https://truckmanualshub.com/

Bolens®
SINCE-1850

# Operator's Manual

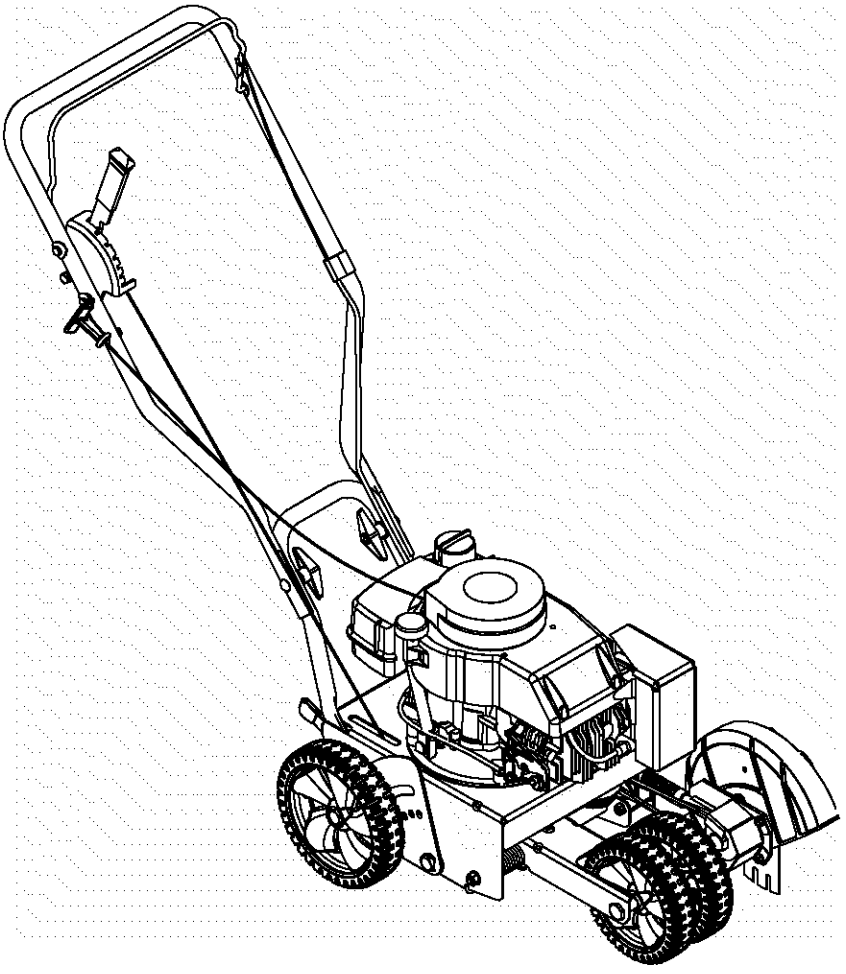

**Edger**

Models 550
551

## IMPORTANT: READ SAFETY RULES AND INSTRUCTIONS CAREFULLY

**Warning:** This unit is equipped with an internal combustion engine and should not be used on or near any unimproved forest-covered, brush-covered or grass-covered land unless the engine's exhaust system is equipped with a spark arrester meeting applicable local or state laws (if any). If a spark arrester is used, it should be maintained in effective working order by the operator. In the State of California the above is required by law (Section 4442 of the California Public Resources Code). Other states may have similar laws. Federal laws apply on federal lands. A spark arrester for the muffler is available through your nearest engine authorized service dealer or contact the service department, P.O. Box 361131 Cleveland, Ohio 44136-0019.

**Troy-Bilt LLC, P.O. BOX 361131 CLEVELAND, OHIO 44136-0019**

PRINTED IN U.S.A.

FORM NO. 769-00566
(11/02)

https://truckmanualshub.com/

# TABLE OF CONTENTS


| Content | Page |
|---|---|
| Important Safe Operation Practices | 3 |
| Assembling The Edger | 5 |
| Know The Edger | 6 |
| Operating The Edger | 7 |
| Making Adjustments | 8 |
| Maintaining and Servicing The Edger | 10 |
| Off Season Storage | 12 |
| Troubleshooting | 12 |
| Parts List | 13 |


# FINDING MODEL NUMBER

This Operator's Manual is an important part of your new edger. It will help you assemble, prepare and maintain the unit for best performance. Please read and understand what it says.

**Before you start assembling your new equipment**, please locate the model plate on the equipment and copy the information from it in the space provided below. The information on the model plate is very important if you need help from our Customer Support Department or an authorized dealer.

- You can locate the model number by looking on the surface of the base plate in the rear of the edger. A sample model plate is explained below. For future reference, please copy the model number and the serial number of the equipment in the space below.

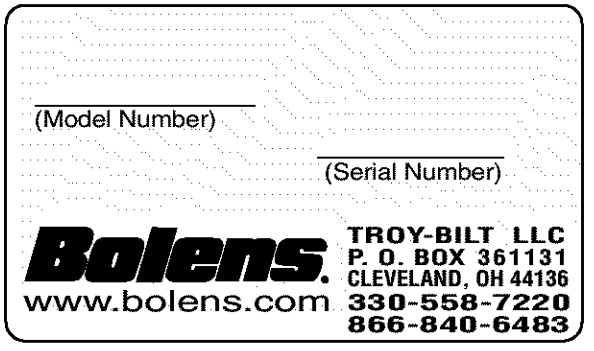


**Copy the model number here:** _____

**Copy the serial number here:** _____

# ENGINE INFORMATION

The engine manufacturer is responsible for all engine-related issues with regards to performance, power-rating, specifications, warranty and service. Please refer to the engine manufacturer's Owner's/Operator's Manual packed separately with your unit for more information.

# CALLING CUSTOMER SUPPORT

If you have difficulty assembling this product or have any questions regarding the controls, operation or maintenance of this unit, please call the Customer Support Department.

Call 1-**866-840-6483** or **1-330-558-7220** to reach a Customer Support representative. Please have your unit's model number and serial number ready when you call. See previous section to locate this information. You will be asked to enter the serial number in order to process your call.

**For more details about your unit, visit our website at www.bolens.com**

https://truckmanualshub.com/

# SECTION 1: IMPORTANT SAFE OPERATION PRACTICES

**WARNING:** THIS SYMBOL POINTS OUT IMPORTANT SAFETY INSTRUCTIONS WHICH, IF NOT FOLLOWED, COULD ENDANGER THE PERSONAL SAFETY AND/OR PROPERTY OF YOURSELF AND OTHERS. READ AND FOLLOW ALL INSTRUCTIONS IN THIS MANUAL BEFORE ATTEMPTING TO OPERATE THIS MACHINE. FAILURE TO COMPLY WITH THESE INSTRUCTIONS MAY RESULT IN PERSONAL INJURY. WHEN YOU SEE THIS SYMBOL — HEED ITS WARNING.

**WARNING:** The Engine Exhaust from this product contains chemicals known to the State of California to cause cancer, birth defects or other reproductive harm.

**DANGER:** This machine was built to be operated according to the rules for safe operation in this manual. As with any type of power equipment, carelessness or error on the part of the operator can result in serious injury. If you violate any of these rules, you may cause serious injury to yourself or others.

## TRAINING

1. Read, understand, and follow all instructions on the machine and in the manual(s) before attempting to assemble and operate. Keep this manual in a safe place for future and regular reference and for ordering replacement parts.
2. Be familiar with all controls and their proper operation. Know how to stop the machine and disengage them quickly.
3. Never allow children under 14 years old to operate this machine. Children 14 years old and over should read and understand the operation instructions and safety rules in this manual and should be trained and supervised by a parent.
4. Never allow adults to operate this machine without proper instruction.
5. To help avoid blade contact or a thrown object injury, keep bystanders, helpers, children and pets at least 75 feet from the machine while it is in operation. Stop machine if anyone enters the area.

## PREPARATION

1. Thoroughly inspect the area where the equipment is to be used. Remove all stones, sticks, wire, bones, toys and other foreign objects which could be tripped over or picked up and thrown by the blade. Thrown objects can cause serious personal injury.
2. Always wear safety glasses or safety goggles during operation and while performing an adjustment or repair to protect your eyes. Thrown objects which ricochet can cause serious injury to the eyes.
3. Wear sturdy, rough-soled work shoes and close-fitting slacks and shirts. Shirts and pants that cover the arms and legs and steel-toed shoes are recommended. Never operate this machine in bare feet, sandals, slippery or light weight (e.g. canvas) shoes.
4. Never attempt to make any adjustments while the engine is running, except where specifically recommended in the operator's manual.
5. To avoid personal injury or property damage use extreme care in handling gasoline. Gasoline is extremely flammable and the vapors are explosive. Serious personal injury can occur when gasoline is spilled on yourself or your clothes which can ignite. Washer your skin and change clothes immediately.
   a. Use only an approved gasoline container.
   b. Extinguish all cigarettes, cigars, pipes and other sources of ignition.
   c. Never fuel machine indoors.
   d. Never remove gas cap or add fuel while the engine is hot or running.
   e. Allow engine to cool at least two minutes before refueling.
   f. Never over fill fuel tank. Fill tank to no more than ½ inch below bottom of filler neck to provide space for fuel expansion.
   g. Replace gasoline cap and tighten securely.
   h. If gasoline is spilled, wipe it off the engine and equipment. Move unit to another area. Wait five minutes before starting the engine.
   i. Never store the machine or fuel container inside where there is an open flame, spark or pilot light as on a water heater, space heater, furnace,clothes dryer or other gas appliances.
   j. Allow machine to cool at least 5 minutes before storing.

## OPERATION

1. Do not put hands or feet near rotating parts. Contact with the rotating blade can amputate hands and feet.
2. The blade control handle is a safety device. Never bypass its operation. Doing so, makes the machine unsafe and may cause personal injury.
3. Never operate without blade guard, debris shield and blade control handle in place and working.

https://truckmanualshub.com/

4. Never operate with damaged safety devices. Failure to do so, can result in personal injury.
5. Never run an engine indoors or in a poorly ventilated area. Engine exhaust contains carbon monoxide, an odorless and deadly gas.
6. Do not operate machine while under the influence of alcohol or drugs.
7. Muffler and engine become hot and can cause a burn. Do not touch.
8. Never operate this machine without good visibility or light. Always be sure of your footing and keep a firm hold on the handles. Walk, never run.
9. Do not operate this machine if it has been dropped or damaged. Return machine to your nearest authorized servicing dealer for examination and repair.
10. Do not operate this machine with a damaged or excessively worn cutting blade.
11. Never attempt to clear material from the blade guard while the engine is running. Shut the engine off, disconnect the spark plug wire and ground against the engine to prevent unintended starting.
12. Do not overload machine capacity by attempting to edge at too fast of a rate.
13. Stay alert for uneven sidewalks, terrain etc. Always push slowly over rough surfaces. Do not use this machine on gravel surfaces.
14. Do not operate machine in rain or wet soil conditions.
15. Always operate machine from behind the handles and position yourself where the direct line of sight to cutting blade is blocked by guards.
16. Always stop engine when edging or trimming is delayed or when transporting machine from one location to another.
17. Never leave a running machine unattended. Stop the engine, disconnect spark plug wire and ground against the engine to prevent unintended starting.
18. Only use parts and accessories made for this machine by the manufacturer. Failure to do so, can result in personal injury.
19. If situations occur which are not covered in this manual, use care and good judgment. Contact your dealer or telephone 1-866-840-6483 for assistance and the name of your nearest servicing dealer.

## MAINTENANCE AND STORAGE

1. Never tamper with safety devices. Check their proper operation regularly.
2. Before cleaning, repairing, or inspecting, disconnect the spark plug wire and ground against the engine to prevent unintended starting.
3. Check bolts, and screws for proper tightness at frequent intervals to keep the machine in safe working condition. Also, visually inspect machine for any damage.
4. Do not change the engine governor setting or over-speed the engine. The governor controls the maximum safe operating speed of the engine.
5. The blade, blade guard and debris shield are subject to wear and damage. For your safety protection, frequently check all components and replace with original equipment manufacturer's (O.E.M.) parts only. "Use of parts which do not meet the original equipment specifications may lead to improper performance and compromise safety!"
6. Maintain or replace safety and instruction labels, as necessary.
7. Observe proper disposal laws and regulations for gas, oil, etc. to protect the environment.
8. Never store the machine or fuel container inside where there is an open flame, spark or pilot light such as a water heater, furnace,clothes dryer etc.
9. Always refer to the operator's manual for proper instructions on off-season storage.

**WARNING: YOUR RESPONSIBILITY**
**Restrict the use of this power machine to persons who read, understand and follow the warnings and instructions in this manual and on the machine.**

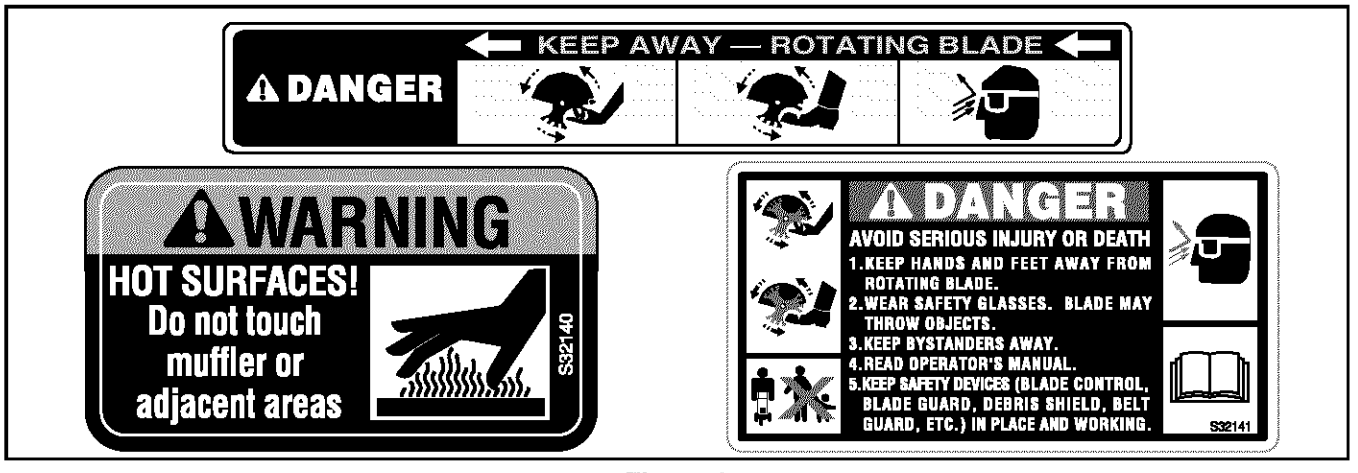


**Figure 1**

https://truckmanualshub.com/

# SECTION 2: ASSEMBLING YOUR EDGER

**IMPORTANT:** This unit is shipped WITHOUT GASOLINE or OIL. After setting up the unit, service engine with gasoline and oil as instructed in the separate engine manual packed with your unit.

**NOTE:** *Reference to right or left hand side of the edger is observed from the operating position.*

### Grounding the Engine's Spark Plug

- Disconnect the spark plug wire from the spark plug and ground against the engine.

### Positioning the Edger Handles

- Remove and discard any packaging cardboard that may be present between the upper handle and the lower handle.
- Depress the blade control bail at the top of the upper handle and pivot the upper handle upward until it snaps into place.
- Tighten the wing knobs which are located on both the left and right sides of the handle. See Figure 2 .

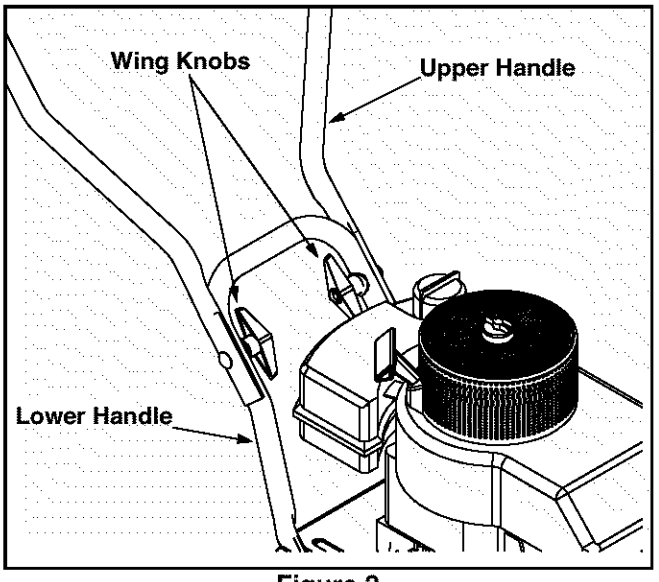


**Figure 2**

## Attaching the Starter Rope

- Locate the eyebolt found on the right side of the upper handle.
- Loosen, but do NOT remove, the wing knob which secures the rope guide to the upper handle. See Figure 3.

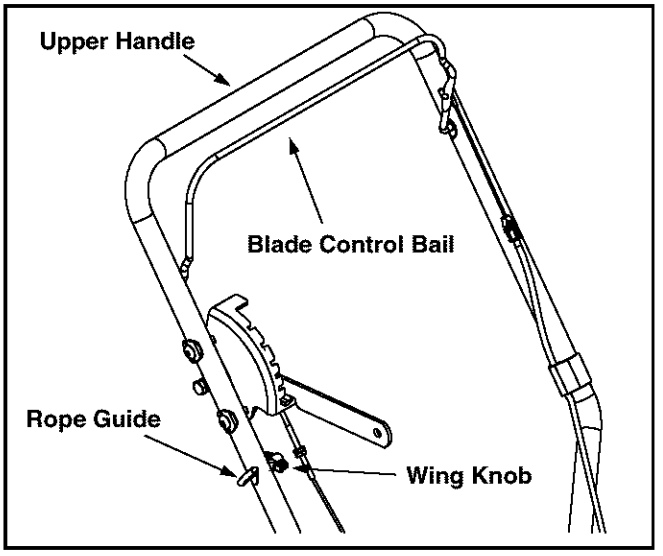


**Figure 3**

**IMPORTANT:** Make certain that the engine's spark plug wire is properly grounded as instructed earlier in this section before proceeding on to the next step.

- Stand behind the unit and hold the blade control bail against the upper handle and gently pull the starter rope out of the engine.

**WARNING: The edger blade WILL rotate when the starter rope is pulled.**

**NOTE:** *The starter rope will not pull out of the engine unless the blade control bail (refer to Figure 3) is depressed against the upper handle.*

- Slip the starter rope through the top of the rope guide.
- Retighten the wing knob which secures the rope guide to the upper handle.

https://truckmanualshub.com/

# SECTION 3: KNOW THE EDGER

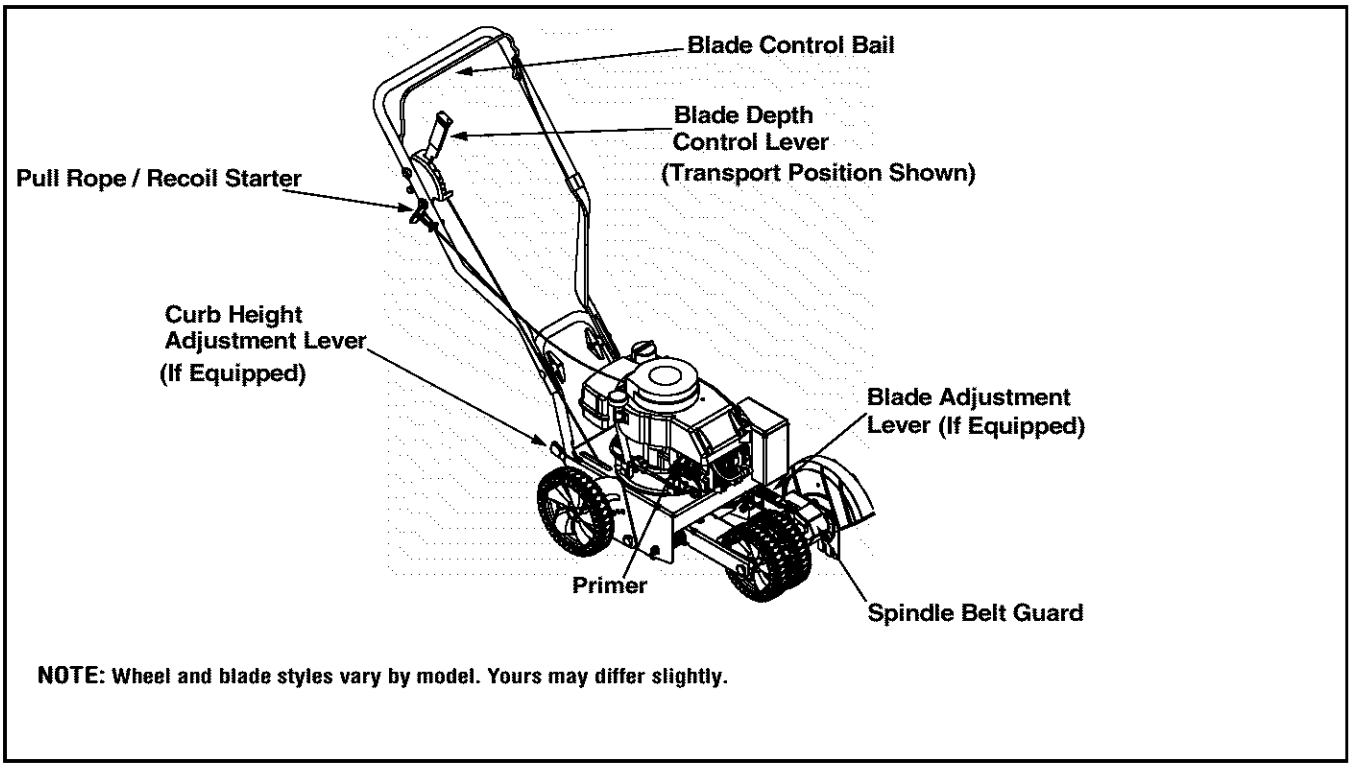


Figure 4

**WARNING: Be familiar with all controls and their proper operation. Know how to stop the machine and disengage them quickly.**

**NOTE:** *Refer to the Engine Manual packed with your edger for a detailed description of all engine-related controls and components.*

## Pull Rope / Recoil Starter

The pull rope/recoil starter is used to start the engine.

## Primer

The primer is used to pump gas into the carburetor and aid in starting the engine. Use it to start a cold engine, but do not use it to restart a warm engine after a short shutdown.

**NOTE:** *Refer to the Engine Manual packed with your edger for a detailed description of all engine-related controls and components.*

## Blade Control Bail

Located on the upper handle, the blade control bail must be depressed against the upper handle in order to operate the unit. Releasing the blade control stops the engine and the edger blade. See Figure 4.

## Blade Depth Control Lever

The blade depth control lever is located on the right side of the upper handle. It is used to control the depth of the cut. The further forward the blade depth control lever is moved, the deeper into the soil the edger blade will cut. See Figure 4.

## Blade Adjustment Lever (if so equipped)

The blade adjustment lever, if so equipped, is located on the front, left portion of the edger, behind the edger blade. It is used to vary the angle of the edger blade between one of three positions for edging, beveling, or trenching. See Figure 4.

## Curb Height Adjustment Lever (if so equipped)

The curb height adjustment lever, if so equipped, is found on the rear portion of the edger.When placed in an applicable notch, it aids in stabilizing the edger while edging grass along a curb. See Figure 4.

**IMPORTANT:** Become familiar with all the controls before operating the edger.

https://truckmanualshub.com/

# SECTION 4: OPERATING THE EDGER

**The operation of any edger can result in foreign objects being thrown into the eyes, which can result in severe eye damage. Always wear safety glasses or eye shields. We recommend wide vision safety mask for over spectacles or standard safety glasses**

**WARNING:** Do not lower blade if blade is over concrete, asphalt, rocks or the like. The blade can strike the supporting surface, resulting in personal injury or property damage.

## Adding Gasoline And Oil

Service the engine with gasoline and oil as instructed in the Engine Manual packed with your edger. Read instructions carefully.

**WARNING:** Never fill fuel tank indoors, with engine running or until the engine has been allowed to cool for at least two minutes after running.

## Starting The Engine

**NOTE:** *Refer to the Engine Manual packed with your edger for a detailed description of all engine-related controls and components.*

To start the edger's engine, proceed as follows:

- Attach the spark plug wire to the spark plug. Make certain the metal cap on the end of the spark plug wire is fastened securely over the metal tip on the spark plug.
- Move the blade depth control lever back to the START position in the adjacent (top) notch.
- Depress the primer bulb three times, pausing two to three seconds between each push. In cold weather (below 50°F /19°C), it may be necessary to depress the primer bulb four or five times.

**IMPORTANT:** Using the primer to restart a warm engine after a short shutdown is usually not necessary. Doing so may result in a flooded engine.

- Standing behind the unit, depress the blade control bail and hold it against the upper handle with your left hand.

**WARNING: This control mechanism is a safety device. Never attempt to bypass its operation.**

- With your right hand, grasp the recoil starter handle and slowly pull the rope outward until engine reaches the start of its compression cycle (the rope will pull slightly harder at this point).
- After slowly allowing the rope to recoil, pull the rope with a rapid, continuous, full arm stroke. Keep a firm grip on starter handle throughout the entire stroke.
- Allow the starter handle to slowly return to the eyebolt.

**NOTE:** *If the engine fails to start after three pulls, depress the primer an additional two times before pulling the starter rope again.*

To begin edging, proceed as follows:

- Move the blade depth control lever to the left and place it into any of the five lower notches. The further forward the blade depth control lever is moved, the deeper or lower the blade will cut into the ground.

**IMPORTANT:** For best results, proceed slowly along the path being edged, slowly moving the edger back and forth through the cutting area.

## Stopping The Engine

To stop the edger's engine, proceed as follows:

- Release the blade control handle.

**IMPORTANT:** Make certain that the engine's spark plug wire is properly grounded as instructed in SECTION 2: Assembling The Edger before storing the edger for its next use.

https://truckmanualshub.com/

# SECTION 5: MAKING ADJUSTMENTS

## Blade Tilt Adjustment (models so equipped)

**NOTE:** *Edger features vary by model. All edger models do NOT come equipped for blade tilt adjustment nor is there a blade tilt kit available to modify your edger if it was not purchased equipped to do so.*

The angle of the edger blade can be adjusted by placing the blade adjustment lever in one of three positions for edging, beveling, or trenching. See Figure 5.

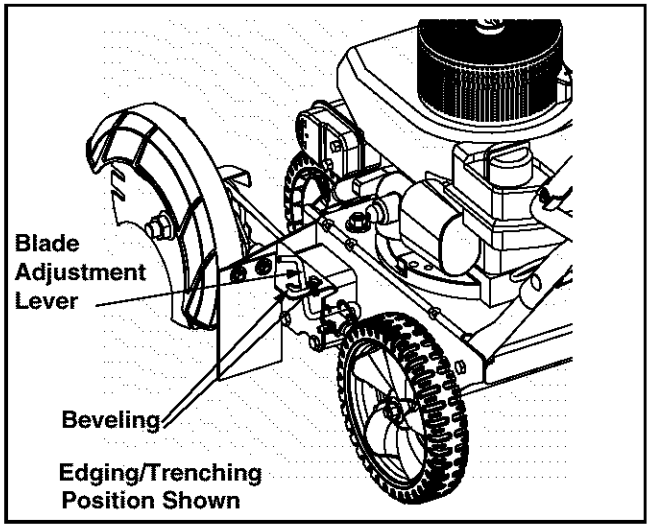


Figure 5

**WARNING: Rotating cutting blade may throw objects causing personal injury. Keep area clear of bystanders and do not operate without guards in place.**

## Beveling

Set the blade adjustment lever (refer to Figure 5) in the first (left hand) or third (right hand) notch to place the edger blade in position for beveling. See Figure 6.

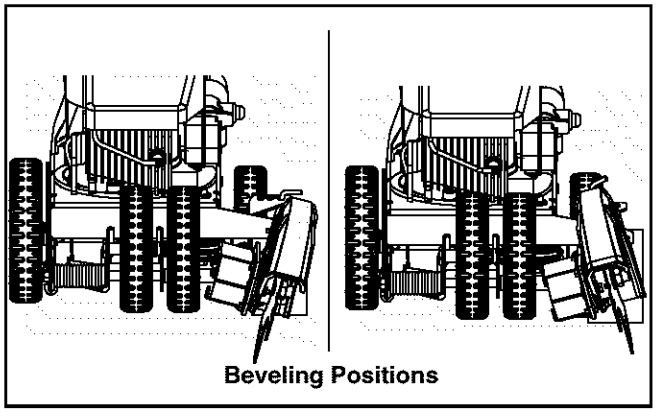


Figure 6

## Edging

Set the blade adjustment lever (refer to Figure 5) in the center notch to place the edger blade in a 90° position for edging. See Figure 7.

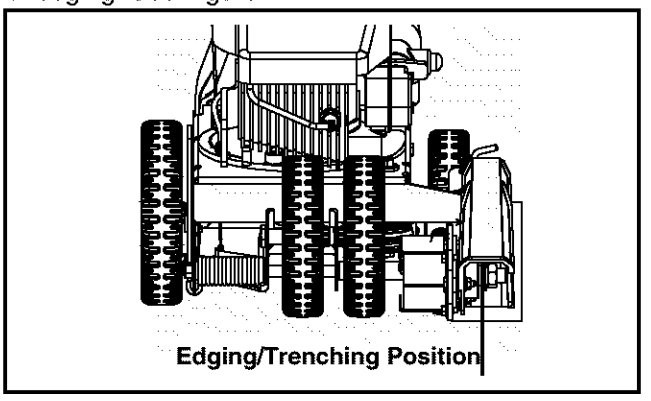


Figure 7

## Trenching (models so equipped)

**NOTE:** *Edger features vary by model. All edger models do NOT come equipped for trenching. If your edger was not purchased equipped to do so, you may purchase part no. 736-0366 (flat washer) and part no. 781-0748 (triplex edger blade) to utilize this feature.*

**WARNING: Disconnect the spark plug wire and ground against the engine before performing the following steps.**

**WARNING: The edger blade is sharp. Wear leather work gloves to protect your hands when working around the edger blade.**

- Working in front of the edger, with the rear wheels backed up to a curb or the unit tilted back to keep it from rolling backwards, grasp the spindle belt guard with one hand and push towards the rear of the unit to compress the spring and relieve the tension on the drive belt.
- If it hasn't already freed itself, with your other hand, carefully reach under the rear of the unit and remove the belt from around the engine flywheel pulley. See Figure 8.

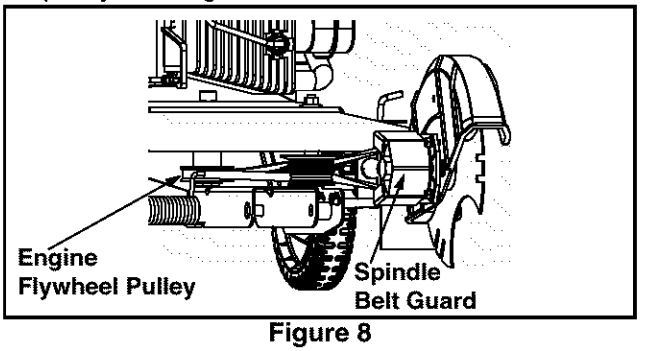


Figure 8

https://truckmanualshub.com/

- Remove the spindle belt guard by removing the two self tapping screws which secure it to the blade plate assembly. See Figure 9.

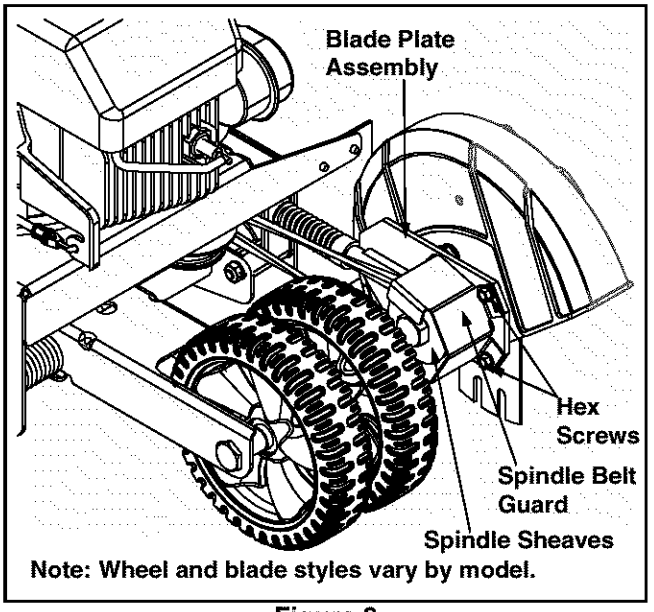


Figure 9

- Use two wrenches (one wrench to prevent the hex bolt head from spinning and the other to unthread the hex lock nut) to remove the hex lock nut and bell washer that secure the edger blade, leaving the dual edger blade in place. See Figure 10.

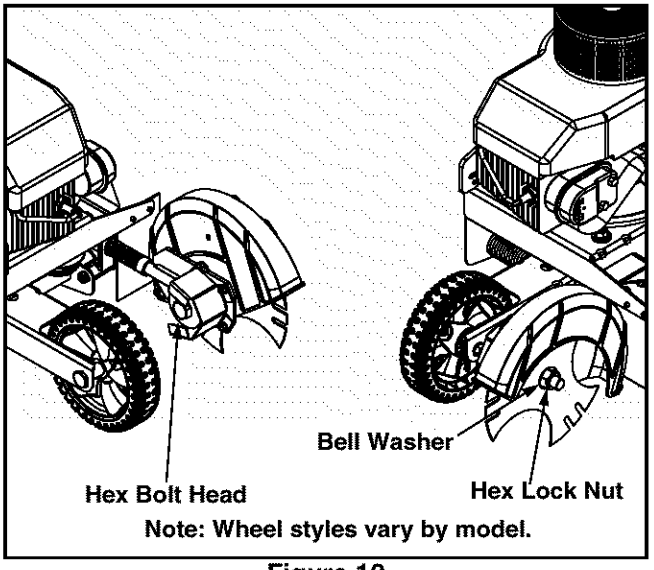


Figure 10

- Install the flat washer (part no. 736-0366) and the triplex edger blade (part no. 781-0748) that are packed separately in the box.
- Secure with the bell washer and the hex lock nut removed earlier. See Figure 11.

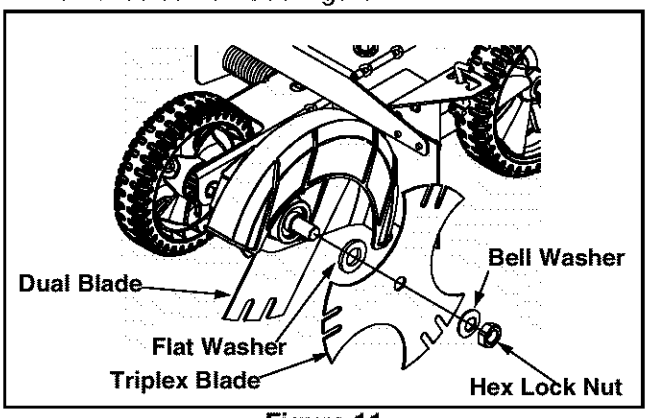


Figure 11

**IMPORTANT:** Use a torque wrench to tighten the hex lock nut to between 37 foot-lbs. and 50 foot-lbs.

- Reinstall the spindle belt guard with the self tapping screws removed earlier.
- Grasp the spindle belt guard with one hand and push towards the rear of the unit to compress the spring, and with your other hand carefully place the drive belt back onto the engine flywheel pulley.

**IMPORTANT:** Make certain that the drive belt is seated correctly on the blade spindle and that it is riding smoothly on the spindle sheaves and is not pinched between them. Repeat the first three steps if the belt is pinched.

- Set the blade adjustment lever (refer to Figure 5) in the center notch to place the edger blade in a 90° position (see Figure 7) and place the blade depth control lever in the lowest position.

## Edging Along A Curb (models so equipped)

**NOTE:** *Edger features vary by model. All edger models do NOT come equipped to edge along a curb nor is there a curb wheel kit available to modify your edger if it was not purchased equipped to do so.*

On models so equipped, the right, rear wheel of the edger can be lowered into one of five positions to ease the task of edging along a curb.

To adjust the height of the curb wheel, proceed as follows:

https://truckmanualshub.com/

- Lower the right, rear wheel by moving the curb height adjustment lever slightly to the left. See Figure 12.

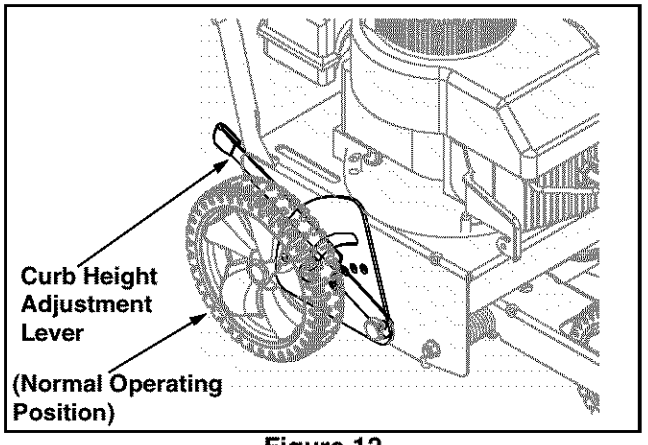


Figure 12

- Pivot the right, rear wheel into an applicable position in relation to the height of the curb to be edged along.

- Release the curb height adjustment lever to lock the wheel in position. See Figure 13.

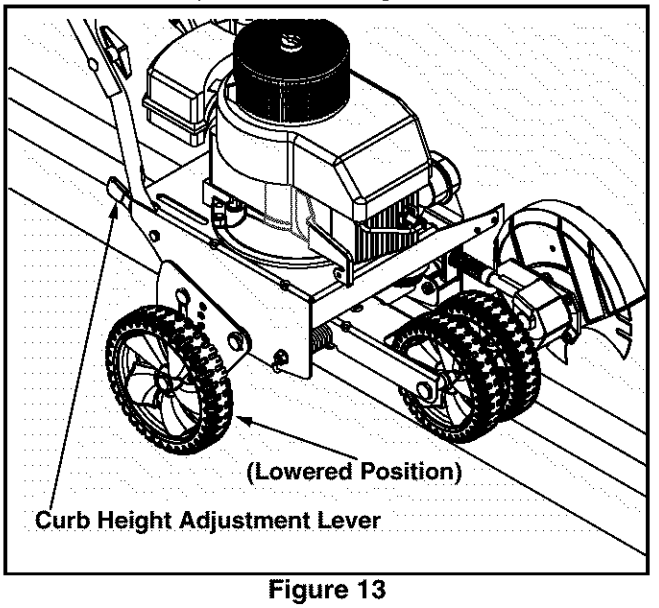


Figure 13

# SECTION 6: MAINTAINING & SERVICING THE EDGER

**WARNING: Disconnect the spark plug wire and ground against the engine before performing any adjustment, repairs or maintenance.**

## Lubrication

### Engine

Refer to the *Engine* Manual packed with your edger for a detailed description of all engine-related service specifications.

### Wheels

Lubricate the wheels and bearings at least once a season with a light oil. Also if the wheels are removed for any reason, lubricate the surface of the axle bolt and the inner surface of the wheel with light oil.

### Pivot Points

Lubricate the pivot points on the blade control bail, blade depth control lever, and if applicable, the blade adjustment lever, and curb height adjustment lever with light oil at least once a season.

### Bearing Block

The bearing block is equipped with a grease fitting. Lubricate with a grease gun after every 25 hours or at least once a season. See Figure 14.

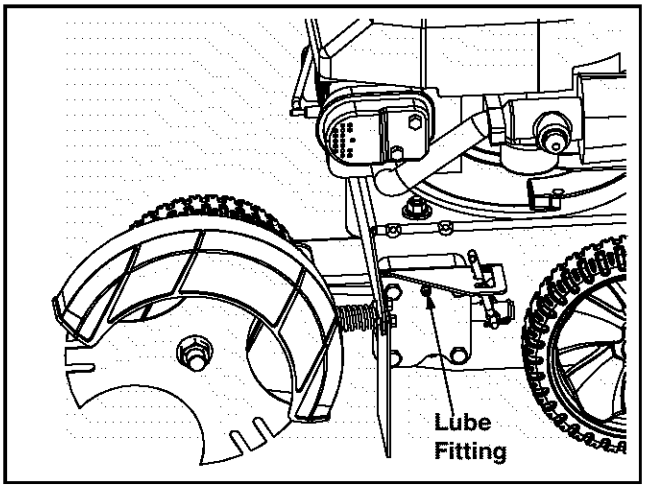


Figure 14

## Replacing the Edger Blade

**WARNING: The edger blade is sharp. Wear leather work gloves to protect your hands when working around the edger blade.**

**WARNING: Disconnect the spark plug wire and ground against engine before performing the following steps.**

https://truckmanualshub.com/

- Working in front of the edger, with the rear wheels backed up to a curb or the unit tilted back to keep it from rolling backwards, grasp the spindle belt guard with one hand and push towards the rear of the unit to compress the spring and relieve the tension on the drive belt.
- If it hasn't already freed itself, with your other hand, carefully reach under the rear of the unit and remove the belt from around the engine flywheel pulley.
- Remove the spindle belt guard by removing the two self tapping screws which secure it to the blade plate assembly. Refer to Figure 9.
- Use two wrenches (one wrench to prevent the hex bolt head from spinning and the other to remove the hex lock nut and bell washer) to remove the edger blade. Refer to Figure 10.
- Remove and discard the edger blade but retain the bell washer and hex lock nut.
- Install the replacement edger blade, the bell washer (cupped side facing **inward**) and the hex lock nut removed earlier.

**IMPORTANT:** Use a torque wrench to tighten the hex lock nut to between 37 foot-lbs. and 50 foot-lbs.

- Reinstall the spindle belt guard with the self tapping screws removed earlier.
- Grasp the spindle belt guard with one hand and push towards the rear of the unit to compress the spring, and with your other hand carefully place the drive belt back onto the engine flywheel pulley.

**IMPORTANT:** Make certain that the drive belt is seated correctly on the blade spindle and that it is riding smoothly on the spindle sheaves and is not pinched between them. Repeat the first three steps if the belt is pinched.

## Replacing the Drive Belt

**IMPORTANT:** To aid in reassembly, note the orientation of the drive belt on the two idler pulleys and the engine pulley prior to performing the following steps. Refer to Figure 15.

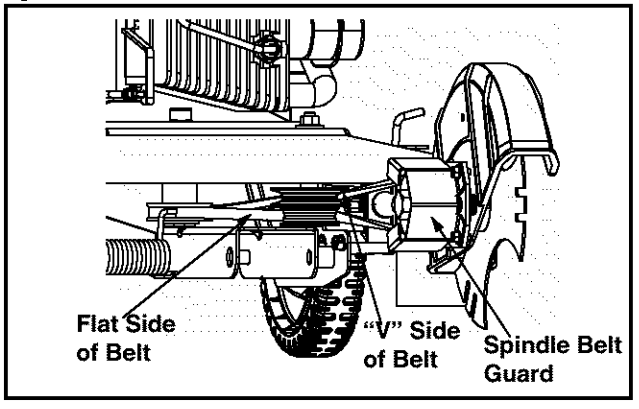


**Figure 15**

The edger drive belt is subject to wear and should be replaced if any signs of cracking, shredding or rotting are present. To replace the belt, proceed as follows:

- Working in front of the edger, grasp the spindle belt guard with one hand and push towards the rear of the unit to compress the spring and relieve the tension on the drive belt.
- If it hasn't already freed itself, with your other hand, carefully reach under the rear of the unit and remove the belt from around the engine flywheel pulley.
- Remove the spindle belt guard by removing the two self-tapping screws which secure it to the blade plate assembly. See Figure 9.
- Carefully remove the belt from off of the two idler pulleys and the blade spindle, again making sure to note the orientation of the belt. Discard the belt.

Install the replacement belt (Part No. 754-0465) in the same configuration that the original belt was routed as follows:

- Working from the front of the edger, place the belt onto the blade spindle and then route it back onto the two idler pulleys.

**IMPORTANT:**Make certain that the "V" side of the belt is seated into the top pulley and the flat side of the belt is seated into the bottom pulley. See Figure 15.

- Reinstall the spindle belt guard with the self tapping screws removed earlier.
- Grasp the spindle belt guard with one hand and push towards the rear of the unit to compress the spring, and with your other hand carefully place the drive belt back onto the engine flywheel pulley.

**IMPORTANT:** Make certain that the drive belt is seated correctly on the blade spindle and that it is riding smoothly on the spindle sheaves and is not pinched between them. Repeat the first three steps if the belt is pinched.

**WARNING:** Never operate the edger without the spindle belt guard in place.

https://truckmanualshub.com/

# SECTION 7: OFF-SEASON STORAGE

Observe the following when preparing the edger for long-term storage:

- Clean and lubricate unit thoroughly as instructed on page 10 of this manual.
- Refer to the Engine Manual packed separately with the edger for engine manufacturers's storage instructions.
- Coat the edger blade with chassis grease to prevent rusting and corrosion.
- Store the edger in a dry, clean area. Do not store next to any corrosive materials, such as lawn fertilizer.
- Coat the edger, especially any springs and bearings with a light oil or silicone spray.

**IMPORTANT:** When storing any type of power equipment in an poorly ventilated or metal storage shed, care should be taken to rustproof the equipment.

# SECTION 8: TROUBLESHOOTING

| Trouble | Possible Cause(s) | Corrective Action |
|---|---|---|
| Engine fails to start | Dirty air cleaner | Refer to the Engine Manual packed with your unit. |
| | Engine needs to be primed | Push primer bulb two or three times. |
| | Fuel tank empty | Fill tank with clean, fresh gasoline. |
| | Stale fuel in gasoline tank | Drain gasoline and refill tank with clean, fresh gasoline. |
| | Throttle control lever not in starting position | Move throttle lever to FAST position. |
| | Spark plug wire disconnected. | Connect the spark plug wire to the spark plug. |
| | Spark plug fouled | Clean, adjust gap or replace spark plug. |
| | Engine flooded | Refer to the Engine Manual packed with your unit. |
| Engine runs erratic | Spark plug wire loose | Connect and tighten spark plug wire. |
| | Stale fuel in gasoline tank | Drain gasoline and refill tank with clean, fresh gasoline. |
| | Vent in gas cap plugged | Clear vent of any debris. |
| | Water or dirt in fuel system | Drain fuel tank. Refill with fresh fuel. |
| | Dirty air cleaner | Refer to the Engine Manual packed with your unit. |
| | Carburetor out of adjustment | Refer to the Engine Manual packed with your unit. |
| Engine overheats | Engine oil level low | Fill crankcase with proper oil. |
| | Air flow restricted | Clean the area around the engine's cooling fins. |
| | Dirty air filter | Replace the engine's air filter |
| | Carburetor not adjusted properly | Refer to the Engine Manual packed with your unit. |
| Excessive vibration | Edger blade bent or damaged | Replace edger blade. |
| | Blade spindle bent or damaged | Contact an authorized *Troy-Bilt* service dealer. |
| Drive belt slips | Belt worn or stretched | Replace drive belt. |

https://truckmanualshub.com/

# SECTION 9: MODEL 550 AND 551 HANDLE

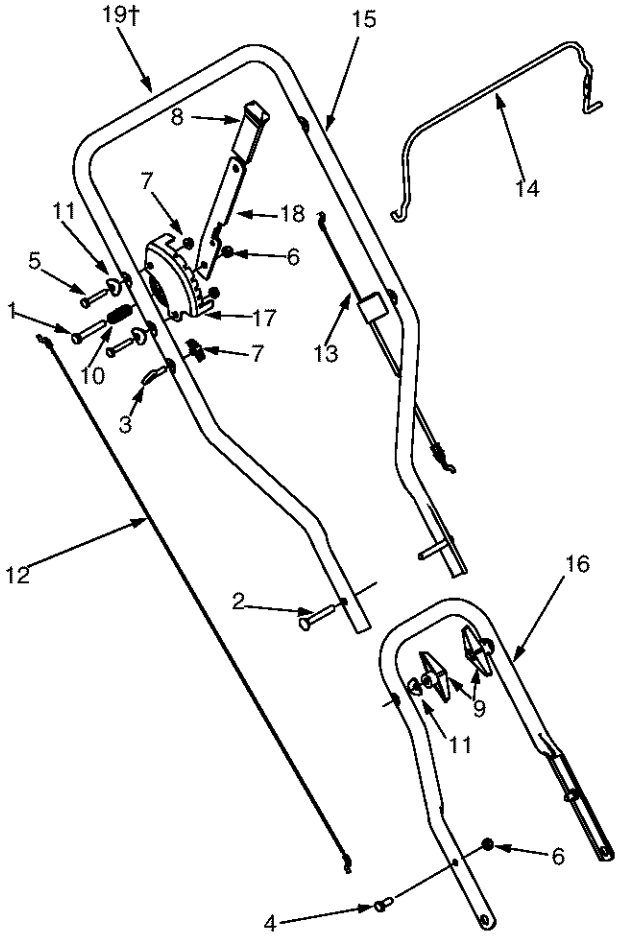


| REF. NO. | PART NO. | DESCRIPTION |
|---|---|---|
| 1 | 710-0116 | Screw, 5/16-18 |
| 2 | 710-0449 | Screw, 5/16-18 |
| 3 | 710-1205 | Eye Bolt |
| 4 | 710-3008 | Screw, 5/16-18 |
| 5 | 710-0606 | Screw |
| 6 | 712-3009 | Hex Lock Nut, 5/16-18 |
| 7 | 720-0279 | Wing Nut |
| 8 | 720-0142 | Grip |
| 9 | 720-0241 | Wing Knob |
| 10 | 732-0369 | Compression Spring |

| REF. NO. | PART NO. | DESCRIPTION |
|---|---|---|
| 11 | 736-0451 | Saddle Washer,.320 ID x.93 OD |
| 12 | 746-04036 | Wheel Adjustment Cable |
| 13 | 746-04052 | Control Cable (Tecumseh) |
| | 746-04035 | Control Cable (Briggs & Stratton) |
| 14 | 747-0976A | Bail Handle |
| 15 | 749-1225 | Upper Handle |
| 16 | 749-4044 | Lower Handle |
| 17 | 781-0741 | Depth Index Bracket |
| 18 | 781-0742 | Depth Index Lever |
| 19 | 720-0297† | Foam Grip |

†If so equipped

https://truckmanualshub.com/

# Model 550 And 551 Frame

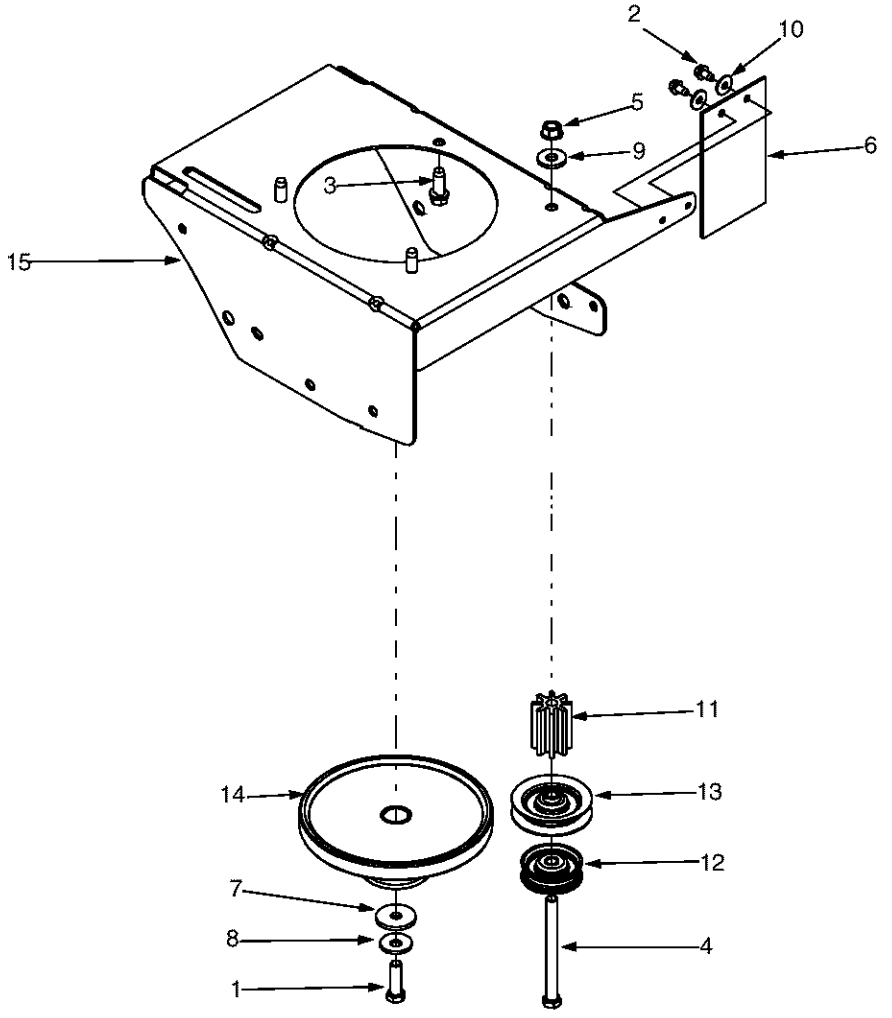


| REF. NO. | PART NO. | DESCRIPTION |
|---|---|---|
| 1 | 710-0191 | Screw, 3/8-24 |
| 2 | 710-0599 | Screw, 1/4-20 |
| 3 | 710-0654A | Screw, 3/8-16 |
| 4 | 710-0944 | Screw, 3/8-16 |
| 5 | 712-0431 | Flange Lock Nut, 3/8-16 |
| 6 | 731-04168 | Debris Guard |
| 7 | 736-0320 | Flat Washer, 3/8 ID x 1.37 OD |
| 8 | 736-0452 | Bell Washer,.396 x 1.140 |
| 9 | 736-3052 | Flat Washer,.406 x 1.00 |
| 10 | 736-3090 | Flat Washer,.260 x.720 |
| 11 | 750-04142 | Pulley Mount Spacer |
| 12 | 756-0313 | Flat Idler Pulley, 1.88 OD |
| 13 | 756-1035A | Idler Pulley |
| 14 | 756-1150A | Combination Flywheel Pulley |
| 15 | 787-01072 | Frame |

https://truckmanualshub.com/

# Model 550 And 551 Spindle Assembly

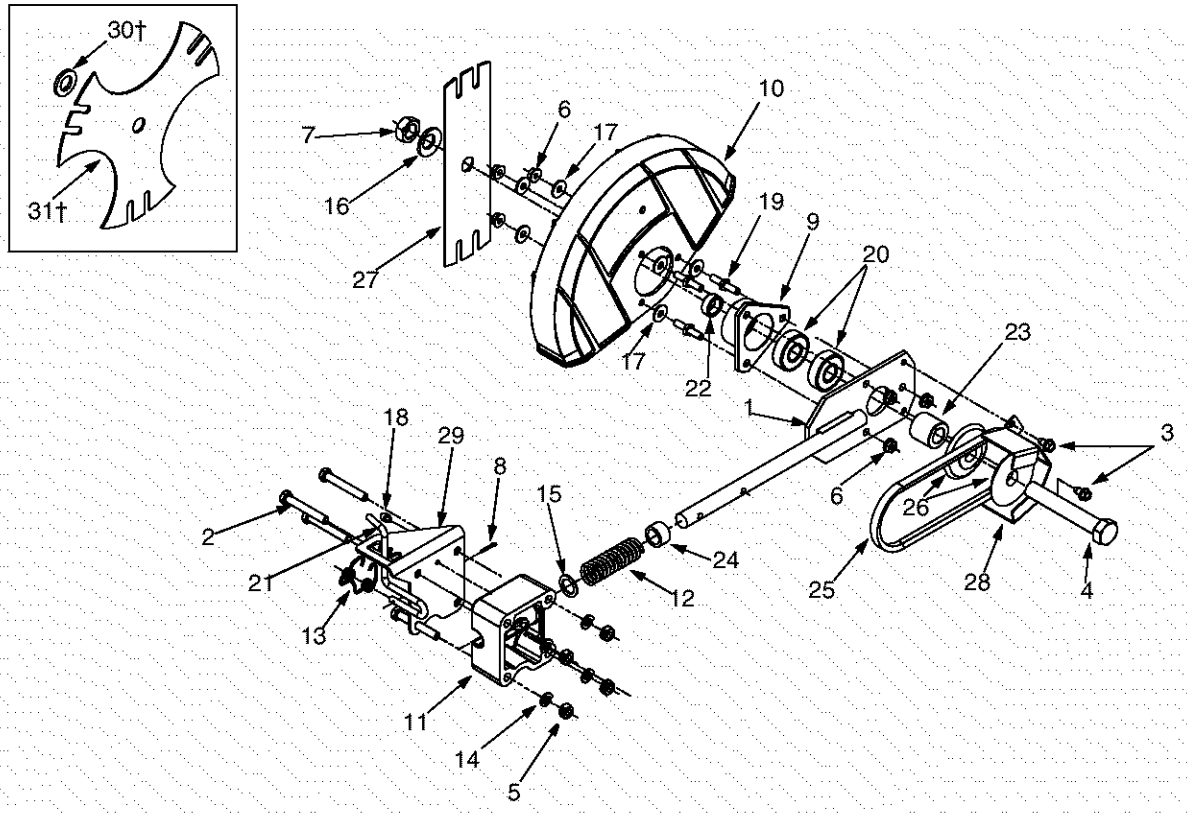


**V-BELTS** are specially designed to engage and disengage safely. A substitute (non-OEM) V-Belt can be dangerous by not disengaging completely.

| REF. NO. | PART NO. | DESCRIPTION |
|---|---|---|
| 1 | 687-02019 | Blade Plate Assembly |
| 2 | 710-0395 | Hex Screw, 5/16-18 |
| 3 | 710-0599 | Self-tapping Screw, 1/4-20 |
| 4 | 710-1143A | Hex Screw, 5/8-18 |
| 5 | 712-3009 | Hex Lock Nut, 5/16-18 |
| 6 | 712-3027 | Hex Flange Nut, 1/4-20 |
| 7 | 712-3056 | Jam Nut, 5/8-18 |
| 8 | 714-3010 | Cotter Pin |
| 9 | 718-04012 | Bearing Cup |
| 10 | 731-04158 | Blade Guard |
| 11 | 731-04207 | Bearing Block |
| 12 | 732-0187 | Compression Spring |
| 13 | 732-0188A | Double Torsion Spring |
| 14 | 736-0119 | Lock Washer |
| 15 | 736-0302 | Flat Washer,.632 ID,.943 OD |
| 16 | 736-0317 | Bell Washer,.63 ID x 1.2 OD |

| REF. NO. | PART NO. | DESCRIPTION |
|---|---|---|
| 17 | 736-3090 | Flat Washer,.260 x.72 |
| 18 | 737-3000 | Lube Fitting, 3/16 |
| 19 | 738-04025 | Pin, 1/4-20 |
| 20 | 741-0524 | Bearing,.625 ID x 1.57 OD |
| 21 | 747-04110 | Blade Adjustment Rod |
| 22 | 748-0273 | Spacer.635 ID x.88 OD |
| 23 | 750-04105 | Spacer,.63 x 1.12 x 1.06 |
| 24 | 750-0547 | Spacer,.632 ID x.875 OD |
| 25 | 754-0465 | Belt |
| 26 | 756-0449 | Sheave |
| 27 | 781-0080 | Blade |
| 28 | 781-0086 | Spindle Belt Guard |
| 29 | 787-01081 | Index Bracket |
| 30 | 736-0366† | Flat Washer |
| 31 | 781-0748† | Tri Star Blade |

†If so equipped

https://truckmanualshub.com/

# Model 550 And 551 Wheel Assembly

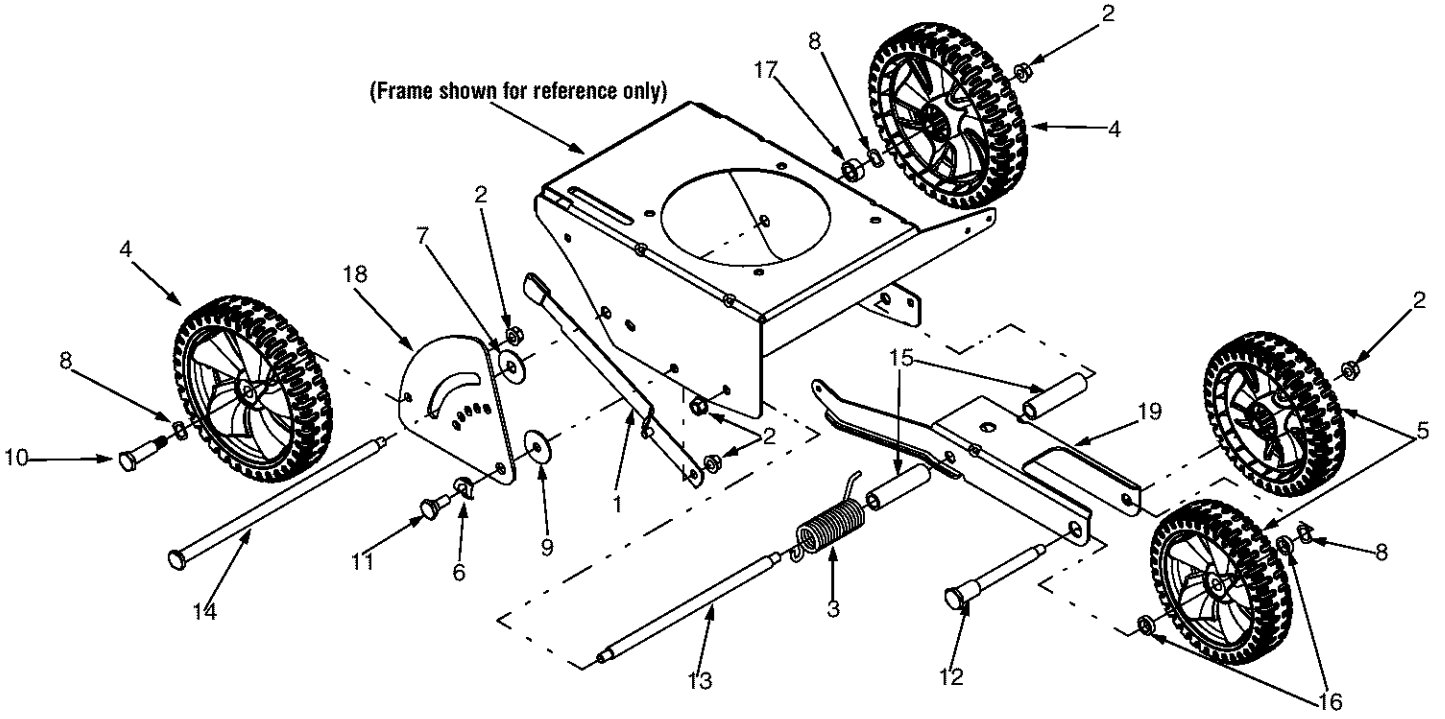


| REF. NO. | PART NO. | DESCRIPTION |
|---|---|---|
| 1 | 687-02022 | Curb Height Adjustment Lever |
| 2 | 712-0431 | Flange Lock Nut, 3/8-16 |
| 3 | 732-04045 | Torsion Spring |
| 4 | 734-1987 | Wheel 8x1.8 |
| 5 | 734-1988 | Wheel 7x1.8 |
| 6 | 736-0182 | Spring Washer,.500 x 1.00 |
| 7 | 736-0208 | Flat Washer,.51 ID x 1.5 OD |
| 8 | 736-0232 | Wave Washer,.531 ID x.781 OD |
| 9 | 736-0234 | Washer,.385 x 1.5 |
| 10 | 738-0213 | Shoulder Screw,.498 x 1.445 |
| 11 | 738-0380 | Shoulder Screw,.50 x.27 |
| 12 | 738-04036 | Shoulder Screw,.50 x 4.62 |
| 13 | 738-04037 | Shoulder Screw,.50 x 9.36, 3/8-16 |
| 14 | 738-04041 | Shoulder Screw,.50 x 11.61 |
| 15 | 750-04129 | Spacer,.525 x.775 |
| 16 | 750-04165 | Spacer,.525 x.775 |
| 17 | 750-0664 | Spacer,.505 ID x.88 OD |
| 18 | 781-0100 | Curb Height Adjuster Plate |
| 19 | 787-01074 | Wheel Bracket |

https://truckmanualshub.com/

# NOTES

https://truckmanualshub.com/

# MANUFACTURER'S LIMITED WARRANTY FOR:

The limited warranty set forth below is given by Troy-Bilt LLC with respect to new merchandise purchased and used in the United States, its possessions and territories.

Troy-Bilt LLC warrants this product against defects for a period of two (2) years commencing on the date of original purchase and will, at its option, repair or replace, free of charge, any part found to be defective in materials or workmanship. This limited warranty shall only apply if this product has been operated and maintained in accordance with the Operator's Manual furnished with the product, and has not been subject to misuse, abuse, commercial use, neglect, accident, improper maintenance, alteration, vandalism, theft, fire, water, or damage because of other peril or natural disaster. Damage resulting from the installation or use of any accessory or attachment not approved by Troy-Bilt LLC for use with the product(s) covered by this manual will void your warranty as to any resulting damage.

Normal wear parts or components thereof are subject to separate terms as follows: All normal wear parts or component failures will be covered on the product for a period of 90 days regardless of cause. After 90 days, but within the two year period, normal wear part failures will be covered ONLY IF caused by defects in materials or workmanship of OTHER component parts. Normal wear parts and components include, but are not limited to: batteries, belts, blades, blade adapters, grass bags, rider deck wheels, seats, snow thrower skid shoes, shave plates, auger spiral rubber, and tires.

**HOW TO OBTAIN SERVICE:** Warranty service is available, WITH PROOF OF PURCHASE, through your local authorized service dealer. To locate the dealer in your area, check your Yellow Pages, or contact Troy-Bilt LLC at P.O. Box 361131, Cleveland, Ohio 44136-0019, or call 1-866-840-6483 or 1-330-558-7220, or log on to our Web site at www.troybilt.com.

This limited warranty does not provide coverage in the following cases:

a. The engine or component parts thereof. These items carry a separate manufacturer's warranty. Refer to applicable manufacturer's warranty for terms and conditions.
b. Log splitter pumps, valves, and cylinders have a sepa rate one year warranty.
c. Routine maintenance items such as lubricants, filters, blade sharpening, tune-ups, brake adjustments, clutch adjustments, deck adjustments, and normal deterioration of the exterior finish due to use or exposure.
d. Troy-Bilt LLC does not extend any warranty for products sold or exported outside of the United States, its possessions and territories, except those sold through Troy-Bilt LLC's authorized channels of export distribution.
e. Parts that are not genuine Troy-Bilt parts are not covered by this warranty.
f. Service completed by someone other than an authorized service dealer is not covered by this warranty.
g. Transportation charges and service calls are not covered.

**No implied warranty, including any implied warranty of merchantability of fitness for a particular purpose, applies after the applicable period of express written warranty above as to the parts as identified. No other express warranty, whether written or oral, except as mentioned above, given by any person or entity, including a dealer or retailer, with respect to any product, shall bind Troy-Bilt LLC. During the period of the warranty, the exclusive remedy is repair or replacement of the product as set forth above.**

**The provisions as set forth in this warranty provide the sole and exclusive remedy arising from the sale. Troy-Bilt LLC shall not be liable for incidental or consequential loss or damage including, without limitation, expenses incurred for substitute or replacement lawn care services or for rental expenses to temporarily replace a warranted product.**

Some states do not allow the exclusion or limitation of incidental or consequential damages, or limitations on how long an implied warranty lasts, so the above exclusions or limitations may not apply to you.

In no event shall recovery of any kind be greater than the amount of the purchase price of the product sold. **Alteration of safety features of the product shall void this warranty.** You assume the risk and liability for loss, damage, or injury to you and your property and/or to others and their property arising out of the misuse or inability to use the product.

This limited warranty shall not extend to anyone other than the original purchaser or to the person for whom it was purchased as a gift.

**HOW STATE LAW RELATES TO THIS WARRANTY:** This limited warranty gives you specific legal rights, and you may also have other rights which vary from state to state.

**Troy-Bilt LLC, P.O. BOX 361131 CLEVELAND, OHIO 44136-0019; Phone: 1-866-840-6483, 1-330-558-7220**