https://truckmanualshub.com/

Operator's Manual

Snorkel

ATB 42-50

engine powered
diesel
gasoline
LPG fuel

P/N 0161987
August, 1998

DNV Certification, Inc.
ISO 9001 REGISTERED FIRM

OmniQuip Snorkel INTERNATIONAL

https://truckmanualshub.com/

LIMITED WARRANTY

Snorkel warrants each new machine manufactured and sold by it to be free from defects in material and workmanship for a period of one (1) year from date of delivery to a Customer or for one year after the machine has been placed in first service in a Dealer rental fleet, whichever comes first. Any part or parts which, upon examination by the Snorkel Service Department, are found to be defective, will be replaced or repaired, at the sole discretion of Snorkel, through its local Authorized Dealer at no charge.

Snorkel further warrants the structural components; specifically, the mainframe chassis, turntable, booms and scissor arms, of each new machine manufactured by it to be free from defects in material and workmanship for an additional period of four (4) years. Any such part or parts which, upon examination by the Snorkel Service Department, are found to be defective will be replaced or repaired by Snorkel through its local Authorized Dealer at no charge; however, any labor charges incurred as a result of such replacement or repair will be the responsibility of the Customer or Dealer.

The Snorkel Service Department must be notified within forty-eight (48) hours of any possible warranty situation during the applicable warranty period. Personnel performing warranty repair or replacement must obtain specific approval by Snorkel Service Department prior to performing any warranty repair or replacement.

Customer and Dealer shall not be entitled to the benefits of this warranty and Snorkel shall have no obligations hereunder unless the "Pre-Delivery and Inspection Report" has been properly completed and returned to the Snorkel Service Department within ten (10) days after delivery of the Snorkel product to Customer or Dealer's rental fleet. Snorkel must be notified, in writing, within ten (10) days, of any machine sold to a Customer from a Dealer's rental fleet during the warranty period.

At the direction of the Snorkel Service Department, any component part(s) of Snorkel products to be replaced or repaired under this warranty program must be returned freight prepaid to the Snorkel Service Department for inspection. All warranty replacement parts will be shipped freight prepaid (standard ground) from the Snorkel Service Department or from Snorkel's Vendor to Dealer or Customer.

REPLACEMENT PARTS WARRANTY

Any replacement or service part made or sold by Snorkel is not subject to the preceding **Limited Warranty** beyond the normal warranty period of the machine upon which the part was installed.

THIS WARRANTY EXCLUDES AND SNORKEL DOES NOT WARRANT:

1. Engines, motors, tires and batteries which are manufactured by suppliers to Snorkel, who furnish their own warranty. Snorkel will, however, to the extent permitted, pass through any such warranty protection to the Customer or Dealer.
2. Any Snorkel product which has been modified or altered outside Snorkel's factory without Snorkel's written approval, if such modification or alteration, in the sole judgment of Snorkel's Engineering and/or Service Departments, adversely affects the stability, reliability or service life of the Snorkel product or any component thereof.
3. Any Snorkel product which has been subject to misuse, improper maintenance or accident. "Misuse" includes but is not limited to operation beyond the factory-rated load capacity and speeds. "Improper maintenance" includes but is not limited to failure to follow the recommendations contained in the Snorkel Operation, Maintenance, Repair Parts Manuals. Snorkel is not responsible for normal maintenance, service adjustments and replacements, including but not limited to hydraulic fluid, filters and lubrication.
4. Normal wear of any Snorkel component part(s). Normal wear of component parts may vary with the type application or type of environment in which the machine may be used; such as, but not limited to sandblasting applications.
5. Any Snorkel product that has come in direct contact with any chemical or abrasive material.
6. Incidental or consequential expenses, losses, or damages related to any part or equipment failure, including but not limited to freight cost to transport the machine to a repair facility, downtime of the machine, lost time for workers, lost orders, lost rental revenue, lost profits or increased cost.

This warranty is expressly in lieu of all other warranties, representations or liabilities of Snorkel, either expressed or implied, unless otherwise amended in writing by Snorkel's President, Vice President-Engineering, Vice President-Sales or Vice President-Marketing.

SNORKEL MAKES NO WARRANTIES WHICH EXTEND BEYOND THE DESCRIPTION OF THIS LIMITED WARRANTY. SNORKEL MAKES NO IMPLIED WARRANTY OF MERCHANTABILITY OR FITNESS FOR A PARTICULAR PURPOSE AND DISCLAIMS ALL LIABILITY FOR INCIDENTAL OR CONSEQUENTIAL DAMAGES, INCLUDING BUT NOT LIMITED TO INJURY TO PERSONS OR PROPERTY.

The Customer shall make all warranty claims through its local Authorized Dealer and should contact the Dealer from whom the Snorkel product was purchased for warranty service. Or, if unable to contact the Dealer, contact the Snorkel Service Department for further assistance.

Effective July 1995

© Snorkel – all rights reserved

Printed in USA

Electrical Hazard Warning

DANGER

THE SNORKELIFT AERIAL WORK PLATFORM IS NOT ELECTRICALLY INSULATED.

If the platform, booms, or any other conductive part of a Snorkelift contacts a high-voltage electrical conductor, the result can be **SERIOUS INJURY** or **DEATH** for persons on or near the machine.

GO NO CLOSER THAN THE MINIMUM SAFE APPROACH DISTANCES (M.S.A.D) - AS OUTLINED IN TABLE 1 AND FIGURE 3 ON THE NEXT PAGE.

Be sure to allow for sag and sway in the wires and the work platform.

If a Snorkelift comes in contact with a live electrical conductor, the entire machine can be charged.

If that happens, you should remain on the machine and not contact any other structure or object within reach. That includes the ground, adjacent buildings, poles, and any object not a part of the Snorkelift.

Such contact could make your body a conductor to the other object creating an electrical shock hazard resulting in **SERIOUS INJURY** or **DEATH**.

DO NOT attempt to enter or leave the Snorkelift until you are sure the electricity has been turned off.

If a Snorkelift is in contact with a live conductor, the platform operator **MUST** warn others on the ground in the vicinity of the Snorkelift to **STAY AWAY** from the machine, since their bodies can also form a path for electricity to ground thus creating an electrical shock hazard with possible **ELECTROCUTION** and **DEATH**.

DO NOT attempt to operate the Snorkelift ground controls when the platform, booms, or any other conducting part of a Snorkelift is in contact with electrical wires or if there is an immediate danger of such contact.

Regard all conductors as energized.

Personnel working on or near a Snorkelift must be continuously aware of electrical hazards, recognizing that **SERIOUS INJURY** or **DEATH** can result if contact with an electrical wire does occur.

https://truckmanualshub.com/

■ Minimum Safe Approach Distance

The Snorkelift is an all metal boom, **NOT ELECTRICALLY INSULATED**, aerial work platform. **DO NOT** operate it near **ELECTRICAL** conductors. Regard all conductors as being energized. Use the table and illustration below to determine safe clearance from electrical conductors. (Table 1 and Figure 3, below, are from ANSI/SIA A92.5–1992 Standard, reprinted with permission of Scaffold Industry Association.)

❑ Table 1 - (M.S.A.D.)

Minimum Safe Approach Distance
to energized (exposed or insulated power lines)

Voltage range	Minimum safe approach distance	
(phase to phase)	(Feet)	(Meters)
0 to 300V	Avoid contact	
over 300v to 50kv	10	3.05
over 50kv to 200kv	15	4.60
over 200kv to 350kv	20	6.10
over 350kv to 500kv	25	7.62
over 500kv to 750kv	35	10.67
over 750kv to 1000kv	45	13.72

❑ Figure 3 - (M.S.A.D.)

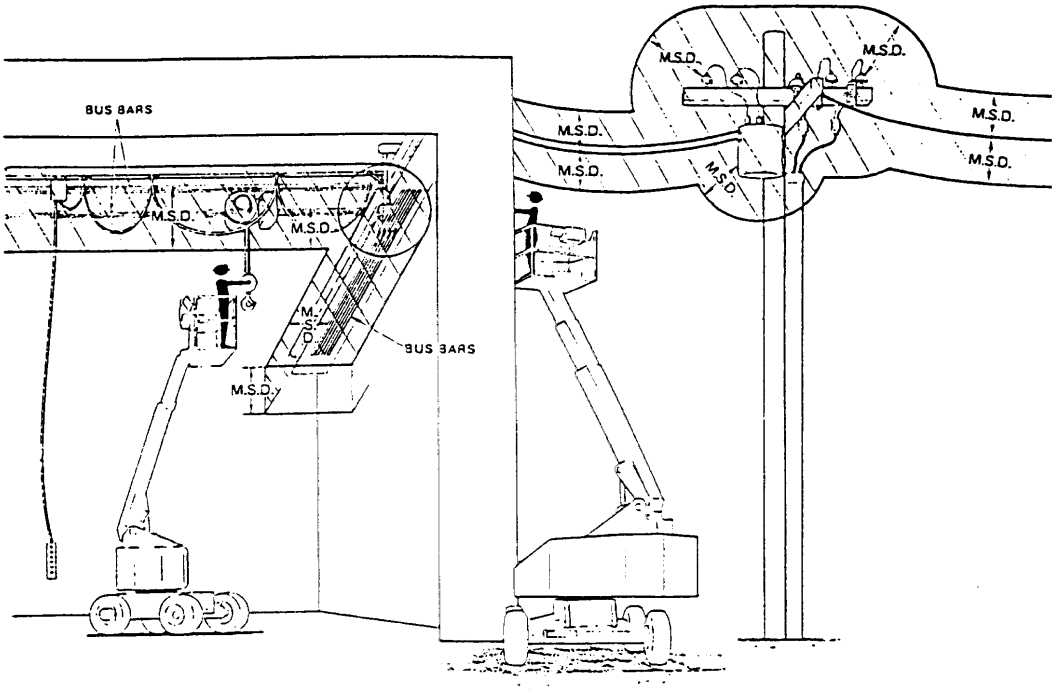

Denotes prohibited zone

Danger: - Do not allow machine personnel or conductive materials inside prohibited zone.

- Maintain M.S.A.D. from all energized lines and parts as well as those shown.

- Assume all electrical parts and wires are energized unless known otherwise.

Caution: - Diagrams shown are only for purposes of illustrating M.S.A.D. work positions, not all work positions.

The most important chapter in this manual is "Safety" chapter 1. Take time, now, to study it closely. The information in chapter 1, might save your life or prevent serious injury.

■ Signs

The following three conventions are used throughout this manual.

1. Danger sign

⚠ DANGER

means: Attention! Become alert! Your safety is involved.

2. Caution sign

⚠ CAUTION

means one of two things: (1) an action, about to be performed, is potentially hazardous and might result in minor personal injury if not done correctly, or (2) an action, about to be performed, can harm the Snorkelift if not done correctly.

3. Note sign

——— NOTE ———

means: The information following is to assist you in either the proper steps to take for an action or as additional information concerning your present situation, but does not indicate a dangerous condition to either you or the Snorkelift.

■ Qualified Operators

The Snorkelift aerial platform has built in safety features and has been factory tested for compliance with Snorkel specifications and industry standards. However, any personnel lifting device can be potentially dangerous in the hands of untrained or careless operators.

Training is vitally important and **MUST** be done under the direction of a QUALIFIED person. You must display proficiency in knowledge and actual operation of the Snorkelift.

Before operation of the Snorkelift you must read and understand the operating instructions in this manual as well as the decals, warnings, and instructions on the machine itself.

Before operating the Snorkelift you must be AUTHORIZED by the person in charge to do so.

■ Operation Rules

The following rules will help ensure the safety of personnel and help prevent needless downtime because of damaged equipment.

1. Only TRAINED and AUTHORIZED operators shall be permitted to operate the equipment.
2. All manufacturer's operating instructions and safety rules and all employers' safety rules and all OSHA and other government safety rules must be strictly adhered to.
3. Repairs and adjustments shall be made only by QUALIFIED TRAINED maintenance personnel.
4. No modification shall be made to the equipment without prior written consent of the Snorkel Engineering Department.
5. You must make a pre-start inspection of the Snorkelift at the beginning of each shift. A malfunctioning machine must not be used.
6. You must make an inspection of the work place to locate possible hazards before operating the Snorkelift.

⚠ DANGER

DO NOT operate this equipment unless you are TRAINED and AUTHORIZED and have read and thoroughly understand all of the information given in this Operator's Manual and on all DANGER and CAUTION signs on the machine. Misuse of this machine can result in **DEATH** or **SERIOUS INJURY**.

■ Maintenance

Every person who maintains, inspects, tests, or repairs these machines, and every person supervising any of these functions, **MUST** be properly trained.

This Operator's Manual provides a daily inspection procedure that will help you keep your Snorkelift in good operating condition. **DO NOT** perform other maintenance unless you are a TRAINED mechanic, QUALIFIED to work on the Snorkelift. Call QUALIFIED maintenance personnel if you find problems or malfunctions.

DO NOT modify this machine without written approval from the Engineering Department of Snorkel.

Information contained in this manual concerns only current Snorkelift's, and the right is reserved to make changes at any time without obligation.

https://truckmanualshub.com/

■ Responsibilities of Parties

It is imperative that all owners and users of the Snorkelift read, understand, and conform to all applicable regulations. Ultimate compliance to OSHA regulations is the responsibility of the employer using the equipment.

⚠ DANGER

ANSI Standard A92.5-1992 clearly identifies requirements of all parties who might be involved with Boom-Supported Elevating Work Platforms.

A reprint of the “Manual of Responsibilities for Dealers, Owners, Users, Operators, Lessors and Lessees of ANSI/SIA A92.5-1992 Boom Supported Elevating Work Platforms” is available from Snorkel dealers or from the factory upon request.

Copies are also available from the Scaffold Industry Association, Inc., 14039 Sherman Way, Van Nuys, CA 91405-2599.

■ OSHA, ANSI and CSA Standards

The Snorkelift is a boom-supported elevating work platform built to conform to the following standards:

OSHA Paragraph 1910.67 Title 29, C.F.R.
Vehicle-Mounted Elevating and Rotating Work Platforms - Labor.

OSHA Paragraph 1926.556 Title 29, C.F.R.
Aerial Lifts - Construction.

ANSI Standard A92.5-1992
Boom-Supported Elevating Work Platforms.

CSA Standard CAN 3-B354.4-M82
Boom-type Elevating Work Platforms.

■ California Proposition 65 Warning

The state of California requires that all equipment used within its boundaries shall have the following warning noted in the Operator’s Manual.

CALIFORNIA

Proposition 65 Warning

Diesel engine exhaust and some of its constituents are known to the State of California to cause cancer, birth defects, and other reproductive harm.

■ Options

The use of optional equipment is discussed in the “Options” chapter 11.

The options you will find discussed there are:

1. AC generator.
2. Air line to platform.
3. Motion warning alarms.
4. Battery (extra).
5. Cold weather start kit.
6. Dual fuel.
7. Operator horn.
8. Flashing lights.
9. Platform work lights.
10. LPS rating.
11. Sandblast protection kit.
12. Spark arrestor.
13. Platform swinging gate.
14. Optional tires.
15. Tow kit.
16. 4-wheel drive functions.

■ Additional Information

For additional information contact your local dealer or Snorkel at:

Snorkel International, Inc.
P.O. Box 1160
St. Joseph, MO 64502-1160 USA
816-364-0317

Electrical Hazard

Electrical Hazard Warning i
Minimum Safe Approach Distance ii
Table 1 - (M.S.A.D.). ii
Figure 3 - (M.S.A.D.) ii

Introduction

Signs. iii
Qualified Operators iii
Operation Rules iii
Maintenance. iii
Responsibilities of Parties iv
OSHA, ANSI and CSA Standards iv
California Proposition 65 Warning iv
Options. iv
Additional Information iv

1. Safety

Safe Operation. 1-1
Pre-Start Inspection 1-1
Work Place Inspection and Practices 1-1
Electrocution 1-2
Tipover and Falling Hazards 1-2
Crushing 1-2
General Safety Precautions. 1-2
Personnel Precautions 1-2
Operator General Precautions 1-2
Mounting and Dismounting Precautions 1-3
Starting and Stopping Precautions 1-3
Operating Precautions 1-3
Operator Maintenance Precautions 1-3
Fuel Handling Precautions 1-3
Safety Placards and Decals 1-3
Safety Placards and Decals Location 1-4

2. Safety Devices

Safety Device Information 2-1
Alarms 2-1
Start-Up Alarm 2-1
Engine Shut-Off Alarm 2-2
Alternator Not Charging Alarm 2-2
Axle Unlocked Alarm. 2-2
Tilt Alarm 2-3
All Motion Alarm 2-3
Descending Boom Alarm 2-3
Drive Motion Alarm 2-3
Other Safety Devices. 2-3
Battery. 2-3
Emergency Stop Switches 2-4
At Ground Control Box 2-4
At Platform Control Box. 2-4
Flashing Lights 2-4
Foam Filled Tires. 2-5
Platform Foot Switch 2-5
Lanyard Anchor Points 2-5
Platform Guardrails 2-5
Ground Fault Circuit Interrupt 2-6
Platform Gravity Gate 2-6
Ground Operation Switch 2-7
Operator Horn 2-7
Level Sensor 2-7
Platform Swinging Gate 2-7
Platform Work Lights. 2-8
Tipover Hazard Light. 2-8

3. Specifications

General Specifications. 3-1
Engine Oil Charts 3-2
Engine Data. 3-2
Overall Dimensions - ATB 42. 3-3
Working Envelope - ATB 42. 3-4
Overall Dimensions - ATB 50. 3-5
Working Envelope - ATB 50. 3-6
Nomenclature and Serial Numbers 3-7
Right Side View Of Machine 3-7
Booms Identification 3-7
Left Side View Of Machine 3-8
Serial Number Location. 3-8

https://truckmanualshub.com/

Table of Contents

4. Gauges

Ammeter 4-1
Engine Coolant 4-1
Engine Oil 4-1
Gas Engine 4-1
Diesel Engine 4-1
Engine Oil Dipstick 4-2
Filter Minder. 4-2
Filter Minder Indicators 4-2
Fuel 4-2
LPG (Liquefied Petroleum Gas) 4-3
Hour Meter. 4-3
Hydraulic Oil Filter 4-3
Hydraulic Oil Level. 4-4
Hydraulic Oil Temperature 4-4
Temperature. 4-4

5. Automatic Shut-Offs and Circuit Breakers

Automatic Shut-Offs 5-1
Engine Temperature 5-1
Engine Oil Pressure 5-1
Circuit Breakers 5-2

6. Controls

Controls Description 6-1
Controls and Controls Decals Locations 6-1
Ground Control Box. 6-2
Ground Control Box Controls 6-3
Platform Control Box 6-4
Platform Control Box Controls. 6-5
Platform Foot Switch 6-6
Battery Switch 6-6

7. Daily Inspection and Maintenance

Daily Inspection and Maintenance Table 7-1
Engine Fuel Level 7-2
Fuel Tank Cap 7-2
Engine Oil Level. 7-2
Gasoline Engine 7-2
Diesel Engine 7-3
Fuel Leaks 7-3
Gasoline Engine 7-3
Diesel Engine 7-3
Engine Coolant Level. 7-3
Wiring Harnesses 7-4
Battery Terminals. 7-4
Battery Fluid Level. 7-5
Hydraulic Oil Level. 7-5
Hydraulic Oil Leaks 7-5
Tires. 7-6
Bolts and Fasteners. 7-6
Structural Damage and Welds. 7-7
Lanyard Anchor Points 7-8
Platform Gravity Gate 7-8
Swinging Gate 7-8
Platform Guardrails 7-8
Flashing Lights 7-9
Air Filter 7-9
Charging System 7-9
Ground Control Switches and Alarms 7-9
Level Sensor 7-10
Emergency Power 7-10
Platform Box Switches and Alarms 7-11
Operator Horn 7-11
Motion Warning Alarm. 7-11
Ground Fault Circuit Interrupt 7-11
Platform Work Lights 7-12
Slide Pads (ATB 50 Only) 7-12
Axle Unlocked Alarm 7-13
Placards and Decals 7-14
Standard Placards and Decals 7-14
Optional Placards and Decals. 7-14
Inspection Drawing 7-15

https://truckmanualshub.com/

8. Operation

Operating Procedures 8-1
Control Stations 8-1
Emergency Stopping 8-1
Operation Considerations 8-2
Starting From Ground Control Box 8-2
Starting From Platform Control Box. 8-4
Moving The Platform 8-5
From Ground Control Box 8-6
From Platform Control Box 8-6
Driving the ATB 42/50 8-7
Forward and Reverse Drive. 8-7
Steering the ATB 42/50 8-7
Steer Left and Right 8-7
4-Wheel Steer 8-7
4-Wheel Steer With Crab Steer. 8-8
Electrical Outlets (GFCI) at Platform 8-8
AC Generator 8-9
Securing for Day 8-9

9. Emergency Operation

Emergency Operation Procedures 9-1
Operation From Platform Control Box. 9-1
Operation From Ground Control Box 9-2

10. Stowing and Transporting

Stowing 10-1
To Lock the ATB 42/50: 10-1
Transporting. 10-1
Trailering 10-1
Securing to a Transport Vehicle 10-2
Towing 10-4
Lifting 10-4

11. Options

AC Generator. 11-1
Air Line To Platform 11-1
Alarms 11-1
Extra Battery 11-2
Cold Weather Start Kit. 11-2
Dual Fuel 11-2
Operator Horn 11-2
Lights 11-2
LPS Rating 11-2
Sandblast Protection Kit 11-2
Spark Arrestor 11-3
Platform Swinging Gate. 11-3
Tires. 11-3
Highway or Bar Lug. 11-3
Flotation Tires 11-3
Foam Filled Tires. 11-4
Large Tires 11-4
Tow Kit 11-4
Towing Procedures 11-4
4-Wheel Functions. 11-5
4-Wheel Drive 11-5
4-Wheel Steer 11-5
4-Wheel Steer With Crab Steer. 11-5

Chapter 12. Troubleshooting

Troubleshooting Chart 12-1

■ Safe Operation

The following safety information is vitally important for safe operation of the ATB 42/50. Failure to follow these instructions can result in personal injury or **DEATH**.

❑ Pre-Start Inspection

At the start of each work shift, the ATB 42/50 shall be given a visual inspection and function test. See the “Daily Inspection and Maintenance” chapter 7, in this manual for a list of items to inspect and test.

⚠CAUTION

DO NOT operate the ATB 42/50 unless you are trained and authorized, understand the operation characteristics of the ATB 42/50, and have inspected and tested all functions to be sure they are in proper working order.

❑ Work Place Inspection and Practices

Do not use the ATB 42/50 as a ground for welding. Ground to the work piece.

Before the ATB 42/50 is used, and during use, check the area in which the ATB 42/50 is to be used for possible hazards such as, but not limited to:

1. Drop-offs or holes.
2. Side slopes.
3. Bumps and floor obstructions.
4. Debris.
5. Overhead obstructions and electrical conductors.
6. Hazardous locations.
7. Inadequate surface and support to withstand all load forces imposed by the aerial platform in all operating configurations.
8. Wind and weather conditions.
9. Presence of unauthorized persons.
10. Other possible unsafe conditions.

Before the ATB 42/50 is used, determine the hazard classification of any particular atmosphere or location according to ANSI/NFPA 505-1987.

Any ATB 42/50 operated in a hazardous location must be approved and of the type required by ANSI/NFPA 505-1987.

A recommended safety practice is to have personnel that are trained in the operation of the emergency controls working in the immediate area of the ATB 42/50 to assist the platform operator in the event of an emergency.

When moving the platform, check the clearance around the ATB 42/50 to avoid contact with structures or other hazards. Always look in the direction of motion.

Keep ground personnel from under the platform when the platform is raised.

Secure all accessories, containers, tools, and other materials in the platform to prevent them from accidentally falling or being kicked off the platform.

DO NOT engage in any form of “horseplay” or “stunt driving” while operating the ATB 42/50.

DO NOT permit riders on the machine anyplace other than on the platform.

Remove all loose objects stored in or on the machine, particularly in the platform. Remove all objects which do not belong in or on the machine.

When other moving equipment is in the area, take special precautions to comply with local regulations regarding warnings.

Never steady the platform by positioning it against another platform.

DO NOT operate an ATB 42/50 that is not functioning properly, or has been damaged, until the machine has been repaired by a qualified maintenance person.

DO NOT operate an ATB 42/50 that does not have all its decals and placards attached and legible.

Drive the machine with care and at speeds compatible with conditions. Use extra caution when driving over rough ground, on slopes, and when turning.

Know and understand the job site traffic flow patterns and obey the flagmen, road signs, and signals.

Watch for bystanders and never allow anyone to be under, or to reach through, the machine and its equipment while operating.

Use the recommended transport device when loading the machine.

https://truckmanualshub.com/

❑ Electrocution

The ATB 42/50 is an all metal boom, NON-INSULATED, aerial work platform. **DO NOT** operate it near ELECTRICAL conductors. Regard all conductors as being energized.

DO NOT operate outside during a thunderstorm.

❑ Tipover and Falling Hazards

DO NOT operate the ATB 42/50 from a position on trucks, trailers, railway cars, floating vessels, scaffolds, or similar equipment unless the application is approved in writing by Snorkel.

If the platform or elevating assembly becomes caught, snagged, or otherwise prevented from normal motion by an adjacent structure or other obstacles such that control reversal does not free the platform, remove all personnel from the platform before attempts are made to free the platform using ground controls.

Under normal working conditions it is best not to transfer from the platform to another structure or vice versa, unless that is the safest way to do the job. Each situation must be judged separately taking the work environment into account. The following guidelines apply:

1. Where possible, place the work platform over a roof or walking structure to do the transfer.
2. Transfer your anchorage from one structure to another before you step across.
3. Remember, you might be departing the work platform to a structure where *personal fall arrest* is required.
4. **DO NOT** climb the rails. Use the entrance.

All platform occupants MUST wear and use fall restraint. Attach fall restraints to the platform lanyard anchor points.

DO NOT exceed the unrestricted platform capacity as indicated on the capacity placard at the entrance to the platform.

DO NOT raise the boom if the ATB 42/50 is on soft ground. Operate the boom only on a firm surface capable of withstanding all load forces imposed by the aerial platform in all operating conditions.

Do Not carry loads that extend beyond the platform guardrails without prior written consent from Snorkel.

Care shall be taken to prevent rope, electrical cords, and hoses, etc., from becoming entangled in the aerial platform.

Raise the platform only when the ATB 42/50 is on level ground.

Maintain a firm footing on the platform floor. Climbing on the guardrails is prohibited.

DO NOT use ladders, planks, or other devices to extend or increase your work position from the platform.

DO NOT jerk the controls. Move the controls slowly and deliberately to avoid jerky and erratic operation. Always stop the controls in the neutral, off, position before going in the opposite direction.

DO NOT use the boom for any purpose other than to position personnel, their tools, and materials.

DO NOT use the ATB 42/50 as a crane, hoist, or jack.

DO NOT operate the ATB 42/50 in winds, or wind gusts, of 28 mph (45 km/h) or more.

DO NOT add anything to the ATB 42/50 that will increase the wind loading (banners, flags, etc.).

❑ Crushing

Always look in the direction of travel. Avoid overhead obstructions.

Never cover the floor grating or otherwise obstruct your view below.

Make sure the area below the platform is free of personnel before lowering.

■ General Safety Precautions

❑ Personnel Precautions

If you encounter any suspected malfunction of the aerial platform, or any hazard or potentially unsafe condition relating to capacity, intended use, or safe operation, cease operation and seek assistance from management.

❑ Operator General Precautions

Make sure that all protective guards, cowlings, and doors are in place and secure.

Be sure the guardrail system, including the gate, is in place and secure.

https://truckmanualshub.com/

❑ Mounting and Dismounting Precautions

Use three points of support when getting on or off the platform (two hands and one foot or a similar set of points). Keep the platform clean.

DO NOT jump off the machine.

DO NOT dismount while the machine is in motion.

❑ Starting and Stopping Precautions

DO NOT start until all personnel are clearly away from the machine.

Before leaving the operator's station, place the machine in the stowed position.

When leaving the machine parked or unattended, remove the starter key from the **Master Key Switch**, set the **Battery** switch to OFF, then lock the **Battery** switch.

❑ Operating Precautions

DO NOT modify the ATB 42/50 in any way.

When parts or components are replaced, they shall be identical or equivalent to original Snorkel parts or components.

DO NOT override any of the safety features of the ATB 42/50.

Limit travel speeds according to conditions. Take into account: grade, surface, congestion, visibility, side slope, location of personnel, and other hazards.

❑ Operator Maintenance Precautions

Use extreme caution when removing radiator caps. Park the machine and let it cool down before opening a pressurized compartment.

⚠CAUTION

DO NOT use your hand to search for hydraulic oil leaks. High pressure hydraulic oil can easily cut and penetrate your skin — a very serious injury that requires immediate attention by a medical specialist trained in that type of injury. Use a piece of cardboard or wood to search for hydraulic oil leaks.

DO NOT attempt repairs unless you are trained. Refer to manuals and experienced repair personnel for help.

❑ Fuel Handling Precautions

DO NOT smoke or permit open flames while fueling or near fueling operations.

Never remove the fuel cap or refuel a gasoline engine while the engine is running or hot. Never allow fuel to spill on hot machine components.

Maintain control of the fuel filler nozzle when filling the tank.

DO NOT fill the fuel tank to capacity. Allow room for expansion.

Clean up spilled fuel immediately.

Tighten the fuel tank cap securely. If the fuel cap is lost, replace it with an approved cap from Snorkel. Use of a non-approved cap without proper venting may result in pressurization of the tank.

Never use fuel for cleaning purposes.

For diesel engines, use the correct fuel grade for the operating season.

■ Safety Placards and Decals

There are several safety placards and decals on the ATB 42/50. Their locations and descriptions are shown in this section. Take time to study them.

⚠CAUTION

Be sure that all the safety placards and decals on the ATB 42/50 are legible. Clean or replace them if you cannot read the words or see the pictures. Clean with soap & water and a soft cloth. Do not use solvents.

You MUST replace a placard or decal if it is damaged, missing, or cannot be read. If it is on a part that is replaced, make sure a new decal or placard is installed on the replaced part. See your Snorkel dealer for new decals and placards.

NOTE

Refer to Placards and Decals in the "Daily Inspection and Maintenance" chapter 7, for part numbers, location, and required quantities of all placards and decals.

https://truckmanualshub.com/

■ Safety Placards and Decals Location

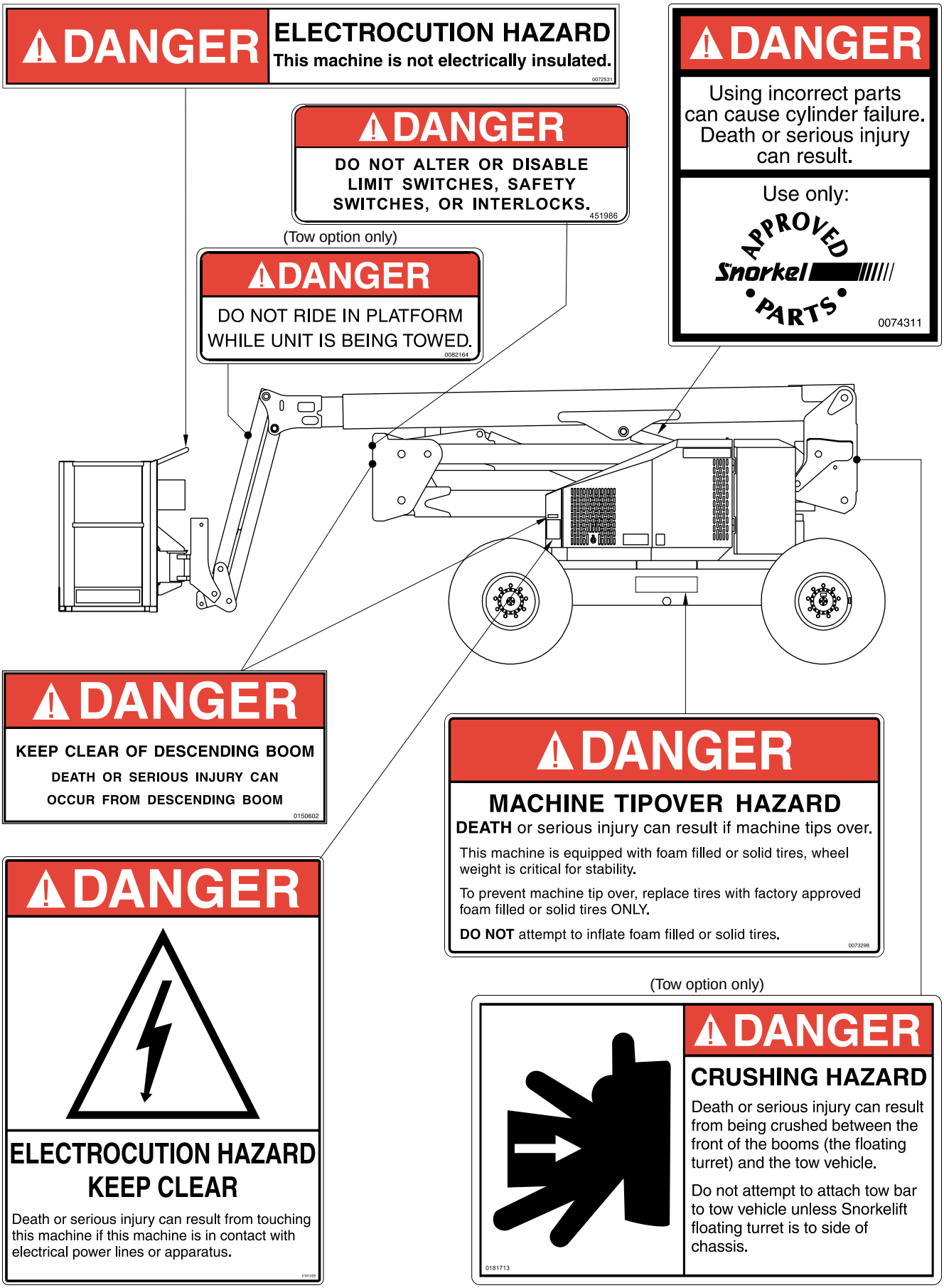

https://truckmanualshub.com/

⚠ DANGER

ROTATING ENGINE PARTS

KEEP CLEAR

SERIOUS INJURY CAN RESULT

0151410

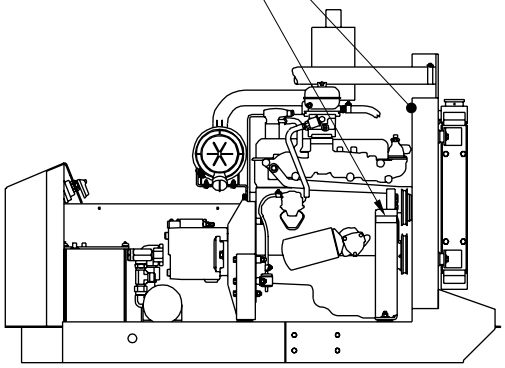

⚠ DANGER

- Perform the DAILY INSPECTION & MAINTENANCE, listed in the Operator's Manual, prior to each work shift.
- All platform occupants MUST wear fall restraint attached to lanyard anchor points provided.

0181654

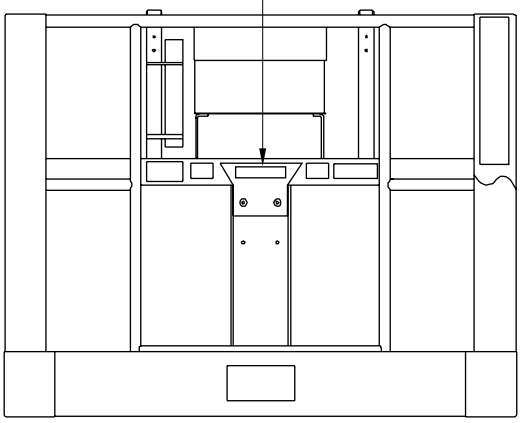

PLATFORM

(LPG option only)

⚠ CAUTION

THIS MACHINE IS EQUIPPED WITH

LIQUID WITHDRAWAL

L.P. GAS SYSTEM

- LIQUID OR VAPOR WITHDRAWAL L.P.-GAS CYLINDER MAY BE USED.
- ALWAYS KEEP L.P.-GAS CYLINDER SHUT-OFF VALVE CLOSED WHEN NOT USING L.P.-GAS SYSTEM.

0081441

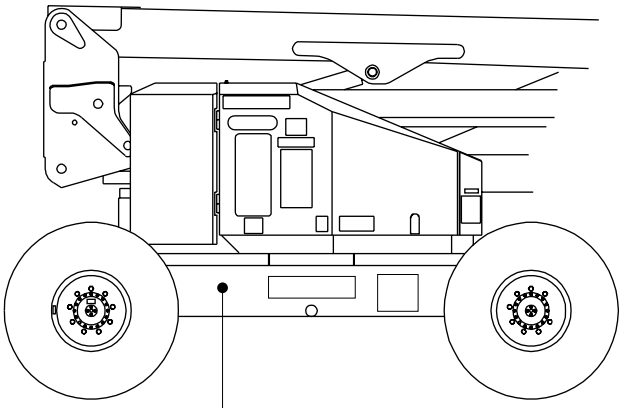

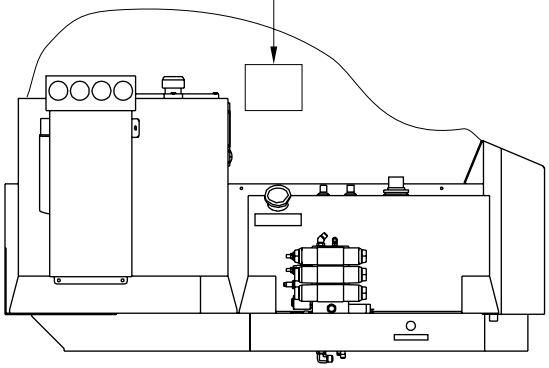

(Tow option only)

⚠ DANGER

A "RUNAWAY" SNORKELIFT CAN CAUSE **DEATH** OR SERIOUS INJURY. CHECK WITH TOW VEHICLE MANUFACTURER OR MANUFACTURER'S LITERATURE TO SEE THAT TOW VEHICLE CAN SAFELY TOW AND STOP TOTAL WEIGHT OF SNORKELIFT ON THE STEEPEST GRADE YOU WILL ENCOUNTER. REMEMBER, SNORKELIFT DOES NOT HAVE BRAKES WHEN IT IS TOWED.

BE CERTAIN TOW VEHICLE BRAKES ARE SET AND TOW BAR IS CONNECTED TO BOTH TOW VEHICLE AND SNORKELIFT BEFORE YOU TURN SNORKELIFT DISCONNECT-PLATES OVER.

AT THE END OF THE TOW, BEFORE YOU DISCONNECT THE SNORKELIFT FROM THE TOWING VEHICLE, TURN THE DISCONNECT-PLATES BACK OVER SO THE NIPPLES ARE OUT. THAT WILL PREVENT THE MACHINE FROM ROLLING WHEN YOU DISCONNECT IT FROM THE TOW VEHICLE.

DO NOT EXCEED 10 MPH (16 KM/HR) WHEN TOWING. AVOID SHARP TURNS.

0082160

https://truckmanualshub.com/

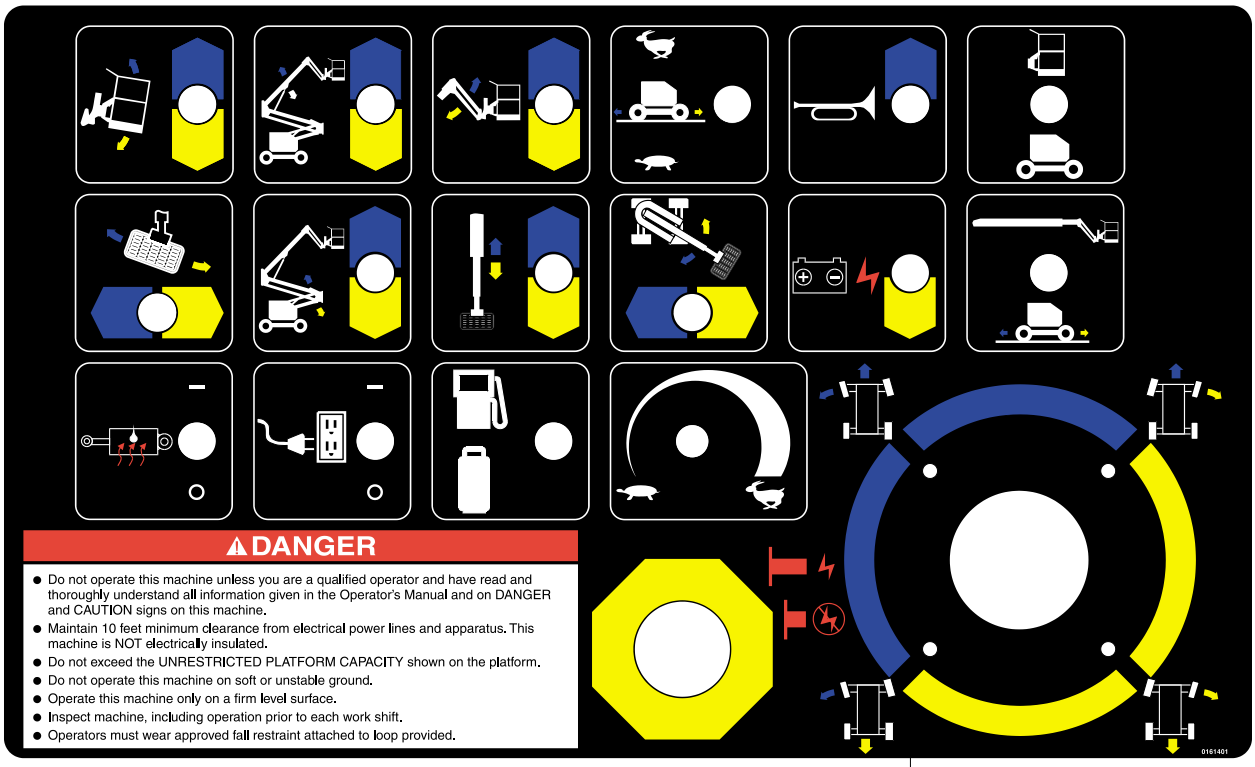

DANGER

TIP OVER HAZARD

DEATH or serious injury can result if machine tips over

If indicator light above is illuminated, the FRONT AXLE is unlocked.

To prevent tip over, move boom to stowed position and shut down machine.

Determine cause of unlock condition and repair before returning machine to service.

DO NOT elevate booms with axle unlocked.

0161937

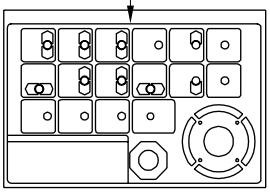

PLATFORM CONTROL BOX

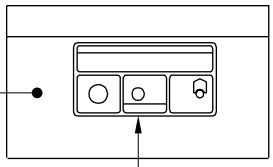

CAUTION

Move control handle slowly and deliberately to avoid jerky and erratic platform movement.

In case of emergency, depress **EMERGENCY STOP** button. Pull out to reset.

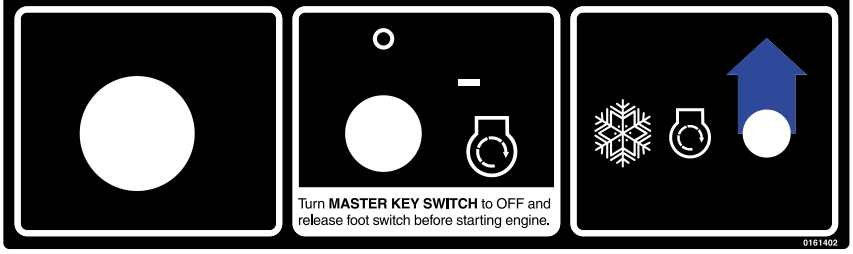

https://truckmanualshub.com/

Snorkel ST JOSEPH, MISSOURI U.S.A.

MODEL NUMBER		SERIAL NUMBER	
MONTH / YEAR OF MANUFACTURE		SLOPE SENSOR ALARM SETTING	deg
MAXIMUM MACHINE WEIGHT	lbs kg	MAXIMUM WHEEL LOAD	lbs kg
ENGINE POWERED MODELS	hp kW	BATTERY POWERED MODELS ONLY: DRIVE MOTORS	V
		BATTERIES	V Ah
MAXIMUM ALLOWABLE MANUAL FORCE (SIDE PULL)	lbs N	MAXIMUM ALLOWABLE WIND SPEED	mi/h m/s
PLATFORM SIZE	in cm	MAXIMUM PLATFORM REACH	ft m
MAXIMUM PLATFORM HEIGHT	ft m	MAXIMUM DRIVE HEIGHT	ft m

CAUTION

Do not remove any weight from this unit. Any weight added must be distributed equally on each axle. Proper stability and axle weights of this unit are based on the platform size shown above.

Axle weights with unit in the stowed - travel position.

STEER AXLE		lbs		kg
DRIVE AXLE		lbs		kg

0070901

DANGER

KEEP CLEAR OF DESCENDING BOOM

DEATH OR SERIOUS INJURY CAN OCCUR FROM DESCENDING BOOM

0150602

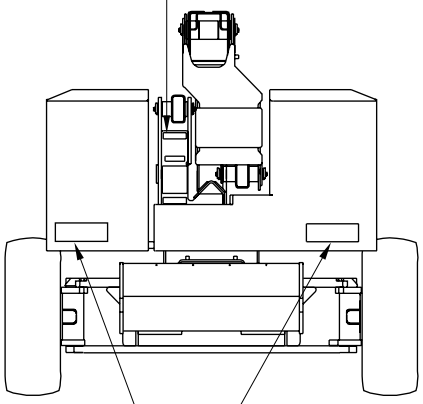

DANGER

ELECTROCUTION HAZARD

KEEP CLEAR

Death or serious injury can result from touching this machine if this machine is in contact with electrical power lines or apparatus.

0323896

DANGER

ELECTROCUTION HAZARD

THIS MACHINE IS NOT ELECTRICALLY INSULATED.

- Death or serious injury can result from contact or inadequate clearance to electrical power lines and apparatus.
- Maintain 10 feet minimum clearance from electrical power lines and apparatus.
- Allow for sway, rock, and sag.

0323899

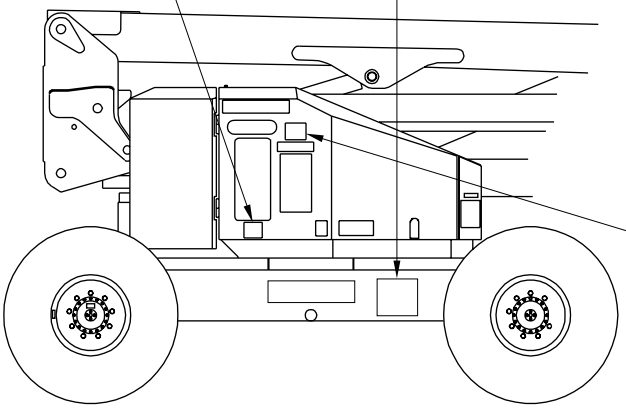

DANGER

YOU MUST NOT OPERATE THIS DEVICE UNLESS:

1. YOU HAVE BEEN TRAINED IN THE SAFE OPERATION OF THIS DEVICE AND
2. YOU KNOW AND FOLLOW THE SAFETY AND OPERATING RECOMMENDATIONS CONTAINED IN THE MANUFACTURER'S MANUALS, YOUR EMPLOYER'S WORK RULES, AND APPLICABLE GOVERNMENTAL REGULATIONS.

AN UNTRAINED OPERATOR SUBJECTS HIMSELF AND OTHERS TO DEATH OR SERIOUS INJURY.

0323897

■ Safety Device Information

For emergency operation controls and procedures, see the “Emergency Operation” chapter 9.

The devices listed in this chapter are safety devices.

They are on the ATB 42/50 to increase safety in the work place for both the operator and other people near the ATB 42/50.

⚠CAUTION

DO NOT by pass, disable, modify, or ignore any of these devices. Check them carefully at the start of each work shift to see that they are in working order (see “Daily Inspection and Maintenance” chapter 7). If any is found to be defective, remove the ATB 42/50 from service immediately until a qualified service technician can make repairs.

■ Alarms

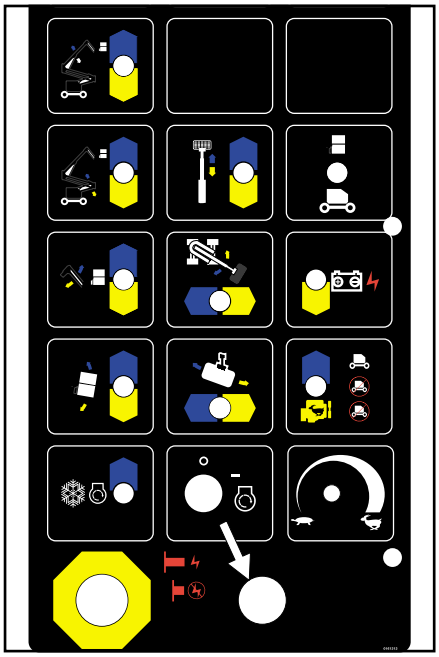

There are two buzzers on the ATB 42/50. One is located on the ground control box,

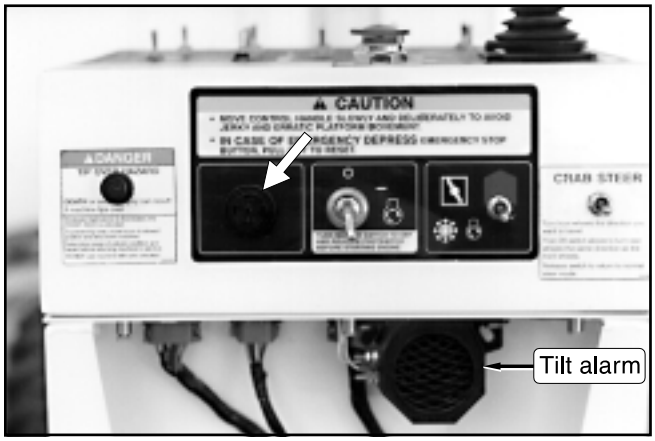

the other is located on the platform control box. The buzzers are connected in parallel, they both emit the same pattern of sound at the same time. The tilt alarm is also located on the platform control box.

The different alarm sound patterns these three devices make are shown in the table immediately below and discussed below the table.

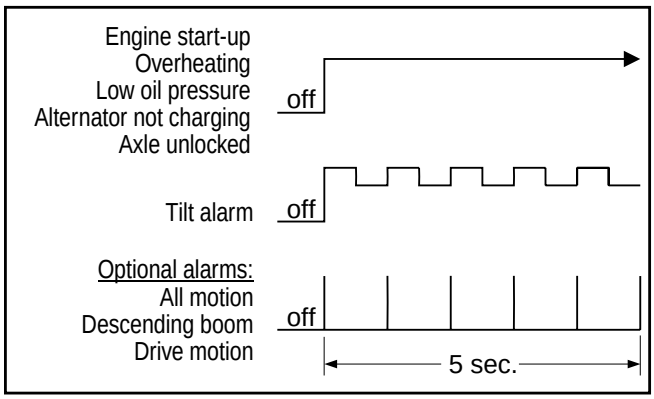

❑ Start-Up Alarm

When the **Master Key Switch** or **Anti-Restart** switch is turned ON, just prior to starting, the buzzers emit a loud continuous tone to alert others in the area that the ATB 42/50 is about to start. The tone will continue until the ATB 42/50 starts or the switch is turned OFF.

https://truckmanualshub.com/

❑ Engine Shut-Off Alarm

The engine shut-off alarm comes on when the engine is overheating or the oil pressure is low.

When the alarm sounds you should immediately lower the platform completely down then turn the engine off until the condition that caused the alarm has been corrected. See “Automatic Shut-Offs and Circuit Breakers” chapter 5 for more information.

NOTE

If the engine has automatically shut off, and will not restart, go to the “Emergency Operation” chapter 9, and use emergency operation procedures to lower the platform.

❑ Alternator Not Charging Alarm

⚠CAUTION

DO NOT continue to operate the ATB 42/50 while the alternator alarm sounds. Without charging current, the battery will discharge to the point it cannot operate Emergency Power.

If the engine alternator quits (usually because of a broken fan belt), a continuous tone alarm will automatically sound. The alarm warns you that the battery is discharging.

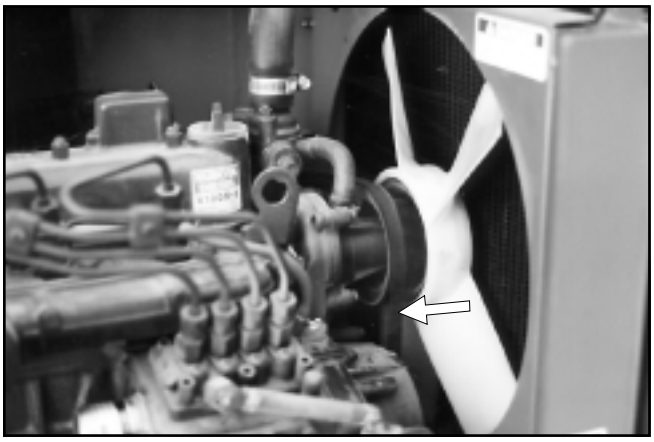

Check the alternator drive belt to see if it is broken or loose before you try to restart the engine. If the engine will not restart, refer the problem to a qualified service technician.

❑ Axle Unlocked Alarm

The front axle of the ATB 42/50 pivots so that all four wheels remain on the ground when the machine is driven with the main boom elevated less than 5° and the riser booms down. This improves traction for 4-wheel drive machines and reduces the ground pressure for all machines while they are driven between work sites.

The main boom (more than 5°) and/or riser booms should only be raised when the ATB 42/50 is on a smooth level surface. When the main boom is raised more than 5° or the riser booms are raised slightly the front axle is automatically forced to lock into position parallel to the rear axle so that the bottoms of all four tires are in the same plane. This maximizes stability of the chassis while the booms are up.

If the front axle is not locked parallel to the rear axle when the main boom is raised more than 5° or riser booms are raised, the TIP OVER HAZARD light will come on and the “axle unlocked” alarm will sound.

⚠DANGER

DO NOT raise the main boom or riser booms while the “axle unlocked” alarm is sounding.

⚠CAUTION

When the alarm sounds you should IMMEDIATELY lower the booms completely down. Drive to a slightly different position, then raise the booms again. If the alarm comes on again, take the machine out of service immediately and refer the problem to a qualified service technician.

https://truckmanualshub.com/

❑ Tilt Alarm

The tilt alarm warns the ATB 42/50 operator that the ATB 42/50 is over 5° out of level. If the tilt continues to increase, the ATB 42/50 will eventually tip over.

⚠ DANGER

To prevent **Death** or **Serious Injury**, when you hear the loud two toned (high-low-high-low...) alarm, immediately retract and lower the platform. When the platform is completely down, determine and correct the cause of the tilt before raising the platform again.

❑ All Motion Alarm

The optional all motion alarm emits a loud beeping sound anytime a platform moving switch is used or anytime the DRIVE/STEER controller is used. The alarm alerts people near the ATB 42/50 that some part of the ATB 42/50 is moving.

❑ Descending Boom Alarm

The optional descending boom alarm emits a loud beeping sound anytime the jib boom, main boom, or riser booms come DOWN. The alarm also sounds when the tip boom of the ATB 50 RETRACTS. The alarm alerts people near the ATB 42/50 that a boom is lowering.

❑ Drive Motion Alarm

The optional drive motion alarm emits a loud beeping sound anytime the **Drive/Steer** controller is in FORWARD or REVERSE. This alarm alerts people on the ground that the ATB 42/50 is traveling along the ground.

■ Other Safety Devices

❑ Battery

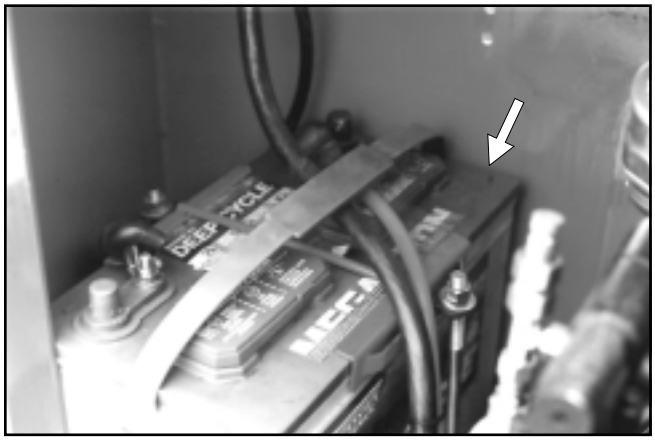

The battery in the ATB 42/50 is a safety device because it powers the emergency operating circuits. If the platform is aloft and the engine dies, battery power is the only way to lower the platform, there is no manual bleed down procedure. Thus, battery maintenance is very important. The battery should always be kept at full charge and the battery terminals kept free of corrosion.

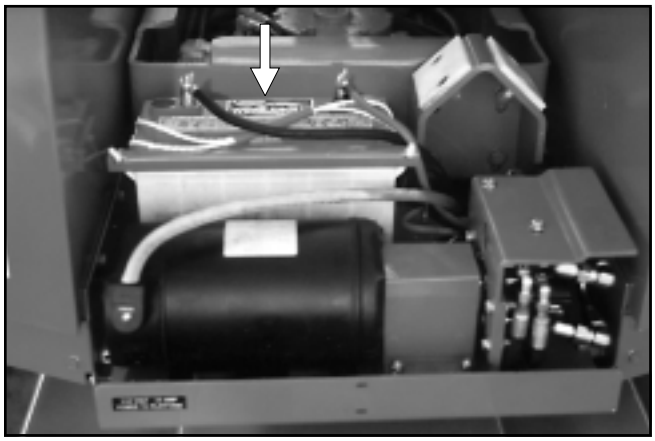

If an optional extra battery is installed, at rear of turntable, it too is a safety device. The extra battery is not connected to the standard battery. The batteries alternate use: only one battery is connected to the ATB electrical system at a time. Each time the starter motor is activated the battery used changes.

https://truckmanualshub.com/

❑ Emergency Stop Switches

❑ At Ground Control Box

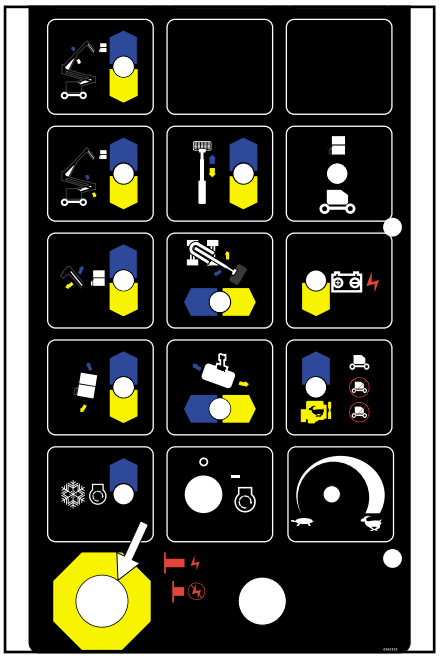

Press the large red **Emergency Stop** switch in, at any time, under any conditions, and the entire machine stops, the engine turns off, the brakes automatically set, and nothing moves.

This switch must be pulled out (on) for anything on the ATB 42/50 to work.

⚠CAUTION

The ground control box is designed to override the platform control box.

If the platform control box **Emergency Stop** switch is down (off) the ground control box can still be used to start and operate the ATB 42/50.

❑ At Platform Control Box

Press the large red **Emergency Stop** switch down (off) and the entire machine stops, the engine turns off, the brakes automatically set, and nothing moves.

This switch must be pulled to its up (on) position to control the ATB 42/50 from the platform.

❑ Flashing Lights

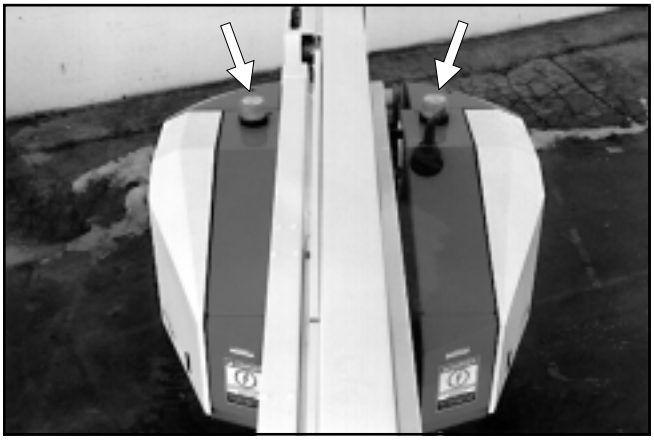

The optional flashing lights alert people that the ATB 42/50 is present. The lights flash at about one flash per second any time the **Battery**, **Emergency Stop** (at the ground), and **Master Key Switch** are all ON.

There is no ON/OFF switch for the flashing lights.

https://truckmanualshub.com/

❑ Foam Filled Tires

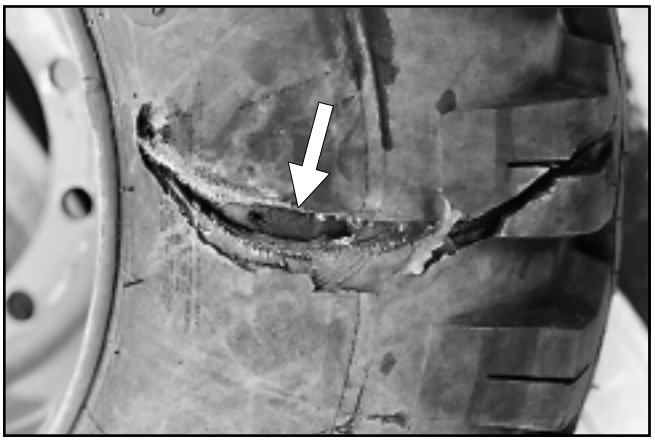

Optional foam filled tires eliminate the possibility of air leaks or blowouts which might cause a tipover. Foam filled tires are therefore a safety device.

Inspect them at the start of each work shift according to the procedures in the “Daily Inspection and Maintenance” chapter 7.

The foam filled tire shown here, shows signs of damage and therefore is not acceptable for service.

❑ Platform Foot Switch

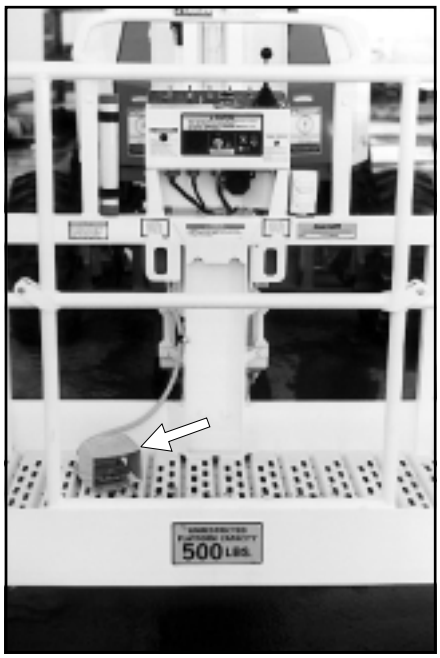

The platform foot switch prevents the platform from moving if something accidentally pushes one of the platform moving controls on the platform control box. To make the platform move you must step on the foot switch at the same time you use a platform moving control.

❑ Lanyard Anchor Points

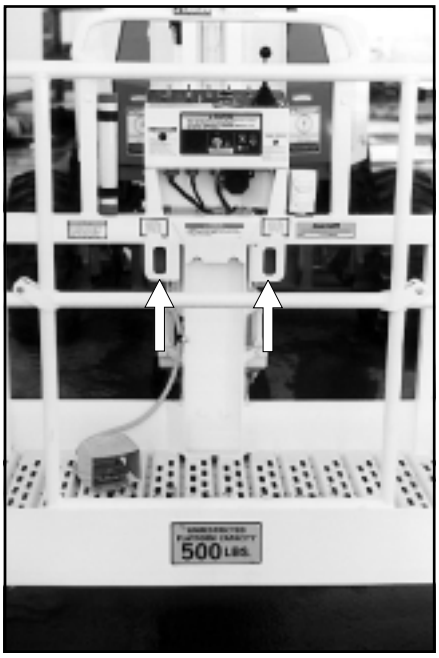

All personnel on the platform shall attach their fall restraint lanyards to one of the lanyard anchor points.

❑ Platform Guardrails

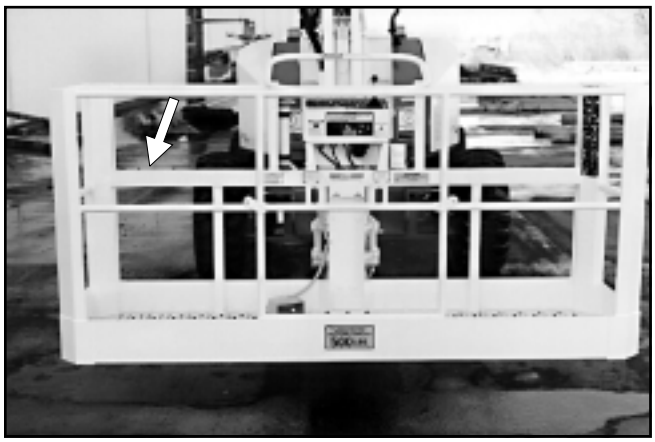

The guardrails help protect you from falling off the platform. Be sure the guardrails are properly installed and that the gravity gate or swinging gate is in place.

https://truckmanualshub.com/

❑ Ground Fault Circuit Interrupt

The ground fault circuit interrupt (GFCI) is located near the platform control box.

The GFCI protects against short circuits to ground. When there is a short to ground the GFCI shuts off power to the electrical outlets.

To use the outlet, connect the power input connector, at the rear of the turntable, to a source of 125 V AC, 15 A electrical power.

NOTE

If the ATB 42/50 has the optional AC Generator, plug the power input connector into the generator. Then, set the **AC Generator** switch, on the platform control box, to ON.

See “electrical Outlet at the Platform” in the “Operation” chapter 8, for more information about how to use the GFCI.

❑ Platform Gravity Gate

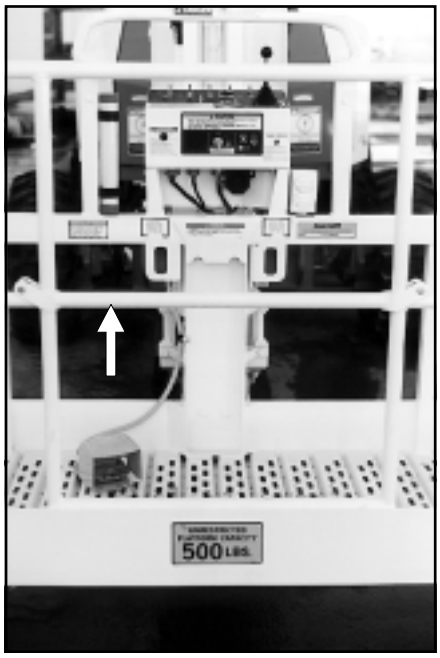

The platform gravity gate is the place in the platform guardrail system where you should enter and leave the platform.

Raise the gate and step under it onto the platform.

⚠CAUTION

Once you have entered the platform and attached your fall restraint lanyard to an anchor point, check to see that the gravity gate has fallen back into place.

https://truckmanualshub.com/

❑ Ground Operation Switch

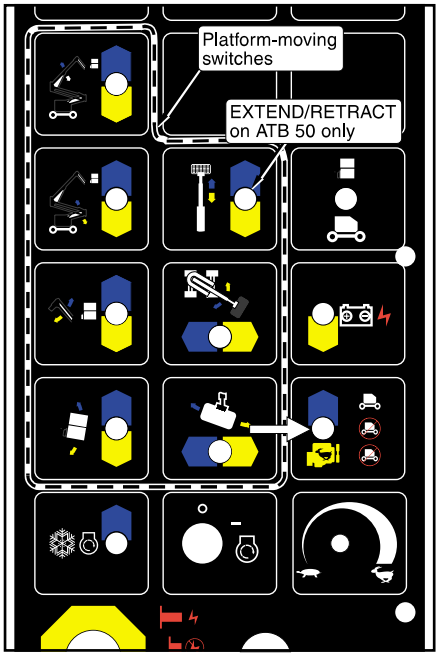

The **Ground Operation** switch prevents the platform from moving if something accidentally pushes one of the platform moving switches at the ground control box. To make the platform move you must push and hold the **Ground Operation** switch up at the same time you use a platform moving switch.

❑ Operator Horn

The optional operator **Horn** is used primarily to get the attention of people on the ground when you are working aloft. For the horn to work the **Battery** switch must be ON and the following switches, on the ground control box, must be set as indicated:

Platform/Ground Selector . . . . . PLATFORM
Emergency Stop . . . . . Pulled Out (ON)
Master Key Switch . . . . . ON

❑ Level Sensor

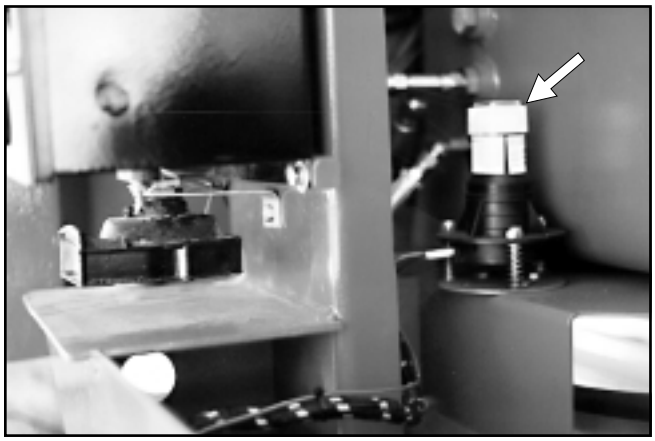

The level sensor, located behind the ground control box, detects how far out of level the turntable is.

If the turntable gets over 5° out of level and the booms are raised, the level sensor activates the tilt alarm.

❑ Platform Swinging Gate

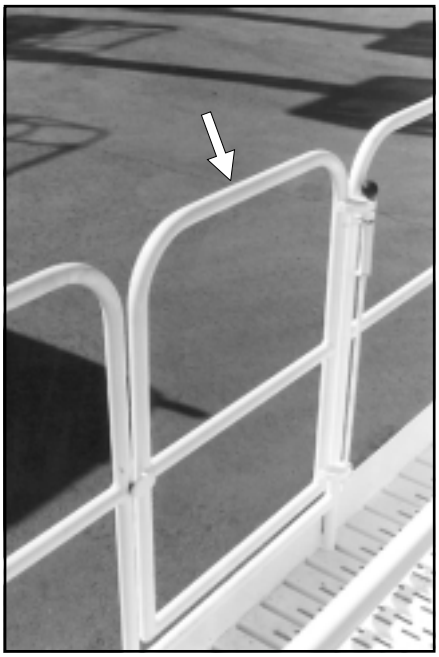

The optional platform swinging gate is designed to automatically close after you enter or leave the platform. It helps prevent people from falling off the platform.

https://truckmanualshub.com/

❑ Platform Work Lights

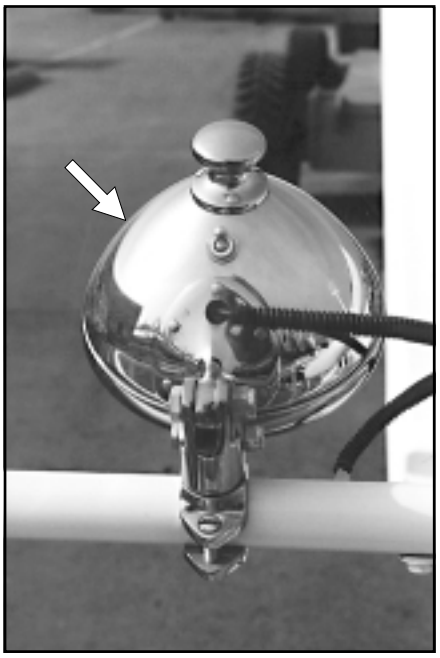

The optional platform work lights are located on top the platform guardrail. For the lights to work, the **Battery** switch must be ON and the following switches, on the ground control box, must be set as indicated:

Platform/Ground Selector . . . . . PLATFORM
Emergency Stop. . . . . Pulled Out (ON)
Master Key Switch . . . . . ON

The toggle switch on the back of a light turns it on.

⚠CAUTION

Incandescent lights draw three amperes (35 watts) each. Halogen lights draw four amperes (50 watts) each.

If you work with the lights turned on and the engine turned off, the battery can discharge to the point it will not start the engine nor run the Emergency Power hydraulic pump.

If you cannot leave the engine running while the lights are on, start and run the engine at least 15 minutes in each hour to keep the battery charged.

❑ Tipover Hazard Light

This light will come on when the front axle should be locked but is not. The axle unlocked alarm will sound when this light is on. When this light comes on you should immediately completely lower the booms.

Drive the ATB to a slightly different position then raise the booms again. If the alarm comes on, take the machine out of service IMMEDIATELY and refer the problem to a qualified service technician. For more information about the axle lock, see “Axle Unlocked Alarm” at the start of this chapter.

The Snorkelift ATB 42/50 is a boom supported elevating work platform built to conform to all applicable OSHA, ANSI or CSA standards as previously outlined.

■ General Specifications

Working height, nominal
- 42 . . . . . 48.2 ft (14.81 m)
- 50 . . . . . 56.0 ft (17.07 m)

Platform height, maximum
- 42 . . . . . 42.6 ft (12.98 m)
- 50 . . . . . 50.2 ft (15.30 m)

Platform reach, maximum
- 42 . . . . . 20.1 ft (6.13 m)
- 50 . . . . . 28.0 ft (8.53 m)

Length, overall - booms down and retracted
- 42 . . . . . 20.7 ft (6.30 m)
- 50 . . . . . 21.0 ft (6.40 m)

Width, overall . . . . . 90 in (2.29 m)

Height
- (booms down & retracted) . . . . . 83 in (2.11 m)

Wheelbase . . . . . 96 in (2.44 m)

Ground clearance . . . . . 7 in (17.8 cm)

Tailswing, stowed
- 42 . . . . . 16 in (0.41 m)
- 50 . . . . . 15 in (0.38 m)

Weight,approximate
- 42. . . . . 13,600 lbs (6,170 kg)
- 50. . . . . 15,280 lbs (6,930 kg)

Wheel loading, single - maximum
- 42. . . . . 7,050 lbs (3,200 kg)
- 50. . . . . 7,890 lbs (3,580 kg)

Ground pressure, standard tires - maximum
- 42 . . . . . 68 psi (469 kPa)
- 50 . . . . . 77 psi (529 kPa)

Gradeability
- 2-wheel drive 25%
- 4-wheel drive 40%

Platform size:
- Standard . . . . . 30 x 72 in (76 x 183 cm)
- Optional . . . . . 30 x 96 in (76 x 244 cm)

Unrestricted rated work load
(total weight of personnel, tools, and equipment that platform is designed to carry above its floor):
- Load weight. . . . . 500 lbs (227 kg)
- Occupants . . . . . 2 people

Travel speeds
- Booms down and retracted. . . 3.5 mph (5.6 km/h)
- Booms up and/or extended. . . 0.5 mph (0.8 km/h)

Turning radius
- 2-wheel steer, inside . . . . . 89 in (2.26 m)
- 2-wheel steer, outside . . . . . 205 in (5.21 m)
- 4-wheel steer, inside . . . . . 45 in (1.14 m)
- 4-wheel steer, outside . . . . . 124 in (3.15 m)

Tires . . . . . 12 x 16.5 (30.5 x 42), 8 ply

Electrical system . . . 12 V dc (neg. chassis ground)

Environmental operating ranges:
ambient air temperature
- Fahrenheit . . . . . 0°F to +110°F
- Centigrade . . . . . -18°C to +43°C

Wind speed
- (maximum gust or steady) . . 28 mph (45 km/hr)

Fuel tank capacity
- Gas or diesel . . . . . 15 gal USA (56.8 liters)
- Optional LPG . . . . . 43.5 lbs USA (20 kg)

Hydraulic oil
- Pressure, maximum - 42. . 3,200 psi (22,080 kPa)
- Pressure, maximum - 50. . 3,500 psi (24,150 kPa)
- Tank capacity . . . . . 16.5 gal USA (62.5 liters)
- Maximum temperature at tank . . . . 200°F (93°C)

Hydraulic oil type and grade recommended
- Above 10°F (-13°C). . . . . Mobil DTE-13M
- Below 10°F (-13°C) . . . . . Mobil DTE-11M

Boom times, (complete range of movement):

Turntable Swing, 360°
- CW or CCW . . . . . 60 - 70 seconds

Platform Rotation, 180°
- CW or CCW . . . . . 15 - 20 seconds

Main Boom Elevation, +75°/-1° to horizontal
- UP: . . . . . 30 - 35 seconds
- DOWN: . . . . . 20 - 25 seconds

Riser Boom Elevation
- UP: . . . . . 55 - 60 seconds
- DOWN: . . . . . 55 - 60 seconds

Jib Boom, +45°/-75° to horizontal
- UP:. . . . . 25 - 30 seconds
- DOWN:. . . . . 15 - 20 seconds

https://truckmanualshub.com/

3. Specifications

■ Engine Data

Engine Make	Ford (gasoline)	Ford (LPG)	Kubota (diesel)
Model	VSG 411 or VSG 413		V1305
Fuel	gasoline	LPG (liquefied petroleum gas)	diesel
Fuel Grade	Unleaded 87 octane (motor method) **Do not use gasoline blended with methyl alcohol.**	HD5 Gas Processors Association Standard 2140. Category: special duty propane	Diesel fuel No. 2-D (ASTM D975)
Coolant	50% water + 50% ethylene glycol		
Operating Temperature	160°F - 190°F (71°C - 88°C)		180°F - 205°F (82°C - 96°C)
Oil Capacity	3.5 qt USA (3.25 liters)		1.59 gal USA (6.0 liters)
Oil Grade	API: SG, SG/CC, or SG/CD		API: CD/CE
Oil Weight	see chart below		
Running Time (one tank fuel)	A full tank of gasoline, or diesel, will last an entire eight hour shift, under normal working conditions. It normally takes two tanks of LPG per eight hour shift.		

■ Engine Oil Charts

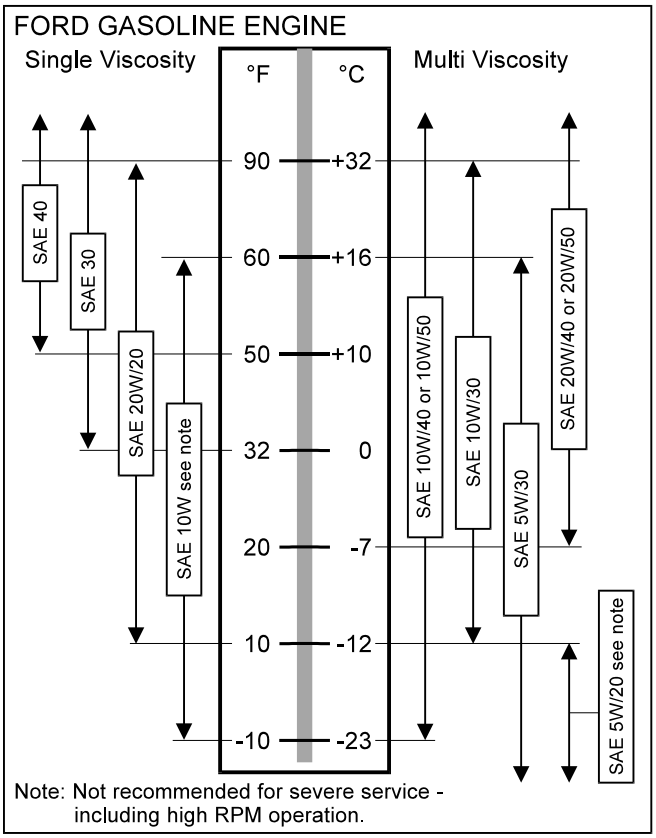

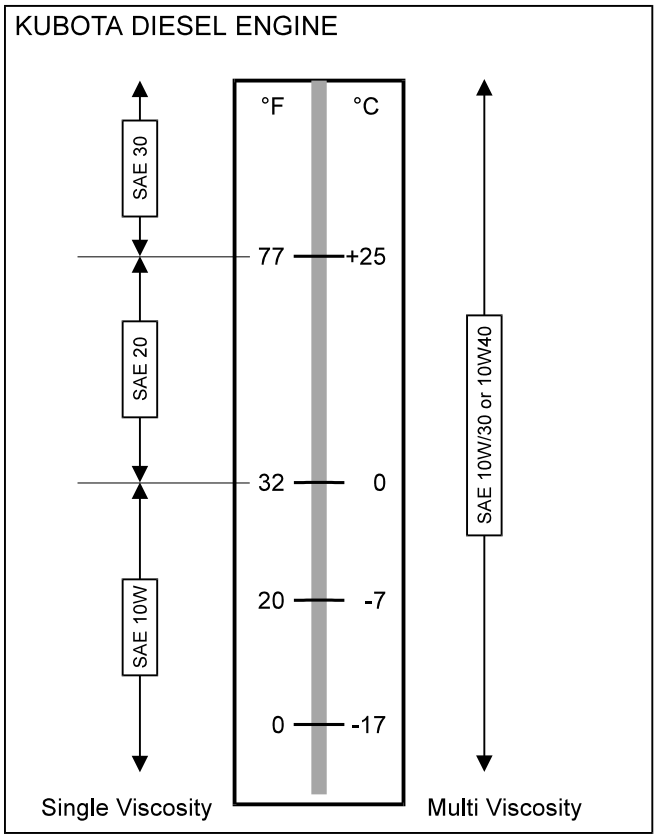

https://truckmanualshub.com/

■ Overall Dimensions - ATB 42

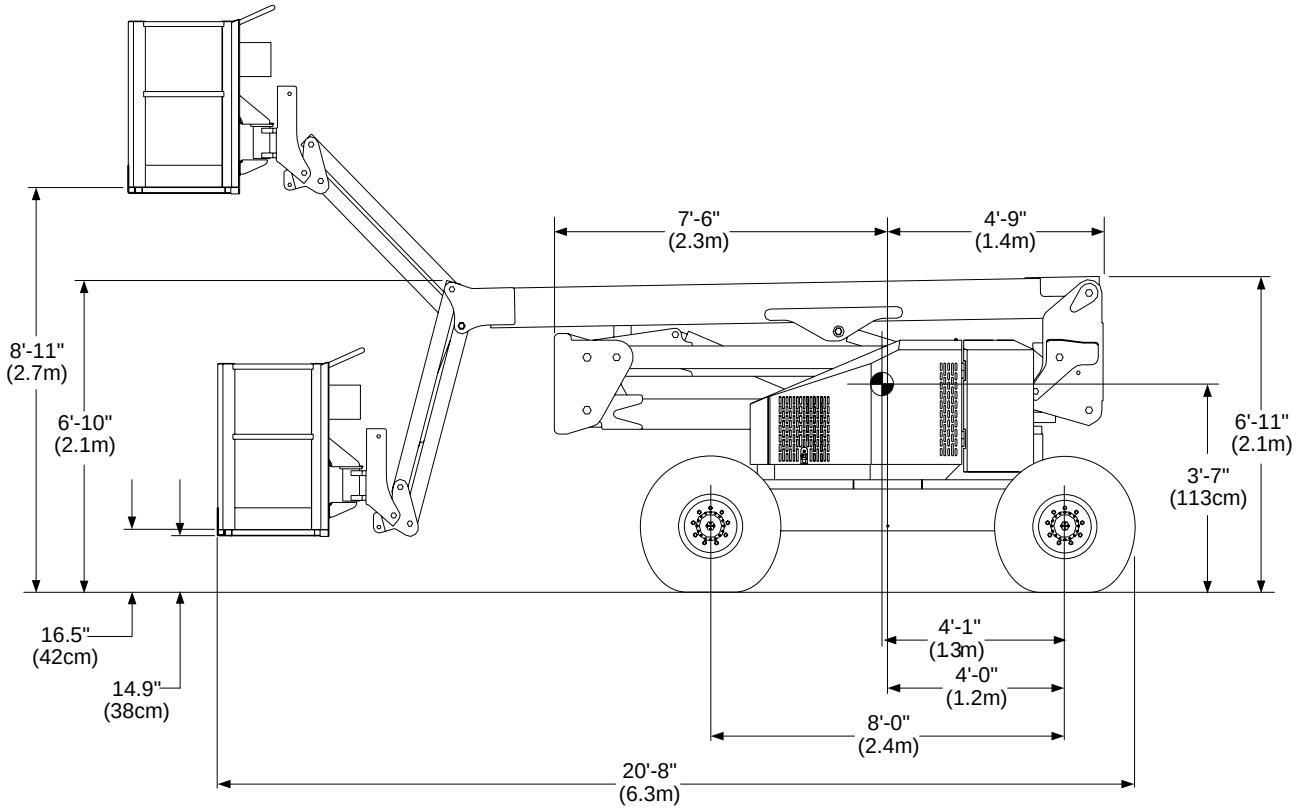

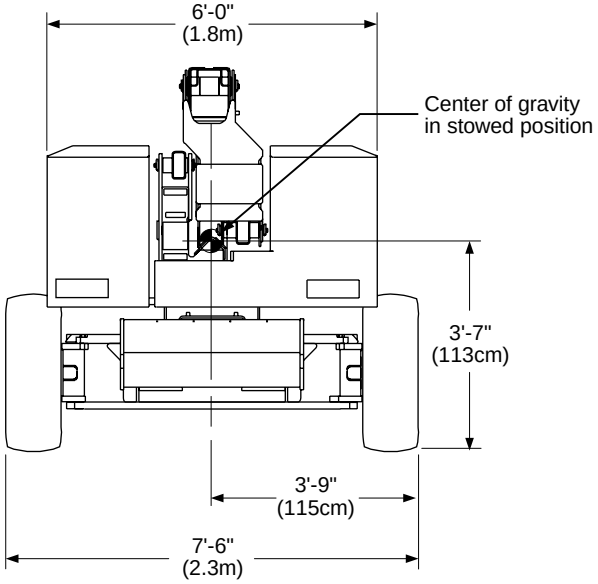

https://truckmanualshub.com/

■ Working Envelope - ATB 42

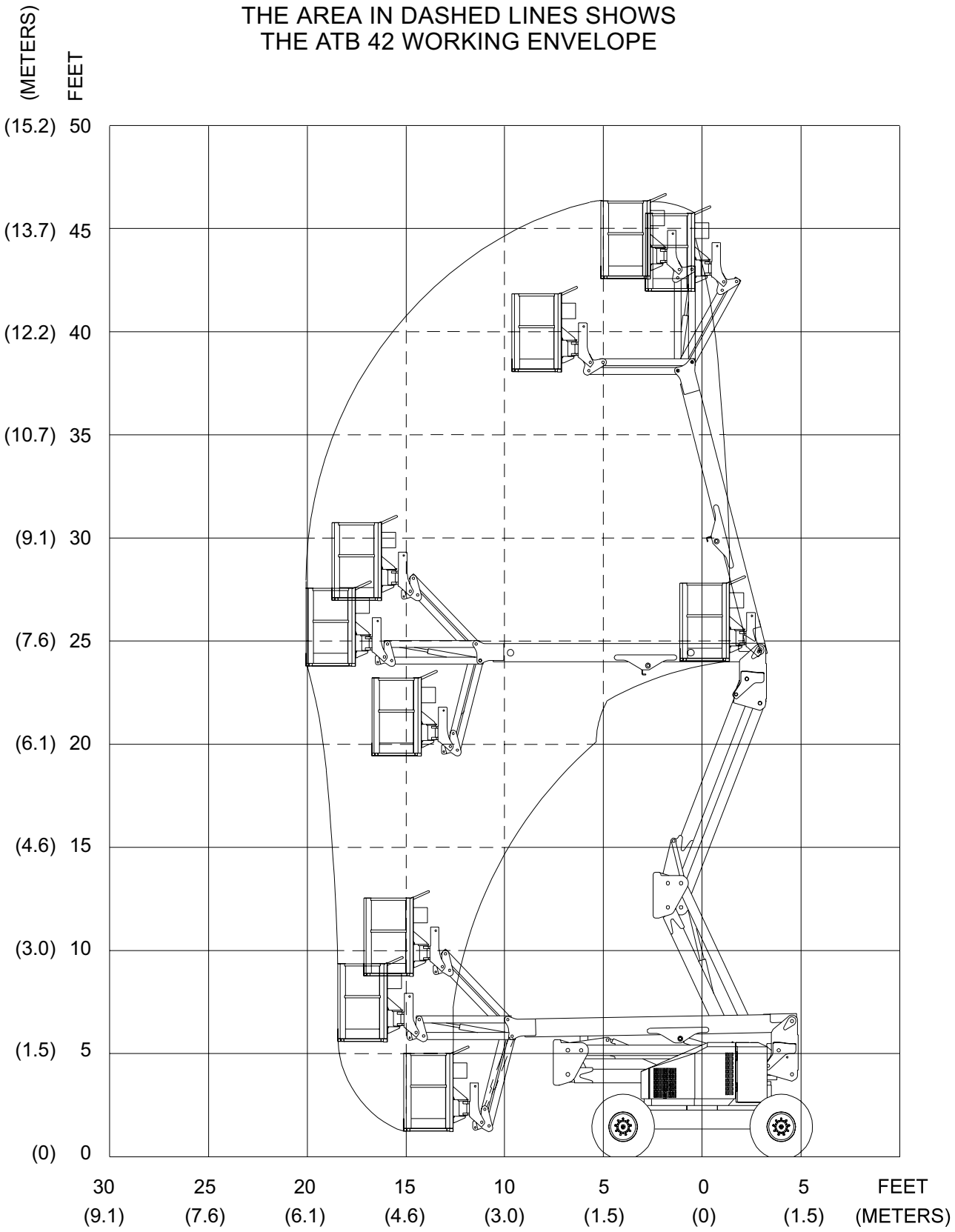

https://truckmanualshub.com/

■ Overall Dimensions - ATB 50

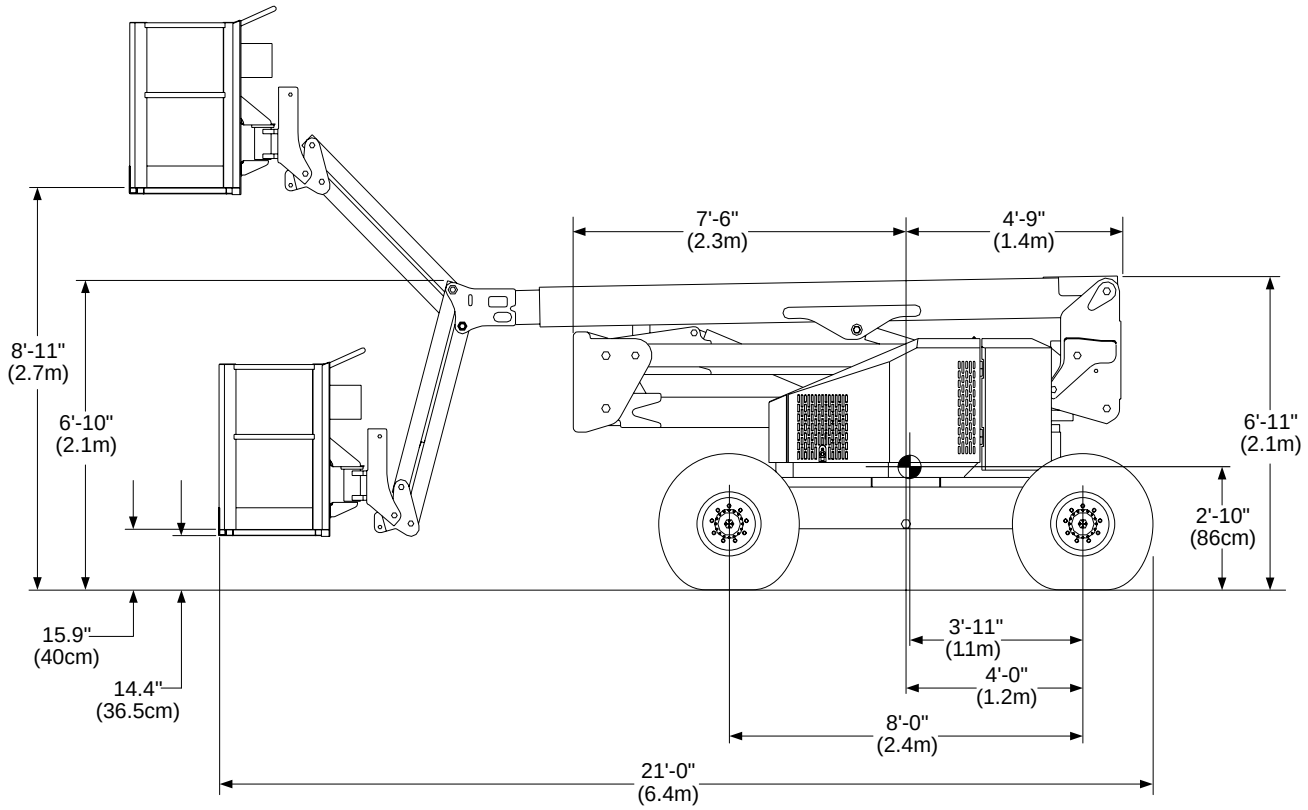

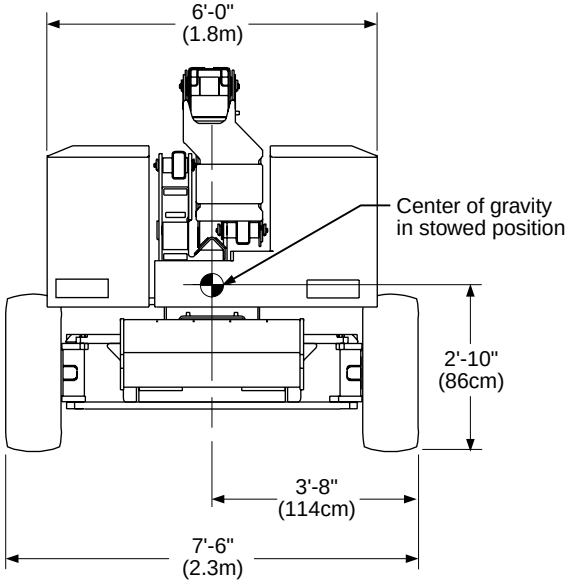

https://truckmanualshub.com/

■ Working Envelope - ATB 50

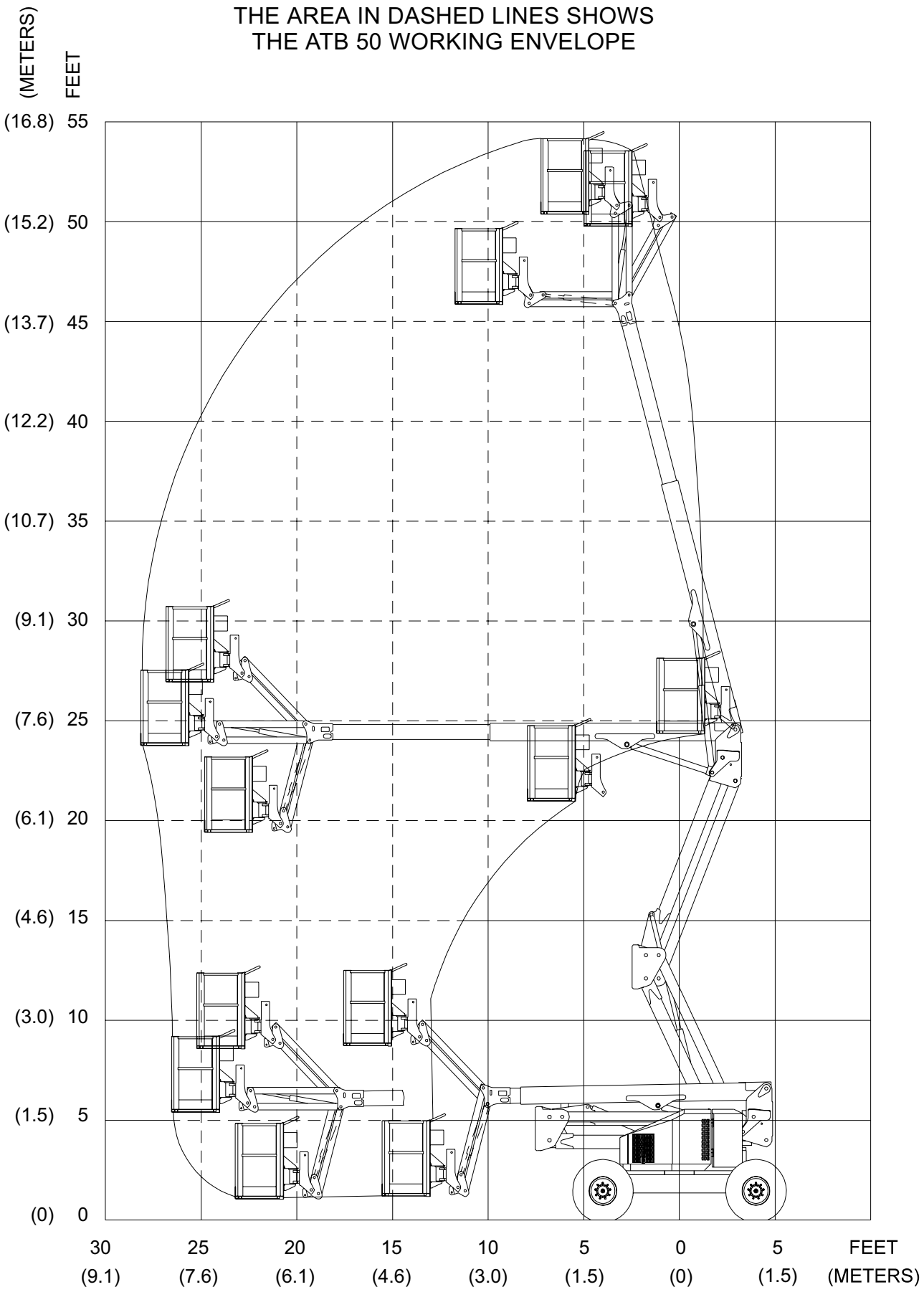

https://truckmanualshub.com/

■ Nomenclature and Serial Numbers

❑ Right Side View Of Machine

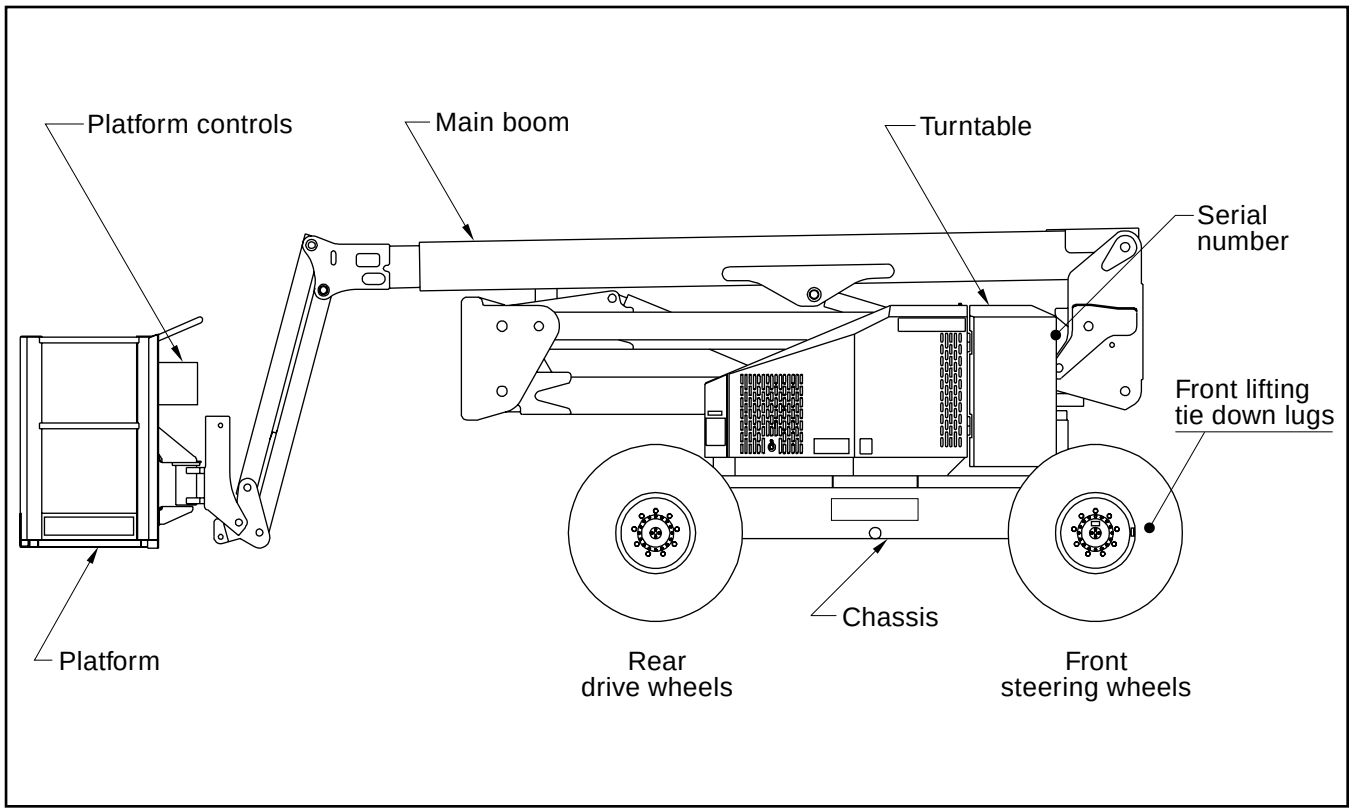

❑ Booms Identification

ATB 50 Main boom = Tip boom + Base boom

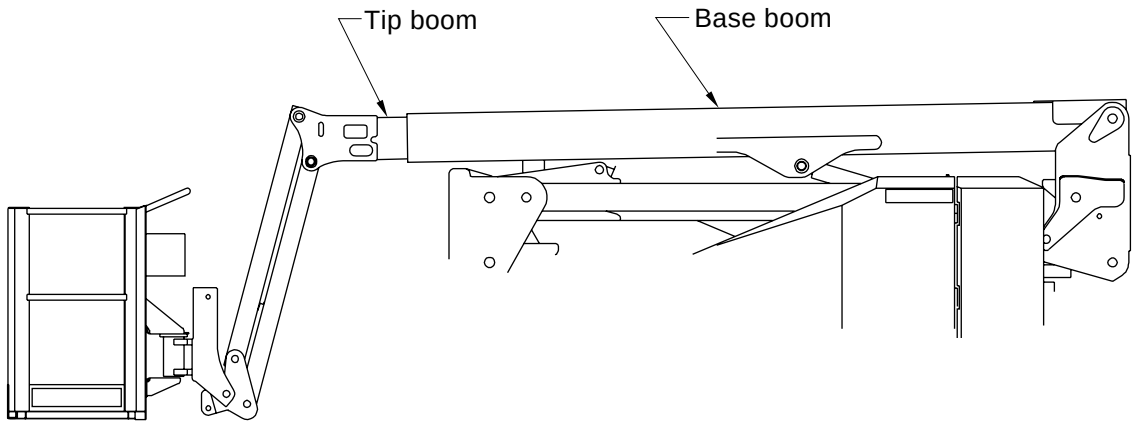

https://truckmanualshub.com/

❑ Left Side View Of Machine

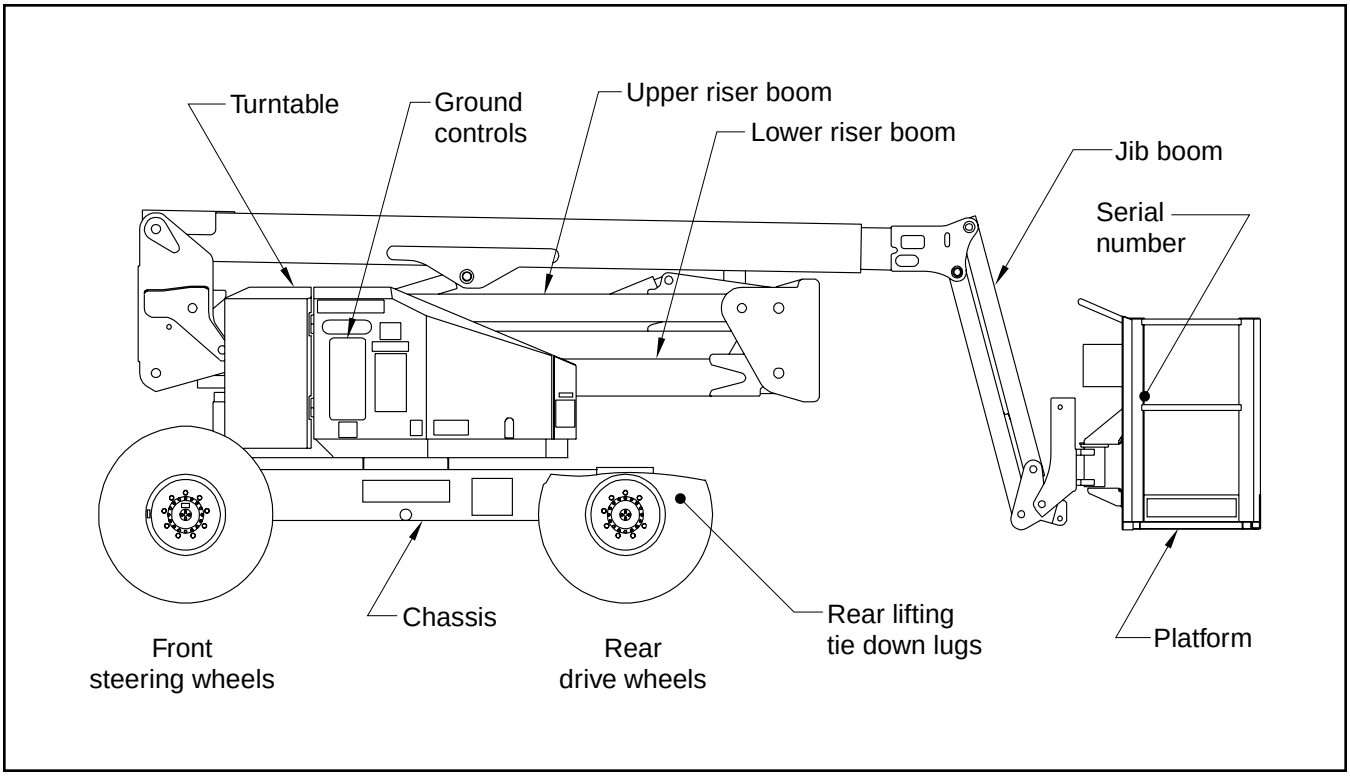

❑ Serial Number Location

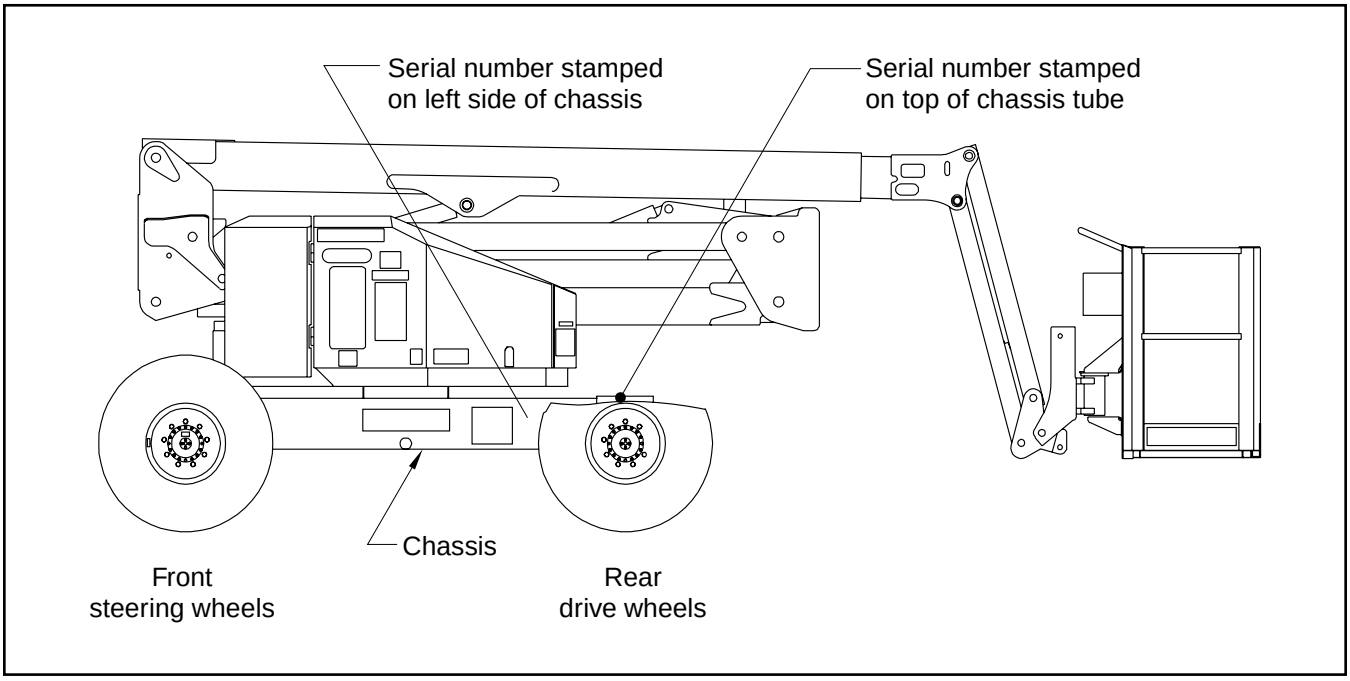

■ Ammeter

The ammeter gauge shows the electric current from the alternator to the battery. When the engine is running, the needle in the ammeter gauge should not be to the left of “0.” Under normal operating conditions, after the engine has been running for a few minutes, this gauge should read “0.”

■ Engine Coolant

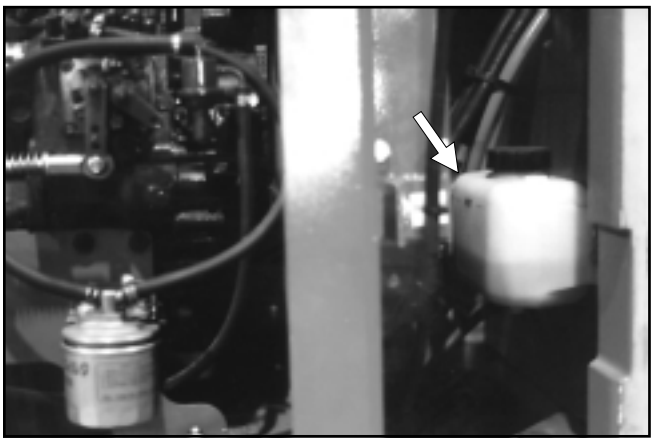

The engine coolant reservoir is in front of the radiator. When the engine is at operating temperature the coolant level should be at the HOT line. When the engine is cold there should be about one inch (2.5 cm) of coolant in the bottom of the reservoir.

■ Engine Oil

❑ Gas Engine

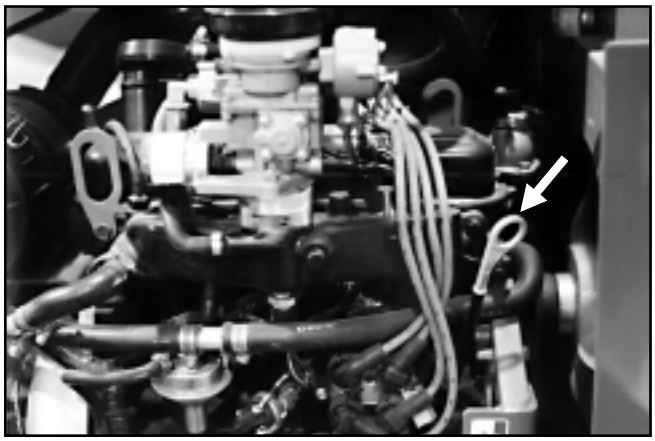

❑ Diesel Engine

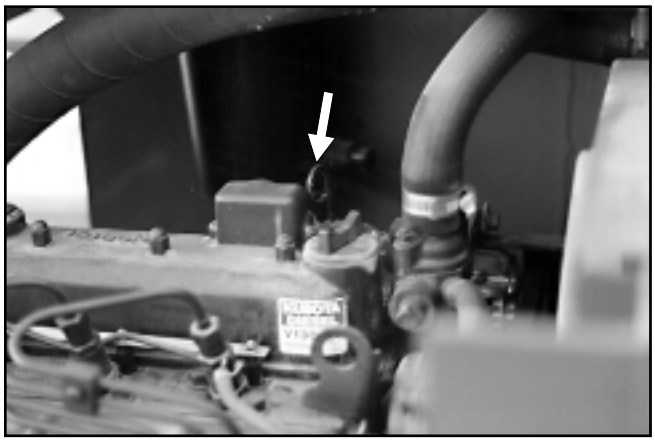

Engine oil level is measured with a dipstick. Oil capacities given in “Specifications” chapter 3,are approximate.

True values may vary from machine to machine due to slight variations or modifications during production.

The oil dipstick is the only way to accurately gauge if the engine oil level is correct.

❑ Engine Oil Dipstick

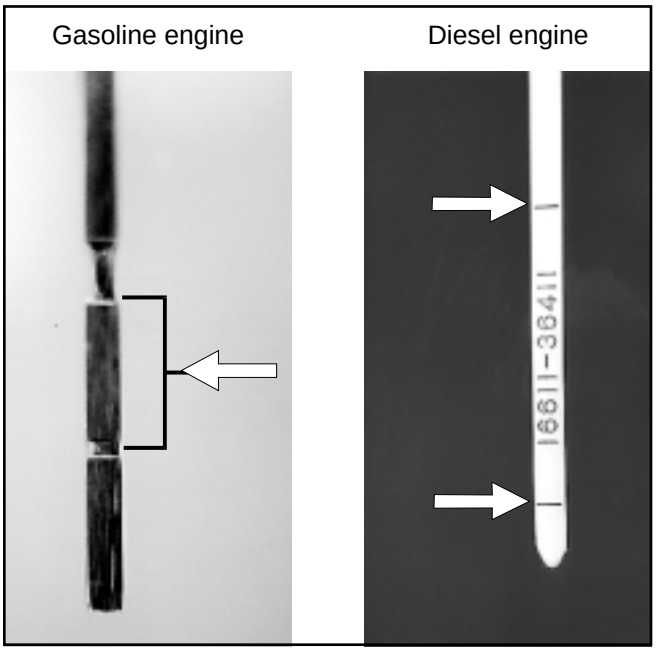

Engine oil level should always be between the lines on the dipstick, never above or below them.

The ATB 42/50 should be on level ground when you check the dipstick.

Check the oil level after the engine has been turned off a few minutes so that oil can run down out of the engine into the sump.

■ Filter Minder

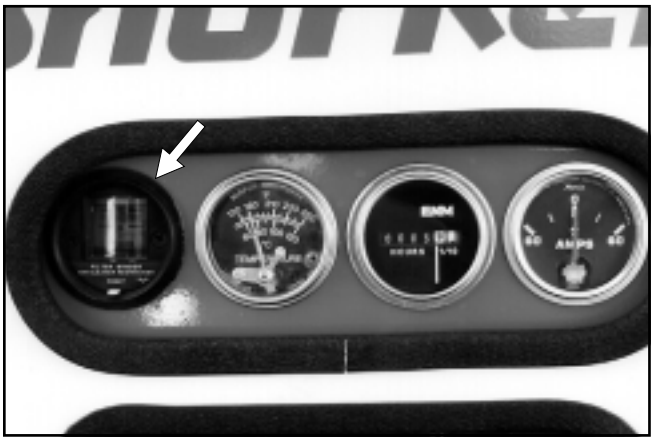

The air filter gauge, filter minder, is located just above the ground control box.

The gauge measures the vacuum (air pressure) between the intake manifold and the air filter.

❑ Filter Minder Indicators

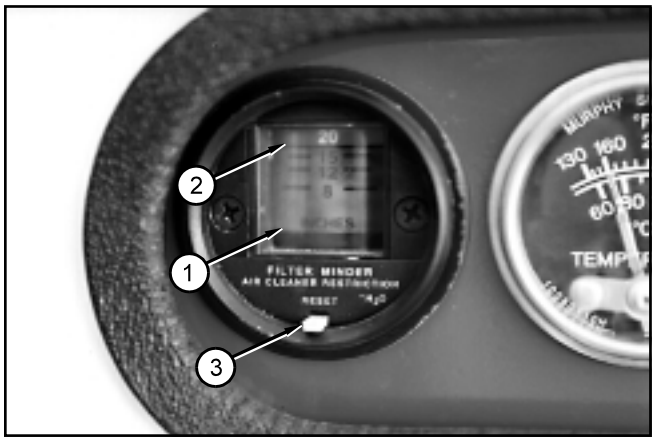

As the filter clogs, the vacuum increases (pressure drops). As the vacuum increases, the yellow indicator (1) raises toward the red area (2) of the sight glass. When the yellow indicator reaches the red, it's time to change the air filter.

The yellow indicator (1) stays at its highest setting. It does not go to the bottom of the sight glass when the engine is turned off. After the filter is changed, press the small RESET button (3) to reset the yellow indicator to the bottom of the sight glass.

■ Fuel

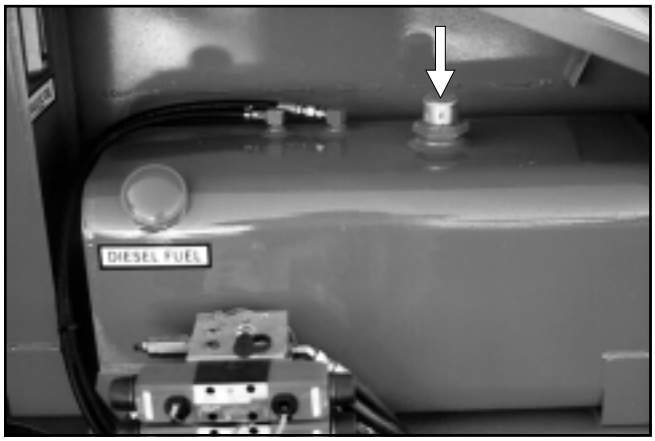

The fuel gauge is located on top of the gasoline or diesel fuel tank. Read the fuel gauge at the line in the clear plastic window. The gauge reads in fractions-of-a-full-tank.

⚠CAUTION

DO NOT run a diesel fuel tank empty. Air in the fuel line makes a diesel engine hard to start.

https://truckmanualshub.com/

■ LPG (Liquefied Petroleum Gas)

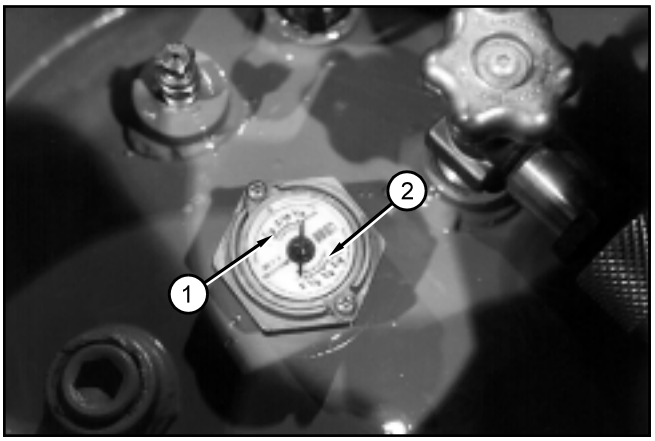

Optional LPG tanks have two fuel gauges (1) and (2) on top. One measures correctly when the tank is standing on end (vertical), the other measures correctly when the tank is laying down (horizontal).

Both read in fractions-of-a-full-tank. Standard ATB 42/50 tanks are mounted vertically, therefore, you should read the vertical scale (1).

NOTE

Optional second LPG tanks are mounted horizontally. Read the horizontal gauge on them.

■ Hour Meter

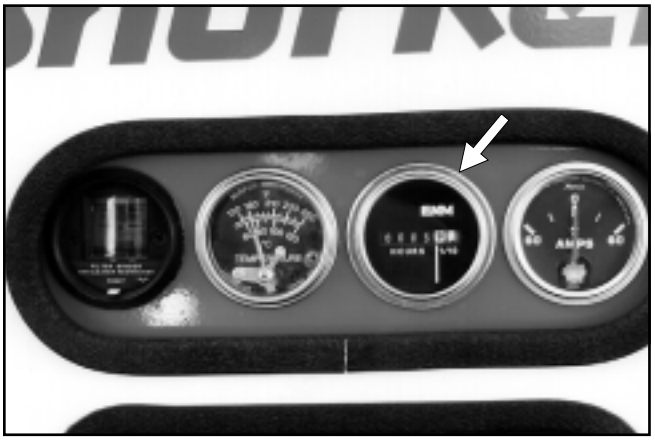

The hour meter gauge is basically an electric clock. It accumulates time when:

Battery Switch . . . . . ON
Platform/Ground Selector . . . . . GROUND
Emergency Stop
(at ground control box) . . . . . Pulled Out (ON)
Master Key Switch . . . . . ON

The Hour Meter also accumulates time when:

Battery Switch . . . . . ON
Platform/Ground Selector . . . . . PLATFORM
Emergency Stop
(at ground control box) . . . . . Pulled Out (ON)
Emergency Stop
(at platform control box) . . . . Pulled Out (ON)
Master Key Switch . . . . . ON
Anti-Restart Switch . . . . . ON

NOTE

The hour meter gauge cannot be reset. use it to tell when it is time to perform the periodic maintenance listed in the Maintenance and Repair Parts Manual.

■ Hydraulic Oil Filter

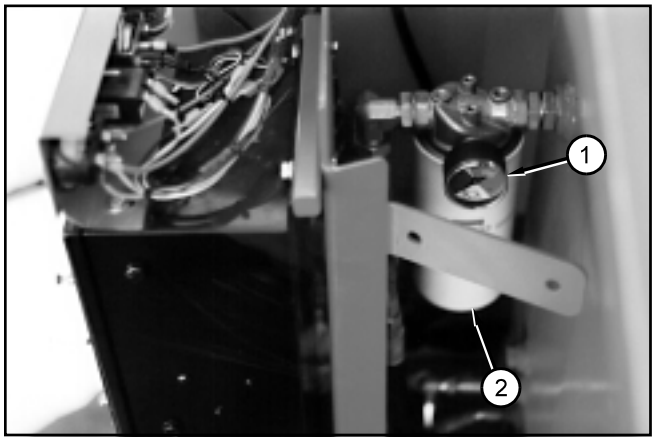

The hydraulic oil filter gauge (1) is located above the hydraulic oil filter (2). The gauge measures pressure into the filter. As the filter clogs, the pressure goes up.

⚠CAUTION

The hydraulic oil filter gauge should only be read by qualified trained maintenance personnel. An accurate reading requires very special conditions and should not be attempted by operators.

https://truckmanualshub.com/

■ Hydraulic Oil Level

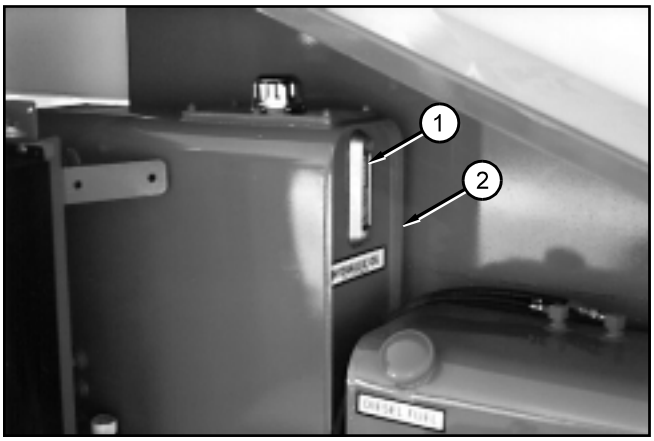

The hydraulic oil level gauge (1) is on the side of the hydraulic oil tank (2).

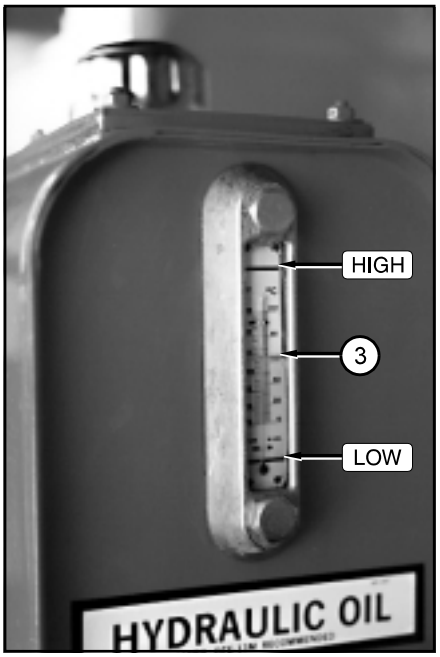

The gauge shows the actual level of oil inside the hydraulic oil tank.

NOTE

Read it only when the booms are completely down and completely retracted. Otherwise, the boom hydraulic cylinders become large reservoirs for hydraulic oil and the oil level in the tank will be low.

The oil level (3) should be between the HIGH mark and LOW mark.

■ Hydraulic Oil Temperature

The hydraulic oil temperature gauge measures the temperature of the oil in the tank. The temperature should not exceed 200°F (93°C). If it does, reduce your driving speed or stop the engine and let the hydraulic oil cool.

■ Temperature

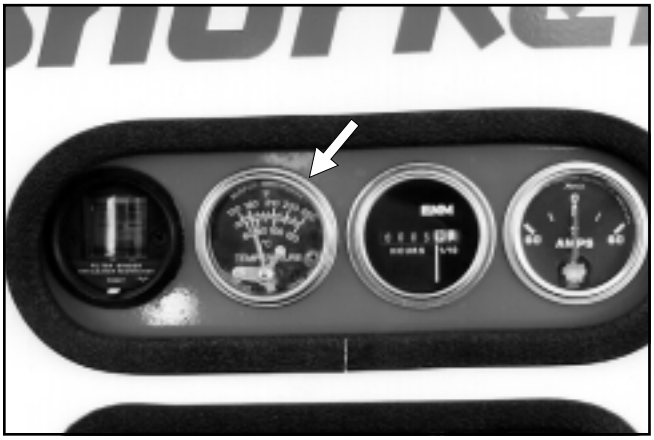

The temperature gauge shows the temperature of the water antifreeze mixture as the mixture enters the engine block.

The typical operating temperature range for FORD engines is 160°F to 190°F (71°C to 88°C).

The typical range for Kubota engines is 180°F to 205°F (82°C to 96°C).

■ Automatic Shut-Offs

The ATB 42/50 engine will automatically shut off if:

1. The engine temperature gets too high.
2. The engine oil pressure gets too low.
3. The main circuit breaker trips.

A continuous tone alarm will sound as the engine begins to overheat or if the oil pressure is low. For circuit breaker problems there is no audible alarm. The subsections below explain the shut-offs in more detail.

See the “Safety Devices” chapter 2, for an alarm timing diagram.

⚠ DANGER

If you are aloft in the platform when a continuous tone alarm sounds, **IMMEDIATELY** lower the platform to ground by using normal operating procedures or emergency operating procedures if the engine will not run. Then, check the ATB 42/50 as described below. Failure to do so might result in harm to the ATB 42/50 or might result in stranding you aloft, in some cases, with no EMERGENCY POWER.

❑ Engine Temperature

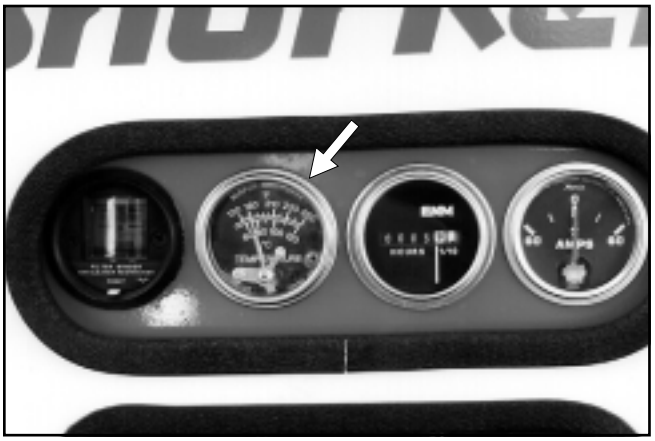

If the temperature of either a gasoline or diesel engine reaches 220°F (104°C) a warning alarm will sound. If the temperature continues to climb to 230°F (110°C) the engine will automatically shut off and cannot be restarted until it cools.

Check engine coolant level (see “Daily Inspection and Maintenance” chapter 7), before you try to restart the engine. If the coolant is low, replenish it then start the engine and visually check the radiator, radiator hoses, and engine head gasket for leaks. If the engine will not restart, or if it automatically shuts off a second time, refer the problem to a qualified service technician.

❑ Engine Oil Pressure

If the engine oil pressure drops to an unsafe level the engine automatically shuts off and an alarm sounds. If you are aloft in the platform and the engine automatically shuts off and will not restart, use EMERGENCY POWER to lower the platform (see “Emergency Operation” chapter 9).

Check the engine oil level (see “Daily Inspection and Maintenance” chapter 7), before you try to restart the engine. If the engine oil is low, replenish it then check for leaks. Check the engine oil filter (with the engine turned off) to be sure it is in place and tight. If the engine will not restart, or if it automatically shuts off a second time, refer the problem to a qualified service technician.

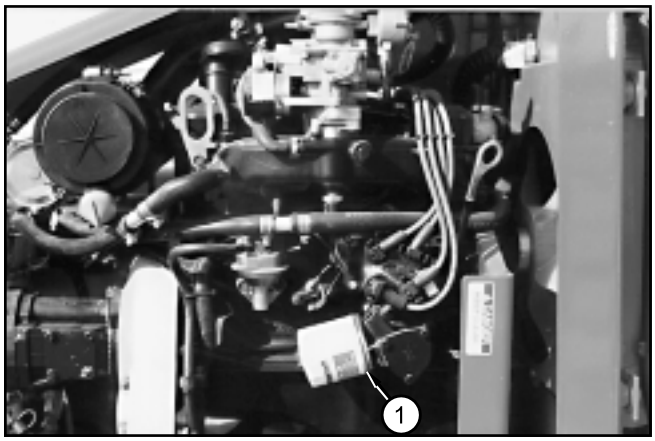

The oil filter (1) on a Ford engine is easy to reach.

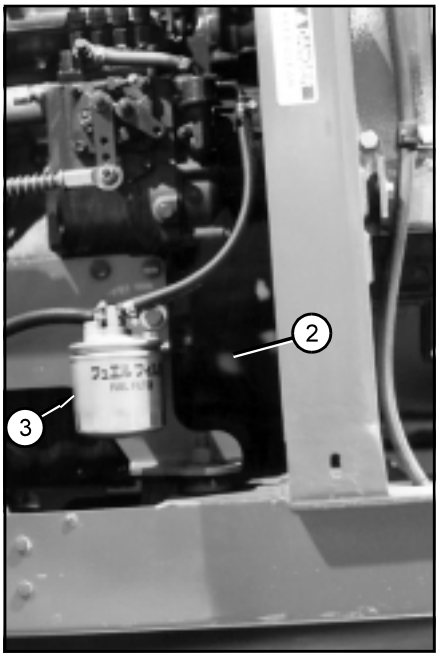

The oil filter (2) on a Kubota engine is on the back side of the engine, approximately where the fuel filter (3) is on the front side.

https://truckmanualshub.com/

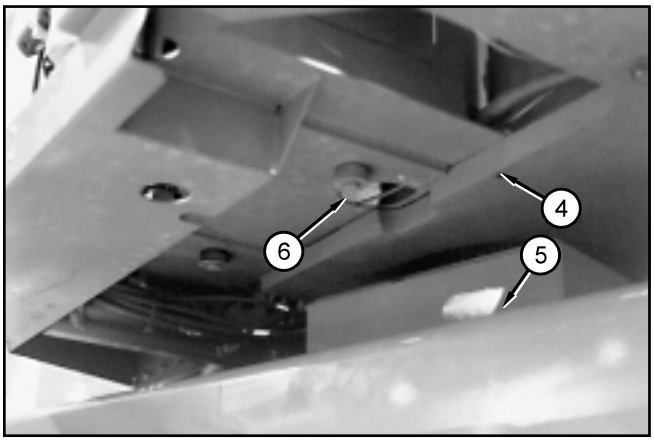

There are two ways to get to the oil filter on a Kubota engine.

1. One way is to rotate the turntable (4) about 30° clockwise with respect to the chassis (5) then reach through the hole (6) in the bottom of the turntable (4).

⚠CAUTION

Use caution to avoid burns as the engine and exhaust manifold might be hot.

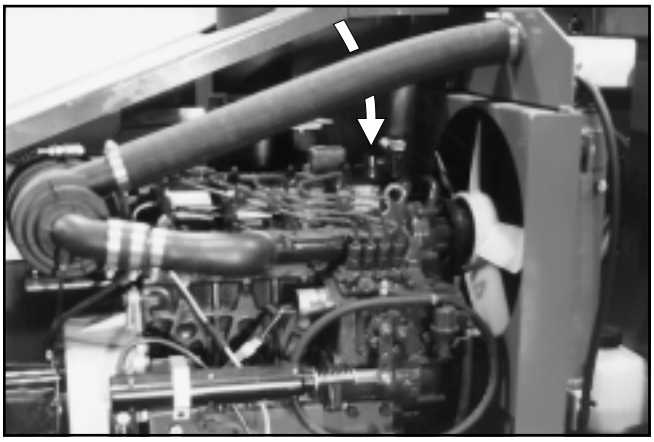

2. The second way is to reach over the engine.

■ Circuit Breakers

With the exception of the GFCI outlet at the platform, there are no circuit breakers on the ATB 42/50 that are accessible to an operator.

Circuit breakers on the ATB 42/50 automatically reset themselves about one minute after tripping. When a circuit breaker trips that will not reset, or if it resets automatically but trips again, immediately attempt to lower the platform to the ground by using normal operating procedures.

If normal procedures do not work, use EMERGENCY procedures (see “Emergency Operation” chapter 9) to lower the platform.

⚠CAUTION

If the cause of the problem is not immediately obvious, refer the problem to a qualified service technician.

If the 15 A circuit breaker on the side of the outlet trips, disconnect whatever you plugged into the outlet, wait one minute, then press the circuit breaker button back in.

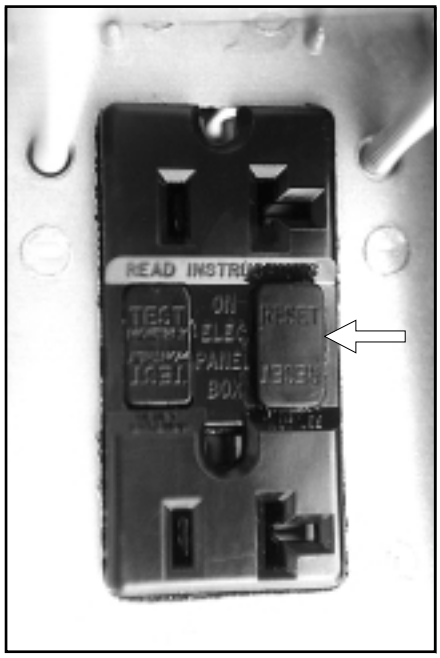

If the ground fault circuit breaker in the GFCI outlet trips, disconnect whatever you plugged into the outlet, wait one minute, then press the RESET button back in.

If a circuit breaker trips two times in a row, refer the problem to a qualified service technician.

■ Controls Description

This chapter shows the controls at the ground control box and the platform control box, and explains what each control does.

NOTE

This chapter **DOES NOT** explain how to use the controls to produce useful work.

“Operation” chapter 8, covers the proper use of controls.

See the “Emergency Operation” chapter 9, for correct emergency operation procedures.

See the “Options” chapter 11, for correct operation procedures of any optional equipment.

The main operating functions of an ATB 42/50 can be controlled from the ground control box or from the platform control box.

■ Controls and Controls Decals Locations

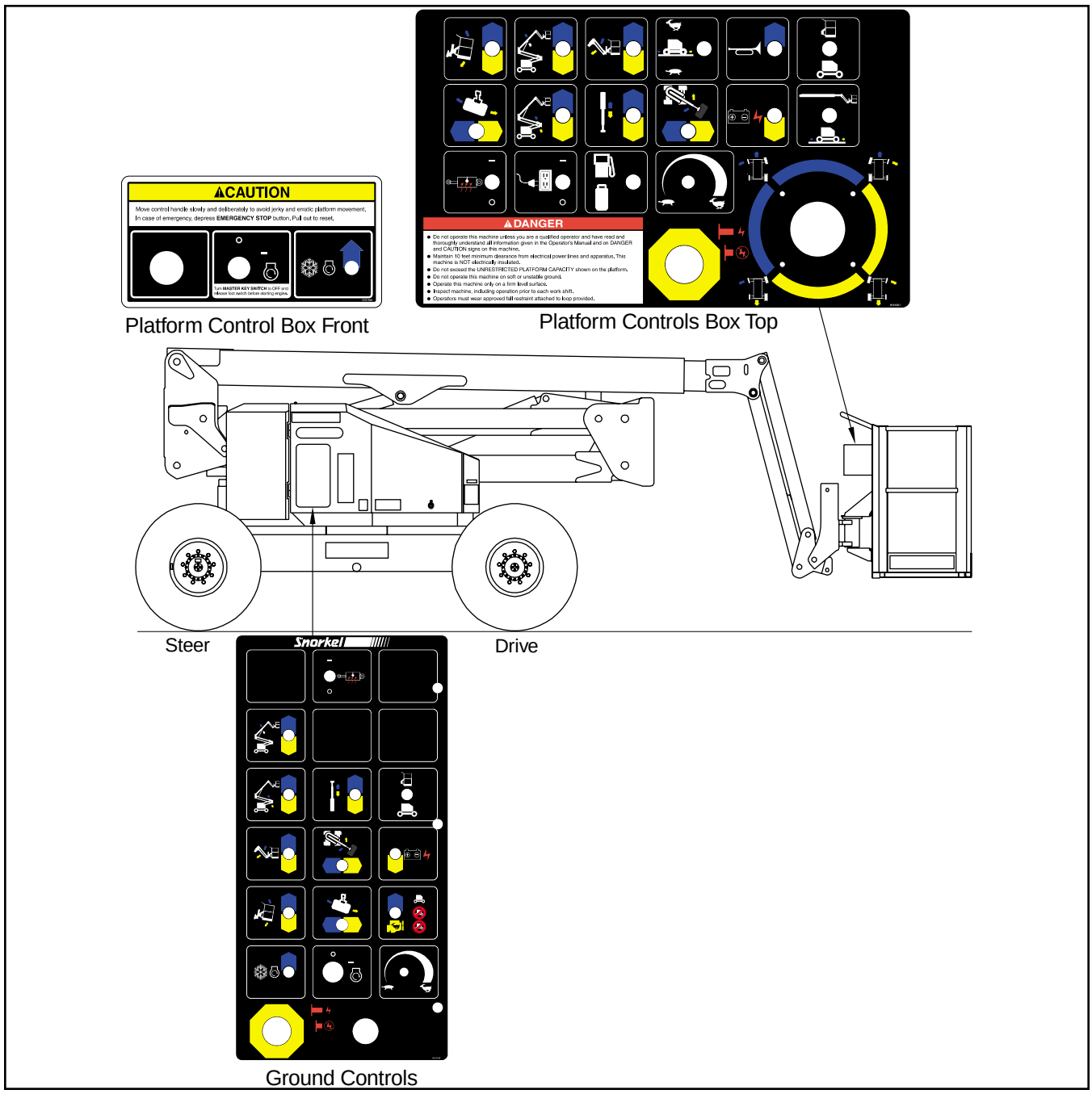

https://truckmanualshub.com/

■ Ground Control Box

Controls for operating the ATB 42/50 from the ground, are located on the left side of the turntable.

The number of each control below corresponds to the control's call out on the control box illustration.

1. **Emergency Stop**: Press the red button in, at any time, under any conditions, and the entire machine stops - the engine turns off, the brakes automatically set, and nothing moves. This switch must be out for anything on the machine to work.
2. **Platform/Ground Selector** : Must be in the GROUND position (down) for the ground control box to work. The switch MUST be in the PLATFORM position (up) for the platform control box to work.
3. **Choke/Cold Start**: This switch only works for diesel engines. Gasoline engines have automatic chokes. Hold the switch UP for 10 seconds then release it just before you start an engine that is at ambient air temperature (a "cold" engine). That will cause the glow plugs to warm the inside top of each cylinder, thus aiding combustion.
4. **Master Key Switch**: This switch works like an automobile ignition switch. Hold it at START until the engine starts, then release it to ON. Turn the **Master Key Switch** to OFF if the platform is to stay in one position for a long time, that will turn the engine off and save fuel.
5. **Boom Speed**: This control determines how fast the booms move. Set it to SLOW (turtle) until you are very familiar with the way the machine works or if the platform is working in dangerous or cramped surroundings.
6. **Ground Operation**: You must manually hold this switch up any time you use one of the seven platform moving switches, (switches 7 through 13), to move the platform.

   Holding the switch up increases the engine speed and activates the platform moving switches in preparation to do work. Set the switch to FAST IDLE (down position) only when you need to quickly warm the engine. Return to IDLE (center position) after engine warm up.

Control switches 7 through 13 are the platform moving switches. Each is a three position, momentary contact, normally OFF switch.

NOTE

See Nomenclature and Serial Numbers in the "Specifications" chapter 3, for boom identification.

7. **Main Boom Lift**: UP raises the main boom. DOWN lowers the base boom.
8. **Extend/Retract**: EXTEND extends the tip boom out of the base boom. RETRACT retracts the tip boom into the base boom.

NOTE

There is no Extend/Retract switch on an ATB 42 because there is no tip boom.

9. **Riser Lift**: Up raises the upper and lower riser booms. DOWN lowers them.
10. **Jib**: UP raises the jib boom. DOWN lowers the jib boom.
11. **Swing**: CW (left) rotates the entire turntable clockwise (as seen from above). CCW (right) rotates the turntable counterclockwise.
12. **Platform Level**: UP rotates the platform up relative to the end of the jib boom. DOWN rotates the platform down.
13. **Platform Rotate**: CW (left) rotates the platform clockwise (as seen from above) relative to the end of the jib boom. CCW (right) rotates the platform counterclockwise.
14. **Emergency Power**: If the engine stops and cannot be restarted, continuously holding this switch down activates a small, battery powered hydraulic pump that supplies emergency hydraulic power for the machine. Boom movements will be slow and have long lag times under EMERGENCY POWER. **DO NOT** use this switch for normal operation.

https://truckmanualshub.com/

❑ Ground Control Box Controls

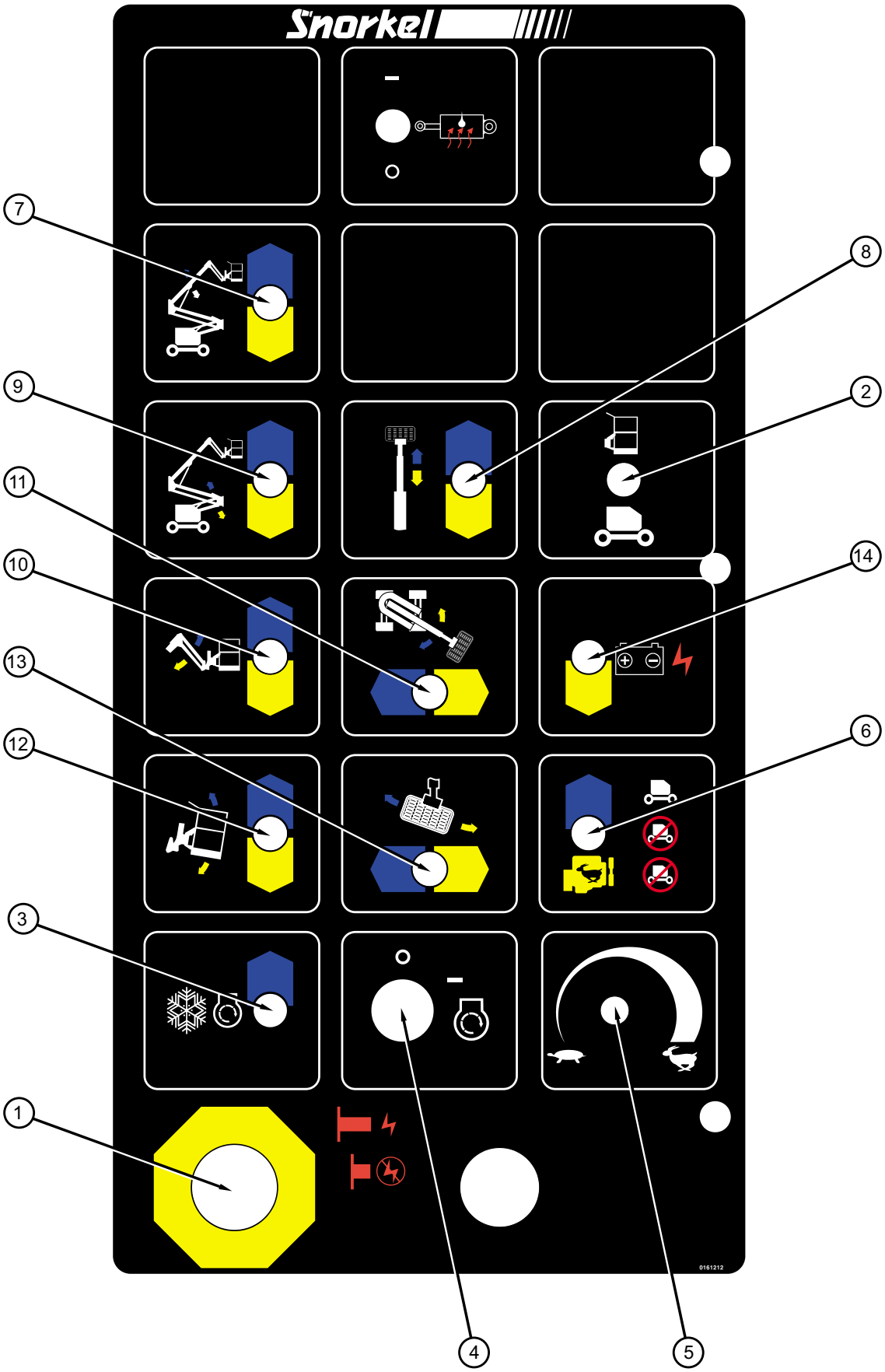

https://truckmanualshub.com/

■ Platform Control Box

Controls for operating the ATB 42/50 from the platform are located on the platform control box, with the exception of the foot switch which is on the platform floor.

The number of each control below corresponds to the control's call out on the control box illustration.

1. **Emergency Stop**: Press the large red button down at any time, under any conditions, and the entire machine stops - the engine turns off, the brakes automatically set, and nothing moves. This switch must be pulled to its up (or out) position if the ATB 42/50 is to be controlled from the platform.
2. **Choke/Cold Start:** This switch only works for diesel engines. Gasoline engines have automatic chokes. Hold the switch UP for 10 seconds, then release it just before you start an engine that is at ambient air temperature (a "cold" engine). That will cause the glow plugs to warm the inside top of each cylinder, thus aiding combustion.
3. **Anti-Restart**: This switch works like an automobile ignition switch. Hold it at START until the engine starts, then release it to ON. If the engine dies in ON, the key must be turned to OFF before it will go back to START. Turn the switch to OFF if the platform is to stay in one position for a long time, that will turn the engine off and save fuel.
4. **Boom Speed**: This control determines how fast the booms move. Set it to SLOW (turtle) until you are very familiar with the way the machine works or if the platform is working in dangerous or cramped surroundings.
5. **Drive Range**: Switching from LOW to HIGH changes from low speed and high torque to the wheels to high speed and low torque to the wheels. Set this switch to LOW for driving on loading ramps or other steep grades and when safety considerations demand slow deliberate machine movements. Set the switch to MID for traveling across soft surfaces when the booms are down and retracted. Set the switch to HIGH to travel across hard surfaces when the booms are down and retracted.

NOTE

Prolonged driving in HI (3.5 mph, 5.6 km/h), heats the hydraulic oil.

Periodically check the thermometer at the hydraulic oil gauge. **DO NOT** let the oil exceed 200°F (93°C). Stop the engine and let the oil cool if necessary.

Items 6 through 12 are the platform moving switches. Each is a three position, momentary contact, normally OFF switch.

NOTE

See Nomenclature and Serial Numbers in the "Specifications" chapter 3, for boom identification.

6. **Jib**: UP raises the jib boom. DOWN lowers the jib boom.
7. **Extend/Retract**: EXTEND extends the tip boom out of the base boom. RETRACT retracts the tip boom into the base boom.

NOTE

There is no Extend/Retract switch on an ATB 42 because there is no tip boom.

8. **Main Boom Lift**: UP raises the main boom. DOWN lowers the base boom.
9. **Riser Lift**: UP raises the upper and lower riser booms. DOWN lowers them.
10. **Platform Level**: UP rotates the platform up relative to the end of the jib boom. DOWN rotates the platform down.
11. **Platform Rotate**: CW (left) rotates the platform clockwise (as seen from above) relative to the end of the jib boom. CCW (right) rotates the platform counterclockwise.
12. **Swing**: CW (left) rotates the entire turntable clockwise (as seen from above). CCW (right) rotates the turntable counterclockwise.
13. **Emergency Power**: If the engine stops and cannot be restarted, hold the switch toward you and a small, battery powered hydraulic pump comes on to supply power for the machine. Boom movements will be slow and have long lag times under EMERGENCY POWER. **DO NOT** use this switch for normal operation.
14. **Horn**: The horn (optional item), is used to get the attention of people on the ground.
15. **Dual Fuel**: Before starting a dual fuel engine, set the **Dual Fuel** switch to GAS (gasoline), or LP depending on which you want to use. If you select LP, be sure to open the valve on top of the LP tank. To switch fuels while the engine is running, see the dual fuel system decal on the platform corner post.

https://truckmanualshub.com/

❑ Platform Control Box Controls

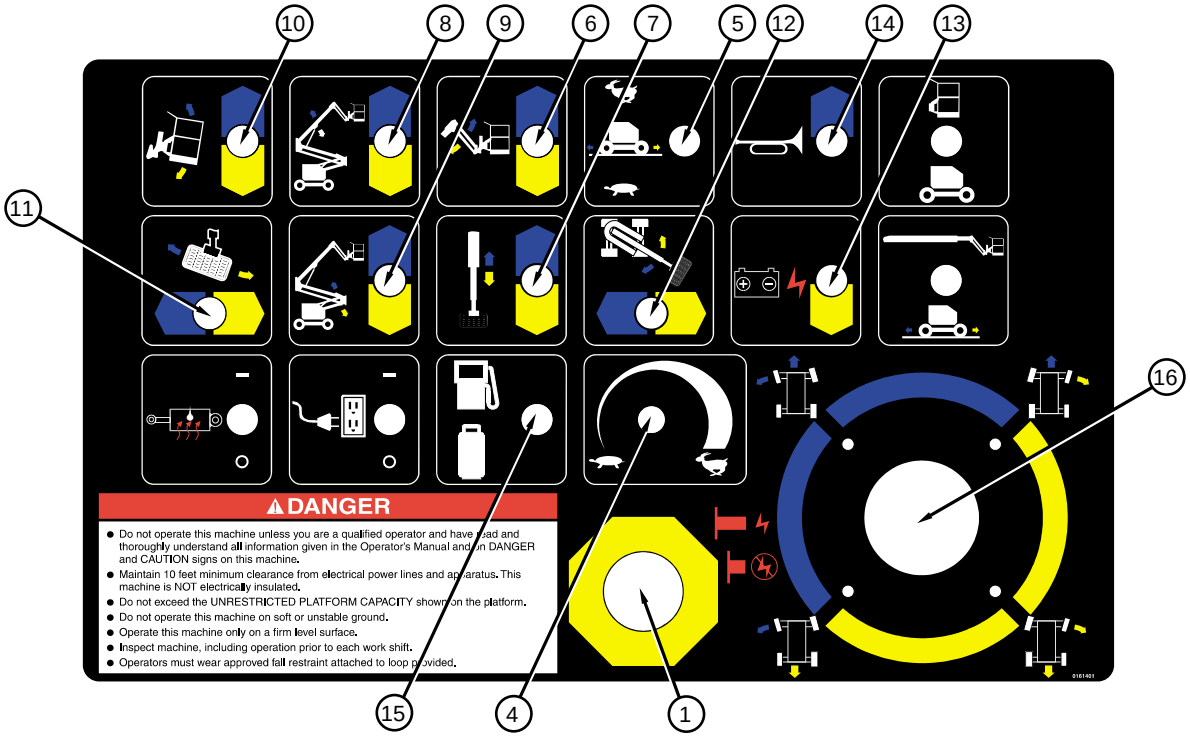

Platform Control Box Top

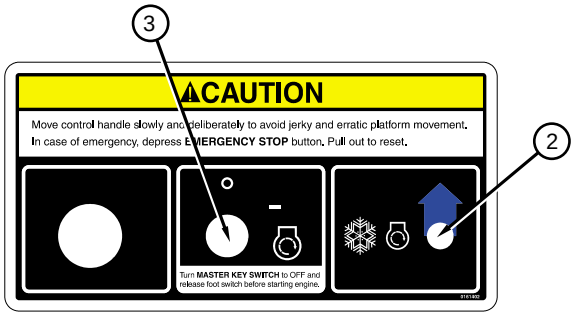

Platform Control Box Front

16. **Drive/Steer Controller**: The Drive/Steer Controller is a joystick type controller to regulate the drive and steer movement as follows:

- DRIVE FORWARD: Slowly push the **Drive/Steer** controller FORWARD and the ATB 42/50 moves forward. The further forward you push the controller the faster the ATB 42/50 goes (max. 3.5 mph, 5.6 km/hr).
- DRIVE REVERSE: Same as DRIVE FORWARD except move the controller backward, and the ATB 42/50 chassis moves backward.

NOTE

The smoother you move the controller the smoother starts and stops will be.

- STEER RIGHT: Slowly push the **Drive/Steer** controller to the right and the front wheels move in the direction for a right hand turn. The longer you hold the controller to the right the further the wheels turn.
- STEER LEFT: Works the same as STEER RIGHT only for a left hand turn.

NOTE

The wheels stay the direction you turn them, they do not automatically return to center the way automobile wheels do.

https://truckmanualshub.com/

There are blue and yellow arrows on top of the chassis. The blue arrows point to the FORWARD end of the chassis and to the LEFT side of the chassis. The yellow arrows point to the REVERSE end of the chassis and to the RIGHT side of the chassis.

The **Drive/Steer** controller is color coded to match the arrows. The color coding is designed to keep you from becoming disoriented when you are aloft and the platform is rotated with respect to the chassis.

NOTE

If you have an ATB 42/50 that is equipped with 4-wheel steer, (or 4-wheel steer with crab steer), see Steering the ATB 42/50 in the “Operation” chapter 8, and also see 4-Wheel Drive Functions in the “Options” chapter 11, for more information.

■ Platform Foot Switch

You must step down on the platform foot switch, and hold it down, when you use any platform control that causes the platform to move.

Stepping on the platform foot switch increases the engine speed and activates other switches and controls in preparation to do work. The foot switch is to the platform control box what the **Ground Operation** switch is to the ground control box.

NOTE

DO NOT step on the platform foot switch while you are trying to start the engine. The ATB 42/50 is designed not to start, or even crank, if you are stepping on the foot switch.

■ Battery Switch

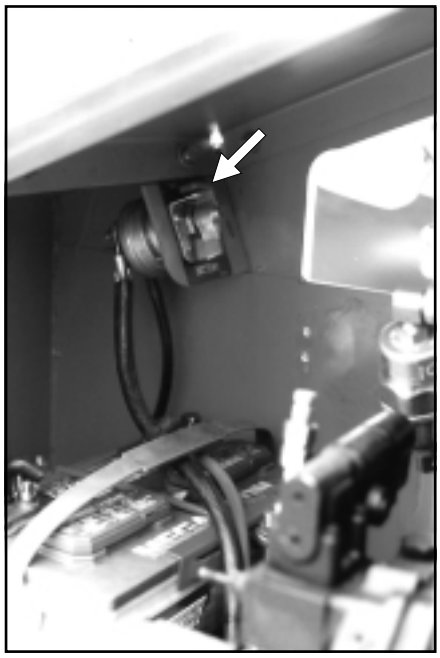

When the **Battery** switch is set to OFF, the negative terminal of the battery is disconnected from the electrical system of the ATB 42/50.

However, the positive terminal remains connected to the emergency power and battery charging circuits.

At the start of each work day (or 8 hour shift), an ATB 42/50 qualified operator must perform the Daily Inspection and Maintenance as listed in the table below.

The purpose of the Daily Inspection and Maintenance is to keep the ATB 42/50 in proper working condition and to detect signs of malfunction at the earliest possible time.

The ATB 42/50 should be in the STOWED POSITION and the **Master Key Switch** set to OFF before you begin this inspection.

Defective parts and/or equipment malfunctions jeopardize the safety of the operator and other personnel, and can cause damage to the machine.

⚠ DANGER

DO NOT operate an ATB 42/50 that is known to be damaged or malfunctioning.

Repair all equipment damage or malfunctions, before placing the ATB 42/50 into service.

■ Daily Inspection and Maintenance Table

Item	Service Required
Engine fuel level	Look to see that the fuel tank is full
Fuel tank cap	Check to see that the cap is tight
Engine oil level	Check oil level (between dipstick lines)
Fuel leaks	Visually inspect (hoses and connections)
Engine coolant level	Check fluid level and radiator hoses
Wiring harnesses	Visually inspect (installation, condition)
Battery terminals	Visually inspect (no corrosion)
Battery fluid level	Check fluid level (1/4" or 6 mm below filler neck)
Hydraulic oil level	Visually inspect level (between lines on gauge)
Hydraulic oil leaks	Visually inspect (hoses, tubes)
Tires	Visually inspect (condition)
Bolts and fasteners	Visually inspect (condition)
Structural damage and welds	Visually inspect (weld cracks, dents)
Lanyard anchor points	Visually inspect (condition)
Platform gravity gate	Check condition and operation
Platform swinging gate (option)	Check condition and operation
Platform guardrails	Visually inspect (condition)
Flashing lights (option)	Visually inspect (operation)
Air filter	Check condition (gauge)
Charging system	Visually inspect (gauge)
Ground control switches and alarms	Actuate and inspect for proper operation
Level sensor	Check operation
Emergency power	Check operation (causes correct motion)
Platform control box switches and alarms	Actuate and inspect for proper operation
Ground Fault Circuit Interrupt	Check operation
Platform work lights (option)	Check operation
Slide pads (ATB 50 only)	Visually inspect for installation and boom wear marks
Axle unlocked alarm, tipover hazard light	Actuate and inspect for proper operation
Placards and decals	Visually inspect (installation, condition)

https://truckmanualshub.com/

The rest of this chapter shows how to perform the inspection and maintenance required for each item in the Daily Inspection and Maintenance Table.

■ Engine Fuel Level

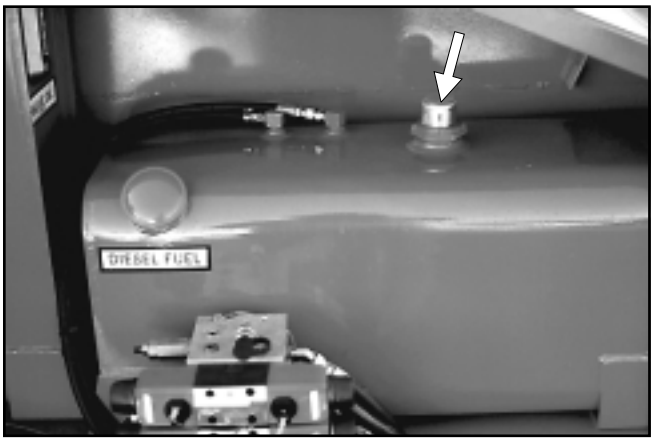

Visually check to see that the gasoline or diesel tank is full.

See the “Specifications” chapter 3, fuel for octane and grade.

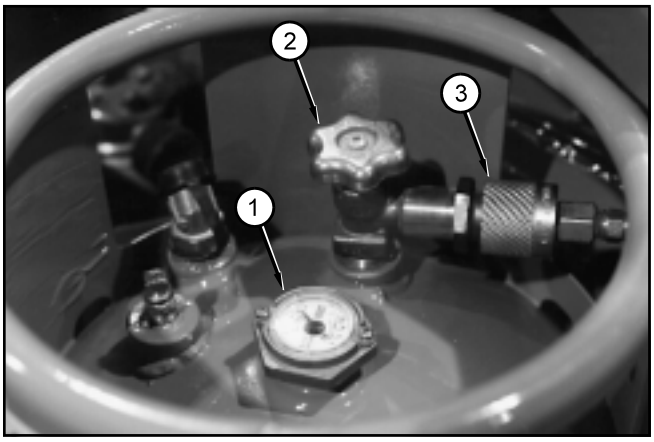

(Option - LPG) Visually check to see that the LPG tank is full (1).

To replace an LPG tank:

1. Close the valve (2) by screwing clockwise.
2. Manually disconnect the fuel hose at the knurled ring (3).

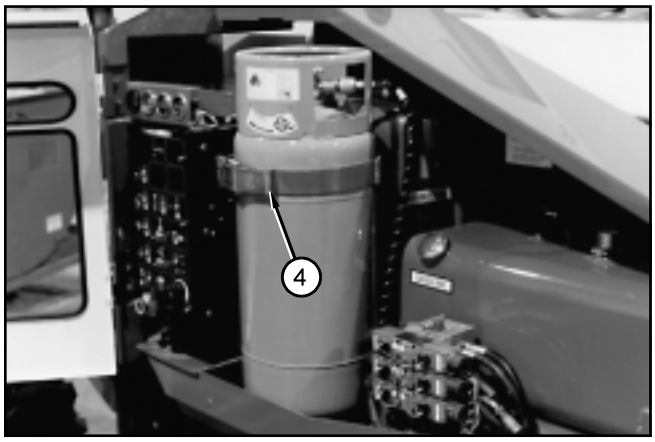

3. Open the strap (4).
4. Manually lift the tank out.

■ Fuel Tank Cap

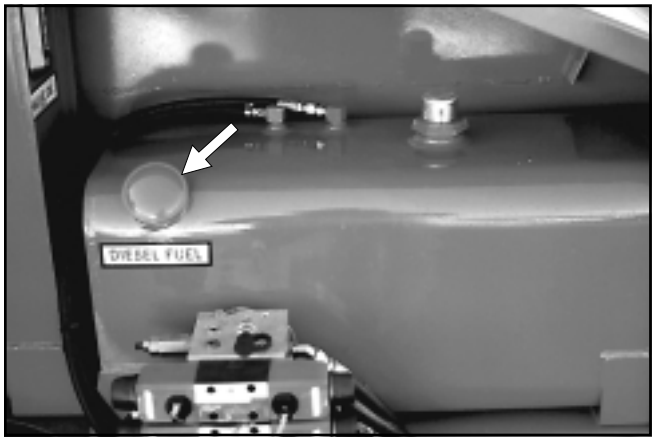

Check to see that the tank cap is in place and is tight.

■ Engine Oil Level

❑ Gasoline Engine

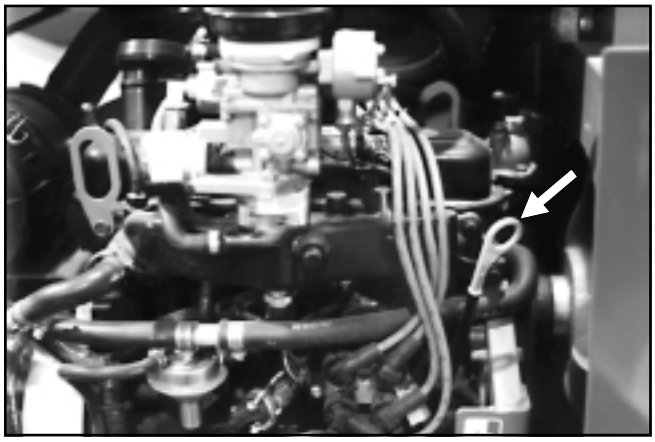

https://truckmanualshub.com/

❑ Diesel Engine

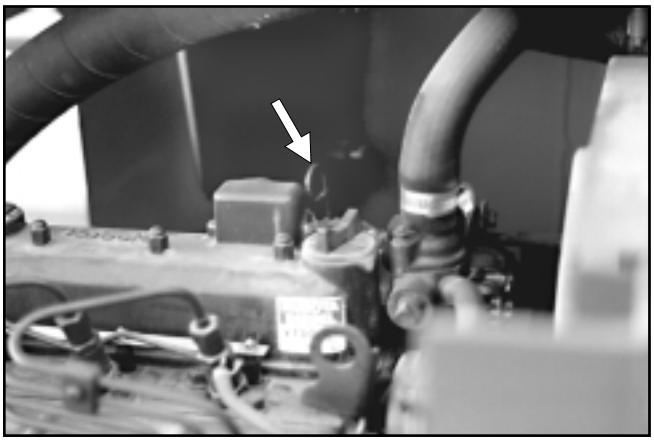

Keep the oil level between the marks on the engine oil dipstick.

The distance between the top and bottom dipstick marks corresponds to about 1 qt USA (one liter). Add oil, if needed, at the top of the engine.

See the “Specifications” chapter 3, for the correct engine oil grade and weight.

■ Fuel Leaks

❑ Gasoline Engine

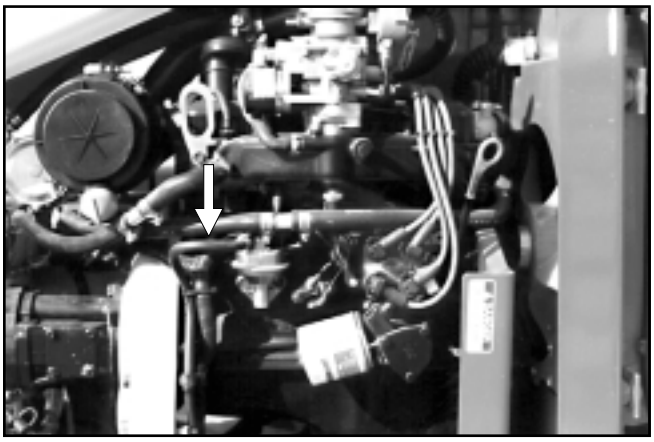

❑ Diesel Engine

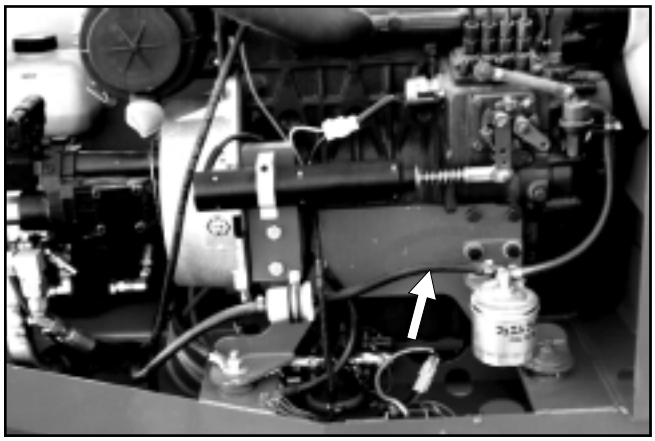

Visually inspect the entire length of the fuel line, from the engine to the fuel tank, for leaks.

■ Engine Coolant Level

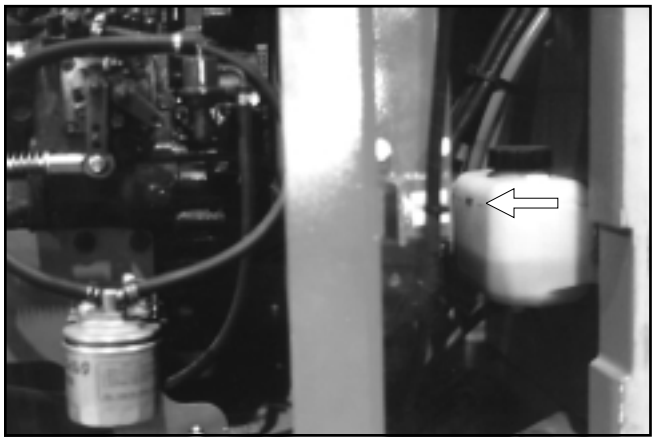

At operating temperature the coolant should be at the HOT level. When cold, there should be about 1 inch (2.5 cm) of coolant in the bottom of the reservoir.

The coolant is half water and half antifreeze, (Kubota recommends ethylene glycol antifreeze).

To add coolant:

1. Turn the engine OFF at the ground control box **Master Key Switch**.
2. Remove the cap from the coolant reservoir.
3. Add coolant, then replace the cap.

https://truckmanualshub.com/

■ Wiring Harnesses

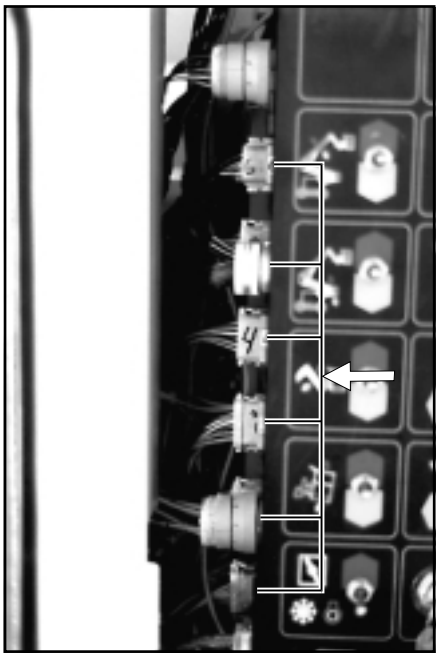

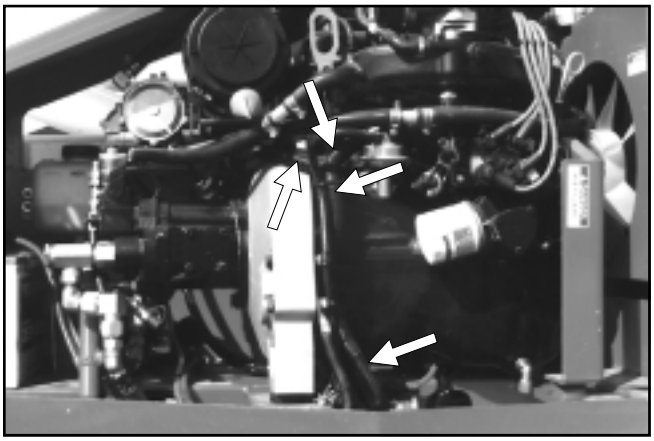

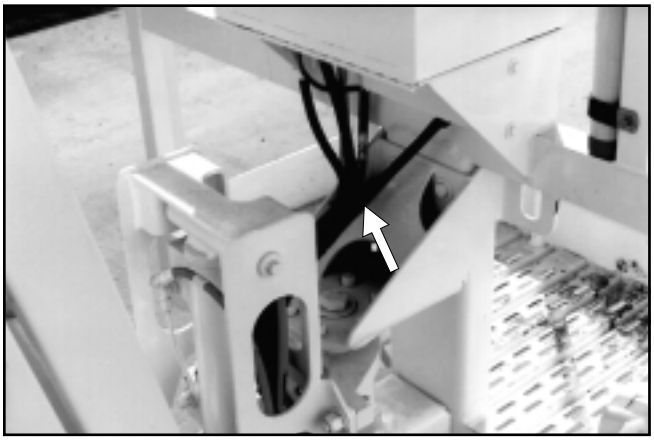

Inspect all the wiring harnesses, on the machine, for loose connections, broken wires, and frayed insulation.

■ Battery Terminals

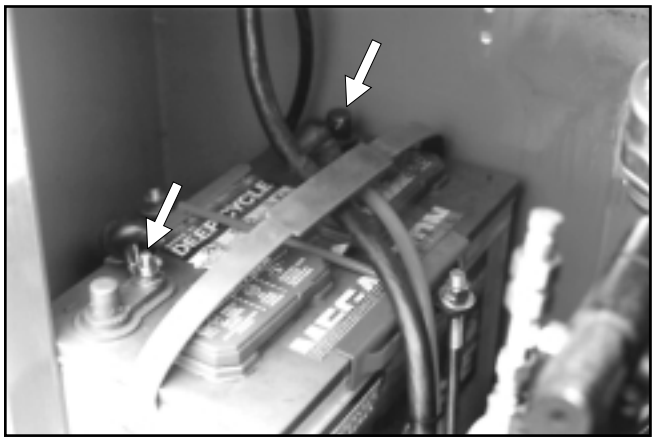

Battery terminals should be clean and free of dirt and corrosion.

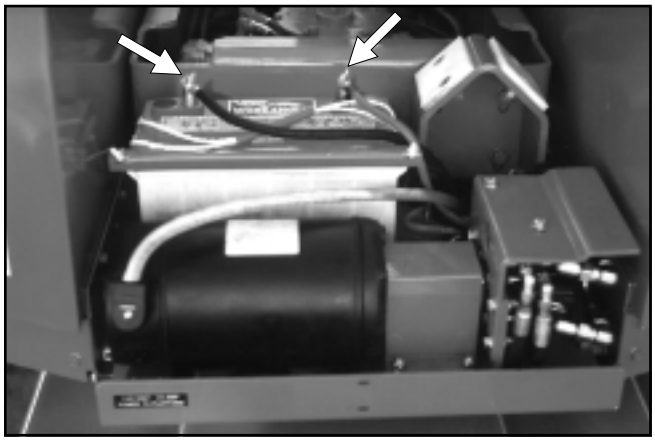

If the ATB is equipped with the optional extra battery, check it too.

https://truckmanualshub.com/

■ Battery Fluid Level

⚠ DANGER

Batteries emit hydrogen and oxygen, elements that can combine explosively.

DO NOT smoke or permit open flames or sparks when checking batteries.

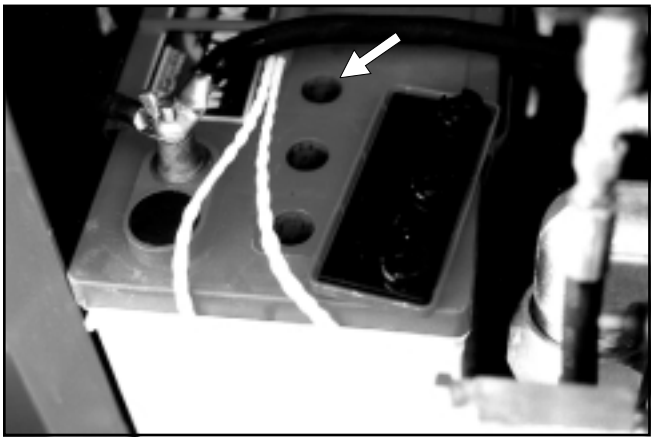

Remove the caps from each battery and visually check to see that the battery fluid is 1/4 (6 mm) below the bottom of the filler neck inside each hole.

■ Hydraulic Oil Level

To check the hydraulic oil level:

Completely lower and completely retract the booms.

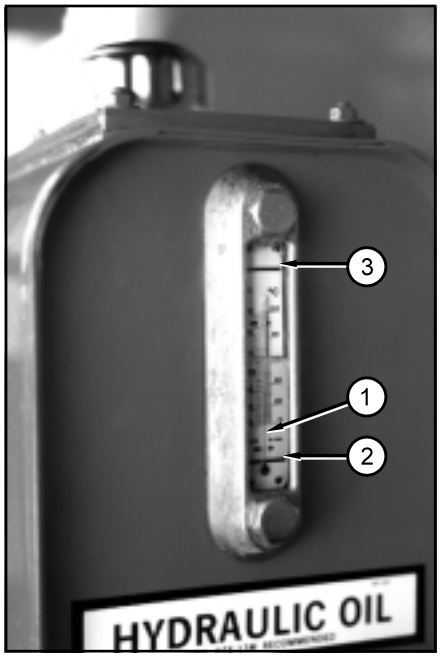

The hydraulic oil temperature (1) should be less than 200°F (93°C).

The hydraulic oil level should be between the two marks (2) and (3) on the sight glass gauge.

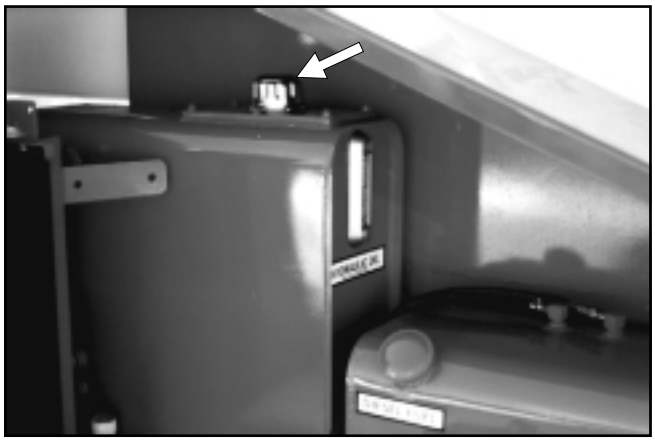

If necessary, add hydraulic oil at the filler cap. See the “Specifications” chapter 3, for type and grade of hydraulic oil.

■ Hydraulic Oil Leaks

⚠ DANGER

Leaking hydraulic oil can cause burns, fires, falls (slipping), cuts, and puncture wounds (if under high pressure). Have a qualified trained maintenance person repair all hydraulic fluid leaks before you operate an ATB 42/50.

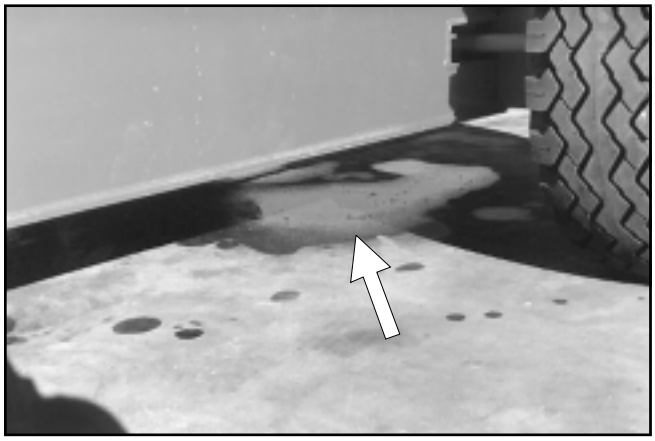

Hydraulic oil leaks are easily visible and can show up anyplace.

Visually inspect the entire machine for hydraulic oil. Check the ground under the machine for leaked oil.

For ATB 50’s inspect the ends of the main boom. Oil can run down the inside of the boom and drip out the ends.

https://truckmanualshub.com/

■ Tires

⚠ DANGER

Death or **Serious Injury** can result if an ATB 42/50 tips over. An air filled tire that has an air leak or blow out is a tipover hazard.

DO NOT raise the ATB 42/50 platform if any tire has an air leak or is in such condition that a blow out could occur.

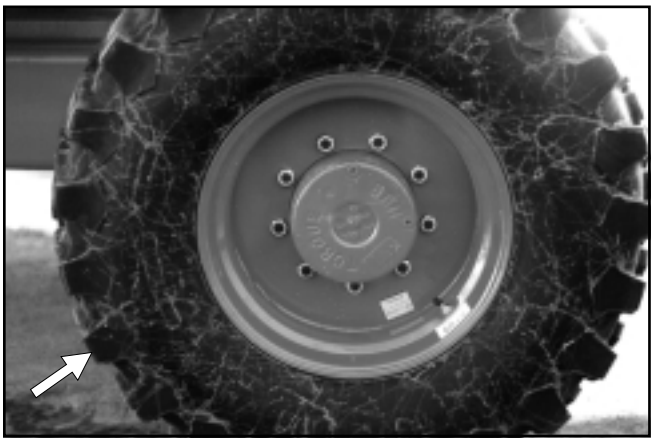

Air filled tires should be visually checked several times a day to see that they are properly inflated. Air filled tires should be checked very carefully for imbedded material, cuts, punctures, or abraded areas. Do not tolerate a suspect tire, it can be fatal.

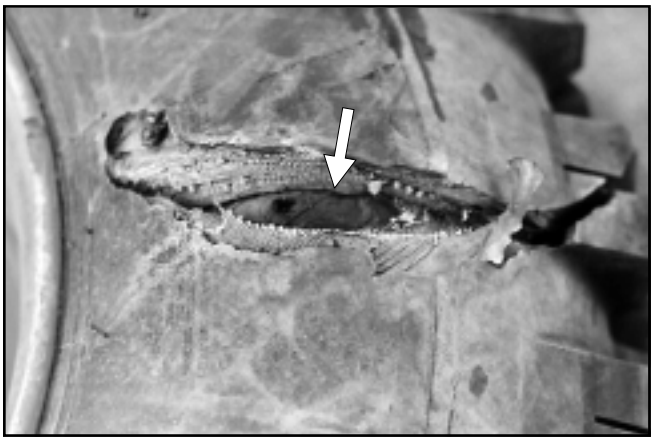

Punctures of the type caused by bolts, screws, or nails are not a problem for the optional foam filled tires. Look for large holes or long cuts completely through the tire body: holes or cuts where foam is being forced or eroded out of the tire. Also, look for large imbedded objects, such as angle iron, that can rip a tire body open under some conditions.

The tire shown above is not fit for service.

■ Bolts and Fasteners

Visually inspect all fasteners to see that none is missing or obviously loose.

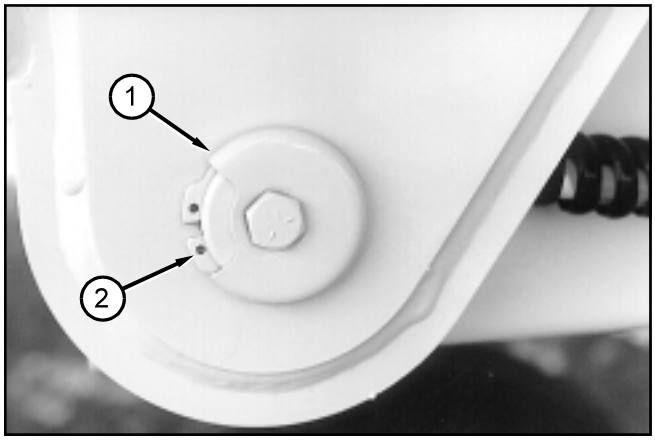

Pay particular attention to all of the pin caps (1) and snap rings (2) that connect the booms. They should all be present and not damaged in any way.

Check the turntable end of the booms and the end of the lift cylinders for other pin caps and snap rings. Check both sides of the machine.

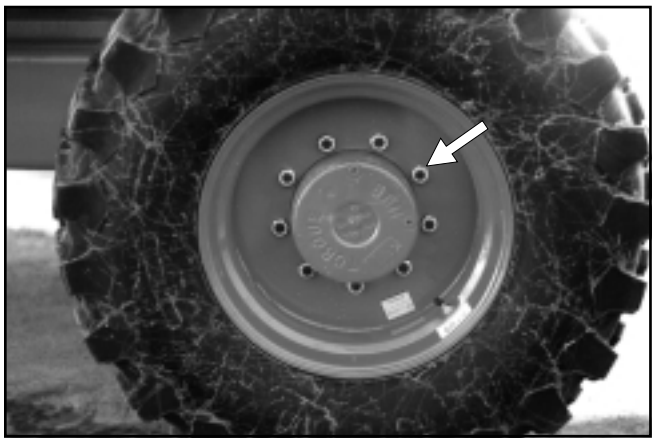

Pay particular attention to all of the wheel nuts and bolts.

None should be visibly loose, missing, or deformed.

https://truckmanualshub.com/

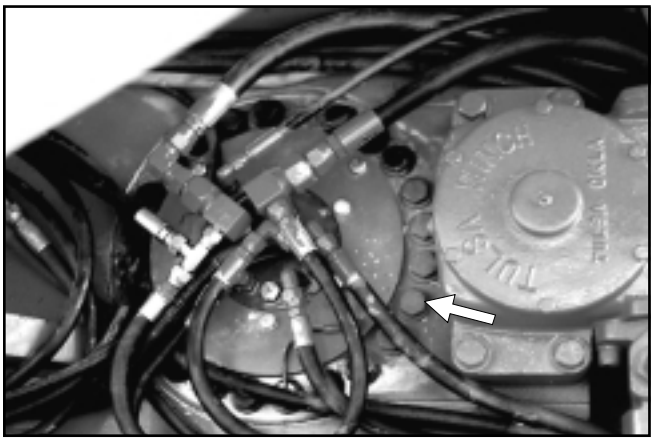

Pay particular attention to all of the upper rotation bearing bolts.

None should be visibly loose, missing, or have broken heads.

Pay particular attention to all of the lower (view from under the machine) rotation bearing bolts.

None should be visibly loose, missing, or have broken heads.

■ Structural Damage and Welds

Visually inspect all welds for cracks, all structural members for deformity, and all sheet metal for dents that could interfere with machine operation.

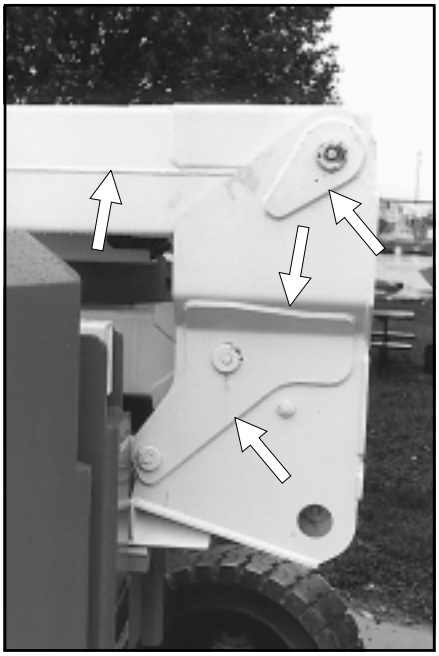

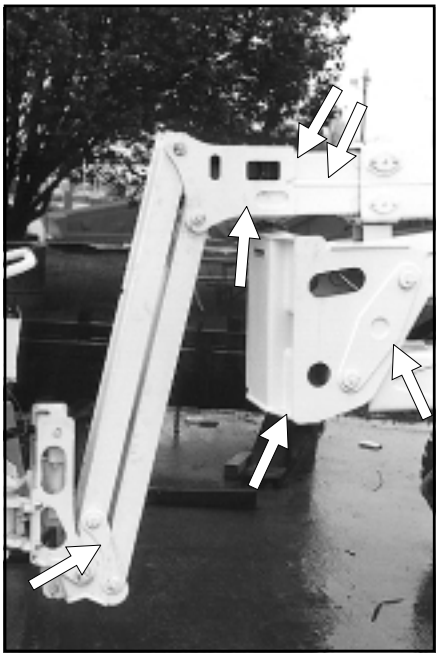

Pay particular attention to boom welds.

Closely inspect boom welds, all the way around, for cracks.

https://truckmanualshub.com/

■ Lanyard Anchor Points

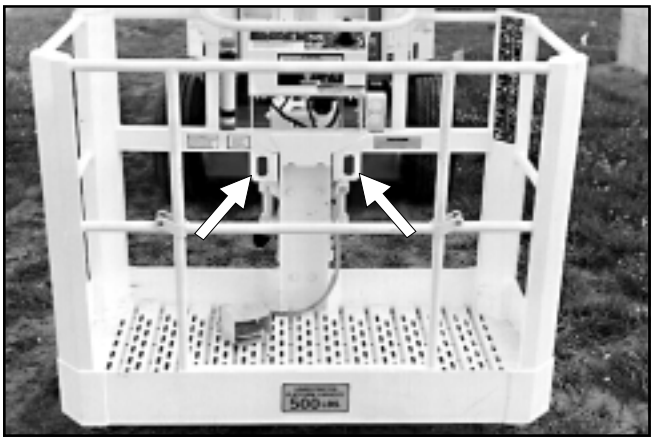

Visually check the lanyard anchor points to see that they are not deformed or cut off.

■ Platform Gravity Gate

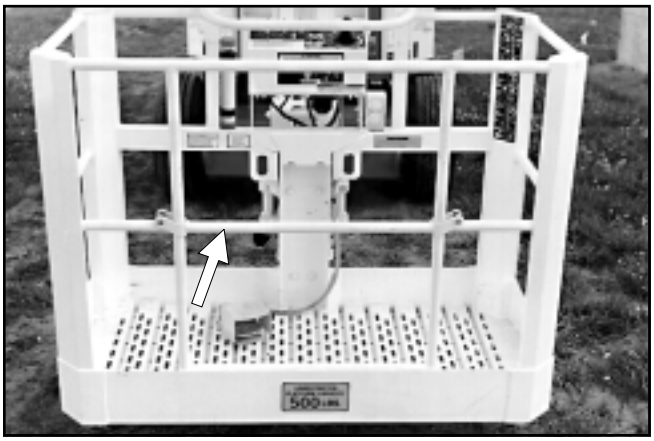

Inspect the platform gate to be sure it is present and moves freely.

■ Swinging Gate

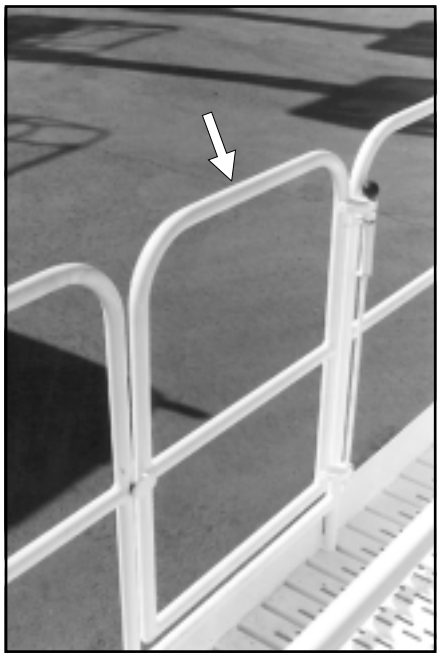

Inspect the optional platform swinging gate, at the platform entrance, to see that it swings freely, latches securely, and is not deformed in any way.

■ Platform Guardrails

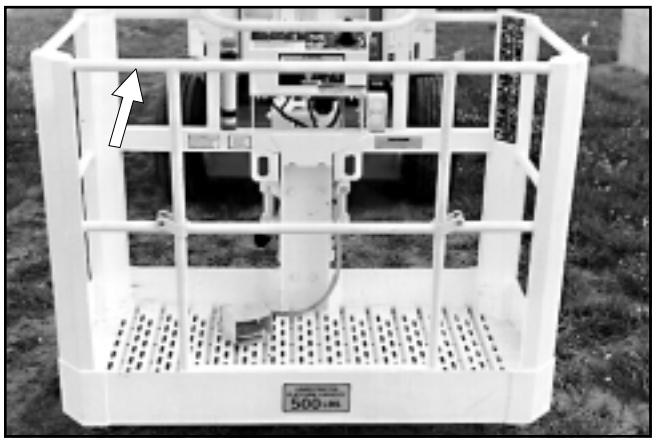

Visually inspect the platform guardrails to see that none of the tubing has been cut out, removed, or is deformed in any way.

Visually check the guardrail welds to see that none is cracked or ground down.

https://truckmanualshub.com/

■ Flashing Lights

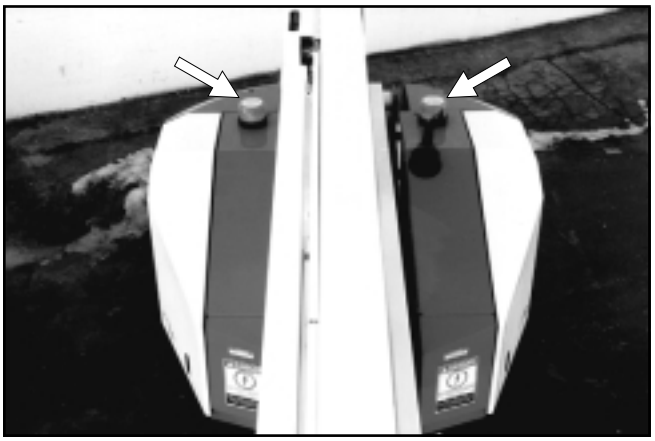

Visually check the optional flashing lights, to see that the lights flash at approximately one flash per second when the engine is running.

■ Air Filter

Start the engine from the ground control box.

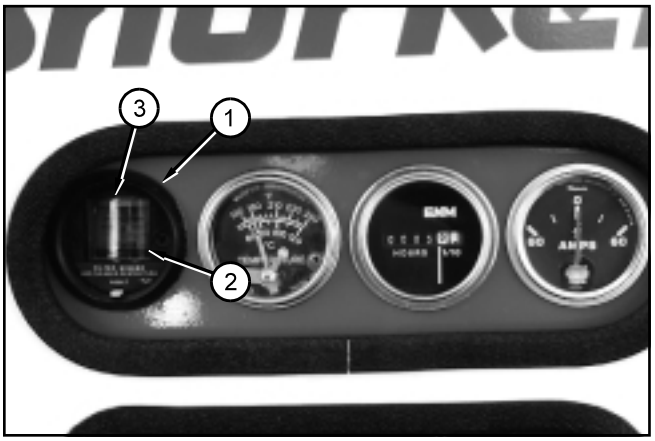

The **Filter Minder** gauge (1) has a yellow indicator in it (2). As the air filter clogs the yellow indicator raises toward the red area (3) of the sight glass.

If the indicator is in the red, after the engine has been running for 30 seconds in **Ground Operation** FAST IDLE, the air filter needs to be replaced. (For further explanation of the **Filter Minder** gauge, see “Gauges” chapter 4).

NOTE

Leave the engine running for the next step.

■ Charging System

With the engine running at **Ground Operation** IDLE, the needle in the ammeter gauge should not be to the left of “0” (left of “0” is discharging).

NOTE

Leave the engine running for the next step.

■ Ground Control Switches and Alarms

⚠ DANGER

When you check turntable **Swing** at CCW (1) the turntable will move directly toward you. Be sure you have room to step backward.

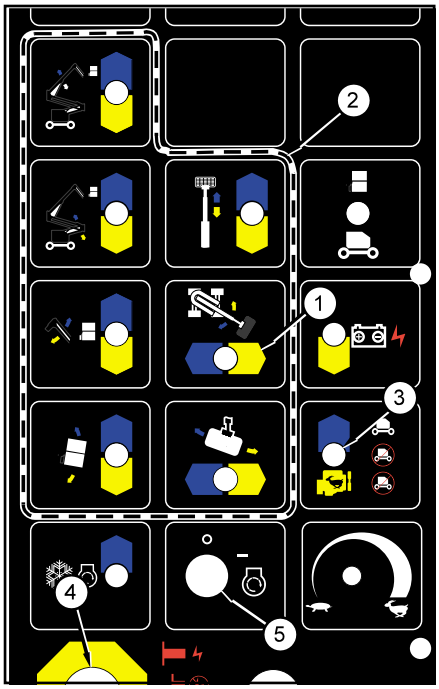

Check each of the seven platform moving switches (2) using **Ground Operation** (3) to see that they cause the ATB 42/50 to move the way it should.

https://truckmanualshub.com/

Check both positions of each switch.

For correct operating procedures see the “Operation” chapter 8.

Pay particular attention to the **Emergency Stop** switch (4) to see that it turns the ATB 42/50 engine off when struck.

Listen for the start up alarm when **the Master Key Switch** (5) is first turned ON.

NOTE

Leave the engine running for the next step.

■ Level Sensor

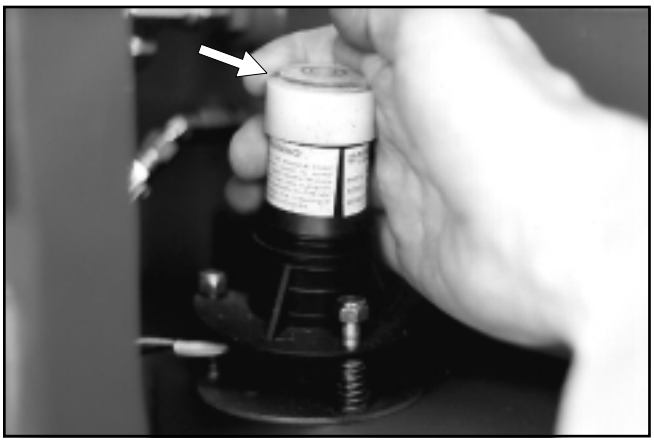

Use **Riser Lift** to raise the platform about six feet (2 m). With the **Master Key Switch** and the **Emergency Stop** switch (at the ground) ON, pull the level sensor to the side as far as possible.

The tilt alarm should sound.

The level sensor is located in the left side of the turntable, behind the ground control box.

■ Emergency Power

⚠ DANGER

When you check turntable **Swing** at CCW (1) the turntable will move directly toward you. Be sure you have room to step backward.

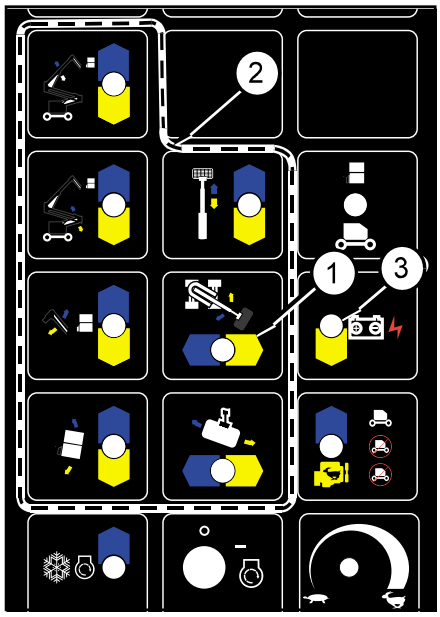

Check each of the seven platform moving switches (2), using **Emergency Power** (3), to see that they work correctly. Check both positions of each switch (2).

For correct emergency power operating procedures see “Emergency Operation” chapter 9.

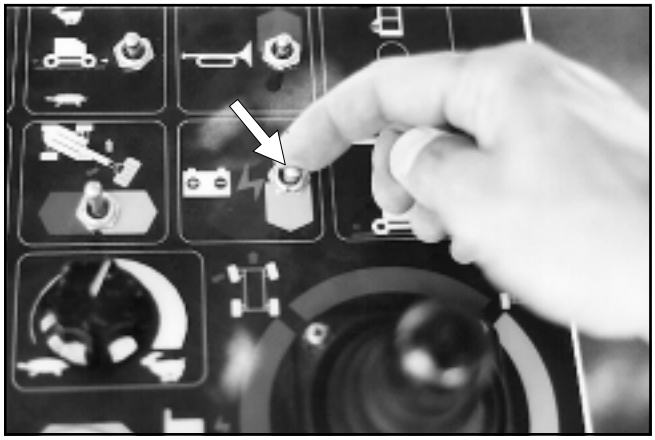

Check each of the boom movement functions from the platform control box, using **Emergency Power**. Check all positions of each control.

https://truckmanualshub.com/

■ Platform Box Switches and Alarms

Check all of the platform moving, drive, and steering functions from the platform control box to see that they cause the ATB 42/50 to move the way it should.

For correct operating procedures see the “Operation” chapter 8.

Pay particular attention to the **Emergency Stop** switch to see that it turns the ATB 42/50 engine off when struck.

Pay particular attention to the platform foot switch to see that it deactivates the platform moving switches when the foot switch is not stepped on.

■ Operator Horn

Press the operator horn (if the ATB 42/50 has that option) to see that it works.

■ Motion Warning Alarm

Listen for the motion warning alarm (if the ATB 42/50 has that option) as you drive forward and backward. Listen for the start up alarm when the **Anti-Restart Switch** is first turned ON.

■ Ground Fault Circuit Interrupt

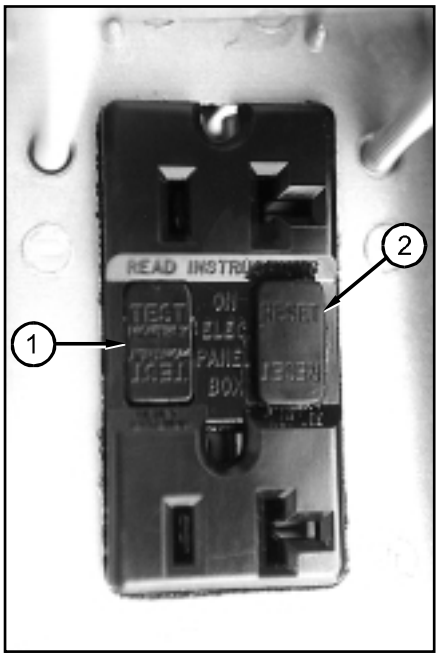

Connect the power input connector (at the rear of the turntable) to a source of 125 volt AC, 15 A electrical power.

NOTE

If the ATB is equipped with the optional AC generator, connect the power input connector to the AC generator, start the engine, then set the **AC Generator** switch to ON.

1. Push the TEST button (1) IN on the GFCI. The RESET button (2) should pop OUT.
2. Press the RESET button (2) back IN. Set the **AC Generator** switch to OFF if you used the optional AC generator.

https://truckmanualshub.com/

■ Platform Work Lights

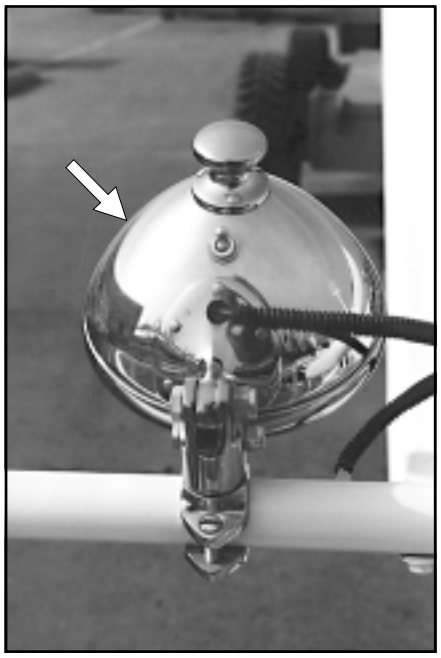

To check the optional platform work lights, while the engine is running, momentarily turn each work light on (use the switch on the back of each light) to see that they both work.

■ Slide Pads (ATB 50 Only)

With the engine running, use the ground control box to extend the tip boom about 1 foot (30 cm).

Visually inspect to see that all the slide pads are in place in the rear end of the base boom.

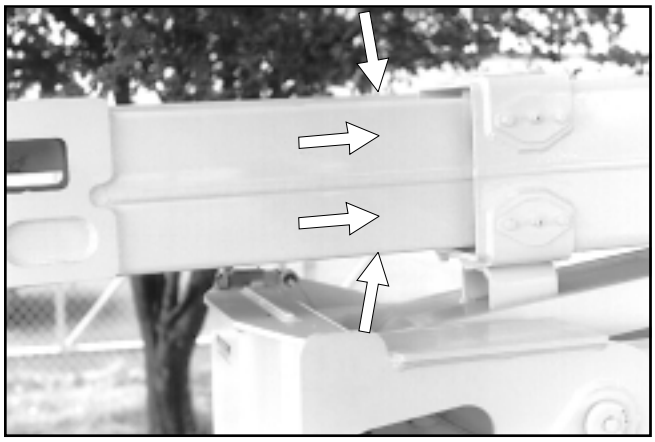

Look at the surface that slides on each slide pad.

The paint should still be in place and there should not be any signs of bare metal gouging.

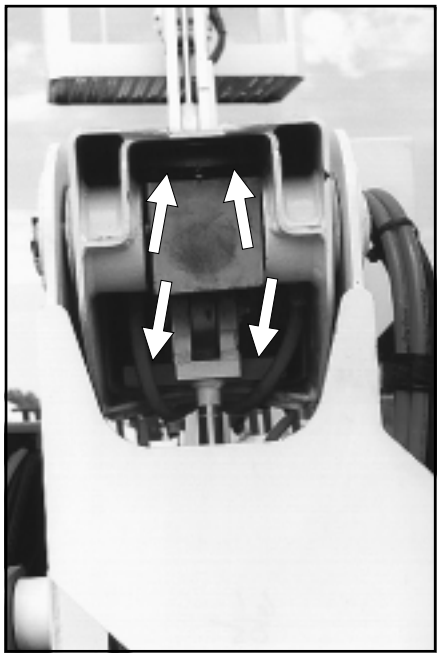

Check the slide pads and paint inside the front end of the base boom similarly.

Completely retract the boom then turn the engine OFF at the ground control box **Master Key Switch**.

https://truckmanualshub.com/

■ Axle Unlocked Alarm

To test the **Axle Unlocked Alarm** and **Tipover Hazard** light do the following:

1. Start the engine from the ground control box and stow the ATB.

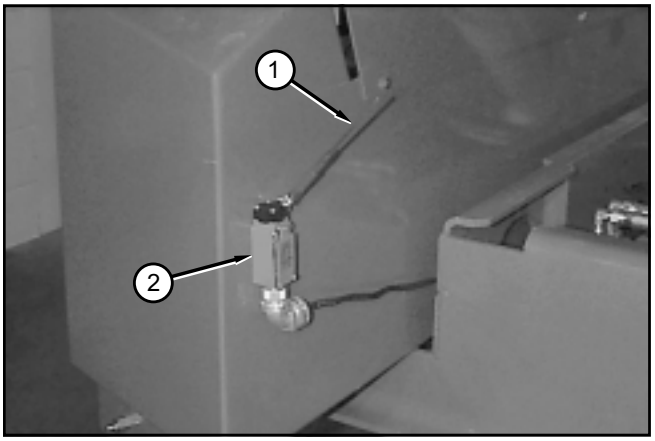

2. Use the **Riser Boom** switch to raise the riser boom about 6 feet (2 m). The arm (1) of the limit switch (2) at the end of the riser should be up as shown.

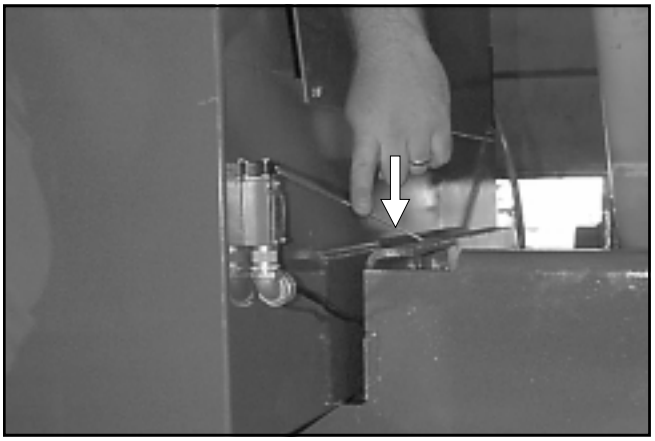

3. Manually push the arm completely down then operate Jib DOWN while holding switch.
4. Release the Jib DOWN switch, then release the switch arm.

When you release the arm, the **Axle Unlocked Alarm** should sound and the **Tipover Hazard** light on the front of the platform control box should come on.

5. Use the **Riser Boom** switch to lower the riser boom onto the limit switch. The alarm should stop sounding and the light should go out.

⚠ DANGER

If either the **Axle Unlocked Alarm** or **Tipover Hazard** light fails to respond correctly, repeat this test.

If either fails a second time, remove the ATB from service **IMMEDIATELY** and refer the problem to a qualified service technician.

https://truckmanualshub.com/

■ Placards and Decals

Look to see that all placards and decals are in place and legible. Replace any missing or illegible placards or decals before placing the Snorkelift into service for the daily work shift.

Decal and placard kits for the ATB 42/50 are available from Snorkel dealers.

❑ Standard Placards and Decals

No	Part No	Description	Req
1	0071927	Hydraulic oil	1
2	0070418	Snorkelift logo	2
3	0162337	Emergency lowering procedures	1
4	0070901	Caution serial number	1
5	0071425	Platform identification	1
6	0072277	Lug nut torque	4
7	0072531	Danger electrical hazard	1
8	0073224	Notice manual reorder	2
9	0074372	Engine RPM	1
10	0073492	Rotate while greasing	1
11	0073585	Made in USA	2
12	0074209	Pre-start instructions	1
13	0074311	Danger cylinder failure (1 per cyl)	10
14	0073491	Safe operating information	1
15	0150448	Attach fall restraint	2
16	0150452	Directional arrows forward/reverse	1
17	0150602	Danger descending boom	4
18	0073043	Manual reorder	1
19	0151410	Danger rotating engine parts	2
20	0151917	Directional arrows	1
21	0090589	Platform capacity 500 pounds	1
22	0161180	Snorkelift logo	2
23	0161205	Danger electrical hazards	2
24	7030003	Lube recommendations	1
25	0161329	Patents applied for	1
26	451986	Danger do not alter switch	1
27	0323899	Danger electrical hazard	1
28	0323897	Danger you must not operate	1
29	7030004	Omniquip logo	2
30	0161819	Emergency lowering procedures	1
31	0161937	Danger tipover hazard	1
32	0323896	Danger electrical hazard	2
33	0181562	ANSI standard	1
34	0181654	Danger inspect unit	1
35	0161402	Caution platform control box front	1
36	0161401	Danger platform control box top	1
37	0161212	Ground controls	1
Model identification			
100	0161707	ATB 50 logo	2
125	0161867	ATB 42 logo	2

No	Part No	Description	Req
Diesel engine			
150	0071926	Diesel fuel	1
Gasoline engine			
175	0071925	Gasoline fuel	1
176	0074316	Caution governor damage	1
Dual fuel			
200	0161667	Dual fuel system	1
201	0081441	Caution liquid withdrawal	1
202	0071925	Gasoline fuel	1
LP fuel only			
225	0081441	Caution liquid withdrawal	1
226	0074316	Caution governor damage	1
Foam filled tires			
250	0073298	Danger foam filled tires	2
Air filled tires			
275	0070421	Tire pressure (1 per wheel)	4
4 wheel drive			
300	0111390	4 x 4 logo	2
Crab steer			
325	0161396	Crab steer	1

❑ Optional Placards and Decals

No	Part No	Description	Req
350	0161778	CE 5 station control valve	1
351	0161819E	CE emergency lowering	1
352	0162194	CE mark logo	1
353	0162311	CE logo	1
375	0161699	Caution do not run engine	1
400	0181634	Engine block heater, Ford only	1
425	0150606	125 volt power to platform	1

https://truckmanualshub.com/

❑ Inspection Drawing

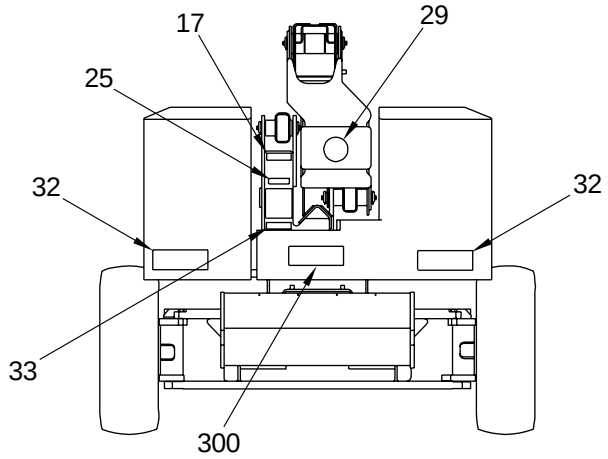

Front

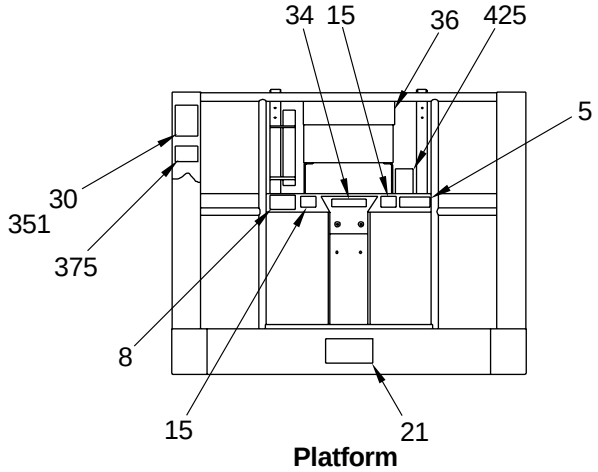

Platform

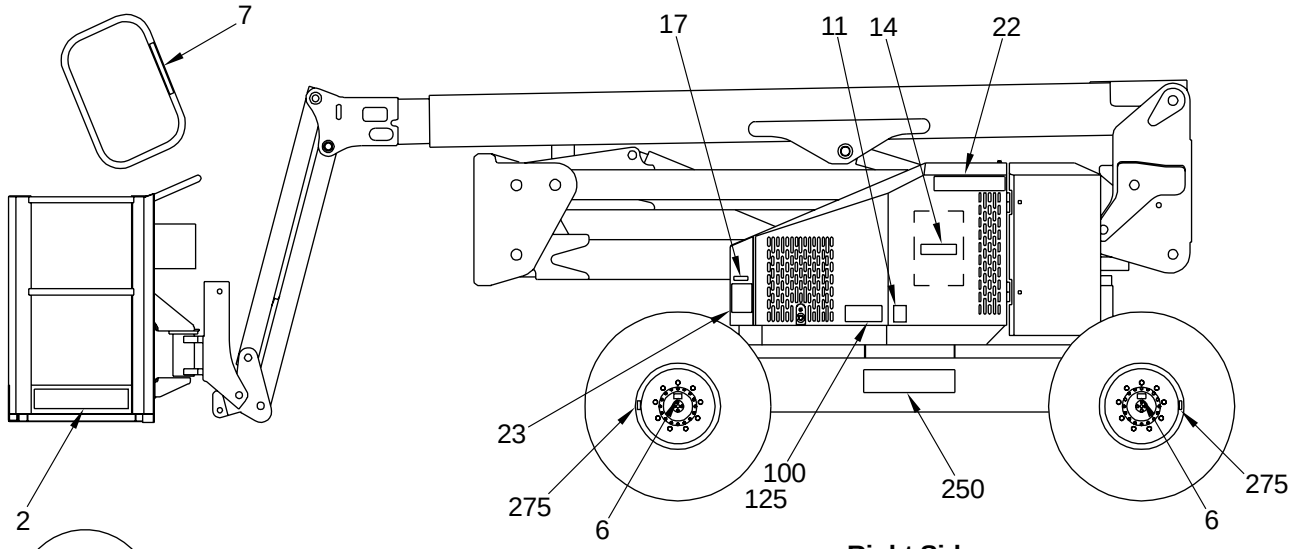

Right Side

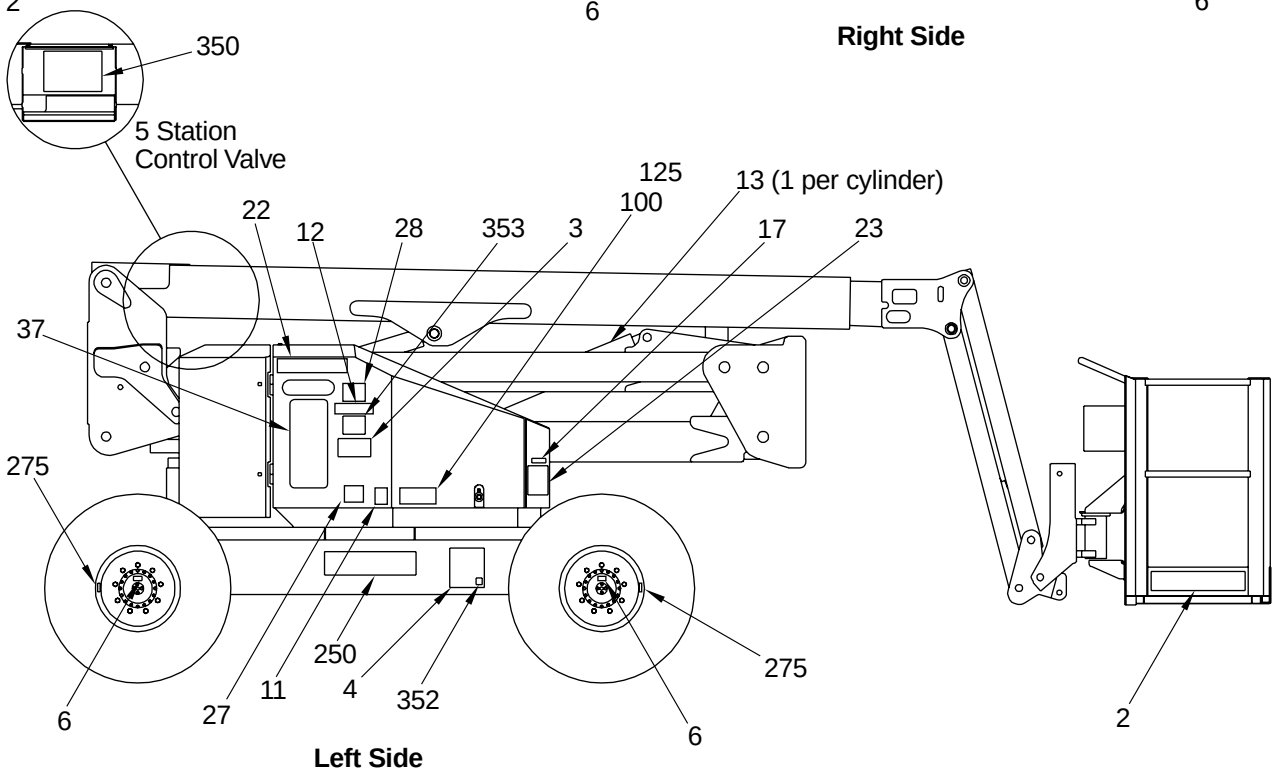

Left Side

https://truckmanualshub.com/

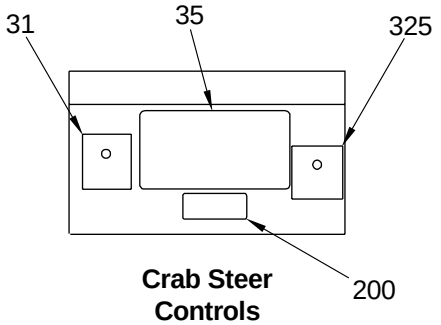

Crab Steer Controls

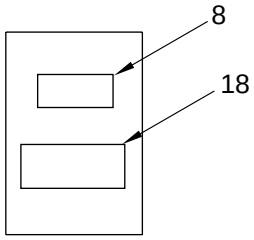

Manual Record box

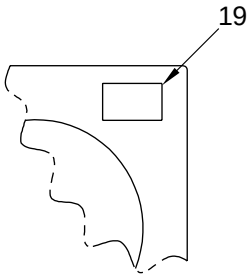

Engine Shroud

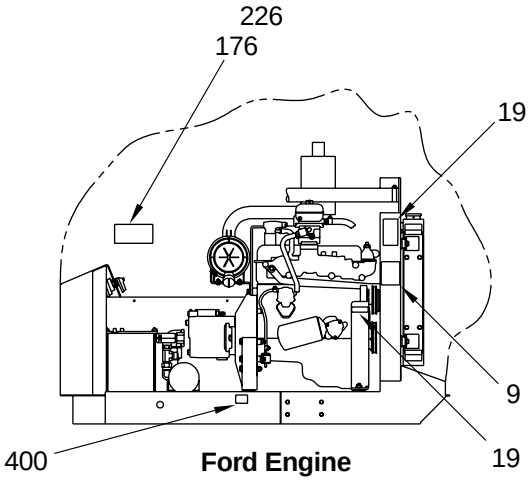

Ford Engine

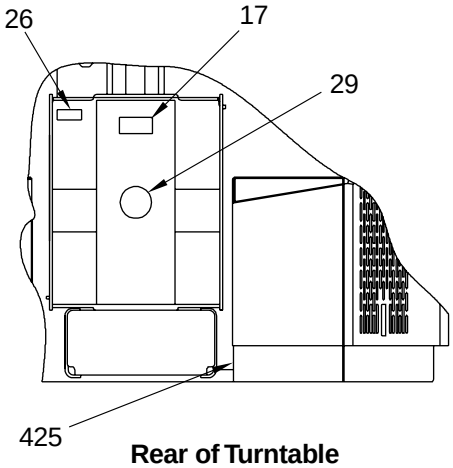

Rear of Turntable

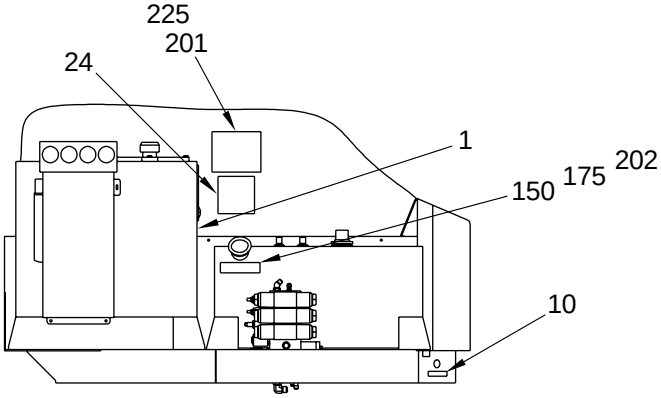

Fuel and Hydraulic Tanks

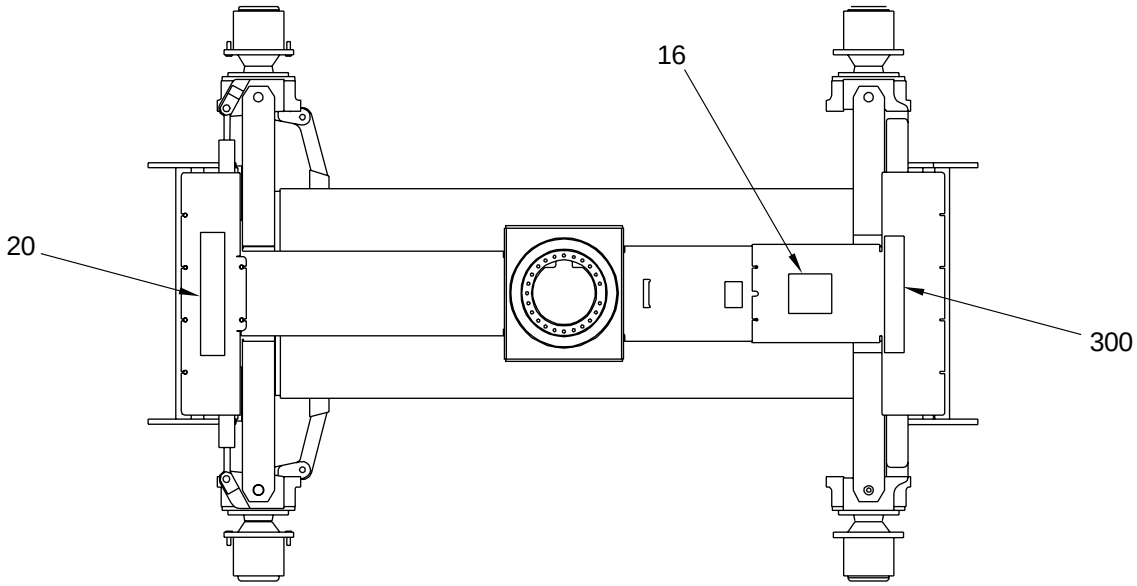

Top of Chassis

■ Operating Procedures

This chapter explains how to properly start and operate an ATB 42/50 that has either a gasoline or diesel engine. Starting a gasoline engine that is set up to burn LPG only or dual fuel, is also explained in this chapter. Read and understand all the previous chapters in this manual before you begin to operate an ATB 42/50.

⚠CAUTION

If you use the ATB 42/50 for painting be sure the optional sandblast protection kit is installed to protect the hydraulic cylinder rods from paint. Do not leave the ATB 42/50 engine running if you are sandblasting. Sand drawn through the radiator erodes the core and fan.

■ Control Stations

An ATB 42/50 can be operated from the ground control box or from the platform control box. There are basically two differences between ground control and platform control operations, both are safety related:

1. The ground control box can override the platform control box at any time. If a person operating the machine from the platform becomes incapacitated, a person on the ground can always take over machine control.
2. The ATB 42/50 can only be driven from the platform control box. The wheels cannot be made to move from the ground control box. This prevents ground control operators from running over themselves.

⚠DANGER

The ATB 42/50 is **not Electrically** Insulated.

Death or **Serious Injury** to operating personnel, can occur if the machine should come into contact with energized electrical wires during operation.

DO NOT attempt to operate the ATB 42/50 ground controls if the platform, booms, or any other conducting part of an ATB 42/50 is in contact with energized electrical wires or if there is an immediate danger of such contact.

NOTE

See the “Electrical Hazard Warning” section for a complete explanation of the hazards concerning electricity.

■ Emergency Stopping

To stop an ATB 42/50, push the **Emergency Stop** button at the ground control box or at the platform control box IN.

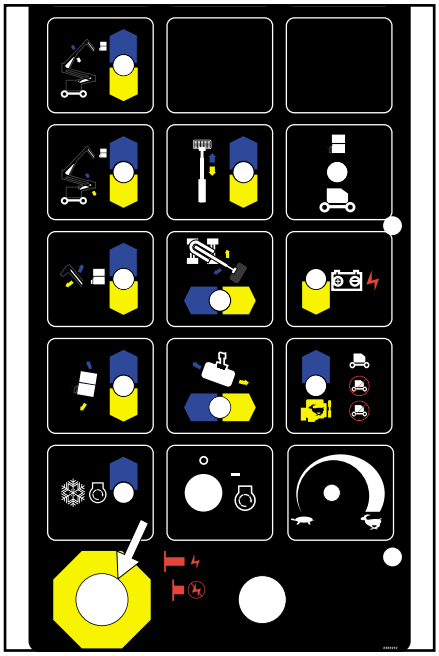

Ground control box **Emergency Stop** switch location.

Platform control box **Emergency Stop** switch location.

NOTE

For a complete discussion of the **Emergency Stop** switches, see “Controls” chapter 6.

https://truckmanualshub.com/

■ Operation Considerations

To use this chapter, first decide whether you will be starting and operating the ATB 42/50 from the ground control box or the platform control box.

Begin at the section entitled “Starting From Ground Control Box”, if you intend to start and run the ATB 42/50 from the ground station.

Begin at the section entitled “Starting From Platform Control Box”, if you intend to start and run the ATB 42/50 from the platform.

After you have made the decision as to ground or platform control operation, you need to know whether the ATB 42/50 has a gasoline or diesel engine. If it has a gasoline engine, you further need to know whether the engine is set up to run on LPG only, or dual fuel (LPG or gasoline). If it is set up to burn dual fuel, you have to decide on gasoline or LPG operation.

The simplest way to tell what kind of engine set up you have is to look inside the fuel compartment at the left rear of the ATB 42/50 turntable.

- If the only fuel source you see there is a tank labeled GASOLINE, and there is no strap or hose to mount an LPG tank, the ATB 42/50 has a gasoline engine set up to burn gasoline fuel only.
- If all you see is a fuel tank labeled DIESEL FUEL, the ATB 42/50 has a diesel engine.
- If all you see is one or more LPG tanks, the ATB 42/50 has a special gasoline engine set up to burn LPG only.
- If you see a GASOLINE tank and an LPG tank, the ATB 42/50 has a special gasoline engine set up to burn either gasoline or LPG fuel.

NOTE

Once you have determined the type of engine installed and the type of fuel that you will operate the ATB 42/50 on, you are ready to start the engine.

■ Starting From Ground Control Box

Before you begin to operate the ATB 42/50 from the ground control box, a qualified operator must perform the “Daily Inspection and Maintenance” as described in chapter 7.

To start the engine from the ground control box do the following:

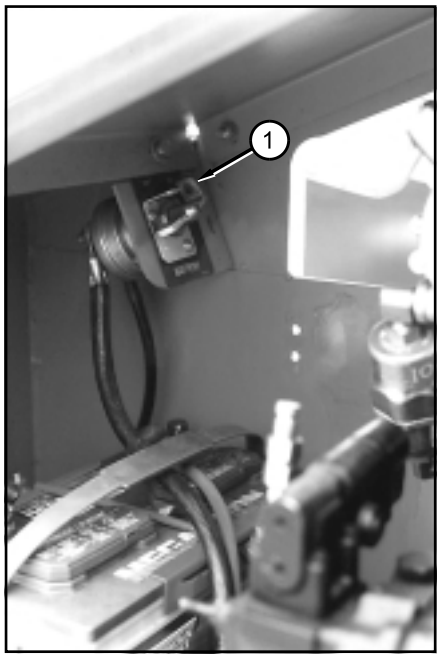

1. Set the **Battery** switch (1) to ON.

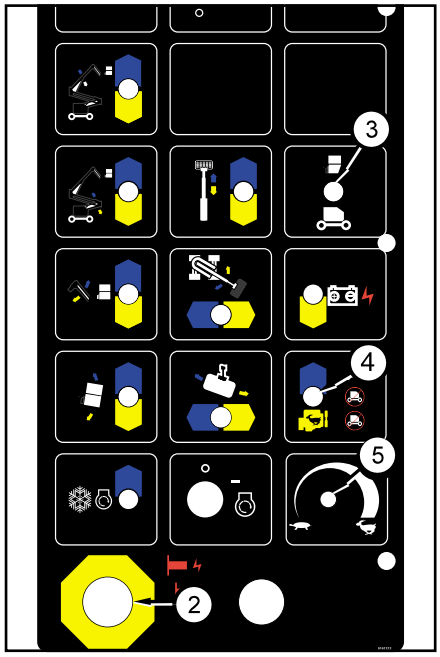

2. Set the **Emergency Stop** switch (2) to ON (pulled out).
3. Set the **Platform/Ground Selector** switch (3) to GROUND (down).
4. Set the **Ground Operation** switch (4) to the engine IDLE position (center).
5. Set the **Boom Speed** knob (5) at about 3/4 full scale.

https://truckmanualshub.com/

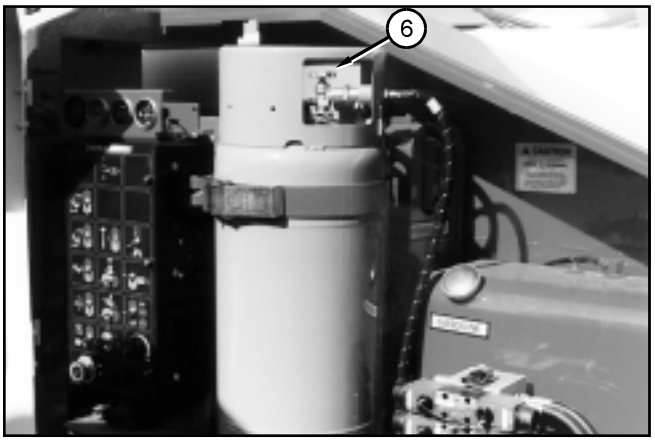

6. For LPG fuel operation: Completely open the valve (6) on top of the LPG tank, (turn counterclockwise until it stops).

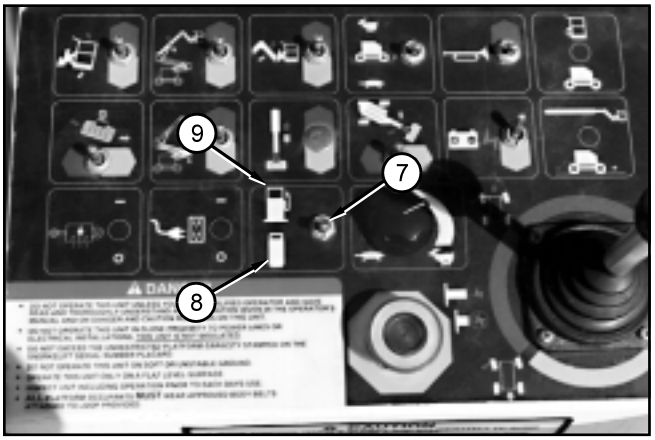

7. For a dual fuel engine: Set the **Dual Fuel** switch (7) to GAS (gasoline) (9) or to LPG (gas) (8), depending on which fuel you want to use for operation.

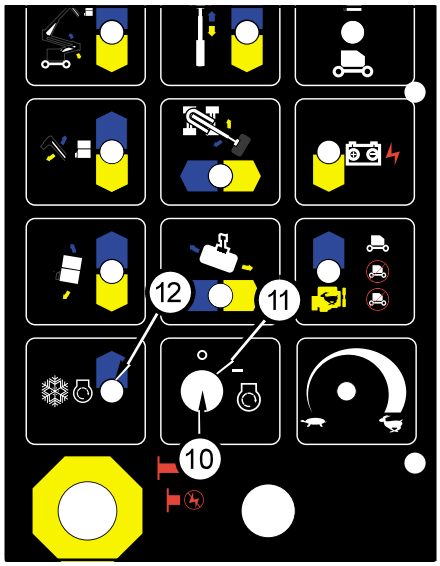

8. Insert the key (10) in to the **Master Key Switch** (11).

9. Turn the key (10) to ON and pause there a few seconds (but not over 30 seconds), while an alarm sounds to alert others that the ATB 42/50 is about to start.

10. For a diesel engine: If engine is at cold ambient temperature, hold the **Choke/Cold Start** switch (12) up for 10 seconds just before you perform the next step.

NOTE

Gasoline engines have automatic chokes. They do not use the **Choke/Cold Start** switch.

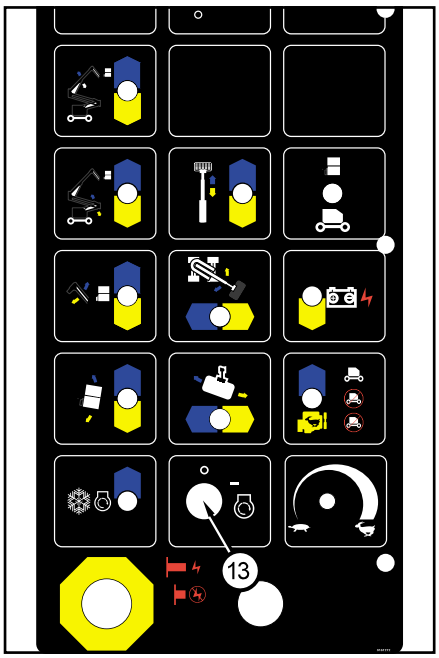

11. Turn the key (13) to START and hold it there until the engine starts, or for 20 seconds, whichever comes first. When the engine starts, release the key (13).

NOTE

If you pause 30 seconds or more, after turning the **Master Key Switch** to ON, an automatic protection feature will prevent the ATB 42/50 from starting. If that happens, turn the key to OFF, then try again.

⚠CAUTION

If the engine does not start in 20 seconds, turn the key (13) to OFF. Wait 60 seconds before trying to start the engine again.

The engine should now be running, and the ATB 42/50 is ready to begin work.

https://truckmanualshub.com/

■ Starting From Platform Control Box

Before you begin to operate the ATB 42/50 from the platform control box, a qualified operator must perform the “Daily Inspection and Maintenance” as described in chapter 7.

To start the engine from the platform control box do the following:

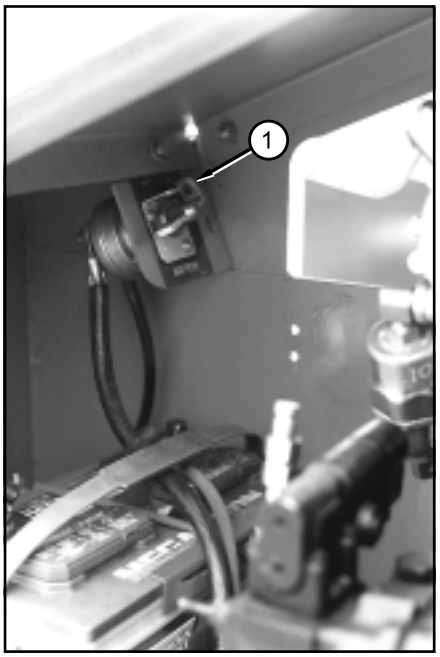

1. Set the **Battery** switch (1) in turntable to ON.

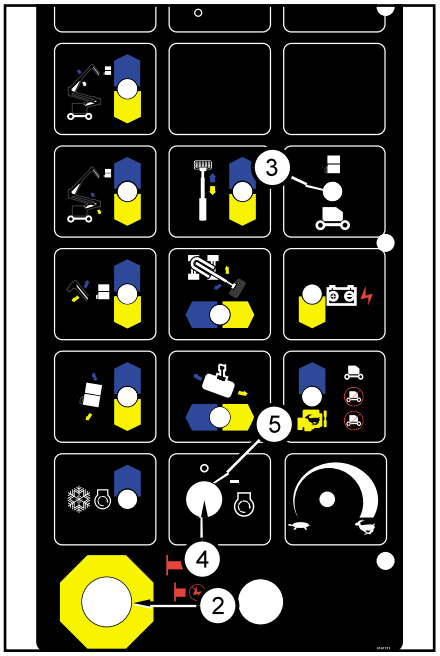

2. Set the **Emergency Stop** switch (2) at the ground controls to ON (pulled out).
3. Set the **Platform/Ground Selector** switch (3) to PLATFORM (up).
4. Insert the key (4) and set the **Master Key Switch** (5) to ON.

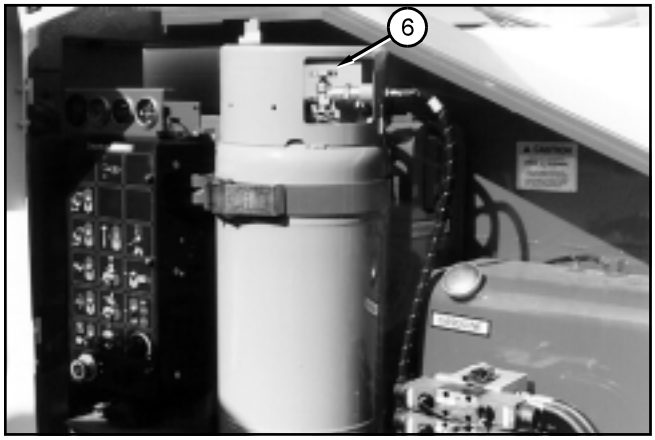

5. For LPG fuel operation: Completely open the valve (6) on top of the LPG tank, (turn counterclockwise until it stops).

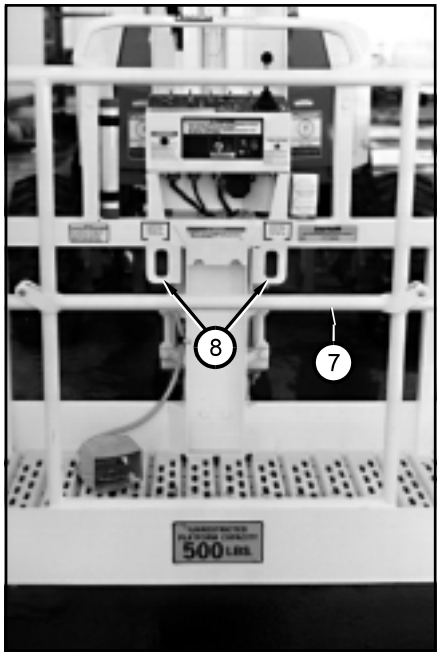

6. Enter the platform, close the gate (7), and attach the lanyard of your fall restraint to one of the anchor points (8).

https://truckmanualshub.com/

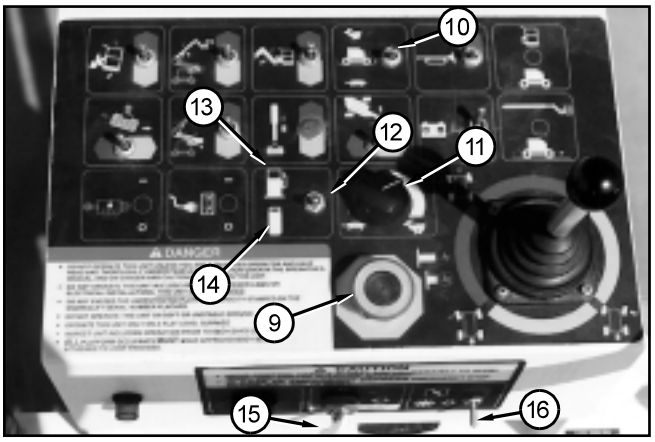

7. Pull the **Emergency Stop** switch (9) on the platform control box up (ON).
8. Set the **Drive Range** switch (10) to LOW.
9. Set the **Boom Speed** knob (11) as shown.
10. For a dual fuel engine: Set the **Dual Fuel** switch (12) to GAS (gasoline) (13) or to LPG (gas) (14), depending on which fuel you want to use for operation.
11. Turn the **Anti-Restart** switch (15) to ON, and pause there a few seconds (but not over 30 seconds), while an alarm sounds to alert others that the ATB 42/50 is about to start.
12. For a diesel engine: If the engine is at ambient temperature (cold), hold the **Choke/Cold Start** switch (16) up for 10 seconds just before you perform the next step.

NOTE

Gasoline engines have automatic chokes. They do not use the **Choke/Cold Start** switch.

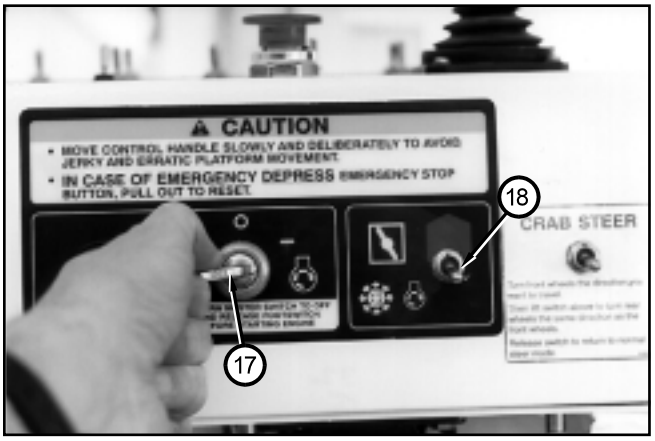

13. Turn the **Anti-Restart** switch (17) to START and hold it there until the engine starts or for 20 seconds, whichever comes first. When the engine starts, release the **Anti-Restart** switch.

NOTE

If you pause 30 seconds or more, after turning the **Anti-Restart** switch (17) to ON, an automatic protection feature will prevent the ATB 42/50 from starting. If that happens, turn the **Anti-Restart** switch to OFF, then try again.

⚠CAUTION

If the engine does not start in 20 seconds, turn the Anti-Restart switch (17) to OFF. Wait 60 seconds before trying to start the engine again.

The engine should now be running, and the ATB 42/50 is ready to begin work.

■ Moving The Platform

The engine should already be running (as described earlier in this chapter), before you start this section.

⚠DANGER

DO NOT operate near energized electrical conductors. Maintain the Minimum Safe Approach Distance (M.S.A.D.), to energized power lines. See the “Electrical Hazard Warning” section for a complete explanation of the hazards concerning electricity.

Be certain that the space into which you are about to move the platform, boom, turntable, and/or chassis is free of obstructions. **ALWAYS** look in the direction of movement.

When you operate from the platform control box, be sure that the lanyard of your fall restraint is attached to an anchor point on the platform mount. Also, be sure that platform gate is closed behind you.

Death or **Serious Injury** can result from sudden stops. To avoid sudden stops, **DO NOT** remove your foot from the platform foot switch while the ATB 42/50 is in motion.

https://truckmanualshub.com/

❑ From Ground Control Box

Each of the ways the platform can move is shown in the following photograph and switch illustration:

The illustration shows the platform switches that cause the platform or booms to move.

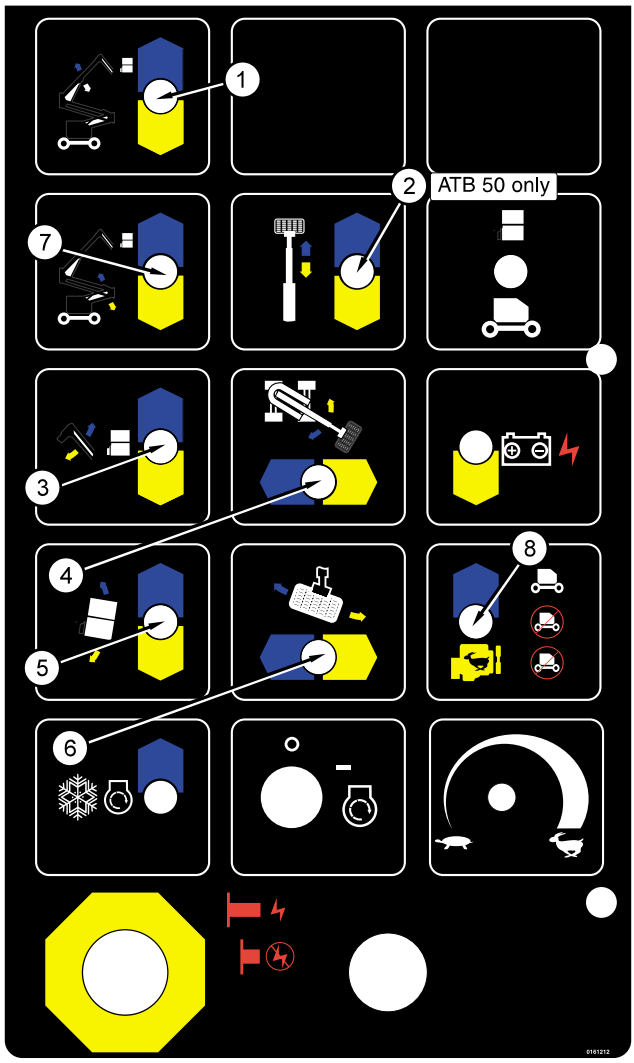

Although the **Ground Operation** switch (8) is not a platform moving switch, its use is required whenever any of the other switches are operated.

NOTE

You must hold the **Ground Operation** switch (8) up when you use any of the platform moving switches (1 through 7) to move the platform.

This is a safety feature to prevent the platform from moving if a single platform moving switch is accidentally pushed.

❑ From Platform Control Box

When you operate from the platform control box, be sure that the lanyard of your fall restraint is attached to an anchor point on the platform mount. Also, be sure the gate is closed. Each of the ways the platform can move is shown in the following photograph and switch illustration.

The illustration shows the platform switches that cause the platform or booms to move.

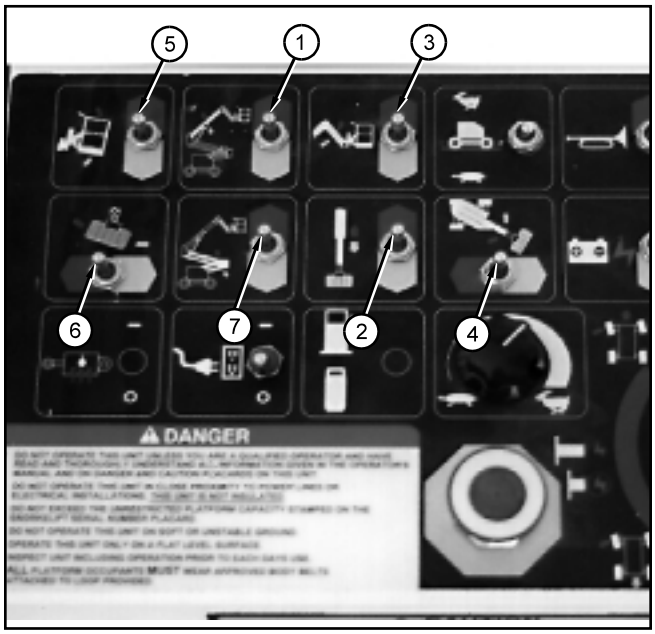

You must be stepping on the platform foot switch (9) when you use any of the platform moving switches (1 through 7) or the **Drive/Steer** controller to move the platform. The platform foot switch is a safety feature to prevent the platform from moving if a platform moving switch, or controller, is accidentally pushed.

https://truckmanualshub.com/

■ Driving the ATB 42/50

The ATB 42/50 chassis can only be driven from the platform control box. You cannot drive from the ground control box.

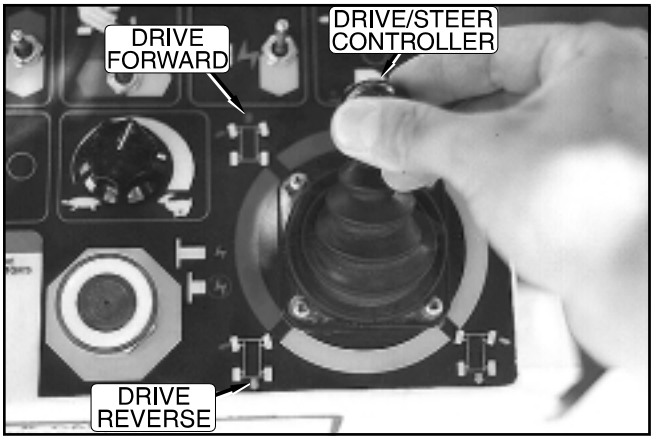

There is a blue arrow on the forward end of the chassis and a yellow arrow on the reverse end of the chassis.

❑ Forward and Reverse Drive

Pushing the **Drive/Steer** controller to FORWARD causes the chassis to move in the direction of the blue arrow on the end of the chassis.

Pushing the **Drive/Steer** controller to REVERSE causes the chassis to move in the direction of the yellow arrow on the opposite end of the chassis.

NOTE

You must be stepping on the platform foot switch for the **Drive/Steer** controller to work.

■ Steering the ATB 42/50

The ATB 42/50 can only be steered from the platform control box. You cannot steer the ATB 42/50 from the ground control box.

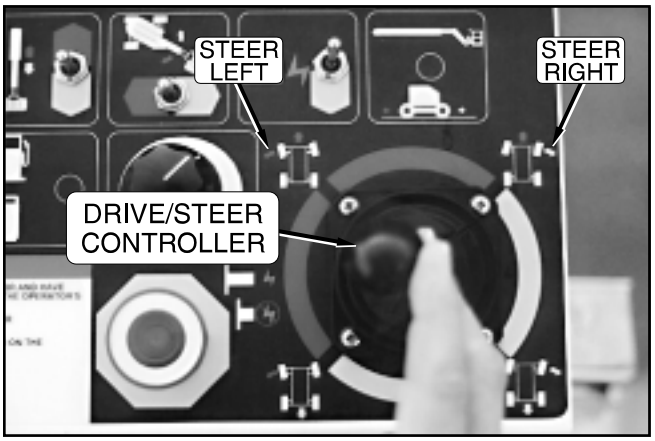

There are two blue arrows on the left side of the chassis and two yellow arrows on the right side of the chassis.

❑ Steer Left and Right

Pushing the **Drive/Steer** controller to LEFT causes the front wheels to turn for a left turn.

Pushing the **Drive/Steer** controller to RIGHT causes the front wheels to turn for a right turn.

NOTE

You must be stepping on the platform foot switch for the **Drive/Steer** controller to work.

When you release the **Drive/Steer** controller the wheels stay where you set them. The wheels do not return to the “straight ahead” position the way automobile wheels do.

❑ 4-Wheel Steer

An ATB 42/50 equipped with optional 4-wheel steer can make extremely sharp turns by turning the two front wheels (1) one direction then turning the two rear wheels (2) the opposite direction.

4-wheel steer works like 2-wheel steer: Hold the **Drive/Steer** controller to the RIGHT or LEFT until the front wheels (1) turn as far as they will go.

Continue to hold the Drive/Steer controller to the RIGHT or LEFT and the rear wheels (2) will begin to turn.

https://truckmanualshub.com/

The wheels straighten in reverse order: Hold the **Drive/Steer** controller to the LEFT or RIGHT and the rear wheels (2) will come back to the straight ahead position before the front wheels (1) start to turn back.

❑ 4-Wheel Steer With Crab Steer

An ATB 42/50 equipped with optional crab steering can move sideways.

To do so, use the **Drive/Steer** controller to turn the front wheels (1) in the direction you want to move the ATB 42/50.

Then, hold the Crab Steer switch UP until the rear wheels (2) point the same direction as the front wheels (1).

Use the **Drive/Steer** controller to drive the ATB 42/50 FORWARD (and to the side), or REVERSE (and to the side).

NOTE

If the Drive/Steer controller is not returned to the center position the wheels may return to the straight position.

■ Electrical Outlets (GFCI) at Platform

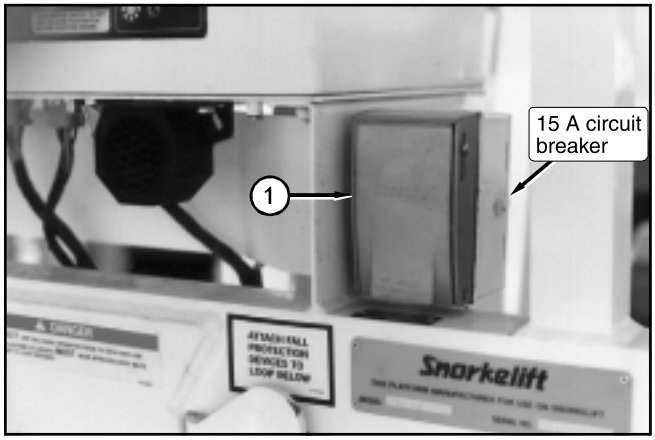

The electrical box (1) has two 3 prong, 125 volt AC electrical connectors. Their combined output is limited by a 15 A, slow blow circuit breaker.

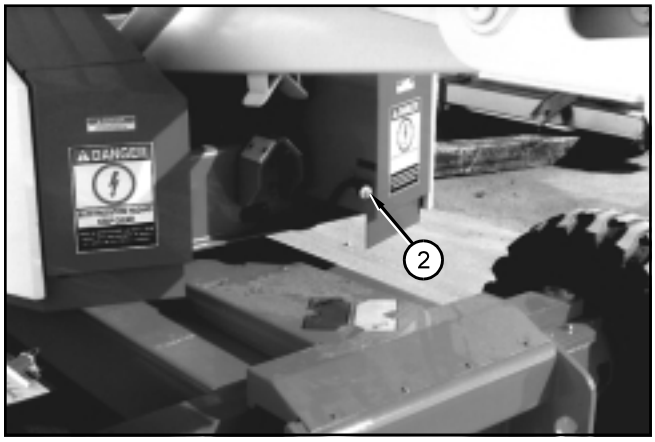

The power input connector (2) for the electrical box (1) is at the rear of the turntable. Plug a 125 volt AC - 15 amp source of power into the power input connector (2) if you intend to use the electrical outlet (1) to power equipment.

⚠CAUTION

ALWAYS be sure to unplug the power source before you move the ATB 42/50.

https://truckmanualshub.com/

❑ AC Generator

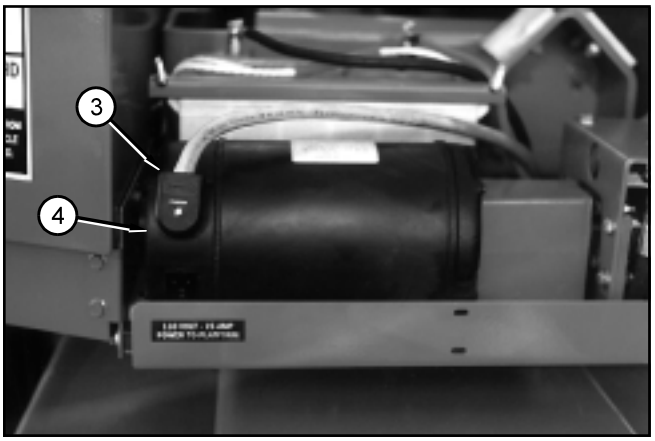

If the ATB 42/50 has the AC generator option, the power input connector (3) should be plugged into the AC generator (4).

After the power input connector is plugged into the generator, turn the **AC Generator** switch (5) ON.

NOTE

For more information about the electrical outlet, see Ground Fault Circuit Interrupt in “Safety Devices” chapter 2 and Circuit Breakers in “Automatic Shut-Offs and Circuit Breakers” chapter 5.

■ Securing for Day

At the end of each work day the ATB 42/50 should be returned to the stowed position and locked as described under Stowing in the “Stowing and Transporting” chapter 10.

■ Emergency Operation Procedures

The following procedures are emergency procedures only. **DO NOT** use them for normal operation. Their purpose is to get the platform and operator safely to ground when a problem keeps the platform from lowering in a normal way.

❑ Operation From Platform Control Box

Switch settings listed in the first four steps below must exist at the ground before emergency operation procedures will work at the platform control box:

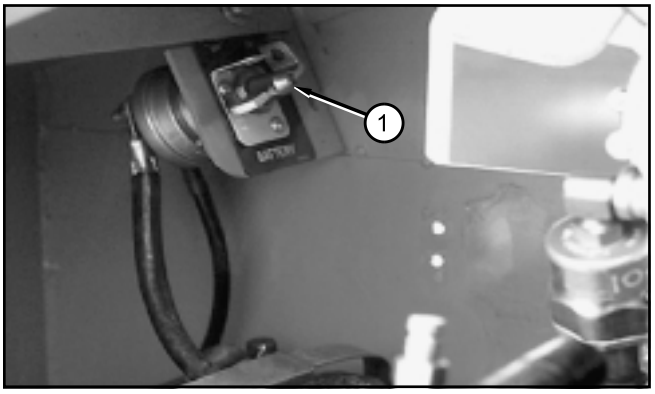

1. The **Battery** switch (1) must be ON.

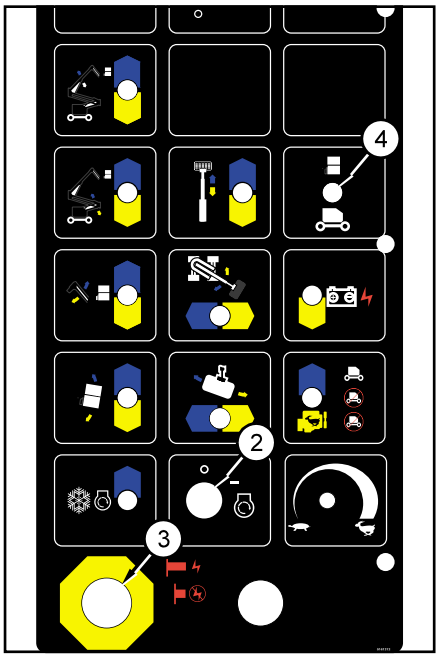

2. The **Master Key Switch** (2) must be ON.
3. The **Emergency Stop** switch (3) must be pulled out (ON).
4. The **Platform/Ground Selector** switch (4) must be set to PLATFORM (up).

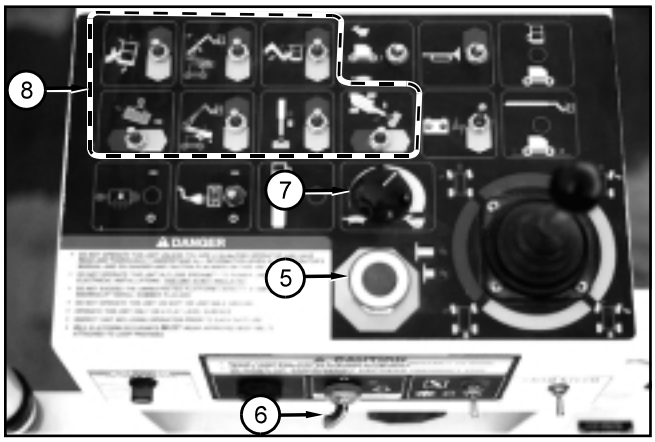

5. Set the **Emergency Stop** switch (5) to ON (pulled up).
6. Set the **Anti-Restart** switch (6) to ON.
7. Set the **Boom Speed** knob (7) to the speed you want.
8. Hold the appropriate platform moving switch (8) the direction you want the platform to move.

9. Step on the platform foot switch (9).

10. Hold the **Emergency Power** switch (10) down and the platform will move.

https://truckmanualshub.com/

NOTE

Boom movements will be slow and have long lag times under Emergency Power from the ground controls, even with the **Boom Speed** switch set at the maximum speed setting.

If the platform does not move and the ATB 42/50 has the optional extra battery installed, turn the **Anti-Restart** switch to OFF then back to ON (to cycle to the opposite battery) then go back to step 8 on page 9-1.

❑ Operation From Ground Control Box

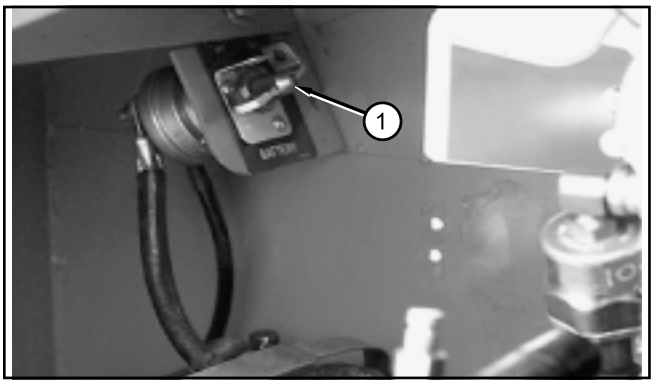

1. Set the **Battery** switch (1) to ON.

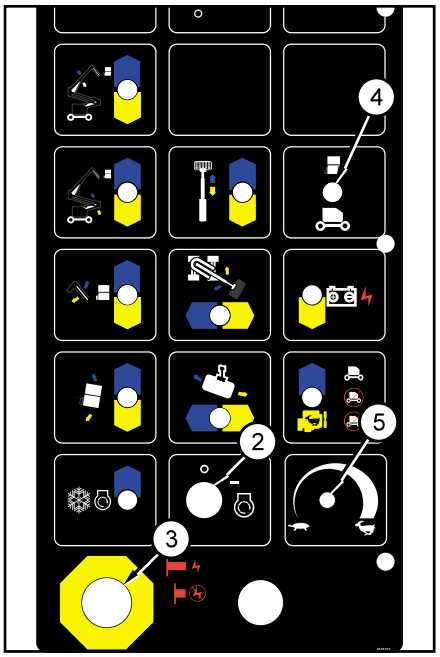

2. Set the **Master Key Switch** (2) to ON.
3. Pull the **Emergency Stop** switch (3) out (ON).
4. Set the **Platform/Ground Selector** switch (4) to GROUND.
5. Set the **Boom Speed** knob (5) to the speed you want.

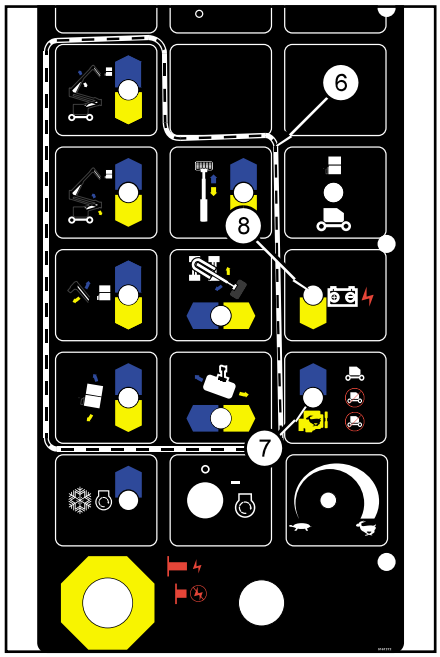

6. Hold the appropriate platform moving switch (6) the direction you want the platform to move.
7. Hold the **Ground Operation** switch (7) up.
8. Hold the **Emergency Power** switch (8) down and the platform will move.

NOTE

Boom movements will be slow and have long lag times under Emergency Power from the platform, even with the **Boom Speed** knob set at the maximum speed setting.

If the platform does not move and the ATB 42/50 has the optional extra battery installed, turn the **Master Key Switch** to OFF then back to ON (to cycle to the opposite battery) then go back to step 6 above.

■ Stowing

At the end of each work day (or in preparation for lifting or storage) a qualified operator should put the ATB 42/50 into its stowed position then lock it.

The correct stowed position is shown here.

To bring the ATB 42/50 into the stowed position use the controls on the ground control box or platform control box to:

1. Fully retract the booms (ATB 50 only).
2. Fully lower the booms.
3. Center the main boom between the rear wheels.

❑ To Lock the ATB 42/50:

NOTE

If the engine has just been under load and is hot, let the engine idle for one minute.

1. Set the **Master Key Switch** to OFF then remove the key.

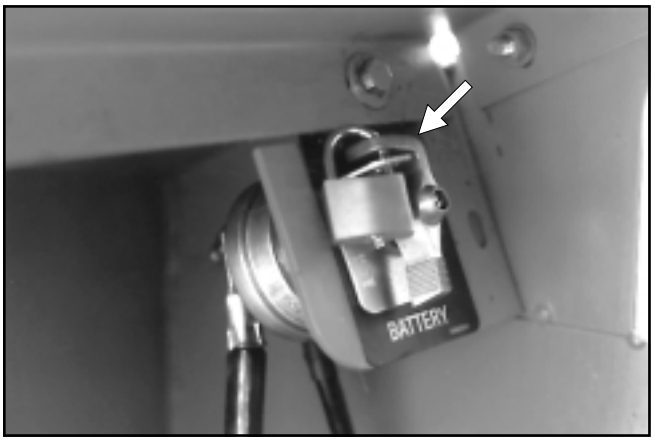

2. Set the **Battery** switch to OFF and it.
3. For machines equipped with optional LPG fuel, close the valve on the LPG tank (completely turned clockwise).
4. Close and lock all doors.

■ Transporting

❑ Trailering

An ATB 42/50 weighs approximately 15,280 pounds (6930 kg). Loading ramps must be able to support that weight. Transport trailers must be able to safely transport that weight.

⚠ DANGER

DO NOT load an ATB 42/50 on grades over 25%; or with the turntable rotated with respect to the chassis; or on ramps with poor traction, uneven surfaces, or steps.

To safely drive an ATB 42/50 onto a transport trailer:

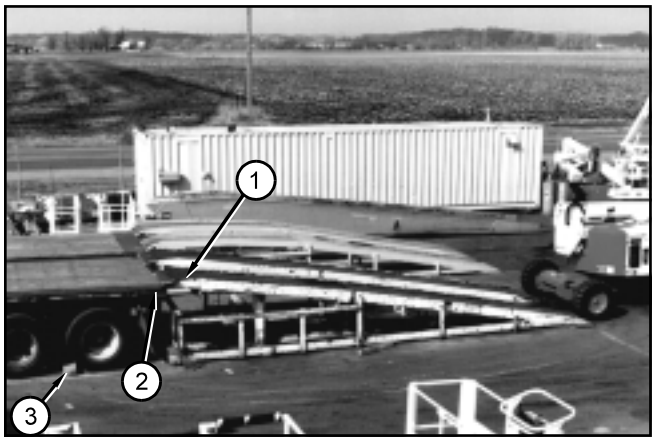

1. Visually inspect the alignment of the loading ramp (1) and the truck or trailer (2). They should both be on the same straight line.
2. Chock (3) the wheels of the truck or trailer so it cannot roll away form the loading ramp (1) while the ATB 42/50 is being loaded.
3. Set the ground control box for platform operation.

https://truckmanualshub.com/

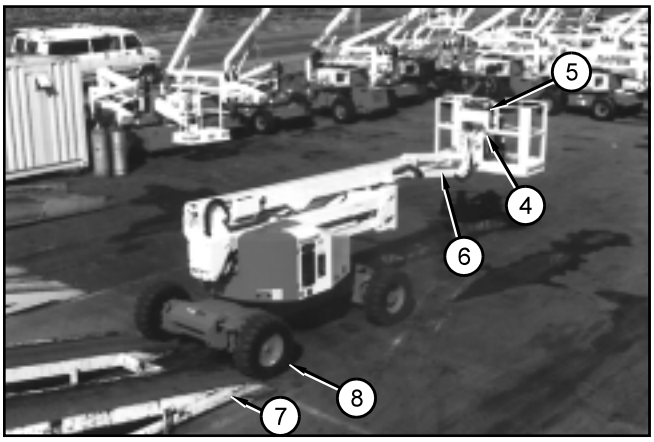

4. Enter the platform and attach the lanyard of your fall restraint to the lanyard anchor point (4) on the platform.
5. Use the controls on the platform control box (5) to raise the jib boom (6) to its horizontal position.
6. Use the platform controls to bring the ATB 42/50 into the stowed position (except jib boom horizontal) at the foot of the loading ramp (7) with the steering wheels (8) nearest the ramp (7).
7. Visually check (from the platform) to be sure the ATB 42/50 is aligned with the ramp and the ramp is still aligned with the truck or trailer. All should be in a straight line.

⚠ DANGER

Death or **Serious Injury** can result from losing control of an ATB 42/50 while loading. Always set the **Drive Range** to LOW before you drive up or down a grade.

8. Set the **Drive Range** to LOW.
9. Use turntable **Swing** to move the platform slightly to the side so you are aligned with the wheels and can see them better.
10. Use the **Drive/Steer** controller to slowly drive the ATB 42/50 straight onto the ramp and transport trailer.
11. Use turntable **Swing** to align the main boom between the rear wheels.
12. Lower the jib boom until it is completely down.
13. Leave the engine running in preparation for securing the machine to the transport vehicle.
14. Chock the ATB 42/50 wheels.

❑ Securing to a Transport Vehicle

This procedure assumes that you have just finished loading the machine onto the transport vehicle, that the ATB 42/50 engine is still running, and that the wheels are chocked.

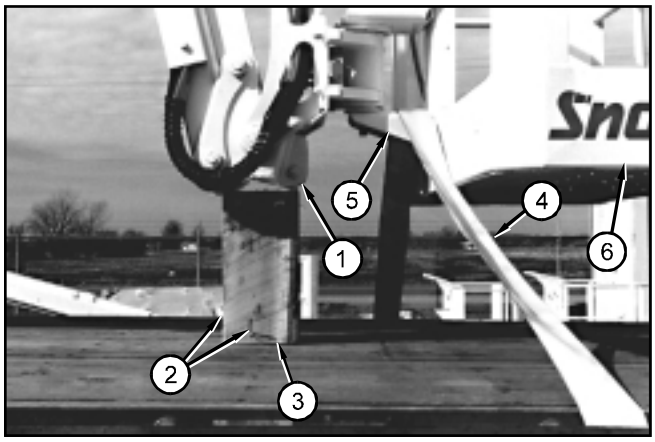

1. Use **Main Boom Lift** to raise the jib end bracket (1) a few inches.
2. Toenail (2) a large wooden block (3) directly below the jib end bracket (1).
3. Use **Main Boom Lift** to lower the jib end bracket (1) onto the block (3).
4. Set the **Anti-Restart** switch to OFF.
5. Set the **Master Key Switch** to OFF then remove the key.

⚠ DANGER

DO NOT run a strap over the platform toe board (6). The toe board is not strong enough to hold the platform down and will be damaged in transit. Run a strap where shown.

6. Tighten a nylon strap (4) over the mounting bracket (5) as shown.

7. Set the **Battery** switch to OFF and lock it.

https://truckmanualshub.com/

8. For machines equipped with optional LPG fuel, close the valve on the LPG tank (completely turned clockwise).

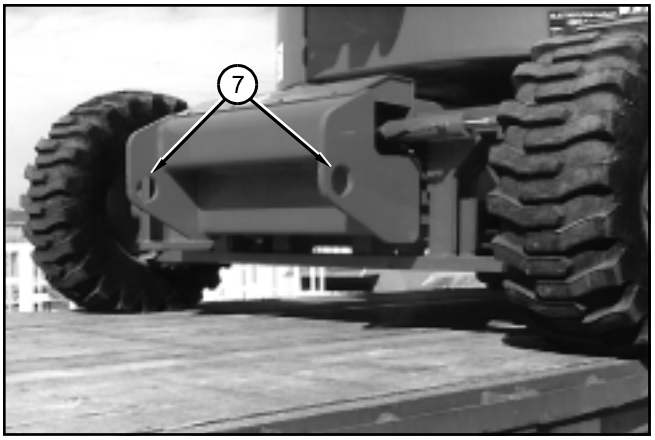

⚠ DANGER

Transporting a loose ATB 42/50 can cause **Death** or **Serious Injury**.

DO NOT attach tie downs to the steering tie rods. The tie rods are not strong enough to safely hold an ATB 42/50.

9. Attach chains to the front lifting tie down lugs (7) on the ATB 42/50 chassis.

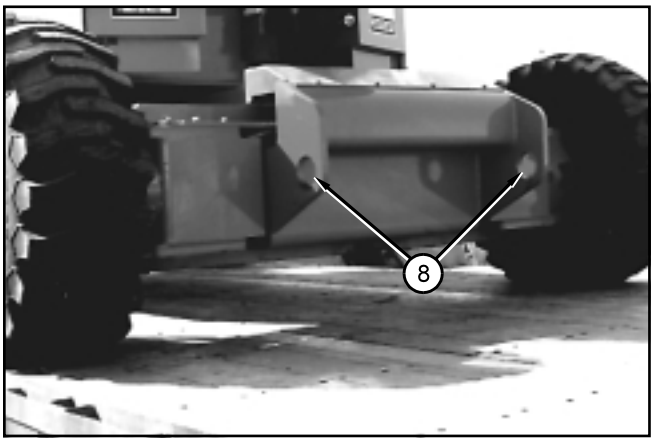

10. Attach chains to the rear lifting tie down lugs (8) on the ATB 42/50 chassis.

NOTE

Chocks may be removed at this time, though it is a good idea to leave them in place.

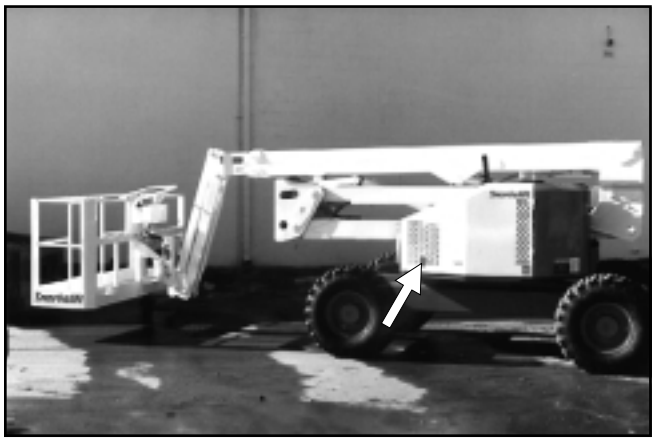

11. Lock the cowling doors closed.

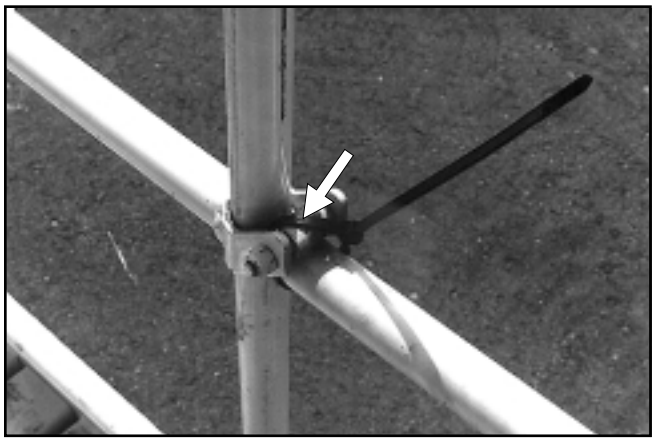

12. Use wire ties, as shown, to keep the platform gravity gate from bouncing around.

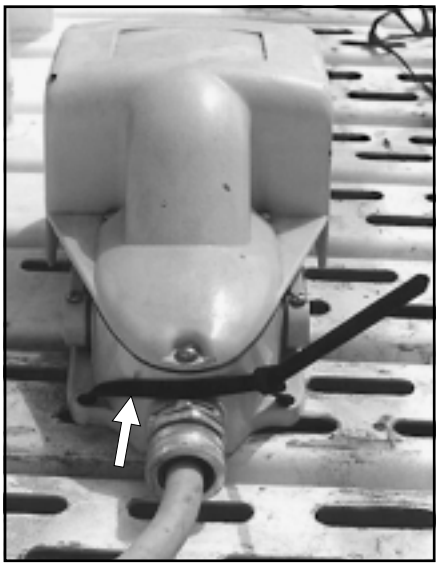

13. Use wire ties, as shown, to keep the platform foot switch from bouncing around.

NOTE

Reverse the above procedure after transporting.

https://truckmanualshub.com/

■ Towing

⚠DANGER

DO NOT tow an ATB 42/50 unless it is equipped with the optional tow kit.

A runaway ATB 42/50 can cause **Death** or **Serious Injury**. If you have to move an ATB 42/50 down a grade, chain a braking vehicle to the “uphill” end of the ATB 42/50.

Be certain the braking vehicle has the capacity to stop and hold both itself and the ATB 42/50 on the steepest grade they will encounter and under the prevailing environmental conditions.

In an emergency when you have to move a disabled ATB 42/50 a few feet to safety or for repairs, do the following:

1. Chain a forklift or other heavy vehicle to the front lifting tie down lugs and chain a similar vehicle to the rear lifting tie down lugs.

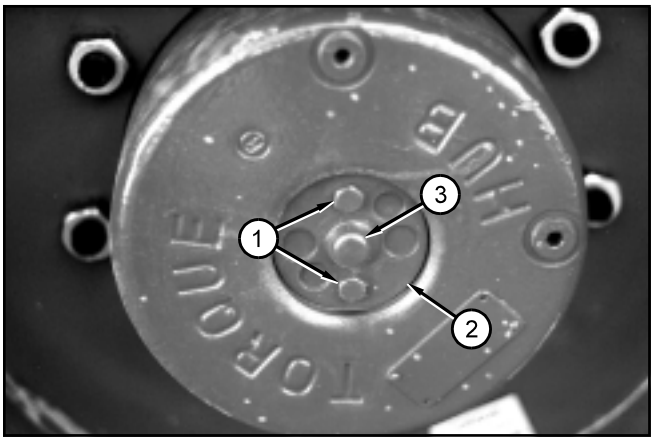

2. At each drive wheel, remove the two bolts (1) and turn the disconnect plate (2) over so that the nipple (3) points into the drive motor, then reinstall the bolts (1). This disengages the brakes and lets the drive wheels freewheel.
3. Pull the ATB 42/50, at less than 1 mph (1.6 km/h), to its new position then turn the disconnect plates back over so the nipples are out and the drive wheels are locked.
4. Unchain the ATB 42/50.

■ Lifting

An ATB 42/50 can be safely lifted.

⚠CAUTION

To prevent any damage to the ATB 42/50 or injury to personnel, only a trained qualified service technician should perform lifting.

■ AC Generator

⚠CAUTION

Do not use the AC generator unless the hydraulic oil is over 70°F (21°C). The output voltage of the generator depends on the temperature of the hydraulic oil.

Temperature below 70°F (21°C) will cause dangerously low output voltages that can burn out some kinds of electrical equipment.

The hydraulically powered, 120 volt AC generator can be used anytime the ATB 42/50 engine is running. When the generator is ON the ATB 42/50 cannot be driven in high drive range.

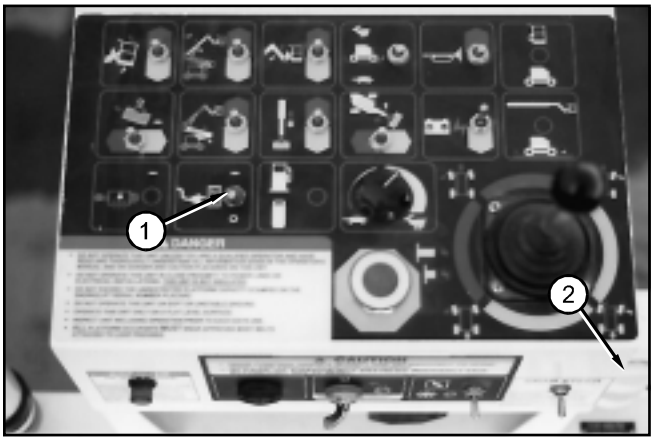

Set the **AC Generator** switch (1), on the platform control box, to ON and a total of 2 kW, continuous duty, 120 volt AC power is available from the two electrical outlets (2) near the platform control box or from the electrical outlets on the end of the generator housing.

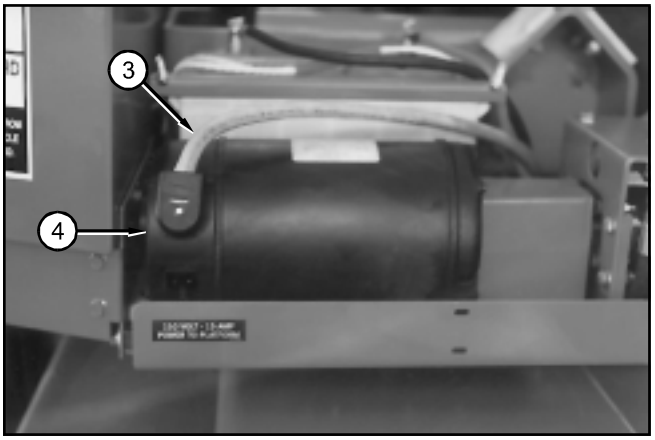

To energize the two platform electrical outlets, the power cord (3) from the platform outlets must be plugged into the receptacle on the generator (4).

■ Air Line To Platform

The input to the air line is on the bottom left rear of the turntable. The outlet is on the platform mounting frame. The maximum safe working pressure for the air line is 250 psi (1725 kPa).

⚠CAUTION

Water or antifreeze solution in the air line might damage some air tools.

If you use the air line to conduct water or antifreeze solution be sure to drain and blow out the air line before attaching air tools.

The air line can be used to conduct air, water, or antifreeze solution.

NOTE

If you want to conduct other liquids, contact your Snorkel dealer for compatibility information

To drain the air line:

1. Close the turntable end of the air line.
2. Open the platform end of the air line.
3. Raise the main boom slightly above horizontal.
4. Open the turntable end of the air line.

■ Alarms

For a complete discussion of the following alarms see the “Alarms” section of the “Safety Devices” chapter 2.

- All motion warning
- Descending boom alarm
- Drive motion alarm

https://truckmanualshub.com/

■ Extra Battery

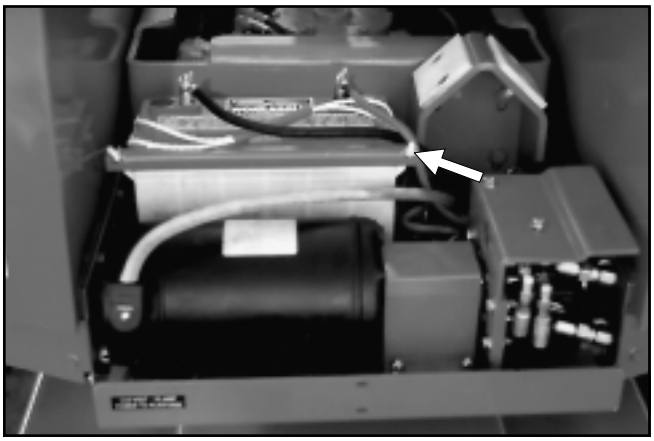

The extra battery is located at the rear of the turntable. For a complete discussion of the extra battery see the Battery section of the “Safety Devices” chapter 2.

■ Cold Weather Start Kit

The cold weather start kit on an ATB 42/50 is a freeze plug type block heater. The engine is heated by convection of water that is warmed by the heater. The heater is located in a freeze plug hole just below the engine exhaust manifold. If the engine starting temperature is expected to be 32°F (0°C) or below, plug the power cord from the heater into 125 Volt AC, 600 watt source eight hours before starting the engine.

⚠CAUTION

Unplug the heater just before starting the engine. That will keep you from driving off while the heater is still plugged in.

■ Dual Fuel

The dual fuel option lets you run a gasoline engine on either gasoline or liquefied petroleum gas (LPG).

Instructions for using this option are listed throughout this manual.

■ Operator Horn

For a complete discussion of the horn see the Operator Horn section of the “Safety Devices” chapter 2.

■ Lights

For a complete discussion of the following lights see the “Safety Devices” chapter 2.

- Flashing lights
- Platform work lights

■ LPS Rating

LPS is a rating devised by Underwriters Laboratory, Inc. for specialized industrial vehicles that meet certain fire safety standards.

The rating specifies physical characteristics of the electrical, exhaust, and fuel systems of vehicles powered by liquefied petroleum gas engines. An LPS rating signifies fire safety characteristics that not only meet, but exceed, the minimum standards for fire safety.

NOTE

See ANSI/UL 558-1984 for specific information.

■ Sandblast Protection Kit

Sandblast protection for the ATB consists of bellows over the boom hydraulic cylinder rods.

The bellows prevent sand and paint from damaging the cylinder rods and seals, and thus prevent hydraulic oil leaks.

⚠CAUTION

DO NOT paint or sandblast from an ATB 42/50 unless the cylinder rods are protected by bellows.

https://truckmanualshub.com/

■ Spark Arrestor

The spark arrestor prevents incandescent carbon particles from coming out the tail pipe.

Baffles in the spark arrestor slow the flow of particles through the exhaust system.

The additional time spent in the exhaust system lets the carbon completely burn before it comes out the tail pipe.

■ Platform Swinging Gate

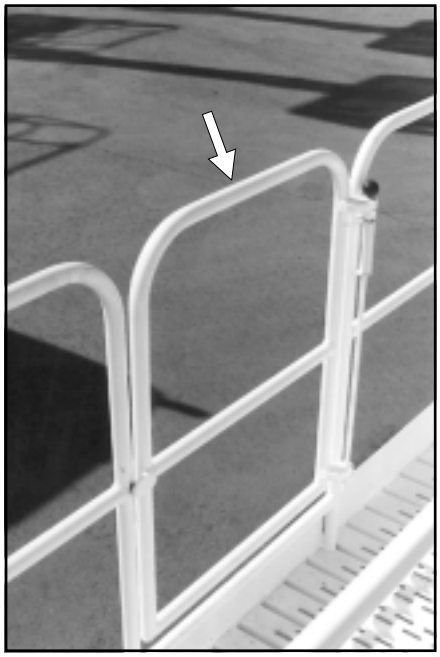

The platform swinging gate is designed to automatically close after you enter or leave the platform.

It helps prevent people from falling off the platform.

■ Tires

❑ Highway or Bar Lug

Standard highway tread tires and large bar lug tires can be air filled.

Air filled tires should be visually checked several times a day to see that they are properly inflated.

Air filled tires should be checked very carefully for imbedded material, cuts, punctures, or abraded areas

⚠ DANGER

Death or **Serious Injury** can result if the ATB tips over. An air filled tire that has an air leak or blow out is a tipover hazard. **DO NOT** raise the platform if any tire has an air leak or is in such condition that a blow out could occur.

❑ Flotation Tires

Flotation tires are designed for use in sand, gravel, or loose soil.

Their increased size helps keep the ATB 42/50 from sinking into the ground. The increased size has three other effects.

1. It increases the overall width of the ATB 42/50 and increases the ground clearance a few inches.
2. Flotation tires are pneumatic, they cannot be foam filled.
3. It increases the overall height of the machine a few inches.

https://truckmanualshub.com/

❑ Foam Filled Tires

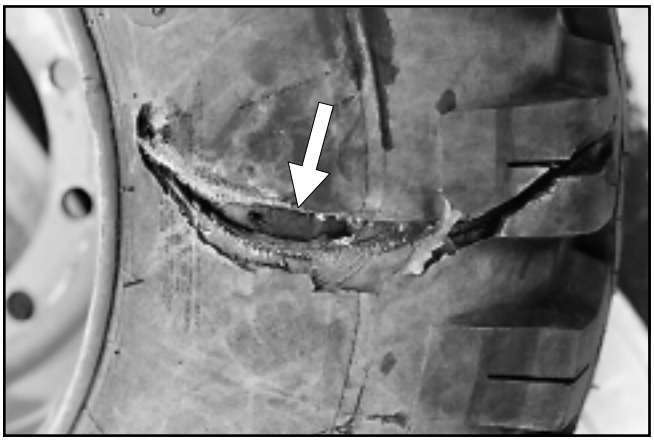

Foam filled tires eliminate the possibility of air leaks or blow outs which might cause a tipover.

Inspect them at the start of each work shift according to the procedures in the “Daily Inspection and Maintenance” chapter 7.

NOTE

The foam filled tire shown here is not acceptable for service.

❑ Large Tires

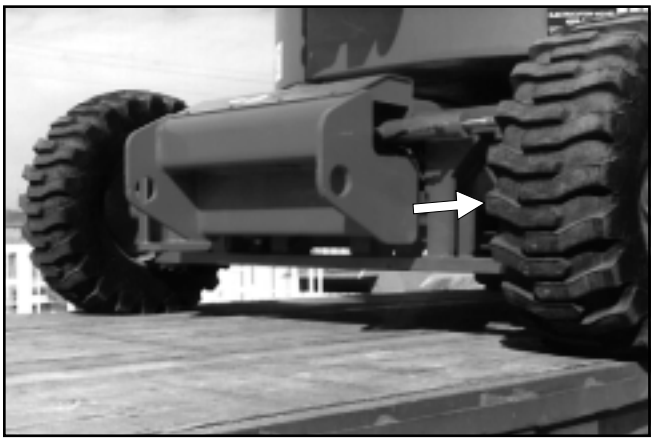

The large bar lug tires are designed for off pavement use.

Their additional size provides a little more ground clearance than regular bar lug tires and the bar lugs give better traction off pavement.

■ Tow Kit

Improper towing can cause an ATB 42/50 to break away from the towing vehicle.

⚠ DANGER

A “runaway” ATB 42/50 can cause **Death** or **Serious Injury**.

Do not tow an ATB 42/50 faster than 10 mph (16 km/h). An ATB 42/50 can behave erratically above 10 mph (16 km/ h).

When you tow the ATB 42/50 around a corner or a curve do not turn so sharply that either of the yokes are fully turned. If the yokes are fully turned the steering mechanism might be damaged or the tow vehicle and ATB 42/50 might jackknife.

Check with the tow vehicle manufacturer or manufacturer’s literature, to be sure the towing vehicle can safely tow and stop a 13,600 pound (6,170 kg) ATB 42 or a 15,280 pound (6,930 kg) ATB 50 on the steepest grade and type of surface you will encounter. Remember, the ATB 42/50 does not have brakes when it is towed.

❑ Towing Procedures

1. Remove the tow bar and tie rod weldment from the storage cradles and lay them near the front of the chassis.
2. Attach the tow bar to the towing lug with the tow pin and snap pin.
3. Attach the tie rod weldment to the tow bar and the right hand steering yoke.
4. Attach the ring end of the tow bar to the tow vehicle.
5. Raise the platform approximately 3 feet (1 m) to keep the platform from scraping the ground when the ATB starts up a grade.
6. Pull the Steering Float Valve, located on the front of the chassis, knob out and turn to lock.

⚠ DANGER

Death or **Serious Injury** may occur from a “runaway” ATB 42/50.

7. Disconnecting the disconnect plates will allow the ATB 42/50 drive wheels to turn freely. Before proceeding, be certain the tow bar is installed and connected to a towing vehicle that can safely control both itself and the ATB 42/50.

https://truckmanualshub.com/

⚠CAUTION

Be certain the tow vehicle brakes are set.

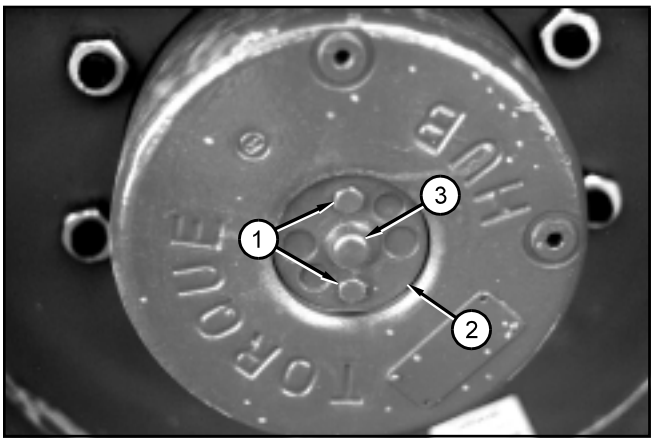

8. Remove the two bolts (1) that hold each drive wheel disconnect plate (2).
9. Turn each disconnect plate (2) over so that the nipple (3) points inward, then retighten the bolts (1).
10. At the end of the tow, before you disconnect the ATB 42/50 from the towing vehicle, turn the disconnect plates back over so the nipples are out. This will prevent the ATB 42/50 from rolling when you disconnect it from the tow vehicle.
11. Reverse the above procedure at the end of the tow.

■ 4-Wheel Functions

❑ 4-Wheel Drive

4-wheel drive improves traction on all surfaces.

There are two ways to tell if the ATB has 4-wheel drive.

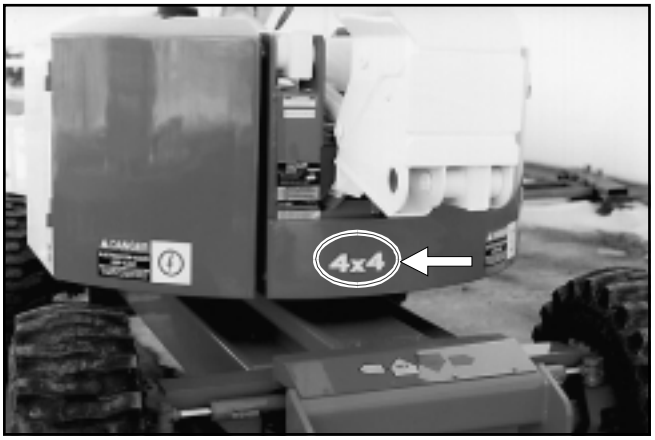

1. Look for the “4x4” decal shown on the front of the turntable.

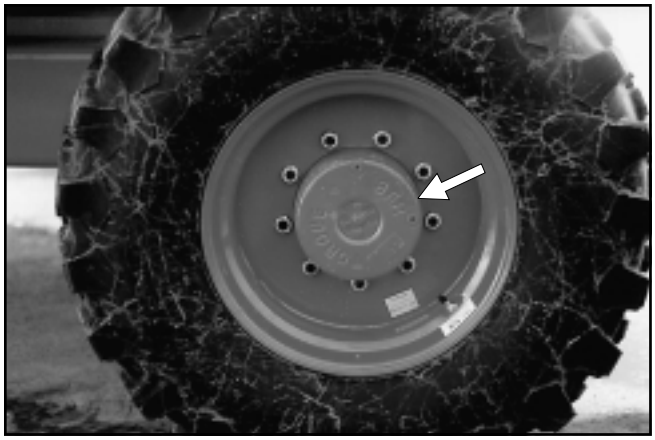

2. Look at the wheels. If the hubs of all four wheels look like this, the ATB has 4-wheel drive.

NOTE

The ATB shown on the front cover of this manual is a 2-wheel drive machine.

Note that the hub on the front wheel is different.

❑ 4-Wheel Steer

For a complete discussion of 4-wheel steer see the 4-Wheel Steer section of “Operation” chapter 8.

❑ 4-Wheel Steer With Crab Steer

For the ATB to have crab steer it must first have 4-wheel steer.

For a complete discussion of crab steering see the 4-Wheel Steer with Crab Steer section of “Operation” chapter 8.

https://truckmanualshub.com/

The chart below lists situations where machine operation may be interrupted. If the problem cannot be corrected with the action listed, stow the machine and remove it from service. Repairs must be made by qualified maintenance personnel.

■ Troubleshooting Chart

Problem	Cause	Remedy
Engine will not start from the ground control box.	Switches are set wrong. (Engine will not crank).	Set **Battery** switch to ON. At the ground control box: Set the **Master Key Switch** to ON. Pull **Emergency Stop** switch (out) ON. Set **Platform/Ground Selector** switch to GROUND. Set **Master Key Switch** to ON for 5 seconds, then turn **Master Key Switch** to START.
	Main circuit breaker, in ground control box, has tripped. (Engine will not crank.)	Wait three minutes, then try to start the engine. If it will not start, refer the problem to a qualified service technician.
	Out of fuel. (Gasoline or diesel engine cranks but will not start).	Add fuel to tank, then alternately crank engine for 20 seconds and let starter motor cool for 60 seconds (20 on / 60 off).
	LPG (Option) **Dual Fuel** switch on the platform control box is set wrong. (Engine cranks but will not start).	Set Dual Fuel switch in platform control box to GAS or LPG. Check the fuel gauge, on top of the tank, to see if there is fuel in tank. For LPG operation: Check to see that fuel valve, on top of LPG tank, is open. Alternately crank engine for 20 seconds, then let starter motor cool for 60 seconds.
Engine will not start from the platform control box.	Stepping on platform foot switch. (Engine will not crank).	Be sure you are **not** stepping on the platform foot switch, or that the foot switch is not “blocked” in any way, while you are trying to start the engine

https://truckmanualshub.com/

Problem	Cause	Remedy
Engine will not start from the platform control box. (Continued):	Switches are set wrong. (Engine will not crank).	Set **Battery** switch to ON. At the ground control box: Set the **Master Key Switch** to ON. Pull **Emergency Stop** switch (out) ON. Set **Platform/Ground Selector** switch to PLATFORM. At the platform control box: Set the **Anti-Restart** switch to OFF. Pull **Emergency Stop** switch (out) ON. Turn the **Anti-Restart** switch to ON. Turn the **Anti-Restart** switch to START.
	The main circuit breaker, in the platform control box and/or the main system circuit breaker, in the ground control box has tripped. (Engine will not crank).	Wait three minutes, then try to start the engine. If the engine will not start, refer the problem to a qualified service technician.
	Out of fuel. (Gasoline or diesel engine cranks but will not start).	Add fuel to tank, then alternately crank engine for 20 seconds and let starter motor cool for 60 seconds (20 on / 60 off).
	LPG (Option) **Dual Fuel** switch on the platform control box is set wrong. (Engine cranks but will not start).	Set **Dual Fuel** switch at platform control box to GAS or LPG. Check the fuel gauge, on top of the tank, to see if there is fuel in tank. For LPG operation: Check to see that fuel valve, on top of LPG tank, is open. Alternately crank engine for 20 seconds, then let starter motor cool for 60 seconds.

!

120 volt AC generator, 11-1
125 volt AC - 15 amp source of power, 8-8
125 volt AC electrical connectors, 8-8
4-wheel drive, 11-5
4-wheel steer, 8-7
4-wheel steer with crab steer, 8-8, 11-5

A

AC electrical connectors, 8-8
AC generator, 8-9, 11-1
additional information, A-iv
  see introduction - page iv
air line to platform, 11-1
alarms, 11-1
  all motion, 2-3
  alternator not charging, 2-2
  axle unlocked, 7-13
  descending boom, 2-3
  motion warning, 7-11
ammeter, 4-1
arrows
  blue and yellow, 8-7
automatic shut-offs
  engine oil pressure, 5-1
  engine temperature, 5-1

B

battery, 2-3
battery fluid level, 7-5
battery terminals, 7-4
bolts and fasteners, 7-6
  rotation bearing bolts, 7-7
booms
  movements under emergency power, 9-2
  times, 3-1
buzzers , 2-1

C

California Proposition 65 warning
  see introduction - page iv
charging system, 7-9
circuit breakers, 5-2
cold weather start kit, 11-2
controls
  control switches
    AC generator switch, 2-6
    AC Generator switch, 11-1
    anti-restart, 6-4, 8-5, 9-1
    battery switch, 6-6, 8-2, 8-4, 9-1
    boom speed, 6-2, 6-4, 8-2, 8-5, 9-1, 9-2
    choke/cold start, 6-2, 6-4, 8-3, 8-5
    drive range, 6-4, 8-5
    drive/steer controller, 6-5
    dual fuel, 6-4, 8-3, 8-5
    emergency power, 6-2, 6-4, 9-2
    emergency stop, 6-2, 6-4, 8-1, 8-4, 8-5, 9-1
    emergency Stop, 8-2
    extend/retract, 6-2, 6-4
    ground operation, 2-7, 6-2, 6-6, 7-9, 8-2, 8-6, 9-2
    horn, 6-4
    jib, 6-2, 6-4
    main boom lift, 6-2, 6-4
    master key switch, 2-1, 6-2, 7-1, 7-12, 8-3, 8-4, 9-1
    platform level, 6-2, 6-4
    platform rotate, 6-2, 6-4
    platform/ground selector, 6-2, 8-2, 8-4, 9-1
    riser lift, 6-2, 6-4
    swing, 6-2, 6-4
  drive/steer controller, 6-6, 8-6, 8-7
  ground control box, 6-2
    control switches, 6-2
    controls location illustration, 6-3
  platform control box
    control switches, 6-4
  platform foot switch, 6-6
crushing hazard, 1-2

D

daily inspection and maintenance table, 7-1
drive wheel, 10-4
driving the ATB 42/50, 8-7
  4-wheel steer, 11-5
  forward and reverse drive, 8-7
dual fuel, 11-2

E

electrical
  electrocution, 1-2, 8-1
  outlets at platform , 8-8
  system, 3-1
electrical (GFCI) outlets at platform, 8-8
electrical hazard warning
  see electrical hazard - page i

https://truckmanualshub.com/

emergency operation, 9-1
  operation from ground control box, 9-2
  operation from platform control box, 9-1
  procedures, 9-1
emergency power, 7-10
engine
  air filter, 7-9
  alternator, 2-2
  automatic choke, 8-3
  coolant level, 5-1, 7-3
  coolant reservoir, 4-1
  engine oil dipstick, 4-2
  engine oil level, 7-2
  Ford - gasoline data, 3-2
  fuel gauge, 4-2
  fuel leaks, 7-3
  fuel level, 7-2
  Kubota diesel - data, 3-2
  LPG fuel operation, 8-4
  oil charts, 3-2
  oil filter, 5-2
  oil pressure, 5-1
  operating temperature range, 4-4
engine shut-off alarm, 2-2
extra battery, 11-2

F

falling hazards, 1-2
filter minder gauge, 7-9
filter minder indicators, 4-2
flashing lights, 7-9
foam filled tires, 2-5
fuel tank cap, 7-2
fuel tank capacity, 3-1

G

gauges
  engine coolant, 4-1
  engine oil, 4-1
  filter minder, 4-2
  fuel, 4-2
  hour meter, 4-3
  hydraulic oil filter, 4-3
  hydraulic oil level, 4-4
  hydraulic oil temperature, 4-4
  LPG, 4-3
  temperature, 4-4
gradeability, 3-1
ground clearance, 3-1
ground control box controls, 6-3
ground fault circuit interrupt, 7-11
ground operation switch, 2-7
ground pressure, standard tires, 3-1

H

height, 3-1
hydraulic oil, 3-1
  filler cap, 7-5
  leaks, 7-5
  oil temperature, 7-5
  tank, 4-4
  temperature gauge, 4-4
hydraulic oil level, 7-5
  sight-glass gauge, 7-5

I

incandescent lights, 2-8
inspection
  operators daily inspection, 7-1
    inspection and maintenance table, 7-1

L

lanyard anchor points, 2-5
length, overall, 3-1
level sensor, 7-10
lifting the ATB, 10-4
lights, 11-2
  flashing, 7-9
LPG tank, 8-3
  valve, 7-2
LPS rating, 11-2

M

maintenance personnel
  see iIntroduction - page iii
minimum safe approach distance
  see electrical hazard - page ii
motion warning alarm, 7-11

N

nomenclature and serial numbers, 3-7

O

operating procedures, 8-1
  control stations, 8-1
  emergency stopping, 8-1
  moving the platform, 8-5
  starting from ground control box, 8-2
  starting from platform control box, 8-4
operation, 8-1
  driving

https://truckmanualshub.com/

forward, 8-7
reverse, 8-7
from platform control box, 8-6
steering
left, 8-7
right, 8-7
operator horn, 7-11, 11-2
operators
qualified, 7-1, 8-2
OSHA, ANSI and CSA Standards
see introduction - page iv
overall dimensions
ATB 42, 3-3
ATB 50, 3-5

P

placards and decals, 7-14
Inspection drawing, 7-15
optional placards and decals, 7-14
standard placards and decals, 7-14
platform
foot switch, 8-6, 8-7
gravity gate, 7-8
guardrails, 7-8
lanyard anchor points, 7-8
platform height, maximum, 3-1
platform reach, maximum, 3-1
platform size, 3-1
swinging gate, 7-8, 11-3
work lights, 7-12
pre-start Inspection, 1-1

Q

qualified operators
see introduction - page iii

R

responsibilities of owners and users
see introduction - page iv

S

safe operation, 1-1
safety decals and placards, 1-3
location illustration, 1-4
safety devices
alarms, 2-1
emergency stop switches, 2-4
flashing lights, 2-4
ground fault circuit interrupt, 2-6
level sensor, 2-7
operator horn, 2-7
platform foot switch, 2-5
platform gravity gate, 2-6
platform guardrails, 2-5
platform swinging gate, 2-7
platform work lights, 2-8
safety device information, 2-1
tipover hazard light, 2-8
safety precautions
fuel handling precautions, 1-3
mounting and dismounting Precautions, 1-3
operating precautions, 1-3
operator, 1-2
operator maintenance precautions, 1-3
personnel precautions, 1-2
starting and stopping precautions, 1-3
sandblast protection kit, 8-1, 11-2
Scaffold Industry Association, Inc.
see introduction - page iv
securing for day, 8-9
serial numbers, 3-7
signs, caution, danger, notes
see introduction - page iii
slide pads, 7-12
spark arrestor, 11-3
start up alarm, 2-1
steering the ATB 42/50, 8-7
steer left and right, 8-7
stowing the ATB, 10-1
to lock the ATB 42/50:, 10-1
structural damage and welds, 7-7
boom welds, 7-7

T

tailswing, 3-1
tilt alarm , 2-3
tipover hazard, 1-2
tipover hazard light, 7-13

https://truckmanualshub.com/

tires, 7-6
flotation tires, 11-3
highway or bar lug, 11-3
large tires, 11-4
punctures, 7-6
size, 3-1
tow kit, 11-4
towing, 10-4
towing procedures, 11-4
transporting the ATB, 10-1
attaching chains, 10-3
driving onto trailer, 10-1
loading ramp, 10-1
securing to a transport vehicle, 10-2
trailering, 10-1
weight, 10-1
travel speeds, 3-1
troubleshooting
troubleshooting chart, 12-1
turning radius, 3-1

U

unrestricted rated work load, 3-1

W

warranty - limited
see inside front cover
weight,approximate, 3-1
wheel loading, single, 3-1
wheelbase, 3-1
width, overall, 3-1
wind speed, 3-1
wiring harnesses, 7-4
loose connections, 7-4
work place inspection and practices, 1-1
working envelope
ATB 42, 3-4
ATB 50, 3-6
working height, 3-1