https://truckmanualshub.com/

TEREX

LIMITED PRODUCT WARRANTY CERTIFICATE

Terex USA, LLC (a "Seller"), warrants its new equipment and parts manufactured and sold worldwide, to be free, under normal use and service, of any defects in manufacture or materials for a period of twenty-four (24) months after the date of delivery provided that (1) Seller receives written notice of the defect within thirty (30) days of its discovery and Buyer establishes that (i) the equipment has been maintained and operated within the limits of rated and normal usage; and (ii) the defect did not result in any manner from the intentional or negligent action or inaction by Buyer, its agents or employees and (2) a new machine registration certificate has been completed, signed and delivered to Seller within thirty (30) days of the equipment's invoice date. If requested by Seller, Buyer must return the defective equipment to Seller's manufacturing facility, or other location designated by Seller, for inspection, and if Buyer cannot establish that conditions, (1) (i) and (1) (ii) above have been met, then this warranty shall not cover the alleged defect. All other standard warranty rules apply.

Seller's obligation and liability under this warranty is expressly limited to, at Seller's sole option, repairing or replacing, with new or remanufactured parts or components, any part, which appears to Seller upon inspection to have been defective in material or workmanship. Such parts shall be provided at no cost to the owner, FOB Seller's parts facility. If requested by Seller, components or parts for which a warranty claim is made shall be returned to Seller at a location designated by Seller. All components and parts replaced under this limited product warranty become the property of Seller.

This warranty shall be null and void if parts (including wear parts) other than genuine OEM Seller parts are used in the equipment.

Accessories, assemblies and components included in the Seller equipment, which are not manufactured by Seller, are subject to the warranty of their respective manufacturers. Normal maintenance, adjustments, or maintenance/wear parts, including without limitation friction plates, glass, clutch and brake linings, filters, wire rope and paint, are not covered by this warranty and are the sole maintenance responsibility of Buyer.

SELLER MAKES NO OTHER WARRANTY, EXPRESS OR IMPLIED, AND MAKES NO WARRANTY OF MERCHANTABILITY OR FITNESS FOR ANY PARTICULAR PURPOSE.

No employee or representative is authorized to modify this warranty unless such modification is made in writing and signed by an authorized officer of Seller.

Seller's obligation under this warranty shall not include duty, taxes, environmental fees, including without limitation, disposal or handling of tires, batteries, petrochemical items, or any other charges whatsoever, or any liability for direct, indirect, incidental, or consequential damages.

Improper maintenance, improper use, abuse, improper storage, operation beyond rated capacity, operation after discovery of defective or worn parts, accident, sabotage or alteration or repair of the equipment by persons not authorized by Seller shall render this warranty null and void. Seller reserves the right to inspect the installation of the product and review maintenance procedures to determine if the failure was due to improper maintenance, improper use, abuse, improper storage, operation beyond rated capacity, operation after discovery of defective or worn parts, or alteration or repair of the equipment by persons not authorized by Seller.

Structural Warranty: Warranty of major welded structural components such as carrier frame, superstructures, boom sections, deck, carbody, side frames, inner and outer mast sections and jibs, will be covered for a total of sixty (60) months

Parts Warranty: Seller warrants the parts ordered from the Seller's parts to be free of defect in material or workmanship for a period of 12 months after date of shipment from the factory.

NO TRANSFERABILITY OF WARRANTY: This warranty is limited to the original purchaser or original end-user if sold to a distributor, and is not assignable or otherwise transferable without the written agreement of Seller. Please contact your local distributor for additional details if needed.

ITEMS NOT COVERED BY SELLER WARRANTY

The following items are **NOT** covered under the Seller Warranty (the following list is not exhaustive):

1. Items sold by any individual, corporation, partnership or any other organization or legal entity that is not an authorized Seller distributor.

2. Components which are not manufactured by Seller are not covered by Seller's warranty. Such components are covered only by the warranty that is provided by the manufacturer of such components. Such components may include, but are not limited to, chassis, engines, air compressors, batteries, tires, customer supplied products.

3. Replacement of assemblies: Seller has the option to repair or replace any defective part or assembly. It is Seller's policy to refuse claims for the replacement of a complete assembly that is field repairable by the replacement or repair of defective part(s) within the assembly.

4. Normal Operational Maintenance Services and Wear Parts: Maintenance services and wear parts are excluded from warranty claims. Maintenance services and wear parts **not covered** include, but are not limited to, such items as: seals, gaskets, hoses, friction plates, glass, clutch and brake linings, filters, wire rope, exterior coatings**,** proper tightening of bolts, nuts and fittings, adding or replacing of fluids, filter, breathers, belts, nozzles, adjustments of any kind, services supplies such as hand cleaners, towels and lubricants, inspections, diagnostic time.

5. Transportation cost and/ or damage: Any damage caused by carrier handling is a transportation claim and should be filed immediately with the respective carrier.

6. Deterioration: Repairs, work required or parts exposed as the result of age, storage, weathering, lack of use, demonstration use, or use for transportation of corrosive chemicals.

7. Secondary Failures: Should the owner or operator continue to operate a machine after it has been noted that a failure has occurred, Seller will not be responsible under the warranty for resultant damage to other parts due to that continued operation.

8. Workmanship of Others: Seller does not accept responsibility for improper installation or labor costs or costs of any kind from personnel other than authorized Seller distributor personnel.

9. Stop and Go Warranty: Seller does not recognize "Stop and Go" warranties.

10. Incidental or Consequential Damage: SELLER SHALL NOT BE LIABLE FOR ANY INCIDENTAL OR CONSEQUENTIAL DAMAGES OF ANY KIND, INCLUDING, BUT NOT LIMITED TO, LOST PROFITS, LOSS OF PRODUCTION, INCREASED OVERHEAD, LOSS OF BUSINESS OPPORTUNITY, DELAYS IN PRODUCTION, COSTS OF REPLACEMENT COMPONENTS AND INCREASED COSTS OF OPERATION THAT MAY ARISE FROM THE BREACH OF THIS WARRANTY. Customer's sole remedy shall be limited to (at Seller's sole option) repair or replacement of the defective part.

THIS WARRANTY IS EXPRESSLY IN LIEU OF AND EXCLUDES ALL OTHER WARRANTIES, EXPRESS OR IMPLIED (INCLUDING THE WARRANTIES OF MERCHANTABILITY AND FITNESS FOR A PARTICULAR PURPOSE) AND ALL OTHER OBLIGATIONS OR LIABILITY ON SELLER'S PART. THERE ARE NO WARRANTIES THAT EXTEND BEYOND THE LIMITED WARRANTY CONTAINED HEREIN. Seller neither assumes nor authorizes any other person to assume for Seller any other liability in connection with the sale of Seller's equipment. This warranty shall not apply to any of Seller's equipment or any part thereof which has been subject to misuse, alteration, abuse, negligence, accident, acts of God or sabotage. No action by any party shall operate to extend or revive this limited warranty without the prior written consent of Seller. In the event that any provision of this warranty is held unenforceable for any reason, the remaining provisions shall remain in full force and effect.

IN THE EVENT OF ANY BREACH OF THE WARRANTY BY SELLER, SELLER'S LIABILITY SHALL BE LIMITED EXCLUSIVELY TO THE REMEDIES (AT SELLER'S SOLE OPTION) OF REPAIR OR REPLACEMENT OF ANY DEFECTIVE EQUIPMENT COVERED BY THE WARRANTY. IN NO EVENT SHALL SELLER, OR ANY SUBSIDIARY OR DIVISION THEREOF BE LIABLE FOR INCIDENTAL, INDIRECT, CONSEQUENTIAL OR OTHER DAMAGES OR LOSSES RESULTING FROM A BREACH OF WARRANTY INCLUDING, WITHOUT LIMITATION, LABOR COSTS, LOSS OF USE OF OTHER EQUIPMENT, THIRD PARTY REPAIRS, LOST PROFITS, LOST TIME, TOWING OR HAULING OF EQUIPMENT, RENTAL COSTS, PERSONAL INJURY, EMOTIONAL OR MENTAL DISTRESS, IMPROPER PERFORMANCE OR WORK, PENALTIES OF ANY KIND, LOSS OF SERVICE OF PERSONNEL, OR FAILURE OF EQUIPMENT TO COMPLY WITH ANY FEDERAL, STATE OR LOCAL LAWS.

https://truckmanualshub.com/

TEREX®

BT4792
Parts Manual

Revised: December 2013 **12261-286**

https://truckmanualshub.com/

TEREX®

BT4792
Parts Manual

Revised: December 2013 **12261-286**

https://truckmanualshub.com/

INSTRUCTIONS FOR ORDERING PARTS

When ordering parts, contact your nearest Terex Cranes distributor and give the following information to assure prompt service:

MACHINE IDENTIFICATION:

State the model and serial number, located on a plate affixed to the Turret behind the Operator's Seat.

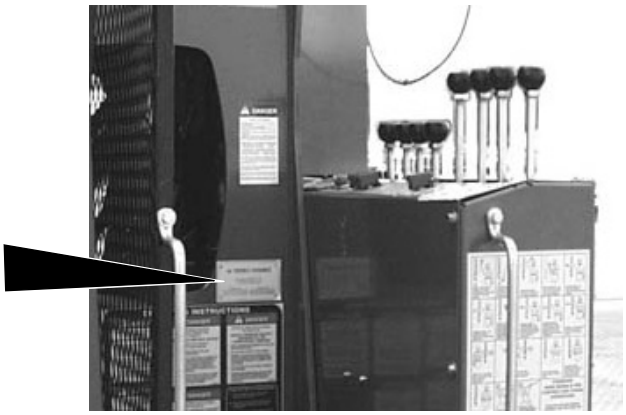

PART IDENTIFICATION:

State the part number, description and quantity required. Do not use the item number. Avoid using the words "Pairs" or "Sets".

REF.	PART.NO.	DESCRIPTION	QTY.
1	656-00008	Boom Decal Kit.....	1

SHIPPING INSTRUCTIONS:

State the invoicing address. Unless otherwise specified, invoices will be mailed to the shipping address.

State the correct shipping address and the means of shipment: parcel post, air mail, air freight, UPS, bus, etc.

INVOICE TO:	SHIP TO:
Mid State Equipment	Ace Construction Co.
Milwaukee, WI	Madison, WI

https://truckmanualshub.com/

USING THIS PARTS BOOK

This Parts Manual has been designed for optimum ease of reading and is the key to Customer-Distributor-Factory communication. Genuine replacement parts, along with interchangeable product improvements as they become available, will keep your machine in a reliable and productive condition.

The following instructions describe the features of the manual and how to use it effectively.

Use this manual also as a supplement to the Operator's Manual and Maintenance Manual when performing service procedures on the machine.

IMPORTANT

This manual lists serviceable parts for **EVERY** machine built of this model designation. Serial numbers are used to identify parts when a product improvement is made or an alternate component is used. **KNOW THE SERIAL NUMBER OF YOUR MACHINE** before searching for replacement parts.

The **PARTS GROUP INDEX** shows the functional arrangement of associated parts for the machine. A group number identifies the same group of parts regardless of model (Group 25 is always the hydraulic system). The groups which apply to the machine are listed in numerical order. A letter suffix to a group number, 25A, is used for variable parts groups.

PAGE NUMBERS are in numerical sequence within each parts group. The first number is the group number and the second number is the numerical sequence number. Letter suffixes are used to maintain continuity to the manual as revisions are incorporated (1.1, 1.2, 1.2A, 1.2B, 1.3, etc.).

EXPLODED VIEW ILLUSTRATIONS show the relationship of assembled parts. The illustrations are keyed to an accompanying parts list on the same page or on the facing page and are positioned for ease in reading the manual.

https://truckmanualshub.com/

LOCATING INDIVIDUAL PARTS

1. Turn to the PARTS GROUP INDEX and find the general area of the part in question. (Example: Seat would be found in “Operator’s Cab & Machinery Housing” Group 27).

2. Refer to the partsgroup and check to see if a subsequent letter-designated group is used. Check the title block on the pages to determine the application of the group to your particular machine.

BOOM ASSEMBLY 100’	**39**

JIB ASSEMBLY	**39A**

3. Major assemblies are shown at the beginning of each group with page references to component parts breakdowns on the pages which follow. Briefly skim through the group to familiarize yourself with the information included in it. Locate the illustration and parts list which pertain to the assembly or part you desire. Compare the serial number of your machine to those which may appear on the page to be sure you are ordering the correct part.

4. Item numbers on the illustration correspond to those in the parts list. Parts not shown with an item number are the same as identical or symmetrical parts with an item number. Parts keyed with an asterisk or other symbol are included in a repair kit. If no part number is shown, these parts cannot be ordered separately.

5. Quantities are shown as required per component assembly unless otherwise noted.

6. If an assembly is listed without any serviceable parts, it must be ordered complete. Serviceable parts of components are listed under the component part or a subsequent page as indicated.

7. All hardware shown without the size listed after the noun name is specially made for the particular application and must not be substituted with standard hardware.

https://truckmanualshub.com/

https://truckmanualshub.com/

TEREX

BT4792

PARTS GROUPS

2 CARRIER FRAME
- 2.1) Truck Chassis
- 2.2) Subframe Assembly
- 2.3) Rear Bumper Assembly
- 2.4) Flatbed Options
- 2.5) Flatbed Installation
- 2.7) Boom Rest Assembly
- 2.8) Mainframe Installation
- 2.9) Mainframe Assembly
- 2.10) Mainframe Assembly
- 2.11) Mainframe Sub Assembly (Gray & Red)
- 2.12) Operator Platform Installation
- 2.13) Ladder Kit, Steel Bed
- 2.14) Fire Extinguisher

3 OUTRIGGERS
- 3.1) Outriggers
- 3.2) Main Outrigger Assembly (Gray & Red)
- 3.4) Main Outrigger Cylinder Assembly
- 3.5) Auxiliary Outrigger INSTL (Terex Gray)
- 3.8) Auxiliary Outrigger INSTL (Terex Red)
- 3.10) ASSY-HORZ AUX O/R (Terex Gray)
- 3.13) ASSY-HORZ AUX O/R (Terex Red)
- 3.16) Vertical Auxiliary Outrigger Cylinder
- 3.17) Horizontal Auxiliary Outrigger Cylinder
- 3.18) Front Jack Cylinder
- 3.19) ASSY, Front Bumper (O/R)
- 3.21) FRT Outrigger INSTL EXT Frame
- 3.22) Frightliner EXT Frame
- 3.23) Front Bumper EXT Frame
- 3.24) SUBASSY, Front Bumper (O/R)
- 3.26) ASSY, Front Bumper (O/R) 34” & 46” Frame
- 3.29) SubASSY, Front Bumper (O/R) 34” & 46” Frame

8 STEEL PLATFORM
- 8.1) 1-Man Steel Platform INSTL
- 8.2) 1 Person Steel Platform Assembly
- 8.4) 2-Man Steel Platform INSTL
- 8.5) 2 Person Steel Platform Assembly

12 SUPERSTRUCTURE
- 12.1) Turret Installation Non - Continuous Rotation
- 12.3) Swing Stop Installation Non-continuous Rotation
- 12.4) Turret Installation Continuous Rotation
- 12.6) Swing Bearing

22 SWING SYSTEM
- 22.1) Rotation Gearbox Installation
- 22.3) Rotation Gearbox Assembly
- 22.5) Swing Cut-Out Kit

24 PUMP DRIVE CASE
- 24.1) Hydraulic Pump Installation
- 24.2) Pump, Triple

25 HYDRAULIC SYSTEM
- 25.1) Hydraulic Reservoir Installation
- 25.4) Hydraulic Reservoir Assembly 90GAL
- 25.5) Filter Assembly
- 25.6) Main Valve Assembly Combined Flow
- 25.7) Main Valve Assembly Motor Shift
- 25.8) Winch Valve Assembly Combined Flow
- 25.9) Winch Valve Assembly Motor Shift
- 25.10) Valve Assembly
- 25.11) Hydraulic Piping, Mainframe Non-continuous Rotation
- 25.14) Hydraulic Piping, Mainframe Continuous Rotation
- 25.17) Main Valve Piping Continuous Rotation Option

28 OPERATOR’S CONTROLS
- 28.1) Control Console ASSY 4792 CF/MS Winch (Gray & Red)
- 28.8) Control Console ASSY/Weldment (Gray & Red)
- 28.10) Throttle INSTL (Electric)
- 28.12) Throttle Assembly
- 28.13) Bump Throttle INSTL
- 28.14) Throttle Pedal (Manual)

30 DECALS & PLACARDS
- 30.1) Marking Decal Placement (With Terex)

33 ELECTRICAL SYSTEM
- 33.1) Electrical System Outrigger Alarm Switch
- 33.2) Subframe Electrical Installation
- 33.3) Electrical Box Installation
- 33.4) Electrical Box Installation

39 HYDRAULIC TELESCOPING BOOM
- 39.1) Boom Assembly - 92’
- 39.6) Extension Cylinder Assembly - 92’ Boom
- 39.7) Cylinder, Extend
- 39.8) Extension Tube Assembly 92’ Boom
- 39.9) Cable Guide Installation 92’ Boom
- 39.10) Boom Assembly - 92' CF & MS Winch
- 39.11) Topping Cylinder Assembly
- 39.12) Topping Cylinder

https://truckmanualshub.com/

TEREX

BT4792

PARTS GROUPS

39A JIB
- 39A.1) Jib Options
- 39A.2) Jib Assembly 26' & 26'/44'
- 39A.6) Jib Stowage
- 39A.7) ASSY, ATB/LMI Cable 2ND Stage Jib

40 HYDRAULIC WINCH
- 40.1) Winch Installation
- 40.2) Winch Installation 2 Speed Option
- 40.4) Winch Assembly

44 HOOK BLOCKS, BALLS
- 44.1) Load Block Assembly 17.5 Ton, 2 Part, 1 Sheave
- 44.2) Hook Block 1 Sheave / 17.5 Ton
- 44.3) Load Block Assembly 22.5 Ton, 4 Part, 2 Sheave
- 44.4) Hook Block 2 Sheave / 22.5 Ton
- 44.5) Hook Ball
- 44.6) Load Ball, 7 Ton
- 44.7) Non-swivel Overhaul Ball 7 Ton

45 WIRE ROPE & REEVING
- 45.1) Wire Rope And Reeving

51 OPTIONAL EQUIPMENT
- 51.1) Tool Box Installation
- 51.2) Oil Cooler Installation
- 51.4) Front Bumper Outrigger Valve
- 51.5) Hydraulic Piping, Aux O/R
- 51.8) Hydraulic Swivel INSTL Continuous Rotation
- 51.10) Hydraulic Swivel, 15 Pass Continuous Rotation
- 51.12) Radio Remote Control (W/Bump Throttle)
- 51.14) Actuator Linkage Kit
- 51.15) Radio Remote Control Throttle Installation
- 51.16) Radio Remote Assembly With Foot Throttle
- 51.18) Radio Remote Actuator Assembly
- 51.19) Foot Throttle Actuator Sub Assembly
- 51.20) Kit, Radio Remote System W/Foot Throttle
- 51.21) Actuator Linkage Kit
- 51.22) Winch Cable Tensioner Assembly
- 51.23) Roofer's Package Installation
- 51.26) HYD Ground Tool Circuit
- 51.28) Valve ASSY, Tool Circuit
- 51.29) Auxiliary Sheave
- 51.30) Sheave Assembly
- 51.31) Sheave ASSY 9/16 Rope
- 51.32) Sheave Assembly, Boom Retract
- 51.33) INSTL, Oil Cooler

52 VGA DISPLAY & COMPUTER
- 52.1) ATB/LMI Installation CYL/Boom Cable Guide INSTL
- 52.2) Non-Boom LMI Parts BT Machines
- 52.3) Greer Insight VGA Display
- 52.4) Greer UG500R Computer
- 52.5) Computer, Greer A450880 (Beginning W / S.N. # 140735)

55 RECOMMENDED SPARE PARTS
- 55.1) Recommended Spare Parts List

58 MANUALS
- 58.1) Manuals

https://truckmanualshub.com/

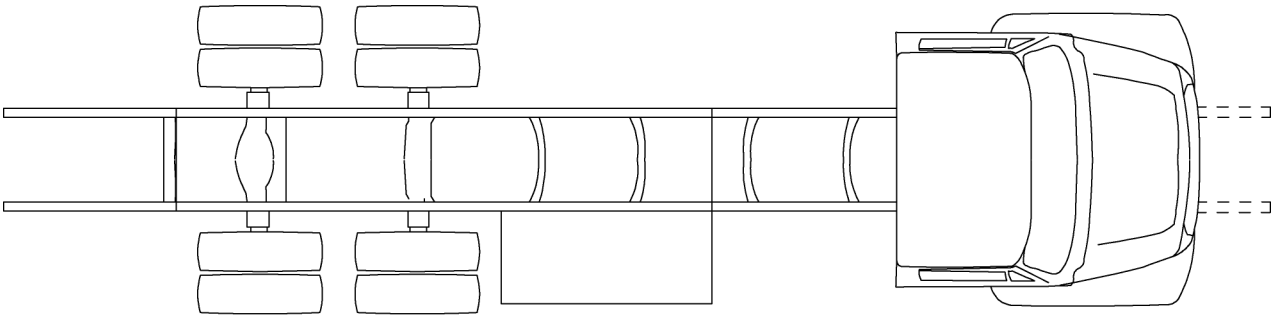

REF	PART NO.	DESCRIPTION	QTY
	660-00050-5 (Rev 00)	*Truck Chassis*	

Refer to Truck Chassis manufacturer (Freightliner, International etc.) for truck repair/replacement parts.

RECORD VEHICLE/MACHINE INFORMATION BELOW FOR USE WHEN ORDERING PARTS

Truck Chassis Manufacturer_____ Model _____	Comments
Boom Truck Model No. _____ Serial No. _____	Comments
Optional Equipment _____	Comments

WHEN ORDERING PARTS, SPECIFY MODEL NUMBER, SERIAL NUMBER AND DESCRIPTION OF PARTS REQUIRED

https://truckmanualshub.com/

REF	PART NO.	DESCRIPTION	QTY
	4000-1SF-1	*Subframe ASSY 21" (Gray) (Items 1 thru 9 & 10)*	
	4000-1SF-1-R	*Subframe ASSY 21" (Red) (Items 1 thru 9 & 11)*	
1	024-00008	INSTL, Ladder Kit, Steel Bed	1
2	400-02451-1	Electrical Box, Installation BT	1
3	500-50020	HYD Piping-AUX Out-DWN OR	1
4	600-95010	Rear, Bumper, ASS'Y	1
5	691-00001	Subframe, Electrical, INSTL	1
6	691-00003	Shear, PLT INSTL B Truck	1
7	700-00990-1	INSTL, Mainframe (4792)	1
8	701-00511	Weld, S/F 25 FT 6 IN	1
9	876-00060-1	HYD RES 90 GAL RND BT Tank	1
10	T121324	AUX Outrigger, Installation (BT4792) Gray	1
11	T121325	AUX Outrigger, Installation (BT4792) Red	1

ITEMS 1 TO 11 ARE NOT ILLUSTRATED

https://truckmanualshub.com/

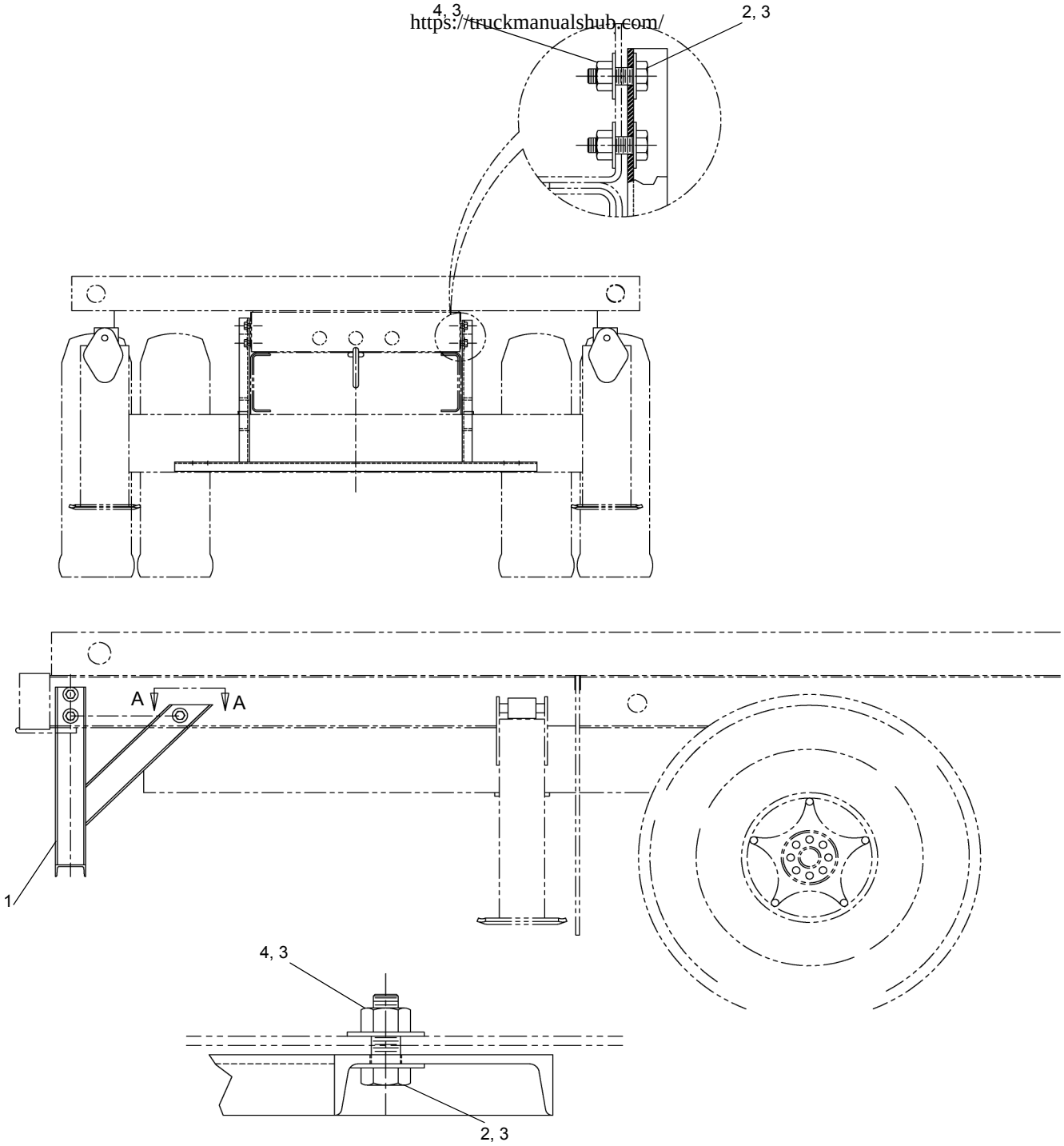

SECTION A-A

REF	PART NO.	DESCRIPTION	QTY
	600-95010 (Rev A)	*Bumper Guard Assembly*	
1	600-22111	Bumper Guard Weldment	1
2	220-07020	HHCS, 3/4-10 NC X 2.00 GR8 ZinC	6
3	222-07003	Flatwasher, 3/4 Hard Zinc PLTD	12
4	221-97002	Toplock Nut, 3/4-10 NC Zinc PL	6

WHEN ORDERING PARTS, SPECIFY MODEL NUMBER, SERIAL NUMBER AND DESCRIPTION OF PARTS REQUIRED

https://truckmanualshub.com/

REF	PART NO.	DESCRIPTION	QTY
	21Steel-STD	*21' Steel STD Flatbed*	1
1	600-38143	Flatbed, 21FT-Steel	1
2	696-00032-1	Flatbed INSTL, STD Duty	1
	21Wood-STD	*21' Wood STD Flatbed*	1
3	600-38142	Flatbed, 21FT-Wood	1
4	696-00032-1	Flatbed INSTL, STD Duty	1
	21Steel-Super	*21' Steel Super Duty Flatbed*	1
5	696-00032-2	Flatbed INSTL, Super Duty	1
6	600-38186	F/B-21' S/Duty 3/16 Steel	1
	21Wood-Super	*21' Wood Super Duty Flatbed*	1
7	696-00032-2	Flatbed INSTL, Super Duty	1
8	600-38172	FB-21FT-WD-Super Duty	1
	21Steel-STD-R	*21' Steel STD Flatbed (Red)*	1
9	600-38143.4	Flatbed, Steel, 21 Feet Paint Red	1
10	696-00032-1	Flatbed INSTL, STD Duty	1
	21Wood-STD-R	*21' Wood STD Flatbed (Red)*	1
11	600-38142.4	Flatbed, Wood, 21 Feet Paint Red	1
12	696-00032-1	Flatbed INSTL, STD Duty	1

ITEMS 1 TO 12 ARE NOT ILLUSTRATED

WHEN ORDERING PARTS, SPECIFY MODEL NUMBER, SERIAL NUMBER AND DESCRIPTION OF PARTS REQUIRED

https://truckmanualshub.com/

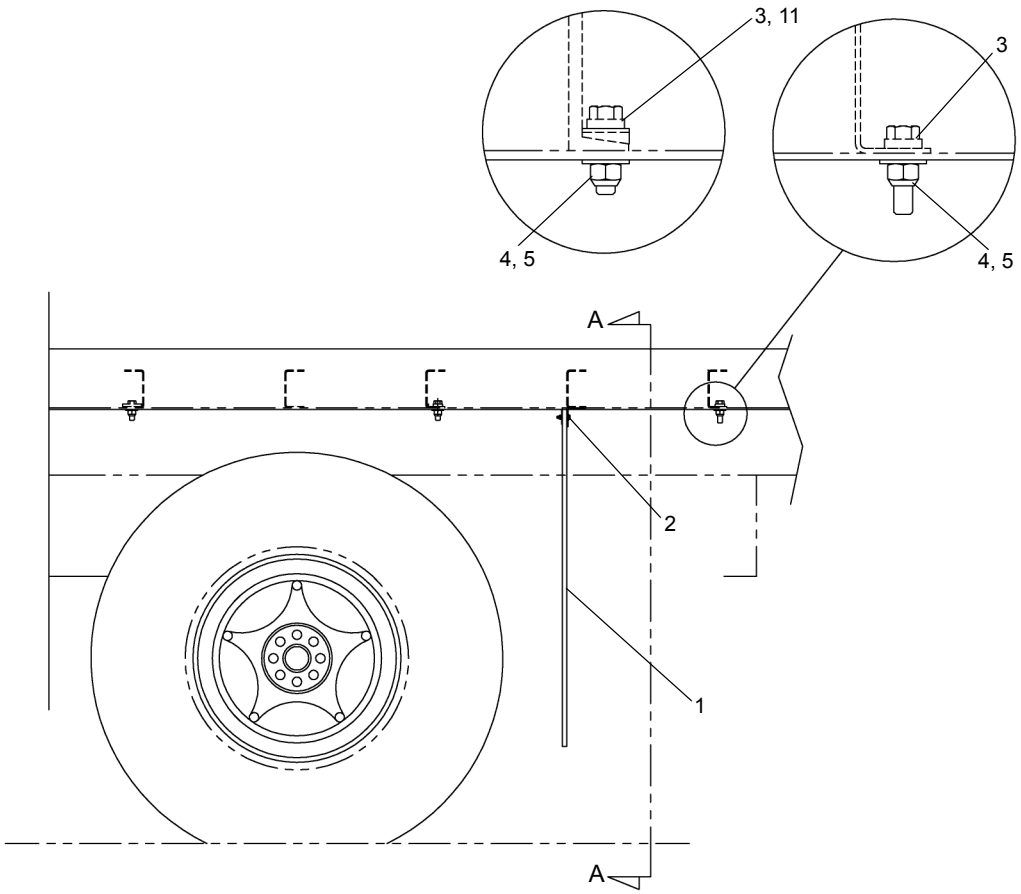

GROUND LINE

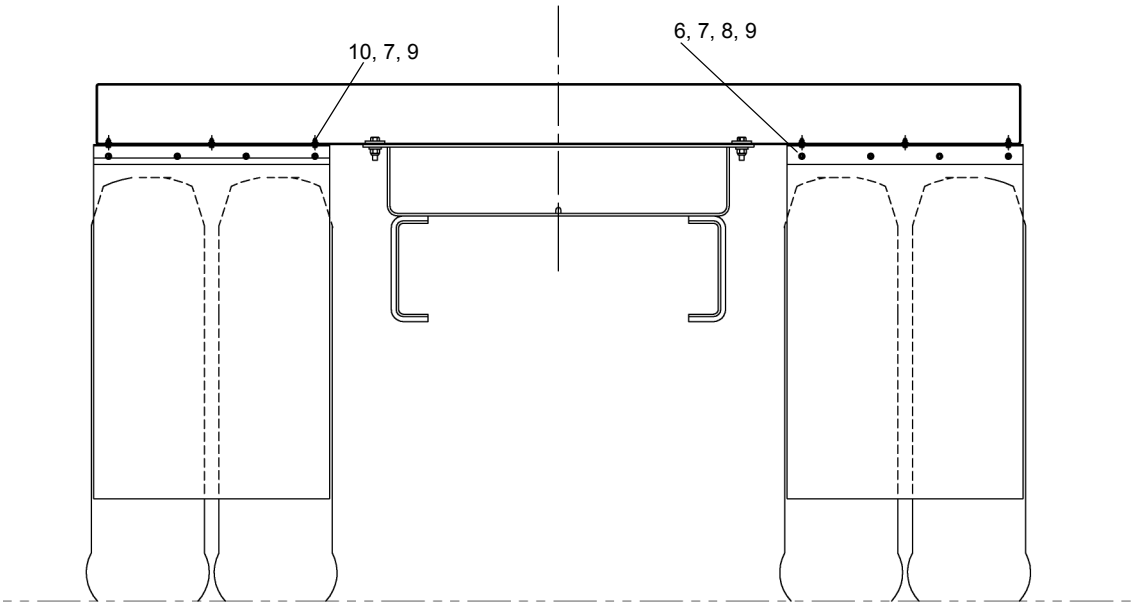

GROUND LINE VIEW A-A

SEE PAGE 2.6

https://truckmanualshub.com/

SEE PAGE 2.5

REF	PART NO.	DESCRIPTION	QTY
	696-00032-1 (Rev B)	*STD Flatbed INSTL (Items 1 thru 10 & 12)*	
	696-00032-2 (Rev B)	*SUP Duty Flatbed INSTL (Items 1 thru 12)*	
1	209-00461	Mud Flap, 1/2 x 24 x 36 Logo WHT	2
2	785-00561	Angle, Support Mud Flap	2
3	709-01925	FLTD TDN Bolt Weldment	12
4	221-94002	Toplock Nut 1/2-13NC Zinc	12
5	222-04009	Flatwasher, 1/2 Hard Zinc	12
6	220-00004	HHCS, 1/4-20NC x 1.25 GR 5 Zinc	8
7	221-90001	Toplock Nut 1/4-20 NC Zinc	14
8	222-00019	Flatwasher 1/4 Zinc (1.50 O.D)	8
9	222-00006	Flatwasher 1/4 Zinc PLTD	14
10	220-00003	HHCS, 1/4-20NC x 0.75 GR 5 Zinc	6
11	222-32005	Bevel Washer 1/2 Zi PLTD	12
12*	783-03723	Track Mount Bar - Long	2

* ITEM 12 IS NOT SHOWN IN ILLUSTRATION

https://truckmanualshub.com/

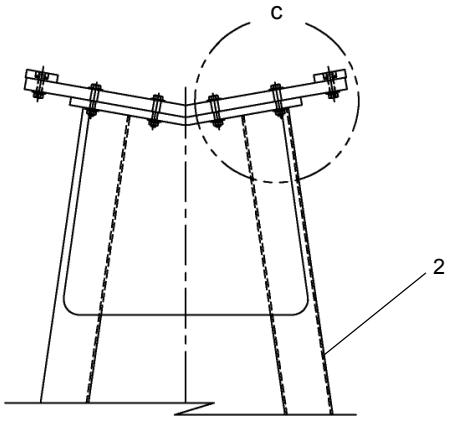

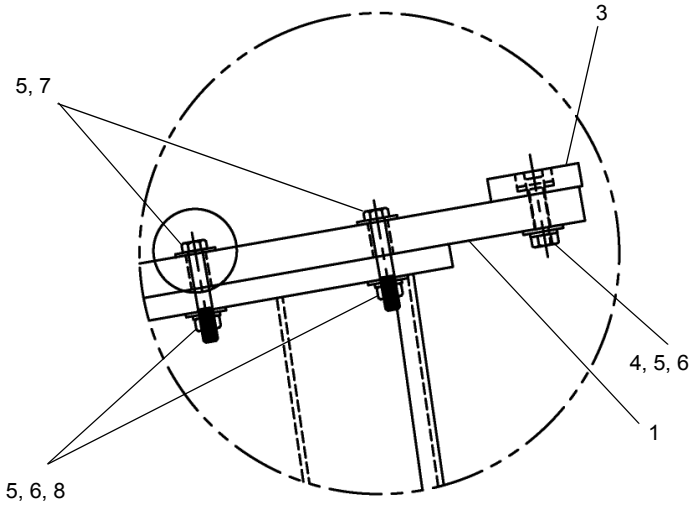

DETAIL C

REF	PART NO.	DESCRIPTION	QTY
	698-00063-3 (Rev A)	*Boom Rest Assembly*	
1	709-01318	Support Plate, Boom Rest	1
2	709-01212	Boom Rest Weld	1
3	729-02175	Wear Pad 2X6 PLYSRT (00765)	2
4	S01-312CA00-25	SCR, HHCS, 0.3125-18 X 1.00, ST Z G5	4
5	WAN-31NX000-20	WSH, FL, TYPA-NRW 0.3125, ST Z	20
6	W07-312X000-20	WSH, LCK, MED SPLT 0.3125, ST Z	12
7	S01-312CB00-25	SCR, HHCS, 0.3125-18 X 2.00, ST Z G5	8
8	N04-312C000-25	Nut, HEX, 0.3125-18, ST Z GR5	8

WHEN ORDERING PARTS, SPECIFY MODEL NUMBER, SERIAL NUMBER AND DESCRIPTION OF PARTS REQUIRED

https://truckmanualshub.com/

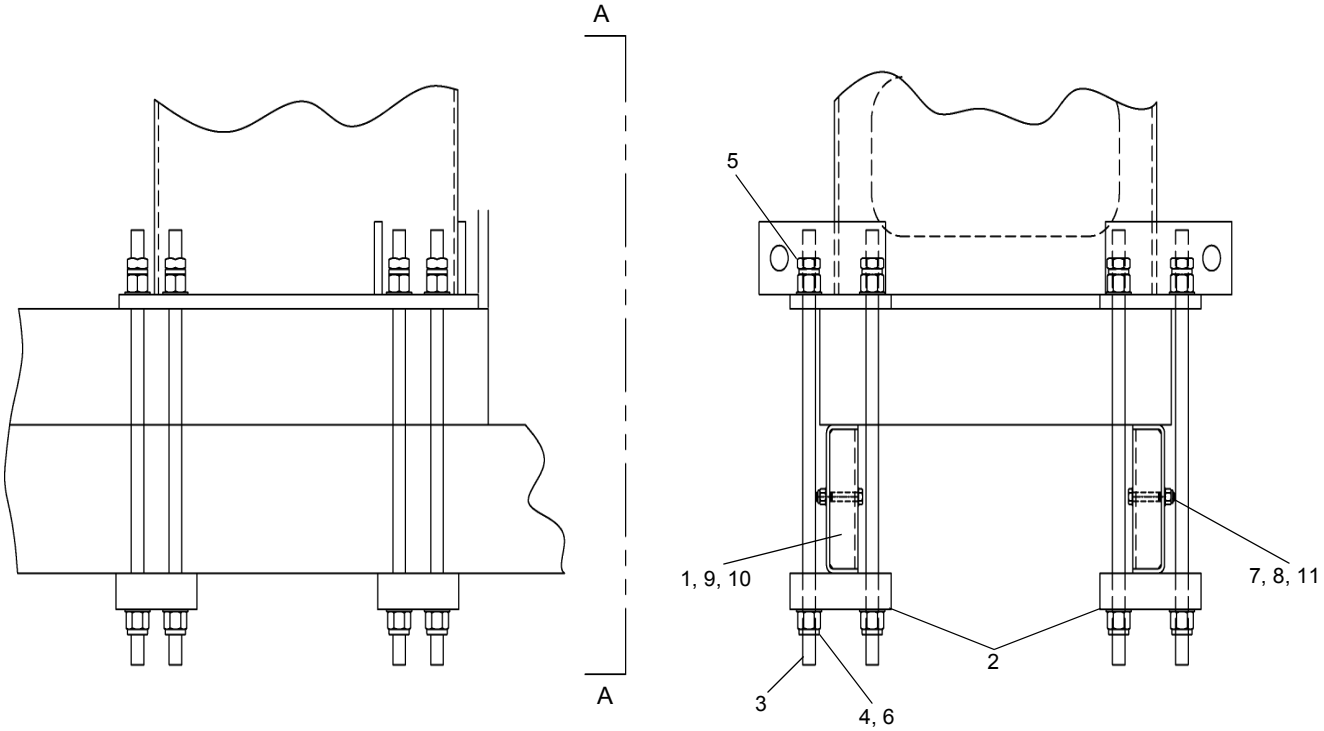

VIEW A - A

REF	PART NO.	DESCRIPTION	QTY
	700-00990-1 (Rev C)	*M/F Turret Installation*	
1	709-01902-1	Frame Stiffener 9.50” (021-40046)	A/R
2	783-02895	Clamp Bar	4
3	220-09078	Tiedown Stud 1-1/4 NF X 30	16
4	NYH-A25F000-22	Nut, NYL-INS HVY 1.25-12, ST Z	32
5	N05-A25F000-Y8	Nut, HEX Jam 1.25-12 ST YZ GR8	16
6	WAH-A2NX000-Y2	WSH, FL HRD A-NRW 1.25 ST YZ	32
7	WAH-62NX000-Y2	WSH, FL HRD A-NRW 0.625 ST YZ	8
8	NYL-625C000-25	Nut, HEX NYL_INS 0.625-11, ST Z G5	4
9	709-01902-2	Frame Stiffener 9.63” (021-40042)	4
10	709-01902-3	Frame Stiffener 9.75” (021-40051)	A/R
11	S01-625CD00-25	SCR, HHCS 0.625-11 X 4.00, ST Z GR5	4

WHEN ORDERING PARTS, SPECIFY MODEL NUMBER, SERIAL NUMBER AND DESCRIPTION OF PARTS REQUIRED

https://truckmanualshub.com/

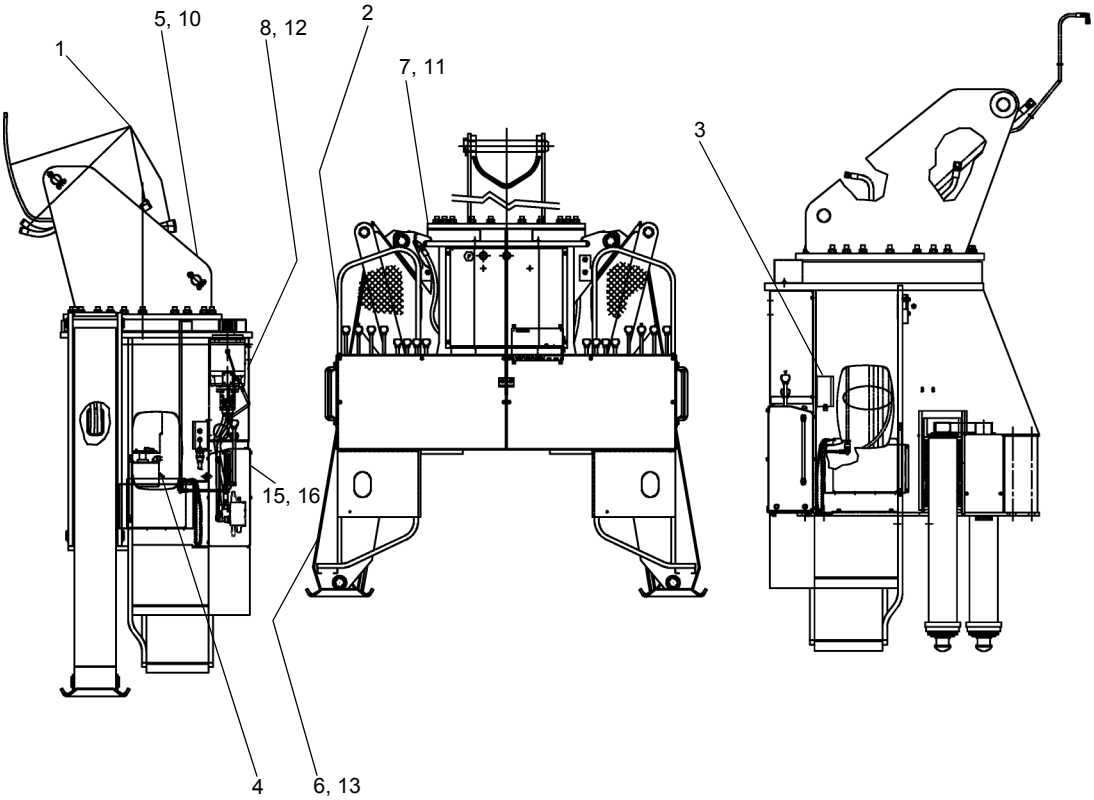

REF	PART NO.	DESCRIPTION	QTY
	700-00979-5 (Rev M)	*Mainframe ASSY CONT. Rotation 4792 Series (Items 1 thru 9)*	
	700-00979-5-R (Rev M)	*Mainframe ASSY CONT. Rotation 4792 Series (RED) (Items 1 thru 4 & 10 to 14)*	
1	500-01794-2	HYD. Piping-Mainframe (4792) CR	1
2	706-00022-3	Platform Installation (4792)	1
3	400-02451-3	Electrical Box Installtion (BT) (Refer Page 33.5)	1
4	500-01708	Center Post INSTL, CONT. Rotation	1
5	700-00981	Mainframe Sub Assembly (4792)	1
6	760-00306-P7	Main O/R Assembly (Gray) (4792)	2
7	710-00275-6	Turret Installation (4792) CR	1
8	705-00043-2	Swing Installation (4792)	1
9*	T126641	Non-Boom LMI Parts BT Machines	1
10	700-00981-R	Mainframe Sub Assembly (4792)	1
11	710-00275-6-R	Turret Installation (4792) CR	1
12	705-00043-2-R	Swing Installation (4792)	1
13	760-00306-P4	Main O/R Assembly (Red) (4792)	2
14*	T126642	Non-Boom LMI Parts BT Machines (Red)	1
15	800-50054-2	Control Console For STD Speed Winch	1
16	800-50054-5	Control Console For Two Speed Winch	1

* ITEMS 9 & 14 ARE NOT SHOWN IN THE ILLUSTRATION

WHEN ORDERING PARTS, SPECIFY MODEL NUMBER, SERIAL NUMBER AND DESCRIPTION OF PARTS REQUIRED

https://truckmanualshub.com/

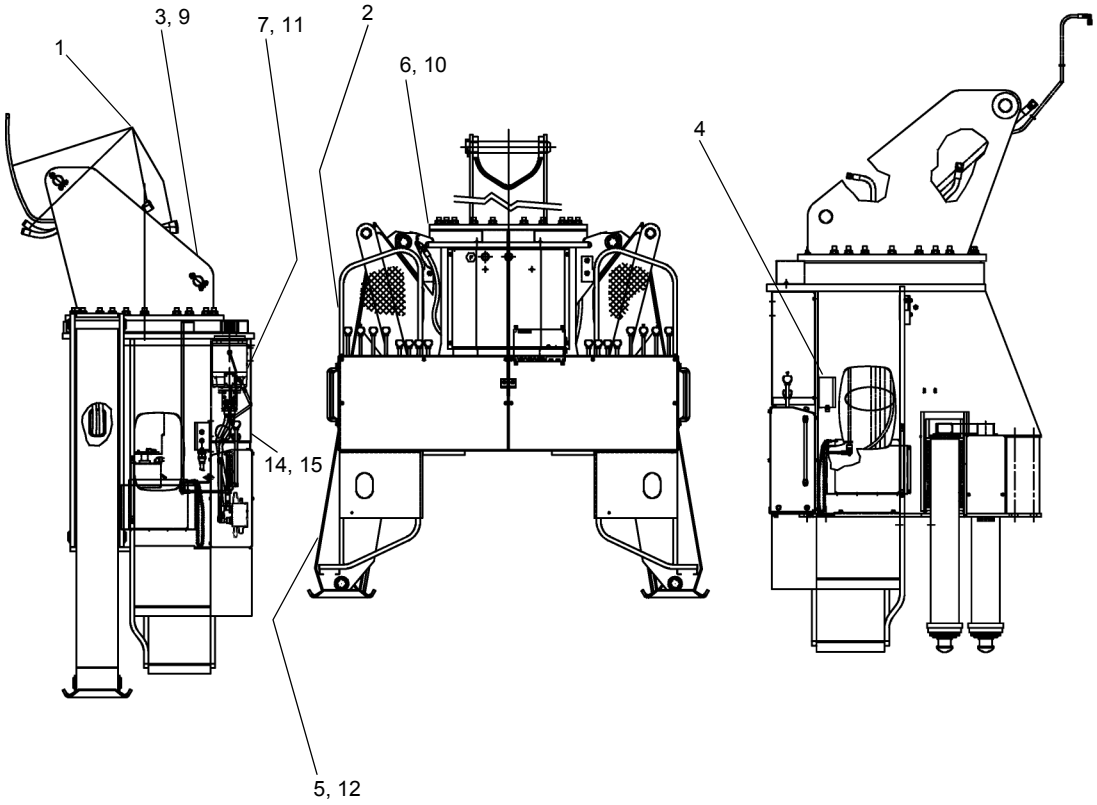

REF	PART NO	DESCRIPTION	QTY
	700-00979-6 (Rev M)	*Mainframe ASSY CONT. Rotation 4792 Series (Items 1 thru 8)*	
	700-00979-6-R (Rev M)	*Mainframe ASSY CONT. Rotation 4792 Series (RED) (Items 1 thru 3 & 9 thru 13)*	
1	500-01794-2	HYD. Piping-Mainframe (4792) NCR	1
2	706-00022-3	Platform Installation (4792)	1
3	400-02451-3	Electrical Box Installtion (BT) (Refer Page 33.5)	1
4	700-00981	Mainframe Sub Assembly (4792)	1
5	760-00306-P7	Main O/R Assembly (Gray) (4792)	2
6	710-00275-5	Turret Installation (4792) NCR	1
7	705-00043-2	Swing Installation (4792)	1
8*	T126641	Non-Boom LMI Parts BT Machines	1
9	700-00981-R	Mainframe Sub Assembly (4792)	1
10	710-00275-5-R	Turret Installation (4792) NCR	1
11	705-00043-2-R	Swing Installation (4792)	1
12	760-00306-P4	Main O/R Assembly (Red) (4792)	2
13*	T126642	Non-Boom LMI Parts BT Machines (Red)	1
14	800-50054-2	Control Console For STD Speed Winch	1
15	800-50054-5	Control Console For Two Speed Winch	1

* ITEMS 8 & 13 ARE NOT SHOWN IN THE ILLUSTRATION

WHEN ORDERING PARTS, SPECIFY MODEL NUMBER, SERIAL NUMBER AND DESCRIPTION OF PARTS REQUIRED

https://truckmanualshub.com/

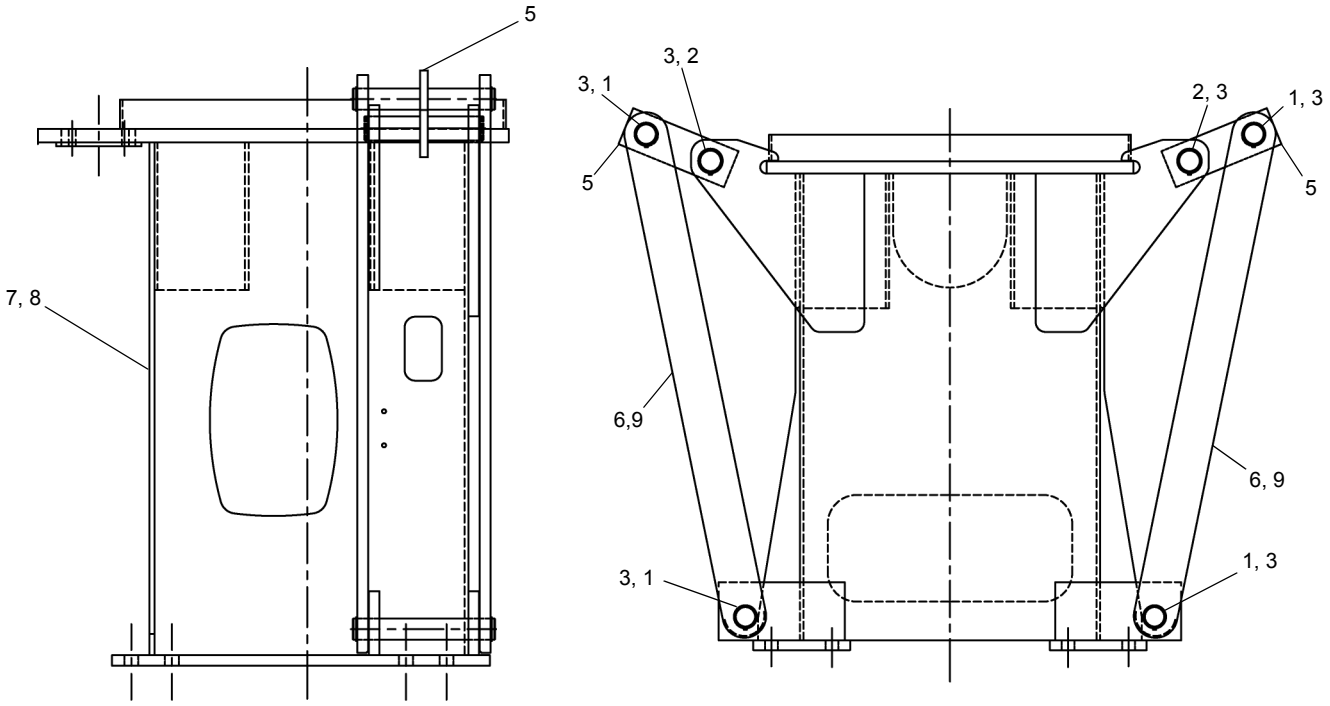

REF	PART NO.	DESCRIPTION	QTY
	700-00981 (Rev F)	*Mainframe Sub Assembly-Paint Gray (Includes Items 1 thru 7)*	
	700-00981-R (Rev F)	*Mainframe Sub Assembly-Paint Red (Includes Items 1 thru 5, 8 & 9)*	
1	870-60202	Pin, Link Bar	4
2	870-70066	Pin, Outrigger	2
3	200-30006	Snap Ring (3-784)	8
4*	200-30009	Snap Ring (3-766)	4
5	699-00025	Transport Link, Wooden	2
6	T123823	Link, Bar (Gray)	4
7	701-00527	Mainframe Weld/MACH (Gray)	1
8	T123827	Mainframe Weld/MACH (Red)	1
9	760-90036	Link, Bar (Red)	4

* ITEM 4 IS NOT SHOWN IN THE ILLUSTRATION

WHEN ORDERING PARTS, SPECIFY MODEL NUMBER, SERIAL NUMBER AND DESCRIPTION OF PARTS REQUIRED

https://truckmanualshub.com/

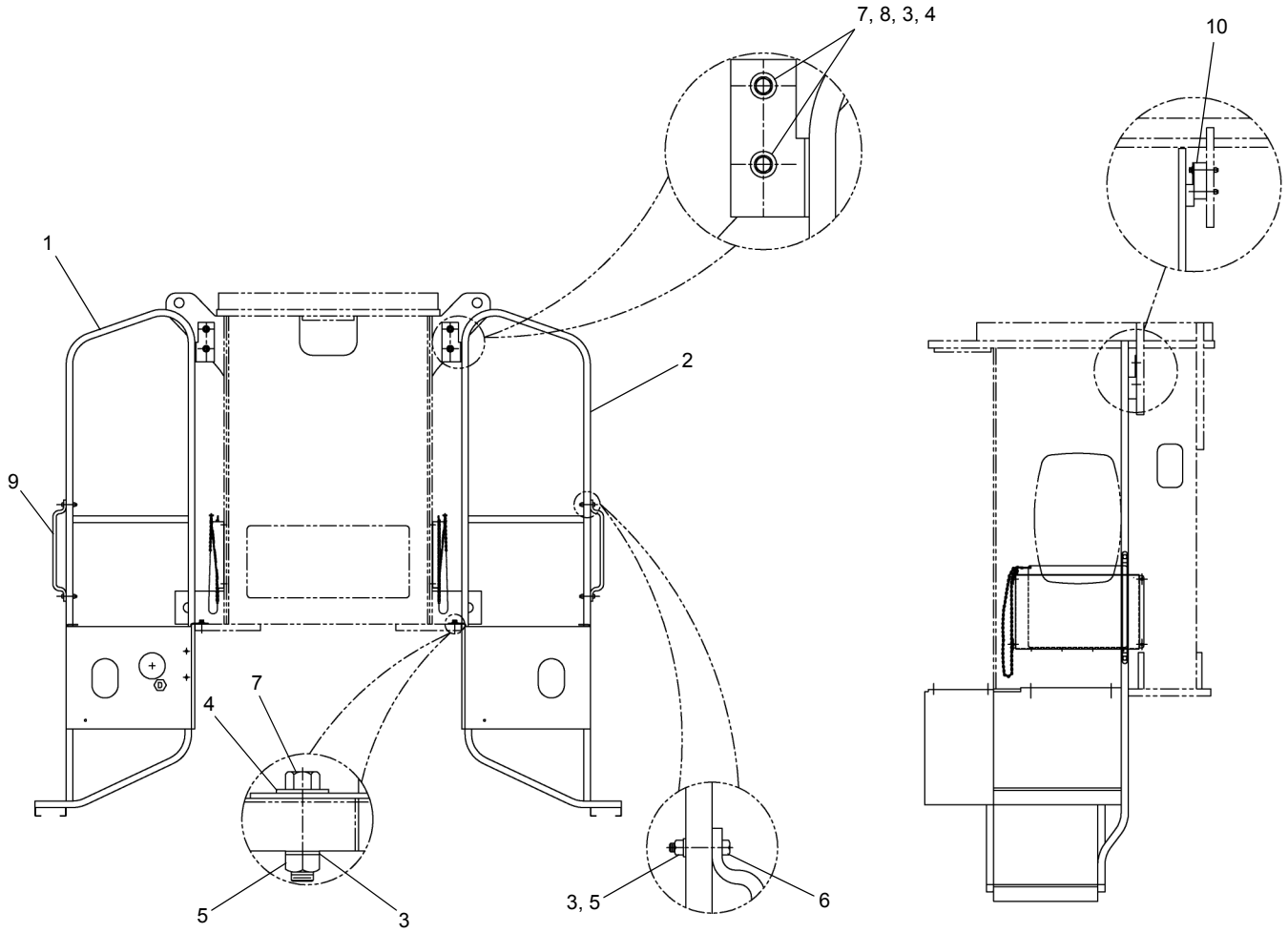

REF	PART NO.	DESCRIPTION	QTY
	706-00022-3 (Rev D)	*Platform Installation*	
1	709-01301	Platform, Weld LH	1
2	709-01300	Platform, Weld RH	1
3	222-12001	Lockwasher 3/8” Zinc PLTD	12
4	222-02005	Flatwasher 3/8” Zinc PLTD	8
5	221-02001	Nut-HEX 3/8-16 UNC-2B REG PLTD	8
6	220-02011	HHCS, 3/8-16 NC X 2.00 GR5 Zinc	4
7	220-02007	HHCS, 3/8-16 NC X 1.75 GR5 Zinc	4
8	220-02008	HHCS, 3/8-16 NC X 3.50 GR5 Zinc	4
9	209-00444	Grab Handle #2399-D	2
10	783-03022	Spacer Bar	2

WHEN ORDERING PARTS, SPECIFY MODEL NUMBER, SERIAL NUMBER AND DESCRIPTION OF PARTS REQUIRED

https://truckmanualshub.com/

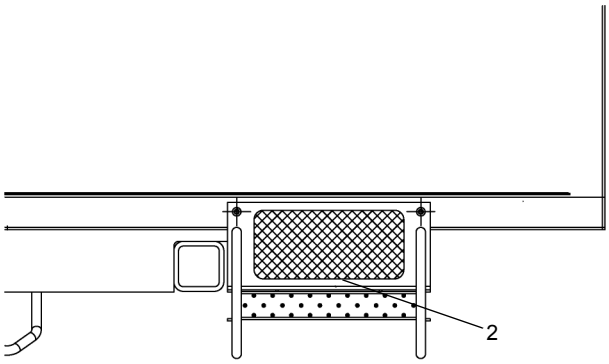

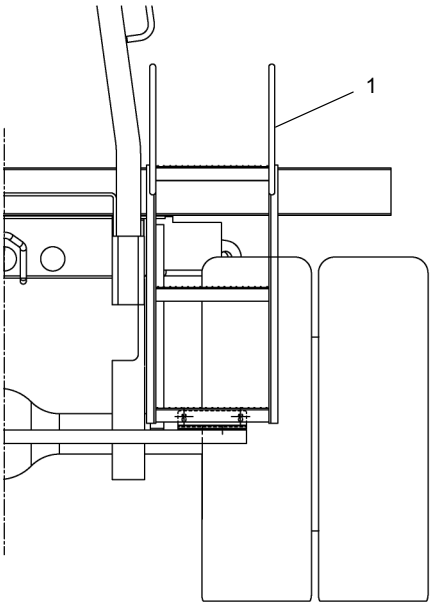

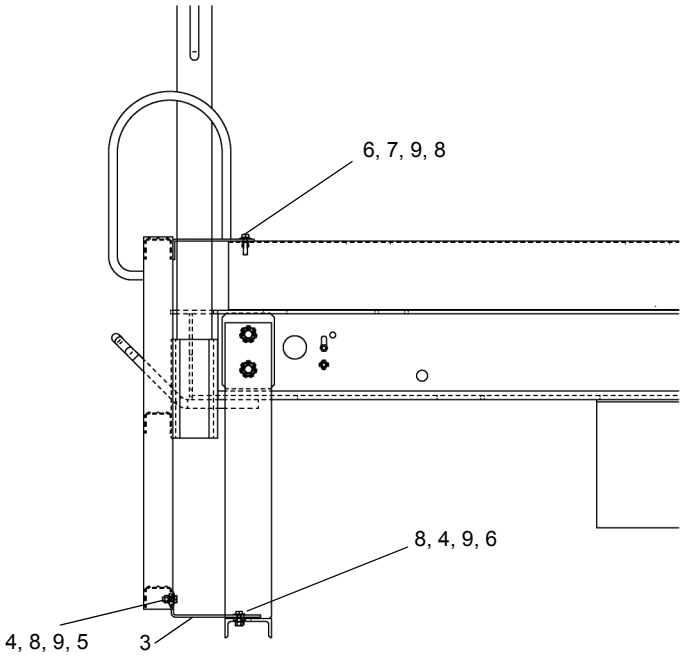

REF	PART NO.	DESCRIPTION	QTY
	024-00008 (Rev B)	*Ladder Kit, Steel Bed*	
1	024-00009	Ladder Weldment	1
2	209-00871	Anti Slip Tape, Ladder	1
3	789-05812	Ladder SPT BRKT	1
4	N04-375C000-25	Nut, HEX 0.375-16, ST Z GR5	4
5	SHF-375CA00-25	SCR, HHCS FT 0.375-16X1.00, STZ G5	4
6	SHF-375CA50-25	SCR, HHCS FT 0.375-16X1.50, STZ G5	2
7	T11-375C000-CD	Thread-SERT 0.375-16, ST CAD	2
8	W07-375X000-20	WSH, LCK, MED SPLT 0.375, ST Z	6
9	WBR-37RXA00-20	WSH, FL TYPB-REG 0.375, ST Z	10

WHEN ORDERING PARTS, SPECIFY MODEL NUMBER, SERIAL NUMBER AND DESCRIPTION OF PARTS REQUIRED

https://truckmanualshub.com/

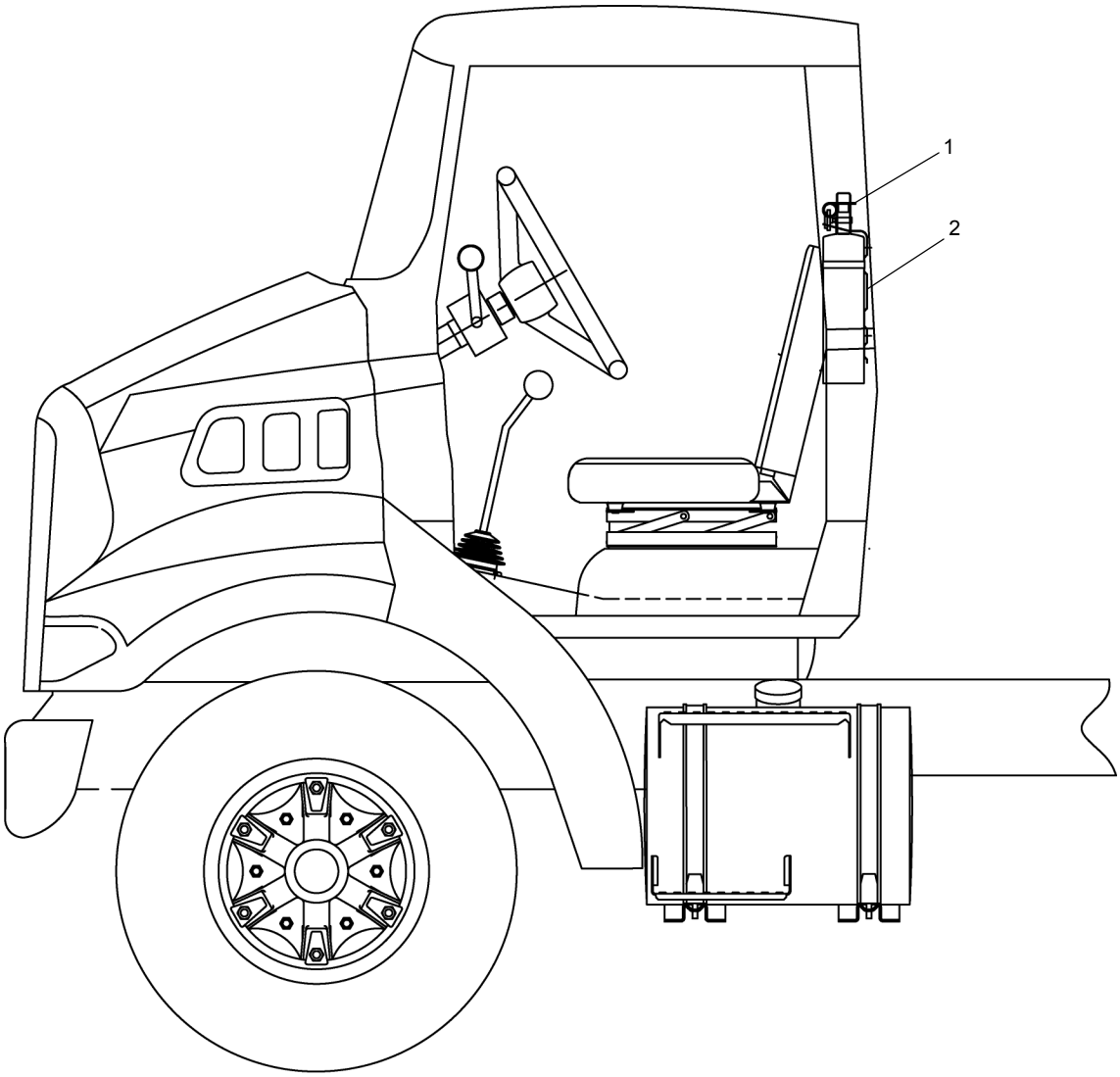

REF	PART NO.	DESCRIPTION	QTY
	736-00001-1 (Rev A)	*Fire Extinguisher Installation*	
1	1222-217	Fire Extinguisher	1
2	223-00116	HWHTS, #10-16 X .75 Zinc	4

WHEN ORDERING PARTS, SPECIFY MODEL NUMBER, SERIAL NUMBER AND DESCRIPTION OF PARTS REQUIRED

https://truckmanualshub.com/

REF	PART NO.	DESCRIPTION	QTY
1	760-00306	Main Outrigger Assembly	2
2	T121324	Auxiliary Outrigger Assembly	1
3	760-00464-2	Front Bumper Stabilizer (34”)	1
	760-00464-4	Front Bumper Stabilizer (46”)	1

WHEN ORDERING PARTS, SPECIFY MODEL NUMBER, SERIAL NUMBER AND DESCRIPTION OF PARTS REQUIRED

https://truckmanualshub.com/

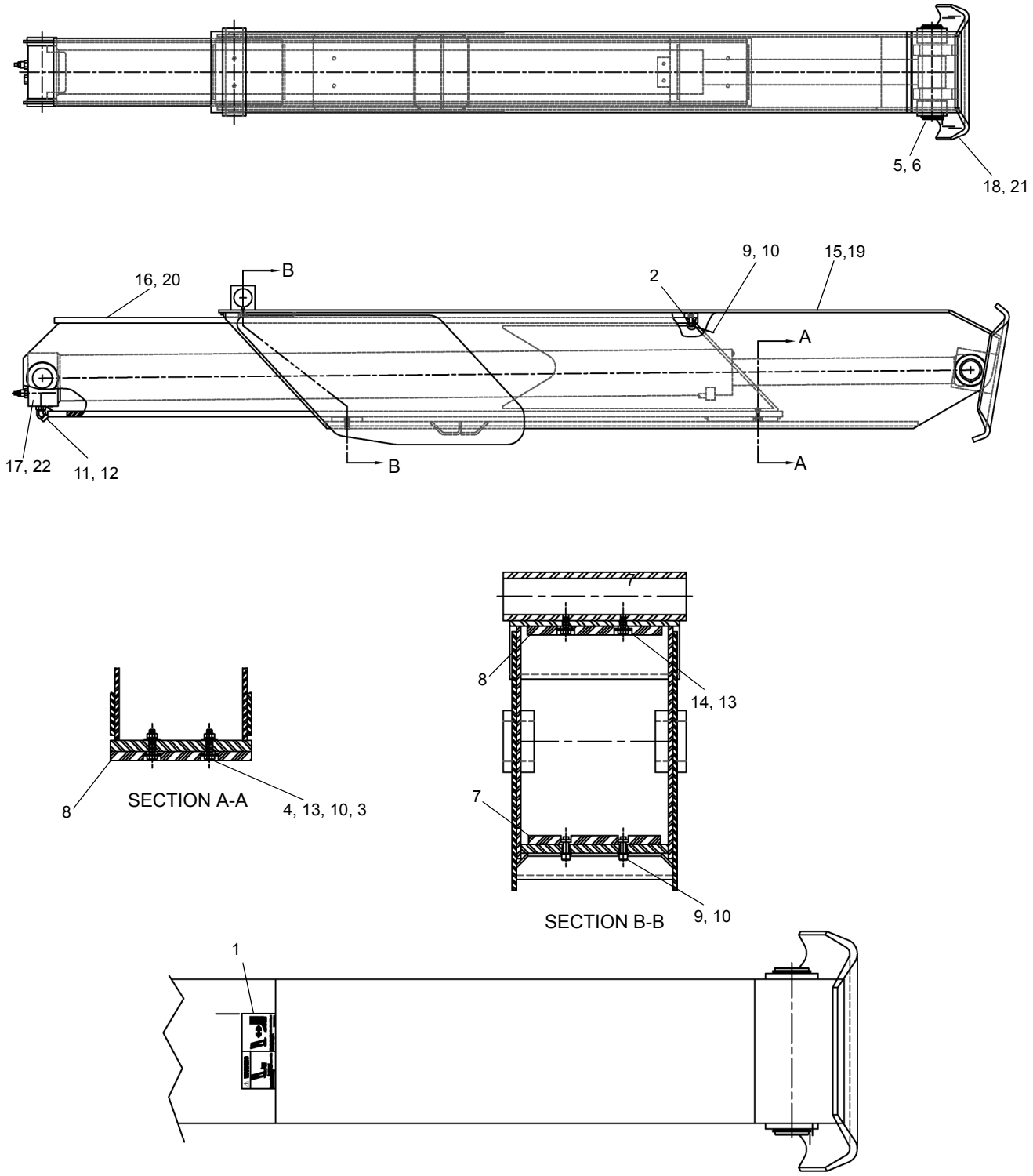

SEE PAGE 3.3

WHEN ORDERING PARTS, SPECIFY MODEL NUMBER, SERIAL NUMBER AND DESCRIPTION OF PARTS REQUIRED

https://truckmanualshub.com/

SEE PAGE 3.2

REF	PART NO.	DESCRIPTION	QTY
	760-00306-P7 (Rev E)	*Main Outrigger Assembly* (*Gray*) *(Items 1 thru 14 & 15 to 18)*	
	760-00306-P4 (Rev E)	*Main Outrigger Assembly* (*Red*) *(Items 1 thru 14 & 19 to 22)*	
1	T116671	Decal, A Frame Outrigger Crush	1
2	729-02341	Wear Pad, 1.50 x 3.50 PLYSRT	1
3	221-01001	HEX Nut 5/16-18 UNC	2
4	220-01006	HHCS, 5/16-18 UNC x 1.50 LG	2
5	870-70066	Outrigger Pin	1
6	200-30009	Retainer Ring (TAB 766)	2
7	729-02333	Wear Pad 3.50 x 7.50 PLYSRT (TAB 765)	1
8	729-02334	Wear Pad 8.00 X 7.63	2
9	220-01005	HHCS, 5/16-18 UNC X 1.00 LG	4
10	222-11002	Lockwasher 5/16	6
11	519-50010	Cap #8 OFS	2
12	515-05003	Elbow 45º #8 OFS	2
13	222-01001	Flat Washer 5/16	6
14	220-01004	HHCS, 5/16-18 UNC x .75 LG	2
15	760-10331-P7	O/R LEG Weld Outer (Gray)	1
16	760-10332-P7	O/R LEG Weld Inner (Gray)	1
17	540-50045-P7	Main O/R Cylinder (Gray)	1
18	760-30167-P7	Outrigger Shoe Weld (Gray)	1
19	760-10331-P4	O/R LEG Weld Ouler Red)	1
20	760-10332-P4	O/R LEG Weld Inner (Red)	1
21	760-30167-P4	Outirigger Shoe Weld (Red)	1
22	540-50045-P4	Main O/R Cylinder (Red)	1

https://truckmanualshub.com/

540-50045

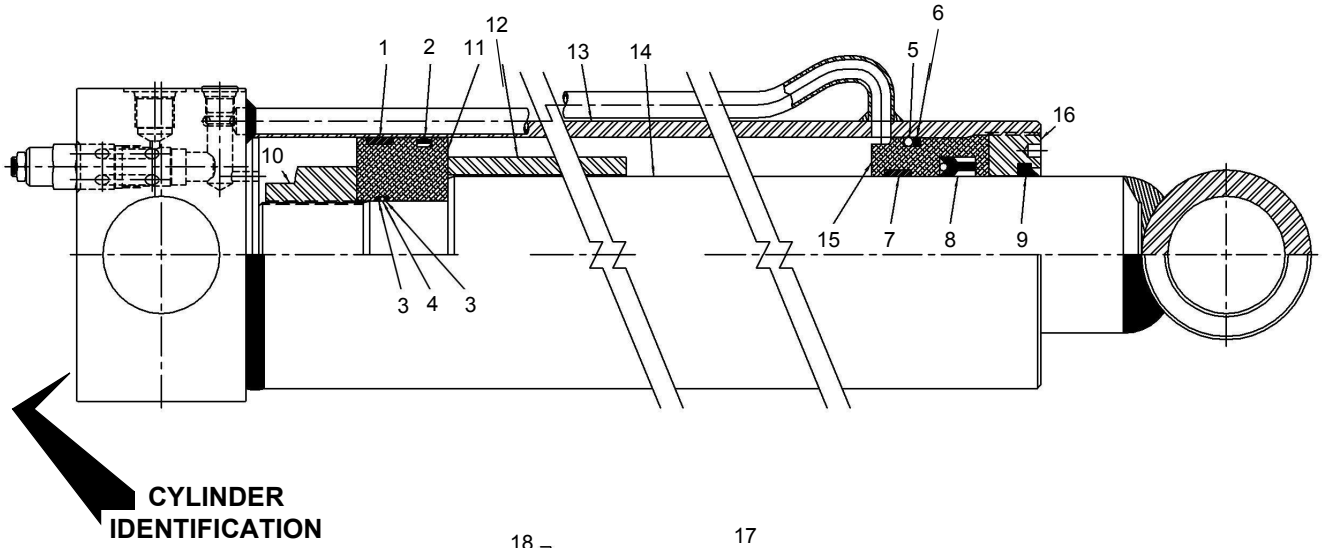

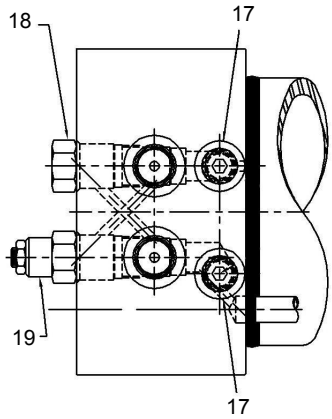

REF	PART NO.	DESCRIPTION	QTY
	540-50045 (Rev A)	*Main Outrigger Cylinder*	
	226830	*Seal Kit (Items 1 thru 9)*	
1	222886	Wear Ring	1
2	226827	PSP Seal	1
3	222888	Back-Up Ring	2
4	215118	O-Ring	1
5	222890	O-Ring	1
6	222891	Back-Up Ring	1
7	219596	Wear Ring	1
8	226828	Loaded U-Cup	1
9	226829	Rod Wiper	1
10	222895	Locknut	1
11	226831	Piston	1
12	226832	Spacer	1
13	226833	Barrel Assembly	1
14	226834	Rod Assembly	1
15	226835	Internal Head	1
16	226836	Thread Ring	1
17	218693	Steel Plug	2
18	226837	Check Valve	1
19	226838	Counter Balance Valve	1

WHEN ORDERING PARTS, SPECIFY MODEL NUMBER, SERIAL NUMBER AND DESCRIPTION OF PARTS REQUIRED

https://truckmanualshub.com/

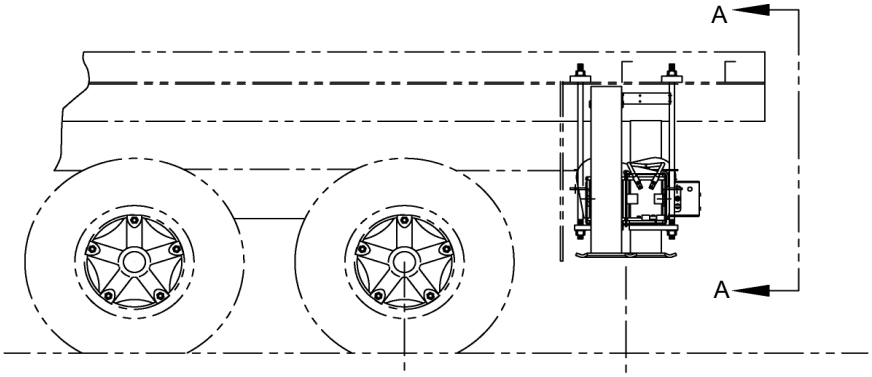

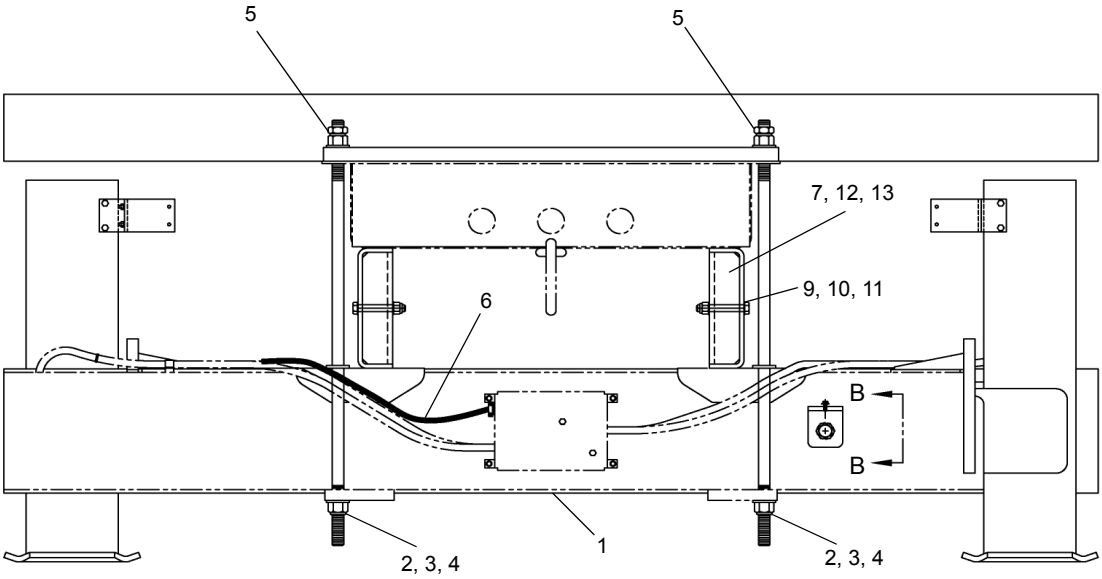

VIEW A-A

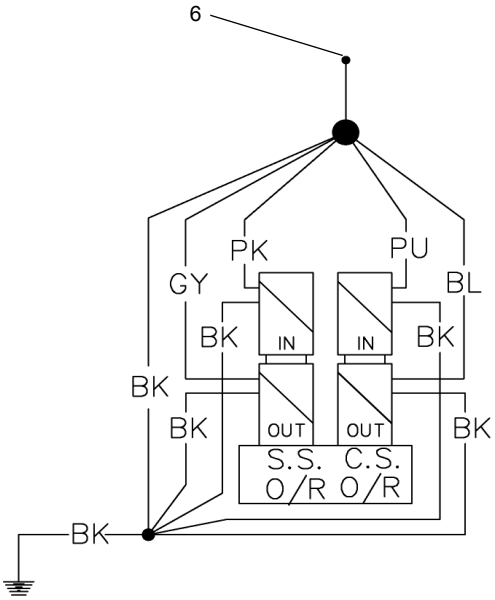

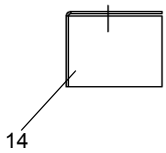

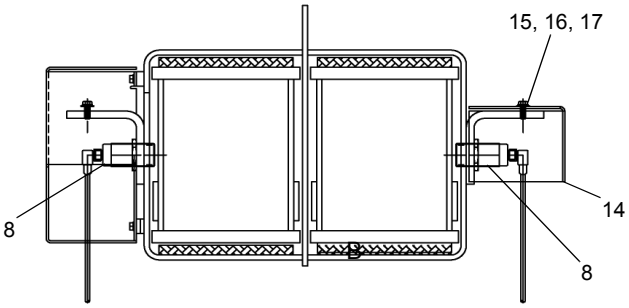

VIEW B - B

SEE PAGE 3.7

https://truckmanualshub.com/

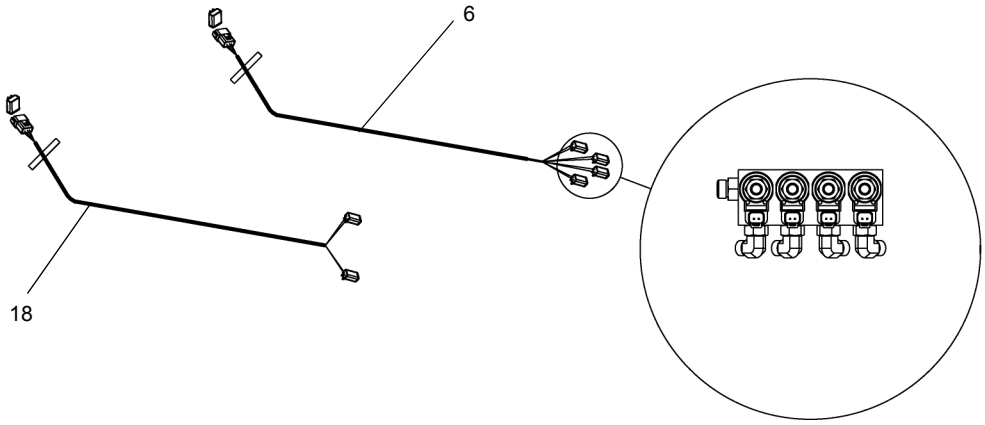

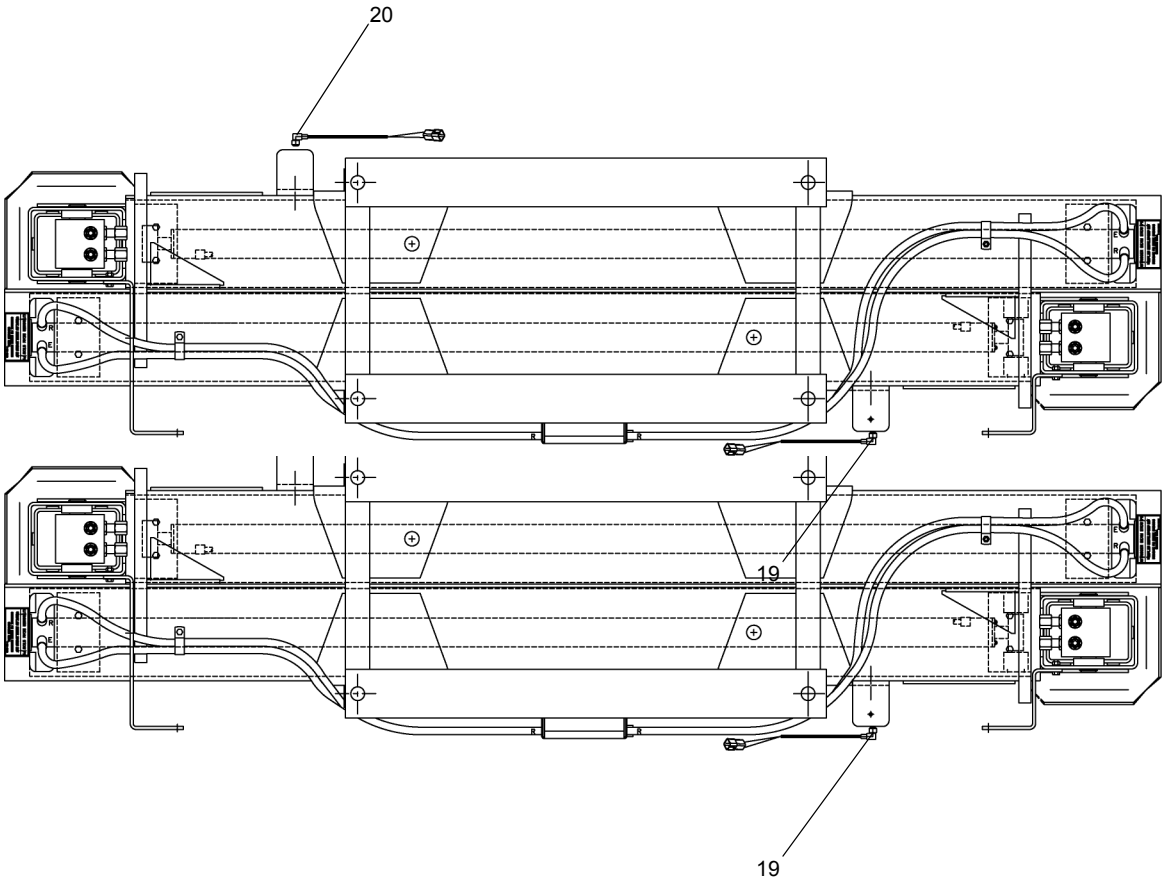

SEE PAGE 3.7

WHEN ORDERING PARTS, SPECIFY MODEL NUMBER, SERIAL NUMBER AND DESCRIPTION OF PARTS REQUIRED

https://truckmanualshub.com/

SEE PAGES 3.5 & 3.6

REF	PART NO.	DESCRIPTION	QTY
	T121324 (Rev C)	*AUX Outrigger INSTL (Terex Gray)*	
1	T120909	AUX O/R Assembly	1
2	220-09123	Stud, 1.00-14 X 39.00 LG	4
3	NYH-A00S000-22	Nut, NYL-INS HVY 1.00-14, ST Z	8
4	WAH-A0NX000-Y2	WSH, FL HRD A-NRW 1.00, ST YZ	8
5	N05-A00S000-Y8	Nut, HEX Jam 1.00-14 ST YZ GR8	4
6	400-25188	ELEC. Harness ASSY AUX O/R	1
7	709-01902-1	Frame Stiffner 9.50” (021-40046)	4
8	T120217	Position Sensor	2
9	S01-625CD00-25	SCR, HHCS 0.625-11X4.00, ST Z GR5	4
10	NYL-625C000-25	Nut, HEX NYL-INS 0.625-11, ST Z G5	4
11	WAH-62NX000-Y2	WSH, FL HRD A-NRW 0.625 ST YZ	8
12	709-01902-2	Frame Stiffener 9.63” (021-40042)	A/R
13	709-01902-3	Frame Stiffener 9.75” (021-40051)	A/R
14	T120495	Position Sensor Cover (Gray)	2
15	SHF-250C750-25	SCR, HHCS, FL 0.25-20 X 0.75, ST Z GR5	2
16	W07-250X000-20	WSH, LCK, SPLT 0.25. ST Z	2
17	WAW-25WX000-20	WSH, FL TPYA-WID 0.25 ST YZ	2
18	T121809	Harness AUX O/R Sensors	1
19	T121221	Harness AUX C.S O/R Sensor	1
20	T121222	Harness AUX S.S O/R Sensor	1

https://truckmanualshub.com/

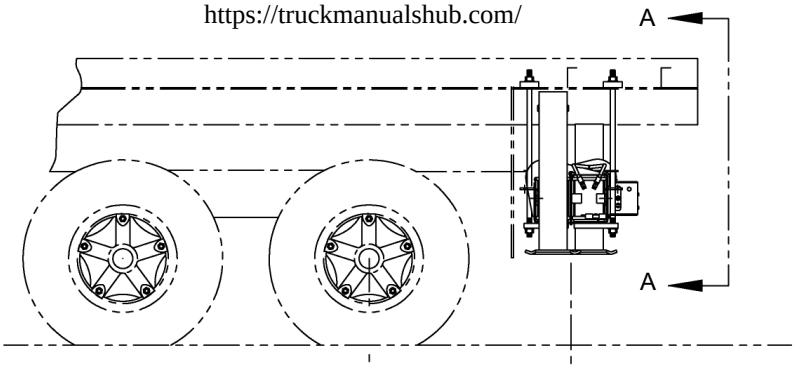

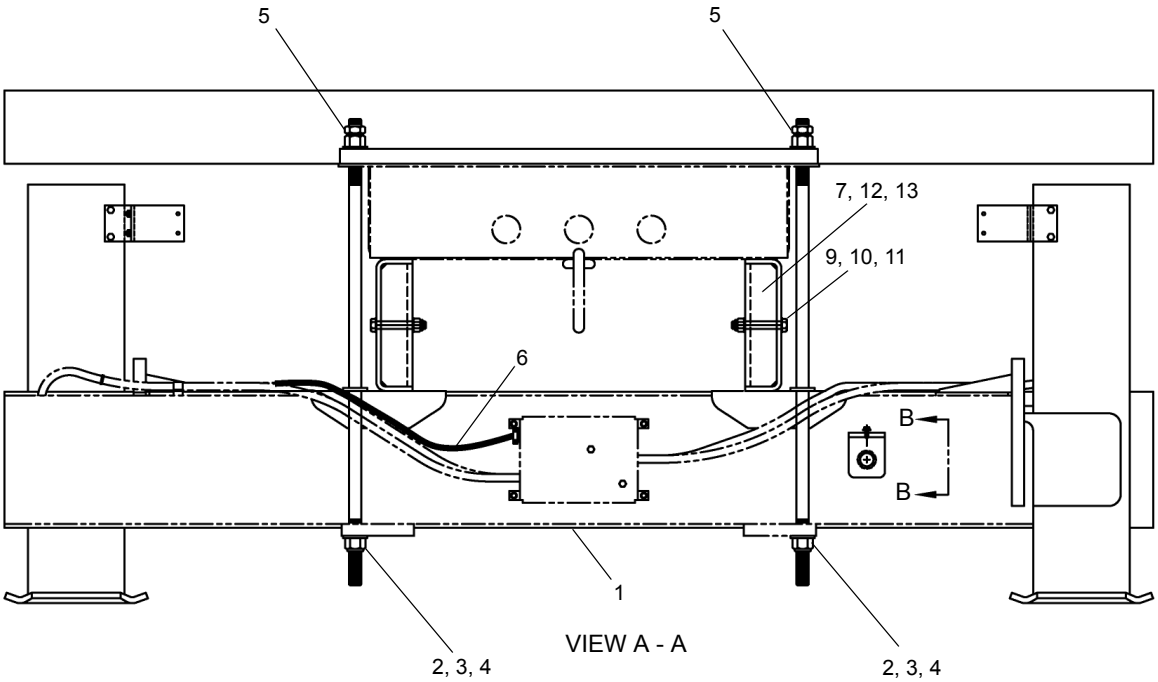

VIEW A - A

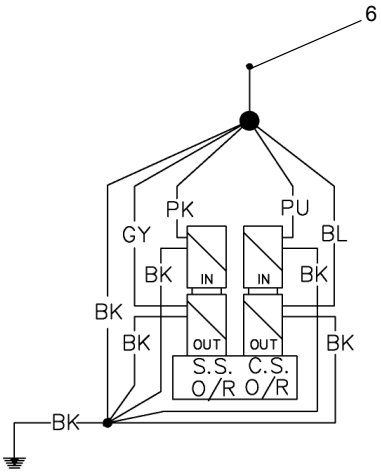

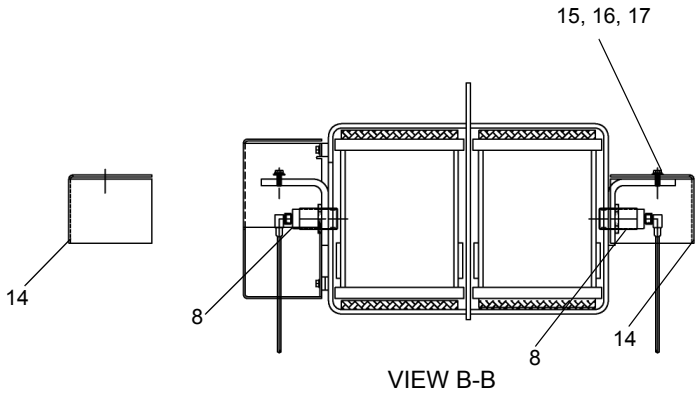

VIEW B-B

SEE PAGE 3.9

WHEN ORDERING PARTS, SPECIFY MODEL NUMBER, SERIAL NUMBER AND DESCRIPTION OF PARTS REQUIRED

https://truckmanualshub.com/

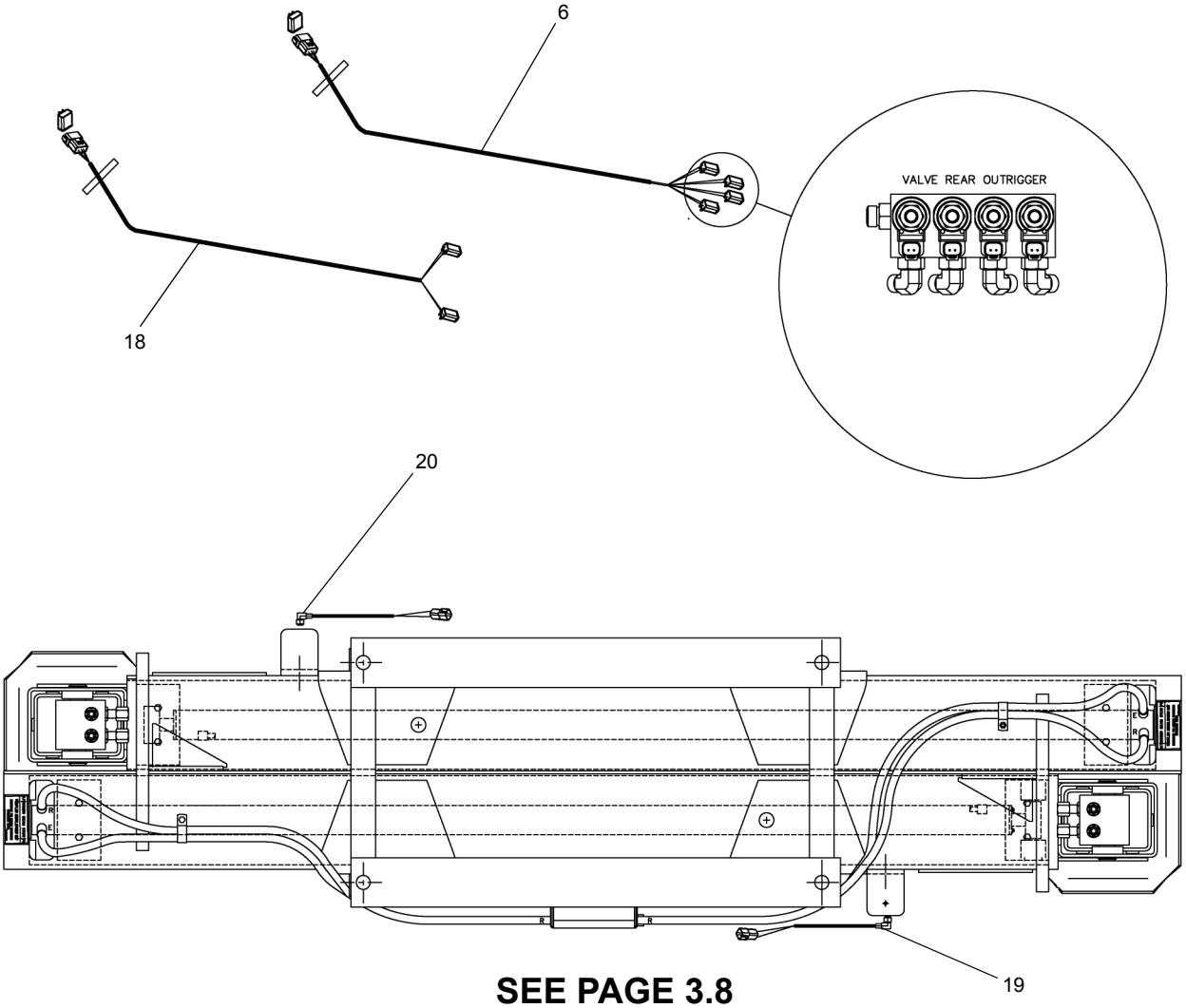

SEE PAGE 3.8

REF	PART NO.	DESCRIPTION	QTY
	T121325 (Rev C)	*AUX Outrigger INSTL (Terex Red)*	
1	T121012	AUX O/R Assembly (Terex Red)	1
2	220-09123	Tie Down Stud	4
3	NYH-A00S000-22	Nut, NYL-INS HVY 1.00-14, ST Z	8
4	WAH-A0NX000-Y2	WSH, FL HRD A-NRW 1.00-14, ST YZ	8
5	N05-A00S000-Y8	Nut, HEX JAM 1.00-14 ST YZ GR8	4
6	400-25188	ELEC. Harness ASSY	1
7	709-01902-1	Frame Stiffner 9.50” (021-40046)	4
8	T120217	Position Sensor	2
9	S01-625CD00-25	SCR, HHCS 0.625-11X4.00, ST Z GR5	4
10	NYL-625C000-25	Nut, HEX NYL-INS 0.625-11, ST Z G5	4
11	WAH-62NX000-Y2	WSH, FL HRD A-NRW 0.625 ST YZ	8
12	709-01902-2	Frame Stiffener 9.63” (021-40042)	A/R
13	709-01902-3	Frame Stiffener 9.75” (021-40051)	A/R
14	T121574	Position Sensor Cover (Red)	2
15	SHF-250C750-25	SCR, HHCS, FL 0.25-20X0.75, ST Z GR5	2
16	W07-250X000-20	WSH, LCK, SPLT 0.25. ST Z	2
17	WAW-25WX000-20	WSH, FL TPYA-WID 0.25 ST YZ	2
18	T121809	Harness AUX O/R Sensors	1
19	T121221	Harness AUX C.S O/R Sensor	1
20	T121222	Harness AUX S.S O/R Sensor	1

WHEN ORDERING PARTS, SPECIFY MODEL NUMBER, SERIAL NUMBER AND DESCRIPTION OF PARTS REQUIRED

https://truckmanualshub.com/

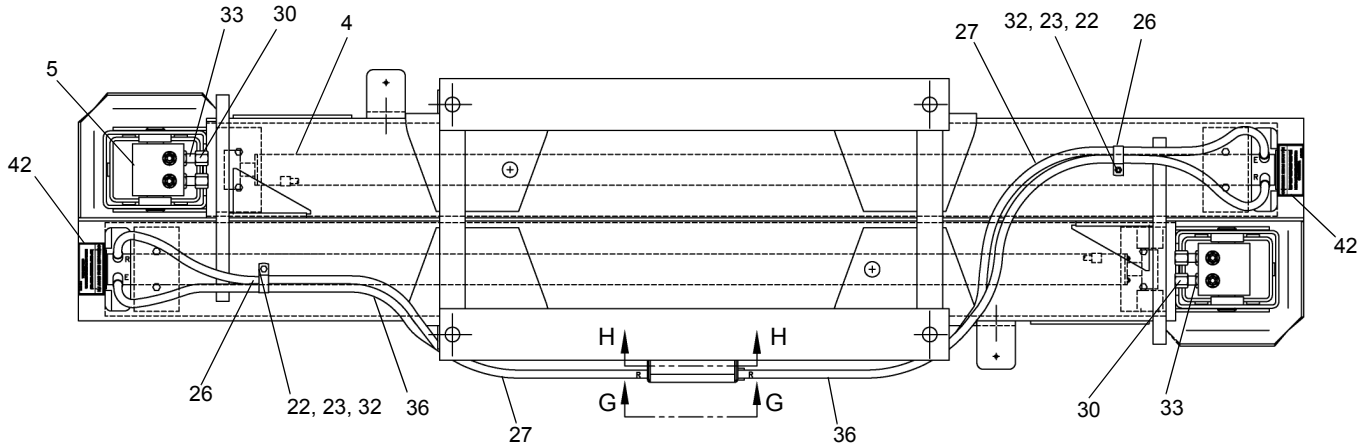

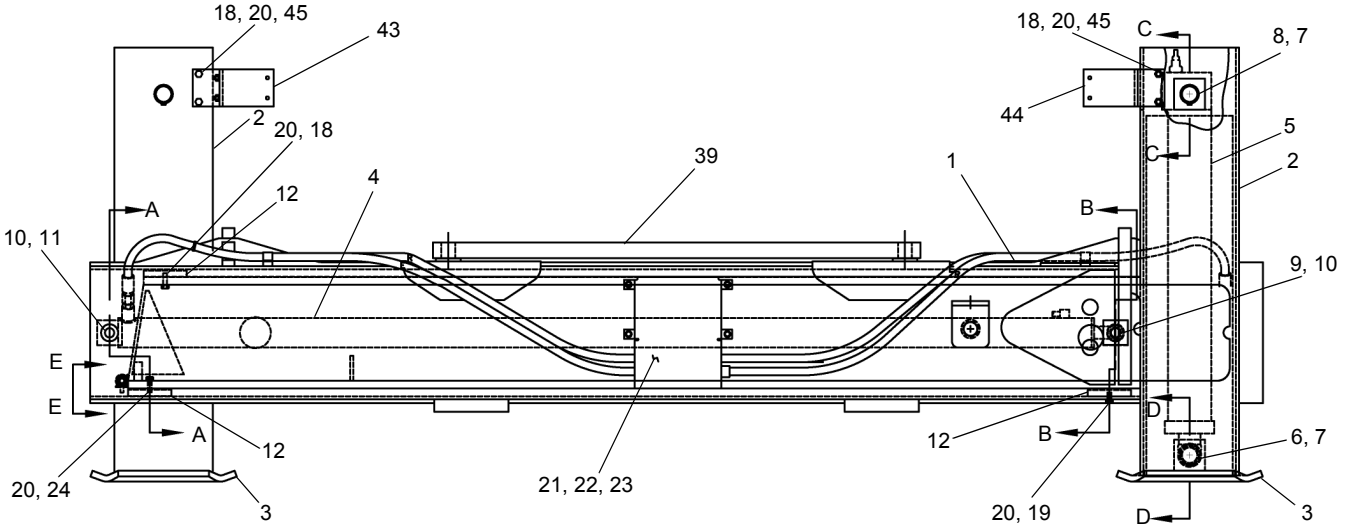

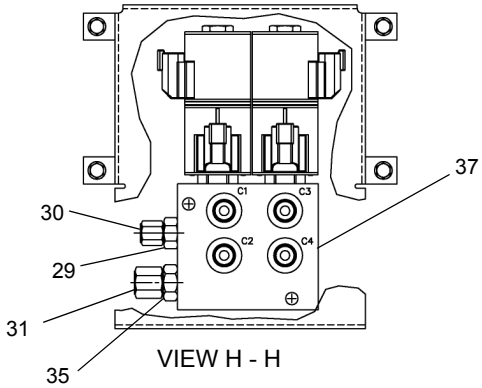

VIEW H - H

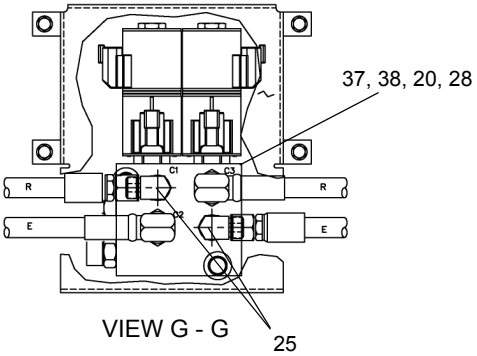

VIEW G - G

SEE PAGE 3.12

WHEN ORDERING PARTS, SPECIFY MODEL NUMBER, SERIAL NUMBER AND DESCRIPTION OF PARTS REQUIRED

TEREX® P/N 12261-286	**ASSY-HORZ AUX O/R (TEREX GRAY)**	DATE: Revised 12-2013	GROUP
		MODEL: BT4792	**3**
		PAGE 3.10	

https://truckmanualshub.com/

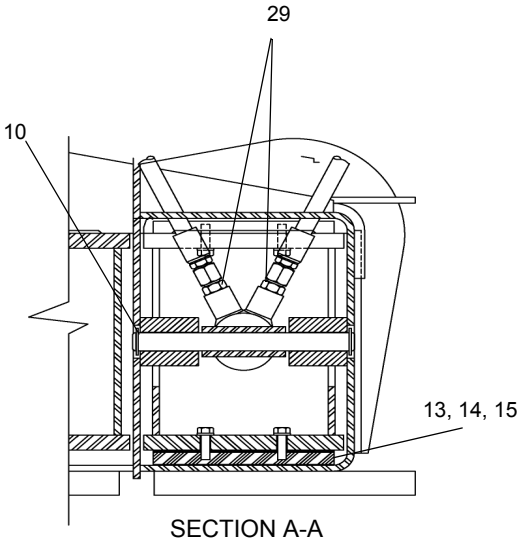

SECTION A-A

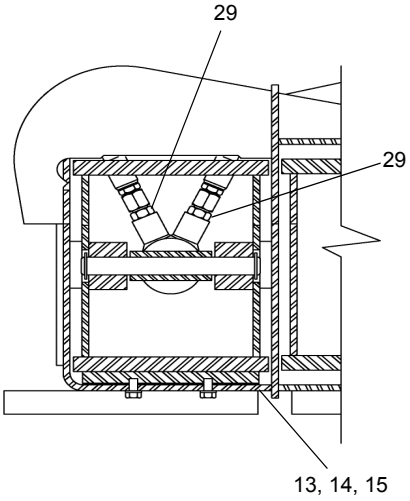

SECTION B-B

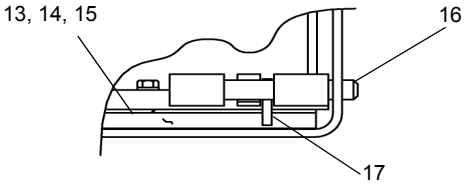

VIEW E-E

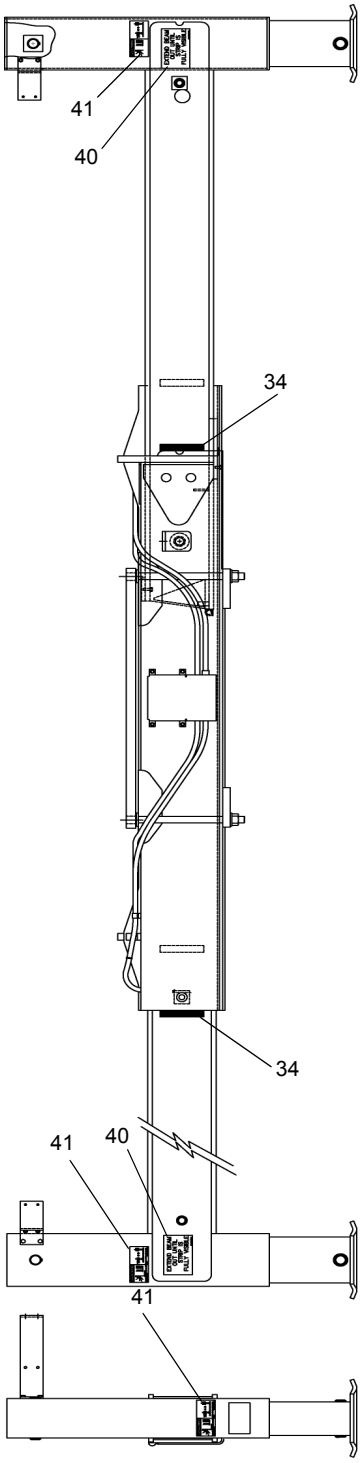

SEE PAGE 3.12

WHEN ORDERING PARTS, SPECIFY MODEL NUMBER, SERIAL NUMBER AND DESCRIPTION OF PARTS REQUIRED

TEREX® P/N 12261-286	**ASSY-HORZ AUX O/R (TEREX GRAY)**	DATE: Revised 12-2013	GROUP
		MODEL: BT4792	**3**
		PAGE 3.11	

https://truckmanualshub.com/

SEE PAGES 3.10 & 3.11

REF	PART NO.	DESCRIPTION	QTY
	T120909 (Rev B)	*ASSY, HORZ AUX O/R (Terex Gray)*	
1	T120910	HORZ AUX O/R Outer (Weld) (Gray)	1
2	T120913	HORZ AUX O/R Inner (Weld) (Gray)	2
3	760-10335-P7	VERT AUX O/R Inner (Weld) (Gray)	2
4	540-00061-P7	Cylinder, HORZ AUX O/R (Gray)	2
5	540-30181-P7	Cylinder, VERT AUX O/R (Gray)	2
6	870-30211	CYL, Pin, VERT-Rod End	2
7	200-10013	RET.Ring, Ø1 1/4 (3-784)	8
8	870-30212	CYL, Pin, VERT-Barrel End	2
9	870-10184	CYL, Pin, HORZ-Rod End	2
10	200-00006	RET, Ring, Ø3/4 (3-784)	8
11	870-10185	CYL, Pin, HORZ-Barrel End	2
12	729-02238	Wear Pad (2-765)	6
13	787-00255	SHIM, Wear Pad .040 (2-817)	4
14	787-00256	SHIM, Wear Pad .063 (2-817)	4
15	787-00257	SHIM, Wear Pad .100 (2-817)	4
16	870-10186	Lockpin, HORZ AUX O/R	2
17	224-16014	Roll Pin, Ø1/4 x 1 1/2 PLTD	2
18	SHF-312CA00-25	SCR, HHCS, 0.312-18 x 1.00, ST Z GR5	8
19	SHF-312C750-25	SCR, HHCS, 0.312-18 x 1.00, ST Z GR5	4
20	W07-312X000-20	WSH, LCK, SPLT 0.312, ST Z	18
21	802-01594-P7	Cover, Control Valve AUX O/R (Gray)	1
22	SHF-250C500-25	SCR, HHCS 0.25-20 x 0.50, ST Z GR5	6
23	W07-250X000-20	WSH, LCK, SPLT 0.25, ST Z	6
24	SHF-312CA25-25	SCR, HHCS, 0.312-18 x 1.25, ST Z GR5	4
25	514-54004	Elbow, 90° #6 ORB/#6 OFS	2
26	201-00170	Clamp, DBL Ø5/8 x .406H	2
27	502-20797	Hose/A, AUX O/R HORZ 3/8 x 60” LG	2
28	WAH-31NX000-Y2	WSH, FL HRD A-NRW 0.3125, ST Z	2
29	513-40014	Connector, #6 OFS x #6 ORB	5
30	519-40007	Cap, #6 OFS	5
31	519-50010	Cap, #8 OFS	1
32	WAW-25WX000-20	WSH, FL TYPA-WID 0.25, ST Z	2
33	513-40015	CONN., Long #6 OFS x #6 ORB	4
34	659-00216	Yellow, O/R Strip 2.0 x 5.75	4
35	513-50026	Connector, #8 OFS x #6 ORB	1
36	502-20971	Hose/A, AUX O/R HORZ 3/8 x 63” LG	2
37	559-00252	Control Valve, AUX O/R	1
38	SHF-312CC00-25	SCR, HHCS, 0.312-18 x 3.00, ST Z GR5	2
39	783-03010-P7	Support Bar, AUX O/R (Gray)	2
40	651-00386	Decal, O/R Beam	4
41	12400-1514	Decal, O/R Crush Hazard	6
42	652-00469	Decal, Outrigger Beam Pin	2
43	770-01840-P7	Hose Support Bracket S.S Gray	1
44	770-01820-P7	Hose Support Bracket C.S Gray	1
45	N04-312C000-25	HEX Nut, 0.312-18, ST Z GR5	4

https://truckmanualshub.com/

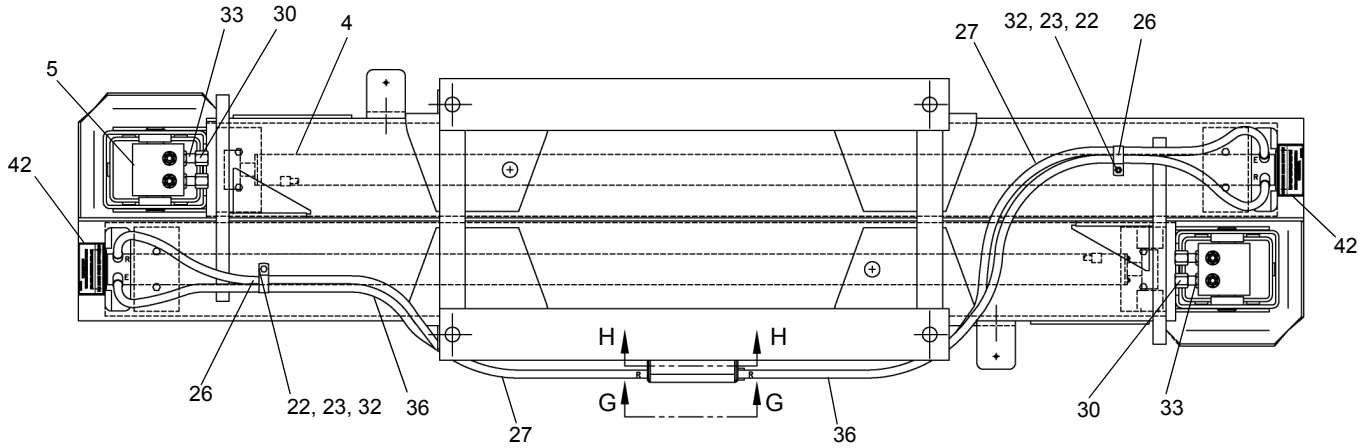

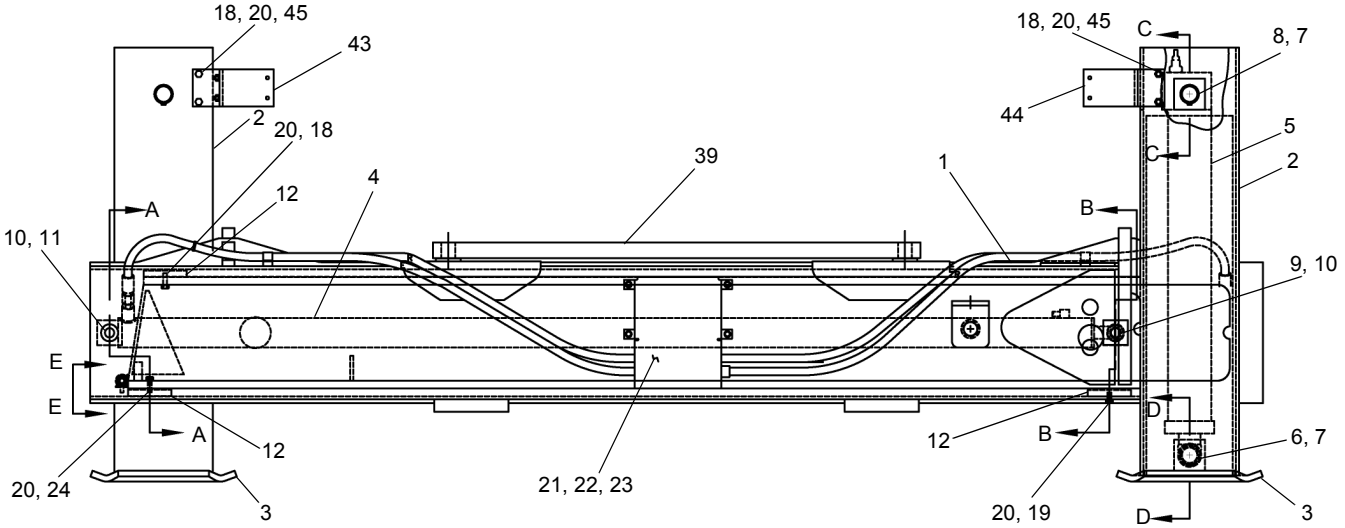

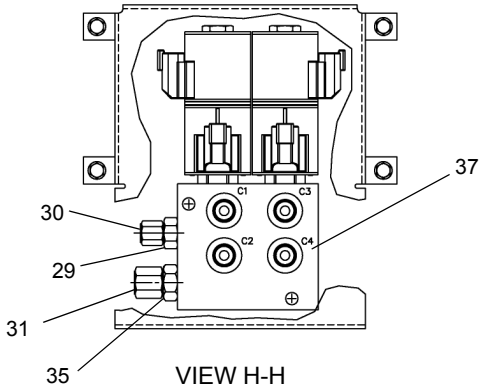

VIEW H-H

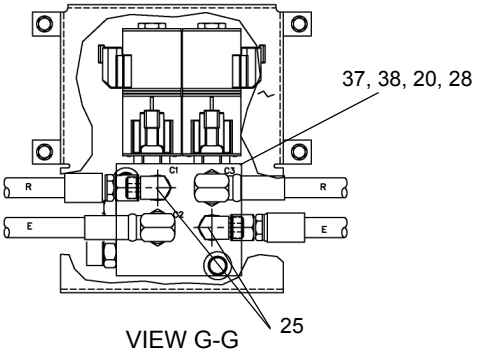

VIEW G-G

SEE PAGE 3.15

WHEN ORDERING PARTS, SPECIFY MODEL NUMBER, SERIAL NUMBER AND DESCRIPTION OF PARTS REQUIRED

TEREX® P/N 12261-286	**ASSY-HORZ AUX O/R (TEREX RED)**	DATE: Revised 12-2013	GROUP
		MODEL: BT4792	3
		PAGE 3.13	

https://truckmanualshub.com/

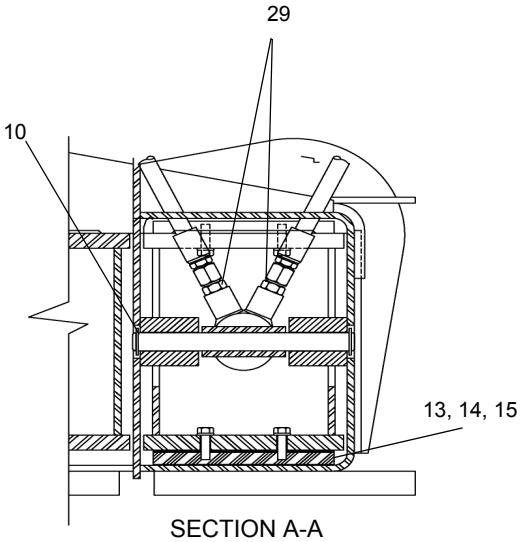

SECTION A-A

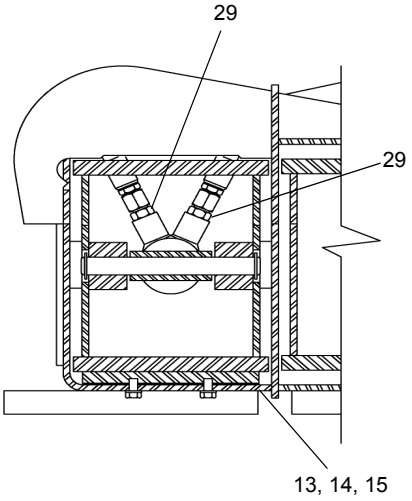

SECTION B-B

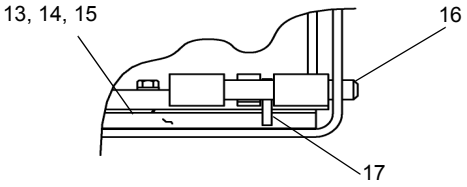

VIEW E-E

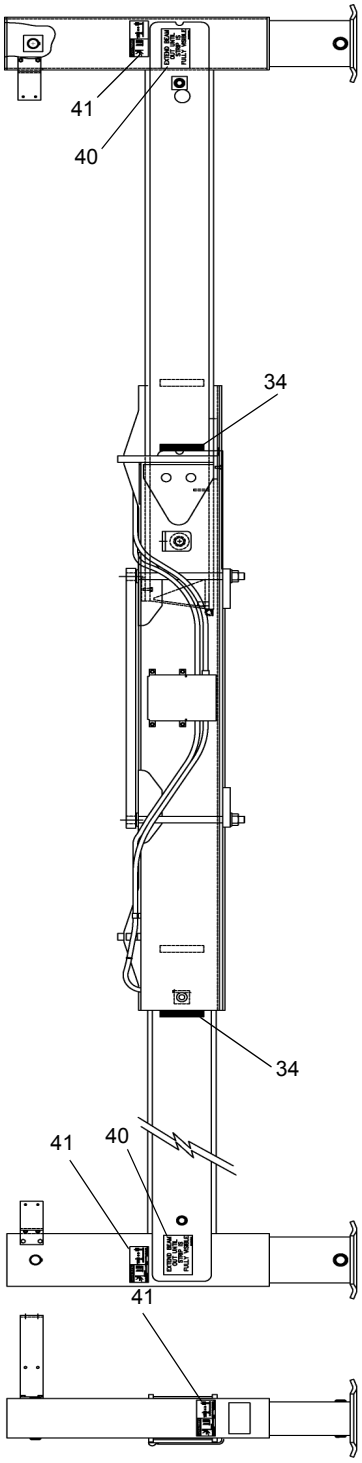

SEE PAGE 3.15

WHEN ORDERING PARTS, SPECIFY MODEL NUMBER, SERIAL NUMBER AND DESCRIPTION OF PARTS REQUIRED

TEREX® P/N 12261-286	**ASSY-HORZ AUX O/R (TEREX RED)**	DATE: Revised 12-2013	GROUP
		MODEL: BT4792	**3**
		PAGE 3.14	

https://truckmanualshub.com/

SEE PAGES 3.13 & 3.14

REF	PART NO.	DESCRIPTION	QTY
	T121012 (Rev B)	*ASSY, HORZ AUX O/R (Terex Red)*	
1	T121322	HORZ AUX O/R Outer (Weld) (Red)	1
2	T121323	HORZ AUX O/R Inner (Weld) (Red)	2
3	760-10335-P4	VERT AUX O/R Inner (Weld) (Red)	2
4	540-00061-P4	Cylinder, HORZ AUX O/R (Red)	2
5	540-30181-P4	Cylinder, VERT AUX O/R (Red)	2
6	870-30211	CYL, Pin, VERT-Rod End	2
7	200-10013	RET.Ring, Ø1 1/4 (3-784)	8
8	870-30212	CYL, Pin, VERT-Barrel End	2
9	870-10184	CYL, Pin, HORZ-Rod End	2
10	200-00006	RET, Ring, Ø3/4 (3-784)	8
11	870-10185	CYL, Pin, HORZ-Barrel End	2
12	729-02238	Wear Pad (2-765)	6
13	787-00255	Shim, Wear Pad .040 (2-817)	4
14	787-00256	Shim, Wear Pad .063 (2-817)	4
15	787-00257	Shim, Wear Pad .100 (2-817)	4
16	870-10186	Lockpin, HORZ AUX O/R	2
17	224-16014	Roll Pin, Ø1/4 x 1 1/2 PLTD	2
18	SHF-312CA00-25	SCR, HHCS, 0.312-18 x 1.00, ST Z GR5	8
19	SHF-312C750-25	SCR, HHCS, 0.312-18 x 0.75, ST Z GR5	4
20	W07-312X000-20	WSH, LCK, SPLT 0.312, ST Z	18
21	802-01594-P4	Cover, Control Valve AUX O/R (Red)	1
22	SHF-250C500-25	SCR, HHCS 0.25-20 x 0.50, ST Z GR5	6
23	W07-250X000-20	WSH, LCK, SPLT 0.25, ST Z	6
24	SHF-312CA25-25	SCR, HHCS, 0.312-18 x 1.25, ST Z GR5	4
25	514-54004	Elbow, 90° #6 ORB/#6 OFS	2
26	201-00170	Clamp, DBL Ø5/8 x .406H	2
27	502-20797	Hose/A, AUX O/R HORZ 3/8 x 60” LG	2
28	WAH-31NX000-Y2	WSH, FL HRD A-NRW 0.3125, ST Z	2
29	513-40014	Connector, #6 OFS x #6 ORB	5
30	519-40007	Cap, #6 OFS	5
31	519-50010	Cap, #8 OFS	1
32	WAW-25WX000-20	WSH, FL TYPA-WID 0.25, ST Z	2
33	513-40015	CONN., Long #6 OFS x #6 ORB	4
34	659-00216	Yellow, O/R Strip 2.0 x 5.75	4
35	513-50026	Connector, #8 OFS x #6 ORB	1
36	502-20971	Hose/A, AUX O/R HORZ 3/8 x 63” LG	2
37	559-00252	Control Valve, AUX O/R	1
38	SHF-312CC00-25	SCR, HHCS, 0.312-18 x 3.00, ST Z GR5	2
39	783-03010-P4	Support Bar, AUX O/R (Red)	2
40	651-00386	Decal, O/R Beam	4
41	12400-1514	Decal, O/R Crush Hazard	6
42	652-00469	Decal, Outrigger Beam Pin	2
43	770-01840-P7	Hose Support Bracket S.S (Red)	1
44	770-01820-P7	Hose Support Bracket C.S (Red)	1
45	N04-312C000-25	HEX Nut, 0.312-18, ST Z GR5	4

WHEN ORDERING PARTS, SPECIFY MODEL NUMBER, SERIAL NUMBER AND DESCRIPTION OF PARTS REQUIRED

https://truckmanualshub.com/

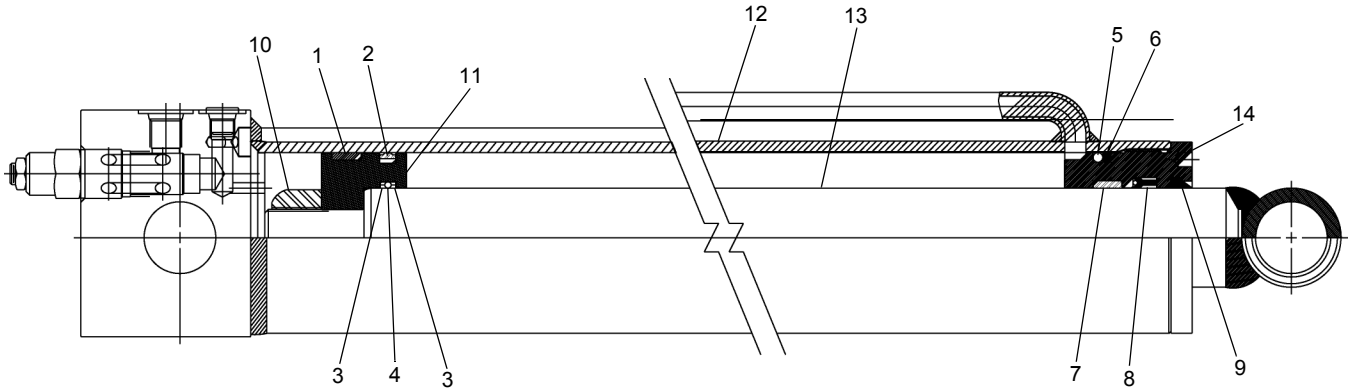

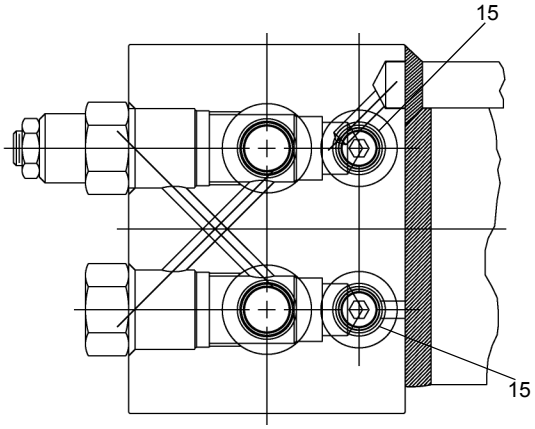

REF	PART NO.	DESCRIPTION	QTY
	540-30181 (Rev A)	*AUX. Vertical Outrigger Cylinder*	
	221125	*Seal Kit (Items 1 thru 9)*	
1	222999	Wear Ring	1
2	221119	PSP Seal	1
3	221107	Back-Up Ring	2
4	221106	O' Ring	1
5	223005	O' Ring	1
6	223006	Back-Up Ring	1
7	221102	Wear Ring	1
8	215123	Loaded U-Cup	1
9	215124	Rod Wiper	1
10	223010	Locknut	1
11	221120	Piston	1
12	223012	Barrel Assembly	1
13	221122	Rod Assembly	1
14	221123	Internal Head	1
15	221124	Steel Plug	2

WHEN ORDERING PARTS, SPECIFY MODEL NUMBER, SERIAL NUMBER AND DESCRIPTION OF PARTS REQUIRED

https://truckmanualshub.com/

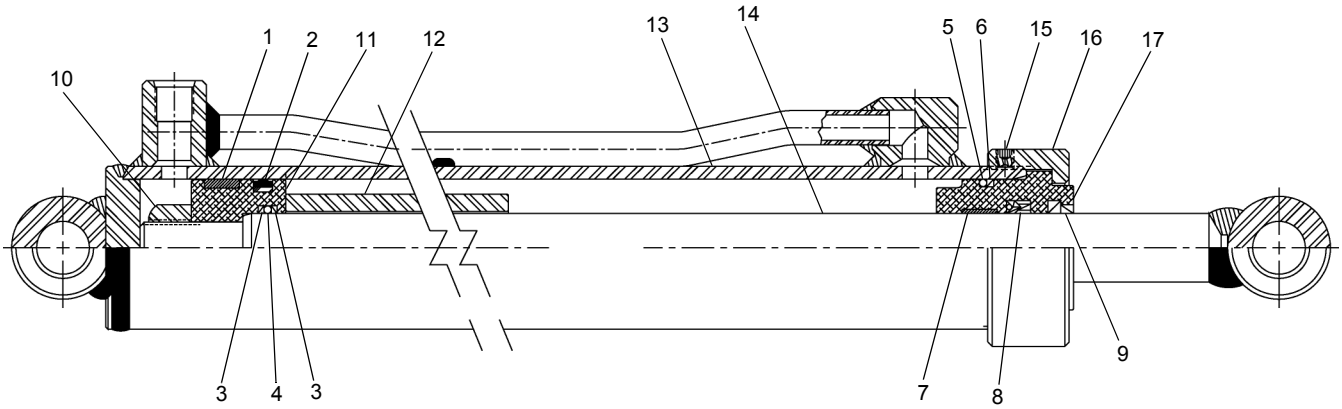

REF	PART NO.	DESCRIPTION	QTY
	540-00061-1 (Rev B)	*AUX. Outrigger EXT, Cylinder*	
	221101	*Seal Kit (Items 1 thru 9)*	
1	221102	Wear Ring	1
2	221103	PSP Seal	1
3	221104	Back-up Ring	2
4	221105	O' Ring	1
5	221106	O' Ring	1
6	221107	Back-Up Ring	1
7	221108	Wear Ring	1
8	221109	Loaded U-Cup	1
9	221110	Rod Wiper	1
10	221111	Locknut	1
11	221112	Piston	1
12	221113	Spacer	1
13	221114	Barrel Assembly	1
14	221115	Rod Assembly	1
15	221116	Cup PT Set Screw	1
16	221117	Thread Cap	1
17	221118	Thread Cap Head	1

WHEN ORDERING PARTS, SPECIFY MODEL NUMBER, SERIAL NUMBER AND DESCRIPTION OF PARTS REQUIRED

https://truckmanualshub.com/

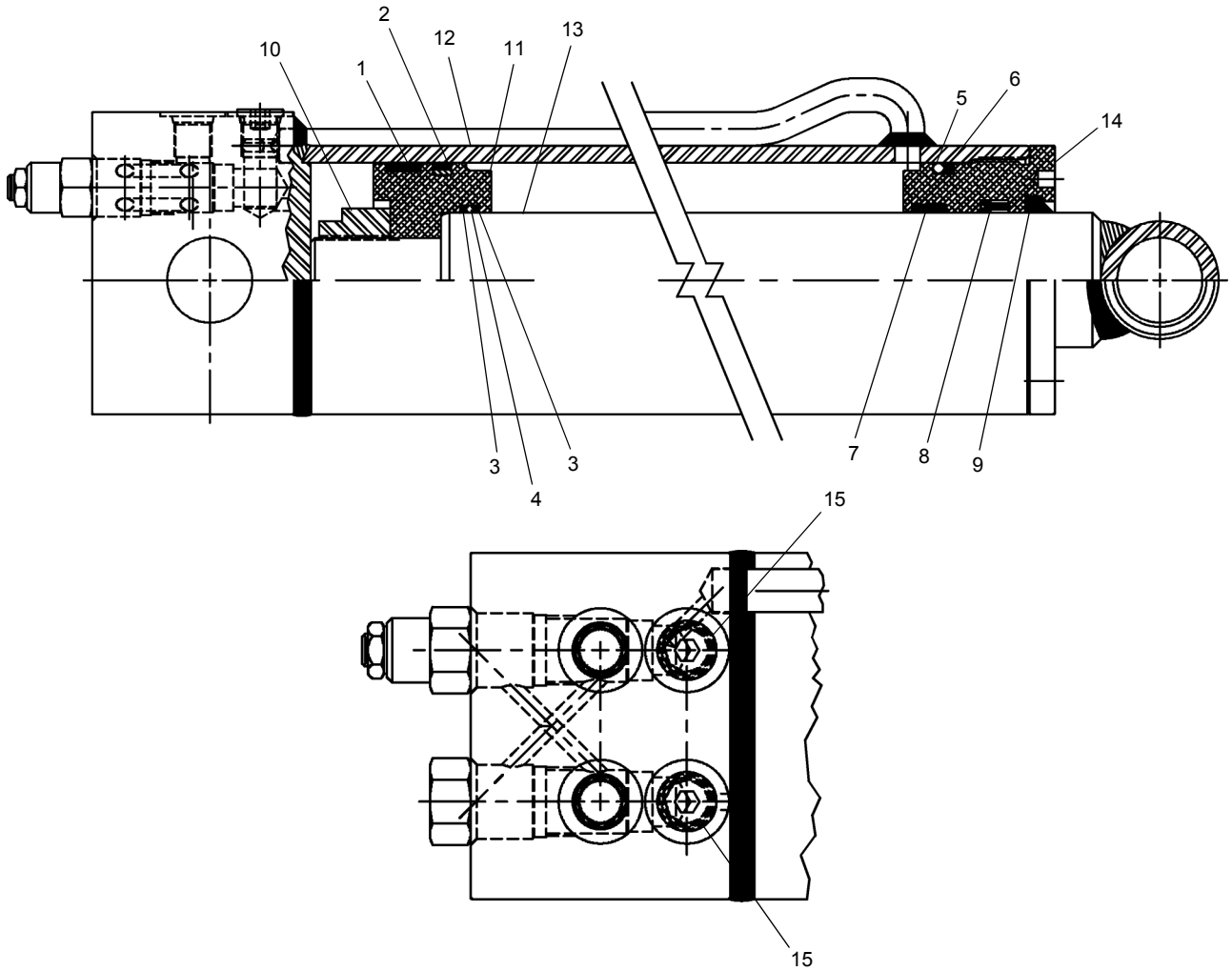

REF	PART NO.	DESCRIPTION	QTY
	540-20142-2 (Rev 00)	*Front Jack Cylinder*	
	226098	*Seal Kit (Items 1 thru 9)*	
1	226086	Wear Ring	1
2	226087	PSP Seal	1
3	226088	Back-Up Ring	2
4	226089	O'Ring	1
5	226090	O'Ring	1
6	226091	Back-Up Ring	1
7	218901	Wear Ring	1
8	226092	Loaded U-Cup	1
9	217985	Rod Wiper	1
10	226093	Locknut	1
11	226094	Piston	1
12	226095	Barrel Assembly	1
13	226096	Rod Assembly	1
14	226097	Internal Head	1
15	218693	Steel Plugs	2

WHEN ORDERING PARTS, SPECIFY MODEL NUMBER, SERIAL NUMBER AND DESCRIPTION OF PARTS REQUIRED

https://truckmanualshub.com/

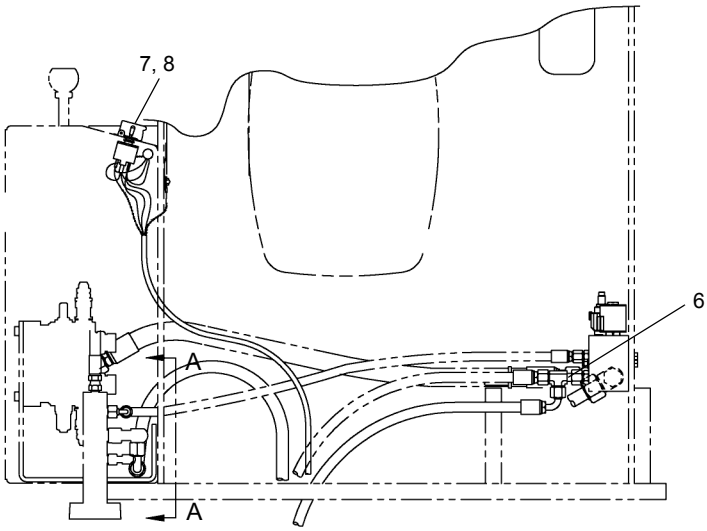

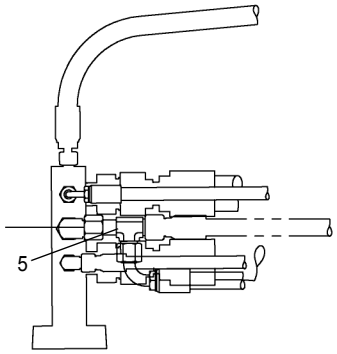

VIEW A-A

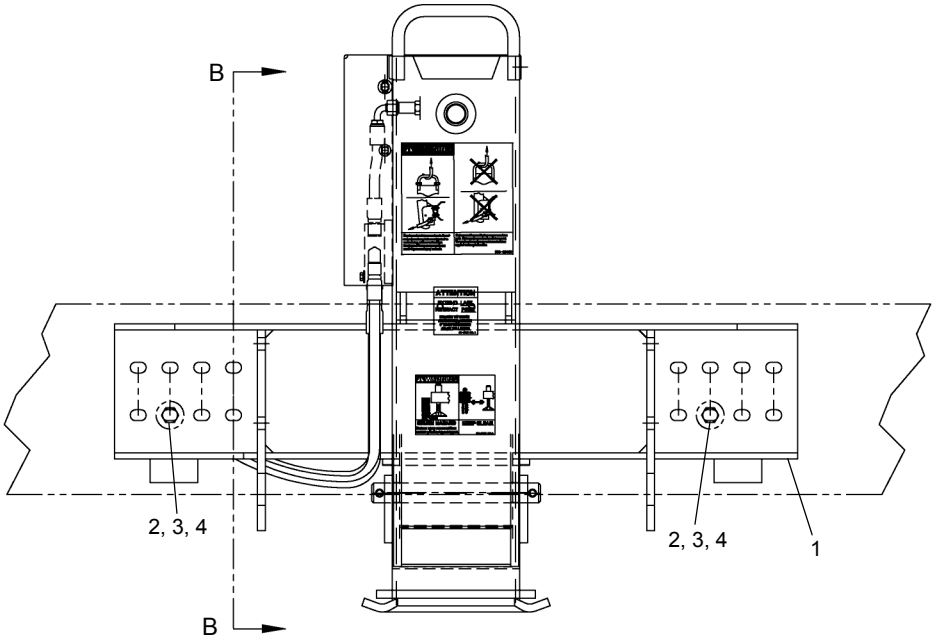

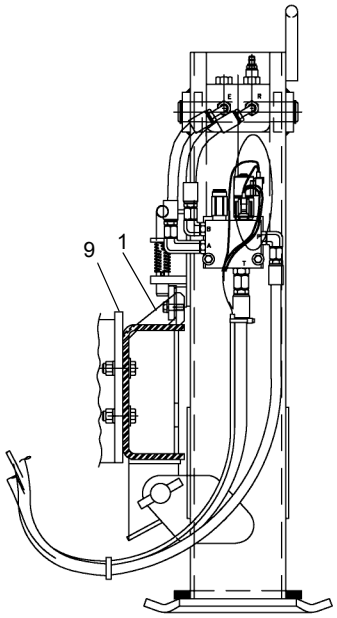

SECTION B-B

SEE PAGE 3.20

https://truckmanualshub.com/

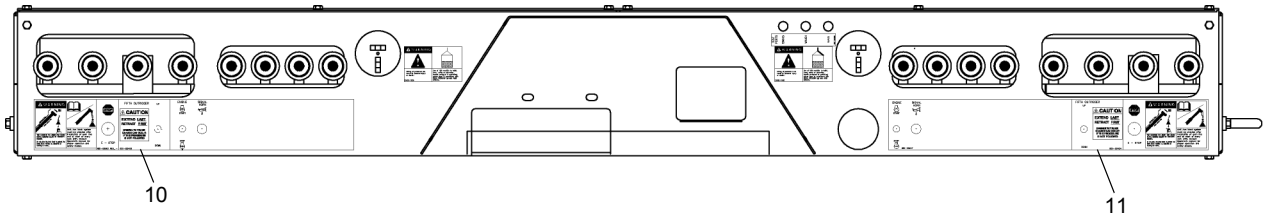

OPERATOR CONSOLE

SEE PAGE 3.19

REF	PART NO.	DESCRIPTION	QTY
	760-00437-2 (Rev L)	*Front Bumper O/R INSTL*	
1	760-00444	O/R SUB ASSY, Front Bumper	1
2	220-06051	HHCS, 5/8-11 NC GR 8 Zinc	8
3	222-06010	Flat Washer, 5/8 Hard Zinc	16
4	221-96002	Top Lock Nut 5/8-11 NC Zinc	8
5	516-85004	Tee 2x M#8 OFS x F#8 OFS	1
6	516-84003	Tee 2x M#6 OFS x M#6 ORB	1
7	400-04122	Switch, DPDT (MOM)	2
8	400-04036	Cover Switch	2
9	770-02750	Front O/R MTG Bracket Chart	REF
10	651-00428	Decal, Fifth O/R (CS)	1
11	651-00434	Decal, Fifth O/R (SS)	1

https://truckmanualshub.com/

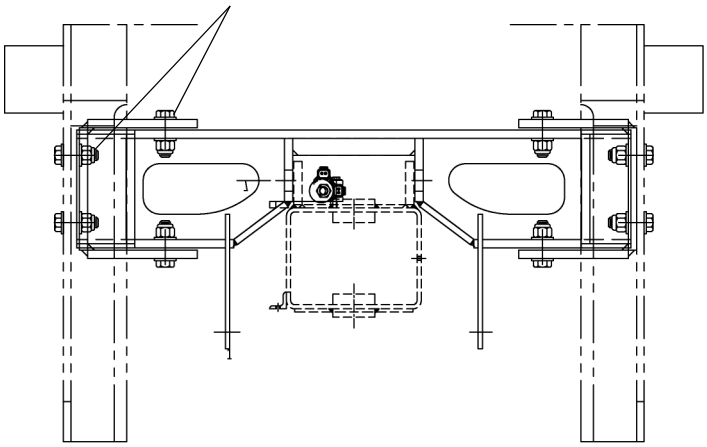

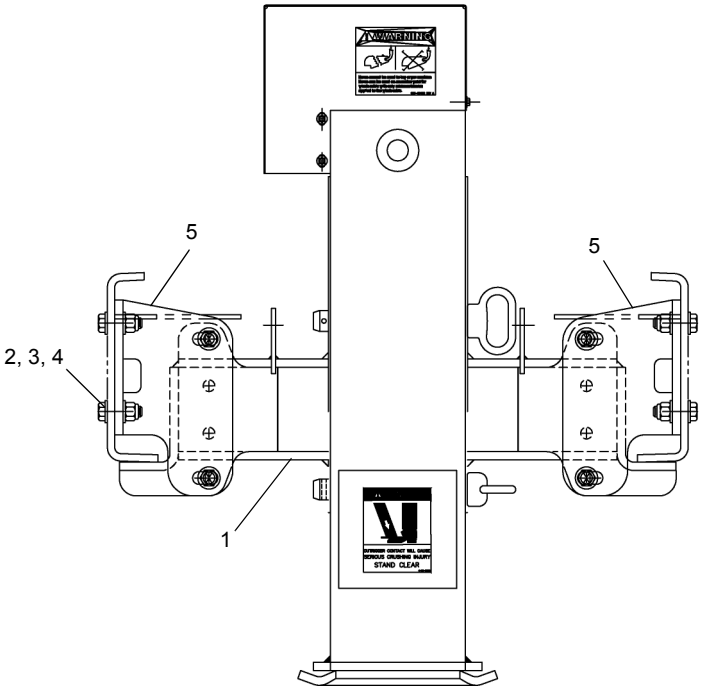

FRONT VIEW BUMPER REMOVED

REF	PART NO.	DESCRIPTION	QTY
	766-00056 (Rev 00)	*07 International EXT FRT O/R INSTL W/20" EXT Frame*	
1	760-00459	O/R Sub ASSY FRT BMP EXT FRM	REF
2	220-06064-25	HHCS, 5/8-11 NC X 1.75 GR 8 ZINC	8
3	222-00026-7	Flatwasher, 5/8 Hard Zinc	32
4	221-00033-7	Nylon Lock Nut, 5/8-11 GR8 Zinc	16
5	770-02811	Front Jack EXT Frame Mount	2
6	220-06064-33	HHCS, 5/8-11 NC X 2.25 GR 8 Zinc	8

WHEN ORDERING PARTS, SPECIFY MODEL NUMBER, SERIAL NUMBER AND DESCRIPTION OF PARTS REQUIRED

https://truckmanualshub.com/

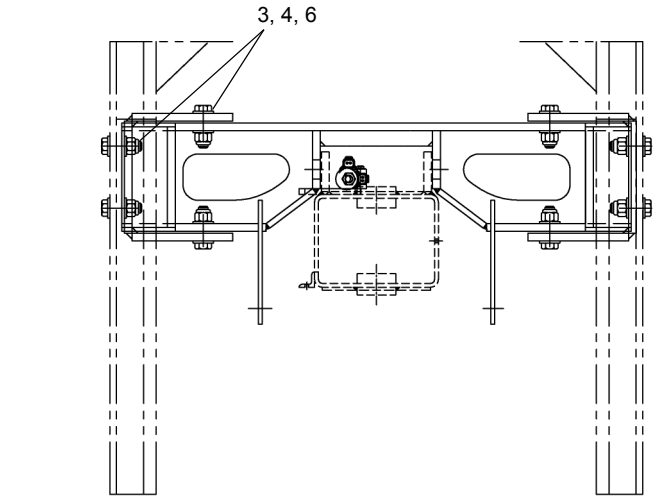

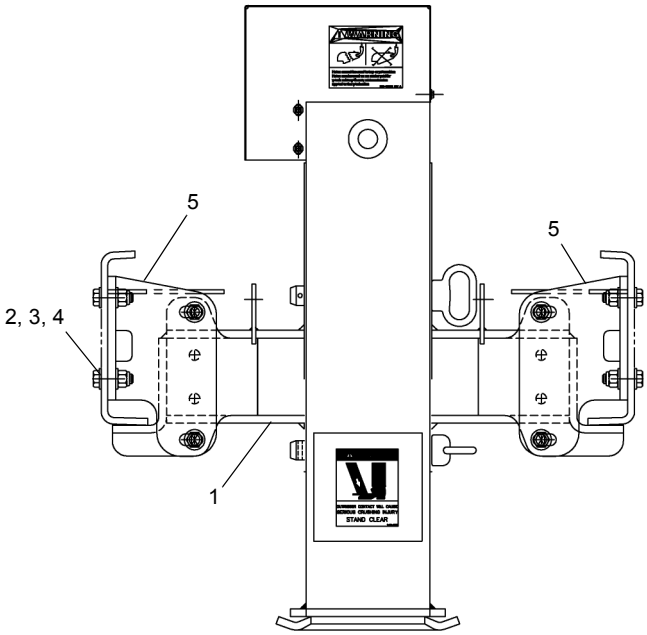

FRONT VIEW BUMPER REMOVED

REF	PART NO.	DESCRIPTION	QTY
	766-00055 (Rev A)	*Frightliner EXT FRM FRT O/R INSTL W/24" EXT Frame*	
1	760-00459	O/R Sub ASSY FRT BMP EXT FRM	REF
2	220-06064-25	HHCS, 5/8-11 NC X 1.75 GR 8 ZINC	6
3	222-00026-7	Flatwasher, 5/8 Hard Zinc	38
4	221-00033-7	Nylon Lock Nut, 5/8-11 GR8 Zinc	22
5	770-02811	Front Jack EXT Frame Mount	2
6	220-06064-33	HHCS, 5/8-11 NC X 2.25 GR 8 Zinc	16

WHEN ORDERING PARTS, SPECIFY MODEL NUMBER, SERIAL NUMBER AND DESCRIPTION OF PARTS REQUIRED

https://truckmanualshub.com/

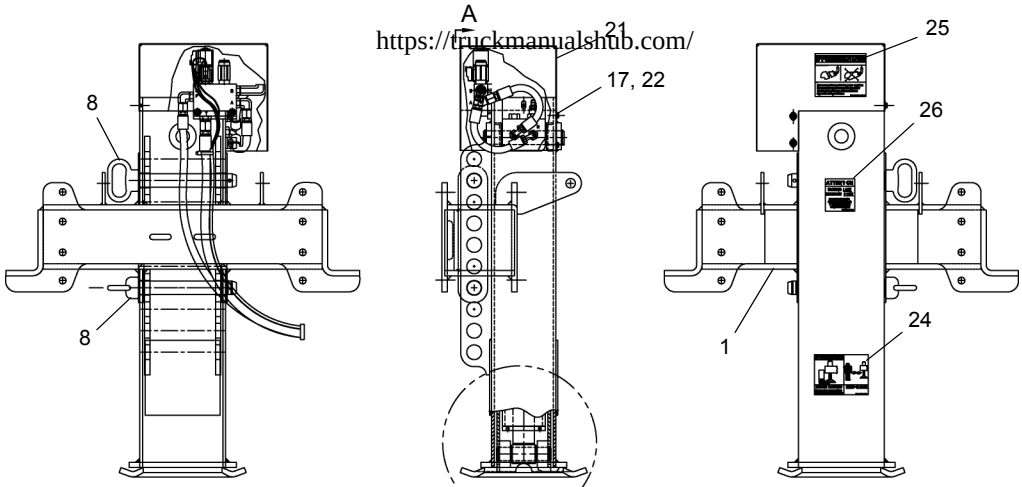

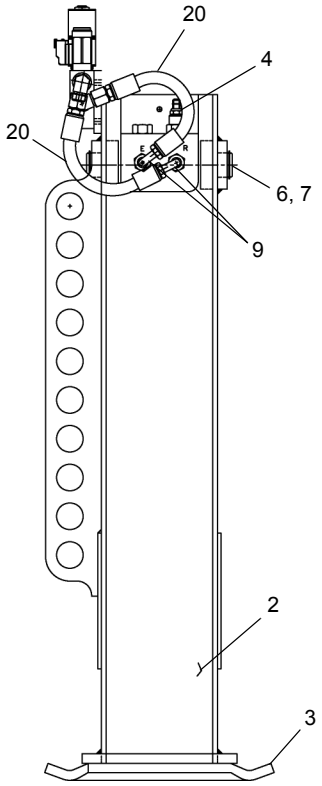

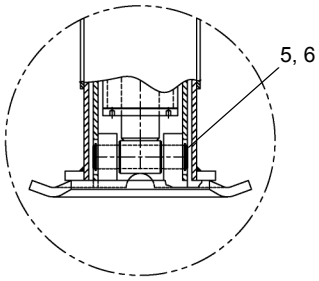

DETAIL B

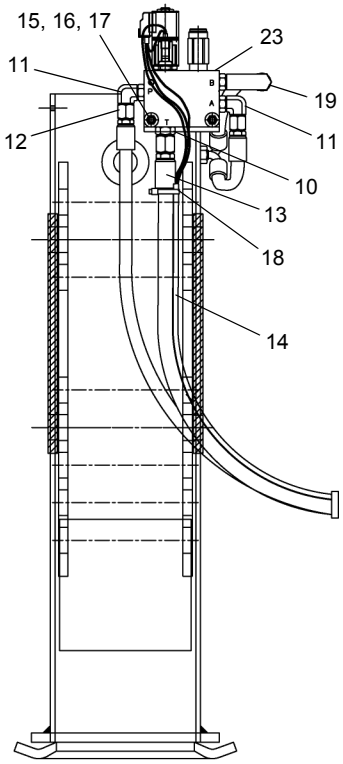

SECTION A-A

REF	PART NO.	DESCRIPTION	QTY
	760-00459 (Rev A)	*O/R SUB ASSY Front Bumper EXT Frame*	
1	760-00452	FRT Bumper O/R MTG Bracket	1
2	760-00458	FRT BMPR O/R HSG-Outer Weld	1
3	760-10408	FRT BMPR O/R HSG-Inner Weld	1
4	540-20142	Jack Cylinder	1
5	870-30211	CYL Pin, Vert-Rod End	1
6	200-10013	Retaining Ring, Ø1 1/ 4 (3-784)	4
7	870-10210	CYL Pin, VERT-Barrel End	1
8	870-30234	Hitch Pin 1.25 DIAX8.5 H.T. GR 8	2
9	513-40015	CONN., #6 OFS X #6 ORB (Long)	2
10	513-50026	CONN., #8 OFS X #6 ORB	1
11	514-54004	Elbow, 90° #6 OFS X #6 ORB	2
12	502-20813	Hose ASSY, Valve Supply	1
13	502-30781	Hose ASSY, Valve Return	1
14	400-02461	Wire Harness, VLV/ Switch	1
15	220-00045-25	HHCS, 1/4-20 NCX1.75 GR5 Zinc	2
16	222-00028-9	Lockwasher, 1/4 Zinc PLTD	2
17	222-00025-6	Flatwasher, 1/4 Zinc PLTD	5
18	400-15086	Nylon Cable Tie (7" LG)	6
19	514-54008	Elbow, 90°L #6 OFS X #6 ORB	1
20	502-20816	Hose ASSY, Front O/R EXT/RET	2
21	802-01664	Cover, Front O/R Valve	1
22	220-00045-7	HHCS, 1/4-20 NCX0.6 3 GR5 Zinc	3
23	551-10142	Valve ASSY, SOL-O/R CONT	1
24	651-00414	Decal, 5th O/R Crush Hazard	1
25	653-00408	Warning-Do Not Anchor/TOW Decal	1
26	651-00435	Decal, Extend Last Retract First	1

WHEN ORDERING PARTS, SPECIFY MODEL NUMBER, SERIAL NUMBER AND DESCRIPTION OF PARTS REQUIRED

TEREX® P/N 12261-286	**FRONT BUMPER EXT FRAME**	DATE: Released 12-2013	GROUP
		MODEL: BT4792	3
		PAGE 3.23	

https://truckmanualshub.com/

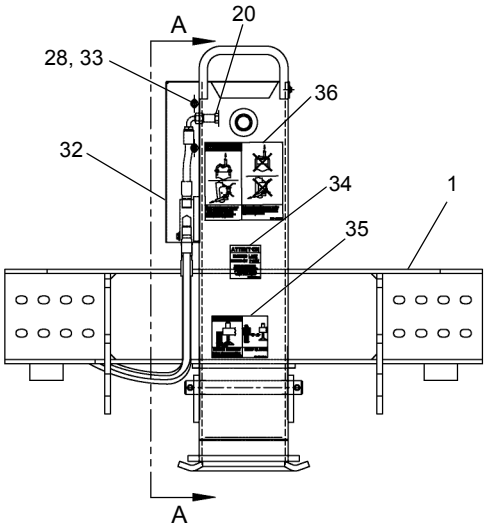

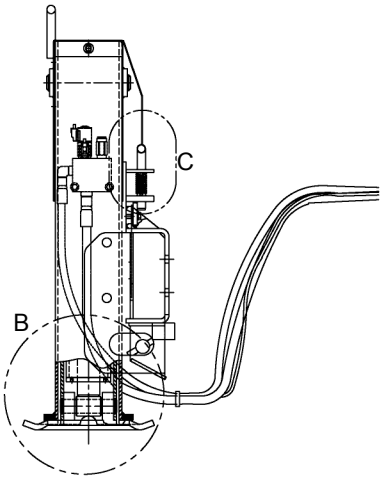

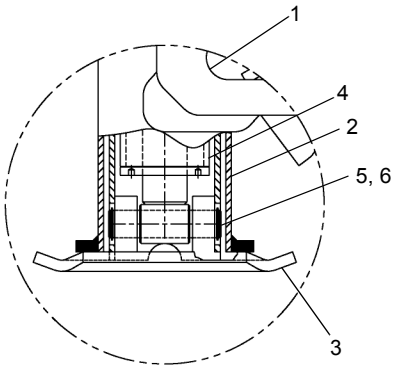

DETAIL B

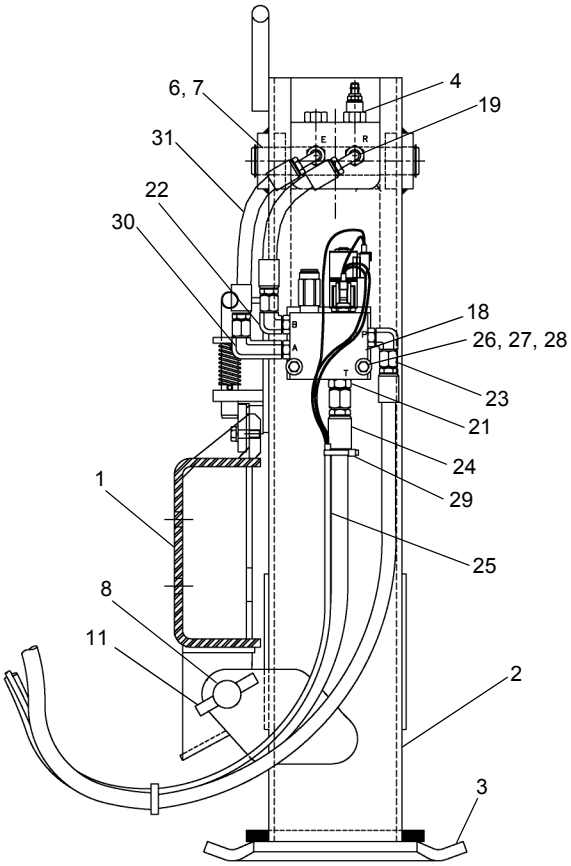

SECTION A-A

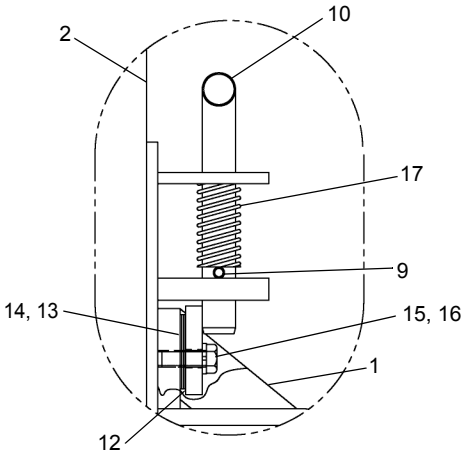

DETAIL C

SEE PAGE 3.25

WHEN ORDERING PARTS, SPECIFY MODEL NUMBER, SERIAL NUMBER AND DESCRIPTION OF PARTS REQUIRED

TEREX® P/N 12261-286	**SUBASSY, FRONT BUMPER (O/R)**	DATE: Revised 07-2010	GROUP
		MODEL: BT4792	**3**
		PAGE 3.24	

https://truckmanualshub.com/

SEE PAGE 3.24

REF	PART NO.	DESCRIPTION	QTY
	760-00444 (Rev D)	*O/R Subassembly, Front Bumper*	
1	770-02600	Front Bumper O/R Support Bracket MOD	1
2	760-00443	Front Bumper O/R HSG-Outer Weld	1
3	760-10408	Front Bumper O/R HSG-Inner Weld	1
4	540-20142	Jack Cylinder	1
5	870-30211	CYL Pin, Vertical -Rod End	1
6	200-10013	Retaining Ring, Ø1 1/4 (3-784)	4
7	870-10210	CYL Pin, Vertical Barrel End	1
8	870-30161	Pin, O/R Pivot Ø1 1/4 (3-179)	1
9	224-16014	Pin, Roll Ø1/4 x 1 1/2 LG	1
10	870-10188	Pin, O/R Stop 3/4	1
11	224-19004	Pin, Roll Ø1/2 x 3 LG	2
12	783-03099	Bar, O/R Latch	1
13	787-00233	Shim, 0.040 (2-775)	1
14	787-00234	Shim, 0.063 (2-775)	1
15	220-02004	HHCS, 3/8-16 NC x 1.00 GR5 Zinc	2
16	222-12001	Lock Washer, 3/8 Zinc PLTD	2
17	202-10061	Spring, Compression	1
18	551-10142	Valve, Assembly SOL- O/R CONT	1
19	502-20816	Hose Assembly, Front O/R Retract	1
20	513-40015	Connector, #6 OFS x #6 ORB(Long)	2
21	513-50026	Connector, #8 OFS x #6 ORB	1
22	514-54004	Elbow, 90 Deg. #6 OFS x #6 ORB	2
23	502-20813	Hose Assembly, Valve Supply	1
24	502-30596	Hose Assembly, Valve Return	1
25	400-02461	Wire Harness, Valve/ Switch	1
26	220-00006	HHCS, 1/4-20 NC x 1.75 GR5 Zinc	2
27	222-10005	Lock Washer, 1/4 Zinc PLTD	2
28	222-00006	Flat Washer, 1/4 Zinc PLTD	5
29	400-15086	Nylon Cable Tie (7” LG)	6
30	514-54008	Elbow, 90 Deg. #6 OFS x #6 ORB	1
31	502-20815	Hose Assembly, Front O/R Extend	1
32	802-01651	Cover, Front O/R Valve	1
33	220-00021	HHCS, 1/4-20 NC X .63 GR5 ZINC	3
34	651-00435	Fifth O/R Decal	1
35	651-00414	Fifth O/R Crush	1
36	653-00406	Danger-Do Not Anchor/TOW Decal	1

https://truckmanualshub.com/

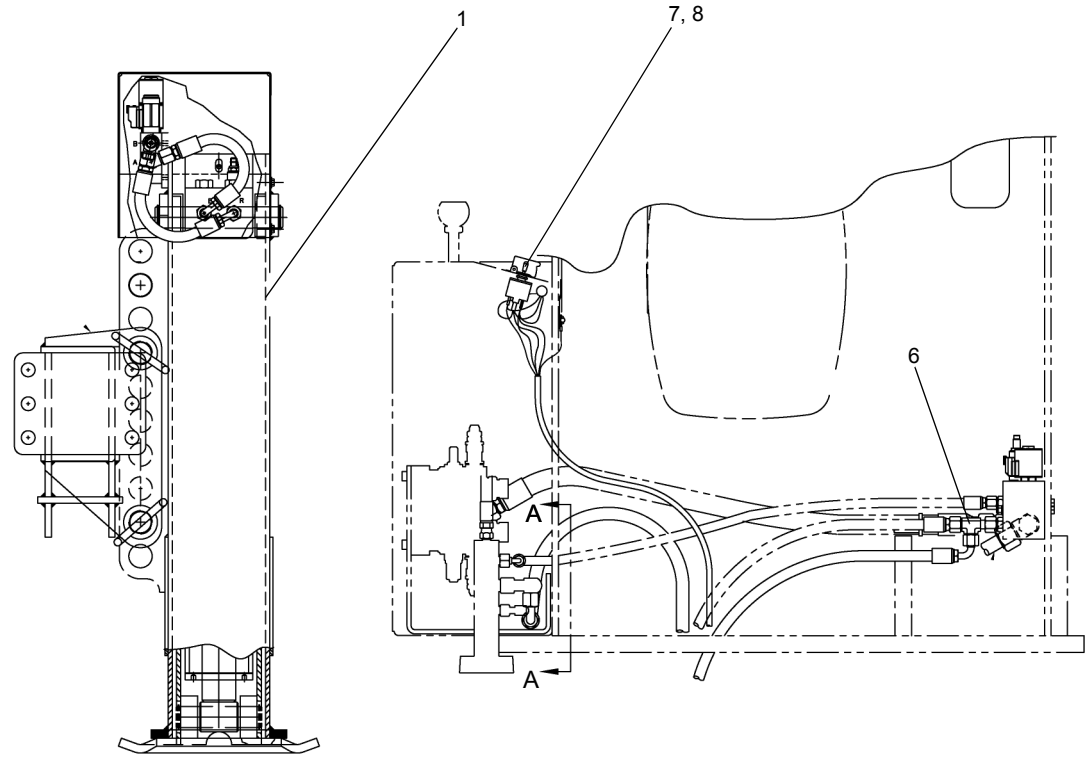

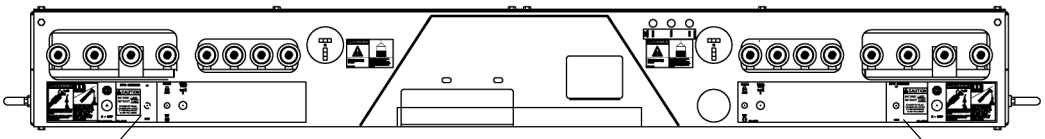

TOP VIEW

10
CURB SIDE

9
STREET SIDE

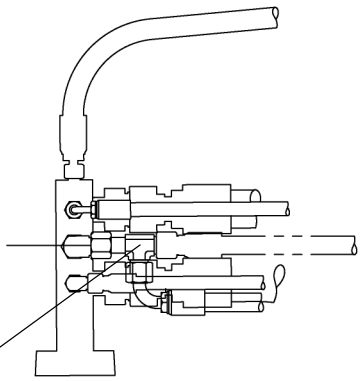

VIEW A-A

SEE PAGE 3.28

WHEN ORDERING PARTS, SPECIFY MODEL NUMBER, SERIAL NUMBER AND DESCRIPTION OF PARTS REQUIRED

https://truckmanualshub.com/

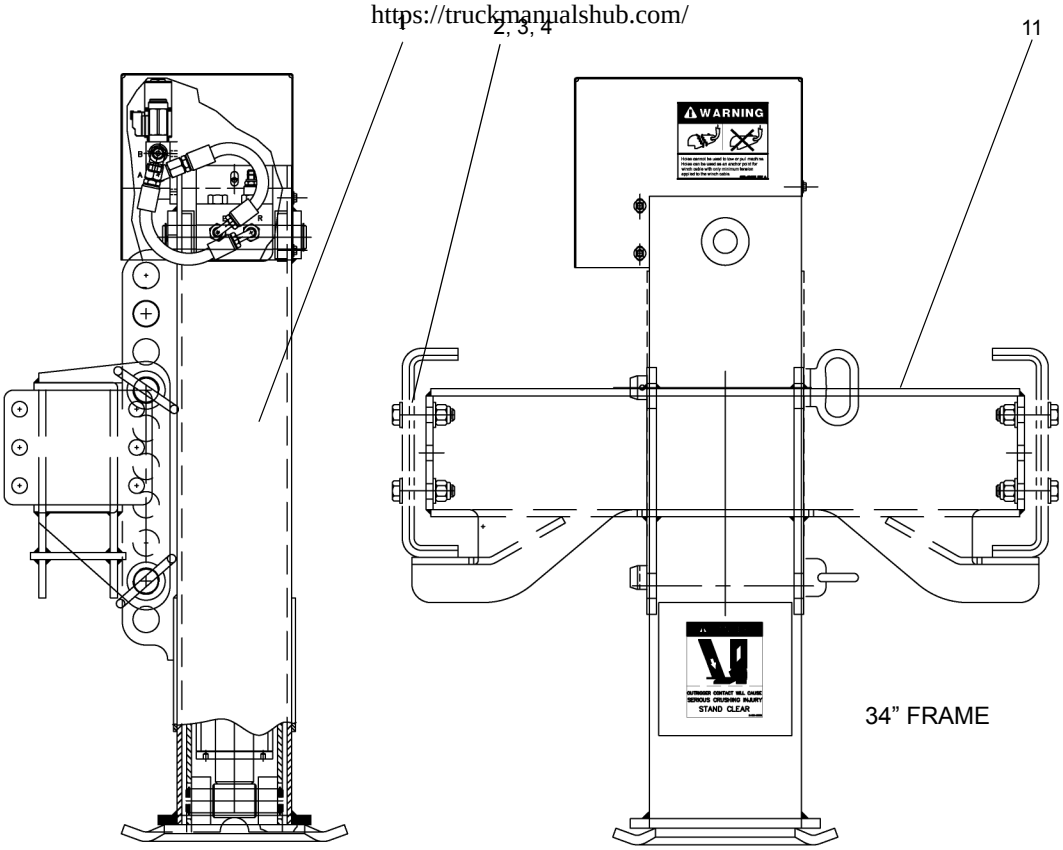

34” FRAME

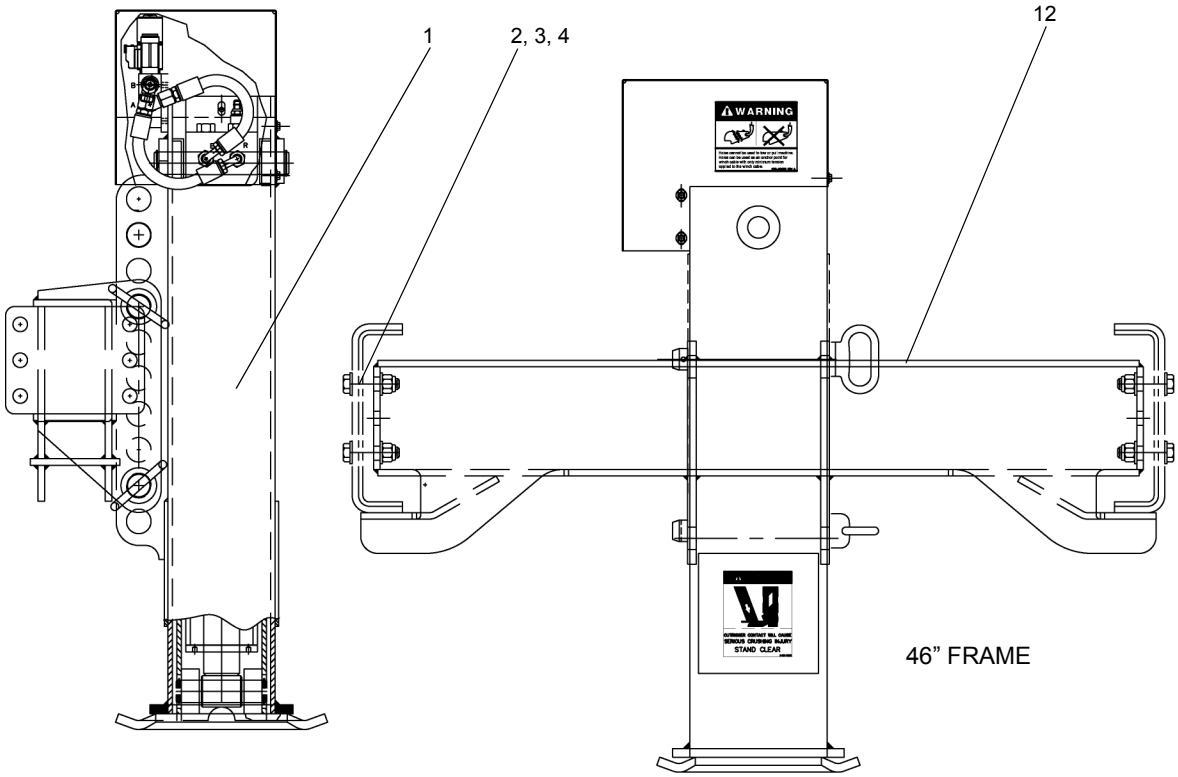

46” FRAME

SEE PAGE 3.28

WHEN ORDERING PARTS, SPECIFY MODEL NUMBER, SERIAL NUMBER AND DESCRIPTION OF PARTS REQUIRED

TEREX® P/N 12261-286	**ASSY, FRONT BUMPER (O/R) 34” & 46” FRAME**	DATE: Released 12-2013	GROUP
		MODEL: BT4792	3
		PAGE 3.27	

https://truckmanualshub.com/

SEE PAGES 3.26 & 3.27

REF	PART NO.	DESCRIPTION	QTY
	760-00464-2 (Rev B)	*EXT Frame ASSY. Front Bumper (O/R) 34" Frame Width (Items 1 thru 10 & 11)*	
	760-00464-4 (Rev B)	*EXT Frame ASSY. Front Bumper (O/R) 46" Frame Width (Items 1 thru 10 & 12)*	
1	760-00461	O/R SUB ASSY, FRT BMP EXT FRM	1
2	789-06043.3	1/8" Shim Plate	2
3	789-06044.3	1/4" Shim Plate	2
4	789-06045.3	3/8" Shim Plate	4
5	516-85004	TEE 2X M#8 OFS X F#8 OFS	1
6	516-84003	TEE 2X M#6 OFS X M#8 ORB	1
7	400-04122	Toggle Switch, Micro	2
8	400-04036	Cover Switch	2
9	651-00434	Decal, Fifth O/R (SS)	1
10	651-00428	Decal, Fifth O/R (CS)	1
11	T128151	34" Front O/R MTG Bracket	1
12	T128149	46" Front O/R MTG Bracket	1

https://truckmanualshub.com/

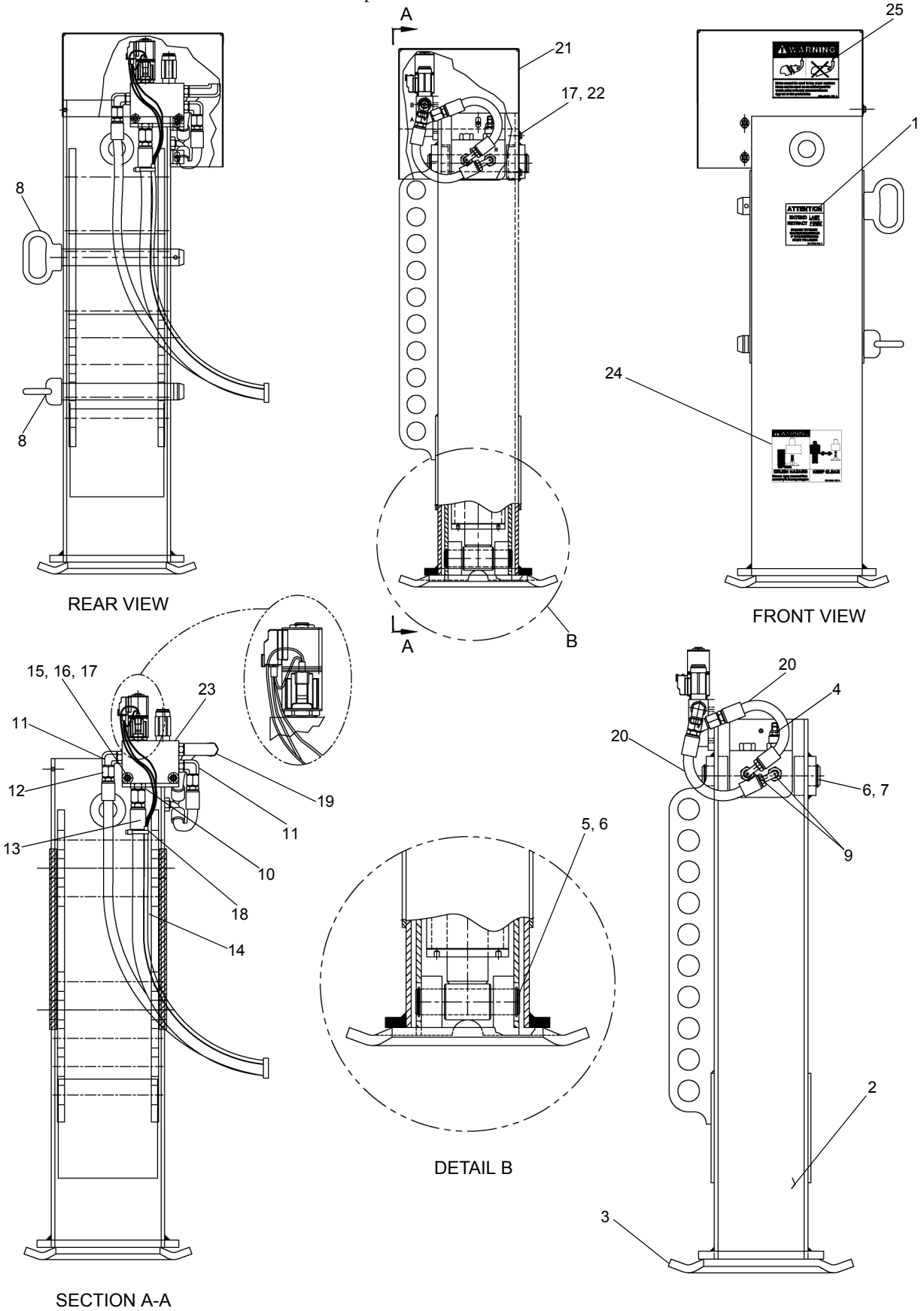

SEE PAGE 3.30

WHEN ORDERING PARTS, SPECIFY MODEL NUMBER, SERIAL NUMBER AND DESCRIPTION OF PARTS REQUIRED

https://truckmanualshub.com/

SEE PAGE 3.29

REF	PART NO.	DESCRIPTION	QTY
	760-00461 (Rev 00)	*O/R Sub ASSY Front Bumper EXT Frame*	
1	651-00435	Decal, Extend Last Retract First	1
2	760-00458	FRT BMPR O/R HSG-Outer Weld	1
3	760-10408	FRT BMPR O/R HSG-Inner Weld	1
4	540-20142	Jack Cylinder	1
5	870-30211	CYL Pin, Vert-Rod End	1
6	200-10013	Retaining Ring, Ø1 1/ 4 (3-784)	4
7	870-10210	CYL Pin, VERT-Barrel End	1
8	870-30234	Hitch Pin 1.25 DIA X 8.5 H.T. GR 8	2
9	513-40015	CONN., #6 OFS X #6 ORB (Long)	2
10	513-50026	CONN., #8 OFS X #6 ORB	1
11	514-54004	Elbow, 90° #6 OFS X #6 ORB	2
12	502-20813	Hose ASSY, Valve Supply	1
13	502-30781	Hose ASSY, Valve Return	1
14	400-02461	Wire Harness, VLV/ Switch	1
15	220-00045-25	HHCS, 1/4-20 NC X 1.75 GR5 Zinc	2
16	222-00028-9	Lockwasher, 1/4 Zinc PLTD	2
17	222-00025-6	Flatwasher, 1/4 Zinc PLTD	5
18	400-15086	Nylon Cable Tie (7” LG)	6
19	514-54008	Elbow, 90°L #6 OFS X #6 ORB	1
20	502-20816	Hose ASSY, Front O/R EXT/RET	2
21	802-01664	Cover, Front O/R Valve	1
22	220-00045-7	HHCS, 1/4-20 NC X 0.63 GR5 Zinc	3
23	551-10142	Valve ASSY, SOL-O/R CONT	1
24	651-00414	Decal, 5th O/R Crush Hazard	1
25	653-00408	Warning-Do Not Anchor/TOW Decal	1

https://truckmanualshub.com/

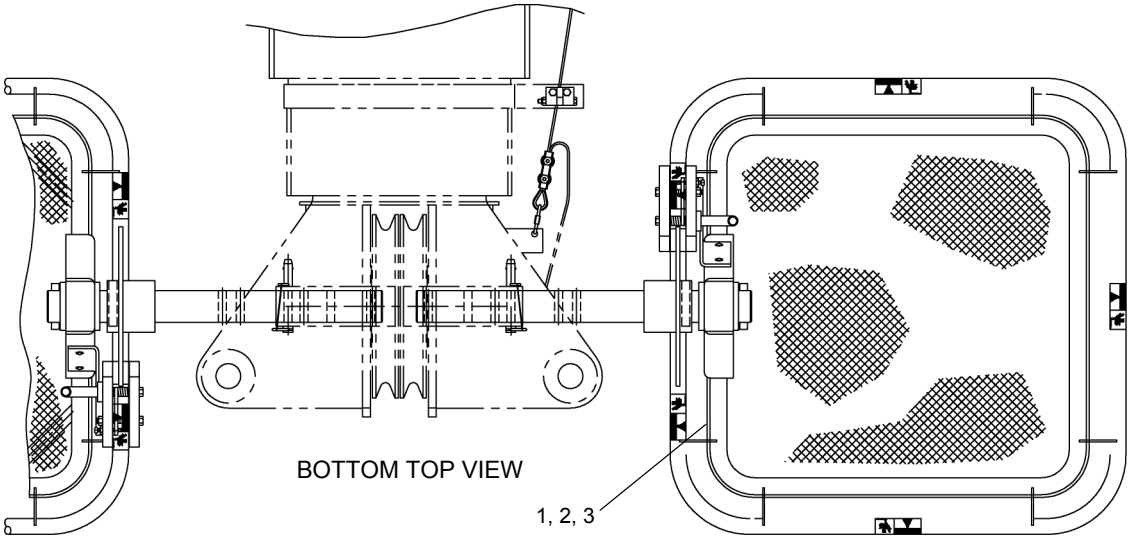

BOTTOM TOP VIEW

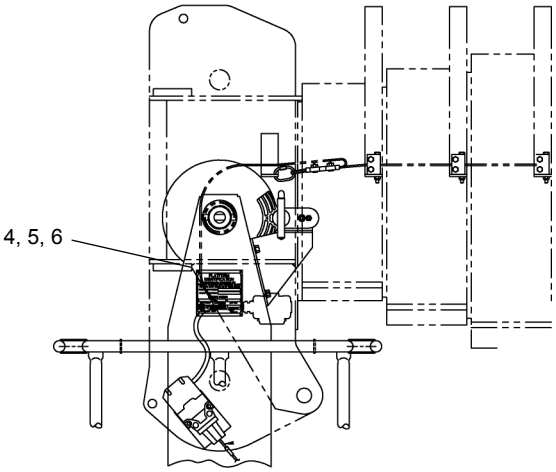

BOTTOM SIDE VIEW

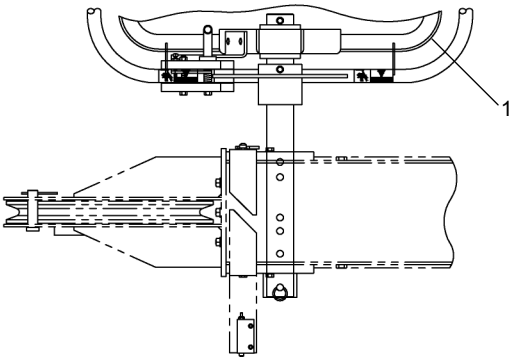

JIB TOP VIEW
PLATFORM RH SIDE

REF	PART NO.	DESCRIPTION	QTY
	731-20005 (Rev A)	*1 Man Steel Platform INSTL*	
1	730-20431	ASSY, 1-Man Platform (Steel)	1
2	209-00434	Aerial Lanyard-Shock Absorb	1
3	209-00809	Safety Harness	1
4	652-00577	1 or 2 Man Stamping INFO Chart	REF
5	226-00023-5	Pop Rivet, ALUM, .125 DIA X .462 LG	4
6	653-00407	Platform Identification Plate	1

WHEN ORDERING PARTS, SPECIFY MODEL NUMBER, SERIAL NUMBER AND DESCRIPTION OF PARTS REQUIRED

https://truckmanualshub.com/

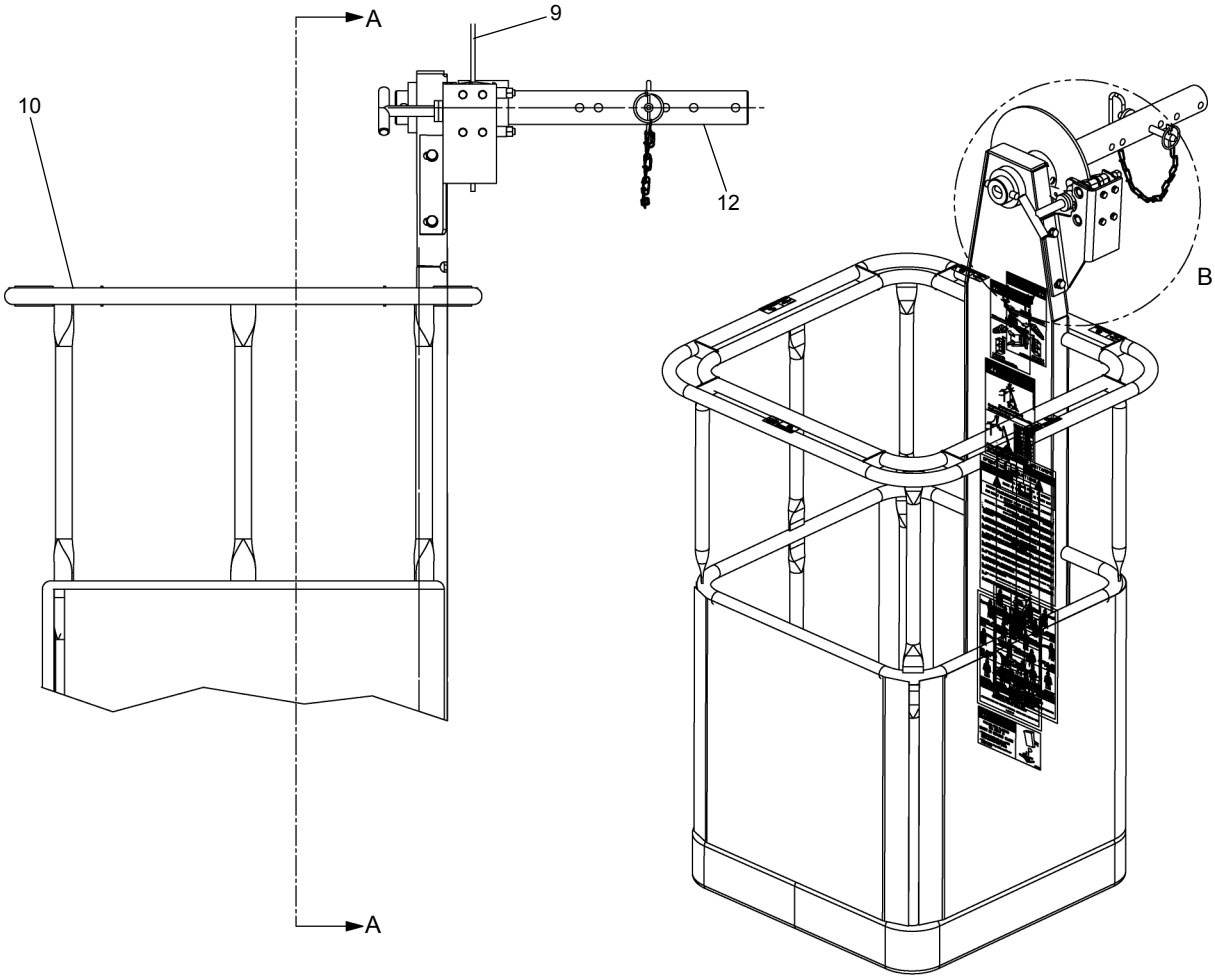

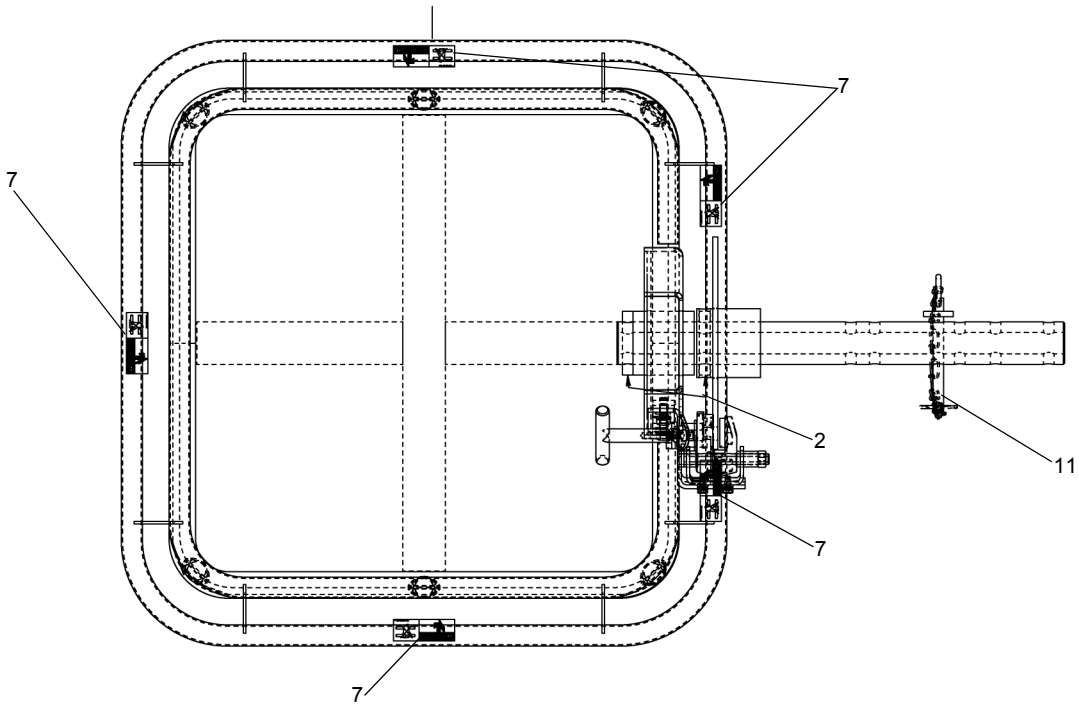

SEE PAGE 8.3

WHEN ORDERING PARTS, SPECIFY MODEL NUMBER, SERIAL NUMBER AND DESCRIPTION OF PARTS REQUIRED

https://truckmanualshub.com/

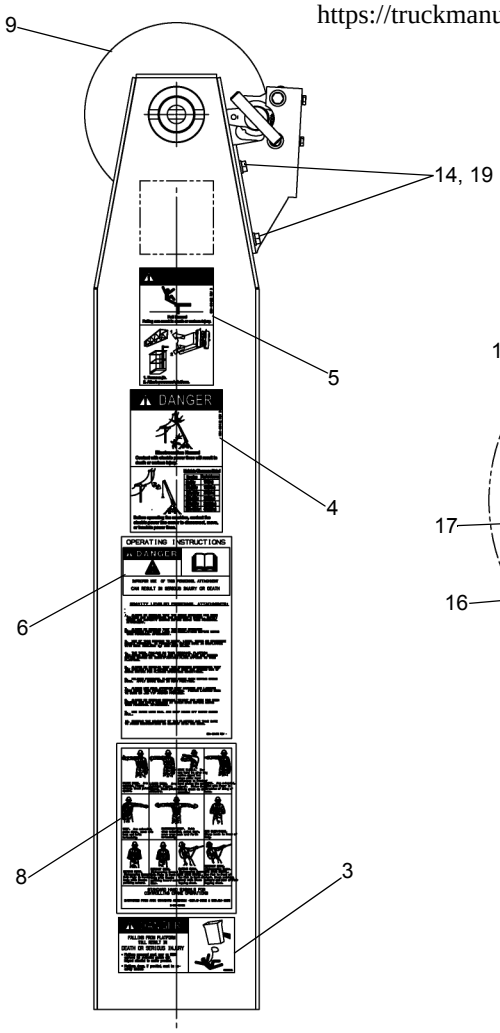

SECTION A-A

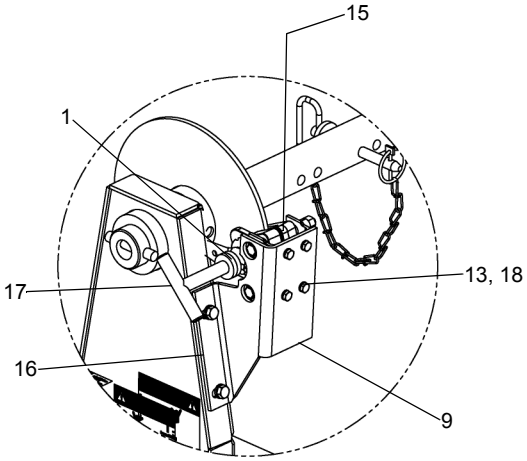

DETAIL B

SEE PAGE 8.2

REF	PART NO.	DESCRIPTION	QTY
	730-20431 (Rev C)	*ASSY. Platform 1-Man (Steel)*	
1	222-01003	Washer, Brake S/ASSY-BUCKT	2
2	224-19004	Roll - Pin - 1/2 X 3LG	2
3	419264A	Platform Danger Decal (Terex TEL)	1
4	651-00412	Decal, Electrocution	1
5	651-00422	Decal, JIB Removal, Lift Attach	2
6	651-00466	Danger Label - Pers	2
7	651-00469	Decal, Hands Off Rail	5
8	651-00496	Decal, Crane Hand Signals	2
9	730-20064	Disc Brake Weldment	1
10	730-20432	Weld, 1-Man Platform (Steel)	1
11	870-00131	PIN ASSY, JIB Restrain	1
12	870-60206	Pin, 1-Man Platform	1
13	SHF-250C500-25	SCR, HHCS FT 0.25-20 X 0.50, ST Z G5	4
14	SHF-375CA00-25	SCR, HHCS FT 0.375-16 X 1.00, ST Z G5	2
15	T124468	Mechanical Brake W/Bracket	1
16	T124483	Brake MTG BRKT - 10” Disc	1
17	T124496	Gravity Brake Handle	1
18	W07-250X000-20	WSH, LCK, MED SPLT 0.25, ST Z	4
19	W07-375X000-20	WSH, LCK, MED SPLT 0.375, ST Z	2

WHEN ORDERING PARTS, SPECIFY MODEL NUMBER, SERIAL NUMBER AND DESCRIPTION OF PARTS REQUIRED

https://truckmanualshub.com/

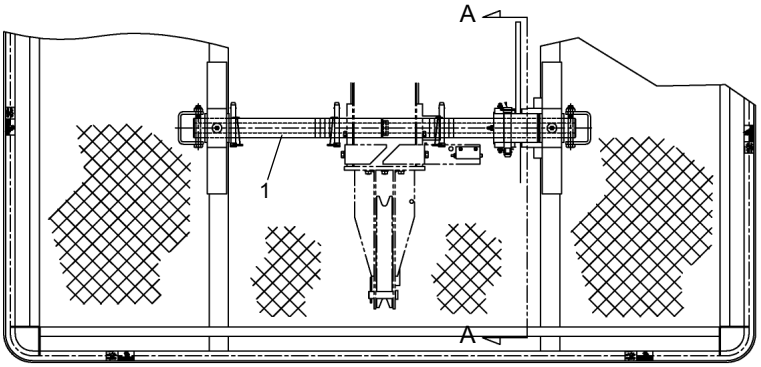

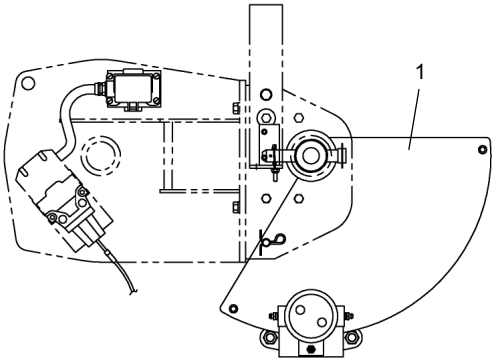

VIEW A-A

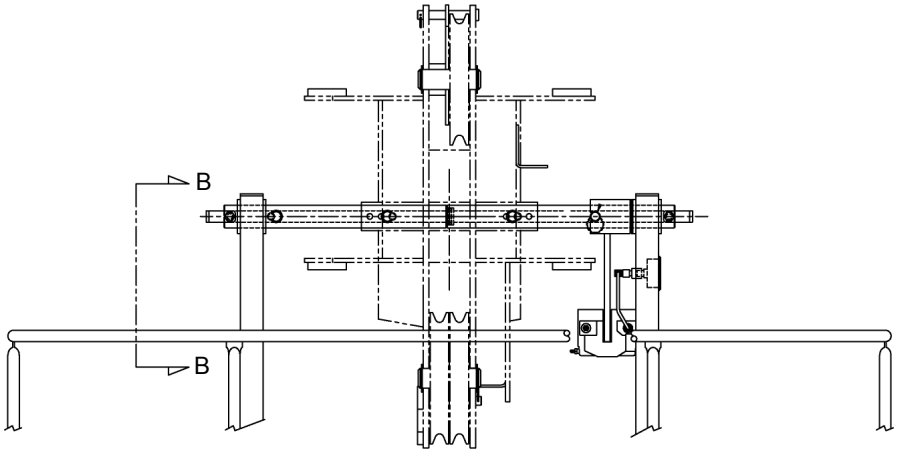

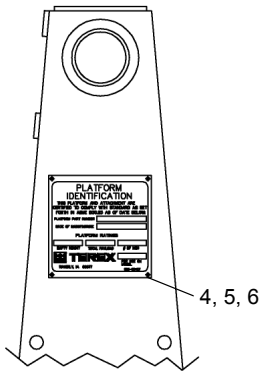

VIEW B-B

REF	PART NO.	DESCRIPTION	QTY
	731-30014 (Rev 00)	*2 Man Steel Platform INSTL*	
1	730-20433	2 Man Steel Platform Assembly	1
2*	209-00434	Aerial Lanyard-Shock Absorb	2
3*	209-00809	Safety Harness	2
4	653-00407	Platform Identification Plate	1
5	226-00023-5	Pop Rivet, ALUM, 0.125 DIA X 0.462 LG	4
6	652-00577	1 or 2 Man Platform Stamping INFO Chart	Ref

* ITEMS 2, 3 ARE NOT SHOWN IN ILLUSTRATION

WHEN ORDERING PARTS, SPECIFY MODEL NUMBER, SERIAL NUMBER AND DESCRIPTION OF PARTS REQUIRED

https://truckmanualshub.com/

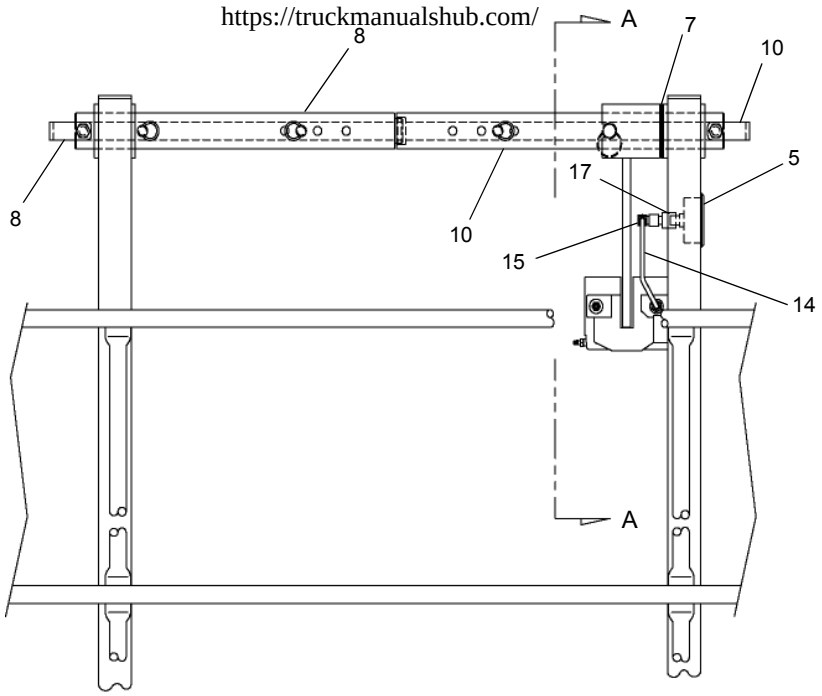

BOOM FRONT VIEW

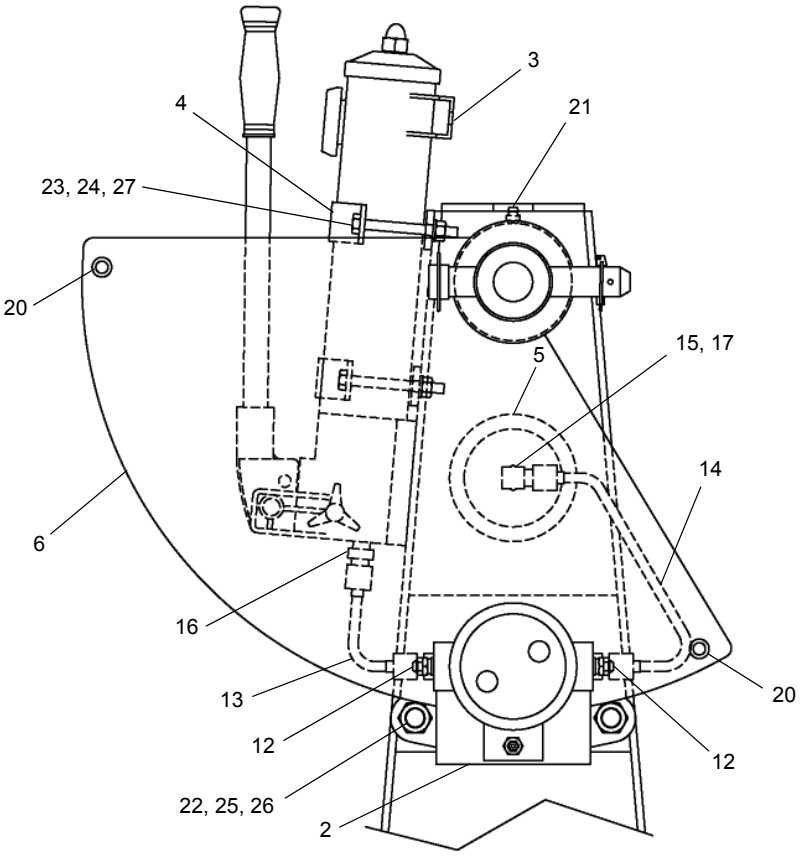

SECTION A - A

SEE PAGE 8.8

https://truckmanualshub.com/

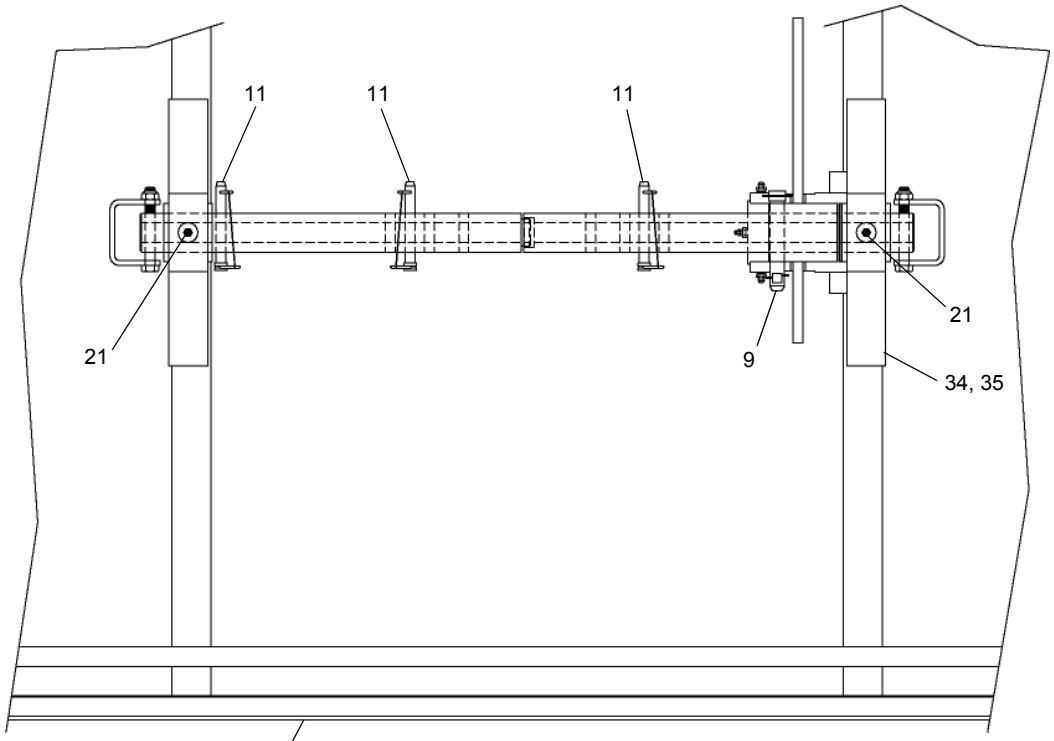

BOOM TOP VIEW

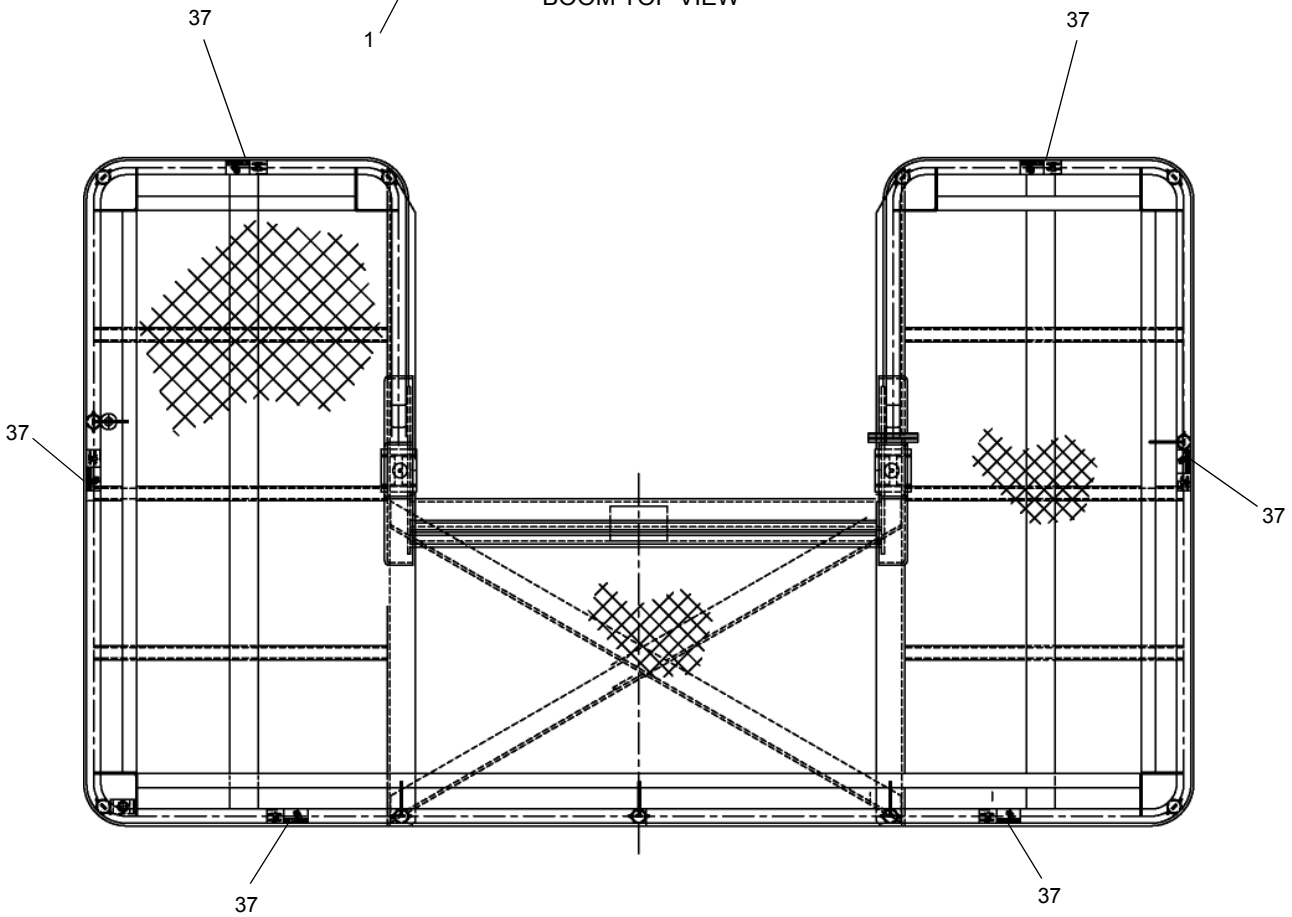

SEE PAGE 8.8

WHEN ORDERING PARTS, SPECIFY MODEL NUMBER, SERIAL NUMBER AND DESCRIPTION OF PARTS REQUIRED

https://truckmanualshub.com/

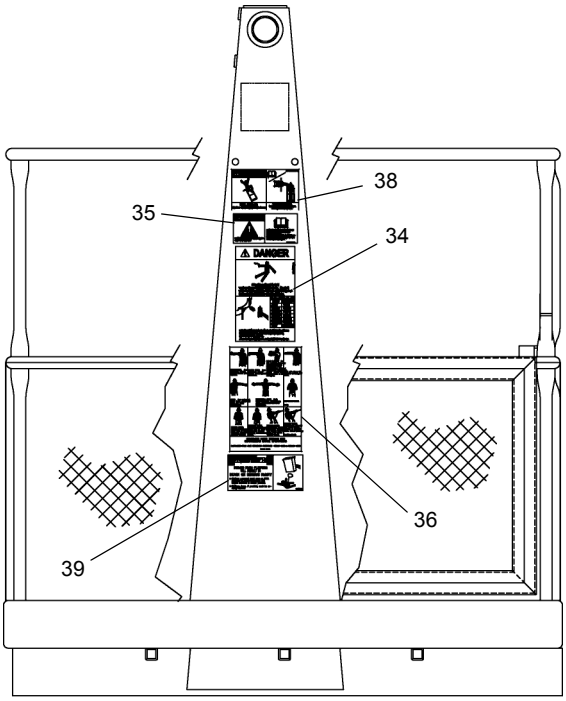

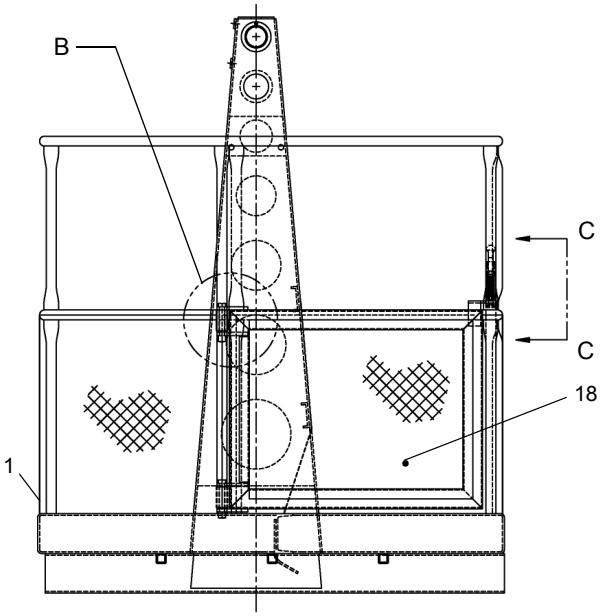

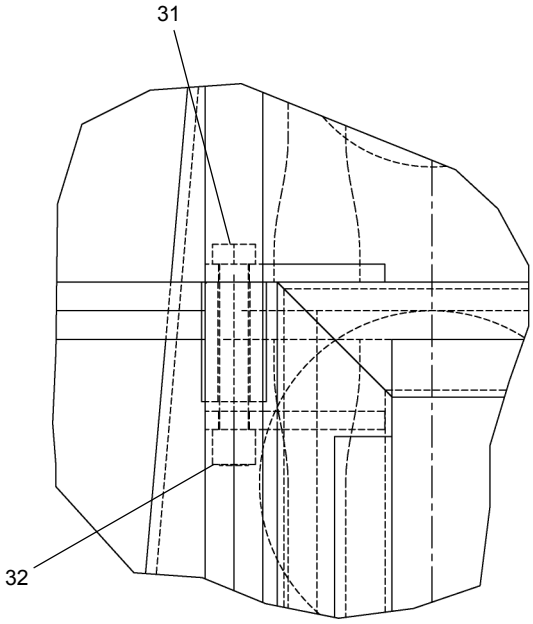

DETAIL B

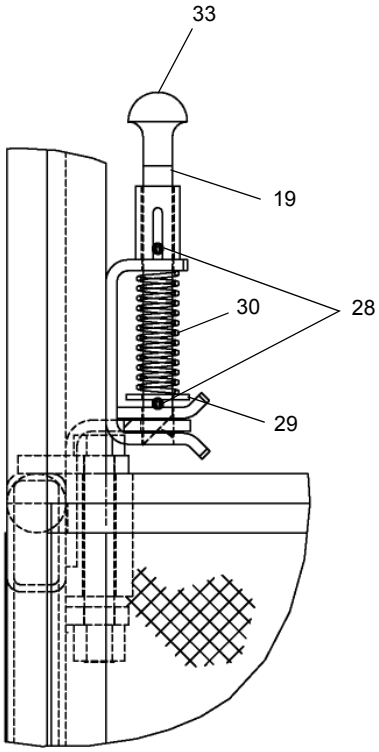

VIEW C - C

SEE PAGE 8.8

https://truckmanualshub.com/

SEE PAGES 8.5, 8.6 & 8.7

REF	PART NO.	DESCRIPTION	QTY
	730-20433 (Rev A)	*Assembly, Platform 2-Man (Steel)*	
1	730-20434	Platform Weldment, 2-Man	1
2	559-00055	HYD Brake, MICO #03-520-072	1
3	559-00056	Hand Pump ENERPAK #P-141	1
4	771-00128	Hand Pump Bracket	2
5	600-40280	Gauge, LHA #PGL-25-3000-11	1
6	730-20338	Disc Weldment	1
7	222-29011	Bushing 3” OD X 2” ID X 14 GA	4
8	870-60222	RH Pin Assembly (Pivot)	1
9	870-00149	Hitch Pin Assembly-3/4” DIA	1
10	870-60220	LH Pin Assembly (Pivot)	1
11	870-00131	Hitch Pin Assembly-1/2” DIA	3
12	513-20002	CONN, STR 4 ORB/4 JIC	2
13	510-20447	Tube Assembly, Pump	1
14	510-20448	Tube Assembly, Brake & Engage	1
15	514-62001	Elbow, 90° S.Nut 4 JIC	1
16	513-20001	CONN, STR 1/4 MPT/4 JIC	1
17	513-20006	Adapter, STR 1/4 FPT/4 JIC	1
18	730-20441	Door Weld, Swing-Away	1
19	870-80013	Pin, Latch	1
20	224-19017	Roll Pin 1/2 OD X 1 1/4 LG	2
21	501-03001	Grease Fit STR 1/4-28 UNF	2
22	220-04011	HH Bolt 1/2-13NC X 4 LG	2
23	220-00005	HH Bolt 1/4-20NC X 2 1/2 LG	4
24	222-10005	Lockwasher, 1/4 DIA PLTD	4
25	222-14003	Lockwasher, 1/2 DIA PLTD	2
26	221-04001	Nut HEX 1/2-13NC PLTD	2
27	221-00001	Nut HEX 1/4-20NC PLTD	4
28	224-12009	Roll Pin, 1/8 X 1 LG PLT	2
29	222-04011	Flatwasher, 1/2 ID X 1-1/16 OD	1
30	202-10077	Spring, Compression	1
31	220-04025	HHCS, 1/2NC X 3-1/2 LG GR5 PLT	2
32	221-94002	Nut, 1/2 NC HEX PLT	2
33	808-00031	Knob, Push-Pull Black	1
34	T127260	Decal, Electrocution Platform	2
35	T127259	Decal, Remote Warning	2
36	652-00496	Decal, Crane Hand Signals	2
37	651-00469	Decal, Hands Off Rail	6
38	651-00422	Decal, Jib Removal W/Lift Attach	2
39	419264A	Decal, Falling From Platform	2

WHEN ORDERING PARTS, SPECIFY MODEL NUMBER, SERIAL NUMBER AND DESCRIPTION OF PARTS REQUIRED

https://truckmanualshub.com/

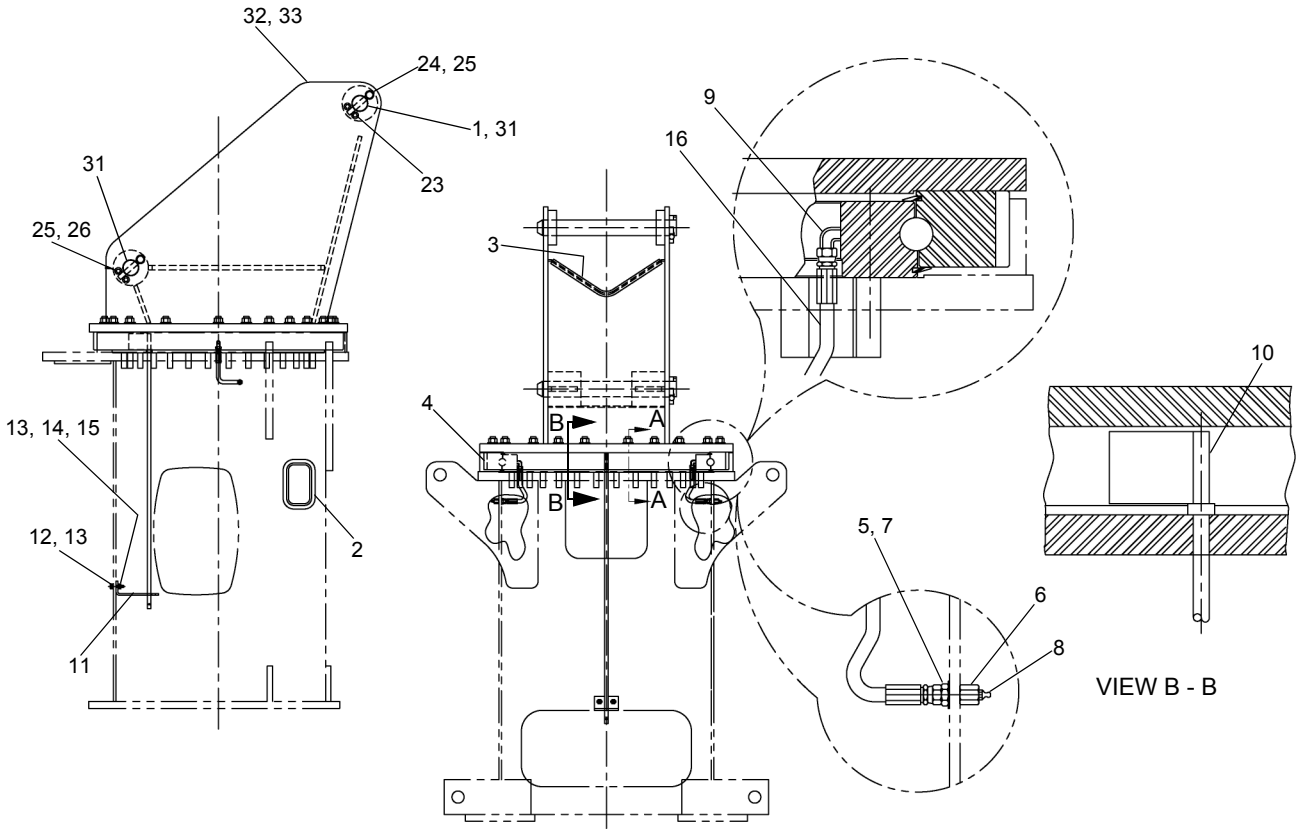

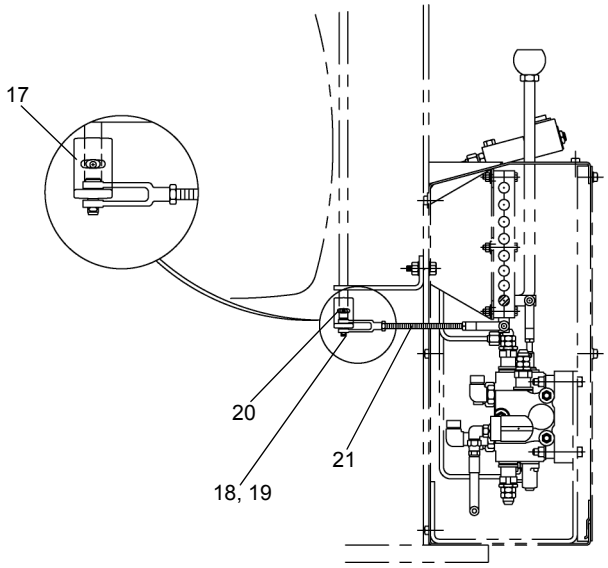

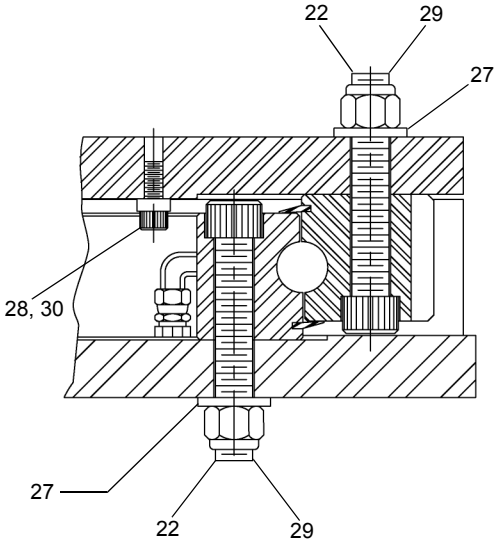

SECTION A - A

SEE PAGE 12.2

https://truckmanualshub.com/

SEE PAGE 12.1

REF	PART NO.	DESCRIPTION	QTY
	710-00275-5 (Rev F)	*Installation Group Non-Continous Rotation (Items 1 thru 31 & 32)*	
	710-00275-5-R (Rev F)	*Installation Group Non-Continous Rotation (Red) (Items 1 thru 31 & 33)*	
1	787-00767	Spacer Shim 2 3/4 X #14 Gauge	2
2	209-00470	Trim Edging - 1/2" Black	3'
3	209-00802	Trim Edging - 5/8" Black	2'
4	716-00032	Rotation Bearing (4792 Series)	1
5	WAR-375X000-22	WSH, FL TYPA REG 0.375, ST YZ	2
6	518-20001	Bulkhead CONN 1/8 FPT-4 JIC	2
7	511-21001	Locknut (-4)	2
8	501-03002	Zerk - 1/8 NPT	2
9	514-02002	Elbow 90º 1/4 Tube X 1/8 NPT	2
10	719-00323	Swing Stop Rod Weldment NCR	1
11	785-01678	Support Angle - Swing Stop NCR	1
12	S01-312CA50-25	SCR, HHCS 0.3125 - 18 X 1.50, ST Z G5 NCR	2
13	WBR-31RX875-20	WSH, LF TYPB-REG 0.3125, ST Z NCR	4
14	W07-312X000-20	WSH, LCK MED-SPLT 0.3125, ST Z NCR	2
15	N04-312C000-25	Nut, HEX 0.3125-18, ST Z G5 NCR	2
16	520-00191	Hose ASS'Y - Swing BRG Lube	2
17	T124167	Swing Stop Weldment NCR	1
18	870-00129	Clevis Pin 5/16" NCR	2
19	P02-125X750-20	Pin, Cotter 0.125 X 0.75 , ST Z NCR	2
20	P22-188XA50-GP	Pin, Spring SLTD 0. 1875 X 1.50, ST Z NCR	1
21	806-00245	ASS'Y - Swing K/O Link (2-1141) NCR	1
22	S14-A00CD75-H2	SCR, SHCS 1.00-8 X 4.75, ST Z	46
23	224-26005	Rod End ø.62 X 4.25 LG (2-754)	2
24	SHF-625CA50-25	SCR. HHCS, FL 0.625-11 X 1.50, ST Z G5	2
25	W07-625X000-20	WSH, LCK MED-SPLT 0.625, ST Z	6
26	S14-625C750-H2	SCR, SHCS 0.625-11 X 0.75, ST Z	4
27	WAH-A0NX000-Y2	WSH, LF HRD TYPA-NRW 1.00 , ST Z	46
28	S14-375CA00-H2	SCR, SHCS 0.375-16 X 1.00, ST Z NCR	1
29	NYL-A00C000-Y8	Nut, HEX NYL-INS 1.00-8, ST YZ G8	46
30	011-20014	Spacer 3/8" SCH80 Pipe X .44 LG (3-19) NCR	1
31	870-90030	Pin ø2.75 X 26.06 LG (3-852)	2
32	712-00239	Turret (4792 Series)	1
33	T124180	Turret (4792 Series) (Red)	1

https://truckmanualshub.com/

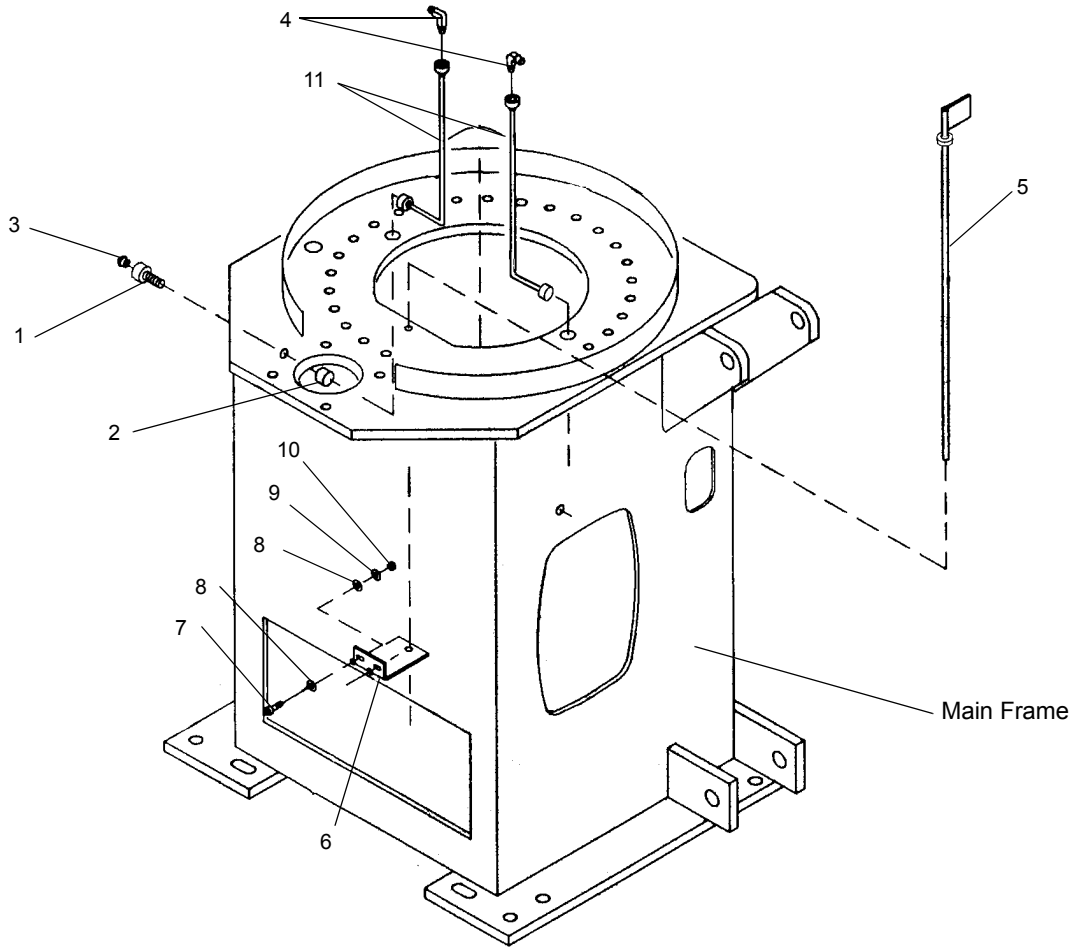

REF	PART NO.	DESCRIPTION	QTY
1	518-20001	Connector, Bulkhead 1/8FPT	2
2	511-21001	Nut, Lock	2
3	501-03002	Zerk, 1/8NPT	2
4	514-02002	Elbow, 90 Deg. 1/4 Tube x 1/8NPT	2
5	719-00323	Rod, Swing Stop Weldment	1
6	785-01678	Angle, Swing Stop Support	1
7	220-01006	Screw, HHC 5/16NC x 1 1/2" Long	2
8	222-01001	Washer, Flat 5/16 PLTD	4
9	222-11002	Washer, Lock 5/16 PLTD	2
10	221-01001	Nut, HEX 5/16NC	2
11	502-00180	Hose Assembly, Swing Bearing Lube	2

WHEN ORDERING PARTS, SPECIFY MODEL NUMBER, SERIAL NUMBER AND DESCRIPTION OF PARTS REQUIRED

https://truckmanualshub.com/

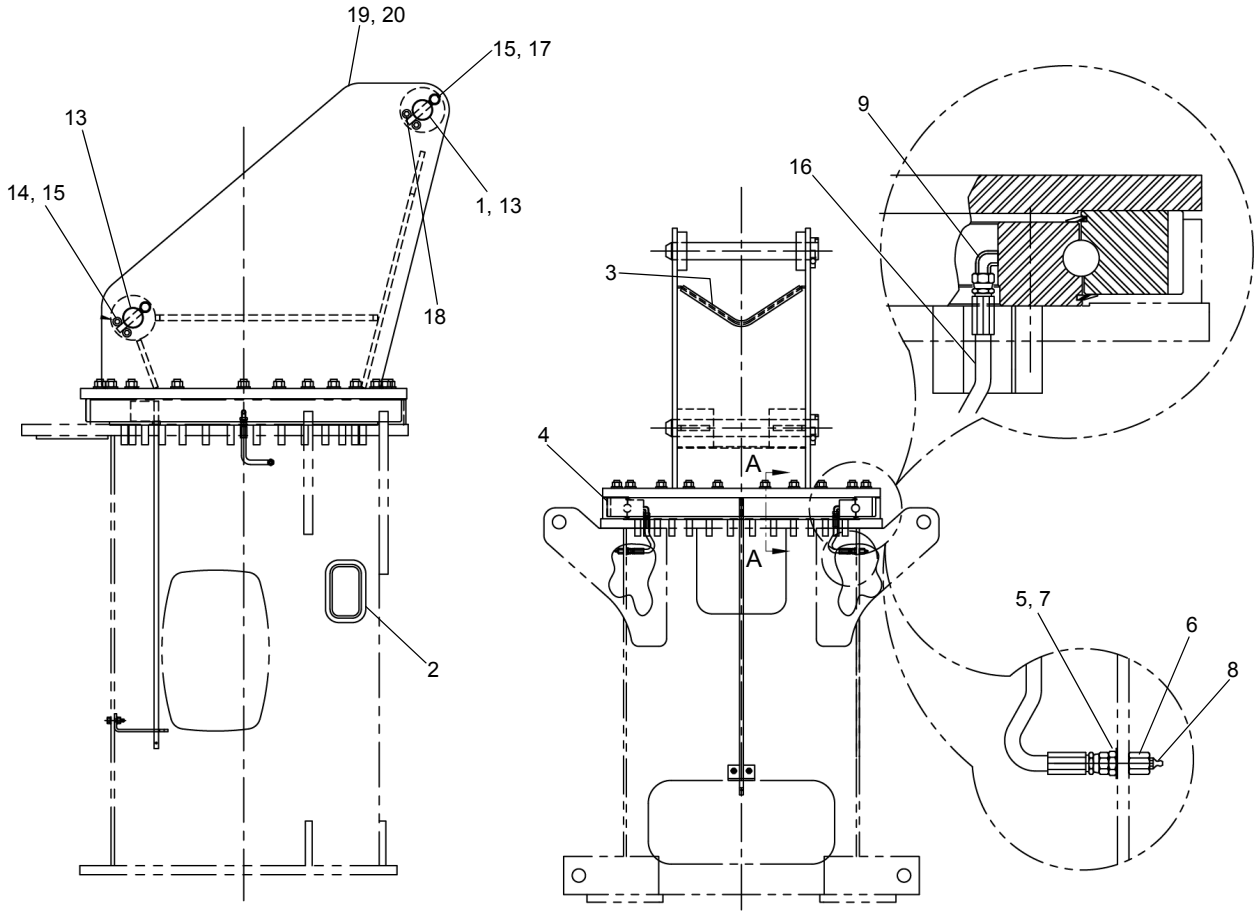

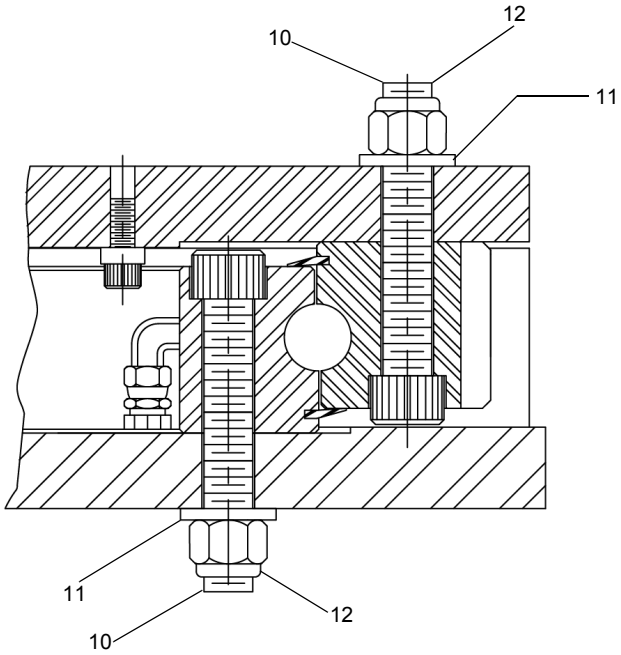

SECTION A-A

SEE PAGE 12.5

https://truckmanualshub.com/

SEE PAGE 12.4

REF	PART NO.	DESCRIPTION	QTY
	710-00275-6 (Rev F)	*Installation Group Continous Rotation (Includes Items 1 thru 18 & 19)*	
	710-00275-6-R (Rev F)	*Installation Group Continous Rotation (Red) (Includes Items 1 thru 18 & 20)*	
1	787-00767	Spacer Shim 2 3/4 X #14 Gauge	2
2	209-00470	Trim Edging - 1/2" Black	3'
3	209-00802	Trim Edging - 5/8" Black	2'
4	716-00032	Rotation Bearing (4792 Series)	1
5	WAR-375X000-22	WSH, FL TYPA REG 0.375, ST YZ	2
6	518-20001	Bulkhead CONN 1/8 FPT-4 JIC	2
7	511-21001	Locknut (-4)	2
8	501-03002	Zerk - 1/8 NPT	2
9	514-02002	Elbow 90º 1/4 Tube X 1/8 NPT	2
10	S14-A00CD75-H2	SCR, SHCS 1.00-8 X 4.75, ST Z	46
11	WAH-A0NX000-Y2	WSH, LF HRD TYPA-NRW 1.00 , ST Z	46
12	NYL-A00C000-Y8	Nut, HEX NYL-INS 1.00-8, ST YZ G8	46
13	870-90030	Pin ø2.75 X 26.06 LG (3-852)	2
14	S14-625C750-H2	SCR, SHCS 0.625-11 X 0.75, ST Z	4
15	W07-625X000-20	WSH. LCK MED-SPIT 0.625, ST Z	6
16	520-00191	Hose ASS'Y - Swing BRG Lube	2
17	SHF-625C750-H2	SCR, HHCS, FL 0.625-11 X 1.50, ST Z G5	2
18	224-26005	Rod End ø.62 X 4.25 LG (2-754)	2
19	712-00239	Turret (4792 Series)	1
20	T124180	Turret (4792 Series) (Red)	1

https://truckmanualshub.com/

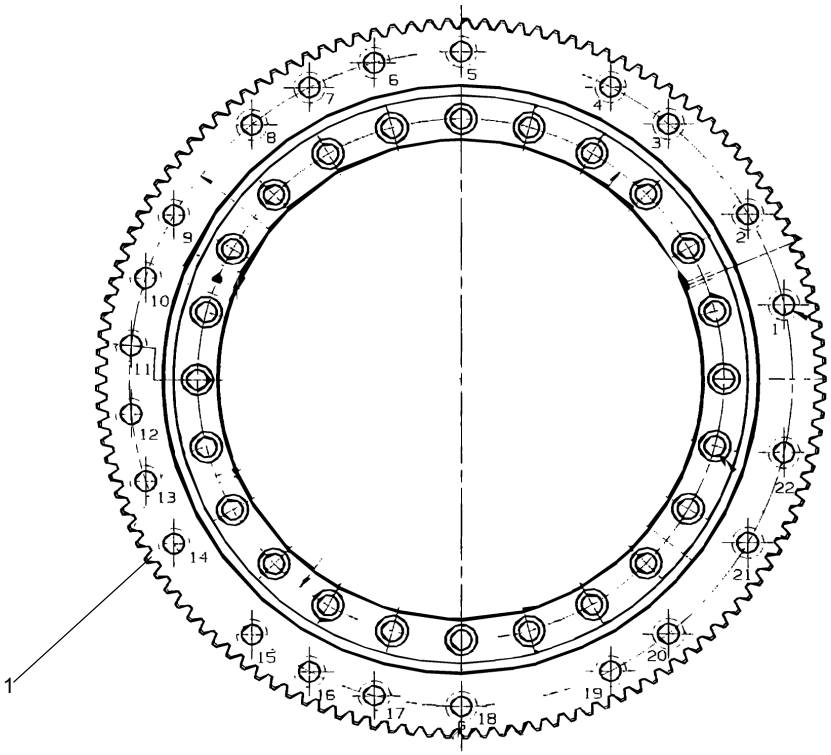

REF	PART NO.	DESCRIPTION	QTY
1	716-00032	Rotation Bearing	1

WHEN ORDERING PARTS, SPECIFY MODEL NUMBER, SERIAL NUMBER AND DESCRIPTION OF PARTS REQUIRED

https://truckmanualshub.com/

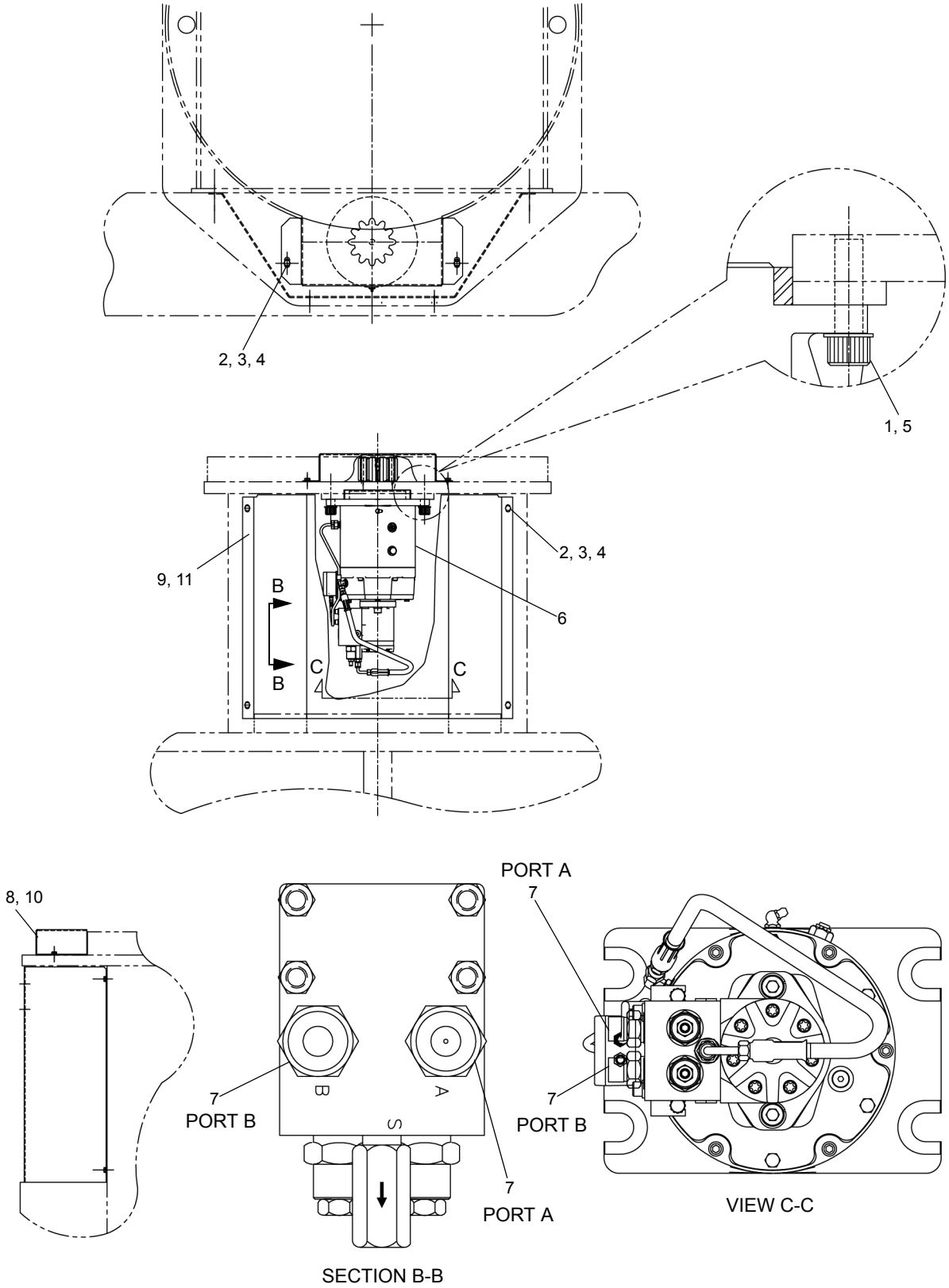

SEE PAGE 22.2

WHEN ORDERING PARTS, SPECIFY MODEL NUMBER, SERIAL NUMBER AND DESCRIPTION OF PARTS REQUIRED

https://truckmanualshub.com/

SEE PAGE 22.1

REF	PART NO.	DESCRIPTION	QTY
	705-00043-2 (Rev A)	*Swing Install W/Area Defination (Includes Items 1 thru 9)*	
	705-00043-2-R (Rev A)	*Swing Install W/Area Defination (Includes Items 1 thru 7, 10 & 11)*	
1	WAH-75NX000-Y2	WSH, FL HRD A NRW 0.75, ST Z	4
2	SHF-312C750-25	SCR, HHCS, FT 0.312-18 X 0.75, ST Z GR5	6
3	W07-312X000-20	Lockwasher 5/16 Zinc PLTD	6
4	WAN-31NX000-20	WSH, FL HRD A NRW 0.625, ST Z	6
5	S14-750CB25-25	SCR, HHCS, FT 0.75-10 X 2.25, ST Z GR5	4
6	292-00048	Rotation Gearbox ASSY (BLK) (4792)	1
7	513-50027	STR CONN. M#8 OFS X M#10 ORB	2
8	802-01646-P7	Cover-Pinion Gear (Gray)	1
9	802-01645-P7	Cover-Rotation Gearbox (Gray)	1
10	802-01646-P4	Cover-Pinion Gear (Red)	1
11	802-01645-P4	Cover-Rotation Gearbox (Red)	1

https://truckmanualshub.com/

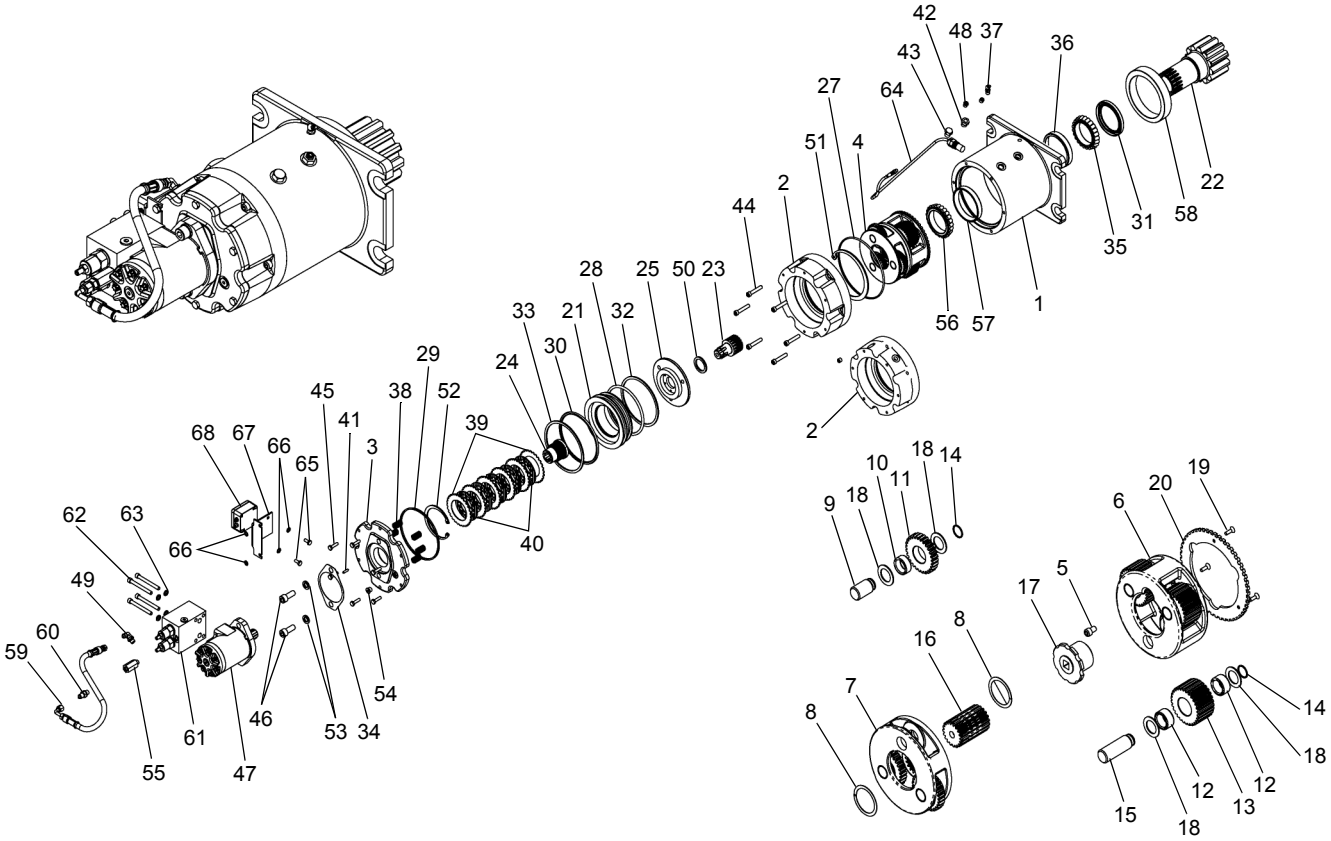

SCHEMATIC

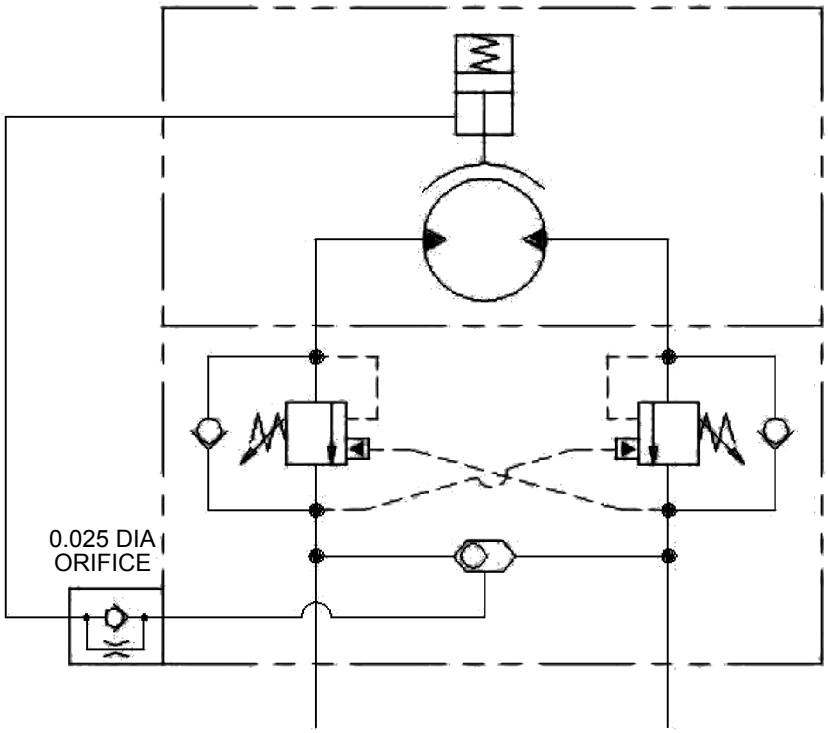

SEE PAGE 22.4

WHEN ORDERING PARTS, SPECIFY MODEL NUMBER, SERIAL NUMBER AND DESCRIPTION OF PARTS REQUIRED

TEREX® P/N 12261-286	**ROTATION GEARBOX ASSEMBLY**	DATE: Revised 07-2010	GROUP
		MODEL: BT4792	**22**
		PAGE 22.3	

https://truckmanualshub.com/

SEE PAGE 22.3

REF	PART NO.	DESCRIPTION	QTY	REF	PART NO.	DESCRIPTION	QTY
	292-00048 (Rev 00)	*Gear Box Assembly, Turret Rotation*					
1	901-00348	Housing, Gear, Swing	1	36	901-00396	Cup, Bearing	1
2	901-00136	Housing, Brake	1	37	901-00365	Fitting, Grease Zerk	1
3	901-00137	Adapter Motor	1	38	901-00148	Spring, Green	6
4	901-00350	Gear Set, Planetary	1	39	901-00149	Plate, Stator	6
5	901-00172	Bolt, Pinion, Locking	1	40	901-00150	Disc Friction	5
6	901-00351	Carrier, Output	1	41	901-00151	Pin, Roll	1
7	901-00248	Carrier, Input	1	42	901-00276	Fitting, Adapter	1
8	901-00175	Ring, RET	2	43	901-00277	Plug, O-Ring	1
9	901-00176	Pin, Planet	3	44	901-00159	Capscrew, Sockethead	6
10	901-00177	Bearing, Needle	3	45	901-00160	Capscrew	6
11	901-00249	Gear, Planet, Input	3	46	901-00397	Capscrew, Socket Head	2
12	901-00179	Bearing, Needle	6	47	530-20148	Motor, Hydraulic	1
13	901-00180	Gear, Secondary Planet	3	48	901-00029	Breather	1
14	901-00182	Ring, Retaining	6	49	901-00106	ADPT., 90DEG	1
15	901-00183	Pin, Plane	3	50	901-00165	Washer Thrust	1
16	901-00184	Gear, Sun, Output	1	51	901-00167	Ring, Retaining	1
17	901-00185	Bolt, Pinion	1	52	901-00168	Ring, Retaining	1
18	901-00250	Washer, Thrust	12	53	901-00109	Lockwasher	2
19	901-00352	Capscrew, HEX, Flat Head	3	54	901-00170	Plug, O-Ring	1
20	901-00353	Plate, Target, Swing	1	55	552-00100	Check Valve	1
21	901-00139	Piston, Brake	1	56	901-00192	Cone, Bearing	1
22	901-00407	Shaft, Output, Pinion	1	57	901-00193	Cup, Bearing	1
23	901-00191	Gear, Sun	1	58	901-00198	Ring, Eccentric	1
24	901-00142	Gear, Brake Driver	1	59	901-00356	Hose, Assembly	1
25	901-00143	Plate,Thrust	1	60	901-00104	Adapter, Straight	1
26*	901-00354	Kit, Seal	1	61	901-00357	Block, C.B. W/Valve	1
27	901-00074	O-Ring	1	62	901-00358	Capscrew, Socket Head	4
28	901-00154	O-Ring	1	63	901-00405	Lockwasher	4
29	901-00157	O-Ring	1	64	901-00359	Sensor, Hall Effect	1
30	901-00153	O-Ring	1	65	901-00360	Capscrew	2
31	901-00394	Seal, Oil	1	66	901-00361	Washer, Shake Proof	4
32	901-00155	Ring, Back Up	1	67	901-00362	Bracket, Conditioner W.A.D.	1
33	901-00152	Ring, Back Up	1	68	901-00363	Conditioner, W.A.D.	1
34	901-00161	Gasket	1	69*	901-00364	Cable Clamp	1
35	901-00395	Cone, Bearing	1	70*	269-00168	Motor Seal Kit	1

* ITEMS 26, 69 AND 70 ARE NOT SHOWN IN ILLUSTRATION

WHEN ORDERING PARTS, SPECIFY MODEL NUMBER, SERIAL NUMBER AND DESCRIPTION OF PARTS REQUIRED

https://truckmanualshub.com/

REF	PART NO.	DESCRIPTION	QTY
	T130517 (Rev A)	*Swing Cut-Out Kit*	
1	514-55011	Elbow,90,MOFS-8/MORB-8	2
2	514-55020	Elbow, CONN 90° M#6 OFS X M#8 ORB	1
3	1219-624	Plug	1
4	516-85004	Tee, Swivel	2
5	516-85005	Tee, ORB Port	1
6	12019-846	Reducer	1
7	T128207	Swing Control Valve	1
8	502-30780	Hose, Swing, 25.75"	1
9	502-30779	Hose, Swing, 28"	1
10	T107877	Hose, HYD #06 27" STR FOFS FOFS 4KPSI	1
11	T128914	Weld Plate	2
12	T129701	Limit Plate	2
13	T128915	Guide Plate	2
14	442-2201	Switch	2
15	S14-190C625-H2	SCR, SHCS 10-24 X 0.625, ST Z	4
16	S14-250C750-H2	SCR, SHCS 0.25-20 X 0.75, ST Z	4
17	W07-250X000-20	1/4 Locker Washer	4
18	WMF-60MX000-20	1/4 Washer	4
19	S01-250CB00-25	Valve Bolt	2
20	WBR-25X734-20	Valve Washer	4
21	W07-250X000-20	Valve Lock Washer	2
22	T130516	Wire Harness	1

ITEMS 1 TO 22 ARE NOT ILLUSTRATED

https://truckmanualshub.com/

https://truckmanualshub.com/

REF	PART NO.	DESCRIPTION	QTY
	521-00082-6 (Rev C)	*Pump Installation (Includes Items 1 thru 18 & 19)*	
	521-00082-7 (Rev C)	*Pump Installation (Includes Items 1 thru 18 & 20)*	
1	1209-4	Washer, Flat 3/8 STD	2
2	201-00257	Clamp, Cable SGL DIA 3.5	1
3	201-00258	Clamp, Cable SGL DIA 2.5	1
4	209-00804	Hose Protector-HP8-B BLK (F3N)	1
5	221-92008	Locknut 3/8-16NC NYL INS ZINC	2
6	222-14001	Lockwasher 1/2 Zinc Plated	2
7	503-93010-1	Hose Kit - Pump BT + 1'	1
8	505-01002	Split Flange Kit .75"	1
9	505-02002	Split Flange Kit 1.00"	1
10	505-06004	Split Flange Kit 2.50"	1
11	220-04005	HHCS, 1/2-13NC X 1.50 GR5 Zinc	2
12	201-00119	Clamp, Conduit 2.50 DIA	1
13	220-01010	HHCS, 5/16-18NC X 1.75 Zinc	1
14	221-01001	Hex Nut 5/16-18NC Zinc PLTD	1
15	222-01001	Flatwasher 5/16 Zinc PLTD	1
16	222-11002	Lockwasher 5/16 Zinc PLTD	1
17	504-03509	90° Hose End, Beaded (00776)	1
18	514-55011	90° ELBOW M#8 OFS X M#8 ORB	1
19	520-00053-4	Pump, Triple Eaton #CCC-RH	1
20	520-00053-3	Pump, Triple Eaton #ACD-LH	1

ITEMS 1 TO 20 ARE NOT ILLUSTRATED

https://truckmanualshub.com/

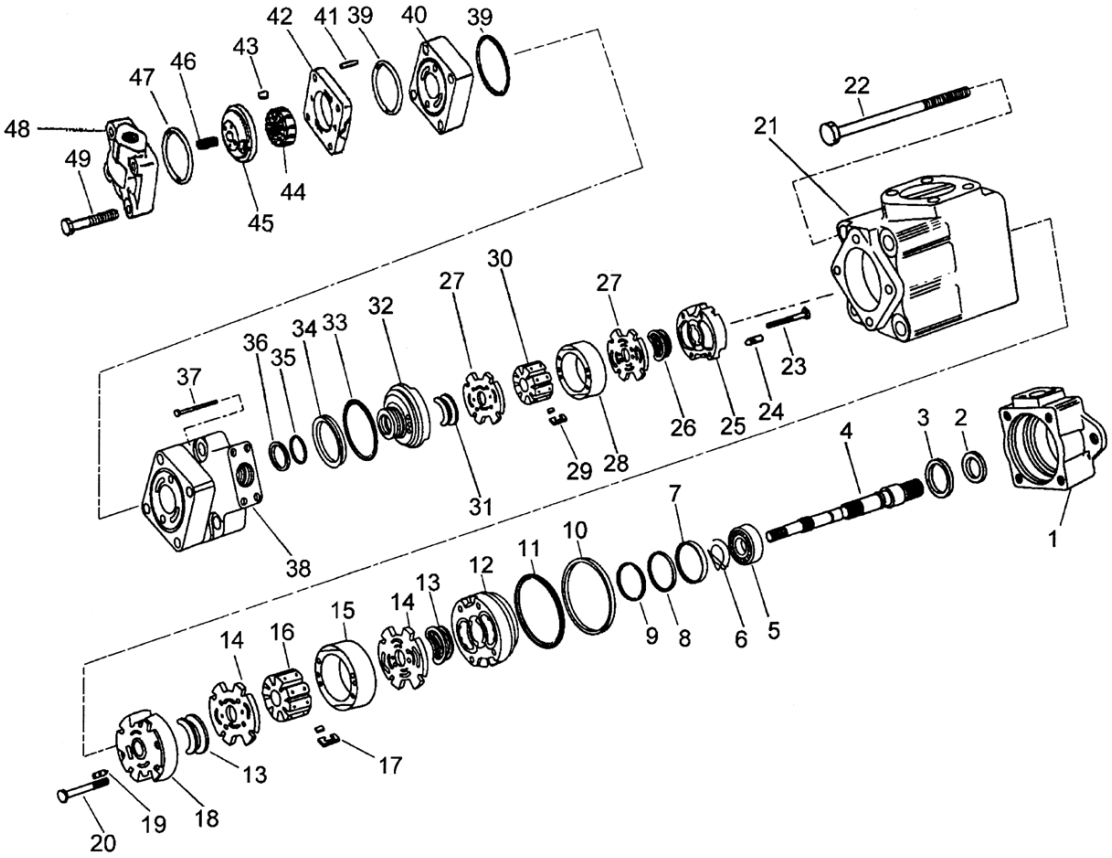

SEE PAGE 24.3

https://truckmanualshub.com/

SEE PAGE 24.2

REF	PART NO.	DESCRIPTION	QTY
	520-00053-3 (Rev A)	*Hydraulic Pump Assembly (Vickers) Bottom Mount 8 Bolt PTO*	
	520-00053-4 (Rev A)	*Hydraulic Pump Assembly (Vickers) Allison Automatic PTO Curbside Mount*	
1	935-00119	Body Kit	1
2**	935-00101	Primary Shaft Seal	1
3	935-00033	Washer	1
4	935-00097	Shaft (297 Type)	1
5	935-00020	Bearing	1
6	935-00025	Ring	1
7	935-00034	Lockring	1
8	935-00119	Back Up Ring	1
9**	935-00026	O-Ring	1
10	935-00151	Seal Ring	1
11**	935-00030	O-Ring	1
12	935-00150	Outlet Plate	1
13	935-00149	Seal Pac	4
14	935-00120	Flex Side Plate	2
15	935-00148	Ring	1
16	935-00044	Rotor	1
17	935-00056	Vane KiT	1
18	935-00146	Inlet Plate	1
19	935-00147	Pin	2
20	935-00145	Hex Head Screw	2
21	935-00041	Inlet Cover	1
22	935-00024	Bolt	4
23	935-00140	Screw	2
24	935-00141	Pin	2
25	935-00142	Inlet Plate	1
26	935-00143	Seal Pack	4
27	935-00121	Side Plate Kit	1
28	935-00139	Ring	1
29	935-00144	Vane Kit	1
30	935-00138	Rotor	1
31	935-00143	Seal Pac	4
32	935-00117	Outlet Plate	1
33**	935-00028	O-Ring	1
34	935-00136	Seal Ring	1
35**	935-00060	O-Ring	1
36	935-00122	Back-Up Ring	1
37	935-00022	Bolt	4
38	935-00135	Rear Mounting Cover	1
39**	935-00093	O-Ring	2
40	935-00111	Wear Plate	1
41	935-00095	Pin	2
42	935-00110	Ring	1
43	935-00109	Vane Kit	1
44	935-00108	Rotor	1
45	935-00107	Pressure Plate	1
46	935-00106	spring.	1
47**	935-00093	O-Ring	1
48	935-00100	V10 Cover Option	1
49	935-00088	Bolt	1
	REPAIR KITS		
**	935-00091	Pump Seal Kit	
	(needed if any of the following are replaced)		

WHEN ORDERING PARTS, SPECIFY MODEL NUMBER, SERIAL NUMBER AND DESCRIPTION OF PARTS REQUIRED

https://truckmanualshub.com/

https://truckmanualshub.com/

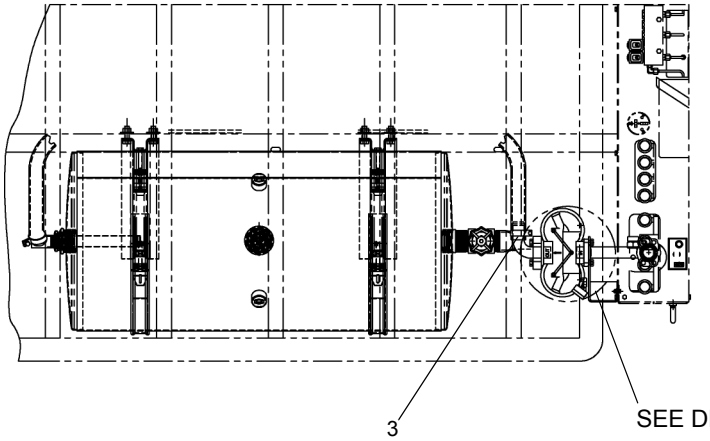

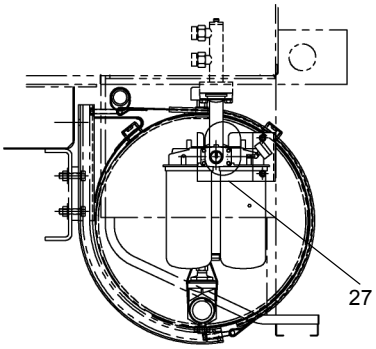

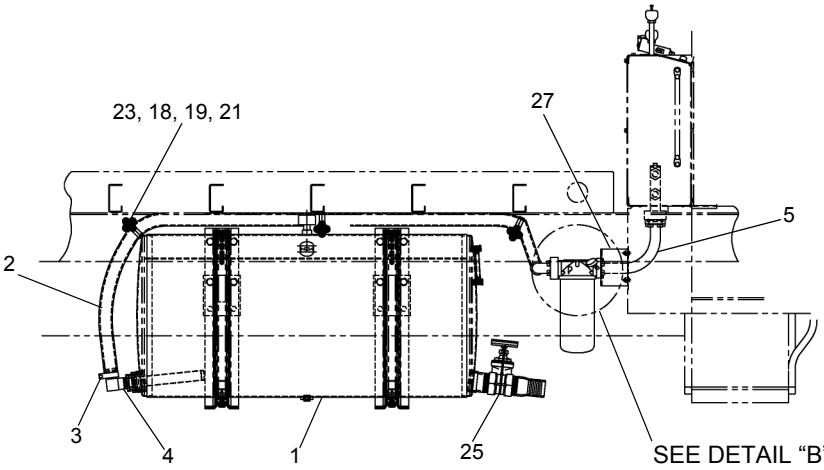

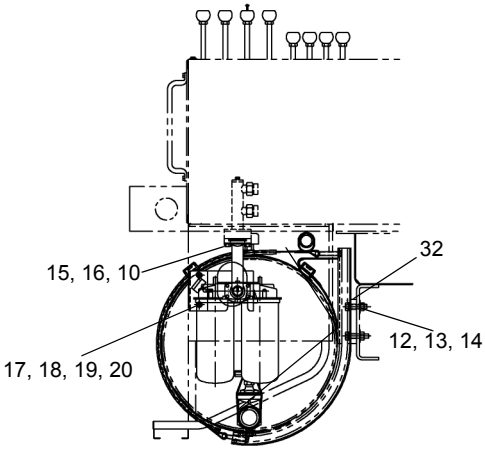

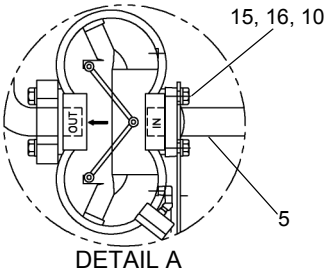

DETAIL A

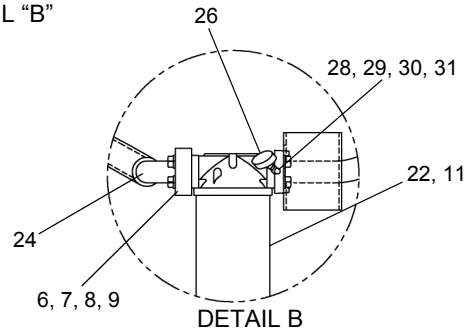

DETAIL B

SEE PAGE 25.3

https://truckmanualshub.com/

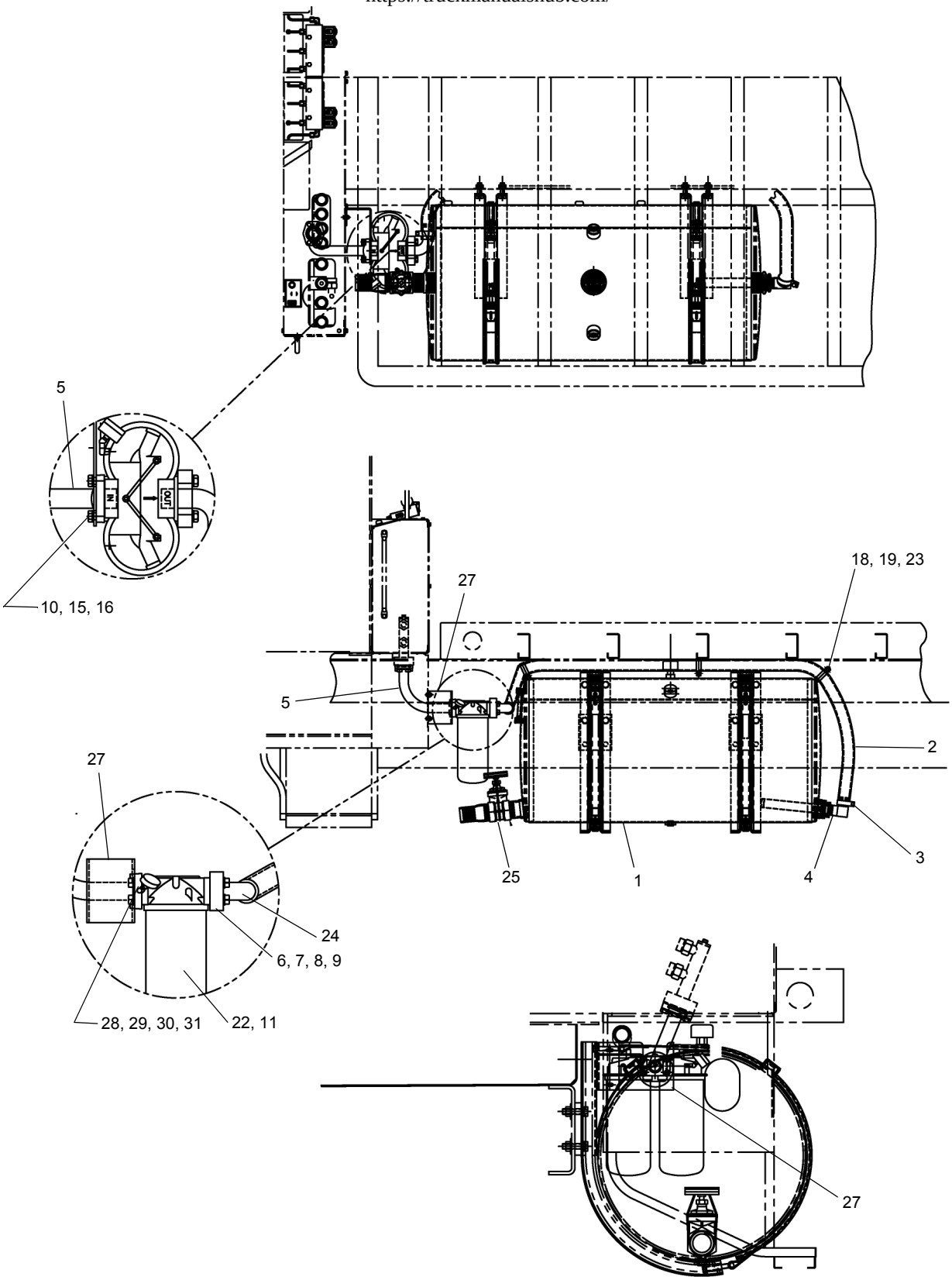

OPTIONAL FILTER AND TANK MOUNTING FOR SHORT WHEEL BASE TRUCKS ON STREET SIDE

SEE PAGE 25.3

https://truckmanualshub.com/

SEE PAGES 25.1 & 25.2

REF	PART NO.	DESCRIPTIION	QTY
	876-00060-1 (Rev P)	*Hydraulic Reservoir Installation*	
1	875-90036	ASSY HYD RES RND Steel	1
2	503-03001	Hose, 1 1/2 I.D SAE 100R4	11FT
3	201-00260	Clamp, Hose 1 1/ 2 T- Bolt	2
4	504-00706	Coupling, Hose 90° #4501-24-20	1
5	510-90279	Tube ASSY-Return W/Flanges	1
6	505-03003	Split Flange Half 1 1/2 W/HWARE	1
7	260-30004	O-Ring Parker #224	1
8	222-14003	Lock Washer 1/2 MED PLTD	4
9	220-04005	HHCS, 1/2-13 NC X 1.50 GR5 Zinc	4
10	260-30004	O-Ring Parker #224	2
11	501-02018	Filter Element	2
12	221-96005	Lock Nut HH 5/8-11 NC ESNA	8
13	222-06006	Flat Washer 5/8 Zinc PLTD	16
14	220-06056	HHCS 5/8-11 NC X 2.75 GR8 Zinc	8
15	220-04005	HHCS, 1/2-13 NC X 1.50 GR5 Zinc	8
16	222-14003	Lock Washer 1/ 2 MED PLTD	8
17	220-01004	HHCS, 5/16 -18 NC X .75 GR5 Zinc	2
18	222-11002	Lock Washer 5/16 Zinc PLTD	5
19	222-01001	Flat Washer 5/16 Plated	5
20	221-01001	Nut, HEX 5/16-18 NC PLTD	2
21	223-15210	Screw, 5/16 X 3/4 Self Tapping	3
22	501-02012	Return Line Filter ASS'Y	1
23	201-00181	Clamp, Cable SGL Ø1 3/4"	3
24	504-03407	Hose End 90° 1 1/2.1 1/2 3-776	1
25	400-15187	Cable Tie 24" Heavy BLK Nylon	1
26	935-00113	Filter By-Pass Gauge	1
27	770-02621	MTG Bracket HYD Filter	1
28	1219-4	Elbow, 90° Street	1
29	1219-59	Elbow, 45° Parker 2214P-2-2	1
30	1219-99	Nipple Closed Parker 215PN-2	1
31	1219-134	Coupling Parker 207P-2-2	1
32	789-05507	Plate, HYD Tank Frame Spacer	2

WHEN ORDERING PARTS, SPECIFY MODEL NUMBER, SERIAL NUMBER AND DESCRIPTION OF PARTS REQUIRED

https://truckmanualshub.com/

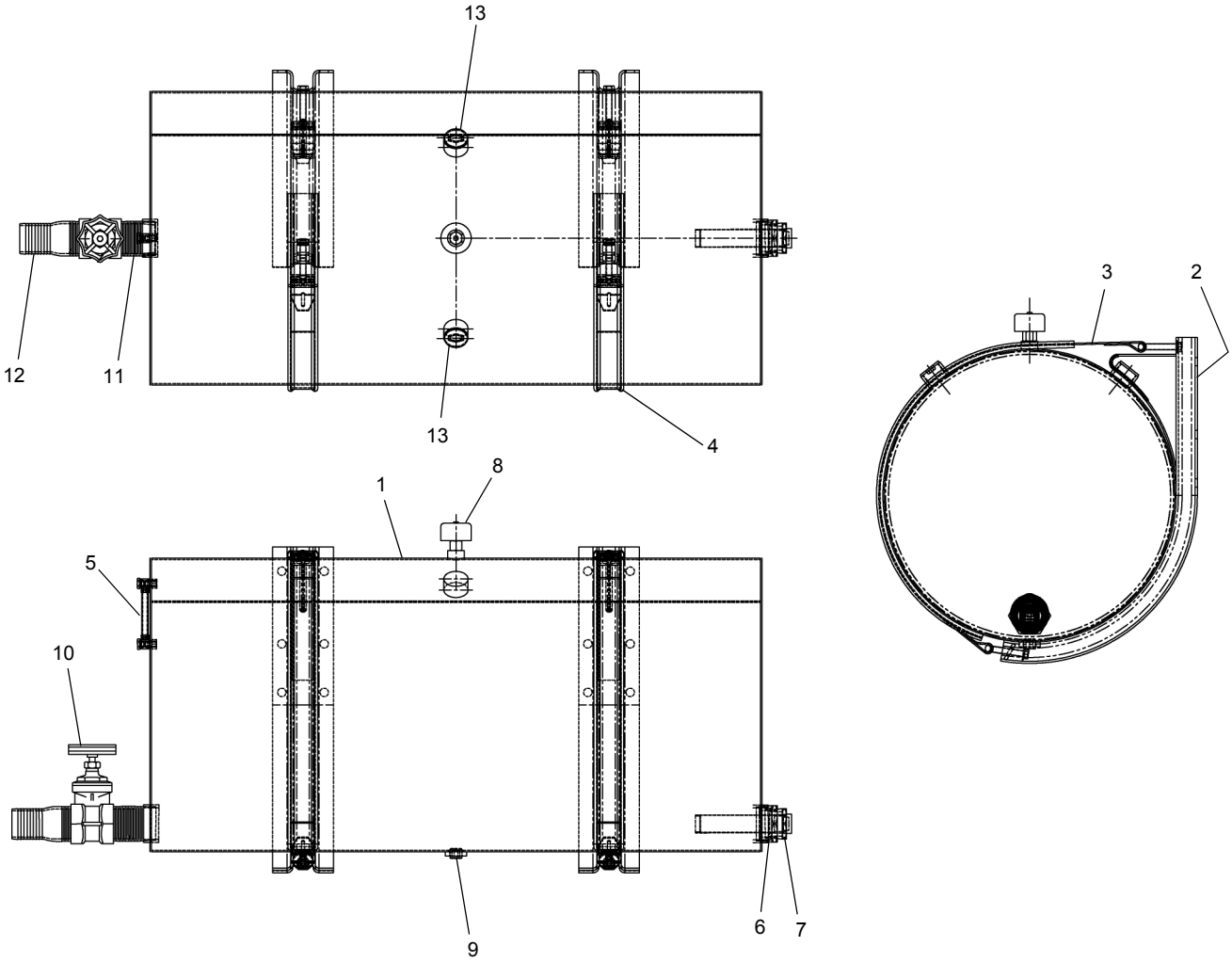

REF	PART NO.	DESCRIPTION	QTY
	875-90336 (Rev C)	*Hydraulic Reservoir Assembly*	
1	875-90339	RES., 90 GAL RD HYD	1
2	875-90325	BRK'T, 24" RD HYD Tank	2
3	875-90326	Strap, MTG HYD Tank	2
4	875-90327	Strap, RUB 2 1/32 X 10'	2
5	875-90340	Guage, Sight Glass	1
6	875-90329	Reducer 2 1/2 NPT X 2NPT	1
7	875-90330	Diffuser, 2NPT X 1-1/4 NPT	1
8	875-90138	ASS'Y, Breather	1
9	875-90332	Plug, 3/4NPT HEX Socket	1
10	570-90055	2 1/2" Gate Valve	1
11	570-09005	2 1/2" Closed Nipple	1
12	504-00902	2 1/2" Hose Coupling	1
13	517-30015	HEX Plug 1 5/8-12	2

WHEN ORDERING PARTS, SPECIFY MODEL NUMBER, SERIAL NUMBER AND DESCRIPTION OF PARTS REQUIRED

https://truckmanualshub.com/

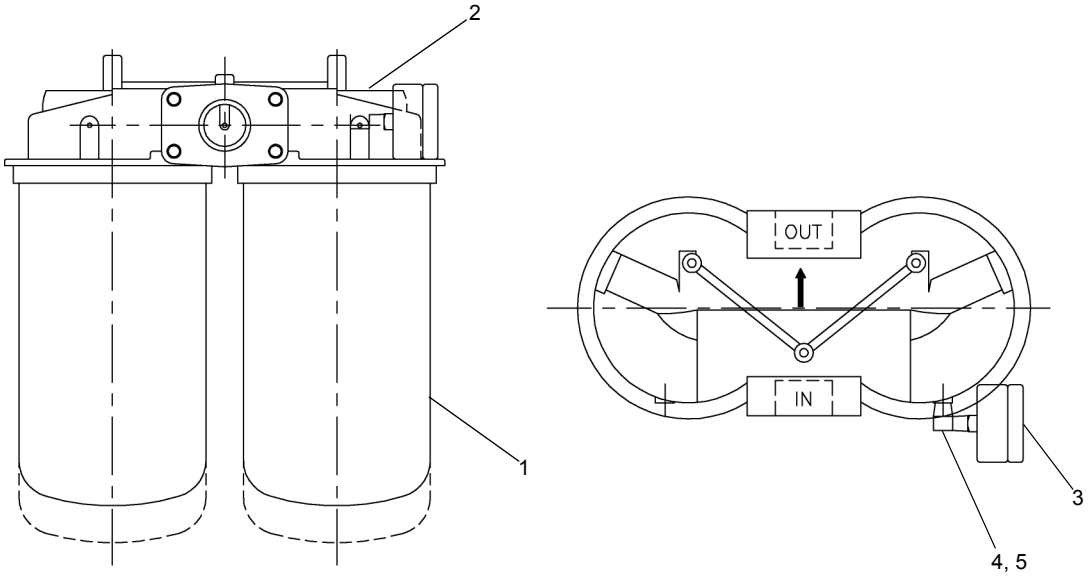

REF	PART NO.	DESCRIPTION	QTY
	501-02012 (Rev A)	*Return Line Filter ASSY*	
1	501-02018	Filter Replacement Cartridge	2
2	501-02013	Filter Head	1
3	935-00113	Gauge	Ref
4	1219-4	Elbow, 90°, Street 1/8 NPT	Ref
5	1219-59	Elbow, 45°, Street 1/8 NPT	Ref

WHEN ORDERING PARTS, SPECIFY MODEL NUMBER, SERIAL NUMBER AND DESCRIPTION OF PARTS REQUIRED

https://truckmanualshub.com/

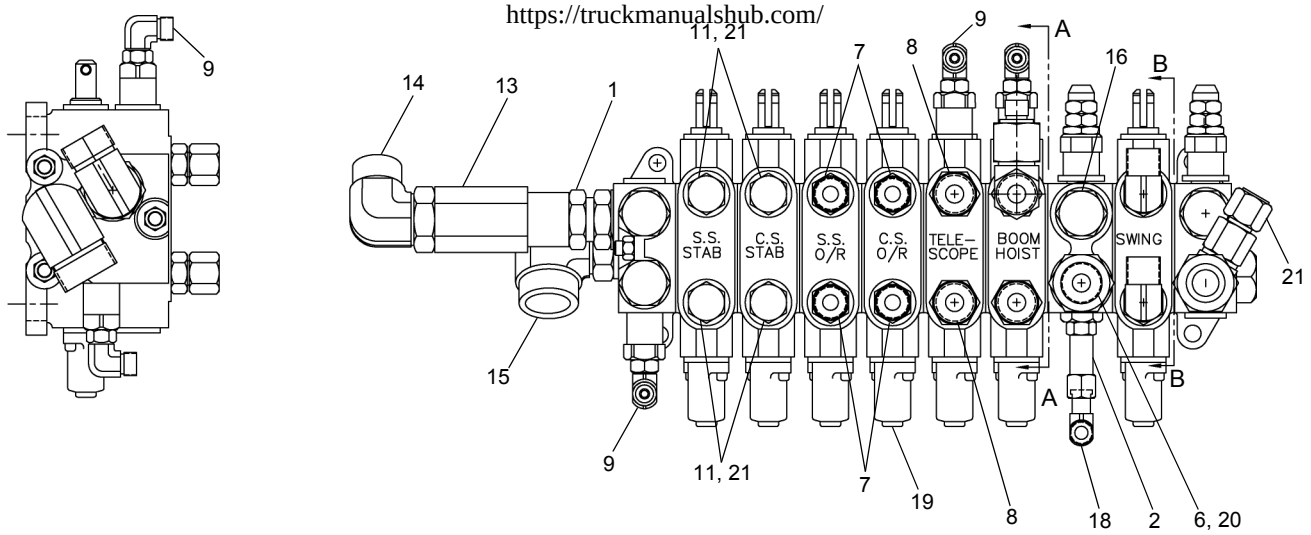

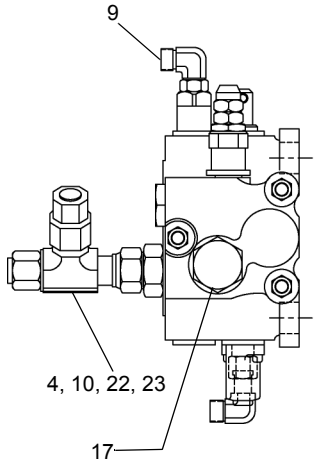

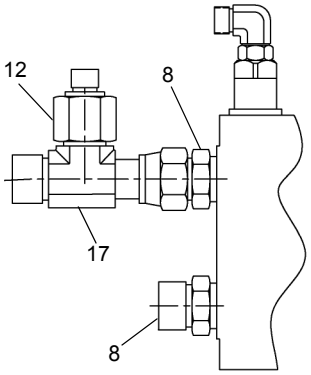

VIEW A-A

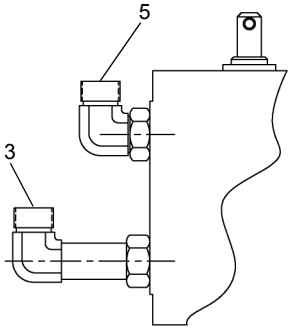

VIEW B-B

REF	PART NO.	DESCRIPTION	QTY
	500-01804-1 (Rev F)	*Valve ASSY, Main W/FTGS, CF WINCH*	
1	T121655	O-Ring-Union	1
2	513-30003	CONN, L M#4 OFS x M#4 ORB	1
3	514-55015	90 Elbow, L M#8 OFS x M#8 ORB	1
4	519-50012	Reducer, F#8 OFS x M#4 OFS	1
5	514-55011	90 Elbow, M#8 OFS x M#8 ORB	1
6	513-70038	CONN, L M#10 OFS x #10 ORB	1
7	513-50023	CONN, M#8 OFS x M#8 ORB	4
8	513-60012	CONN, M#10 OFS x M#8 ORB	4
9	514-52003	90 Elbow, M#4 OFS x M#4 ORB	3
10	516-85004	Tee 2x, M#8 OFS x F#8 OFS	1
11	513-40018	CONN, M#6 OFS x M#8 ORB	4
12	375-0002	Reducer, F10 OFS X M4 OFS	1
13	T121654	Check Valve	1
14	514-57010	90 Elbow, M#12 OFS x M#12 ORB	1
15	514-59024	90 Elbow, M#16 OFS x M#12 ORB	1
16	517-30002	Plug, M#10 ORB	1
17	516-86002	Tee, Swivel Nut F100FS x M100FS x M100FS	1
18	514-62002	90 Elbow, M#4 OFS x M#4 ORB SW	1
19	550-00422	Valve ASSY, Main (7000)	1
20	519-70032	Cap, Tube, F#12 OFS	1
21	519-40007	Cap, Tube, F#6 OFS	5
22	519-50010	Cap, Tube, F#8 OFS	1
23	513-50027	STR CONN, M#8 OFS x M10 ORB	1

WHEN ORDERING PARTS, SPECIFY MODEL NUMBER, SERIAL NUMBER AND DESCRIPTION OF PARTS REQUIRED

https://truckmanualshub.com/

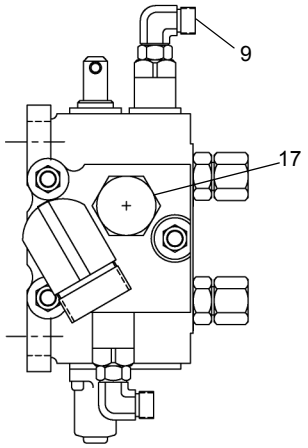

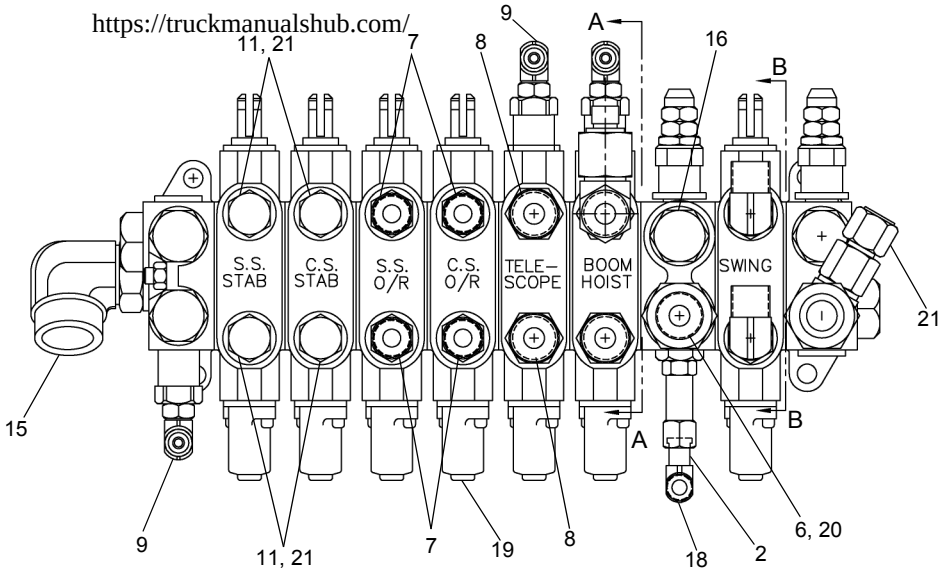

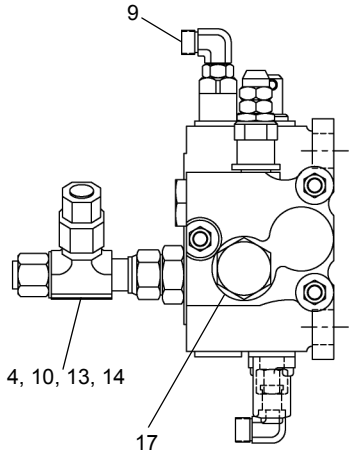

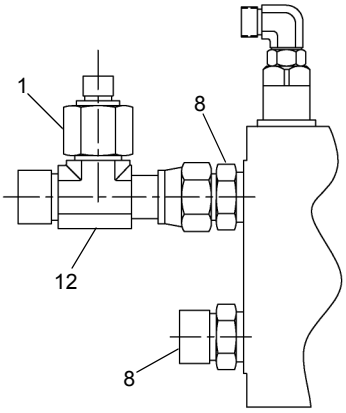

VIEW A-A

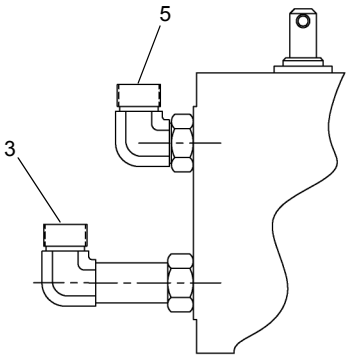

VIEW B-B

REF	PART NO.	DESCRIPTION	QTY
	500-01804-2 (Rev F)	*Valve ASSY, Main W/FTGS, CF WINCH*	
1	375-0002	Reducer, F10 OFS X M4 OFS	1
2	513-30003	Connector, L M#4 OFS x M#4 ORB	1
3	514-55015	90 Elbow, M#8 OFS x M#8 ORB	1
4	519-50012	Reducer, F#8 OFS x M#4 OFS	1
5	514-55011	90 Elbow, M#8 OFS x M#8 ORB	1
6	513-70038	CONN, L M#10 OFS x #10 ORB	1
7	513-50023	CONN, M#8 OFS x M#8 ORB	4
8	513-60012	CONN, M#10 OFS x M#8 ORB	4
9	514-52003	90 Elbow, M#4 OFS x M#4 ORB	3
10	516-85004	Tee 2x, M#8 OFS x F#8 OFS	1
11	513-40018	CONN, M#6 OFS x M#8 ORB	4
12	516-86002	Tee, Swivel Nut F100FS x M100FS x M100FS	1
13	513-50027	STR CONN, M#8 OFS x M10 ORB	1
14	519-50010	Cap, Tube, F#8 OFS	1
15	514-59024	90 Elbow, M#16 OFS x M#12 ORB	1
16	517-30002	Plug, M#10 ORB	1
17	517-30004	Plug, M#12 ORB	1
18	514-62002	90 Elbow, M#4 OFS x M#4 ORB	1
19	550-00422	Valve ASSY, Main (7000)	1
20	519-70032	Cap, Tube, F#12 OFS	1
21	519-40007	Cap, Tube, F#6 OFS	5

WHEN ORDERING PARTS, SPECIFY MODEL NUMBER, SERIAL NUMBER AND DESCRIPTION OF PARTS REQUIRED

https://truckmanualshub.com/

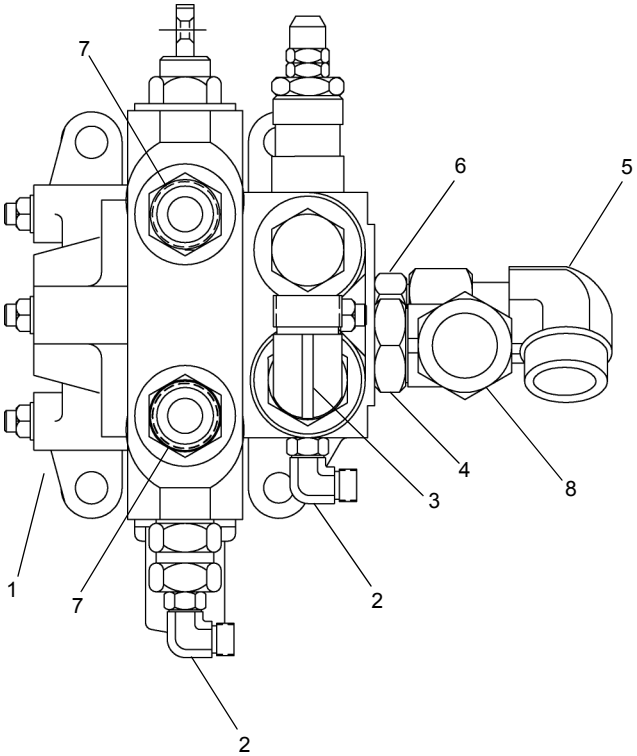

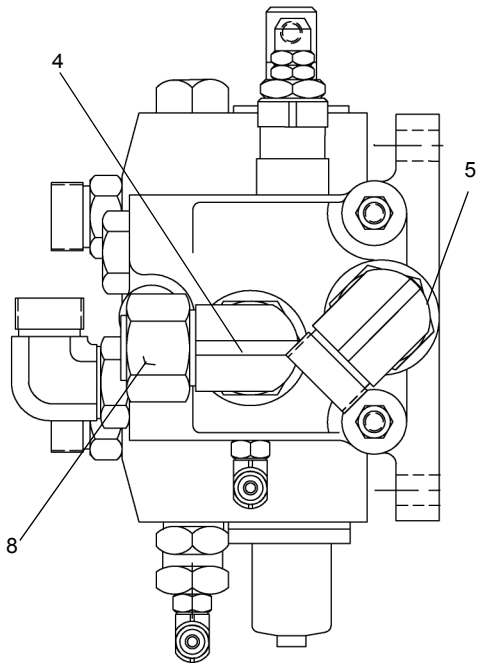

REF	PART NO.	DESCRIPTION	QTY
	500-01803-1 (Rev A)	*Valve ASSY, CF (Combined Flow)*	
1	550-00314	Valve ASSY, Winch	1
2	514-52003	90 Elbow M#4 OFS x M#4 ORB	2
3	514-57010	90 Elbow M#12 OFS x M#12 ORB	1
4	541-59021	90 Elbow M#16 OFS x M#16 ORB	1
5	514-69012	90 Elbow M#16 OFS x M#16 ORB SW	1
6	513-90032	CONN, M#16 OFS x M#16 ORB	1
7	513-70023	CONN, M#12 OFS x M#12 ORB	2
8	519-90036	Cap, Tube F#16 OFS	1

WHEN ORDERING PARTS, SPECIFY MODEL NUMBER, SERIAL NUMBER AND DESCRIPTION OF PARTS REQUIRED

https://truckmanualshub.com/

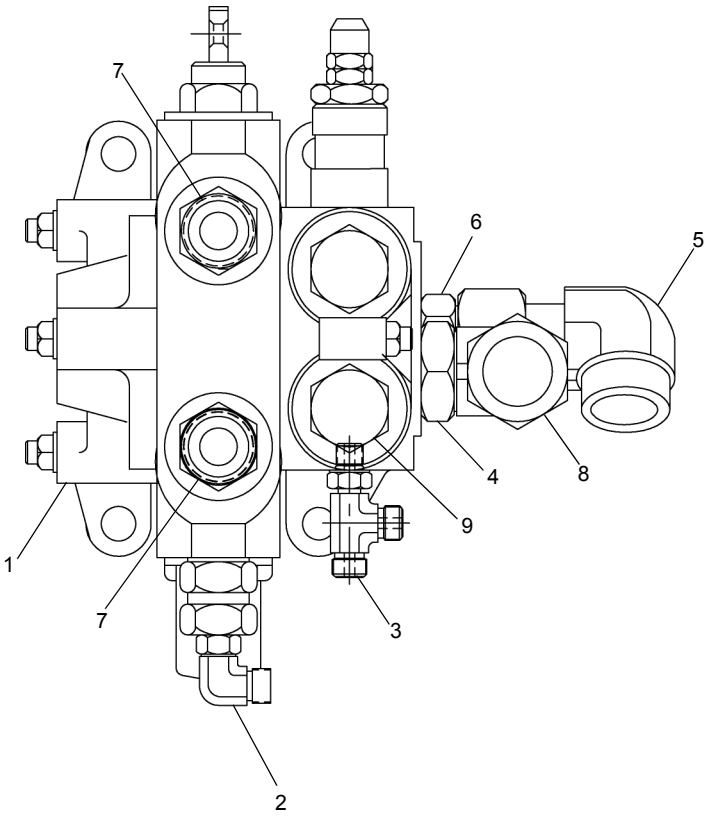

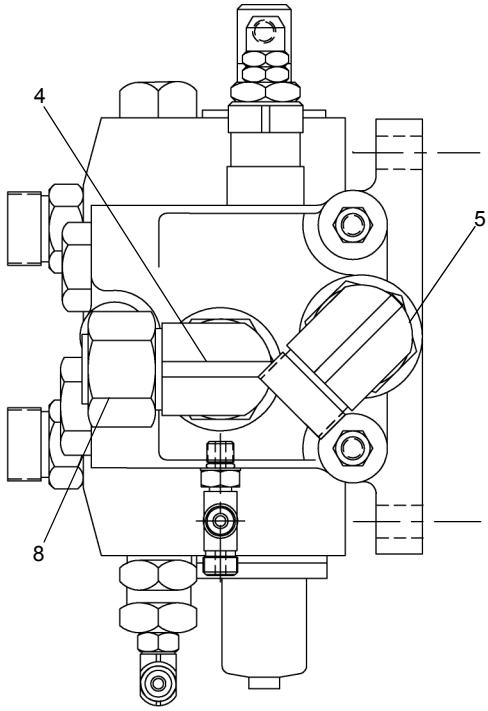

REF	PART NO.	DESCRIPTION	QTY
	500-01803-2 (Rev A)	*Valve ASSY, MS(Motor Shift)*	
1	550-00314	Valve ASSY, Winch	1
2	514-52003	90 Elbow M#4 OFS x M#4 ORB	1
3	516-82006	Tee, 2x M#4 OFS M#4 ORB	1
4	541-59021	90 Elbow M#16 OFS x M#16 ORB	1
5	514-69012	90 Elbow M#16 OFS x M#16 ORB SW	1
6	513-90032	CONN, M#16 OFS x M#16 ORB	1
7	513-70023	CONN, M#12 OFS x M#12 ORB	2
8	519-90036	Cap, Tube, F#16 OFS	1
9	517-30004	Plug, M#12 ORB	1

WHEN ORDERING PARTS, SPECIFY MODEL NUMBER, SERIAL NUMBER AND DESCRIPTION OF PARTS REQUIRED

https://truckmanualshub.com/

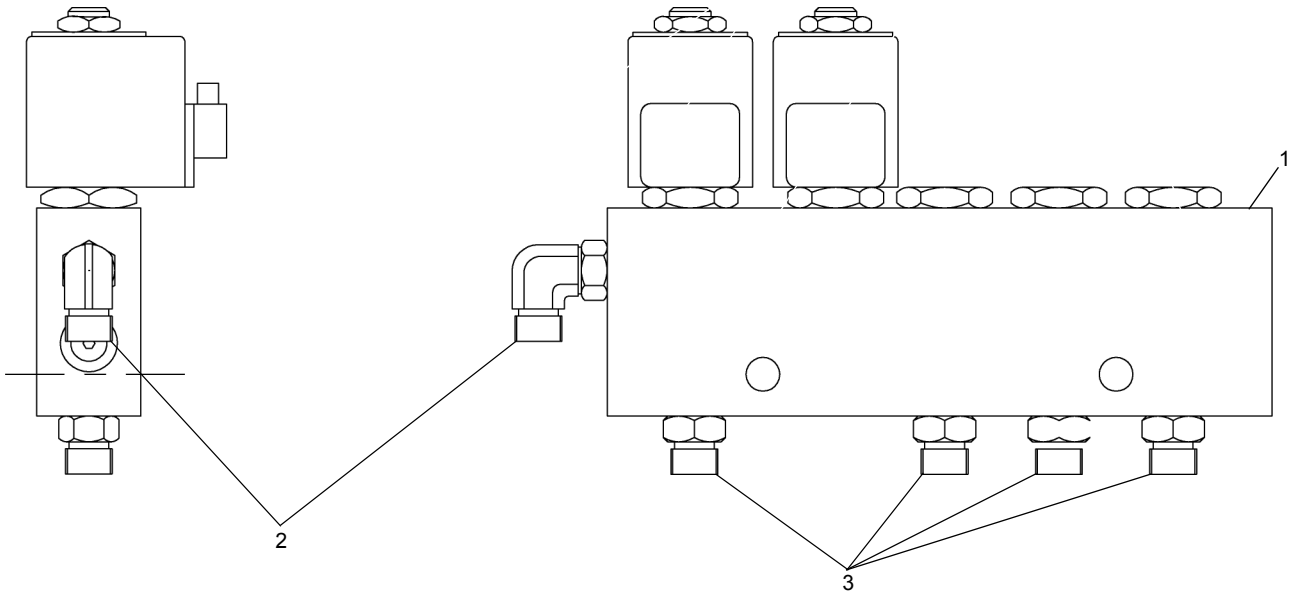

REF	PART NO.	DESCRIPTION	QTY
	500-01397 (Rev B)	*Valve ASSY, Unload W/FTGS*	
1	551-10136	Unloader Valve	1
2	514-52003	Elbow, 90 Deg., -4 OFS x -4 ORB	1
3	513-20017	Conn, -4 OFS x -4 ORB	4

WHEN ORDERING PARTS, SPECIFY MODEL NUMBER, SERIAL NUMBER AND DESCRIPTION OF PARTS REQUIRED

https://truckmanualshub.com/

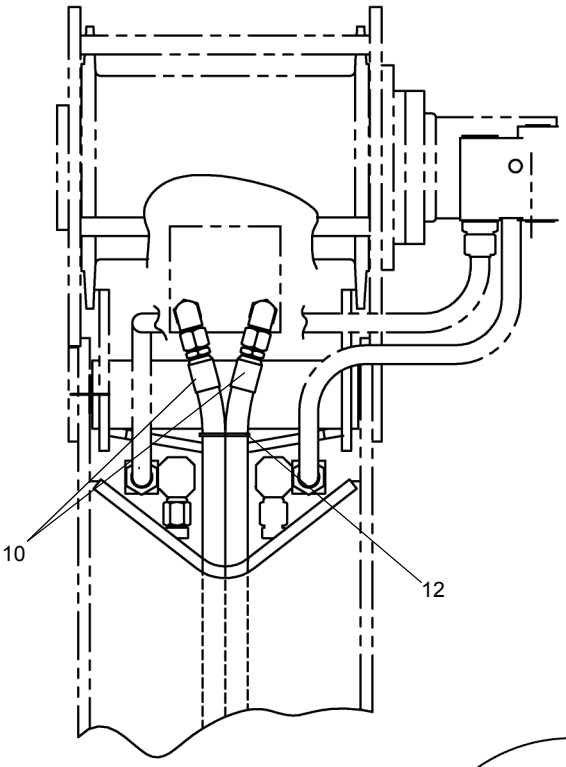

WINCH

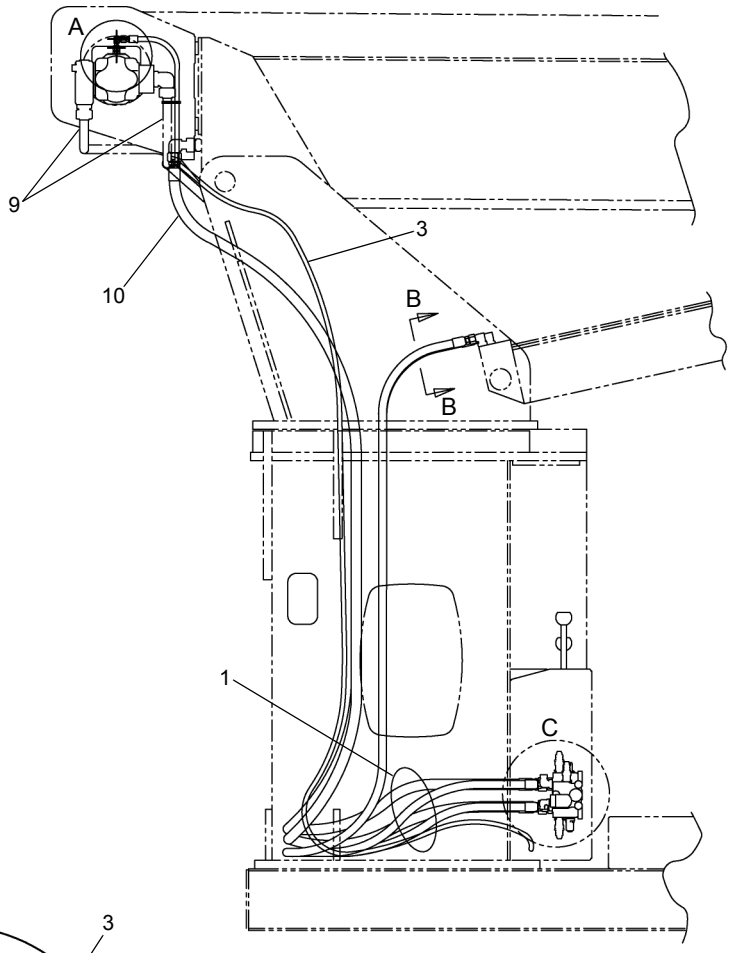

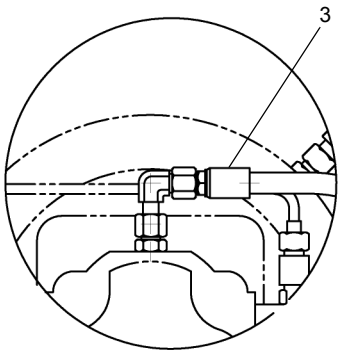

DETAIL A

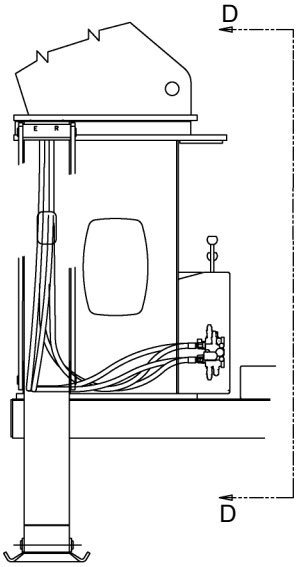

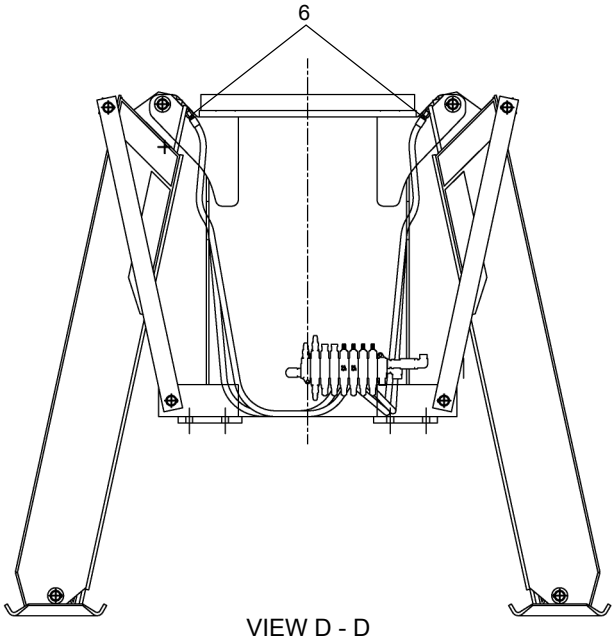

VIEW D - D

SEE PAGE 25.13

https://truckmanualshub.com/

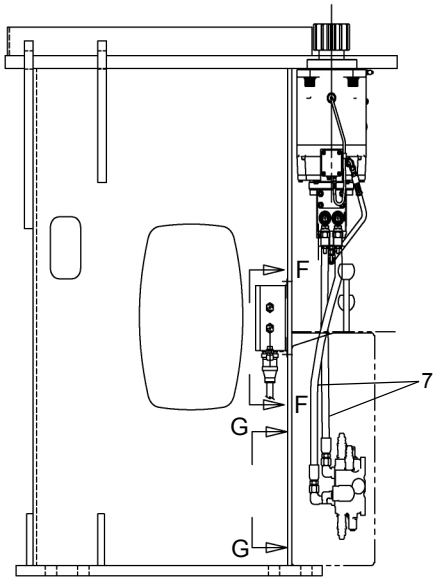

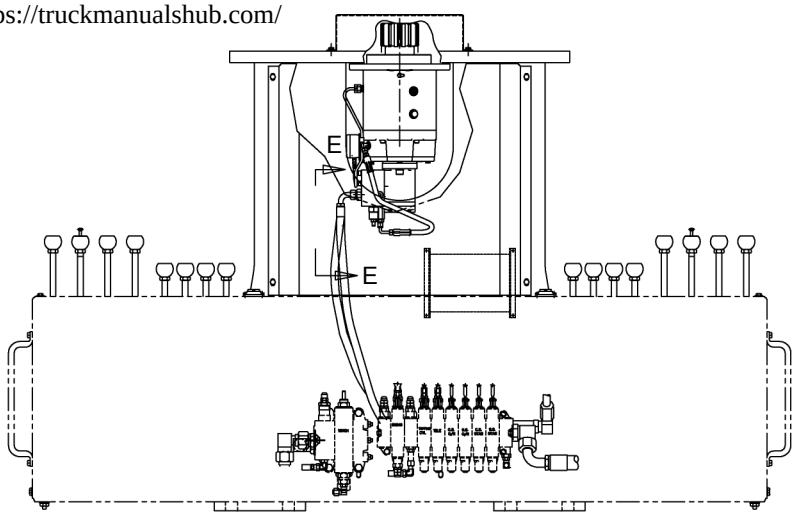

SWING

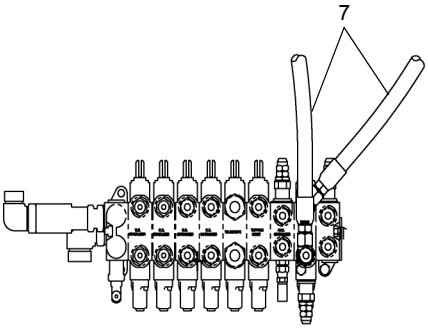

VIEW G - G

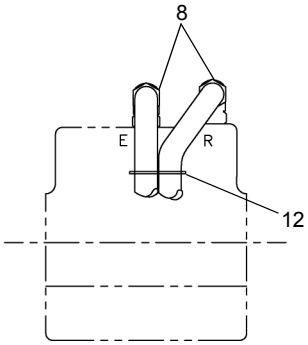

VIEW B - B

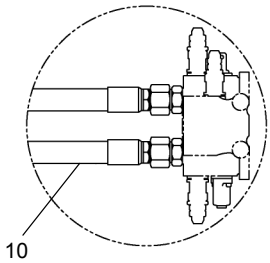

DETAIL C

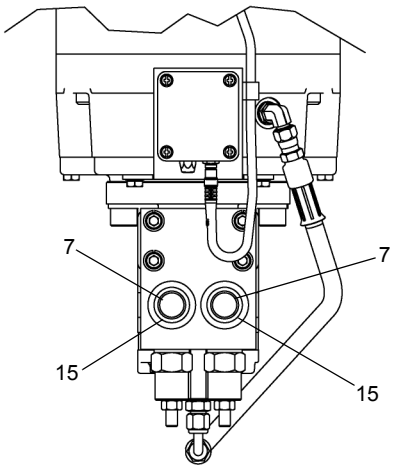

VIEW E - E

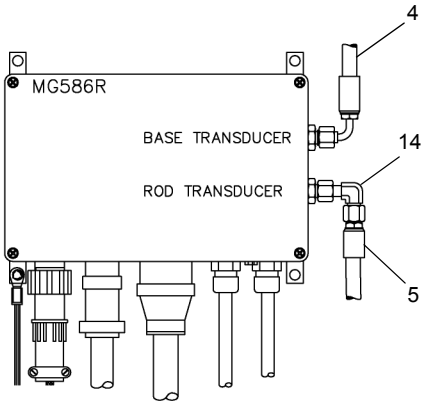

VIEW F - F

SEE PAGE 25.13

https://truckmanualshub.com/

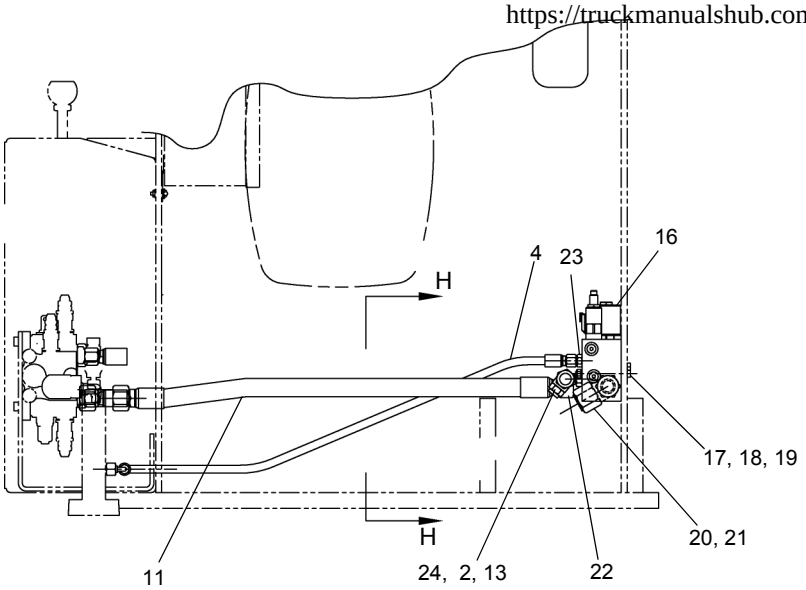

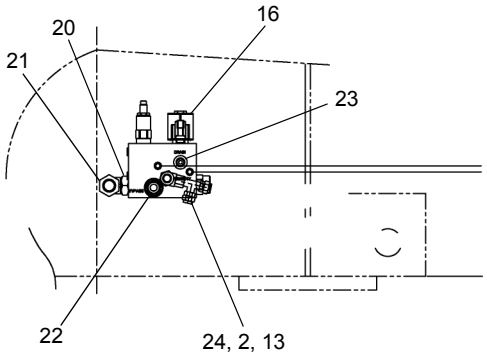

VIEW H - H

SEE PAGES 25.11 & 25.12

REF	PART NO.	DESCRIPTION	QTY
	500-01793-2 (Rev D)	*HYD Piping, Mainframe Non Continuous Rotation*	
1	503-92031-2	Hose Kit, M/F ASSY	1
2	516-84003	Swivel Run Tee #6	1
3	502-21002	Hose ASSY, Case Drain Winch Motor	1
4	502-11225	Hose ASSY, Greer Base/ Priority Valve Drain	2
5	502-10916	Hose ASSY, Greer Box-Rod	1
6	502-30534	Hose ASSY, Main Outrigger EXT/RET	4
7	502-30557	Hose ASSY, Swing Motor CW/CCW	2
8	502-35068	Hose ASSY, Topping Cylinder Up/Down	2
9	502-40928	Hose ASSY, Winch Motor Raise/Lower	2
10	502-35069	Hose ASSY, Boom Cylinder EXT/RET	2
11	502-40727	Hose ASSY, Priority Valve/ Main Valve	1
12	400-15088	Nylon Cable Tie	6
13	519-40007	Cap, #6 OFS	2
14	514-62002	Elbow, 90 S.N. #4 OFS	1
15	513-50027	STR CONN. #8 OFS X #10 ORB	2
16	559-00251	Priority Flow CNTRL. Valve	1
17	220-01011	HHCS, 5/16-18 UNC X 3.50 LG	2
18	222-11002	Lockwasher, 5/16”	2
19	221-01001	HEX Nut, 5/16-18 UNC	2
20	514-57011	Elbow, 90° #12 OFS X #10 ORB	1
21	519-70032	Cap, #12 OFS	1
22	513-60008	CONN. #10 OFS X #10 ORB	1
23	513-20019	CONN. #4 OFS X #6 ORB	1
24	514-54004	CONN. #6 OFS X #6 ORB	1

WHEN ORDERING PARTS, SPECIFY MODEL NUMBER, SERIAL NUMBER AND DESCRIPTION OF PARTS REQUIRED

https://truckmanualshub.com/

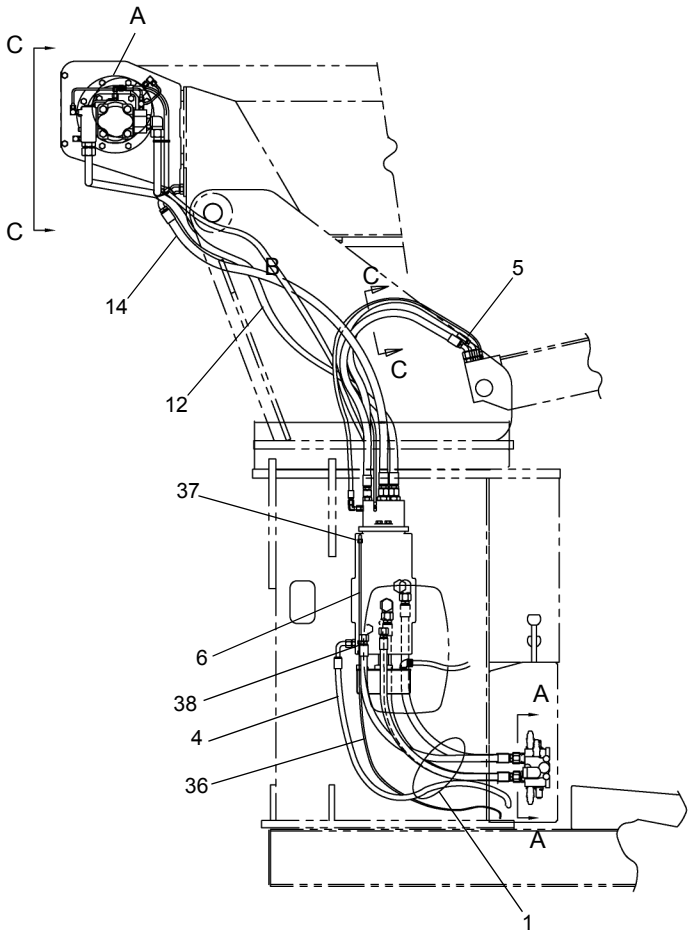

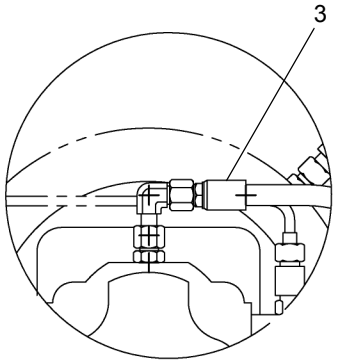

DETAIL A

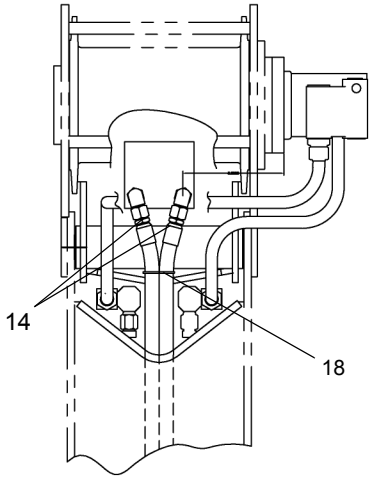

VIEW C - C
WINCH

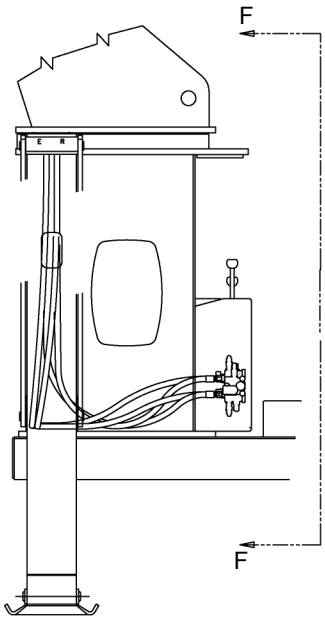

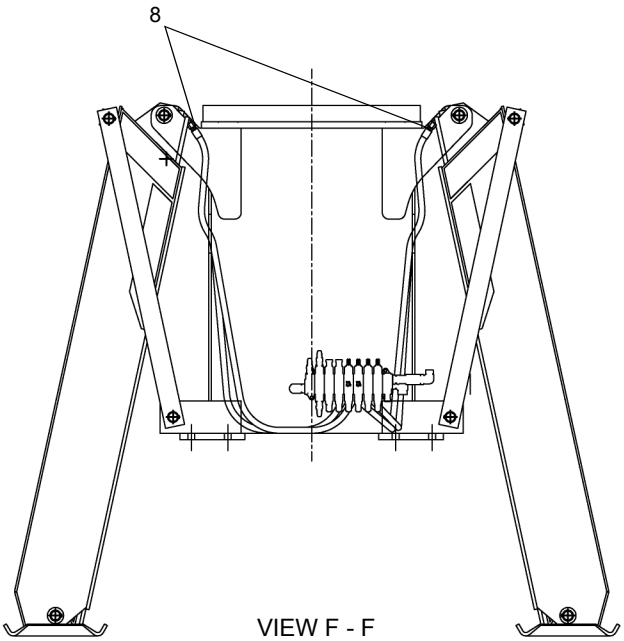

VIEW F - F
MAIN OUTRIGGER

SEE PAGE 25.16

WHEN ORDERING PARTS, SPECIFY MODEL NUMBER, SERIAL NUMBER AND DESCRIPTION OF PARTS REQUIRED

https://truckmanualshub.com/

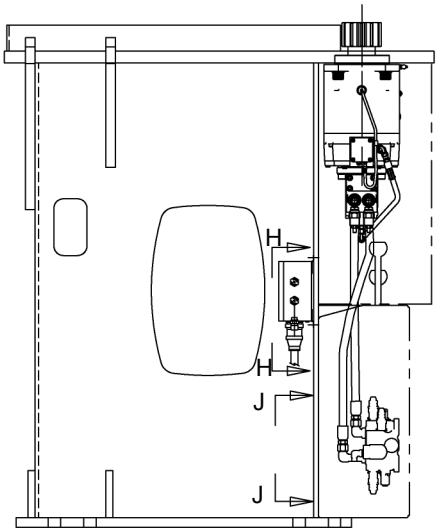

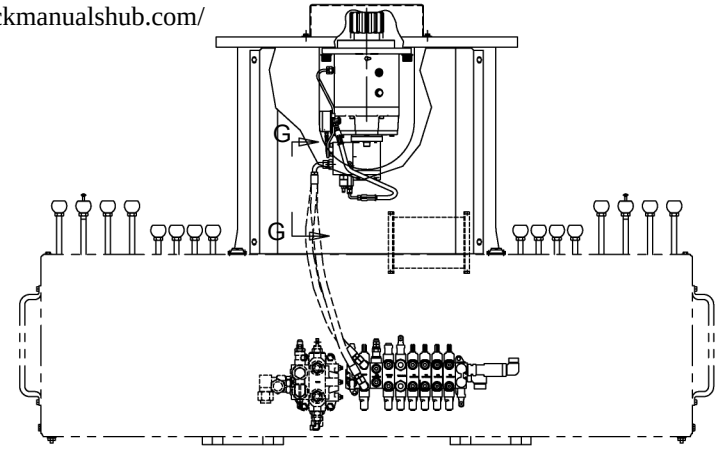

SWING

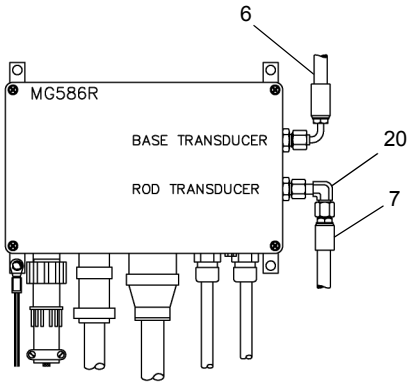

VIEW H - H
GREER BOX

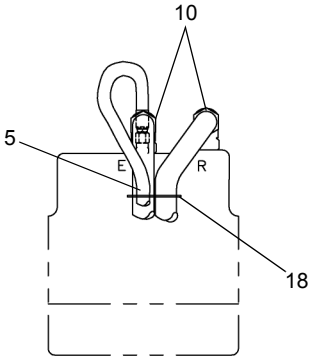

VIEW B - B

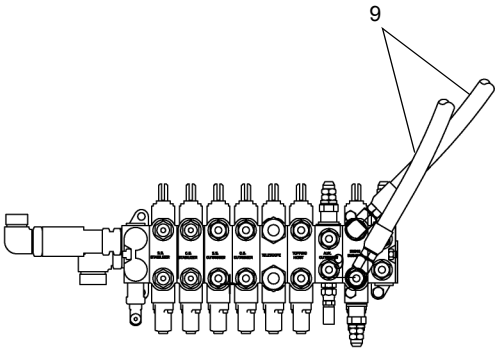

VIEW J - J

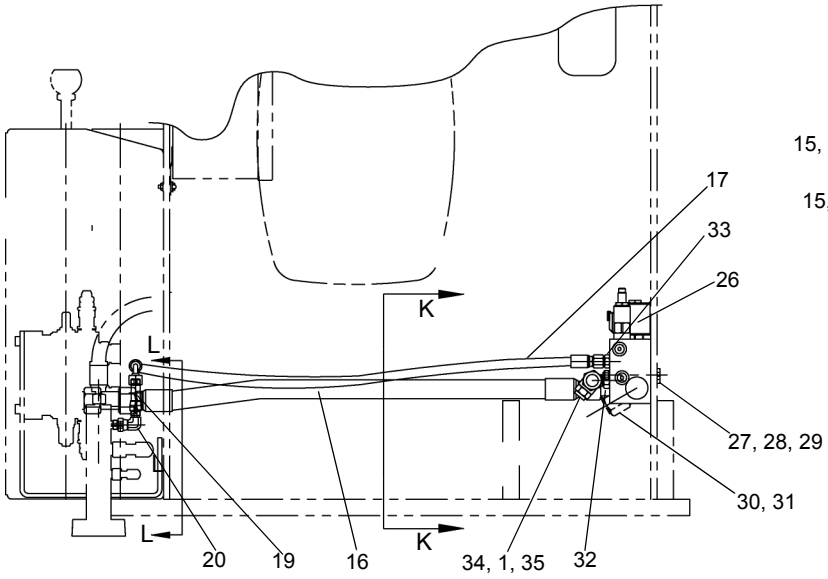

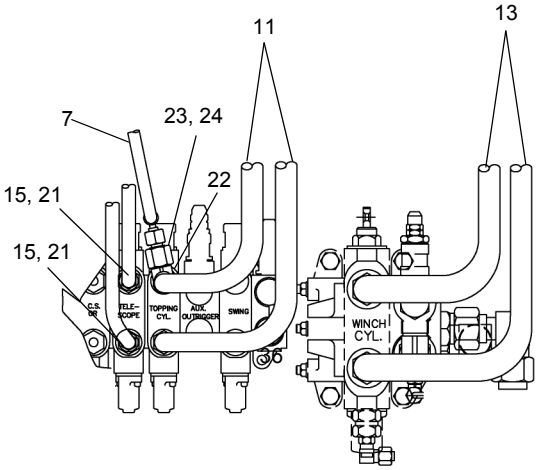

VIEW A - A

SEE PAGE 25.16

https://truckmanualshub.com/

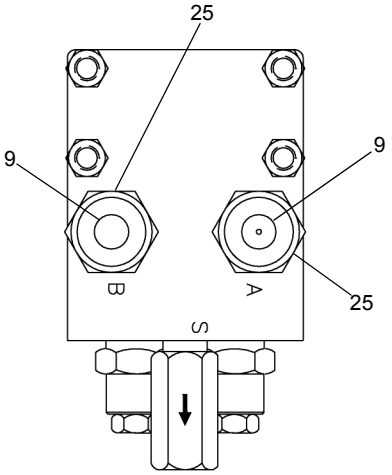

VIEW G - G

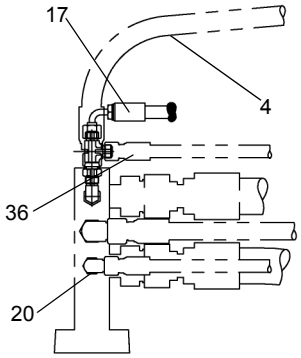

VIEW L - L

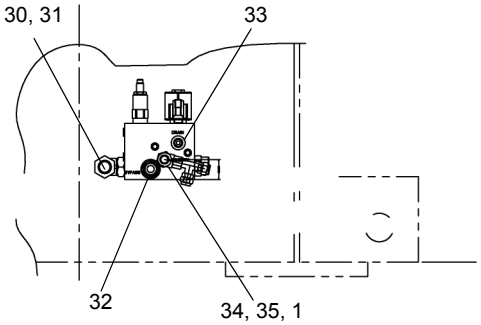

VIEW K - K

SEE PAGES 25.14 & 25.15

REF	PART NO.	DESCRIPTION	QTY
	500-01794-2 (Rev D)	*Hydraulic Piping, Main Frame Continuous Rotation*	
1	516-84003	Swivel Run, Tee #6	1
2	503-92030-2	Hose Kit, Main Frame Assembly 4792	1
3	502-21012	Hose, Case Drain Winch Motor(Upper)	1
4	502-21011	Hose, Case Drain Winch Motor(Lower)	1
5	502-11159	Hose, Greer Box - Base (Upper)	1
6	502-10974	Hose, Greer Box - Base (Lower)	2
7	502-10916	Hose, Greer Box - Valve	1
8	502-30534	Hose, Main Out Rigger EXT/RET	4
9	502-30557	Hose, Swing Motor CW/CCW	2
10	502-35026	Hose, Topping Cylinder Up/Down (Upper)	2
11	502-30628	Hose, Topping Cylinder Up/Down (Lower)	2
12	502-40789	Hose, Winch Motor Raise/Lower (Upper)	2
13	502-40787	Hose, Winch Motor Raise/Lower (Lower)	2
14	502-35073	Hose, Telescop Cylinder EXT/RET(Upper)	2
15	502-35074	Hose, Telescop Cylinder EXT/RET(Lower)	2
16	502-40727	Hose, Priority Valve/Main Valve	1
17	502-11225	Hose, Priority Valve Drain	1
18	400-15088	Nylon Cable Tie	6
19	516-82003	Tee, SW Run F#4 OFS X 2XM#4 OFS	1
20	514-62002	Elbow 90 SN #4 OFS	3
21	513-50023	STR CONN. #8 ORB/#8 OFS	2
22	516-85004	Tee, SN #8 OFS	1
23	519-50012	Reducer, #8 X #4 OFS	1
24	511-50004	Tube Nut, #8 OFS	1
25	513-50027	STR CONN. #10 ORB/#8 OFS	2
26	559-00251	Priority Flow Control Valve	1
27	220-01011	HHCS, 5/16-18 UNC X 3.50 LG	2
28	222-11002	Lock Washer 5/16”	2
29	221-01001	Hex Nut 5/16-18 UNC	2
30	514-57011	Elbow, 90 Deg #12 OFS X #10 ORB	1
31	519-70032	Cap, #12 OFS	1
32	513-60008	CONN. #10 OFS X #10 ORB	1
33	513-20019	CONN. #4 OFS X #6 ORB	1
34	514-54004	CONN. #6 OFS X #6 ORB	1
35	519-40007	Cap, #6 OFS	2
36	502-11262	Hose ASSY 1/4” I.D.(CTR’POST DRAIN)	1
37	514-52003	Elbow, 90 Deg #4 OFS X #4 ORB	1
38	516-82005	Tee, Branch #4 OFS X #4 ORB	1

https://truckmanualshub.com/

REF	PART NO.	DESCRIPTION	QTY
	503-94003 (Rev 00)	*Hose Kit-AUX O/R INSTL (Includes Items 1 thru 4)*	
1	502-20798	AUX. Beam VLV-Supply	1
2	502-20973	AUX. O/R Leg-Rear	2
3	502-20974	AUX. O/R Leg-Front	2
4	502-30586	AUX. Beam VLV-Return	1
	503-92025 (Rev 00)	*Hose Kit, Console Assembly (Includes Items 5 thru 9)*	
5	502-10973	Hose ASSY 1/4" I.D. (Test Port - Shuttle Valve)	1
6	502-11308	Hose ASSY 1/4" I.D. (Test Ports - Winch/Swing Valves)	2
7	502-10999	Hose ASSY 1/4" I.D. (Return - Unloader Valve Manifold)	1
8	502-50313	Hose ASSY 1" I.D. (Return - Winch Valve)	1
9	502-50314	Hose ASSY 1" I.D. (Return - Crane Valve)	1
	503-92028 (Rev 00)	*Hose Kit, 2 SP Winch (Includes Items 10 thru 12)*	
10	502-11310	Hose, 1/4 X 9, -4 FOFS -4 FOFS 90	1
11	502-20998	Hose, 3/8 X 11.5, -6 FOFS -6 FOFS 90	1
12	502-20999	Hose, 3/8 X 16, -6 FOFS -6 FOFS 90	1
	503-92031-2 (Rev 00)	*Mainframe ASSY Hose Kit, Non-CON. ROT (Includes Items 13 thru 21)*	
13	502-21002	Hose ASSY, 3/8" I.D. (Case Drain Winch Motor)	1
14	502-11225	Hose ASSY 1/4" I.D. (Greer Box-Base)	2
15	502-10916	Hose ASSY 1/4" I.D. (Greer Box-Rod)	1
16	502-30534	Hose ASSY 1/2" I.D. (Main Outrigger Extend/Retract)	4
17	502-30557	Hose ASSY 1/2" I.D. (Swing Motor CW/CCW)	2
18	502-35068	Hose ASSY 5/8" I.D. (Topping Cylinder Up/Down)	2
19	502-40928	Hose ASSY 3/4" I.D. (Winch Motor Raise/Lower)	2
20	502-35069	Hose ASSY 5/8" I.D. (Boom Cylinder Extend/Retract)	2
21	502-40727	Hose ASSY 3/4" I.D. (Priority Valve/Main Valve)	1
	503-92030-2 (Rev A)	*Mainframe ASSY Hose Kit, CON. ROT (Includes Items 22 thru 37)*	
22	502-21012	Hose ASSY 3/8" I.D. (Case Drain Winch Motor) (Upper)	1
23	502-21011	Hose ASSY 3/8" I.D. (Case Drain Winch Motor) (Lower)	1
24	502-11159	Hose ASSY 1/4" I.D. (Greer Box-Base) (Upper)	1
25	502-10974	Hose ASSY 1/4" I.D. (Greer Box-Base) (Lower)	2
26	502-10916	Hose ASSY 1/4" I.D. (Greer Box-Valve)	1
27	502-30534	Hose ASSY 1/2" I.D. (Main Outrigger Extend/Retract)	4
28	502-30557	Hose ASSY 1/2" I.D. (Swing Motor CW/CCW)	2
29	502-35026	Hose ASSY 5/8" I.D. (Topping Cylinder UP/Down) (Upper)	2
30	502-30628	Hose ASSY 1/2" I.D. (Topping Cylinder UP/Down) (Lower)	2
31	502-40789	Hose ASSY 3/4" I.D. (Winch Motor Raise/Lower) (Upper)	2
32	502-40787	Hose ASSY 3/4" I.D. (Winch Motor Raise/Lower) (Lower)	2
33	502-35074	Hose ASSY 5/8" I.D. (Boom Cylinder Extend/Retract) (Upper)	2
34	502-35073	Hose ASSY 5/8" I.D. (Boom Cylinder Extend/Retract) (Lower)	2
35	502-11262	Hose ASSY 1/4" I.D. (CTR'Post Drain)	1
36	502-40727	Hose ASSY 3/4" I.D. (Priority Valve/Main Valve)	1
37	502-11225	Hose ASSY 1/4" I.D. (Priority Valve Drain)	1
	503-93010-1 (Rev 00)	*PTO Pump Hose Kit (Includes Items 38 thru 42)*	
38	503-06008	Hose ASSY, (2-1/2" X 110") Pump Inlet	1
39	502-30749	Hose ASSY, (1/2" X 92") Swing Pump	1
40	502-40929	Hose ASSY, (3/4" X 96") Boom Pump	1
41	502-50521	Hose ASSY, (1" X 108") Winch Pump	1
42	201-00248	T-Bolt Hose Clamp, 3" O.D.	2

ITEMS 1 TO 42 ARE NOT ILLUSTRATED

WHEN ORDERING PARTS, SPECIFY MODEL NUMBER, SERIAL NUMBER AND DESCRIPTION OF PARTS REQUIRED

https://truckmanualshub.com/

https://truckmanualshub.com/

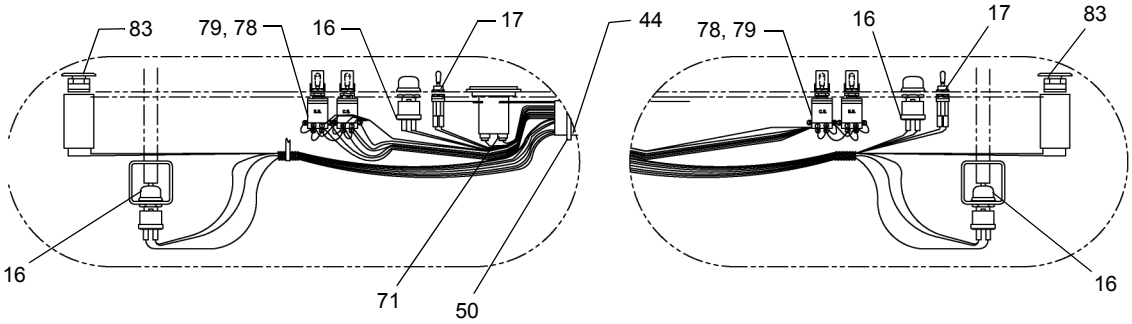

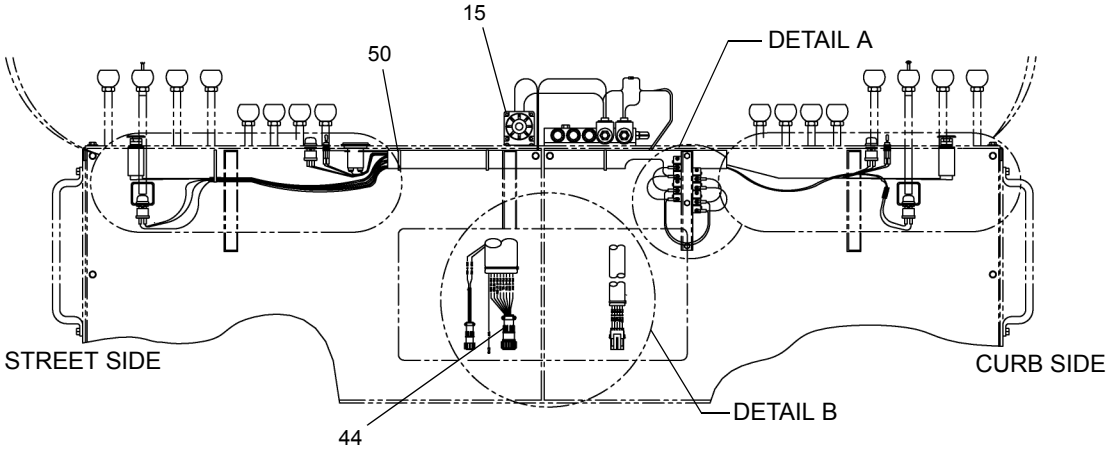

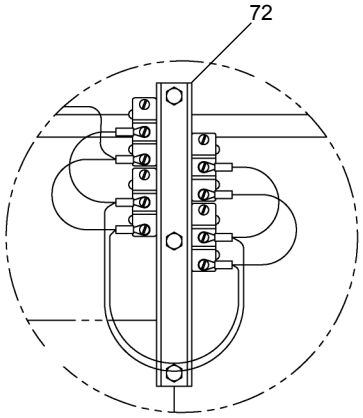

DETAIL A

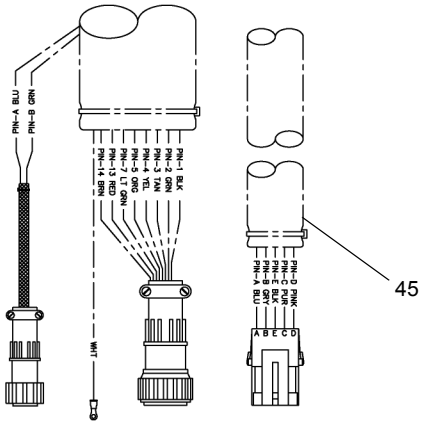

DETAIL B

FOR CF WINCH 800-50054-2

SEE PAGES 28.6 & 28.7

WHEN ORDERING PARTS, SPECIFY MODEL NUMBER, SERIAL NUMBER AND DESCRIPTION OF PARTS REQUIRED

https://truckmanualshub.com/

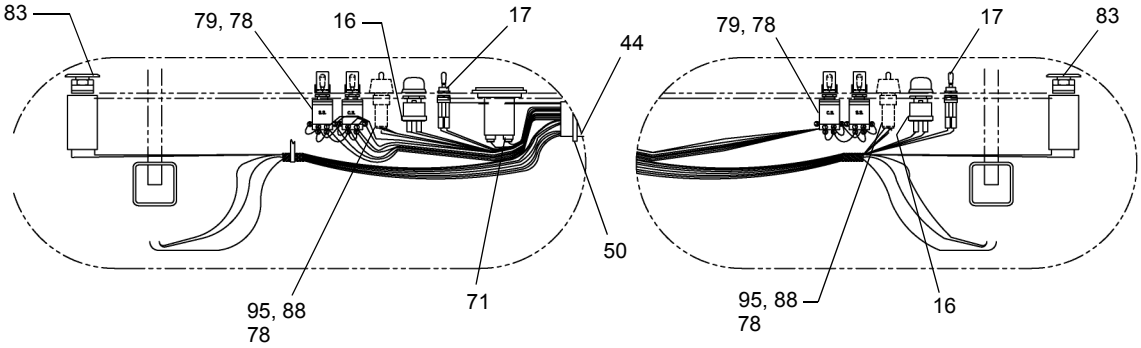

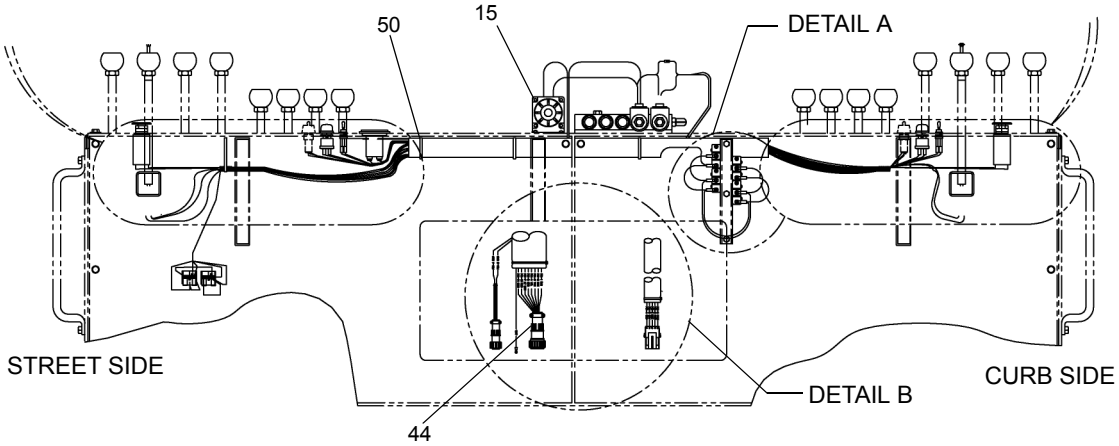

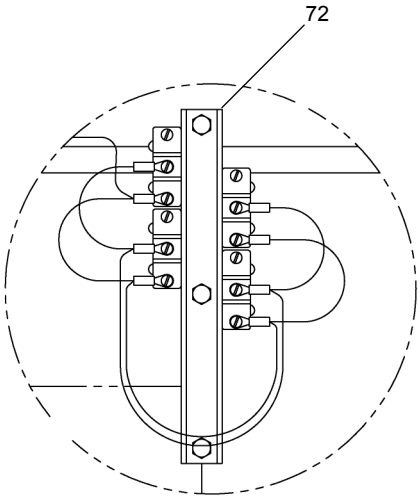

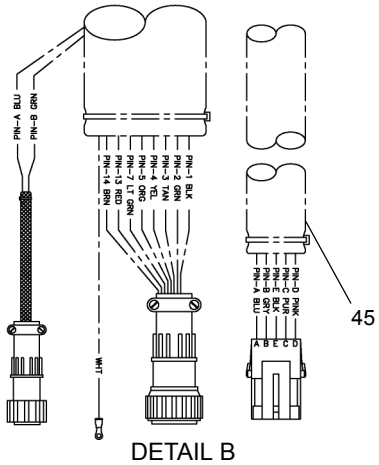

FOR MS WINCH 800-50054-5

SEE PAGES 28.6 & 28.7

WHEN ORDERING PARTS, SPECIFY MODEL NUMBER, SERIAL NUMBER AND DESCRIPTION OF PARTS REQUIRED

https://truckmanualshub.com/

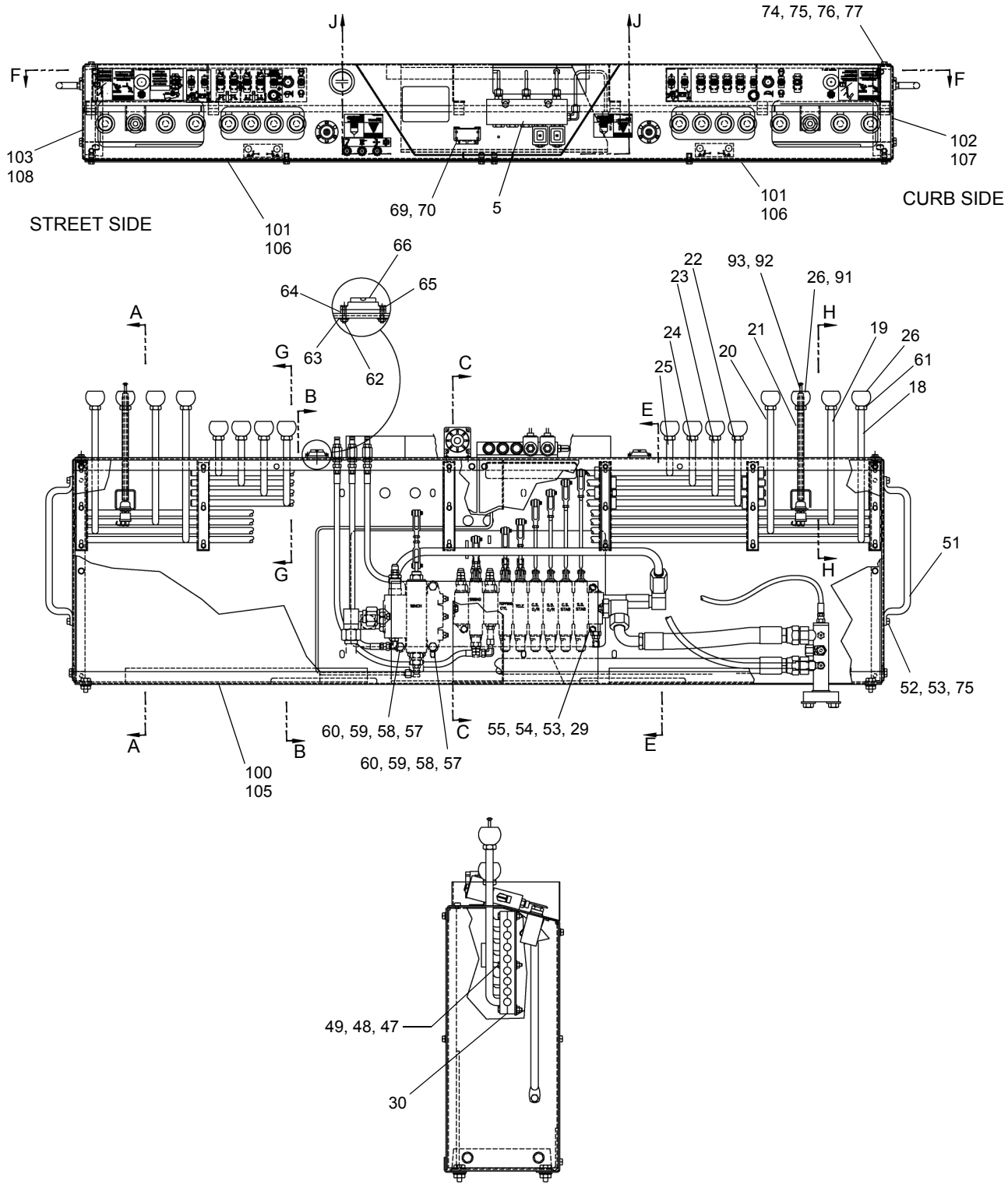

SEE PAGES 28.6 & 28.7

WHEN ORDERING PARTS, SPECIFY MODEL NUMBER, SERIAL NUMBER AND DESCRIPTION OF PARTS REQUIRED

TEREX® P/N 12261-286	**CONTROL CONSOLE ASSY 4792 CF/MS WINCH (GRAY & RED)**	DATE: Revised 12-2013	GROUP
		MODEL: BT4792	**28**
		PAGE 28.3	

https://truckmanualshub.com/

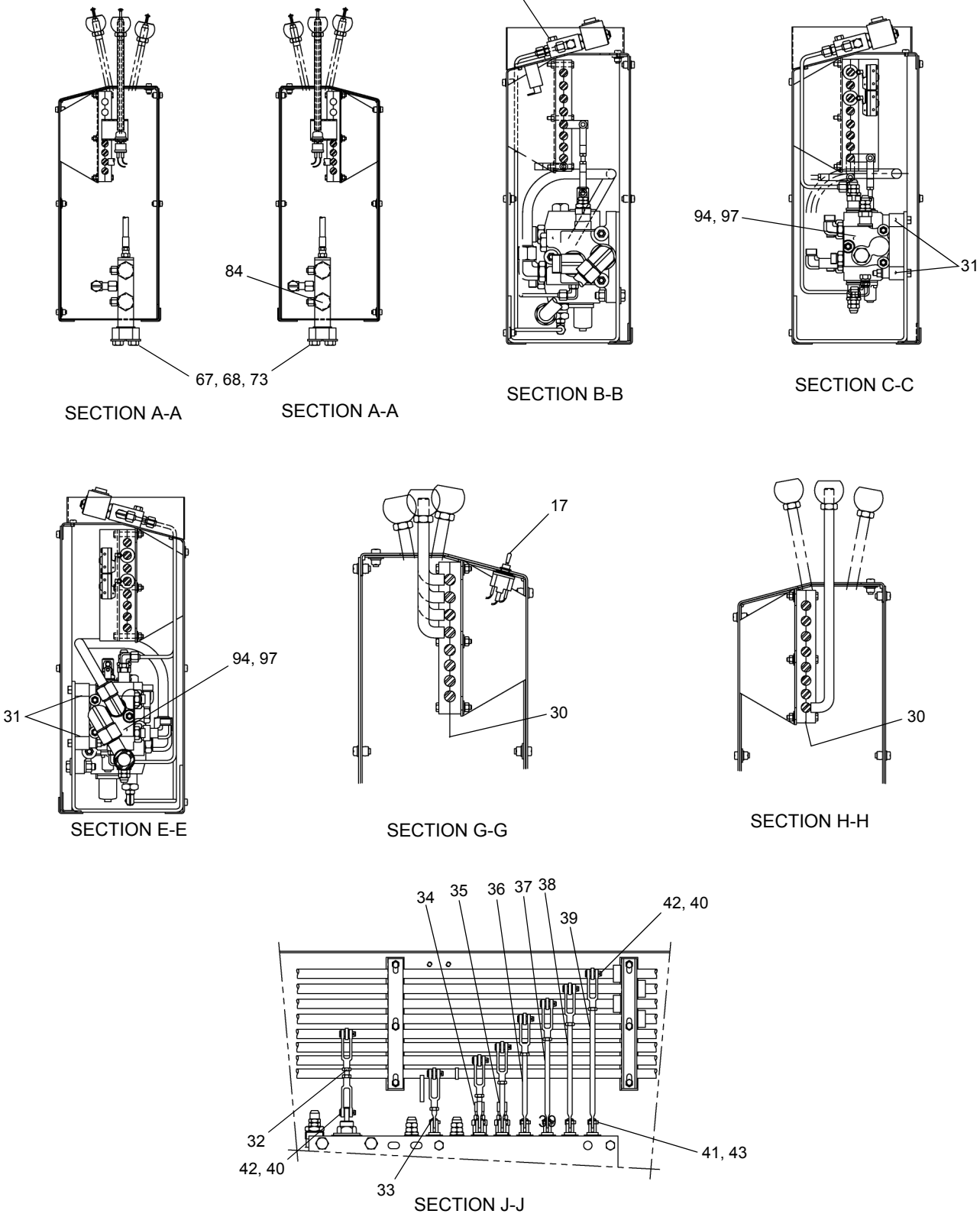

SEE PAGES 28.6 & 28.7

WHEN ORDERING PARTS, SPECIFY MODEL NUMBER, SERIAL NUMBER AND DESCRIPTION OF PARTS REQUIRED

https://truckmanualshub.com/

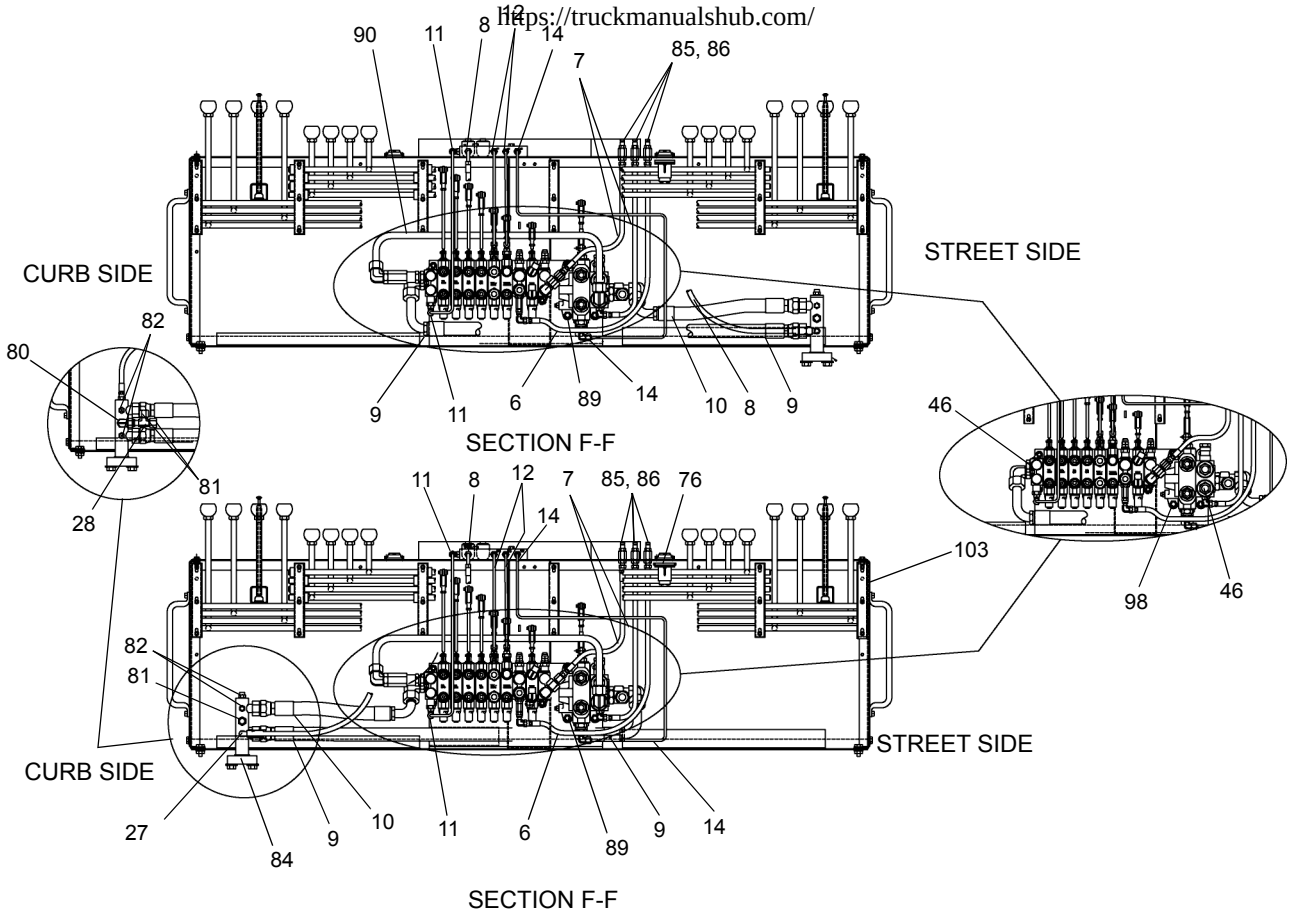

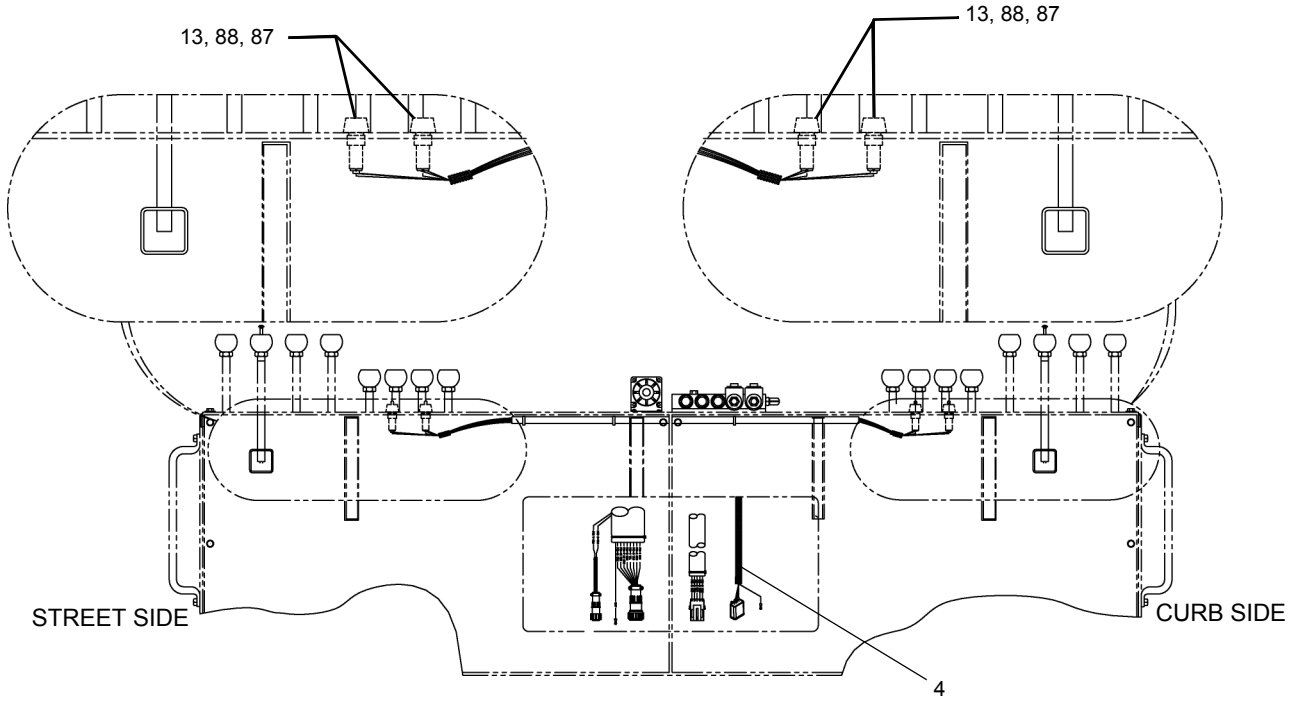

SEE PAGES 28.6 & 28.7

WHEN ORDERING PARTS, SPECIFY MODEL NUMBER, SERIAL NUMBER AND DESCRIPTION OF PARTS REQUIRED

SEE PAGES 28.1, 28.2, 28.3, 28.4 & 28.5
https://truck-manuals-hub.com/

REF	PART NO.	DESCRIPTION	QTY
	800-50054-2 (Rev N)	*Control Console ASSY 4792 Series CF Winch (Item 1 thru 94 & 99 thru 103)*	
	800-50054-2-R (Rev N)	*Control Console ASSY 4792 Series CF Winch (Item 1 thru 94 & 104 thru 108)*	
	800-50054-5 (Rev N)	*Control Console ASSY 4792 Series MS Winch (Item 1 thru 88& 95 thru 103)*	
	800-50054-5-R (Rev N)	*Control Console ASSY 4792 Series MS Winch (Item 1 thru 88, 95 thru 98 & 104 thru 108)*	
1*	503-92025	Hose Kit, Control ASSY (Items Include 6 to 10)	1
2*	T128313	Kit - Control Handle, Triple Weldment (Items Include 18 to 25)	1
3*	806-00247	Kit - Control Link, Triple Pump (Items Include 32 to 39)	1
4	T121810	Harness, AUX O/R Sensor Lamps	1
5	500-01397	Valve ASSY, Unload W/FTGS	1
6	502-10973	Hose ASSY, Test Port-Shuttle Valve	1
7	502-11308	Hose ASSY, Test Port-Winch/Swing Valves	2
8	502-10999	Hose ASSY, Unload Valve Return	1
9	502-50313	Hose ASSY, Valve Return	1
10	502-50314	Hose ASSY, Valve Return	1
11	510-20457	Tube ASSY, Unload VLV SUP	1
12	510-20372	Tube ASSY, Telescopic Unload	2
13	1223-1023	Lens (Green) (AUX O/R Sensor)	4
14	510-20459	Tube ASSY, Winch Unload	1
15	400-05334	Horn, ATB, ECA	1
16	400-04125	Switch Momentary (For 800-50054-2 & -2-R)	4
	400-04125	Switch Momentary (For 800-50054-5 & -5-R)	2
17	400-04123	Switch Start/Stop	2
18	T128312	Control Handle Weldment (Swing)	1
19	T128311	Control Handle Weldment (Boom Hoist)	1
20	T128310	Control Handle Weldment (Telescope)	1
21	T128309	Control Handle Weldment (Winch)	1
22	804-00811	Control Handle, C.S. O/R	1
23	804-00812	Control Handle, S.S. O/R	1
24	804-00809	Control Handle, C.S. AX O/R	1
25	804-00810	Control Handle, S.S. AX O/R	1
26	808-00048	Knob, Control (Black) (For 800-50054-2 & -2-R)	14
	808-00048	Knob, Control (Black) (For 800-50054-5 & -5-R)	16
27	514-52002	Elbow 90 S.N. #4 OFS	1
28	516-85006	Tee, Run M#8 OFS X M#8 OFS	1
29	WBR-37RXA00-20	WSH, FL TYPB-REG 0.375, ST Z	6
30	709-01119	Block, Bearing	12
31	001-20057	Space, Valve Spacer	4
32	806-00243	CTRL Link ASSY, -Winch (2-1141)	1
33	806-00235	CTRL Link ASSY, -Swing (2-1139)	1
34	806-00236	CTRL Link ASSY, -Boom (2-1139)	1
35	806-00237	CTRL Link ASSY, -Tele (2-1139)	1
36	806-00238	CTRL Link ASSY, -C.S. O.R. (2-1139)	1
37	806-00239	CTRL Link ASSY, -S.S. O/R (2-1139)	1
38	806-00240	CTRL Link ASSY, -C.S. STB (2-1139)	1
39	806-00241	CTRL Link ASSY, S.S. STB (2-1139)	1
40	870-00129	Pin, CLEVIS 5/16 DIA	9
41	870-00044	Pin, CLEVIS 3/16 DIA	7
42	224-02001	Pin, Cotter 1/8 X 3/4”	9
43	224-01001	Pin, Cotter 3/32 X 1/2	7
44	T127469	Harness BT Control Console	1
45	400-25189	Harness ASSY, CON. AUX O/R	1
46	519-70032	Plug #12 ORB	2
47	WBR-25RX734-20	WSH, FL TYPB-REG 0.25, ST Z	18
48	NYL-250C000-25	Nut, HEX NYL-INS 0.25-20, ST Z G5	18
49	S01-250CB00-25	SCR, HHCS 0.25-20X2.00, ST Z G5	18
50	400-15086	Nylon Cable Tie TY7X2	5
51	209-00444	Handle C/H #2399-D	2
52	SHF-375CA00-25	SCR, HHCS FL 0.375-16 X 1.00, ST Z G5	4
53	W07-375C000-20	WSH, LCK, MED-SPLT 0.375, ST Z	10
54	N04-375C000-25	Nut, HEX 0.375-16, ST Z G5	6
55	S01-375CB50-25	SCR, HHCS 0.375-16 X 2.50, ST Z G5	4
56	S01-375CB00-25	SCR, HHCS 0.375-16 X 2.00, ST Z G5	2

WHEN ORDERING PARTS, SPECIFY MODEL NUMBER, SERIAL NUMBER AND DESCRIPTION OF PARTS REQUIRED

SEE PAGES 28.1, 28.2, 28.3, 28.4 & 28.5
https://truckmanualshub.com/

REF	PART NO.	DESCRIPTION	QTY
	800-50054-2 (Rev N)	*Control Console ASSY 4792 Series CF Winch (Item 1 thru 94 & 99 thru 103) (Contd..)*	
	800-50054-2-R (Rev N)	*Control Console ASSY 4792 Series CF Winch (Item 1 thru 94 & 104 thru 108) (Contd..)*	
	800-50054-5 (Rev N)	*Control Console ASSY 4792 Series MS Winch (Item 1 thru 88 & 95 thru 103) (Contd..)*	
	800-50054-5-R (Rev N)	*Control Console ASSY 4792 Series MS Winch (Item 1 thru 88, 95 thru 98 & 104 thru 108) (Contd..)*	
57	S01-500CB00-25	SCR, HHCS 0.50-13 X 2.00, ST Z G5	3
58	W07-500C000-20	WSH, LCK, MED-SPLT 0.50, ST Z	3
59	WBR-50RXA37-20	WSH, FL TYPB-REG 0.50, ST Z	6
60	N04-500C000-25	Nut, HEX 0.50-13, ST Z G5	3
61	N05-625C000-25	Nut, HEX, JAM 0.625-11, ST Z G5	16
62	S16-164C750-20	SCR, FHSHCS 08-32X0.75, ST Z	6
63	NYL-164C000-22	Nut, HEX NYL-INS 08-32, ST Z G2	6
64	263-00044	Gasket, Level Mounting	2
65	209-00831	Level Base, Circular Level	2
66	209-00832	Circular Level Indicator	2
67	519-00008	Block-Off Plate	1
68	263-00041	Gasket - Block - Off Plate	1
69	SL5-190C750-20	SCR, CREC RND MS, 10-24X0.75, ST Z	2
70	NYL-190C000-22	Nut, HEX NYL-INS 10-32, ST Z G2	2
71	1245-162	Hour Meter HOBB 85006-04	1
72	400-24062	SubASSY, O/R Alarm Switchs	1
73	S01-500CA25-25	SCR, HHCS 0.50-13X1.25, ST Z G5	2
74	SHF-312C750-25	SCR, HHCS FL 0.312-18X0.75, ST Z G5	22
75	WBR-31RX875-20	WSH, FL TYPB-REG 0.3125, ST Z	26
76	W07-312C000-20	WSH, LCK, MED-SPLT 0.3125, ST Z	22
77	N04-312C000-25	Nut, HEX 0.3125-18, ST Z G5	6
78	400-04122	Switch, DPDT MOM (For 800-50054-2 & -2-R)	4
	400-04122	Switch, DPDT MOM (For 800-50054-5 & -5-R)	6
79	400-04036	Switch Guard	4
80	514-65004	Elbow, SN #8 OFS	1
81	519-50010	Cap, #8 OFS	1
82	519-20004	Cap, #4 OFS	2
83	1223-981	E-Stop Push Button	2
84	519-90051	Manifold, Return	1
85	518-20013	Test Port Bulkhead Seal-LOK #4	3
86	12019-558	Dust Cover (Test Port)	3
87	1223-1021	Lamp (For 800-50054-2 & -2-R)	4
	1223-1021	Lamp (For 800-50054-5 & -5-R)	6
88	1223-1020	Socket (MS Winch & AUX O/R Sensor) (For 800-50054-2 & -2-R)	4
	1223-1020	Socket (MS Winch & AUX O/R Sensor) (For 800-50054-5 & -5-R)	6
89	500-01803-1	Valve ASSY, Winch For CF	1
90	510-70773	Tube ASSY, Power Beyond	1
91	808-00049	Knob, Control Winch (Black)	2
92	809-00385	Rod, MS Winch	2
93	222-40007	Retainer, Rod	2
94	500-01804-1	Valve ASSY, Main W/CF Winch 4792	1
95	1223-1022	Lens (Red) (MS Winch)	2
96*	400-02449	Latch Relay MS Winch	1
97	500-01804-2	Valve ASSY, Main W/MS Winch 4792	1
98*	500-01803-2	Valve ASSY Winch For MS	1
99*	T128052	Console Cover Kit (Gray) (Items Includes 100 thru 103)	1
100	T128048	Console Weldment (Gray)	1
101	802-01390-P7	Cover, Console - Front (Gray)	2
102	802-01489-P7	Cover, End Console - C S (Gray)	1
103	802-01490-P7	Cover, End Console - S S (Gray)	1
104*	T128053	Console Cover Kit (Red) (Items Includes 105 thru 108)	1
105	T128049	Console Weldment (Red)	1
106	802-01390-P4	Cover, Console - Front (Red)	2
107	802-01489-P4	Cover, End Console - C S (Red)	1
108	802-01490-P4	Cover, End Console - S S (Red)	1

* ITEMS 1, 2, 3, 96, 98, 99 & 104 ARE NOT SHOWN IN ILLUSTRATION.

WHEN ORDERING PARTS, SPECIFY MODEL NUMBER, SERIAL NUMBER AND DESCRIPTION OF PARTS REQUIRED

https://truckmanualshub.com/

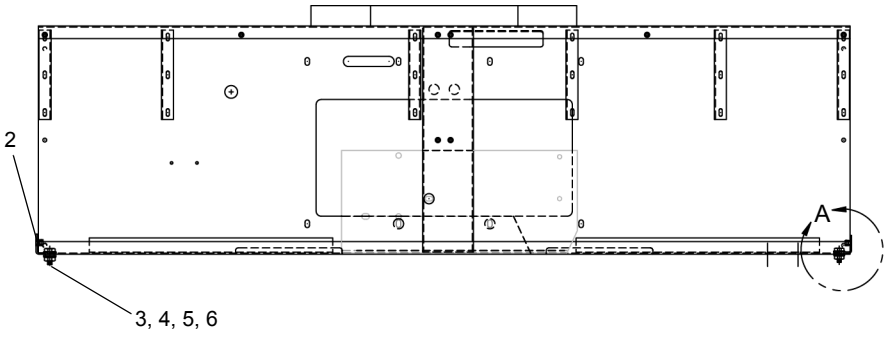

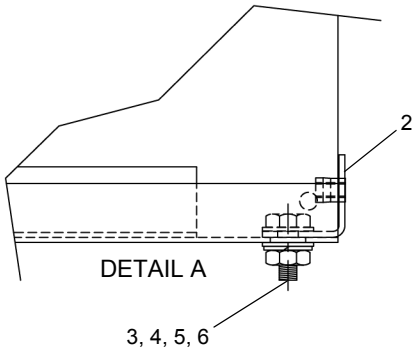

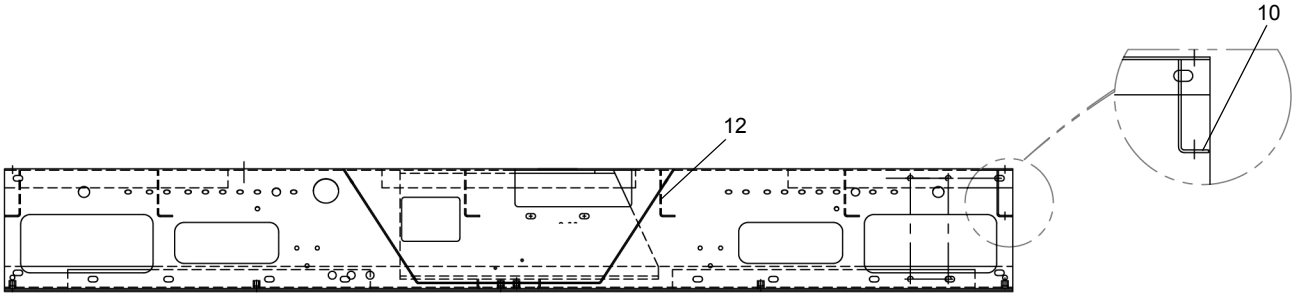

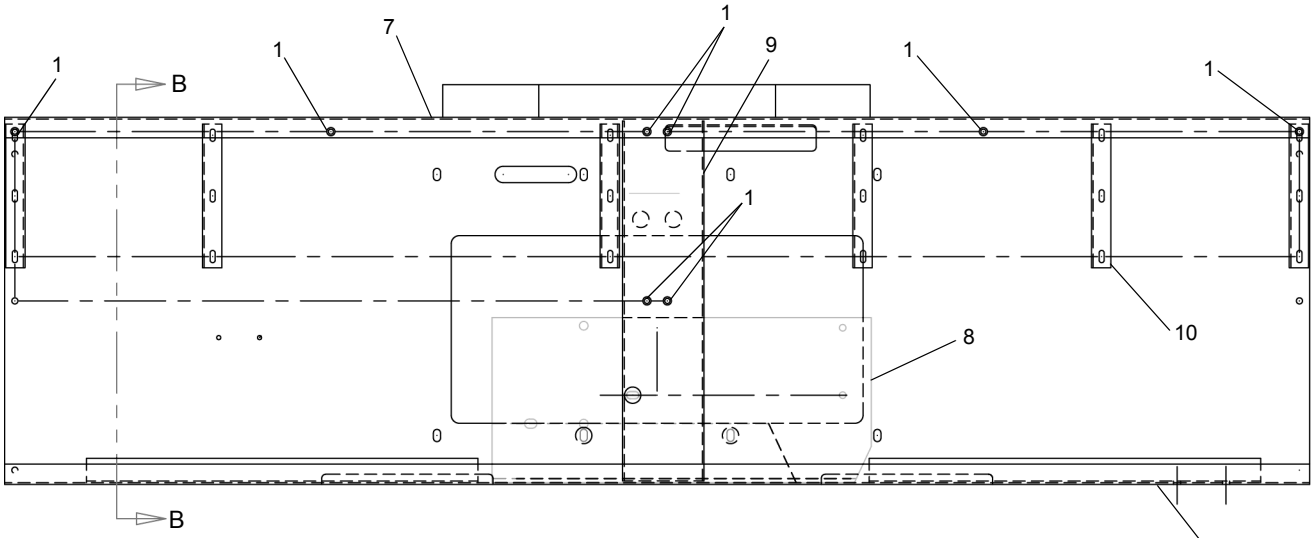

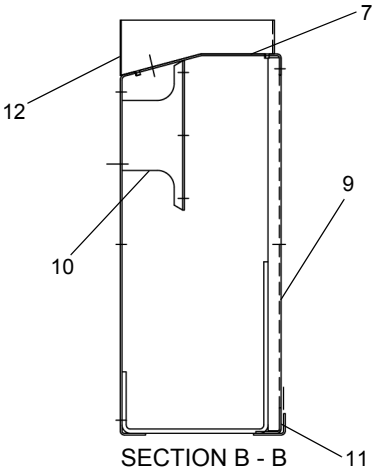

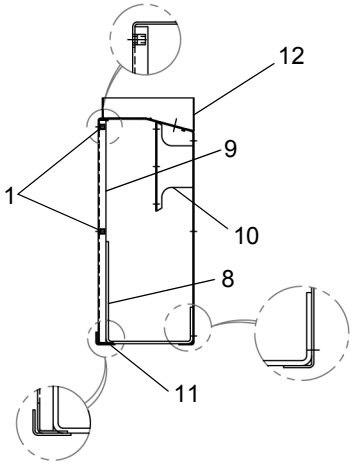

SEE PAGE 28.9

WHEN ORDERING PARTS, SPECIFY MODEL NUMBER, SERIAL NUMBER AND DESCRIPTION OF PARTS REQUIRED

TEREX® P/N 12261-286	**CONTROL CONSOLE ASSY/WELDMENT (GRAY & RED)**	DATE: Released 08-2013	GROUP
		MODEL: BT4792	**28**
		PAGE 28.8	

https://truckmanualshub.com/

SEE PAGE 28.8

REF	PART NO.	DESCRIPTION	QTY
	T128048 (Rev A)	*Control Console ASSY/Weldment (Gray)*	
	T128049 (Rev A)	*Control Console ASSY/Weldment (Red)*	
1	T11-312C000-CD	Thread SERT 0.3125-18, ST CAD	8
2	785-01779	End Cap Mounting Angle	2
3	SHF-375CA00-25	SCR, HHCS, FT 0.375-16X1.00, ST Z G5	4
4	WAR-375X000-20	WSH, FL TYPA-REG 0.375, ST Z	8
5	W07-375X000-20	WSH, LCK, MED SPLT 0.375, ST Z	4
6	N04-375C000-25	Nut, HEX 0.375-16, ST Z GR5	4
7	T128050	Console, Control Back Support	1
8	809-00490	Valve Mount Control Console	1
9	809-00491	Support CHAN Control Console	1
10	809-00376	Support Angle Control Console	6
11	809-00395	Support Angle Subweldment	1
12	809-00493	Cover Stop Plate Control Console	1

https://truckmanualshub.com/

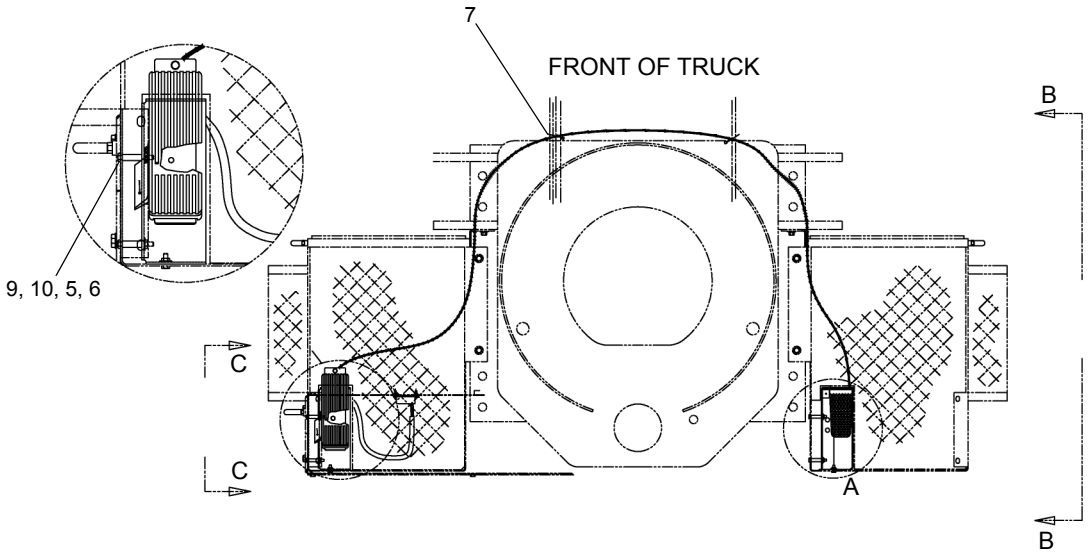

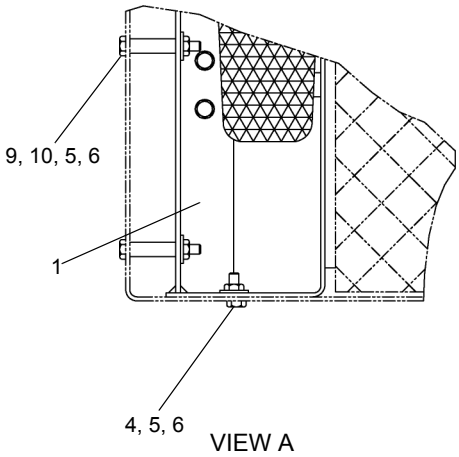

VIEW A

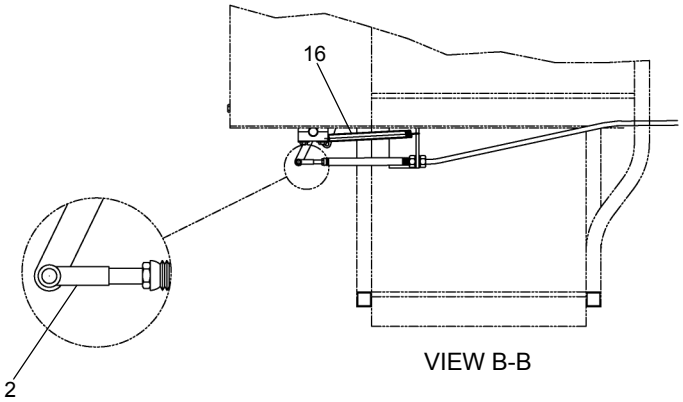

VIEW B-B

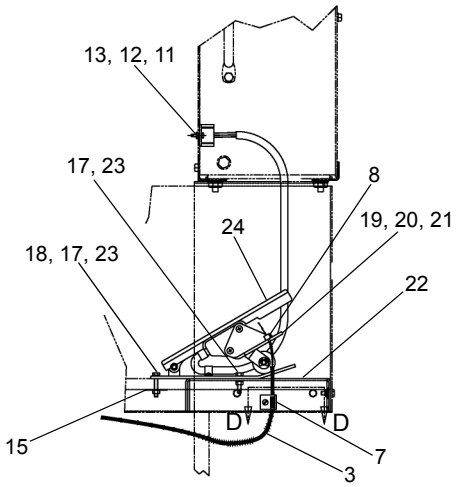

VIEW C-C

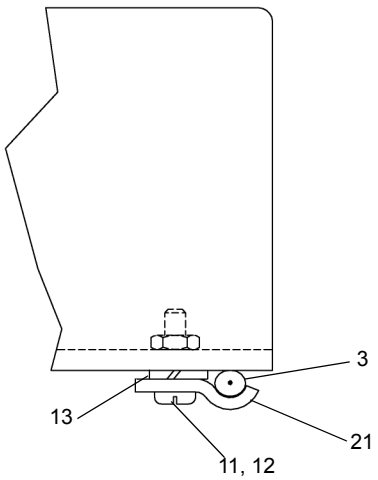

VIEW D-D

SEE PAGE 28.11

WHEN ORDERING PARTS, SPECIFY MODEL NUMBER, SERIAL NUMBER AND DESCRIPTION OF PARTS REQUIRED

https://truckmanualshub.com/

SEE PAGE 28.10

REF	PART NO.	DESCRIPTION	QTY
	600-40439 (Rev 00)	*Throttle INSTL*	
1	600-40347	Throttle Subassembly	1
2	809-00390	Clevis Assembly	2
3	600-40329	Cable Accelerator	1
4	220-00003	HHCS, 1/4-20 NC X 0.75 GRS ZINC	4
5	222-00006	Flat Washer, 1/4 Zinc PLTD	6
6	221-90001	Toplock Nut 1/4-20 NC Zinc	6
7	201-00143	Clamp Throttle Cable	1
8	209-00046	Swivel Stop	1
9	220-00007	HHCS 1/4-20 NC X 2 GRS Zinc	4
10	036-10040	Spacer Tube 1/2 DIA Nylon	4
11	223-011004	RHMS 10-32 NF X 0.75 GR2 Zinc	3
12	221-90003	Locknut 10-32 NF Zinc (Nylon)	3
13	222-00007	Flat Washer #10 Zinc PLTD	2
14	400-25170	Electrical Schematic	REF
15	222-00019	Flat Washer, 1/4 Zinc 1.25 O.D.	1
16	202-10062	Throttle Pedal Return Spring	1
17	222-10005	Lockwasher, 1/4 Zinc PLTD	2
18	220-00035	HHCS, 1/4-20 X 1 3/4 PLT GR5 Zinc	1
19	789-05177	Plate, Bracket Throttle Pedal	1
20	223-01120	RHMC #10-32 NF X 1 1/4 GRD 2 Zinc	2
21	222-10006	Lockwasher #10 Zinc PLTD	3
22	789-05176	MTG Plate, Throttle Pedal	1
23	221-00001	Hexnut 1/4-20 NC Zinc PLT	3
24	300-00503	Throttle Pedal (Caterpillar Engine)	REF
	300-00513	Throttle Pedal (Cummins & Detroit DDEC V)	REF
	300-00501	Throttle Pedal (Mercedes & Internaitonal Engine)	REF

https://truckmanualshub.com/

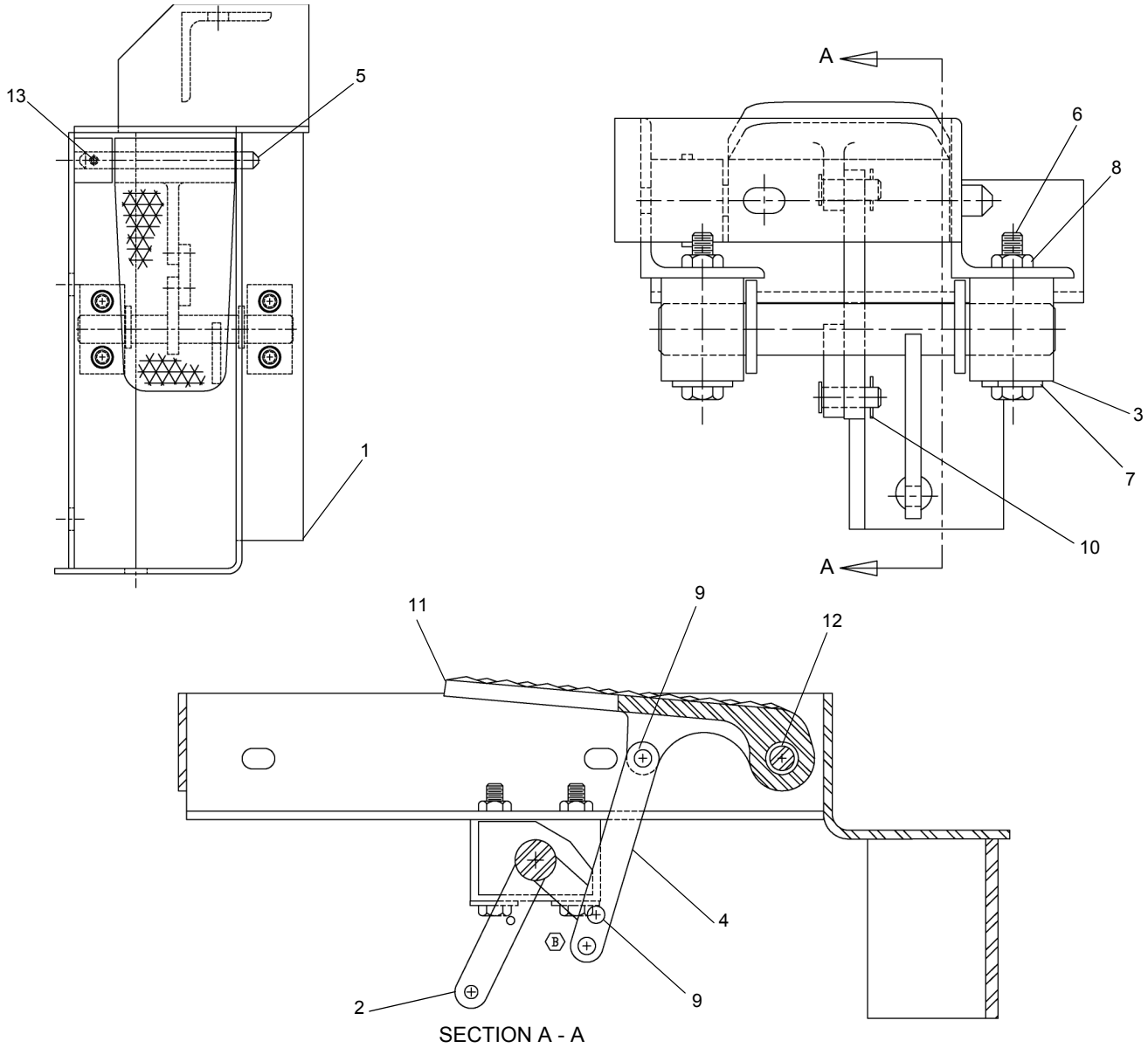

REF	PART NO.	DESCRIPTION	QTY
	600-40347 (Rev F)	*Throttle Sub Assembly*	
1	809-00407	Throttle Weldment	1
2	809-00389	Throttle Shaft - Weldment	1
3	709-01612	Bearing Block ACCEL. Pedal	2
4	806-00198	Control-Pedal Main Link	1
5	870-00132	Pin, 3/8D X 4 LG (3-134)	1
6	220-00007	HHB 1/4NC X 2 LG	4
7	222-00006	Flat Washer 1/4 PLTD	4
8	221-90001	HHN 1/4NC TPLK	4
9	870-00002	Clevis Pin 1/4 X 3/4	2
10	224-01001	Cotter Pin 3/32 D X 1/2 LG	2
11	100-30029	Throttle Pedal	1
12	8074200	Nylon Spacer (Microplastics)	2
13	224-12001	Roll Pin, 1/8D X 1 1/8 LG	1

WHEN ORDERING PARTS, SPECIFY MODEL NUMBER, SERIAL NUMBER AND DESCRIPTION OF PARTS REQUIRED

https://truckmanualshub.com/

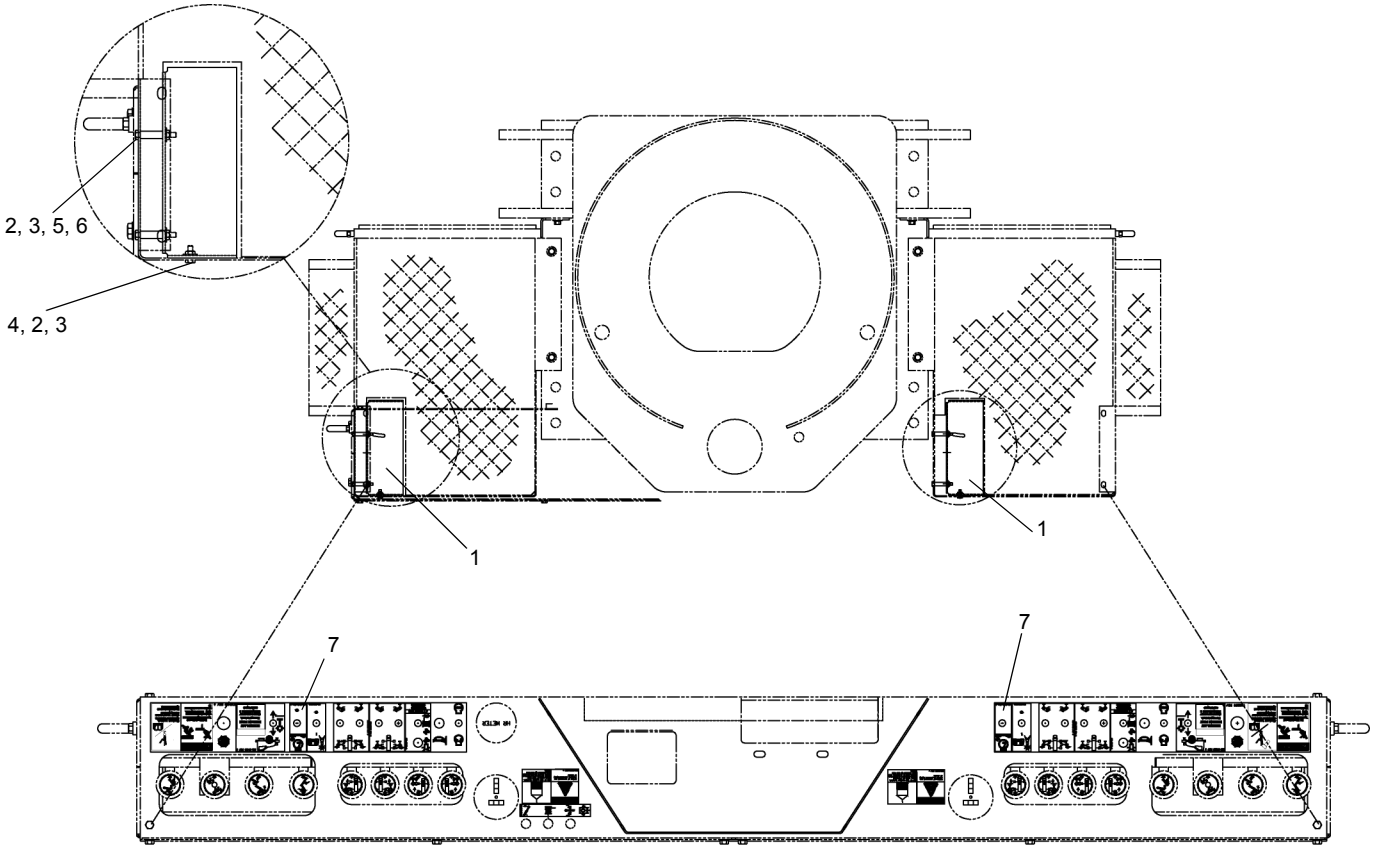

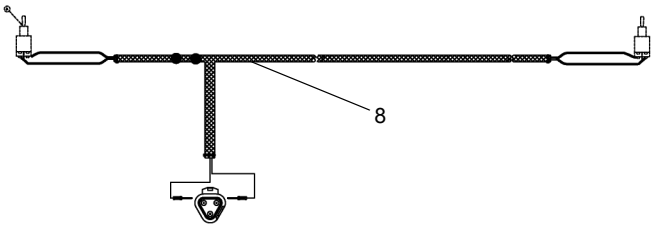

REF	PART NO.	DESCRIPTION	QTY
	T114222 (Rev A)	*Bump Throttle INSTL*	
1	789-05176	PLT MTG Pedal ELEC Throttle	2
2	WAW-25WX000-20	WAS, FL TYPA-WID 0.25, ST Z	6
3	NYL-250C000-25	Nut, NYL-INS 0.25-20, ST Z	6
4	SHF-250C750-25	SCR, HHCS FL 0.25-20 X 0.75, ST Z	2
5	SHF-250CB00-25	SCR, HHCS FL 0.25-20 X 2.00, ST Z	4
6	036-10040	Spacer Tube 1/2 DIA Nylon	4
7	651-00451	Decal, Bump Throttle	2
8	T112812	Harness, Bump Throttle	1

WHEN ORDERING PARTS, SPECIFY MODEL NUMBER, SERIAL NUMBER AND DESCRIPTION OF PARTS REQUIRED

https://truckmanualshub.com/

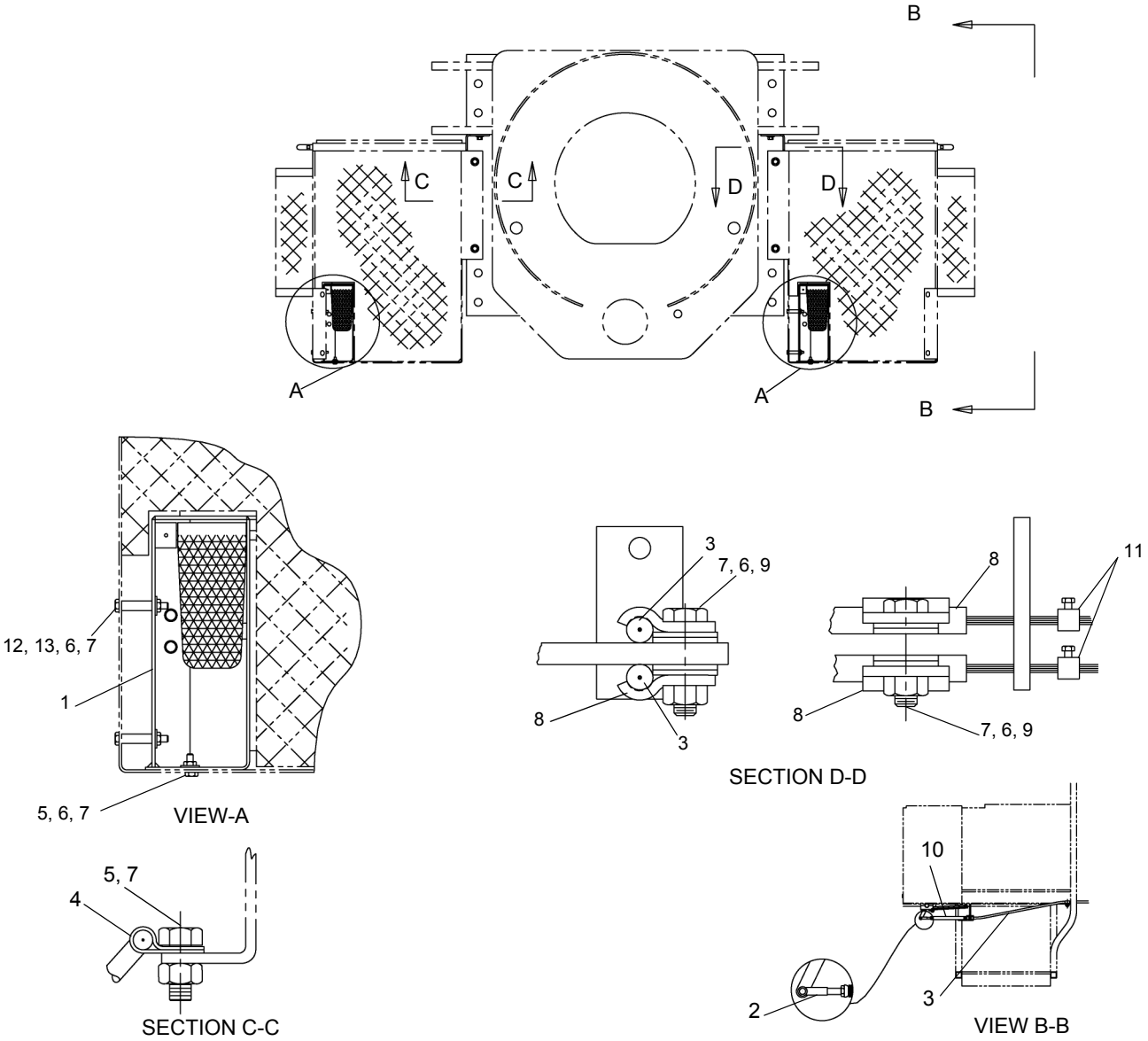

REF	PART NO.	DESCRIPTION	QTY
	600-40429 (Rev A)	*Throttle INSTL*	
1	600-40347	SUBASS'Y	2
2	809-00390	Clevis ASS'Y	2
3	600-40329	Cable Throttle	2
4	201-00141	Tube Clamp 1/4 x 5/16	2
5	220-00003	BLT HH 1/4NC X 3/4	2
6	222-00006	Flat Washer 1/4 PLTD	10
7	221-90001	Hex Nut 1/4NC Toplock	9
8	201-00143	Cable Clamp	2
9	220-00004	Bolt HH 1/4NCx1 1/4 PLT GR5	1
10	202-10062	Throttle Pedal Return Spring	2
11	209-00046	Swivel Stop	2
12	220-00007	Bolt HH 1/4NC X 2 PLT GR5	4
13	036-10040	Spacer Tube 1/2 DIA Nylon	4

WHEN ORDERING PARTS, SPECIFY MODEL NUMBER, SERIAL NUMBER AND DESCRIPTION OF PARTS REQUIRED

https://truckmanualshub.com/

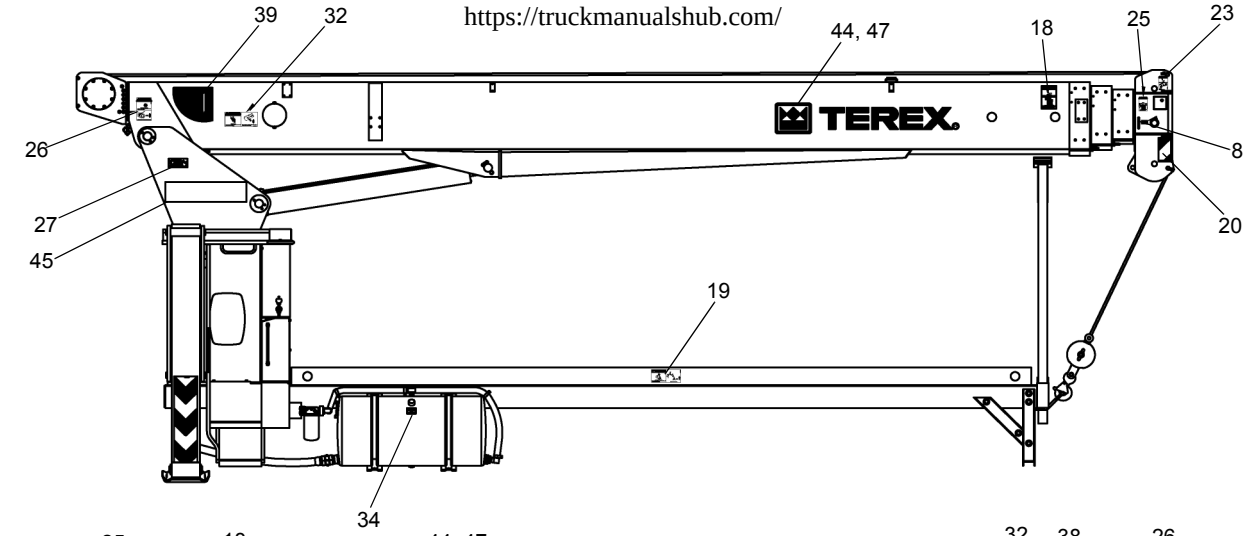

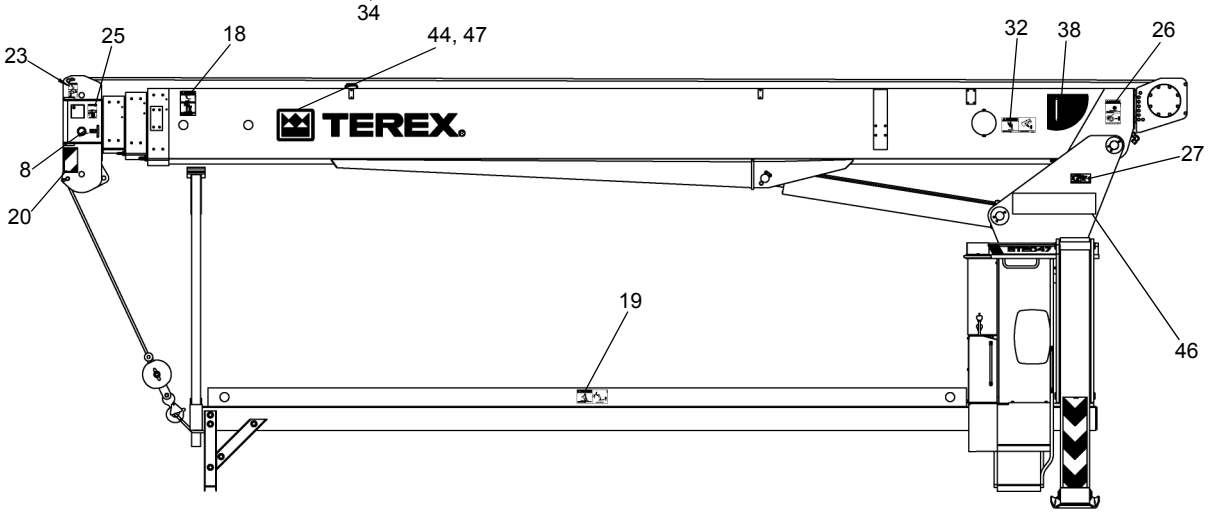

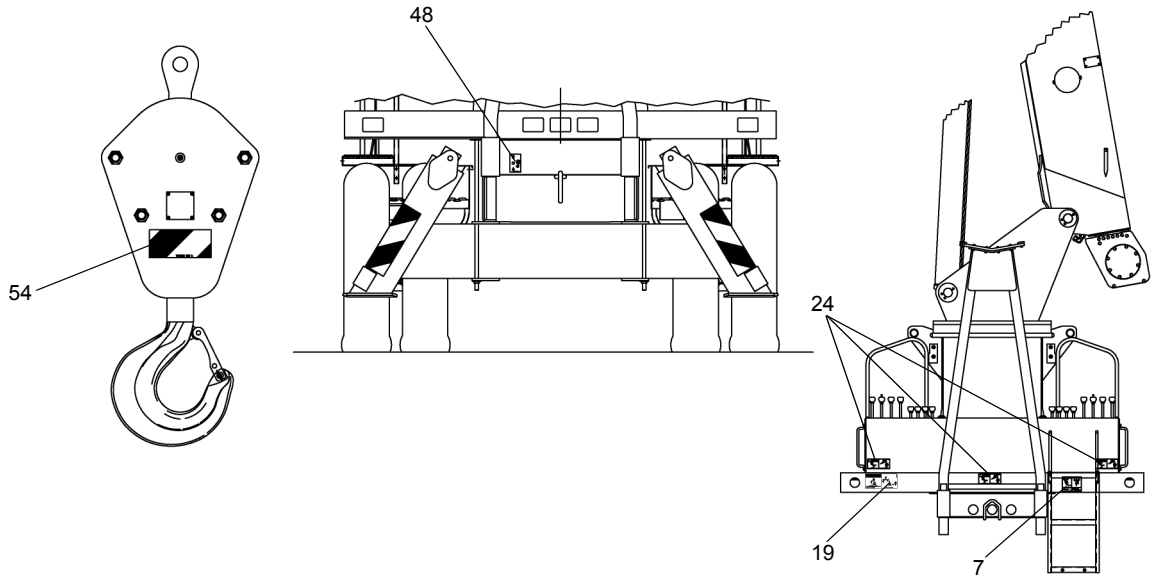

SEE PAGE 30.5

WHEN ORDERING PARTS, SPECIFY MODEL NUMBER, SERIAL NUMBER AND DESCRIPTION OF PARTS REQUIRED

https://truckmanualshub.com/

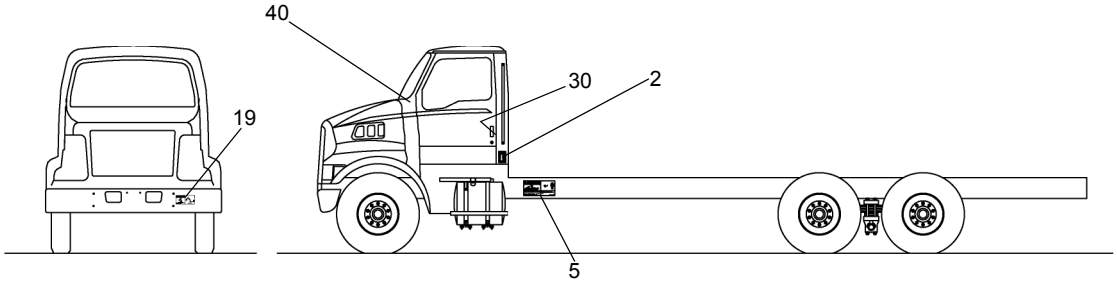

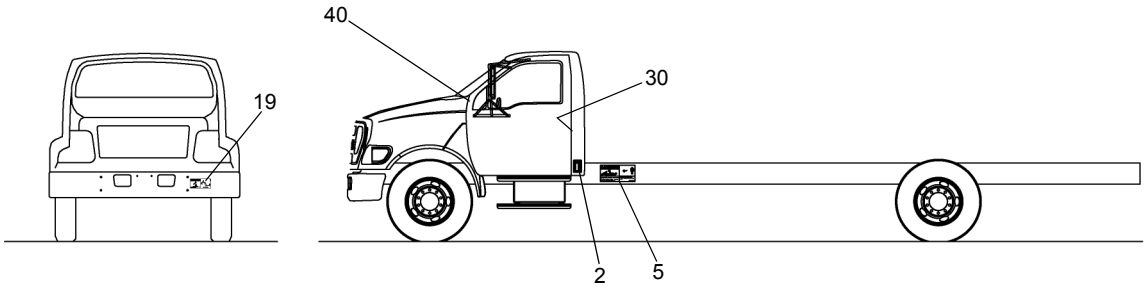

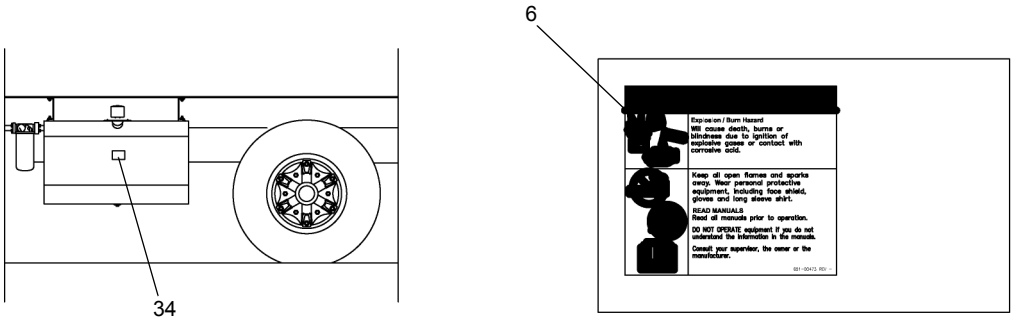

BATTERY BOX

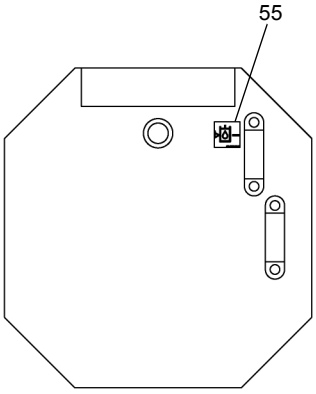

SEE PAGE 30.5

https://truckmanualshub.com/

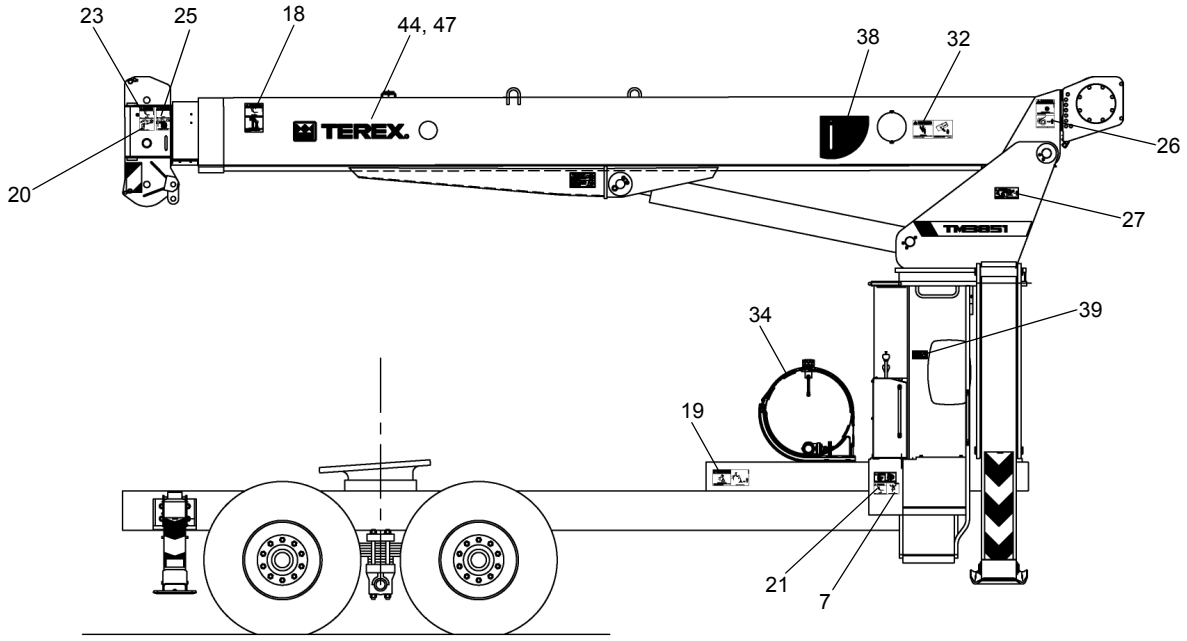

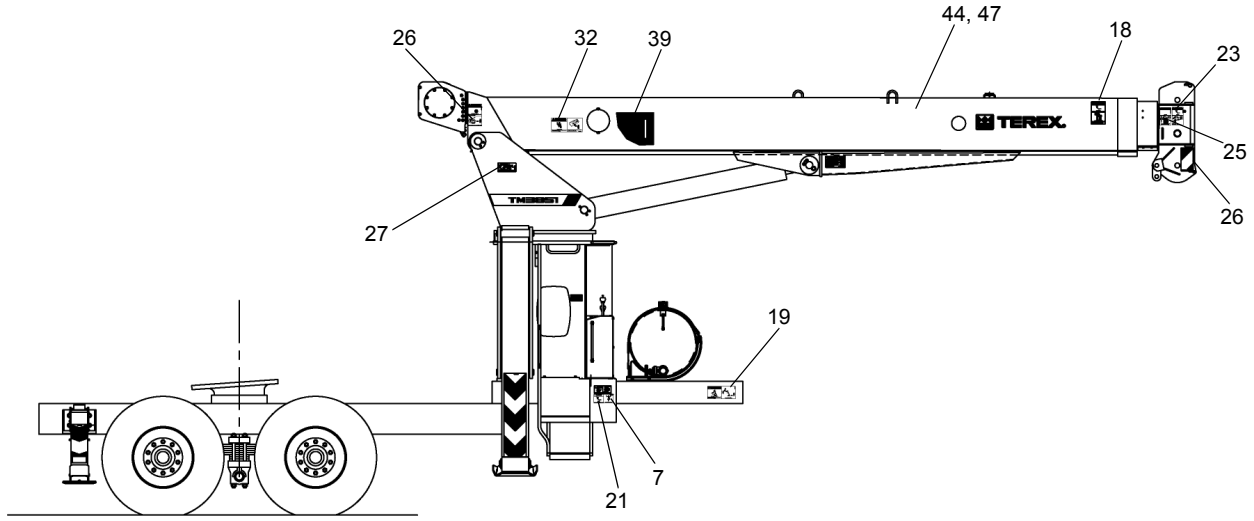

SEE PAGE 30.5

https://truckmanualshub.com/

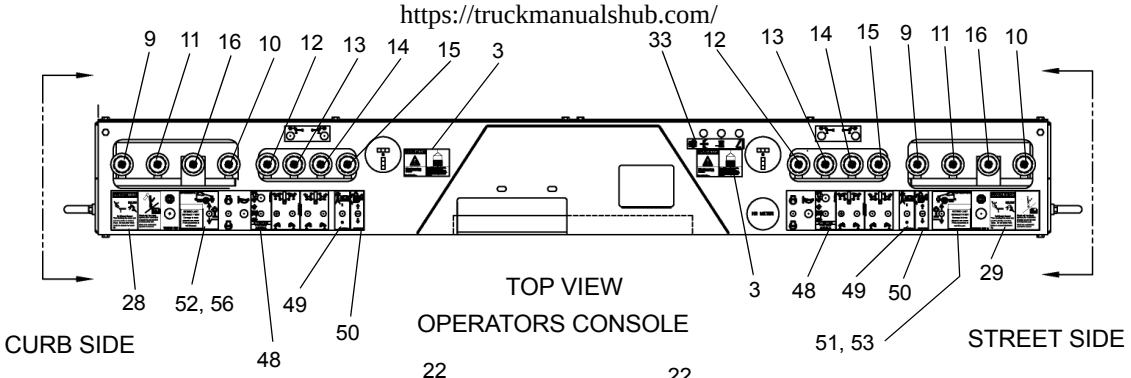

TOP VIEW
OPERATORS CONSOLE

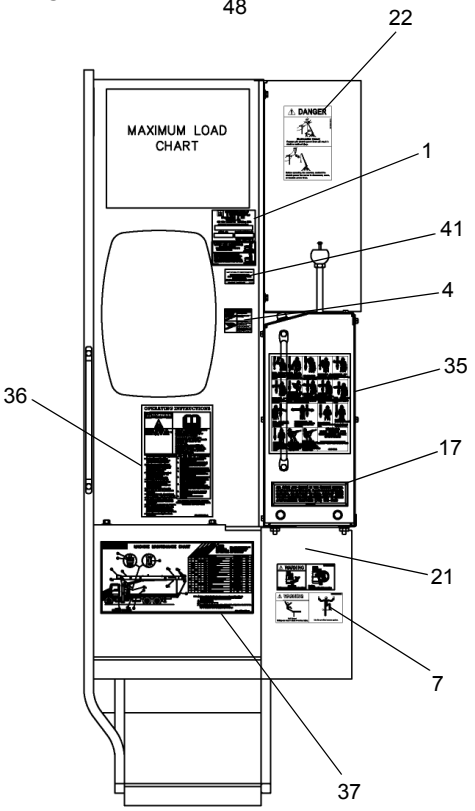

STREET SIDE END VIEW OF CONSOLE/PEDESTAL

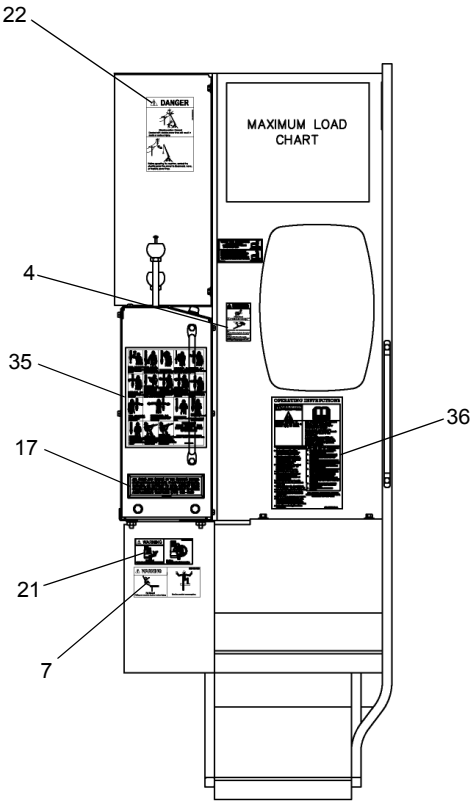

CURB SIDE END VIEW OF CONSOLE/PEDESTAL

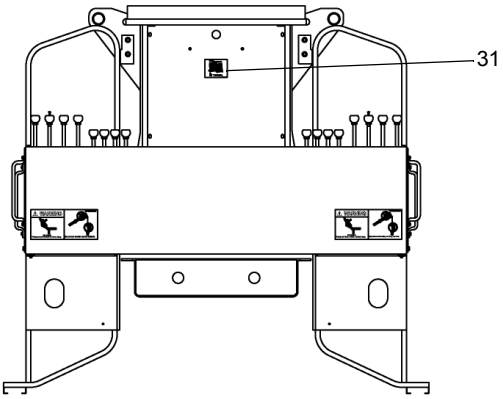

SEE PAGE 30.5

WHEN ORDERING PARTS, SPECIFY MODEL NUMBER, SERIAL NUMBER AND DESCRIPTION OF PARTS REQUIRED

https://truckmanualshub.com/

SEE PAGES 30.1, 30.2, 30.3 & 30.4

REF	PART NO.	DESCRIPTION	QTY
	655-00001-8 (Rev X)	*Decals (Black) W/Terex (Includes Items 1 thru 46 & 48 thru 56)*	
	655-00001-32 (Rev X)	*Decals (White) W/Terex (Includes Items 1 thru 41, 43, 47 & 48 thru 56)*	

Standard Feature Decals

REF	PART NO.	DESCRIPTION	QTY
1	12400-2032	Decal - Pin Number Plate	1
2	12400-1003	Decal - Fire Extingusher	1
3	651-00470	Decal - Personnel Lifting	2
4	12400-1503	Decal - Skin Injection	2
5	12400-1507	Decal - Entanglement	2
6	651-00473	Decal - Battery Danger	1
7	12400-1516	Decal - Fall Hazard	3
8	T127341	Decal - Lanyard Hook	1
9	650-00329	Deacl - Boom Swing Control	2
10	650-00330	Decal - Boom Hoist Control	2
11	650-00411	Decal - Boom Telescoping CONT	2
12	650-00431	Decal - C.S. Main O/R Control	2
13	650-00432	Decal - S.S. Main O/R Control	2
14	650-00433	Decal - S.S. AUX O/R Contro	2
15	650-00434	Decal - C.S. AUX O/R Control	2
16	650-00654	Decal - Combined Flow Winch CONT	2
17	651-00253	Decal - Warning All	2
18	651-00416	Decal - Safe Elevated Access	1
19	T106560	Decal - Electrocution HAZ Person	3
20	T105672	Decal - Boom Head Safety Stripe	2
21	651-00409	Decal - No Ridestep/Platform	2
22	651-00412	Decal - Electrocution Hazard	2
23	T121866	Decal - JIB Removal W/Lift	2
24	651-00415	Decal - No Riding Boom/JIB/Load	3
25	T121867	Decal - Lanyard Hook Location	2
26	651-00424	Decal - Load Line Crush Hazard	2
27	651-00425	Decal - BM/Turret Crush Hazard	2
28	T112399	Decal - Console, C.S	1
29	T112400	Decal - Console, S.S	1
30	654-00704	Decal - Final Vehicle Certification	1
31	12400-2023	Decal - Made in USA	1
32	653-00411	Decal - Crush Hazard	2
33	651-00442	Decal - Test Ports	1
34	651-00073	Decal - Hydraulic Oil Only	1
35	652-00114	Decal - Crane Hand Signals	2
36	652-00569	Decal - Operating Instructions	2
37	652-00572-1	Decal - Machine Maintenance Chart	1
38	653-00390	Decal - Boom Angle Indicator, L.H.	1
39	653-00389	Decal - Boom Angle Indicator, R.H.	1
40	652-00575	Placard - Operating Instructions	1
41	653-00229	Decal - Stability Certification	1
42	T1211648	Decal - Sensor Light AUX O/R BT4792	2
43	651-00430	Decal - AUX Outrigger	2
44	T105635	Decal - Terex Logo (Black) 10.5” Crown	2
45	T112084	Decal, Model Number BT4792 Street Side	1
46	T112086	Decal, Model Number BT4792 Curb Side	1
47	T117583	Decal - Terex Logo (White) 10.5” Crown	2

Optional Feature Decals

REF	PART NO.	DESCRIPTION	QTY
48	651-00429	Decal - Motor Shift Winch	2
49	651-00432	Decal - Remote Control	2
50	651-00433	Decal - Platform Leveling	2
51	T124806	Decal - Rear MTG Fifth O/R Control S.S	1
52	651-00428	Decal - Fifth O/R Control, C.S.	1
53	651-00434	Decal - Fifth O/R Control, S.S	1
54	T115420	Decal - Safety Stripe 2.5 X 5.5	2
55	651-00418	Decal - HYD. Oil Level	1
56	T124805	Decal - Rear MTG Fifth O/R Control S.S	1

WHEN ORDERING PARTS, SPECIFY MODEL NUMBER, SERIAL NUMBER AND DESCRIPTION OF PARTS REQUIRED

https://truckmanualshub.com/

https://truckmanualshub.com/

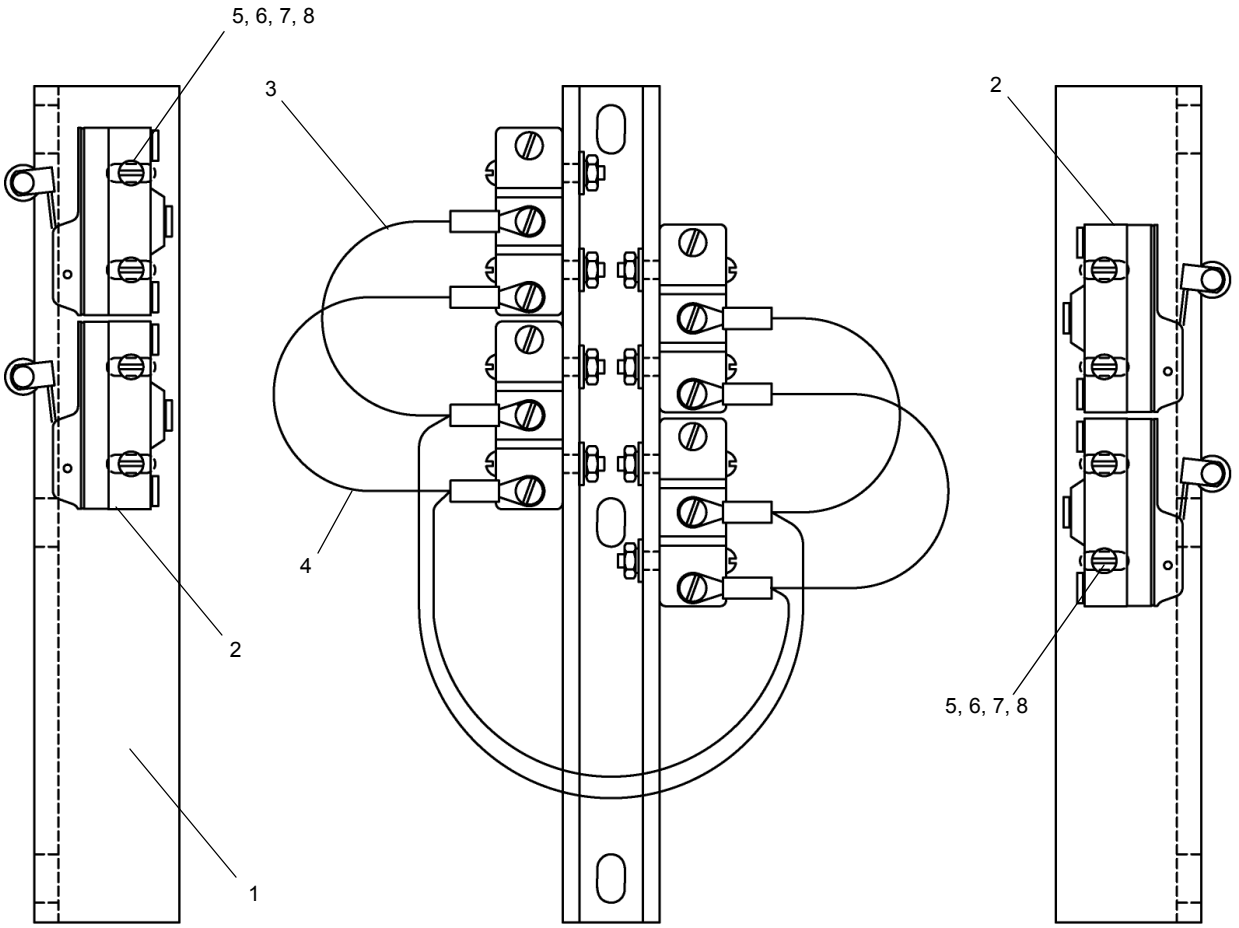

REF	PART NO.	DESCRIPTION	QTY
	400-24062 (Rev 00)	*Outrigger Alarm Switch Assembly*	
1	786-01774	MTG. O/R Warning Switch	1
2	400-05109	Switch, O/R Warning	4
3	400-01957	Jumper ASSY, BLU - 16 GA	1
4	400-01956	Jumper ASSY, BRN - 16 GA	1
5	223-01129	Round HD MS Slot #6-32 X 1 1/8 PLTD	8
6	222-00004	Flat Washer, #6 PLTD	8
7	222-10009	Lock Washer, #6 PLTD	8
8	221-00009	Nut, HEX #6-32 PLTD	8

WHEN ORDERING PARTS, SPECIFY MODEL NUMBER, SERIAL NUMBER AND DESCRIPTION OF PARTS REQUIRED

https://truckmanualshub.com/

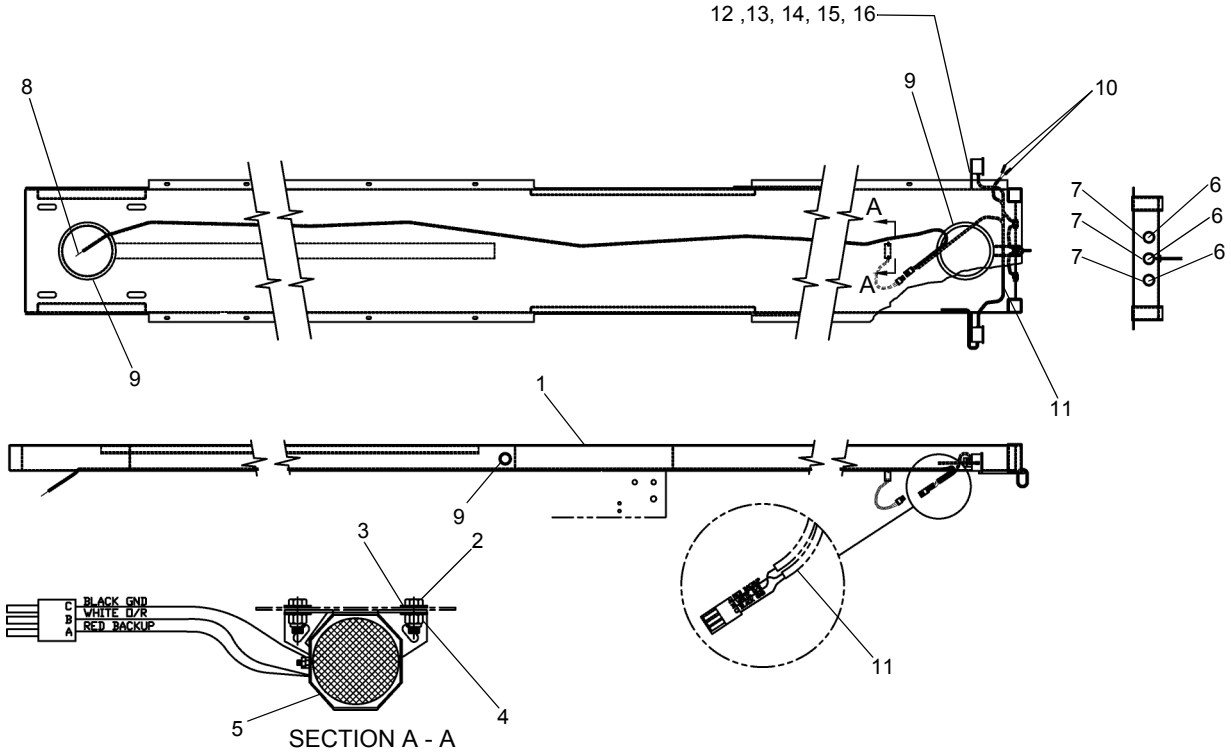

REF	PART NO.	DESCRIPTION	QTY
	691-00001 (Rev P)	*Outrigger Alarm Switch Assembly*	
1	Boom Trucks	Subframe Weldment	REF
2	SHF-250CA00-25	SCR, HHCS, FL 0.25-20 X 1.00, ST Z G5	2
3	WBR-25RX734-20	WSH, FL TYPB-REG 0.25, ST Z	2
4	NYL-250C000-25	Nut, Hex, NYL-INS 0.25-20, ST Z G5	2
5	714A1432	Horn ASSY, ECCO #DF532	1
6	400-09113	Light, 2 1/2” Red Reflectized, TL#10205R	3
7	400-09318	Grommet, 2 1/2”, LITE & 3” Hole TL#10704	3
8	400-02323	Terminal Ring, #8-16/14 GA	1
9	209-00174	Seal Trim	10’
10	400-02230	Terminal-Butt Connection 16/14 GA	2
11	400-25163	Wire Harness, Tail Light-Alarm-O/R	1
12	789-05681	Bracket, Tail Light	2
13	SHF-312CA25-25	SCR, HHCS, FL 0.312-18 x 1.25, ST Z G5	4
14	WBR-31RX875-20	WSH, FL, TYPB-REG 0.3125, ST Z	8
15	W07-312X000-20	WSH, LCK, MED-SPLT 0.3125, ST Z	4
16	N04-312C000-25	Nut, Hex 0.3125-18, ST Z GR5	4

WHEN ORDERING PARTS, SPECIFY MODEL NUMBER, SERIAL NUMBER AND DESCRIPTION OF PARTS REQUIRED

https://truckmanualshub.com/

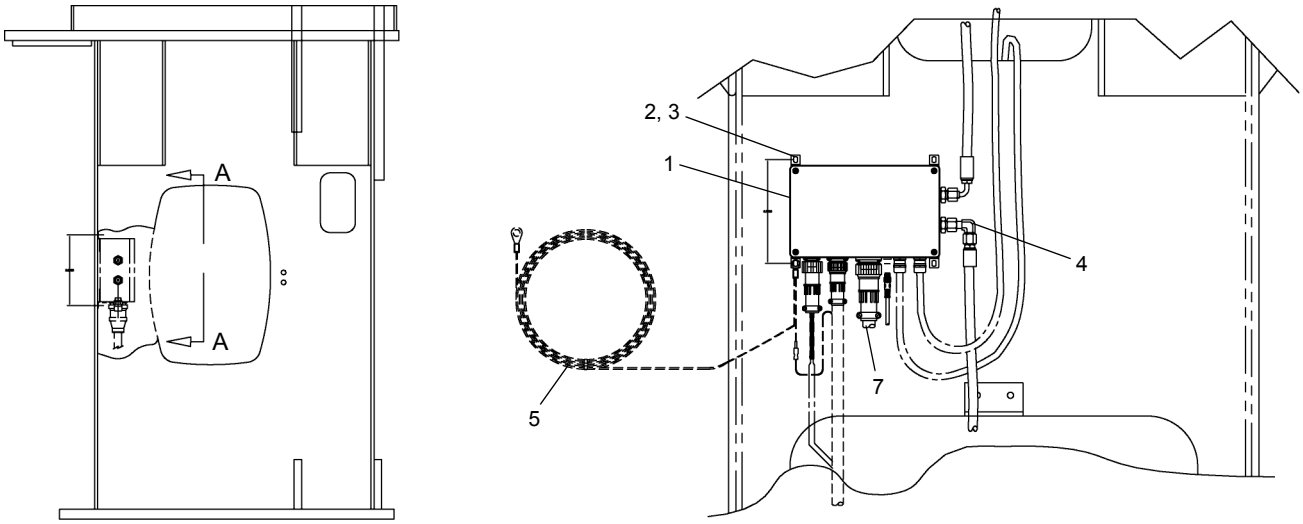

VIEW A-A

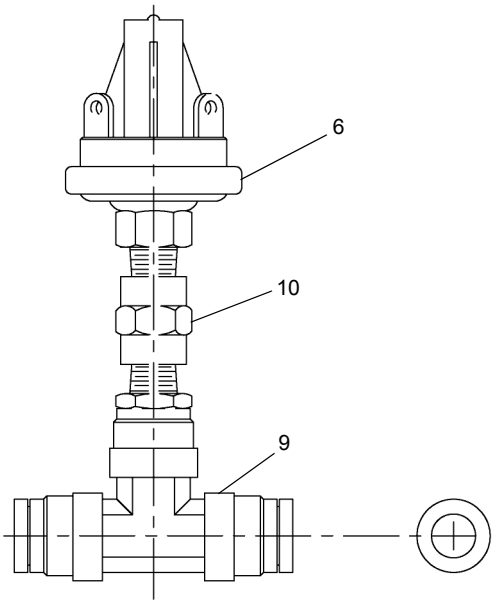

REF	PART NO.	DESCRIPTION	QTY
	400-02451-1 (Rev G)	*Electrical Box INSTL 4792 BT*	
1		Electrical Box 586R-Greer	REF
2	SHF-250c075-25	SCR, HHCS 0.25-20 X 0.75, ST Z GR5	4
3	W02-250X000-20	WSH, LCK, MED SPLT 0.25, ST Z	4
4	514-62002	S.N. Elbow #4 OFS	1
5	400-01530	Ground Wire Assembly-TC	1
6	1223-379	Air Switch	1
7	400-02450	Harness BT, ELEC-Cab/ Box	1
8*	1223-547	Air Switch, PTO	1
9	570-50096	Tee, Branch Swivel	1
10	1219-134	Coupling, P.Brake ASSY.	1

* ITEM 8 IS NOT SHOWN IN THE ILLUSTRATION

WHEN ORDERING PARTS, SPECIFY MODEL NUMBER, SERIAL NUMBER AND DESCRIPTION OF PARTS REQUIRED

https://truckmanualshub.com/

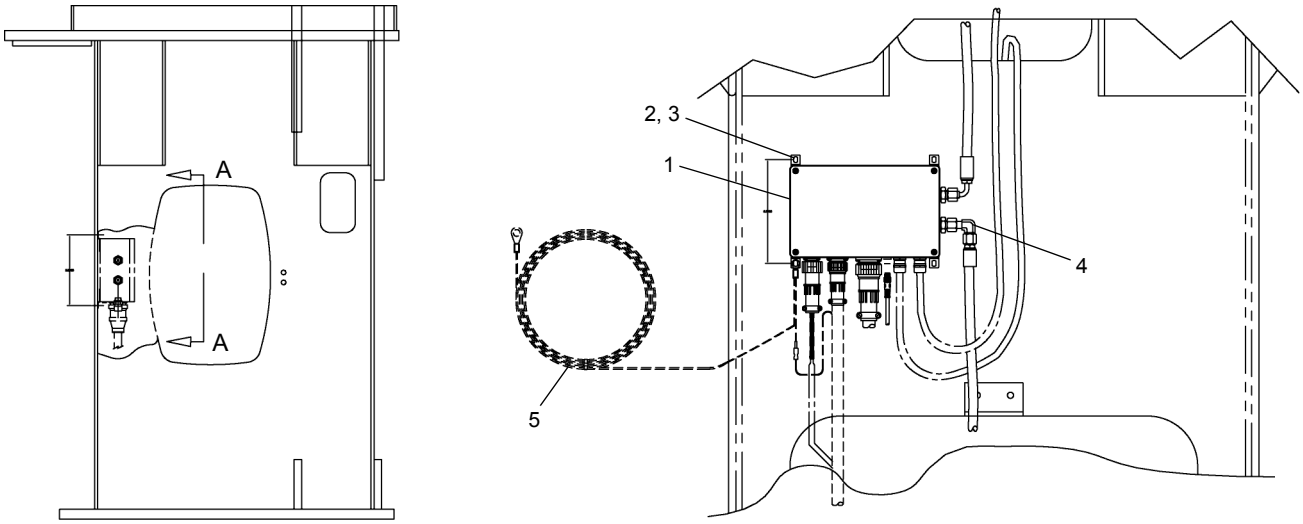

VIEW A-A

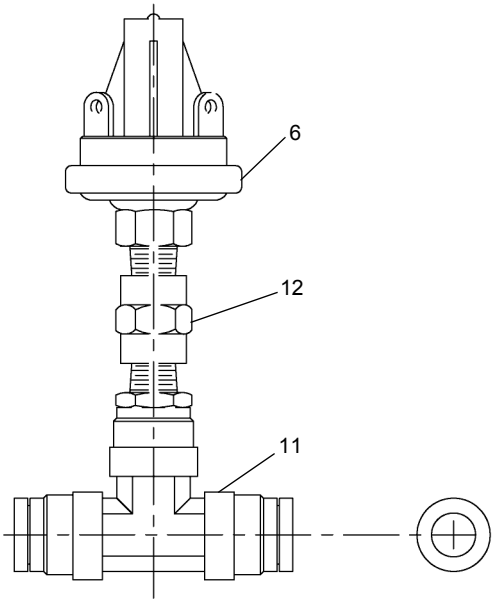

SEE PAGE 33.5

https://truckmanualshub.com/

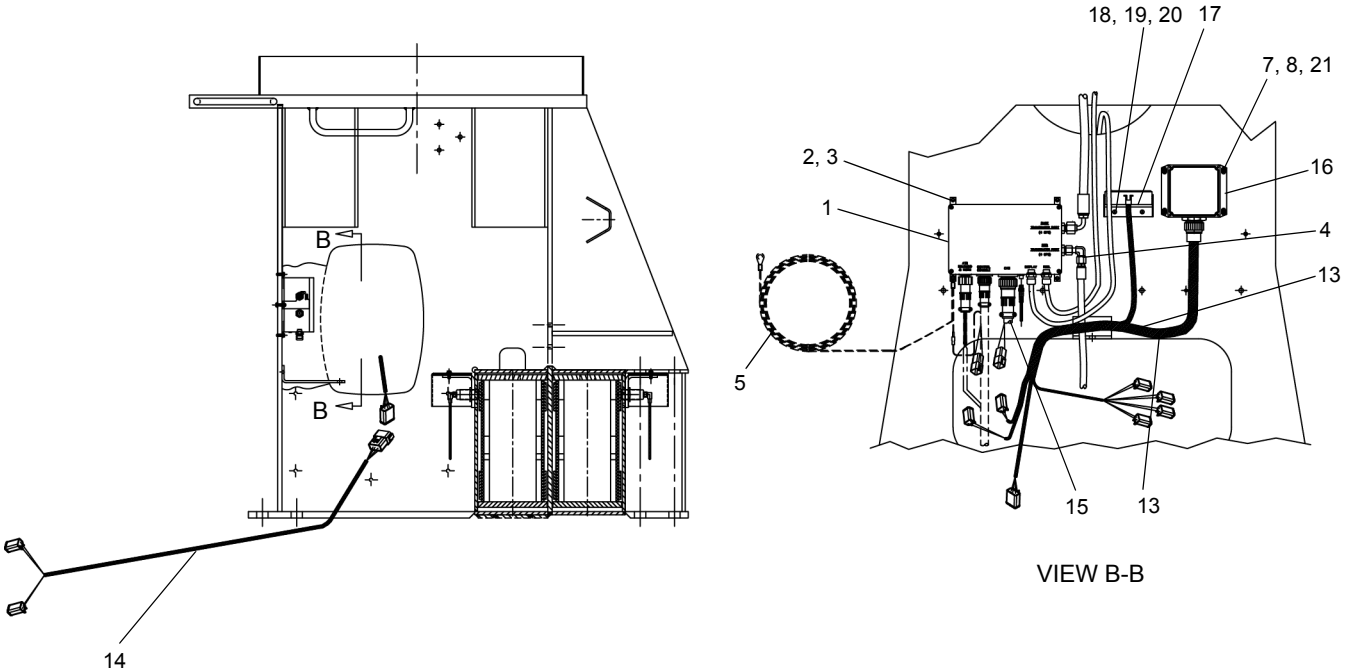

SEE PAGE 33.4

REF	PART NO.	DESCRIPTION	QTY
	400-02451-3 (Rev G)	*Electrical Box INSTL 7000 BT*	
1		Electrical Box 586R-Greer	REF
2	SHF-250C075-25	SCR, HHCS 0.25-20 X 0.75, ST Z GR5	4
3	W02-250X000-20	WSH, LCK, MED SPLT 0.25, ST Z	4
4	514-62002	S.N. Elbow #4 OFS	1
5	400-01530	Ground Wire Assembly-TC	1
6	1223-379	Air Switch	1
7	NYL-138C000-22	Nut, HEX, NYL-INS, 06-32, ST Z GR2	4
8	WAR-138X000-22	WSH, FL, TYPA-NRW 06, ST Z	8
9*	400-25187	Harness, BT70100 Front O/R	1
10*	1223-547	Air Switch, PTO	1
11	570-50096	Tee, Branch Swivel	1
12	1219-134	Coupling, P.Brake ASSY.	1
13	T122361	Harness, ORPS	1
14	T121809	Harness, AUX O/R Sensor	1
15	T121846	Harness, Main BT	1
16	T121671	Resistor Box	1
17	T113654	Bracket Fuse	1
18	SHF-250CA00-25	SCR, HHCS 0.25-20 X 1.00, ST Z GR5	2
19	WAN-25NX000-20	WSH, FL, TYPA-NRW 0.25, ST Z	2
20	NYL-250C000-25	Nut, HEX, NYL-INS, 0.25-20, ST Z GR5	2
21	S14-138CA12-HB	SCR, SHCS, 06-32 X 1.125, ST BKOX	4

* ITEMS 9 & 10 ARE NOT SHOWN IN THE ILLUSTRATION

https://truckmanualshub.com/

https://truckmanualshub.com/

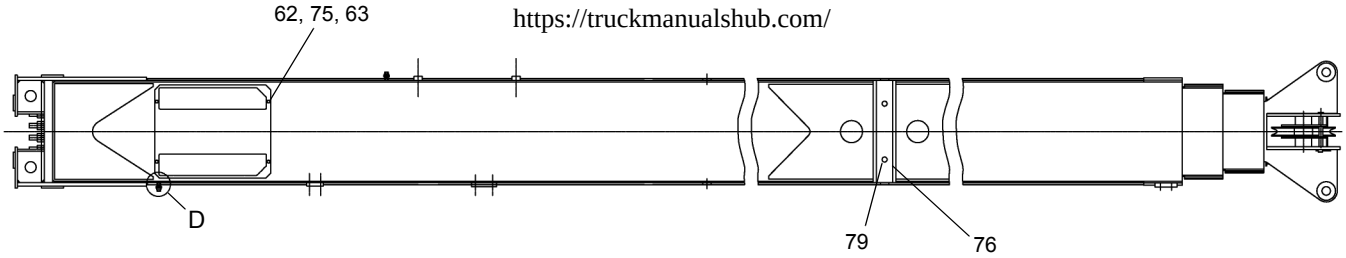

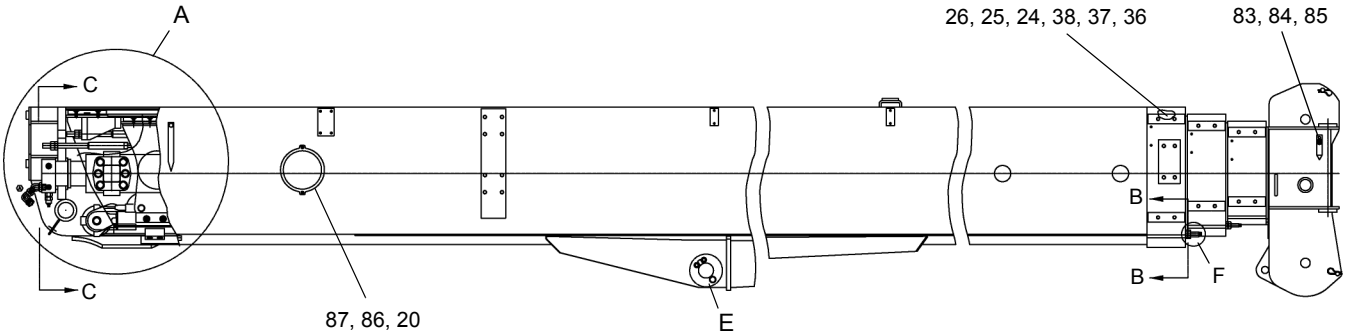

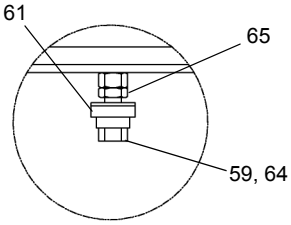

DETAIL D

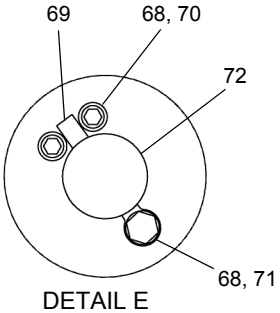

DETAIL E

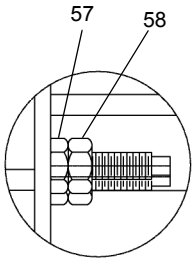

DETAIL F

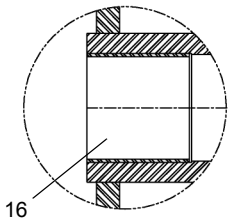

DETAIL G

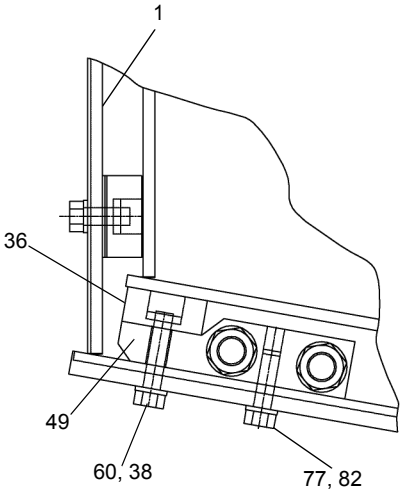

SECTION B - B

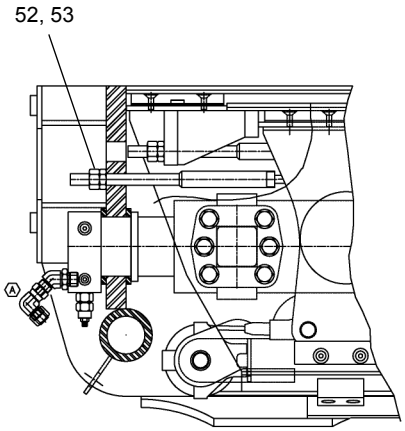

DETAIL A
(CUT-WAY VIEW)

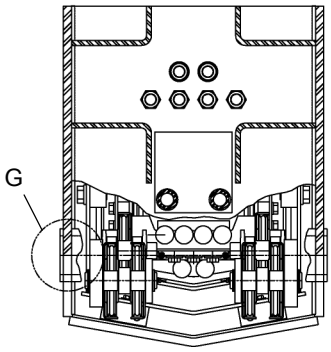

SECTION C-C

SEE PAGE 39.5

WHEN ORDERING PARTS, SPECIFY MODEL NUMBER, SERIAL NUMBER AND DESCRIPTION OF PARTS REQUIRED

https://truckmanualshub.com/

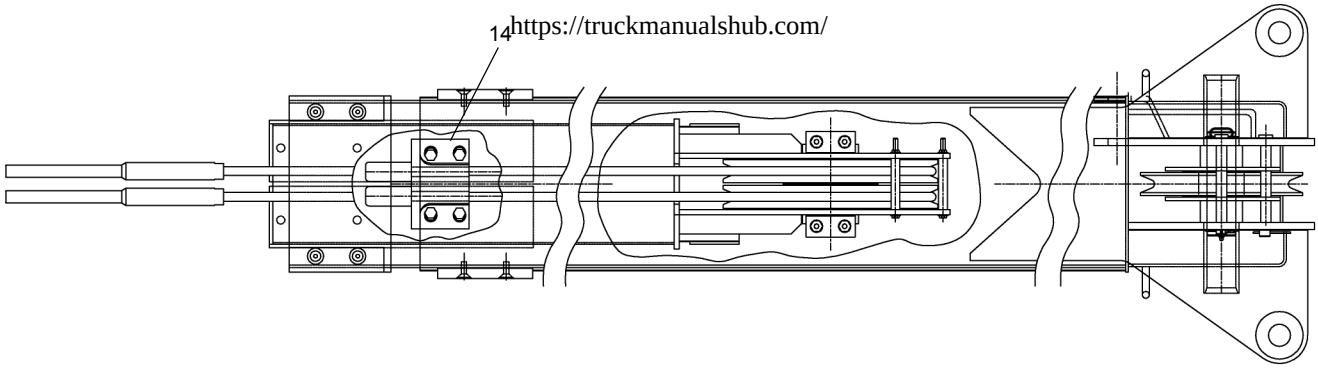

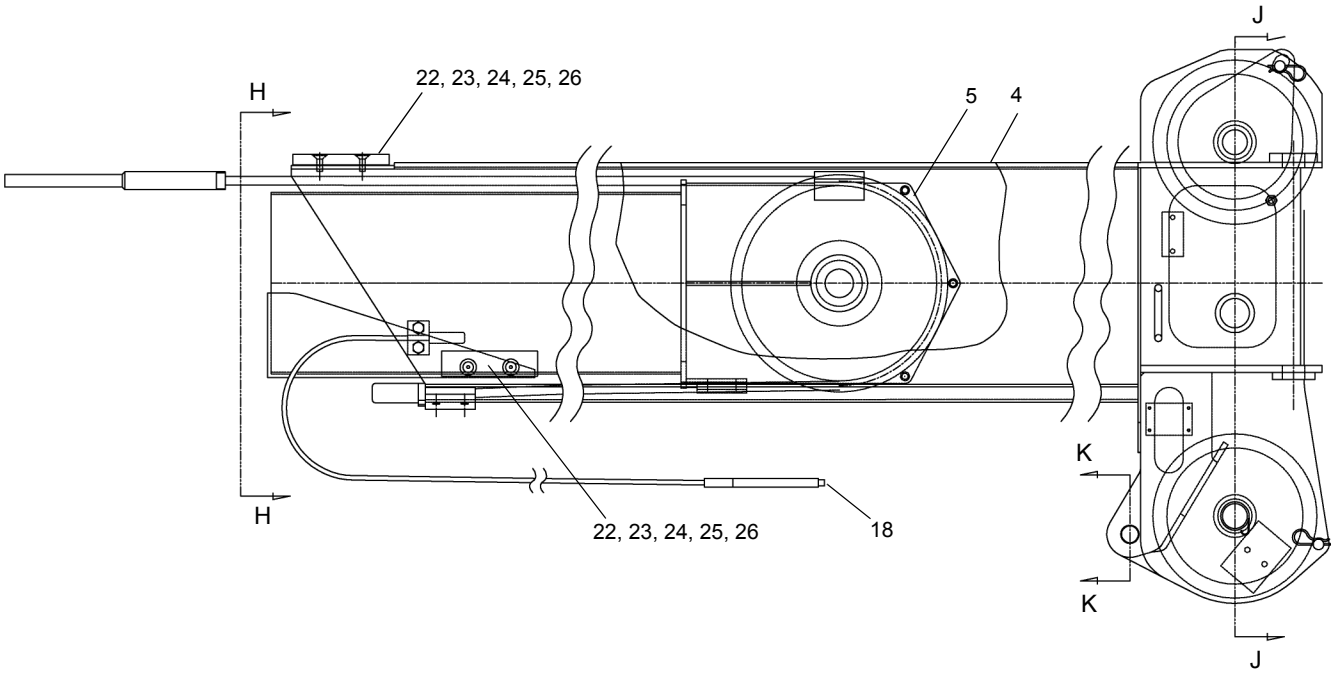

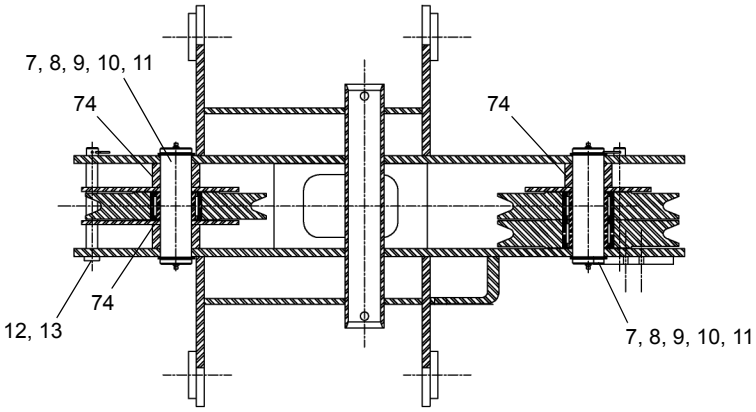

SECTION J - J
ROTATED 90° CCW
TWO SHEAVE ARRANGEMENT

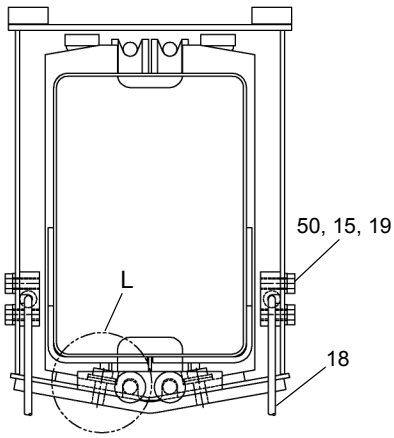

VIEW H - H

SEE PAGE 39.5

WHEN ORDERING PARTS, SPECIFY MODEL NUMBER, SERIAL NUMBER AND DESCRIPTION OF PARTS REQUIRED

https://truckmanualshub.com/

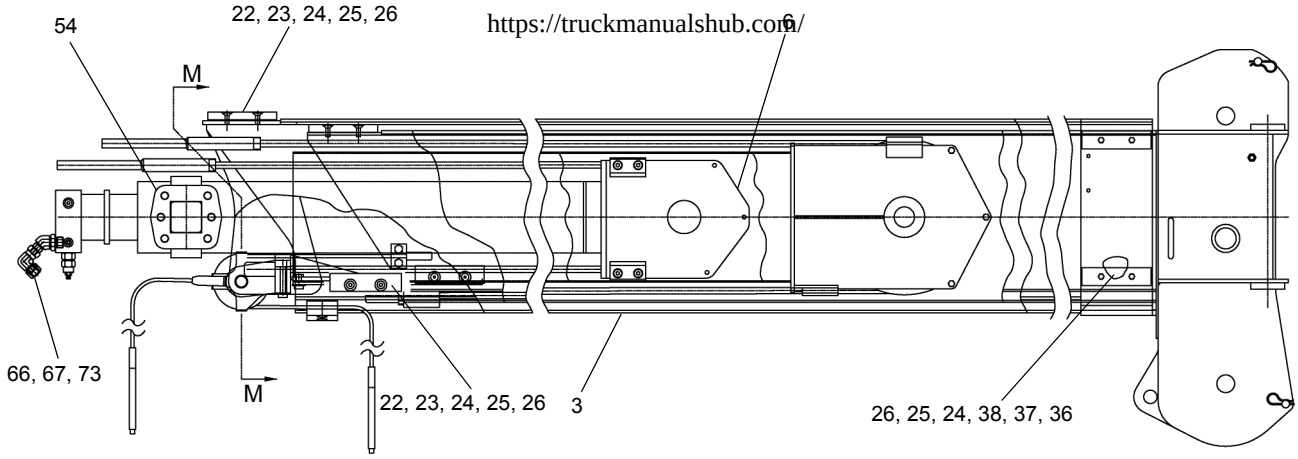

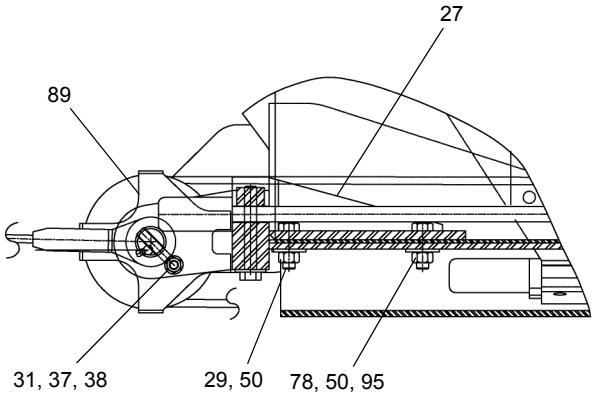

VIEW N - N

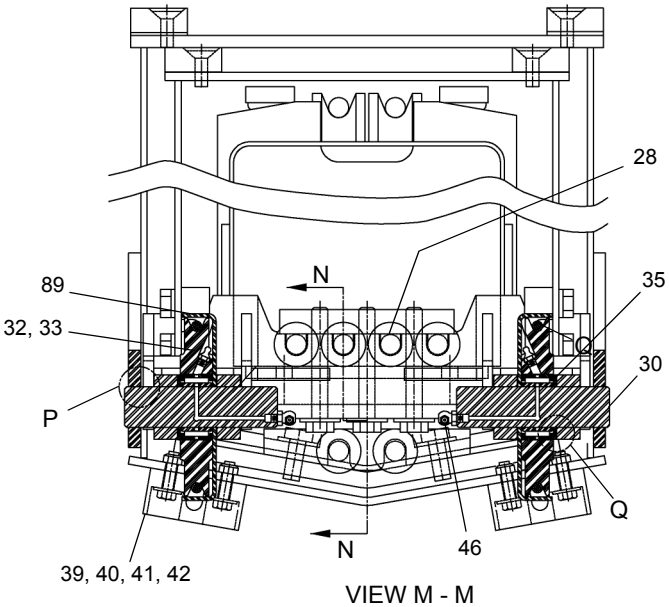

VIEW M - M

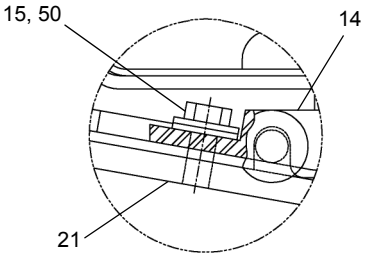

DETAIL L

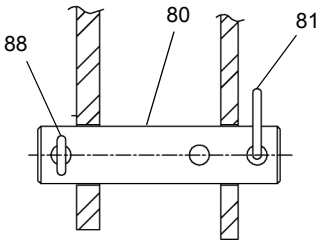

SECTION K - K

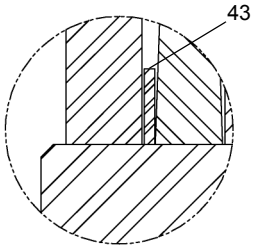

DETAIL P

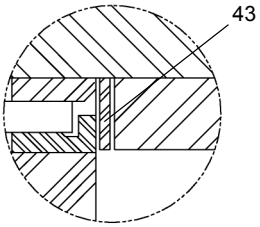

DETAIL Q

SEE PAGE 39.5

WHEN ORDERING PARTS, SPECIFY MODEL NUMBER, SERIAL NUMBER AND DESCRIPTION OF PARTS REQUIRED

https://truckmanualshub.com/

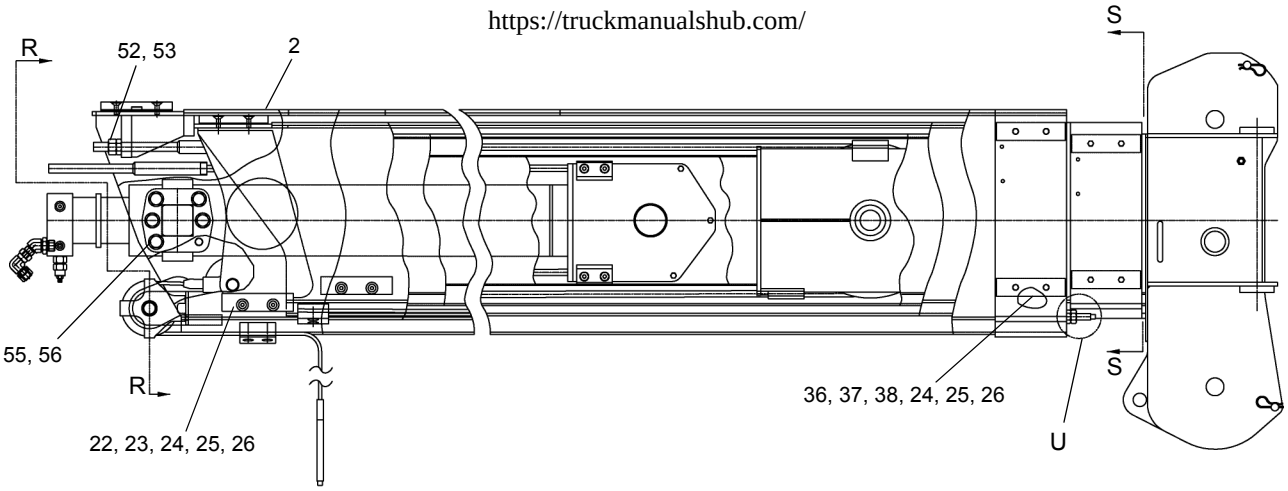

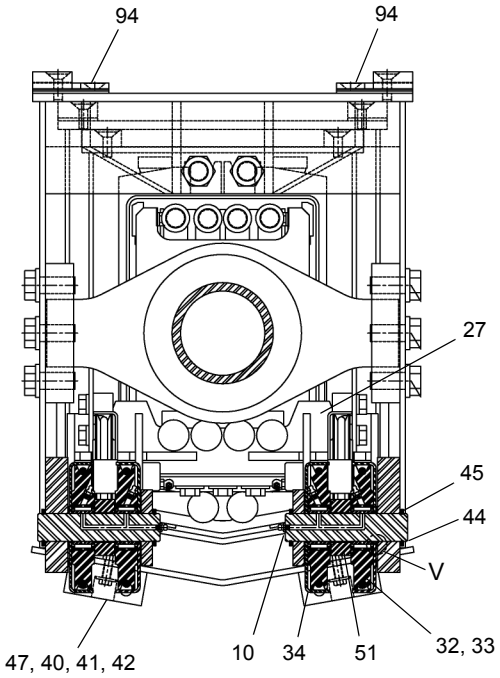

VIEW R - R

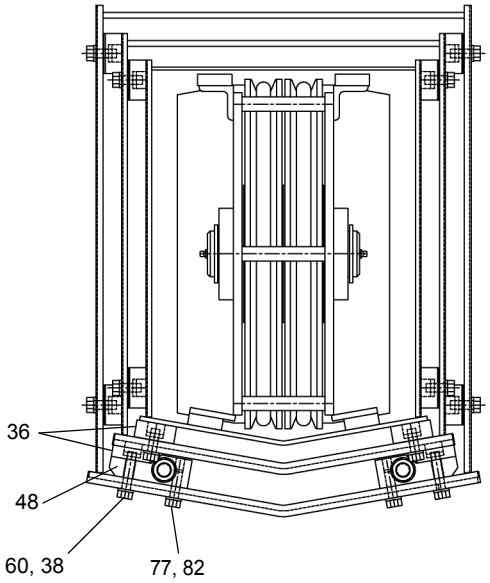

VIEW S - S

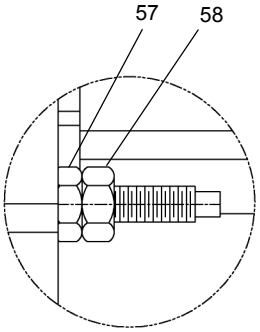

DETAIL U

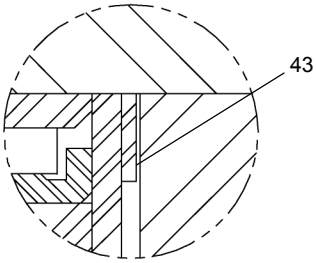

DETAIL V

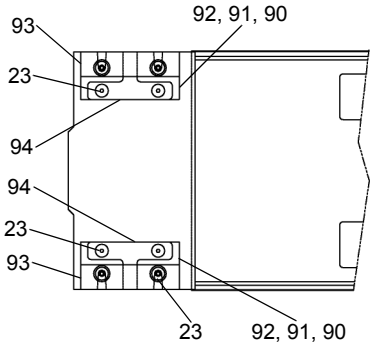

SEE PAGE 39.5

WHEN ORDERING PARTS, SPECIFY MODEL NUMBER, SERIAL NUMBER AND DESCRIPTION OF PARTS REQUIRED

https://truckmanualshub.com/

SEE PAGES 39.1, 39.2, 39.3 & 39.4

REF	PART NO.	DESCRIPTION	QTY
	721-00242-1 (Rev F)	*BM SUB-WELD, 92' 2 Sheave*	
1	722-01309	Base Boom Weld-92FT	1
2	722-01257	2nd Stage Weld-92FT	1
3	722-01145	3rd Stage Weld-92FT	1
4	722-01359	4th Stage Weld-92FT	1
5	721-00139	Extend Tube ASSY-92FT	1
6	548-00017	EXT CYL ASSY-92FT	1
7	860-40082	Sheave ASSY 9/16 Rope (Ref Page 51.31)	3
8	274-30006	Bearing Inner Race (00767)	3
9	870-60214	Pin-Sheave-Tip	2
10	501-03001	Lube Fitting 1/4-28 UNF	5
11	200-30006	Retaining Ring TRU-ARC (00784)	4
12	870-10214	Clevis Pin 3/4 DIA X 7" LG	2
13	224-02006	Hairpin 0.120 DIA.	2
14	781-00271	Extend Cable Anchor-4th	1
15	220-04040	HHCS 1/2NC X 1 1/4" GR8 NYLX	8
16	271-18002	Bushing-Hinge Pin (00772)	2
17*	225-00008	SHSS 1/4NF X 3/8	1
18	861-13010	Retract Cable-4th	2
19	781-00191	Boss Retract Cable ANCH-4th	2
20	222-10005	Lock Washer 1/4 Plated	4
21	729-02323	Boom Support Bar-4th	1
22	729-02236	Wear Pad 1 3/4 X 7 CSK(00802)	10
23	223-00409	FSHMS 3/8NC X 1 1/4 LG PLTD	28
24	787-00238	Shim 0.040 x 1 3/4 X 6 3/4 (00817)	30
25	787-00239	Shim 0.063 x 1 3/4 X 6 3/4 (00817)	30
26	787-00240	Shim 0.100 x 1 3/4 X 6 3/4 (00817)	30
27	100-10075	EXT/RET Cable Anchor	1
28	781-00193	Boss, EXT CBL Anchor-3rd	1
29	220-04038	HHCS 1/2-13NC X 3 1/2 GR8	3
30	870-30210	Pin, Retract SHV-3rd	2
31	224-23008	Rod End 3/8 D X 2 1/2 LG(00754)	2
32	860-10009	Sheave ASSY, 5/16 Rope (Ref Page 51.32)	6
33	274-20004	RLR BRG-Inner Race (00767)	6
34	729-02336	Cable Retainer-2nd Retract	4
35	861-13009	Retract Cable-3rd	4
36	729-02235	Wear Pad, 1 3/4 X 6 3/4(00803)	18
37	220-02004	Bolt 3/8NC X 1 GR5 PLTD	26
38	222-12001	Lock Washer 3/8 MED PLTD	36
39	729-02311	Cable Guide-3rd	2
40	220-01003	HHCS 5/16NC X 1 1/4 GR5	8
41	221-91002	Nut-HH Top Lock 5/16NC	8
42	222-01001	Flat Washer 5/16 PLTD	8
43	222-29004	MCH BUSH, 1.25 ID X 1.875 OD	10
44	870-30208	PIN RET SHV-2nd	2
45	200-10013	Retaining Ring TRUARC (00784)	4
46	501-03007	90° Lube FTNG	2
47	729-02310	Cable Guide (RET 2nd)	2
48	780-00280	SUPT BLK-RETRCT Cable-4th	2
49	780-00279	SUPT BLK-RETRCT Cable-3rd	2
50	222-04009	Flat Washer 1/2 HARD	19
51	031-40229	Spacer RET SHV-2ND(00088)	2
52	221-18003	Nut-HH Jam 7/8-14-2B PLTD	6
53	221-18001	Nut-HH 7/8-14-2B PLTD	6
54	781-00188	SPRT Boss-EXT CYL TRUNN	2
55	222-07003	Flat Washer 3/4 HARD PLTD	12
56	220-07009	HHCS 3/4NC X 1 3/4 GR8	12
57	221-06002	Nut-HH Jam 5/8-11-2B PLTD	6
58	221-06001	Nut-HH 5/8-11-2B PLTD	6
59	222-03002	Flat Washer 7/16	2
60	220-02011	HHCS 3/8NC X 2 GR5 PLTD	8
61	729-02578	Angle Pointer ASSY	2
62	729-02798	Cover Plate-Boom Base	1
63	220-01047-7	HHCS 5/16-18 X 5/8 GR5 ZI	4
64	220-03004	HHCS 7/16NC X 1 1/4 GR5 PLTD	2
65	221-03001	Nut-HH 7/16 NC	2
66	515-06004	Elbow 45° #10-12	2
67	514-66004	Swivel Elbow 90° #10	2
68	222-16003	Lock Washer 5/8 PLTD	3
69	224-26005	Rod End 5/8 D X 4 1/4 LG (00754)	1
70	220-36010	SHCS 5/8NC X 3/4 A574 PLTD	2
71	220-06037	HHCS 5/8 NC X 1 1/2 GR5 PLTD	1
72	870-90031	Pin, 2.75 x 12.625 LG (00852)	1
73	519-60007	Cap #10	2
74	729-02663	Spacer, Weldment Boom Tip	3
75	222-11002	Lock Washer 5/16 MED PLTD	4
76	729-02348	Wear Pad-2Hole (00142)	1
77	220-02048	HHCS 3/8NC X 1 1/4 GR8 PLTD	8
78	220-04035	HHCS 1/2NC X 1 1/2 GR8 PLTD	4
79	223-00425	FSHMS 3/8NC X 7/8 PLTD	2
80	870P30200	Pin, 1 1/4 DIA x 5 1/4	1
81	224-04002	Hairpin 3/16 DIA	1
82	222-02011	Flat Washer 3/8 Hardened	8
83	729-02579	Angle Pointer	2
84	222-02005	Flat Washer 3/8 ZI	4
85	221-92008	Nut, Lock 3/8-16 PLT NYL INS	2
86	223-01202	RHMS 1/4-20NC X 1/2 PLTD SLTD	4
87	802-01572	Cover, Base Boom Access Hole	2
88	224-04001	Cotter Pin 3/16 x 2	1
89	729-02405	Cable Retainer - 3rd Retract	2
90	787-00310	Wear Pad Shim, 0.100 (01142)	8
91	787-00309	Wear Pad Shim, 0.063 (01142)	2
92	787-00308	Wear Pad Shim, 0.040 (01142)	4
93	729-02335	Anti-Shift Wear Pad (00840)	2
94	783-03524	Anti-Shift Wear Pad MTG Bar	2
95	221094002	Nut 1/2 NC Top Lock PLTD	4

* ITEM 17 IS NOT SHOWN IN THE ILLUSTRATION

WHEN ORDERING PARTS, SPECIFY MODEL NUMBER, SERIAL NUMBER AND DESCRIPTION OF PARTS REQUIRED

https://truckmanualshub.com/

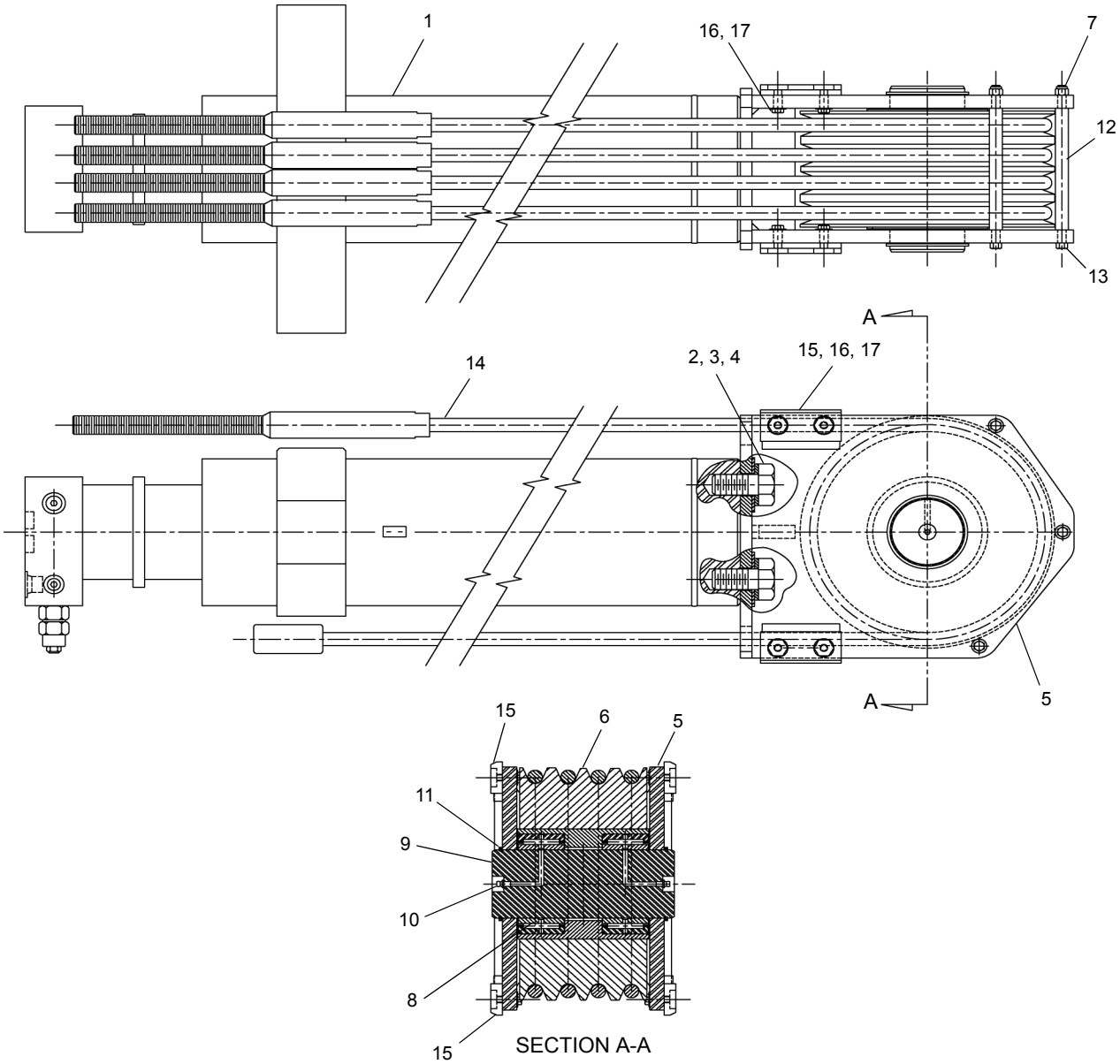

REF	PART NO.	DESCRIPTION	QTY	REF	PART NO.	DESCRIPTION	QTY
	548-00017 (Rev G)	*ASSY, EXT Cylinder 92 FT*					
1	540-80078	Extension Cylinder	1	10	501-03001	Lube Fitting 1/4 - 28 UNF	2
2	222-09003	Flat Washer 1” PLTD	2	11	200-50004	Retaining Ring TRUARC (3-766)	2
3	222-19001	Lock Washer 1” PLTD	2	12	782-01397	Spacer	3
4	220-09011	HHCS 1-8NC x 2 GR5	2	13	220-01029	HHCS 5/16-18 NC x 7 1/2	3
5	777-00094	EXT Sheave BRKT Weld	1	14	861-17029	Cable-Extend	4
6	860-40081	4 Rope Sheave ASSY (5/8 Rope)	1	15	729-02341	Wear Pad	4
7	221-00032-2	Nylon Lock Nut 5/16-18 ZINC	3	16	220-01005	HHCS 5/16NC x 1 GR5 PLTD	8
8	274-40009	Bearing, Inner Race (3-767)	2	17	222-11002	Lock Washer 5/16 MED PLTD	8
9	870-80006	Pin-Sheave Ø3 1/4	1				

WHEN ORDERING PARTS, SPECIFY MODEL NUMBER, SERIAL NUMBER AND DESCRIPTION OF PARTS REQUIRED

https://truckmanualshub.com/

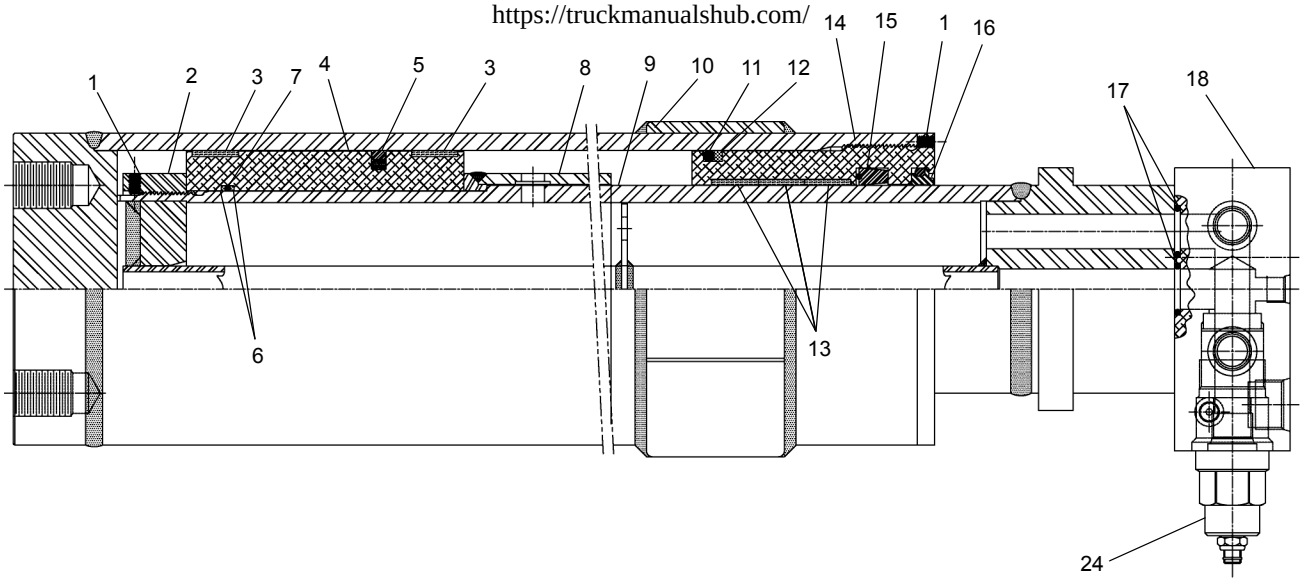

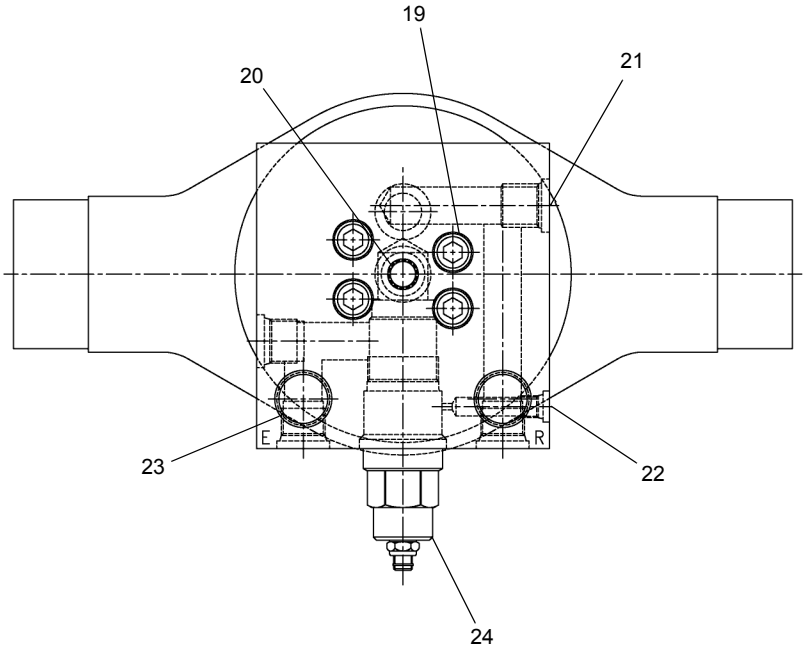

REF	PART NO.	DESCRIPTION	QTY	REF	PART NO.	DESCRIPTION	QTY
	540-80078 (Rev 00)	*Cylinder, Extension*					
	226879	*Seal Kit SPEC. Soft*	1				
1	222472	SHSS .250-20 X .375 W/NYLOK	4	14	226889	Head Gland	1
2	226880	Nut Ring S 4.188-12 B 4.250 1.	1	15	226890	UCup 4.500R .375CS .625 DZ	1
3	223989	WRing 6.000 5.750 1.000 BC	2	16	226891	Wiper 4.500R .375CS DX	1
4	226881	Piston S 6.019 4.251 6.000 AL	1	17	226892	ORing 212 1.125OD 70 N .125CS	2
5	226882	Seal Piston 6.000 GLYD Ring T	1	18	226893	Valve Block S 5.875 6.125 2.50	1
6	226883	Backup 4.25 X 4.50	2	19	226894	SHCS .500-13 3.000	4
7	226884	ORing 244 4.5000OD 70 N .125CS	1	20	216550	Plug SAE 6 0.563-18 SH	1
8	226885	Spacer Weld S 4.260 5.000 8.56	1	21	221082	Plug SAE 10 0.875-14 SH STL	4
9	226886	Rod Weld Tube S 4.500 276.563	1	22	222475	Plug SAE 4 0.438-20 SH STL	1
10	226887	Case Weld S 6.000 275.438	1	23	219625	Metal Plug 1.06-12 ORing Boss Plug W/ORing	2
11	217247	ORing 433 6.000OD 70 N .250CS	1				
12	217246	Backup 433 6.000 1758	1	24	221080	Counter Balance Valve ~ SUN “CAGA-LHN” Set @ 4000 P.S.I	1
13	226888	WRing 4.750 4.500 1.000 BC	3				

WHEN ORDERING PARTS, SPECIFY MODEL NUMBER, SERIAL NUMBER AND DESCRIPTION OF PARTS REQUIRED

https://truckmanualshub.com/

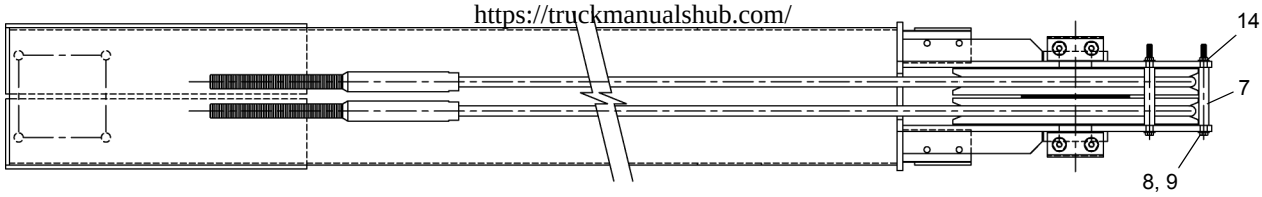

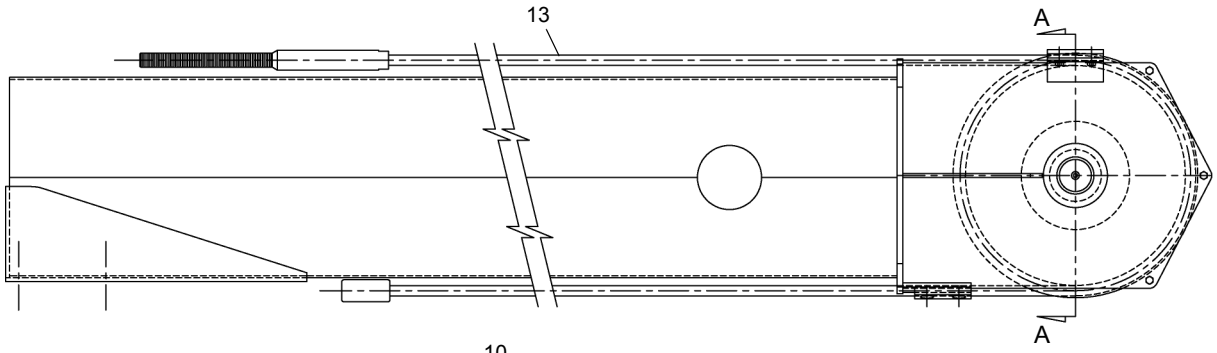

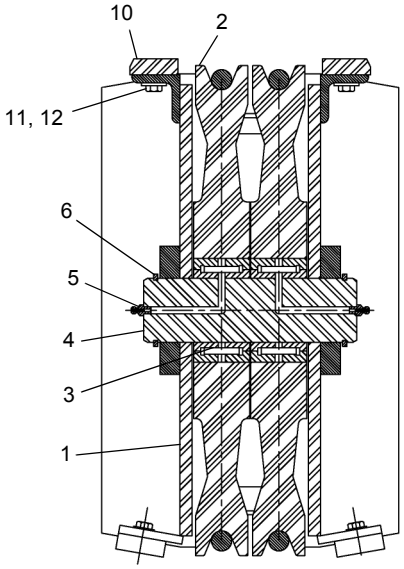

SECTION A-A

REF	PART NO.	DESCRIPTION	QTY
	721-00139 (Rev A)	*Extend Tube Assembly (92 FT)*	
1	722-01149	Extended Tube Weldment (92 FT)	1
2	860-40065	Extended Sheave ASSY	2
3	274-30006	Race, Inner #MI-32 (3-767)	2
4	870-60201	Pin, Extend Sheave	1
5	501-03001	Grease Zerk 1/4”	2
6	200-30006	Ring, Snap #5160-200 (3-784)	2
7	782-01310	Spacer	3
8	220-02049	Bolt, HH 3/8-NC X 5 1/2” LG	3
9	222-02005	Washer, Flat 3/8”	6
10	729-02341	Wear Pad 2 Hole W/POLYSERT	4
11	220-01013	Bolt, HH 5/16-UNC X 5/8 LG	8
12	222-11002	Washer, Lock 5/16” PL MED	8
13	861-17030	Wire Rope ASSY 5/8”	2
14	221-92001	Nut Toplock 3/8UNC	3

WHEN ORDERING PARTS, SPECIFY MODEL NUMBER, SERIAL NUMBER AND DESCRIPTION OF PARTS REQUIRED

https://truckmanualshub.com/

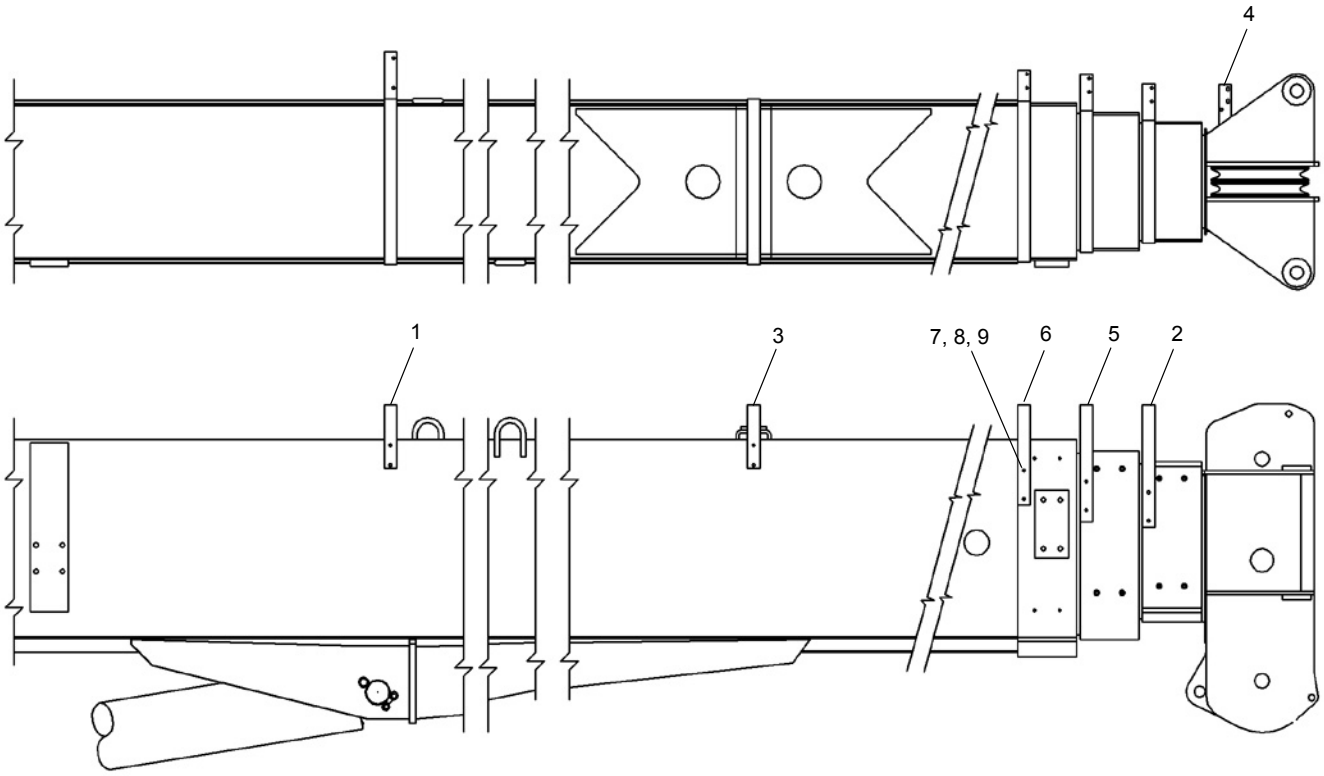

REF	PART NO.	DESCRIPTION	QTY
	721-00234-5 (Rev E)	*Cable Guide INSTL*	
1	729-02687.3	Rope Guide - Rear Base Boom	1
2	729-02349.3	BRKT LMI/Rope Guide - 3rd Stage	1
3	729-02352.3	BRKT MID Base Boom Rope Guide	1
4	729-02354.3	BRKT Boom Tip Cable Anchor	1
5	729-02696.3	BRKT LMI/Rope Gide 2nd Stage	1
6	729-02351.3	BRKT LMI/Rope Guide Base BM FRT	1
7	222-01001	Flat Washer 5/16 PLTD	22
8	222-11002	Lockwasher , 5/16 PLTD	22
9	220-01013	HHCS, 5/16-18 UNC x .63 LG PLTD	22

WHEN ORDERING PARTS, SPECIFY MODEL NUMBER, SERIAL NUMBER AND DESCRIPTION OF PARTS REQUIRED

https://truckmanualshub.com/

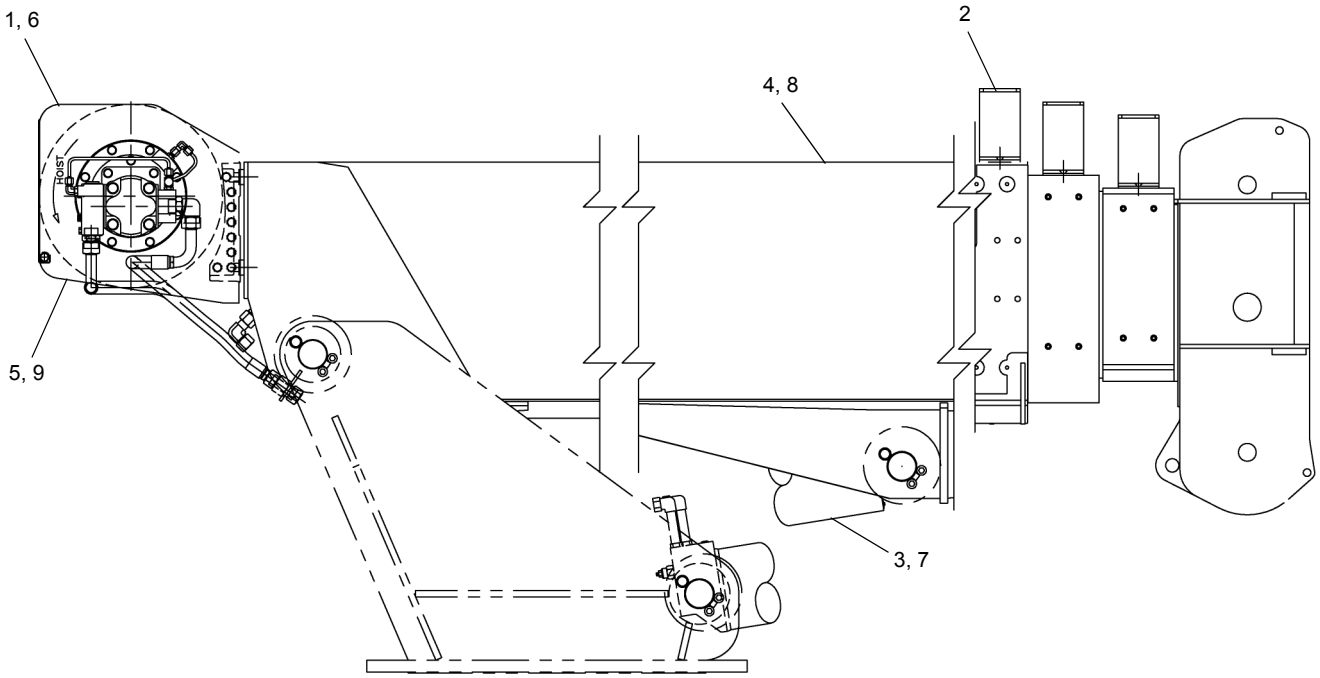

REF	PART NO.	DESCRIPTION	QTY
	720-01007-6 (Rev N)	*Model BT 4792 STD Winch (Item 1 thru 4 & 10 thru 11)*	
	720-01007-6-R (Rev N)	*Model BT 4792 STD Winch (Item 2 & 6 thru 8, 10, 13)*	
	720-01007-12 (Rev N)	*Model BT 4792 2 Speed Winch (Item 2 thru 5 & 10, 12)*	
	720-01007-12-R (Rev N)	*Model BT 4792 2 Speed Winch (Item 2 & 7 thru 9, 10, 14)*	
1	717-00052-2	Winch Installation	1
2	721-00234-5	Cable Guide Installation	1
3	548-00054-3	Topping Cylinder ASSY	1
4	721-00242-1	Boom ASSY (92 FT) 2 Sheave (4 Stage)	1
5	717-00053-1	2 Speed Winch Install	1
6	717-00052-2-R	Winch Installation	1
7	548-00054-3-R	Topping Cylinder ASSY	1
8	721-00242-1-R	Boom ASSY (92 FT) 2 Sheave (4 Stage)	1
9	717-00053-1-R	2 Speed Winch Install	1
10*	508-00090-5	ATB/LMI Installation	1
11*	800-50054-2	Control Console STD Winch	1
12*	800-50054-5	Control Console 2SP Winch	1
13*	800-50054-2-R	Control Console STD Winch	1
14*	800-50054-5-R	Control Console 2SP Winch	1

* ITEMS 10 TO 14 ARE NOT SHOWN IN THE ILLUSTRATION

WHEN ORDERING PARTS, SPECIFY MODEL NUMBER, SERIAL NUMBER AND DESCRIPTION OF PARTS REQUIRED

https://truckmanualshub.com/

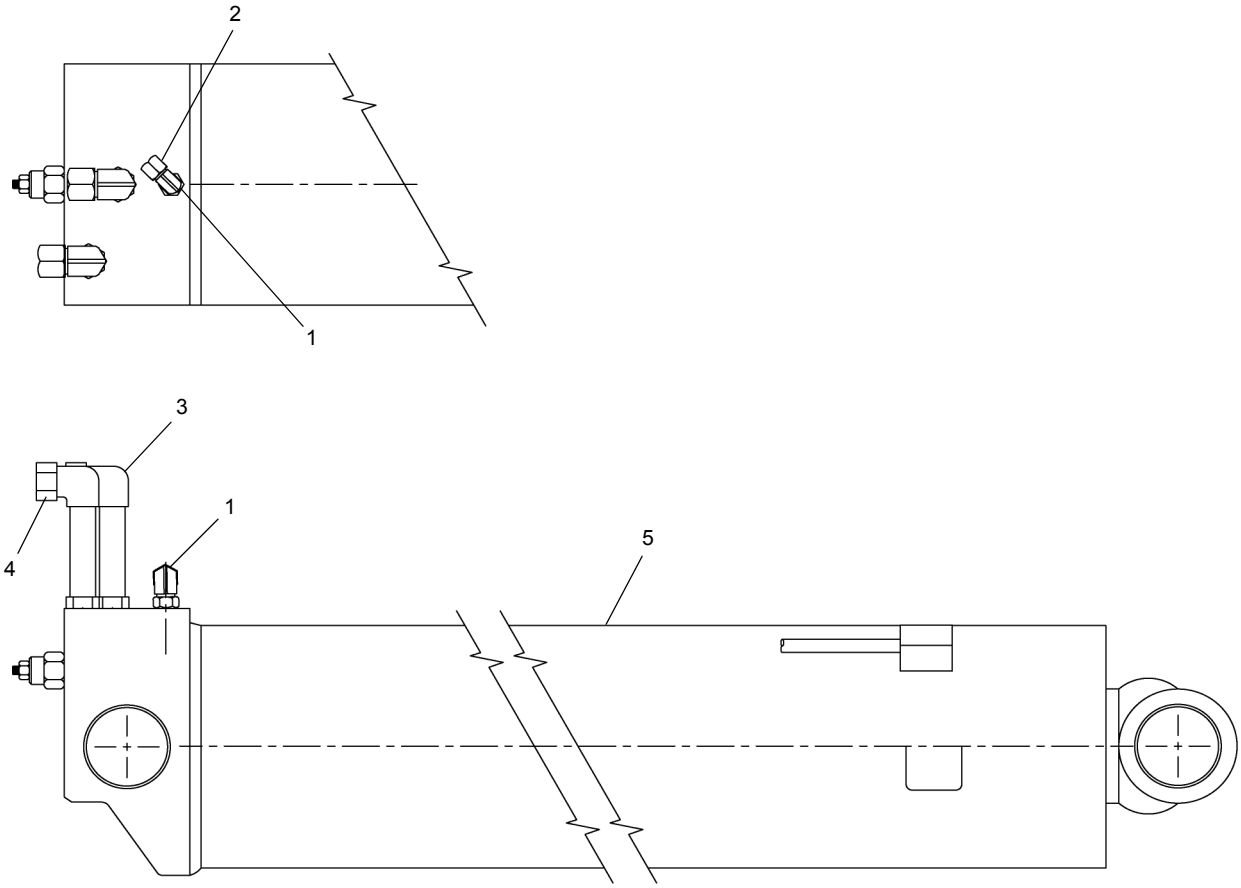

REF	PART NO.	DESCRIPTION	QTY
	548-00054-3 (Rev D)	*Topping Cylinder Assembly*	
1	514-52005	Elbow, 90° STD. #4 OFS - #6 ORB	1
2*	519-20004	Cap, #4	1
3	514-56005	Elbow, 90° Long #10	2
4	519-60007	Cap, #10	2
5	540-90087	Topping Cylinder (4792 Series)	1

WHEN ORDERING PARTS, SPECIFY MODEL NUMBER, SERIAL NUMBER AND DESCRIPTION OF PARTS REQUIRED

https://truckmanualshub.com/

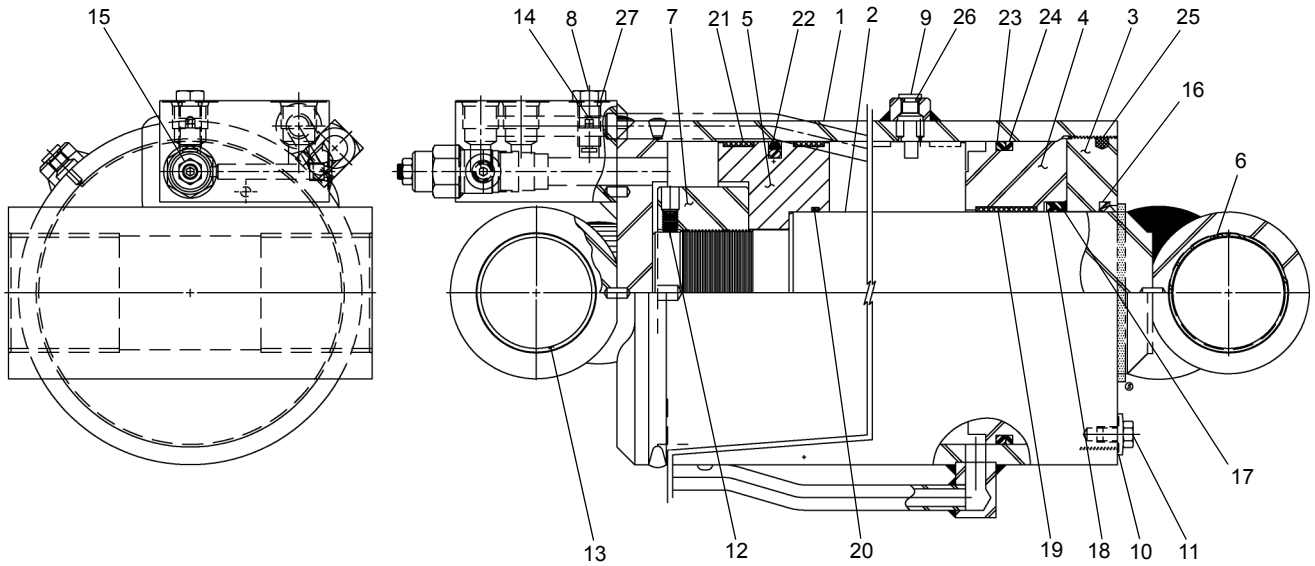

REF	PART NO.	DESCRIPTION	QTY
	540-90087 (Rev C)	*Cylinder, Topping*	
	226850	*Seal Kit (Includes Items 16 Through 27)*	
1	226839	Case Weld	1
2	226840	Rod Weld	1
3	226841	Thread Ring	1
4	226842	Head Gland	1
5	226843	Piston	1
6	226844	Bushing Spacer	1
7	226845	Ring Nut	1
8	223271	Port Plug	1
9	222055	Port Plug	2
10	226846	Lock Washer	1
11	226847	Cap Screw	1
12	223269	Set Screw	1
13	223268	Bushing	4
14	223267	Valve	1
15	226849	Valve	1
16	226851	Wiper, Type “D”	1
17	226852	Back-Up	1
18	226853	U-Cup	1
19	226854	Wear Ring	1
20	226855	O-Ring	1
21	226856	Wear Ring	2
22	226857	Teflon Seal	1
23	226858	O-Ring	1
24	226859	Back-Up	1
25	223273	Nylon Plug	1
26	223339	O-Ring	2
27	219848	O-Ring	1

WHEN ORDERING PARTS, SPECIFY MODEL NUMBER, SERIAL NUMBER AND DESCRIPTION OF PARTS REQUIRED

https://truckmanualshub.com/

REF	PART NO.	DESCRIPTION	QTY
1	4000-1JIB26/44R	*(Red) Jib Assy Two Stage 24/44'*	1
	730-51337-2.4	Jib Assy 26'/44'	1
	730-51331-R	Jib Storage 4792/7000 Series	1
2	4000-1JIB26-1	*1 Stage Jib, 26'(Black Logo)*	1
	730-51331-1	Jib Stowage, Black Terex Logo	1
	730-51337-1	Jib Assy 26'	1
3	4000-1JIB26-2	*1 Stage Jib, 26'(White Logo)*	1
	730-51331-2	Jib Stowage, White Terex Logo	1
	730-51337-1	Jib Assy 26'	1
4	4K-1JIB26/44-1	*2 Stage Jib, 26/44(Black Logo)*	1
	730-51331-1	Jib Stowage, Black Terex Logo	1
	730-51337-2	Jib Assy 26'/44'	1
5	4K-1JIB26/44-2	*2 Stage Jib, 26/44(White Logo)*	1
	730-51331-2	Jib Stowage, White Terex Logo	1
	730-51337-2	Jib Assy 26'/44'	1

https://truckmanualshub.com/

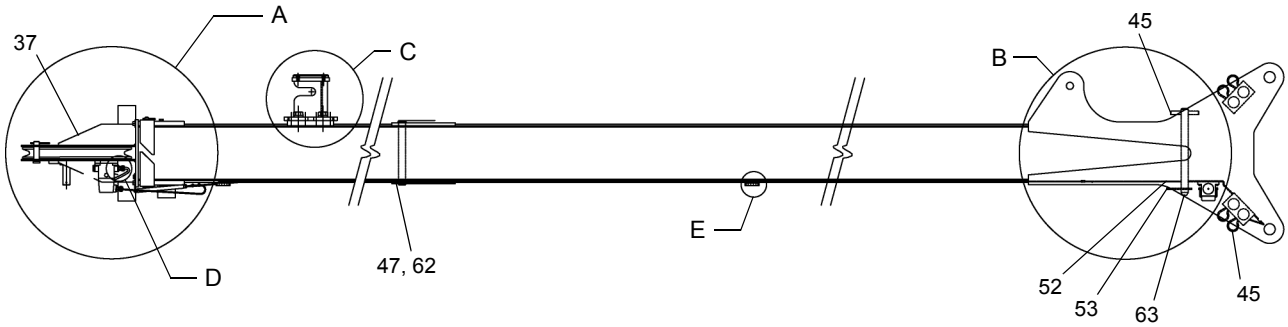

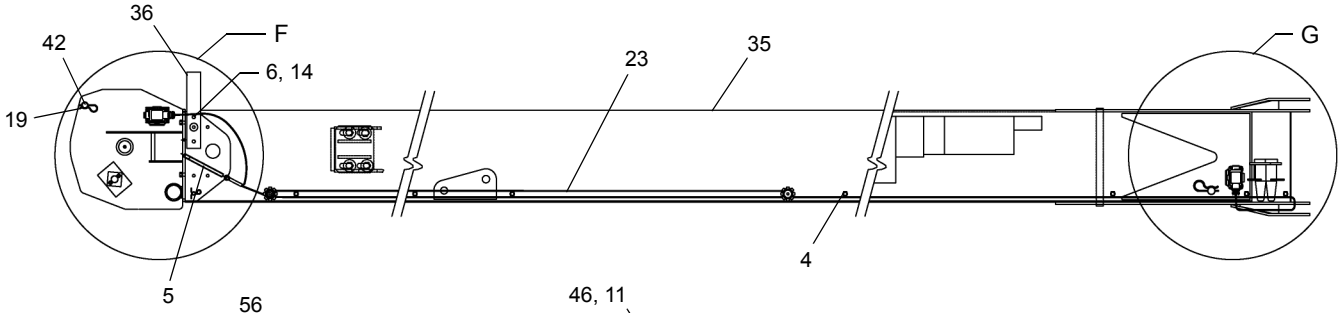

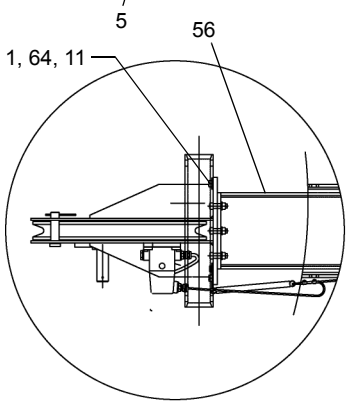

2 STAGE JIBS ONLY

DETAIL A

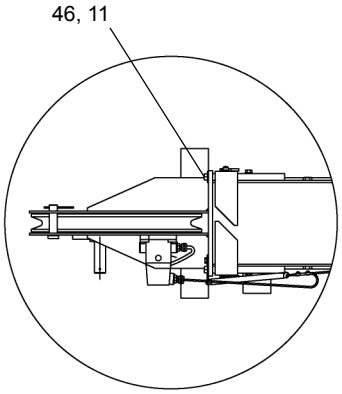

SINGLE STAGE JIBS ONLY

DETAIL A

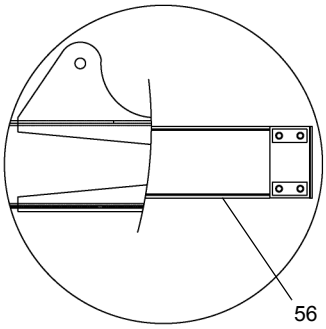

2 STAGE JIBS ONLY

DETAIL B

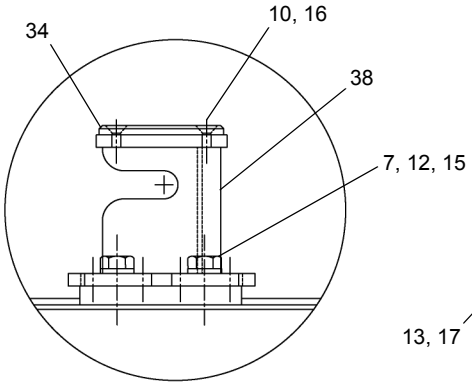

DETAIL C

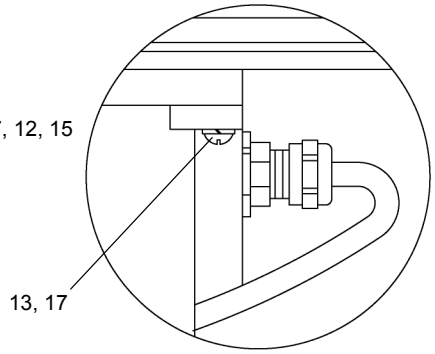

DETAIL D

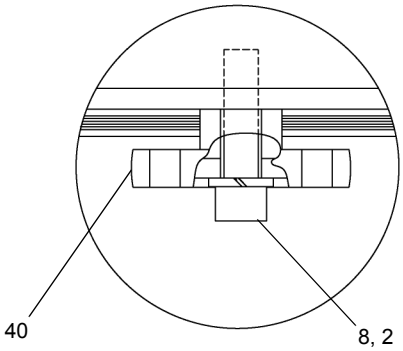

DETAIL E

SEE PAGES 39A.4 & 39A.5

WHEN ORDERING PARTS, SPECIFY MODEL NUMBER, SERIAL NUMBER AND DESCRIPTION OF PARTS REQUIRED

https://truckmanualshub.com/

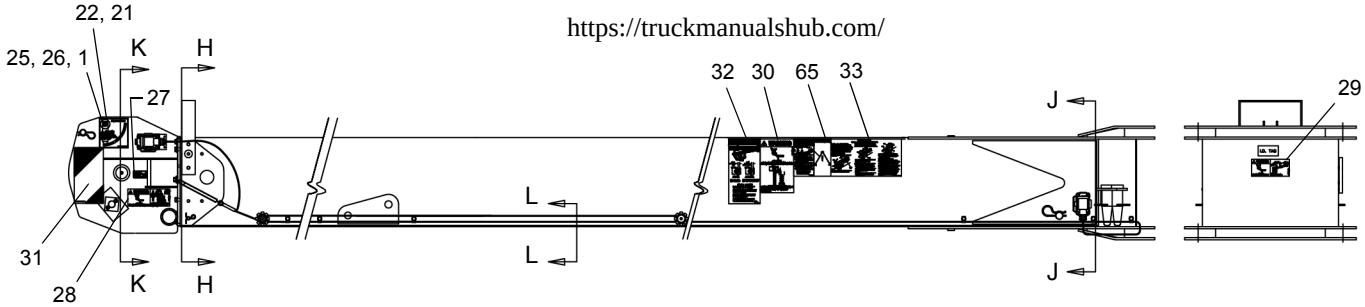

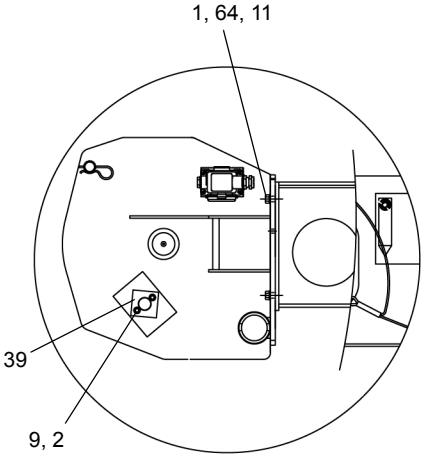

2 STAGE JIBS ONLY
DETAIL F

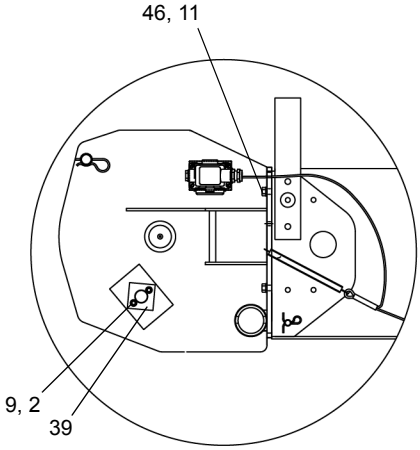

SINGLE STAGE JIBS ONLY
DETAIL F

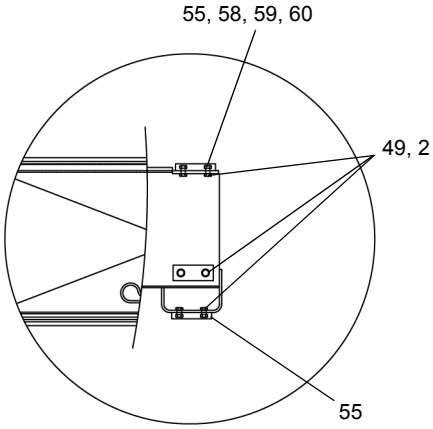

2-STAGE JIBS ONLY
DETAIL G

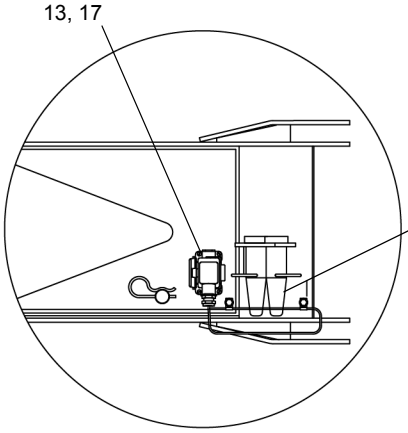

ALL JIBS
DETAIL G

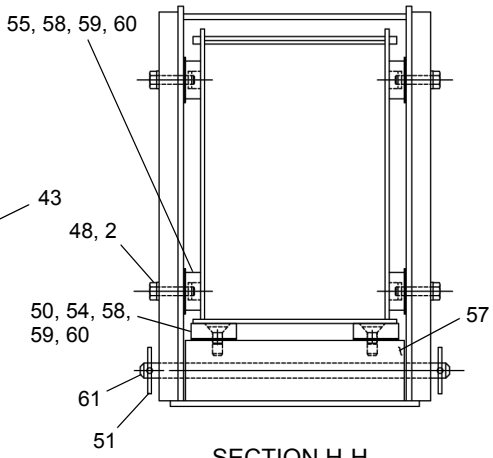

SECTION H-H

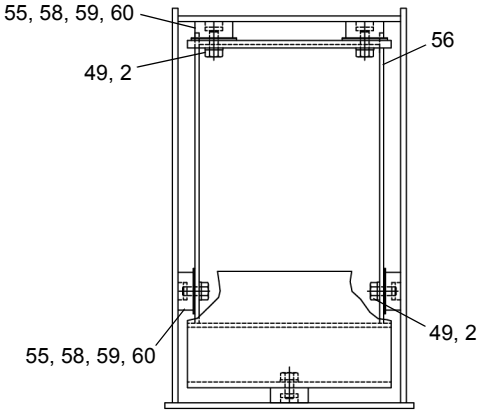

SECTION J-J

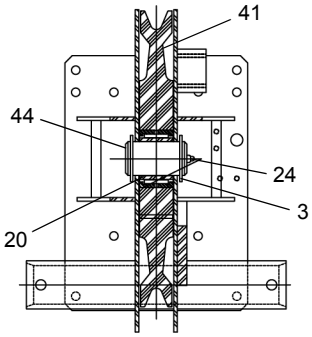

SECTION K-K

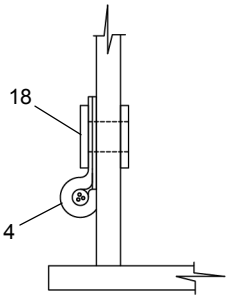

SECTION L-L

SEE PAGES 39A.4 & 39A.5

WHEN ORDERING PARTS, SPECIFY MODEL NUMBER, SERIAL NUMBER AND DESCRIPTION OF PARTS REQUIRED

https://truckmanualshub.com/

SEE PAGES 39A.2 & 39A.3

REF	PART NO.	DESCRIPTION	QTY
	730-51337-1 (Rev J)	*Jib Assembly, 26' Jib*	
		(Includes Items 1 thru 46)	
	730-51337-2 (Rev J)	*Jib Assembly, 26'/44' Jib*	
		(Includes Items 1 thru 45 & 47 thru 65)	
	730-51337-2.4 (Rev J)	*Jib Assembly, 26'/44' Jib*	
		(Includes Items 1 thru 45 & 47 thru 65)	
1	NYL-375C000-25	Nut, HEX, NYL-INST 0.375, ST Z GR5	
		(For 730-51337-1)	2
	NYL-375C000-25	Nut, HEX, NYL-INST 0.375, ST Z GR5	
		(For 730-51337-2 & 730-51337-2.4)	8
2	W07-312X000-20	WSH, LCK, MED-SPLT 0.312, ST Z	
		(For 730-51337-1)	8
	W07-312X000-20	WSH, LCK, MED-SPLT 0.312, ST Z	
		(For 730-51337-2 & 730-51337-2.4)	22
3	200-30001	Snap Ring- TRUARC#5100-175	2
4	201-00171	Clamp 0.13 DIA TUBE (A3S)	9
5	202-10066	Spring, Cable Tension (A3S)	1
6	SHF-375C875- 25	SCR, HHCS 0.375-16 X 0.875, ST Z GR5	4
7	SHF-625CA25-25	SCR, HHCS 0.625-11 X 1.25, ST Z GR5	4
8	S14-312CA25-H2	SCR, SHCS 0.312-18 X 1.25, ST Z G5	2
9	S14-312C625-H2	SCR, SHCS 0.312-18 X 0.63, ST Z G5	2
10	N04-312C000-25	Nut, HEX, 0.312-18 ST Z GR5	4
11	WAH-37NX000- Y2	WSH, FL HRD, A-NRW 0.375, ST Z	12
12	WAH-62NX000- Y2	WSH, FL HRD A-NRW 0.625, ST Z	4
13	W07-190X000-20	WSH, LCK MED-SPLT 0.190, ST Z	4
14	W07-375X000- 20	WSH, LCK MED-SPLT 0.375, ST Z	8
15	W07-625X000- 20	WSH, LCK, MED-SPLT .625, ST Z	4
16	S16-312CA50-25	SCR, FHSHCS - 0.312-18 X 1.50, ST Z	4
17	S18-190C375-HC	SCR, BHSHCS 10-24 X 0.375 ST Z	4
18	226-00020	Rivet .38HD .19D .45LG	9
19	PHP-120XA91-20	Pin, CTRHAIR 0.120 X 2.38 X 0.72, ST Z	1
20	274-30004	Bearing-inner Race MI-28	1
21	651-00366	Decal, Angle Chart L.H.	1
22	651-00367	Decal, Angle Chart R.H.	1
23	400-25085	Harness ATB /LMI Jib 4792 Series	1
24	501-03001	Fitting, Lube Straight 1/4-2	1
25	729-02579	Angle Pointer	2
26	WAR-375X000-22	WSH, FL, TYPA-REG 0.375, ST Z	2
27	T127341	Decal, Lanyard Hook	2
28	651-00423	Decal, Lanyard Hook Location	2
29	T118213	Decal, Jib Removal W/Lift Attach.	1
30	651-00416	Decal, Safe Elevated Access	2
31	T105672	Decal, Boom Head Strip	2
32	651-00371	Decal, Crush Hazard	2
33	652-00576	Decal, Folding Jib	2
34	729-02611	Wear Pad, Jib STOW BRKT	1
35	730-51273	Weld-Base-TC3400	1
36	770-01738	BRKT, Cable Guide-CS	2
37	770-01987	Tip Weld-jib- TC4700	1
38	770-02321	BRKT Weld, SFJ STOW- TC4700	1
39	774-00054	ATB Switch Adapter Bracket	1
40	808-00047	Knob, Hand	2
41	860-70005	Sheave ASS'Y 15 3 /80D- 9 /16GR	1
42	870-10174	Pin Clevis 0.75 X 2.75 PL	1
43	870-40186	Pin, 1.53-Jib INSTL	4
44	870-50058	Pin-Sheave- TC2800	1
45	PHP-178XC75-20	Pin, CTRHAIR 0.178 X 3.75 X 1.03,ST Z	
		(For 730-51337-1)	4
	PHP-178XC75-20	Pin, CTRHAIR 0.178 X 3.75 X 1.03,ST Z	
		(For 730-51337-2 & 730-51337-2.4)	5
46	SHF-375CA13-Y8	SCR,HHCS 0.375-16 X1.13, ST Z GR8	6

WHEN ORDERING PARTS, SPECIFY MODEL NUMBER, SERIAL NUMBER AND DESCRIPTION OF PARTS REQUIRED

https://truckmanualshub.com/

SEE PAGES 39A.2 & 39A.3

REF	PART NO.	DESCRIPTION	QTY
	730-51337-1 (Rev J)	*Jib Assembly, 26' Jib (Includes Items 1 thru 46) (Contd)*	
	730-51337-2 (Rev J)	*Jib Assembly, 26'/44' Jib (Includes Items 1 thru 45 & 47 thru 65) (Contd)*	
	730-51337-2.4 (Rev J)	*Jib Assembly, 26'/44' Jib (Includes Items 1 thru 45 & 47 thru 65) (Contd)*	
47	200-10002	Snap Ring- TRUARC#51 00-1 00	2
48	SHF-312CA25-25	SCH,HHCS, 0.312-18 X 1.25, ST Z GR5	8
49	SHF-312C625- 25	SCH,HHCS, 0.312-18 X 0.63, ST Z GR5	10
50	S16-312C625- 20	SCR,FHSHCS 0.312-18 X 0.63, ST Z	4
51	P02-188XA50-20	Pin, Cotter 0.188 X 1.50, ST Z	2
52	P22- 250XB25-G2	Pin, Roll, Ø0.25 X 2.25, ST Z	1
53	P22- 250XD00-G2	Pin, Roll, Ø0.50 X 4.00, ST Z	1
54	729-02170	Wear Pad 1.50 X 3.50 CSK	2
55	729-02341	Wear Pad 1.50 X 3.50 PLYS	9
56	730-51269	Weld-2nd Stage-TC3200	1
57	783-02908	Support Bar - Jib	1
58	787-00241	Shim 3.50 X 1.50 X .040	10
59	787-00242	Shim 3.50 X 1.50 X .063	10
60	787-00243	Shim 3.50 X 1.50 X .10	2
61	870-00136	Pin Ø0.50 X 10.25	1
62	870-20236	Pin Ø1 X 9.13	1
63	870-20237	Pin Ø1 X 12.13	1
64	SHF-375CA50-25	SCR,HHCS 0.375-16 X 1.50, ST Z GR5	6
65	652-00132	Decal 2nd Stage Operation	2

https://truckmanualshub.com/

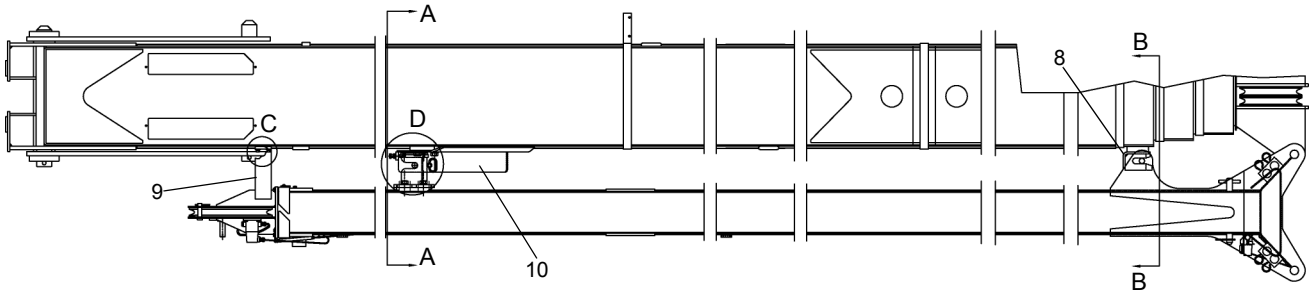

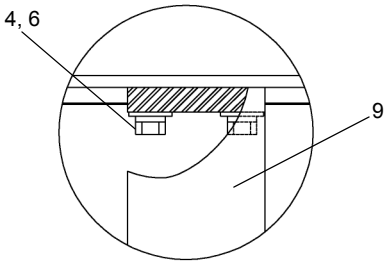

DETAIL C

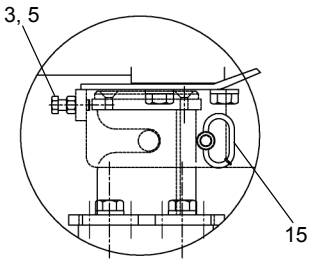

DETAIL D

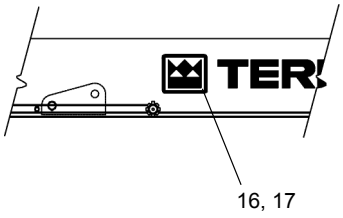

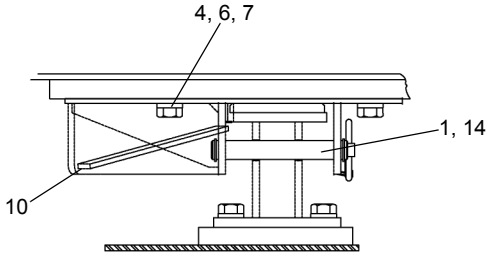

SECTION A - A

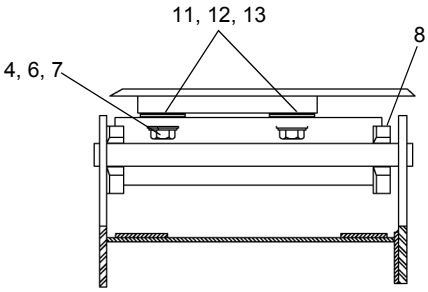

SECTION B - B

REF	PART NO.	DESCRIPTION	QTY
	730-51331-1 (Rev D)	*Jib Stowage, BT4792 Black Terex Logo (Includes Items 1 thru 15 & 16)*	
	730-51331-2 (Rev D)	*Jib Stowage, BT4792 White Terex Logo (Includes Items 1 thru 15 & 17)*	
1	200-10011	Snap Ring-TRUARC	2
2*	220-02004	3/8 16X1 HCS GR 5 ZINC	4
3	220-04005	1/2 13 X 1 1/2 HCS GR5 ZINC	2
4	220-06038	HHB 5/8 NC X 1-1/4 GR5 PLTD	8
5	221-04001	Nut HEX 1/2-13 STL GR5	2
6	222-06006	Washer, Flat 5/8 USS ZINC	8
7	222-16003	Washer, Lock MED 5/8 PLTD	8
8	770-01736	BRKT Weld, Jib Stow	1
9	770-01822	BRKT, Jib Stop	1
10	770-02322	BRKT Weld, Stow Ramp	1
11	787-00226	Shim .040 X 2-3/8 X 4	2
12	787-00227	Shim .063 X 2-3/8 X 4	2
13	787-00228	Shim .100 X 2-3/8 X 4	2
14	870-20256	Pin, 1" DIA Jib STOW	1
15	870-00152	Hitch Pin ASSY	1
16	T105648	Terex Logo (BLK) With 5.4” Crown	2
17	T105650	Terex Logo (WHT) With 5.4” Crown	2

* ITEM 2 IS NOT SHOWN IN ILLUSTRATION

WHEN ORDERING PARTS, SPECIFY MODEL NUMBER, SERIAL NUMBER AND DESCRIPTION OF PARTS REQUIRED

https://truckmanualshub.com/

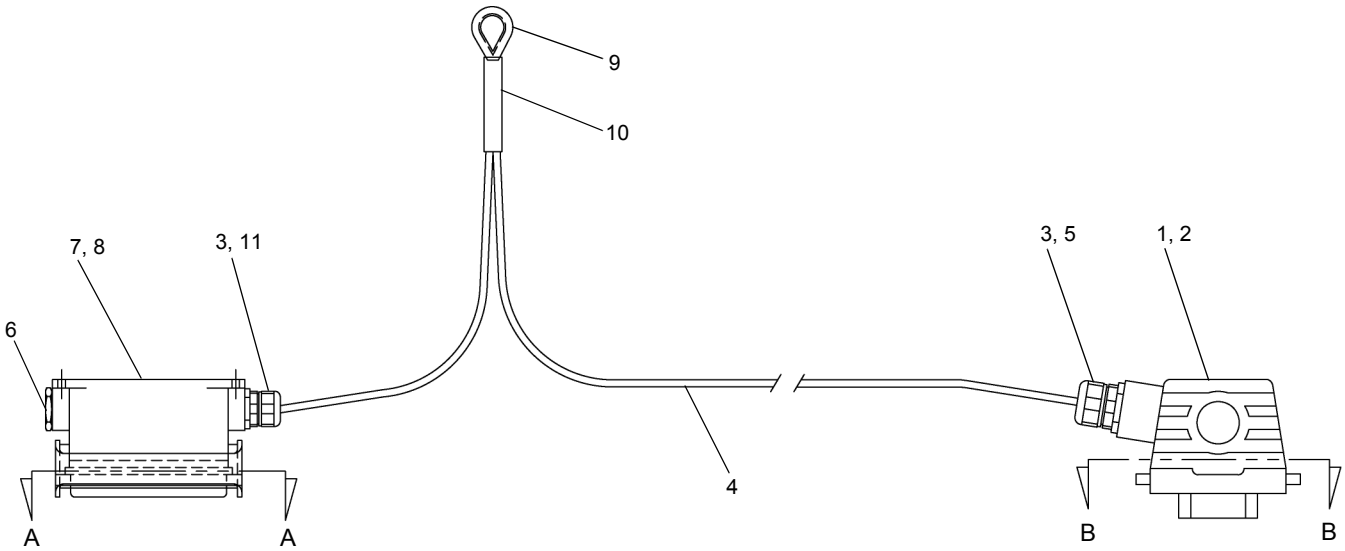

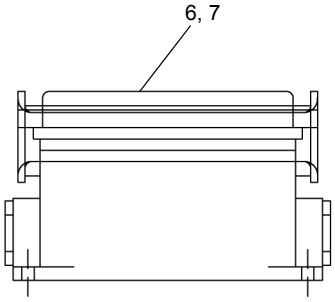

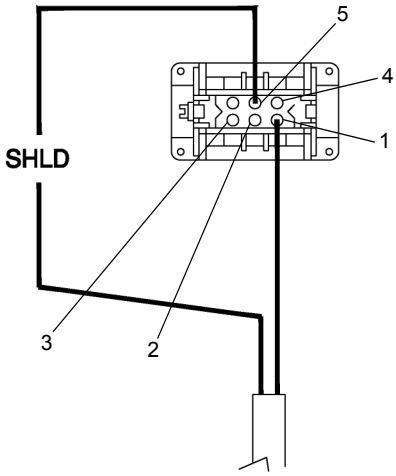

SECTION A - A

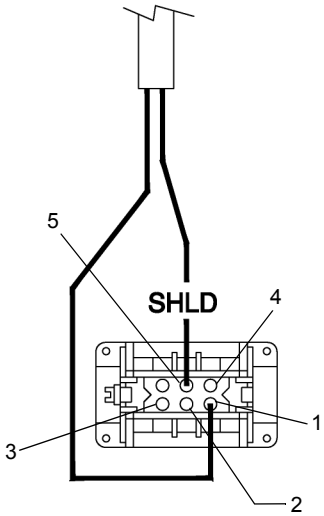

SECTION B - B

REF	PART NO.	DESCRIPTION	QTY
	400-25085 (Rev E)	*ASSY, ATB/LMI Cable 2ND Stage*	
1	400-23335	Hood, 6 Pin Side Entry	1
2	400-23341	Insert, 6 Pin Male Plug	1
3	400-15184	Cable Gland - PG7 S.R	2
4	400-26019	Cable, 1 COND w/SHLD - S.S	45.5’
5	400-15185	Reducer, PG 13.5 To PG7	1
6	400-15109	Plug - PG16 Hole	3
7	400-23243	Cable Base - SNGL Latch S.M	2
8	400-23340	Insert, 6 Pin Female RECPT.	1
9	861-90345	Thimble - S.S. Ø5/32 Wire	1
10	400-15092	Adhesive Heat Shrint Tubing Ø1/4	2”
11	400-15183	Reducer, PG16 - PG7	1

WHEN ORDERING PARTS, SPECIFY MODEL NUMBER, SERIAL NUMBER AND DESCRIPTION OF PARTS REQUIRED

TEREX® P/N 12261-286	**ASSY, ATB/LMI CABLE 2ND STAGE JIB**	DATE: Released 12-2013	GROUP **39A**
		MODEL: BT4792	
		PAGE 39A.7	

https://truckmanualshub.com/

https://truckmanualshub.com/

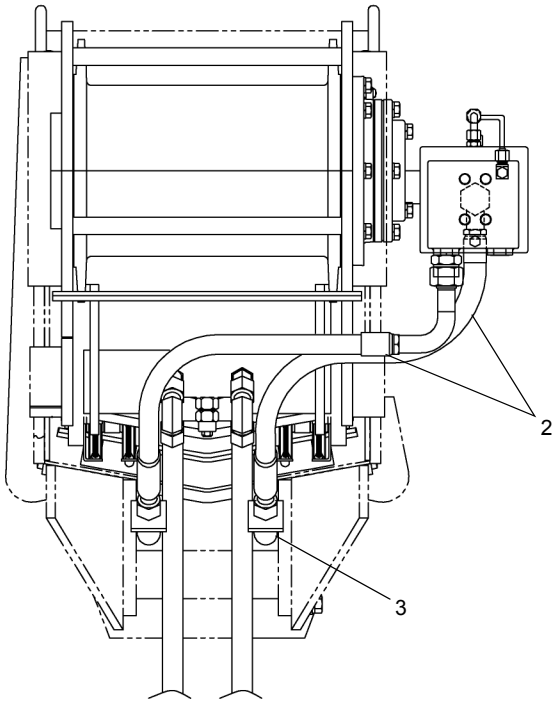

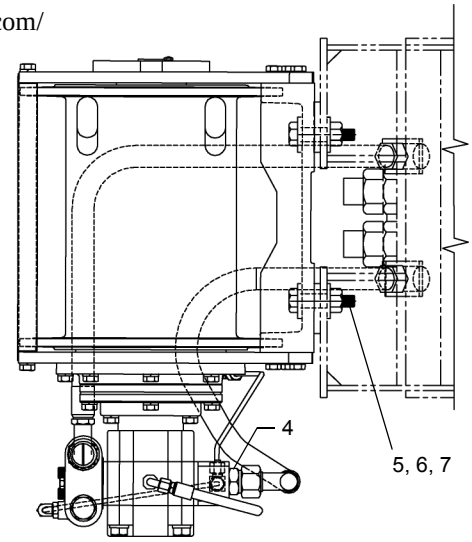

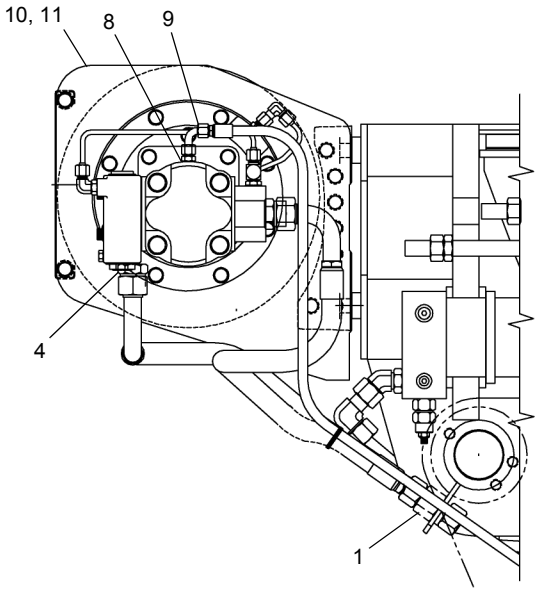

REF	PART NO.	DESCRIPTION	QTY
	717-00052-2 (Rev E)	*Winch INSTL CF (Combined Flow) 3000/4792 Series (Includes Items 1 thru 10)*	
	717-00052-2-R (Rev E)	*Winch INSTL CF (Combined Flow) 3000/4792 Series (Includes Items 1 thru 9 & 11)*	
1	518-60007	Bulkhead Union, M#12 OFS W/LN	2
2	502-40908	Hose ASSY, 3/4" I.D. (Winch)	2
3	519-70032	Cap, Tube, F#12 OFS	2
4	513-90032	CONN L M#16 OFS X M#16 ORB	2
5	220-07051	HHCS, 3/4-10 UNC X 2.75 LG GR8 Zinc	4
6	221-97002	Toplock Nut 3/4-10 NC Zinc	4
7	222-07003	Flatwasher 3/4 Hard Zinc PL	8
8	513-20027	STR CONN M 1/4 NPT X M#6 ORB	1
9	514-64002	Elbow, 90° #6 OFS Swivel Nut	1
10	293-00037-2.2	Winch ASSY 4792 W/ Cover WHT	1
11	293-00037-2.4	Winch ASSY 4792 W/ Cover Red	1

WHEN ORDERING PARTS, SPECIFY MODEL NUMBER, SERIAL NUMBER AND DESCRIPTION OF PARTS REQUIRED

https://truckmanualshub.com/

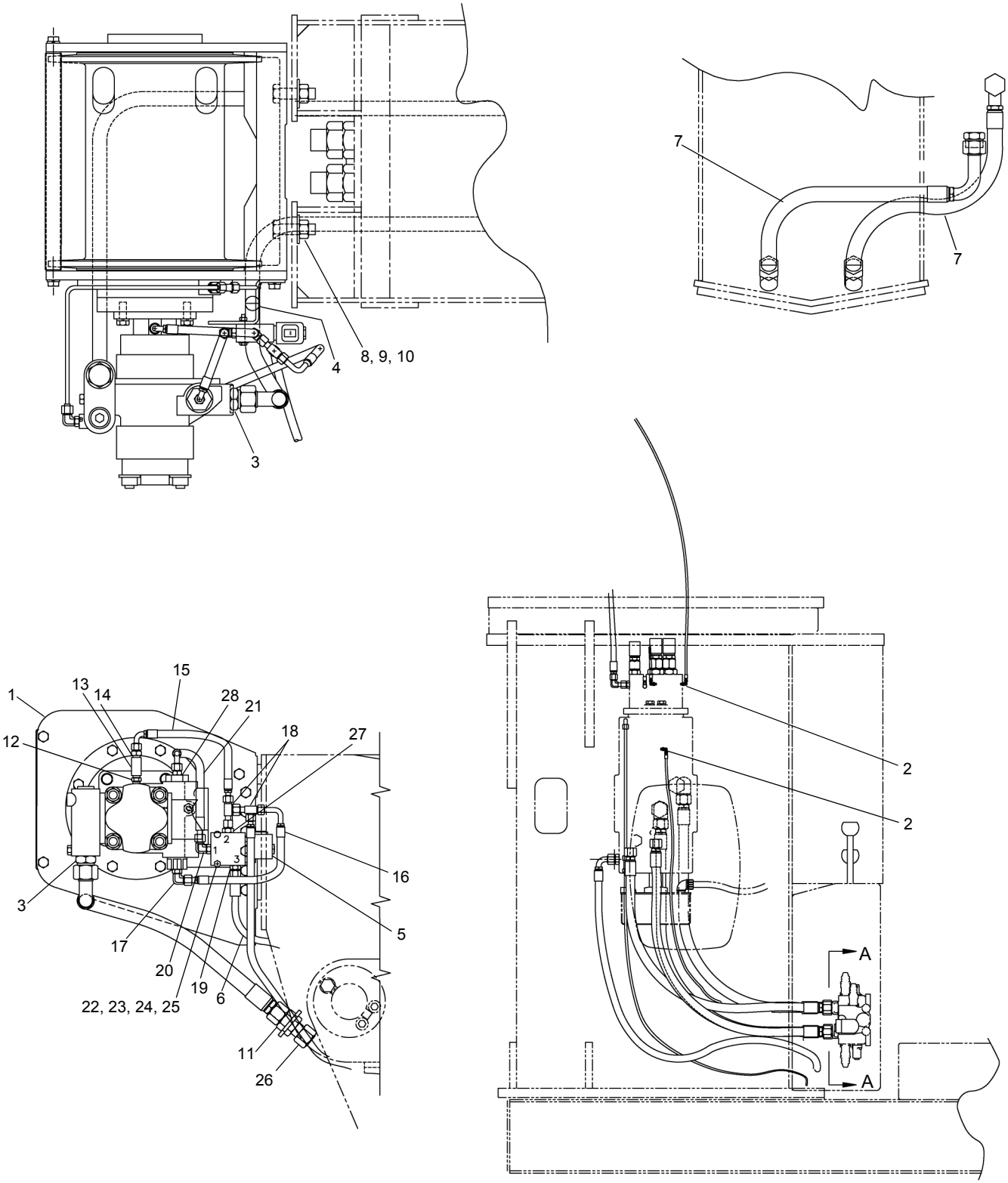

SEE PAGE 40.3

https://truckmanualshub.com/

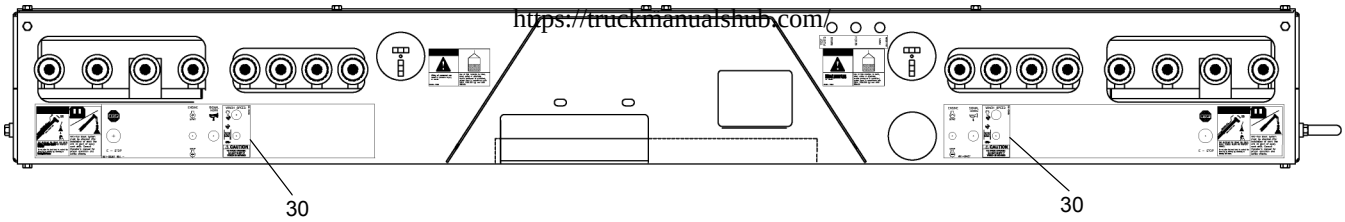

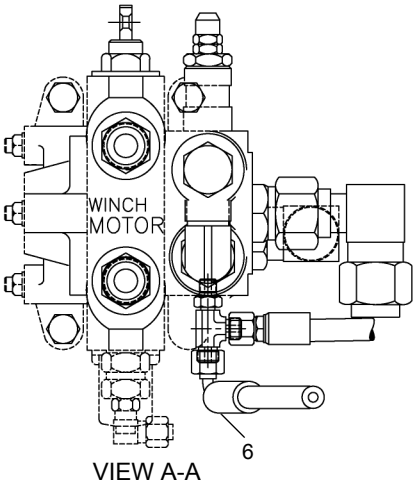

VIEW A-A

SEE PAGE 40.2

REF	PART NO.	DESCRIPTION	QTY
	717-00053-1 (Rev E)	*Winch INSTL MS*	
1	293-00044	Planetary Drive Winch ASSY	1
2	514-52003	Elbow 90 S.N. #4 OFS	2
3	513-90032	STR CONN M#16 OFS x M#16 ORB	2
4	775-00187	Bracket, Valve SUPT.	1
5	551-10032	Valve ASSY, Solenoid	1
6	502-11087	Hose ASSY, 1/4” I.D.	1
7	502-40908	Hose ASSY, 3/4” I.D.	2
8	220-07005	HHCS, 3/4-10 NC x 2.50 GR 8 Zinc	4
9	222-07003	FLatwasher 3/4 Zinc PLTD	8
10	221-97002	Toplock Nut 3/4-10 NC Zinc	4
11	518-60007	Bulkhead Union, 12WLD W/LN	2
12	552-10026	Check Valve	1
13	570-11001	Coupling, 1/4 NPT	1
14	513-20027	STR CNN M#6 OFS x M#4 MPTF	1
15	502-20998	Hose, 3/8 X 11.5 F#6 OFS x F#6 OFS 90°	1
16	502-20999	Hose, 3/8 X 16 F#6 OFS x F#6 OFS 90°	1
17	514-04010	90 Elbow STD - M#6 OFS x M#4 ORB	1
18	516-84003	Tee, 2 X M#4 OFS x M#4 ORB	2
19	513-20019	STR CONN M#4 OFS x M#6 ORB	1
20	514-52005	90 Elbow M#4 OFS x M#6 ORB	1
21	502-11310	Hose, 1/4 x 9 F#4 OFS x F#4 OFS 90°	1
22	220-00007	HHCS 1/4-20 NC x 2.00 GR 8 Zinc	2
23	222-00006	Flatwasher 1/4 Zinc PLTD	2
24	222-10005	Lockwasher 1/4 Zinc PLTD	2
25	221-00001	Hex Nut 1/4-20 NC Zinc PLTD	2
26	519-70032	Cap, Tube, F#12 OFS	2
27	513-40014	STR CONN M#4 OFS x M#6 ORB	1
28	513-20017	STR CONN M#4 OFS x M#4 ORB	1
29*	503-92028	Hose Kit, 2 SP Winch	1
30	651-00429	Decal, Motor Shift Winch	2

* ITEM 29 IS NOT SHOWN IN ILLUSTRATION

WHEN ORDERING PARTS, SPECIFY MODEL NUMBER, SERIAL NUMBER AND DESCRIPTION OF PARTS REQUIRED

https://truckmanualshub.com/

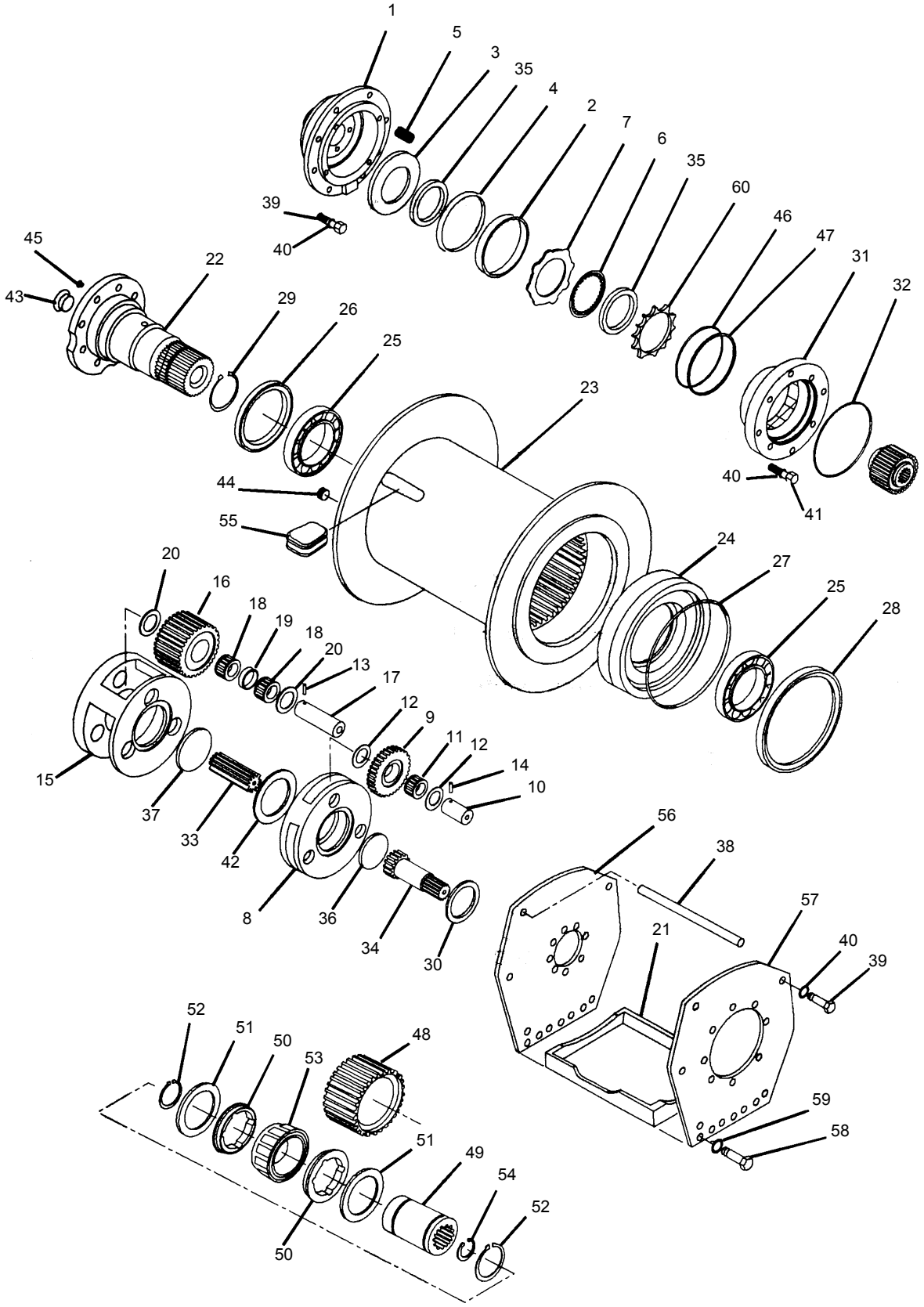

SEE PAGE 40.5

WHEN ORDERING PARTS, SPECIFY MODEL NUMBER, SERIAL NUMBER AND DESCRIPTION OF PARTS REQUIRED

https://truckmanualshub.com/

SEE PAGE 40.4

REF	PART NO.	DESCRIPTION	QTY
	293-00037 (Rev D)	*Winch*	
1	058-00632	Brake Cylinder	1
2*	058-00429	Seal	1
3	058-00430	Pressure Plate	1
4	058-00432	Backup Ring	1
5	058-00431	Spring	12
6	058-00634	Disc, Friction	7
7	058-00629	Disc, Steel	8
8	058-00584	Primary Planet Carrier	1
9	058-00585	Primary Planet Gear	3
10	058-00396	Primary Planet Gear Shift	3
11	058-00397	Bearing, Roller	3
12	058-00398	Washer, Thrust	6
13	058-00399	Spirol Pin, Primary Planet Carrier	3
14	085-00627	Spirol Pin Output Planet Carrier	3
15	058-00402	Output Planet Carrier	1
16	058-00403	Output Planet Gear	3
17	058-00404	Output Planet Gear Shift	3
18	058-00405	Bearing, Roller	6
19	058-00406	Bearing, Spacer	3
20	058-00407	Washer, Thrust	1
21	058-00579	Base	1
22	058-00636	Bearing Support	1
23	058-00581	Cable Drum	1
24	058-00582	Cable Drum Closure	1
25	058-00413	Bearing, Ball	2
26*	058-00420	Seal	1
27*	058-00421	O-Ring Flush Plug	1
28*	058-00487	Seal	1
29	058-00423	Retaining ring	1
30	058-00610	Washer, thrust	1
31	058-00637	Motor Support	1
32*	058-00540	O-Ring	1

REF	PART NO.	DESCRIPTION	QTY
33	058-00415	Output Sun Gear	1
34	058-00416	Primary Sun Gear	1
35	058-00433	Spacer	1
36	058-00400	Primary Thrust Plate	1
37	058-00408	Output Thrust Plate	1
38	058-00444	Spacer, Bar	2
39	058-00568	Capscrew	14
40	058-00034	Washer, Lock	22
41	058-00565	Capscrew	4
42	058-00611	Washer, Lock	1
43	058-00595	O-Ring Flush Plug	1
44	058-00426	O-Ring, Flush Plug	1
45	058-00608	Plug, Vent	1
46*	058-00434	O-Ring	1
47*	058-00435	Backup Ring	1
	058-00597	**Brake Clutch Assembly** (Items 48 through 54)	1
48		Outer Brake Race	1
49		Inner Brake Race	1
50	058-00609	Sprag Bearing	2
51	058-00389	Washer, Thrust	2
52	058-00390	Retaining Ring	2
53		Sprag, Clutch	1
54	058-00391	Retaining Ring	1
55	058-00639	Cable, Wedge	1
56	058-00598	Side Plate, Support End	1
57	058-00599	Side Plate, Motor End	1
58	058-00440	Capscrew	8
59	058-00607	Washer, Lock	8
60	058-00643	Spring, Cover	1

* ITEMS CONTAINED IN SEAL KIT 058-00728

WHEN ORDERING PARTS, SPECIFY MODEL NUMBER, SERIAL NUMBER AND DESCRIPTION OF PARTS REQUIRED

https://truckmanualshub.com/

https://truckmanualshub.com/

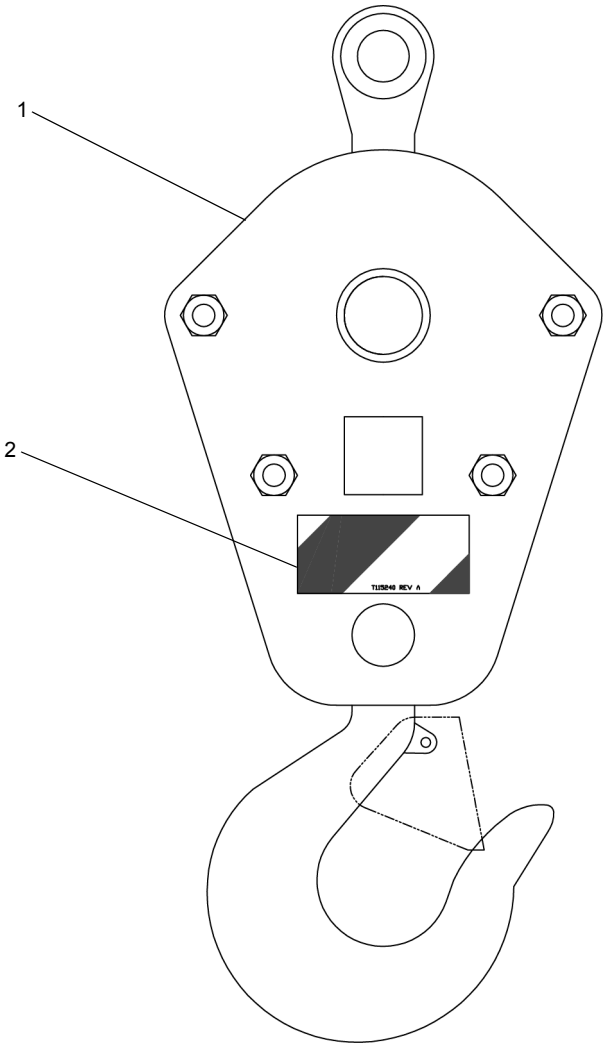

REF	PART NO.	DESCRIPTION	QTY
	T115185 (Rev B)	*Load Block ASSY 17.5T, 2 Part 1 Sheave*	
1	861-60104	Load Block, 17.5T 2 Part 1 Sheave.....	1
2	T115240	Safety Stripe 2.5 X 5.5.....	2

WHEN ORDERING PARTS, SPECIFY MODEL NUMBER, SERIAL NUMBER AND DESCRIPTION OF PARTS REQUIRED

https://truckmanualshub.com/

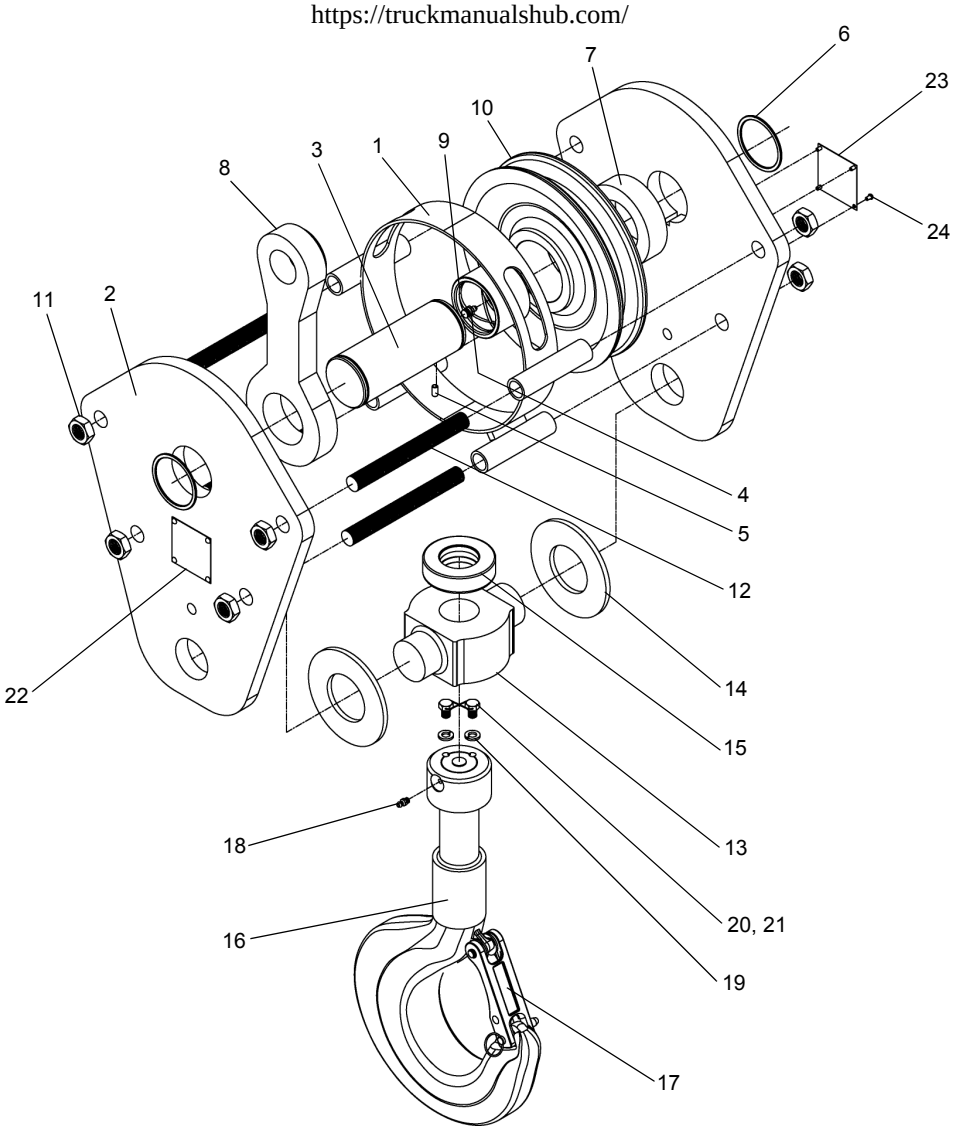

REF	PART NO.	DESCRIPTION	QTY	REF	PART NO.	DESCRIPTION	QTY
	861-60104 (Rev 00)	*Load Block 17.5T,* 2 Part 1 Sheave					
1	226750	J 10Shroud AY	1	13	215311	J DHSG CSTG	1
2	226751	J 10S PL 3/4	2	14	215326	SPR 4.75OD x 2.38ID x O.22LG	2
3	226752	Pin Center 2.50OD X 6.44LG 1	1	15	215312	T176 RT BRG	1
4	215304	Fitting 1/8NPT	1	16	221149	25HK & Nut A25	1
5	215305	OSPIROL 1/4	1	17*	215323	A22J Latch Kit Installed	1
6	215294	SPRLO X 21/2	2	18	215286	-28 Fitting 1/4	1
7	219136	SPR 4.00OD X 2.53ID X 1.09LG	1	19	217899	L Wash 3/8	2
8	226753	J D End 11/8	1	20	217898	OSCR HX 3/8 LW	2
9	226754	2B Bush3	1	21	217119	1/32 STN SAFTY Wire	1
10	226755	#10-1 10SHV	1	22	217136	Name Plate Terex	1
11	219133	-10 Nut J 3/4	8	23	217137	CAUT Plate Terex	1
12	219134	T Bolt 0.75OD X 7.00LG All THD	4	24	216955	OSCR DR 1/8	8

* WHEN ORDERING REPLACEMENT LATCH KIT SPECIFY PN: 226756

WHEN ORDERING PARTS, SPECIFY MODEL NUMBER, SERIAL NUMBER AND DESCRIPTION OF PARTS REQUIRED

https://truckmanualshub.com/

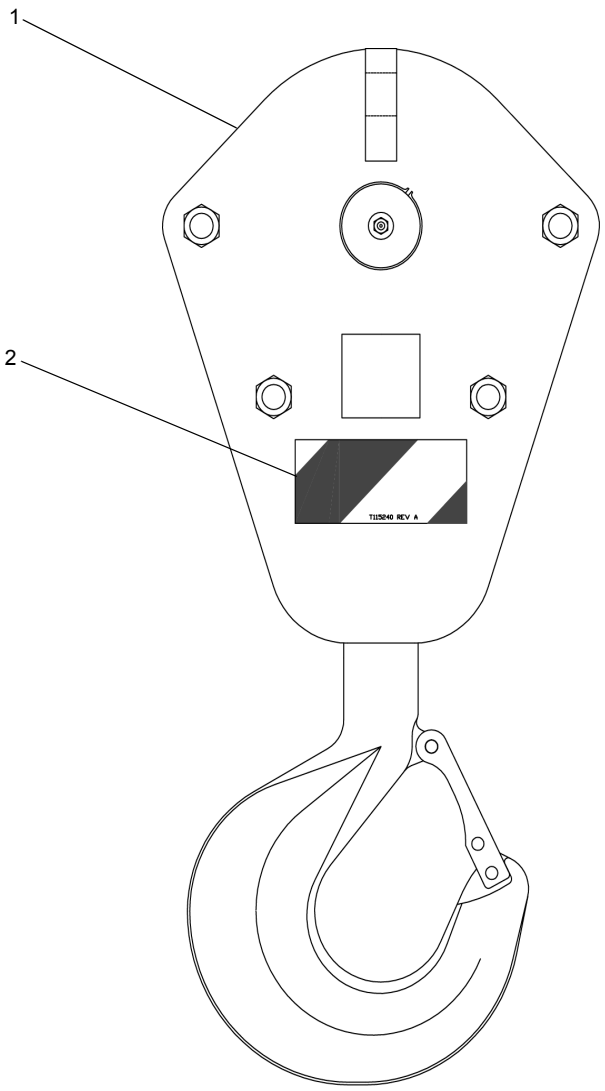

REF.	PART NO.	DESCRIPTION	QTY.
	T115186 (Rev B)	*Load Block ASSY 22.5T, 4 Part 2 Sheave*	
1	861-60105	Load Block, 22.5T 4 Part 2 Sheave	1
2	T115240	Safety Stripe 2.5 X 5.5	2

WHEN ORDERING PARTS, SPECIFY MODEL NUMBER, SERIAL NUMBER AND DESCRIPTION OF PARTS REQUIRED

https://truckmanualshub.com/

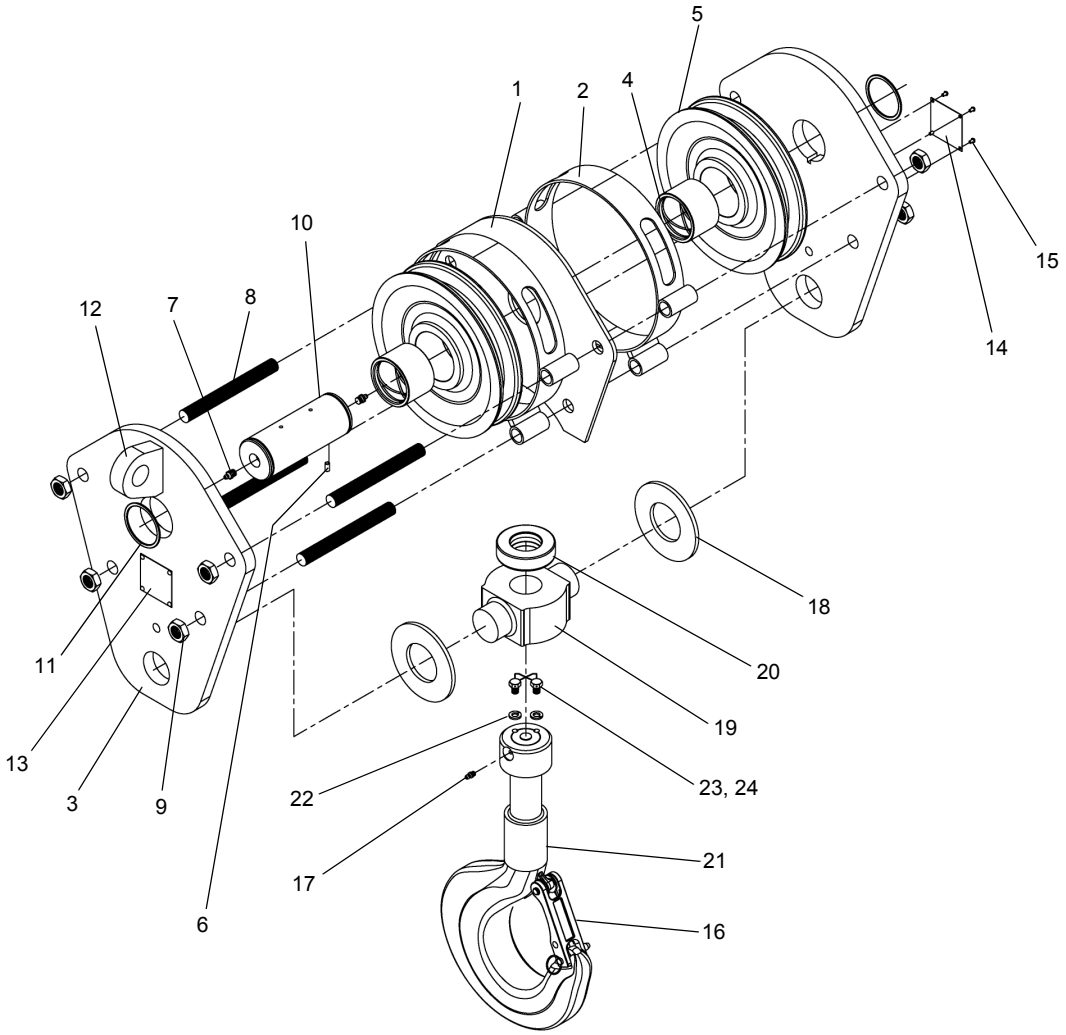

REF	PART NO.	DESCRIPTION	QTY	REF	PART NO.	DESCRIPTION	QTY
	861-60105 (Rev 00)	*Load Block 22.5T, 4 Part 2 Sheave*					
1	226757	J 10C PL 1/4 BRN	1	13	217136	Name Plate Terex	1
2	226758	J 10Shroud AY	2	14	217137	CAUT Plate Terex	1
3	226751	J 10S PL 3/ 4	2	15	216955	OSCR DR 1/8	8
4	226754	2B BUSH3	2	16*	215323	A22J Latch Kit Installed	1
5	226755	# 10-1 10SHV	2	17	215286	-28 Fitting 1/4	1
6	215305	OSPIROL 1/4	1	18	215326	SPR 4.75OD X 2.38 ID X 0.22LG	2
7	215304	Fitting 1 8NPT	2	19	215311	J DHSG CSTG	1
8	219134	T Bolt 0.75OD X 7.00LG All THD	4	20	215312	T176 RT BRG	1
9	219133	-10 Nut J 3/4	8	21	221149	25HK & Nut A25	1
10	226759	Pin Center 2.50OD X 6.44LG 2	1	22	217899	L Wash 3/8	2
11	215294	SPRLO X 21/2	2	23	217898	OSCR HX 3/8 LW	2
12	226760	J D END 1	1	24	217119	1/32 STN SAFTY Wire	1

* WHEN ORDERING REPLACEMENT LATCH KIT SPECIFY PN: 226756

WHEN ORDERING PARTS, SPECIFY MODEL NUMBER, SERIAL NUMBER AND DESCRIPTION OF PARTS REQUIRED

https://truckmanualshub.com/

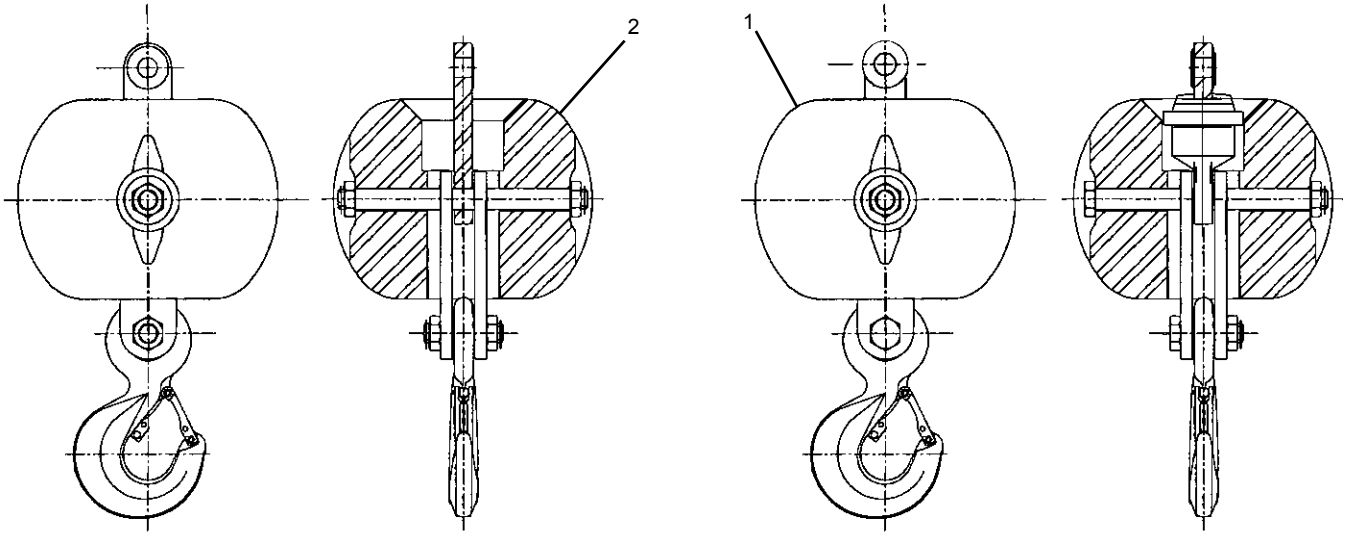

REF	PART NO.	DESCRIPTION	QTY
1	861-60090	Hook Ball 7 Ton Swivel	
2	861-90367	Load Ball 7 Ton Non-Swivel	

WHEN ORDERING PARTS, SPECIFY MODEL NUMBER, SERIAL NUMBER AND DESCRIPTION OF PARTS REQUIRED

https://truckmanualshub.com/

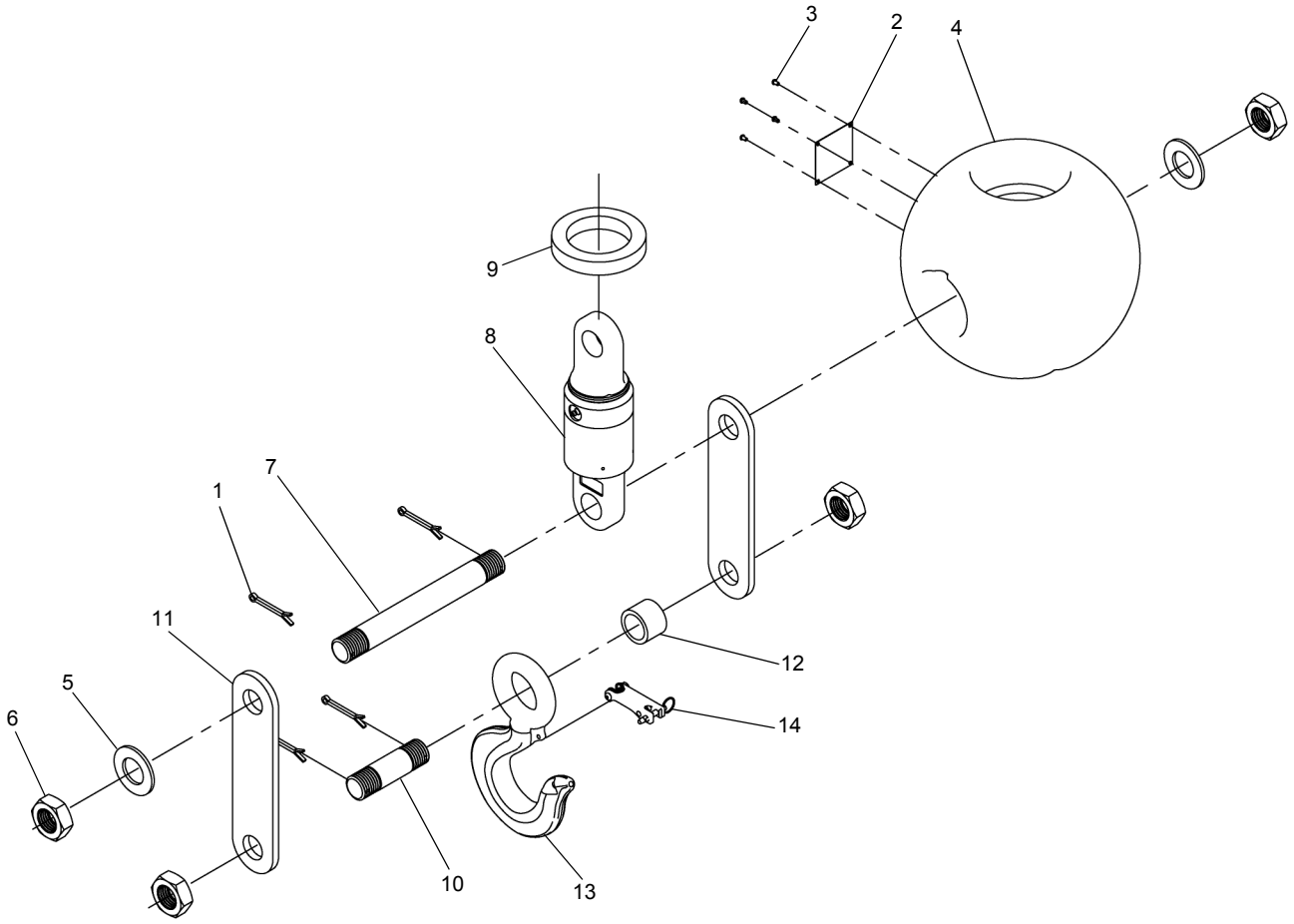

REF	PART NO.	DESCRIPTION	QTY
	861-60090 (Rev 00)	*Hook Ball 7 Ton Swivel*	
1	215388	1 Cotter 3/16	4
2	216954	Name Plate	1
3	216955	OSCR DR 1/8	4
4	225014	OHB 150 Ball	1
5	215386	Washer 11/4	2
6	215387	-7 Nut J 11/4	4
7	225016	OHB 10L Pin 11/4	1
8	215382	7EE	1
9	216951	7EE200C Ring	1
10	215389	OHB 4L Pin 11/4	1
11	215393	OHB ADP B 3/8	2
12	215392	1SPR 11/4	1
13	215391	7 Eye HK A 7	1
14*	219129	A-7J Latch Kit STL	1

* WHEN ORDERING REPLACEMENT HOOK LATCH KIT SPECIFY PN: 215390

https://truckmanualshub.com/

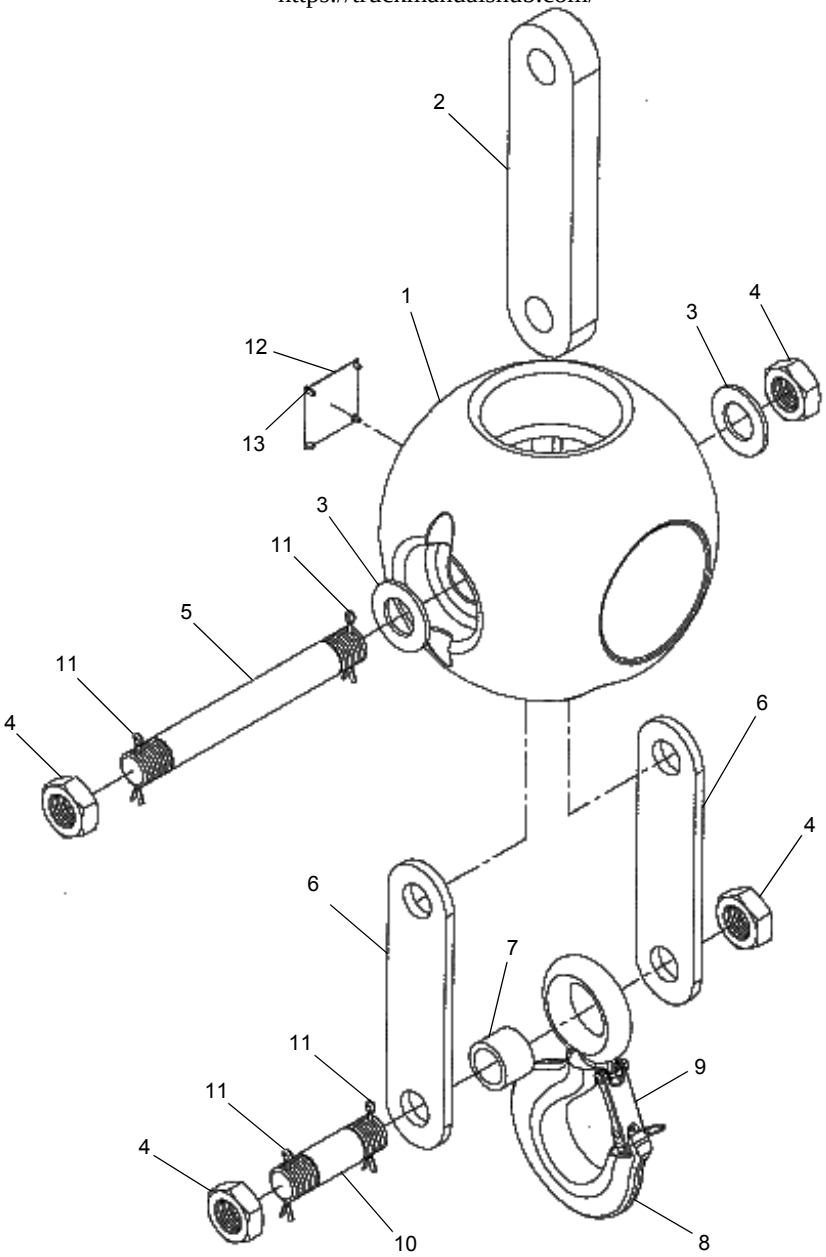

REF	PART NO.	DESCRIPTION	QTY
	861-90367	*Non-Swivel Overhaul Ball 7 Ton*	
1	225014	OHB 150 Ball	1
2	225015	OHB ADP B 11/4	1
3	215386	Washer 11/4	2
4	215387	-7 Nut J 11/4	4
5	225016	Pin Latch 1.25ODX10.4LG OHB	1
6	215393	OHB ADP B 3/8	2
7	215392	SPR 1.75ODX1.31IDX1.25LG	1
8	215391	7Eye HK A 7	1
9	219129	A-7J Latch Kit Installed	1
10	215389	Pin Latch 1.25ODX4.38LG	1
11	215388	Pin Cotter 0.19ODX1.75LG	4
12	219778	Name Plate Terex	1
13	216955	Screw DR RD0.14ODX0.25 LGNC CD	4

WHEN ORDERING PARTS, SPECIFY MODEL NUMBER, SERIAL NUMBER AND DESCRIPTION OF PARTS REQUIRED

https://truckmanualshub.com/

https://truckmanualshub.com/

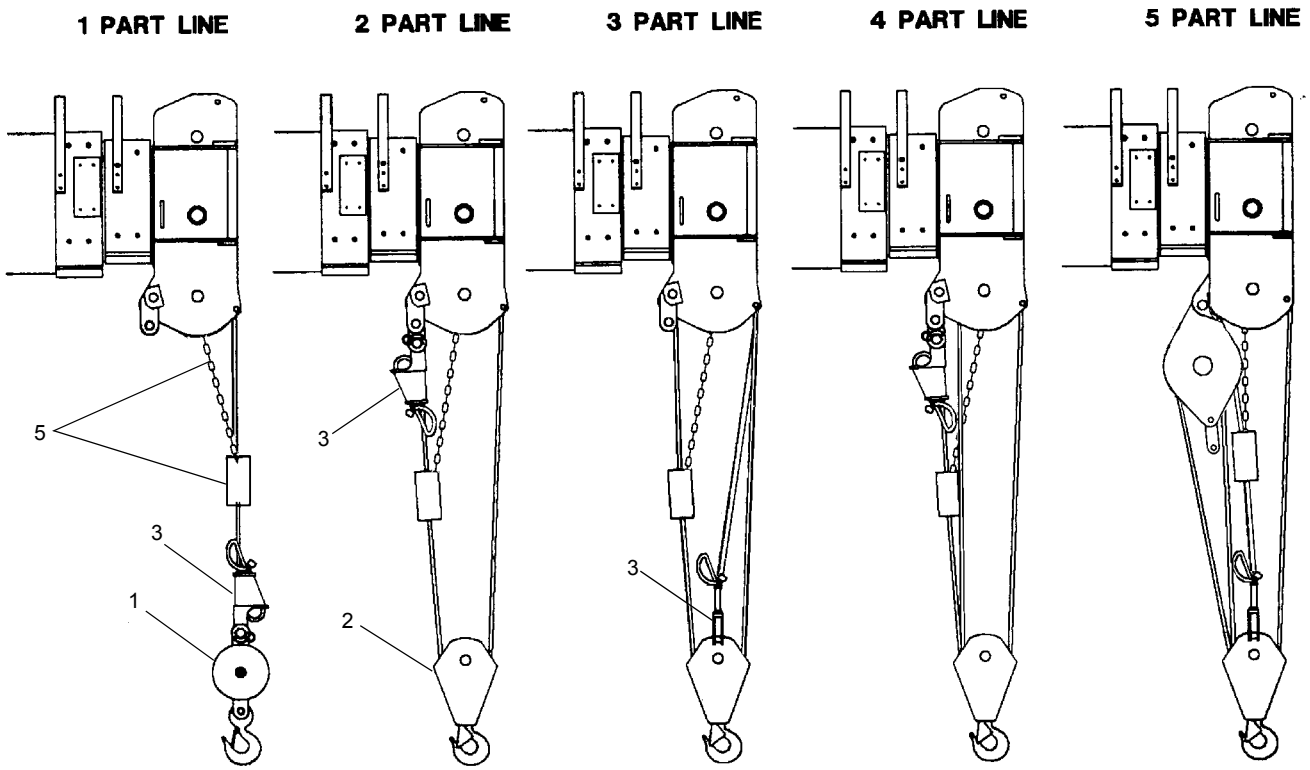

SEE PAGE 45.2

WHEN ORDERING PARTS, SPECIFY MODEL NUMBER, SERIAL NUMBER AND DESCRIPTION OF PARTS REQUIRED

https://truckmanualshub.com/

SEE PAGE 45.1

REF	PART NO.	DESCRIPTION	QTY
1	861-60090	Ball and Hook, Swivel, 7 Ton (Ref Page 44.6)	1
**	861-90367	Ball and Hook, Non-Swivel 7 Ton (Ref Page 44.7)	1
2	861-60104	Load Block, 17.5 Ton 3 Part Line (Ref Page 44.2)	1
	861-60105	Load Block, 22.5 Ton 3 - 5 Part Line (Ref Page 44.4)	1
3	861-90296	Wedge and Socket 9/16	1
4*	861-90059	Clamp	1
5	717 0882	Weight & Chain Anti-Two Block (Ref Page 52.1)	1
6*	870-30200	Pin, 1 1/4 x 5 1/4" Long	1
7*	224-04002	Hairpin (Ref Page 39.5)	1
8*	224-04001	Pin, Cotter (Ref Page 39.5)	1
9	861-16085	Wire Rope, Rotation Resistant, 9/16” x 315’	1
10	861-16089	Wire Rope, 6 x 25 IWRC, 9/16” x 315’	1
11*	735-00004	Sheave, Auxiliary (Ref Page 51.29)	1

** USE WITH 861-16089

* ITEMS 4, 6, 7, 8 & 11 ARE NOT SHOWN IN THE ILLUSTRATION

https://truckmanualshub.com/

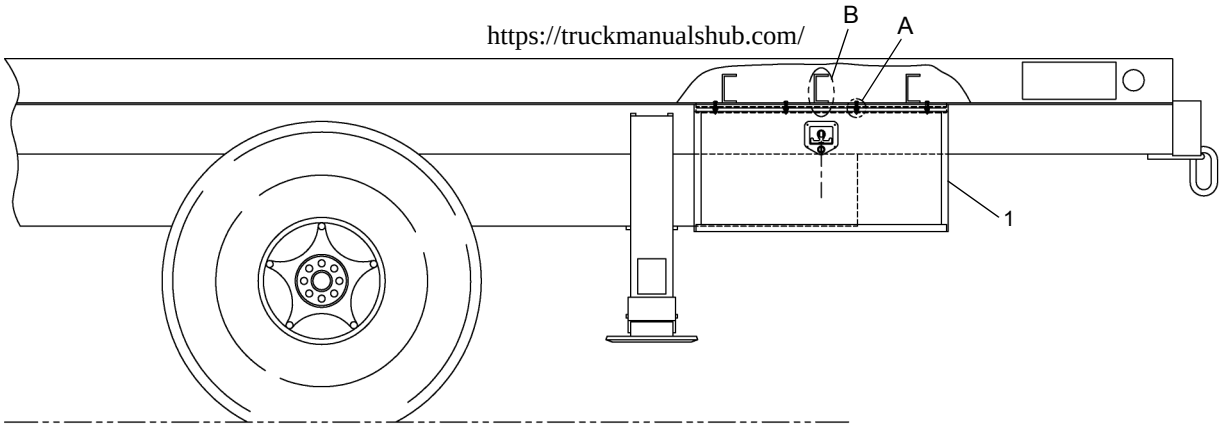

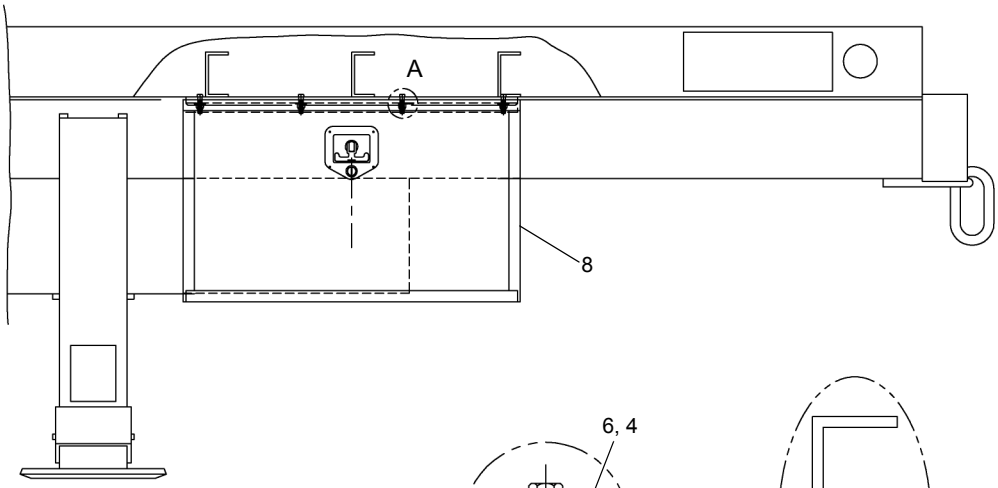

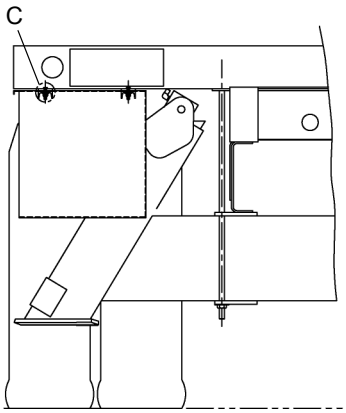

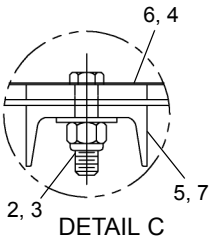

DETAIL C

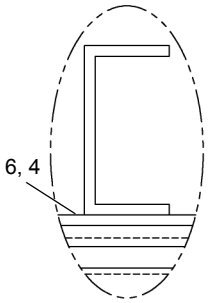

DETAIL B

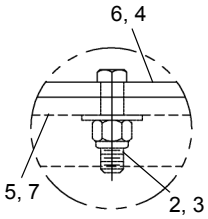

DETAIL A

REF	PART NO.	DESCRIPTION	QTY	REF	PART NO.	DESCRIPTION	QTY
	697-00007-1 (Rev C)	*Tool Box INSTL*			697-00007-2 (Rev C)	*Tool Box INSTL*	
1	600-32312	Tool Box - 36 x 18 x 18	1	2	221-00032-2	Nylon Lock HEX Nut 3/8-16 Zinc	8
2	221-00032-2	Nylon Lock HEX Nut 3/8-16 Zinc	8	3	222-00025-8	Flat Washer, 3/8 Zinc PLTD	8
3	222-00025-8	Flat Washer, 3/8 Zinc PLTD	8	6	770-02847.3	Stud Bar - 30” Tool Box S/W	2
4	770-02848.3	Stud Bar - 36” Tool Box S/W	2	7	786-01896.3	30” Tool Box MTG Channel	1
5	786-01897.3	36” Tool Box MTG Channel	1	8	600-32576	Tool Box - 30 x 18 x 18	1

WHEN ORDERING PARTS, SPECIFY MODEL NUMBER, SERIAL NUMBER AND DESCRIPTION OF PARTS REQUIRED

https://truckmanualshub.com/

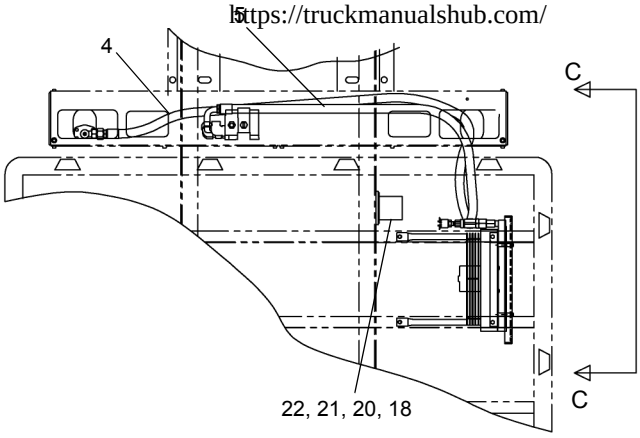

CURBSIDE INSTALLATION

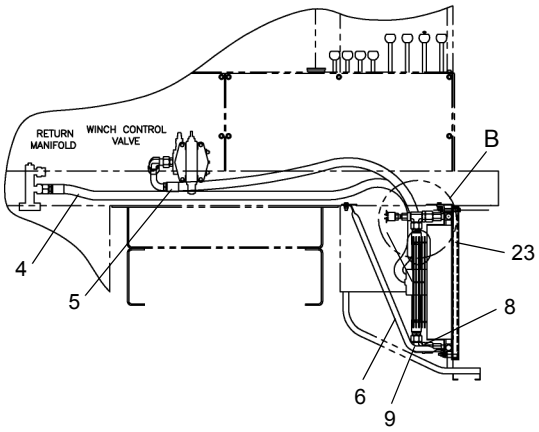

CURBSIDE INSTALLATION

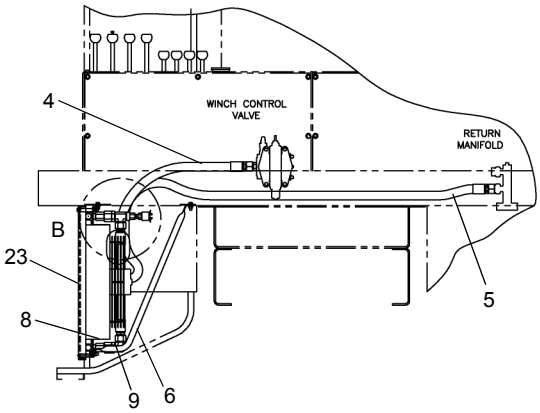

STREETSIDE INSTALLATION

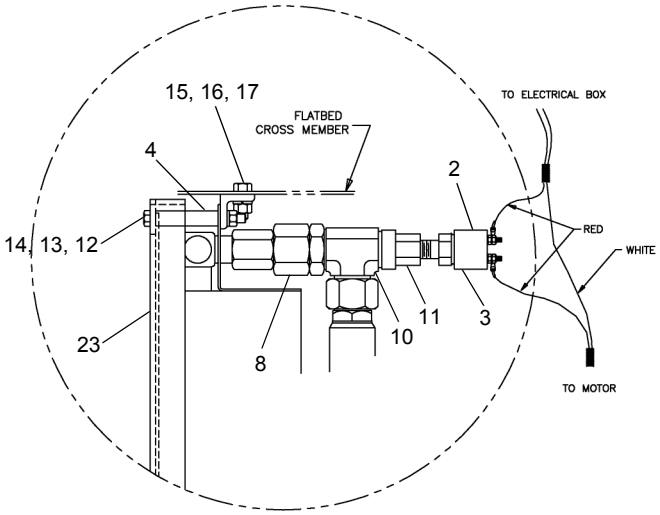

DETAIL B

SEE PAGE 51.3

https://truckmanualshub.com/

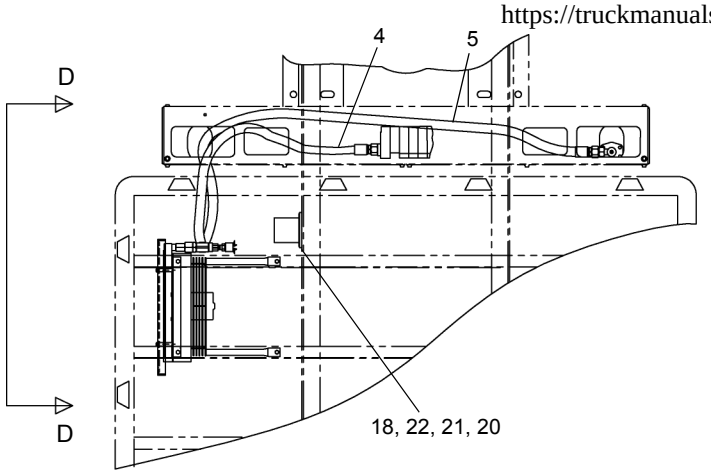

STREETSIDE INSTALLATION

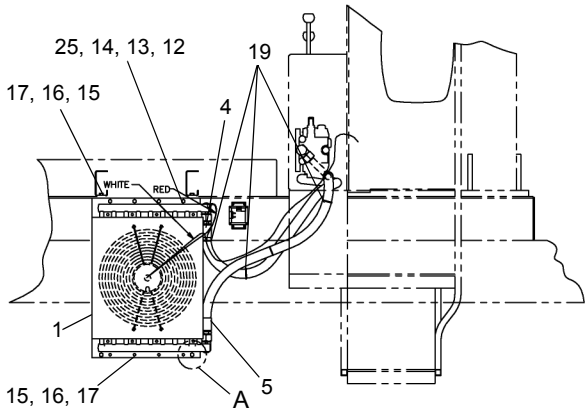

VIEW C-C
CURBSIDE INSTALLATION

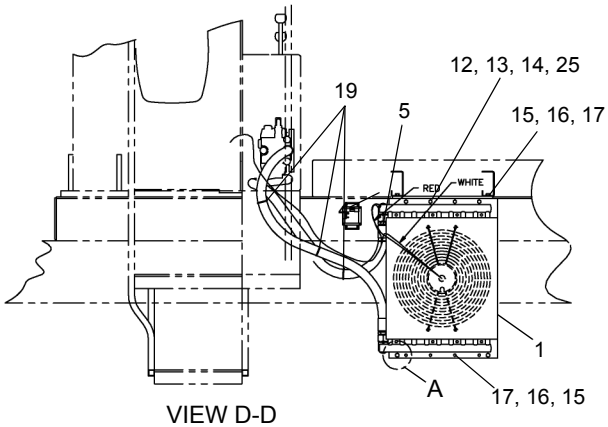

VIEW D-D
STREETSIDE INSTALLATION

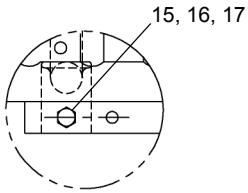

DETAIL A

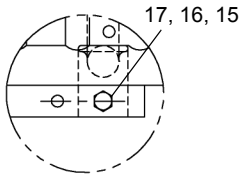

DETAIL A

SEE PAGE 51.2

REF	PART NO.	DESCRIPTION	QTY
	526-00013-1 (Rev K)	*Oil Cooler Installation*	
1	501-05010	Oil Cooler	1
2	400-05418	Thermal Switch - 160º	1
3	400-04990	Switch Boot	1
4	502-50316	Hose Assembly-Cooler Return	1
5	502-50317	Hose Assembly-Cooler Supply	2
6	782-01269	Support, Oil Cooler	2
7	785-01481	Angle, Cooler Support	1
8	517-90006	Adapter #16 For x 1"MPT	2
9	514-59021	Elbow, 90 #16 OFS	1
10	516-89013	Tee, Run, SPCL	1
11	517-00045	Adapter #6FP x #10 ORB	1
12	220-01011	HHCS 5/16-18NC x 3.5 Zinc	4
13	222-11002	Lockwasher 5/16	4
14	221-01001	HEX Nut 5/16-18	4
15	220-02004	Cap Screw 3/8-16 x 1 LG	6
16	222-12001	Lock Washer 3/8	6
17	221-02001	Nut 3/8-16	6
18	400-05502	Fan Control Box ASSY Oil Cool	1
19	400-15086	Tie Wrap 7 7/16 LG	10
20	780-00309	Pad	1
21	222-00028-9	Lockwasher 1/4 Size	4
22	220-00045-5	HHCS 1/4-20 x 1/2 GR 5 ZI	4
23	802-01642	Guard, Oil Cooler	1
24	400-01411	Loom, Split 1/4 I.D	25FT
25	011-20016	Spacer, Pipe	4

WHEN ORDERING PARTS, SPECIFY MODEL NUMBER, SERIAL NUMBER AND DESCRIPTION OF PARTS REQUIRED

https://truckmanualshub.com/

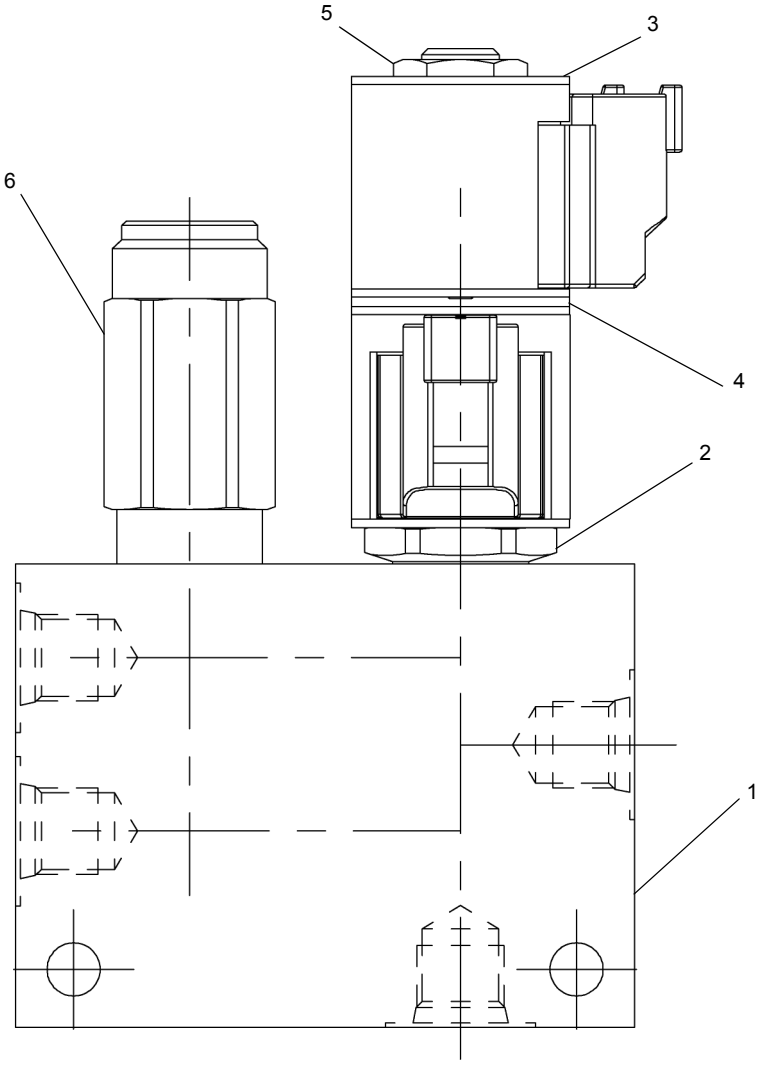

REF	PART NO.	DESCRIPTION	QTY
	551-10142 (Rev A)	*Front Bumper Outrigger Valve*	
1		Block	1
2	226865	Cartridge	1
3	226864	Coil	2
4	226863	Spacer	1
5	223073	Nut	1
6	226862	Relief	1

WHEN ORDERING PARTS, SPECIFY MODEL NUMBER, SERIAL NUMBER AND DESCRIPTION OF PARTS REQUIRED

https://truckmanualshub.com/

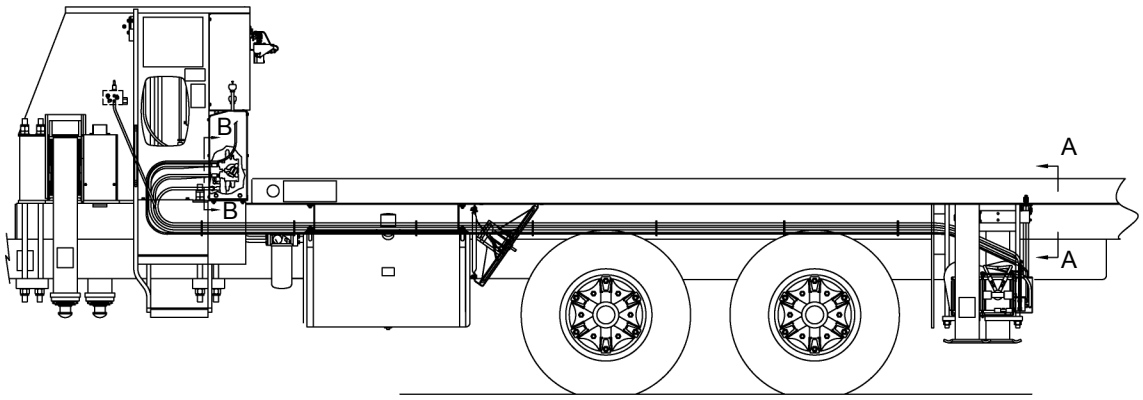

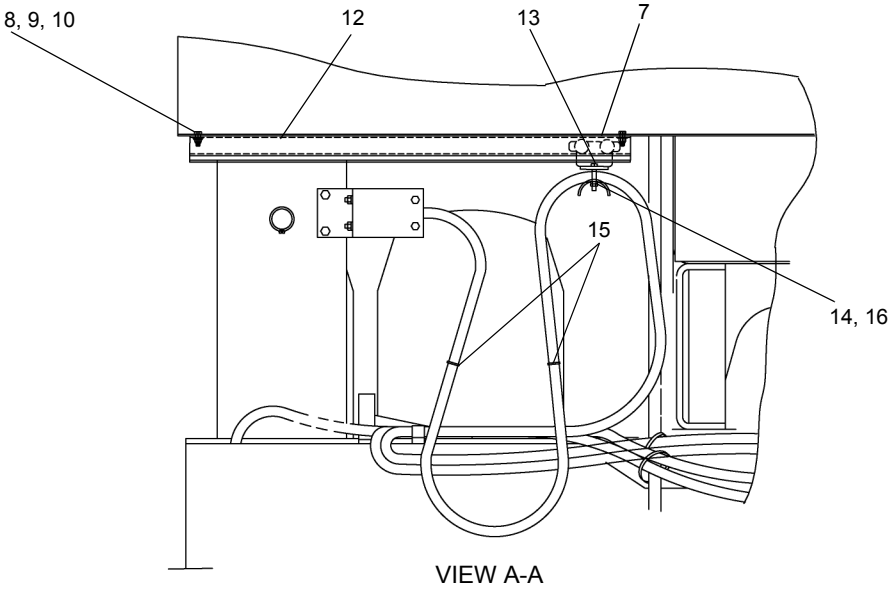

VIEW A-A

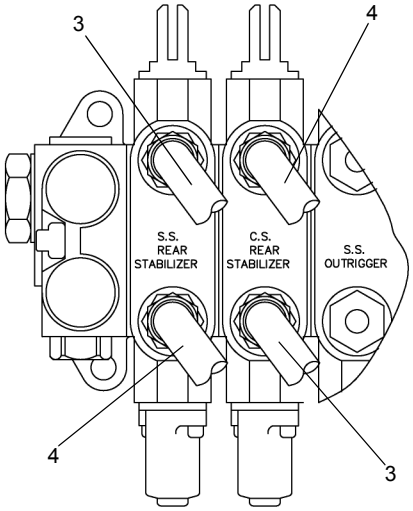

VIEW B-B

SEE PAGE 51.7

https://truckmanualshub.com/

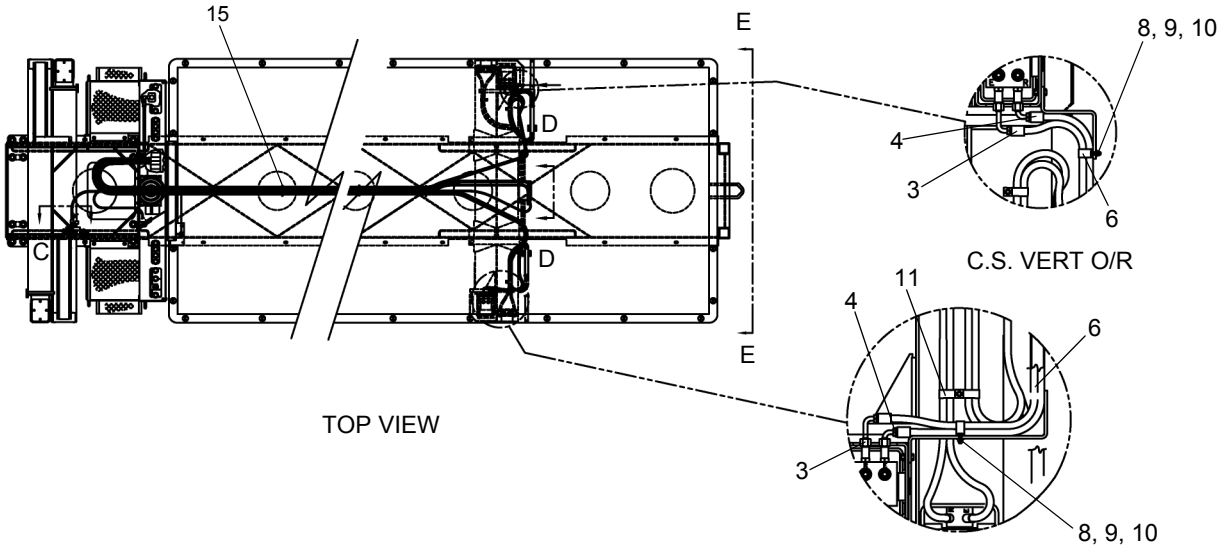

TOP VIEW

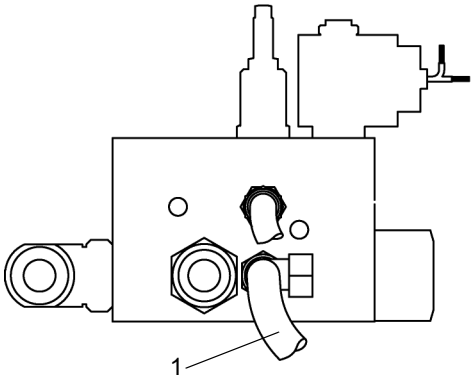

VIEW C-C

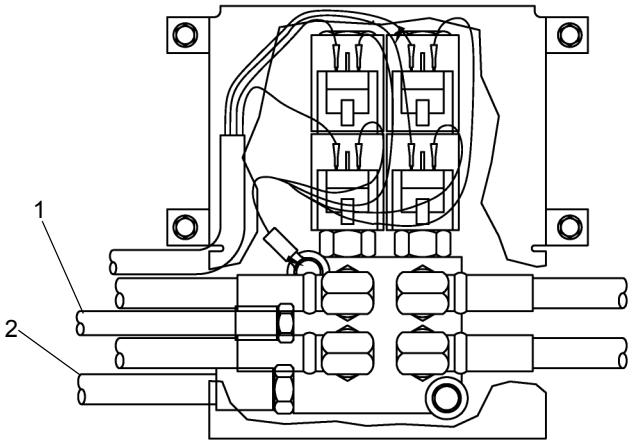

VIEW D-D

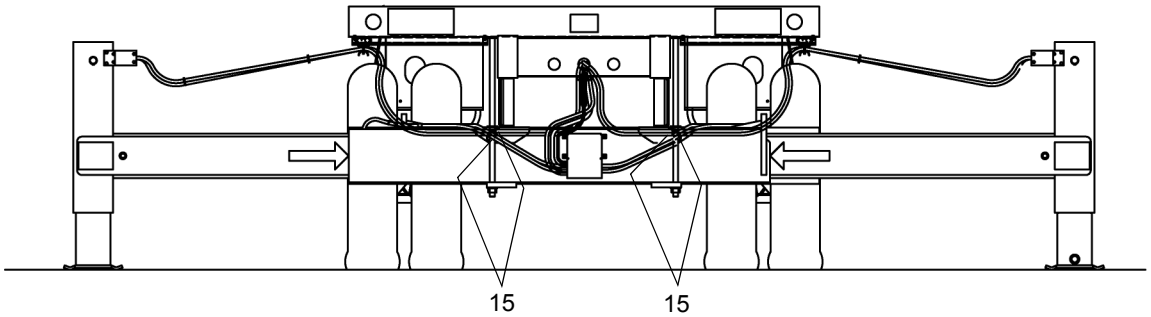

VIEW E-E

SEE PAGE 51.7

https://truckmanualshub.com/

SEE PAGES 51.5 & 51.6

REF	PART NO.	DESCRIPTION	QTY
	500-50020 (Rev J)	*Hydraulic Piping, AUX. O/R*	
1	205-20798	Hose ASSY, AUX O/R VLV-SUPLY	1
2	502-30586	Hose ASSY, AUX O/R VLV-RETRN	1
3	502-20973	Hose ASSY, VERT AUX O/R	2
4	502-20974	Hose ASSY, VERT AUX O/R	2
5	503-94003	Hose Kit, AUX. Outriggers	1
6	201-00167	Clamp, DBL. Hose	3
7	783-03726	Track Mount Bar - Long	2
8	NYL-250C000-25	Nut, HEX, NYL-LCK, 0.25-20, ST Z G5	10
9	WAN-25NX000-25	WSH, FL, TYPA-NRW 0.25, ST Z	10
10	SHF-250C750-25	SCR, HHCS, FT 0.25-20 X 0.75, ST Z	10
11	201-00170	Clamp, DBL Hose Ø5/8	2
12	774-00046	Track, Hose Trolley	2
13	774-00047	Trolley, Hose	2
14	NYL-250C000-25	Nut, HEX, NYL-INS 0.25-20, ST Z GR5	4
15	400-15088	Cable Tie, Nylon 11 15/32	8
16	S01-250CA25-25	SCR, HHCS, 0.25-20 X 0.75, ST Z G5	4

https://truckmanualshub.com/

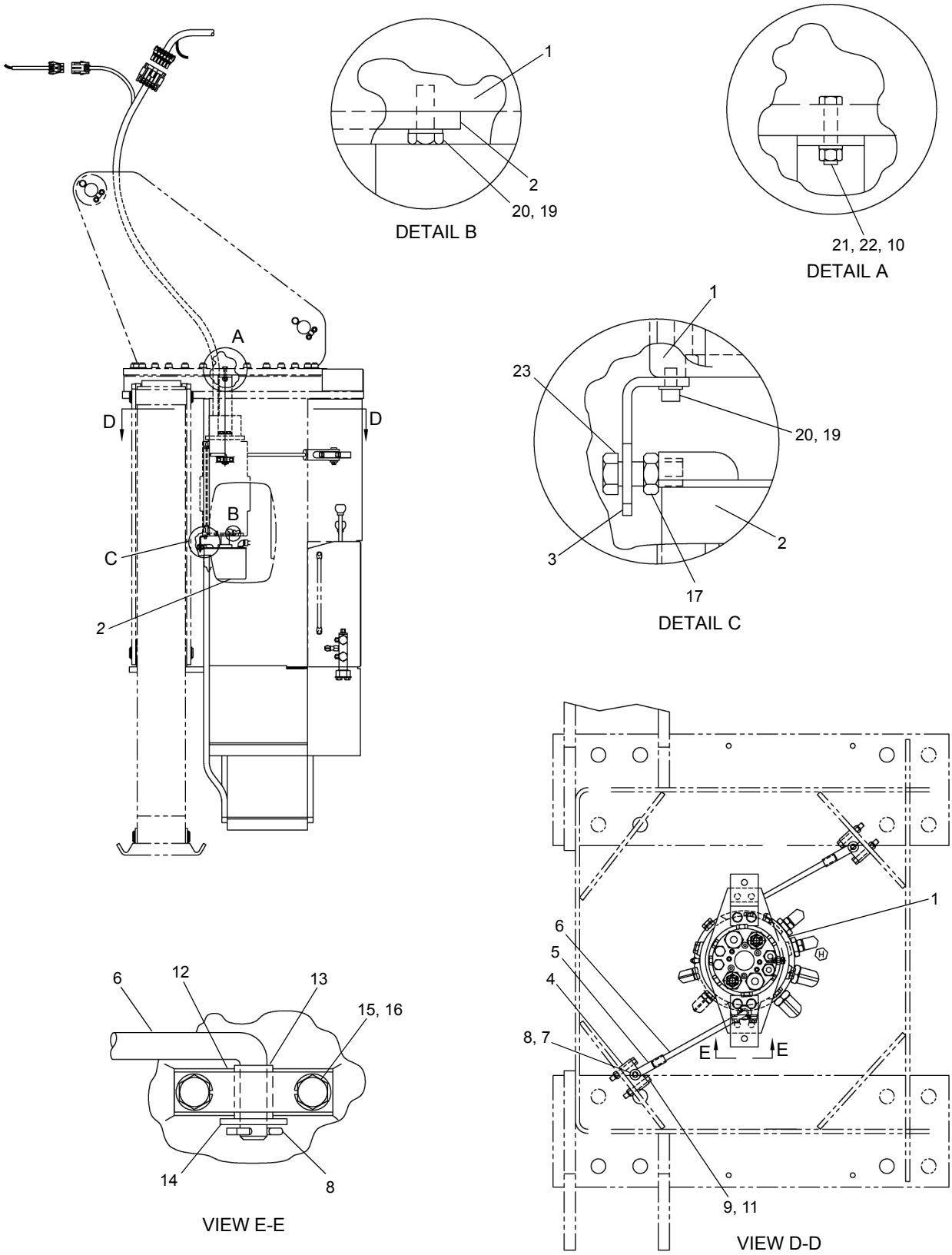

SEE PAGE 51.9

https://truckmanualshub.com/

SEE PAGES 51.8

REF	PART NO.	DESCRIPTION	QTY
	500-01708 (Rev J)	*Center Post INSTL, CONT ROT*	
1	500-01566	Centerpost ASSY, CONT. ROT.	1
2	400-17082	Collector ASSY, 9 Ring	1
3	785-02111	Angle, Collector Ring Stop	1
4	783-03134	Bar, Torque ROD SUPT	2
5	809-00036	Yoke, 1/2-20 UNF	2
6	209-00677	Torque ROD, Centerpost	2
7	870-00008	Pin, Clevis Ø1/2	2
8	224-02004	Cotter Pin, Ø1/8 x 1 PLTD	4
9	220-01007	BLT HH 5 16NC X 2 -1/2 G5 PLTD	4
10	221-94006	HNut, Lock 1/2-13NC GR C	2
11	1205-34	HEX Locknut. 5/16-18 UNC	4
12	789-04121	Plate, Torque ROD Retainer	2
13	502-30604	Hose, Torque ROD Spacer	2
14	222-04001	FLWASH, Ø1/2	2
15	220-02002	HHBolt, 3/8-16 UNC x1 1/ 4	4
16	222-12001	LKWASH, 3/8	4
17	221-04002	JNUT, 1/2-13 UNC PLT	1
18*	400-15088	Tie, Nylon Cable	4
19	222-10005	LKWASH, 1/4	4
20	220-00003	HHBolt, 1/4-20UNC X 3/4 LG GR5	4
21	220-04052	HHBolt, 1/2-13UNC X 2 1/4 GR 8	2
22	222-04009	FLTWASH, 1/2 Hard A325	2
23	220-04005	HHBolt, 1/2-13NC X 1 1/2 LG GR5	1

* ITEM 18 IS NOT SHOWN IN ILLUSTRATION

https://truckmanualshub.com/

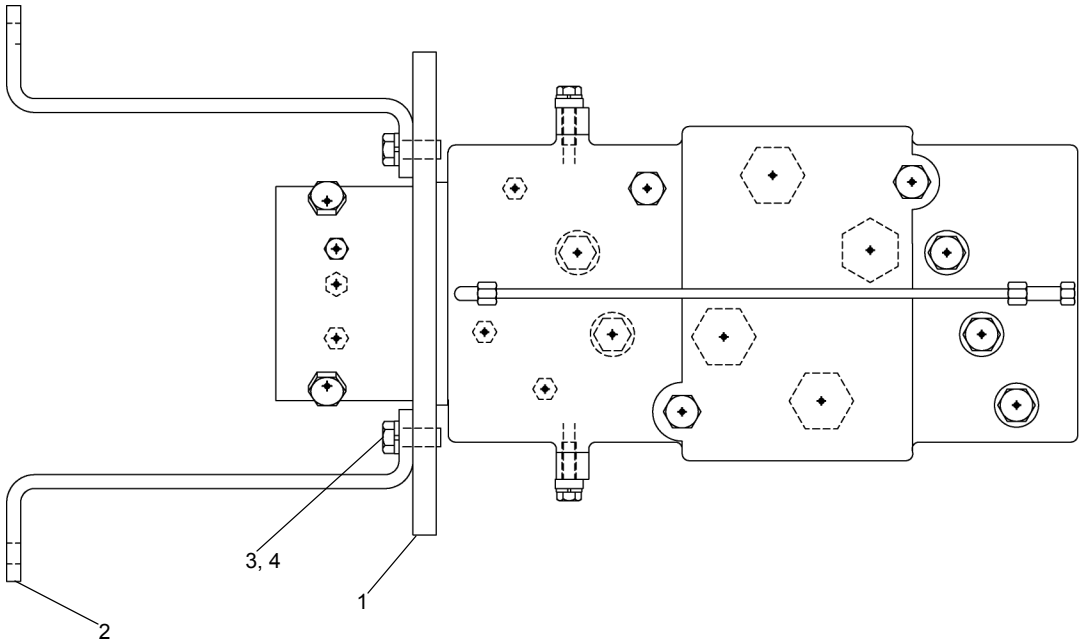

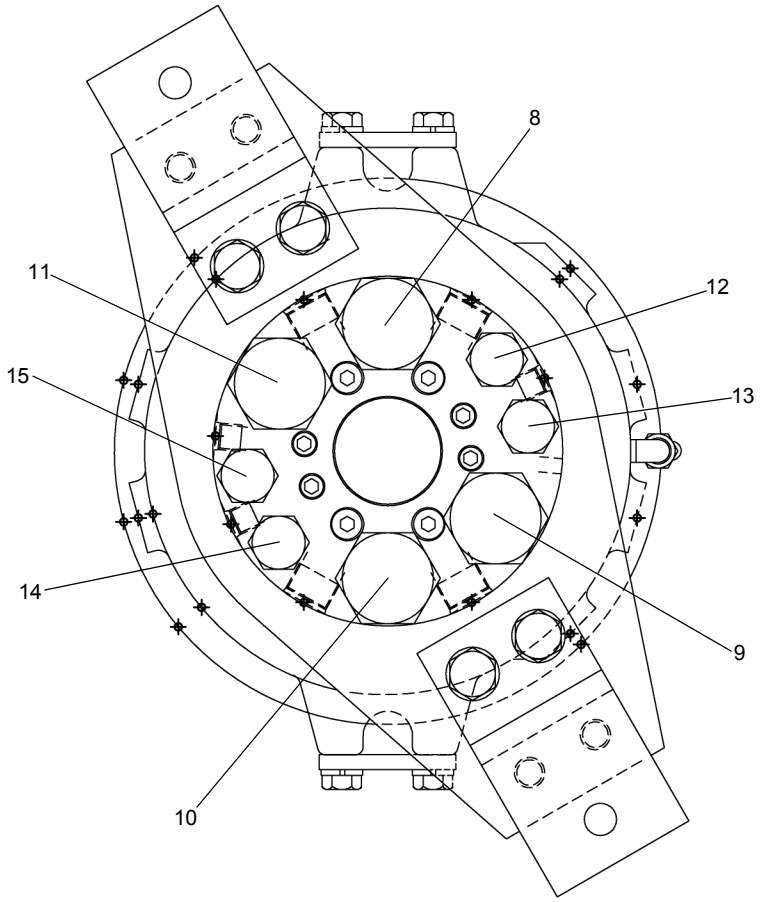

SEE PAGE 51.11

WHEN ORDERING PARTS, SPECIFY MODEL NUMBER, SERIAL NUMBER AND DESCRIPTION OF PARTS REQUIRED

https://truckmanualshub.com/

SEE PAGE 51.10

REF	PART NO.	DESCRIPTION	QTY
	500-01566 (Rev 00)	*Centerpost Assembly, 15 Pass*	
1	560-00066	Centerpost ASSY., 15 Passage	1
2	770-01896	Bracket, Centerpost SUPT.	2
3	220-04002	HHBOLT, 1/2-13UNC X 1 1/4	4
4	222-14003	LKWASH., 1/2	4
5*	513-70026	Connector, #12 OFS X #16 ORB	2
6*	513-60012	Connector, #10 OFS X #8 ORB	2
7*	514-52003	Elbow, 90° #4 OFS X #4 ORB	1
8	513-20017	Connector, #4 OFS X #4 ORB	1
9	514-59023	Elbow, 90° #12 OFS X #16 ORB	2
10	514-55011	Elbow, 90° #8 OFS X #8 ORB	2
11	570-20010	Plug, 1/8 NPT Socket Head	1
12	517-30001	Plug, -8 ORB	10
13	517-30005	Plug, -4 ORB	4
14	517-00100	Adaptor, #10#16	4
15	513-60008	Connecter, #10 #10	2
16*	514-56005	Elbow, 90 #10 #10	2
17*	513-40018	Connector, #6 OFS X #8 ORB	2

* ITEMS 5, 6, 7, 16 & 17 ARE NOT SHOWN IN ILLUSTRATION

https://truckmanualshub.com/

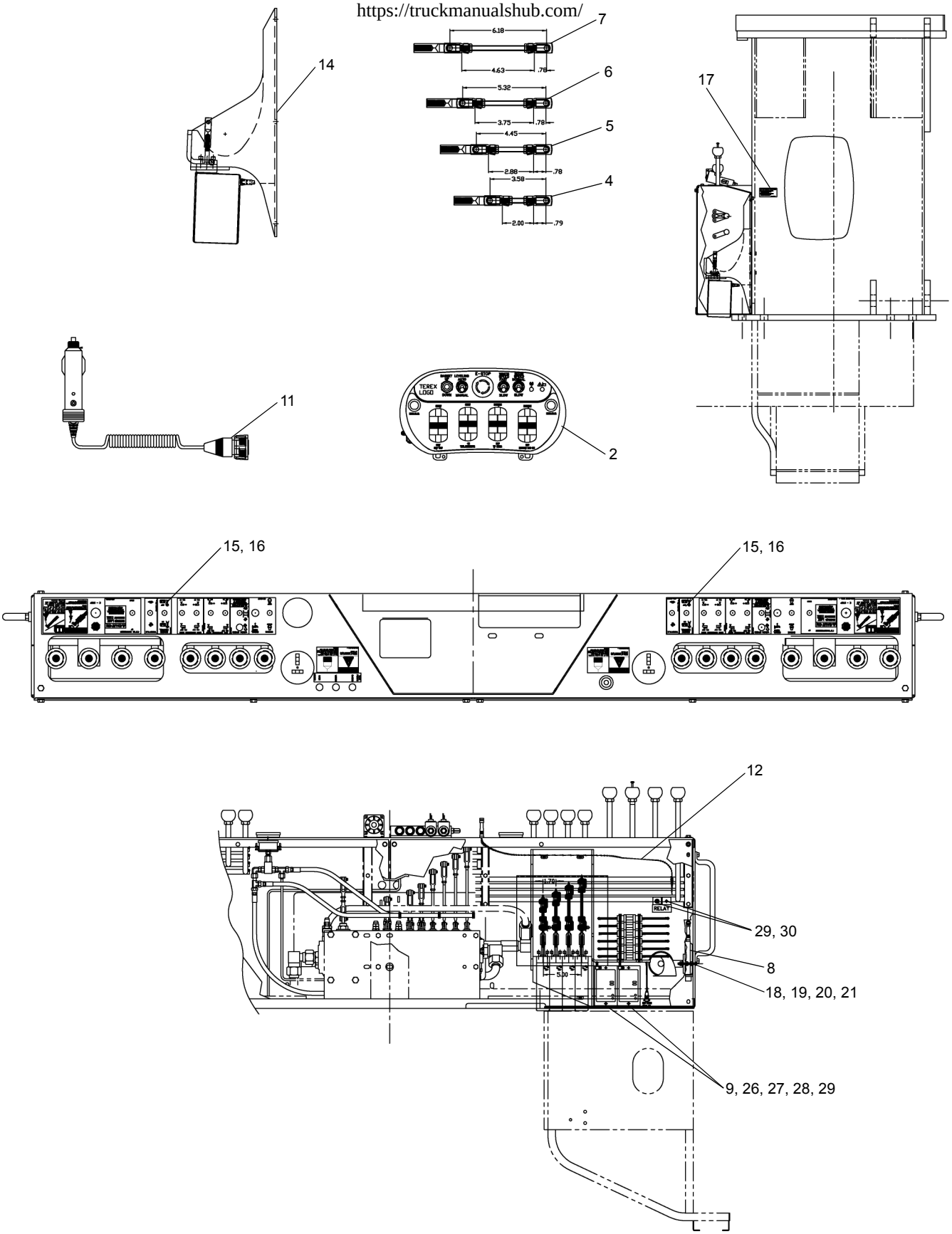

SEE PAGE 51.13

WHEN ORDERING PARTS, SPECIFY MODEL NUMBER, SERIAL NUMBER AND DESCRIPTION OF PARTS REQUIRED

https://truckmanualshub.com/

SEE PAGE 51.12

REF	PART NO.	DESCRIPTION	QTY
	T110706 (Rev C)	*Radio Remote Assembly With Bump Throttle*	
1*	800-50059	Kit, Radio Remote Control System (Includes Items 2 thru 13)	1
2	403-00100	Radio Remote Transmitter	1
3*	806-00278	Actuator Linkage Kit (Includes Items 4 thru 6)	1
4	806-00278-1	Actuator Linkages Sub ASSY 3.72	1
5	806-00278-2	Actuator Linkages Sub ASSY 4.59	1
6	806-00278-3	Actuator Linkages Sub ASSY 5.46	1
7	806-00278-4	Actuator Linkages Sub ASSY 6.32	1
8	403-00103	Recevier, High Gain Radio Remote	1
9	403-00105	Actuator Controller	2
10*	403-00106	Wire Harness, Ranger 4 Crane	1
11	403-00107	Cigarette Lighter Charger	1
12	403-00108	36” Antenna Extension Cable	1
13*	403-00102	Actuator, 2.3 Inch Travel	4
14	T124047	Radio Actuator Valve Assembly (Includes Item 15)	1
15	410-04124	Switch, Toggle On/Off	2
16	651-00432	Decal, Remote Control	2
17	650-00663	Decal, Operating INSTRT Radio Remote	2
18	SHF-250CB00-25	SCR, HHCS, FT 0.25-20 X 2.00, ST Z GR5	2
19	WAN-25NX000-20	WSH, FL TYPA NRW 0.25, ST Z	8
20	W07-250X000-20	WSH, LCK, MED SPLT 0.25, ST Z	4
21	N04-250C000-25	Nut, HEX 025-20 ST Z GR5	6
22*	S01-375CA25-25	SCR, HHCS 0.375-16X1.25, ST Z GR5	5
23*	WAN-38NX000-20	WSH, FL TYPA NRW 0.375. ST Z	5
24*	W07-375X000-20	WSH, LCK MED SPLT 0.375, ST Z	5
25*	N04-375C000-25	Nut, HEX 0.375-16, ST Z GR5	5
26	SL5-190CA25-20	SCR, CEEC, RND MS 10-24X1.25, ST Z	4
27	WAR-190X000-22	WSH, FL TYPA-REG 10, ST Z	4
28	W07-190X000-20	WSH, LCK,MED SPLT 10 ST Z	4
29	N23-190C000-20	Nut, HEX, Mach 10-24, ST Z	6
30	SL4-190C500-25	SCR, STL RND MS 10-24X0.50, ST Z GR5	2
31*	NYL-190C000-22	Nut, HEX, NYL-INS 10-24, ST Z GR2	2

* ITEMS 1, 3, 10, 13, 22 TO 25 & 31 ARE NOT SHOWN IN THE ILLUSTRATION

https://truckmanualshub.com/

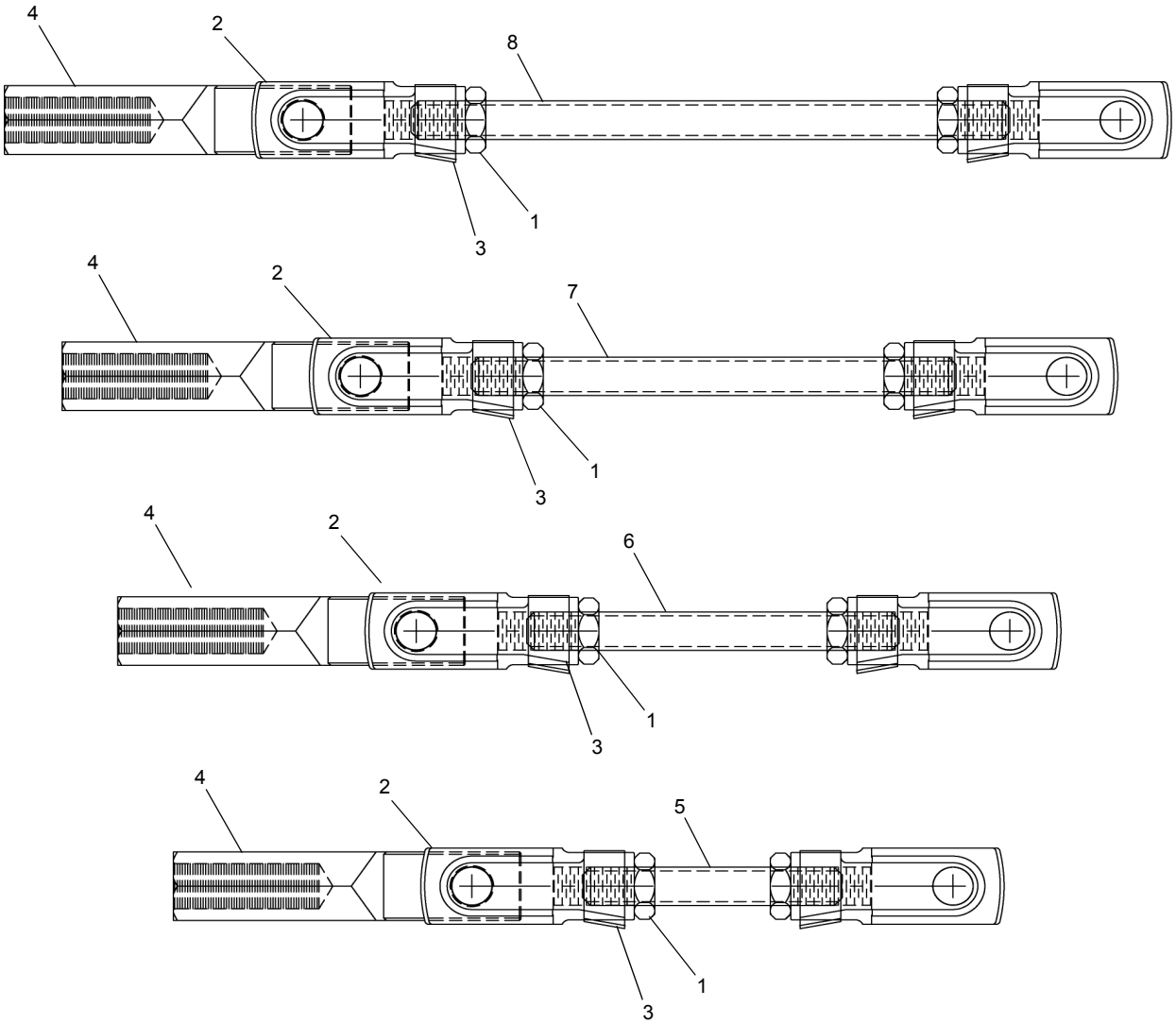

REF	PART NO.	DESCRIPTION	QTY
	806-00278 (Rev B)	*Actuator Linkage Kit*	
	806-00278-1	*Actuator Linkage Kit (Includes Item 1 thru 4 & 5)*	
	806-00278-2	*Actuator Linkage Kit (Includes Item 1 thru 4 & 6)*	
	806-00278-3	*Actuator Linkage Kit (Includes Item 1 thru 4 & 7)*	
	806-00278-4	*Actuator Linkage Kit (Includes Item 1 thru 4 & 8)*	
1	N05-312F000-25	Nut, HEX Jam 0.3125-24, ST Z GR5	2
2	809-00510	Clevis Housing 5/16-24 W/5/16 Pin	2
3	809-00511	Clevis Spring Pin 5/16 DIA	2
4	809-00521	Valve Rod End 3/8-25 THRD 5/16 PIN	1
5	806-00279-1	Acturator Link Thread Rod 5/16-24 X 2.00	1
6	806-00279-2	Acturator Link Thread Rod 5/16-24 X 2.88	1
7	806-00279-3	Acturator Link Thread Rod 5/16-24 X 3.75	1
8	806-00279-4	Acturator Link Thread Rod 5/16-24 X 4.63	1

WHEN ORDERING PARTS, SPECIFY MODEL NUMBER, SERIAL NUMBER AND DESCRIPTION OF PARTS REQUIRED

https://truckmanualshub.com/

REF	PART NO.	DESCRIPTION	QTY
	800-50059 (Rev A)	*Kit, Radio Remote Control System*	
1	403-00100	Radio Remote Transmiter, Joystick Operated	1
2	403-00103	Receiver, High Gain Radio Remote	1
3	403-00105	Actuator Controller	2
4	403-00106	Wire Harness, Ranger 4 Crane	1
5	403-00107	Cigarette Lighter Charger	1
6	403-00108	36" Antenna Extension Cable For Receiver	1
7	806-00278	Actuator Linkage Kit	1
8	403-00102	Actuator, 2.3 Inch Travel	4

ITEMS 1 TO 8 ARE NOT ILLUSTRATED

https://truckmanualshub.com/

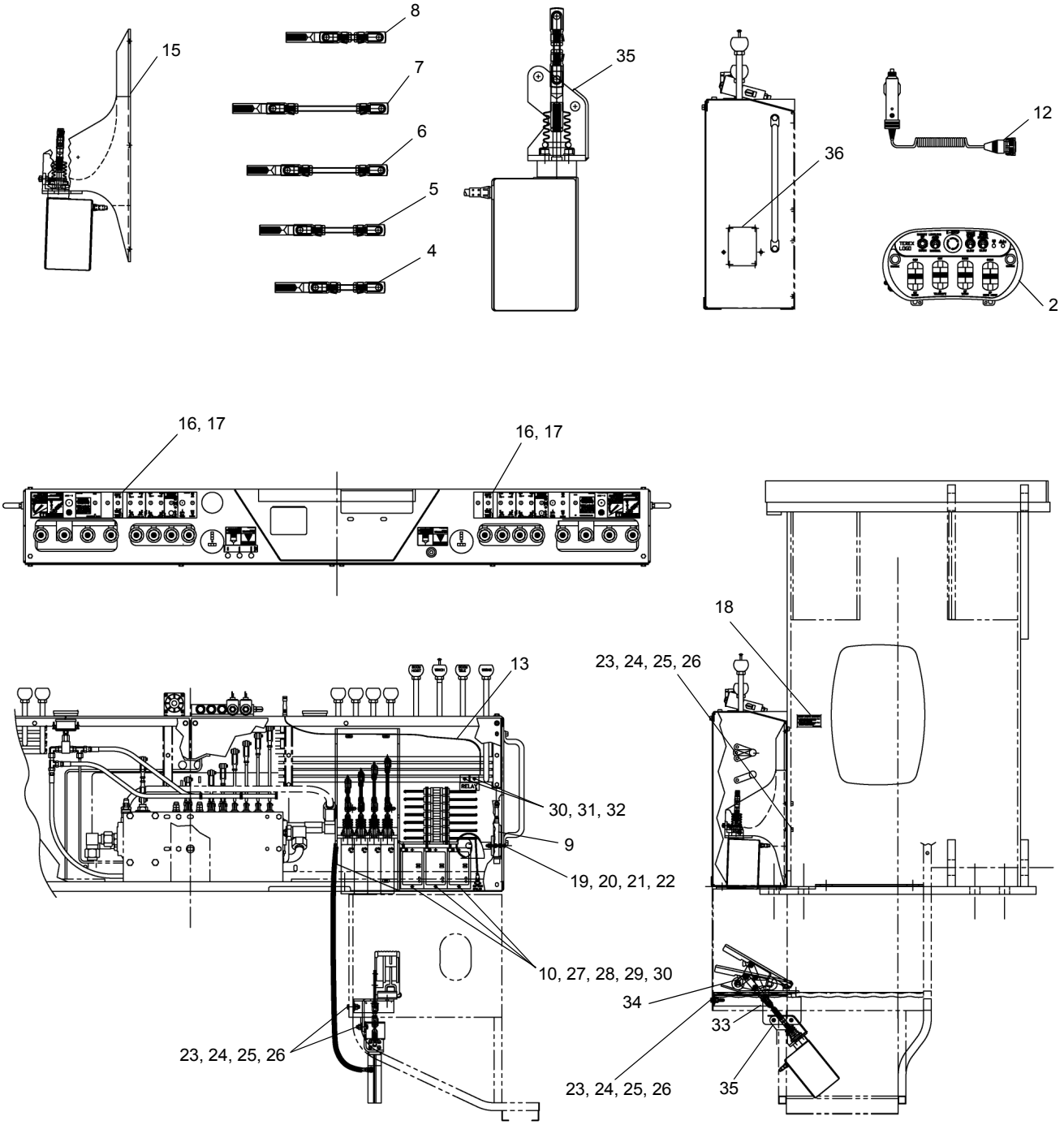

SEE PAGE 51.17

WHEN ORDERING PARTS, SPECIFY MODEL NUMBER, SERIAL NUMBER AND DESCRIPTION OF PARTS REQUIRED

https://truckmanualshub.com/

SEE PAGE 51.16

REF	PART NO.	DESCRIPTION	QTY
	T122792 (Rev B)	*Radio Remote ASSY With Foot Throttle*	
1	T122674	Kit, Radio Remote System W/ Foot Throttle (Includes Items 2 thru 13)	1
2	403-00100	Radio Remote Transmitter	1
3*	T122789	Actuator Linkage Kit (Includes Items 4 thru 7)	1
4	806-00278-1	Actuator Linkages Sub ASSY 3.72	1
5	806-00278-2	Actuator Linkages Sub ASSY 4.59	1
6	806-00278-3	Actuator Linkages Sub ASSY 5.46	1
7	806-00278-4	Actuator Linkages Sub ASSY 6.32	1
8	T122790	Actuator Linkage Foot Throttle 3.00	1
9	403-00103	Receiver, High Gain Radio Remote	1
10	403-00105	Actuator Controller	3
11*	T122793	Wire Harness, Ranger 4 Crane	1
12	403-00107	Cigarette Lighter Charger	1
13	403-00108	36" Antenna Extension Cable	1
14*	403-00102	Actuator, 2.3 Inch Travel	5
15	T124027	Radio Actuator Valve Assembly	1
16	410-04124	Switch, Toggle On/Off (Includes Item 11)	2
17	651-00432	Decal, Remote Control	2
18	650-00663	Decal, Operatlng INSTRT Radio Remote	2
19	SHF-250CB00-25	SCR, HHCS, FT 0.25-20 X 2.00, ST Z GR5	2
20	WAN-25NX000-20	WSH, FL TYPA NRW 0.25, ST Z	8
21	W07-250X000-20	WSH, LCK, MED SPLT 0.25, ST Z	4
22	N04-250C000-25	Nut, HEX 025-20 ST Z GR5	6
23	S01-375CA25-25	SCR, HHCS 0.375-16X1.25, ST Z GR5	10
24	WAN-38NX000-20	WSH, FL TYPA NRW 0.375, ST Z	10
25	W07-375X000-20	WSH, LCK, MED SPLT 0.375, ST Z	10
26	N04-375C000-25	Nut, HEX 0.375-16, ST Z GR5	10
27	SL5-190CA25-20	SCR, CEEC, RND MS 10-24X1.25, ST Z	6
28	WAR-190X000-22	WSH, FL TYPA-REG 10, ST Z	6
29	W07-190X000-20	WSH, LCK, MED SPLT 10 ST Z	6
30	N23-190C000-20	NUT, HEX, MACH 10-24, ST Z	8
31	SL4-190C500-25	SCR, STL RND MS 10-24X0.50, ST Z GR5	2
32	NYL-190C000-22	NUT, HEX, NYL-INS 10-24, ST Z GR2	2
33	T122976	Foot Throttle MTG Plate Weldment	1
34	T122676	Foot Throttle Bracket Remote Control	1
35	T123341	Foot Throttle Actuator Sub Assembly	1
36	12147-1	Rubber Channel, ALTA X 1045	14"

* ITEMS 3, 11 & 14 ARE NOT SHOWN IN THE ILLUSTRATION

https://truckmanualshub.com/

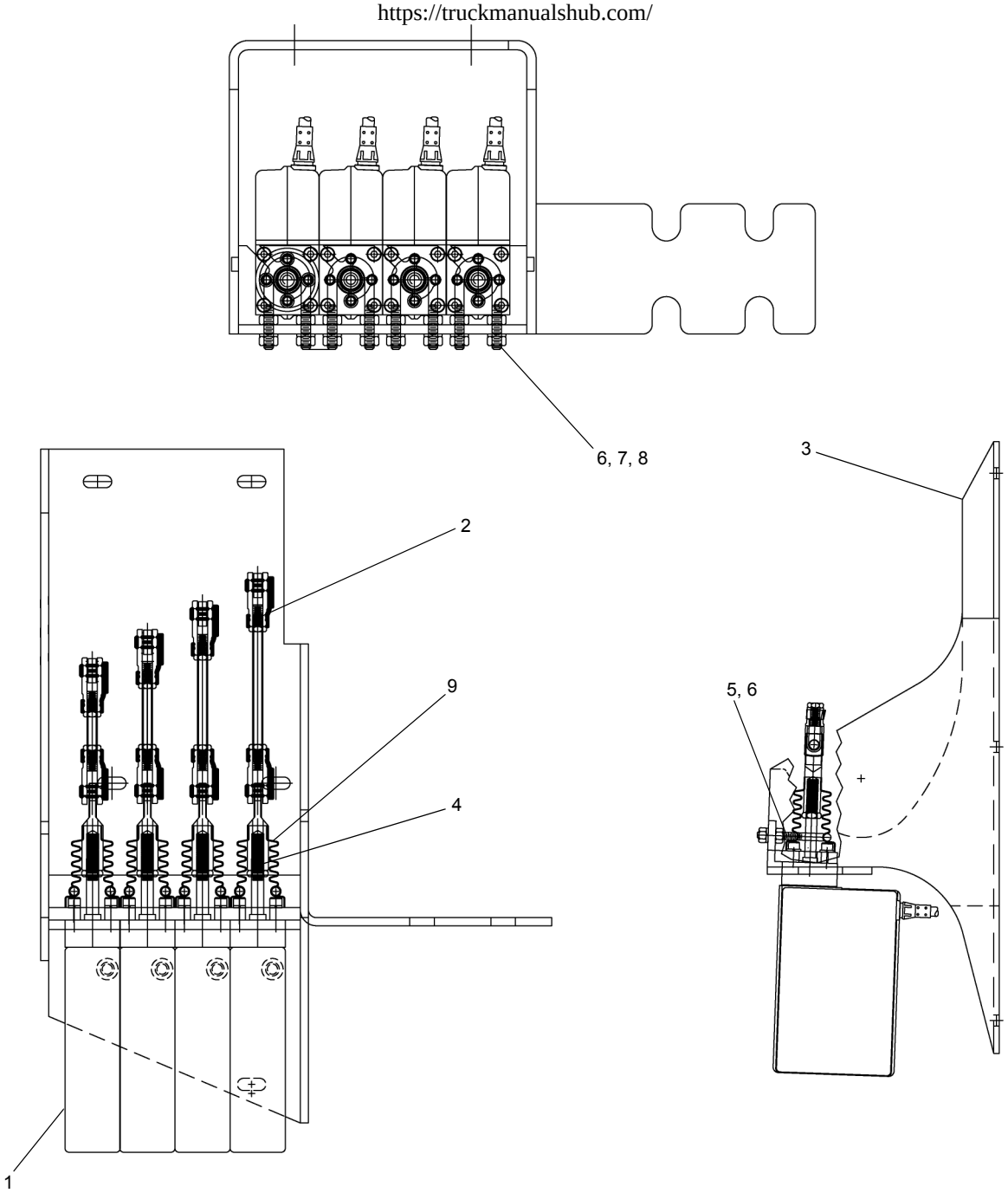

REF	PART NO.	DESCRIPTION	QTY
	T124027 (Rev A)	*Radio, Actuator Valve Sub-ASSY*	
1	403-00102	Actuator, 2.3” Travel	4
2	806-00278	Actuator Linkage Kit	1
3	T111981	Plate, Actuator MTG BRKT	1
4	N05-375F000-25	Nut, Hex, Jam 0.375-24 ST Z GR5	4
5	S14-250C750-H2	SCR, HHCS, 0.25-20 X 0.75, ST Z	16
6	W07-250X000-20	WSH, LCK, MED SPLT 0.25, ST Z	24
7	T123340	U-Bolt 0.25-20 ST Z GR5	4
8	N04-250C000-25	Nut, HEX 0.25-20 ST Z GR5	16
9	T123342	Actuator Boot Radio Remote	4

WHEN ORDERING PARTS, SPECIFY MODEL NUMBER, SERIAL NUMBER AND DESCRIPTION OF PARTS REQUIRED

https://truckmanualshub.com/

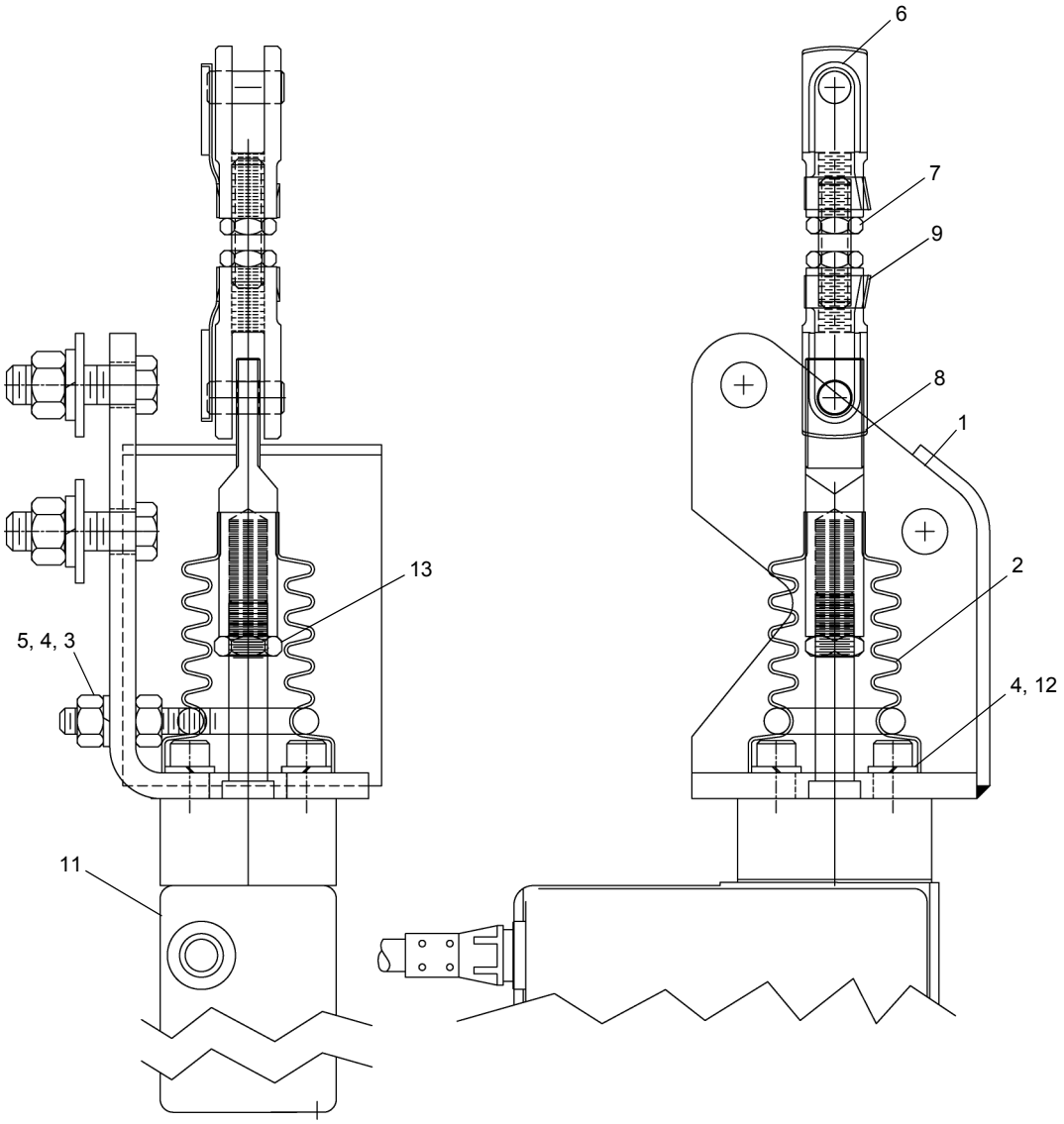

REF	PART NO.	DESCRIPTION	QTY
	T123341 (Rev B)	*Foot Throttle Actuator Sub Assembly*	
1	T123040	Actuator Bracket Foot Throttle Mount	1
2	T123342	Actuator Boot Radio Remote	1
3	T123340	U-Bolt 0.25-20 X .38 DIA Pipe	1
4	W07-250X000-20	WSH, LCK, MED SPLT 0.25. ST Z	6
5	N04-250C000-25	Nut, HEX 0.25-20 ST Z GR5	4
6	T122789-1	Actuator Link Kit (Foot Throttle) (Includes Items 7 thru 10)	1
7	N05-312F000-25	Nut, HEX Jam 0.3125-24, ST Z GR5	2
8	809-00510	Clevis Housing 5/16-24 W/5/16 Pin	1
9	809-00511	Clevis Spring Pin 5/16 DIA	1
10*	809-00521	Rod End .38-24 X .3125 Pin	1
11	403-00102	Actuator, 2.3" Travel	1
12	S14-250C750-H2	SCR, SHCS, 0.25-20 X 0.75, ST Z	4
13	N05-375F000-25	Nut, HEX, Jam 0.375-24 ST Z GR5	1

* ITEM 10 IS NOT SHOWN IN THE ILLUSTRATION

WHEN ORDERING PARTS, SPECIFY MODEL NUMBER, SERIAL NUMBER AND DESCRIPTION OF PARTS REQUIRED

https://truckmanualshub.com/

REF	PART NO.	DESCRIPTION	QTY
	T122674 (Rev B)	*Kit, Radio Remote System W/Foot Throttle*	
1	403-00100	Radio Remote Transmiter, Joystick Operated	1
2	403-00103	Receiver, High Gain Radio Remote	1
3	403-00105	Actuator Controller	3
4	T122793	Wire Harness, Ranger 4 Crane	1
5	403-00107	Cigarette Lighter Charger	1
6	403-00108	36" Antenna Extension Cable For Receiver	1
7	T122789	Actuator Linkage Kit	1
8	403-00102	Actuator, 2.3 Inch Travel	5

ITEMS 1 TO 8 ARE NOT ILLUSTRATED

https://truckmanualshub.com/

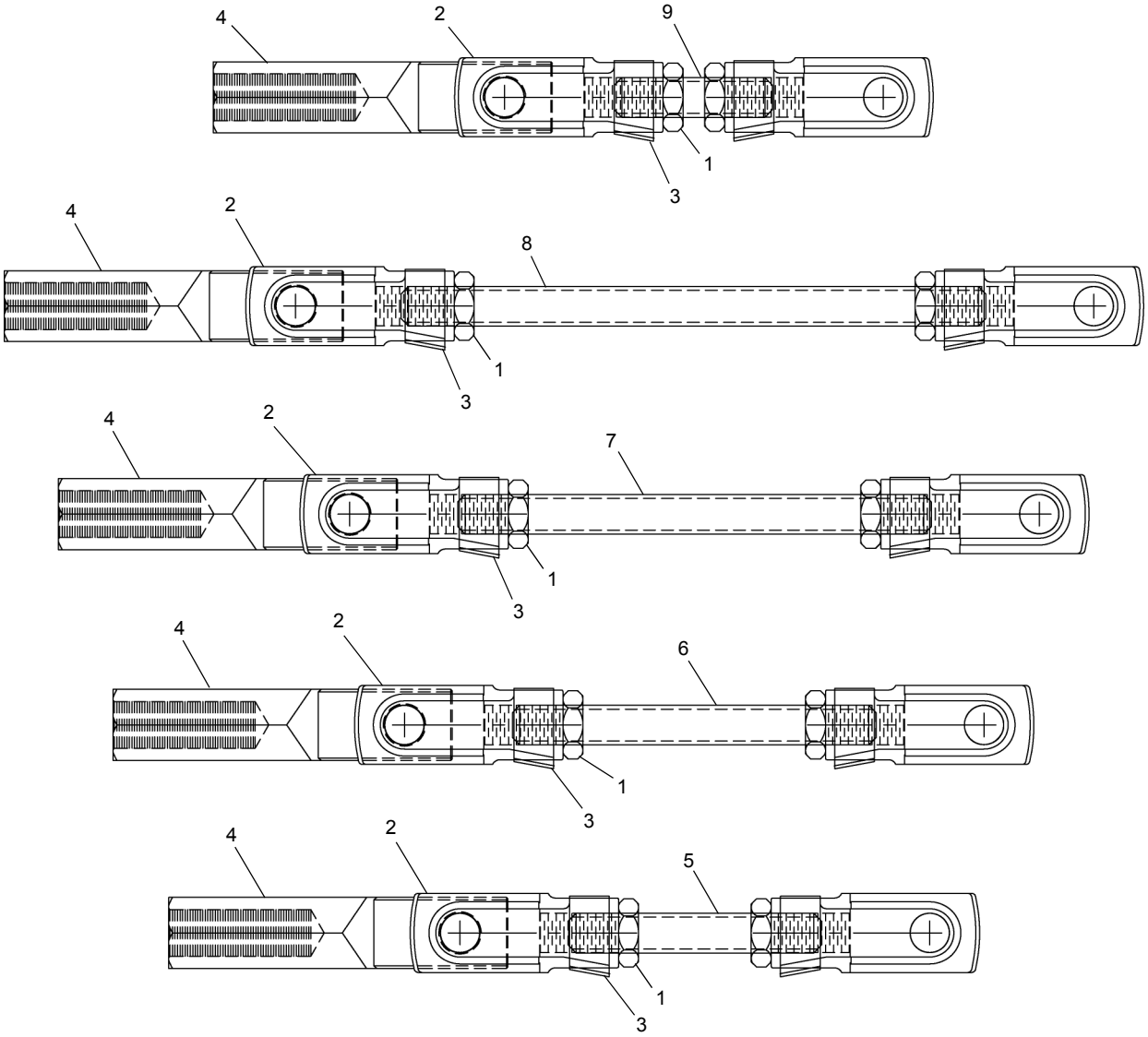

REF	PART NO.	DESCRIPTION	QTY
	T122789 (Rev A)	*Actuator Linkage Kit*	
	T122789-1 (Rev A)	*Actuator Linkage Kit (Includes Item 1 thru 4 & 9)*	
	806-00278-1 (Rev A)	*Actuator Linkage Kit (Includes Item 1 thru 4 & 5)*	
	806-00278-2 (Rev A)	*Actuator Linkage Kit (Includes Item 1 thru 4 & 6)*	
	806-00278-3 (Rev A)	*Actuator Linkage Kit (Includes Item 1 thru 4 & 7)*	
	806-00278-4 (Rev A)	*Actuator Linkage Kit (Includes Item 1 thru 4 & 8)*	
1	N05-312F000-25	Nut, HEX Jam 0.3125-24, ST Z GR5	2
2	809-00510	Clevis Housing 5/16-24 W/5/16 Pin	2
3	809-00511	Clevis Spring Pin 5/16 DIA	2
4	809-00521	Valve Rod End 3/8-25 THRD 5/16 PIN	1
5	806-00279-1	Acturator Link Thread Rod 5/16-24 X 2.00	1
6	806-00279-2	Acturator Link Thread Rod 5/16-24 X 2.88	1
7	806-00279-3	Acturator Link Thread Rod 5/16-24 X 3.75	1
8	806-00279-4	Acturator Link Thread Rod 5/16-24 X 4.63	1
9	T122790	Acturatdr Link Thread Rod 5/16-24 X 1.25	1

WHEN ORDERING PARTS, SPECIFY MODEL NUMBER, SERIAL NUMBER AND DESCRIPTION OF PARTS REQUIRED

https://truckmanualshub.com/

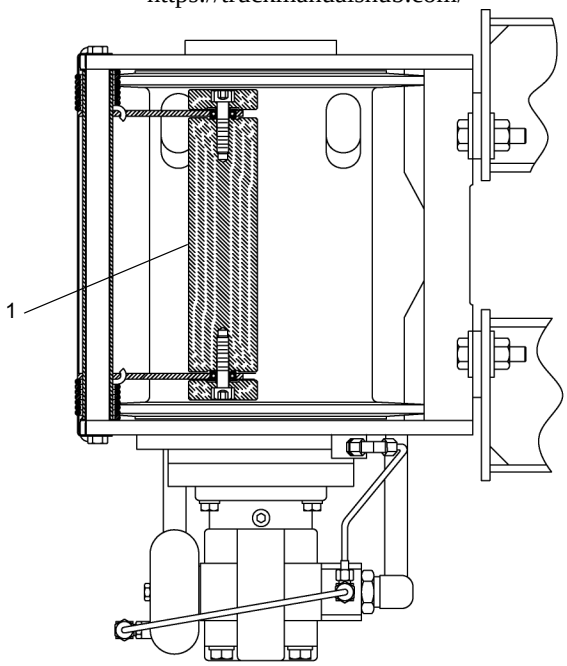

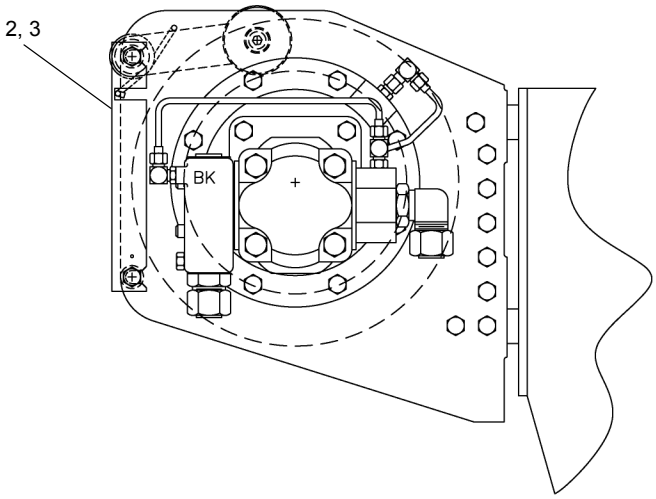

REF	PART NO.	DESCRIPTION	QTY
	717-00054-2 (Rev C)	*Cable Tensioner INSTL 4792 Series (Includes Item 1 & 2)*	
	717-00054-2-R (Rev C)	*Cable Tensioner INSTL 4792 Series (Includes Item 1 & 3)*	
1	901-00189	Tensioner, Winch	1
2	802-01649.2	Cover, Winch Cable	1
3	802-01649.4	Cover, Winch Cable	1

WHEN ORDERING PARTS, SPECIFY MODEL NUMBER, SERIAL NUMBER AND DESCRIPTION OF PARTS REQUIRED

https://truckmanualshub.com/

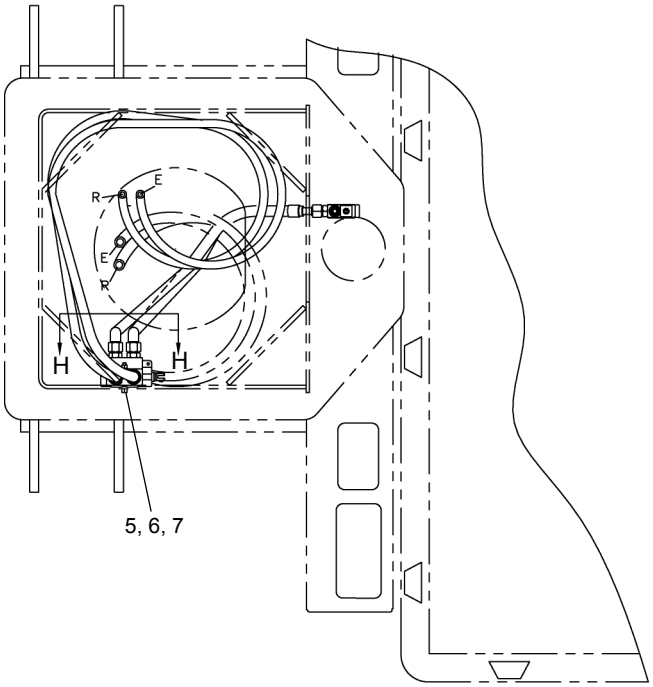

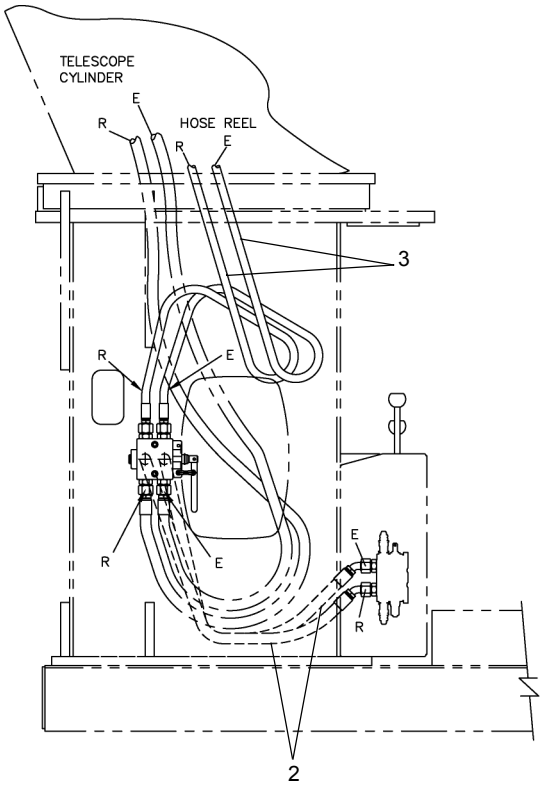

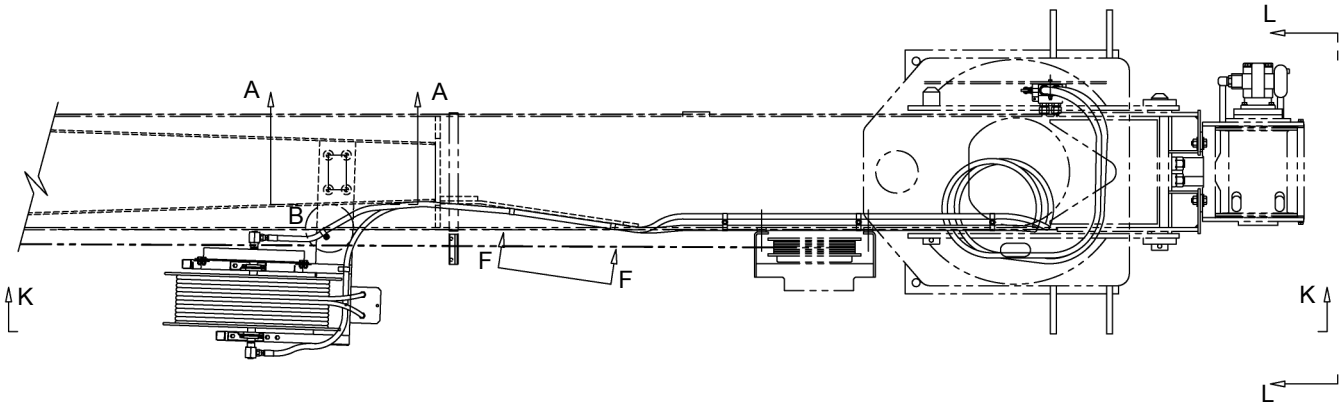

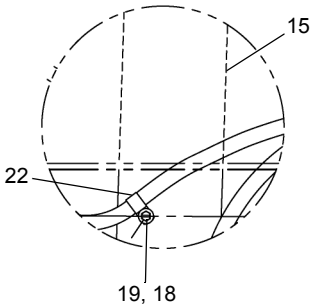

DETAIL B

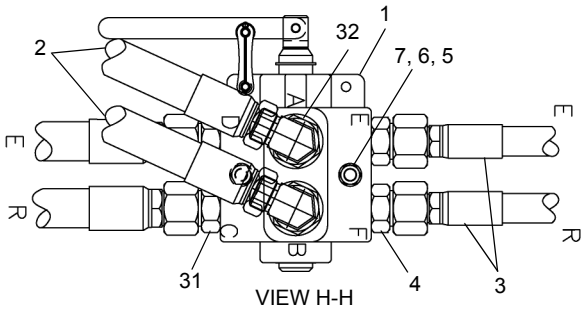

VIEW H-H
(VIEW ROTATED BY 90° CLOCKWISE)

SEE PAGE 51.25

https://truckmanualshub.com/

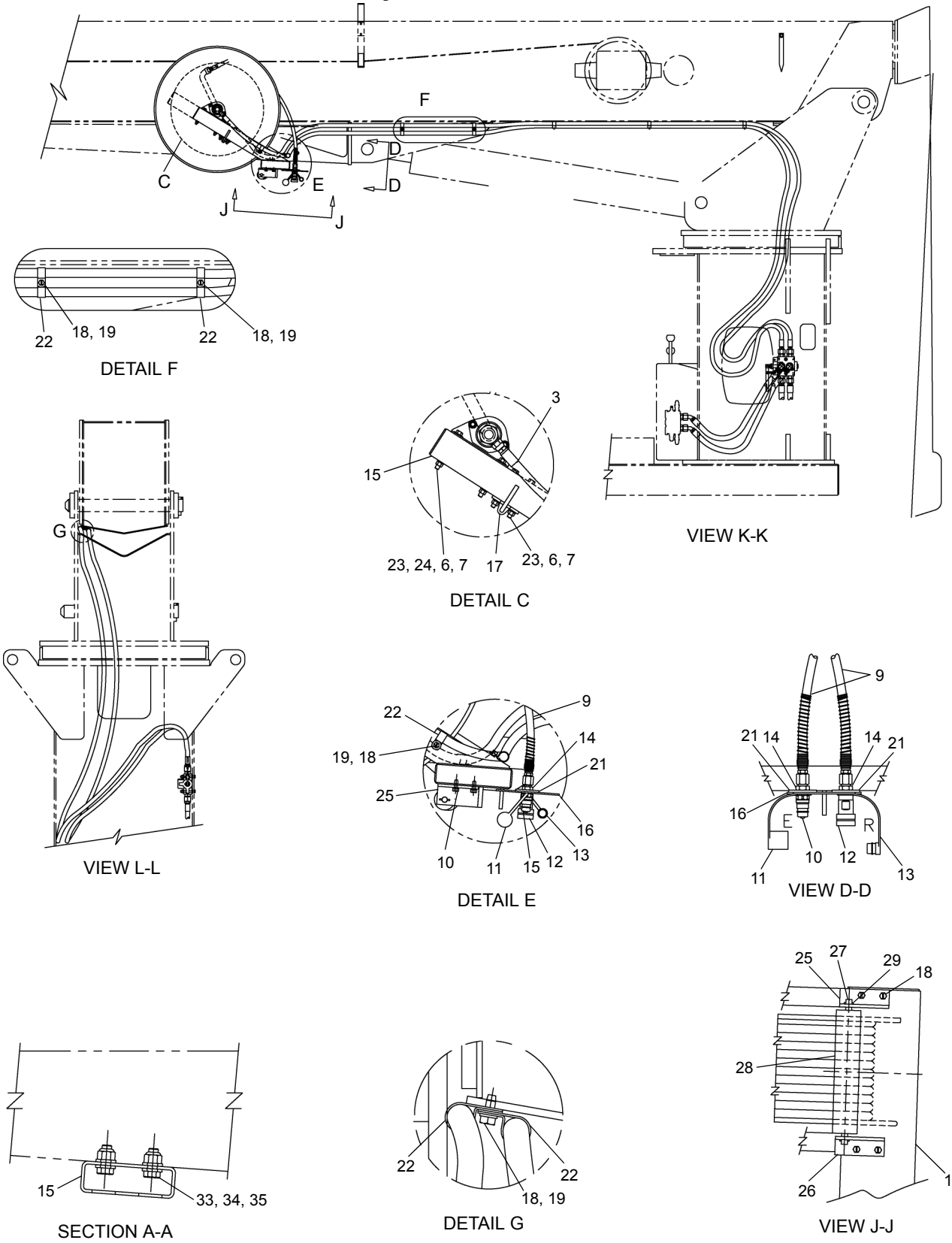

SEE PAGE 51.25

https://truckmanualshub.com/

SEE PAGES 51.23 & 51.24

REF	PART NO.	DESCRIPTION	QTY
	730-91006-3 (Rev D)	*Roofers Package Installation*	
1	553-00002	Selector Valve	1
2	502-35075	Hose ASSY-M VLV/Select VLV	2
3	502-30540	Hose ASSY-Valve/Hose Reel	2
4	513-70023	STR CONN-#12 OFS x #12 ORB	2
5	220-02001	CAPSCR 3/8-16NC x 3 LG PLTD	2
6	222-12001	Lock Washer, 3/8 DIA PLTD	14
7	221-02001	HEX Nut 3/8-16NC	8
8*	501-07064	Hose Reel, HANNAY	1
9	502-20740	Hose ASSY, Dual 3/8 x 100FT	1
10	501-04131	Q'Coupler, Nose	1
11	501-04018	Dust Cap	1
12	501-04130	Q'Coupler,Body	1
13	501-04028	Dust Plug	1
14	513-50002	Connector, STR #8TX #8MP	4
15	770-01749	Bracket Weld, Hose Reel	1
16	780-00248	Support Plate	1
17	209-00586	Pin Lock, Hose Reel	1
18	223-15210	HHMS 5/16-18 NC x 3/4 Type F	12
19	222-01001	Flat Washer, 5/16 DIA PLTD	8
20*	223-15209	HHMS 3/8-14 x 3/4 Type F	6
21	222-08001	Flat Washer, 7/8 DIA PLTD	2
22	201-00050	Clamp, Hose AERO# 9000729-4	13
23	220-02009	HH Bolt 3/8-16 NC x 4 LG PLTD	6
24	222-02005	Flat Washer, 3/8 DIA PLTD	4
25	785-01503	LH Angle, Roller Support	1
26	785-01504	RH Angle, Roller Support	1
27	870-00135	Pin, Roller Guide	1
28	865-00008	Roller, Hose Guide	1
29	224-12001	Pin, 1/8 x 1 1/8 Roll	2
30*	785-01483	Support Angle	1
31	513-60015	STR CONN- M#10 OFS x #12 ORB	2
32	514-56004-25	90° Elbow M#10 OFS x M#12 ORB	2
33	220-06064	HHCS 5/8-11 x 1.75 GR5 Zinc	4
34	222-06010	Flat Washer 5/8 Hard Zinc PLTD	4
35	221-98002	Top LockNut 5/8-11 NC Zinc	4
36*	729-02889	Trough, Base Boom	1

* ITEMS 8, 20, 30 & 36 ARE NOT SHOWN IN ILLUSTRATION

WHEN ORDERING PARTS, SPECIFY MODEL NUMBER, SERIAL NUMBER AND DESCRIPTION OF PARTS REQUIRED

https://truckmanualshub.com/

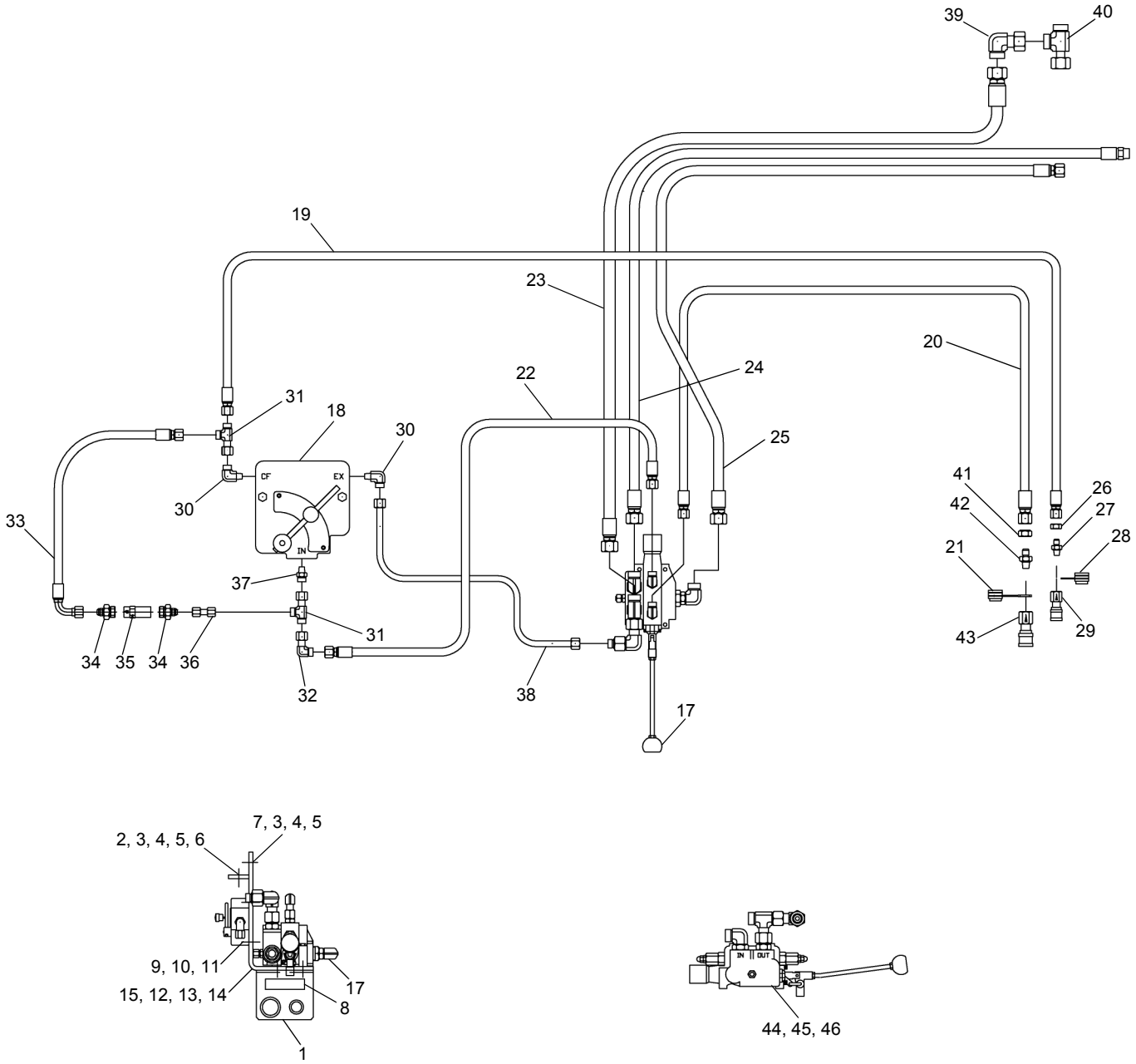

SEE PAGE 51.27

https://truckmanualshub.com/

SEE PAGE 51.26

REF	PART NO.	DESCRIPTION	QTY
	500-01544 (Rev E)	*Mainframe Tool Circuit INSTL*	
1	785-01622	Q/D Mounting Bracket	1
2	220-02011	HH Bolt 3/8-16NC x 2 GR.5 PLTD	2
3	222-02005	Flat Washer 3/8 DIA PLTD	8
4	222-12001	Lock Washer 3/8 DIA MED PLTD	4
5	221-02001	HEX Nut 3/8-16NC PLTD	4
6	222-32001	Wedge-3/8 Bevel	2
7	220-02006	HH Bolt 3/8-16NC x 1 1/2 GR.5 PLTD	2
8	650-00694	Placard Tool CIR Return /Press	1
9	220-00009	HH Bolt 1/4-20NC x 2 3/4 LG PLTD	2
10	222-10005	Lock Washer 1/4 DIA MED PLTD	2
11	221-00001	HEX Nut 1/4-20NC PLTD	2
12	220-01008	HH Bolt 5/16-18NC x 3 LG PLTD	3
13	222-11002	Lock Washer 5/16 DIA MED PLTD	3
14	221-01001	HEX Nut 5/16-18NC PLTD	3
15	789-03808	Valve VE/FD Mounting Bracket	1
16*	209-00174	Seal Trim Edging	1ft
17	500-01507	Tool Circuit Control Valve ASSY	1
18	559-00042	Flow Divider- Brand FCSI-1/2 INCH	1
19	502-20795	Hose ASSY - Q/D/Flow Divider	1
20	502-30585	Hose ASSY - Q/D/V20 W. Port	1
21	501-04028	Dust Plug 1/2	1
22	502-30553	Hose ASSY - V20 W, Port/FLow Divider	1
23	502-40753	Hose ASSY - V20 Return/Manifold	1
24	502-40757	Hose ASSY - V20 Jumper Supply/Pump	1
25	502-35019	Hose ASSY - V20 PBY/Console VLV	1
26	511-41001	Bulkhead Lock Nut #6	1
27	518-30007	Bulkhead 3/8 MPT, 8JIC	1
28	501-04020	Dust Plug 3/8	1
29	501-04071	Q/Disconnect 3/8 FPT	1
30	514-05002	90° Elbow 1/2 MPT - 8 JIC	2
31	516-85001	Swivel Nut Run Tee - 8 JIC	2
32	514-65001	90° Swivel Nut Elbow - 8 JIC	3
33	707-4078-13	Hose ASSY, .50ID	1
34	1219-691	STR, Connector 12ORB - 8 JIC	2
35	T121654	Check Valve	1
36	510-50305	Tube ASSY 1/2 DIA x 2 1/4 LG	1
37	513-50002	STR, Connector 1/2 MPT - 8 JIC	1
38	510-50391	Tube ASSY 1/2 DIA FLO Div/V20 RET	1
39	514-69012	Swivel Nut 90° Elbow - 16 OFS	1
40	516-89011	Swivel Nut Run Tee - 16 OFS	1
41	511-61001	Bulkead Lock Nut #10	Ref
42	518-40007	Bulkhead, 1/2 NPT 10 JIC	1
43	501-04010	Q/D Body 1/2 FPT	1
44	340-00030	Shim, Gresen 0.010 100” PSI	2
45	340-00031	Shim, Gresen 0.020 200” PSI	2
46	340-00032	Shim, Gresen 0.030 300” PSI	2

* ITEM 16 IS NOT SHOWN IN ILLUSTRATION

https://truckmanualshub.com/

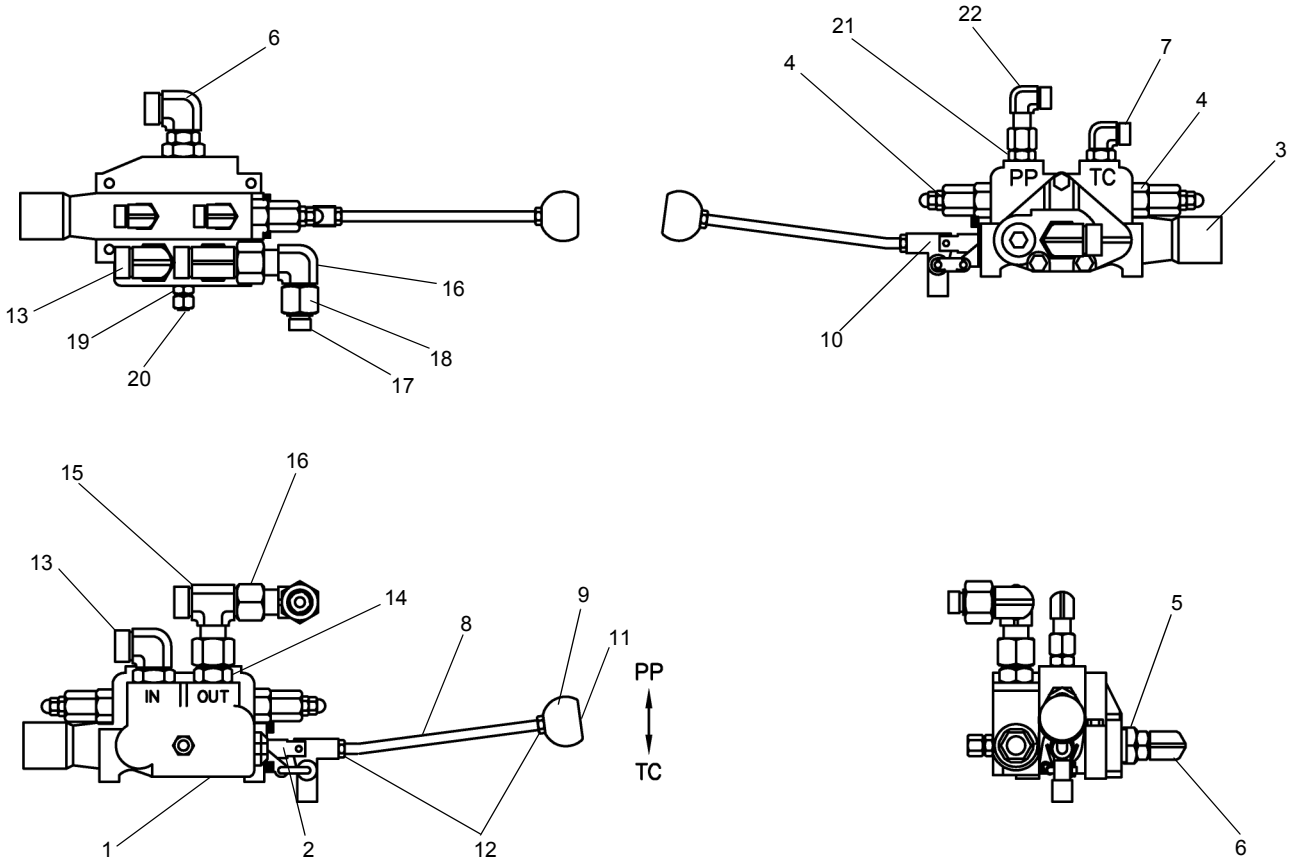

REF	PART NO.	DESCRIPTION	QTY
	500-01507 (Rev B)	*Tool Circuit Valve ASSY*	
1	550-00231	Valve ASSY-Gresen V20-1716	1
2	340-00115	Motor Spool-Gresen #8108-001	1
3	340-00127	Detent Out Kit-Gresen #K6122	1
4	340-00208	ADJ. Port Relief RCA	2
5	340-00060	PWR Beyond Kit-Gresen#K-6019	1
6	514-57011	Elbow #10 ORB-#12 OFS	1
7	514-55011	Elbow #8 OFS-#8 ORB 90	1
8	803-00105	Control Rod (2-316)	1
9	808-00034	Knob	1
10	806-00219	Control Link Modification	1
11	650-00403	Placard, TC/PP	1
12	221-02002	PLTD Jam Nut 3/8- 16NC	2
13	514-57010	Elbow #12 OFS- #12 ORB	1
14	513-70023	STR CONN - #12 ORB/#12 OFS	1
15	516-87007	S.N. BRANCH TEE - #12 OFS	1
16	514-67004	Elbow #12 OFS SN	1
17	519-70035	Reducer - #12 OFS/#8 OFS	1
18	511-70004	Tube Nut - #12 OFS	1
19	513-20017	CONN #4 OFS-#4 ORB	1
20	519-20004	CAP #4 OFS	1
21	513-50023	STR CONN - #8 ORB/#8 OFS	1
22	514-65004	90º SW Nut Elbow - #8 OFS	1

WHEN ORDERING PARTS, SPECIFY MODEL NUMBER, SERIAL NUMBER AND DESCRIPTION OF PARTS REQUIRED

https://truckmanualshub.com/

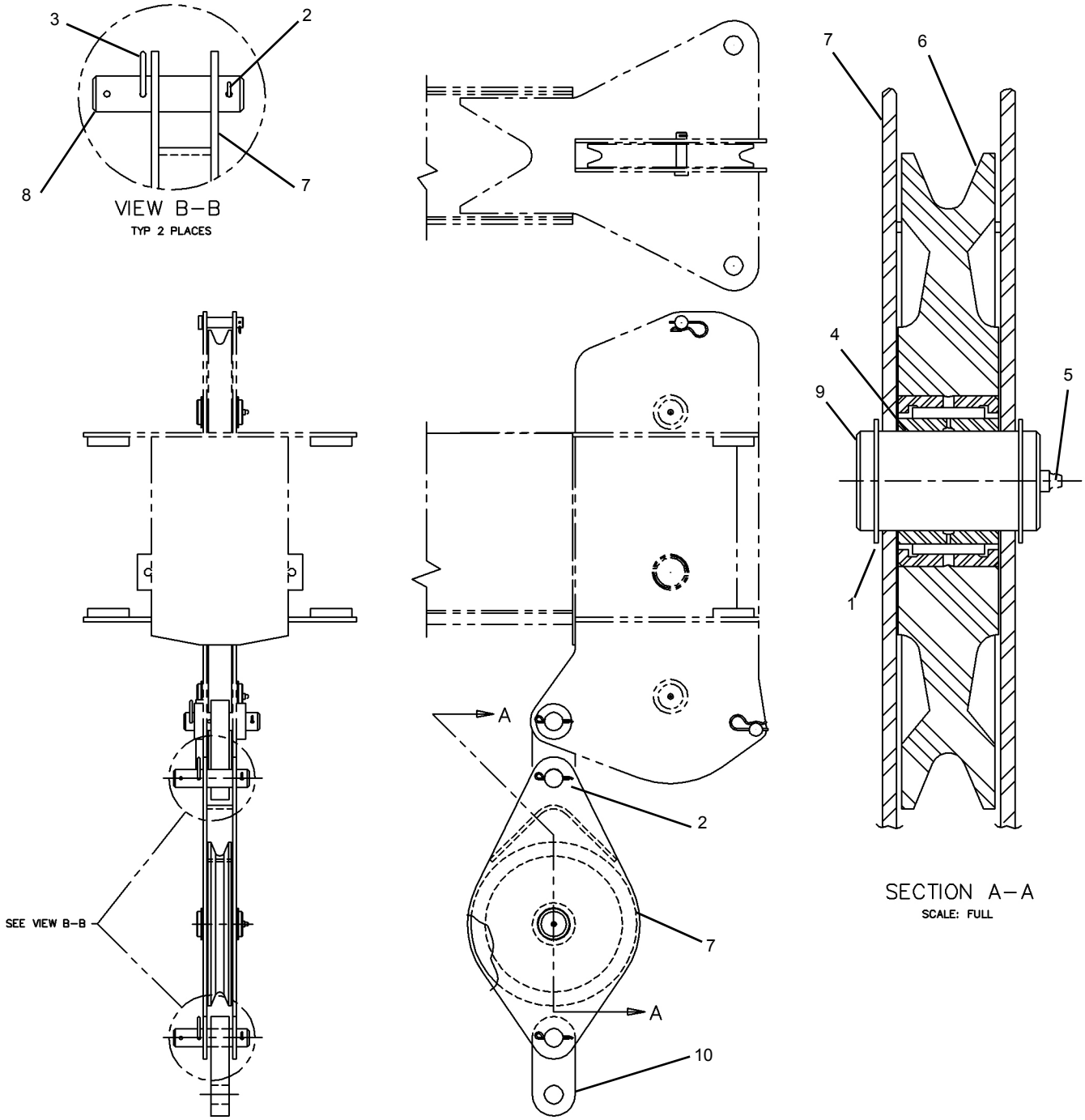

REF	PART NO.	DESCRIPTION	QTY	REF	PART NO.	DESCRIPTION	QTY
	735-00004 (Rev A)	*Auxiliary Sheave*					
1	200-30001	Snap Ring	2	6	860-40050	Sheave Assembly 9/16	1
2	224-04001	Cotter Pin 3/16 x 2	2	7	861-90320	Aux Sheave Bracket	1
3	224-04002	Cotter Pin	2	8	870-30200	Pin 1 1/4 x 5 1/4	2
4	274-30004	Bearing Race	1	9	870-50058	Pin, Sheave	1
5	501-03001	Zerk 1/4 - 28	1	10	783-02786	Support Bar	1

WHEN ORDERING PARTS, SPECIFY MODEL NUMBER, SERIAL NUMBER AND DESCRIPTION OF PARTS REQUIRED

https://truckmanualshub.com/

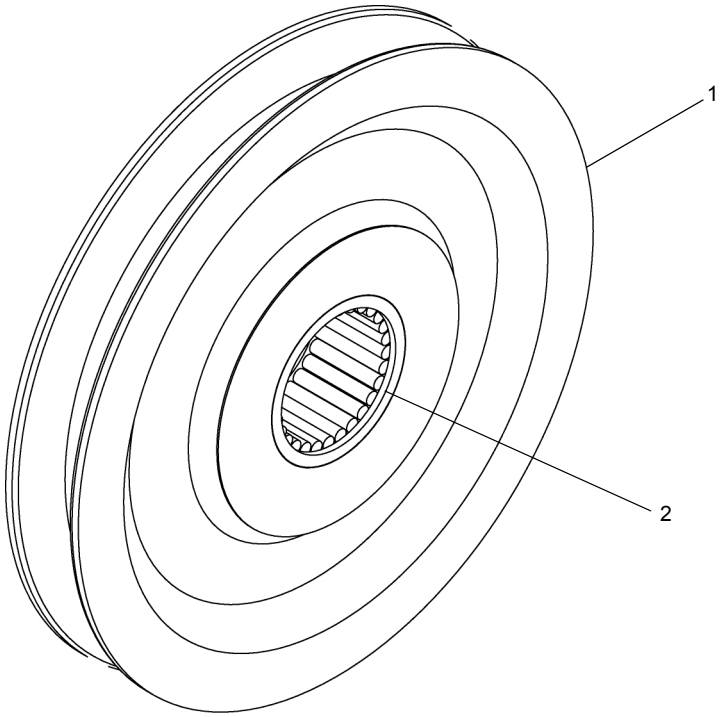

REF	PART NO.	DESCRIPTION	QTY
	860-40050 (Rev B)	*Sheave Assembly - 9/16 Rope*	
1	860-40051	Load Sheave	1
2	273-50002	Roller Bearing Outer Race (McGILL MR-36)	1

https://truckmanualshub.com/

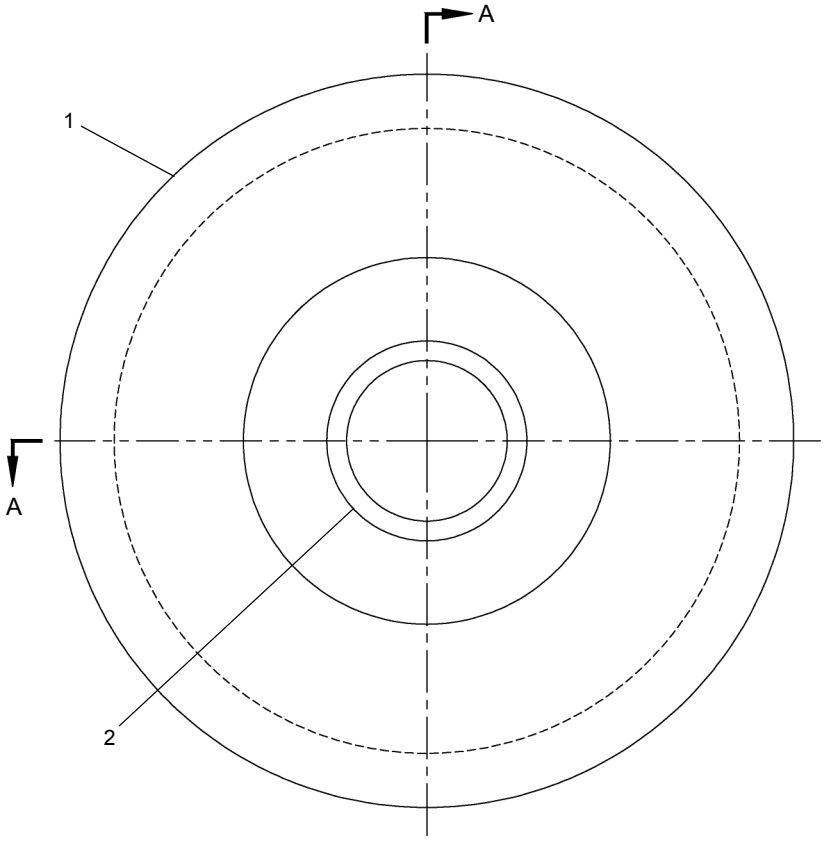

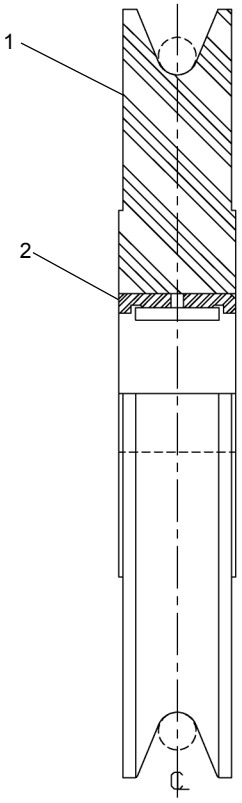

SECTION A - A

REF	PART NO.	DESCRIPTION	QTY
	860-40082 (Rev 00)	*Sheave / Bearing ASSY 9/16 DIA. Rope*	
1	860-40083	Sheave-9/16 Rope	1
2	273-50004	RLR BRG OTR Race (000-00773)	1

WHEN ORDERING PARTS, SPECIFY MODEL NUMBER, SERIAL NUMBER AND DESCRIPTION OF PARTS REQUIRED

https://truckmanualshub.com/

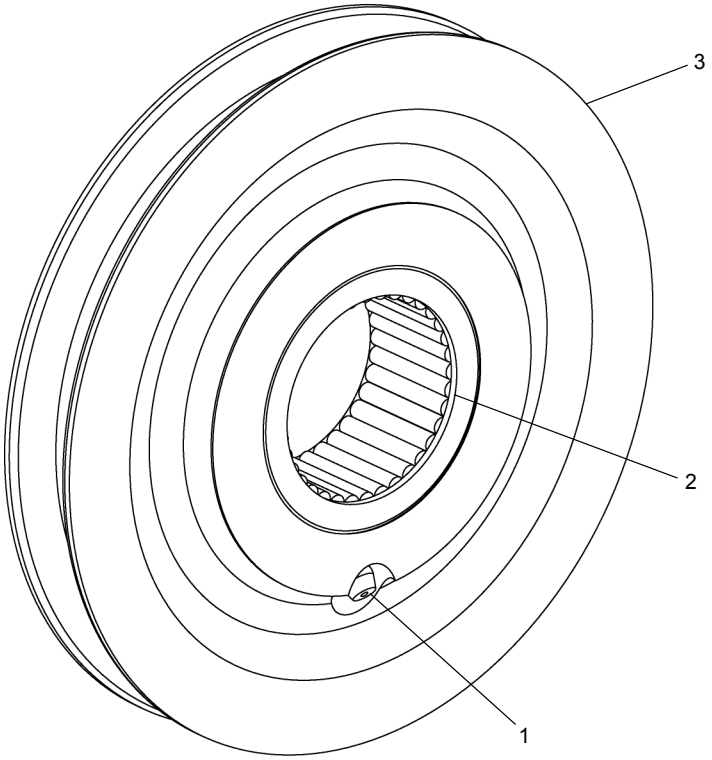

REF	PART NO.	DESCRIPTION	QTY
	860-10009 (Rev C)	*Sheave Assembly, Boom Retract*	
1	1213-07	Grease FTG, ZERK, 0.25-28 STR	1
2	273-10007	Roller BRG Outer Race	1
3	860-10010	Sheave 5.50 OD X 7.50	1

WHEN ORDERING PARTS, SPECIFY MODEL NUMBER, SERIAL NUMBER AND DESCRIPTION OF PARTS REQUIRED

https://truckmanualshub.com/

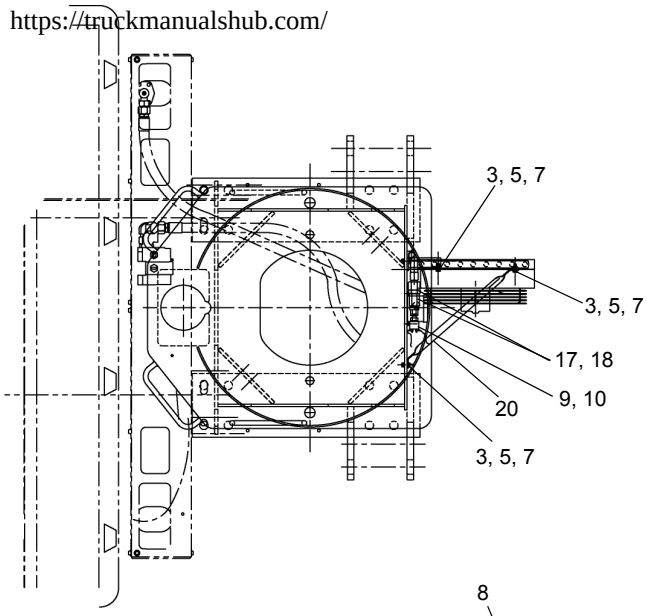

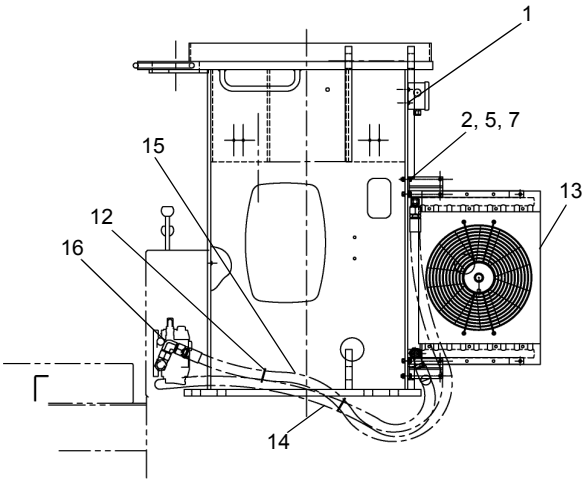

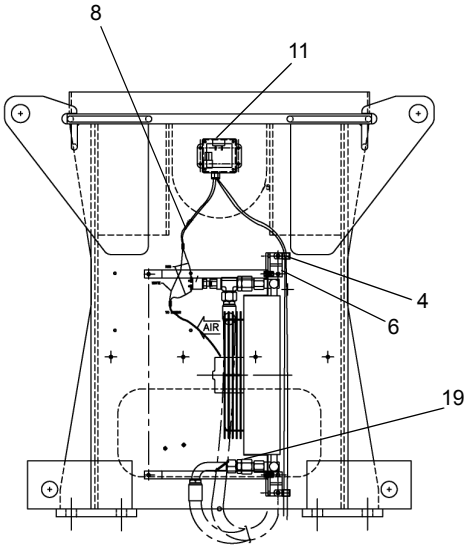

REF	PART NO.	DESCRIPTION	QTY
	T110778 (Rev C)	*INSTL, Oil Cooler Back Of Main Frame*	
1	S01-250CA25-25	SCR, HHCS, 0.25-20 X 1.25, ST Z G5	4
2	SHF-375CA25-25	SCR, HHCS, FT, 0.375-16 X 1.25, ST Z G5	4
3	SHF-375CA00-25	SCR, HHCS, FT, 0.375-16 X 1.00, ST Z G5	6
4	201-00145	Clamp, 11/16 1D	2
5	N04-375C000-25	Nut, HEX, 0.375-16, ST Z G5	10
6	T110779	Bracket, ASSY	2
7	W07-375X000-20	WSH, LCK, NED SPLT 0.375, ST Z	10
8	400-01411	Loom, Split Poly-1/4	35
9	400-04990	Boot Pressure Switch	1
10	400-05418	Controller, Fan, Oil Cooler	1
11	400-05502	Fan Control Box ASSY Oil Cool	1
12	400-15086	Nylon Cable Tie (7"LG.)	10
13	501-05010	Cooler, Oil	1
14	502-50316	Hose ASSY-OIL Cooler Supply	1
15	502-50317	Hose ASSY-Oil Cooler Return	1
16	514-69012	Swivel 90	1
17	516-89013	Tee #16 OFS Run Special	1
18	517-00045	Adapter	1
19	517-90006	Adapter F#16 OFS X M1" NPT	2
20	785-02124	Angle, BRKT, Cooler	2

WHEN ORDERING PARTS, SPECIFY MODEL NUMBER, SERIAL NUMBER AND DESCRIPTION OF PARTS REQUIRED

https://truckmanualshub.com/

https://truckmanualshub.com/

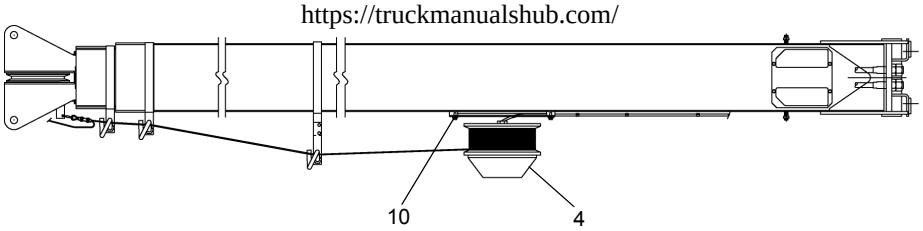

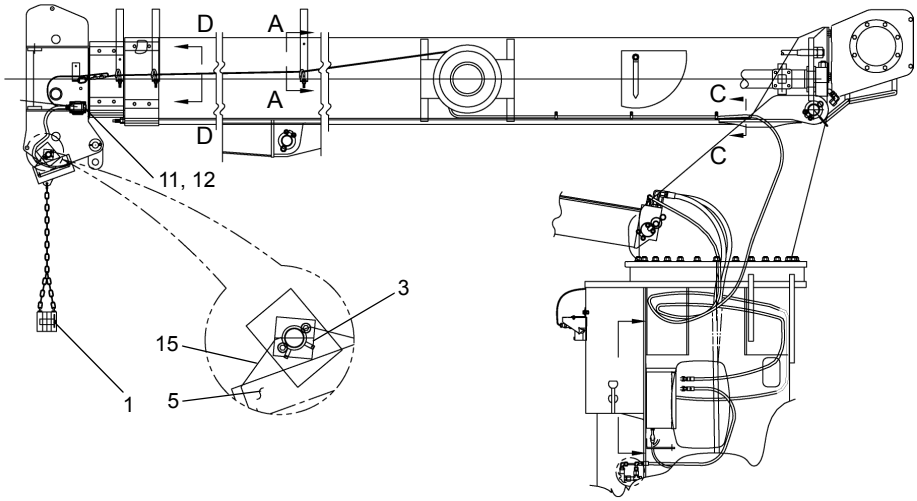

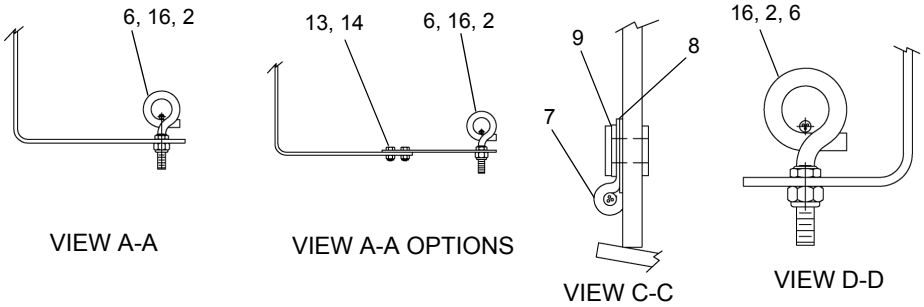

REF	PART NO.	DESCRIPTION	QTY
	508-00090-5 (Rev 00)	*ATB-LIM CYL/Boom Cable Guide INSTL*	
1	717 0882	CTWT W/Chain	1
2	221-00032-3	Nylon HEX Lock Nut 3/8-16 Zinc	4
3	774-00054	Bracket - ATB Switch	1
4	861-90386	Reel/A-RCI/ATB	1
5	861-90434	ATB Switch ASSY HVY DTY	1
6	865-00029	ATB Cable Guide	4
7	201-00141	Clamp Ø1/4 X .40 Hole	3
8	222-00006	Flatwasher, 1/4 Zinc PLTD	3
9	226-00021	Rivet .50HD .25D .63LG	3
10	222-02005	Flatwasher, 3/8	4
11	223-04001	MSHH, #10-24 X .50 LG	4
12	222-10006	Lockwasher, #10	4
13	220-00021	HHCS, 1/4-20 UNC X .63 LG	2
14	221-90001	HEX Nut 1/4-20 UNC Top Lock	2
15	729-02729	RCI/ATB Switch Bracket, Weld	1
16	221-00031-3	HEX Jam Nut 3/8-16 Zinc	4

WHEN ORDERING PARTS, SPECIFY MODEL NUMBER, SERIAL NUMBER AND DESCRIPTION OF PARTS REQUIRED

https://truckmanualshub.com/

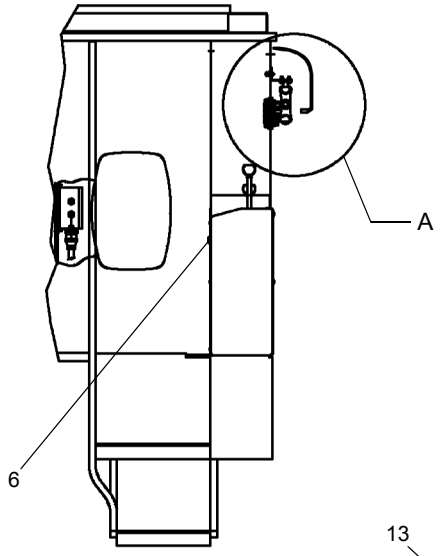

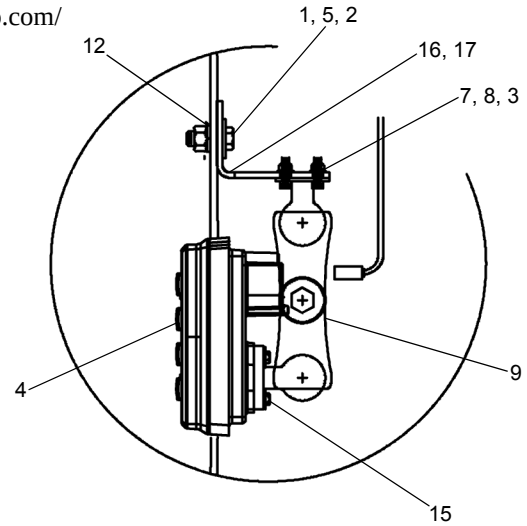

DETAIL A

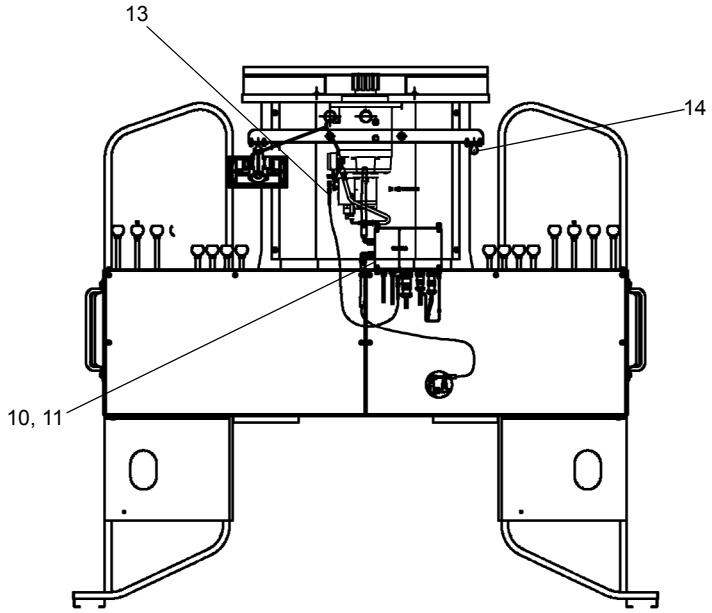

REF	PART NO.	DESCRIPTION	QTY
	T126641 (Rev B)	*Non-Boom LMI Parts (Items 1 thru 15 & 16)*	
	T126642 (Rev B)	*Non-Boom LMI Parts (Items 1 thru 15 & 17)*	
1	N04-375C000-2A	Nut, HEX 0.375-16, ST Z GRA	2
2	WBR-37RXA00-20	WSH, FL TYPB-REG 0.375, ST Z	2
3	WBR-25RX734-20	WSH, FL TYPB-REG 0.25, ST Z	6
4	T117745	Greer Insite Display	1
5	SHF-375CA00-25	SCR, HHCS FT 0.375-16X1.00, STZ G5	2
6	450-0006	Alarm	1
7	SHF-250C625-25	SCR, HHCS FT 0.25-20X0.625, STZ G5	6
8	NYL-250C000-25	Nut, HEX NYL - INS 0.25-20, ST Z G5	6
9	T119215	RAM Mount	1
10	T127212	Greer COMP Control	1
11	717-0776	Duty Chip	1
12	W07-375X000-20	WSH, LCK, MED SPLT 0.375, ST Z	2
13	400-16139	WAD Cable 32" LG (Greer)	1
14	T127257	RAM Ball Mount	1
15	SL5-164C500-20	SCR, CR RND MS 8-32X0.500, STZ	2
16	T127386	Angle, Display Mounting (Gray)	1
17	T127389	Angle, Display Mounting (Red)	1

WHEN ORDERING PARTS, SPECIFY MODEL NUMBER, SERIAL NUMBER AND DESCRIPTION OF PARTS REQUIRED

https://truckmanualshub.com/

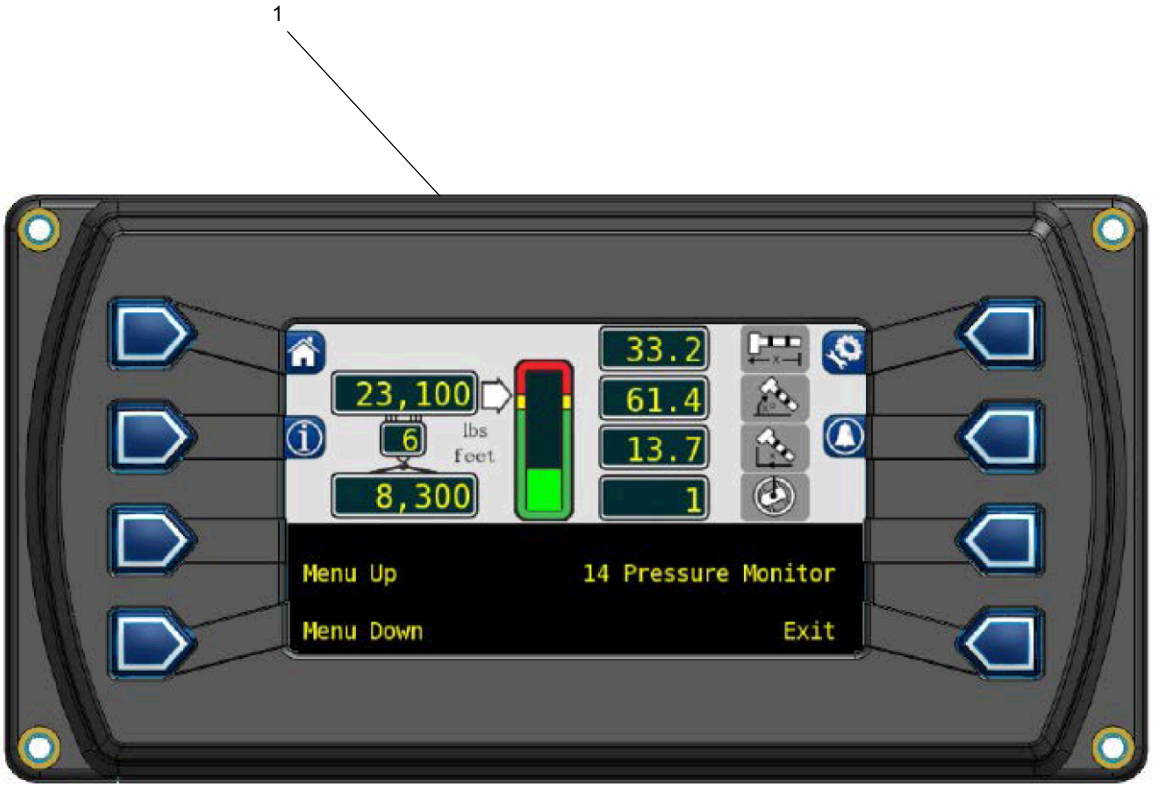

REF	PART NO.	DESCRIPTION	QTY
1	T117745 (Rev A)	*Display, Greer Insight*	1

WHEN ORDERING PARTS, SPECIFY MODEL NUMBER, SERIAL NUMBER AND DESCRIPTION OF PARTS REQUIRED

https://truckmanualshub.com/

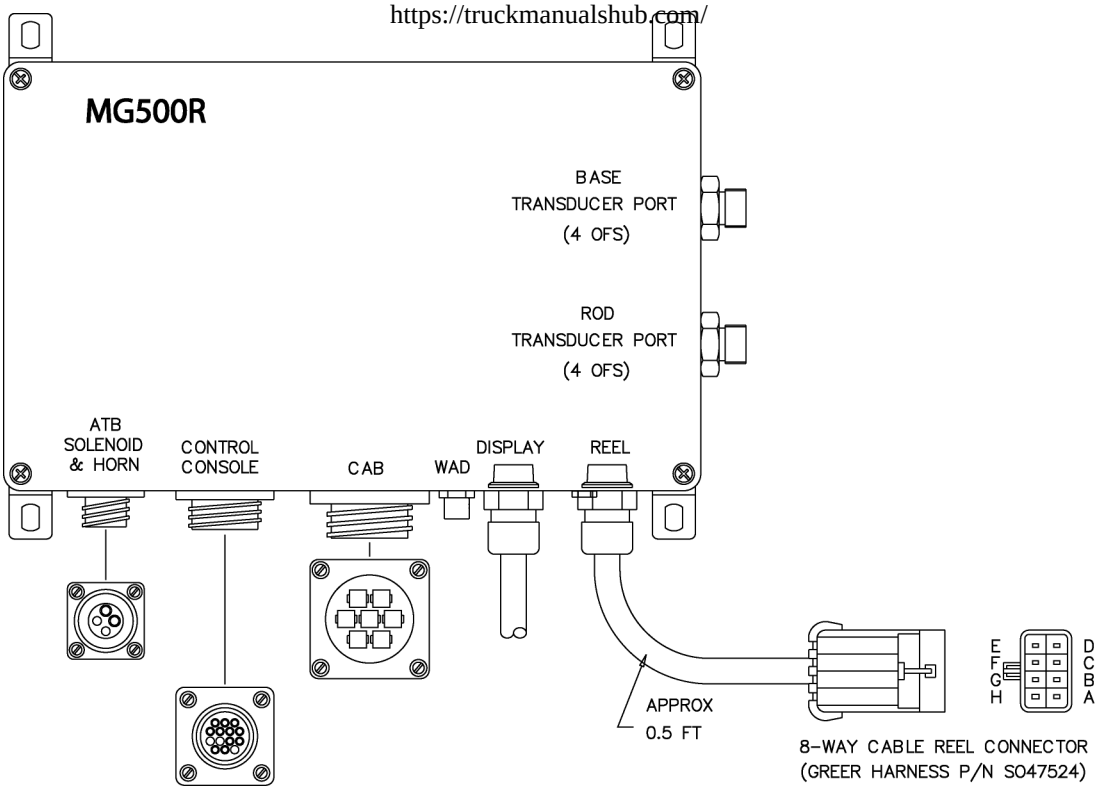

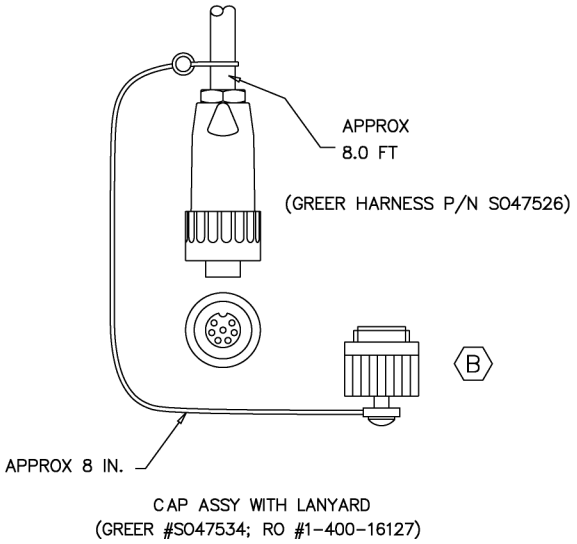

REF	PART NO.	DESCRIPTION	QTY
	400-16141	*Control Unit Greer (510 RCI/WAD)*	

NOTE: Return to Manufacturer if component becomes damaged or defective.

WHEN ORDERING PARTS, SPECIFY MODEL NUMBER, SERIAL NUMBER AND DESCRIPTION OF PARTS REQUIRED

https://truckmanualshub.com/

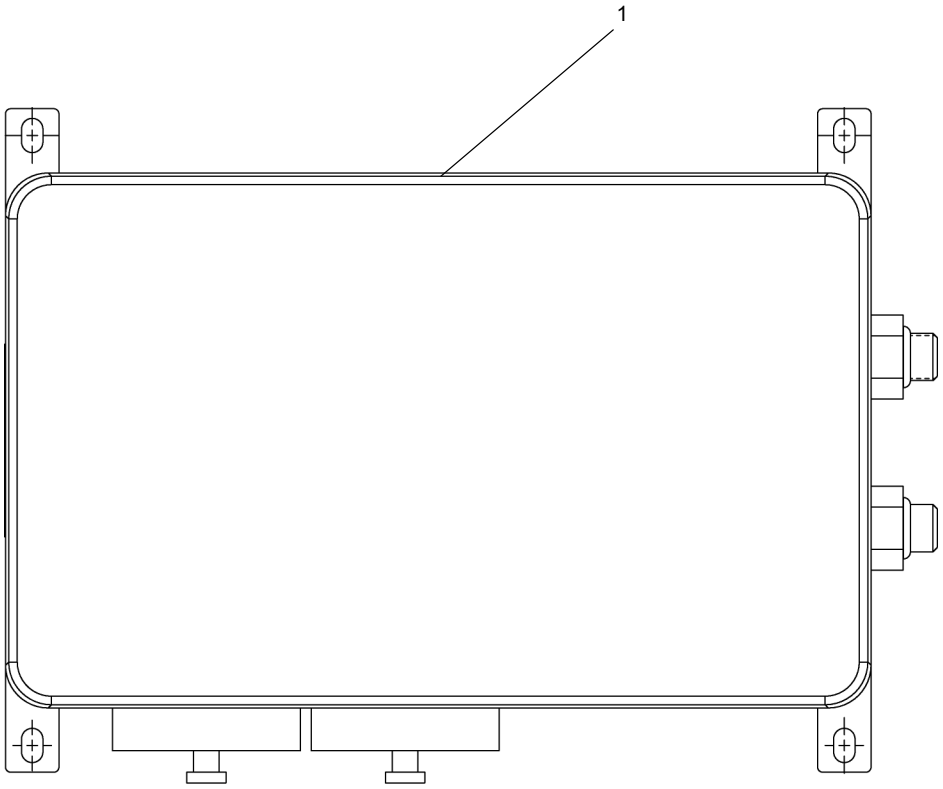

REF	PART NO.	DESCRIPTION	QTY
1	T127212 (Rev B)	*Computer, Greer A450880*	1

WHEN ORDERING PARTS, SPECIFY MODEL NUMBER, SERIAL NUMBER AND DESCRIPTION OF PARTS REQUIRED

https://truckmanualshub.com/

https://truckmanualshub.com/

SPARE PARTS LIST

Winch Parts

ITEM	PART NO.	DESCRIPTION	QTY
1	058-00431	Die Spring - Winch	12
2	058-00597	Sprague Clutch Assembly - Winch	1
3	058-00634	Disc Friction - Winch	7
4	058-00629	Brake Disk - Winch	8
5	058-00728	Seat Kit - Winch	1
1	200-10011	Snap Ring	2
2	200-30006	Snap Ring	14
3	200-30009	Snap Ring	6
4	202-10062	Spring	3
5	220-01004	BLT HH5/16NCX3/4	4
6	220-04040	BLT HH1/2NCX1 1/4	8
7	223-00409	Screws	28
8	224-04002	Hair Pins	4
9	P02-188XA50-20	Pin, Cotter 0.188 X 1.50, ST Z	2
1	S14-A00CD75-H2	SCR, SHCS 1.00-8 X 4.75, ST Z)	92
2	NYL-A00C000-Y8	Nut, HEX NYL-INS 1.00-8, ST YZ G8)	92
3	WAH-A0NX000-Y2	WSH, LF HRD TYPA-NRW 1.00, ST Z	108
1	224-26005	Rod End	5
2	271-18002	Bushing	2
1	221101	Seal Kit O-R AUX Horizontal	1
2	221125	Seal Kit O-R AUX Vertical	1
3	226830	Seal Kit O-R Main	1
4	226879	Seal Kit -EXT CYL	1
5	226850	Seal Kit-(Topping) Lift CYL	1
6	226849	Counter Balance Topping	1
7	226837	Check Valve - Outrigger	1
8	226838	Counter Balance Outrigger	1
9	221080	Counter Balance Extend	1
1	274-20004	Bearing	6
2	274-30006	Bearing	5
1	209-00046	Swivel Stops	3
2	600-40329	Throttle Cable	3
3		Electronic Throttle - Depends on Engine	1
4		Potentiometer - Depends on Engine	1
5	809-00390	Clevis ASSY.	4
1	400-04036	Switch Guard	8
2	400-04123	Switch	2
3	400-04125	Switch	6
4	1223-981	Switch	2
5	400-05109	Outrigger Alarm Switch	4
1	501-02018	Filter Element	4
2	875-90138	Tank Breather	1
3	875-90340	HYD Tank Sight Gauge	2
4	935-00113	Gauge	Ref
5	520-00053-3	Hydraulic Pump	1
1	400-05334	ATB Alarm	1
2	400-23243	Receptacle	2
3	400-23341	Insert, 6 Pin Male Plug	1
4	400-23340	Insert, 6 Pin Female RECPT	1
5	729-02729	ATB Switch Bracket	1
6	774-00054	ATB Mounting Pin	2
7	861-90434	Greer ATB Switch	1
1	T106560	ELECT. Hazard	3
2	12400-1514	O.R. Warning - AUX	12
3	T116671	O.R. Warning - Main	1
4	651-00412	ELECT. Hazard	3
5	652-00114	Hand Signals	2
1	729-02335	Wear Pads - Boom	2
2	729-02236	Wear Pads - Boom	10
3	729-02334	Wear Pads - Front Outriggers	2
4	729-02235	Wear Pads - Boom	18
5	729-02333	Wear Pads - Front Outriggers	1
6	729-02175	Wear Pads - Boom Rest	2
7	729-02341	Wear Pads - Boom	18
8	729-02348	Wear Pad-3/8 X 3 X 19	1
9	729-02238	Wear Pads- AUX Outriggers	12
10	729-02405	CBL RTNR-Retract 3rd STG	2
11	729-02310	Cable Guide RET-2nd-4700	2
12	729-02578	Angle Pointer	2
13	787-00238	Shim - Boom	30
14	787-00239	Shim - Boom	30
15	787-00240	Shim	30
16	787-00308	Shim	4
17	787-00309	Shim	2
18	787-00310	Shim	8
19	860-10009	Sheave ASSY.	6
20	860-40082	Sheave ASSY.	3
21	861-13009	Cable 3rd Stage Retract	4
22	861-13010	Cable 4th Stage Retract	2
23	861-17029	Extend Cables - 3rd Stage	4
24	861-17030	Extend Cables - 4th Stage	2
25	870-10214	Pin	2
26	870-40186	Jib Pins	4
27	870-70066	Pin - Outrigger	3
28	870-60214	Sheave Pin	2

SEE PAGE 55.2

https://truckmanualshub.com/

SEE PAGE 55.1

ITEM	PART NO.	DESCRIPTION	QTY
	Gearbox Parts		
1	901-00407	Shaft, Output, Pinion	1
2	901-00354	Kit, Seal	1
3	901-00192	Cone, Bearing	1
4	901-00193	Cup, Bearing	1
5	901-00395	Cone, Bearing	1
6	901-00396	Cup, Bearing	1
7	901-00148	Spring, Green	6
8	901-00149	Plate, Stator	6
9	901-00150	Disc Friction	5
10	901-00029	Breather	1
11	901-00359	Sensor, Hall Effect	1
12	901-00363	Conditioner, W.A.D.	1
1	209-00832	Bubble Level	2
2	T121655	Connector	1
3	T121654	Check Valve	2
1	215323	Latch Kits	2
2	219129	Ball - Latch Kit Spring	2

https://truckmanualshub.com/

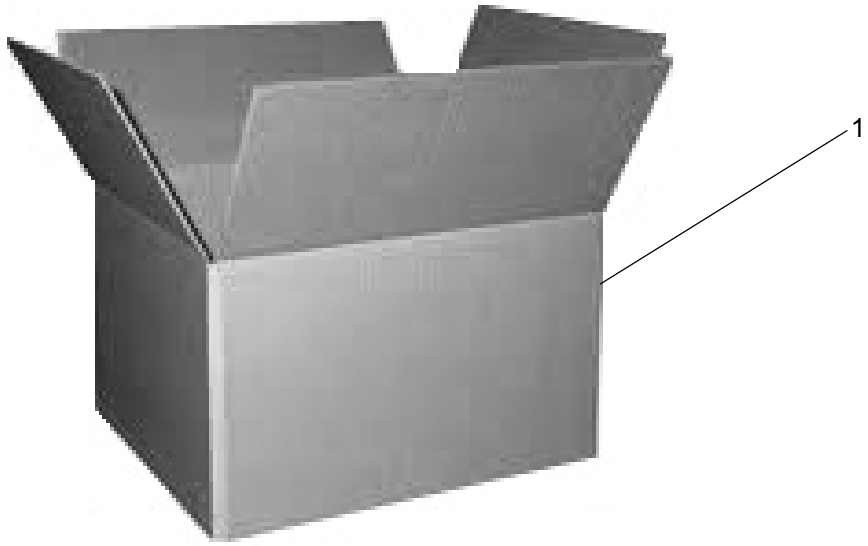

MANUAL PACK							
ITEM	PART NO. (ENGLISH)	PART NO. (SPANISH)	PART NO. (PORTUGUESE)	PART NO. (FRENCH)	PART NO. (RUSSIAN)	DESCRIPTION	QTY
1	218882 *(Includes items below)*	221353 *(Includes items below)*	-- *(Includes items below)*	221974 *(Includes items below)*	-- *(Includes items below)*	*Standard Manual Pack*	1
	12261-350	12261-492	--	12261-507	--	CD-Operator's, Parts, Shop & Schematics	1
	12261-287	12261-468	--	12261-486	--	BT4792 Operator's Manual	1
	12261-302	12261-302	--	12261-302	--	Customer Orientation & Operation Checkout	1
	C-70-2	C-70-2	--	C-70-2	--	AEM Safety Manual	1
	V-CR	V-CR	--	V-CR	--	AEM Safety Video	1
	12261-644	12261-644	--	12261-644	--	Greer Insight Operation's Video - DVD	1
	T132522	T132523	--	T132525	--	Terex Product Warranty Certificate-24 Month	1

For Ordering the above:
Contact: Sycamore Enterprises, Evansville, IN 47716
www.sycamoreworldwide.com
e-mail: sales@sycamoreworldwide.com
Fax: 812-476-7683

WHEN ORDERING PARTS, SPECIFY MODEL NUMBER, SERIAL NUMBER AND DESCRIPTION OF PARTS REQUIRED

https://truckmanualshub.com/