WEAM000704

Operation & Maintenance Manual

WB97S-2

BACKHOE-LOADER

SERIAL NUMBER

WB97S-2 97SF11205 and up

WARNING

Unsafe use of this machine may cause serious injury or death. Operators and maintenance personnel must read this manual before operating or maintaining this machine.
This manual should be kept inside the cab for reference and periodically reviewed by all personnel who will come into contact with the machine.

KOMATSU Utility

1.1 FOREWORD

- This manual has been carried out by Komatsu Utility in order to supply their customers with all the necessary information on the machine and the safety regulations related to it, together with the use and maintenance instructions that enable the operator to exploit the capacity of the machine with optimal results and to keep the machine efficient over time.
- The operation manual, together with the spare parts catalogue, is an integral part of the machine and must accompany it, even when it is resold, until its final disposal.
- The manual must be handled with the greatest care and always kept on board the machine, so that it can be consulted at any moment; it must be placed in the appropriate compartment behind the seat, where also the ownership documents and the logbook are usually kept (see “3.5.10 TECHNICAL DOCUMENTATION”).
- This manual must be given to the persons who have to use the machine and carry out the routine maintenance operations; they must read the contents carefully more than once, in such a way as to clearly understand what are the correct operating conditions and the dangerous conditions that must be avoided.
  In case of loss or damage, request a new copy to Komatsu Utility or your Komatsu Utility Dealer.
- The illustrations contained in this manual may represent machine configurations available upon request.
  Komatsu Utility machines are constantly improved in order to increase their efficiency and reliability; this manual sums up all the information regarding the most recent techniques applied at the moment in which the machine is marketed.
  For any further and/or updated information, contact your Komatsu Utility Dealer.
- For the various maintenance phases it is advisable to consult the hour meter and in particular the maintenance plan set on the electronic unit of the machine frequently. The display of the maintenance plan can be obtained by means of an appropriate screen positioned on the upper part of the front dashboard. In any case, the maintenance plan can be also consulted on the relevant manual provided. Keep to the various maintenance intervals indicated on the screen and on the use and maintenance manual.
- Over the years Komatsu Utility Dealers have gathered considerable experience in customer service.
  If more information is needed, do not hesitate to contact your Komatsu Utility Dealer: he always knows how to get the best performance from the machine, he can suggest the use of the equipment that is most suitable for specific needs and can provide the technical assistance necessary for any change that may be required to conform the machine to the safety standards and traffic rules.
  Furthermore, Komatsu Utility Dealers also ensure their assistance for the supply of Komatsu Utility genuine spare parts, which alone guarantee safety and interchangeability.
- The table included in this manual must be filled in with the machine data, which are the data that must always be indicated to the Dealer when requiring assistance and ordering spare parts.

CAUTION

- **The incorrect use of the machine and inappropriate maintenance operations may cause serious injuries and even death.**
- **Operators and maintenance personnel must carefully read this manual before using the machine or performing maintenance operations.**
- **Any serious accident that may occur during the use of the machine or during maintenance operations is due to failure to comply with the instructions given herein.**
- **The procedures and precautions described in this manual are valid for application to the machine only when it is used correctly.**
  If the machine is used for any purpose or in any way other than those described herein, the operator shall be responsible for his own safety and for the safety of any other person involved.

1.2 INFORMATION ON SAFETY

Many accidents are caused by insufficient knowledge of and failure to comply with the safety regulations prescribed for the maintenance operations that must be performed on the machine.
In order to avoid accidents, before starting work and before carrying out any maintenance operation, carefully read and be sure to understand all the information and warnings contained in this manual and given on the plates applied onto the machine, so that you can follow the instructions without making mistakes.
To identify the messages regarding safety that are included in this manual and written on the machine plates, the following words have been used.

DANGER

- **This word is used in the safety warnings in the manual and on the plates when the situation is dangerous and it may possibly result in serious injuries or even death.**
  These messages describe the safety precautions to be taken in order to avoid any risk. Non-compliance with these instructions may also result in serious damage to the machine.

CAUTION

- **This word is used in the safety warnings in the manual and on the plates to signal risks that may cause moderate damage or injuries.**
  The message can be used even to indicate the risk of damage to the machine only.

IMPORTANT

- **This word is used when precautions are indicated, which must be taken to avoid actions that may shorten the life of the machine.**

Komatsu Utility cannot reasonably predict every circumstance that might involve a potential hazard during the operation or maintenance of the machine; for this reason, the safety messages included in this manual and applied onto the machine may not include all possible safety precautions.
If all the procedures and operations prescribed for this machine are kept to, you can be sure that the operator and the persons in the vicinity can work in total safety, with no risk of damaging the machine. In case of doubt regarding the safety measures necessary for some procedures, contact Komatsu Utility or your local Dealer.

DANGER

- **Before starting any maintenance operation, position the machine on firm and level ground, engage the safety locks of the equipment and controls, stop the engine and apply the parking brake.**

DANGER

- **To make the information clearer, some illustrations in this manual represent the machine without safety guards. Do not use the machine without guards and do not start the engine when the engine protection casing is open, if this is not expressly prescribed for some specific maintenance operations.**

DANGER

- **It is strictly forbidden to modify the setting of the hydraulic system safety valves; Komatsu Utility cannot be held liable for any damage to persons, property or the machine, if this has been tampered with by modifying the standard setting of the hydraulic system.**

DANGER

- **Before carrying out any electrical welding, disconnect the battery, the alternator and the connector of the gearshift unit installed under the steering wheel (see “2.8.13 PRECAUTIONS CONCERNING THE BATTERY AND THE ALTERNATOR” - “2.8.15 PRECAUTIONS CONCERNING THE GEARSHIFT”).**

DANGER

- **Install only authorized additional equipment (see “6.1 AUTHORIZED OPTIONAL EQUIPMENT”).**

DANGER

- **The machine can travel on roads only if provided with homologated equipment; before travelling on roads, make sure that the equipment with which the machine is provided is homologated and that the safety locks are correctly connected.**

1.3 INTRODUCTION

1.3.1 INTENDED USES

The Komatsu Utility BACKHOE LOADERS described in this manual have been designed and constructed to be used mainly for the following functions:

- LOADER
- EXCAVATOR

Through the installation of optional equipment, the machine can also be used for the following applications:

- HANDLING OF MATERIALS (4IN1 BUCKET - PALLET FORKS)
- SNOWPLOUGH (ANGLEDOZER BLADE - SNOWPLOUGH)
- DEMOLITION (HAND HAMMER - HAMMER ON THE BACKHOE)
- DITCH CLEANING AND DIGGING (SPECIAL BUCKETS)

1.3.2 IMPROPER OR UNAUTHORIZED USES

CAUTION

- **This paragraph describes some of the improper or unauthorized uses of the machine; since it is impossible to predict all the possible improper uses, if the machine happens to be used for particular applications, contact your Komatsu Utility Dealer before carrying out the work.**

IMPORTANT

- **The instructions regarding the authorized optional equipment are given in the relevant operation and maintenance manuals; if the equipment is supplied by Komatsu Utility, these publications are enclosed to this manual.**
- **The instructions regarding the assembly of the authorized equipment, the controls requiring special arrangement on the machine and the hydraulic couplings necessary for the operation of the equipment are grouped in the final section of this manual.**

Komatsu Utility backhoe loaders are constructed exclusively for the handling, excavation and treatment of inert materials; therefore, the following uses are absolutely forbidden:

- USE OF THE MACHINE BY MINORS OR INEXPERIENCED PERSONS.
- USE OF THE MACHINE FOR LIFTING PERSONS OR OBJECTS.
- TRANSPORTATION OF PERSONS even if they are in the operator’s cab.
- TRANSPORTATION OF CONTAINERS with fluids, flammable fluids, loose material, without the appropriate slinging equipment.
- TRANSPORTATION AND LIFTING (EVEN IF IN EXCEPTIONAL CASES) OF EQUIPMENT OR MATERIALS THAT PROTRUDE FROM THE BUCKET OR ARE NOT SECURED TO THE BUCKET BY MEANS OF ROPES OR CHAINS.
- USE OF THE BUCKET FOR DRIVING OR EXTRACTING PILES.
- USE OF THE MACHINE FOR TOWING DAMAGED VEHICLES ON ROADS.
- USE OF THE MACHINE FOR LIFTING DAMAGED VEHICLES.

1.3.3 MAIN CHARACTERISTICS

- Simple and easy operation.
- Servo-assisted steering with priority hydraulic system.
- Three steering modes that can be selected with a push button:
  - Two-wheel steering
  - All-wheel steering
  - Crab steering
- Gearshift with electronic gear selection through solenoid valve actuators and transmission with hydraulic converter; reversal and gear shifting with controls on a single lever.
- Loader control through a single lever ensuring also combined movements that can be modulated proportionally and continually.
- Backhoe controls with two levers ensuring also combined movements that can be modulated proportionally and continually.
- Complete series of instruments visible from the two operating positions (loader or backhoe).
- Separate accelerator controls for the two operating positions.
- Foot brake control.
- Easy maintenance with simplified intervals.
- Automatic engagement and disconnection of the differential locking on both axles (front and rear).

1.3.4 RUNNING-IN

Every machine is scrupulously adjusted and tested before delivery.
A new machine, however, must be used carefully for the first 100 hours, in order to ensure proper running-in of the various components.
If the machine is subjected to excessive work load at the beginning of operation, its potential yield and its functionality will be shortly and untimely reduced.
Every new machine must be used carefully, paying special attention to the following indications:

- After the start, let the engine idle for 5 minutes, in such a way as to warm it up gradually before actual operation.
- Avoid operating the machine with the limit loads allowed or at high speed.
- Avoid abrupt starts or accelerations, useless sudden decelerations and abrupt reversals.
- After the first 250 hours, carry out the following operations, in addition to those to be performed every 250 hours:
  1 - Change the hydraulic transmission oil and filter.
  2 - Change the differential unit oil (front and rear axle).
  3 - Change the oil in the final reduction gears (front and rear axle).
  4 - Check and adjust the engine valve clearance.
  5 - Change the hydraulic circuit oil filter.

SYNTHETIC BIODEGRADABLE OIL TYPE HEES

On machines in which the synthetic biodegradable oil type HEES is used, the following operations are to be performed besides the standard maintenance operations:

- After the first 50 hours of operation, change the hydraulic circuit drain filter.
- After the first 500 hours of operation, change the hydraulic circuit oil.

☞ **IMPORTANT**

- **When changing the oil filters (cartridges), check their innner part to make sure that there are no deposits.**
  If considerable deposits are observed, find out what may have caused them before starting the machine.
- **The number of operation hours is indicated by the hour meter, while the partial service hours for the various maintenance operations to be carried out on the machine are stored and displayed on the electronic screen positioned on the front dashboard.**

1.4 PRODUCT IDENTIFICATION

The Komatsu Utility backhoe loader and its main components are identified by serial numbers stamped on the identification plates.
The serial number and the identification numbers of the components are the only numbers that must be indicated to the Dealer when requiring assistance and ordering spare parts.

1.4.1 MACHINE SERIAL NUMBER

The machine serial number is stamped on the front part of the main frame, on the right side.

1.4.2 MACHINE IDENTIFICATION PLATE

The Komatsu Utility backhoe loaders described in this manual are provided with the CE mark, which certifies that they are in compliance with the CE harmonized standards.
The plate with the mark is applied inside the operator's cab, on the left vertical wall of the frame, in correspondence with the brake pedals.

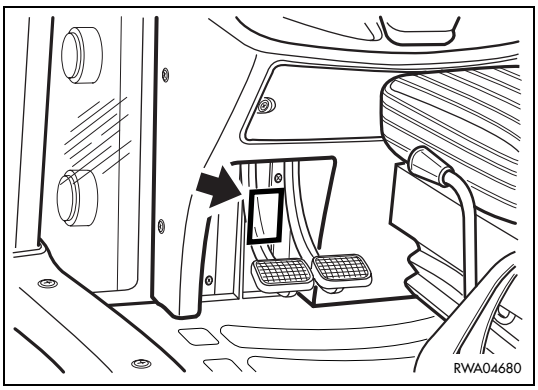

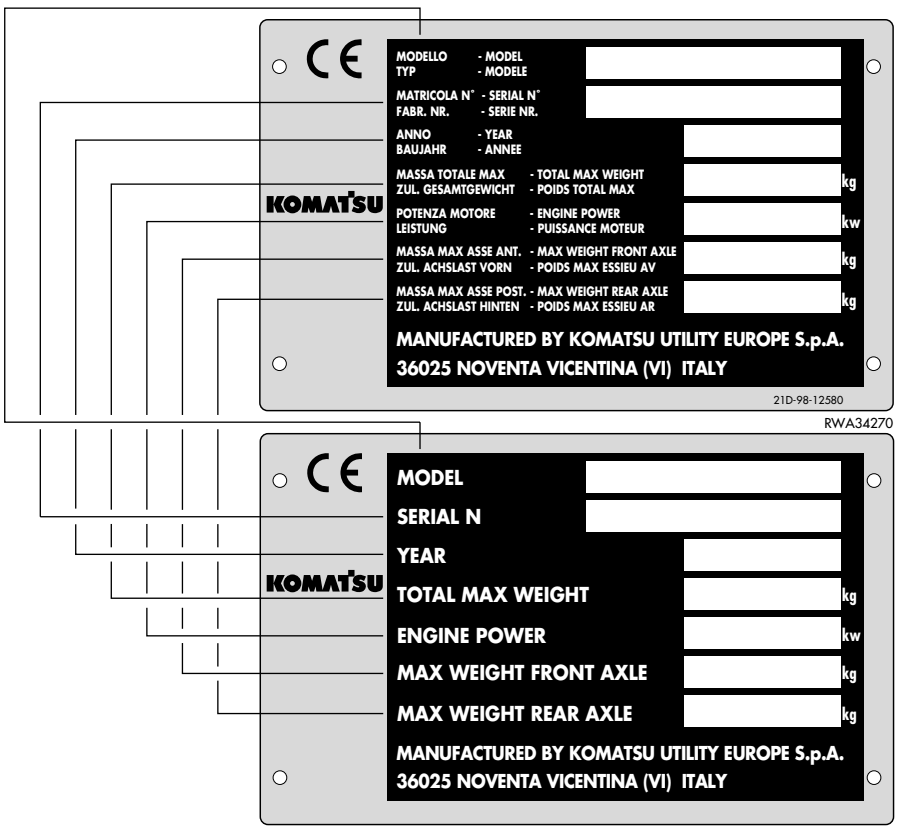

1.4.3 ENGINE SERIAL NUMBER AND EXHAUST GAS EMISSION PLATE

The engine serial number is stamped on the plate positioned on the rear side of the tappet cover.

The plate regarding the exhaust emission regulations is applied to the front side of the tappet cover.

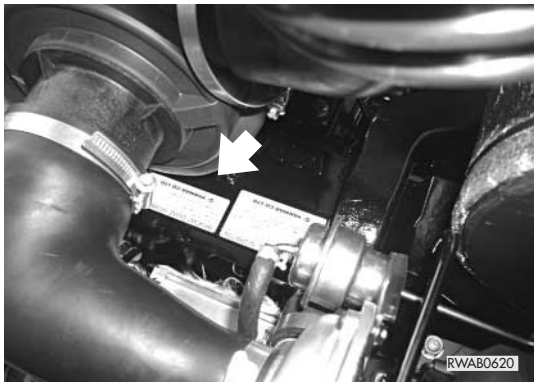

1.4.4 FRONT AXLE SERIAL NUMBER

The serial number of the front axle is stamped on the plate positioned on the right side of the axle body.

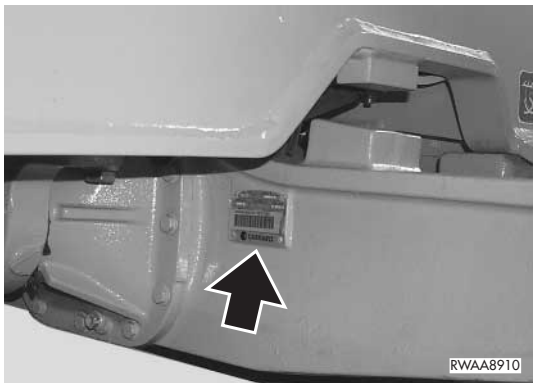

1.4.5 REAR AXLE SERIAL NUMBER

The serial number of the rear axle is stamped on the plate positioned on the left side of the axle body.

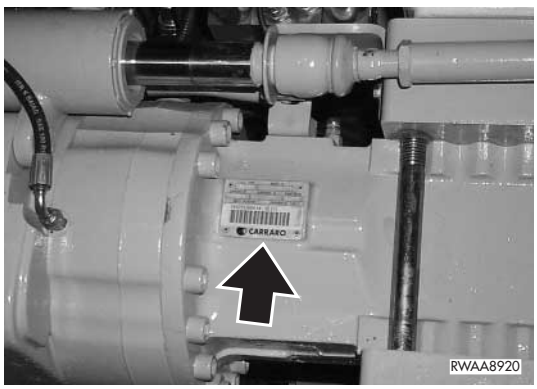

1.4.6 TRANSMISSION SERIAL NUMBER

The transmission serial number is stamped on the plate postioned on the right side of the transmission case.

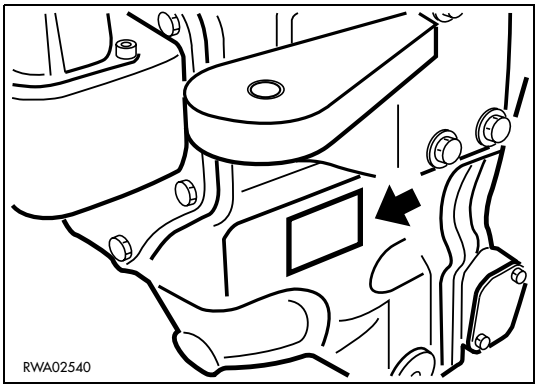

1.4.7 CAB SERIAL NUMBER

The cab serial number is stamped on the plate positioned on the right center pillar.

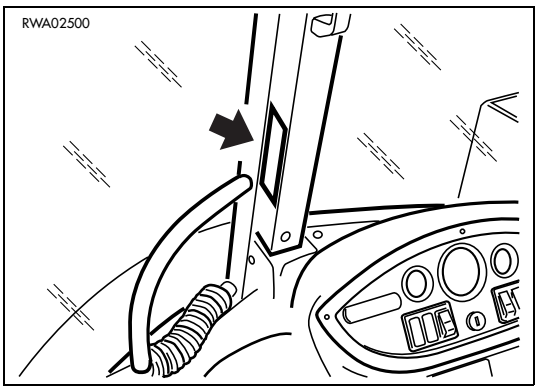

1.4.8 CANOPY SERIAL NUMBER (if provided)

The serial number is stamped on the plate positioned inside the canopy, on the front right part.

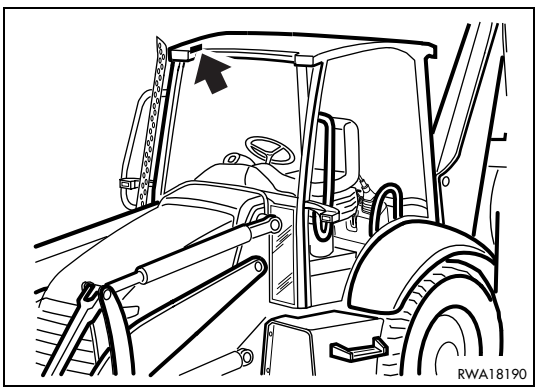

1.4.9 SERIAL NUMBERS AND DEALER'S ADDRESS

Machine n. _____ Model _____

Engine n. _____

Front axle n. _____

Rear axle n. _____

Transmission n. _____

Cab n. _____

Canopy n. _____

Dealer:

_____

_____

_____

_____

Address: _____

_____

_____ Tel. _____

Person to contact: _____

NOTES: _____

_____

_____

_____

_____

_____

_____

_____

_____

_____

_____

_____

_____

THIS PAGE WAS INTENTIONALLY LEFT EMPTY

Page

TABLE OF CONTENTS

1.1 FOREWORD **1**
1.2 INFORMATION ON SAFETY **2**
1.3 INTRODUCTION **4**
1.3.1 INTENDED USES 4
1.3.2 IMPROPER OR UNAUTHORIZED USES 4
1.3.3 MAIN CHARACTERISTICS 5
1.3.4 RUNNING-IN 5
1.4 PRODUCT IDENTIFICATION **6**
1.4.1 MACHINE SERIAL NUMBER 6
1.4.2 MACHINE IDENTIFICATION PLATE 6
1.4.3 ENGINE SERIAL NUMBER AND EXHAUST GAS EMISSION PLATE 7
1.4.4 FRONT AXLE SERIAL NUMBER 7
1.4.5 REAR AXLE SERIAL NUMBER 8
1.4.6 TRANSMISSION SERIAL NUMBER 8
1.4.7 CAB SERIAL NUMBER 8
1.4.8 CANOPY SERIAL NUMBER (if provided) 8
1.4.9 SERIAL NUMBERS AND DEALER’S ADDRESS 9

SAFETY AND ACCIDENT PREVENTION

2.1 SAFETY, NOISE AND VIBRATION PLATES **20**
2.1.1 POSITION OF THE SAFETY PLATES 20
2.1.2 PICTOGRAMS AND RELEVANT MEANINGS 22
2.1.3 POSITION OF THE NOISE PLATES ON MACHINES WITH CAB 26
2.1.4 VIBRATIONS TO WHICH THE OPERATOR IS SUBJECTED 27
2.2 GENERAL PRECAUTIONS **28**
2.2.1 GENERAL SAFETY RULES 28
2.2.2 SAFETY DEVICES AND GUARDS 28
2.2.3 CLOTHING AND PERSONAL PROTECTION ITEMS 28
2.2.4 UNAUTHORIZED MODIFICATIONS 29
2.2.5 LEAVING THE OPERATOR’S SEAT 29
2.2.6 GETTING ON AND OFF THE MACHINE 30
2.2.7 CHECKING THE REAR-VIEW MIRRORS 30
2.2.8 PREVENTING FIRES DUE TO FUEL AND OIL 30
2.2.9 PREVENTING BURNS 31
2.2.10 PREVENTING DAMAGE DUE TO ASBESTOS POWDER 31
2.2.11 PREVENTING DAMAGE CAUSED BY THE WORK EQUIPMENT 32
2.2.12 FIRE EXTINGUISHERS AND FIRST AID KIT 32
2.2.13 PRECAUTIONS CONCERNING THE CAB STRUCTURE 32
2.2.14 PRECAUTIONS CONCERNING THE EQUIPMENT 32
2.3 PRECAUTIONS TO BE TAKEN BEFORE STARTING THE ENGINE **33**
2.3.1 SAFETY ON THE WORK SITE 33
2.3.2 FIRE PREVENTION 33
2.3.3 PRECAUTIONS TO BE TAKEN FOR THE OPERATOR'S CAB 33
2.3.4 ROOM VENTILATION 34
2.3.5 CLEANING WINDOWS, MIRRORS AND LIGHTS - CHECKING THE WINDSHIELD WIPER BLADES AND THE BULBS 34

Page

2.4 PRECAUTIONS TO BE TAKEN WHEN WORKING 35
2.4.1 STARTING THE ENGINE 35
2.4.2 RULES FOR ROAD TRAVEL 35
2.4.3 CHECKS FOR TRAVELLING IN REVERSE 36
2.4.4 MOVING THE MACHINE 36
2.4.5 WORKING ON SLOPES 37
2.4.6 PREVENTING ELECTROCUTION 38
2.4.7 VISIBILITY 39
2.4.8 WORKING ON ICY OR SNOW-COVERED SURFACES 39
2.4.9 PREVENTING DAMAGE CAUSED BY THE WORK EQUIPMENT. 39
2.4.10 WORKING ON LOOSE GROUND. 39
2.4.11 PARKING THE MACHINE 40
2.5 TRANSPORTING THE MACHINE ON OTHER VEHICLES 41
2.5.1 LOADING AND UNLOADING THE MACHINE 41
2.5.2 THE ROUTE 41
2.6 BATTERY 42
2.6.1 SAFETY PRECAUTIONS FOR WORK ON BATTERIES 42
2.6.2 STARTING WITH BOOSTER CABLES. 42
2.7 PRECAUTIONS FOR EMERGENCY RECOVERY 43
2.8 PRECAUTIONS TO BE TAKEN DURING MAINTENANCE 44
2.8.1 WARNING PLATES 44
2.8.2 TOOLS 44
2.8.3 PERSONNEL 44
2.8.4 EQUIPMENT 45
2.8.5 WORKING UNDER THE MACHINE 45
2.8.6 KEEPING THE MACHINE CLEAN 45
2.8.7 USE OF THE ENGINE DURING MAINTENANCE 46
2.8.8 PERIODICAL CHANGE OF THE PARTS THAT ARE CRITICAL FOR SAFETY 46
2.8.9 STOP THE ENGINE BEFORE CARRYING OUT ANY MAINTENANCE OPERATION OR INSPECTION 47
2.8.10 RULES FOR REFUELLING AND ADDING OIL 48
2.8.11 CHECKING THE COOLANT LEVEL IN THE RADIATOR 48
2.8.12 USING LAMPS 48
2.8.13 PRECAUTIONS CONCERNING THE BATTERY AND THE ALTERNATOR 49
2.8.14 PRECAUTIONS CONCERNING THE STARTER 49
2.8.15 PRECAUTIONS CONCERNING THE GEARSHIFT 50
2.8.16 HANDLING HIGH-PRESSURE PIPES 50
2.8.17 PRECAUTIONS TO BE TAKEN WHEN HANDLING HIGH-PRESSURE OIL 50
2.8.18 PRECAUTIONS FOR MAINTENANCE WORK INVOLVING HIGH TEMPERATURES AND PRESSURES 51
2.8.19 COOLING FAN AND FAN BELT 51
2.8.20 WASTE MATERIALS. 51
2.8.21 PRECAUTIONS TO BE TAKEN WHEN INFLATING TYRES 52
2.8.22 PRECAUTIONS FOR THE INSTALLATION OF THE EXHAUST SYSTEM TAILPIPE. 52
2.8.23 PRECAUTIONS FOR THE USE OF THE SYNTHETIC BIODEGRADABLE OIL TYPE HEES 53

Page

DESCRIPTION AND USE OF THE MACHINE

3.1 SAFETY LOCKS. 56
3.1.1 FRONT LOADER LOCKS 56
3.1.2 BACKHOE LOCKS 58
3.2 GENERAL VIEWS 59
3.2.1 FRONT GENERAL VIEW 59
3.2.2 BACKHOE GENERAL VIEW 60
3.2.3 CAB INSIDE GENERAL VIEW 61
3.2.3.1 CAB INSIDE GENERAL VIEW (Standard version) 61
3.2.3.2 CAB INSIDE GENERAL VIEW (Version with servcontrols available on request) 62
3.3 INSTRUMENTS AND CONTROLS 63
3.3.1 FRONT INSTRUMENTS 63
3.3.2 SIDE INSTRUMENTS 75
3.3.2.1 SIDE INSTRUMENTS (Standard version) 75
3.3.2.2 SIDE INSTRUMENTS (Version with servo controls available on request) 76
3.3.3 PUSH BUTTONS ON THE FRONT LOADER CONTROL LEVER 84
3.3.4 ELECTRICAL ACCESSORIES 85
3.3.5 MACHINE CONTROLS 86
3.3.5.1 MACHINE CONTROLS (Standard version) 86
3.3.5.2 MACHINE CONTROLS (Version with servo controls available upon request) . . 87
3.4 FUSES AND RELAYS 127
3.4.1 EQUIPMENT FUSES AND RELAYS. 127
3.4.1.1 FUSES 128
3.4.1.2 RELAYS 129
3.4.2 ENGINE LINE FUSES AND RELAYS 129
3.4.2.1 FUSES 130
3.4.2.2 RELAYS 130
3.4.3 SIDE DASHBOARD RELAYS 131
3.4.4 SIDE DASHBOARD RELAYS AND FUSES (Only with servo controls) 131
3.4.4.1 RELAYS 131
3.4.4.2 FUSES 131
3.5 GUARDS, CAB AND DRIVER'S SEAT 132
3.5.1 ENGINE HOOD 132
3.5.2 CANOPY (if provided) 132
3.5.3 CAB 133
3.5.4 VENTILATION AND HEATING 136
3.5.5 AIR CONDITIONER (if installed) 137
3.5.6 SEAT 139
3.5.6.1 SEAT (STANDARD) 139
3.5.6.2 SEAT (OPTIONAL) 140
3.5.7 SAFETY BELT 141
3.5.8 FIRE EXTINGUISHER. 141
3.5.9 FIRST AID KIT 141
3.5.10 TECHNICAL DOCUMENTATION 141
3.5.11 ADDITIONAL TOOL BOX (if provided) 142
3.6 USE OF THE MACHINE. 143
3.6.1 CHECKS BEFORE STARTING THE ENGINE 143
3.6.1.1 VISUAL CHECKS 143
3.6.1.2 DAILY CHECKS 143
3.6.1.3 OPERATIONAL CHECKS 144

Page

3.6.2 STARTING THE ENGINE . . . 145
3.6.2.1 STARTING WITH WARM ENGINE OR IN TEMPERATE CLIMATES . . . 145
3.6.2.2 STARTING WITH COLD ENGINE OR IN COLD CLIMATES . . . 146
3.6.3 WARMING THE ENGINE . . . 147
3.6.4 HEATING THE HYDRAULIC OIL . . . 147
3.6.5 HOW TO MOVE THE MACHINE . . . 148
3.6.5.1 ENGAGING THE FOUR-WHEEL DRIVE . . . 149
3.6.5.2 MOVING ON SLOPES . . . 150
3.6.5.3 MAXIMUM IMMERSION DEPTH . . . 151
3.7 PARKING THE MACHINE . . . 152
3.7.1 PARKING ON LEVEL GROUND . . . 152
3.7.2 PARKING ON SLOPES . . . 153
3.8 STOPPING THE ENGINE. . . . 154
3.9 TRANSPORTING THE MACHINE ON OTHER VEHICLES. . . . 155
3.9.1 LOADING AND UNLOADING THE MACHINE . . . 155
3.9.2 TRANSPORT . . . 156
3.10 PRECAUTIONS TO BE TAKEN IN THE COLD SEASON . . . 157
3.10.1 FUEL AND LUBRICANTS . . . 157
3.10.2 COOLANT . . . 157
3.10.3 BATTERY . . . 157
3.10.4 OTHER PRECAUTIONS . . . 158
3.10.5 PRECAUTIONS TO BE TAKEN AT THE END OF WORK . . . 158
3.11 PRECAUTIONS TO BE TAKEN IN THE WARM SEASON . . . 159
3.12 USING THE MACHINE AS A LOADER . . . 160
3.12.1 BUCKET POSITION INDICATOR . . . 160
3.12.2 ORGANIZING THE WORK AREA . . . 160
3.12.2.1 LOADING HEAPED AND LEVEL MATERIAL . . . 161
3.12.2.2 LOADING OPERATIONS ON SLOPES . . . 162
3.12.3 CHANGING THE STANDARD FRONT BUCKET . . . 162
3.13 USING THE MACHINE AS AN EXCAVATOR . . . 163
3.13.1 POSITIONING THE BUCKET ACCORDING TO THE WORK TO BE CARRIED OUT. . . . 163
3.13.2 POSITIONING THE MACHINE FOR DIGGING OPERATIONS . . . 164
3.13.3 SLIDING THE BACKHOE UNIT SIDEWARDS . . . 165
3.13.4 DIGGING METHOD . . . 166
3.13.5 CHANGING THE BACKHOE BUCKET . . . 167
3.14 LONG PERIODS OF INACTIVITY . . . 168
3.14.1 BEFORE THE PERIOD OF INACTIVITY . . . 168
3.14.2 DURING THE PERIOD OF INACTIVITY . . . 170
3.14.3 AFTER THE PERIOD OF INACTIVITY . . . 170
3.15 TROUBLESHOOTING . . . 171
3.15.1 HOW TO REMOVE THE MACHINE . . . 171
3.15.2 IF THE FUEL HAS BEEN COMPLETELY DEPLETED . . . 171
3.15.3 IF THE BATTERY IS DEPLETED . . . 172
3.15.3.1 STARTING WITH BOOSTER CABLES . . . 173
3.15.4 OTHER TROUBLES . . . 174
3.15.4.1 ELECTRICAL CIRCUIT . . . 174
3.15.4.2 HYDRAULIC SYSTEM . . . 174
3.15.4.3 BRAKING SYSTEM . . . 175
3.15.4.4 CONVERTER . . . 175
3.15.4.5 ENGINE . . . 176

Page

MAINTENANCE

4.1 GUIDE TO MAINTENANCE 178
4.2 MAINTENANCE NOTES 180
4.2.1 NOTES REGARDING THE ENGINE 180
4.2.1.1 ENGINE OIL 180
4.2.1.2 COOLANT 180
4.2.1.3 FUEL 181
4.2.2 NOTES REGARDING THE HYDRAULIC SYSTEM 181
4.2.3 NOTES REGARDING THE ELECTRICAL SYSTEM. 182
4.2.4 NOTES REGARDING LUBRICATION 182
4.2.5 PARTS SUBJECT TO WEAR THAT PERIODICALLY NEED CHANGING. 183
4.3 FUEL, COOLANT AND LUBRICANTS 184
4.3.1 HOMOLOGATED HEES SYNTHETIC BIODEGRADABLE LUBRICANTS. 186
4.4 DRIVING TORQUES FOR SCREWS AND NUTS 187
4.4.1 STANDARD DRIVING TORQUES 187
4.4.2 SPECIFIC DRIVING TORQUES 187
4.5 LUBRICATION 188
4.5.1 LUBRICATION DIAGRAM 188
4.5.2 LUBRICATION DIAGRAM (4in1 bucket and pallet forks) 189
4.5.3 LUBRICATION DIAGRAM (Front bucket rapid couplings) 190
4.5.4 LUBRICATION DIAGRAM (Telescopic arm) 191
4.5.5 LUBRICATION DIAGRAM (Offset device). 192
4.6 PERIODICAL CHANGE OF THE COMPONENTS CONNECTED WITH SAFETY 193
4.6.1 CRITICAL PARTS FOR SAFETY 194
4.7 MAINTENANCE PLAN 198
4.7.1 WHEN REQUIRED 202
4.7.1.a CHECKING, CLEANING OR CHANGING THE AIR CLEANER CARTRIDGE . . 202
4.7.1.b CHECKING AND CLEANING THE CAB AIR FILTER 203
4.7.1.c CHECKING AND CLEANING THE RECIRCULATING AIR FILTER (only for machines with air conditioner) 204
4.7.1.d BLEEDING THE BRAKING CIRCUIT 205
4.7.1.e CLEANING THE WATER SEPARATOR 206
4.7.1.f CHECKING AND ADJUSTING THE WHEEL TOE-IN 206
4.7.1.g CHECKING AND ADJUSTING THE PARKING BRAKE 207
4.7.1.h CHECKING THE BRAKING EFFICIENCY 208
4.7.1.j CHECKING AND ADJUSTING THE BRAKE PEDAL STROKE. 209
4.7.1.k ADJUSTING THE AUTOMATIC RETURN-TO-DIG DEVICE OF THE FRONT BUCKET (if installed) 209
4.7.1.l CHECKING AND ADJUSTING THE STABILIZER SLACK 210
4.7.2 MAINTENANCE INTERVALS IN CASE OF USE OF THE DEMOLITION HAMMER 211
4.7.2.a CHANGING THE HYDRAULIC OIL FILTER 211
4.7.2.b CHANGING THE HYDRAULIC OIL 211
4.7.3 CHECKS BEFORE STARTING 212
4.7.3.a VARIOUS CHECKS 212
4.7.3.b CHECKING THE COOLANT LEVEL 212
4.7.3.c CHECKING THE FUEL LEVEL 213
4.7.3.d CHECKING THE ENGINE OIL LEVEL. 213
4.7.3.e CHECKING THE HYDRAULIC CIRCUIT OIL LEVEL 214
4.7.3.f DRAINING THE WATER SEPARATOR. 215
4.7.4 MAINTENANCE EVERY 10 HOURS OF OPERATION 216
4.7.4.a LUBRICATING THE JOINTS 216

Page

4.7.5 MAINTENANCE AFTER THE FIRST 50 HOURS OF OPERATION (Only for machines in which the synthetic biodegradable oil type HEES is used) 218
4.7.6 MAINTENANCE EVERY 50 HOURS OF OPERATION 218
4.7.6.a CHECKING THE RADIATOR FLUID LEVEL 218
4.7.6.b CHECKING THE BRAKING SYSTEM OIL LEVEL. 218
4.7.6.c LUBRICATING THE PROPELLER SHAFTS 219
4.7.6.d LUBRICATING THE FRONT AXLE JOINTS AND CENTRAL COUPLING AND THE REAR AXLE JOINTS. 220
4.7.6.e CHECKING THE TYRE PRESSURE 220
4.7.6.f CHECKING THE ELECTRICAL SYSTEM 221
4.7.7 MAINTENANCE AFTER THE FIRST 250 HOURS OF OPERATION 222
4.7.8 MAINTENANCE EVERY 250 HOURS OF OPERATION 223
4.7.8.a ADJUSTING THE FAN BELT TENSION 223
4.7.8.b ADJUSTING THE A/C COMPRESSOR BELT TENSION (Only for machines with air conditioner) 224
4.7.8.c CHECKING THE BATTERY ELECTROLYTE LEVEL 225
4.7.8.d CHECKING THE FRONT AXLE OIL LEVELS 226
4.7.8.e CHECKING THE REAR AXLE OIL LEVELS 226
4.7.8.f CHECKING THE HYDRAULIC TRANSMISSION OIL LEVEL 227
4.7.8.g CHECKING THE WHEEL NUT DRIVING TORQUE 227
4.7.9 MAINTENANCE AFTER THE FIRST 500 HOURS OF OPERATION (Only for machines in which the synthetic biodegradable oil type HEES is used) 228
4.7.10 MAINTENANCE EVERY 500 HOURS OF OPERATION 229
4.7.10.a CHANGING THE ENGINE OIL. 229
4.7.10.b CHANGING THE ENGINE OIL FILTER 230
4.7.10.c CHANGING THE HYDRAULIC SYSTEM OIL FILTER 230
4.7.10.d CHANGING THE FUEL FILTER. 233
4.7.10.e DRAINING THE FUEL TANK 234
4.7.10.f DRAINING THE HYDRAULIC OIL TANK (Only for machines in which the synthetic biodegradable oil type HEES is used) 235
4.7.10.g CLEANING THE OUTSIDE OF THE RADIATORS 236
4.7.10.h CLEANING THE OUTSIDE OF THE A/C CONDENSER (Only for machines with air conditioner) 237
4.7.11 MAINTENANCE EVERY 1000 HOURS OF OPERATION 238
4.7.11.a CHANGING THE FRONT AXLE OIL 238
4.7.11.b CHANGING THE REAR AXLE OIL 239
4.7.11.c CHANGING THE HYDRAULIC TRANSMISSION OIL 240
4.7.11.d CHANGING THE HYDRAULIC TRANSMISSION FILTER. 241
4.7.11.e CHECKING AND ADJUSTING THE ENGINE VALVE CLEARANCE 241
4.7.12 MAINTENANCE EVERY 2000 HOURS OF OPERATION 242
4.7.12.a CHANGING THE HYDRAULIC SYSTEM OIL AND CLEANING THE SUCTION FILTER 242
4.7.12.b CHANGING THE COOLANT 244
4.7.12.c CHANGING THE BRAKING SYSTEM OIL 246
4.7.12.d CHECKING THE ALTERNATOR AND THE STARTER 246
4.7.12.e CHECKING THE QUANTITY OF COOLANT IN THE A/C SYSTEM (Only for machines with air conditioner) 247
4.7.13 MAINTENANCE EVERY 4000 HOURS OF OPERATION 248
4.7.13.a CHANGING THE A/C DEHYDRATING FILTER (Only for machines with air conditioner) 248
4.7.13.b CHECKING THE OPERATING CONDITIONS OF THE A/C COMPRESSOR (Only for machines with air conditioner) 248

Page

TECHNICAL SPECIFICATIONS

5.1 TECHNICAL DATA 250
5.1.1 STANDARD OVERALL DIMENSIONS WITH CENTERED BACKHOE 250
5.1.2 STANDARD OVERALL DIMENSIONS WITH FOLDED BACKHOE 250
5.1.3 TECHNICAL CHARACTERISTICS 251
5.1.4 LIFTING CAPACITIES 252
5.1.4.1 SYMBOL TABLE 252
5.1.4.2 LIFTING CAPACITY (STANDARD BOOM) 253
5.1.4.3 LIFTING CAPACITY (OFFSET BOOM) 254

AUTHORIZED OPTIONAL EQUIPMENT

6.1 AUTHORIZED OPTIONAL EQUIPMENT 256
6.1.1 CHARACTERISTICS OF THE OPTIONAL EQUIPMENT 256
6.2 FRONT EQUIPMENT QUICK COUPLING DEVICES 257
6.2.1 MANUAL CONTROL QUICK COUPLING 257
6.2.2 HYDRAULIC CONTROL QUICK COUPLING FOR STANDARD BUCKET 258
6.2.3 HYDRAULIC CONTROL QUICK COUPLING FOR 4IN1 BUCKET AND OPTIONAL EQUIPMENT WITH UNIDIRECTIONAL OIL FLOW 258
6.3 4in1 BUCKET 259
6.3.1 DESCRIPTION AND CONTROLS 259
6.3.2 SAFETY DEVICES 259
6.3.3 INSTALLING THE 4in1 BUCKET 260
6.3.4 USING THE 4in1 BUCKET 261
6.3.5 MAINTENANCE 261
6.4 PALLET FORKS 262
6.4.1 DESCRIPTION 262
6.4.2 SAFETY DEVICES 262
6.4.3 USING THE FORKS 263
6.4.3.1 PREPARING THE PALLET FORKS FOR USE 263
6.4.3.2 OVERTURNING THE FORKS FOR TRAVEL ON ROADS 264
6.4.4 REMOVING THE FORKS 265
6.4.5 INSTALLING THE FORKS 265
6.4.6 MAINTENANCE 265
6.5 BACKHOE TELESCOPIC ARM 266
6.5.1 DESCRIPTION AND CONTROL 266
6.5.1.1 VERSION WITH STANDARD CONTROLS 266
6.5.1.2 VERSION WITH SERVO CONTROLS (if installed) 266
6.5.2 SAFETY DEVICES 267
6.5.3 USING THE TELESCOPIC ARM 267
6.5.4 MAINTENANCE 268
6.5.4.1 ADJUSTING THE GUIDE SLACK 268

Page

6.6 ARRANGEMENT FOR THE INSTALLATION OF THE DEMOLITION HAMMER 270
6.6.1 DESCRIPTION AND CONTROL 270
6.6.1.1 VERSION WITH STANDARD CONTROLS 270
6.6.1.2 VERSION WITH SERVO CONTROLS (if installed) 270
6.6.2 USE OF THE DEMOLITION HAMMER AND RULES TO BE OBSERVED. 271
6.6.3 INSTALLING AND REMOVING THE DEMOLITION HAMMER 275
6.6.3.1 INSTALLING THE HAMMER 275
6.6.3.2 REMOVING THE HAMMER. 277
6.6.4 USING THE HAMMER 277
6.6.5 MAINTENANCE 277
6.7 APPLICATION OF THE OFFSET DEVICE 278
6.7.1 DESCRIPTION AND CONTROL 278
6.7.1.1 VERSION WITH STANDARD CONTROLS 278
6.7.1.2 VERSION WITH SERVO CONTROLS (if installed) 279
6.7.2 MAINTENANCE. 279
6.8 ARRANGEMENT FOR THE OPERATION OF OPTIONAL EQUIPMENT WITH UNIDIRECTIONAL OIL FLOW. 280
6.8.1 DESCRIPTION AND CONTROL 280
6.8.1.1 VERSION WITH STANDARD CONTROLS 280
6.8.1.2 VERSION WITH SERVO CONTROLS (if installed) 280
6.8.2 INSTALLING AND CONNECTING THE EQUIPMENT 281
6.8.3 MAINTENANCE. 281
6.9 ARRANGEMENT FOR THE INSTALLATION OF THE CLAMSHELL BUCKET 282
6.9.1 DESCRIPTION AND CONTROL 282
6.9.1.1 VERSION WITH STANDARD CONTROLS 282
6.9.1.2 VERSION WITH SERVO CONTROLS (if installed) 283
6.9.2 INSTALLING THE CLAMSHELL BUCKET 284
6.9.3 USING THE CLAMSHELL BUCKET 285
6.9.4 MAINTENANCE. 285
6.10 ARRANGEMENT FOR THE INSTALLATION OF THE MANUAL HYDRAULIC HAMMER 286
6.10.1 DESCRIPTION AND CONTROL 286
6.10.2 CONNECTING AND REMOVING THE HAMMER 287
6.10.2.1 CONNECTING THE HAMMER 287
6.10.2.2 REMOVING THE CONNECTIONS 287
6.10.3 USING THE HAMMER 288
6.10.4 MAINTENANCE 288
6.11 LOAD STABILIZER SYSTEM (LSS) (Optional) 289
6.11.1 ACCUMULATOR OF THE LOAD STABILIZER SYSTEM (LSS) 289
6.12 REAR EQUIPMENT RAPID COUPLING DEVICE 290
6.12.1 EQUIPMENT COUPLING AND RELEASE PROCEDURE 291
6.12.2 MAINTENANCE. 293

SAFETY AND ACCIDENT PREVENTION

2.1 SAFETY, NOISE AND VIBRATION PLATES

2.1.1 POSITION OF THE SAFETY PLATES

- The safety plates must always be legible and in good conditions; for this reason, if they are dirty with dust, oil or grease, it is necessary to clean them with a solution made of water and detergent.
  Do not use fuel, petrol or solvents.
- If the plates are damaged, ask for new ones to Komatsu Utility or to your Komatsu Utility Dealer.
- In case of replacement of a component provided with a safety plate, make sure that this plate is applied also on the new piece.
- The machine can be provided with other plates in addition to those indicated below; keep also to the instructions given in the additional plates, in any case.

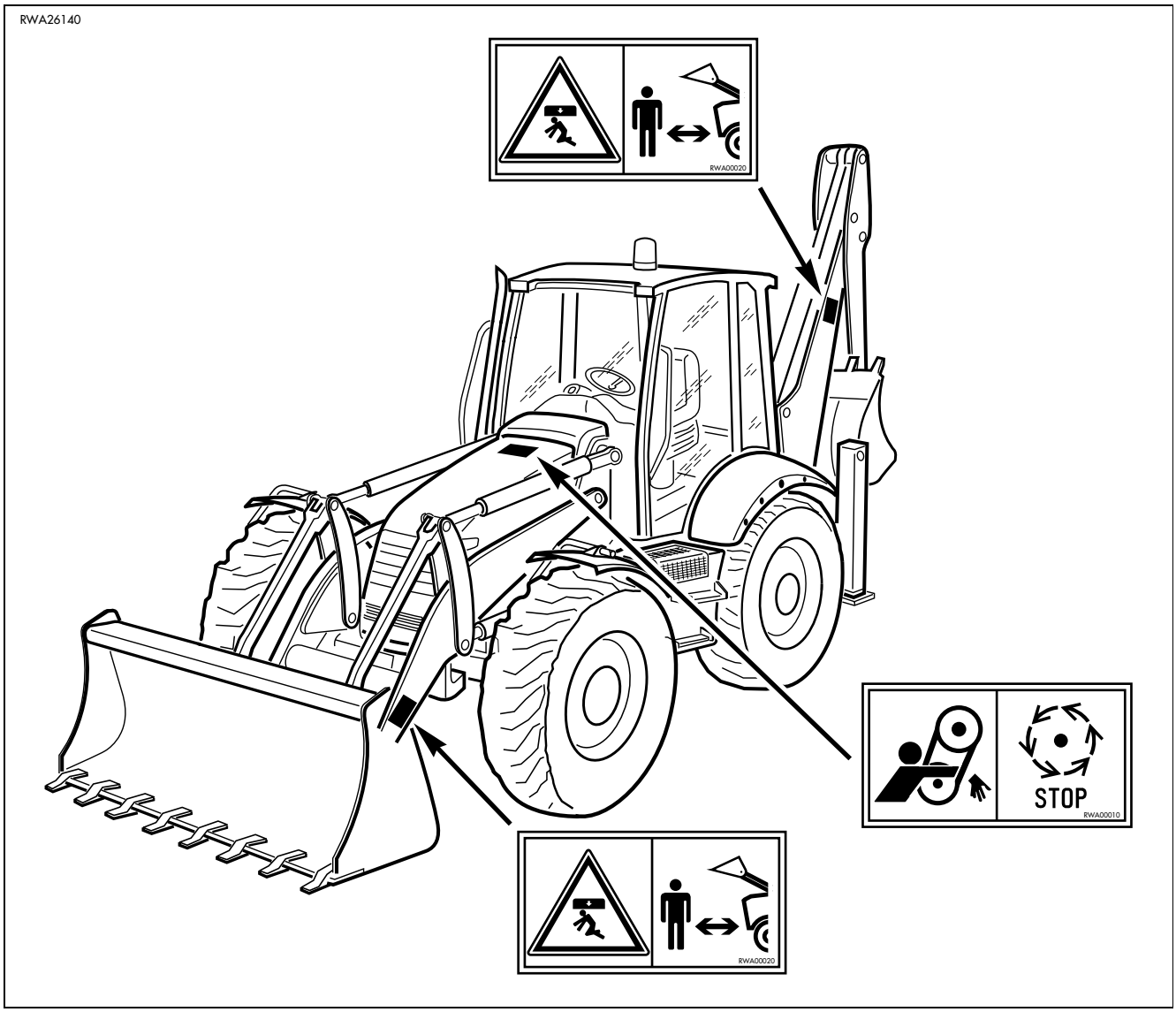

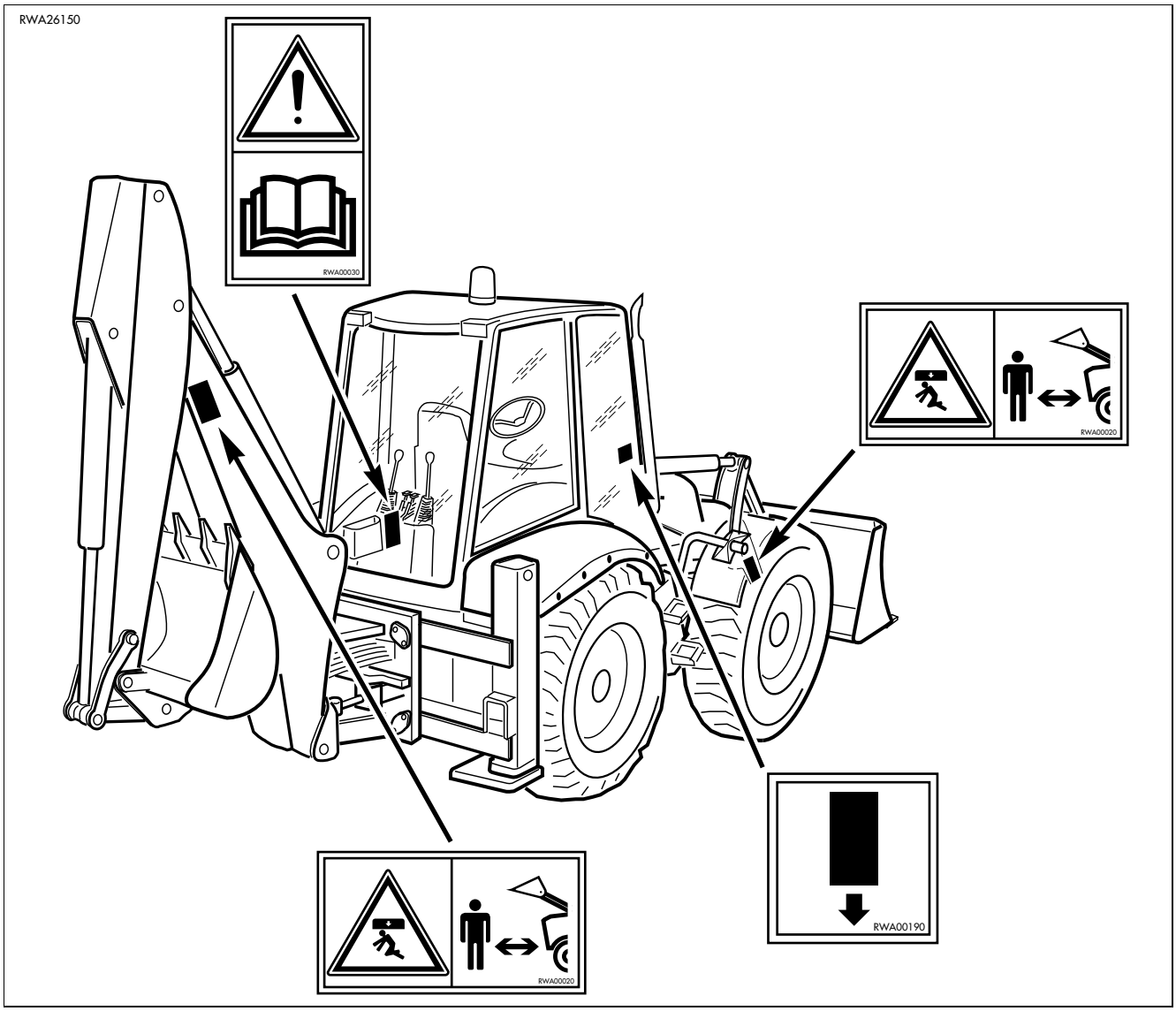
RWA26150
RWA00030
RWA00020
RWA00190
RWA00020

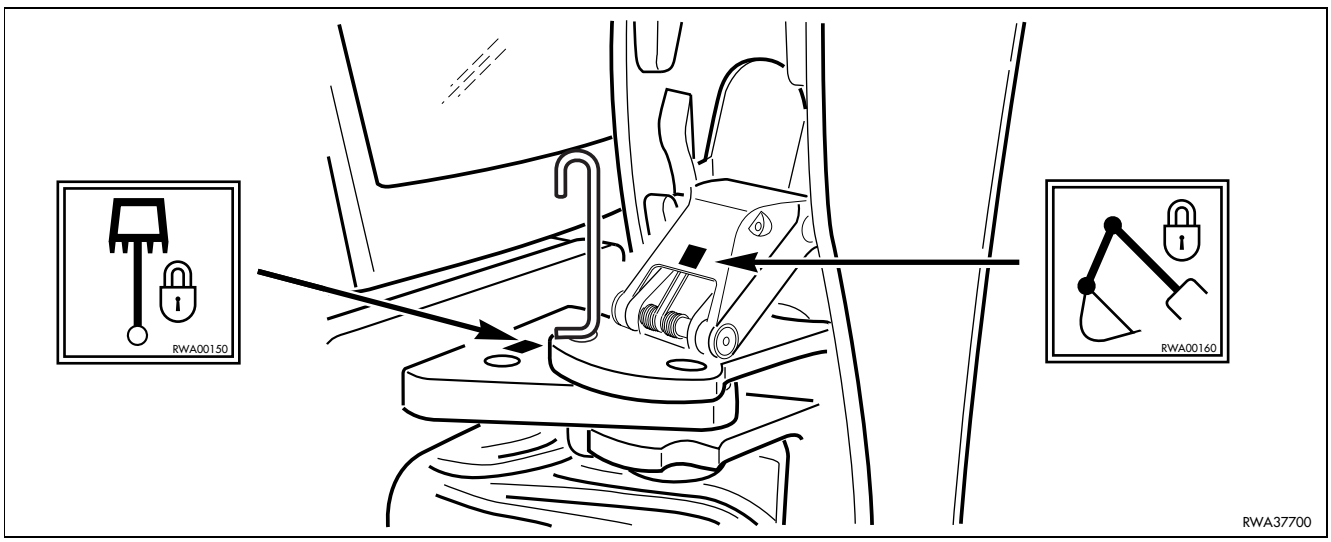
RWA00150
RWA00160
RWA37700

2.1.2 PICTOGRAMS AND RELEVANT MEANINGS

The warning and danger plates applied onto the machine are accompanied or represented by pictograms.
The personnel in charge with the operation and maintenance of the machine must know the symbols contained in the pictograms perfectly; the following description illustrates what they look like and their respective meanings.

DANGER IN THE WORK AREA

- Do not approach or stand in the equipment operating radius when the boom and the bucket are raised.

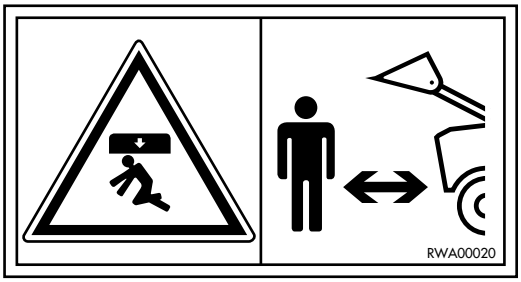

DO NOT OPEN THE HOOD

- Do not open or remove the hood when the engine is running.

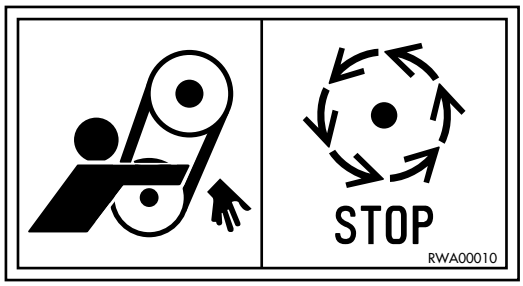

FILLING THE HYDRAULIC SYSTEM WITH OIL

(Only for machines in which the synthetic biodegradable oil type HEES is used)

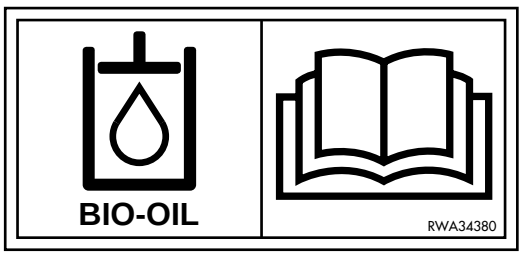

OVERTURNING THE FORKS

- **When the forks are overturned for use or storage, be careful to the grasping points, since hands and feet may be injured and even cut.**

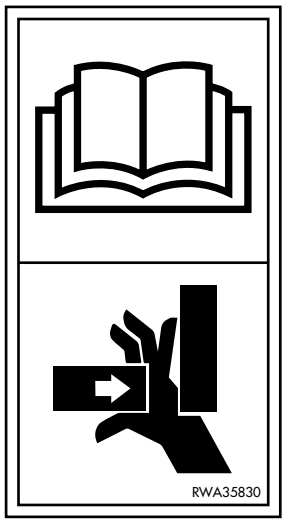

CONSULT THE MANUAL

- Carefully read the contents of the manual before using the machine or performing maintenance operations.

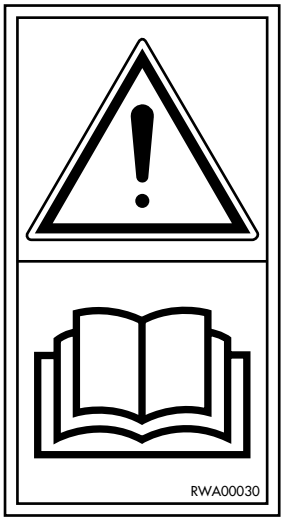

HYDRAULIC OIL TOPPING UP

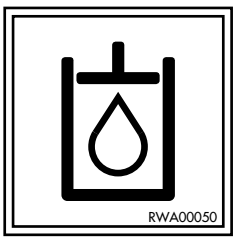

REFUELLING

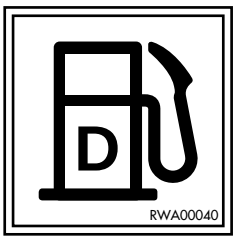

ENGINE LUBRICATING OIL FILTER

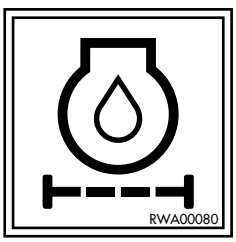

FUEL FILTER

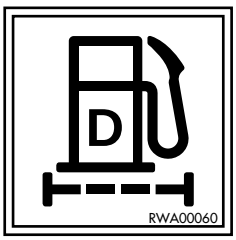

ENGINE AIR SUCTION FILTER

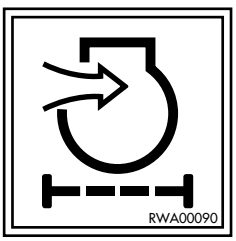

ENGINE COOLANT

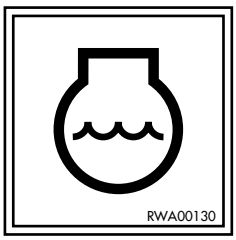

ENGINE COOLANT PRESSURE

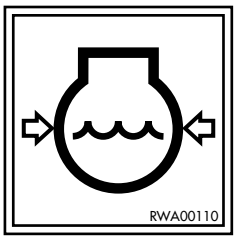

HYDRAULIC OIL LEVEL

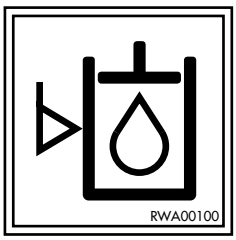

HYDRAULIC OIL FILTER

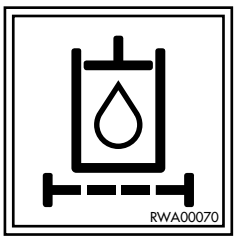

ELECTRIC OUTLET

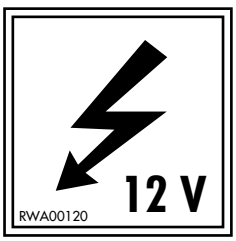

TRANSMISSION OIL LEVEL

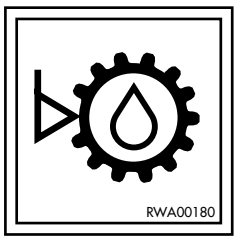

HYDRAULIC TRANSMISSION OIL FILTER

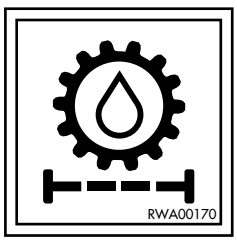

ANCHORAGE POINT

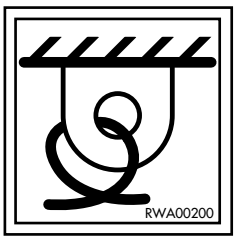

EMERGENCY EXIT

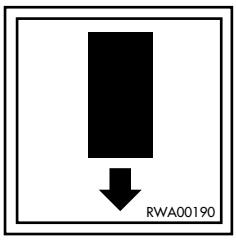

BOOM LOCK

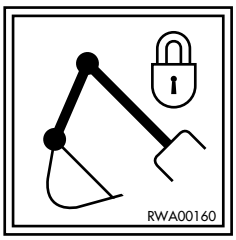

SWING LOCK

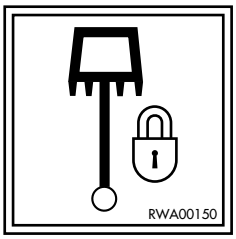

BRAKE OIL

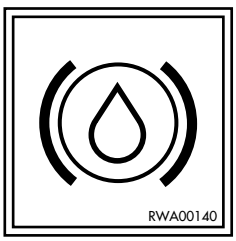

DO NOT LIFT MORE THAN 1000 kg

2.1.3 POSITION OF THE NOISE PLATES ON MACHINES WITH CAB

- The noise plates must always be legible and in good conditions; for this reason, if they are dirty with dust, oil or grease, it is necessary to clean them with a solution made of water and detergent.
  Do not use fuel, petrol or solvents.
- If the plates are damaged, ask for new ones to Komatsu Utility or to your Komatsu Utility Dealer.
- In case of replacement of a component provided with a noise plate, make sure that this plate is applied also on the new piece.

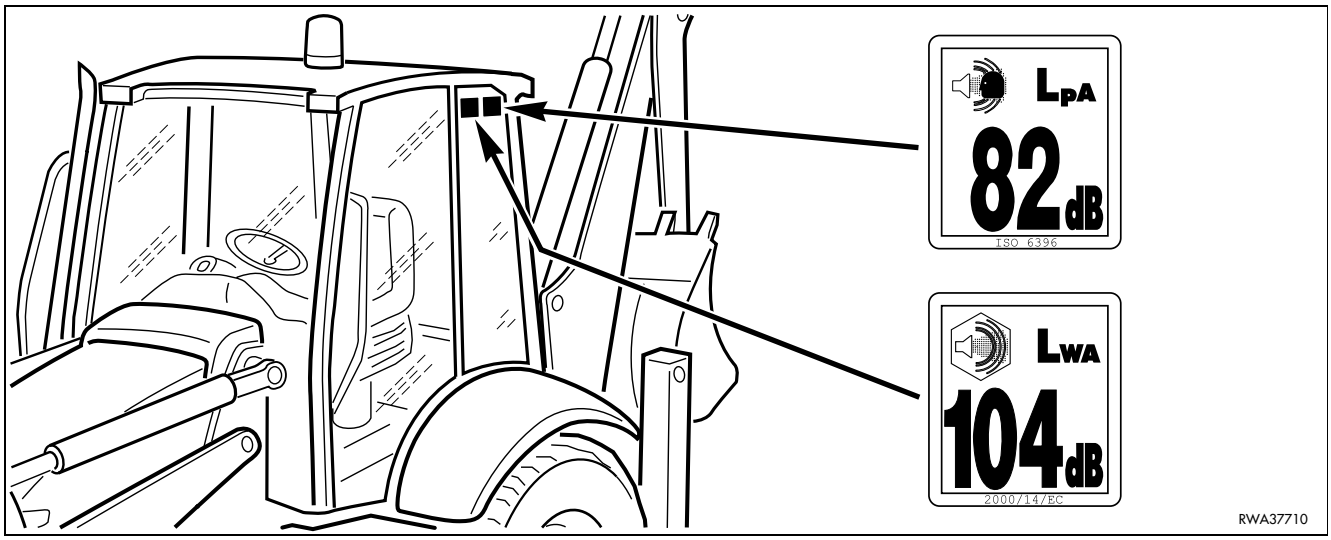

NOISE OUTSIDE THE CAB

- This value indicates the noise level outside the machine and refers to the noise perceived by persons in the vicinity of the work area.

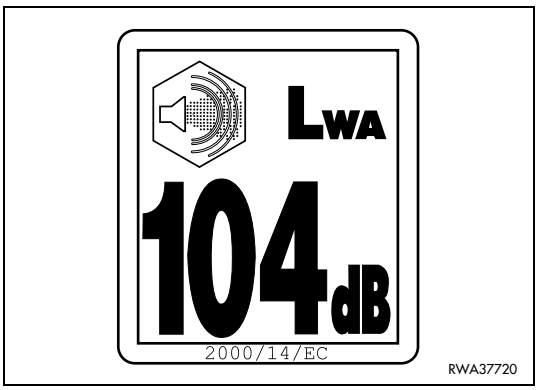

NOISE INSIDE THE CAB

- This value indicates the maximum noise level perceived by the operator's ears inside the cab when this is completely closed.

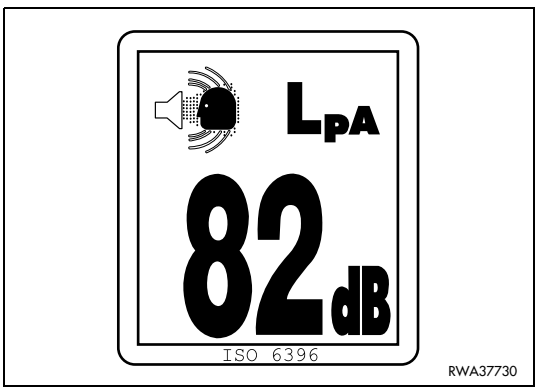

2.1.4 VIBRATIONS TO WHICH THE OPERATOR IS SUBJECTED

- According to the results of the tests carried out to determine the vibrations transmitted to the operator by the machine, the upper limbs are subjected to vibrations lower than 2.5 m/sq.sec., while the seated part of the body is subject to vibrations lower than 0.5 m/sq.sec.

2.2 GENERAL PRECAUTIONS

2.2.1 GENERAL SAFETY RULES

- Only trained and authorized personnel can use the machine and perform maintenance operations.
- Follow all the safety rules, precautions and instructions when using the machine or performing maintenance operations.
- When working with other operators or when the work site is often occupied by other operators, make sure that everyone knows and understands all the signals described above and, in any case, that everyone works in such a way as to be able to see the machine and to be visible to the operator.

2.2.2 SAFETY DEVICES AND GUARDS

- Make sure that all the guards and covers are in the correct position. Have guards and covers changed or repaired if damaged. Neither use the machine without guards, nor remove the guards when the engine is running.
- Always use the proper safety devices to lock the machine when parking and fasten the safety belt.
- For the safety devices, see “3.1 SAFETY LOCKS”.
- For the safety belt, see “3.5.7 SAFETY BELT”.
- Do not remove the safety devices and always keep them in good operating conditions.
- Any improper use of the safety devices may result in serious injuries or even death.

2.2.3 CLOTHING AND PERSONAL PROTECTION ITEMS

- Do not wear large or loose clothes, rings and watches and do not approach the machine with loose long hair, since they can get entagled in the moving parts of the machine and cause serious injuries or damage.
  Avoid also wearing clothes dirty with oil or fuel, since they are flammable.
- Wear a hard hat, goggles, safety shoes, mask, gloves and headphones when operating the machine or performing maintenance operations.
- Always wear safety goggles, a hard hat and heavy gloves if your job involves scattering metal chips or minute materials; these precautions are particularly useful when driving the equipment connection pins with a hammer and when blowing compressed air into the air filter and the radiator to clean them.
  During these operations, make also sure that no one is standing or working near the machine without the necessary protections.
- When working for 8 hours with a noise level exceeding 90 dBA, it is necessary to use headphones or ear plugs and be particularly careful, especially at the end of the work shift.

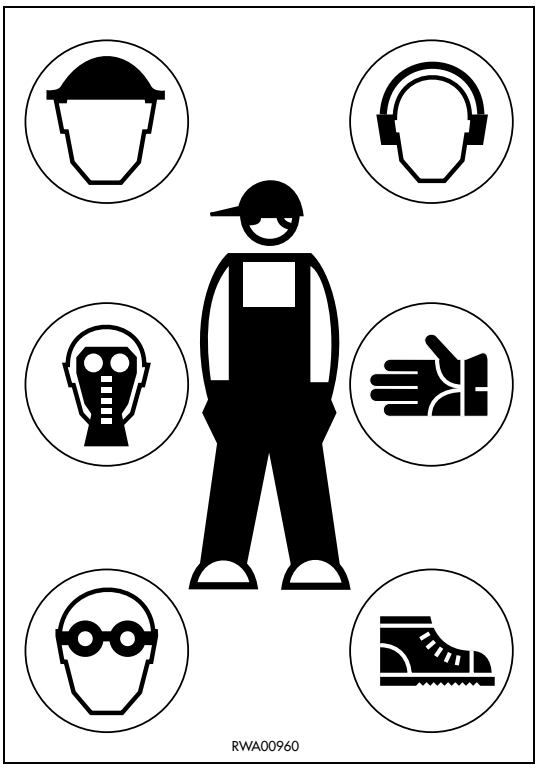

2.2.4 UNAUTHORIZED MODIFICATIONS

- Any modification made without the authorization of Komatsu Utility can involve hazards.
- Before making a modification, consult your Komatsu Utility Dealer. Komatsu Utility declines any responsibility for injuries or damage caused by unauthorized modifications.

2.2.5 LEAVING THE OPERATOR'S SEAT

- When leaving the operator's seat, even if temporarily, make sure that the machine is in a safe position. (See "2.4.11 PARKING THE MACHINE").
- Before leaving the operator's seat, carry out the following operations in the sequence indicated below:

  1 - Rest the equipment onto the ground.

  2 - Connect the safety devices of the controls.

  3 - Apply the parking brake.

  4 - Shift the reversing gear lever to the neutral position.

  5 - Stop the engine.

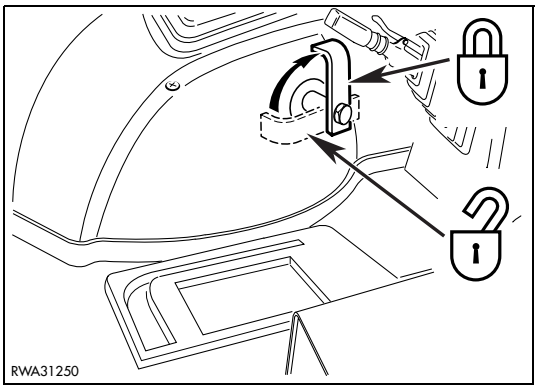

IMPORTANT

- **If the machine is equipped with backhoe servo controls, before leaving the operator seat always engage the control locking safety device by pressing the relevant switch, see "3.3.5.2 MACHINE CONTROLS (Version with servo controls)", pos. 26.**

If you have to go so far away that you will not be able to see the machine, extract the ignition key.

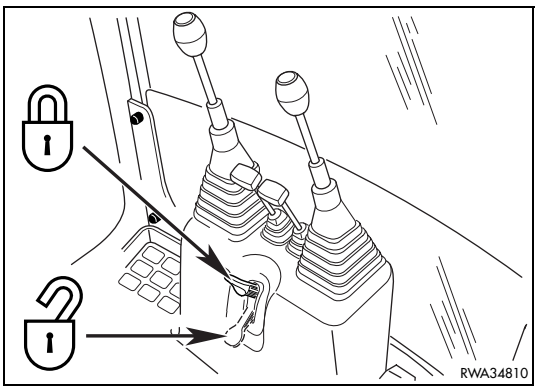

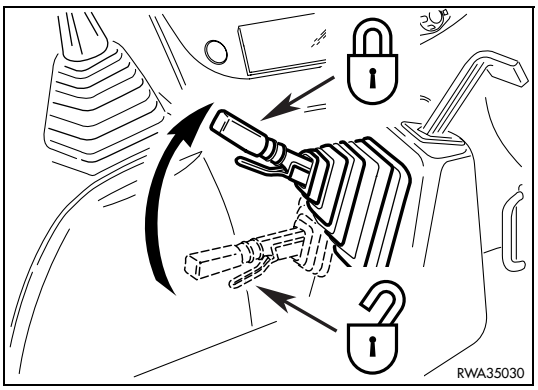

2.2.6 GETTING ON AND OFF THE MACHINE

- Do not jump on or off the machine, either when it is at rest and when it is moving.
- When getting on or off the machine, always use the handles and the safety ladders; get on and off the machine very carefully.
- Never hold or rest on the steering wheel or the gearshift lever.
- Either when getting on and when getting off the machine, always maintain three points of contact (holding or resting points), in order to avoid losing your balance and falling down.
- Tighten the handle and ladder connection screws if they are loose and clean the handles and steps if they are dirty with oil or grease.
  Carefully clean the cab floor if it is dirty with oil, grease, mud or rubble.

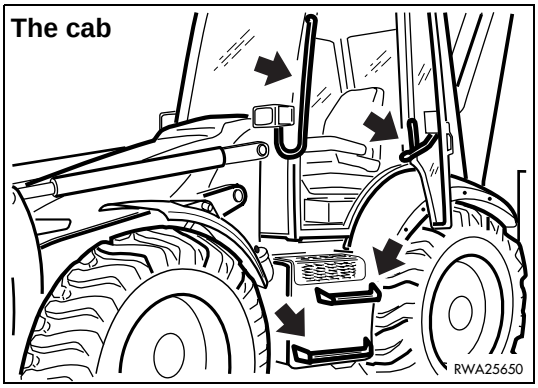

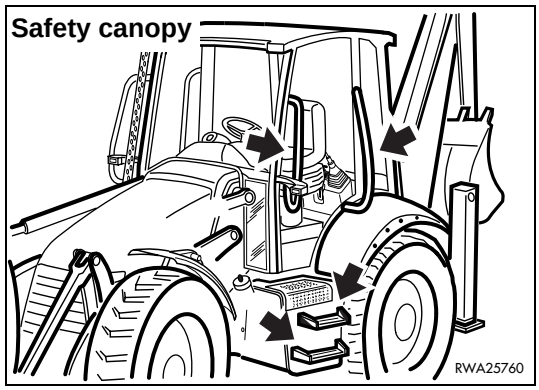

2.2.7 CHECKING THE REAR-VIEW MIRRORS

- Make sure that the rear-view mirrors are clean and correcly positioned; they must allow the operator to see the rear of the machine with no need to move the chest with respect to the normal work position.
- If the rear-view mirrors should move or break during work, stop the machine immediately and fasten or change them.
- Working without checking the back of the machine is dangerous, since the machine may hit persons who are incautiously standing in the work area, fixed obstacles or manoeuvring vehicles.

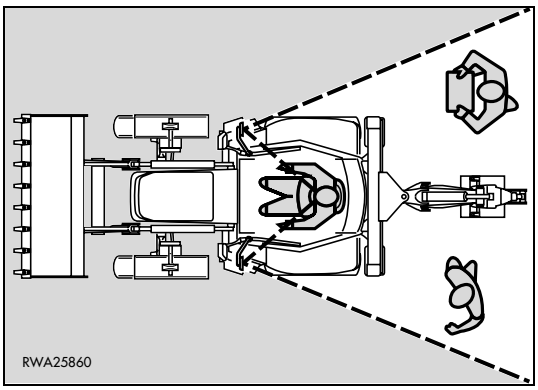

2.2.8 PREVENTING FIRES DUE TO FUEL AND OIL

Fuel, oil and some types of antifreeze can be easily ignited if they get in contact with a flame. Fuel is particularly flammable and therefore extremely hazardous.

- Keep any naked flame away from flammable fluids.
- Stop the engine and do not smoke when refuelling.
- Top up with fuel and oil only after stopping the engine and in well ventilated areas.
- Top up with fuel and oil in a well delimited area and do not allow unauthorized persons to approach.

- When refuelling, hold the fuel gun firmly and keep it constantly in contact with the filler until you have finished, in order to avoid sparks due to static electricity.
- After topping up, tighten the fuel and oil safety caps securely.
- Do not fill the tank completely, in order to leave room for the fuel to expand.
- In case some fuel is spilled, wipe it up immediately.

2.2.9 PREVENTING BURNS

- If the engine coolant, the engine oil and the hydraulic oil are hot, use heavy cloths and wear gloves, heavy clothing and safety goggles before carrying out any check or touching the hot parts.
- Before checking the coolant level, stop the engine and let the fluid cool down.
  If a check is necessary due to the overheating of the engine, slowly loosen the radiator plug to release any residual pressure before removing it. The hot fluid that spurts out may cause serious burns.
- Before checking the engine oil and hydraulic circuit oil level, stop the engine and let the oil cool down. The hot oil that can be sprayed out of the tank may cause serious burns.

2.2.10 PREVENTING DAMAGE DUE TO ASBESTOS POWDER

- Asbestos powder can be hazardous to your health if it is inhaled.
- If you handle materials containing asbestos fibers, keep to the instructions given below:
  1 - Do not use compressed air, but only aspirators to clean the machine and make sure that the room in which you are working is properly ventilated.
  2 - Use low-pressure water to keep down the dust when cleaning.
  3 - If there is danger that there may be asbestos powder in the air, operate the machine with the wind to your back whenever possible.
  4 - Even if the cab provides suitable protection, use an approved and homologated respirator.
  5 - The powder gathered during the cleaning operations must be dampened and put in a sealed and marked container, so that it can be safely disposed of according to the regulations in force.

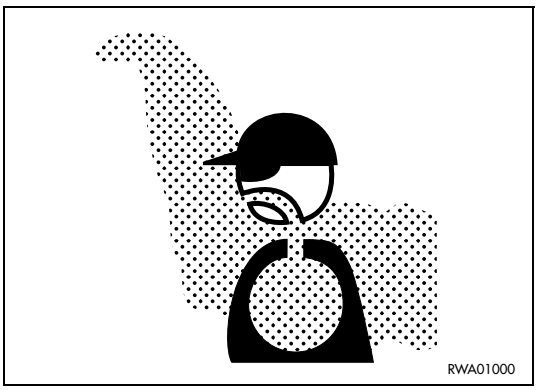

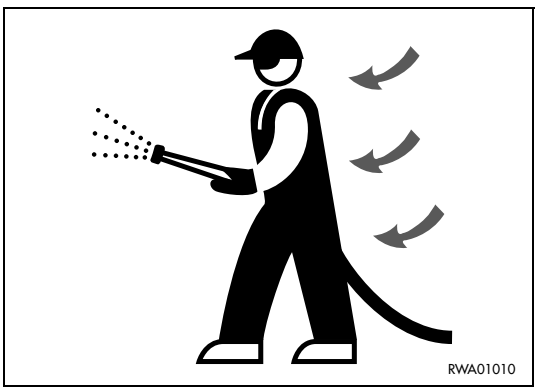

2.2.11 PREVENTING DAMAGE CAUSED BY THE WORK EQUIPMENT

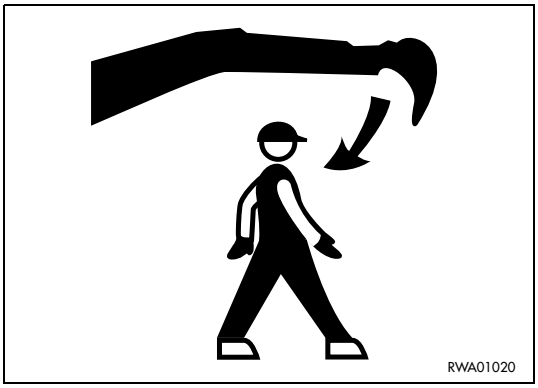

- Do not stand within or approach the operating radius of the work equipment, even when the operator is on board the machine and the engine is running.
- Do not stand or work under the arms or the articulations when the arms are lifted, if you are not sure that the safety locks have been duly engaged.
- Do not carry out any operation requiring the lifting of the arms, if you are not sure that the locks are correctly positioned and coupled to the arms.

2.2.12 FIRE EXTINGUISHERS AND FIRST AID KIT

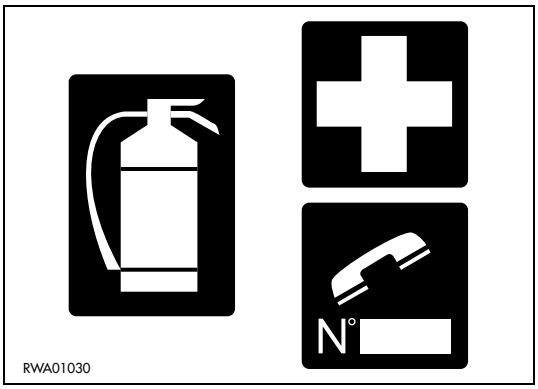

- Make sure that fire extinguishers have been provided and check their position.
- Periodically make sure that the fire extinguishers are loaded and that you know how to use them.
- Find out where the first aid kit has been located.
- Periodically make sure that the first aid kit contains the necessary disinfectants, bandages, medicins, etc.
- It is necessary to know what to do in case of fire.
- Make sure that you have the phone numbers of the persons or structures you may need to contact in case of an emergency at hand (either at the work site and where maintenance operations are performed).

2.2.13 PRECAUTIONS CONCERNING THE CAB STRUCTURE

- If the cab is inadvertently hit or the machine overturns during work, the cab may be damaged with consequent reduction of its stiffness and of the safety that must be guaranteed to the operator (Rops/Fops homologation).
  Contact Komatsu Utility or an Authorized Komatsu Utility Dealer to have the cab structure and resistance checked in case of impact or damage.

2.2.14 PRECAUTIONS CONCERNING THE EQUIPMENT

- When installing and using optional equipment, carefully read the relevant instruction manual and keep to the indications given therein.
- Do not use optional or special equipment without the authorization of Komatsu Utility or the Komatsu Utility Dealer.
  The installation and use of unauthorized equipment may create safety problems and adversely affect the efficiency and life of the machine.
- Komatsu Utility cannot be held liable for any injury, accident, product failure resulting from the installation and use of unauthorized equipment.

2.3 PRECAUTIONS TO BE TAKEN BEFORE STARTING THE ENGINE

2.3.1 SAFETY ON THE WORK SITE

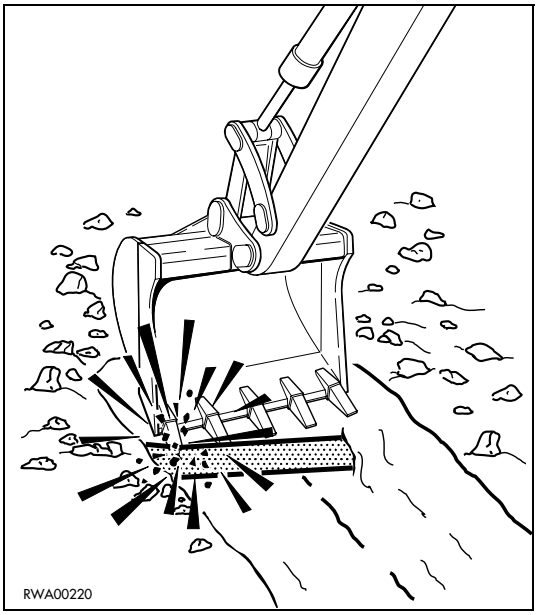

- Before starting the engine, thoroughly check the area for any unusual condition of the ground due to which work may be dangerous.
- Check the conditions of the ground at the work site and before starting the engine define the work plan and the best and safest operating procedure.
- Make the ground surface as level as possible before carrying out any operation.
- In case of work on the road, protect pedestrians and cars by designating a person for work site traffic duty and install fences around the work site.
- If water lines, gas lines, and telephone or high-voltage electrical lines are located under the work site, contact the relevant utility company in order to find out their exact positions or to make them inneffective until the end of the operations. Be careful not to sever or damage any of these lines.
- Check the depth and flow of water before operating in water or on river banks.

2.3.2 FIRE PREVENTION

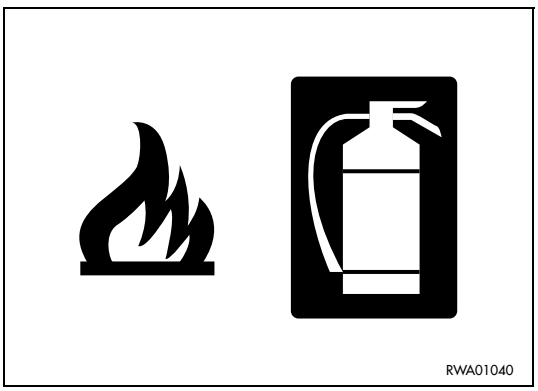

- Completely remove all wood chips, rubbish, paper and other flammable materials that may have accumulated inside the engine compartment, since they can cause fires.
- Check the fuel and hydraulic system pipes for leaks and if necessary repair them. Wipe up any excess oil, fuel or other flammable fluids.
- Make sure that fire extinguishers are available in the work area.

2.3.3 PRECAUTIONS TO BE TAKEN FOR THE OPERATOR'S CAB

- Do not leave objects or tools lying around in the operator's cab. They may hinder the operation of the brakes and cause serious accidents.
- Keep the cab floor and the controls (steering wheel and levers) clean, by removing any trace of oil and grease and, as far as the floor is concerned, remove any excess dirt (earth, stones, etc.).
- Check the safety belt and change it if it is broken or damaged. Replace any component only with homologated parts available at Komatsu Utility or its Dealers.
- Make always sure that the lock of the right door, which is considered the emergency door, is open.

2.3.4 ROOM VENTILATION

- Before starting the machine in confined or poorly ventilated places, provide for proper ventilation or connect the engine exhaust pipe to a suction duct. The engine exhaust gases can be deadly.

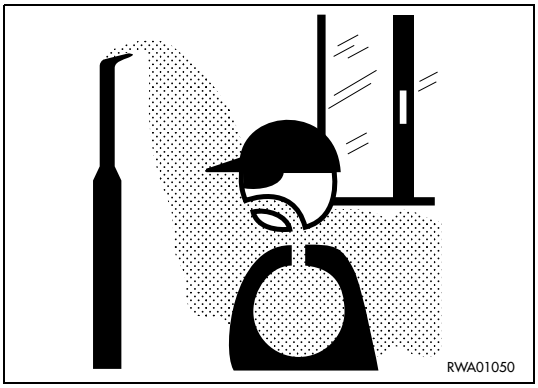

2.3.5 CLEANING WINDOWS, MIRRORS AND LIGHTS - CHECKING THE WINDSHIELD WIPER BLADES AND THE BULBS

- Remove any trace of dirt from the cab windows, lights and rear-view mirrors, in order to ensure perfect visibility.
- Adjust the rear-view mirrors if they have moved, so that the operator sitting in the driving position can clearly see the back of the machine.
  If any window, light or mirror is damaged, change it.
- Make sure that the road lights, stoplights, direction indicators and working lights are properly working. If necessary, change the faulty bulbs with new ones, making sure that their power is correct.
- Check the conditions of the windshield wiper blades; the scraping wire must be smooth, with no indentations and attached to the rubber back of the blade.
  In case of doubts on the efficiency of the scraping wire, change the blades.

2.4 PRECAUTIONS TO BE TAKEN WHEN WORKING

2.4.1 STARTING THE ENGINE

- Before getting on the machine, walk around it and check for people and objects that might be in the way.
- Do not start the engine if warning plates have been attached to the steering wheel or the control levers.
- When starting the engine, sound the horn as an alert signal.
- Start the engine and operate the machine only while seated with fastened safety belt.
- Do not allow anyone to get on the machine or enter the cab.

2.4.2 RULES FOR ROAD TRAVEL

- The machine is equipped with multifunction safety locks that must be used both for maintenance operations and road travel.
- When it is necessary to travel on roads, proceed as follows:

  1 - Position the safety lock of the front loader, so that the bucket is raised from the ground, thus ensuring better visibility and the stability of the machine.

  2 - Install the front bucket antirotation lock and secure it with the safety pins.

  3 - Install the teeth protection casing on the front bucket.

  4 - Raise the backhoe boom until engaging the safety coupling. The arm and bucket must in any case be completely folded.

  5 - The backhoe must be rotated and resting on the structure. This is the only position homologated for road travel in Italy.

  6 - For travelling with folded backhoe, the unit must be moved on its guide in such a way as to be positioned towards the road center, against the lock and with the bucket facing the road side.

  7 - Fasten the backhoe with the antirotation pin.

  8 - Connect the safety chains to prevent the accidental lowering of the stabilizers.

  9 - Engage the loader and backhoe control lever safety locks.
  For further information on their position, see “3.1 SAFETY LOCKS”.

IMPORTANT

- **If the machine is equipped with backhoe servo controls, before travelling on roads always engage the control locking safety device by pressing the relevant switch, see “3.3.5.2 MACHINE CONTROLS (Version with servo controls)”, pos. 26.**

- When it is necessary to travel on roads, the four-wheel drive must be disengaged and the brake pedals must be connected with the appropriate pin.
- When travelling on roads, keep to the rule of the road and operate the flashing light positioned on top of the cab.
- When travelling on roads, keep the working lights off.
- When travelling on roads, use only the two-wheel steering moderuote.

IMPORTANT

- **In any case, keep to the traffic rules in force.**

2.4.3 CHECKS FOR TRAVELLING IN REVERSE

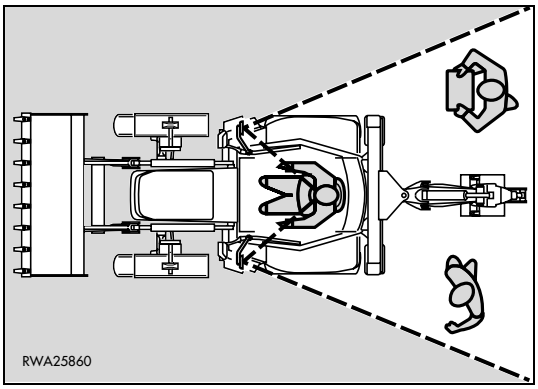

- When operating in areas that may be hazardous or have poor visibility, designate a person to direct the movements of the machine and traffic on the work site.
- Before moving the machine, sound the horn to warn the persons standing or working in the area.
- There are blind spots behind the machine, which cannot be seen through the rear-view mirrors and where someone may be standing.
  It is necessary to make sure that there is no one behind the machine before travelling in reverse.
  On request the machine may be equipped with an acoustic alarm (1) to be used in case of reversal. If the machine is equipped with this acoustic alarm (1), before any reversal make sure that it functions correctly.
  See “3.3.5 pos. 1 REVERSING GEAR LEVER” to check the functionality of the alarm.

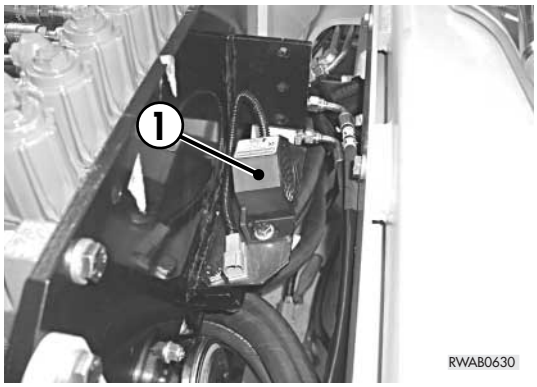

2.4.4 MOVING THE MACHINE

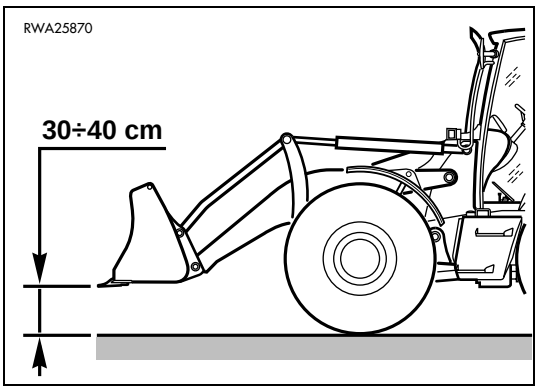

- When moving the machine, position the front bucket at about 30÷40 cm from the ground; this position makes it possible to evaluate the space required for the movements more precisely and at the same time ensures the stability of the machine.
- If the front bucket control lever is to be used during travel, avoid moving it abruptly; sudden manoeuvres change the attitude of the machine and make driving difficult.
- When travelling on rough ground, keep the speed low and avoid sudden movements of the bucket arm.
- If the machine has to travel over an obstacle, keep the front equipment as close to the ground as possible and travel at low speed, in order not to strain the axles and tyres.

2.4.5 WORKING ON SLOPES

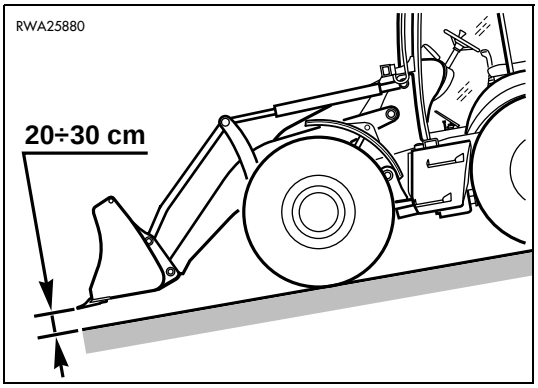

- Operations on slopes and on river or lake banks with damp ground may result in the tipping over or slipping of the machine.
- Do not work with the bucket downward with respect to the tractor.
- On hills, banks or slopes, keep the bucket very close to the ground (20÷30 cm from the ground) and in case of emergency quickly lower it to the ground to help the machine stop.
- Do not change direction and avoid travelling obliquely when working on slopes. It is advisable to go down or up to a flat place to perform these operations.
- Do not travel on wet grass or thick layers of leaves: if the machine moves obliquely in these conditions, it may slip.
- Before working on a slope, always check the efficiency of the brakes, engage a low gear and the four-wheel drive.
- Do not travel down slopes in neutral; you may lose control of the machine and cause serious injuries and even death.
- Avoid disengaging the gearshift with the push button positioned on the loader control lever.
- When travelling down a slope, engage a low gear, so that the braking action of the engine is used to hold the machine, with no need to strain the brakes.
- When the fuel level indicator reaches the red reserve area during work on a slope, immediately provide for refuelling; due to the inclination of the machine, the engine may suck in air and suddenly stop, which represents a grave risk for the safety of the operator and of the persons before the machine.
- If the engine should stop all of a sudden, immediately lower the bucket to the ground, brake and apply the parking brake.

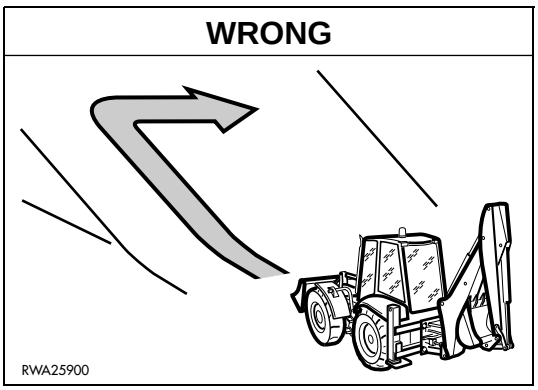

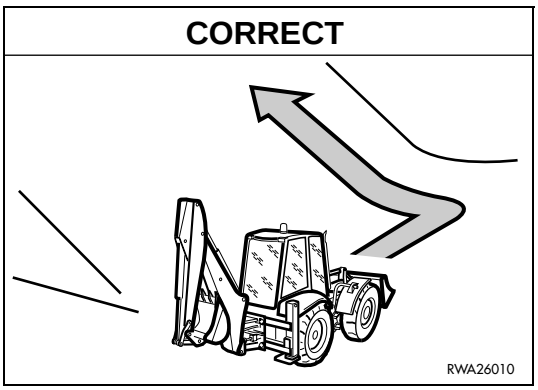

2.4.6 PREVENTING ELECTROCUTION

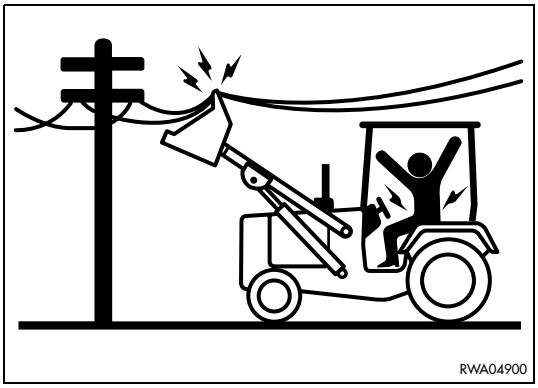

- Digging operations near overhead electric lines are extremely dangerous and they may also cause death due to electrocution; for this reason, when working near overhead electrical lines always respect the minimum safety distances prescribed by the competent authorities and by the accident-prevention rules in force.
- As far as underground long-distance lines are concerned, the minimum distance depends on the covering of the ducts in which the cables are laid.
- The basic safety precautions to be taken to prevent this risk are the following:
  1 - Wear shoes with thick rubber or leather soles.
  2 - Request the aid of another person who can warn you if the machine gets too close to the electric line.
  3 - Operate at low speed.
  4 - Learn what is to be done first in case of electrocution.
  5 - Keep the phone number of the electricity company and of the nearest first aid station at hand.
- If the work equipment gets accidentally entangled in the cables, the operator must not leave the cab until the electricity company has insulated the line.
- When carrying out this kind of operations, warn everyone standing in the work area to keep at the minimum distance prescribed from the machine and the work equipment.
- Ask the electricity company what are the voltage of the cables and the minimum safety distance in advance.

DANGER

- **The minimum distances from overhead lines can vary in the different countries, according to the climate and to the humidity percentage in the air.**
  Indicatively, the distances indicated in the table should be respected.

Cable voltage	Min. safety distance
1.0 kV (distribution line)	5 m
6.6 kV (2÷3 insulators)	5.2 m
33 kV (min. 3 insulators)	5.5 m
66 kV (min. 6 insulators)	6 m
154 kV (min. 10 insulators)	8 m
275 kV (min. 19 insulators)	10 m

2.4.7 VISIBILITY

- Switch on the road or working lights as soon as visibility decreases.
- If visibility decreases due to mist, smoke or heavy rain, stop the machine in a safe position and wait for the weather to improve until visibility becomes acceptable.

2.4.8 WORKING ON ICY OR SNOW-COVERED SURFACES

- If the ground is icy or covered with snow, the response of the machine to the movements of the steering wheel may not be precise.
  To limit the risks deriving from reduced directionality, proceed as follows:
  1 - Engage the four-wheel drive.
  2 - Travel using the accelerator smoothly and gradually.
  3 - Brake smoothly and only after having slowed down by using the engine deceleration as much as possible.
  4 - Avoid any sudden braking, rapid acceleration and abrupt steering with reduced steering radius.
- If the machine is used to clear snow or as snowplough on roads (installing the specific optional equipment and even chains, if necessary), be careful to the road shoulders and to any object/obstacle buried in the snow (way-side posts, milestones, signs just above the asphalt, etc.).

2.4.9 PREVENTING DAMAGE CAUSED BY THE WORK EQUIPMENT

- When working in tunnels, galleries, under electric cables or other ducts (air, telephone lines) and wherever the height is limited, proceed with the greatest care to prevent the bucket or arms and the backhoe bucket from causing any damage.

2.4.10 WORKING ON LOOSE GROUND

- Avoid operating the machine too close to the edge of cliffs, overhangs and deep ditches.
  These areas may collapse, making the machine fall down or tip over and this could result in serious injuries or death.
  Remember that after heavy rain or earthquakes these dangerous conditions usually get worse.
- The earth laid near ditches is loose and can easily collapse due to the weight or vibrations of the machine.
  Be extremely careful: always close the cab doors and fasten the safety belt.

2.4.11 PARKING THE MACHINE

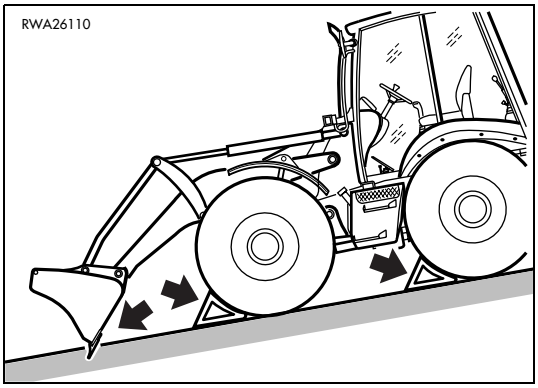

- Park the machine on firm and level ground. If this is not possible and it is necessary to park on a slope, position the machine with the front bucket directed downwards and carry out the following operations:
  1 - While keeping the machine stopped with the brakes, apply the parking brake.
  2 - Dump the front bucket to the unloading position and lower the arms until the teeth are driven into the ground.
  3 - Carry out the same operations with the backhoe bucket.
  4 - Stop the engine.
  5 - Put wedges or safety blocks under the front and rear wheels.
- Always rest the work equipment on the ground; if it is necessary to park with raised arms, make sure that the safety locks are engaged.
- Always engage the control lever safety locks.

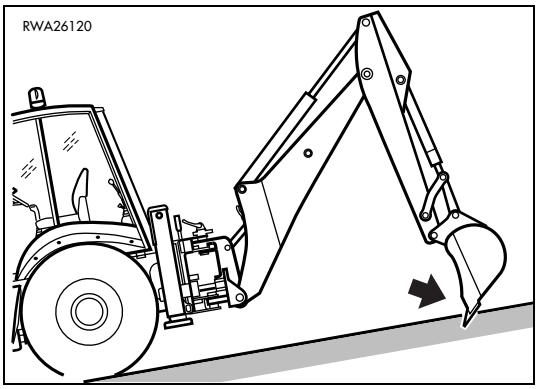

IMPORTANT

- **If the machine is equipped with backhoe servo controls, always engage the control locking safety device by pressing the relevant switch, see “3.3.5.2 MACHINE CONTROLS (Version with servo controls)”, pos. 26.**

- When leaving the machine, apply the parking brake, make sure that the cab windows are closed, remove the ignition key and finally lock the doors.
- If it is necessary to park on public roads, provide for signalling the presence of the machine according to the local regulations in force (signalling fires, fences, road works ahead, alternated direction and direction signs, etc.).

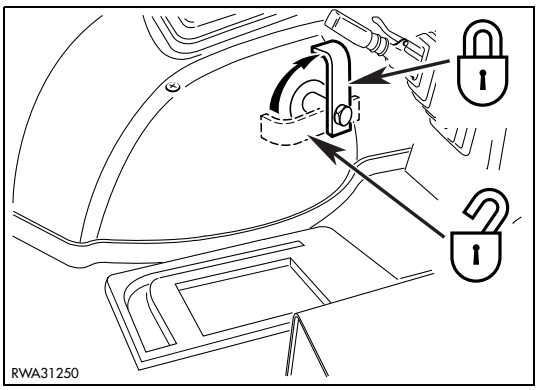

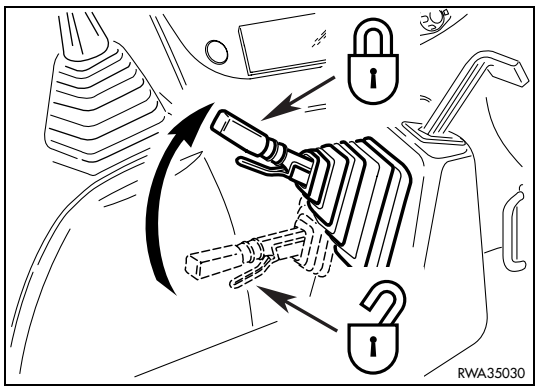

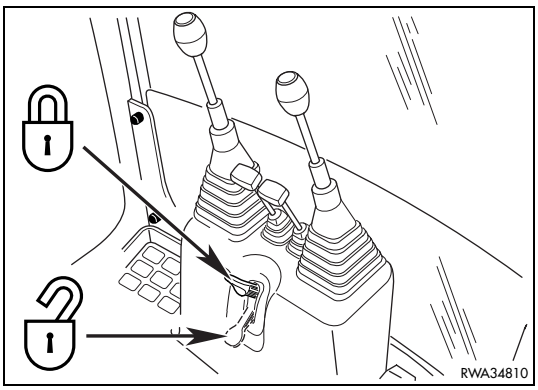

2.5 TRANSPORTING THE MACHINE ON OTHER VEHICLES

2.5.1 LOADING AND UNLOADING THE MACHINE

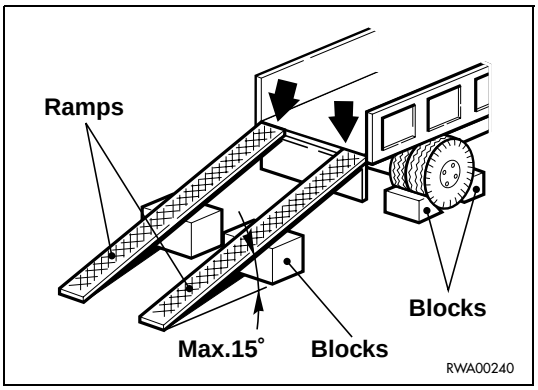

- Loading and unloading the machine on/from a motor vehicle always involves potential hazards. Proceed with extreme care.
- Perform loading and unloading on firm, level ground. Maintain a safety distance from the edges of ditches or from road sides.
- If the vehicles used have not been appositely equipped, put support blocks under the ramps, in order to avoid any bending.
- Always lock the wheels of the transporting vehicle with wedges.
- Always use ramps that are sufficiently wide and can support the weight of the machine. The longitudinal axes of the ramps must be parallel to each other and perpendicular to the loading side board and their distance must be suitable for the tread of the machine.
- Make sure that the ramps are securely positioned and fastened to the loading board and that they have the same length.
- Position the ramps with a maximum inclination of 15°.
- Make sure that the ramp surface is clean and there is no trace of grease, oil, soil and ice; remove dirt from the wheels before starting to load the machine on the vehicle.
- The machine must be loaded on the vehicle with the bucket directed forwards, that is, in the direction of advancement of the vehicle.
- Do not correct the trajectory of the machine on the ramps. If necessary, get down the ramps and start the operation again.
- After loading the machine, block its wheels with wedges and secure it with tie-downs or chains that prevent even any sideward shift (see “3.9 TRANSPORTING THE MACHINE ON OTHER VEHICLES”).

2.5.2 THE ROUTE

CAUTION

- **During transport, the machine must be secured to the vehicle with closed doors and windows.**

- Define the route to be followed, taking in consideration the width, height and weight of the transport means and of the machine.
  Make sure that the dimensions of the machine are compatible with the road and any gallery, subway, bridge, electric and telephone lines, etc.
- Keep to the regulations in force regarding the permissible width, height, weight of the machine and the transport speed.

2.6 BATTERY

2.6.1 SAFETY PRECAUTIONS FOR WORK ON BATTERIES

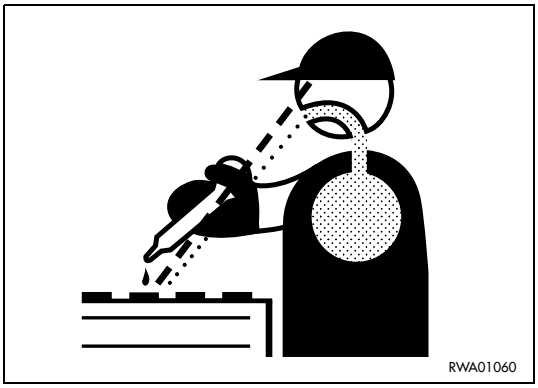

- Electrolytic batteries contain sulphuric acid that can quickly burn the skin and corrode clothes making holes in the fabric. If you spill acid on yourself, immediately rinse the involved area with plenty of water.
- Battery acid may cause blindness if splashed into the eyes. If acid gets accidentally into your eyes, flush them immediately with plenty of water and consult a doctor without delay.
- If you accidentally swallow some acid, drink a large quantity of water or milk, beaten egg white or vegetable oil and in any case antiacid substances like magnesia, bicarbonate, etc.;. call a doctor or a poisoning prevention center immediately.
- When handling batteries, always wear safety goggles.
- Batteries generate hydrogen. Hydrogen is highly explosive and can be easily ignited with small sparks or naked flames.
- Before working with batteries, stop the engine and remove the ignition key.
- Avoid short-circuiting the battery terminals through accidental contact with metal objects or tools or through the inversion of the terminals.
- Tighten the battery terminals securely. Loose terminals may generate sparks and even cause the explosion of the battery.

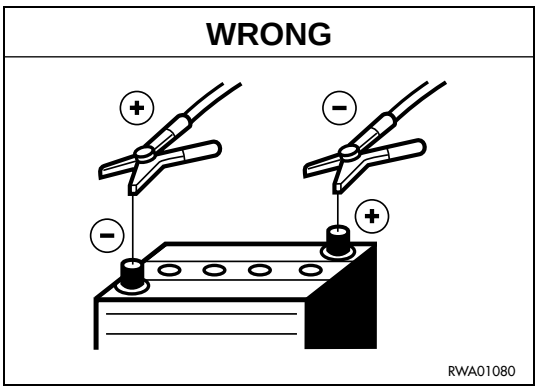

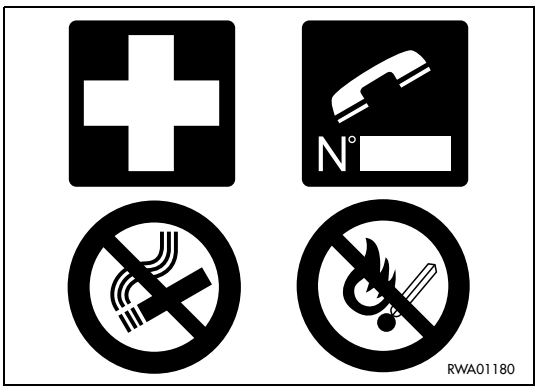

2.6.2 STARTING WITH BOOSTER CABLES

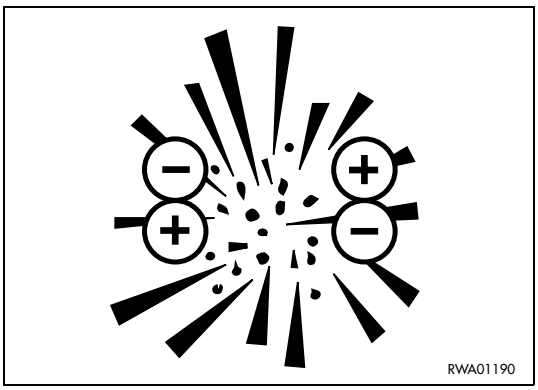

- When starting the machine with booster cables, always wear safety goggles.
- When starting the engine by means of another machine, avoid any contact between the two machines.
- Be sure to connect the positive cable (+) first and then the negative or earth cable (-) when connecting the booster cables. Disconnect first the negative or earth (–) cable and then the positive cable (+) after the start.
- Connect the batteries in parallel: positive to positive and negative to negative.
- When connecting the earth cable to the frame of the machine to be started, operate as far as possible from the battery. (See "3.15.3 IF THE BATTERY IS DEPLETED").
- Do not attempt to start the engine by causing a short-circuit with the terminals of the starter (see “2.8.14 PRECAUTIONS REGARDING THE STARTER”).

2.7 PRECAUTIONS FOR EMERGENCY RECOVERY

- The draw hooks must be used only for the first aid and not for towing the machine.
- Before moving the machine, make sure that the gearshift lever is in neutral and disengage the four-wheel drive.
- Incorrect manoeuvres may result in serious injuries or even death.
- To move the machine, use properly dimensioned steel cables; do not use worn cables or cables with broken strands (A), twisted cables (B), deformed cables (C).
- During the removal, no one can be allowed to get near the machines or the cable.
- Do not get astride the cable.
- Remove the machine only as much as necessary to permit the required repairs.
- Do not remove the machine in any way other than that indicated in paragraph “3.15.1 HOW TO REMOVE THE MACHINE”.

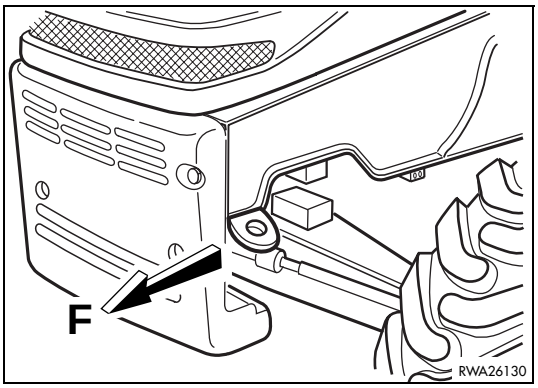

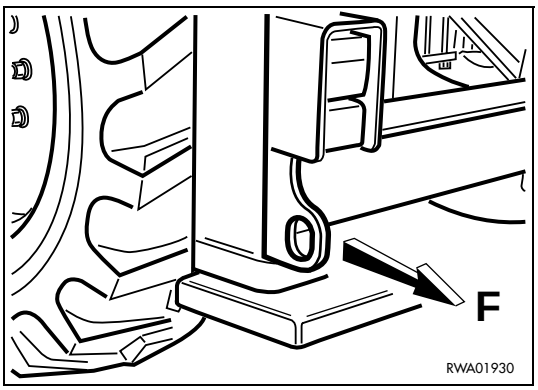

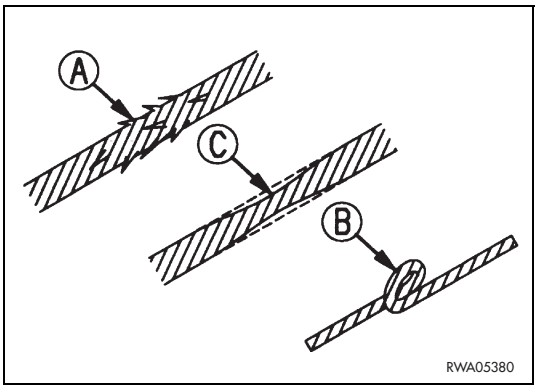

CAUTION

- **The maximum applicable force for each draw hook is F = 6300 kg.**
- **Use cables having the same length and draw continuosly and constantly, without jerks.**
- **The drawing force must be parallel to the machine axis (advancement direction), in such a way as to avoid the application of sideward forces on the draw hooks.**

2.8 PRECAUTIONS TO BE TAKEN DURING MAINTENANCE

2.8.1 WARNING PLATES

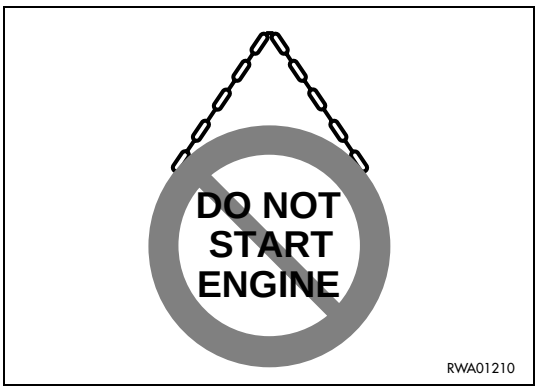

- Before starting any maintenance operation, position the machine on firm and level ground, engage the safety locks either for the equipment and the controls, stop the engine and apply the parking brake.
- If another person starts the engine and operates the controls while the operator is providing for service, this may result in serious injuries or even death.
- To avoid these risks, always attach warning plates to the steering wheel, to the control levers and to the ignition key before performing any maintenance operation; if necessary, attach additional warning tags also around the machine and in particular on the cab door handles.

2.8.2 TOOLS

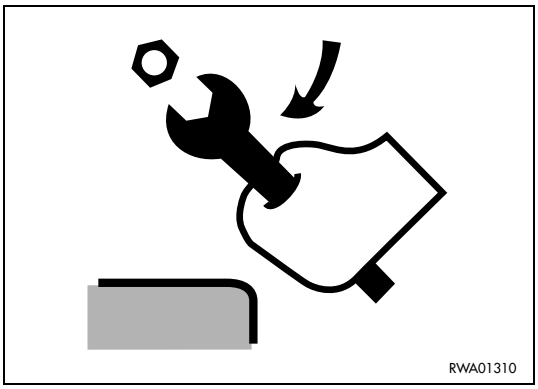

- Use only the tools provided with the machine and high-quality tools suitable for the tasks to be performed.
- Do not use worn, damaged, low-quality tools or tools that are not suitable for the tasks to be performed, in order to avoid any personal injury.
- After use, carefully clean the tools and put them in the compartment obtained inside the seat support. If the operator plans to keep on the machine some tools whose dimensions exceed those of the compartment positioned under the seat, he can store them in an appropriate tool box positioned on the rear outer part of the cab. See “3.5.11 ADDITIONAL TOOL BOX (if provided).”

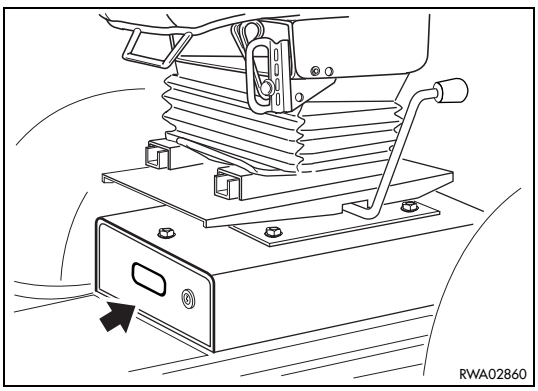

2.8.3 PERSONNEL

- Any maintenance operation must be carried out exclusively by authorized and duly trained personnel; specific and personal protection measures must be adopted when grinding, welding and when using sledges or heavy hammers.
- When assemblying the equipment or cylinder connection pins, use wooden, plastic or in any case not excessively hard tools to check the centering of the holes.
  Do not use your fingers, since you run the risk of cutting them.

2.8.4 EQUIPMENT

- The normal or special equipment that must be installed on the machine or that have been removed must be stored in safe places, preventing them from falling down. If they fall on someone, they can cause serious bodily harm.
- When assemblying or removing any equipment, make sure that the ropes and the lifting hook are in good conditions and properly dimensioned for the load to be lifted.

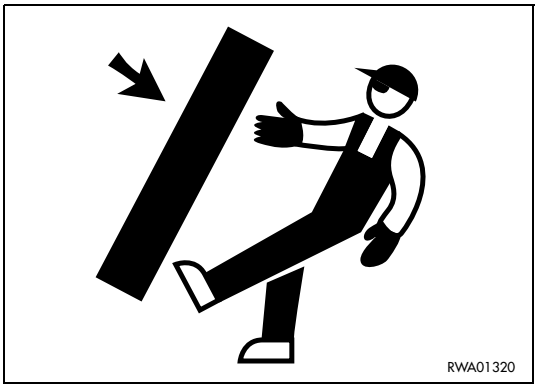

2.8.5 WORKING UNDER THE MACHINE

- Always lower the work equipment to the ground or in any case to their lowest position before performing service or repairs under the machine.
- Always lock the machine tyres securely.
- Do not work under the machine, if this is not sufficiently supported.

2.8.6 KEEPING THE MACHINE CLEAN

- Spilled oil or grease, scattered tools or broken pieces are dangerous, because they may cause someone to slip or trip. Always keep the machine and the work site clean and tidy.
- To clean the machine, use a pressurized jet of warm water or steam and the appropriate detergents available on the market. Do not use gas oil, oil or solvents, since the former leave an oily coat that favours the sticking of dust, while the latter (even if weak) damage the painted surfaces and therefore facilitate rusting.
- While cleaning the machine, keep the pressurized jet at a minimum distance of approx. 60 cm in order not to damage the warning plates and the pictograms.
  If the plates are damaged, request Komlatsu Utility or your Komlatsu Utility Dealer to send you spare plates and change them.
- Water into the electrical system provokes the oxidation of the contacts and may hinder the start of the machine or even make it start suddenly and abruptly. For this reason, never use water or steam jets to clean sensors, connectors or the inside of the operator's cab.

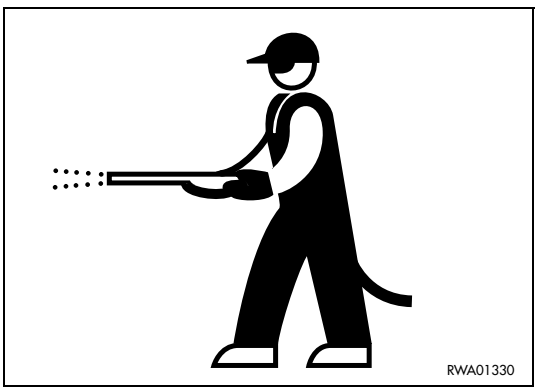

2.8.7 USE OF THE ENGINE DURING MAINTENANCE

- During maintenance operations, let the engine run only when indispensable. If it is necessary to have the engine running (for example, to wash the cooling circuit or to check the functionality of the alternator), an operator should constantly remain in the cab, in order to be able to stop the engine whenever necessary.
- During maintenance operations with running engine, never move the control locking devices from the “lock” position or change the position of the gearshift lever.
  Service personnel must not move any control lever.

☞ **IMPORTANT**

- **If the machine is equipped with backhoe servo controls, always engage the control locking safety device by pressing the relevant switch, see “3.3.5.2 MACHINE CONTROLS (Version with servo controls)”, pos. 26.**

- When carrying out maintenance operations, do not touch the moving parts of the machine and avoid wearing large and loose clothes.

2.8.8 PERIODICAL CHANGE OF THE PARTS THAT ARE CRITICAL FOR SAFETY

- Periodically change the following components, which are important for safety and fire prevention:
  Fuel supply system: fuel delivery and return pipes.
  Hydraulic system: main delivery pipes of the hydraulic pump.
  Hydraulic system: work circuit pipes from the distributor to the hydraulic cylinders.
  Safety belt
- Even if they seem to be in good conditions, these components must be periodically changed with new ones. In fact, these components tend to deteriorate over time.
- If one of these parts is defective, change or repair it even if the change interval has not elapsed yet. (See “4.6 PERIODICAL CHANGE OF THE COMPONENTS CONNECTED WITH SAFETY).

2.8.9 STOP THE ENGINE BEFORE CARRYING OUT ANY MAINTENANCE OPERATION OR INSPECTION

- Stop the machine only on firm and level ground and stop the engine before carrying out any maintenance operation or inspection.
- If it is necessary to have the engine running during maintenance, engage the safety LOCKS of the equipment control levers, apply the parking brake and carry out any maintenance operation with the help of another person; an operator must remain on board and the words to be used during the operation must be agreed upon.

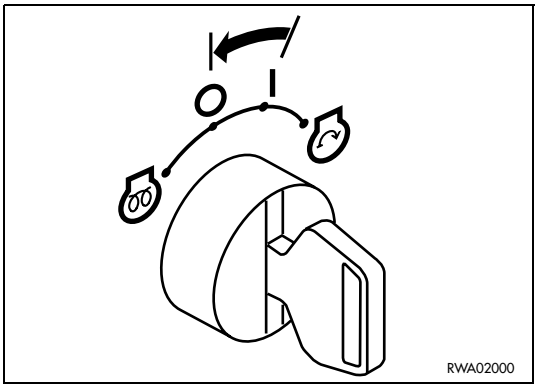

IMPORTANT

- **If the machine is equipped with backhoe servo controls, always engage the control locking safety device by pressing the relevant switch, see "3.3.5.2 MACHINE CONTROLS (Version with servo controls)", pos. 26.**

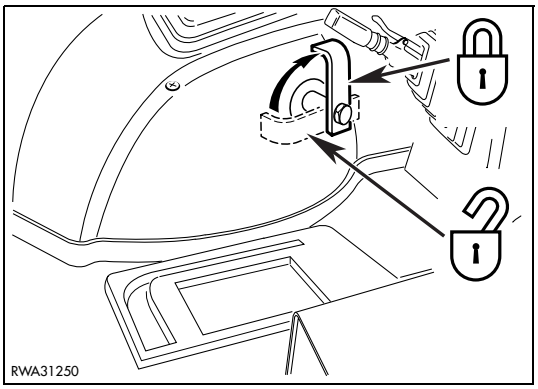

- The person who carries out the maintenance operation must be very careful not to touch any moving part of the engine.

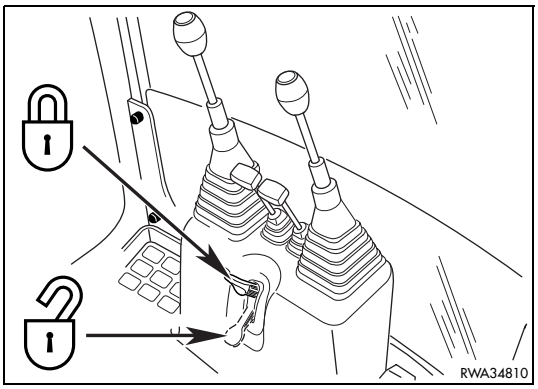

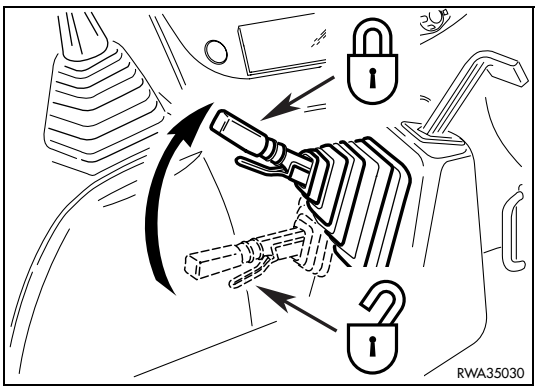

2.8.10 RULES FOR REFUELLING AND ADDING OIL

- Spilled fuel or oil make the ground slippery and may cause accidents; clean any dirty area immediately and carefully.
- Always tighten the fuel tank and hydraulic circuit oil safety caps securely.
- Do not use fuel to clean any part of the machine that may be dirty with oil or dust.
- Always top up the fuel and oil tanks in properly ventilated place and avoid smoking.
- When refuelling, hold the fuel gun firmly and keep it constantly in contact with the filler until you have finished, in order to avoid sparks due to static electricity.
- Do not fill the tank completely, in order to leave room for the fuel to expand.

2.8.11 CHECKING THE COOLANT LEVEL IN THE RADIATOR

- Let the engine and the radiator cool down, before checking the coolant level in the radiator.
- If it is necessary to remove the cap with hot engine, wear suitable clothes and protections and loosen the cap slowly, in order to gradually release the pressure.

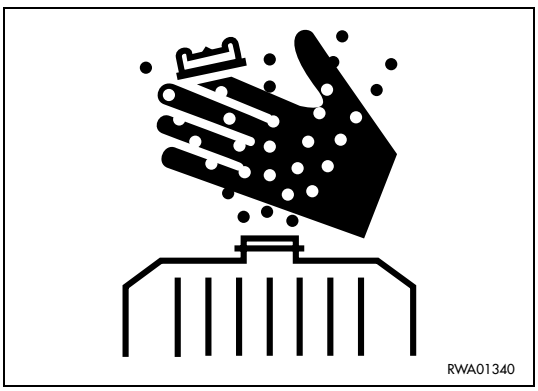

2.8.12 USING LAMPS

- When checking the fuel, oil, coolant or battery electrolyte levels, always use homologated explosion-proof lamps.
  If such lighting equipment is not used, there is danger of fire or explosion.

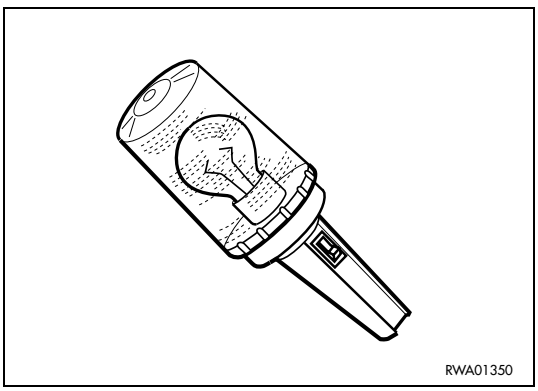

2.8.13 PRECAUTIONS CONCERNING THE BATTERY AND THE ALTERNATOR

- When repairing the electrical system, disconnet the battery in order to stop the flow of current.

IMPORTANT

- **Disconnect first the negative earth cable (-) and then the positive cable (+).**
  At the end of the operation, reconnect first the positive cable (+) and then the negative cable (-).

- If electrical welding operations are to be carried out on the machine, it is necessary to disconnect the battery and also the alternator.

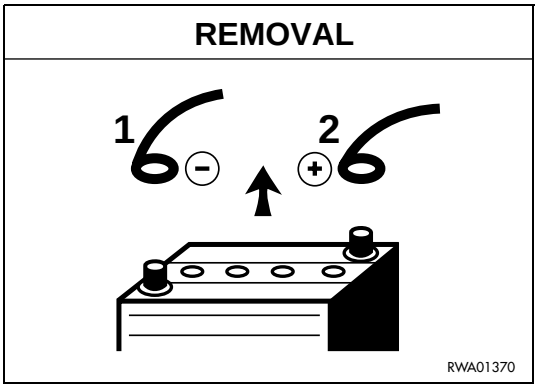

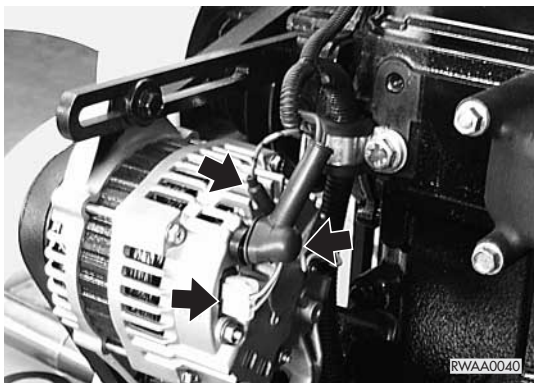

2.8.14 PRECAUTIONS CONCERNING THE STARTER

- Start the engine only when correctly seated in the driving position.
- Do not attempt to start the engine by causing a short-circuit with the terminals of the starter. This may cause fires, serious injuries and even death in case of sudden or accidental movements of the machine.

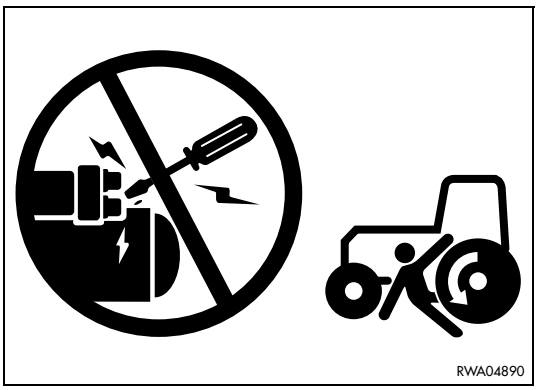

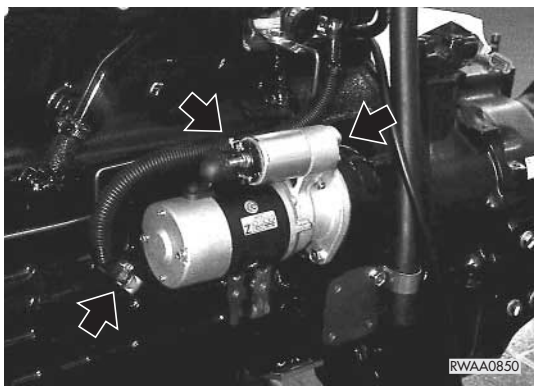

2.8.15 PRECAUTIONS CONCERNING THE GEARSHIFT

- If electrical welding operations are to be carried out on the machine, it is necessary to disconnect the connector (1) of the gearshift unit positioned under the steering wheel.
  To reach the connector (1), first remove the protection casing (2).

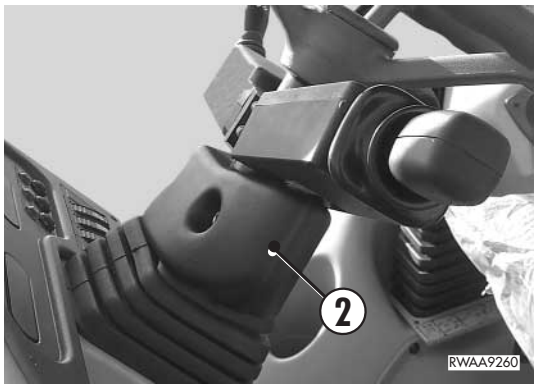

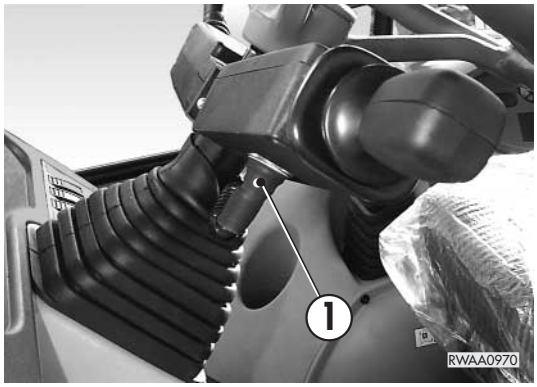

2.8.16 HANDLING HIGH-PRESSURE PIPES

- Do not bend high-pressure pipes or rub them with abrasive or cutting objects.
  Do not use any bent or cracked pipes or hoses that were previously rejected because of leaks or fastening defects, since they may burst during use.
- Always repair or replace any loose or faulty fuel or oil pipe. Any leakage of fuel or oil may cause fires.

2.8.17 PRECAUTIONS TO BE TAKEN WHEN HANDLING HIGH-PRESSURE OIL

- Do not forget that the work equipment circuits are always under pressure; for this reason, when it is necessary to add or drain hydraulic oil or to perform maintenance operations or inspections on the hydraulic circuit, it is advisable to lower the equipment to the ground and completely release the pressures and the residual pressure present in the tank.
  Small leakages from pipes under pressure and the resulting jets are extremely dangerous, since they can perforate the skin and penetrate in the blood circulation or injure the eyes.
  For this reason, always wear goggles and thick gloves during the inspections and use a piece of cardboard or a sheet of plywood to check for oil leakages.
  If you are hit by a jet of high-pressure oil or are injured, even if slightly, immediately consult a doctor.

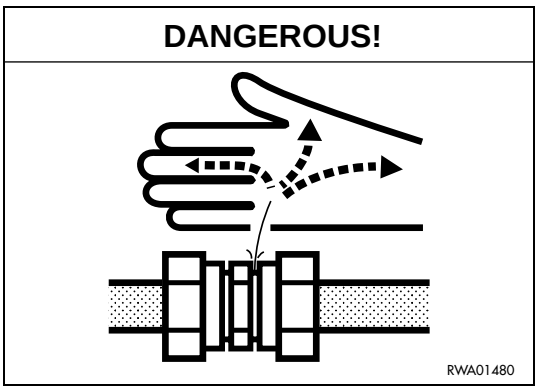

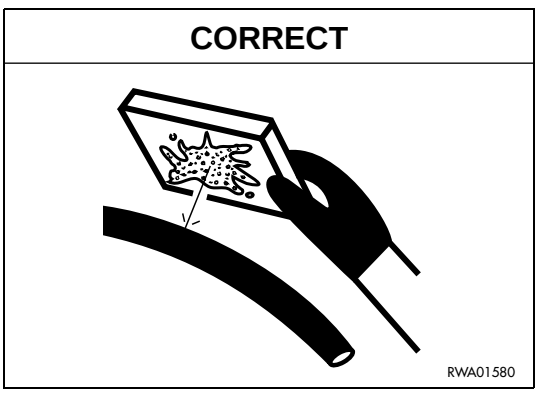

2.8.18 PRECAUTIONS FOR MAINTENANCE WORK INVOLVING HIGH TEMPERATURES AND PRESSURES

- When the machine is stopped at the end of operations, the engine coolant, the oil and all the components are hot and the hydralic circuits are under pressure.
  In these conditions, if the coolant, the hydraulic oil and the engine oil are to be drained in order to change them or the filters, there are serious risks of damage and burns.
  Wait for the temperature to lower within the normal operating range (40÷45) before carrying out the maintenance operations in accordance with the procedures indicated in the relevant sections of this manual.

2.8.19 COOLING FAN AND FAN BELT

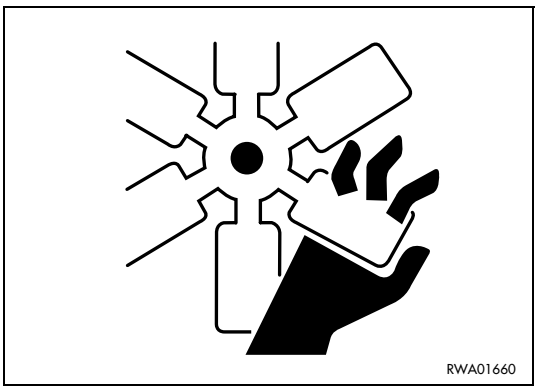

- Be careful to the revolving parts and do not allow anyone to get too close to these parts, since clothes or parts of the body may get caught into them.
- If hands, clothes, or tools touch the fan blades or the belt, they may be cut, torn or seriously damaged; for this reason, avoid touching the revolving parts.

2.8.20 WASTE MATERIALS

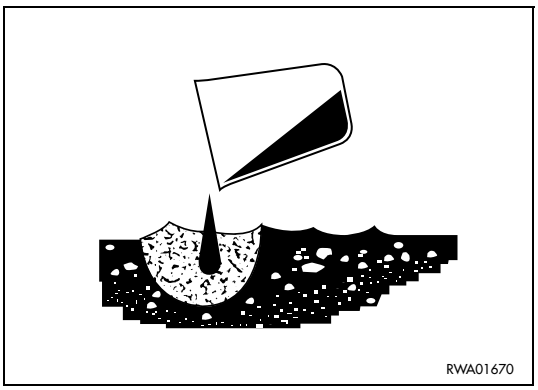

- Do not dispose of used oil in the sewer system, rivers, etc.
- Always put used oil in containers. Never drain the oil directly onto the ground.
- Keep to the laws and regulations in force when disposing of harmful substances such as oil, fuel, solvents, used filters and batteries.

2.8.21 PRECAUTIONS TO BE TAKEN WHEN INFLATING TYRES

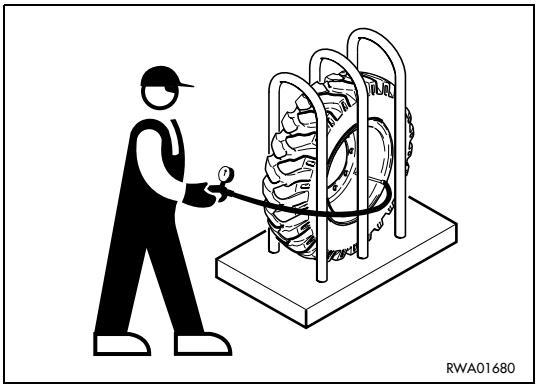

- When being inflated, the tyres may explode and come off, thus causing serious accidents.
- Before inflating the tyres, always check the conditions of the rims and the outer conditions of the tyres themselves, in order make sure that there are no dents, cuts, torn plies or other defects.
- It is advisable to have these checks and maintenance operations carried out by a specialized technician.
- Inflate the tyres using a protection structure and a pneumatic inflating gun with extension complete with controlling pressure gauge.
- Before starting this operation, make sure that there is no one in the vicinity and position yourself in front of the tread.
- Do not exceed the inflation pressures prescribed for the single types of tyre and make sure that all the tyres have the same pressure.

2.8.22 PRECAUTIONS FOR THE INSTALLATION OF THE EXHAUST SYSTEM TAILPIPE

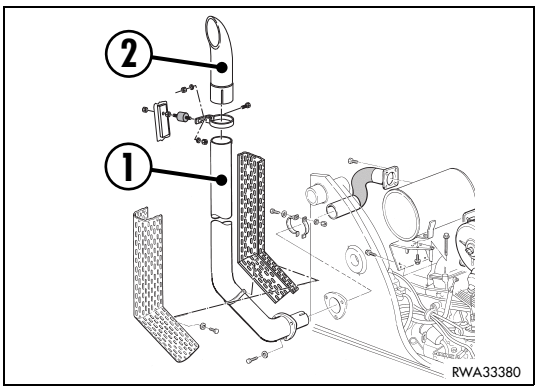

- When the machine is stopped at the end of work, the exhaust pipe (1) and the tailpipe (2) are very hot. In these conditions, if any maintenance operation has to be carried out, the operator runs the risk of being burned or injured.
  Carry out any maintenance operation only when the temperature of these parts is normal and in any case always use thick gloves.
- Be particularly careful when reassembling the tailpipe (2) on the exhaust pipe (1).
  The tailpipe (2) must be positioned in the correct direction and respecting the angles indicated in the figure (A).
  By following the procedure indicated above, you prevent the exhaust gases from being directed towards the cab and therefore towards the operator.

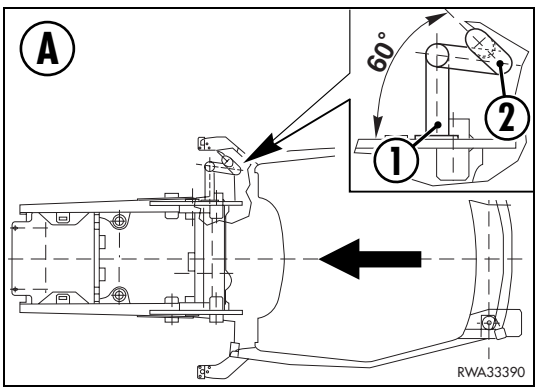

2.8.23 PRECAUTIONS FOR THE USE OF THE SYNTHETIC BIODEGRADABLE OIL TYPE HEES

- It is not possible to mix the synthetic biodegradable oil type HEES with ordinary hydraulic oils, since when the temperature increases insoluble compounds are generated, which are deposited on the filters and clog them (the maximum concentration of ordinary oil cannot exceed 1% of the total quantity of oil).
- The biodegradable oil can be used only in the hydraulic system; it cannot be used for the endothermic engine, the transmissions, the braking system, etc.
- Before introducing the synthetic biodegradable oil in the hydraulic system, empty the system completely, disconnecting the cylinders and all the parts that may contain ordinary oil, and replace the drain filter with a new one.
  Start the engine and let it idle without using the work equipment , wait until the oil reaches a temperature of at least 40°C, then start moving the equipment, so that all the parts of the system are filled with oil. Stop the engine and check the oil level (see “4.7.3.e CHECKING THE HYDRAULIC SYSTEM OIL LEVEL”).

THIS PAGE WAS INTENTIONALLY LEFT EMPTY

THE MACHINE AND ITS OPERATIONS

3.1 SAFETY LOCKS

DANGER

- **If it is necessary to carry out maintenance operations or to stop the machine with raised loader arm, always engage the mechanical safety lock and the control lever lock.**
- **When travelling on roads, always engage the mechanical lock, lock the control lever in order to keep the front bucket in a stable position and use the front bucket antirotation lock and the teeth protection. Use only the two-wheel steering.**
- **When travelling on roads or when the backhoe is not being used, always connect the boom to the safety lock, fold the arm and the bucket completely and lock both the swing and the control lever. If the machine is equipped with backhoe servo controls, always engage the control locking safety device by pressing the relevant switch, see "3.3.6.2 MACHINE CONTROLS (Version with servo controls)", pos. 27.**
  Non-compliance with these rules may cause serious damage in case of travel downhill or accidental swing of the equipment.

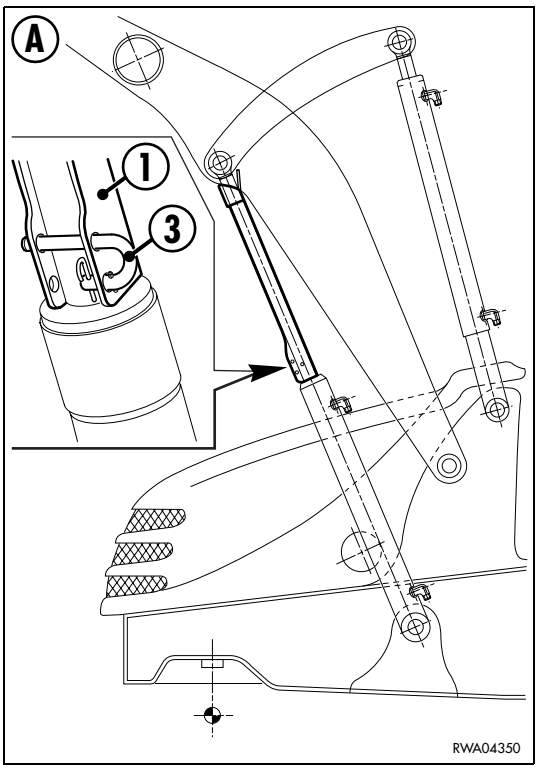

3.1.1 FRONT LOADER LOCKS

The loader arm is provided with two safety locks that have two distinct functions regarding:

a) LOCK (1) - the position of the arm when the machine is subjected to maintenance on the engine unit and inspection of the hydraulic system equipment and of the auxiliary equipment housed in the engine compartment and in any case to inspections and maintenance operations to be carried out with raised arm (A).

b) LOCK (2) - the position of the arm when the machine is travelling on roads (B).

It is important to remember that in operating conditions the safety lock (1) must be positioned against the arm (C) and secured in that position by means of the safety pin (3), while the safety lock (2) must be stored in the tool case positioned inside the cab, under the seat support.

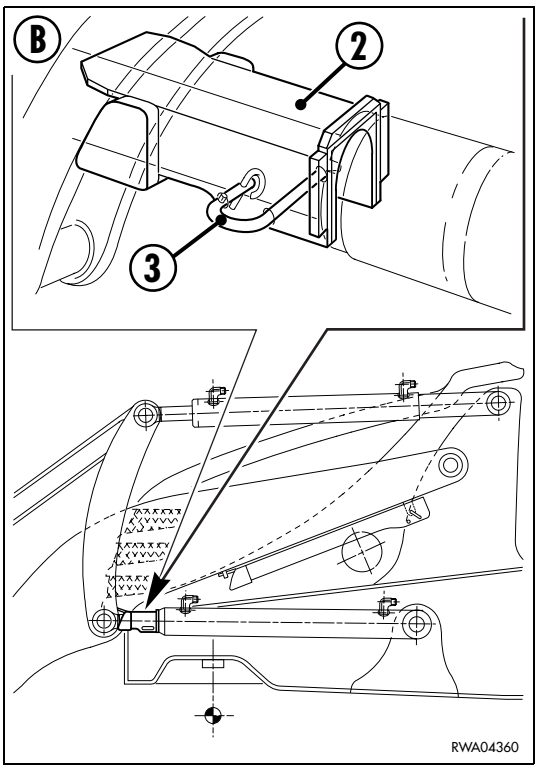

IMPORTANT

- **The safety locks (1-2) must always adhere to the stems of the hydraulic cylinders on whose eyes they are applied.**
- **The safety locks must be positioned definitively by bringing the contact surfaces against each other with a slow and continuous movement, in such a way as not to damage the cylinder head surfaces.**
- **When the safety locks are in their definitive position, fasten them with the safety pins (3).**

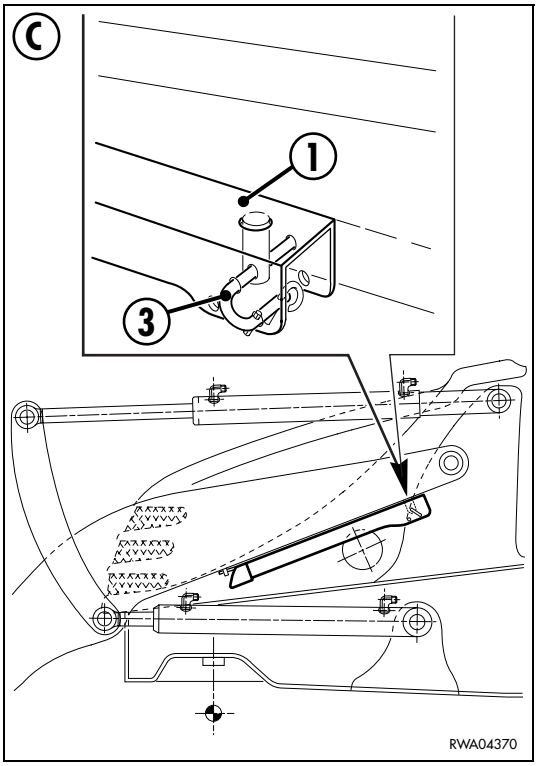

The other applications of the safety locks concern:

a) Installation of the front bucket swing lock (1).

b) Engaging of the front loader (2) control lever lock.

c) Installation of the teeth protection casing (3).

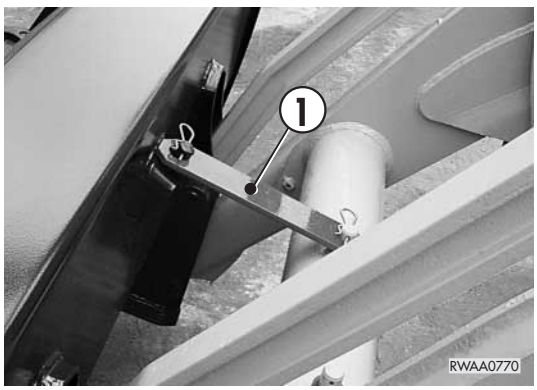

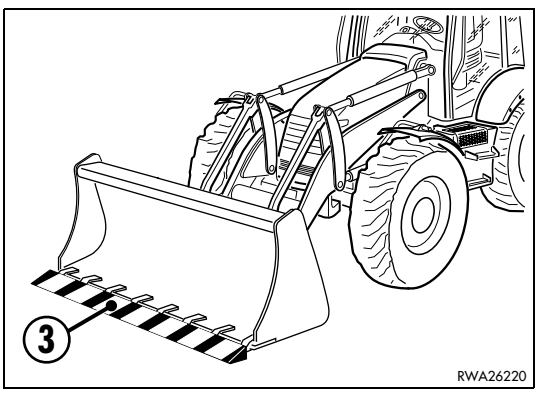

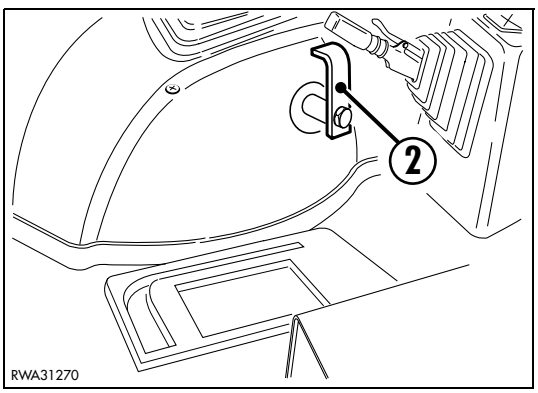

3.1.2 BACKHOE LOCKS

The backhoe is held completely raised by a single coupling that does not permit the lowering of the boom.
The other safety device regards the swing, which is locked, either in the central and in the folded position, by means of a pin.
To lock the boom, proceed as follows:

1 - Fold the bucket and arm completely.
2 - Raise the safety lock (1) by pressing the control switch (led on) positioned on the side dashboard (see “3.3.2 pos. 20”).
3 - Raise the boom completely and engage the safety lock (1) by pressing the switch again (led off).
4 - Rotate the boom and insert the antirotation pin (2).
5 - Install the safety chains (5) for the stabilizers.
6 - Stop the engine and shift the levers (3) to settle the safety locks.
7 - Engage the control lever lock (4).

IMPORTANT

- **If the machine is equipped with backhoe servo controls, always engage the control locking safety device by pressing the relevant switch, see “3.3.5.2 MACHINE CONTROLS (Version with servo controls)”, pos. 26.**

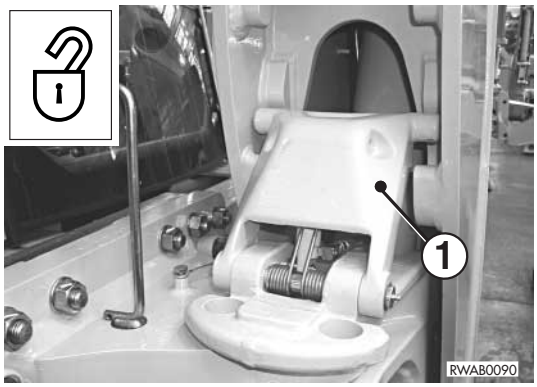

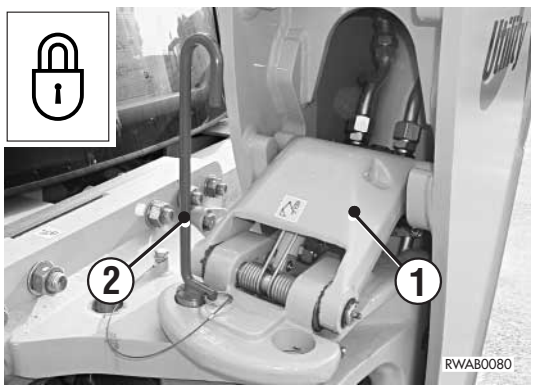

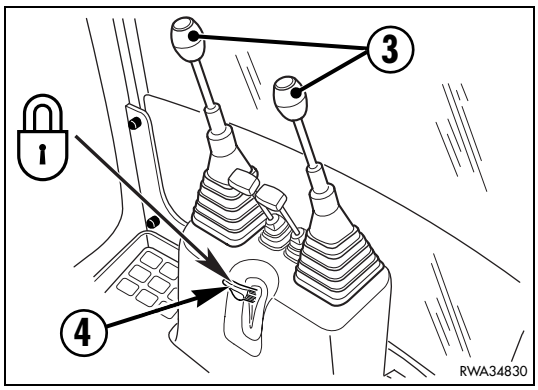

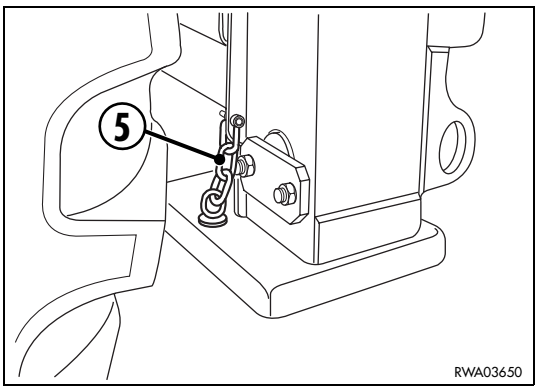

3.2 GENERAL VIEWS

3.2.1 FRONT GENERAL VIEW

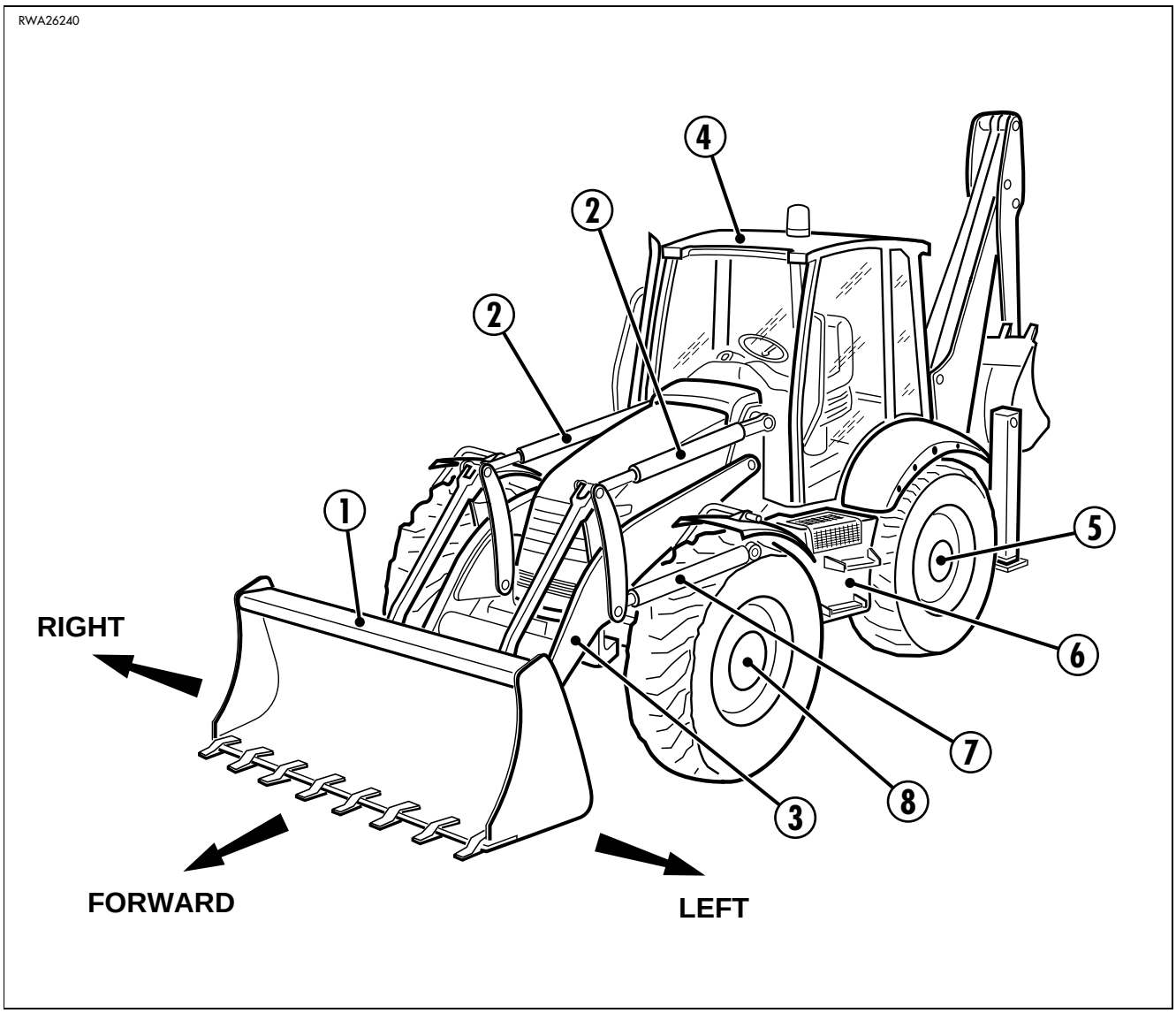

1 - Front bucket
2 - Bucket dumping cylinder
3 - Bucket lifting arm
4 - Cab
5 - Rear axle
6 - Fuel tank
7 - Lifting cylinder
8 - Front axle

3.2.2 BACKHOE GENERAL VIEW

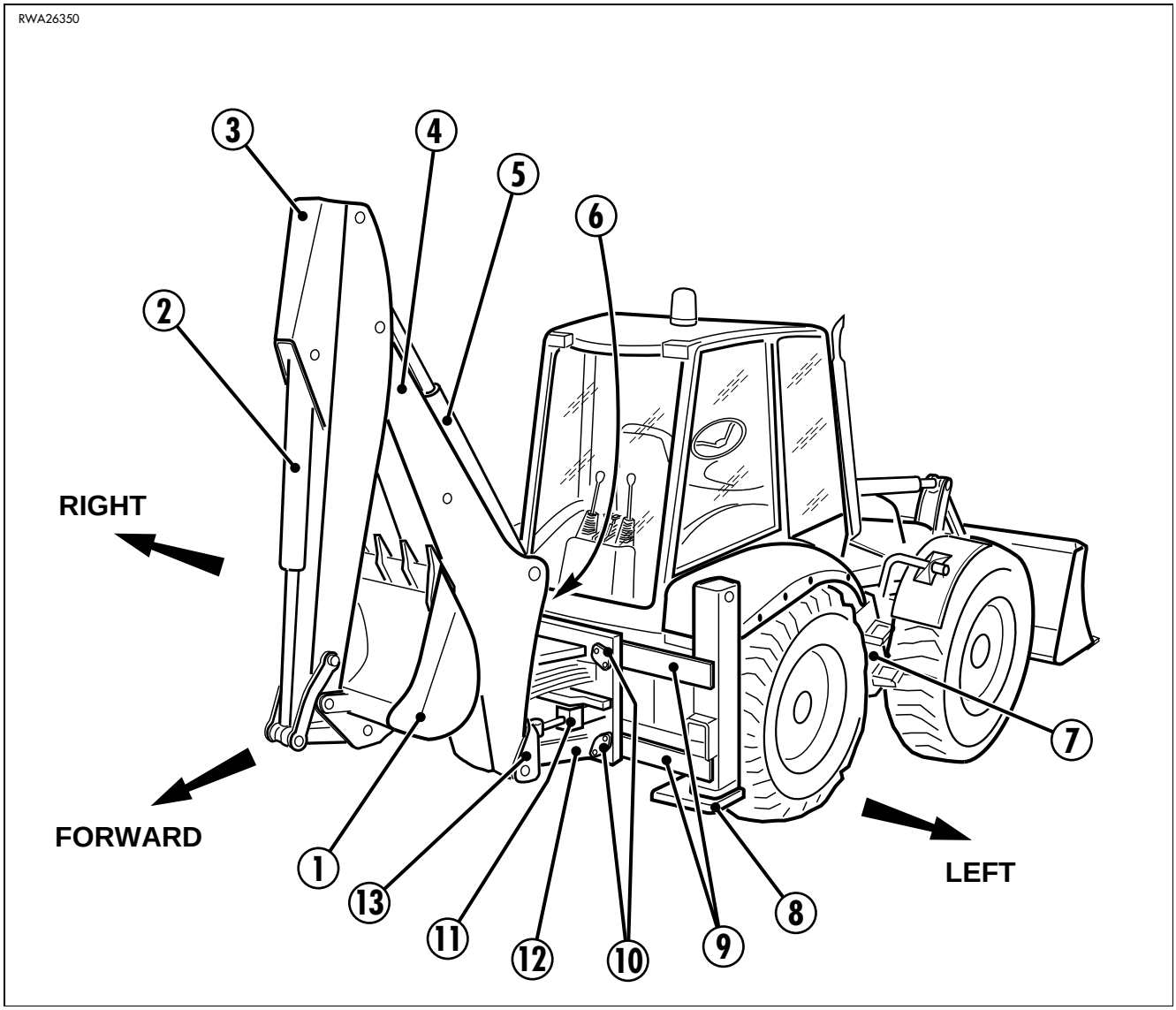

1 - Bucket
2 - Bucket cylinder
3 - Arm
4 - Boom
5 - Arm cylinder
6 - Boom cylinder
7 - Hydraulic oil tank
8 - Stabilizers
9 - Backhoe sliding guides
10 - Backhoe locking cylinders
11 - Boom swing cylinders
12 - Sliding plate
13 - Revolving support

3.2.3 CAB INSIDE GENERAL VIEW

3.2.3.1 CAB INSIDE GENERAL VIEW (Standard version)

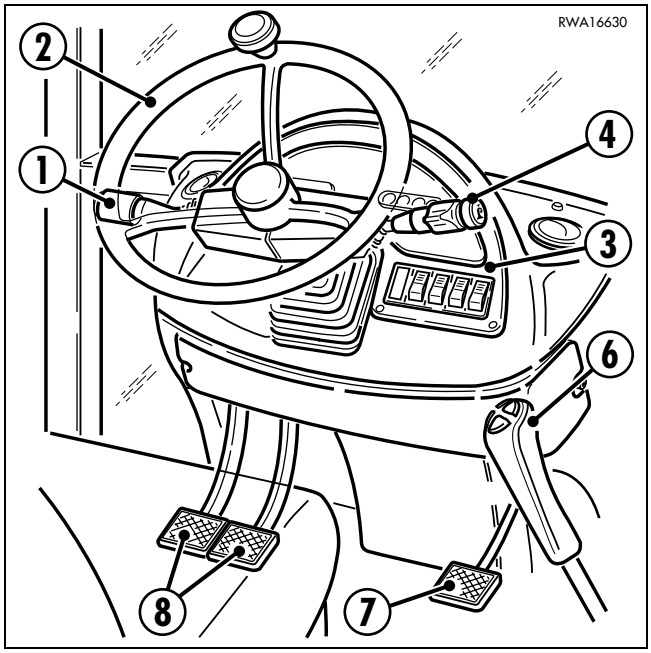

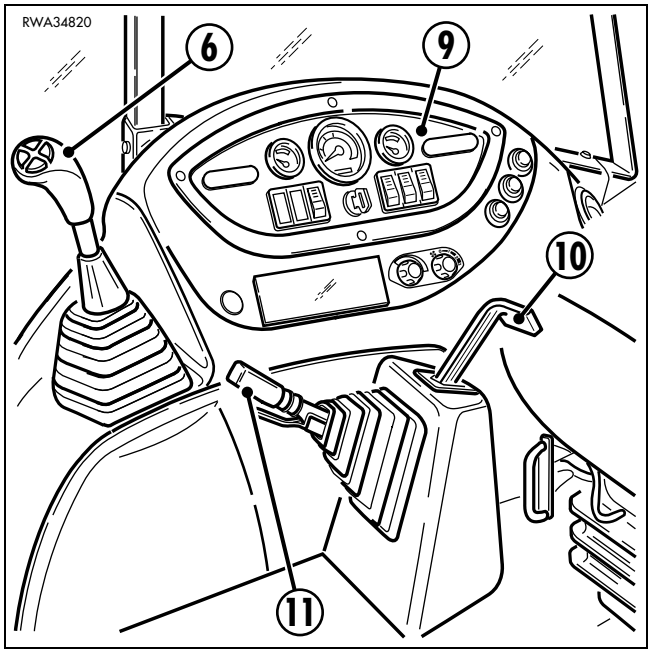

1 - Reversing gear-gearshift control lever
2 - Steering wheel
3 - Front dashboard
4 - Direction selector - dimmer switch
5 - Steering wheel adjustment lock
6 - Front loader control lever
7 - Accelerator pedal
8 - Brake pedals
9 - Side dashboard
10 - Hand accelerator
11 - Parking brake
12 - Arm and swing control lever
(Standard version “ISO system controls”)
- Boom and swing control lever
(On request “Komatsu and “X” system controls”)
13 - Boom and bucket control lever
(Standard version “ISO system controls”)
- Arm and bucket control lever
(On request “Komatsu and “X” system controls”)
14 - Right stabilizer control lever
15 - Left stabilizer control lever

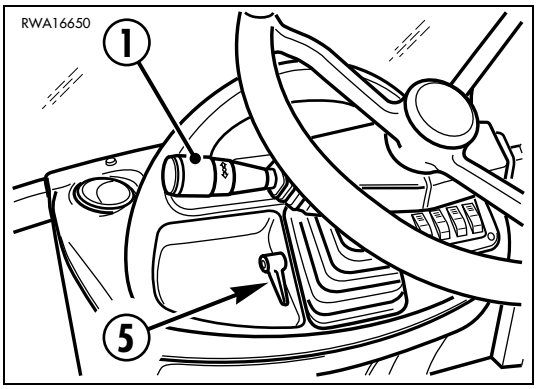

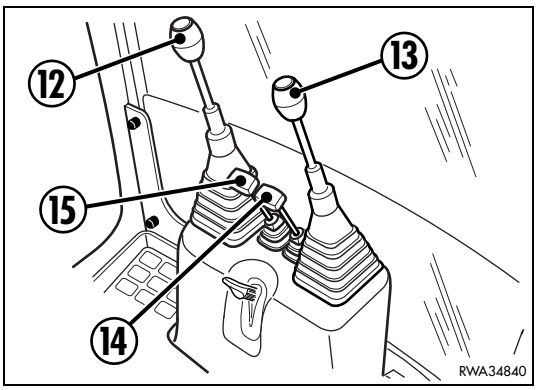

3.2.3.2 CAB INSIDE GENERAL VIEW (Version with servcontrols available on request)

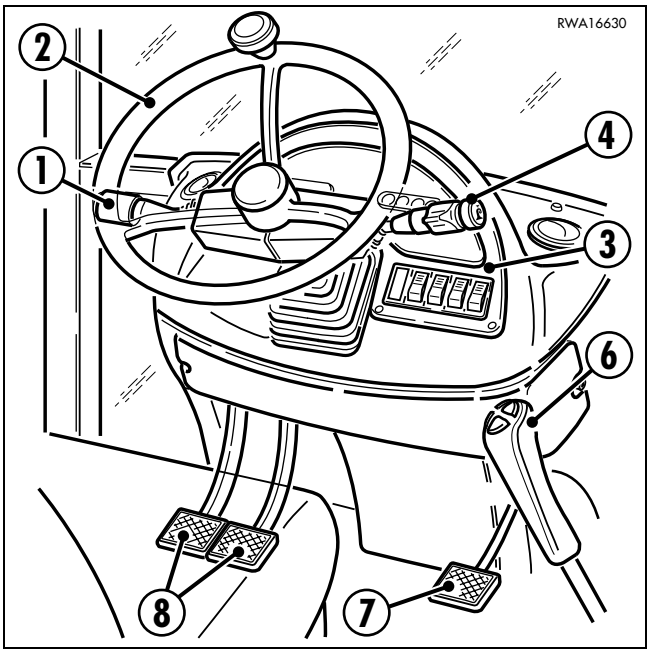

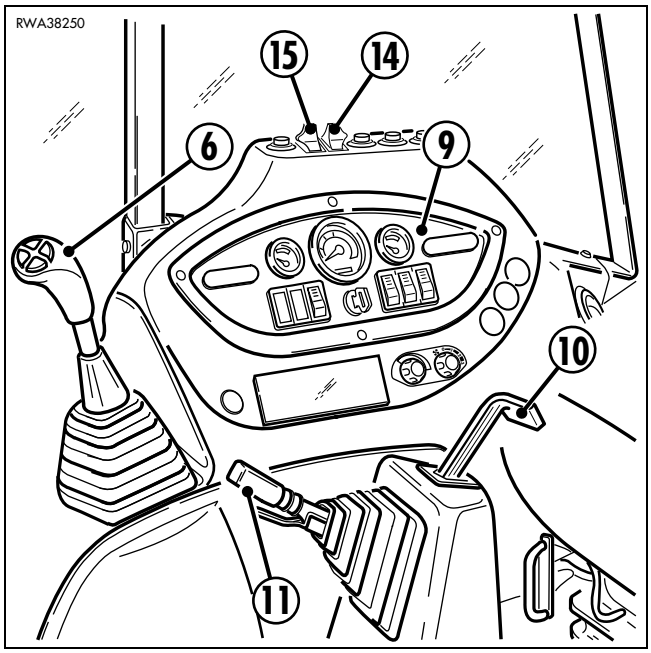

1 - Reversing gear-gearshift control lever
2 - Steering wheel
3 - Front dashboard
4 - Direction selector - dimmer switch
5 - Steering wheel adjustment lock
6 - Front loader control lever
7 - Accelerator pedal
8 - Brake pedals
9 - Side dashboard
10 - Hand accelerator
11 - Parking brake
12 - Arm and swing control lever
(Standard version “ISO system controls”)
- Boom and swing control lever
(On request only with “Komatsu system controls” Pattern Change)
13 - Boom and bucket control lever
(Standard version “ISO system controls”)
- Arm and bucket control lever
(On request only with “Komatsu system controls” Pattern Change)
14 - Right stabilizer control switch
15 - Left stabilizer control switch

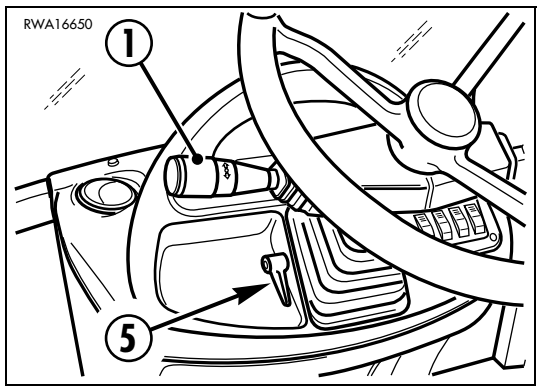

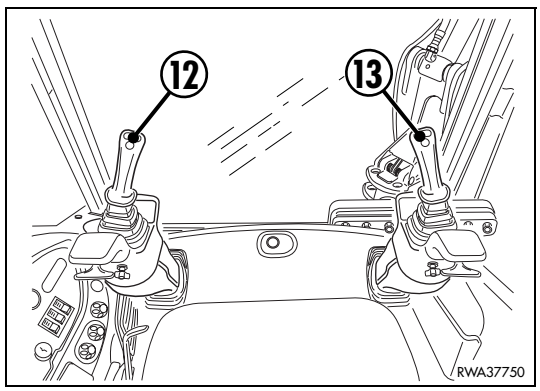

3.3 INSTRUMENTS AND CONTROLS

3.3.1 FRONT INSTRUMENTS

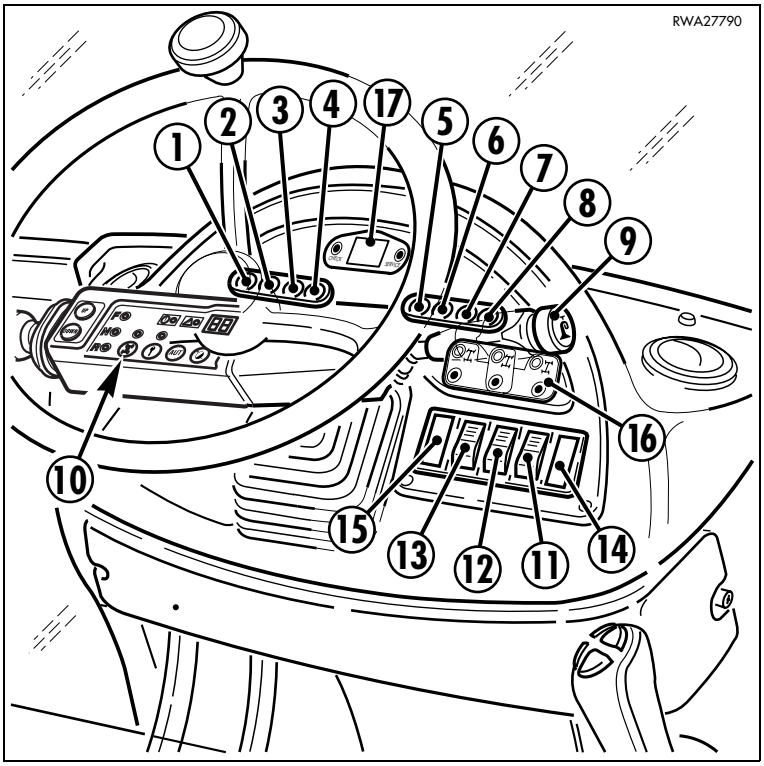

1 - Transmission oil temperature warning light
2 - Engine coolant temperature warning light
3 - Four-wheel drive engagement warning light
4 - Low fuel warning light
5 - Direction indicator warning light
6 - High beam warning light
7 - Parking brake and brake oil level warning light
8 - Warning light available for optional equipment
9 - Direction selector, dimmer switch, horn, blinking
10 - Four-wheel drive push button
11 - Front windshield wiper / washer switch
12 - Front working light switch
13 - Emergency switch (HAZARD)
14 - Switch available for optional equipment
15 - Electric safety valve switch (if installed)
16 - Steering push-button unit
17 - Electronic display

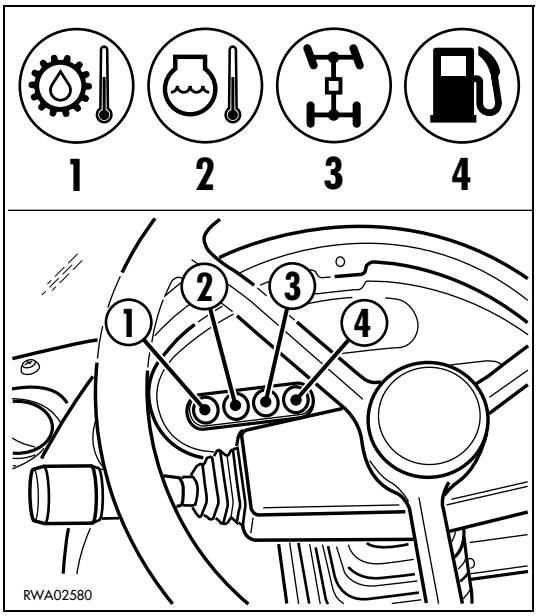

1 - TRANSMISSION OIL TEMPERATURE WARNING LIGHT

This warning light comes on and the acoustic alarm sounds when the transmission oil temperature exceeds the maximum value allowed; when it comes on, immediately stop the machine, shift the gears into neutral and let it cool down with the engine running at about 1200 rpm until the warning light goes out. When the warning light (1) comes on, the operator is warned about the failure also through the electronic display pos. 17.
If this inconvenience occurs repeatedly, have the machine checked and if necessary repaired by an authorized repair shop.

2 - ENGINE COOLANT TEMPERATURE WARNING LIGHT

This warning light comes on and the acoustic alarm sounds when the engine coolant temperature exceeds the maximum value allowed; when it comes on, let the engine idle (1200 rpm) until the warning light goes out. When the warning light (2) comes on, the operator is warned about the failure also through the electronic display pos. 17.
If this inconvenience occurs again, make sure that the radiator is clea

3 - FOUR-WHEEL DRIVE ENGAGEMENT WARNING LIGHT

It comes on when the four-wheel drive is engaged.

4 - LOW FUEL WARNING LIGHT

This warning light comes on when about 17 l. of fuel are left in the tank and therefore it is necessary to refuel as soon as possible.

5 - DIRECTION INDICATOR WARNING LIGHT

This warning light comes on intermittently when the lever (9) or the emergency switch - pos. 13 - are operated.

6 - HIGH BEAM WARNING LIGHT

It comes on when the high beam is operated through the dimmer switch - pos. 9.

7 - PARKING BRAKE AND BRAKE FLUID LEVEL WARNING LIGHT

This warning light indicates that the parking brake has been applied or that the brake fluid level is low; if it comes on for the latter cause, stop the machine and top up the brake fluid.
If this occurs repeatedly, check the braking system in order to eliminate any leakage.

8 - WARNING LIGHT AVAILABLE FOR OPTIONAL EQUIPMENT

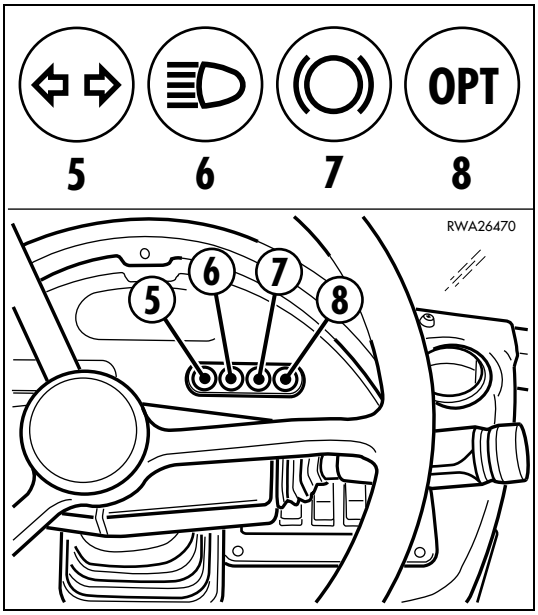

9 - DIRECTION SELECTOR, DIMMER SWITCH, HORN, BLINKING

This is a combined switch positioned under the steering wheel, on the right side, and controls the direction indicators, the lights and the horn. By rotating it one click anticlockwise it is possible to switch on the parking lights and the instrument lighting, while with two clicks the low beam comes on.
It is possible to switch over from low beam to high beam by pushing the lever downwards (position D), while the lights blink when the lever is pushed upwards (position E).
Push the lever forward (position A) to signal left, pull the lever backward (position B) to signal right.
Press (C) to sound the horn.

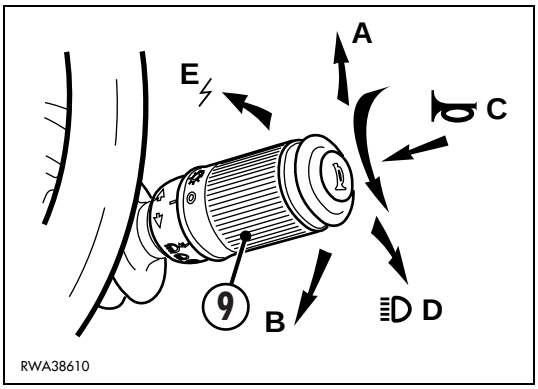

10 - FOUR-WHEEL DRIVE PUSH BUTTON

This button is positioned on the transmission control and when pressed it selects the 4WD (four-wheel drive), which is signalled by the coming on of the relevant green led.
In this position also the warning light pos. 3 comes on.
When the button is pressed again (led off), it disconnects the four-wheel drive while the machine automatically returns to the normal drive.
For further details, see “3.3.5 pos. 1 REVERSING GEAR-GEARSHIFT LEVER”.

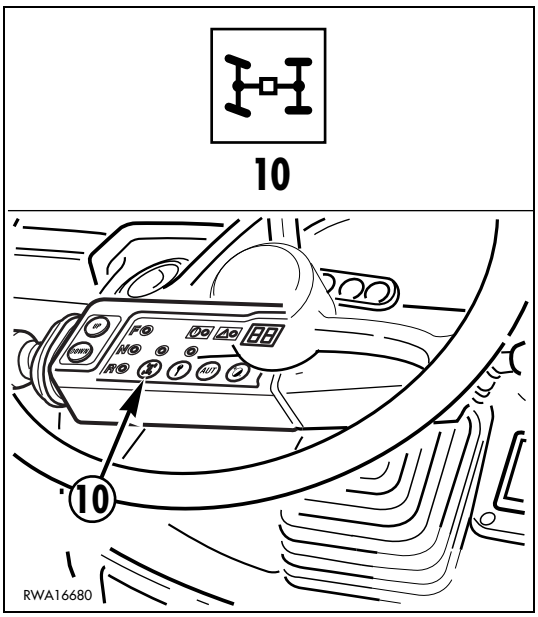

IMPORTANT

- **When travelling at high speed and on roads, disengage the four-wheel drive.**

11 - FRONT WINDSHIELD WIPER / WASHER SWITCH

With the first click it operates the windshield wiper, while with the second click (with automatic return to the first) it operates the windshield washer.

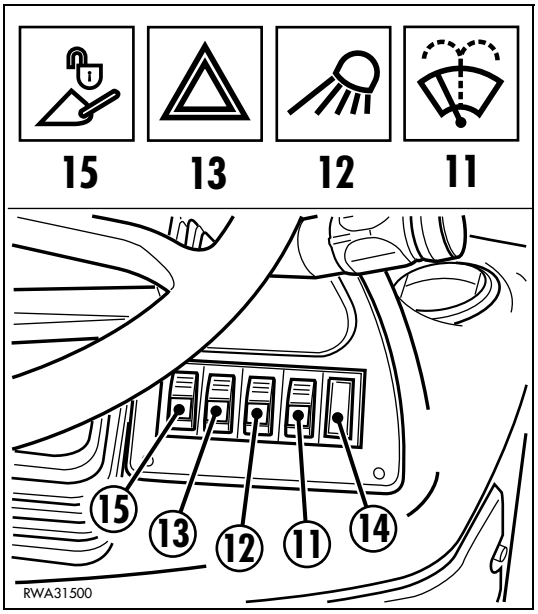

12 - FRONT WORKING LIGHT SWITCH

This switch enables the front working light circuit.

IMPORTANT

- **When travelling on roads, turn off the working lights.**

13 - EMERGENCY SWITCH

This switch simultaneously operates all the direction lights and must be during road travel whenever the machine is temporarily stopped on the roadway or however in anomalous positions.

14 - SWITCH AVAILABLE FOR OPTIONAL EQUIPMENT

15 - ELECTRIC SAFETY VALVE SWITCH (if installed)

This is a two-position switch.
When pressed, it remains in the low position, the relevant red led comes on and the safety valves installed on the cylinders of the front loader are deactivated.
When released, it returns to its original position, the safety valves are activated and at the same time the red led goes out.

- **Always deactivate the electric safety valves when the load stabilizer system “LSS” is operated.**
  For further information regarding the “LSS”, see “6.11 LOAD STABILIZER SYSTEM (LSS)”.

16 - STEERING CONTROL PUSH-BUTTON UNIT

This is a control with microswitches in pairs, giving the opportunity to select from three different steering modes:

A) two-wheel steering

B) all-wheel steering

C) crab steering.

For its use, see “3.3.5 pos. 2 STEERING SELECTOR UNIT”.

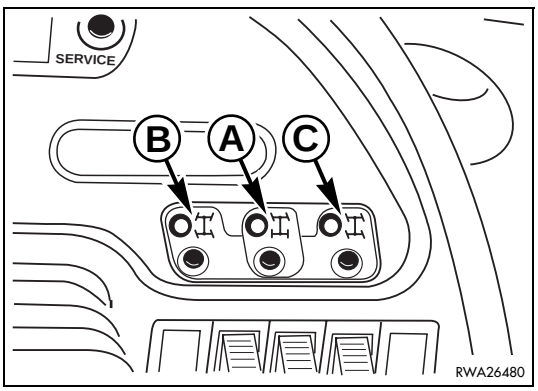

17 - ELECTRONIC DISPLAY

The electronic display (17) shows the alignment of the front and rear axles, besides managing and displaying several functions, at the same time controlling them completely and effectively:

- speedometer, with indication in km/h and Mp/h;
- situation of the routine maintenance operations to be performed every 500, 1000 and 2000 hours;
- maintenance and emergency indicators;
- other messages.

After introducing the key and switching on the board, that is, making one click only with the key (in this phase the engine is off), it is possible to display all the following information in sequence, by pressing the CHECK button (1) only with the rear axle aligned.

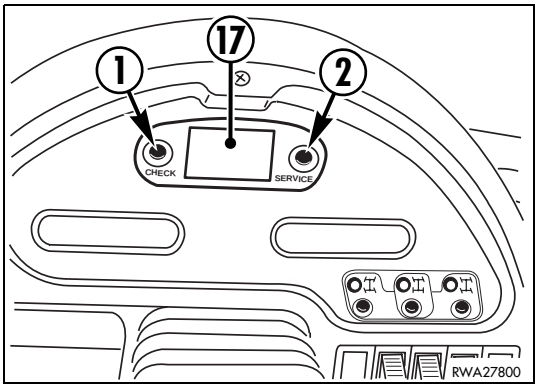

1 - Partial service hours

Storage and display of the service hours between two successive maintenance operations. To set the number of service hours to zero, keep the SERVICE button (2) pressed for approximately 5 seconds.

The display (16) will show some symbols with the respective service hours, in the following order:

- Engine oil.
- Engine oil filter.
- Fuel filter.
- Air cleaner.
- Transmission filter.
- Brake oil.
- Coolant.
- Hydraulic oil.

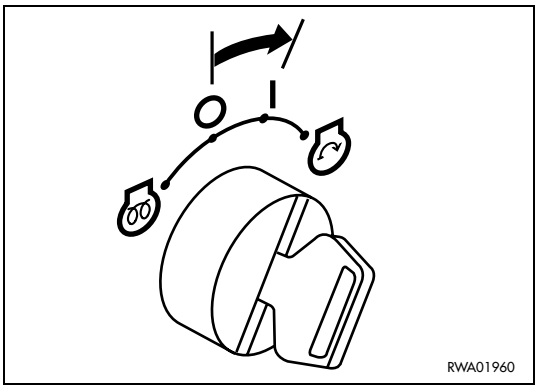

IMPORTANT

- **Set the service hours to zero only after performing the required maintenance operation.**

2 - Types of oil

Indication of the type of oil used in the machine, specifically for the following systems:

- Engine oil and transmission oil (see Fig. A)
- Brake oil and hydraulic oil (see Fig. B)

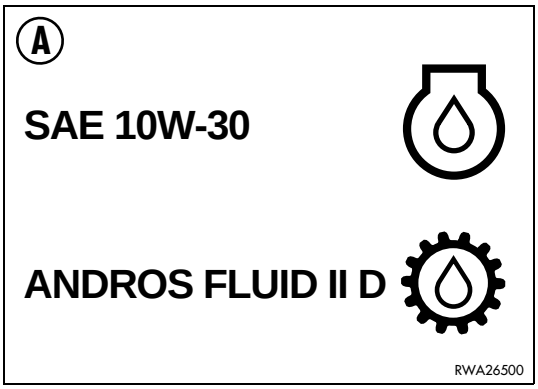

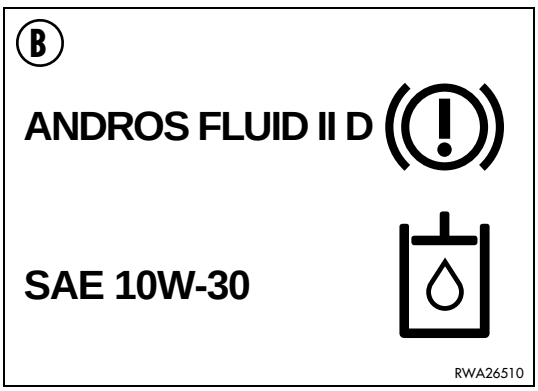

3 - Maintenance plan

The display shows the maintenance plan in the following order:

- Maintenance operations to be performed every 500 hours (engine oil, fuel filter, air cleaner and engine oil filter).

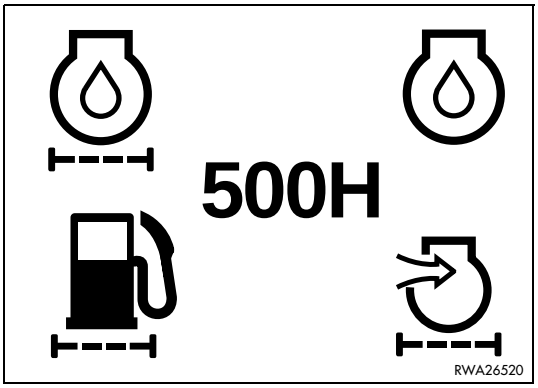

- Maintenance operations to be performed every 1000 hours (transmission filter).

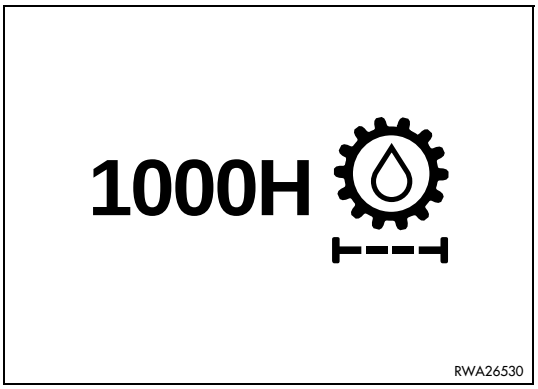

- Maintenance operations to be performed every 2000 hours (engine coolant, hydraulic oil and brake oil).

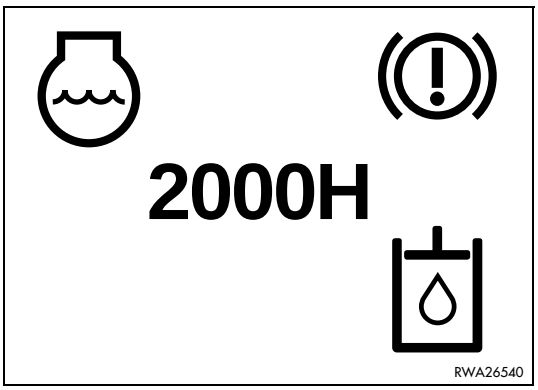

When a maintenance alarm is sent out, the display (17) keeps showing the speedometer together with the ”CHECK” signal (see figure A or B).

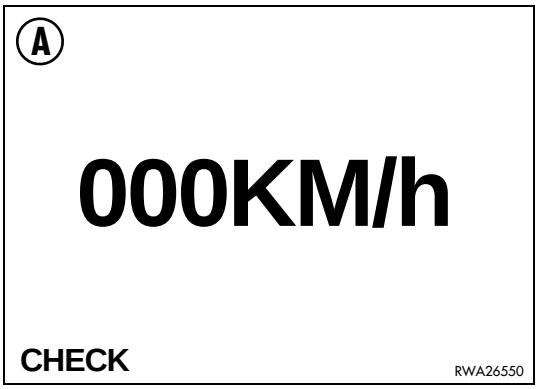

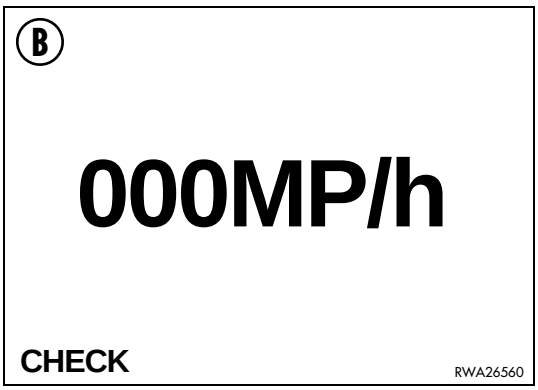

By pressing the CHECK button (1), it is possible to display what maintenance operation must be performed.
If more than one maintenance operation must be performed at the same time, they can be displayed in sequence by pressing the SERVICE button (2):

- Every 500 hours:
  - Engine oil (Fig. C)
  - Engine oil filter (Fig. D)
  - Fuel filter (Fig. E)
  - Air cleaner (Fig. F)

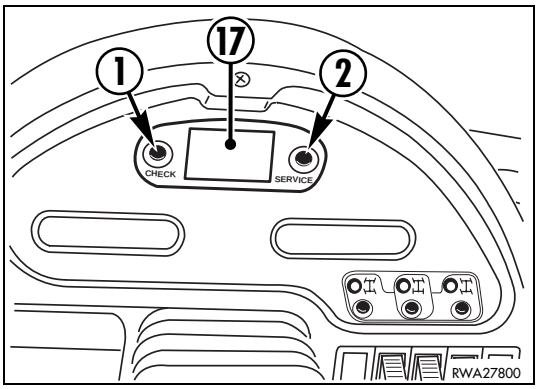

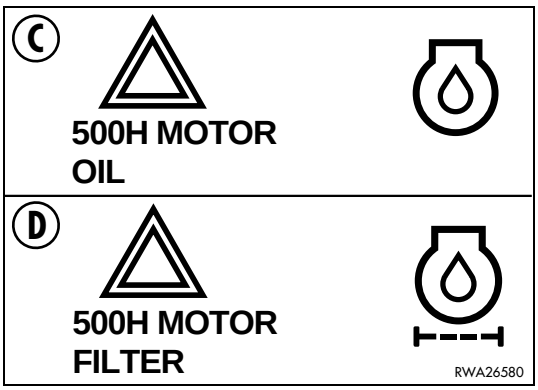

- Every 1000 hours:
  - Transmission filter (Fig. G)
- Every 2000 hours:
  - Brake oil (Fig. H)
  - Coolant (Fig. I)
  - Hydraulic oil (Fig. L).

To return to the speedometer, press the CHECK button (1) again. Once the required maintenance operation has been carried out, it is possible to reset the partial service hours for that specific maintenance operation, by showing the operation on the display (17) and keeping the SERVICE button (2) pressed for approximately 5 seconds.
The partial number of hours is thus cancelled and the count starts again, for each maintenance function, from the moment in which the reset of the alarm is carried out.

IMPORTANT

- **Set the service hours to zero only after performing the required maintenance operation.**
- **The maintenance alarms must be accompanied by the flashing of the danger symbol (⚠).**

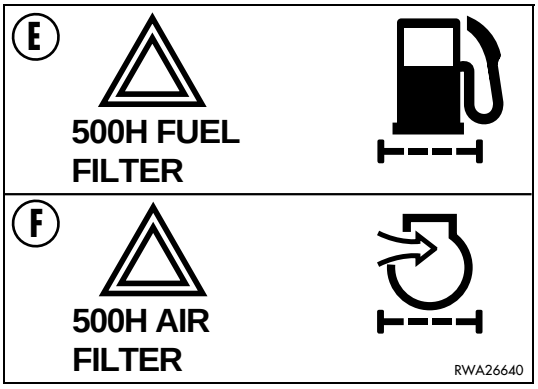

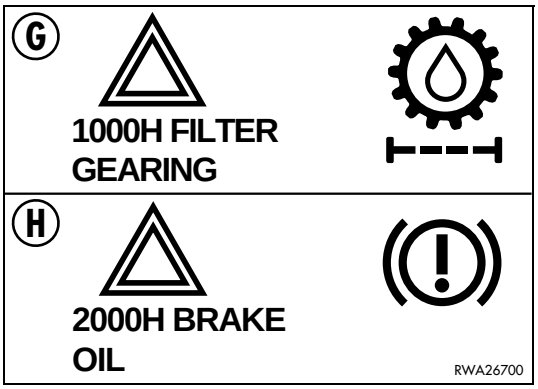

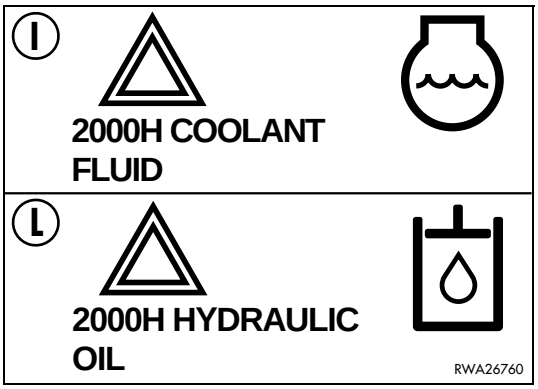

4 - Language selection

It is possible to display the list of all the languages available, in the following order:

- Italian
- English
- German
- French
- Spanish
- Portuguese

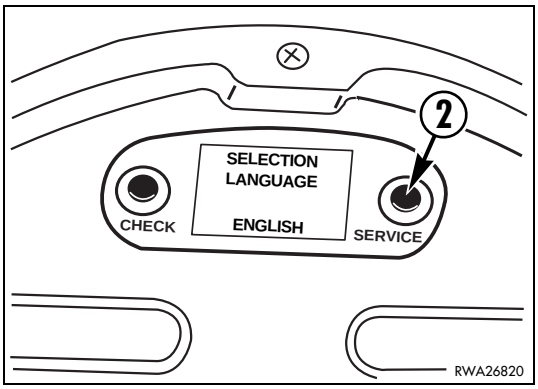

IMPORTANT

- **To select a language, move to the desired page by pressing the SERVICE button (2).**

5 - Speed indication

Display of the machine speed during travel.
According to the traffic rule in force, it is possible to choose from two units of measurement:

- Km/h
- Mp/h

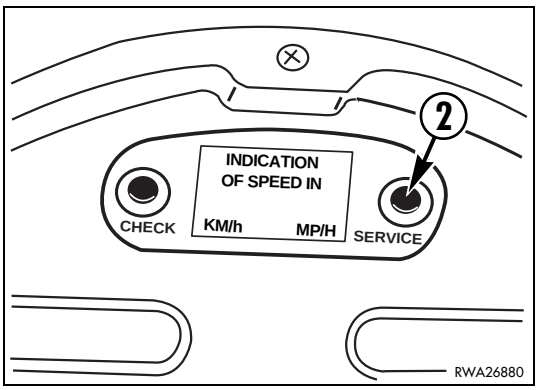

IMPORTANT

- **To select one of the two units of measurement, move to the desired page by pressing the SERVICE button (2).**

6 - Tyre pressure

Display of the correct tyre pressure for the front and rear tyres. The pressure measured when checking the tyres must correspond to that indicated on the display.

For further information on the tyre pressure check, see “4.7.6.e CHECKING THE TYRE PRESSURE” and “5.1.3 TECHNICAL CHARACTERISTICS”.

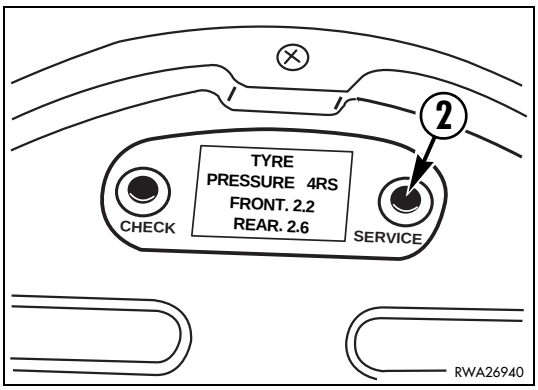

IMPORTANT

- **On this screen page it is possible to select the tyre circumference by keeping the SERVICE button (2) pressed for approximately 10 seconds. The selection of the circumference depends on the type of tyre installed on the machine.**
  Therefore, for a correct selection of the circumference value, keep to the following indications:
  - with tyre 16.9-24 = wheel 3.819
  - with tyre 16.9-28 = wheel 4.144
  To carry out a selection, move to the desired page by pressing the SERVICE button (2).

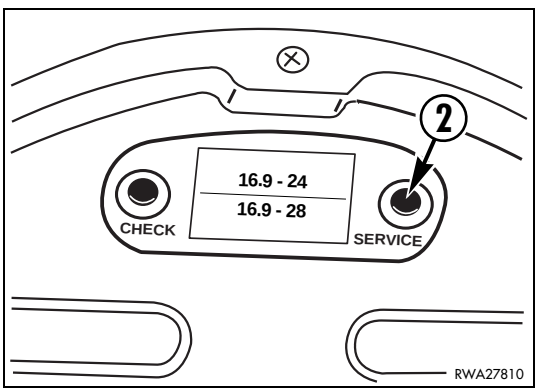

7 - Operation alarms

Besides the functions described before, the display (17) has also the function to warn the operator in case of problems on some machine components.
These alarms take priority over any other message displayed (maintenance alarms) and are accompanied by an acoustic signal.

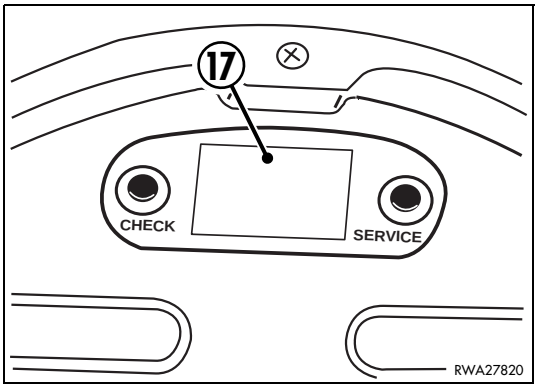

When the machine is started, while the steering system performs the tests on the solenoid valves, the writing ”KOMATSU” appears for a few seconds on the display (17).

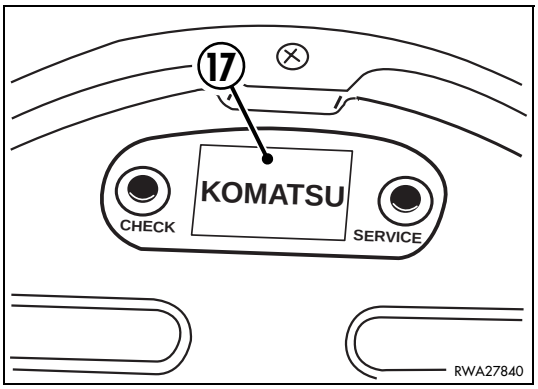

Successively, if no malfunction has been found, the speedometer appears on the display (17) (see Figure A or B).

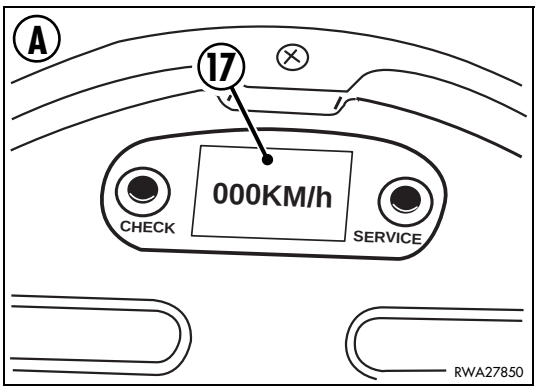

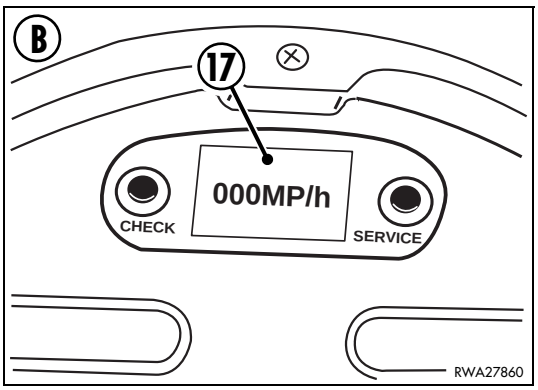

If a malfunction should be found in the steering solenoid valves, the relevant message will appear on the display (17) and an acoustic signal will be sent forth, according to the solenoid valve presenting the failure.

- Crab steering solenoid valve failure.

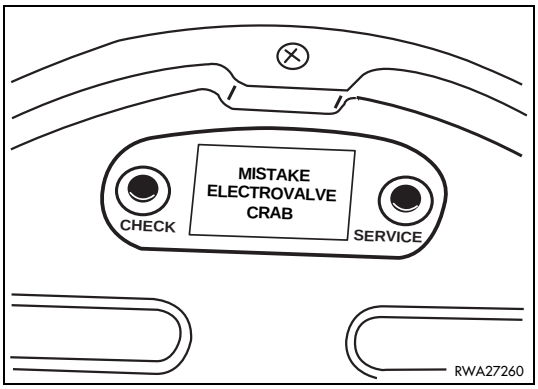

- All-wheel steering solenoid valve failure.

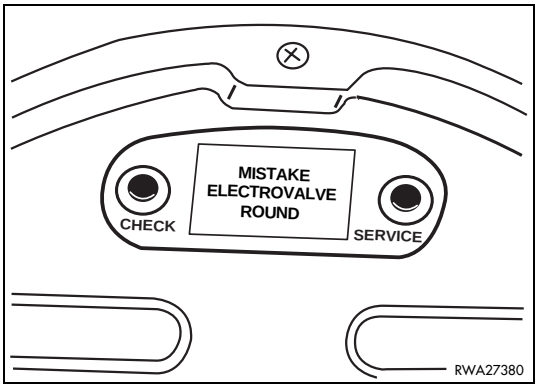

- Four-wheel steering solenoid valve failure.

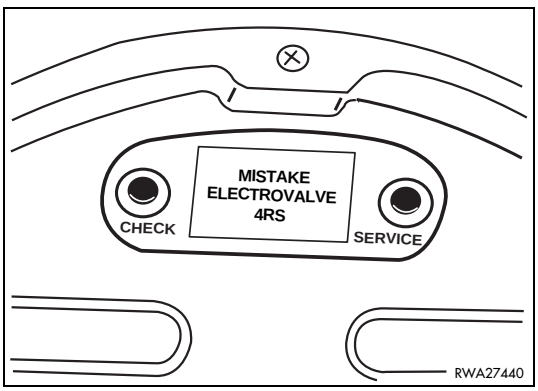

- Two-wheel steering solenoid valve failure.

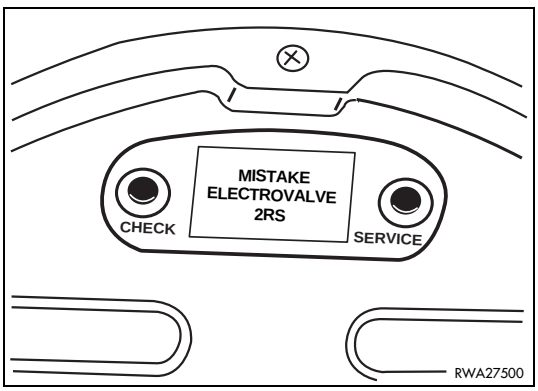

- Rear potentiometer failure

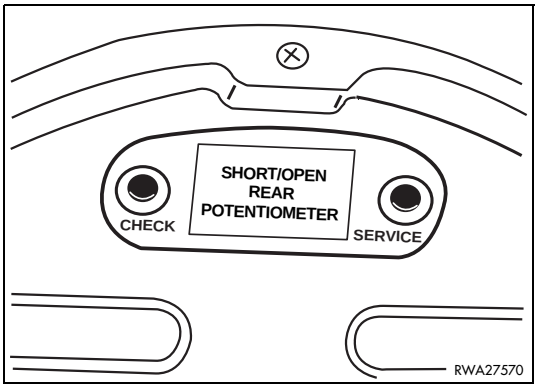

Other operation alarms that can be shown on the display (17) are the following:

- Alternator failure.

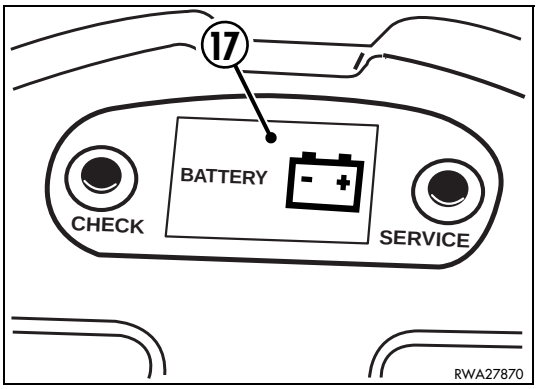

- Insufficient engine oil pressure.

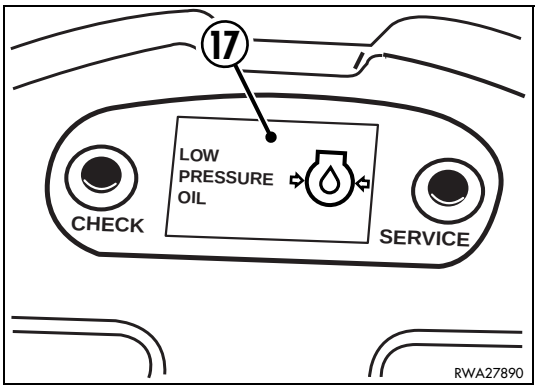

- Maximum coolant temperature.

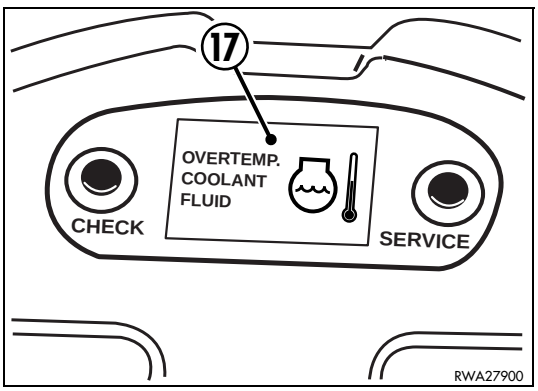

- Air cleaner clogging.

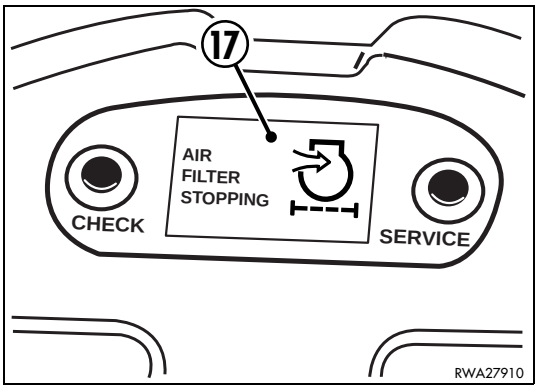

- Converter oil maximum temperature.

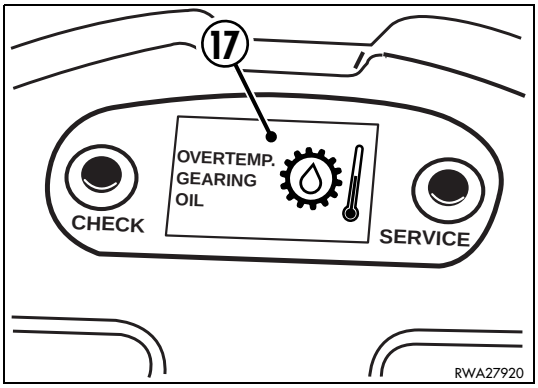

IMPORTANT

- **When an operation alarm is sent forth, stop the machine, engage all the safety locks and carry out the necessary repair.**
- **The acoustic alarm sends out two different sounds: an intermittent sound for the steering alarms and a continuous sound for all the other types of alarm.**
  For further information on the acoustic alarm, see “3.3.2 SIDE INSTRUMENTS pos.10”.

3.3.2 SIDE INSTRUMENTS

3.3.2.1 SIDE INSTRUMENTS (Standard version)

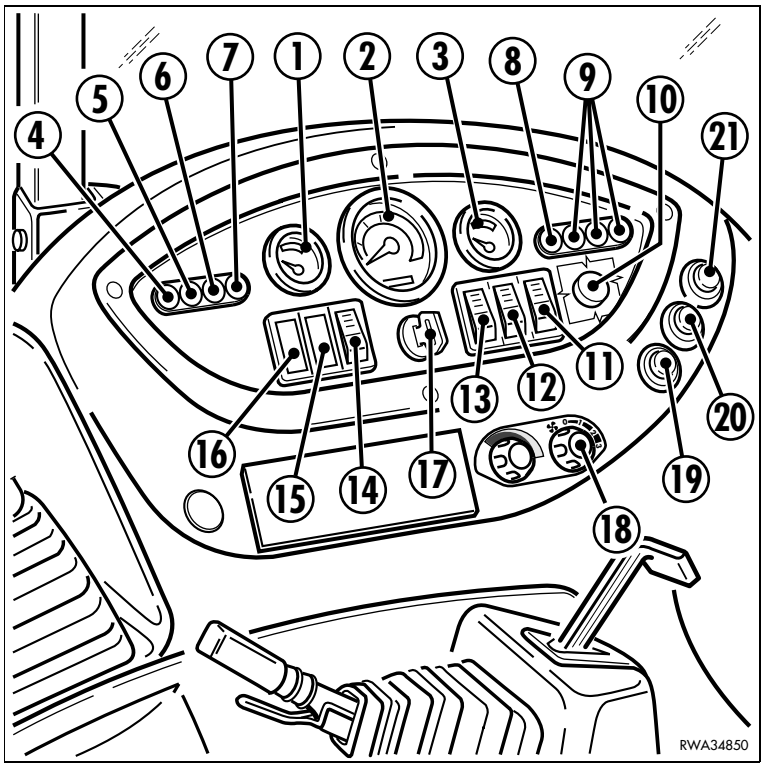

1 - Fuel level indicator
2 - Revolution counter - Hour meter
3 - Engine coolant temperature indicator
4 - Air cleaner clogging warning light
5 - Engine oil pressure warning light
6 - Glow plug preheating warning light
7 - Generator warning light
8 - Engine coolant temperature warning light
9 - Available for optional equipment warning lights
10 - Acoustic alarm
11 - Rear working light switch
12 - Rear windshield wiper / washer switch
13 - Revolving light switch
14 - Rear horn
15 - Air conditioner switch (if provided)
16 - Load stabilizer system switch (if provided)
17 - Ignition switch
18 - Fan switch
19 - Backhoe speed control button
20 - Backhoe boom lock switch
21 - Backhoe sliding lock switch

3.3.2.2 SIDE INSTRUMENTS (Version with servo controls available on request)

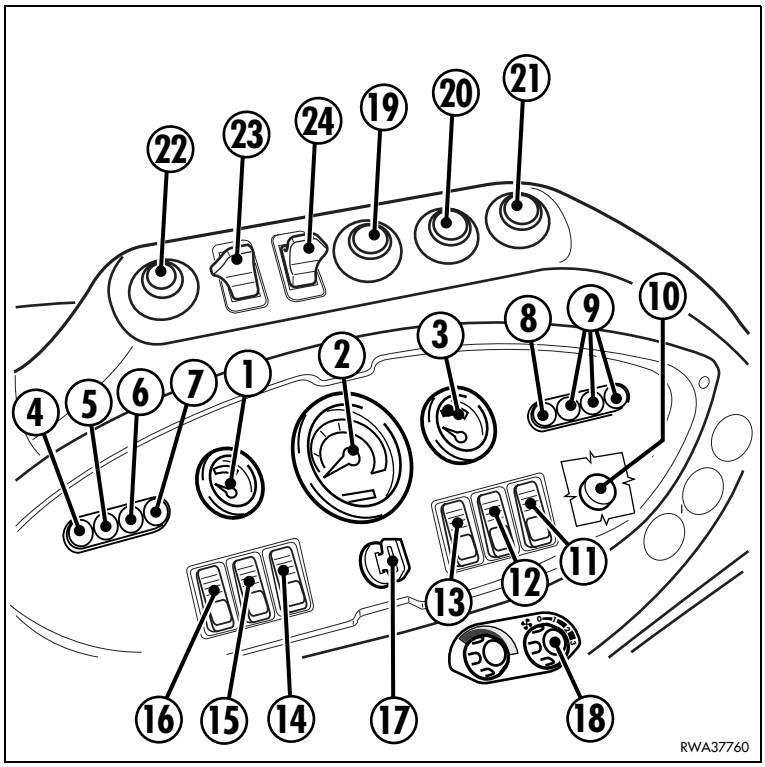

1 - Fuel level indicator
2 - Revolution counter - Hour meter
3 - Engine coolant temperature indicator
4 - Air cleaner clogging warning light
5 - Engine oil pressure warning light
6 - Glow plug preheating warning light
7 - Generator warning light
8 - Engine coolant temperature warning light
9 - Available for optional equipment warning lights
10 - Acoustic alarm
11 - Rear working light switch
12 - Rear windshield wiper / washer switch
13 - Revolving light switch
14 - Rear horn
15 - Air conditioner switch (if provided)
16 - Load stabilizer system switch (if provided)
17 - Ignition switch
18 - Fan switch
19 - Backhoe speed control button
20 - Backhoe boom lock switch
21 - Backhoe sliding lock switch
22 - Backhoe control locking switch (only in the version with servo controls)
23 - Left stabilizer control switch (only in the version with servo controls)
24 - Right stabilizer control switch (only in the version with servo controls)

1 - FUEL LEVEL INDICATOR

It indicates the fuel level in the tank; this indication is given only when the ignition key is in position «**I**» (see pos. 17).

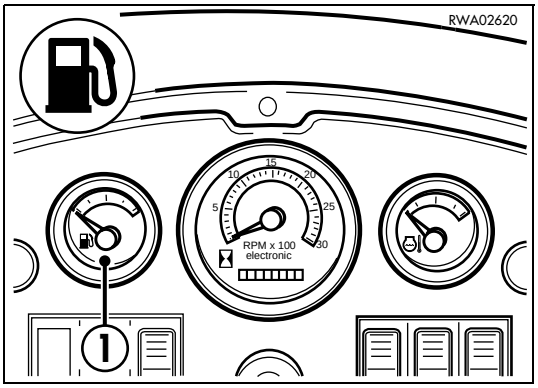

2 - REVOLUTION COUNTER - HOUR METER

This is a combined instrument that indicates the engine running speed with a pointer, while the number of operating hours appears on the lower displays.
The reading is to be considered valid for the calculation of the maintenance intervals.

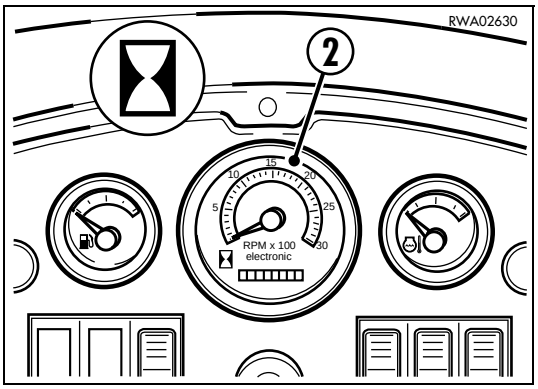

3 - ENGINE COOLANT TEMPERATURE INDICATOR

It indicates the engine coolant temperature, which normally must be included between 80 and 85°C.

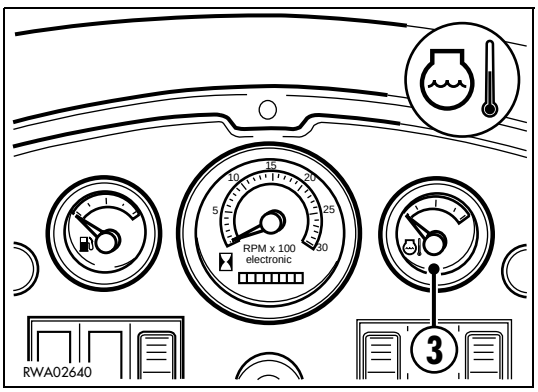

4 - AIR CLEANER CLOGGING WARNING LIGHT

This warning light comes on and the acoustic alarm sounds when the engine air filter needs cleaning. When the warning light (4) comes on, the operator is warned about the inconvenience even through the electronic display positioned on the front dashboard.
See “3.3.1 FRONT INSTRUMENTS” pos. 17).

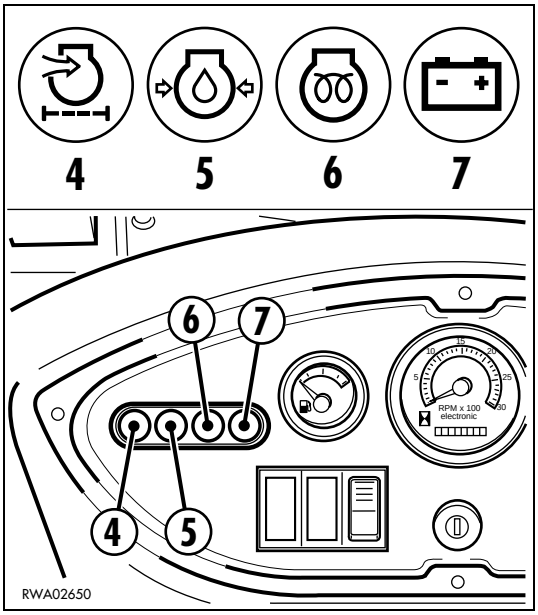

5 - ENGINE OIL PRESSURE WARNING LIGHT

This warning light comes on and the acoustic alarm sounds when the engine is not running and the starting circuit is operated and goes out as soon as the engine lubrication circuit is pressurized. If this warning light does not go out or comes on when the engine is running, stop the machine immediately and try to find the cause of the failure. When the warning light (5) comes on, the operator is warned about the inconvenience even through the electronic display positioned on the front dashboard.
See “3.3.1 FRONT INSTRUMENTS” pos. 17.).

6 - GLOW PLUG PREHEATING WARNING LIGHT

It comes on when the ignition key is turned to position « » for the cold start of the engine (see “3.6.2.2 STARTING WITH COLD ENGINE OR IN COLD CLIMATES”).

7 - GENERATOR WARNING LIGHT

This warning light comes on and the acoustic alarm sounds when the starting circuit is energized and goes out when the engine exceeds the idling rpm; if this warning light remains on even when the engine is running at the normal operating speed, this means that the alternator is not working and the battery is not charged correctly.
When the warning light (7) comes on, the operator is warned about the inconvenience even through the electronic display positioned on the front dashboard. See “3.3.1 FRONT INSTRUMENTS” pos. 17.

8 - ENGINE COOLANT TEMPERATURE WARNING LIGHT

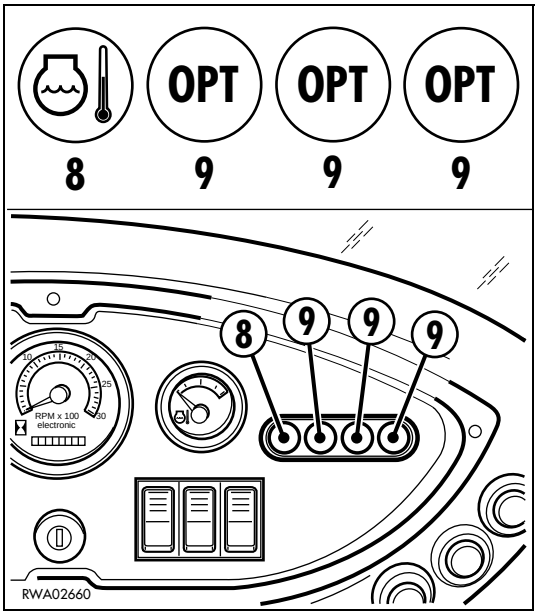

This warning light comes on and the acoustic alarm sounds when the engine coolant temperature exceeds the maximum value allowed; in this case, lower the engine speed to idling (approximately 1200 rpm) and wait until it stops. When the warning light (8) comes on, the operator is warned about the inconvenience even through the electronic display positioned on the front dashboard.
See “3.3.1 FRONT INSTRUMENTS” pos. 17.

9 - WARNING LIGHTS AVAILABLE FOR OPTIONAL EQUIPMENT

10 - ACOUSTIC ALARM

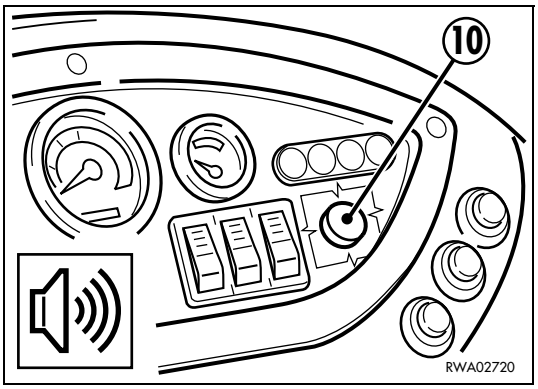

This alarm starts when the circuits are energized by means of the ignition key (by turning it to position «**I**») and is automatically disconnected when the engine starts.
The sounding of the continuous alarm during the use of the machine signals the following:

- Insufficient engine oil pressure.
- Overheating of the engine cooling circuit.
- Overheating of the transmission oil.
- Faulty alternator or worn belt.
- Air cleaner clogged.
- Incorrect position of the seat for travelling.

The sounding of the intermittent alarm during the use of the machine signals the following:

- Real wheels misaligned either with machine moving and with machine at rest.
- Steering solenoid valve malfunction.
- Incorrect gear selection with respect to the selected steering mode.

IMPORTANT

- **Before using the machine, make sure that the acoustic alarm (10) functions perfectly. If the alarm doesn’t work, have the machine checked by your Komatsu Utility Dealer.**

11 - REAR WORKING LIGHT SWITCH

This switch enables the rear working light circuit.

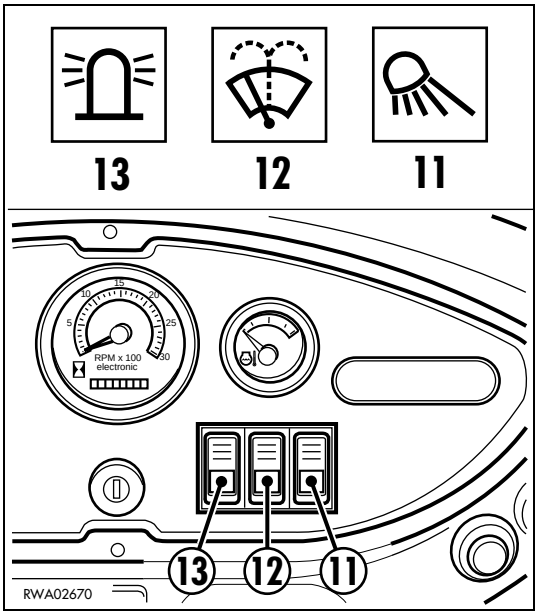

IMPORTANT

- **When travelling on roads, turn off the working lights.**

12 - REAR WINDSHIELD WIPER / WASHER SWITCH

With the first click it operates the windshield wiper, while with the second click (with automatic return to the first) it operates the windshield washer.

13 - REVOLVING LIGHT SWITCH

This switch must be operated when it is necessary to travel on roads and after connecting the light to the outlet (see “3.3.4 pos. 2”).

14 - REAR HORN

It serves to warn the persons in the surrounding area before starting work and in case of danger when working with the back-hoe.

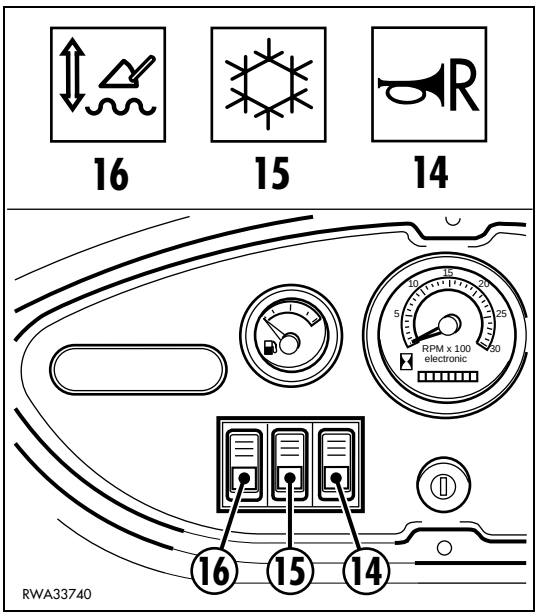

15 - AIR CONDITIONER SWITCH (if provided)

When this switch is pressed, the relevant green led comes on and the air conditioner is started.
For further information on the operation of the air conditioning system, see “3.5.5 AIR CONDITIONER”.

16 - LOAD STABILIZER SYSTEM SWITCH (LSS) (if provided)

When this switch is pressed, the green led comes on and the load stabilizer system is operated.
To recharge the battery and to keep the pressure constant, press the switch. For further information on the LSS system, see "6.11 LOAD STABILIZER SYSTEM (LSS)".

17 - IGNITION SWITCH

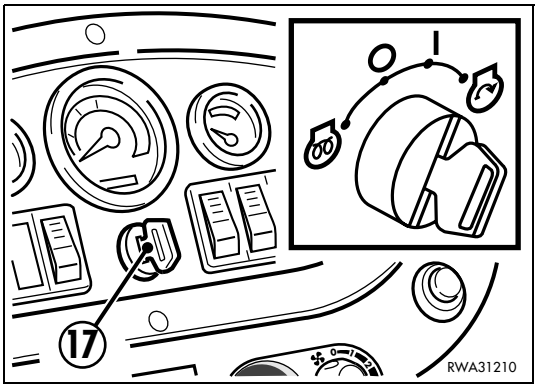

The ignition switch is a rotary key switch with four positions marked with the following symbols: «⏻» - O (OFF) - I - «⏻» (START).
For further details on the use of this switch see “3.6.2 STARTING THE ENGINE”).

18 - FAN SWITCH

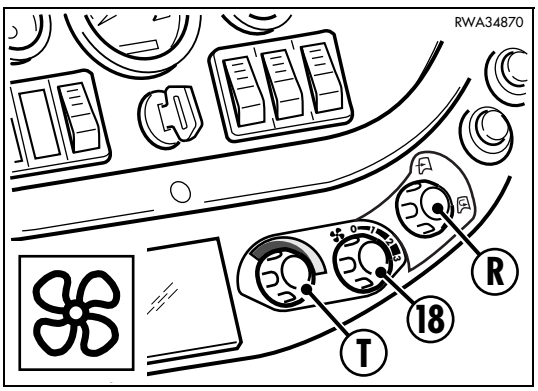

It is a three-speed switch and operates the fan motor. Turn the switch clockwise to increase the fan speed.
If operated after the opening of the cock installed on the heater, it ensures the circulation of warm air and serves as heating switch (see “3.5.4 VENTILATION AND HEATING”).
The temperature of the air conveyed by the heater is regulated through the knob (T).
Turn the knob clockwise to increase the temperature and counterclockwise to reduce it.
If the machine is provided with air conditioning system, the three knobs (T), (18) and (R) can be used to adjust the air flow and therefore to choose the temperature inside the cab.
For further information, see “3.5.5 AIR CONDITIONER”.

19 - BACKHOE SPEED CONTROL BUTTON

This button permits the selection of the oil delivery of the hydraulic pump. Whenever restarted, the machine automatically selects the POWER mode (LED on), even if when it stopped the selected mode was ECONOMY. This position makes it possible to use the maximum oil delivery and is indispensable for a correct use of the backhoe. When the button is pressed (LED off), the ECONOMY operation mode is selected. To return to the POWER mode (LED on), press the button again. The machine passes automatically from the POWER to the ECONOMY operation mode when the forward or the reverse gear are engaged (inverter control lever forward or backward). To return to the POWER operation mode, shift the lever back to the neutral position.

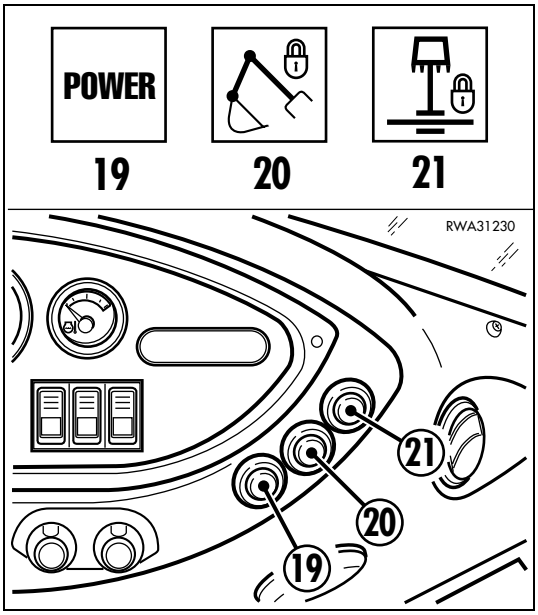

IMPORTANT

- **If the machine is equipped with backhoe servo controls, the switch (19) is positioned on the upper part of the side dashboard, as shown in Fig. A.**

20 - BACKHOE BOOM LOCK SWITCH

This switch is used to couple the safety lock with the boom when the backhoe is not used or when travelling. The safety lock is engaged when the switch is off (led off), while its disengagement takes place when the switch is on (led on). (See “3.3.5 pos. 9”).

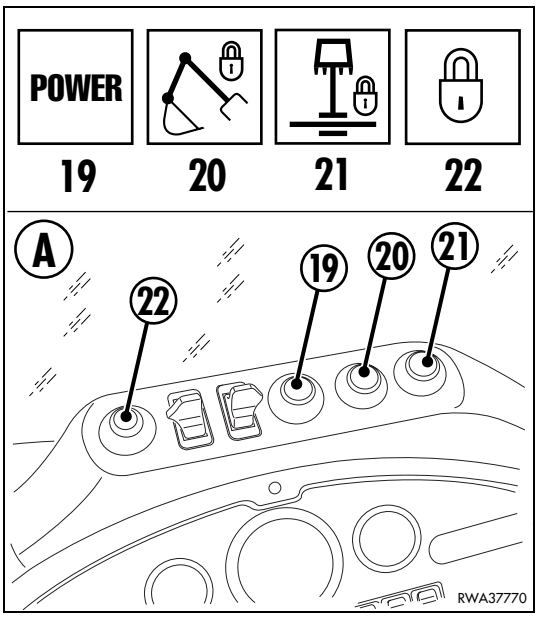

IMPORTANT

- **If the machine is equipped with backhoe servo controls, the switch (20) is positioned on the upper part of the side dashboard, as shown in Fig. A.**
  The specific function of the switch (20) can be disabled through the control locking switch (22).
  For further information, see “22 - CONTROL LOCKING SWITCH (Version with servo controls)”.

21 - BACKHOE SLIDING LOCK SWITCH

This switch has the function to release the backhoe unit from the sliding guides, in such a way as to make it possible to change the position of the backhoe with respect to the machine. The backhoe unit is generally locked on the guides and the switch is not operated (led off). When pressed, the switch comes on and releases the unit from the guides, thus allowing the backhoe to slide; once the desired position has been reached, press the switch again to lock the backhoe unit (led off).

IMPORTANT

- **If the machine is equipped with backhoe servo controls, the switch (21) is positioned on the upper part of the side dashboard, as shown in Fig. A.**
  The specific function of the switch (21) can be disabled through the control locking switch (22).
  For further information, see “22 - CONTROL LOCKING SWITCH (Version with servo controls)”.

22 - BACKHOE CONTROL LOCKING SWITCH (Version with servo controls only)

This switch has the specific function to disable all the backhoe controls and this function must always be activated when the backhoe is not used or when travelling on roads. To activate the control locking function, press the switch (22). The actual locking of the controls is indicated by the coming on of the corresponding warning light. To deactivate this function, press the switch (22) again until the corresponding warning light goes out. The backhoe control locking function is automatically activated at each start of the machine and is signalled by the coming on of the corresponding warning light. For further information on the operation of this switch, see “3.3.5.2 MACHINE CONTROLS (Version with servo controls)” pos. 26.

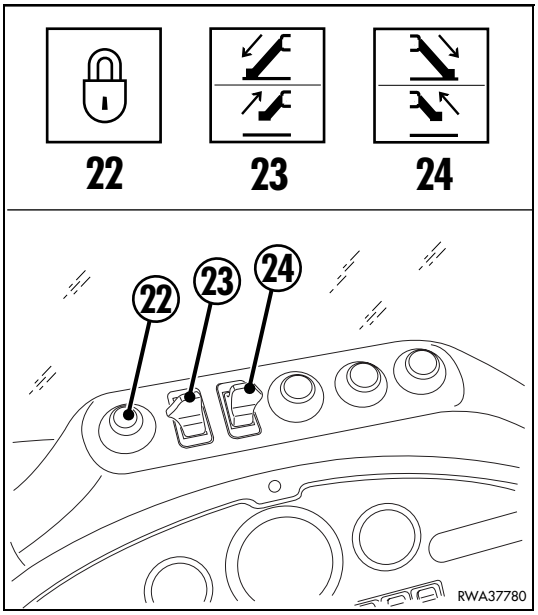

23 - LEFT STABILIZER CONTROL SWITCH (Version with servo controls only)

This switch controls the lifting and lowering of the left stabilizer. Push the switch (23) towards the outside of the cab to lower the left stabilizer. To lift the stabilizer, pull the switch (23) towards the inside of the cab. The function of the switch (23) can be disabled by means of the backhoe control locking switch (22). For further information on the operation of the stabilizers, see “3.3.5.2 MACHINE CONTROLS (Version with servo controls)” pos. 17.

24 - RIGHT STABILIZER CONTROL SWITCH (Version with servo controls only)

This switch controls the lifting and lowering of the right stabilizer. Push the switch (24) towards the outside of the cab to lower the right stabilizer. To lift the stabilizer, pull the switch (24) towards the inside of the cab. The function of the switch (24) can be disabled by means of the backhoe control locking switch (22). For further information on the operation of the stabilizers, see “3.3.5.2 MACHINE CONTROLS (Version with servo controls)” pos. 18.

3.3.3 PUSH BUTTONS ON THE FRONT LOADER CONTROL LEVER

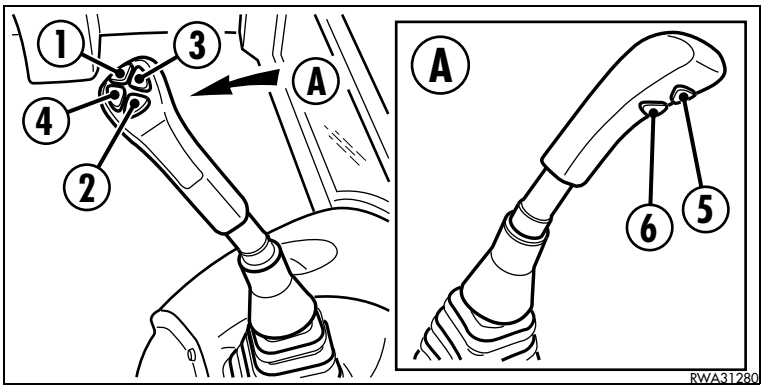

1 - Declutch push button
2 - Available push button
3 - 4in1 bucket opening push button
4 - 4in1 bucket folding push button
5 - Front loader speed control push button
6 - KICK-DOWN push button

1 - DECLUTCH PUSH BUTTON

This push button is used to transform all the engine power into hydraulic power for the lifting of materials.
(See “3.3.5 pos. 11 DECLUTCH CONTROL”).

2 - AVAILABLE PUSH BUTTON

3 - 4IN1 BUCKET OPENING PUSH BUTTON

Press the push button to open the bucket; when the push button is released, the bucket stops (see “3.3.5 pos. 12 4IN1 BUCKET OPENING CONTROL”).

4 - 4IN1 BUCKET FOLDING PUSH BUTTON

Press the push button to fold the bucket; when the push button is released, the bucket stops (see “3.3.5 pos. 13 4IN1 BUCKET FOLDING CONTROL”).

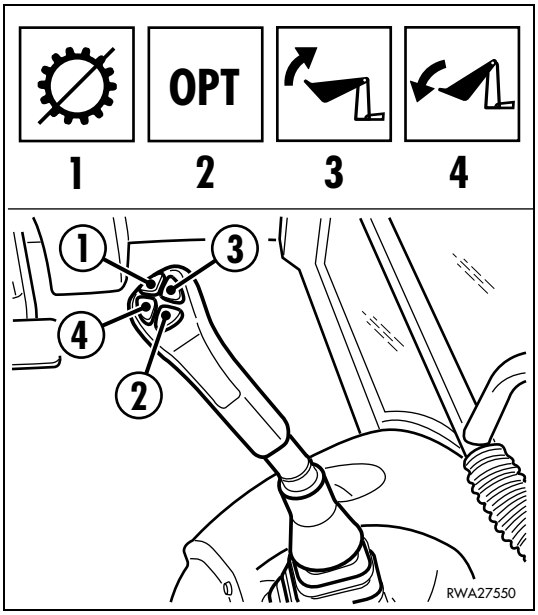

5 - FRONT LOADER SPEED CONTROL PUSH BUTTON

The front loader movement speed can be increased by means of this push button.

6 - KICK-DOWN PUSH BUTTON

This is a pulse push button connected with the electronically-controlled gearshift.
It selects the 1st gear from the 2nd gear or vice versa and keeps them engaged (see “3.3.5 pos. 6 KICK-DOWN PUSH BUTTON”).

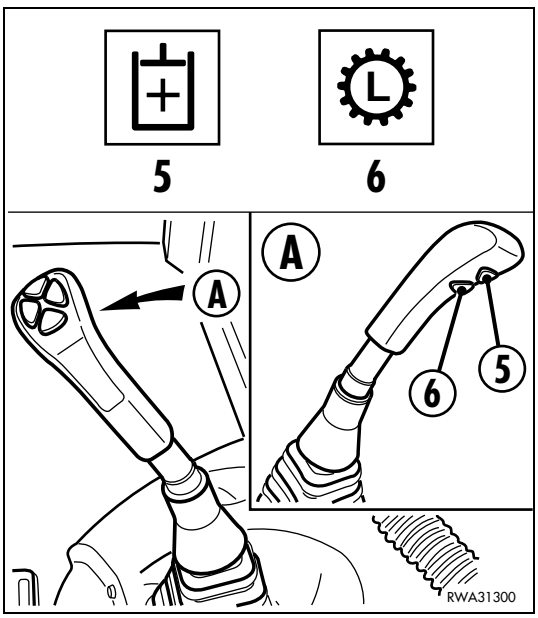

3.3.4 ELECTRICAL ACCESSORIES

1 - OVERHEAD LAMP

The overhead lamp is used to check the instruments and the inside of the cab when visibility is scarce.

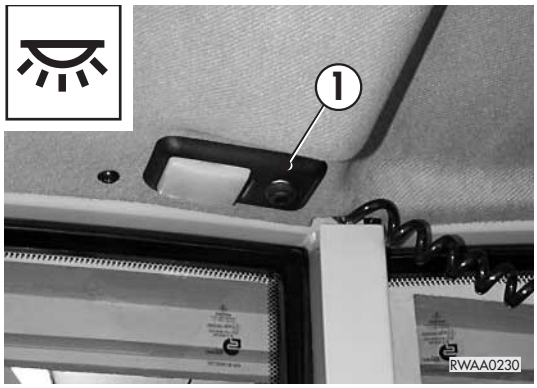

2 - ELECTRIC OUTLET

The electric outlet is a 12V outlet in compliance with the ISO 4165-1979 standard. It is used for the connection of the revolving light and of the inspection lamp when maintenance operations are to be carried out and visibility is scarce and for the connection of the emergency light.
The outlet is powered with the revolving light switch (see “3.3.2 pos. 13”).

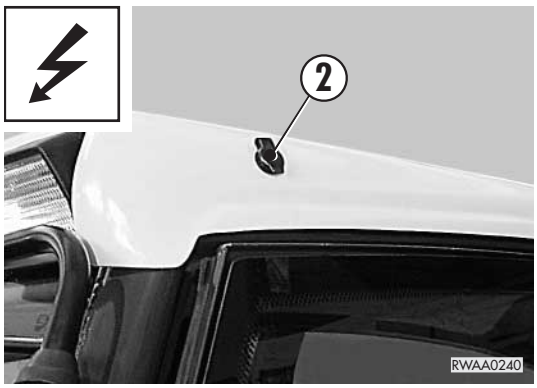

3 - CIGARETTE LIGHTER OUTLET

The outlet (3) is positioned on the lower part of the side dashboard and is powered by a 12V supply. It is used to for the insertion of the cigarette lighter and is perfectly compatible with the cigarette lighters available on the market. The same outlet can also be used to recharge mobile phones; before using it, remove the safety plug (A).

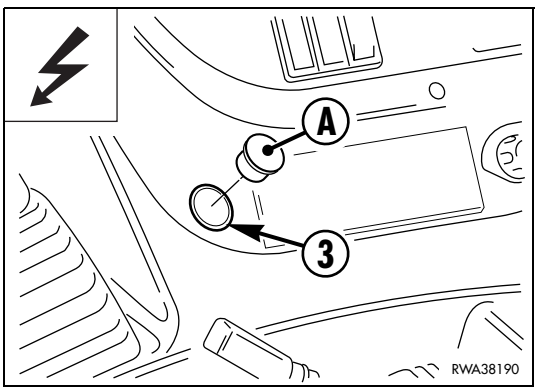

4 - BATTERY DISCONNECTION SWITCH (if installed)

The battery disconnection switch (4) is positioned on the left side of the machine, inside the engine compartment and to reach it it is necessary to open the engine hood (see "3.5.1 ENGINE HOOD"). It is possible to interrupt the passage of current from the battery to the electric system of the machine by rotating the switch anticlockwise and removing it. Always interrupt the passage of current before carrying out any operation on the battery or the electric system and before carrying out any welding operation on the machine. To restore the electric contact, put back the switch and rotate it clockwise.

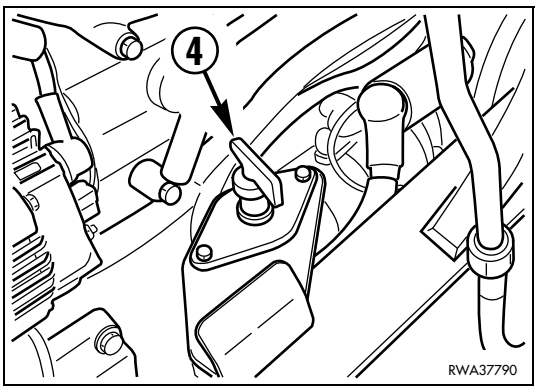

3.3.5 MACHINE CONTROLS

3.3.5.1 MACHINE CONTROLS (Standard version)

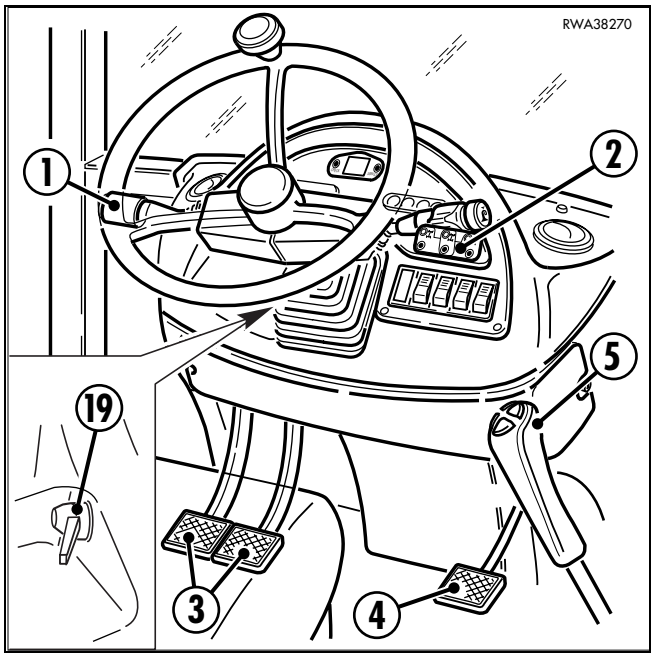

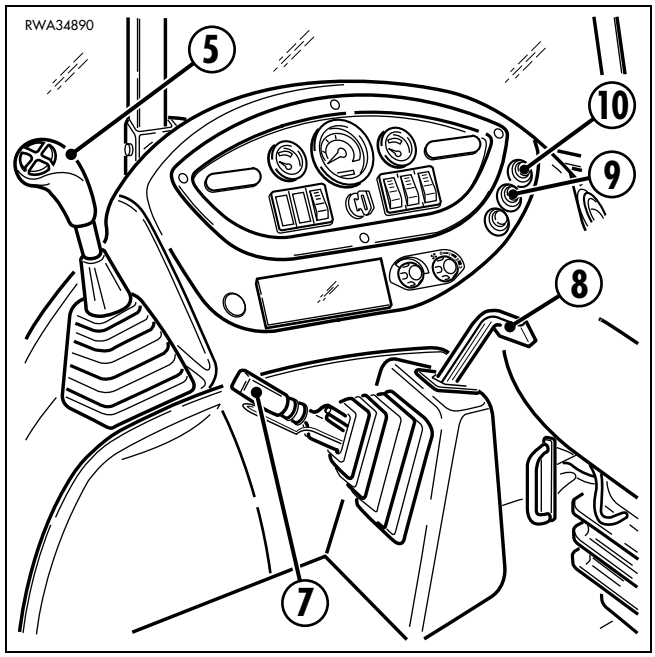

1 - Reversing gear-gearshift lever
2 - Steering selector unit
3 - Brake pedals
4 - Accelerator
5 - Front loader control lever
6 - KICK-DOWN push button
7 - Parking brake
8 - Hand accelerator
9 - Backhoe boom lock control switch
10 - Backhoe sliding lock control switch
11 - Declutch push button
12 - 4in1 bucket opening control push button
13 - 4in1 bucket folding control push button
14 - Front loader speed control push button
15 - Left backhoe control lever
16 - Right backhoe control lever
17 - Left stabilizer control lever
18 - Right stabilizer control lever
19 - Steering wheel adjustment locking lever

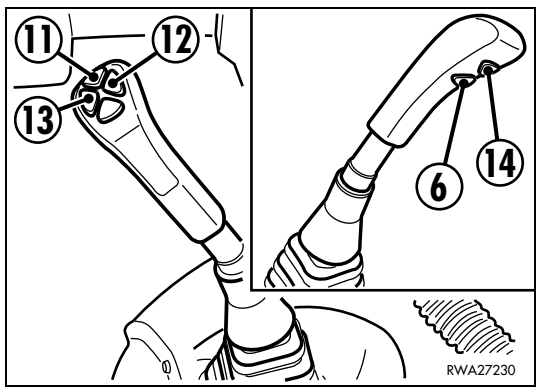

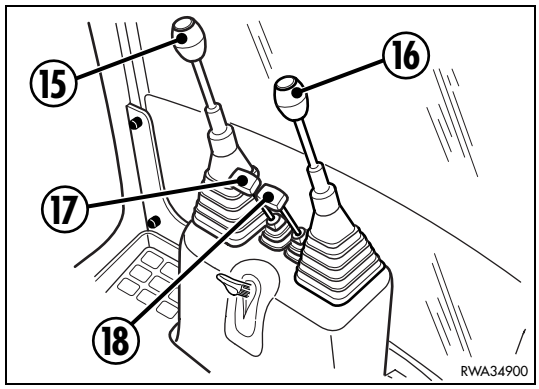

3.3.5.2 MACHINE CONTROLS (Version with servo controls available upon request)

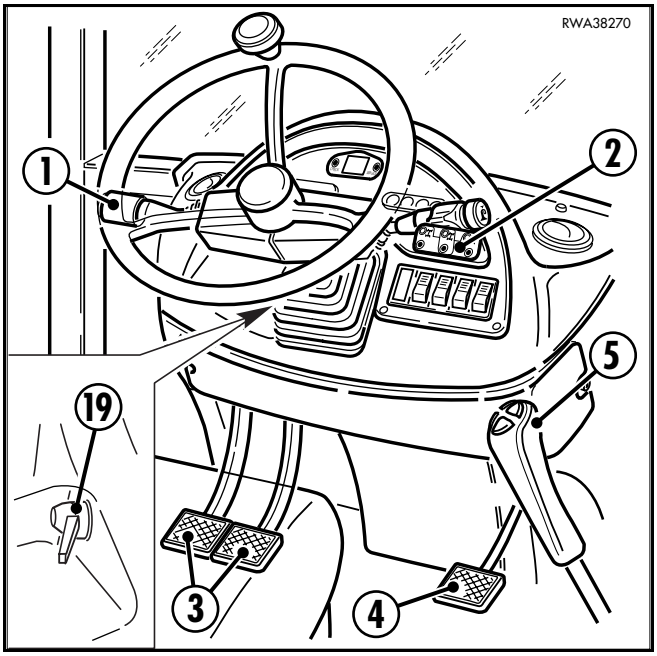

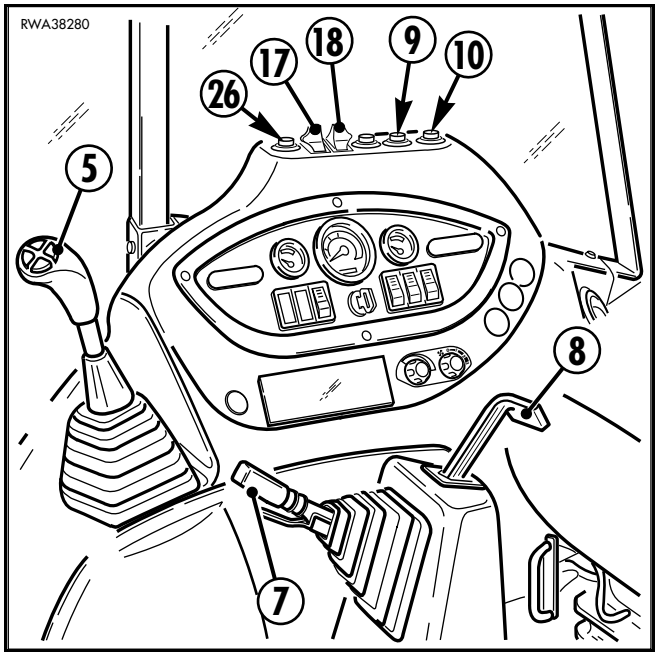

1 - Reversing gear-gearshift lever
2 - Steering selector unit
3 - Brake pedals
4 - Accelerator
5 - Front loader control lever
6 - KICK-DOWN push button
7 - Parking brake
8 - Hand accelerator
9 - Backhoe boom lock control switch
10 - Backhoe sliding lock control switch
11 - Declutch push button
12 - 4in1 bucket opening control push button
13 - 4in1 bucket folding control push button
14 - Front loader speed control push button
15 - Left backhoe control lever
16 - Right backhoe control lever
17 - Left stabilizer control switch
18 - Right stabilizer control switch
19 - Steering wheel adjustment locking lever

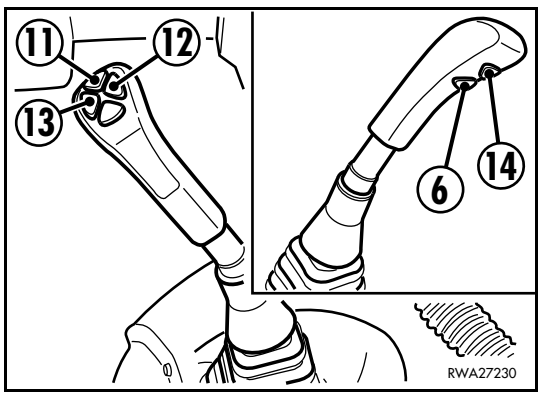

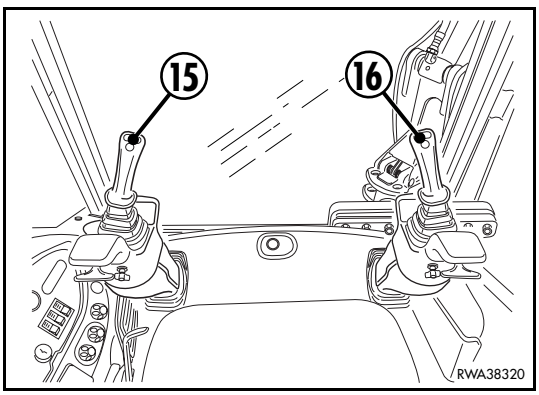

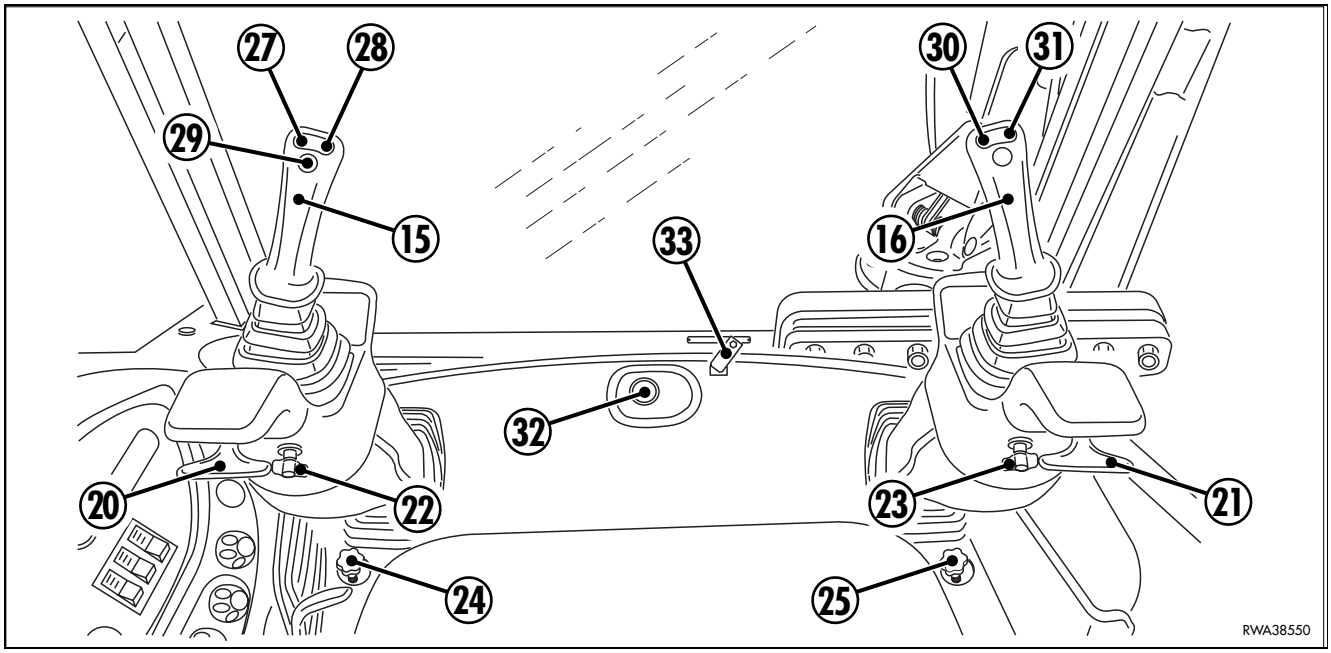

20 - Left joystick locking lever
(only with servo control system)

21 - Right joystick locking lever
(only with servo control system)

22 - Left support adjusting knob
(only with servo control system)

23 - Right support adjusting knob
(only with servo control system)

24 - Left joystick stroke adjusting knob
(only with servo control system)

25 - Right joystick stroke adjusting knob
(only with servo control system)

26 - Backhoe control locking switch
(only with servo control system)

27 - Offset boom left swing control push button
(if installed and only with servo control system)

28 - Offset arm right swing control push button
(if installed and only with servo control system)

29 - Horn push button
(only with servo control system)

30 - Telescopic arm extension control push button
(if installed and only with servo control system)

31 - Telescopic arm retraction control push button
(if installed and only with servo control system)

32 - Hammer control push button
(if installed and only with servo control system)

33 - Pattern change control lever
(if installed and only with servo control system)

1 - REVERSING GEAR-GEARSHIFT LEVER

DANGER

- **Since no mechanical connection is provided between the gearshift and the engine, if the machine is parked on a slope it can move freely even with engaged gears; for this reason, always apply the parking brake, in order to avoid any damage.**
- **The machine is equipped with an acoustic alarm that is activated if the operator, with the engine running, moves the reversing gear lever (1) to position FWD or REV with the seat rotated in any position different from the correct driving position.**
  This is a danger signal, since it is absolutely forbidden to carry out any movement with the machine while working with the backhoe equipment or in any case with the seat rotated by 180° with respect to the regular driving position. Remember that the operator must carry out any movement of the machine while seated in the correct driving position, with locked seat and fastened safety belt.
- **Disconnect the connector of the reversing gear-gearshift lever unit before carrying out electric welding operations on the machine.**
  Non-compliance with this rule may even result in deadly accidents, since the gear storage, gear selection and travel direction selection microcircuits may be irreversibly damaged.

IMPORTANT

- **The engine can be started only with the gearshift lever in neutral position (N).**
- **If the operator deems it necessary, the machine may also be equipped with an acoustic alarm for movements in reverse.**
  This device can be installed on an apposite area on the rear part of the frame (see 2.4.3 CHECKS FOR TRAVELLING IN REVERSE) and before carrying out any movement in reverse it is recommended to make sure that this device is functioning perfectly.
  To check the functionality of this acoustic alarm, proceed as follows:
  - Start the machine (see “3.6.2 STARTING THE ENGINE”)
  - Press the brake pedals.
  - Shift the reversing gear lever (1) to the reverse position R.
  If the alarm doesn’t work, have the machine checked by your Komatsu Utility Dealer.

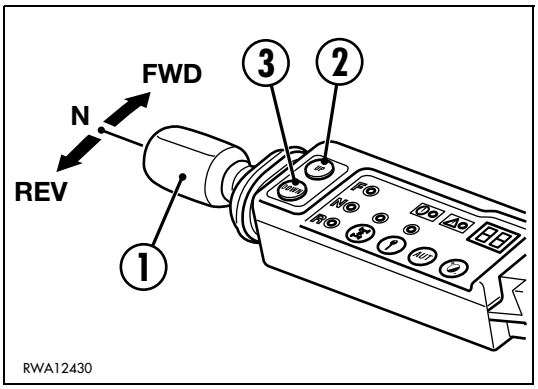

This is a combined control that serves either to shift gears and to reverse.
The gears are engaged by means of the push buttons UP (2) and DOWN (3).
The travelling direction (forward or reverse) is selected by means of the lever (1).
The normal control of the gearshift is ensured by the semiautomatic logic system (SA), with possibility to select the automatic logic system (AU).
The gearshift control is also provided with a safety code to prevent theft.

MAIN FUNCTIONS OF THE GEARSHIFT CONTROL

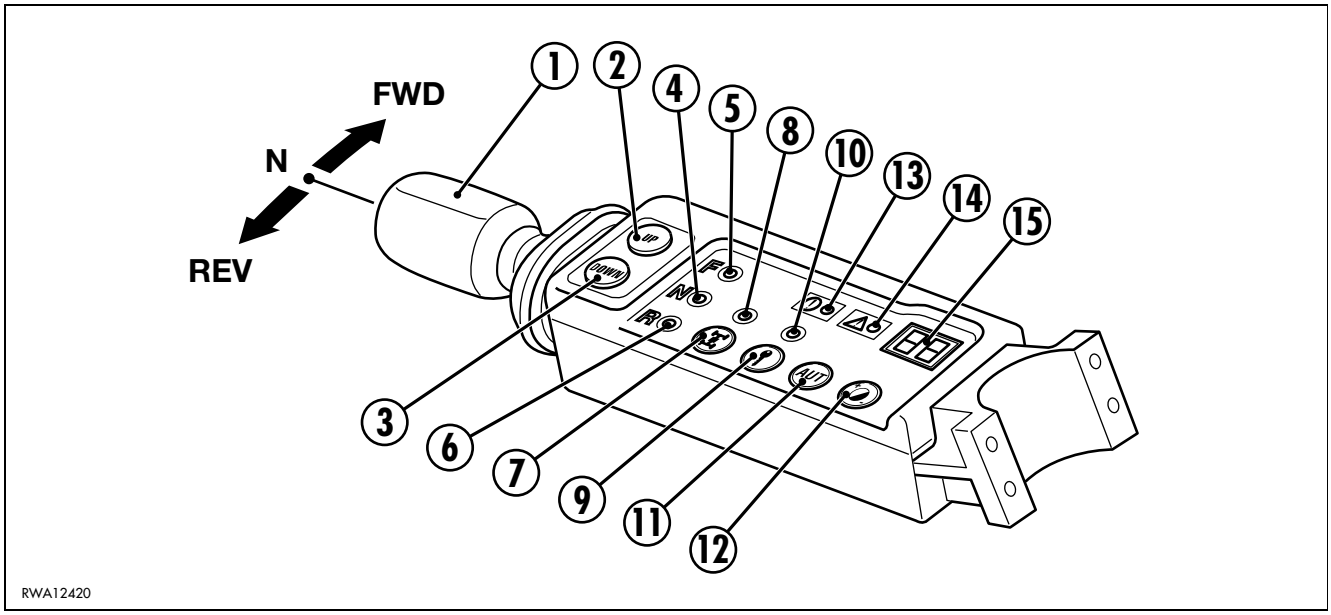

1 - Reversing gear lever for the forward (FWD), reverse (REV) and NEUTRAL (N) selection.

2 - (UP) push button for the upshifting.

3 - (DOWN) push button for the downshifting.

4 - Red led (N); when this led lights up, it indicates that the device preventing the accidental engagement of the FWD or REV is connected or that the reversing gear lever is not in NEUTRAL position during the start.

5 - Green led (FWD); when this led lights up, it indicates that the forward gear has been selected.

6 - Green led (REV); when this led lights up, it indicates that the reverse gear has been selected.

7 - (4WD) push button for the engagement and disengagement of the four-wheel drive only in 1st or 2nd gear.

8 - Green led (4WD); when this led is continuosly on, it indicates that the 4WD push button is pressed and the four-wheel drive is engaged, when it is off, it indicates that the 4WD push button is released and the four-wheel drive is disengaged and when it flashes, it indicates that the 4WD push button is pressed and the four-wheel drive has been temporarily disengaged in 3rd or 4th gear.

9 - Safety code push button for the connection or disconnection of the anti-theft function.
The connection is achieved by pressing the push button for more than 3 seconds with the engine running.

10 - Safety code green led; when this led lights up, it indicates that the anti-theft function is in operation.
When the engine is started again, it is necessary to enter the secret code to be able to move the machine.

11 - Automatic logic connection push button (AUT); the connection of the automatic logic (AUT) is possible only with the engine running and the device preventing the accidental engagement in operation (red led N on).
The connection (AUT) is indicated by the coming on of two red points on the display (15).

12 - (DIM) push button; this button confirms and acquires the anti-theft code, regulates the luminous intensity of the display and of the leds.

13 - Orange configuration led; it flashes when state changes are required in non-optimal field.

14 - Red alarm led; when this led is continuosly on, it indicates serious faults associated to a figure code on the display; when it flashes, it indicates minor faults associated to a figure code on the display.

15 - Red luminous display; it indicates the automatic logic state, the engaged gear, the number relevant to the safety code, the state (88) after the energizing or the entry of a wrong anti-theft code, the diagnostic references in case of anomaly in the transmission or in the electronic control.

STARTING THE ENGINE

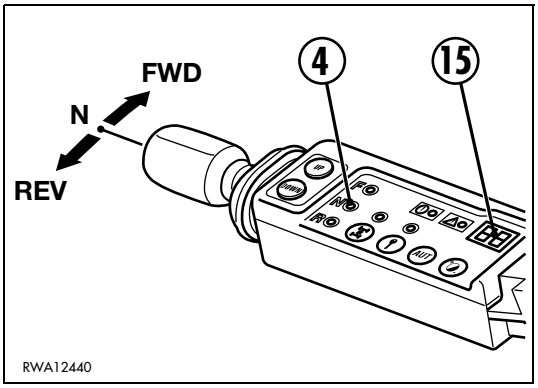

- Shift the lever to the neutral position (N), turn the ignition key to position «I» and make sure that the display indicates (88). Start the engine. After a quick self-test phase, the 2nd gear with semi-automatic logic (SA) will be shown on the display (15).

IMPORTANT

- **If the engine is not started within 20 seconds (programmable) after turning the ignition key to position «I», the electronic system inhibits the control and displays the figure code dP on the display (15); turn the key to position «O» and repeat the starting procedure.**
- **If the lever is not in the neutral position, the red led N (4) comes on and the engine does not start.**
- **If the anti-theft function has been connected before stopping the engine, after the self-test it is necessary to enter the anti-theft code.**

SAFETY CODE PUSH BUTTON (9)

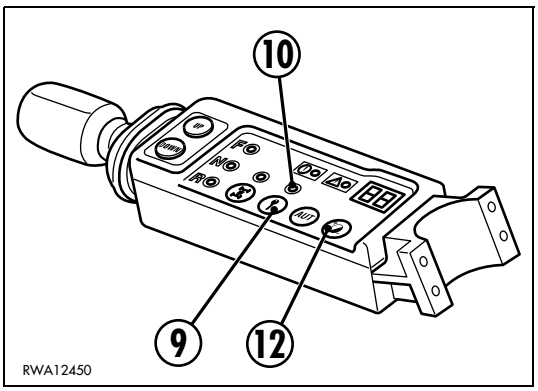

- The anti-theft function is connected by pressing the push button (9) (led 10 on) for at least 3 seconds before stopping the engine (this operation must be carried out by those who know the secret code). If the push button (9) is pressed more than once, the function is connected and disconnected in sequence, with the led (10) coming on and going out alternately.

IMPORTANT

- **After the engine start and the self-test phase, if the anti-theft function has been previously connected (led 10 on), the secret code must be entered by keying the figures in one by one with the UP/DOWN buttons, while the push button 12 (DIM) must be used to confirm the entries.**
- **After the entry of the correct safety code and the successive acoustic confirmation, the anti-theft function is automatically excluded (led 10 off); to connect this function again, press the push button (9) before stopping the engine.**

- The anti-theft code is made up of 4 digits and is connected with the S/N stamped on the casing. The digits are selected by means of the UP/DOWN buttons (09) and each digit is confirmed with the button 12 (DIM). After the 4th digit has been confirmed, the electronic system acquires the code with 3 short beeps (0.3 secs) and the 2nd gear with semiautomatic logic SA is displayed.

IMPORTANT

- **If an INCORRECT digit is confirmed, (88) appears on the display and a long beep (1 sec) is emitted; repeat the operation entering the right code.**
- **After five consecutive incorrect confirmations, stop the engine and start it again.**

DIM PUSH BUTTON (12)

- This push button confirms and acquires the anti-theft code.
  The 4 digits of the secret code must be entered in sequence and each selection must be confirmed by means of the push button 12 (DIM).
- This button is used also to adjust the luminous intensity of the display (15) and of the leds (day/night).
  This function is available after the engine start, the self-test phase and the display of the 2nd gear.

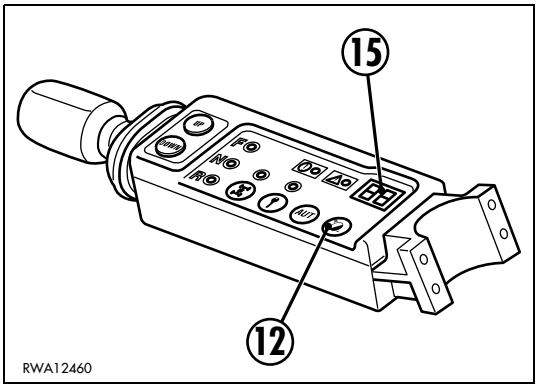

4WD PUSH BUTTON (7)

- This button engages the 4WD in 1st and 2nd gear with the green led (8) on.
  If the 4WD is engaged in 3rd or 4th gear, the led flashes and the function is inhibited.
  If you shift down from 3rd to 2nd gear with the button (7) on, the logic automatically recalls the 4WD function and the green led stops flashing and lights up continuously.

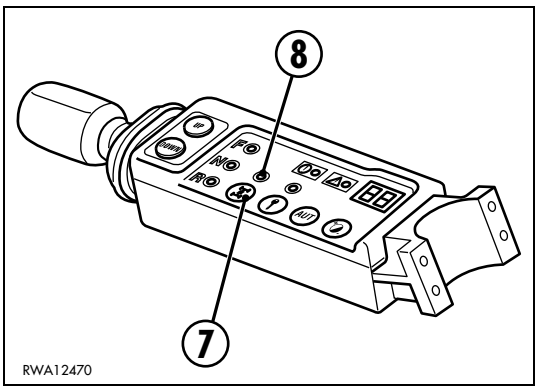

IMPORTANT

- **In case of braking in 3rd or 4th gear, the logic automatically engages the 4WD and the green led (8) lights up without flashing.**

GEAR SHIFTING WITH SEMIAUTOMATIC LOGIC (SA)

- After the engine start, the self-test phase and the entry and confirmation of the antitheft code, if any, the electronic control always sets to the 2nd gear with semiautomatic logic (SA).
  From the 2nd gear, with reversing gear in neutral position, it is possible to engage the 1st, 3rd or 4th gear, by means of the buttons (2 UP) and (3 DOWN); engage the forward or reverse gear within 3 seconds after the release of the device preventing the accidental engagement of the gears.

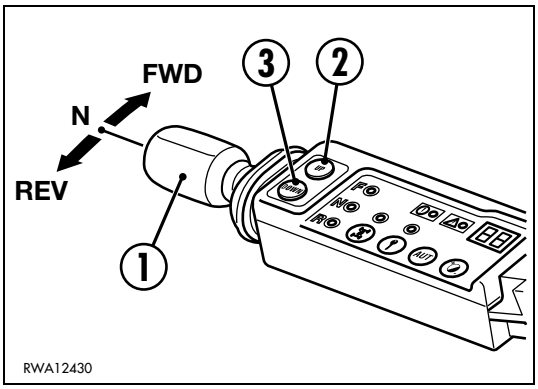

IMPORTANT

- **If the reversing gear lever is shifted to the neutral position (N) when the machine is moving, the electronic control maintains the selected gear, 1st, 2nd, 3rd or 4th and shows them on the display.**
- **If the neutral (N) position is maintained for more than 3 seconds when the machine is not moving, the system signals an EMERGENCY; the electronic control maintains the selected gear (see “DEVICE PREVENTING THE ACCIDENTAL SELECTION OF THE FWD/REV GEAR”).**

- If the gears are shifted at unsuitable speed, the flashing led (13) comes on and this is signalled by a long beep (1 sec).
  The electronic control does not carry out the shifting, but stores the selection.
  When the speed is optimal, the led stops flashing and the selected gear is engaged.
  The electronic control stores only the last selection.
- The upshifting is carried out every 1.5 seconds without checking if the speed is optimal.
  If UP/DOWN is pressed for more than 5 seconds, this is considered as a double selection.
  Pressure on UP/DOWN for more than 0.25 seconds is considered a selection.
- The engaged gear is always shown on the display (15).
- The 4th reverse gear is always disconnected.

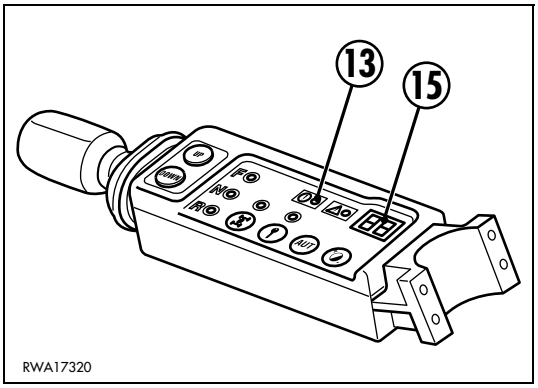

DEVICE PREVENTING THE ACCIDENTAL SELECTION OF THE FWD/REV GEAR

- With the machine at rest and reversing gear lever in neutral position, after 3 seconds the system signals an emergency condition and the red warning light N (4) comes on.
  Press the UP/DOWN buttons again and start again within 3 seconds.

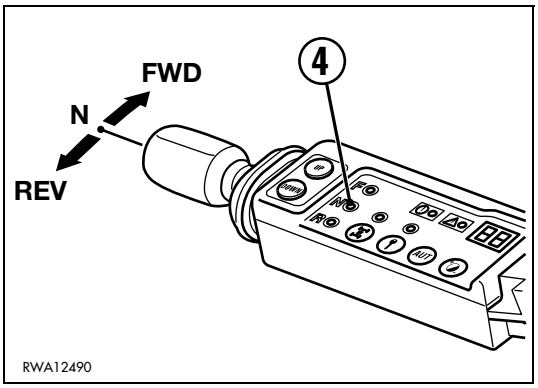

IMPORTANT

- **After the engine start, during the self-test phase and the entry of the safety code, if any, before the 2nd gear is displayed, if the reversing gear lever is accidentally set in FWD or REV position, the logic automatically recalls the emergency function that prevents the accidental engagement from occurring again.**

AUTOMATIC LOGIC PUSH BUTTON (AU)

- This function is enabled by pressing the push button 11 (AUT) once, only with the machine at rest in safety condition (red led N (4) on).
  The automatic function AU is indicated by the coming on of two red points on the display (15).
  If the push button is pressed more than once, the function is enabled and excluded in sequence, with the two red points coming on and going out alternately on the display (15).

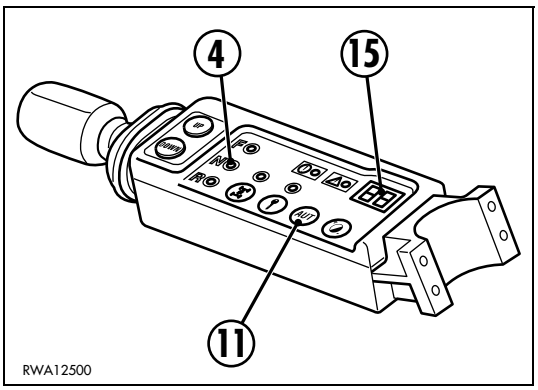

GEAR SHIFTING WITH AUTOMATIC LOGIC (AU)

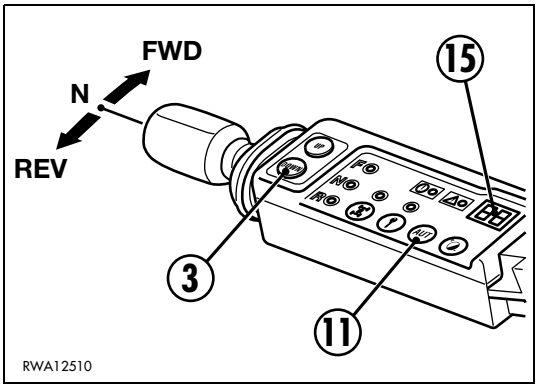

- After the connection of the automatic function (AUT button 11), the electronic control always sets on the 2nd gear; engage the forward or reverse gear within the following three seconds.
- It is possible to carry out the forced engagement of the 1st gear by means of the buttons DOWN (3) or KICK DOWN, while controlling the optimal rpm. After the forced engagement of the 1st forward or reverse gear, the logic AU will carry out the automatic shifting from 1st to 4th forward gear or from 1st to 3rd reverse gear, with successive automatic shifting to the 2nd forward or reverse gear.
- The engaged gear is always shown on the display (15).
- The 4th reverse gear is always disconnected.

☞ **IMPORTANT**

- **If the neutral (N) position is maintained for more than 3 seconds when the machine is not moving, the system signals an EMERGENCY; the electronic control maintains the preselected gear (see "DEVICE PREVENTING THE ACCIDENTAL SELECTION OF THE FWD/REV GEAR").**
  Even the forced 1st gear remains preselected.
- **In case of damage to the solenoid valve of the 2nd or 3rd gear (signalled by 3 long beeps (1 sec) and by the flashing of the figure message on the display (15)), the system passes directly from automatic (AU) to semiautomatic (SA) logic.**

FWD/REV REVERSAL WITH (AU) AND (SA) LOGIC

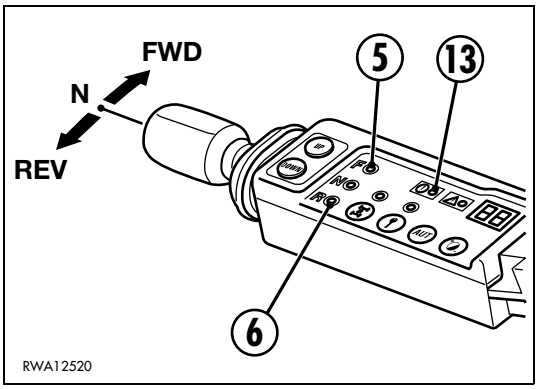

- The FWD/REV reversal is carried out in 1st and 2nd gear and must take place in the shortest possible time.
  The reversal is indicated by the coming on of the led F (5) or R (6).
- It is possible to stop in the neutral position (N) for a while.
- Reversal requested in 3rd and 4th forward gear (FWD): with optimal rpm the 2nd gear is engaged immediately and the reverse soon afterwards. If the rpm is not optimal, the led (13) starts flashing and this is signalled by a long beep (1 sec.).
  The electronic control does not carry out the reversal and the selection is stored.
  When the optimal rpm is reached, the flashing led goes out, the 2nd gear is engaged immediately and the reverse soon afterwards.
- With the (SA) logic, the UP/DOWN button cannot be operated until the reversal has been carried out.
  One selection only is stored.

☞ **IMPORTANT**

- **Carry out reversals in the 3rd and 4th gear only in case of emergency.**

KICK-DOWN FUNCTION FOR 1st AND 2nd GEAR ONLY

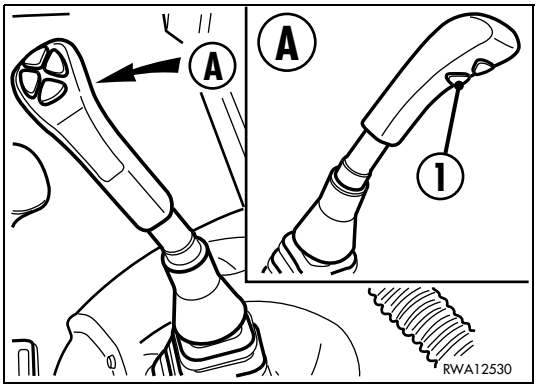

- A pulse push button (1) positioned on the front loader control lever and connected to the electronic control engages the 1st gear from the 2nd or the 2nd from the 1st and maintains the selected gear.
  With the semiautomatic logic (SA), it is possible to shift from 1st to 2nd gear and from 2nd to 1st gear.
  With the automatic logic (AU) it is only possible to shift down from 2nd to 1st gear.
- If the KICK DOWN function is selected - 1st from 2nd gear - the electronic control verifies the optimal rpm for the shifting (programmable).
  When the rpm is not optimal, the flashing led (13) comes on and a long beep (1 sec) is emitted.
  When the optimal rpm has been reached, the led goes out and the 1st gear is engaged.
- If the KICK DOWN function is selected - 2nd from 1st gear - the engagement of the 2nd gear takes place immediately.
- The functions of the UP/DOWN button override the functions of the KICK DOWN button.
  The electronic control acquires a differentiated selection if between two selections a mininum time of 0.5 seconds elapses (the selections are not simultaneous).

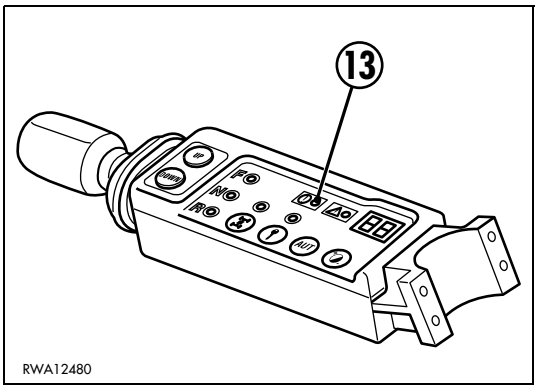

DECLUTCH FUNCTION FOR THE 1st AND 2nd GEAR ONLY

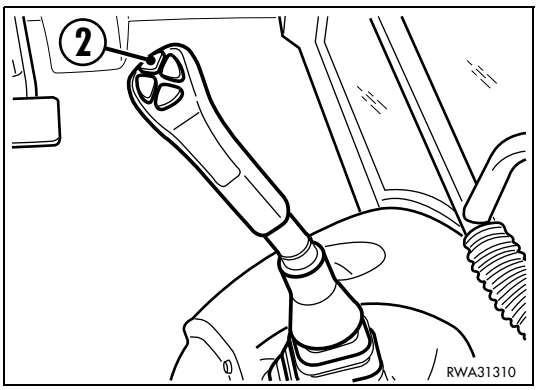

- A state button (1) positioned on the front loader control lever and connected to the electronic control is used to declutch in 1st and 2nd gear only.
  The DECLUTCH function remains in operation as long as the state button remains pressed.

IMPORTANT

- **If the machine is run with speed exceeding the optimal rpm, the flashing led (13) comes on, a long beep (1 sec) is emitted and the electronic control engages the 3rd gear with semiautomatic logic.**

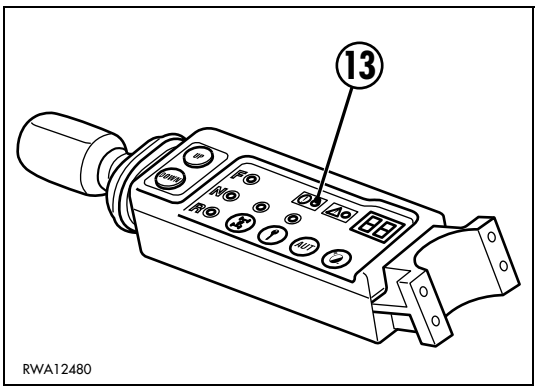

DIAGNOSTIC FUNCTION FOR SERIOUS ANOMALIES - MACHINE NOT WORKING

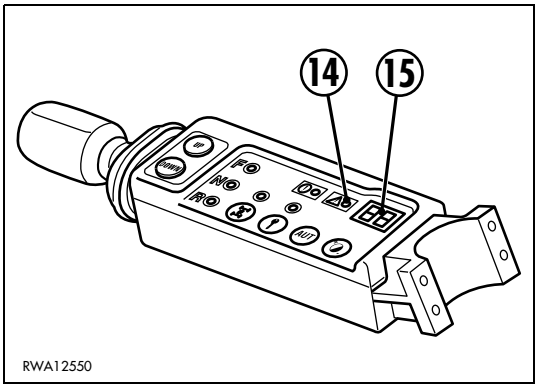

Condition either during the self-test phase and during operation.

⇒ Red alarm led (14) permanently on

⇒ 3 long beeps (1 sec)

⇒ Figure message on the display (15)

⇒ All solenoid valves at rest.

This takes place due to high oil temperature, low pressure of the transmission oil, voltage below 7 volts, electronic card anomaly.

CAUTION

- **When a figure code appears on the display, contact your Komatsu Utility Dealer or an Komatsu Utility authorized repair shop for the necessary checks and repairs.**

DIAGNOSTIC FUNCTION FOR ANOMALIES - MACHINE WORKING

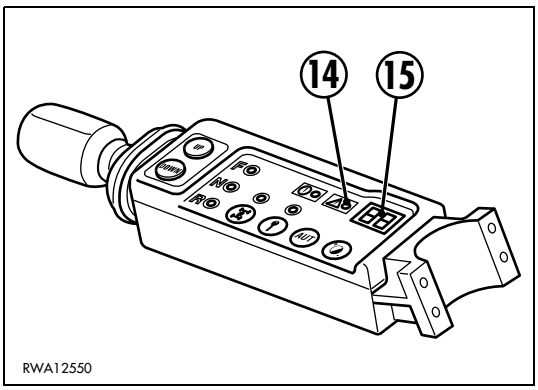

Condition during the self-test phase.

⇒ Red alarm led (14) flashing.

⇒ 3 long beeps (1 sec).

⇒ Figure message on the display (15).

Condition during operation.

⇒ Red alarm led (14) flashing.

⇒ 3 long beeps (1 sec).

⇒ Figure message flashing on the display (15) as an alternative to the indication of the engaged gear.

IMPORTANT

- **In case of damage to the gear clutch pressure sensors, the system does not engage the clutches corresponding to the damaged sensors. In case of damage to the 2nd and 3rd gear clutch pressure sensors, the system passes automatically from the automatic logic AU to the semiautomatic logic SA.**
- **Engine start:**
  In case of damage to the 2nd gear solenoid valve, the electronic control takes the 1st gear as point of reference. In case of damage to the 2nd or 3rd gear solenoid valve, the system passes automatically from the automatic logic AU to the semiautomatic logic SA.
- **In case of damage to the RPM sensor, the shifting with the automatic logic AU cannot take place any more.**

CAUTION

- **When a figure code appears on the display, contact your Komatsu Utility Dealer or an Komatsu Utility authorized repair shop for the necessary checks and repairs.**

2 - STEERING SELECTOR UNIT

DANGER

- **The selection of the crab steering must be carried out with the machine at rest and only in 1st and 2nd gear, while the selection of the all-wheel steering can be performed even with the machine moving and only in 1st, 2nd and 3rd gear.**
- **When the engine is started, the two-wheel steering is automatically selected. If the acoustic alarm sounds when the machine is restarted, this means that the rear wheels are not aligned. The misalignment of the rear wheels is signalled also on the display (17) positioned of the front dashboard, through the alternate presence of the symbols (and) "see Fig. a". Turn the steering wheel clockwise or anticlockwise until the rear wheels are aligned, which is signalled by the coming on of the green warning light (A) and by the interruption of the alarm.**
  When the rear wheels are aligned, the symbols (and) disappear, while the speedometer (km/h or MP/h) is displayed again . "see Fig. b".
- **Every time a steering solenoid valve is powered, its correct operation is automatically tested: if there is a short circuit or an open circuit, a signal on the display (17) and the acoustic alarm inform the operator that there is a failure of the solenoid valve in question.**
  For further details, see "3.3.1 FRONT INSTRUMENTS (pos. 17 ELECTRONIC DISPLAY)".

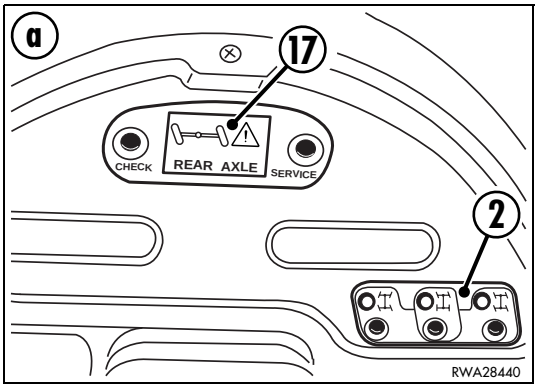

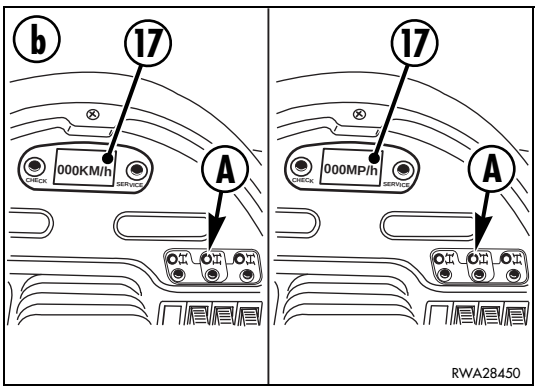

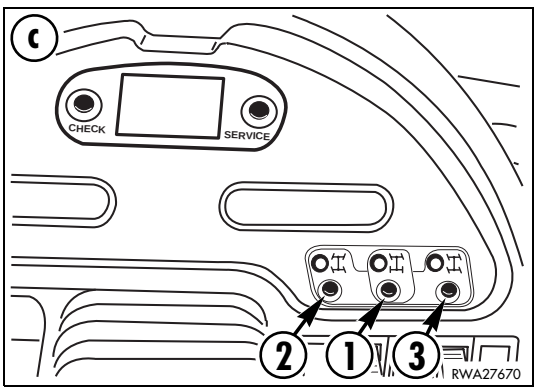

This is a control with coupled microswitches and is used to select the steering mode that is most suitable for the conditions of the ground and the type of work to be performed. The selection is obtained by pressing two coupled switches at the same time, with consequent coming on of the corresponding LED. This system makes it possible to switch over from crab steering to all-wheel steering and vice versa, by pressing button "1", which corresponds to the two-wheel steering, and the button corresponding to the desired steering mode at the same time ("button 3" for crab steering and "button 2" for all-wheel steering).
On the other hand, it is possible to switch over from crab or all-wheel steering to two-wheel steering by simply pressing "button 1", which corresponds to the two-wheel steering (see Fig. c).
The selected steering mode is activated only when the front and rear wheels are aligned (automatic wheel alignment).
If you switch over from one steering mode to the other while the wheels are being aligned, the acoustic alarm keeps sounding until the front or rear wheels are perfectly aligned.
The alignment of the wheels is indicated also on the display (17) positioned on the upper part of the front dahsboard.

The display (17) indicates which wheels must be aligned through the relevant symbols:

- Front wheels misaligned (see Fig. d).
- Rear wheels misaligned (see Fig. e).

Once the wheels are aligned, the relevant symbols go out and the acoustic alarm stops.

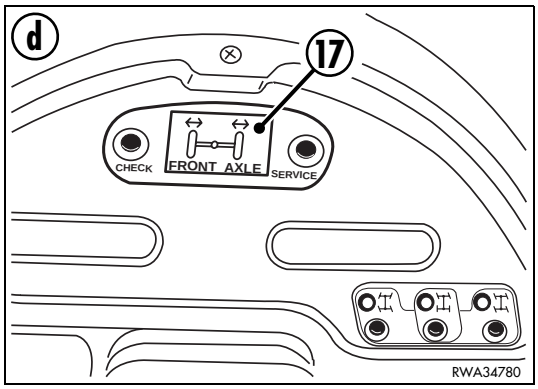

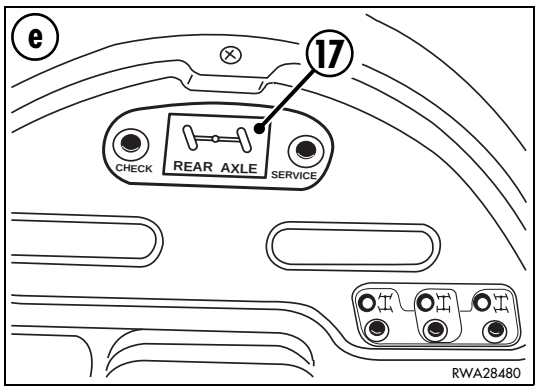

IMPORTANT

- **In case of replacement of the rear axle, the monitor, the potentiometer, the sensor or any other component of the steering system, it is necessary to carry out the alignment of the rear wheels, by proceeding as follows:**
  - **turn the steering wheel clockwise and anticlockwise, until the rear wheels are aligned;**
  - **before checking the alignment of the wheels, stop the machine;**
  - **press the push buttons (1-2-3) shown in Fig. (c) at the same time;**
  - **keeping the three buttons pressed, turn the key to position «I» to activate the electric signal;**
  - **after a few seconds the writing "KOMATSU" will appear on the monitor (17), followed by the symbol that indicates the alignment of the rear wheels ( );**
  - **press the push button (1) shown in Fig. (c);**
  - **the correct alignment of the rear wheels is signalled by the coming on of the green warning light (A) and by the display of the symbols "KM/h or MP/h" on the monitor (17), as shown in Fig. (b).**

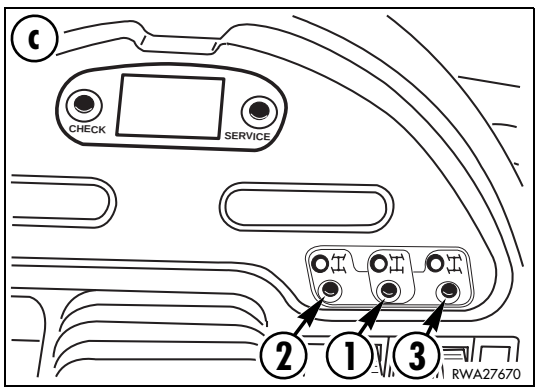

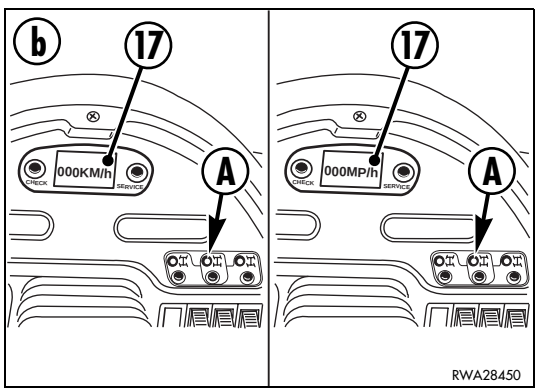

SWITCHING OVER FROM ONE STEERING MODE TO THE OTHER

- **SWITCHING OVER FROM TWO-WHEEL STEERING TO ALL-WHEEL STEERING**

Press buttons (1) and (2) at the same time and turn the steering wheel clockwise or anticlockwise to align the front wheels.
The misalignment of the front wheels is signalled by the acoustic alarm, which will stop once the wheels are correctly aligned.
The green led (A) will go out and the red led (B) will come on at the same time. During the alignment phase the symbol ( ) will appear on the display (17) positioned on the front dashboard and will go out as soon as the front wheels are aligned. At this point the speedometer “Km/h or MP/h” will appear on the display (17).

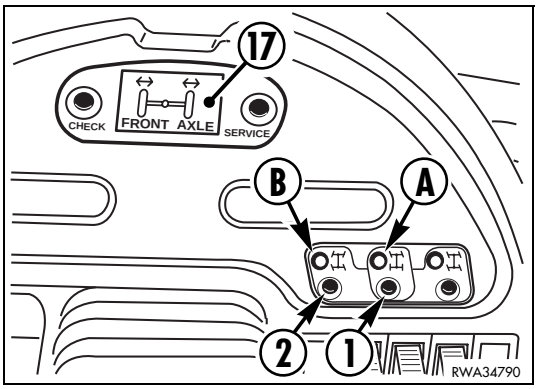

IMPORTANT

- **Changing over from 2-wheel steering to all-wheel steering is possible only with 1st, 2nd and 3rd gear engaged, with the machine either in operation or at rest, provided that the speed does not exceed 13 km/h (8MP/h).**

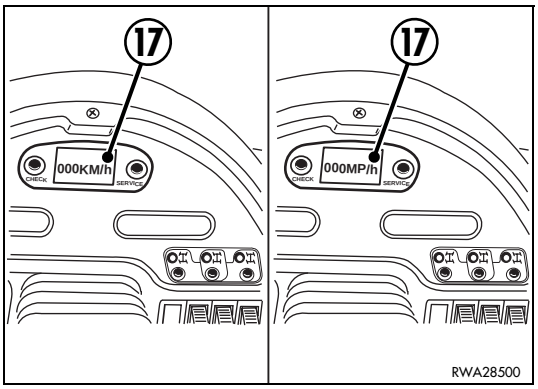

- **SWITCHING OVER FROM TWO-WHEEL STEERING TO CRAB STEERING**

Press buttons 1 and 3 at the same time and turn the steering wheel clockwise or anticlockwise to align the front wheels.
The misalignment of the front wheels is signalled by the acoustic alarm, which will stop once the wheels are correctly aligned. The green led (A) will go out and the red led (C) will come on at the same time. During the alignment phase the symbol ( ) will appear on the display (17) positioned on the front dashboard and will go out as soon as the front wheels are aligned.
At this point the speedometer “Km/h or MP/h” will appear on the display (17).

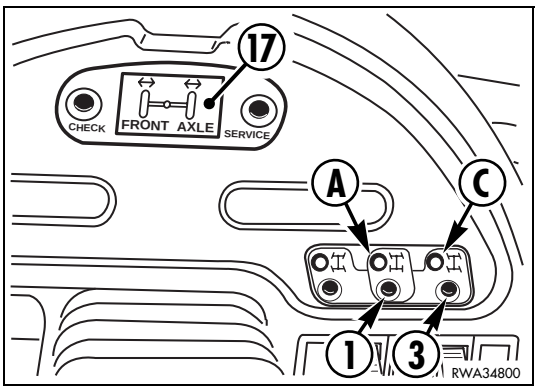

IMPORTANT

- **It is possible to switch over from two-wheel steering to crab steering only in 1st-2nd gear and with the machine at rest.**

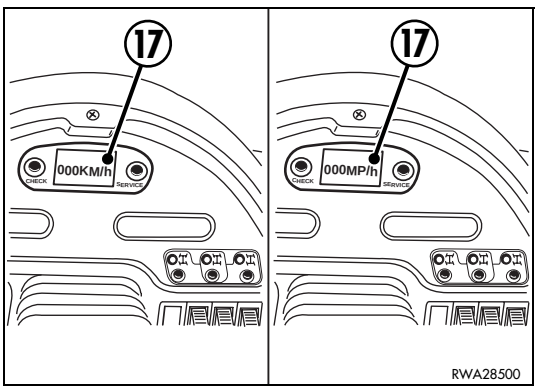

- **SWITCHING OVER FROM ALL-WHEEL STEERING TO TWO-WHEEL STEERING**

Press only button (1) and turn the steering wheel clockwise or anticlockwise to align the rear wheels.
The misalignment of the wheels is signalled by the acoustic alarm, which will stop as soon as the wheels are correctly aligned.
The red led (B) will go out and the green led (A) will come on at the same time. During the alignment phase the symbol ( ) will appear on the display (17) positioned on the front dashboard and will go out as soon as the rear wheels are aligned.
At this point the speedometer “Km/h or MP/h” will appear on the display (17).

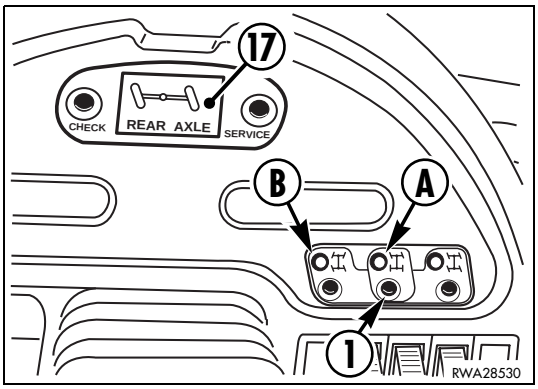

IMPORTANT

- **Changing over from all-wheel steering to 2-wheel steering is possible with the machine either in operation or at rest, provided that the speed does not exceed 13 km/h (8MP/h).**
- **For travelling on roads, use only the two-wheel steering mode.**

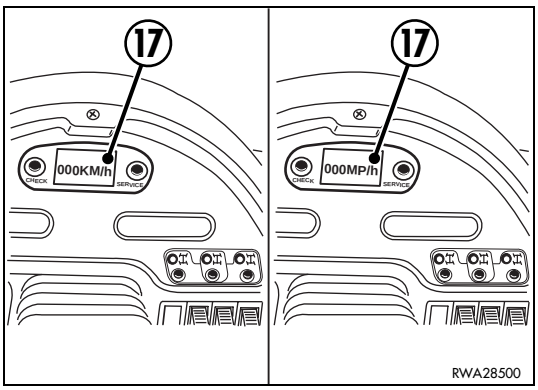

CAUTION

- **If during travel with two-wheel steering the acoustic alarm sounds, this means that the rear wheels are misaligned. The misalignment of the rear wheels is signalled also on the display (17), through the alternate presence of the symbols (and). (see Fig. F).**
  Stop the machine immediately and turn the steering wheel clockwise or anticlockwise until the rear wheels are aligned, which is signalled by the coming on of the green led (A) and by the interruption of the acoustic alarm.
  In this case the realignment of the rear axle can take place even with the machine in operation, provided that the speed does not exceed 13 km/h (8MP/h) and only after aligning the front axle.
  Before leaving, make sure that the wheel misalignment symbols cannot be seen any longer on the display (17) and that the speedometer (Km/h or MP/h) is visible again

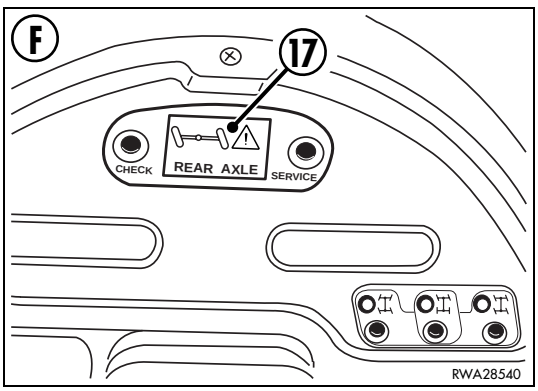

- **SWITCHING OVER FROM ALL-WHEEL STEERING TO CRAB STEERING**

Press buttons (1) and (3) at the same time and turn the steering wheel clockwise or anticlockwise to align the rear wheels. The misalignment of the rear wheels is signalled by the acoustic alarm, which will stop as soon as the wheels are correctly aligned. The red led (B) will go out and the red led (C) will come on at the same time. During the alignment phase the symbol ( ) will appear on the display (17) positioned on the front dashboard and will go out as soon as the rear wheels are aligned.
At this point the speedometer will appear on the display (17).

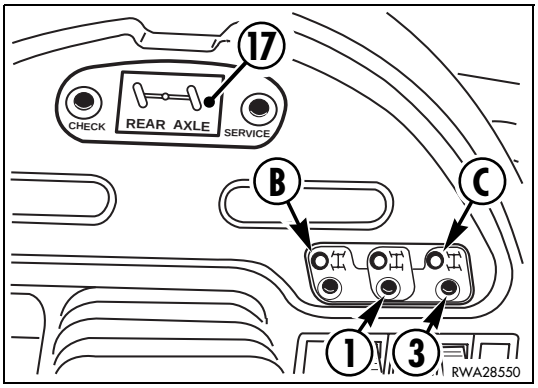

IMPORTANT

- **It is possible to switch over from all-wheel steering to crab steering only in 1st-2nd gear and with the machine at rest.**

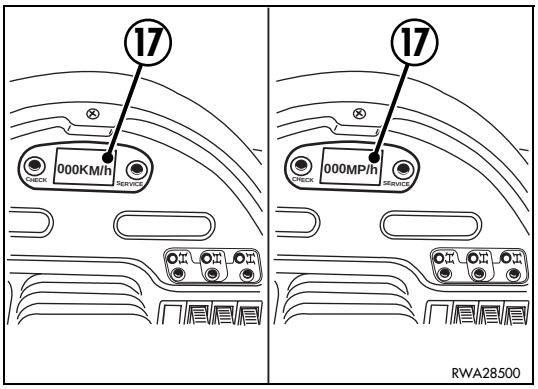

- **SWITCHING OVER FROM CRAB STEERING TO TWO-WHEEL STEERING**

Press only button (1) and turn the steering wheel clockwise or anticlockwise to align the rear wheels.
The misalignment of the wheels is signalled by the acoustic alarm, which will stop as soon as the wheels are correctly aligned.
The red led (C) will go out and the green led (A) will come on at the same time. During the alignment phase the symbol ( ) che si spegnerà non appena le ruote posteriori si sono allineate. will appear on the display (17) positioned on the front dashboard and will go out as soon as the rear wheels are aligned.
At this point the speedometer “Km/h or MP/h” will appear on the display (17).

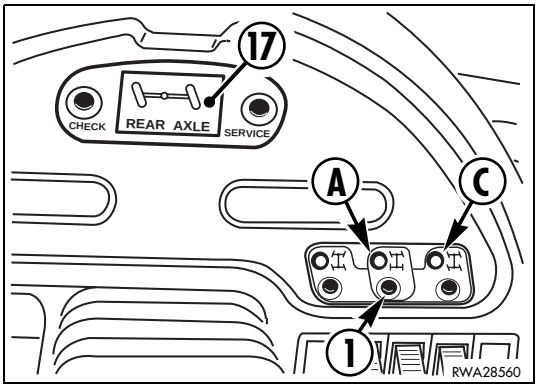

IMPORTANT

- **It is possible to switch over from crab steering to two-wheel steering with the machine either moving or at rest.**
- **For travelling on roads, use only the two-wheel steering mode.**

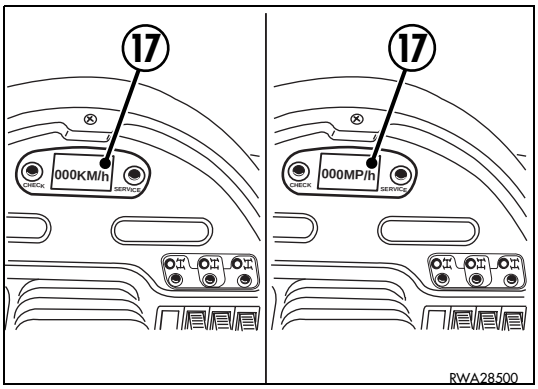

CAUTION

- **If during travel with two-wheel steering the acoustic alarm sounds, this means that the rear wheels are misaligned. The misalignment of the rear wheels is signalled also on the display (17), through the alternate presence of the symbols (and).(see Fig. F).**
  Stop the machine immediately and turn the steering wheel clockwise or anticlockwise until the rear wheels are aligned, which is signalled by the coming on of the green led (A) and by the interruption of the acoustic alarm.
  Before leaving, make sure that the wheel misalignment symbols cannot be seen any longer on the display (17) and that the speedometer (Km/h or MP/h) is visible again

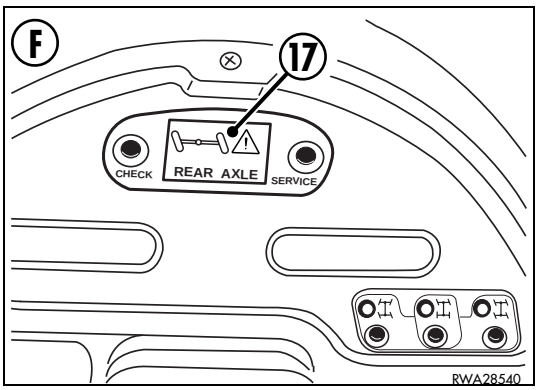

- **SWITCHING OVER FROM CRAB STEERING TO ALL-WHEEL STEERING**

Press buttons 1 and 2 at the same time and turn the steering wheel clockwise or anticlockwise to align the rear wheels.
The misalignment of the wheels is signalled by the acoustic alarm, which will stop as soon as the wheels are correctly aligned.
The red led (C) will go out and the red led (B) will come on at the same time. During the alignment phase the symbol ( ) will appear on the display (17) positioned on the front dashboard and will go out as soon as the rear wheels are aligned.
At this point the speedometer “Km/h or MP/h” will appear on the display (17).

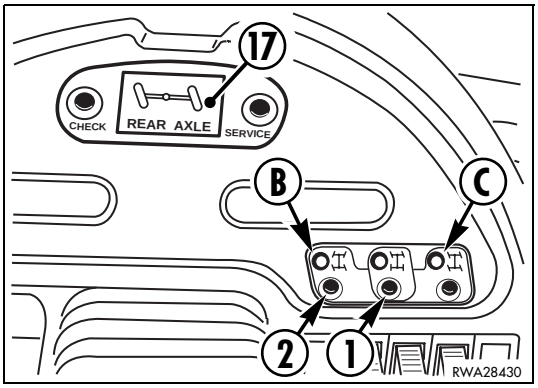

IMPORTANT

- **It is possible to switch over from crab steering to all-wheel steering with the machine either moving or at rest. The 4th gear cannot be engaged with all-wheel steering selected.**

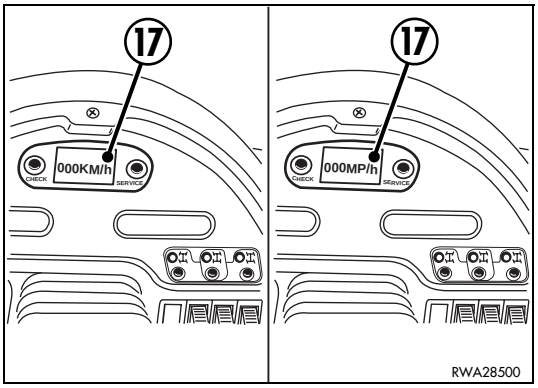

3 - BRAKE PEDALS

DANGER

- **The brake pedals must always be connected in 3rd and 4th gear and when the machine travels on roads.**
- **Non-compliance with this rule may result in serious accidents.**

The machine is provided with two split brake pedals that make it possible to turn sharply in small work areas with many obstacles; with the right pedal it is possible to make sharp turns to the right, with the left pedal it is possible to make sharp turns to the left.
When the pedals (3) are used individually, reduce the speed and keep the bucket as low as possible. The pedals must always be connected with each other by means of the connection pin (A) when using the higher gears and travelling on roads.

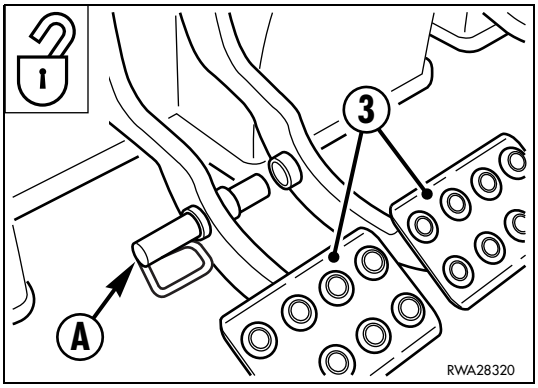

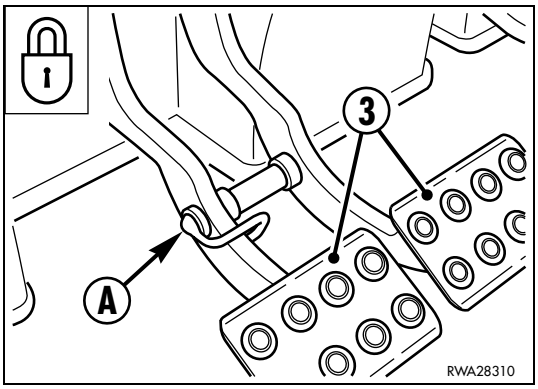

IMPORTANT

- **When the higher gears are engaged, the braking action is strengthened due to the automatic connection of the four-wheel drive.**

4 - ACCELERATOR

Use the accelerator with care, especially when the machine is under strain or is working in difficult conditions. Avoid any useless acceleration to reduce consumption and extend the life of either the engine and the machine.

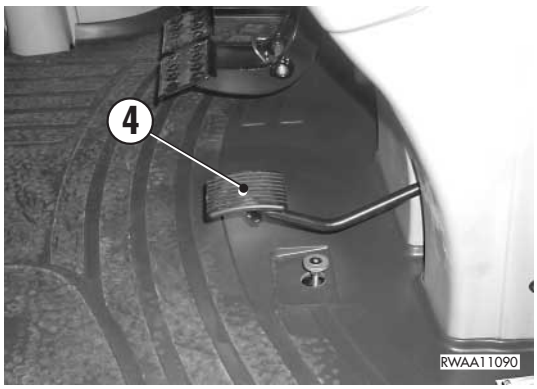

5 - FRONT LOADER CONTROL LEVER

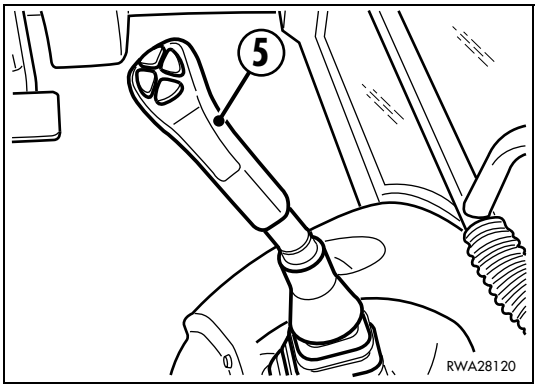

DANGER

- **Before carrying out any operation with this lever, the operator must be sitting in the driving position with fastened seat belt.**
- **If the loader control lever has to be used during travel, avoid any abrupt and quick movement that may affect the balance of the machine and make it difficult to drive.**
- **If it is necessary to leave the machine on a slope, take all the precautions aimed at preventing any uncontrolled movement of the machine itself.**
  (See “3.7 PARKING THE MACHINE”).
- **Before leaving the operator’s seat, lower the bucket to the ground and engage the safety lock before stopping the engine.**

The front loader control lever (5) is positioned on the operator’s right and controls the raising and lowering of the arm and the folding and dumping of the bucket according to the orthogonal movements listed below.
If the machine is properly equipped, the shifting of the lever to position **E** (defined by a click) sets the loader to a free, or floating position, that is, to a position in which it can automatically follow the undulation of the ground.
Furthermore, when the lever (5) is shifted by 45° towards the axis of the machine in position **F**, the “return to dig” device is connected, which lowers the arm and at the same time moves the bucket back in loading position. As soon as the bucket touches the ground, the device is automatically disconnected and the machine returns to its normal position.

N - Neutral
A - Bucket folding
B - Arm lowering
C - Bucket dumping
D - Arm raising
Only with the appropriate equipment:
E - Free (floating) arm
F - Self-leveling (return to dig)

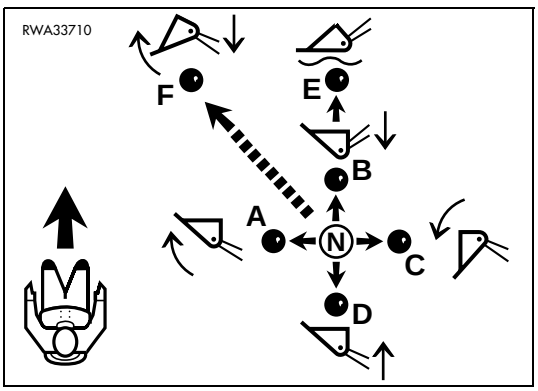

If the lever is operated in directions that are inclined with respect to the machine axes, simultaneous movements proportional to the angle of inclination are obtained, since the two hydraulic distributors corresponding to each single function are engaged at the same time.

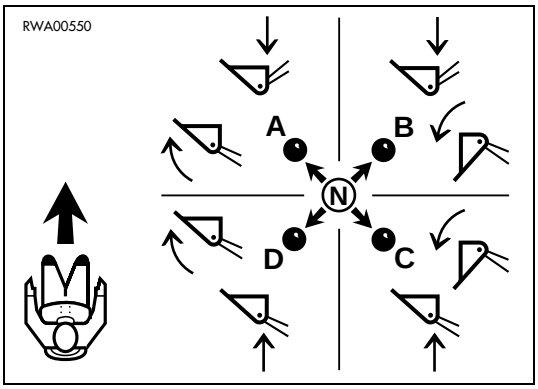

N - Neutral
A - Arm lowering - Bucket folding
B - Arm lowering - Bucket dumping
C - Arm raising - Bucket dumping
D - Arm raising - Bucket folding

IMPORTANT

- **No movement can be performed if the locking pin is connected in the safety position.**
  (See “3.1.1 FRONT LOADER LOCKS”).

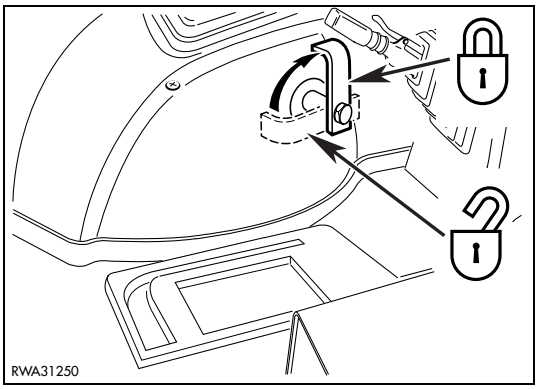

CAUTION

- **Always engage the safety pin when travelling on roads.**

6 - KICK-DOWN PUSH BUTTON

This is a pulse push button connected to the electronic control of the transmission and can be used only in 1st or 2nd gear.
In 1st gear, the button (6) selects the 2nd gear and keeps it engaged.
In 2nd gear, the button (6) selects the 1st gear and keeps it engaged with automatic check of the optimal speed for the shifting.
(See “3.3.5 pos. 1 REVERSING GEAR - GEARSHIFT LEVER”).

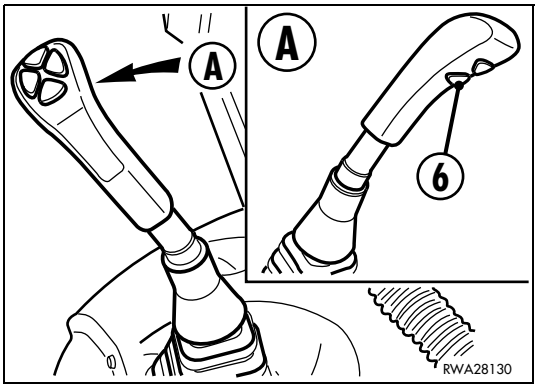

7 - PARKING BRAKE

CAUTION

- **The parking brake must be applied whenever it is necessary to leave the driving position, even if temporarily.**
- **The machine must be parked with the rear wheel firmly resting on a flat surface. If one of the rear wheels is unstable or rests on a small obstacle, the machine may move.**
- **Periodically check the brake efficiency.**
  Non-compliance with these rules may cause serious accidents or even death.
- **The parking brake must be released if the machine breaks down and it is necessary to remove it.**

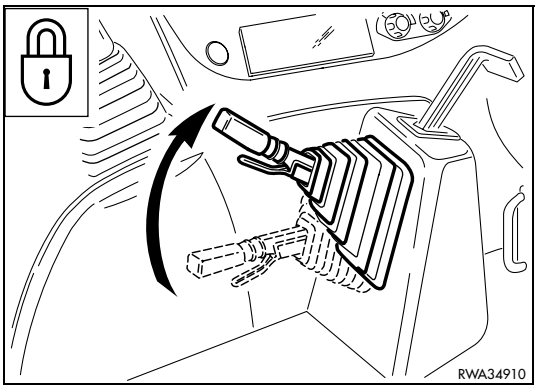

Braking is obtained by pulling the lever completely upwards, until the safety device is coupled; release is obtained by pressing the lower safety device while releasing the lever, which automatically returns downward.

CAUTION

- **The warning light 7 positioned on the front dashboard (see “3.3.1 pos. 7 FRONT INSTRUMENTS) signals that the parking brake has been applied.**
- **For safety reasons, when the parking brake is applied the functions of the reversing gear control lever are inhibited (see “3.3.5 pos. 1 REVERSING GEAR-GEARSHIFT LEVER”).**

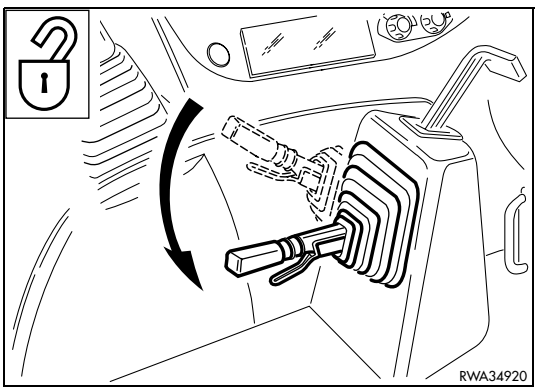

8 - HAND ACCELERATOR

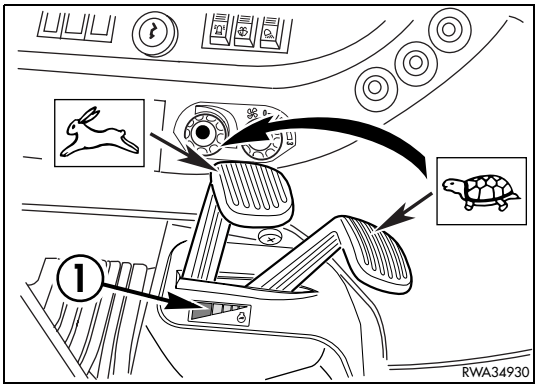

DANGER

- **The use of the hand accelerator is allowed only under the conditions indicated; use in any other condition may cause accidents.**

The hand accelerator can be used only when the engine is warming up and successively only when it is necessary to work with the backhoe; it can also be used for certain maintenance operations.

Minimum speed position: pull the lever completely backward.

Maximum speed position: push the lever complately forward.

CAUTION

- **The maximum speed position corresponds to 1900÷2000 rpm.**

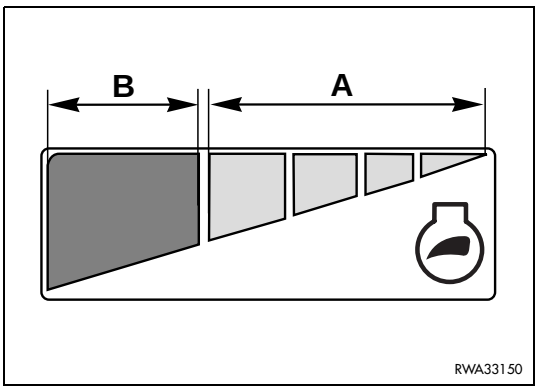

If possible, avoid using the machine with the lever completely pushed forward, since in this way consumptions will be considerably reduced and the life of either the engine and the machine will be longer.

For a correct use of the lever, keep to the indications given on the plate (1) applied inside the right dashboard. The plate (1) is characterized by two coloured areas, the green area **"A"** and the red area **"B"**, referring to different engine rotation speeds:

- **Green area "A"**: this area indicates an engine rotation speed of 1700 rpm, which is the value recommended to the operator.
- **Red area "B"**: this area indicates an engine rotation speed up to 1900 50 rpm, which is the maximum speed allowed for the use of the backhoe. The engine speed can be checked on the revolution counter positioned on the right dashboard. See "3.3.2 pos. 2 REVOLUTION COUNTER - HOUR COUNTER".

9 - BACKHOE BOOM LOCK CONTROL SWITCH

DANGER

- **Always engage the boom safety lock when the backhoe is not used and when travelling on roads.**

This is a two-position switch and is used to connect the boom to the safety lock (A).
In the rest position (led off) the backhoe is free and can move without any interference with the lock.
The switch is in this position even when the boom is connected to the safety lock.
To engage the safety lock, proceed as follows:
Select the uncoupling position by pressing the switch (9) (led on), fold the arm and the bucket, raise the boom completely and engage the lock by pressing the switch again (led off).
Before moving the machine, make sure that the lock is properly engaged in its seat.

IMPORTANT

- **If the machine is equipped with backhoe servo controls, the switch (9) is positioned on the upper part of the side dashboard, as shown in Fig. B.**
  The switch (9) can be disabled by means of the switch (26).
  For further information, see “BACKHOE CONTROL LOCKING SWITCH pos.26”.

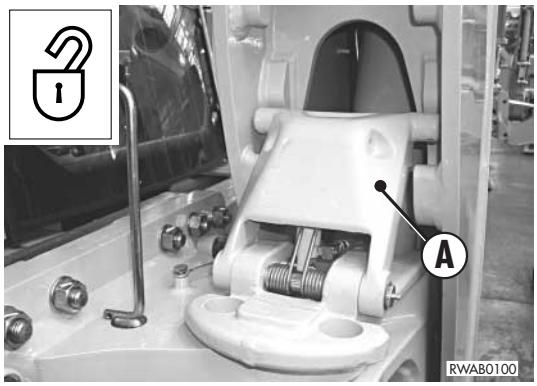

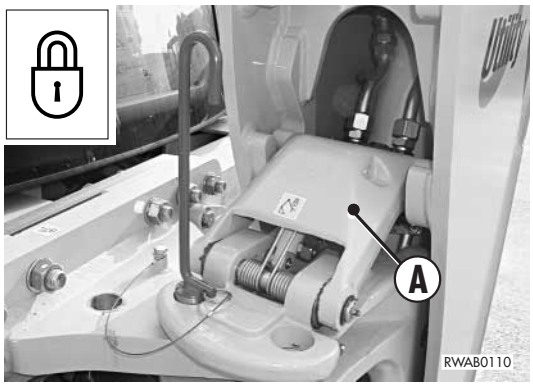

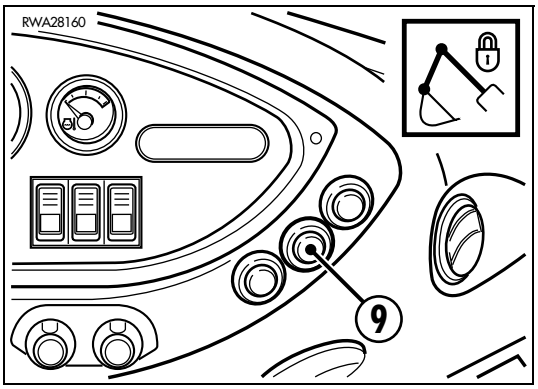

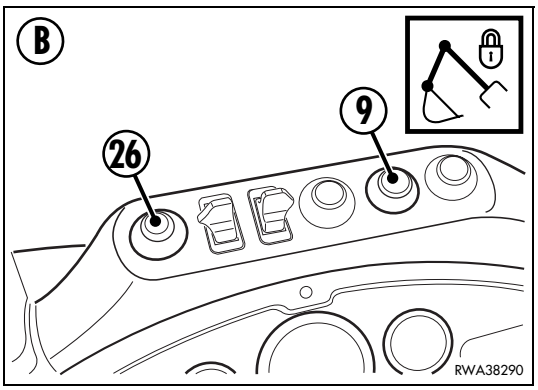

10 - BACKHOE SLIDING LOCK CONTROL SWITCH

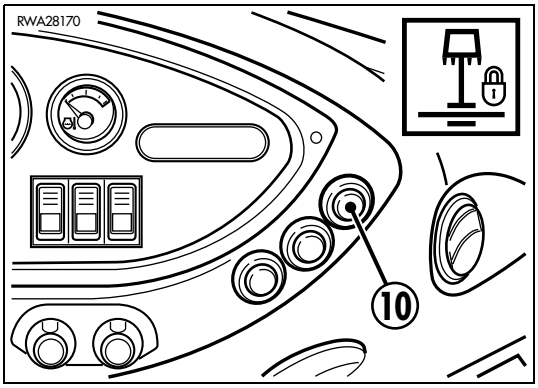

The switch (10) has the function to release the pressure necessary to lock the backhoe unit, so that the backhoe can slide on the guides.
With released switch (led off) the backhoe unit is locked on the guides. With pressed switch (led on) the backhoe unit is released and can slide on the guides.

IMPORTANT

- **If the machine is equipped with backhoe servo controls, the switch (10) is positioned on the upper part of the side dashboard, as shown in Fig. B.**
  The switch (10) can be disabled by means of the switch (26).
  For further information, see “BACKHOE CONTROL LOCKING SWITCH pos.26”.

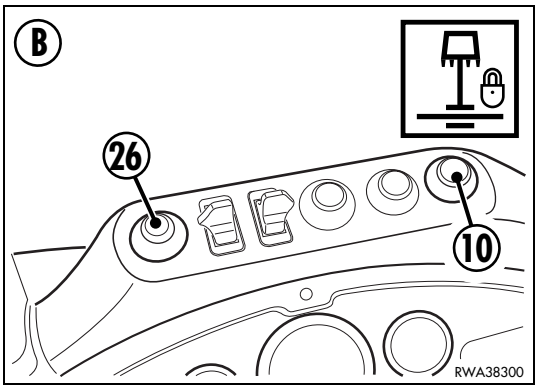

CAUTION

- **Before starting any operation, make sure that the backhoe is locked on its guides.**

11 - DECLUTCH PUSH BUTTON

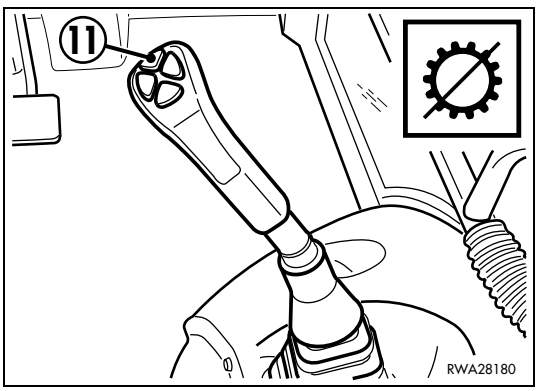

DANGER

- **Do not use this button for more than 1520 seconds.**
- **Do not use this button during travel on normal roads and especially when travelling downhill, since this function releases the clutch and sets the machine in neutral.**

The push button (11) is used when the machine is used as a loader; the declutch function serves to change all the engine power into hydraulic power, which is necessary to lift the machine.

12 - 4IN1 BUCKET OPENING PUSH BUTTON

On the machines provided with the 4in1 bucket, the distributor for the opening of the bucket is controlled through the push button (12) positioned on the loader control lever.
Press the button to open the bucket; when the button is released, the bucket movement stops.

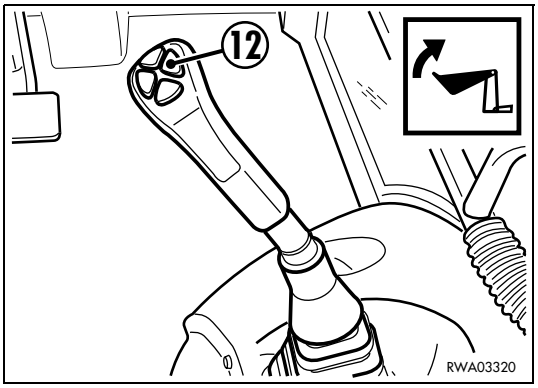

13 - 4IN1 BUCKET FOLDING PUSH BUTTON

On the machines provided with the 4in1 bucket, the distributor for the folding of the bucket is controlled through the push button (13) positioned on the loader control lever.
Press the button to fold the bucket; when the button is released, the bucket movement stops.

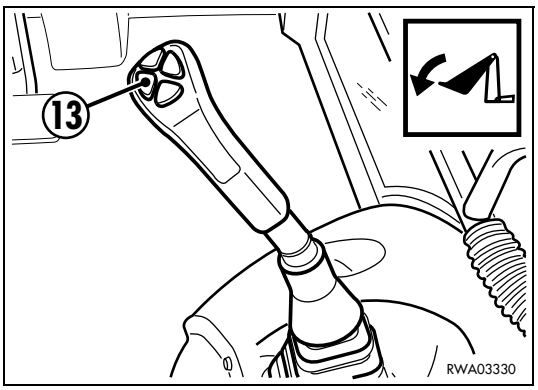

14 - FRONT LOADER SPEED CONTROL PUSH BUTTON

The push button (14) makes it possible to use the maximum quantity of oil delivered by the hydraulic pump when the machine is under load.
Press the push button to increase the delivery; when the button is released, the oil delivery returns to standard operating conditions.
It is advisable to use the push button continuously for maximum 5÷6 seconds.

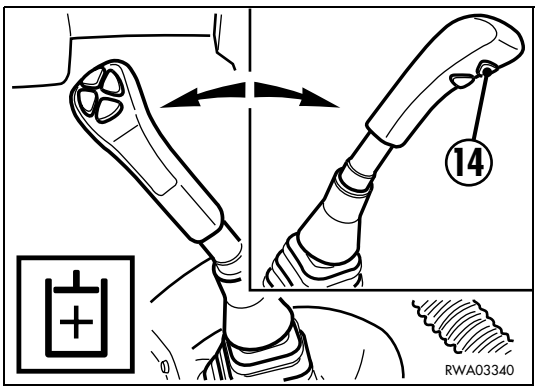

15/16 - BACKHOE CONTROL LEVERS (Standard version)

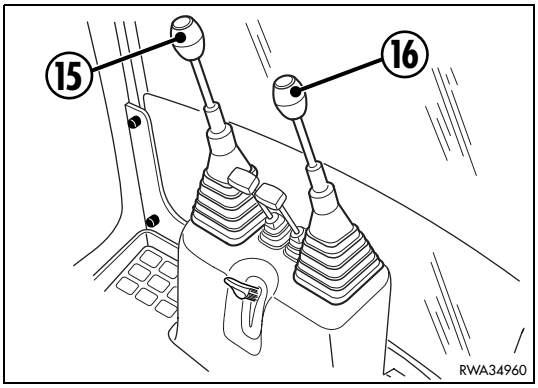

DANGER

- **Before carrying out any manoeuvre with these levers, the operator must be sitting in the working position, that is, with the seat rotated by 180° with respect to the driving position and with fastened safety belt; before any manoeuvre, take all the precautions indicated in section "3.13 USING THE MACHINE AS AN EXCAVATOR".**
- **The machine is equipped with an acoustic alarm that is activated if the operator, with the engine running, moves the reversing gear lever (1) to position F or R with the seat rotated in any position different from the correct driving position.**
  This is a danger signal, since it is absolutely forbidden to carry out any movement with the machine while working with the backhoe equipment or in any case with the seat rotated by 180° with respect to the regular driving position. Remember that the operator must carry out any movement of the machine while seated in the correct driving position, with locked seat and fastened safety belt.
- **Before leaving the working position, lower the equipment to the ground and do not stop the engine if the safety lock is not engaged.**
- **When travelling on roads, always lock the levers by means of the safety lock.**

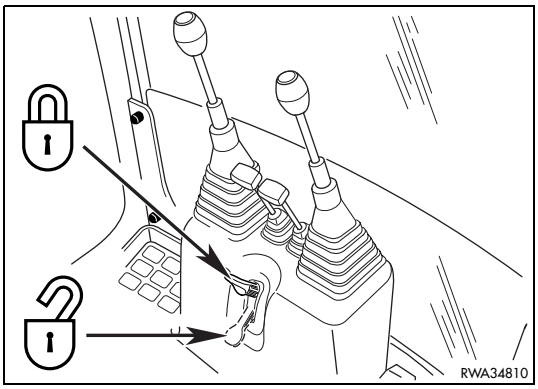

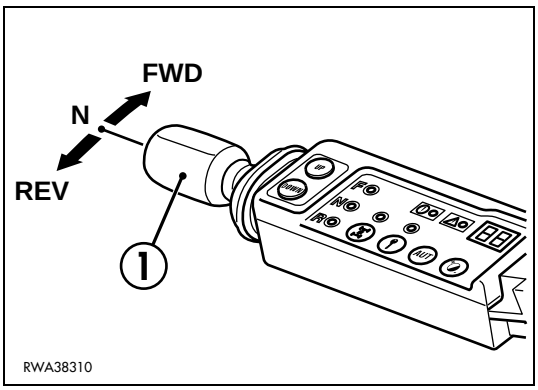

The backhoe control levers can be equipped with different boom, arm and bucket controls according to three different systems:

1 - ISO SYSTEM CONTROLS (Standard)

2 - KOMATSU SYSTEM CONTROLS (On request)

3 - X-SYSTEM CONTROLS (On request)

No movement can be carried out when the safety lever is shifted upwards (see "3.1.2 BACKHOE LOCKS").
The following diagrams show the basic and combined manoeuvres that can be performed with these three systems:

16/17 - BACKHOE CONTROL LEVERS (Version with servo controls available on request)

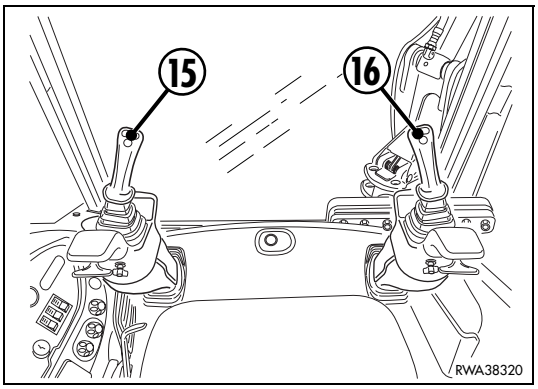

IMPORTANT

- **Before carrying out any manoeuvre with these levers, the operator must be sitting in the working position, that is, with the seat rotated by 180° with respect to the driving position and with fastened safety belt; before any manoeuvre, take all the precautions indicated in section "3.13 USING THE MACHINE AS AN EXCAVATOR".**
- **The machine is equipped with an acoustic alarm that is activated if the operator, with the engine running, moves the reversing gear lever (1) to position FWD or REV with the seat rotated in any position different from the correct driving position.**
  This is a danger signal, since it is absolutely forbidden to carry out any movement with the machine while working with the backhoe equipment or in any case with the seat rotated by 180° with respect to the regular driving position. Remember that the operator must carry out any movement of the machine while seated in the correct driving position, with locked seat and fastened safety belt.
- **Before leaving the driver's seat, lower the equipment to the ground, always engage the safety device to lock the backhoe controls by pressing the switch (26) and raise both joysticks (15-16) towards the rear of the machine.**
- **Before starting to use the controls, check the control pattern by carrying out short manoeuvres in order to make sure the all the movements corresponds to those shown on the decals.**
- **When travelling on roads, always engage the safety device to lock the backhoe controls by pressing the switch (26).**

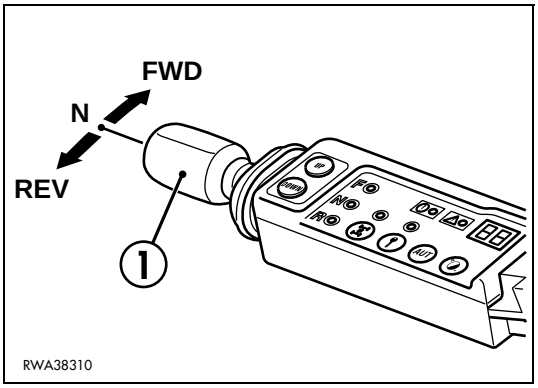

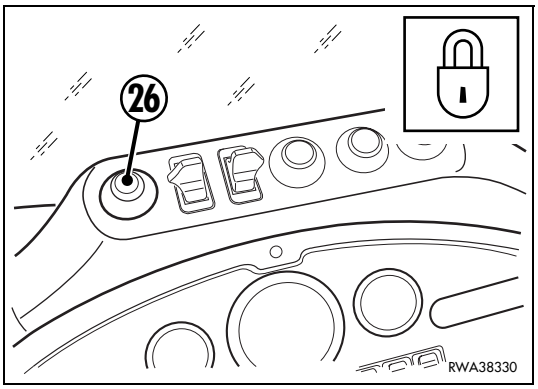

If the operators deems it necessary, the machine can be equipped with backhoe servo controls.
This optional feature is particularly useful, in fact less effort is required to shift the controls and this reduces the stress to which the operator is subjected, as well as the time required to carry out the various operations.
All the backhoe controls can be disabled by pressing the switch (26) positioned on the upper part of the side dashboard.
The locking of the controls is confirmed by the coming on of the corresponding warning light. To enable the backhoe controls, press the switch (26) again and keep it pressed until the warning light goes out.
For further information on the backhoe control locking switch, see "3.3.5.2 MACHINE CONTROLS (Version with servo controls)" pos. 26.

To use the backhoe control levers correctly, proceed as follows:

1 - With the machine at rest and the engine off, seat on the driver's seat and rotate it by 180° with respect to the driving position.

2 - Press the joystick locking levers (20-21) and lower both joysticks (15-16) until reaching the desired operating position. Once they have reached the desired position, release both the locking levers (20-21) in order to lock the joysticks.?For further information, see (20-21) JOYSTICK LOCKING LEVERS.
The position of the joysticks in operating conditions can be adjusted by means of the relevant knobs (24-25) positioned on the cab floor. For the correct adjustment procedure, keep to the instructions given in paragraph (24-25) JOYSTICK STROKE ADJUSTING KNOB.

3 - Adjust the height of the supports (A) by means of the adjusting knobs (22-23) , until finding the position that is most suitable to your physical characteristics. For the correct adjustment procedure, keep to the instructions given in paragraph (22-23) SUPPORT ADJUSTING KNOB.

4 - Once the correct operating position of both joysticks has been found, fasten the safety belt and start the machine by proceeding as described in "3.6.2 STARTING THE ENGINE". Disengage the backhoe control locking device by pressing the switch (26). The release of the controls is indicated by the going out of the relevant warning light.

5 - At the end of work, if possible, lower the equipment to the ground and engage the control locking device by pressing the switch (26) again. The locking of the controls is confirmed by the coming on of the relevant warning light.

6 - Before rotating the seat to the driving position, press the levers (20-21) and at the same time raise the joysticks (15-16) to bring them in vertical position.
Once the desired position has been reached, release the levers (20-21) in order to lock the joysticks, respecting a given safety distance from the rear window. If it is necessary to adjust the stroke of both joysticks, turn the adjusting screws positioned on the front part of the same according to the procedure described in paragraph (24-25) JOYSTICK STROKE ADJUSTING KNOB.

The control lever (15) is positioned on the operator's left and controls the arm and the swing, while the control lever (16) positioned on the operator's right controls the boom and the bucket.
On request of the operator, the machine can be equipped with two different control patterns at the same time, more precisely:

1 - ISO SYSTEM CONTROLS (Standard)

2 - KOMATSU SYSTEM CONTROLS (Optional)

The choice of the desired control pattern is up to the operator; for the selection of the pattern desired, see paragraph (33) PATTERN CHANGE CONTROL LEVER (on request).
The patterns illustrated below show the basic manoeuvres and the combined manoeuvres that can be carried out with the two systems.

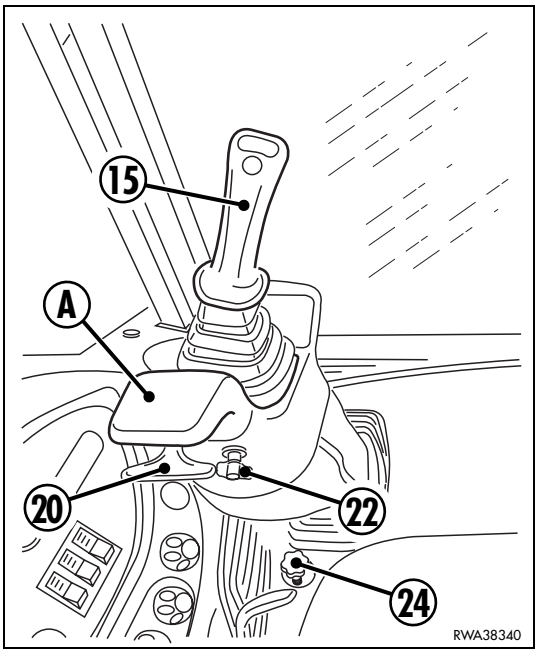

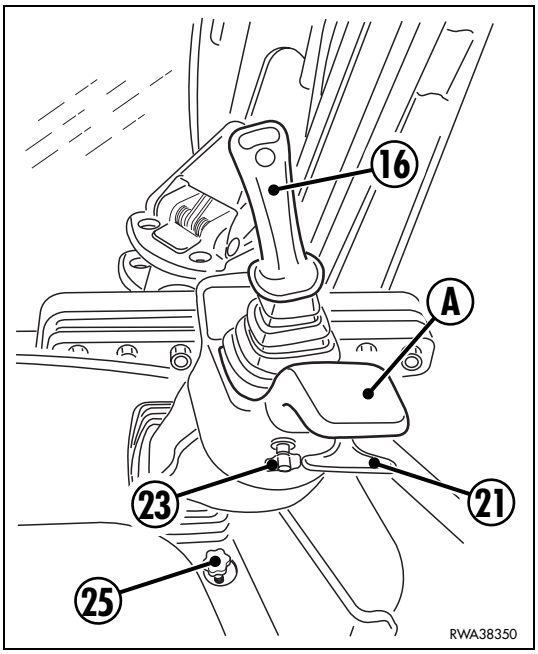

ISO STANDARD CONTROLS

LEVER 15 (BASIC MANOEUVRES)

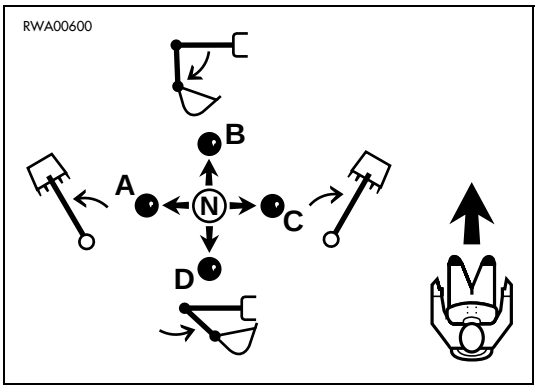

N - Neutral
A - Boom swing to the left
B - Arm opening
C - Boom swing to the right
D - Arm folding

LEVER 16 (BASIC MANOEUVRES)

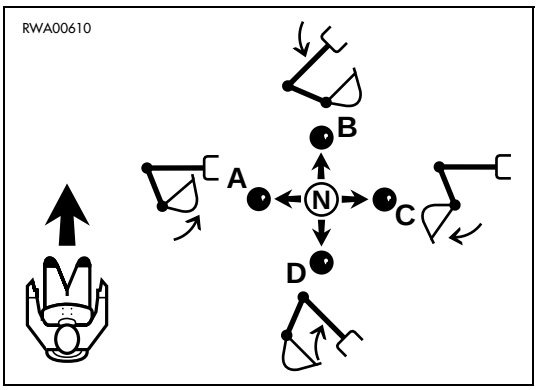

N - Neutral
A - Bucket folding
B - Boom lowering
C - Bucket opening
D - Boom raising

If the levers are operated in directions that are inclined with respect to the machine axis, simultaneous movements proportional to the angle of inclination are obtained, since the two hydraulic distributors corresponding to each single function are engaged at the same time.

LEVER 15 (COMBINED MANOEUVRES)

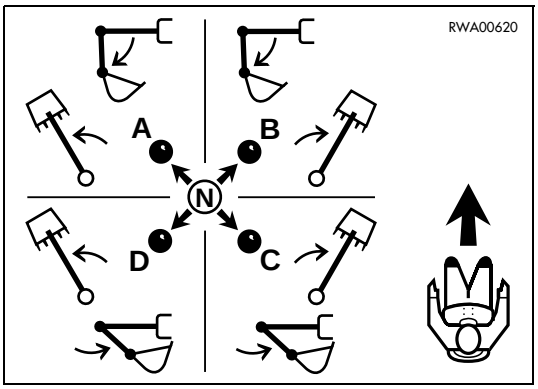

N - Neutral
A - Arm opening - Boom swing to the left
B - Arm opening - Boom swing to the right
C - Arm folding - Boom swing to the right
D - Arm folding - Boom swing to the left

LEVER 16 (COMBINED MANOEUVRES)

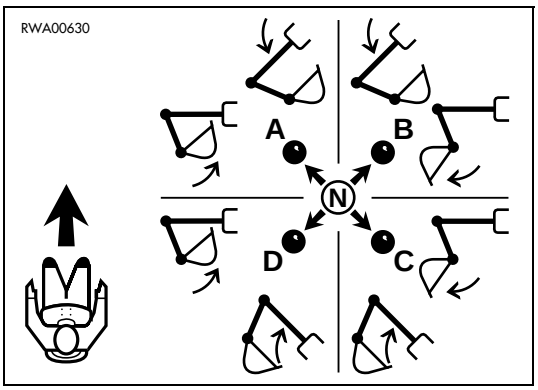

N - Neutral
A - Boom lowering - Bucket folding
B - Boom lowering - Bucket opening
C - Boom raising - Bucket opening
D - Boom raising - Bucket folding

KOMATSU SYSTEM CONTROLS

LEVER 15 (BASIC MANOEUVRES)

N - Neutral
A - Boom swing to the left
B - Boom lowering
C - Boom swing to the right
D - Boom raising

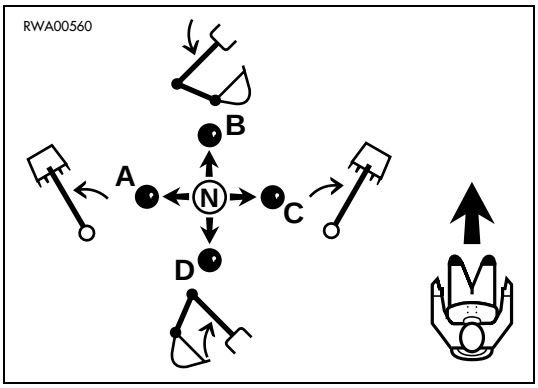

LEVER 16 (BASIC MANOEUVRES)

N - Neutral
A - Bucket folding
B - Arm opening
C - Bucket opening
D - Arm folding

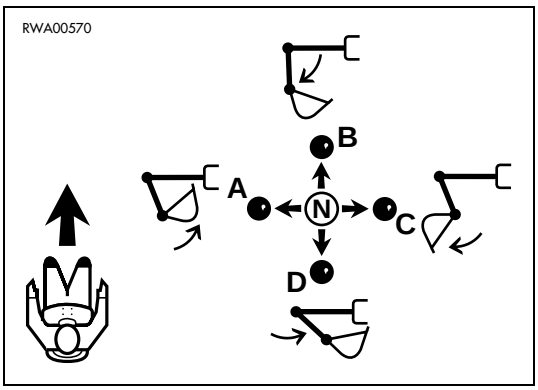

If the levers are operated in directions that are inclined with respect to the machine axis, simultaneous movements proportional to the angle of inclination are obtained, since the two hydraulic distributors corresponding to each single function are engaged at the same time.

LEVER 15 (COMBINED MANOEUVRES)

N - Neutral
A- Boom lowering and swing to the left
B - Boom lowering and swing to the right
C- Boom raising and swing to the right
D - Boom raising and swing to the left

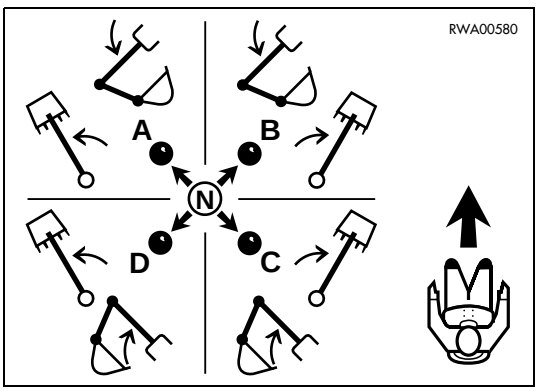

LEVER 16 (COMBINED MANOEUVRES)

N - Neutral
A - Arm opening - bucket folding
B - Arm opening - bucket opening
C - Arm folding - bucket opening
D - Arm folding - bucket folding

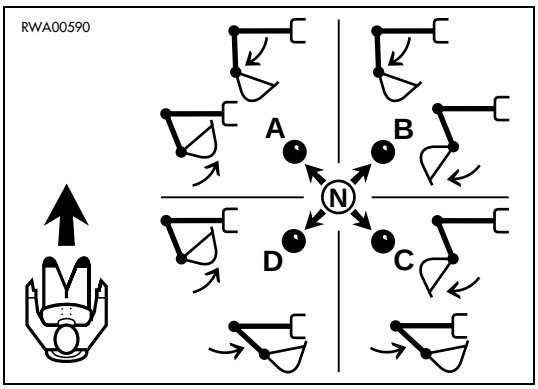

“X” SYSTEM CONTROLS

LEVER 15 (BASIC MANOEUVRES)

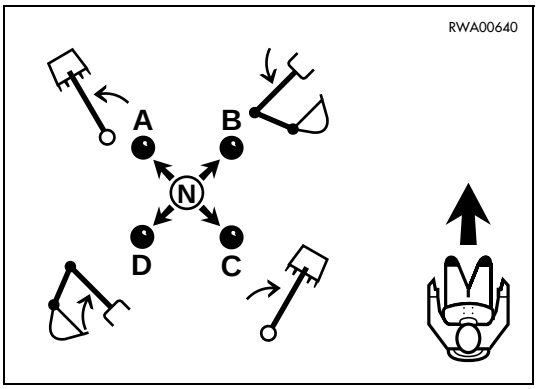

N - Neutral
A - Boom swing to the left
B - Boom lowering
C - Boom swing to the right
D- Boom raising

LEVER 16 (BASIC MANOEUVRES)

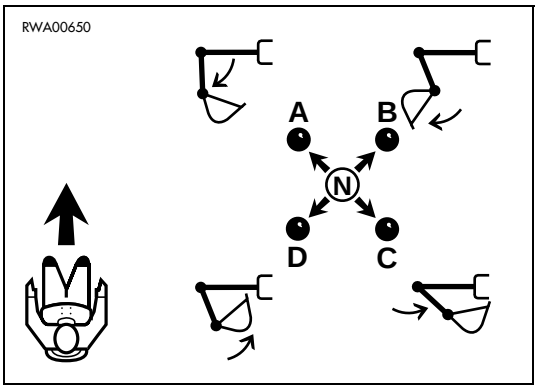

N - Neutral
A - Arm opening
B - Bucket opening
C - Arm folding
D - Bucket folding

If the levers are operated in directions that are inclined with respect to the machine axis, simultaneous movements proportional to the angle of inclination are obtained, since the two hydraulic distributors corresponding to each single function are engaged at the same time.

LEVER 15 (COMBINED MANOEUVRES)

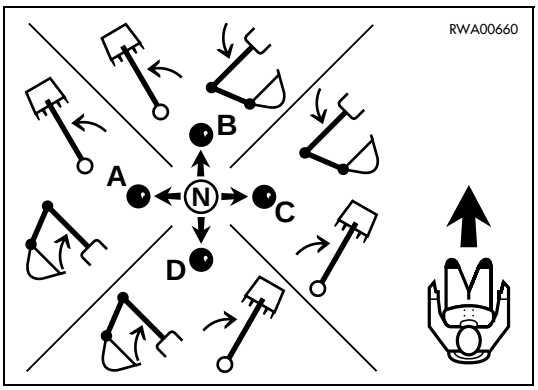

N - Neutral
A - Boom raising and swing to the left
B - Boom lowering and swing to the left
C - Boom lowering and swing to the right
D - Boom raising and swing to the right

LEVER 16 (COMBINED MANOEUVRES)

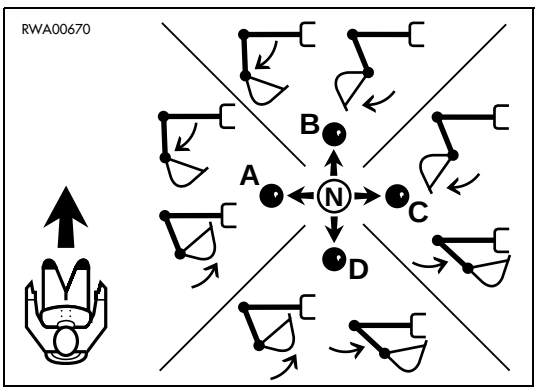

N - Neutral
A - Arm opening - bucket folding
B - Arm opening - bucket opening
C - Arm folding - bucket opening
D - Arm folding - bucket folding

17/18 - STABILIZER CONTROL LEVERS (Standard version)

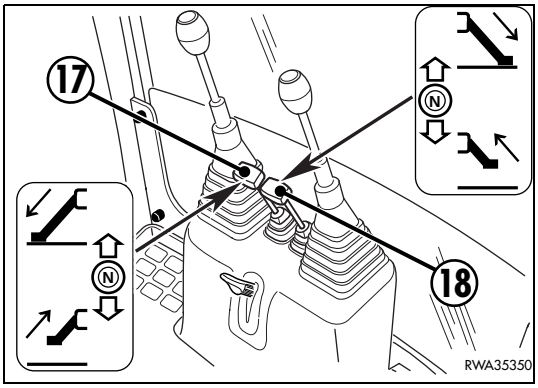

IMPORTANT

- **Before moving the machine, make sure that the stabilizers are completely raised.**
- **When travelling on roads, raise the stabilizers completely and engage the safety locks.**

These levers control the lowering and raising of the machine stabilizers during digging operations.

17/18 - STABILIZER CONTROL SWITCHES (Version with servo controls)

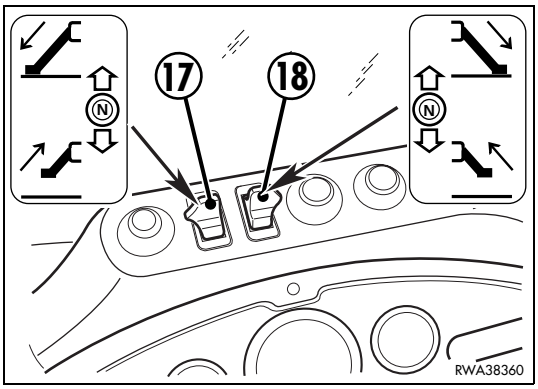

IMPORTANT

- **Before moving the machine, make sure that the stabilizers are completely raised.**
- **When travelling on roads, withdraw the stabilizers completely and engage the safety locks.**
  Engage also the backhoe control locking device by pressing the switch (26).

These lever switches are positioned on the upper part of the side dashboard and control the lowering and lifting of the machine stabilizers during digging operations.
Push the switches (17) and (18) towards the outside of the cab in order to lower both stabilizers. To lift them, pull the switches (17) and (18) towards the inside of the cab.
Both the switches (17) and (19) can be disabled by means of the backhoe control locking switch (26). For the control locking procedure, see “26. BACKHOE CONTROL LOCKING SWITCH”.

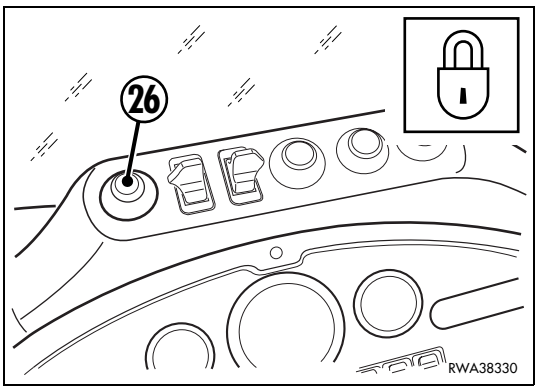

19 - STEERING WHEEL ADJUSTMENT LOCKING LEVER

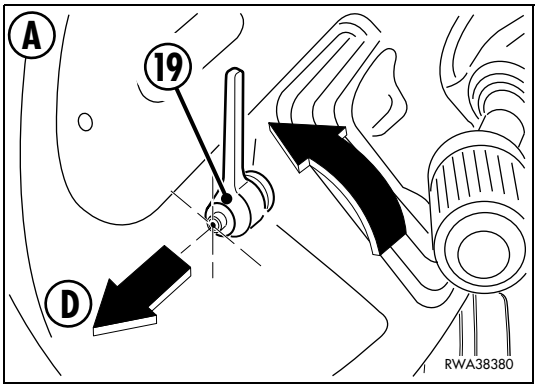

DANGER

- **Adjust the steering wheel while seated in the driving position. The machine must be completely still and the engine must be off.**
- **Before using the machine, make sure that both the steering wheel and the adjusting lever are completely locked. Non-compliance with these instructions may lead to serious accidents.**

This lever is positioned on the left side of the steering wheel and allows the latter to be adjusted according to the physical characteristics of the operator.
It is possible to choose among different positions; for the adjustment, proceed as follows:

1 - After stopping the machine and the engine, turn the lever (19) anticlockwise to release the steering wheel (see Fig. A).

2 - Adjust the steering wheel by moving it forward and backward until finding the desired position (see Fig. B).
Turn the lever (19) clockwise to lock the steering wheel in the desired position (see Fig. C).

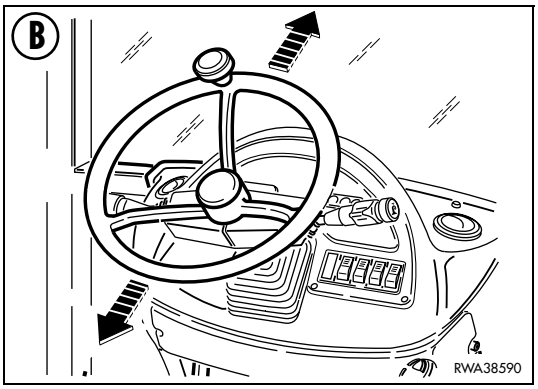

IMPORTANT

- **If the stroke of the lever (19) isn't sufficient to lock the steering wheel completely, pull the lever (19) as indicated by the arrow (D). At this point, shift the lever (19) to its original position by repeating the operation and turning it clockwise or anticlockwise.**

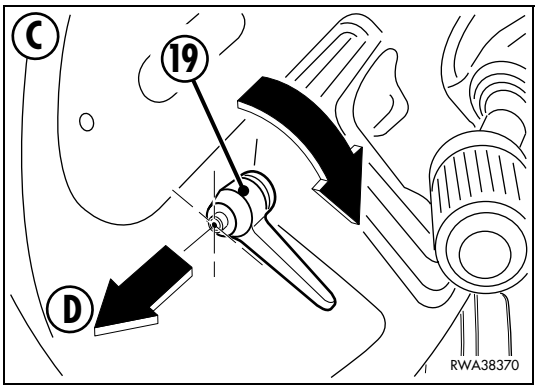

20-21 JOYSTICK LOCKING LEVERS (Only with servo controls)

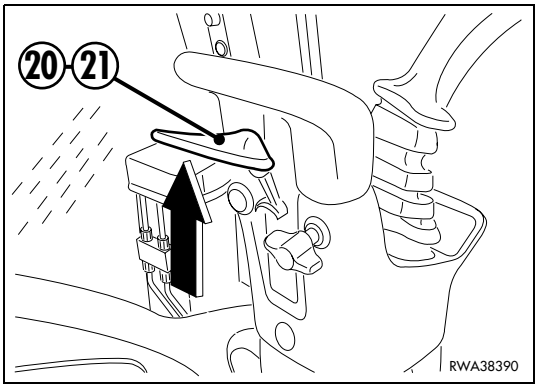

DANGER

- **The operator must use the joystick locking levers while seated in the driving position, with the machine at rest.**
- **Before using these levers, always make sure that the backhoe control locking device is engaged. See “26 BACKHOE CONTROL LOCKING SWITCH (only with servo controls)”.**

These levers are positioned under the supports and their function is to lock/release the respective joysticks.
It is possible to turn both the joysticks to the desired operating position by simply pressing the levers (20-21). Once the desired position has been reached, release the respective levers to lock the joysticks.

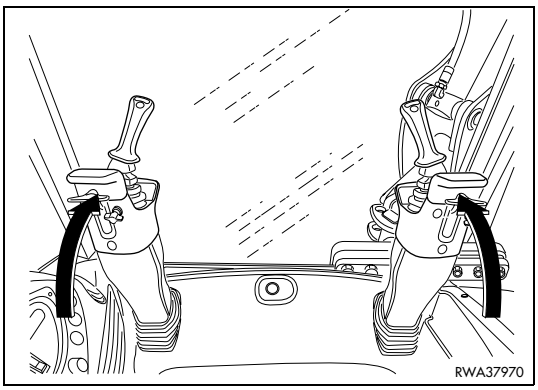

IMPORTANT

- **The joysticks must always be rotated moderately, trying to accompany them to the desired positions.**
- **At the end of digging operations with the backhoe, always bring the joysticks back to the vertical position.**

22-23 SUPPORT ADJUSTING KNOB (Only with servo controls)

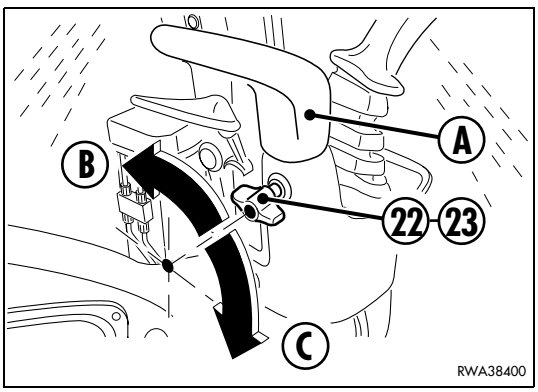

DANGER

- **The operator must adjust the supports while seated in the driving position, before starting work and with the machine completely still.**
- **Before adjusting these knobs, always make sure that the backhoe control locking device is engaged. See “26 BACKHOE CONTROL LOCKING SWITCH (Only with servo controls).**

These knobs make it possible to position the corresponding supports (A) at the desired height.
To release and adjust the supports (A), it is sufficient to turn both the knobs (22-23) anticlockwise, as indicated by the arrow B.
Once the supports (A) have been positioned as desired, turn the knobs (22-23) clockwise until locking them, as indicated by the arrow C.

IMPORTANT

- **After carrying out the adjustment, make sure that the knobs (22-23) and the supports (A) are perfectly locked.**

24-25 JOYSTICK STROKE ADJUSTING KNOB (Only with servo controls)

DANGER

- **The adjustment of the joystick stroke must be carried out before starting work and with the machine completely still.**
- **Before adjusting these knobs, always make sure that the backhoe control locking device is engaged. See “26 BACKHOE CONTROL LOCKING SWITCH (Only with servo controls).**

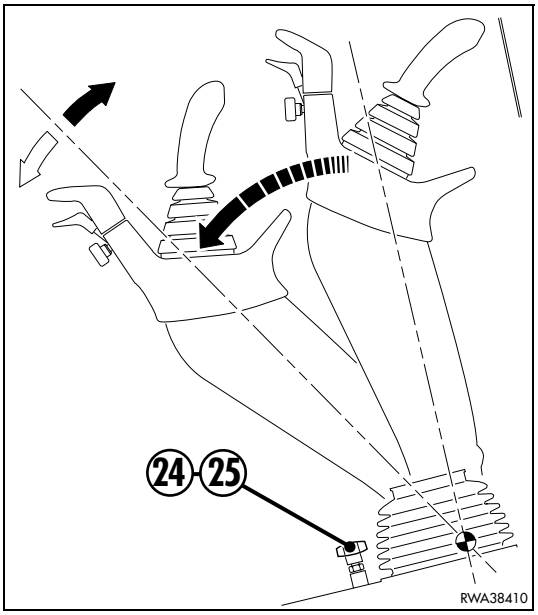

These knobs are positioned on the cab floor, on the front part of each joystick support, respectively. Their specific function is to adjust the stroke of both joysticks in order to reach the most suitable operating position; for the adjustment, proceed as follows:

1 - After releasing the joysticks, lower them completely until reaching the end of stroke. If they are excessively inclined, reduce the stroke by turning the knobs (24-25) clockwise, as indicated by the arrow A. If, on the other hand, it is necessary to increase the stroke in order to obtain a more inclined position of the joysticks, turn the knobs (24-25) anticlockwise, as indicated by the arrow B.

2 - After adjusting both joysticks, make sure that their position is within the desired values.

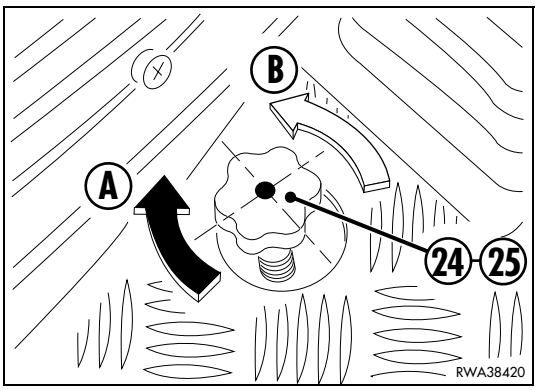

It is also possible to adjust the stroke of the joysticks when these are not used and are brought to the vertical position. Once they have been lifted, make sure that the safety distance between the joystick (2) and the rear window (3) is such as to prevent any contact between them (approximately 60 mm).
If an adjustment should be necessary, proceed as follows:

1 - To increase the distance between the joystick (2) and the rear window (3), loosen the stop nut (4) from its terminal position and turn the adjusting screw (5) clockwise.
To reduce the distance between the joystick (2) and the rear window (3), turn the adjusting screw (5) anticlockwise.
Use a 17 mm hexagon spanner.

2 - Make sure that the distance complies with the safety limits prescribed and tighten the stop nut (4) thoroughly.

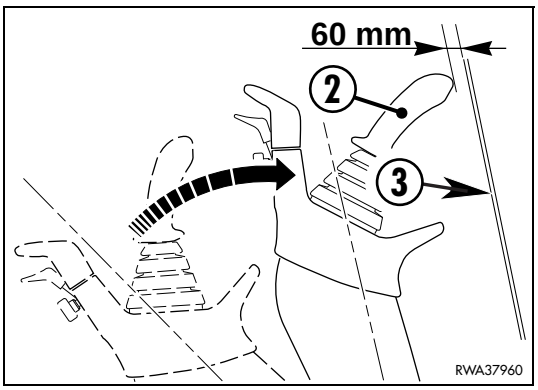

IMPORTANT

- **The joysticks must be rotated moderately, trying to accompany them to the desired positions.**
- **After adjusting the stroke of both joysticks, make sure that all the fastening elements are correctly locked.**

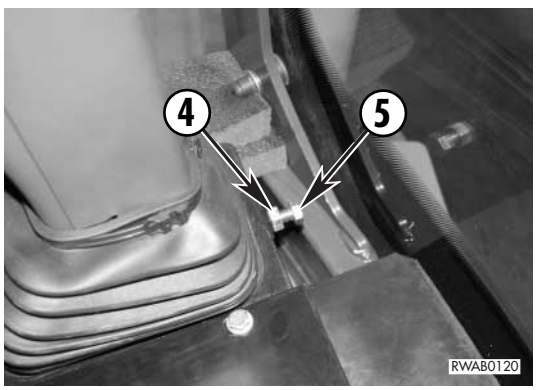

26 - BACKHOE CONTROL LOCKING SWITCH (Only with servo controls)

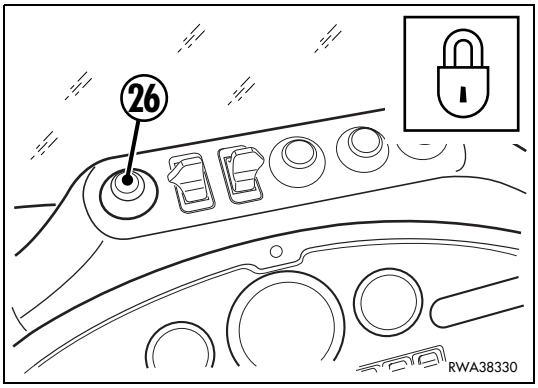

DANGER

- **If it is necessary to stop the machine, lower the equipment to the ground and always engage the control safety device by means of the locking switch (27).**
- **When travelling on roads, always engage the backhoe control locking device by pressing the switch (27).**
- **Non-compliance with these instructions may cause serious damage.**

All the backhoe controls can be disabled by pressing the switch (26) positioned on the upper part of the side dashboard. The locking of the controls is confirmed by the coming on of the corresponding warning light.
To enable the backhoe controls, press the switch (26) again and keep it pressed until the warning light goes out.
Every time the machine is stopped the control locking device (26) is automatically reset and all the backhoe controls are locked.
Therefore, when the machine is started the backhoe controls will always be locked and the relevant warning light will be on.

IMPORTANT

- **When the control safety device (26) is engaged, all the movements are inhibited.**

27 - OFFSET BOOM LEFT SWING CONTROL PUSH BUTTON (if installed and only with servo controls)

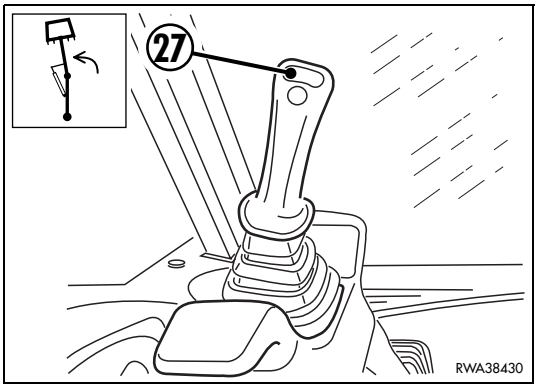

This is a single-function push button positioned on the left joystick lever and allows the offset boom to be swung to the left. To swing the boom, press the push button (27); to stop the boom, release the push button.
For the use of the offset boom, see “6.7 APPLICATION OF THE OFFSET DEVICE”.

IMPORTANT

- **When the control safety device (26) is engaged, all the movements are inhibited.**
  See “26 BACKHOE CONTROL LOCKING SWITCH” (Only with servo controls).

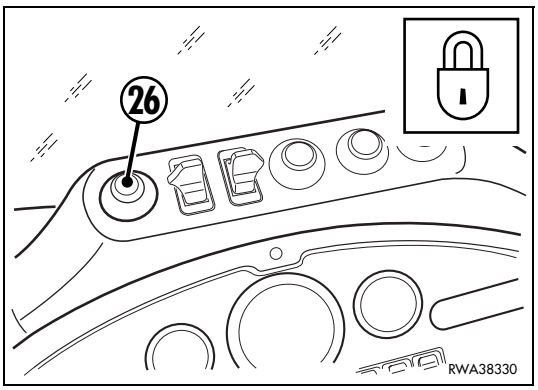

28 - OFFSET BOOM RIGHT SWING CONTROL PUSH BUTTON (if installed and only with servo controls)

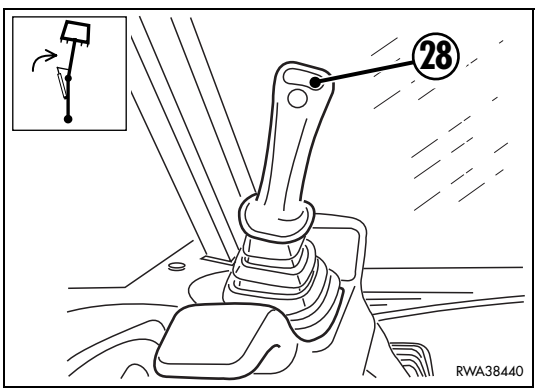

This is a single-function push button positioned on the right joystick lever and allows the offset boom to be swung to the right. To swing the boom, press the push button (28); to stop the boom, release the push button.
For the use of the offset boom, see “6.7 APPLICATION OF THE OFFSET DEVICE”.

IMPORTANT

- **When the control safety device (26) is engaged, all the movements are inhibited.**
  See “267 BACKHOE CONTROL LOCKING SWITCH” (Only with servo controls).

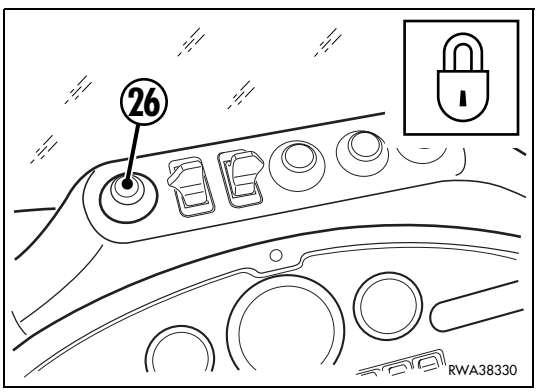

29 - HORN PUSH BUTTON (Only with servo controls)

This push button is positioned on the left backhoe control lever and serves to warn the persons in the vicinity at the beginning of the operations and in case of danger when working with the backhoe.

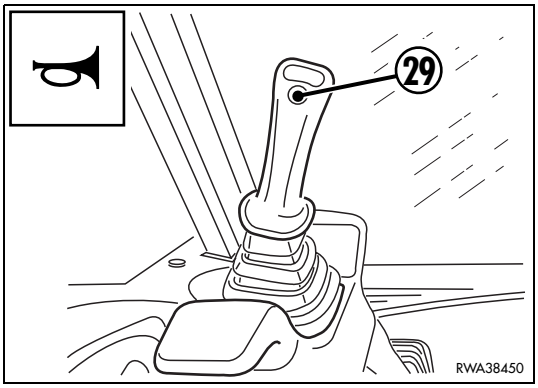

IMPORTANT

- **When the control safety device (26) is engaged, the function of the horn is inhibited.**
  See "26 BACKHOE CONTROL LOCKING SWITCH" (Only with servo controls).

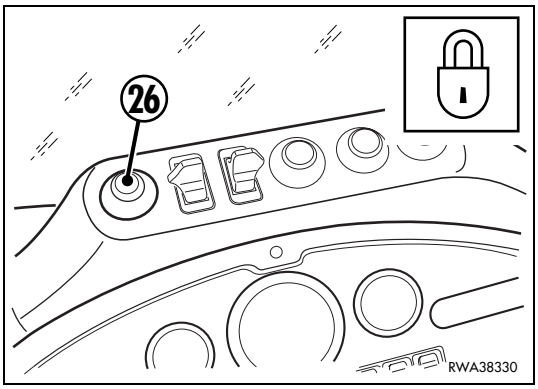

30 - TELESCOPIC ARM EXTENSION PUSH BUTTON (if installed and only with servo controls)

This is a single-function push button positioned on the right joystick lever and controls the extension of the telescopic arm. To extend the arm, press the push button (30); to stop the arm, release the push button.
For the use of the telescopic arm, see "6.5 BACKHOE TELESCOPIC ARM".

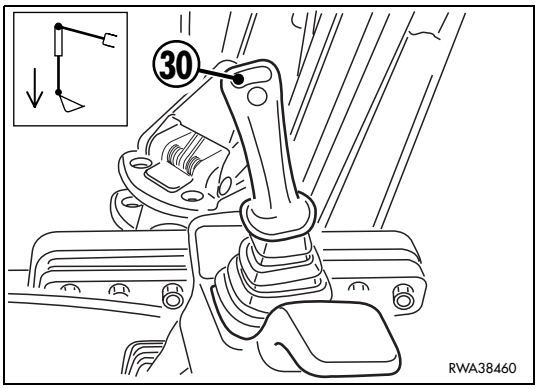

IMPORTANT

- **When the control safety device (26) is engaged, all the movements are inhibited.**
  See "26 BACKHOE CONTROL LOCKING SWITCH" (Only with servo controls).

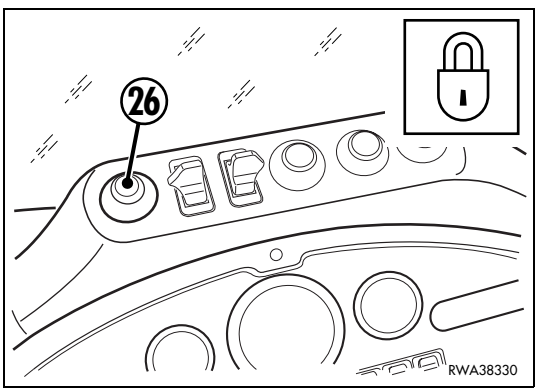

31 - TELESCOPIC ARM RETRACTION PUSH BUTTON (if installed and only with servo controls)

This is a single-function push button positioned on the right joystick lever and controls the retraction of the telescopic arm. To retract the arm, press the push button (31); to stop the arm, release the push button.
For the use of the telescopic arm, see “6.5 BACKHOE TELESCOPIC ARM”.

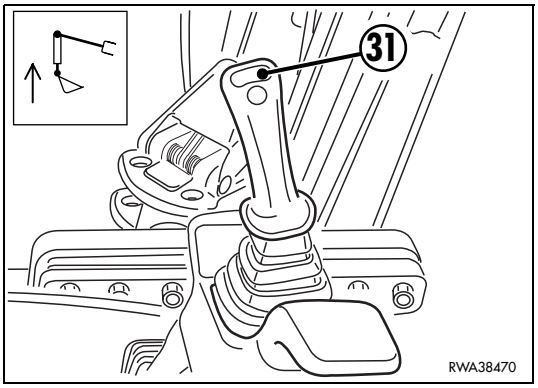

IMPORTANT

- **When the control safety device (26) is engaged, all the movements are inhibited.**
  See “26 BACKHOE CONTROL LOCKING SWITCH” (Only with servo controls).

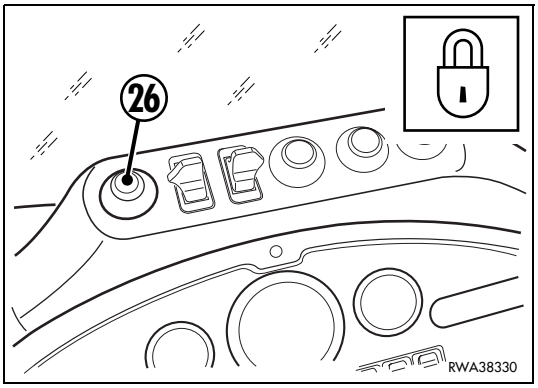

32 - DEMOLITION HAMMER CONTROL PUSH BUTTON (if installed and only with servo controls)

To operate the demolition hammer, press this push button; to stop the hammer, release the push button.
For the use of the demolition hammer, see “6.6 ARRANGEMENT FOR THE INSTALLATION OF THE DEMOLITION HAMMER”.

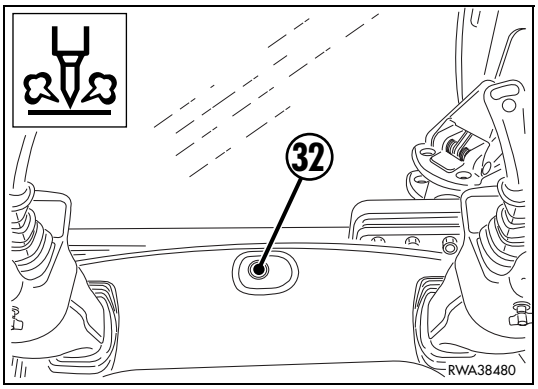

IMPORTANT

- **When the control safety device (26) is engaged, all the movements are inhibited.**
  See “26 BACKHOE CONTROL LOCKING SWITCH” (Only with servo controls).

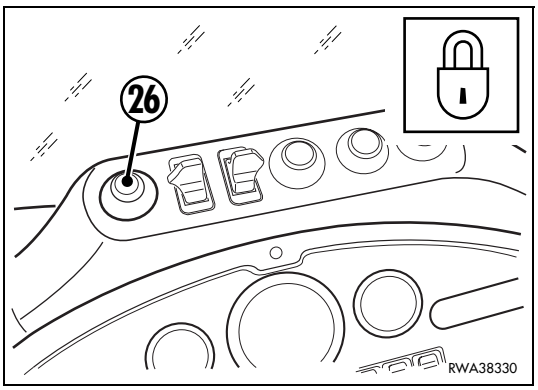

33 - PATTERN CHANGE CONTROL LEVER (if installed and only with servo controls)

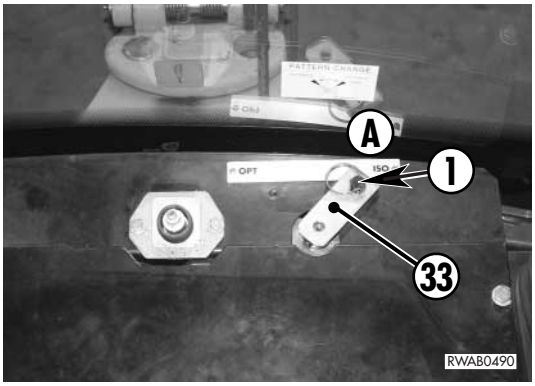

DANGER

- **The desired control pattern must be selected before starting work, with the machine completely still.**
- **Before using the controls, the operator must make sure that the selected pattern is the one required. The operator must also make sure that the lever (33) is perfectly locked.**

The pattern change control is positioned on the rear central part of the cab floor and allows the operator to choose the control pattern he prefers.
The pattern change control lever (33) has two positions:

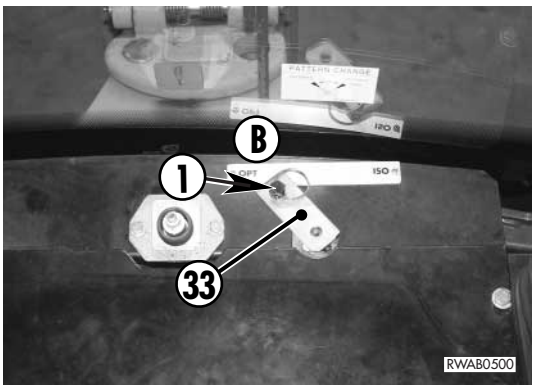

- Pos. 1: ISO control pattern
  Lever in position A.
- Pos. 2: OPTIONAL control pattern
  Lever in position B.

The pattern change control lever (33) is held in its position by means of a safety screw (1). When it is necessary to change the control pattern, raise the mat and loosen the safety screw (1) until releasing the lever (34) completely.
Select the desired control pattern by rotating the lever (33) horizontally and secure it in its position by means of the safety screw (1). Put back the mat.

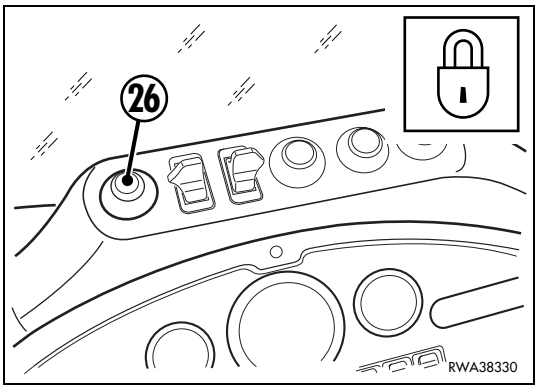

IMPORTANT

- **When the control safety device (26) is engaged, all the movements of the boom, the arm and the equipment are inhibited.**
  See See “26 BACKHOE CONTROL LOCKING SWITCH” (Only with servo controls).

3.4 FUSES AND RELAYS

IMPORTANT

- **When changing a fuse, make sure that the ignition switch is in position «O».**
- **If the fuses are oxidized, corroded or do not fit perfectly in their seat, replace them only with new fuses having the same capacity.**
- **If the engine does not turn when the ignition switch is brought to position «⏲» START, check the engine start fuse and if necessary change it.**

3.4.1 EQUIPMENT FUSES AND RELAYS

The fuses and relays are grouped on a single base positioned inside the front dashboard and protected by a flap door (1).
The following tables indicate the characteristics and the functions of the single fuses and relays.

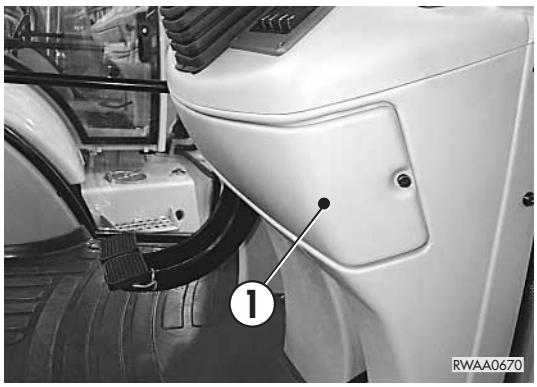

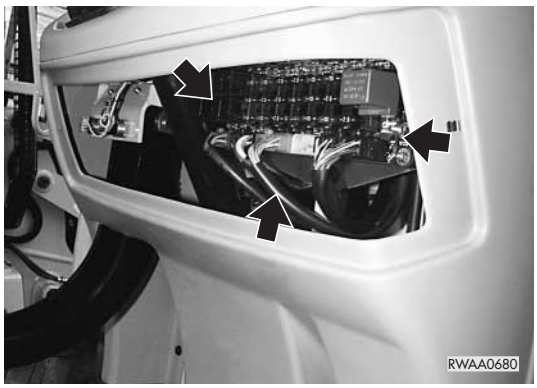

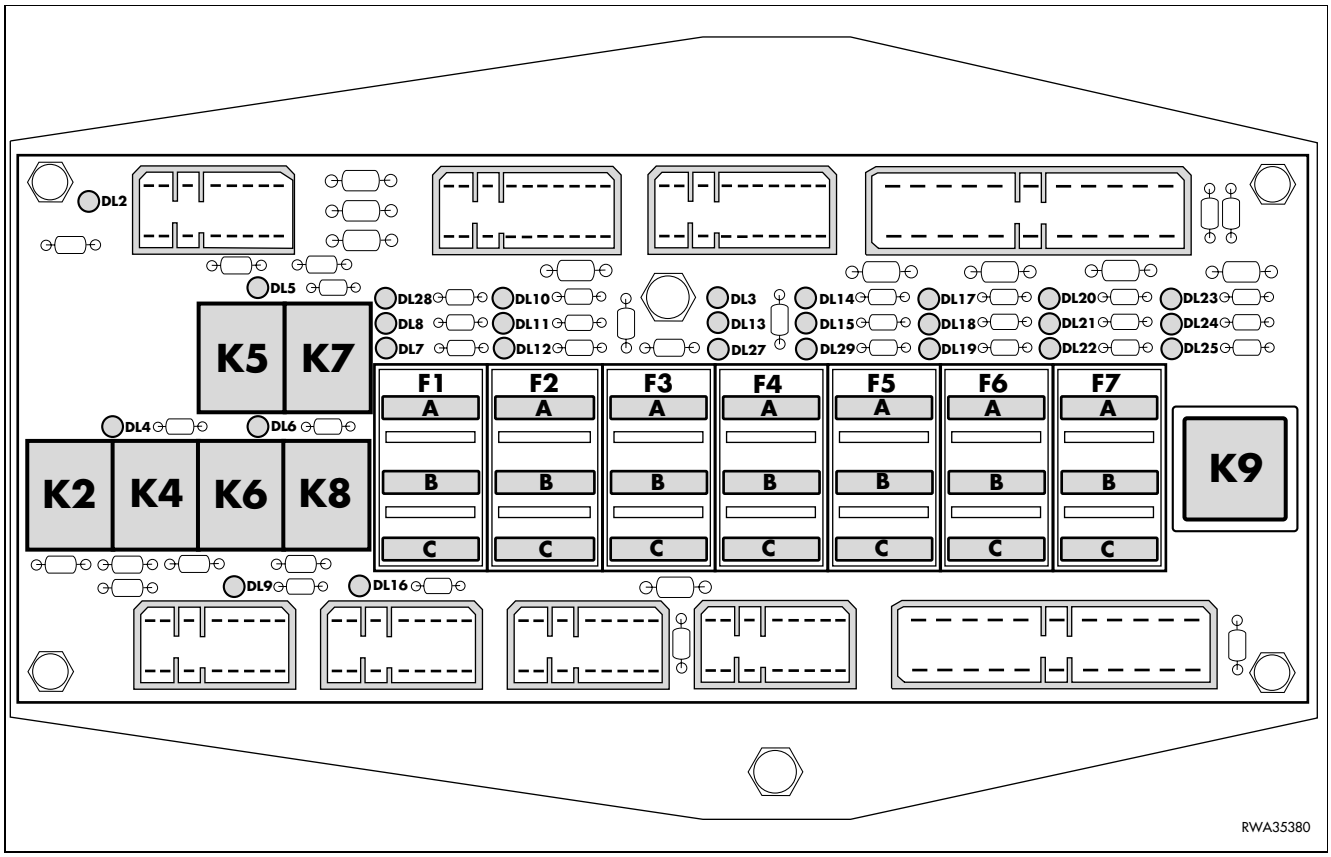

3.4.1.1 FUSES

POSITION		COLOUR	CAPACITY (A)	INVOLVED CIRCUIT
F1	A	Light blue	15	Low beam
	B	Violet	3	Rear right and front left parking light
	C	Violet	3	Rear left and front right parking light
F2	A	Red	10	EGM power supply - Four-wheel drive
	B	Light blue	15	Cab overhead lamp - Radio - Cigarette lighter - Revolving light
	C	Red	10	Emergency power supply
F3	A	Brown	7.5	Stoplights -Seat sensor
	B	Brown	7.5	Instruments - Warning lights - Switch lights - Return to dig (if installed)
	C	Brown	7.5	Optional solenoid valve
F4	A	Brown	7.5	Front windshield wiper
	B	Red	10	EGM power supply relay
	C	Light blue	15	High beam
F5	A	Red	10	Heating motor relay - Power/Economy unit - Seat electronic unit
	B	Light blue	15	Rear working lights
	C	Light blue	15	Front working lights
F6	A	Light blue	15	Rear horn - Rear windshield wiper
	B	Brown	7.5	Dimmer switch - Front horn relay
	C	Red	10	Direction indicators
F7	A	Brown	7.5	4WS display - Axle sensors - Steering push buttons
	B	Red	10	Front horn
	C	Brown	7.5	Engine stop solenoid

3.4.1.2 RELAYS

POSITION	DESCRIPTION
K2	Reversing gear acoustic alarm (if installed)
K3	Four-wheel drive relay
K4	Start enabling relay
K5	Low beam relay
K6	High beam relay
K8	Horn relay
K9	Blinking relay
K10	EGM power supply relay

3.4.2 ENGINE LINE FUSES AND RELAYS

The fuses and relays are grouped on a single base positioned inside the engine compartment and protected by a cover (1). This unit can be reached by opening the engine hood (see “3.5.1 ENGINE HOOD”).

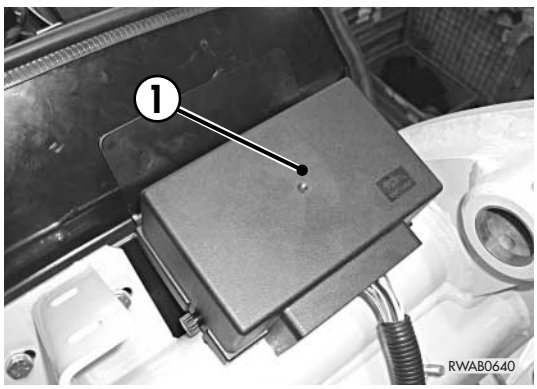

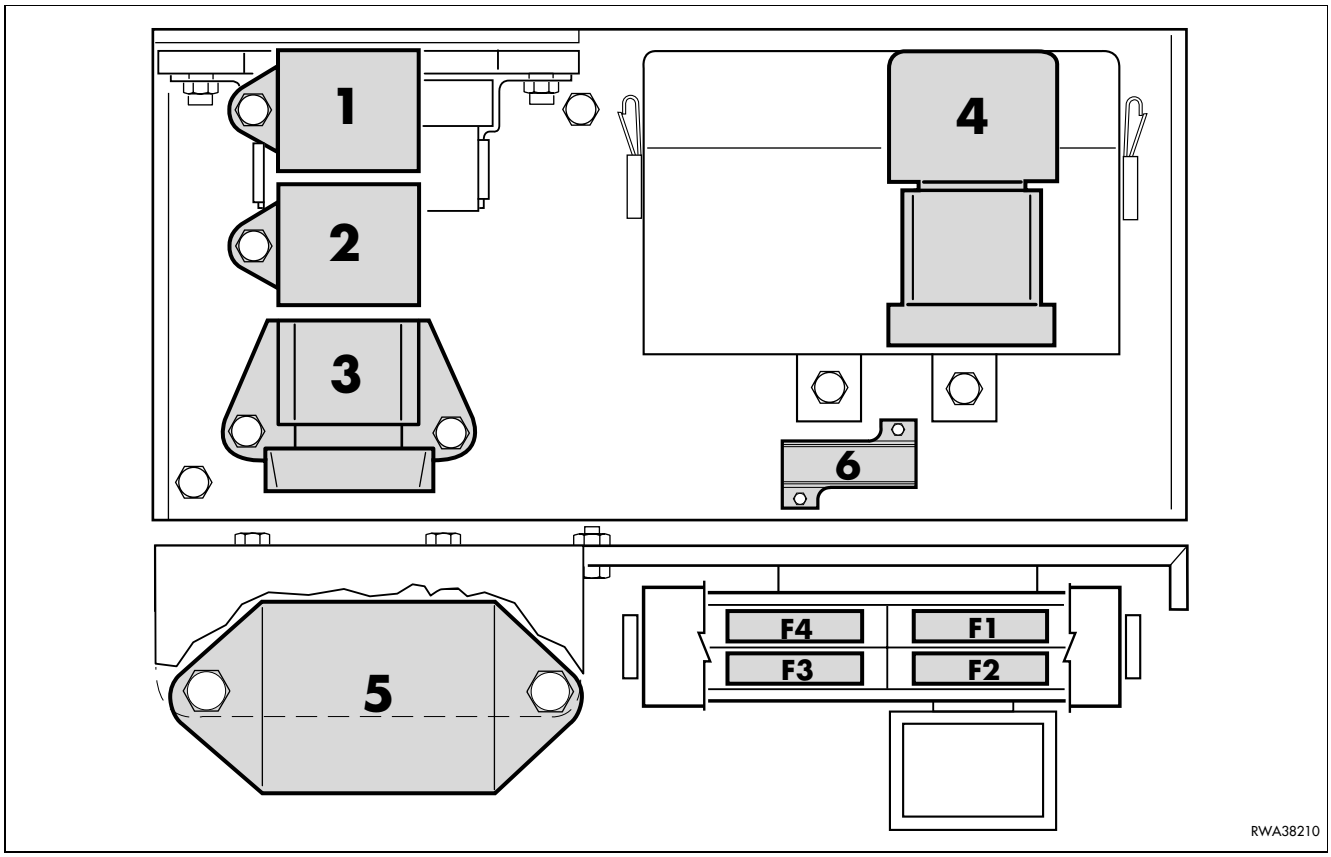

3.4.2.1 FUSES

POSITION	COLOUR	CAPACITY (A)	INVOLVED CIRCUIT
F1	Blue	60	Key block power supply
F2	White	80	Engine stop
F3	Orange	40	Engine start circuit
F4	Orange	40	Heating and air conditioning fan - High and low beam - Electric outlet

3.4.2.2 RELAYS

POSITION	DESCRIPTION
1	Engine stop enabling timer
2	Preheating timer
3	Glow plug preheating relay
4	Solenoid pull relay (engine stop)
5	Safety relay (against repeated start)
6	Battery alarm warning light resistance

3.4.3 SIDE DASHBOARD RELAYS

POSITION	DESCRIPTION
1	Stop light relay
2	Seat safety relay
3	Automatic power relay
4	Return-to-dig relay (if installed)
5	Fan 3rd speed relay (only with A/C system)
6	Fan relay

These relays are positioned inside the right dashboard; to reach them, lift the dashboard cover (7), after removing the relevant fastening screws (8).

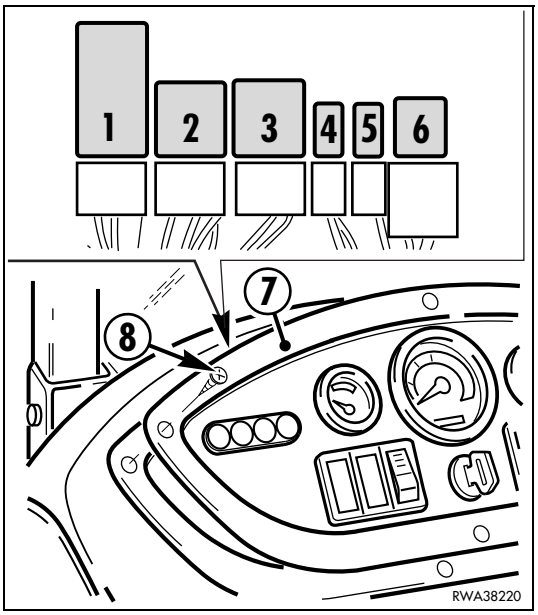

3.4.4 SIDE DASHBOARD RELAYS AND FUSES (Only with servo controls)

3.4.4.1 RELAYS

POSITION	DESCRIPTION
1	Servo control unit
2	Power supply relay

The relay (1), the unit (2) and the fuse (F3) are installed only if the machine is equipped with backhoe servo controls. They are positioned inside the right dashboard and to reach them it is necessary to lift the dashboard cover (4), after removing the relevant fastening screws (5).

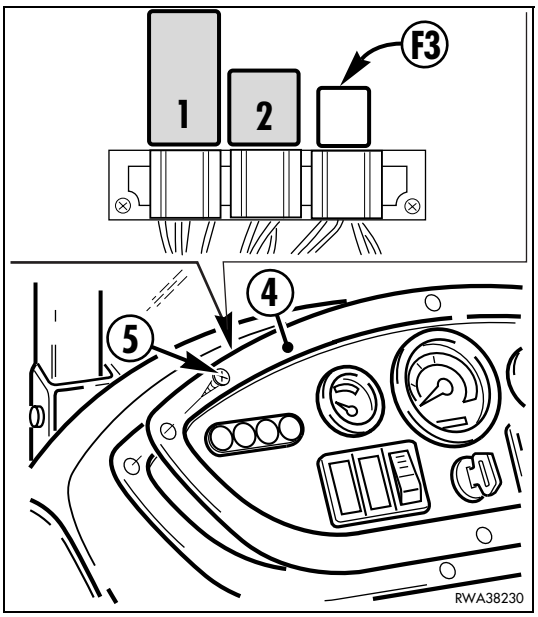

3.4.4.2 FUSES

POSITION	COLOUR	CAPACITY (A)	INVOLVED CIRCUIT
F3	Light blue	15	Servo control power supply

3.5 GUARDS, CAB AND DRIVER'S SEAT

3.5.1 ENGINE HOOD

DANGER

- **Do not open the engine hood when the engine is running.**
- **Do not use the machine without engine hood and do not start the engine when the hood is open, unless this is expressly prescribed for certain maintenance operations.**
- **Before opening the hood, lower the equipment to the ground and apply the parking brake.**
- **Before carrying out any maintenance operation inside the engine compartment, park the machine on firm and flat ground, raise the loader arm and engage the safety lock.**
- **Non-compliance with these rules may result in serious accidents.**

After releasing the lock, press the push button (1), raise the hood (2) and open it completely.
To close the hood, lower it slowly and push it downwards until the lock snaps.
Lock the hood.

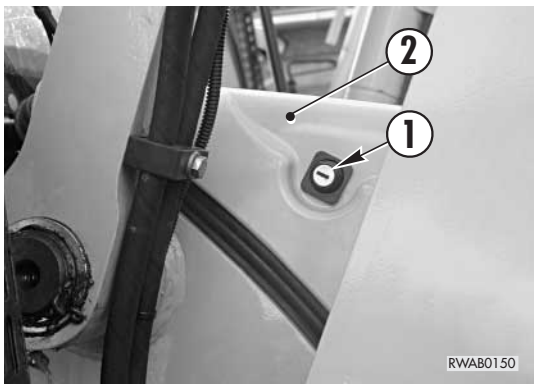

3.5.2 CANOPY (if provided)

DANGER

- **The safety canopy (1) is ROPS-FOPS homologated; if it is subjected to an impact for any reason, or if the machine overturns, contact your Komatsu Utility Distributor immediately to have the canopy replaced.**

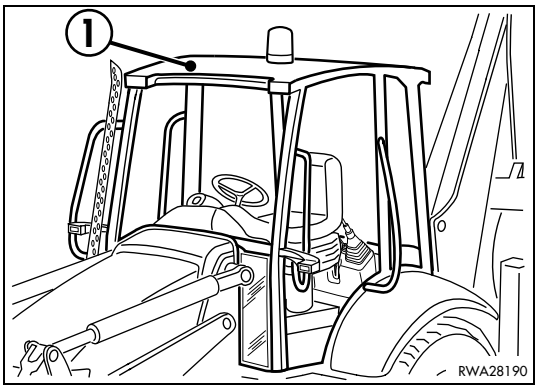

3.5.3 CAB

DANGER

- **The cab is ROPS-FOPS homologated; if it is subjected to an impact for any reason, or if the machine overturns, contact your Komatsu Utility Distributor immediately to have the cab replaced.**
- **The cab is provided with two doors; the left door must be normally used to get on and off the cab, while the right door is the emergency door.**
- **Before starting the machine, make sure that the right door (emergency door) is not locked.**

The cab features a rear upper window that can be opened completely; once opened, this window must be secured to the upper part of the cab, parallel to the roof.
The rear lower window, instead, is fixed.
The side windows can be opened partially or completely, even if the doors are completely closed. These solutions are particularly useful during the summer, since they ensure constant air circulation and therefore reduced stress for the operator.

The rear door (1) can be opened only after releasing the couplings (2), by pulling and lifting the window itself; once the window has been positioned, the bayonet joints (2) must be fitted in the upper safety couplings.

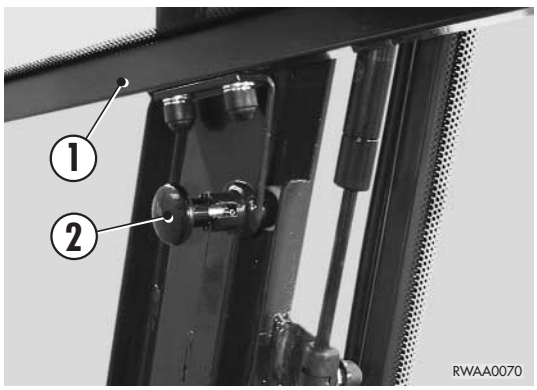

The rear side windows can be opened partially or completely.
To open them partially, proceed as follows:

1 - Release the lever (3) from the lower coupling pin (4), following the direction indicated by the arrow shown in Fig. A.

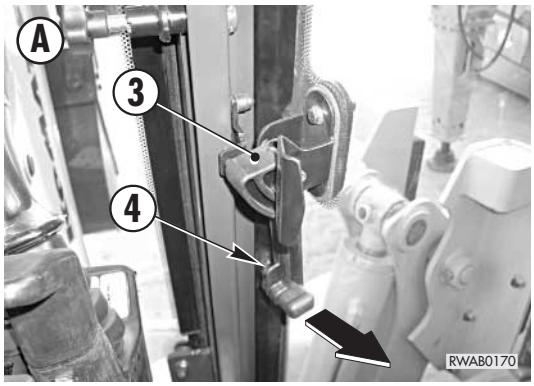

2 - Lift the lever (3) with a simple sliding movement and at the same time push the lever toward the outside of the cab.
After lifting the lever (3), push its end downwards in order to engage it in the upper coupling pin (5), as shown in Fig. B.

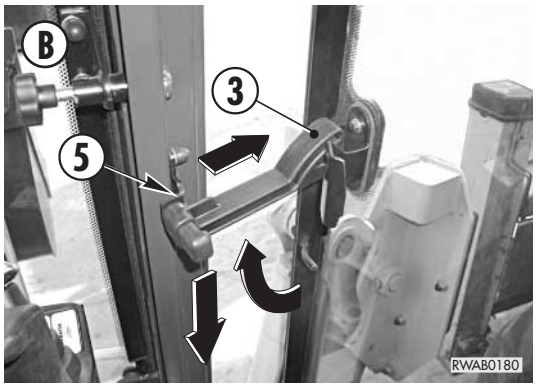

If it is necessary to open the rear side windows completely, proceed as follows:

1 - Release the lever (3) from the upper coupling pin (5) following the direction indicated by the arrow shown in Fig. C.

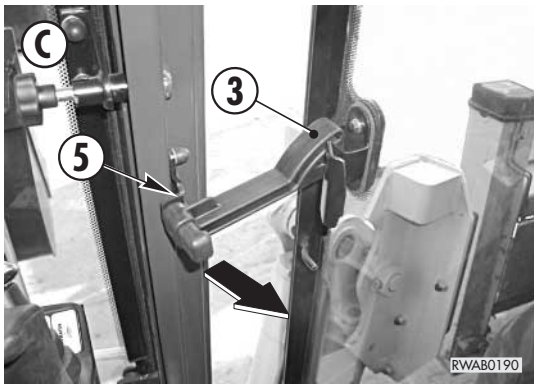

2 - With the window open, lower the lever (3) until engaging it in the lower coupling pin (4), as shown in Fig. D.

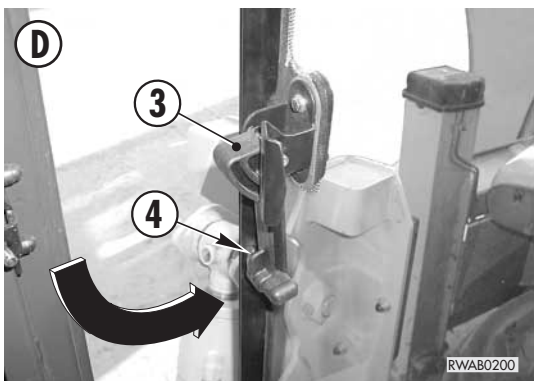

3 - Rotate the rear side windows towards the front of the machine, until engaging the coupling (6) in the rubber block (7), as shown in Fig. E.

To close the rear side windows, repeat the operations described above in the reverse order, remembering that the lever (3) must always be engaged in the lower coupling pin (4) as shown in Fig. A.

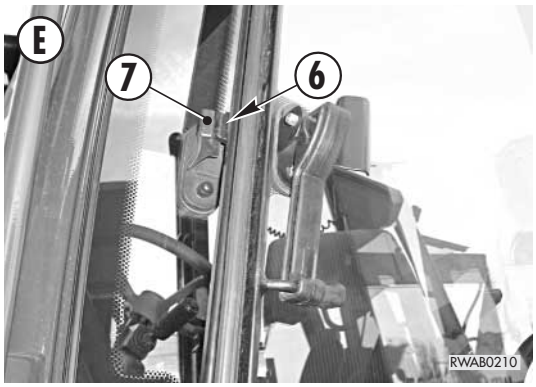

IMPORTANT

- **When the rear windows are partially or completely closed, they must always be engaged in the lower (4) or upper (5) coupling pin by means of the lever (3).**
- **When the rear windows are rotated towards the front of the machine in order to open them completely, make sure that they are perfectly locked in the relevant rubber blocks (7).**
- **Periodically lubricate the rubber blocks (7) with specific greases, in order to facilitate the coupling operation.**

The cab access doors can be opened even partially; the partial opening is obtained by fitting the locking devices (8) in the handle support recesses (9).

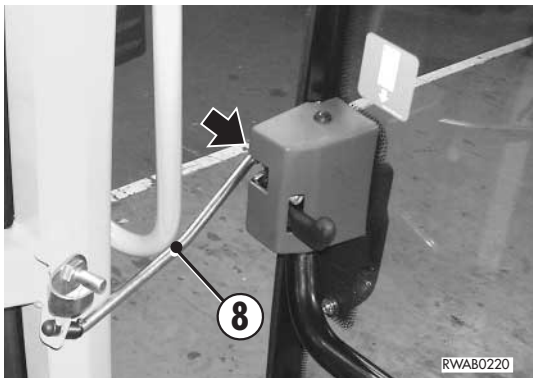

IMPORTANT

- **The doors must always be secured with the locking devices (8) or closed.**

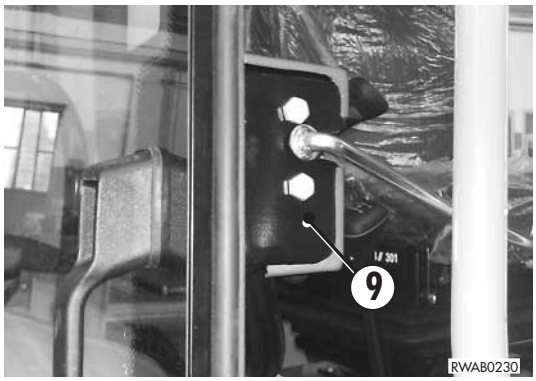

3.5.4 VENTILATION AND HEATING

The ventilation and heating of the cab serve to reduce the operator's stress either in the summer and in the winter; these functions also serve to eliminate the condensate from the front window, thus ensuring visibility during both work and travel.
Ventilation and air change are achieved by means of a 3-speed fan assembled on the outside of the machine, under the cab.
The air suction is protected by a filter positioned on the right side of the cab, while the distribution is obtained through a series of adjustable openings with variable delivery (1), either for the side flows and for the flows that serve to defrost and defog the front window.
A radiator having the function to heat the air conveyed into the cab is installed beside the fan; this is used in the cold season and receives the hot water necessary for the heat exchange directly from the engine cooling circuit.
The water supply flow is divided or excluded by means of a tap operated by the handwheel (2) positioned on the side dashboard.
The flow intensity is adjusted by rotating the handwheel clockwise.
The ventilation and heating system can also provide for the recirculation of the air inside the cab, which is obtained by opening the outlet (3).
This function ensures quicker heating and is very useful when working in areas where air pollution is considerable (tunnels, dusty places, small or badly ventilated rooms, etc.).
If the operator deems it necessary, the machine can be equipped with air conditioning system in addition to the ventilation and heating system. This is particularly useful in the hot season, when the temperatures are rather high. For further information on the use of the air conditioning system, see "3.5.5 AIR CONDITIONER".

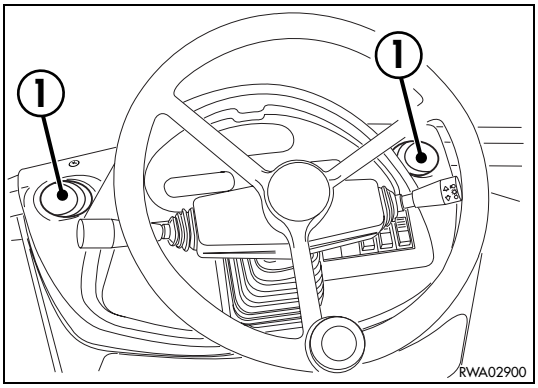

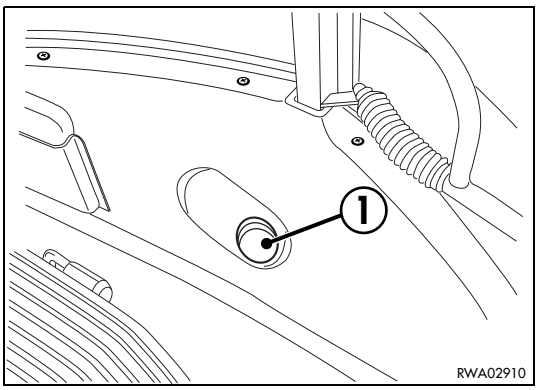

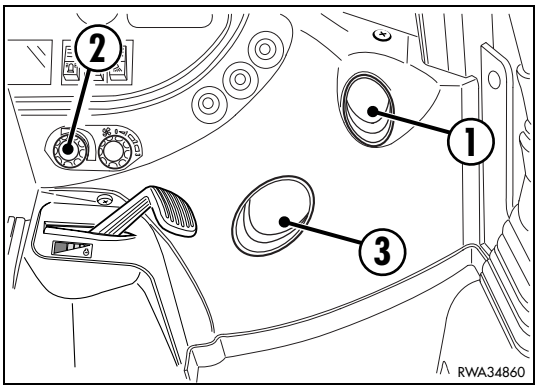

CAUTION

- **Do not use the air recirculation function for long periods in rainy or cold days, since this would increase the fogging of the inside of the windows.**

3.5.5 AIR CONDITIONER (if installed)

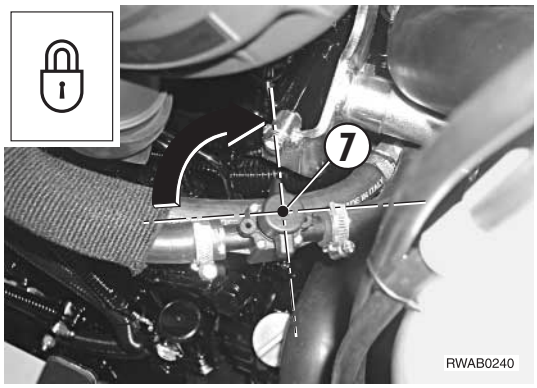

DANGER

- **The coolant used in the air conditioning system is very dangerous. If it is sprayed into the eyes or in case of contact with the skin, wash with plenty of water and consult a doctor without delay. Furthermore, to avoid any explosion, do not generate sparks and do not use naked flames near the air conditioner.**
- **The coolant contained in the air conditioning system is considered special waste and must be recovered and disposed of according to the antipollution regulations in force.**
- **For specific maintenance operations to be performed on the air conditioning system, contact your Komatsu Utility Dealer. Non-compliance with these instructions may cause serious damage and even death.**

The ventilation and, in this case, cooling of the cab have the specific purpose of reducing the stress to which the operator is subjected, in particular when the outside temperature is very high. The air conditioning system can be operated by proceeding as follows:

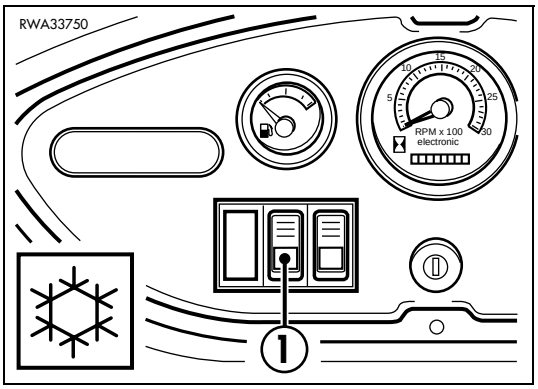

IMPORTANT

- **Before operating the air conditioner, interrupt the circulation of hot water in the engine by rotating the valve (7) positioned in the engine compartment clockwise.**

1 - Press the switch (1) positioned on the right dashboard.

2 - Turn the knob (2) anticlockwise.

3 - Turn the knob (3) to select the desired air flow among the 3 options available: **pos.: 1 - 2 or 3.**

4 - Once one of the three air flow speeds has been selected, the green warning light of the switch (1) will come on to indicate that the air conditioning system is in operation.

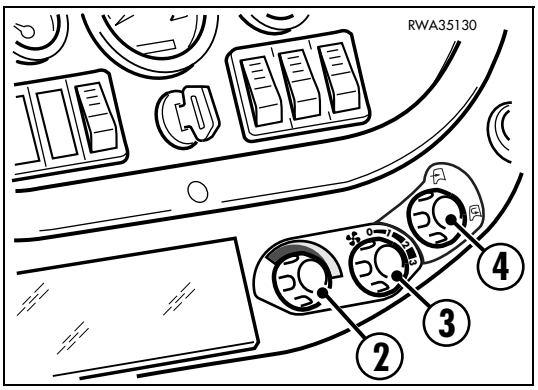

Once started, the system is piloted by a thermostat that intervenes when the evaporator positioned under the seat reaches the maximum or minimum temperature allowed. The distribution of air inside the cab takes place through the same air vents used for the heating system, with the addition of the side air vents (6). The air conditioning system is also provided with a special duct for the recirculation of air inside the cab . To use the air recirculation function, turn the knob (4) clockwise. In this way the suction of air from the outside is interrupted, while there is a continuous air recirculation inside the cab. The filter (5) positioned on the right dashboard has the function to filter the recirculating air, so that the air flow obtained is constantly clean.

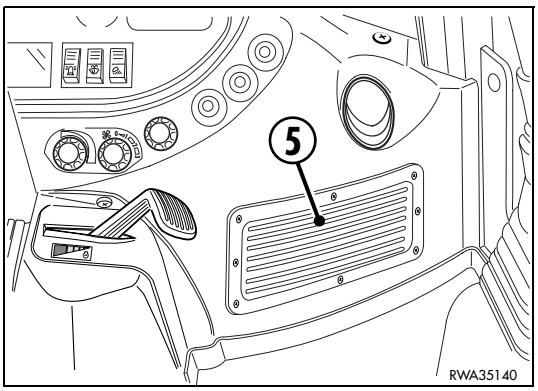

IMPORTANT

- **Periodically clean the filters, with time intervals to be fixed according to the environment in which the machine operates (min. every 5 days - max. every 15 days). To clean the filters, see "4.7.1.b CAB AIR FILTER" and "4.7.1.c RECIRCULATING AIR FILTER".**

The air recirculation function serves to obtain a quicker cooling of the cab and is very useful when working in extremely polluted areas (tunnels, very dusty places, small or closed places, ecc.). To switch off the air conditioner, bring the switch (1) to its initial position; the going out of the relevant green warning light confirms that the air conditioner is off.

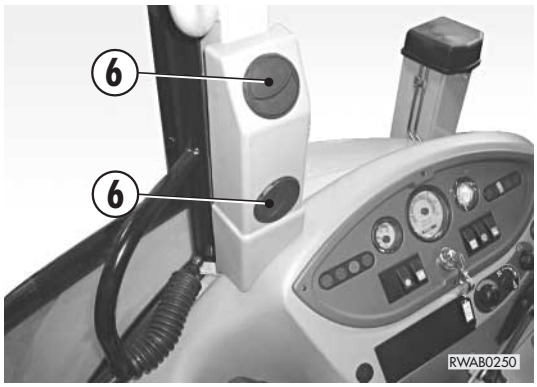

CAUTION

- **Even in the periods in which the air conditioner is not used, operate the compressor at low speed for approximately 3-5 minutes at least once a month. This operation ensures the constant lubrication of all the moving parts of the compressor.**

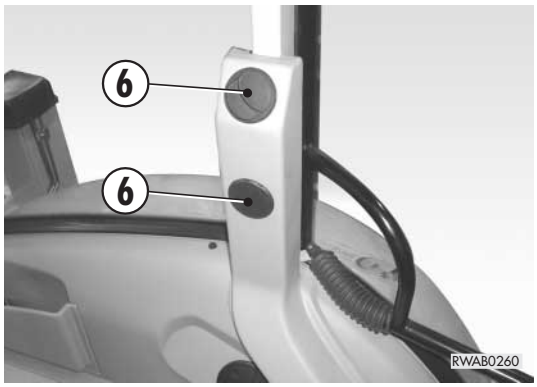

3.5.6 SEAT

3.5.6.1 SEAT (STANDARD)

The seat is extremely comfortable, in fact it offers five adjustment options:

a - Longitudinal adjustment.

b - Back inclination adjustment.

c - Adjustment of the suspension, to dampen the inevitable vibrations and jumps as much as possible.

d - Seat cushion height and inclination adjustment.

e - Rotation for works with the backhoe.

The operator can choose the most comfortable driving position according to his physique and to the angular position of the steering wheel.

The longitudinal adjustment of the seat is obtained by operating the lever (1) and making the seat slide on the guides; once the desired position has been found, release the lever and carry out slight movements, in order to make sure that the lock pin is properly fitted in its seat.

The back adjustment is obtained by acting on the levers (2) while pushing with the back; the back will automatically adapt itself to the operator's body.

The adjustment of the suspension is carried out with the snap lever (3) and can be controlled by observing the position of the indicator (4). The operator must carry out this adjustment while seated; the right suspension degree is reached when the indicator is positioned in correspondence with the seat frame.

If the indicator protrudes from the frame, it is necessary to operate the lever (3) with the (+) mark on the grip towards the operator; if the indicator is positioned inward with respect to the frame, the lever (3) must be operated with the (-) mark on the grip towards the operator.

The seat cushion inclination and height can be adjusted by means of the lever (5); three height positions and five different inclination positions are available.

The rotation of the seat for works with the backhoe is obtained by operating the release lever (6); the locking is automatically carried out every 180°.

CAUTION

- **The seat is equipped with a safety system that sends out an acoustic alarm if the transmission control is operated while the seat isn't in the correct frontal position.**

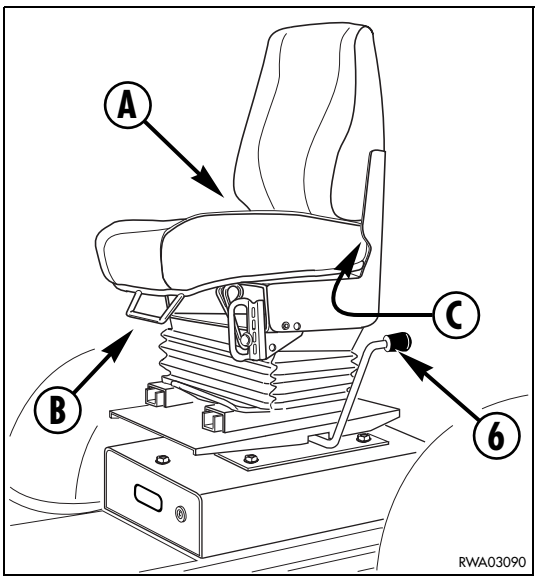

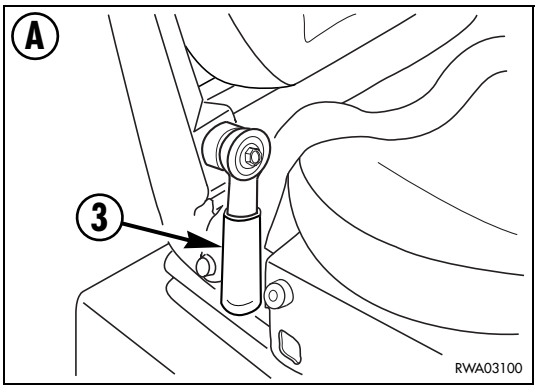

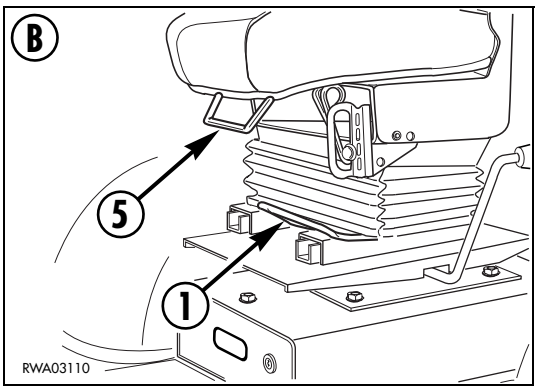

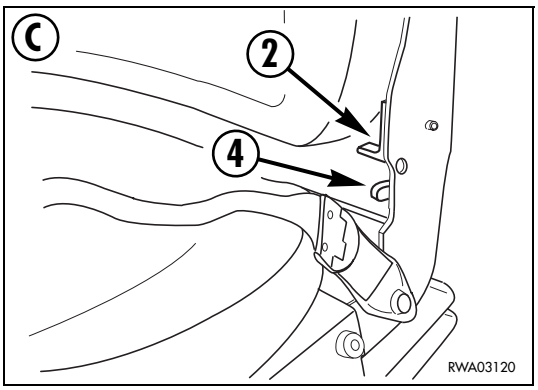

3.5.6.2 SEAT (OPTIONAL)

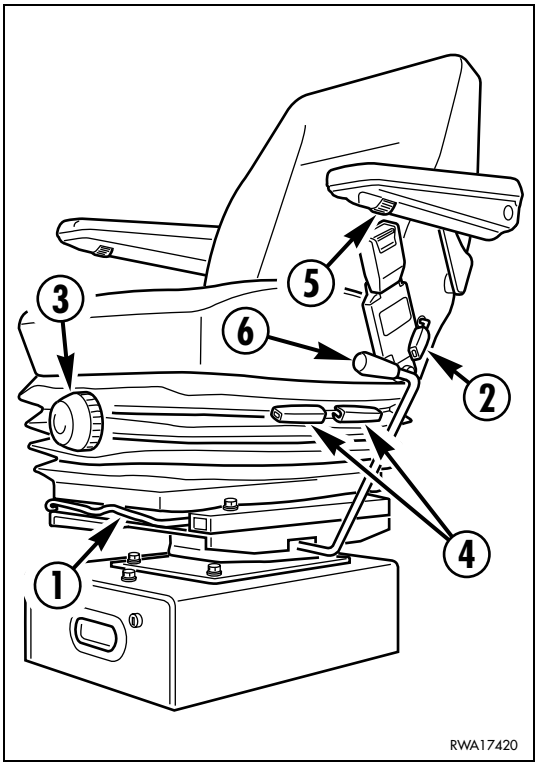

The seat is really comfortable, in fact it features six different adjustment options:

- longitudinal position;
- back inclination;
- degree of suspension, in order to cushion the inevitable vibrations and jumps as much as possible;
- height and cushion inclination;
- armrest position;
- rotation for works to be carried out with the backhoe.

The operator can choose the driving position that is most suitable for his physical structure and according to the angular adjustment of the steering wheel.
The longitudinal adjustment of the seat can be carried out by means of the lever (1), making the seat slide on the apposite guides; once the desired position has been found, release the lever and make small movements with the seat to make sure that the retainer pin is correctly engaged in its seat.

The position of the back can be adjusted by operating the levers (2) and at the same time exerting pressure with the back; the back will automatically adapt to the physical structure of the operator.
The degree of suspension can be adjusted by rotating the knob (3) and checking the graduated scale on the knob itself.
The ideal position is reached when the weight indicated on the scale corresponds to the operator's weight. In any case, the operator can choose the degree of suspension at his sole discretion.
Turn the knob (3) clockwise (⊕) to obtain a more rigid suspension, or anticlockwise to obtain a softer suspension.
The inclination and the height of the cushion can be adjusted by means of the levers (4).
To facilitate access to the seat, both armrests can be rotated and positioned against the back.
The inclination of the armrests can be adjusted with the knobs (5) that are positioned under the armrests.
The rotation of the seat for works to be carried out with the backhoe can be obtained by operating the release lever (6); the seat is locked automatically every 180°.

CAUTION

- **The seat is equipped with a safety system that sends out an acoustic alarm if the transmission control is operated while the seat isn't in the correct frontal position.**

3.5.7 SAFETY BELT

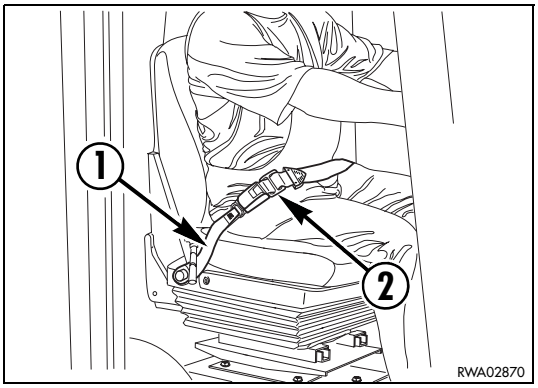

DANGER

- **Fasten the safety belt before starting the engine.**
- **The safety belt must be changed when it is frayed, damaged or worn, or in any case every 4 years.**

The safety belt (1) is of the type with two coupling points and adjustment of the length (2); it must be well tightened and hold the operator's hips, while leaving the upper part of the body completely free.

3.5.8 FIRE EXTINGUISHER

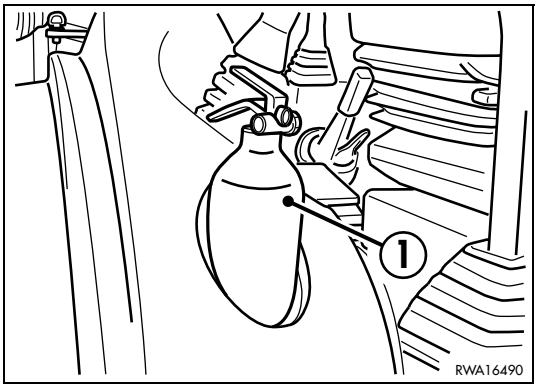

CAUTION

- **The machine's owner must provide for positioning the fire extinguisher where prescribed.**
- **Periodically make sure that the fire extinguisher is full.**

If the operator fears that he may need a fire extinguisher (1) on the machine, he must position it on the appropriate hole provided on the right console.

3.5.9 FIRST AID KIT

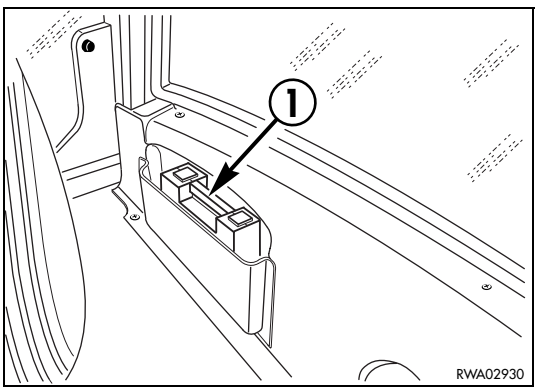

CAUTION

- **Controllare periodicamente che la cassetta di primo soccorso sia rifornita dei disinfettanti, bende, medicinali e controllarne l'integrità e la validità.**

La cassetta (1) con il necessario per il primo soccorso deve essere installata all'interno della cabina a cura del proprietario della macchina e posizionata nel vano ricavato sulla fiancata laterale sinistra.

3.5.10 TECHNICAL DOCUMENTATION

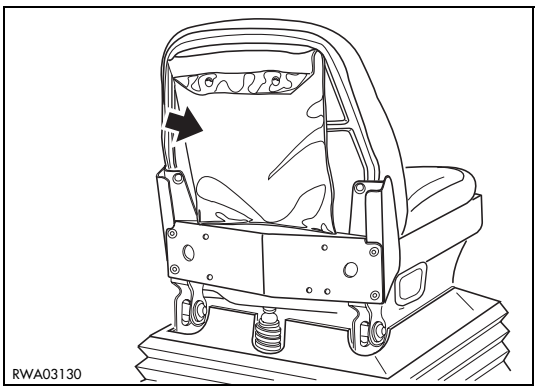

CAUTION

- **The operation manual and the spare parts catalogue are integral parts of the machine and must accompany it even in case of resale.**

The manual must be handled with care and always kept on the machine, so that it can be quickly consulted when necessary; keep the manual in the rear compartment of the seat, where the ownership documents and the logbook are usually kept.

3.5.11 ADDITIONAL TOOL BOX (if provided)

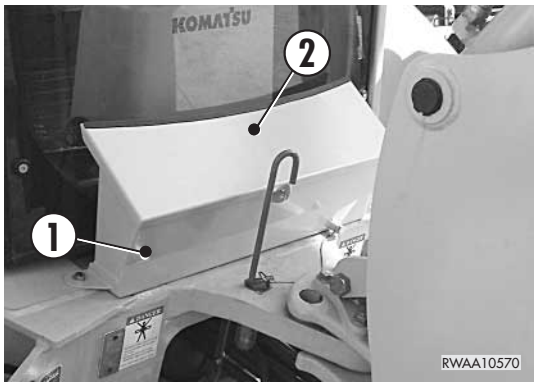

If the operator deems it necessary, an additional tool box (1) can be installed on the rear outer part of the cab. The box (1) can be used to store specific tools to be used for some maintenance operations or other tools that may be useful for the operator.

DANGER

- **The vibrations of the machine may cause the tools stored inside the box to come out, with the risk of getting entangled in the working equipment.**
  After putting the tools in the box, make sure that the cover (2) is perfectly closed.

3.6 USE OF THE MACHINE

3.6.1 CHECKS BEFORE STARTING THE ENGINE

3.6.1.1 VISUAL CHECKS

DANGER

- **Dirt, oil and fuel in the engine compartment near its hot parts may damage the machine and even cause fires.**
  Check frequently and eliminate any leakage; if leakages occur repeatedly, contact your Komatsu Utility Dealer.

Before starting the engine, check around and under the machine to verify:

1 - if there are loose screws or nuts;
2 - if there are oil, fuel or coolant leakages;
3 - the wear of the work equipment;
4 - the fastening of the electrical connections;
5 - the fastening of the engine exhaust pipe and manifold;
6 - the conditions of the rims and the wear of the tyres;
7 - if the safety and warning plates are sufficiently clean;
8 - if the ladders and the handles for the access to the operator's seat are clean.

Any leak or anomaly must immediately be repaired/eliminated and any trace of oil or grease must be removed.
Further visual checks concern:

9 - the condition of the safety belt;
10 - the efficiency of the instruments and of the dashboard;
11 - the condition of the cab windows and the efficiency of the lights, working lights and direction indicators.

3.6.1.2 DAILY CHECKS

DANGER

- **Do not smoke during fuel and oil topping up and do not use naked flames or non-homologated lighting means to check the fuel and oil level, in order not to cause fires.**
- **If fuel, oil, or lubricant are spilled while filling the tanks, clean the dirty areas immediately.**

Before starting any operation, check the engine coolant, engine oil and hydraulic circuit oil levels and lubricate the articulations (see "4.7.4 MAINTENANCE EVERY 10 HOURS OF OPERATION").
At the end of work, provide for refuelling, in order to avoid the formation of condensate, always checking the fuel level on the indicator provided on the dashboard.

IMPORTANT

- **Avoid filling the tank completely, in order to leave room for the gas oil to expand.**
- **After filling the tank, put back the fillercap, making sure that the bleed hole is completely open.**
- **Check the engine oil level with the machine in horizontal position and the hydraulic circuit oil level with the front bucket resting on the ground and the backhoe in transport position.**

3.6.1.3 OPERATIONAL CHECKS

DANGER

- **All the checks must be carried out by the operator while seated, with fastened safety belt.**
- **When the machine is at rest after use or maintenance, some safety locks may not be engaged; when the operator gets into the cab, he must make sure that all the mechanical safety locks are engaged and that the equipment cannot move suddenly and create dangerous situations.**
  If the machine is equipped with backhoe servo controls, always engage the control locking safety device by pressing the relevant switch, see “3.3.5.2 MACHINE CONTROLS (Version with servo controls)” pos. 26.

The checks concern:

1 -The coupling of the safety locks of the front bucket and the backhoe control levers;

2 -The hand accelerator idling position;

3 -The reversing gear neutral position;

4 -The gearshift neutral position;

5 -The application of the parking brake.

The following check is carried out by turning the ignition key to position «**I**» to apply voltage to the control panel and check the functionality of the acoustic alarm, of the fuel level indicator and of the engine oil pressure, generator, preheating, parking brake and electronic display warning lights.

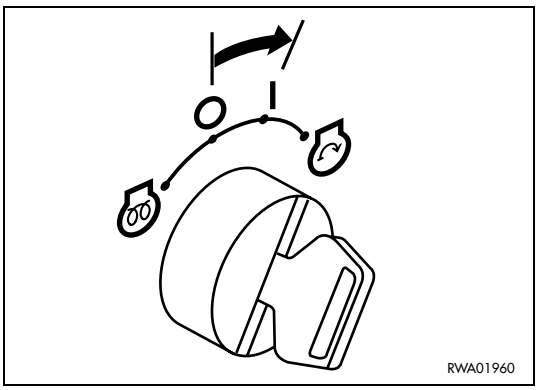

3.6.2 STARTING THE ENGINE

DANGER

- **Before starting the engine, carefully read the instructions and information regarding safety given in this manual and make sure that you know the controls.**
  From the moment in which the engine is started, the operator is directly responsible for any damage that may be caused by wrong manoeuvres and non-compliance with the safety regulations and the rule of the road.
- **Before starting the engine, make sure that there is no one within the operating radius of the machine and sound the horn.**
- **Before starting the engine, make sure that the transmission and the reversing gear control are in neutral position. A safety device does not allow the machine to be started with engaged gears or selected travel direction. The machine is also equipped with an acoustic alarm that is activated when the operator, with the engine running, shifts the reversing gear control lever from the neutral position with the seat rotated and not in the correct driving position.**

3.6.2.1 STARTING WITH WARM ENGINE OR IN TEMPERATE CLIMATES

1 - Turn the ignition key to position «⏻» (START).

2 - As soon as the engine starts, release the ignition key, which will automatically return to position «I».

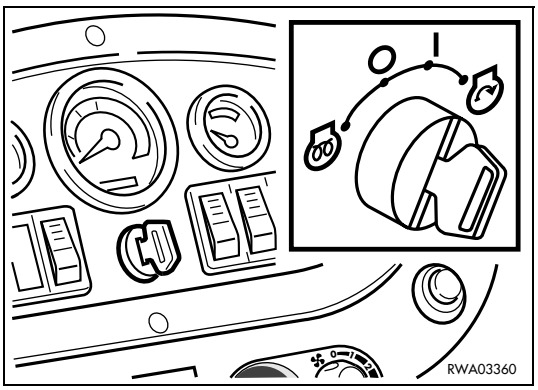

IMPORTANT

- **If the engine does not start within 15 seconds, release the key, which will automatically return to position «I» and wait for 15 seconds before trying again.**

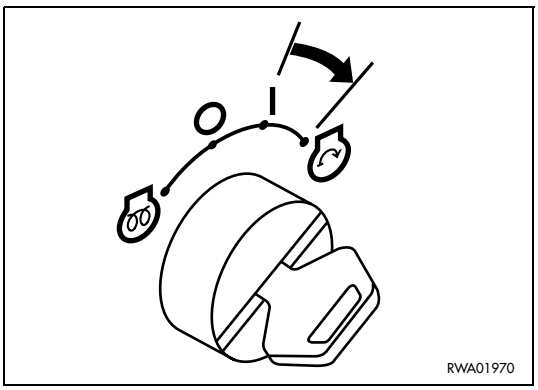

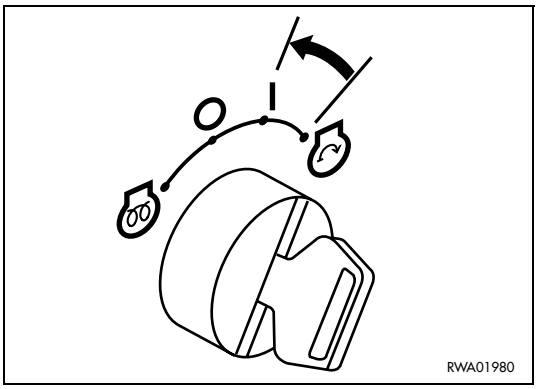

3.6.2.2 STARTING WITH COLD ENGINE OR IN COLD CLIMATES

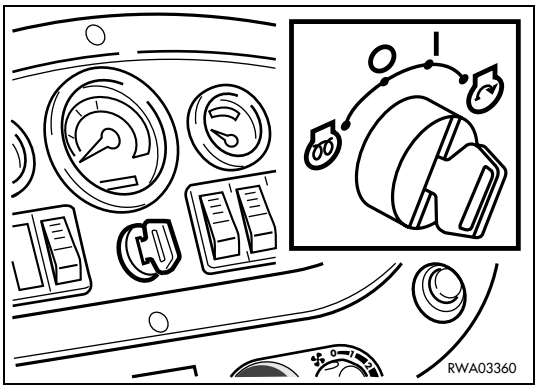

DANGER

- **Do not use any fluid or product that facilitate the cold starting of the engine, since these are ether-based and may cause explosions.**

1 - Turn the key to the preheating position «» for maximum 15 seconds in the coldest weather.
The preheating time is determined according to the outside temperature and the ratio is approx. 1 second for each degree below 0°C.

2 - Press the accelerator pedal slightly and turn the ignition key to position «» (START) for maximum 15 seconds.

3 - As soon as the engine starts, release the ignition key, which will automatically return to position «**I**» and reduce the speed to idling.

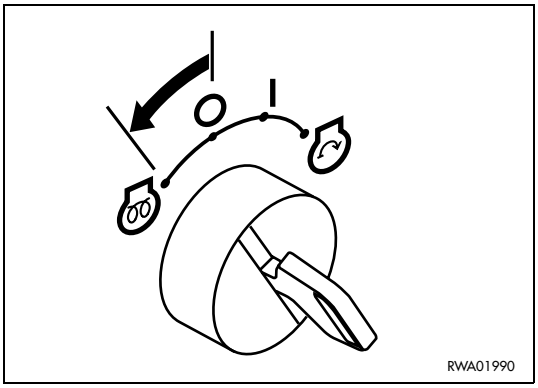

IMPORTANT

- **If the engine does not start at the first attempt, repeat operations 1 and 2 after waiting for at least 30 seconds, in order not to overload the battery.**

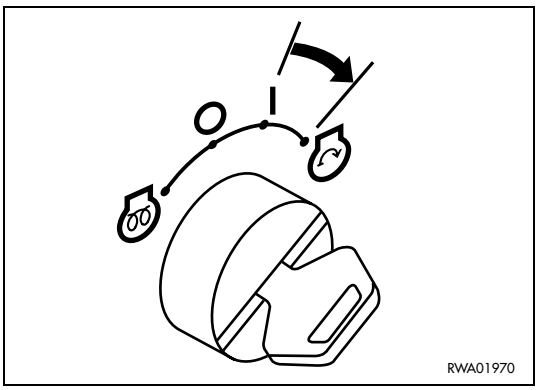

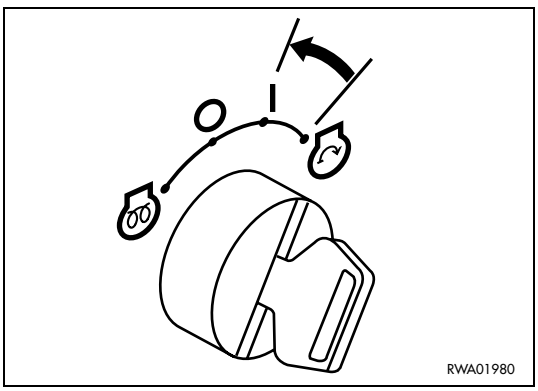

3.6.3 WARMING THE ENGINE

1 - After starting the engine, let it warm up before starting work.

2 - The ideal warming up of the engine is achieved with a constant speed of 1200 rpm, obtained with the hand accelerator (see “3.3.5 pos. 8 HAND ACCELERATOR”).

☞ **IMPORTANT**

- **Do not accelerate completely or abruptly until the coolant temperature has reached at least 60°C, which can be checked by means of the indicator provided on the dashboard.**

3 - To reduce the time necessary to warm up the engine, accelerate now and then, up to maximum 1800 rpm.

4 - During the warming up of the engine, check the colour of the exhaust gases and verify if abnormal noises or vibrations can be noticed; any anomaly must be verified and its cause must be eliminated.

3.6.4 HEATING THE HYDRAULIC OIL

When warming up the engine, especially in the cold season, it is advisable to heat also the hydraulic system oil. For this reason, when the coolant temperature has reached approximately 60°C, proceed as follows:

1 - Release the safety pin of the front bucket control lever (see “3.1 SAFETY LOCKS”).

2 - Raise and rotate the front bucket slowly and completely for several times.

3 - Lower the bucket to the ground and lock the control lever.

4 - Rotate the seat, release the backhoe control levers (see “3.1 SAFETY LOCKS”).

5 - Extend and retract the arm and the bucket completely for several times.

6 - Lock the levers and rotate the seat to the driving position.

☞ **IMPORTANT**

- **If the machine is equipped with backhoe servo controls, always engage the control locking safety device by pressing the relevant switch, see “3.3.5.2 MACHINE CONTROLS (Version with servo controls)” pos. 26.**

3.6.5 HOW TO MOVE THE MACHINE

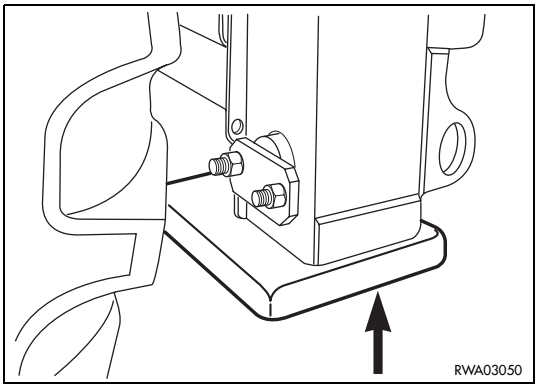

DANGER

- **Before moving the machine, make sure that you know the control functions and all the relevant safety regulations perfectly.**
- **The operator must be sitting in the driving position with fastened safety belt and must have checked the position of the rear-view mirrors.**
- **Before moving the machine, make sure that there is no one within the operating radius of the machine and that there are no obstacles in the surrounding area.**
- **Be extremely careful when engaging the reverse and make sure that there are no persons, working means or obstacles in the way.**
- **The brake pedals must be connected with the appropriate pin.**

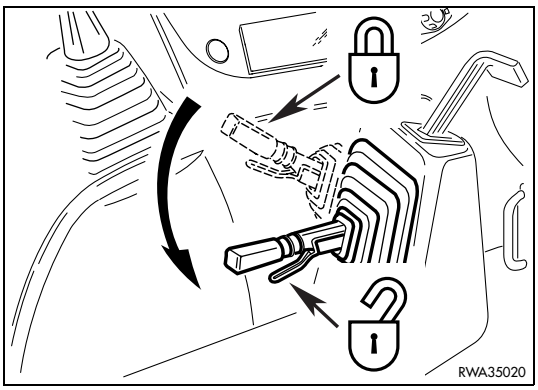

Before moving the machine, check the instruments, warm up the engine and the hydraulic oil, make sure that the stabilizers have been raised and that both the front bucket and the backhoe are in transport position.
The control levers must be in the neutral position (N).
At this point, release the parking brake.

Select:

1 - The desired steering mode.

2 - The gear, by pressing the UP/DOWN buttons and checking the engaged gear on the display.

3 - The travel direction, by shifting the control lever forward (F) or backward (R) within 3 seconds after engaging the gear.

4 - Gradually accelerate with the accelerator pedal.

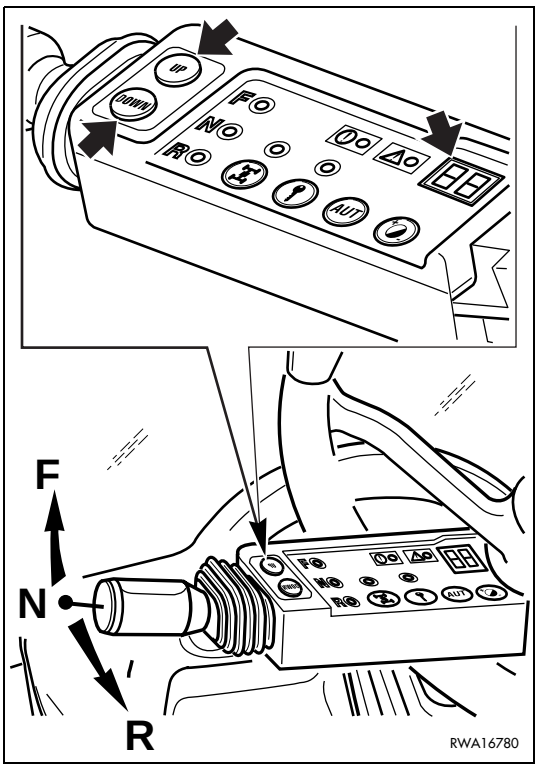

IMPORTANT

- **The travel direction must be selected with the engine at low rpm, in order to avoid abrupt accelerations.**
- **For the operation of the gearshift and its functions, see "3.3.5 MACHINE CONTROLS".**
- **The gearshift is completely synchronized, therefore it is not necessary to decelerate to shift gears when the machine has to keep travelling in the same direction.**
- **If it is necessary to shift down, first reduce the engine rpm and then shift down.**
- **If it is necessary to reverse, slow down by putting on the brakes before operating the reversing gear lever.**
- **For the operation of the steering unit, see "3.3.5 MACHINE CONTROLS" pos. 2.**

3.6.5.1 ENGAGING THE FOUR-WHEEL DRIVE

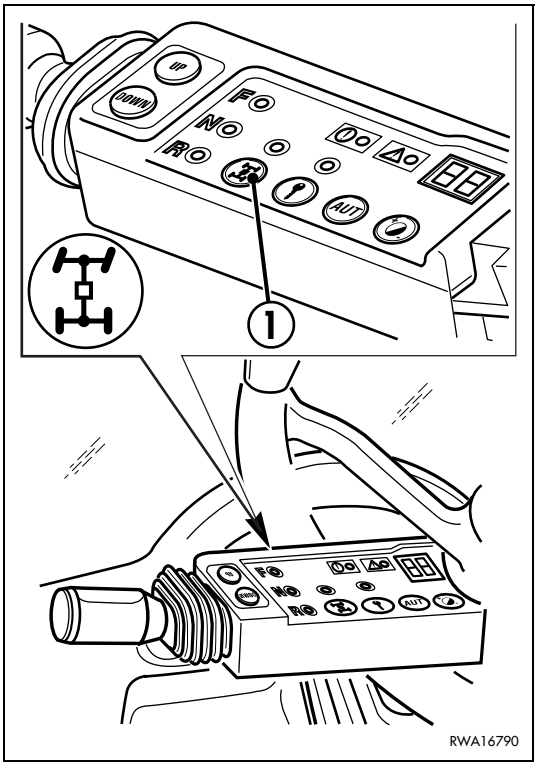

DANGER

- **The four-wheel drive must be engaged only with machine at rest or travelling at low speed.**
- **The four-wheel drive can be engaged only in 1st or 2nd gear; when the other gears are engaged, the four-wheel drive cannot be connected.**
- **When travelling on roads or removing the machine, disengage the four-wheel drive.**

The four-wheel drive is engaged and disengaged by means of the push button (1) on the gearshift control. It is normally used when the machine must move on muddy, icy, gravelly ground, on slopes and in any situation in which it is difficult to move the machine. The four-wheel drive must be used even when the machine is provided with the optional equipment to be employed as snowplough.

IMPORTANT

- **The four-wheel drive is engaged automatically when the machine brakes while in 3rd or 4th forward .**

3.6.5.2 MOVING ON SLOPES

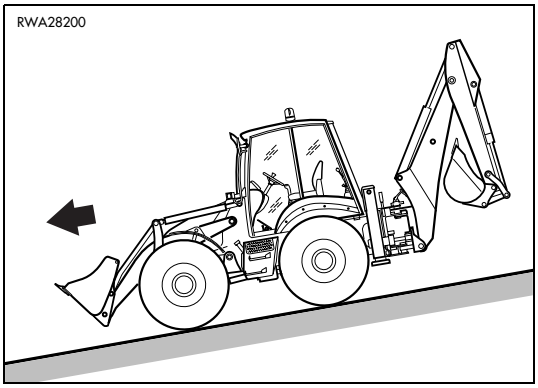

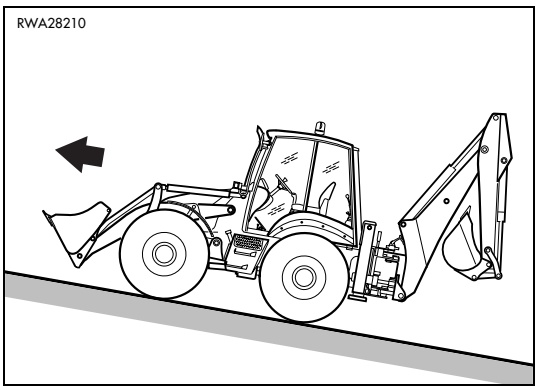

DANGER

- **Before starting to work on slopes, always check the functionality of the brakes and of the parking brake.**
- **Always engage the four-wheel drive.**
- **Avoid engaging the high gears.**
- **Do not move downhill with the gears in neutral, but keep always the low gears engaged. NON-COMPLIANCE WITH THESE RULES MAY CAUSE YOU TO LOSE CONTROL OF THE MACHINE AND THIS MAY OVERTURN.**
- **Avoid using the declutch push button.**

When working on slopes the following precautions should be taken to avoid risks for the operator and anyone in the vicinity; the checks and operations to be carried out are the following:

1 - Always check the work area for snow, landslips, gravel, loose ground and anything that may suddenly modify the work conditions and the stability of the machine.

2 - When it is necessary to travel downhill, the front bucket must always be directed downward, in transport position.

3 - When loading or travelling uphill, the front bucket must always be directed upward.

4 - When moving the machine during work, always lower the front bucket.

5 - Carry out any lateral movement on a flat surface at the beginning or at the end of the slope; if this is not possible, move obliquely, keeping the machine axis as parallel to the slope directrix as possible. Do not move too obliquely or, even worse, with the machine axis rotated by 90° with respect to the slope directrix.

3.6.5.3 MAXIMUM IMMERSION DEPTH

DANGER

- **If it is necessary to work with the machine immersed in water on on river banks or sea shores, always check the water depth and the current flow.**
- **Make sure that the surface on which you are working is sufficently firm.**

If it is necessary to work with the machine immersed in water, make sure that the maximum depth does not exceed 50 cm and in any case that the engine cooling fan does not touch the water, since it may get damaged or even break.

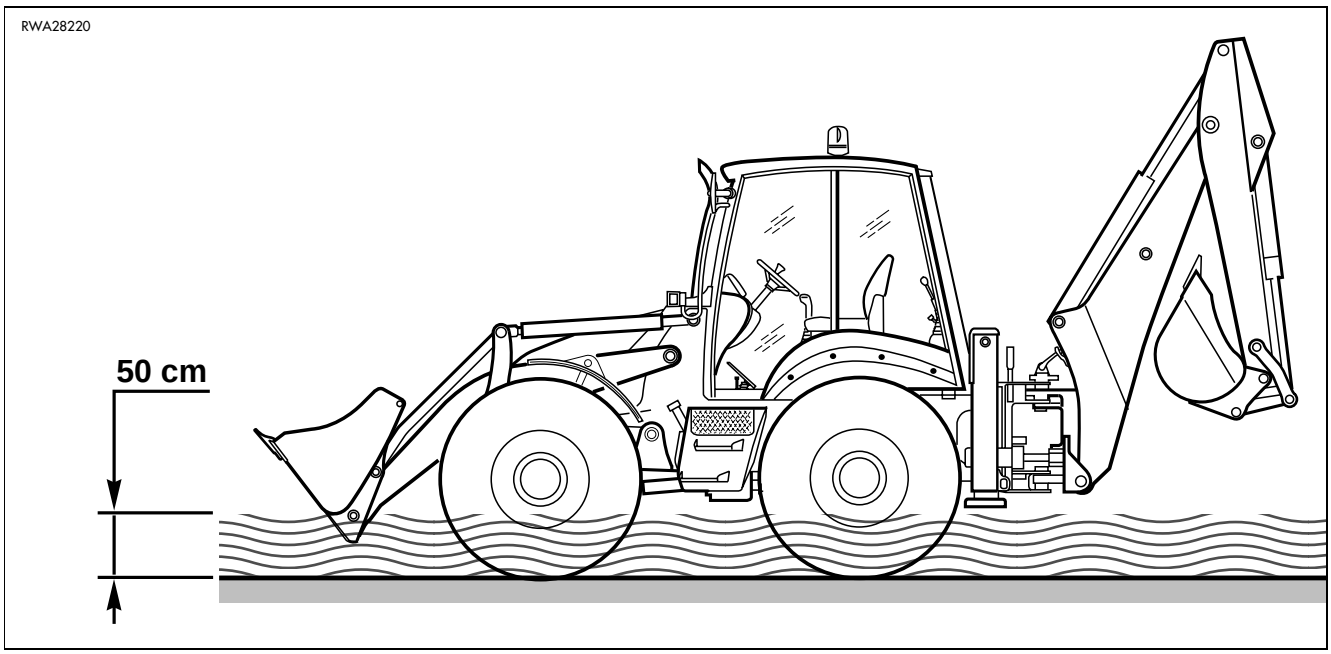

CAUTION

- **When working in water or on muddy ground, lubricate the articulations more frequently than usual.**
- **After work, remove any dirt or mud and lubricate the articulations.**

3.7 PARKING THE MACHINE

3.7.1 PARKING ON LEVEL GROUND

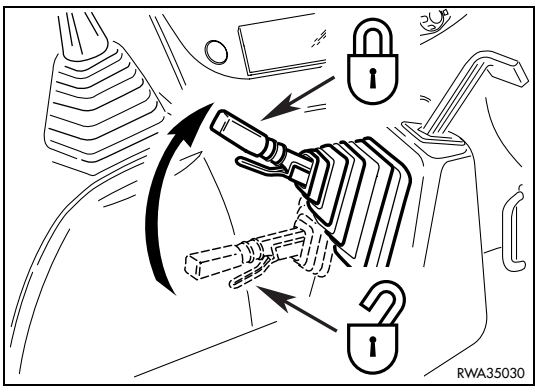

DANGER

- **Park the machine on firm and flat ground, in a sufficiently wide space, so that the checks, daily lubrication and refuelling can be carried out without problems.**
- **Lower the front bucket to the ground and set the backhoe to the transport position or with the bucket resting on the ground.**
- **Keep to all the safety rules, in order to avoid any movement of the machine when the operator is absent.**
- **When leaving the machine, remove the ignition key, use the ladders and handles, lock the cab.**

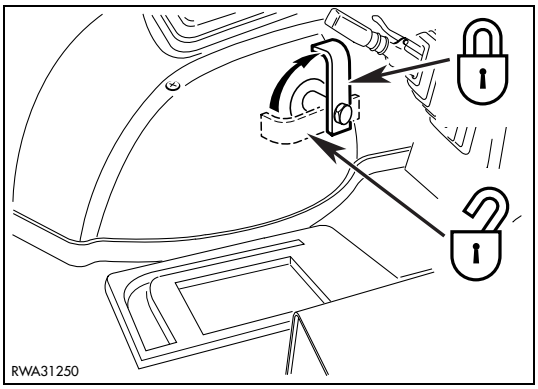

1 - Park the machine on firm and flat ground, in a sufficiently wide space.
2 - Move the gearshift - reversing gear lever to position (N) and apply the parking brake.
3 - Rest the front bucket and the backhoe bucket onto the ground; if this is not possible because the space is insufficient, the backhoe must be folded in the transport position and secured with the appropriate lock.
4 - Engage the safety device of the front bucket control lever and the safety lever of the backhoe levers.

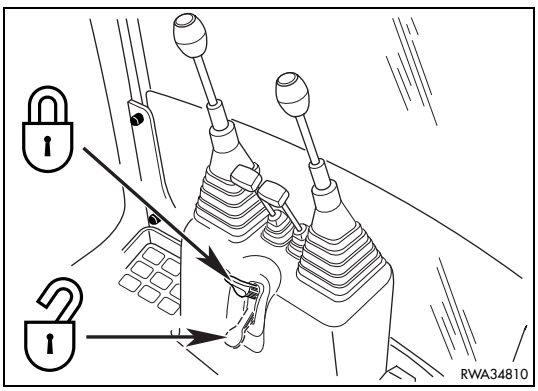

IMPORTANT

- **If the machine is equipped with backhoe servo controls, always engage the control locking safety device by pressing the relevant switch, see “3.3.5.2 MACHINE CONTROLS (Version with servo controls)” pos. 26.**

5 - Stop the engine following the procedure indicated in paragraph “3.8 STOPPING THE ENGINE”.
6 - Leave the driving position using the ladders and handles provided for this purpose.
7 - Refuel taking the necessary precautions.
8 - Remove the ignition key and lock the cab.

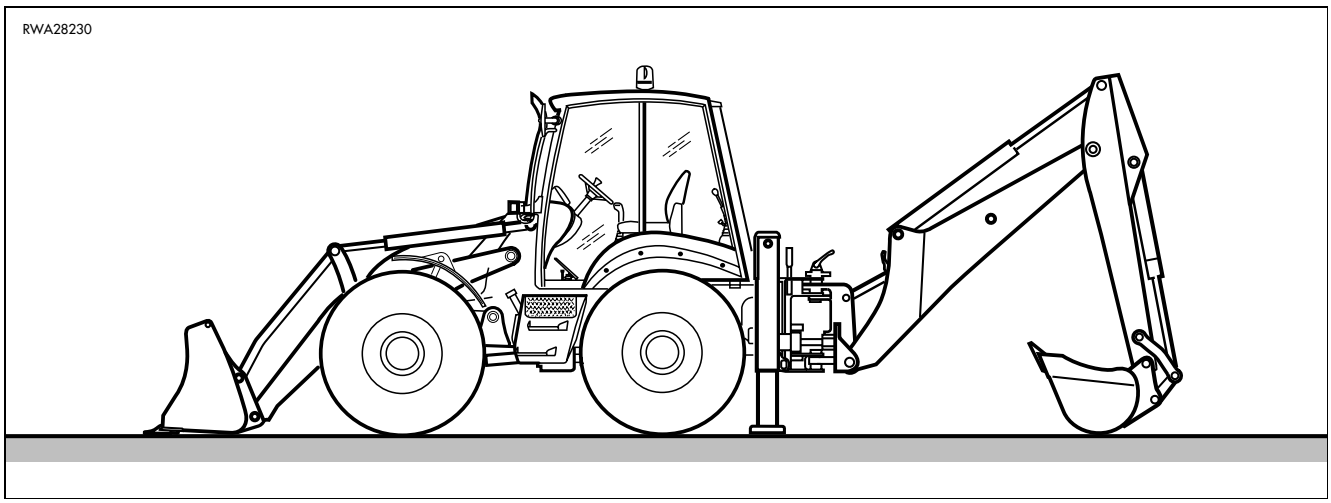

3.7.2 PARKING ON SLOPES

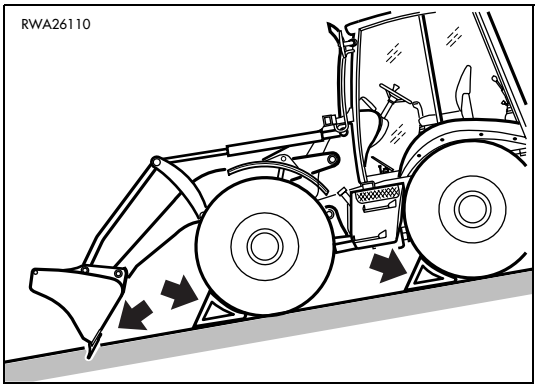

DANGER

- **The movement of the machine when the operator is not on board may cause serious accidents and even death; to prevent this, carry out the operations described below.**
- **Park on slopes only when it is absolutely necessary.**
- **Park only with the front bucket directed downwards.**

1 - Park the machine with the bucket directed downwards and resting against an obstacle.
If this is not possible due to the absence of natural obstacles, rotate the bucket in the dumping position and thrust the teeth into the ground.

2 - Shift the reversing gear lever to the neutral position and apply the parking brake.

3 - Operate the backhoe controls until the bucket teeth are in the digging position and thrust them into the ground.

4 - Insert the safety pin of the bucket control lever and the safety lever of the backhoe levers.

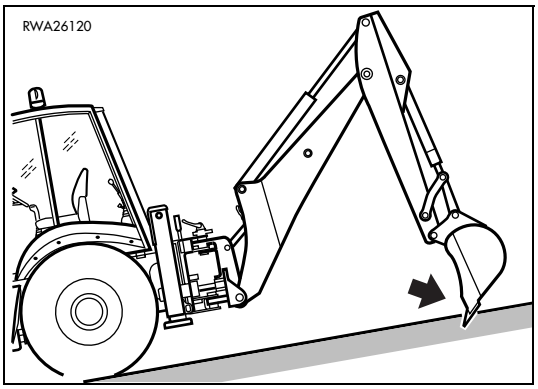

IMPORTANT

- **If the machine is equipped with backhoe servo controls, always engage the control locking safety device by pressing the relevant switch, see “3.3.5.2 MACHINE CONTROLS (Version with servo controls)” pos. 26.**

5 - Stop the engine following the procedure indicated in paragraph “3.8 STOPPING THE ENGINE”.

6 - Leave the driving position using the ladders and handles provided for this purpose.

7 - Put wedges under the wheels.

8 - Refuel taking the necessary precautions.

9 - Remove the ignition key and lock the cab.

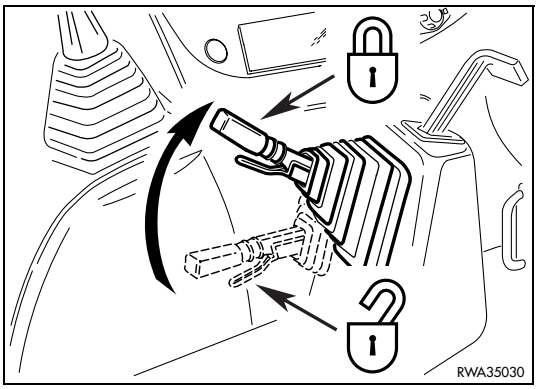

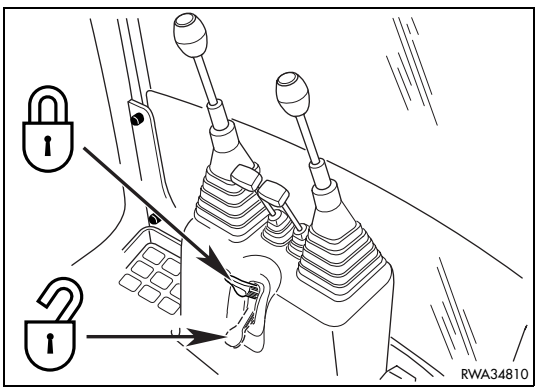

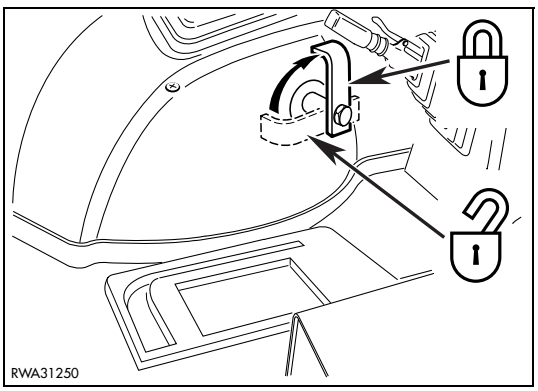

3.8 STOPPING THE ENGINE

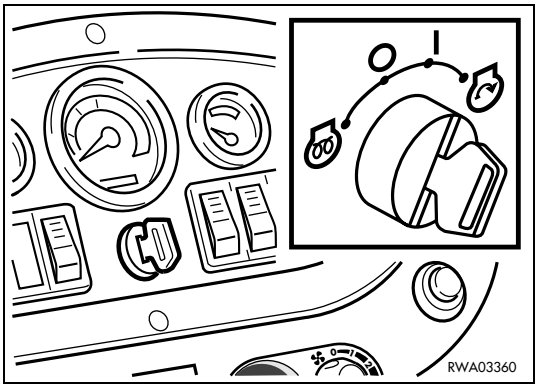

IMPORTANT

- **The sudden stop of the engine while it is running shortens its life. Do not stop the engine suddenly, except in case of emergency.**
- **It is likewise recommended not to stop the engine suddenly if it has been running for a long period and is still hot; in this case, let the engine idle at a minimum speed of 12001300 rpm for about 5 minutes, in order to allow it to cool down gradually before stopping it.**

Before stopping the engine, proceed as follows:

1 - Rest the front loader and backhoe equipment onto the ground.

2 - Shift the levers to the neutral position and connect the safety devices.

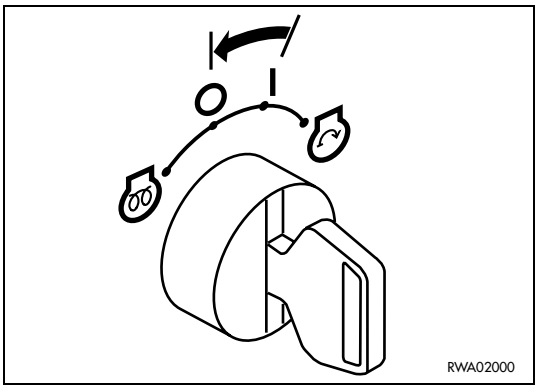

IMPORTANT

- **If the machine is equipped with backhoe servo controls, always engage the control locking safety device by pressing the relevant switch, see “3.3.5.2 MACHINE CONTROLS (Version with servo controls)” pos. 26.**

3 - Shift the hand accelerator lever to the idling position.

4 - Move the gearshift - reversing gear lever to the neutral position and apply the parking brake.

Stop the engine by turning the ignition key to position «O» (OFF).

3.9 TRANSPORTING THE MACHINE ON OTHER VEHICLES

3.9.1 LOADING AND UNLOADING THE MACHINE

DANGER

- **The loading and unloading of the machine on/from the means of transport must be carried out on a flat surface and at a safety distance from the edges of ditches or from the road side.**
- **Block the means of transport by positioning wedges before and behind each wheel.**
- **Make sure that the ramps are sufficiently strong; if necessary, reinforce them with blocks, in order to prevent any dangerous bending.**
- **Make sure that the ramps have the same length, are firmly anchored to the motor vehicle, are parallel to each other and perpendicular to the loading board; the distance between the ramps must be suitable for the machine gauge.**
- **Position the ramps with a maximum inclination of 15°.**
- **Remove any trace of oil, grease or ice from the ramps and the loading board.**
- **Do not change direction when the machine is already on the ramps; if necessary, go down and find the correct direction.**

1 - The machine must get on the ramps with the front bucket (1) directed forward and raised from the ground.

2 - Once the machine has been loaded, rest the front bucket on the floor, set the machine in neutral, apply the parking brake and insert the locking pin of the bucket control lever.

3 - Lower the backhoe bucket (2) onto the vehicle, lower the stabilizers (3) and connect the safety lock lever of the backhoe control levers.

IMPORTANT

- **If the machine is equipped with backhoe servo controls, always engage the control locking safety device by pressing the relevant switch, see “3.3.5.2 MACHINE CONTROLS (Version with servo controls)” pos. 26.**

4 - Stop the engine and remove the ignition key.

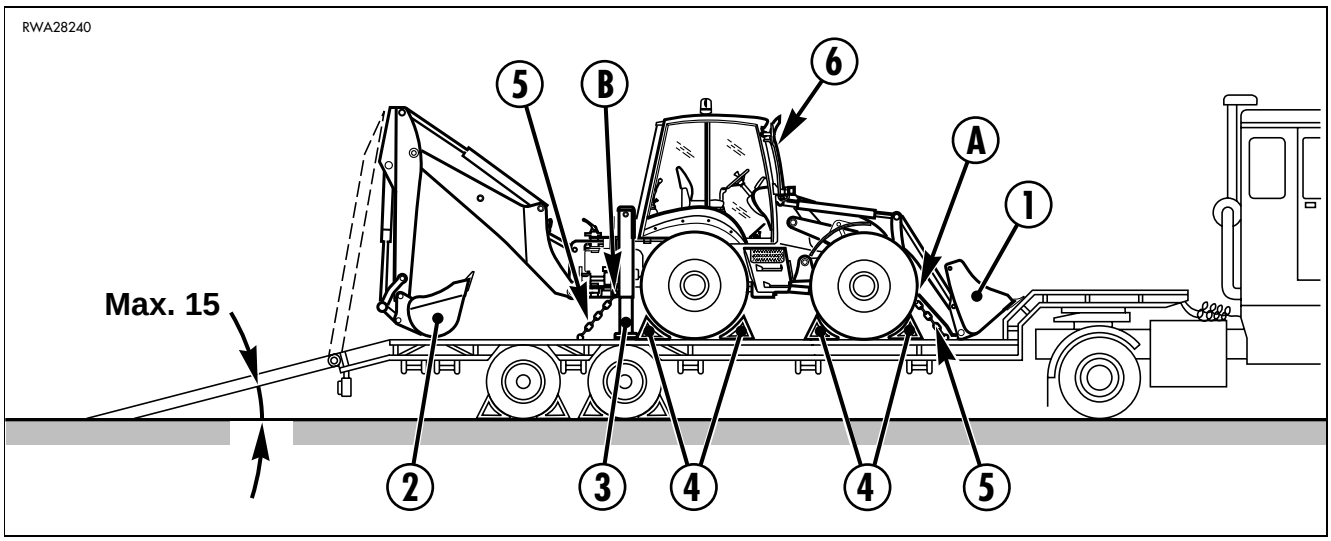

5 - Keep the machine in position also by putting wedges (4) before and behind each wheel.

6 - Fix the machine with tie-downs or chains (5) in the anchorage points (A - B) indicated by the pictograms (see “2.1.1 POSITION OF THE SAFETY PLATES”).

7 - Protect the end of the exhaust pipe (6).

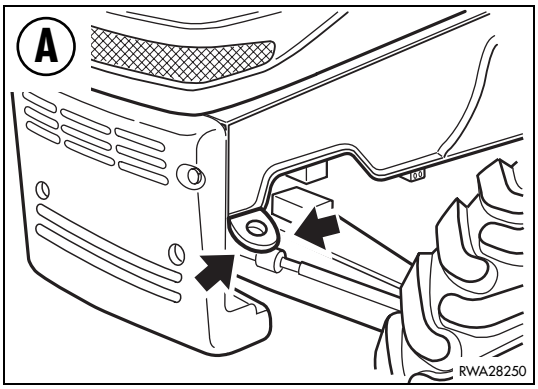

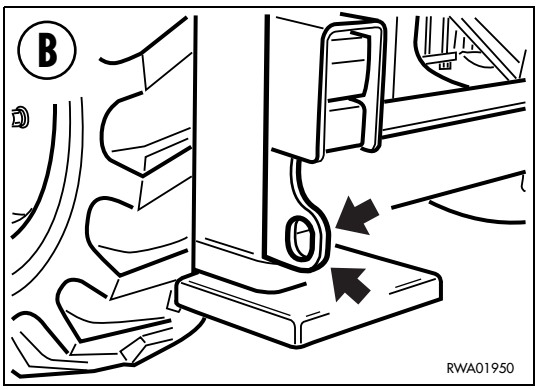

3.9.2 TRANSPORT

CAUTION

- **During transport, the machine must be secured to the vehicle with closed doors and windows.**

1 - Check the overall dimensions; the height, width and weight of the means of transport - machine included - must be compatible with the road and any tunnel, subway, bridge, electric or telephone line that may be found on the way.

2 - Keep to the regulations in force regarding signals, speed limits, road traffic, authorizations, etc.

3.10 PRECAUTIONS TO BE TAKEN IN THE COLD SEASON

During the cold season or in areas where the temperature is particularly low, especially during the night, it is necessary to take some countermeasures meant to limit the damage deriving from low temperatures.

3.10.1 FUEL AND LUBRICANTS

1 - Change the fuel and use the winter fuel ASTM D975 N. 1.

2 - Change the engine oil with an oil with suitable viscosity.
For the relevant specifications, see “4.3 FUEL, COOLANT AND LUBRICANTS”.

3.10.2 COOLANT

DANGER

- **The coolant containing antifreeze is flammable; do not smoke and do not use naked flames during the checks and when preparing the mixture.**
- **Do not use methanol-, ethanol- or propanol-based antifreezes.**

1 - Use only permanent, ethylene glycol-based antifreeze, with corrosion inhibitors and antifoam products.

2 - The antifreeze-water ratio must be 1:1 (50% antifreeze and 50% water).

3 - Do not use plugging additives, either alone or added to the antifreeze, to eliminate leakages.

4 - Do not mix antifreezes of different brands.

5 - The use of permanent antifreeze requires only the check of the level and the periodical change of the fluid. It is not necessary to wash the cooling circuit.

6 - The required standards for the permanent antifreeze are SAE-J1034 and FEDERAL STANDARD O-A-548D.
In case of doubt regarding the compliance of the antifreeze used with the standards, contact the manufacturer and ask for precise information.

3.10.3 BATTERY

DANGER

- **To avoid explosions due to the presence of gas, do not provoke sparks and do not use naked flames near the battery.**
- **The battery electrolyte is dangerous. If it comes in contact with the eyes or the skin, immediately rinse with plenty of water and consult a doctor without delay.**
- **To prevent the fluid from freezing, add distilled water in the morning, before starting work.**

1 - When the ambient temperature decreases, the battery capacity decreases accordingly and, if the battery charge is low, the electrolyte may freeze.
Keep the battery completely charged and insulate it to protect it from low temperatures, so that the machine can be started without problems the following day.

2 - Measure the specific weight of the fluid and check the battery charge percentage, making reference to the following table:

CHARGE PERCENTAGE	FLUID TEMPERATURE			
	20°C	0°C	-10°C	-20°C
100%	1.28	1.29	1.30	1.31
90%	1.26	1.27	1.28	1.29
80%	1.24	1.25	1.26	1.27
75%	1.23	1.24	1.25	1.26

3.10.4 OTHER PRECAUTIONS

1 - Before using the machine in normal operating conditions, carry out some slow movements either forward and in reverse, and operate all the bucket and backhoe cylinders slowly more than once.
These operations serve to warm up and fluidize the oil in the hydraulic circuit, the transmission, the axles and the brakes.

3.10.5 PRECAUTIONS TO BE TAKEN AT THE END OF WORK

1 - Completely remove mud and water from the machine body.
Park the machine on firm ground; if the machine must be parked near banks or ditches, park it on wooden boards in order to distribute the weight of the machine on a larger surface.

2 - Be careful to water drops forming on the hydraulic cylinder rods: these drops must be completely removed, since if they freeze the cylinder gaskets may be damaged.
After removing the water drops, protect the rods with oil.

3 - Drain the condensate that may have formed in the tank and in the water separator, to prevent the water from freezing during the night.

4 - Since the battery capacity may decrease considerably at low temperatures, after work cover the battery or remove it and store it at a suitable temperature.

3.11 PRECAUTIONS TO BE TAKEN IN THE WARM SEASON

1 - At the end of the cold season, change the lubricants, the coolant and the fuel.

IMPORTANT

- **The coolant must be changed only if it is not permanent.**
  For the relevant specifications, see “4.3 FUEL, COOLANT AND LUBRICANTS”.

2 - Make sure that the cooling fan belt is in good conditions.

3 - Make sure that the fins of the radiator and of the heat exchanger are clean.

4 - Check the radiator cap gasket and spring; in case of doubt regarding tightness and setting, change the cap.

3.12 USING THE MACHINE AS A LOADER

DANGER

- **Always fasten the safety belt.**
- **When the declutch push button is used, the machine keeps moving in neutral; to stop it, put on the brakes.**
- **The brake pedals can be separated to make them independent and reduce the steering radiuses; adopt this solution only if it is absolutely necessary, at low speed and with lowered bucket.**
- **Always warn the persons present in the work site, even if they are authorized, by means of the horn.**

IMPORTANT

- **The basic illustrations shown are those necessary for a correct use and exploitment of the machine; the operator must get to know the controls, the described operating method, the use of the bucket position indicator and learn how to organize work in a free area, using low gears while seated in the driving position.**

3.12.1 BUCKET POSITION INDICATOR

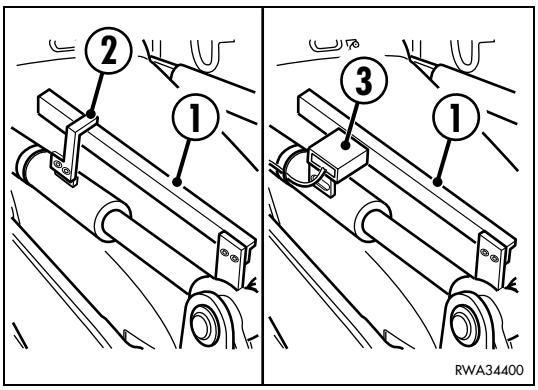

Thanks to this indicator, the operator always knows the position of the front bucket with respect to the ground; when the bucket is resting on the ground, this position is indicated by the return of the rod (1) to the guide tube level (2).
If the machine is provided with automatic RETURN-TO-DIG device, the horizontal position of the bucket with respect to the ground is determined by the sensor (3) positioned on the cylinder and is reached when the sensor does not detect the rod (1) any longer. In case of malfunction of the device, check and if necessary carry out the required adjustments.
To adjust the sensor, see “4.7.1.k ADJUSTING THE AUTOMATIC RETURN OF THE FRONT BUCKET TO THE DIGGING POSITION.”

3.12.2 ORGANIZING THE WORK AREA

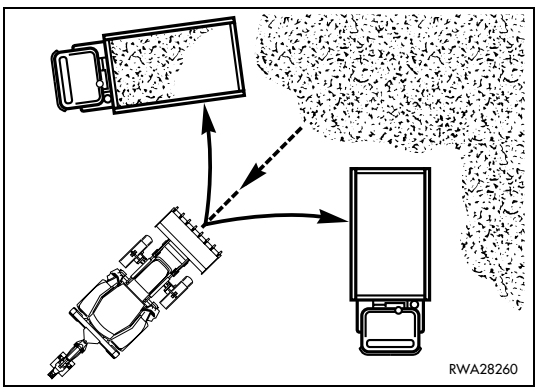

If after a first inspection the area results to be uneven, encumbered with big obstacles or characterized by considerable height differences, before starting work it is advisable to level the ground as much as possible, both for the loader and for the vehicles to be loaded.
This preliminary operations will make work quicker, ensure better results and at the same time reduce the operator’s stress and the straining of the machine components; furthermore, this will considerably reduce the time necessary to load the trucks destined to the transport of the material.
The area to be cleared from obstacles requires the use of a truck positioned as indicated in the figure; for any other arrangement the movements of the loader must be reduced as much as possible

3.12.2.1 LOADING HEAPED AND LEVEL MATERIAL

The efficiency of the bucket depends on how the operator starts loading; proceed as follows:

1 - Start moving and direct the bucket towards the heap base.

2 - While the upper material falls down filling the bucket, raise the arms gradually and at the same time retract the bucket to the end of its stroke.

3 - Reverse the motion of the machine and dump the bucket onto the truck. After unloading the material on the truck, use the “return to dig” device of the loader hydraulic system to accelerate the operations.
Once the device has been connected, it lowers the arm completely and at the same time brings the bucket in perpendicular position with respect to the ground. This is particularly useful for the operator, since in this way the machine is ready for the successive loading phase. For the correct use of the “return to dig” device, see “3.3.5 MACHINE CONTROLS Pos. 5”.

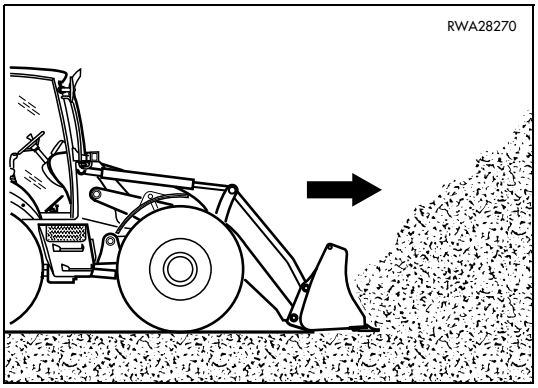

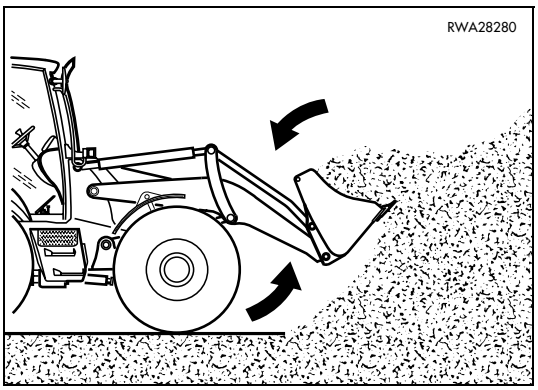

IMPORTANT

- **Start loading the truck from the cab side and, if the material is sufficiently homogeneous, dump from the maximum height in order to increase the compaction of the material and its distribution on the loading platform.**

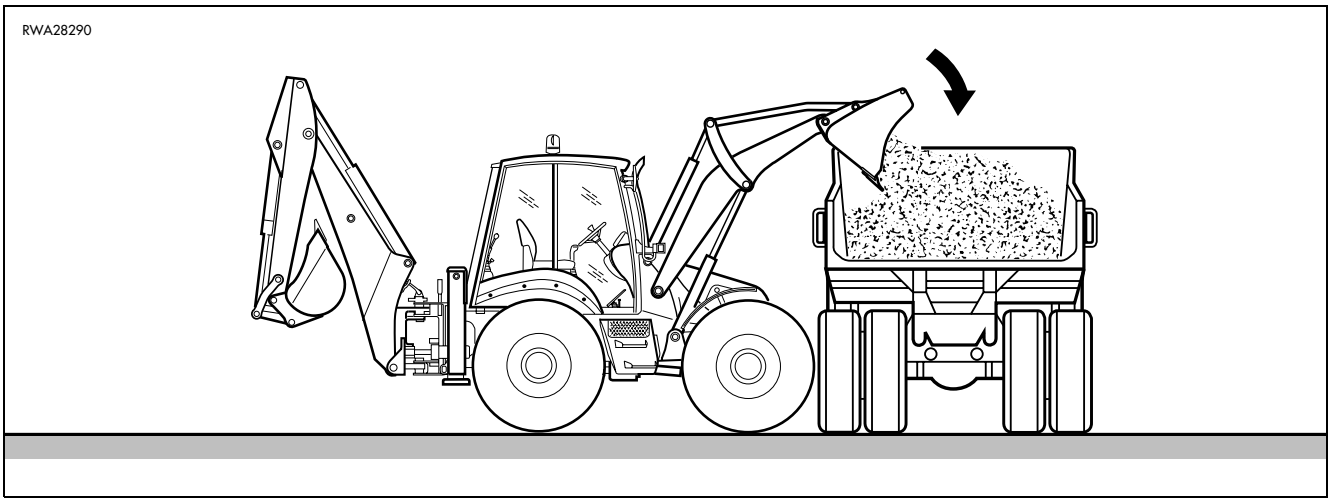

3.12.2.2 LOADING OPERATIONS ON SLOPES

DANGER

- **Travel uphill with the bucket directed forward; the same rule must be followed when loading.**
- **Travel downhill in reverse with the loader directed forward and lowered bucket.**
- **Move changing direction very slowly, with the bucket as low as possible.**
- **Avoid any transverse position with respect to the slope directrix.**
- **Sudden movements of the bucket and dangerous positions may cause the machine to overturn and lead to serious accidents and even death.**

3.12.3 CHANGING THE STANDARD FRONT BUCKET

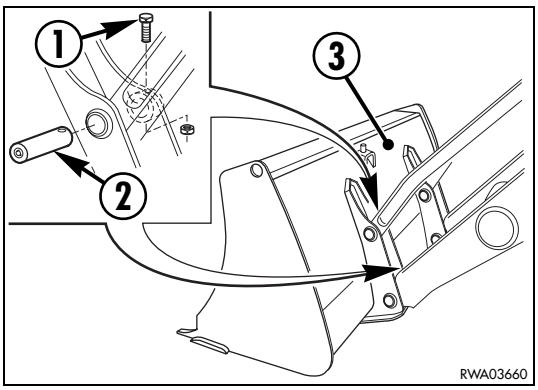

DANGER

- **When the coupling pins are removed or installed, chips may come off; always use gloves, goggles and helmet.**
- **The change of the equipment must be carried out by two persons, who must decide together the words and signals to use during operations.**
- **Do not use your fingers to center the holes, since the may be injured or even cut.**
- **The described procedures are valid also for the coupling of the mechanical constraints of the optional equipment.**

1 - Position the bucket on level ground.

2 - Remove the check bolts (1) and the coupling pins (2).

3 - Change the bucket (3), taking care to clean the pins and bushings perfectly and to grease the pins slightly before reinstalling them.

4 - Put back the check bolts and tighten them.

5 - Lubricate the pins (see “4.5.1 LUBRICATION DIAGRAM”).

3.13 USING THE MACHINE AS AN EXCAVATOR

DANGER

- **Use the machine as an excavator only after rotating the seat by 180° with respect to the correct driving position; for the specific procedure, see "3.13.2 POSITIONING THE MACHINE FOR DIGGING OPERATIONS". The machine is equipped with an acoustic alarm that is activated if the operator, with the engine running, shifts the reversing gear control lever from the neutral position with the seat rotated and not in the correct driving position.**
  This is a danger signal, since it is absolutely forbidden to carry out any movement with the machine while working with the backhoe equipment or in any case with the seat rotated by 180° with respect to the regular driving position.
  Remember that the operator must carry out any movement of the machine while seated in the correct driving position, with locked seat and fastened safety belt.
- **Always fasten the safety belt before starting any manoeuvre.**
- **Always lower the stabilizers before starting any digging operation.**
- **Before starting work, alert the persons in the vicinity by means of the acoustic signal integrated in the side dashboard or in the left backhoe control lever, if the machine is equipped with backhoe servo controls.**

3.13.1 POSITIONING THE BUCKET ACCORDING TO THE WORK TO BE CARRIED OUT

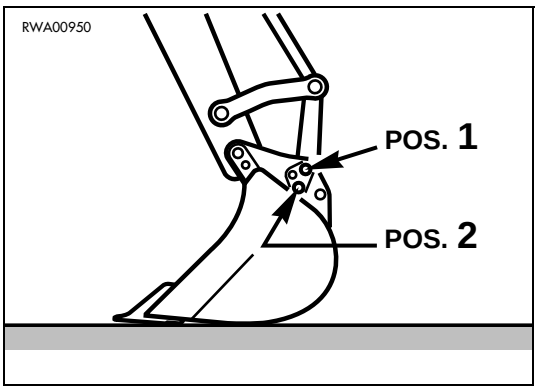

DANGER

- **When introducing the bucket connection pins in the couplings of the arm and of the thrusting arm, be careful to the metal chips that may come off and cause serious injuries.**
- **Always wear safety goggles, thick gloves and helmet.**
- **Do not use your fingers to center the holes; in case of abrupt or uncontrolled movements they may even be cut.**

BUCKET POSITIONS

The bucket can have two positions:

Pos. 1: suitable for normal digging operations, ensures more power to the bucket.

Pos. 2: suitable for operations on vertical walls, ensures the maximum swing and the maximum digging height on walls.
In this position the tearing force is reduced.

3.13.2 POSITIONING THE MACHINE FOR DIGGING OPERATIONS

DANGER

- **Before moving the equipment, make sure that no one is standing in the work area.**
- **Before moving the equipment, make sure that the stabilizers are in the correct position.**
- **Before raising the stabilizers, fold the equipment completely or rest it onto the ground.**
- **Carry out all the possible movements and make sure that the control levers work properly.**
- **If visibility is not perfect or there are ducts or lines of any kind, work at reduced speed and ask the assistance of another operator.**

1 - Center the machine with respect to the digging line.

IMPORTANT

- **If this is not possible, because it is necessary to dig along walls or banks, move the backhoe sidewards (see “3.13.3 SLIDING THE BACKHOE UNIT SIDEWARDS”).**

2 - Remove the boom antirotation pin, introduce it in the apposite hole and release the boom from the safety lock.

3 - Lower the front bucket (1) to the ground; force this position until lifting the front wheels (2) in order to transfer the weight onto the bucket.
Apply the parking brake.

4 - Make sure that the machine is in neutral and lock the front bucket control lever.

5 - Rotate the seat by 180°, fasten the safety belt, accelerate up to 15001600 rpm and lower the stabilizers (3) until the rear wheels (4) are partially raised; this manoeuvre stabilizes the machine and avoids overloads on the rear tyres.

6 - Unlock the backhoe control levers and start work.

IMPORTANT

- **If the machine is equipped with backhoe servo controls, disable the servo control locking function by means of the control locking switch positioned on the side dashboard.?See “3.3.5.2 MACHINE CONTROLS (Version with servo controls)” pos. 26.**

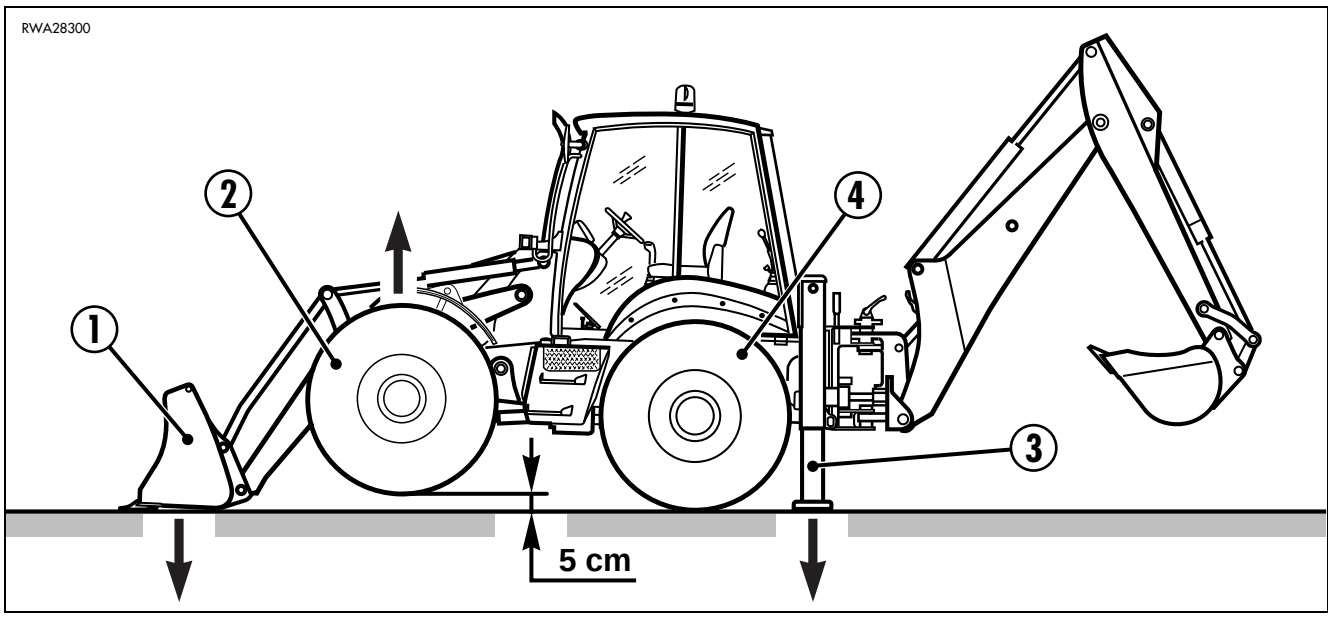

3.13.3 SLIDING THE BACKHOE UNIT SIDEWARDS

IMPORTANT

- **Before moving the backhoe unit, make sure that the sliding guides are clean and lubricated with grease.**

1 - Lower the stabilizers (1) to avoid overloading the rear wheels and to prevent the machine from oscillating.

2 - Swing the boom (2) against the machine.

3 - Manoeuvre the bucket (3) and the arm (4) until the bucket teeth are perpendicular to the ground when the arm and the boom form an angle of approx. 90°; plant the bucket teeth onto the ground.

4 - Release the backhoe unit (see “3.3.5 MACHINE CONTROLS” pos. 10).

5 - Make the unit slide by manoeuvring the arm.

CAUTION

- **Carry out this manoeuvre by operating the arm opening/folding lever smoothly, in such a way as to maintain the sliding support in vertical position and therefore facilitate its sliding.**

6 - Lock the unit.

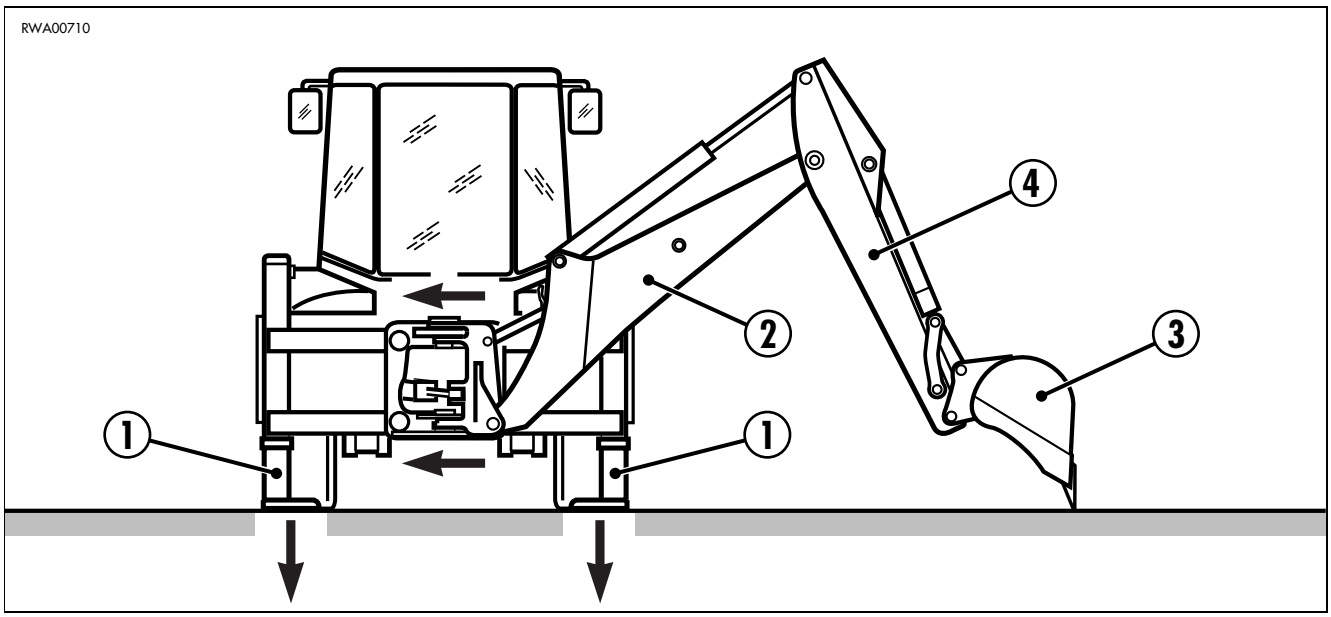

IMPORTANT

- **If the machine is equipped with backhoe servo controls, disable the servo control locking function by means of the control locking switch positioned on the side dashboard.?See “3.3.5.2 MACHINE CONTROLS (Version with servo controls)” pos. 26.**

3.13.4 DIGGING METHOD

DANGER

- **The geometry of the rotation fulcrum of the arms and the bucket make it possible to dig even beyond the stabilizer line, which makes the ground give way. Do not dig beyond the boom fulcrum line, since the ground may collapse and cause the machine to overturn.**

1 - At the beginning of work ,keep the bucket at the correct penetration angle.

2 - Once the desired digging depth has been reached, position the bucket with its back parallel to bottom of the excavation and then start filling.

3 - During the collection phase, make the bucket, the boom and the arm move simultaneously; combined movements facilitate the filling of the bucket and therefore increase productivity.

4 - The removal depth must be correct and suitable to the type of ground; excessive depth may lock the movements, overload the engine and the pump and slow down the digging operations.

5 - To dump on heaps, dump the bucket as soon as it gets near the dumping area; the inertia resulting from the movement will ensure the compaction of the material with no need to use the bucket for this purpose, which avoids impacts and vibrations that facilitate the wear of pins and bushings.

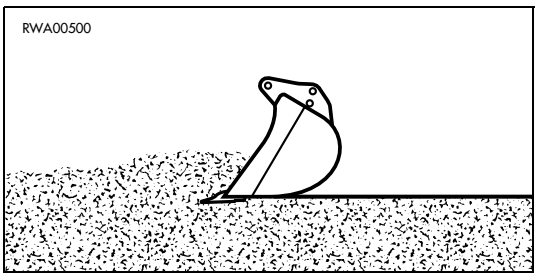

CORRECT
The bucket works with its flat surface parallel to the ground.

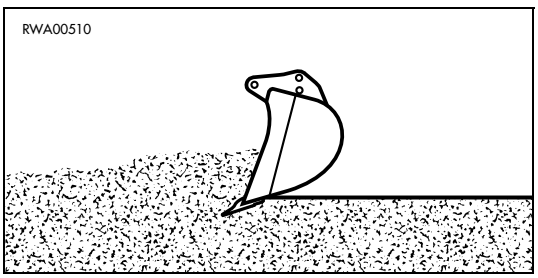

INCORRECT
The bucket is thrusted downwards slowing down the digging work.

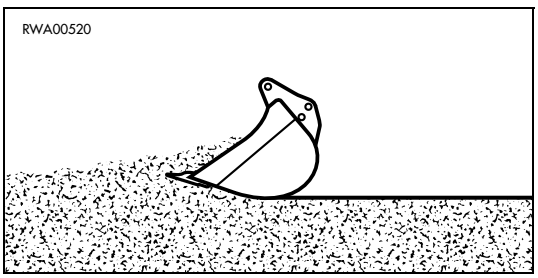

INCORRECT
The bucket is pushed upwards and therefore is not filled completely.

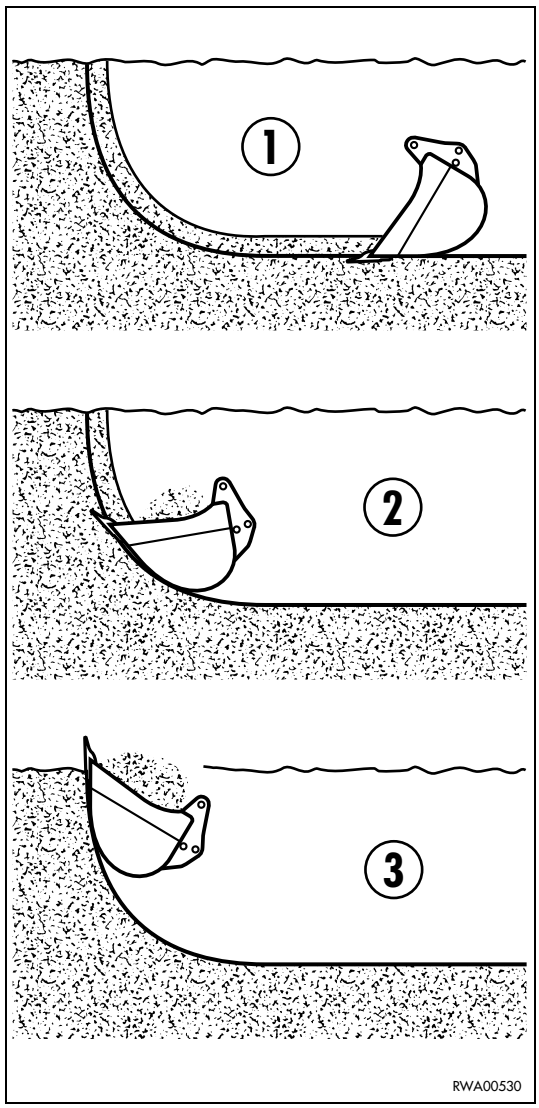

CORRECT DIGGING METHOD
(Sequence 1 - 2 - 3)

3.13.5 CHANGING THE BACKHOE BUCKET

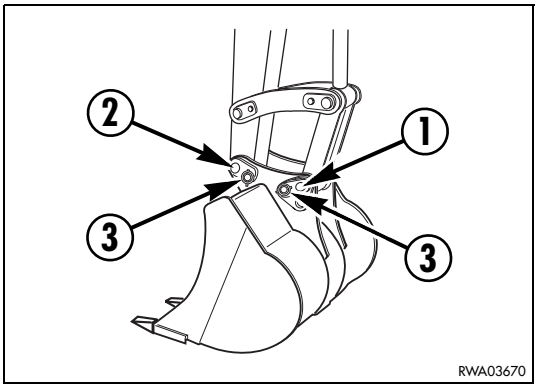

DANGER

- **When the coupling pins are removed or installed, chips may come off; always wear gloves, goggles and helmet.**
- **The change of the equipment must be carried out by two persons, who must decide together the words and signals to use during operations.**
- **Do not use your fingers to center the holes, since they may be injured or even cut.**
- **The described procedures are valid also for the coupling of the mechanical constraints of the optional equipment.**

1 - Position the bucket on level ground, directing it so that the flat part of the bucket back rests on the ground.

2 - Remove first the tie-rod pin (1) and then the arm connection pin (2).

3 - Change the bucket, taking care to clean the pins and bushings perfectly and to grease the pins slightly before reinstalling them.

IMPORTANT

- **Install the arm coupling first.**

4 - Put back the safety stops (3) of the pins.

5 - Lubricate the pins by means of the special grease nipple (see “4.5.1 LUBRICATION DIAGRAM”).

3.14 LONG PERIODS OF INACTIVITY

3.14.1 BEFORE THE PERIOD OF INACTIVITY

DANGER

- **When draining the fuel, do not smoke or bring naked flames near the machine.**
  Place a container under the machine to gather the fuel and prevent it from spreading around.
  If some fuel is spilt, clean the dirty surface immediately.

IMPORTANT

- **To protect the cylinder rods when the machine is not used, position the work equipment as shown in the figure.**
  (This serves to prevent the cylinder rods from rusting).

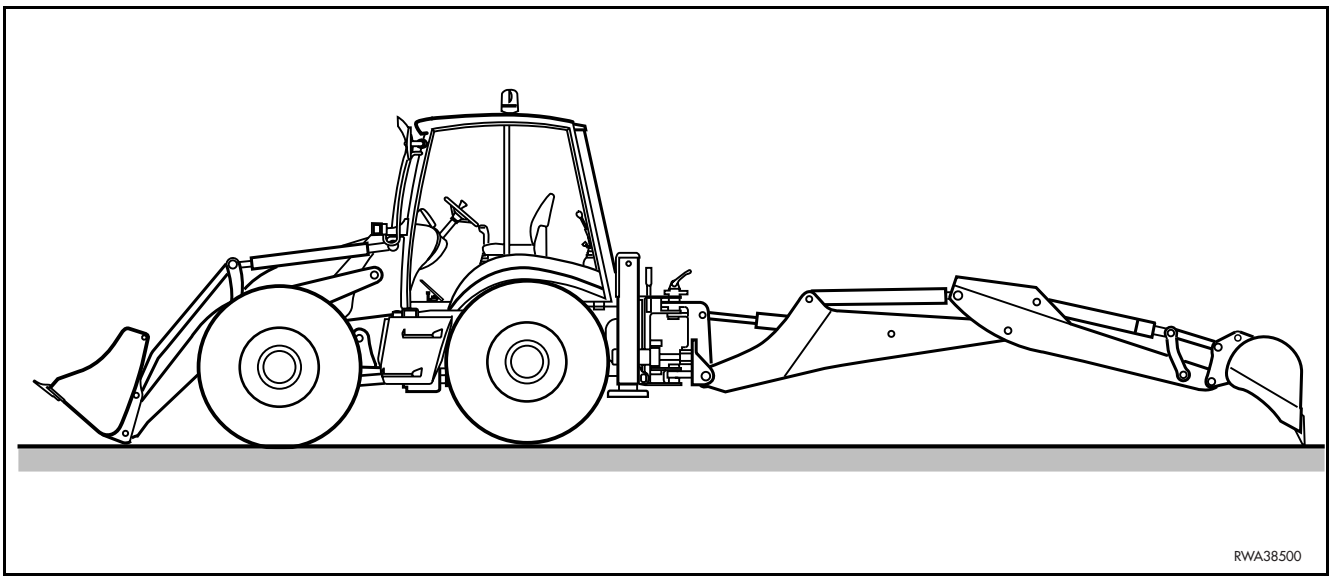

If the machine must be stored for a long period of inactivity, it is advisable to put it in a sheltered place and to take the following precautions, in order to keep all its components sound and efficient:

1 - Clean the machine thoroughly, repainting it where necessary in order to prevent oxidation.

2 - Drain and replace all the hydraulic circuit fluids and the lubricants (axles, reduction gears, converter and engine), keeping to the rules indicated in the section regarding maintenance.

3 - Change all the filtering elements (air cleaner, engine oil filter, hydrulic circuit filters, diesel oil filter).

4 - To avoid the deformation of the tyre sidewalls, insert supports under the axles, in such a way as to relieve the weight of the machine.

5 - Change the coolant (permanent coolant).

6 - Drain the normal fuel and fill the tank with at least 10 liters of special washing and protecting fuel.

7 - Let the engine run for about 10 minutes, in such a way as to eliminate the residual normal fuel from the filters, the injection pump and the entire fuel supply system. This operation avoids the locking of the injection pump and the injectors.
Stop the engine and refuel with normal diesel oil.

8 - Remove the battery, check the electrolyte level and make sure that the battery charge is sufficient. Store the battery in a room with suitable temperature and periodically recharge it.

9 - Grease the hydraulic cylinder rods and the equipment joints.

10 - Seal the end of the exhaust pipe and the fuel tank cap.

11 - Move the machine controls to the neutral position and engage the mechanical safety locks of the equipment controls.

12 - Hang a warning notice on the steering wheel to indicate the condition of the machine.

13 - Lock the cab doors, the fuel tank cap and the engine hood.

3.14.2 DURING THE PERIOD OF INACTIVITY

DANGER

- **If it is necessary to carry out a rust-prevention treatment while the machine is kept indoors, open doors and windows to increase ventilation and avoid poisoning by gas.**

Start the engine and move the machine for a short distance once a month, so that a new oil film covers all the moving parts and the surfaces of the components. Provide also for charging the battery.

3.14.3 AFTER THE PERIOD OF INACTIVITY

IMPORTANT

- **If the machine is stored without carrying out the monthly rust-prevention treatment, have maintenance performed by your Komatsu Utility Dealer.**

When using the machine after a long period of inactivity, proceed as follows:

1 - Remove the seals from the exhaust pipe and the fuel tank.
2 - Check all the fluid levels (engine oil, coolant, fuel, hydraulic circuit oil).
3 - Make sure that the battery charge is sufficient and install the battery.
4 - Disconnect the engine stop solenoid.
5 - Turn the ignition key directly to the start position and keep it there until the engine oil pressure warning light goes out.
This operation serves to start the circulation of the lubricating oil and to carry out a first lubrication cycle.
6 - Reconnect the stop solenoid valve and start the engine. Let the engine run at accelerated speed (approximately 1200 rpm) for about 15 minutes.
7 - While the engine is warming up, check the tyre pressure and remove the protection grease from the hydraulic cylinder rods.
8 - Before moving the machine, make sure that the instruments, lights, direction indicators and brake stoplight work properly.
9 - Warm up the hydraulic cylinders, by slowly moving all the work equipment as soon as possible.
10 - Move at low speed and brake a few times in order to fluidize the oil and allow the setting of the braking surfaces.

3.15 TROUBLESHOOTING

3.15.1 HOW TO REMOVE THE MACHINE

DANGER

- **When removing the machine, use a wire rope suitable for the weight of the machine to be removed.**

If the machine gets stuck in mud and cannot get out using only its motive power, or in case of breakdown, use a wire rope as shown in the figures on the right.

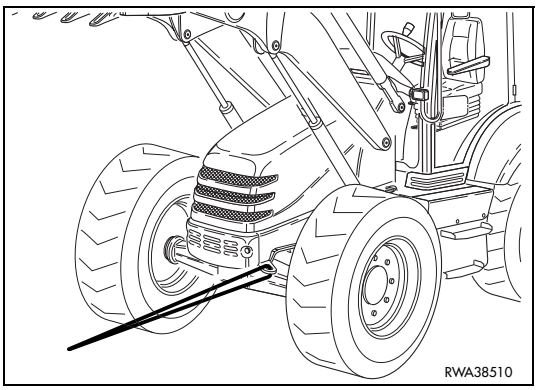

IMPORTANT

- **Before recovering the machine, shift the gear lever to neutral and disengage the four-wheel drive.**

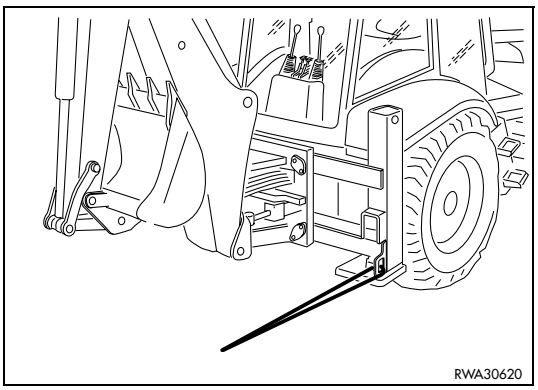

3.15.2 IF THE FUEL HAS BEEN COMPLETELY DEPLETED

Before starting the engine, when the fuel has run out and therefore air has entered the fuel supply circuit, it is necessary to bleed the fuel supply circuit.
For the necessary operations, see “4.7.10 MAINTENANCE EVERY 500 HOURS OF OPERATION”.

3.15.3 IF THE BATTERY IS DEPLETED

DANGER

- **When checking or carrying out any operation on the battery, stop the engine and make sure that the ignition switch is in position «O».**
- **The battery produces hydrogen, which may explode. Do not use naked flames and do not smoke near the battery, and avoid producing sparks.**
- **The battery electrolyte is made of diluted sulphuric acid that may corrode the clothes and even the skin; in case of contact with this fluid, immediately rinse the involved part with plenty of water.**
  If the acid gets into the eyes, immediately rinse with plenty of water and consult a doctor without delay.
- **When working on the battery, always wear goggles and gloves.**
- **When removing the battery, disconnect first the earth cable (-); when installing the battery, connect first the positive cable (+).**
- **If a tool comes into contact with the positive terminal and the machine structure at the same time, this may generate sparks with consequent risk of explosion.**
- **Carefully tighten the connection terminals, since false contacts may generate sparks with consequent risk of explosion.**

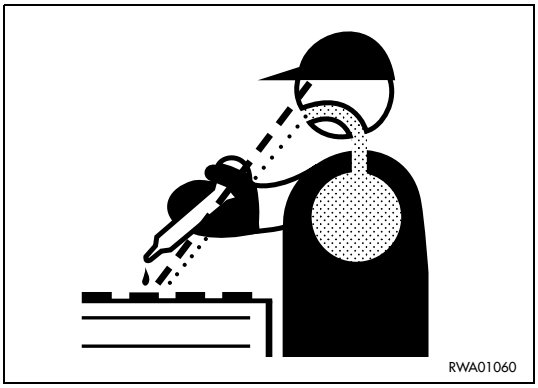

REMOVAL

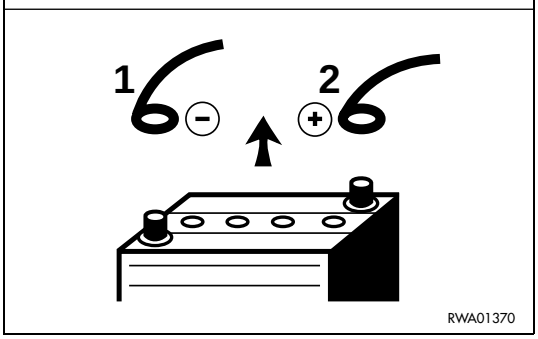

INSTALLATION

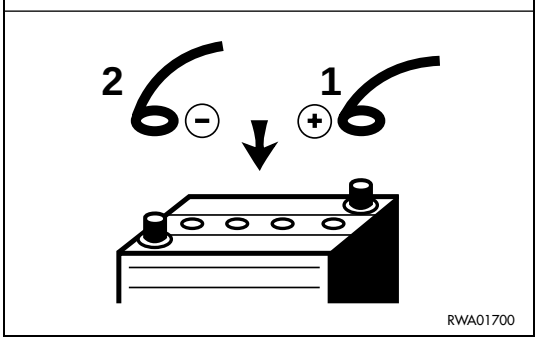

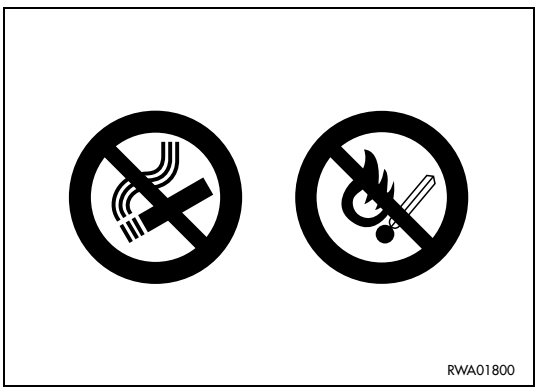

3.15.3.1 STARTING WITH BOOSTER CABLES

DANGER

- **When starting the engine with the aid of another machine, connect the batteries in parallel.**
- **When connecting the cables, avoid any contact between the positive cable (+) and the negative cable (-).**
- **When starting the engine with booster cables, always wear safety goggles.**
- **Take care to avoid any contact between the machine to be started and the machine used as starting aid, in order to avoid sparks and therefore the explosion of the hydrogen produced by the batteries. The explosion of the battery causes serious damage and injuries.**
- **Take care not to invert the cables and connect the earth cable (-) last, as far from the battery as possible.**
- **Remove the cables with great care; prevent the cables disconnected from the battery from touching other parts of the machine, in order to avoid the explosion of the hydrogen.**

IMPORTANT

- **The cables and pliers must be suitable for the current load that must be transferred.**
- **The battery to be used for the starting must have greater capacity or at least the same capacity as the battery of the machine to be started.**
- **Make sure that the cables and pliers are neither corroded, nor damaged.**
- **Make sure that the pliers hold the terminals firmly.**

CONNECTING THE CABLES AND STARTING THE ENGINE

1 - Make sure that the ignition key is in position «O».

2 - Connect the positive poles (+) of the two batteries with each other (A).

3 - Connect the cable of the negative terminal (-) of the charged battery to the earth block of the machine to be started (B).

4 - Start the engine of the machine that supplies current and increase its speed.

5 - Start the engine of the machine that does not work, (see “3.6.2 STARTING THE ENGINE”).

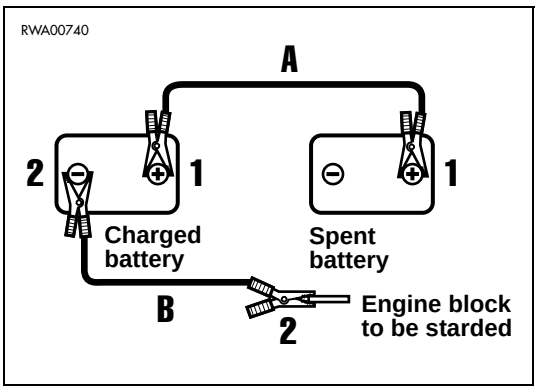

REMOVING THE CABLES

When the engine has started, remove the cables in the reverse order with respect to their connection.

1 - Disconnect the negative cable (-) from the earth block of the engine that has been started and then from the battery (B).

2 - Disconnect the positive cable (+) first from the battery used for the starting and then from the exhausted battery (A).

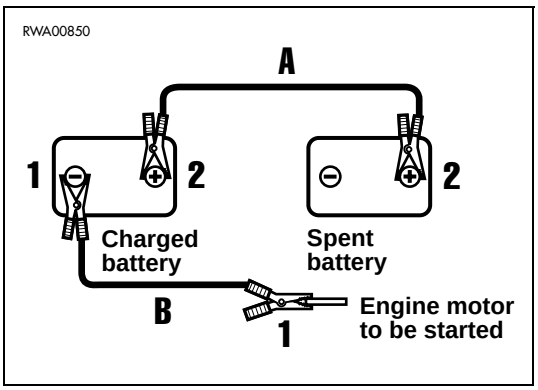

3.15.4 OTHER TROUBLES

(•): Always contact your Komatsu Utility Dealer when you have to carry out this operation.

• : If the anomaly or its cause are not included in the failures indicated below, contact your Komatsu Utility Dealer for the necessary repair.

3.15.4.1 ELECTRICAL CIRCUIT

TROUBLE	CAUSE	REMEDY
Lights do not work satisfactorily even with engine running at high speed:	• Faulty cables. • Faulty fan belt tension	(•) Check and repair any loose terminal and connection. • Adjust fan tension (see “EVERY 250 HOURS).
Lights come on intermittently with engine running:		
Alternator charge warning light does not go out with engine running and increasing speed	• Faulty alternator. • Faulty cables.	(•) Change. (•) Check and repair.
Alternator emits an abnormal noise:	• Faulty alternator.	(•) Change.
Starter does not turn with key in START position:	• Faulty cables. • Battery charge insufficient. • Faulty engine start fuse.	(•) Check and repair. • Charge battery. • Change.
Starter pinion engages and then disengages:	• Battery charge insufficient	• Charge battery.
Starter makes engine run slowly:	• Battery charge insufficient. • Faulty starter.	• Charge battery. (•) Change.
Starter disengages before engine has started:	• Faulty cables. • Battery charge insufficient.	(•) Check and repair. • Charge battery.
Engine oil pressure warning light does not come on when engine is stopped (ignition key in position «I»):	• Faulty bulb. • Faulty pressure sensor.	(•) Change. (•) Change.
Alternator charge warning light does not come on when engine is stopped (ignition key in position «I»):	• Faulty bulb. • Faulty cables.	(•) Change. (•) Check and repair.

3.15.4.2 HYDRAULIC SYSTEM

TROUBLE	CAUSE	REMEDY
Pump emits an abnormal noise:	• No oil in the tank. • Faulty pump. • Hydraulic oil unsuitable for the temperature.	• Top up. (•) Repair or change. • Change.
Equipment control levers do not return automatically to neutral position	• Broken return spring or seized element.	(•) Change spring or distributor element.
Equipment moves only at low speed:	• Faulty pump. • Max. pressure valves out of rating, or not closed due to impurities. • Dirty drain filter.	(•) Repair or change. (•) Calibrate or change. • Change.

3.15.4.3 BRAKING SYSTEM

TROUBLE	CAUSE	REMEDY
Braking not regular for both wheels:	• Brake discs worn. • No oil in brake pump. • Air in braking circuit.	(•) Change. (•) Top up and bleed circuit. (•) Bleed circuit.
Braking not regular on one side only:	• Air in braking circuit. • Brake disc worn.	(•) Bleed circuit. (•) Change.

3.15.4.4 CONVERTER

TROUBLE	CAUSE	REMEDY
Low pressure in the clutch:	• Oil level. • Clutch pressure adjusting valve locked open. • Faulty delivery pump. • Clutch shaft or piston rings. • Leakages due to clutch piston pump locked open.	• Top up. (•) Clean element and seat. (•) Change. (•) Change rings. (•) Clean valve carefully.
Pump delivery insufficient	• Oil level. • Suction filter clogged. • Faulty pump.	• Top up. • Clean filter. (•) Change.
Overheating:	• Damaged rings. • Faulty pump. • Oil level. • Dirty heat exchanger. • Damaged heat exchanger.	(•) Remove, disassemble and reassemble the unit. (•) Change. • Top up. • Clean. • Change.
Noisy converter	• Faulty pump. • Damaged bearings.	(•) Change. (•) Remove and change.
Lack of power:	• Low engine rpm causes stall speed. • Defect as if due to overheating.	(•) Check and set up engine governor. • See remedies in case of overheating.

3.15.4.5 ENGINE

TROUBLE	CAUSE	REMEDY
Oil pressure warning light remains on even with engine at high speed:	• Oil level in oil pan too low. • Oil filter clogged. • Oil unsuitable for the season.	• Top up. • Change filter. • Change.
Steam comes out of radiator breather pipe:	• Fluid level low, fluid leakages. • Fan belt slackened. • Mud or limestone accumulated in cooling system. • Radiator fins damaged or closed. • Faulty thermostat. • Radiator cap loose or broken. Working at considerable altitude.	• Top up, repair. • Check belt tension. • Change fluid and clean cooling system. • Repair or clean. (•) Change. • Tighten cap or change unit.
Temperature indicator always on the right end of the scale:	• Faulty temperature indicator.	(•) Change
Temperature indicator pointer always on the left end of the scale:	• Faulty thermostat. • Faulty indicator.	(•) Change. (•) Change.
Engine does not start with starter running:	• No fuel. • Air in fuel system. • Compression defect (valves with wrong clearance).	• Refuel. • Bleed system. (•) Adjust valve clearance.
Exhaust gases white or light blue:	• Too much oil in oil pan. • Unsuitable fuel.	• Correct oil level. • Change with suitable fuel.
Exhaust gases occasionally tend to be black:	• Air cleaner clogged. • Faulty injectors. • Faulty compression.	• Clean or change. (•) Change. (•) Adjust valve clearance.
Combustion noise occasionally resembles a blow:	• Faulty injectors.	(•) Change.
Abnormal noises (during combustion or in mechanical parts):	• Fuel with low cetane rating. • Overheating. • Exhaust silencer inside damaged. • Excessive valve clearance.	• Change with fuel in compliance with standards. • See “defects of temperature indicator”. (•) Change. (•) Adjust valve clearance.

MAINTENANCE

4.1 GUIDE TO MAINTENANCE

- Before opening the engine hood, engage the safety locks of both the front loader and the backhoe.
- If it is necessary to check the hydraulic oil level in the tank, arrange the machine in transport position (see “3.1 SAFETY LOCKS”).
- Carry out any operation on firm and level ground, after applying the parking brake.
- Use Komatsu Utility genuine oils and greases; choose oils suitable for the ambient temperature.
- Use clean oils and greases. Keep the oil and grease containers clean. Keep any foreign matter away from oils and greases.
- Always keep the machine clean. This makes it easier to find out any part causing troubles.
  In particular, keep the grease nipples, the breathers and the areas near the openings for the level checks clean and prevent any impurities from getting into/on them.
- Draining hot oil or coolant immediately after stopping the engine is hazardous. Wait for the engine to cool down until reaching at least 40÷50° C.
- After changing the oil or the filters, check if metal particles are present. If you find large quantities of metal particles, contact your Komatsu Utility Dealer.
- Check and change the oil in clean places and prevent any impurities from getting into the tank.
- Before carrying out any maintenance operation, hang the warning plates on the ignition switch, the control levers and the cab doors, to prevent anyone from starting the engine by mistake.
- When performing maintenance operations, always take the precautions indicated on the safety plates applied onto the machine.
- Instructions for arc welding:
  1 - Turn the ignition key to position «**O**».
  2 - Disconnect the battery (first the negative pole and then the positive pole).
  3 - Disconnect the alternator.
  4 - Disconnect the gearshift-reversing gear unit connector positioned under the steering wheel.
  5 - Do not apply more than 200V continuously.
  6 - Connect the earth cable within 1 m from the point in which the welding must be carried out.
  7 - Avoid placing gaskets and bearings between the welding area and the earth cable.
- Do not use flammable fluids to clean the machine parts. Keep naked flames or lit cigarettes away from these fluids.
- When O-rings and gaskets are removed, clean the sealing surfaces thoroughly and replace the O-rings and gaskets with new ones. Fit the O-rings and gaskets correctly when reassembling.
- Avoid keeping loose objects or tools in your pockets: they may fall out and drop into the machine, especially when you open covers and work on the machine while bending over it.
- When washing the machine, do not direct the high-pressure water jet onto the radiator and the heat exchanger.
- When washing the machine, protect the electric system connectors and avoid wetting the ignition switch.
- Before starting work in mud, under the rain, on seashores or river banks, carry out a general lubrication.
  Wash the machine immediately after work to protect the components from rust. Lubricate the equipment joints more frequently than usual.
- When working at dusty work sites, proceed as follows:
  1 - Check the air cleaner for any clogging and clean it more frequently than usual.
  2 - Clean the radiator and the heat exchanger frequently, to avoid any clogging of the fins.
  3 - Change the diesel oil filter more frequently than usual.
  4 - Clean the electrical components, especially the starter and the alternator, to avoid any accumulation of dust

- Never mix oils of different brands.
  Do not top up with any oil different from the oil used in the machine. If necessary, drain all the oil and fill the tank with the oil of the new brand.

DANGER

- **Oils, filters, the coolant and the battery are considered special waste and must be collected and disposed of according to the regulations in force.**
- **The combustible material of some components may become extremely dangerous if it burns. For this reason, avoid any contact of burnt material with your skin or eyes and do not inhale the fumes.**

4.2 MAINTENANCE NOTES

- Use only Komatsu Utility genuine spare parts.
- Do not mix different types of oil.
- Unless specified otherwise, the oils and the coolant used by Komatsu Utility to fill the tanks before the delivery of the machine are the following:

ITEM	SPECIFICATIONS
• Engine oil	SAE 10W-30 API classification CD
• Hydraulic system oil	SAE 10W-30 API classification CD
• Biodegradable hydraulic system oil (Only for machines in which the synthetic biodegradable oil type HEES not of plant origin is used)	PAKELO GEOLUBE HYDRAULIC EP-46
• Hydraulic transmission oil	GM classification DEXRON® II D
• Front and rear axle oil	Classification UTTO FLUID
• Braking system oil	GM classification DEXRON® II D
• Fuel	With ambient temperature over -10° C: ASTM D975 no. 2 diesel oil
	With ambient temperature under -10°C: ASTM D975 no. 1 diesel oil
• Radiator	Permanent, ethylene glycol-based antifreeze, with corrosion inhibitor for protection up to -36°C

GM DEXRON® II D (DEXRON® II D is a registered trademark of General Motors Corporation)

4.2.1 NOTES REGARDING THE ENGINE

4.2.1.1 ENGINE OIL

- The engine oil must be selected very carefully, since it lubricates the engine, which is the machine's heart; the main maintenance operations required for the engine oil are the following:

  1 - daily check of the oil level;

  2 - check of the degree of pollution of the oil;

  3 - periodical change.

4.2.1.2 COOLANT

- The coolant serves to keep the engine at the correct temperature and therefore to ensure optimal operating conditions; check the coolant level in the expansion tank daily and top up if necessary.
- The coolant containing antifreeze is flammable; do not use naked flames near the coolant and do not smoke while topping up.

- Use only permanent, ethylene glycol-based antifreeze, with corrosion inhibitors and antifoam products. The antifreeze-water ratio must be 1:1 (50% antifreeze and 50% water).
- The use of permanent antifreeze requires only the periodical change of the fluid. It is not necessary to wash the cooling circuit.
- Use drinkable water and in any case soft water.
- Do not use corrosion inhibitors containing soluble oil, since they damage the rubber couplings.
- The standards required for the use of permanent antifreeze are: SAE-J1034 and FEDERAL STANDARD O-A-548D.
  In case of doubt regarding the applicable standard for the use of antifreeze, contact your Komatsu Utility Dealer, who will supply you with exhaustive and precise information.

4.2.1.3 FUEL

- Always use fuel suitable for the engine. Other fuels with different specifications may damage the engine or reduce its power.
- Always refuel at the end of the work day.
- When refuelling, make sure that there is no water on the fuel drum cover and take care not to draw the condensate from the drum bottom.
- If fuel runs out, or if the fuel filter has been replaced, it is necessary to bleed the circuit.

4.2.2 NOTES REGARDING THE HYDRAULIC SYSTEM

- Be extremely careful when performing maintenance operations on the hydraulic system, since soon after work the oil is very hot.
  The circuit is pressurized not only during work, but also at the end of work.
- The maintenance operations required for the hydraulic system are the following:
  1 - daily check of the oil level in the tank;
  2 - periodical change of the oil filter;
  3 - periodical change of the oil and cleaning of the suction filter.
- Always bleed the circuit after changing the oil filter or the oil.
- When a component is removed from the circuit, check the gaskets and O-rings and change them if they are damaged.
- When a cylinder or a component of the hydraulic circuit is removed, after reassembly bleed the circuit by proceeding as follows:
  1 - start the engine and let it idle;
  2 - make all the cylinders perform 4-5 movements, stopping them at approx. 100 mm from the end of their stroke;
  3 - slowly make all the cylinders reach the end of their stroke for 3-4 times.

4.2.3 NOTES REGARDING THE ELECTRICAL SYSTEM

- If the cables are wet or their insulating material is damaged, the electrical system leaks and this may result in malfunctions of the machine.
- The maintenance operations required for the electrical system are the following:
  1 - check of the alternator belt tension;
  2 - check of the alternator belt for damage or breakages;
  3 - check of the battery electrolyte level.
- Do not remove or eliminate any electric component installed on the machine and do not install any electric component with characteristics different from those specified and approved by Komatsu Utility.
- Be careful to keep the electric system dry.
- When working on seashores or river or lake banks, protect the jack plugs from corrosion.
- Do not connect any optional device to the fuses, ignition switch, battery, relays, etc.; for the installation of any optional equipment, contact your Komatsu Utility Dealer.
- If any electric welding operation has to be carried out, disconnect the battery, the alternator and the gearshift-reversing gear connector.

4.2.4 NOTES REGARDING LUBRICATION

- Lubrication makes the operations carried out with the machine and work equipment smoother, while preventing wear and the noise that may be produced if the articulations are dry.
  Lubrication is to be carried out with grease or oil.
- The maintenance operations required for the components that need lubricating are the following:
  1 - check of the levels;
  2 - oil change;
  3 - injection of grease through the grease nipples.
- Use only the specified lubricants, according to the ambient temperature.
- Always clean the grease nipples before injecting grease and remove any excess grease after lubrication; this cleaning operation must be performed with extreme care on the revolving parts.
- Keep the lubricants at the correct levels; excessive or insufficient quantities are to be avoided.

4.2.5 PARTS SUBJECT TO WEAR THAT PERIODICALLY NEED CHANGING

The parts subject to wear such as filters, bucket teeth, etc. must be replaced according to the periodic maintenance intervals prescribed or when they reach the wear limit.
The timely change of these parts ensures an economic use of the machine.
Use only Komatsu Utility genuine parts, which alone can guarantee excellent quality and interchangeability.

ITEM	CODE	DESCRIPTION	Q.ty	CHANGE INTERVAL
Hydraulic oil filter	848101178	Cartridge	1	EVERY 500 HOURS
Engine oil filter	YM119005-35100	Cartridge	1	EVERY 500 HOURS
Fuel filter	YM123907-55800	Cartridge	1	EVERY 500 HOURS
Converter oil filter	CA0040952	Cartridge	1	EVERY 1000 HOURS
Air cleaner	848101189 848101190	Main cartridge Safety cartridge	1 1	WHEN REQUIRED WHEN REQUIRED
Front bucket	312204054 801580085 801703012	Tooth Screw Nut	AR AR AR	— — —
Backhoe bucket	312204054 801580085 801703012 312204052 312204053 801580085 801014184 801703012	Centre tooth Screw Nut Right tooth Left tooth Screw Side screw Nut	AR AR AR 1 1 AR 4 AR	— — — — — — — —

4.3 FUEL, COOLANT AND LUBRICANTS

PROPER SELECTION ACCORDING TO THE AMBIENT TEMPERATURE

RESERVOIR	FLUID	AMBIENT TEMPERATURE (-30 -20 -10 0 10 20 30 40 50°C)	CAPACITY (l) 1st filling	CAPACITY (l) Change
Engine oil pan	OIL API CD	SAE 10W; SAE 20W-20; SAE 30; SAE 40	7.9	7.9
Hydraulic system	OIL API CD	SAE 10W-30	150	92
Hydraulic system with biodegradable oil	SEE “4.3.1”		150	92
Front axle: • Differential	OIL UTTO FLUID		10.5	10.5
• Final reduction gear (ea.)	OIL UTTO FLUID		1.3	1.3
Rear axle: • Differential	OIL UTTO FLUID		9	9
• Final reduction gear (ea.)	OIL UTTO FLUID		1.3	1.3
Hydraulic transmission	OIL GM DEXRON® II D (DEXRON® is a registered trademark of General Motors Corporation)		24.5	21.5
Braking system	OIL GM DEXRON® II D (DEXRON® is a registered trademark of General Motors Corporation)		0.8	0.8
Fuel tank	DIESEL OIL	✶; ASTM D975 N. 2	130	—
Engine cooling system	PERMANENT COOLANT		15	—

✶ ASTM D975 N. 1

LUBRICATION WITH GREASE

LUBRICATION POINTS	CONSISTENCY	TYPE
Articulations, transmissions	NLGI 2	Lithium EP + MoS_2

IMPORTANT

- **When the diesel oil sulphur content is less than 0.5%, change the engine oil according to the periodic maintenance intervals indicated in the operation and maintenance manual. If the diesel oil sulphur content exceeds 0.5%, change the engine oil according to the following table:**

Sulphur content	Intervallo di cambio olio motore
from 0.5 to 1.0%	1/2 of regular interval
over 1.0%	1/4 of regular interval

- When starting the engine at temperatures below 0°C, use engine oil SAE 10W, 20W-20, even if during the day the temperature increases by 10°C.
- Use engine oil with CD classification; if oil with CC classification is used, reduce the engine oil change interval by a half.
- Use Komatsu Utility genuine products whose characteristics have been specifically formulated and approved for use in the engine, in the work equipment hydraulic circuit, in the transmission and in the axles and brakes.

First filling quantity: total quantity of oil, including the oil for the components and pipes.

Oil change quantity: quantity of oil necessary to fill the system or unit during the normal inspection and maintenance operations.

ASTM: American Society of Testing and Materials
SAE: Society of Automotive Engineers
API: American Petroleum Institute
UTTO: Universal Tractor Transmission Oil

4.3.1 HOMOLOGATED HEES SYNTHETIC BIODEGRADABLE LUBRICANTS

Our machines can be filled with synthetic biodegradable hydraulic oil type HEES not of plant origin and therefore the use of the oils indicated in the following table is authorized and recommended :

SUPPLIER	HEES SYNTHETIC BIODEGRADABLE OIL
KOMATSU	—
AGIP	ARNICA S 46
ARAL	HEF 46 vitam
AVIA	SYNTOFLUID N 46
BP	BIOHYD SE-S 46
CONDAT	CONDAT D 46 K
ELF	HYDRELF BIO 46
ESSO	HYDRAULIKOIL HE 46
FINA	BIOHYDRAN TMP 46 SE 46
FUCHS	PLANTOHYD S 46
KENDALL	SYNTH NATURA 46 HV
KUWAIT PETROLEUM K8	HOLBEIN 46
MOBIL	EAL SYNDRAULIC
MOBIL (USA)	ENVIROSYN 46 H
PAKELO	GEOLUBE HYDRAULIC EP-46
PANOLIN	HLP SYNTH 46
SHELL	NATURELLE HFE-46
TAMOIL	GREEN HYDRO SAFETY 46
TEXACO	HYDRA 46
TOTAL	EQUIVIS BIO 46
VALVOLINE	UNISYN HLP 32/68

CAUTION

- **It is not possible to mix the synthetic biodegradable oil type HEES with ordinary hydraulic oils, since when the temperature increases insoluble compounds are generated, which are deposited on the filters and clog them (the maximum concentration of ordinary oil cannot exceed 1% of the total quantity of oil).**
- **The synthetic biodegradable oil can be used only in the hydraulic system; it cannot be used for the endothermic motor, the transmissions, the braking system, etc.**
- **Before introducing the synthetic biodegradable oil in the hydraulic system, empty the system completely, disconnecting the cylinders and all the parts that may contain ordinary oil, and replace the drain filter with a new one.**
  Start the engine and let it idle without using the work equipment , wait until the oil reaches a temperature of at least 40°C, then start moving the equipment, so that all the parts of the system are filled with oil. Stop the engine and check the oil level (see “4.7.3.e CHECKING THE HYDRAULIC SYSTEM OIL LEVEL”).

4.4 DRIVING TORQUES FOR SCREWS AND NUTS

4.4.1 STANDARD DRIVING TORQUES

★ Nm (Newton metre): 1 Nm = 0,102 kgm

Thread diameter (mm)	Pitch (mm)	Spanner size (mm)	8.8		10.9	
			kgm	Nm	kgm	Nm
6	1	10	0.96 ± 0.1	9.5 ± 1	1.3 ± 0.15	13.5 ± 1.5
8	1.25	13	2.3 ± 0.2	23 ± 2	3.2 ± 0.3	32.2 ± 3.5
10	1.5	17	4.6 ± 0.5	45 ± 4.9	6.5 ± 0.6	63 ± 6.5
12	1.75	19	7.8 ± 0.8	77 ± 8	11 ± 1	108 ± 11
14	2	22	12.5 ± 1	122 ± 13	17.5 ± 2	172 ± 18
16	2	24	19.5 ± 2	191 ± 21	27 ± 3	268 ± 29
18	2.5	27	27 ± 3	262 ± 28	37 ± 4	366 ± 36
20	2.5	30	38 ± 4	372 ± 40	53 ± 6	524 ± 57
22	2.5	32	52 ± 6	511 ± 57	73 ± 8	719 ± 80
24	3	36	66 ± 7	644 ± 70	92 ± 10	905 ± 98
27	3	41	96 ± 10	945 ± 100	135 ± 15	1329 ± 140
30	3.5	46	131 ± 14	1287 ± 140	184 ± 20	1810 ± 190

IMPORTANT

- **This driving torque table is not valid for screws or nuts that must lock nylon parts or alike onto washers or components made of nylon or nonferrous materials.**

4.4.2 SPECIFIC DRIVING TORQUES

ITEM	DESCRIPTION	kgm	Nm
Cab	Front support screws Rear support screws	20 ± 1 20 ± 1	196 ± 9.8 196 ± 9.8
Wheels	Front Rear	81.6 ± 1 81.6 ± 1	800 ± 9.8 800 ± 9.8
Front bucket	Teeth	14.5 ± 1	143 ± 9.8
Backhoe bucket	Central teeth Side teeth	14.5 ± 1 14v5 ± 1	143 ± 9.8 143 ± 9.8
Engine and transmission	Front support central screw Rear support central screw	20 ± 1 20 ± 1	196 ± 9.8 196 ± 9.8

4.5 LUBRICATION

4.5.1 LUBRICATION DIAGRAM

IMPORTANT

- **For the lubrication procedures for the single points, see “4.7 MAINTENANCE PLAN”.**

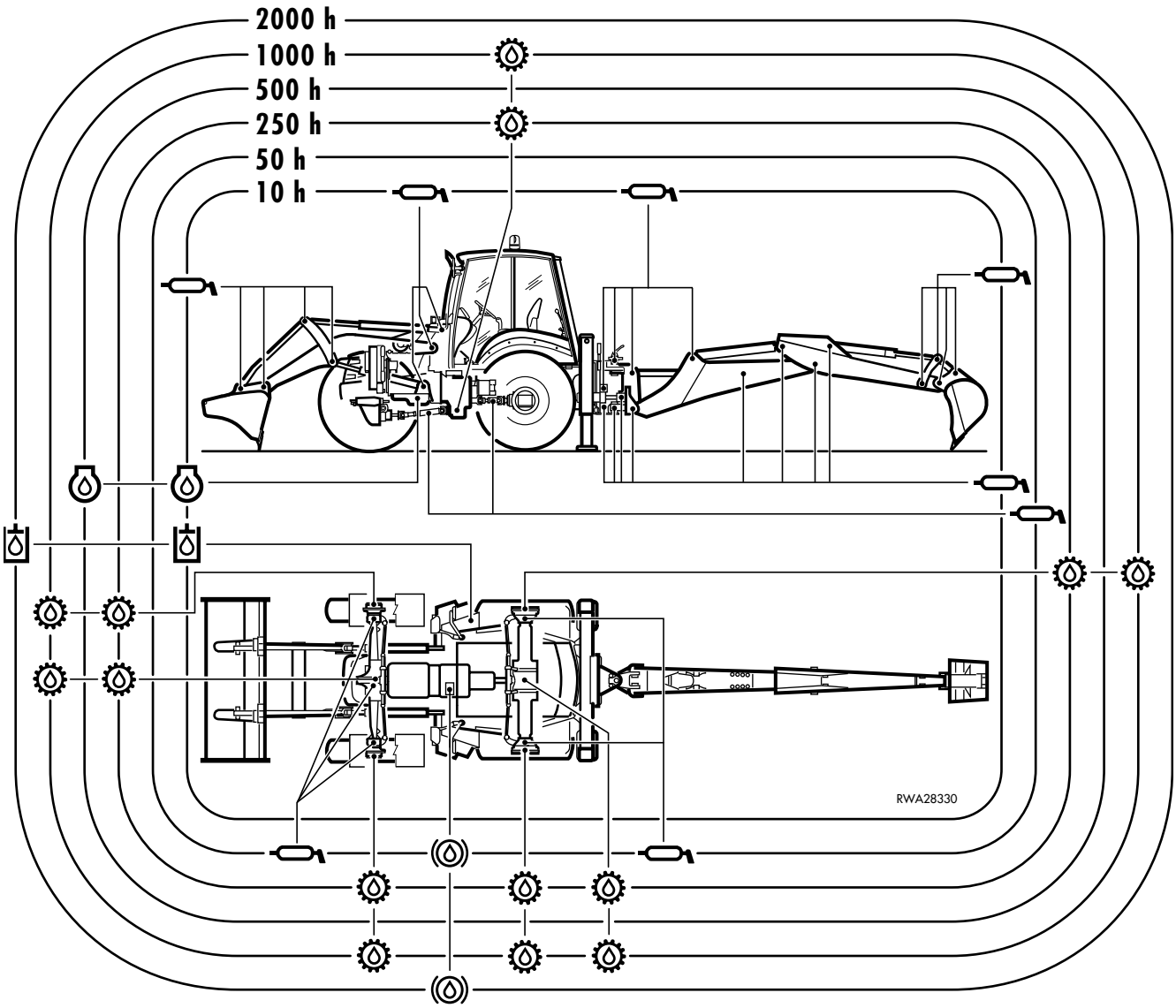

Engine oil

Hydraulic oil

Transmission oil

Grease

Brake oil

4.5.2 LUBRICATION DIAGRAM
(4in1 bucket and pallet forks)

IMPORTANT

- **For the other greasing points, see “4.5.1 LUBRICATION DIAGRAM”.**
- **The points indicated are symmetrical and must be lubricated every 10 hours.**
- **The fork sliding bars and the safety pins must be lubricated with grease only to protect them from oxidation.**
- **The fork joints (A) must be lubricated only if the forks are used.**

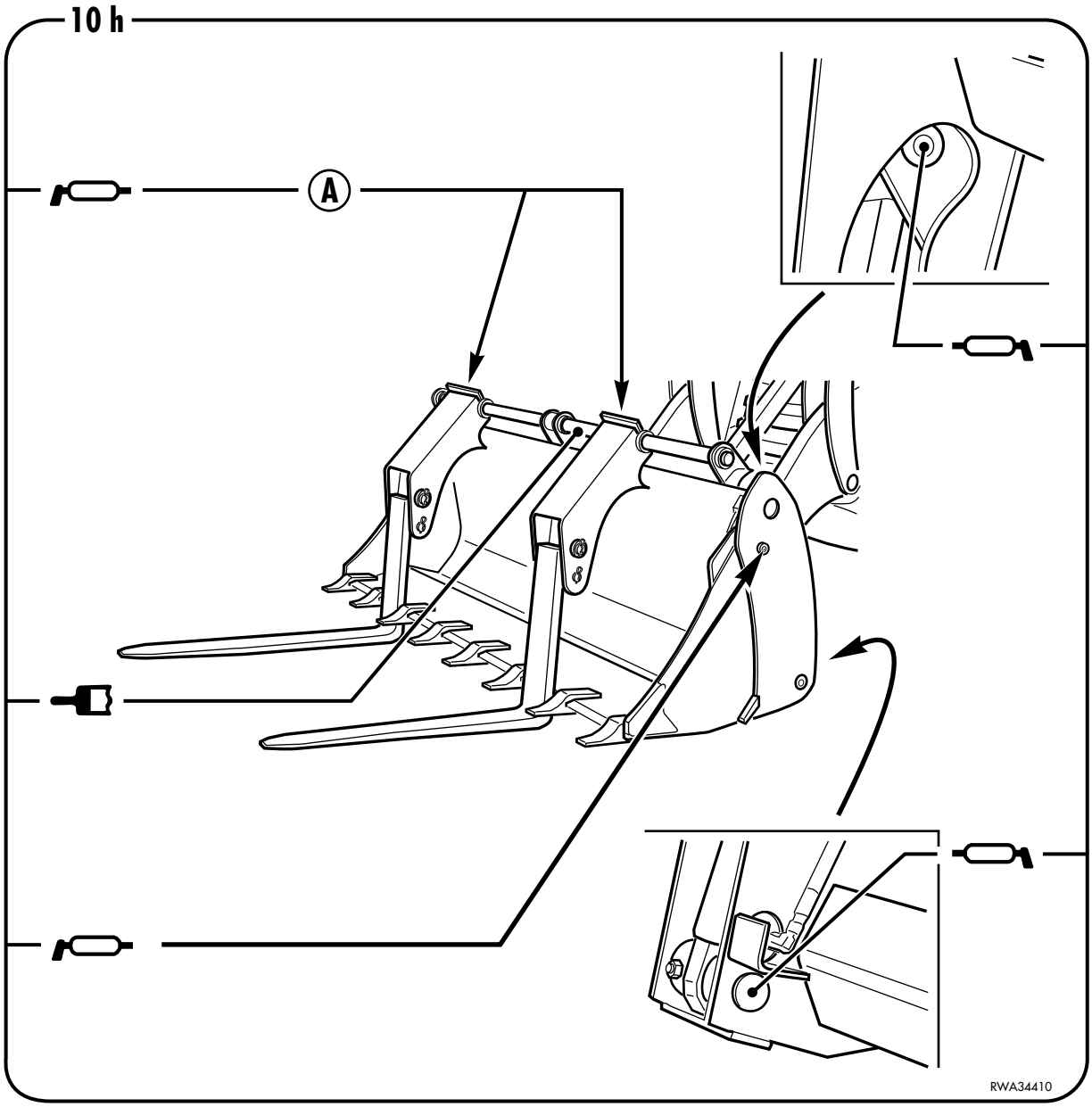

Grease **Grease**

4.5.3 LUBRICATION DIAGRAM
(Front bucket rapid couplings)

IMPORTANT

- **For the other greasing points, see “4.5.1 LUBRICATION DIAGRAM”.**
- **The points indicated are symmetrical and must be lubricated every 10 hours.**

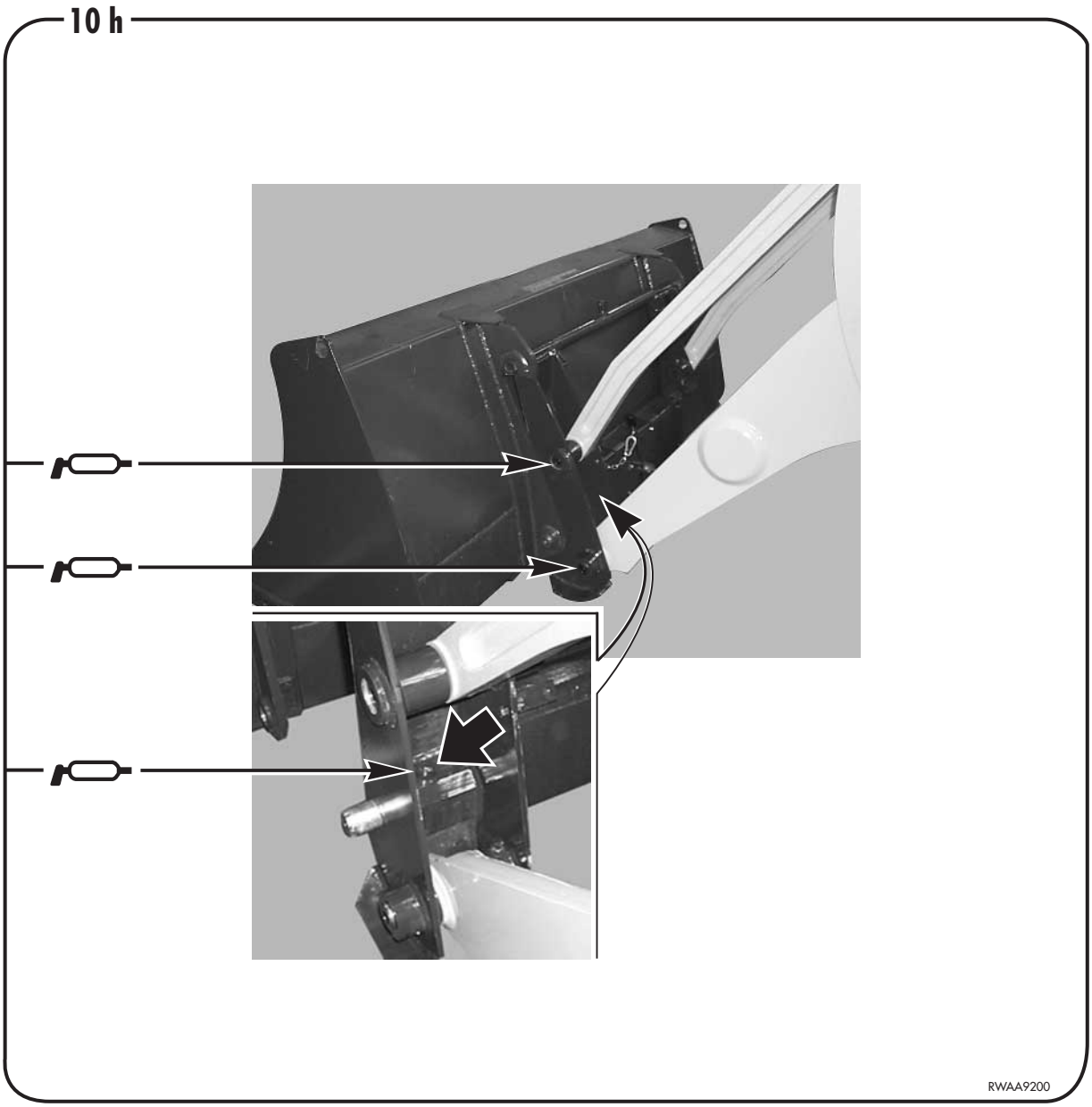

Grease

4.5.4 LUBRICATION DIAGRAM
(Telescopic arm)

IMPORTANT

- **For the other greasing points, see “4.5.1 LUBRICATION DIAGRAM”.**
- **Lubricate the telescopic arm guides only if the sliding shoes are made of brass. Plastic shoes do not require lubrication.**

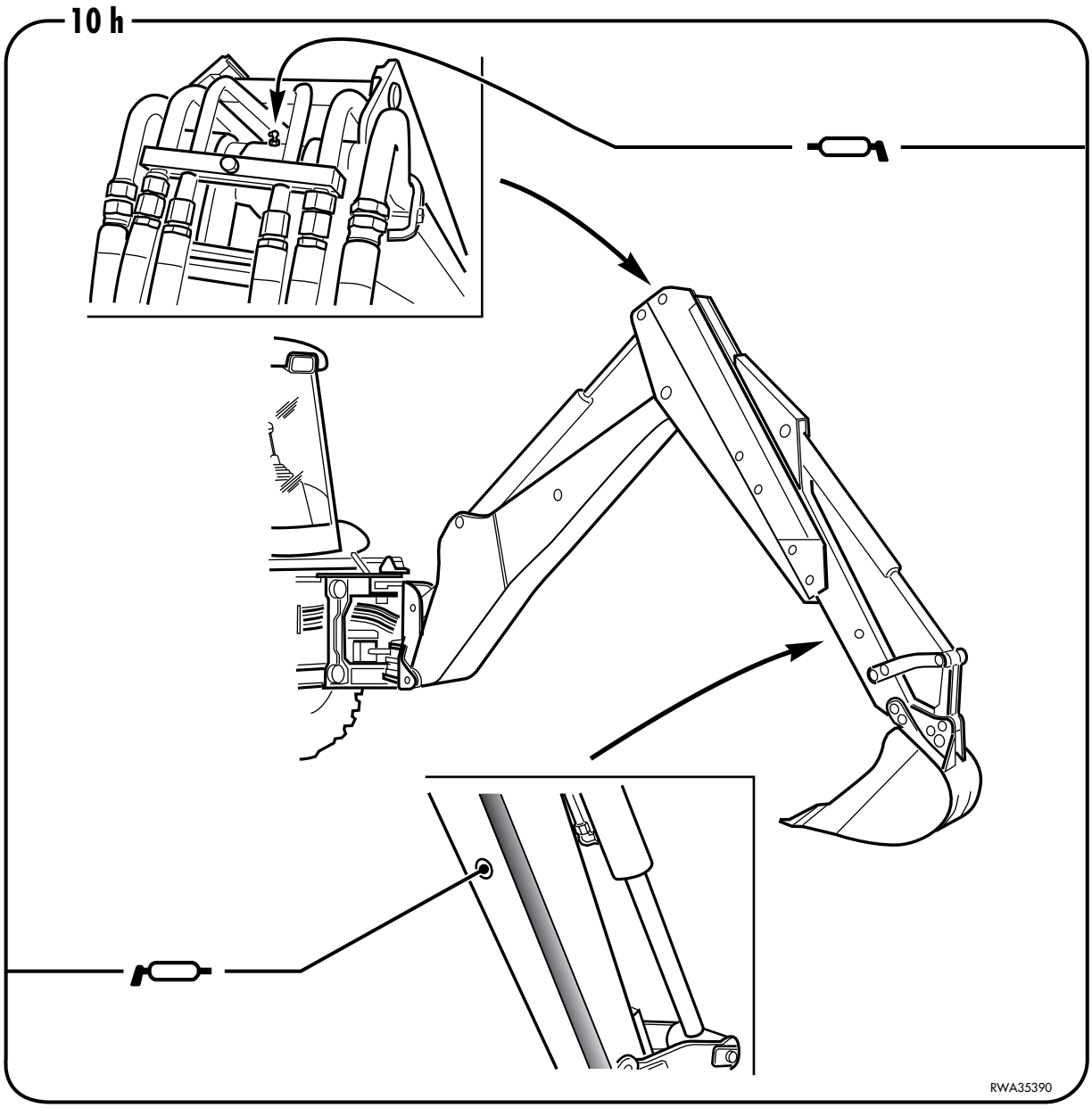

Grease

4.5.5 LUBRICATION DIAGRAM
(Offset device)

IMPORTANT

- **For the other greasing points, see “4.5.1 LUBRICATION DIAGRAM”.**

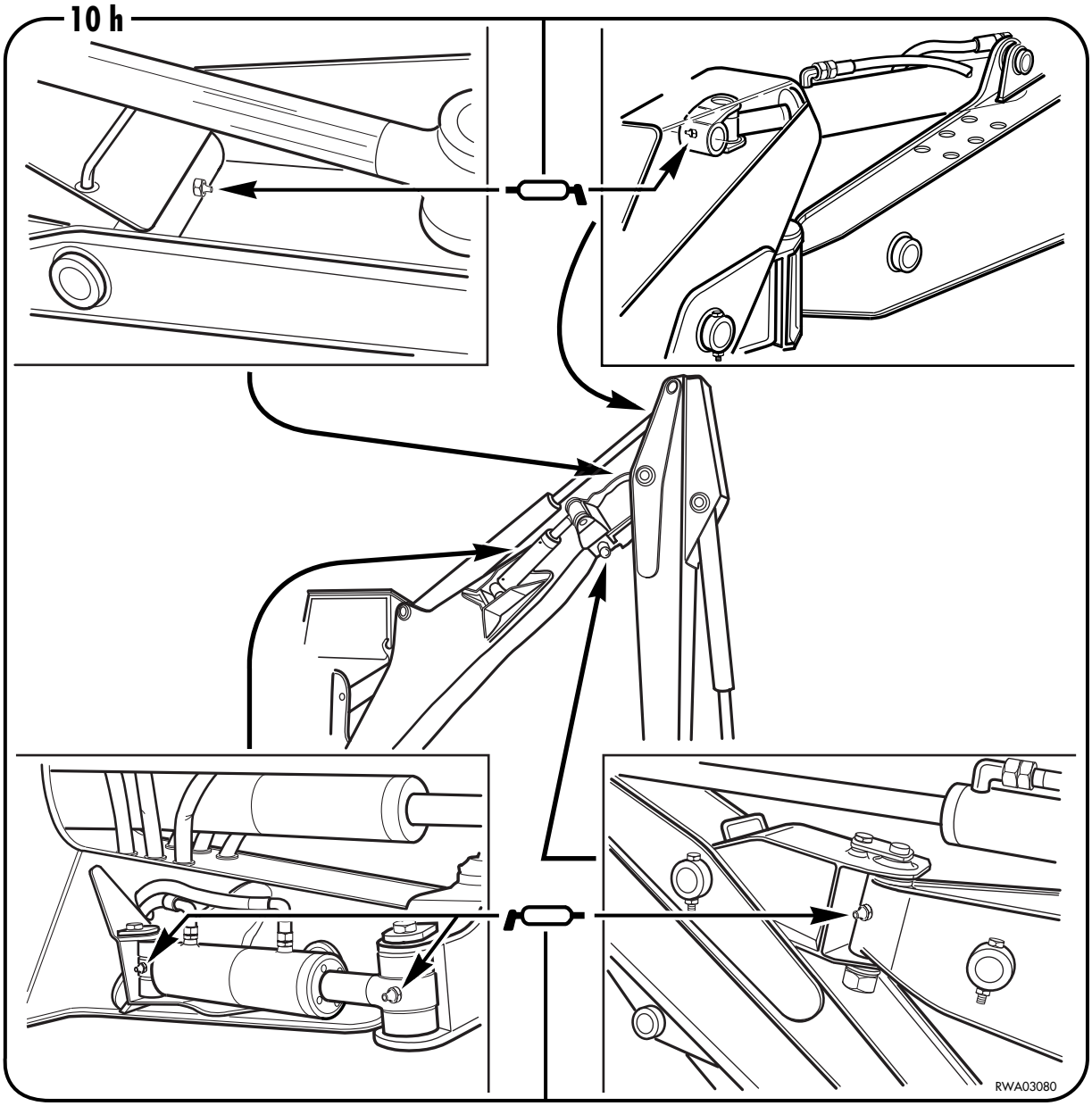

Grease

4.6 PERIODICAL CHANGE OF THE COMPONENTS CONNECTED WITH SAFETY

To ensure safety at any moment while driving and using the machine, the operator must carry out all the periodic maintenance operations prescribed. Furthermore, the operator must periodically change the components indicated in the table in the following page, which are especially related to safety and fire-prevention rules. These components are subject to wear and since it is particularly difficult to evaluate their conditions through simple periodic maintenance, after a certain period it is advisable to change them independently of their state, in order to keep them efficient over time. Repair or replace these components immediately in case of failures or anomalies, even if the time interval prescribed for their change has not elapsed yet.

If the pipe clamps show signs of deterioration, like deformations or cracks, provide for changing them together with the pipes.

In addition to the periodical change of the components listed in the following page, the inspections described here below are to be carried out on the hydraulic pipes. In case of anomalies, carry out the necessary adjustments and changes, or adopt any other measure required.

Type of check	Check item
Check before starting	Leakages from joints, hydraulic pipes or fuel pipes.
Periodical check (monthly check)	Leakages from joints, hydraulic pipes or fuel pipes. Damaged hydraulic or fuel pipes (cracks, wear and tear).
Periodical check (annual check)	Leakages from joints, hydraulic pipes or fuel pipes. Deteriorated, twisted, damaged hydraulic or fuel pipes (cracks, wear and tear) or pipes in contact with other parts of the machine.

4.6.1 CRITICAL PARTS FOR SAFETY

FUEL SUPPLY SYSTEM

No.	Components related to safety that periodically need changing	Q.ty	Change interval
1	Fuel pipe (Fuel tank - precleaner)	1	Every 2 years or 4000 hours, whichever occurs first
2	Fuel pipe (Precleaner - fuel pump)	1	
3	Fuel pipe (Fuel pump - fuel filter)	1	
4	Fuel pipe (Fuel filter - injection pump)	1	
5	Fuel pipe (Fuel filter - fuel tank)	1	
6	Fuel recovery pipe (injection pump - fuel filter)	1	

- For the serial numbers and the quantity of the components that periodically need changing, consult the spare parts catalogue section regarding the components connected with safety and the components that must be periodically changed.
- When changing pipes, always change O-rings, gaskets and analogous components.

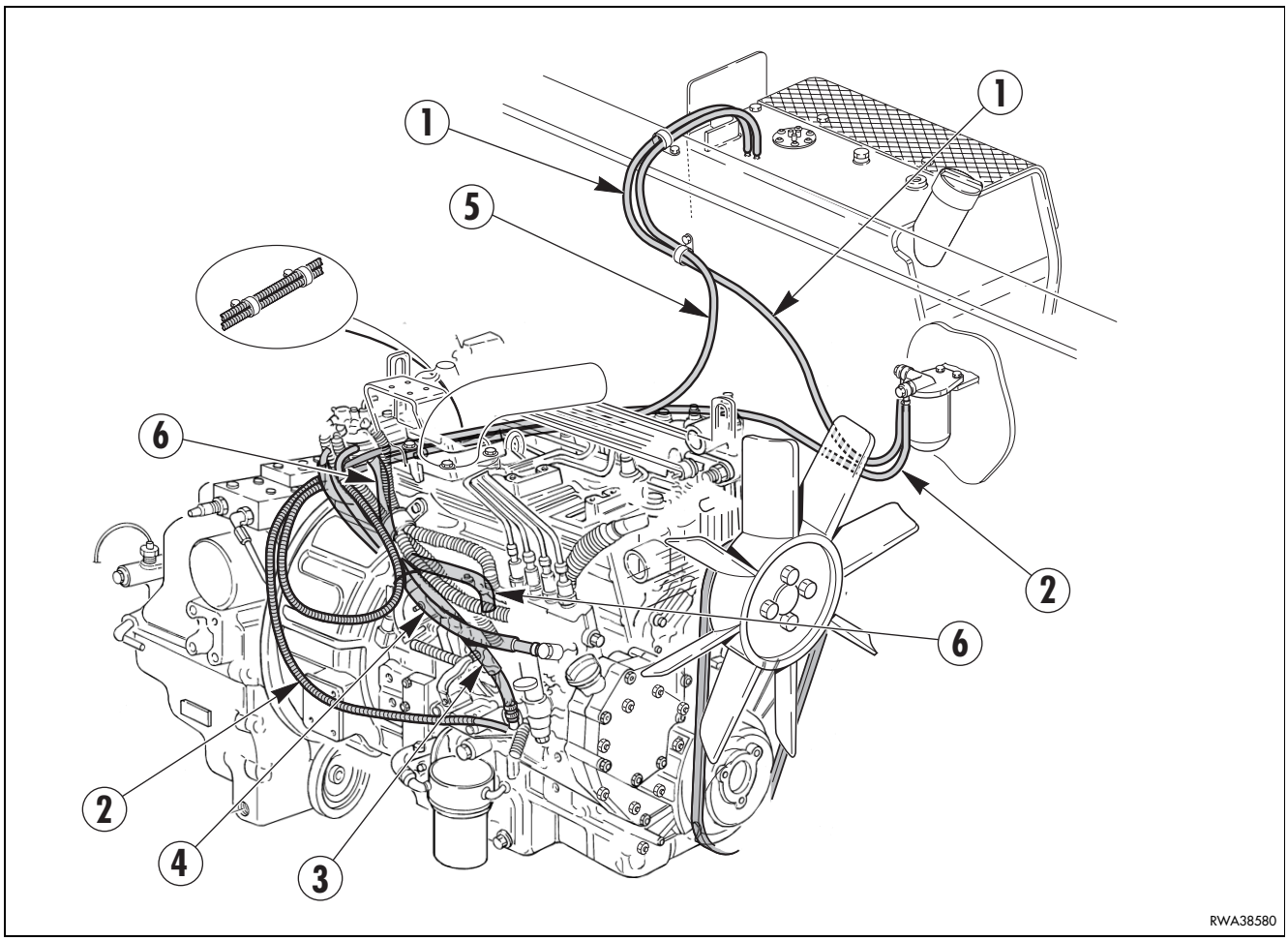

DELIVERY-RETURN HYDRAULIC SYSTEM

No.	Components related to safety that periodically need changing	Q.ty	Change interval
1	Hydraulic pipe (Hydraulic pump - iron tube)	1	Every 2 years or 4000 hours, whichever occurs first
2	Hydraulic pipe (Iron tube - backhoe distributor)	1	
3	Hydraulic pipe (Iron tube - loader distributor)	1	
4	Hydraulic pipe (Hydraulic pump - backhoe distributor)	1	
5	Hydraulic pipe (Loader distributor - backhoe distributor)	1	

- For the serial numbers and the quantity of the components that periodically need changing, consult the spare parts catalogue section regarding the components connected with safety and the components that must be periodically changed.
- When changing pipes, always change O-rings, gaskets and analogous components.

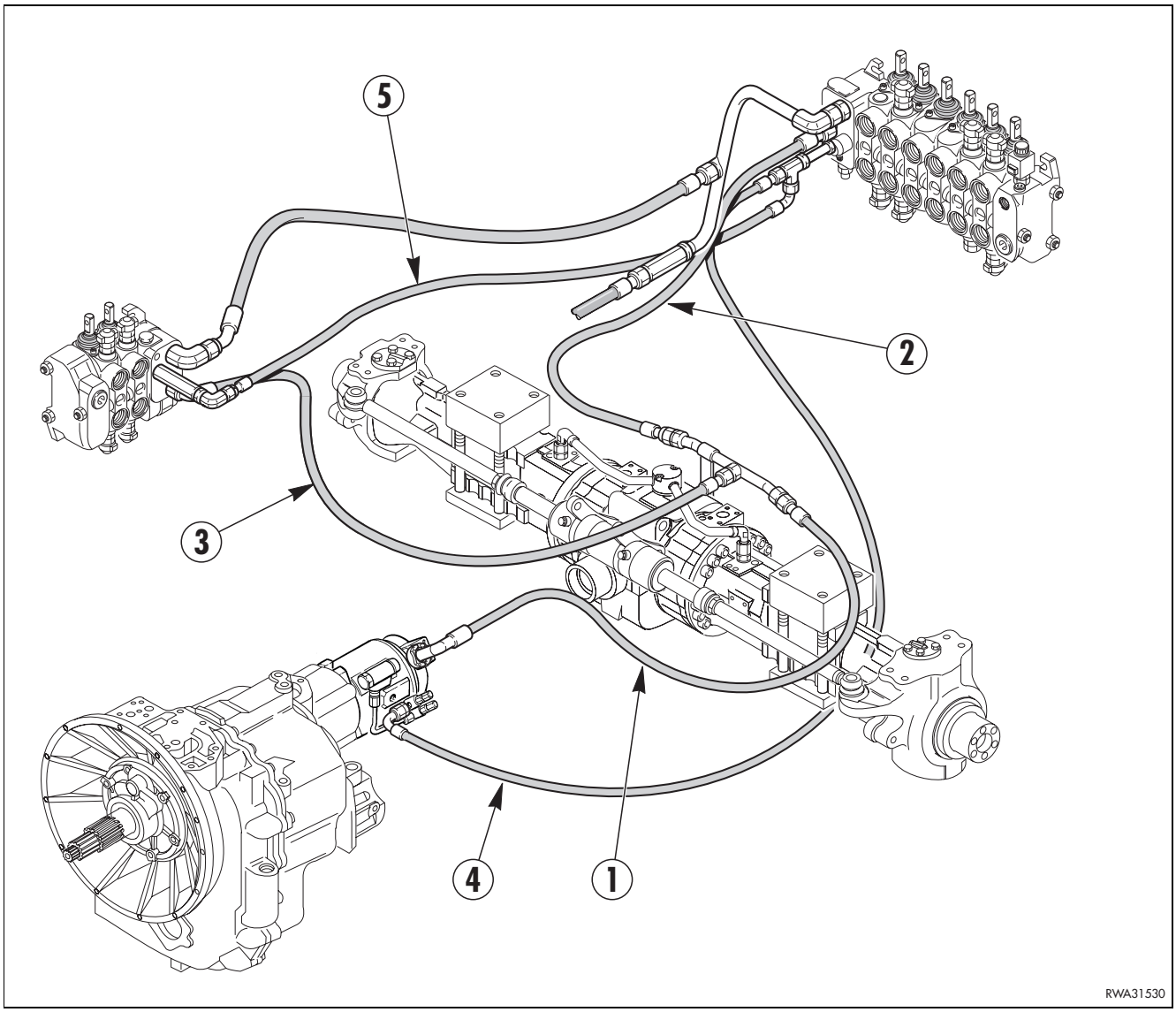

LOADER AND BACKHOE HYDRAULIC SYSTEM

No.	Components related to safety that periodically need changing	Q.ty	Change interval
6	Hydraulic pipes (Cylinders - loader arm)	4	Every 2 years or 4000 hours, whichever occurs first
7	Hydraulic pipes (Cylinders - loader bucket)	4	
8	Hydraulic pipes (Cylinders - 4in1 bucket)	4	
9	Hydraulic pipes (Cylinders - Backhoe boom)	2	
10	Hydraulic pipes (Cylinders - Backhoe arm)	2	
11	Hydraulic pipes (Cylinders - Backhoe bucket)	4	

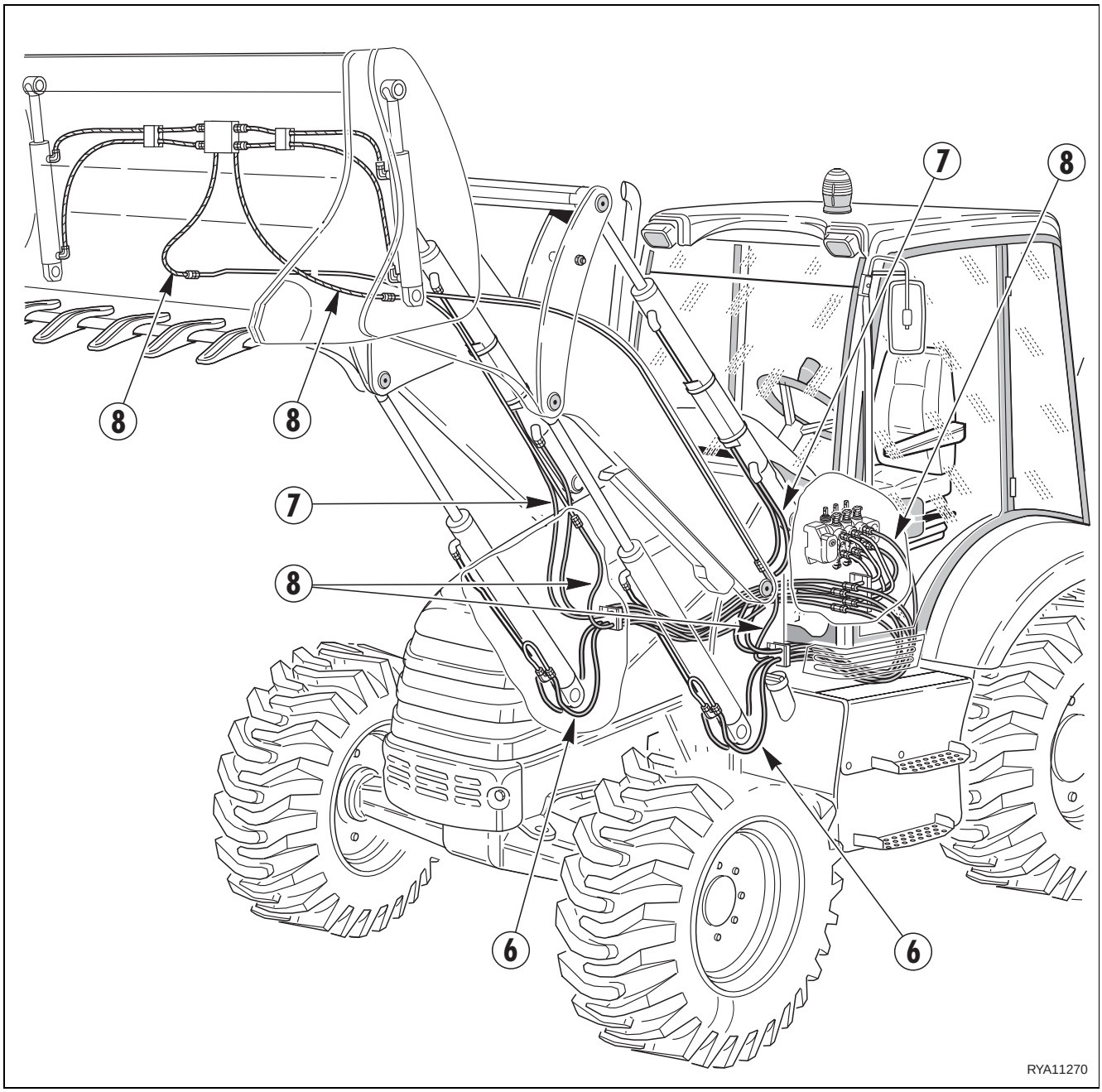

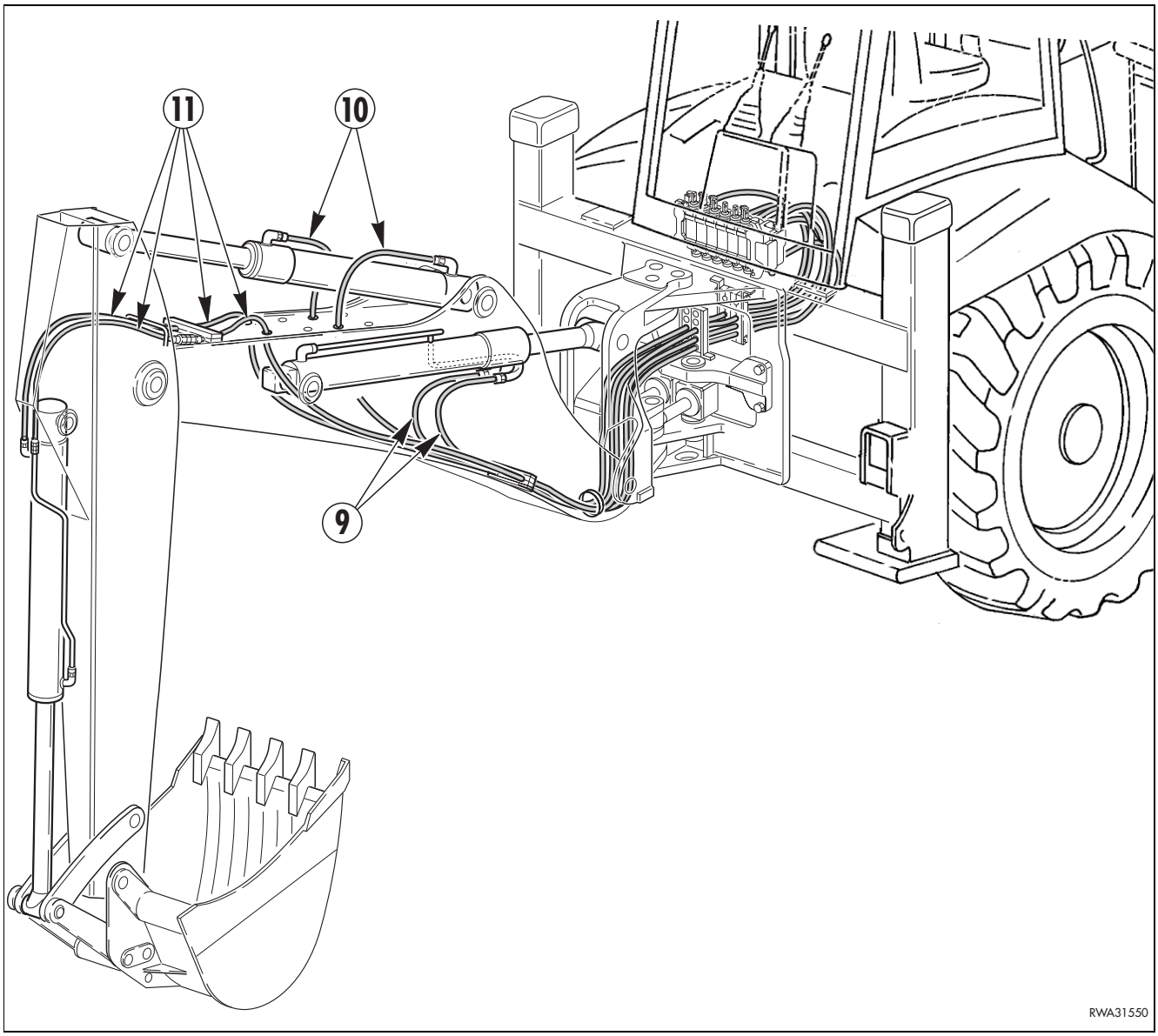

- For the serial numbers and the quantity of the components that periodically need changing, consult the spare parts catalogue section regarding the components connected with safety and the components that must be periodically changed.
- When changing pipes, always change O-rings, gaskets and analogous components.

OPERATOR'S SAFETY

No.	Components related to safety that periodically need changing	Q.ty	Change interval
1	Safety belt	1	Every 4 years

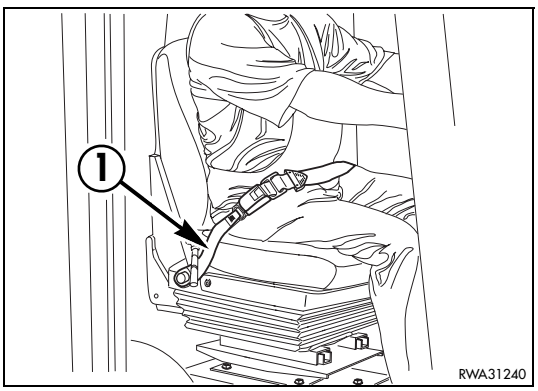

4.7 MAINTENANCE PLAN

4.7.1 WHEN REQUIRED

N.	PART	OPERATION	PAGE
a	Engine air cleaner	Check, clean or change	202
b	Cab air filter	Check and clean	203
c	A/C recirculating air filter (only for machines with air conditioner)	Check and clean	204
d	Braking system	Bleed	205
e	Water separator	Clean	206
f	Front and rear wheels	Adjust toe-in	206
g	Parking brake	Check and adjust	207
h	Service brake	Check braking	208
i	Brake pedals	Adjust stroke	209
k	Return to dig	Adjust	209
l	Stabilizers	Check and adjust clearance	210

4.7.2 MAINTENANCE INTERVALS IN CASE OF USE OF THE DEMOLITION HAMMER

N.	PART	OPERATION	PAGE
a	Hydraulic oil drain filter	Change cartridge	211
b	Hydraulic oil	Change	211

4.7.3 CHECKS BEFORE STARTING

N.	PART	OPERATION	PAGE
a	Various checks	—	212
b	Coolant	Check and top up	212
c	Fuel tank	Check and top up	213
d	Engine oil pan	Check and top up	213
e	Hydraulic oil tank	Check and top up	214
f	Water separator	Drain water	215

4.7.4 MAINTENANCE EVERY 10 HOURS OF OPERATION

N.	PART	OPERATION	PAGE
a	Joints	Lubricate	216

4.7.5 MAINTENANCE AFTER THE FIRST 50 HOURS OF OPERATION (Only for machines in which the synthetic biodegradable oil type HEES is used)

(Carry out these operations together with those to be performed every 50 HOURS, see “4.7.6 MAINTENANCE EVERY 50 HOURS OF OPERATION”).

N.	PART	OPERATION	PAGE
a	Hydraulic oil drain filter (Only for machines with synthetic biodegrad-able oil)	Change	230

4.7.6 MAINTENANCE EVERY 50 HOURS OF OPERATION

N.	PART	OPERATION	PAGE
a	Radiator	Check level	218
b	Braking system	Check oil level	218
c	Propeller shafts	Lubricate (6 points)	219
d	Front axle joints and central coupling and rear axle joints	Lubricate (9 points)	220
e	Front and rear wheels	Check tyre pressure	220
f	Electrical system	Check	221

4.7.7 MAINTENANCE AFTER THE FIRST 250 HOURS OF OPERATION

(Operations to be carried out together with those prescribed at point “4.7.8 MAINTENANCE EVERY 250 HOURS OF OPERATION”)

N.	PART	OPERATION	PAGE
a	Front axle	Change oil	238
b	Rear axle	Change oil	239
c	Hydraulic transmission	Change oil	240
d	Hydraulic transmission filter	Change	241
e	Engine valves	Check clearance	241
f	Hydraulic oil drain filter	Change	230

4.7.8 MAINTENANCE EVERY 250 HOURS OF OPERATION

N.	PART	OPERATION	PAGE
a	Fan belt	Check conditions and tension	223
b	A/C compressor belt (only for machines with air conditioner)	Check conditions and tension	224
c	Battery	Check electrolyte level	225
d	Front axle	Check levels (n. 3)	226
e	Rear axle	Check levels (n. 3)	226
f	Hydraulic transmission	Check level	227
g	Front and rear wheels	Check screw tightening	227

4.7.9 MAINTENANCE AFTER THE FIRST 500 HOURS OF OPERATION (Only for machines in which the synthetic biodegradable oil type HEES is used)

(Carry out these operations together with those to be performed every 500 HOURS, see “4.7.10 MAINTENANCE EVERY 500 HOURS OF OPERATION”)

N.	PART	OPERATION	PAGE
a	Hydraulic oil and suction filter (Only for machines with synthetic biodegrad-able oil)	Change oil and clean filter	242

4.7.10 MAINTENANCE EVERY 500 HOURS OF OPERATION

N.	PART	OPERATION	PAGE
a	Engine oil	Change	229
b	Engine oil filter	Change	230
c	Hydraulic oil drain filter	Change	230
d	Fuel filter	Change	233
e	Fuel tank	Drain condensate	234
f	Hydraulic oil tank (Only for machines with synthetic biodegrad-able oil)	Drain condensate	235
g	Radiators	Clean outside	236
h	A/C condenser (only for machines with air conditioner)	Clean outside	237

4.7.11 MAINTENANCE EVERY 1000 HOURS OF OPERATION

N.	PART	OPERATION	PAGE
a	Front axle	Change oil	238
b	Rear axle	Change oil	239
c	Hydraulic transmission	Change oil	240
d	Hydraulic transmission filter	Change	241
e	Engine valves	Check clearance	241

4.7.12 MAINTENANCE EVERY 2000 HOURS OF OPERATION

N.	PART	OPERATION	PAGE
a	Hydraulic oil and suction filter	Change oil and clean filter	242
b	Coolant	Change	244
c	Braking system oil	Change	246
d	Alternator and starter	Check	246
e	A/C system coolant (only for machines with air conditioner)	Check quantity	247

4.7.13 MAINTENANCE EVERY 4000 HOURS OF OPERATION

N.	PART	OPERATION	PAGE
a	A/C system filter (dehydrating filter) (only for machines with air conditioner)	Change	248
b	A/C system compressor (only for machines with air conditioner)	Check	248

4.7.1 WHEN REQUIRED

4.7.1.a CHECKING, CLEANING OR CHANGING THE AIR CLEANER CARTRIDGE

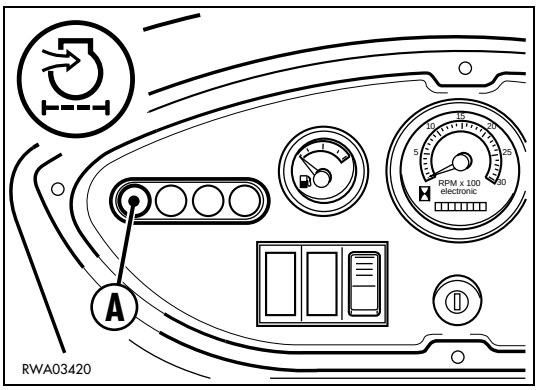

DANGER

- **Remove the air cleaner only after stopping the engine and do not start the engine if the air cleaner is open.**
- **Always wear safety goggles during the cleaning operations.**

IMPORTANT

- **The air filtering system consists of a primary filtering element with considerable capacity and of a secondary cartridge that ensures additional safety protection.**
  The primary element can be cleaned with compressed air, while the cartridge must be changed.
- **The filter must be cleaned when the clogging warning light (A) positioned on the side dashboard comes on or flashes or when the relevant alarm signal comes on on the electronic display positioned on the front dashboard. After performing this maintenance operation, set the partial service hours to zero. For further details, see "3.3.1 FRONT INSTRUMENTS" pos. 17.**

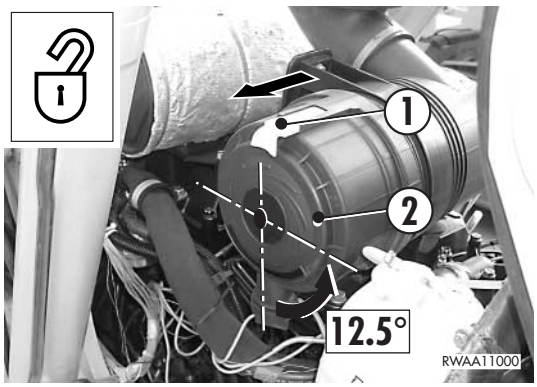

The air cleaner can be reached after raising the loader arm, engaging the mechanical safety lock and opening the engine hood, (see "3.5.1 ENGINE HOOD").
To clean the primary element, proceed as follows:

1 - Release the safety lock (1), moving it toward the outside.
2 - Rotate the cover (2) anticlockwise by approximately 12.5°.
3 - Lift the cover (2) and extract the filtering element (3).
4 - Slightly strike the filtering element (3) on the palm of your hand, in such a way as to remove the dust, and blow compressed air on the inner surface, keeping the air jet at a distance of approximately 15 cm and taking care to prevent the pressure from exceeding 4-5 bars.
5 - Carefully clean the inside of the filter case (4), taking care to prevent foreign bodies from getting into the suction duct.
6 - Put back the filtering element (3), making sure that it is perfectly housed in its seat.
7 - Put back the cover (2), rotating it clockwise by approximately 12.5°. Make sure that the cover (2) is perfectly locked and make sure that the ejector (5) is positioned vertically on the lower part.
8 - Once the whole has been assembled, push the safety lock (1) towards the inside.

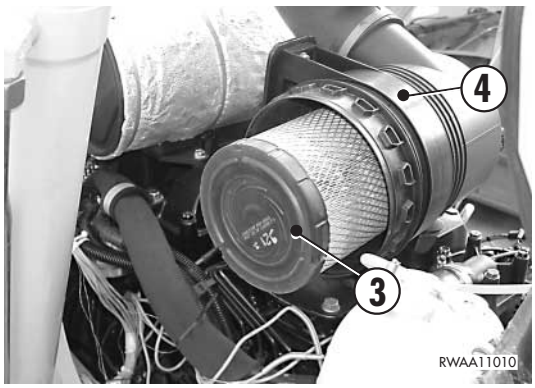

IMPORTANT

- **If the clogging warning light or the relevant alarm signal should come on after the starting of the engine, it is necessary to change the primary filtering element and the safety cartridge.**
- **Change the primary filtering element after 6 cleaning operations or after one year. Every time the primary filtering element is replaced, the safety cartridge must be replaced, too.**

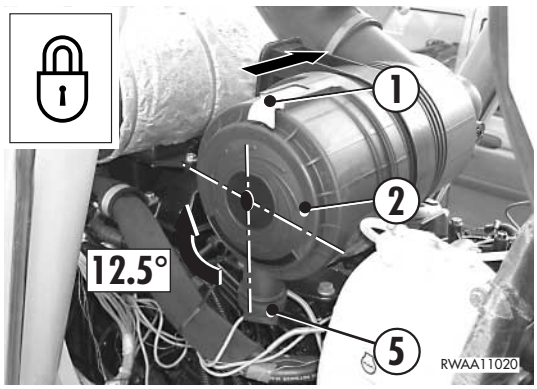

To change the safety cartridge (6), after removing the primary element (3), proceed as follows:

1 - Remove the safety cartridge (6) and replace it with a new one.

2 - Once the safety cartridge (6) has been installed inside the filter case (4), make sure that it is perfectly housed in its seat.

3 - Reassemble the whole as described above, making sure that all the filter components are perfectly locked.

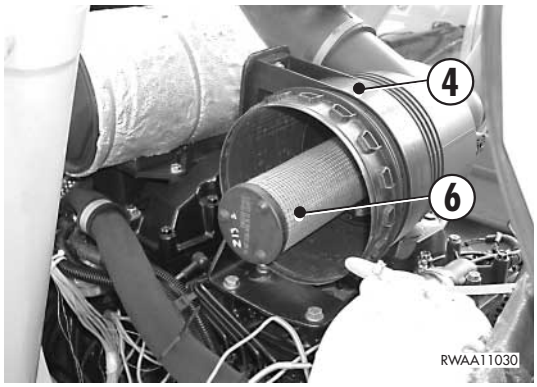

4.7.1.b CHECKING AND CLEANING THE CAB AIR FILTER

DANGER

- **Always wear safety goggles during the cleaning operations.**

The air suction for the ventilation of the cab is protected by a filter positioned on the right side of the cab.
This filter blocks all the impurities contained in the air and must be cleaned whenever a decrease in air circulation is observed.
The filter can be reached from the outside of the cab. To clean the filtering element, proceed as follows:

1 - Remove the screws (1), remove the external protection (2) and extract the filtering element (3).

2 - Hit the element slightly on the palm of your hand to eliminate the dust and blow compressed air on its surfaces, keeping the jet at a distance of about 15 cm and making sure that the pressure does not exceed 45 bars.

3 - Carefully clean the filter casing, taking care to prevent any foreign body from entering the suction duct, and reassemble the unit.

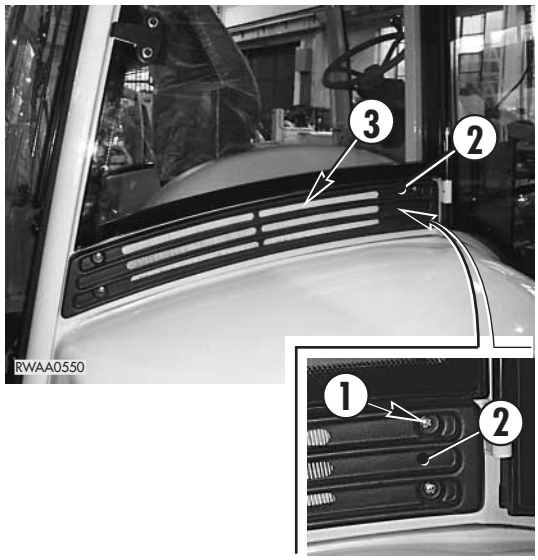

4.7.1.c CHECKING AND CLEANING THE RECIRCULATING AIR FILTER (only for machines with air conditioner)

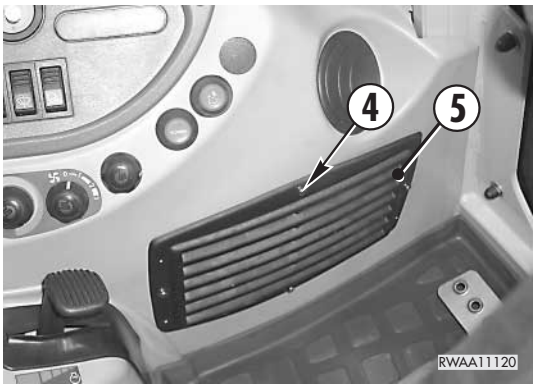

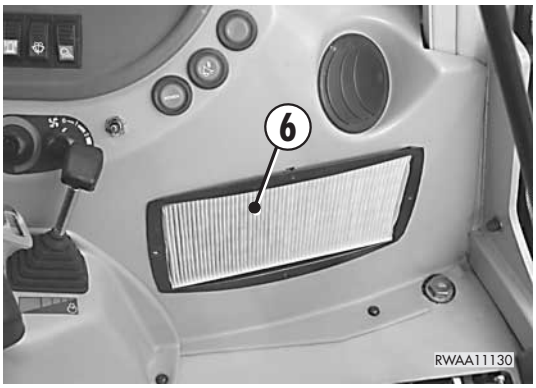

DANGER

- **Always wear safety goggles during the cleaning operations.**

If the machine is provided with air conditioning system, besides the external filter (3) there is also an additional internal filter (6) for the internal air recirculation. This is a filter that holds the impurities present in the air and it must be cleaned whenever a decrease in the air circulation is observed. The filter can be reached from the inside of the cab and to clean the filtering element it is necessary to proceed as follows:

1 - Remove the screws (4), remove the outer guard (5) and extract the filtering element (6).

2 - Hit the element slightly on the palm of your hand to eliminate the dust and blow compressed air on its surfaces, keeping the jet at a distance of about 15 cm and making sure that the pressure does not exceed 4÷5 bars.

3 - Carefully clean the filter casing, taking care to prevent any foreign matter from getting into the suction duct.

4 - Put back the filtering element (6) and the guard (5).

IMPORTANT

- **If the filtering element is excessively clogged or damaged, change it with a new one.**

4.7.1.d BLEEDING THE BRAKING CIRCUIT

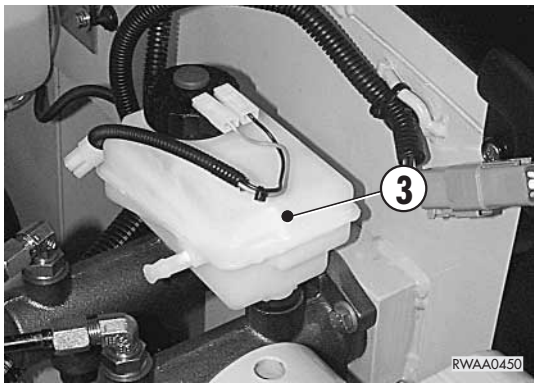

DANGER

- **The oil spilled on the floor may cause it to become slippery; immediately clean any dirty area.**
- **Oils, filters, the coolant and the battery are considered special waste and must be collected and disposed of according to the anti-pollution regulations in force.**

This operation is important, since it helps maintain the power and braking efficiency of the machine.
Proceed as follows:

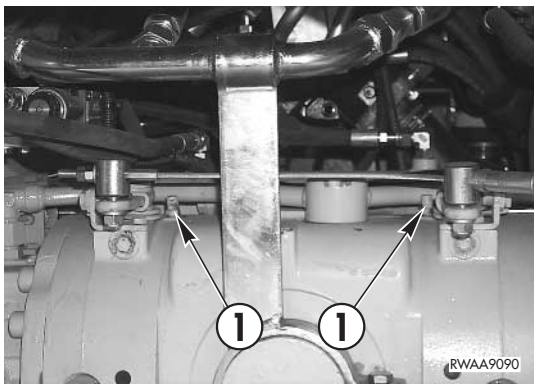

1 - Make sure that the oil in the braking system tank (3) reaches the maximum level.

2 - Press the brake pedal thoroughly and, keeping it pressed, loosen the drain screw (1) of the relevant brake until the pedal reaches the end of stroke.
Use a 13 mm spanner.

3 - Keeping the pedal at the end of its stroke, tighten the drain screw (1).

4 - Release the brake pedal, wait for a few minutes and repeat the operations described above until no air bubbles can be noticed in the oil that flows out of the drain screw (1).

IMPORTANT

- **When bleeding the system, apply a small pipe to the screws (1), in order to collect the oil.**
- **The bleeding must be carried out for both braking units, disconnecting the pedals from each other.**
- **Check the oil level in the braking system tank frequently and top up whenever the oil is near the minimum level.**
- **For the topping up, use only new oil of the prescribed type.**

4.7.1.e CLEANING THE WATER SEPARATOR

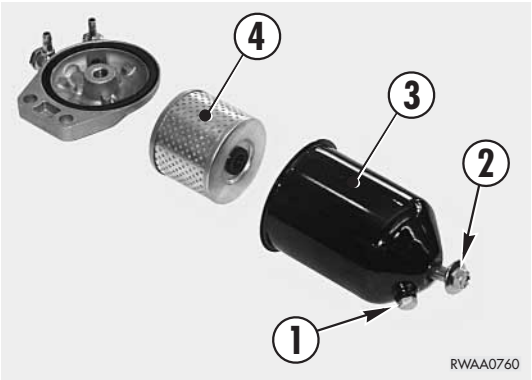

1 - Loosen the screw (1) and drain the fuel contained in the water separator, gathering it in a container with suitable capacity.
Use a 13 mm spanner.

2 - Loosen the central screw (2) and remove the bowl (3) and the filtering element (4).
3 - Clean the inside of the pan and the filter with diesel oil or oil.

4 - Put back the filter (4) and the bowl (3), tighten the screws (2) and (1) and bleed the fuel supply circuit proceeding as described in chapter “4.7.10.d CHANGING THE FUEL FILTER”.

5 - Start the engine.

IMPORTANT

- **If the filtering element is excessively clogged or damaged, provide for changing it.**

4.7.1.f CHECKING AND ADJUSTING THE WHEEL TOE-IN

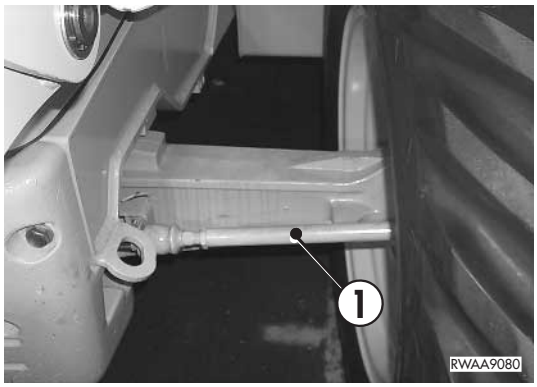

This check must be carried out according to time intervals fixed by the operator, since any anomaly regarding the wheel toe-in is due to impacts or vibrations that depend on the type of surface on which the machine works.
Another reason that shoud lead the operator to perform this check is the excessive wear of the tyres.
The machine has been designed with a toe-in equal to 0 mm.
Every adjustment must restore this value and must be carried out on the coupling bars (1) after loosening the nuts (2) that lock them. (Use 27 and 36 mm spanners).
During this check and the relevant adjustment, it is advisable to check also the conditions of the articulated heads (3); if a considerable slack is observed, immediately provide for changing them.

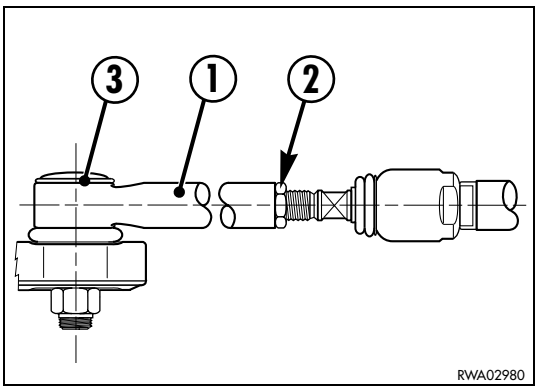

IMPORTANT

- **Check the toe-in and if necessary carry out the required adjustment on both axles.**

4.7.1.g CHECKING AND ADJUSTING THE PARKING BRAKE

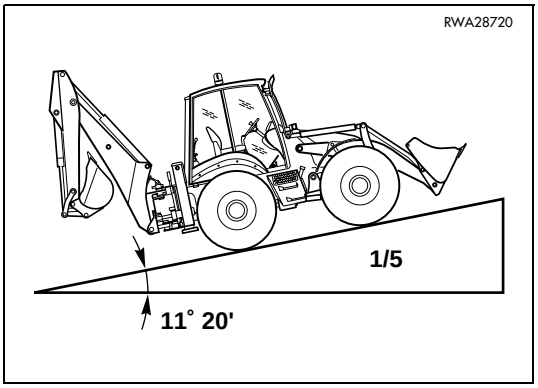

IMPORTANT

- **During running-in, check the efficiency of the parking brake after the first 100 hours of operation.**

CHECK

Check conditions

- Tyre pressure in accordance with the prescribed values.
- Road surface dry, compact, with a gradient of approx. 11°20' (1/5).
- Machine in operating conditions.

1 - Start the engine, (see “3.6.2 STARTING THE ENGINE”).

2 - Align the machine in travel position on a straight road section and proceed up the slope with 1/5 gradient with empty bucket.

3 - Stop the machine with the service brake, shift the reversing gear control lever to the neutral position (N) and stop the engine.

4 - Apply the parking brake (lock position), release the service brake slowly and make sure that the machine does not move.

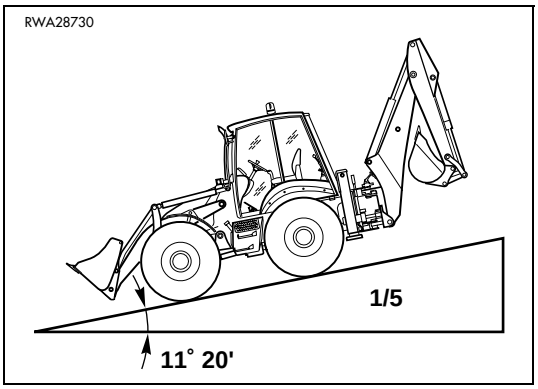

ADJUSTMENT

1 - With the engine off, release the brake lever and rotate the lever end (1) by giving it 2 or 3 anticlockwise turns.

2 - Start the engine and check again.

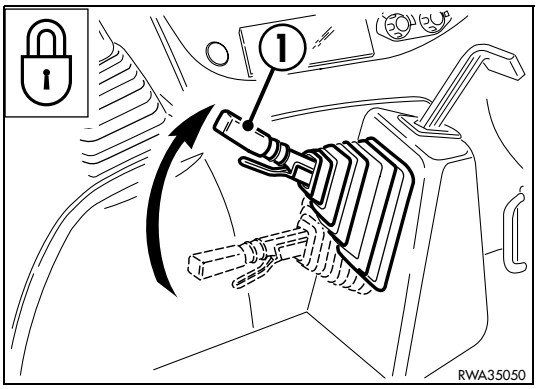

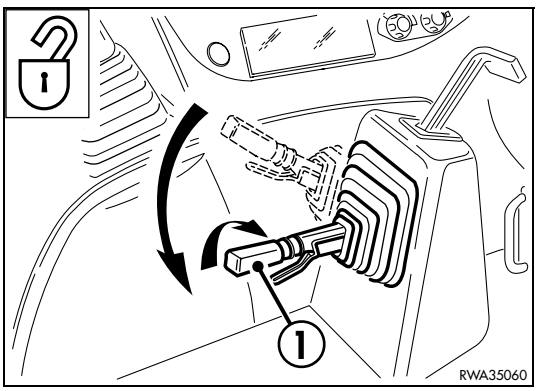

4.7.1.h CHECKING THE BRAKING EFFICIENCY

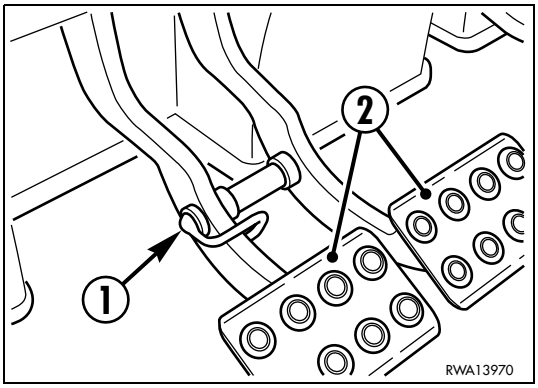

IMPORTANT

- **During running-in, check the braking efficiency after the first 100 hours of operation.**
- **Carry out the check with the machine positioned on firm and flat ground, making sure that there are no persons or obstacles in the vicinity.**

This check must be carried out after setting the work equipment in the travel or transport position and engaging all the safety locks.

1 - Connect the brake pedals (2) with the pin (1).

2 - Release the parking brake and start the engine, (see “3.6.2 STARTING THE ENGINE”).

3 - Engage the 2nd gear and the forward gear.

4 - Accelerate until reaching the maximum speed.

5 - Press the brake pedals. The machine must brake smoothly on a straight line and the tension of the pedals must be constant. Otherwise, contact your Komatsu Utility Dealer.

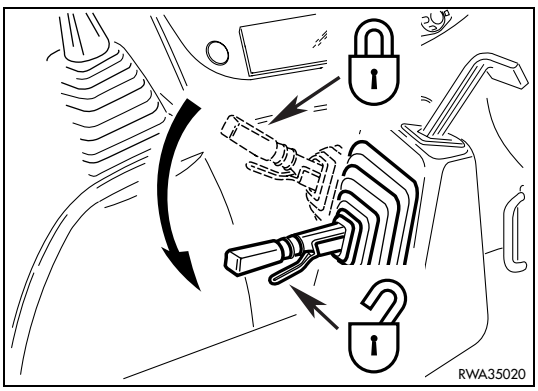

4.7.1.j CHECKING AND ADJUSTING THE BRAKE PEDAL STROKE

This check must be carried out when operating on the braking unit in order to eliminate any trouble.
To check and adjust the brake pedal stroke, proceed as follows:

1 - Insert the connection pin (1) in order to couple the pedals.

2 - By acting on the end-of-stroke rubber pads (2), position the pedals in correspondence with measure “A” - 313 mm; lock the pads in this position. (Use a 13 mm spanner).

3 - Lower the pedals to the measure “A”-303 mm and adjust the brake pump rods (3) until they touch the pumping pistons; lock them in this position.
(Use a 22 mm spanner).

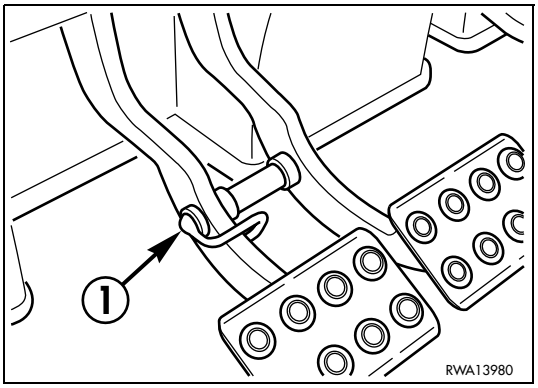

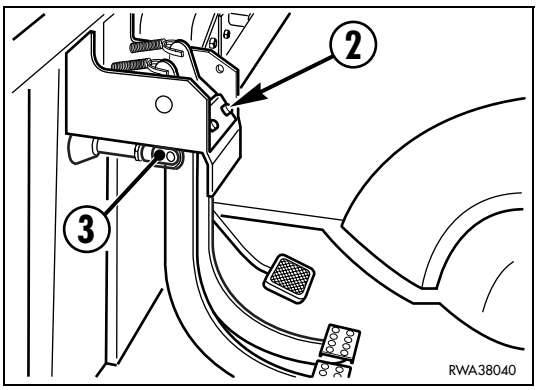

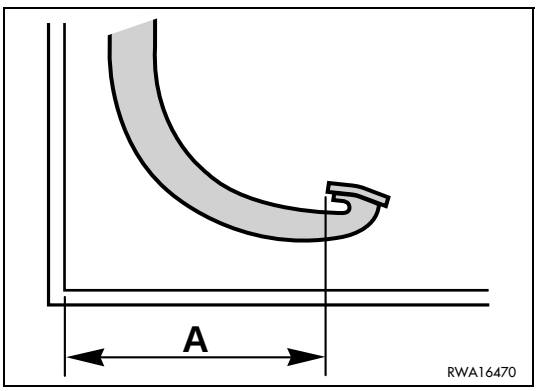

4.7.1.k ADJUSTING THE AUTOMATIC RETURN-TO-DIG DEVICE OF THE FRONT BUCKET (if installed)

The device for the automatic return of the front bucket to the digging position automatically brings the front bucket to the loading position when it is lowered to the ground. The sensor is positioned on the right dumping cylinder and determines the horizontal position of the bucket with respect to the ground after the bucket dumping control has reached the end of stroke and the electromagnet of the distributor rod has been operated (see “3.3.5 pos. 5 LOADER CONTROL LEVER”).
The sensor must be positioned at a distance of 2-4 mm (0.078-0.157 inches) from the sliding rod.

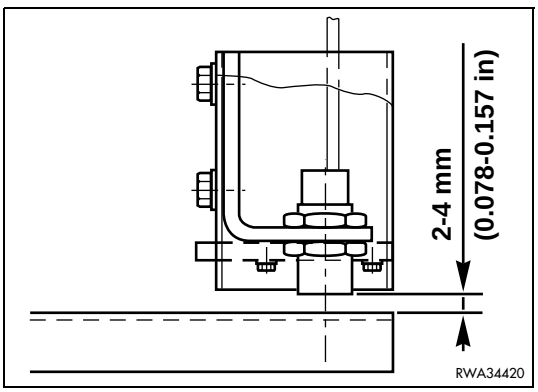

4.7.1.l CHECKING AND ADJUSTING THE STABILIZER SLACK

DANGER

- **When leaving the operator's seat during the adjustment of the guides, remove the ignition key.**

1 - Position the machine on level ground, raise the stabiizers completely, engage all the safety locks and stop the engine.

2 - Manually exert a thrust and traction force on each stabilizer and make sure that the slack between the mobile rod (1) and the adjusting shoe (2) is included between 0.5 and 1.0 mm.
If the slack exceeds the values indicated, loosen the screws (3), remove the adjusting plate (4) and remove one or more washers (5) from both the adjusting points, according to the needs.
Once they have been removed, the washers (5) must be positioned again between the adjusting plate (4) and the screws (3).
During the adjustment, check the condition of the adjusting shoe (2) and change it immediately if it is worn.
After reassembling the washers (5), plate (4) and fastening screws (3) in this order, check if the slack is within the prescribed values.

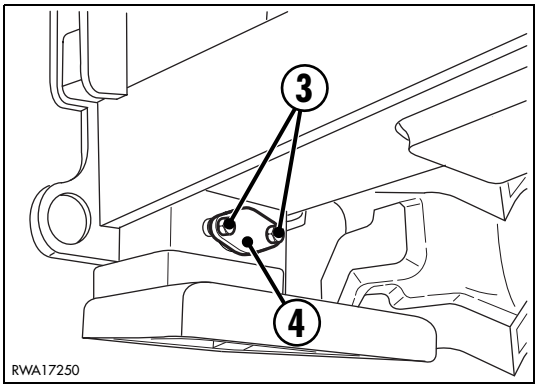

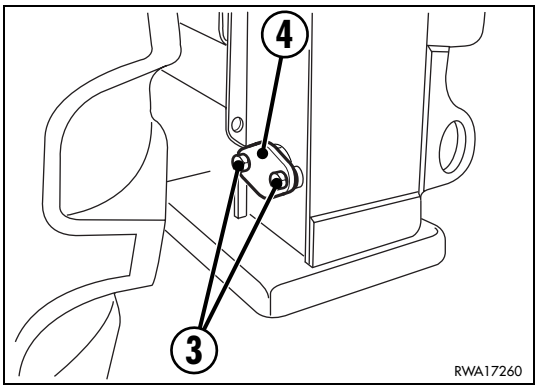

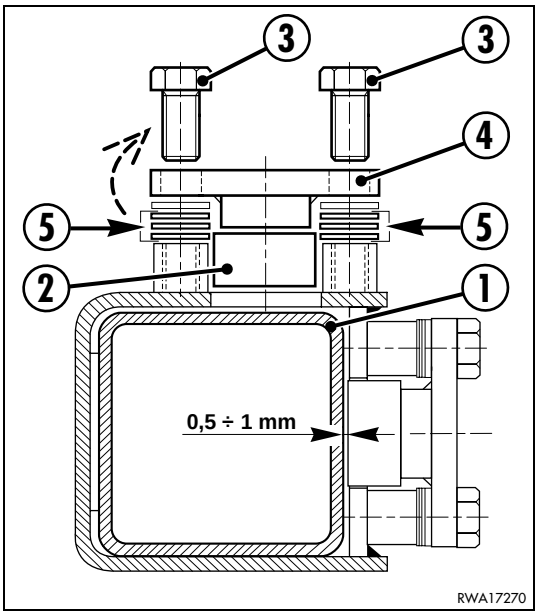

4.7.2 MAINTENANCE INTERVALS IN CASE OF USE OF THE DEMOLITION HAMMER

The hydraulic oil used in the machines provided with demolition hammer deteriorates more quickly than the oil used in normal digging machines, therefore it is advisable to respect the following maintenance plan.

4.7.2.a CHANGING THE HYDRAULIC OIL FILTER

In new machines, change the filter after the first 100÷150 hours of operation and for the successive changes keep to the indications given in the table on the right.
If the machine contains synthetic biodegradable oil type HEES, the filter must be changed after the first 50 hours of operation.

4.7.2.b CHANGING THE HYDRAULIC OIL

Change the hydraulic oil in the tank according to the intervals indicated in the table on the right.
On machines containing synthetic biodegradable oil type HEES, change the oil after the first 500 hours of operation and for the successive changes keep to the indications given in the table on the right.

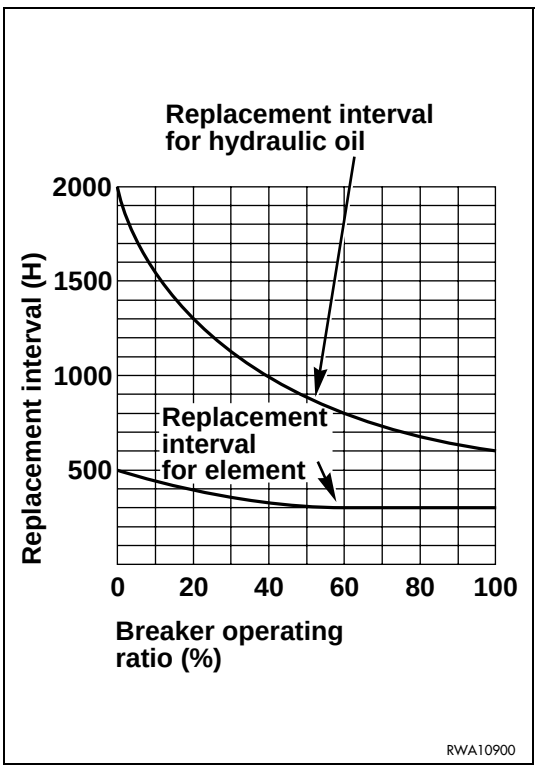

4.7.3 CHECKS BEFORE STARTING

4.7.3.a VARIOUS CHECKS

DANGER

- **Dirt, oil and fuel spread in the engine compartment near the hot areas may cause fires and damage the machine.**
  Check if there are leakages frequently and carry out the necessary repairs immediately; if this occurs repeatedly, contact your Komatsu Utility Dealer.

Before starting the engine, check:

1. if there are loose screws or nuts;
2. if there are oil, fuel or coolant leakages;
3. if the work equipment is worn;
4. the conditions of the rims and the conditions and wear of the tyres;
5. the conditions and efficiency of instruments and warning lights on the dashboard, working lights and direction indicators.

The other general checks concern safety, and precisely:

6. soundness of the safety belt;
7. soundness and legibility of the warning plates;
8. cleanliness of the ladders and handles used to reach the driver's seat, cleanliness inside the driver's cab.

4.7.3.b CHECKING THE COOLANT LEVEL

DANGER

- **Do not remove the radiator cap; the coolant must be checked with cold engine, through the compensation tank.**

The coolant level must be checked on the compensation tank (1), with cold engine, and must be included between the lower MIN. and MAX. marks. The check must be carried out through the hole positioned on the right side of the engine hood and the coolant level must be above the lower MIN. mark.
If the level is near the lower MIN. mark, fill the tank with water or coolant, and if the level decreases considerably and constantly, check the radiator-engine and the radiator body for leaks and check the fluid level in the radiator (see "4.7.6.a CHECKING THE RADIATOR FLUID LEVEL"). The compensation tank (1) can be reached after opening the engine hood (see "3.5.1 ENGINE HOOD").

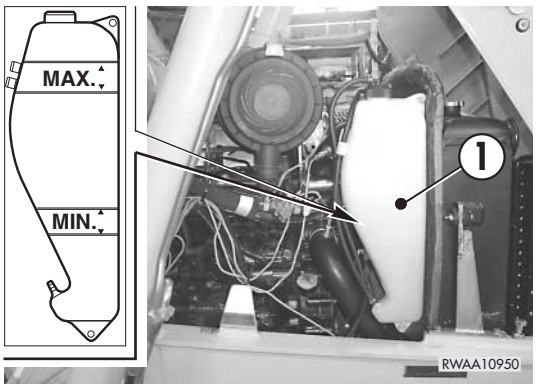

IMPORTANT

- **The upper MIN. and MAX. marks indicate the level reached by the coolant after expansion, at operating temperature.**

4.7.3.c CHECKING THE FUEL LEVEL

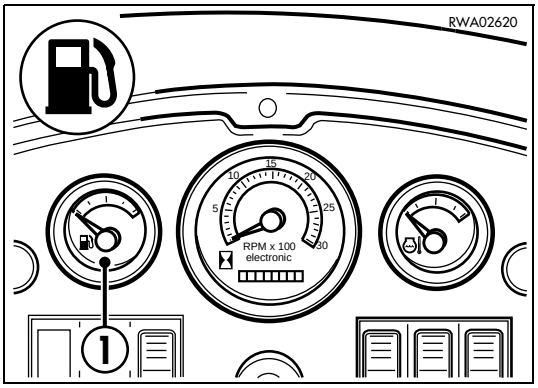

DANGER

- **When refuelling, avoid spilling fuel to prevent any risk of fire. If some fuel should inadvertently be spilled, clean the dirty area immediately.**
- **Fuel is flammable; neither use naked flames, nor smoke while refuelling.**
- **Thrust the filling gun into the filler.**

To check the level, use the indicator (1) positioned on the dashboard; do not fill the tank completely, in order to leave sufficient space for the fuel to expand.

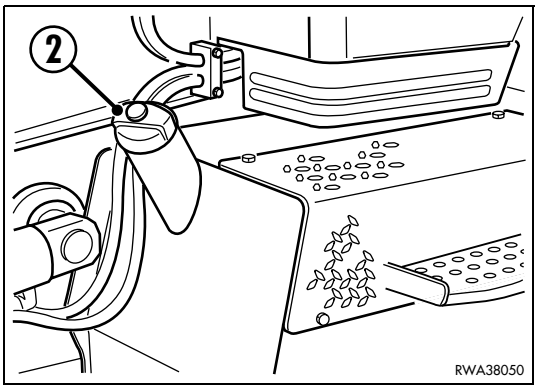

IMPORTANT

- **It is advisable to refuel after work, in order to avoid the formation of water condensate.**
- **After refuelling, tighten the filler cap (2) thoroughly and lock the tank.**

4.7.3.d CHECKING THE ENGINE OIL LEVEL

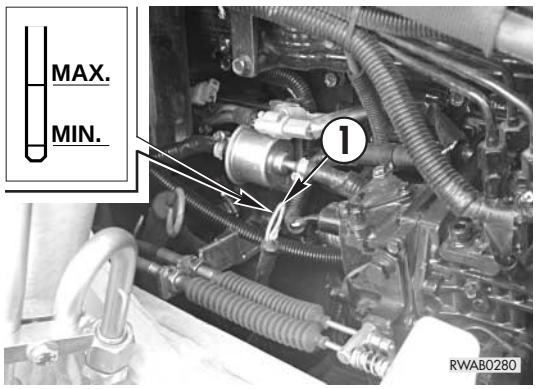

DANGER

- **Soon after the machine has been stopped the engine is very hot and may cause burns; let the engine cool down before carrying out any check.**

The dipstick (1) can be reached after opening the engine hood. See “3.5.1 ENGINE HOOD”.
The oil level must be checked with cold engine and the machine at rest on level ground.
The oil level must be checked on the graduated dipstick (1) and it must be included between the MIN. and MAX. marks; if the level is near the MIN. mark, top up with the suitable oil indicated in the lubricant chart, at ambient temperature.
(See “4.3 FUEL, COOLANT AND LUBRICANTS”).

IMPORTANT

- **If it is necessary to check the oil level during or soon after work, stop the engine and wait for 15 minutes before carrying out the check.**

4.7.3.e CHECKING THE HYDRAULIC CIRCUIT OIL LEVEL

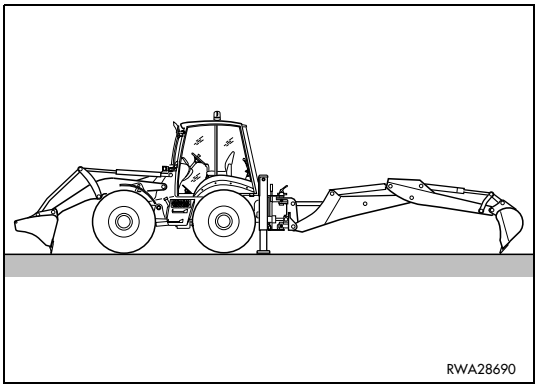

DANGER

- **The oil level must be checked with cold oil and the machine positioned on level ground and in lubricating position.**
- **If it is necessary to top up, stop the engine and eliminate the residual pressure from the equipment circuits (by moving the controls more than once) and from the tank (by slowly loosening the filling cap (2).**

The oil level must be visible through the window (1) provided on the tank and it must be included between the MIN. and MAX. marks.
If the level is near the MIN. mark, top up through the filler (2) with the prescribed oil (see “4.3 FUEL, COOLANT AND LUBRICANTS). Put back the filling cap (2).
Use a 24 mm hexagon spanner.

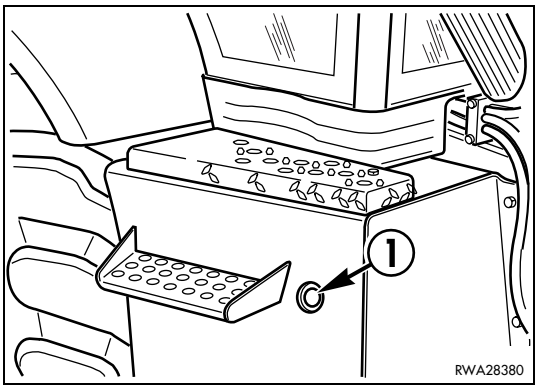

IMPORTANT

- **Do not add oil beyond the MAX. mark, in order to avoid damaging the hydraulic circuit and making the oil flow out.**
- **If a constant or abnormal decrease of the oil level is observed, thoroughly check the hydraulic circuit, the pistons and the pump for leaks.**

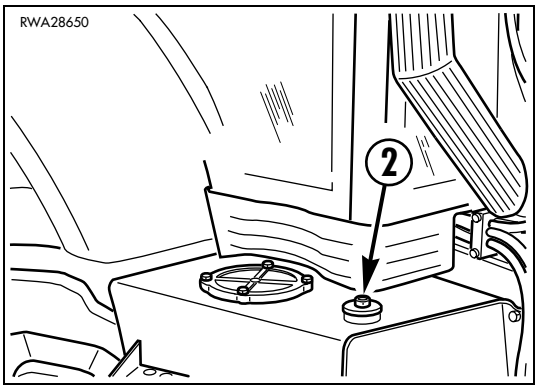

4.7.3.f DRAINING THE WATER SEPARATOR

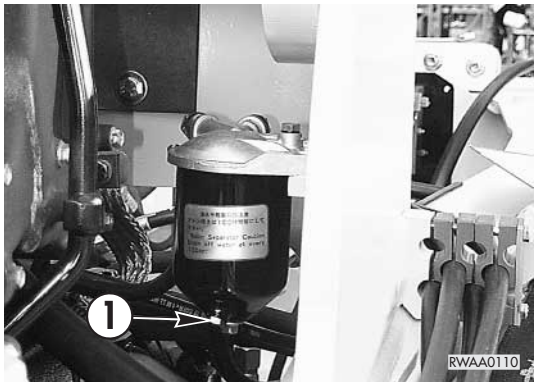

DANGER

- **The fuel is flammable; do not use naked flames and do not smoke while draining the water separator.**
- **If some fuel is spilled, wipe it up immediately.**

This operation serves to drain the condensate water and must be carried out with full tank, in order to prevent air from entering the fuel supply circuit.
The condensate must be drained at the end of work, before the engine has completely cooled down, in order to prevent freezing if the temperature gets very low.
The water separator can be reached after opening the engine hood (see “3.5.1 ENGINE HOOD”).
The condensate is drained by loosening the plug (1) and waiting until only clear diesel oil flows out . (Use a 13 mm spanner).

4.7.4 MAINTENANCE EVERY 10 HOURS OF OPERATION

4.7.4.a LUBRICATING THE JOINTS

IMPORTANT

- **Clean the grease nipples before applying the greasing pump.**
- **After lubrication, remove all the contaminated grease that may have spread out of the nipples.**
- **If the machine is used in difficult conditions, carry out these operations more frequently than usual.**

These maintenance operations must be carried out with the front bucket resting on the ground and the backhoe equipment completely extended and resting on the ground, as shown in the figure.
Use a syringe and the prescribed grease.
(See “4.3 FUEL, COOLANT AND LUBRICANTS” and diagram 4.5.1).

IMPORTANT

- **As a general rule, it is important to consider that each cylinder is provided with two grease nipples positioned on the couplings and that each pin serving as fulcrum point for a movement is provided with at least one grease nipple.**

JOINT LUBRICATION POINTS

FRONT LOADER

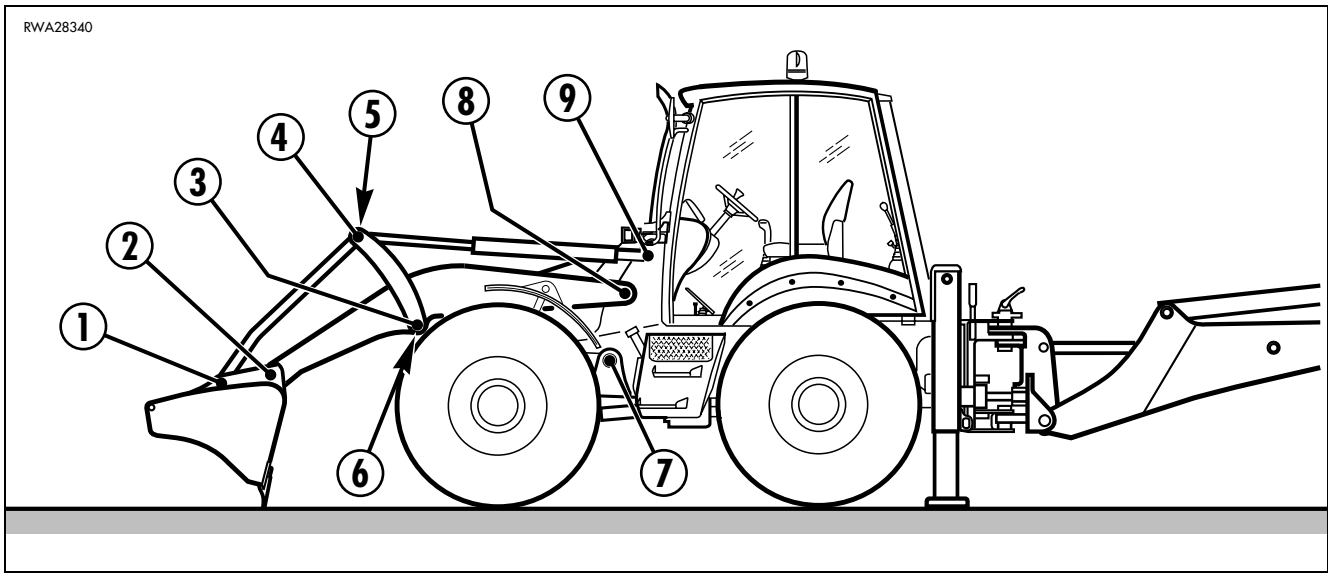

1 - Tie rod - bucket coupling pin	(2 points)
2 - Bucket fulcrum pin	(2 points)
3 - Lever fulcrum pin	(2 points)
4 - Tie rod - lever coupling pin	(2 points)
5 - Bucket cylinder head pin	(2 points)
6 - Lifting cylinder head pin	(2 points)
7 - Lifting cylinder base pin	(2 points)
8 - Arm fulcrum pin	(2 points)
9 - Bucket cylinder base pin	(2 points)

BACKHOE

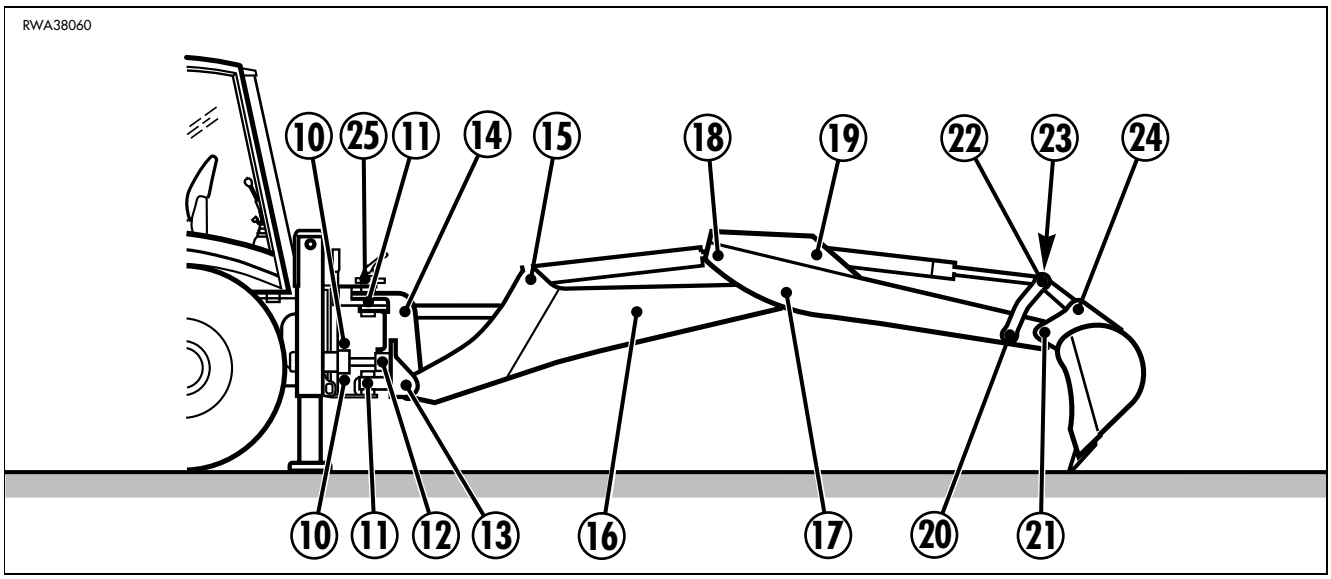

10 - Boom swing cylinder base pin	(4 points)
11 - Boom swing fulcrum pin	(2 points)
12 - Boom swing cylinder head pin	(2 points)
13 -Boom fulcrum pin	(2 points)
14 - Lifting cylinder base pin	(1 point)
15 - Arm cylinder base pin	(1 point)
16 - Lifting cylinder head pin	(1 point)
17 - Arm fulcrum pin	(1 point)
18 - Arm cylinder head pin	(1 point)
19 - Bucket cylinder base pin	(1 point)
20 - Lever fulcrum pin	(1 point)
21 - Bucket fulcrum pin	(1 point)
22 - Bucket cylinder head pin	(1 point)
23 - Tie rod - lever coupling pin	(2 points)
24 - Tie rod - bucket coupling pin	(2 points)
25 - Boom locking fulcrum pin	(2 points)

4.7.5 MAINTENANCE AFTER THE FIRST 50 HOURS OF OPERATION (Only for machines in which the synthetic biodegradable oil type HEES is used)

The following maintenance operation must be carried out after the first 50 hours of operation, together with the maintenance operations to be carried out “EVERY 50 HOURS”.

- HYDRAULIC OIL DRAIN FILTER CHANGE

For further details on the various maintenance operations, see section “EVERY 500 HOURS”.

4.7.6 MAINTENANCE EVERY 50 HOURS OF OPERATION

4.7.6.a CHECKING THE RADIATOR FLUID LEVEL

DANGER

- **Carry out this check with the machine parked on level ground and loader arm raised with engaged safety lock.**
- **Do not remove the radiator cap when the fluid is hot, since the fluid may be sprayed out of the radiator and cause burns.**
- **Loosen the cap slowly to release the pressure before removing it.**

The radiator cap can be reached after opening the engine hood (see “3.5.1 ENGINE HOOD”).
Remove the cap (1) and make sure that the fluid is very near the filling hole.

IMPORTANT

- **If the level of the fluid in the radiator is low and the expansion tank is filled with coolant, check the tightness and make sure that there are no air leaks from the coupling that connects the radiator and the expansion tank.**
  If the problem persists, contact your Komatsu Utility Dealer.

4.7.6.b CHECKING THE BRAKING SYSTEM OIL LEVEL

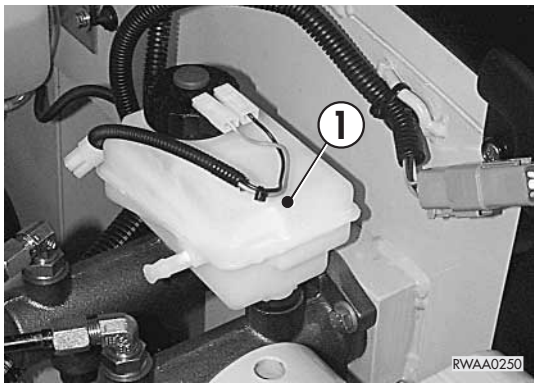

The brake reservoir (1) can be reached after opening the engine hood (see “3.5.1 ENGINE HOOD”).
This is a visual check and the reservoir must be topped up with the prescribed oil until reaching the MAX. mark (see “4.3 FUEL, COOLANT AND LUBRICANTS”).

IMPORTANT

- **Use new oil only.**
- **If constant and considerable leakages are observed, it is advisable to contact an Komatsu Utility Dealer to have the system checked and the necessary repairs carried out.**

4.7.6.c LUBRICATING THE PROPELLER SHAFTS

The lubrication must be carried out after carefully cleaning the grease nipples, by applying the greasing pump supplied together with the machine and using the prescribed grease.
(See “4.3 FUEL, COOLANT AND LUBRICANTS”).
Once the lubrication has been carried out, make sure that all the points have been lubricated and remove the contaminated grease that may have spread out of the joints.

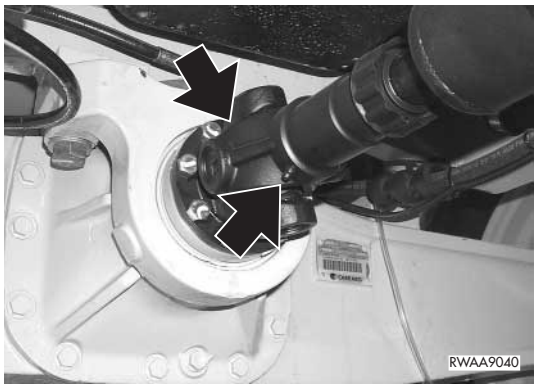

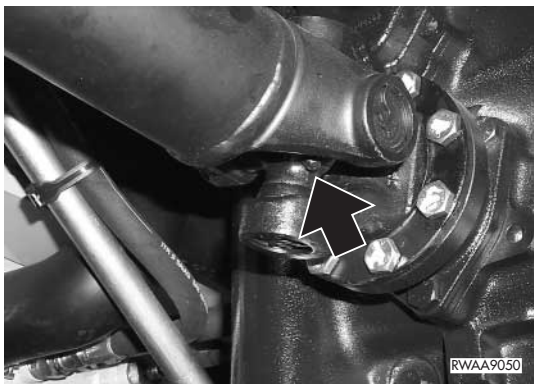

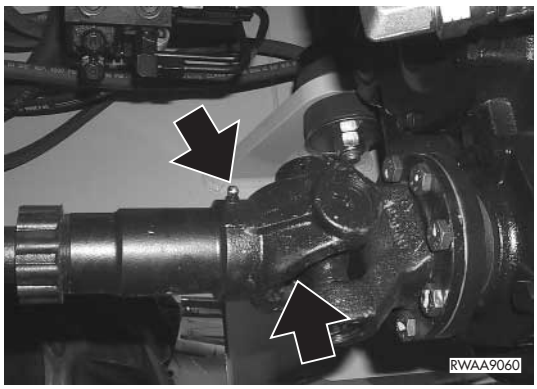

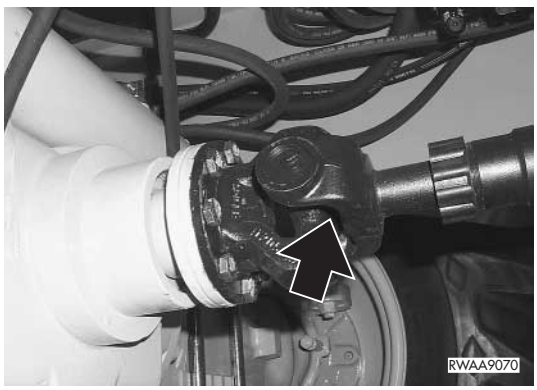

4.7.6.d LUBRICATING THE FRONT AXLE JOINTS AND CENTRAL COUPLING AND THE REAR AXLE JOINTS

The lubrication points (1) of the wheel joints are indicated in the figure and it is important to remember that they are located in symmetrical positions, while the central joint is lubricated by means of two grease nipples (2) positioned on the frame.
The lubrication must be carried out after carefully cleaning the grease nipples, by applying the greasing pump supplied together with the machine and using the prescribed grease.
(See “4.3 FUEL, COOLANT AND LUBRICANTS”).
Once the lubrication has been carried out, remove the contaminated grease that may have spread out of the joints and of the central coupling.

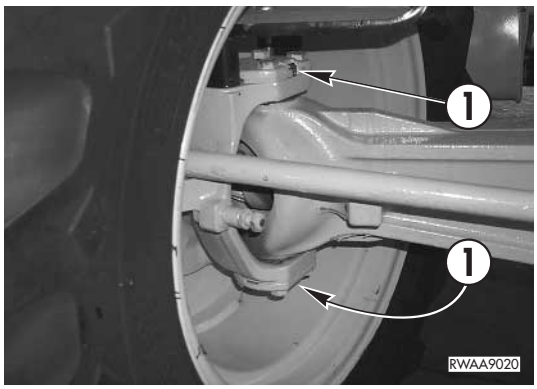

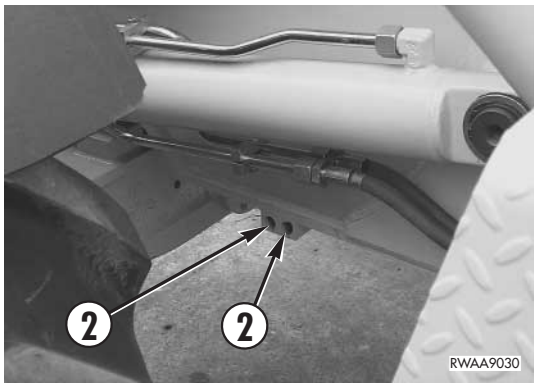

4.7.6.e CHECKING THE TYRE PRESSURE

DANGER

- **Inflate the tyres only after positioning them in a protection cage.**
- **To inflate the tyre, stand beside the external belt.**
- **Do not exceed the pressures prescribed in chapter “5.1 TECHNICAL CHARACTERISTICS”.**

This check is indispensable to preserve the tyres, keep them efficient over time and make them last longer.
The correct pressures are indicated in the specifications, (see “5.1 TECHNICAL CHARACTERISTICS”).
While checking the pressure, check also the conditions of the tread and sidewalls.

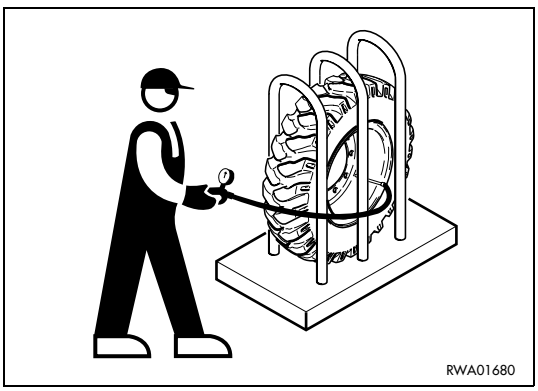

4.7.6.f CHECKING THE ELECTRICAL SYSTEM

DANGER

- **If the fuses are corroded, oxidized or not perfectly held in their seat, replace them only with fuses having the same capacity; before changing a fuse, make sure that the ignition key is in position «O».**
- **If there are signs of short circuit on the cables, find out the cause and repair them; always contact your Komatsu Utility Dealer for the troubleshooting.**

Make sure that there are no disconnected cables or signs of short circuit in the electrical system.
Make sure that all the cables are well tightened in the relevant terminals; tighten any loose cables.
In particular, check:

1. Battery
2. Starter
3. Alternator

4.7.7 MAINTENANCE AFTER THE FIRST 250 HOURS OF OPERATION

Carry out the following maintenance operations after the first 250 hours, together with those to be performed “EVERY 250 HOURS”.

- FRONT AXLE OIL CHANGE
- REAR AXLE OIL CHANGE
- HYDRAULIC TRANSMISSION OIL CHANGE
- HYDRAULIC TRANSMISSION OIL FILTER CHANGE
- ENGINE VALVE CLEARANCE CHECK AND ADJUSTMENT
- HYDRAULIC OIL DRAIN FILTER CHANGE

For details on the various maintenance operations, see the sections “EVERY 500 HOURS” and “EVERY 1000 HOURS”.
For checks and adjustments, contact your Komatsu Utility Dealer.

4.7.8 MAINTENANCE EVERY 250 HOURS OF OPERATION

Carry out the following operations together with those to be performed every 50 HOURS.

4.7.8.a ADJUSTING THE FAN BELT TENSION

The fan belt can be reached after opening the engine hood (see “3.5.1 ENGINE HOOD”).
The control is manual: press the belt (1) with a thumb on the indicated pont with a force equal to approx. 10 kg; the resulting deflection must be approximately 10-15 mm.
If the deflection exceeds this value, loosen the screw (2) that fastens the alternator (3) and, with a lever inserted between the engine block and casing, make the alternator slide.
Lock the screw (2) again and check again.
Use a 12 mm spanner.

A - Fan pulley

B - Alternator pulley

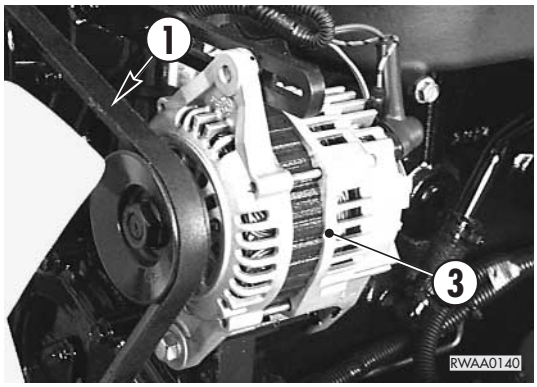

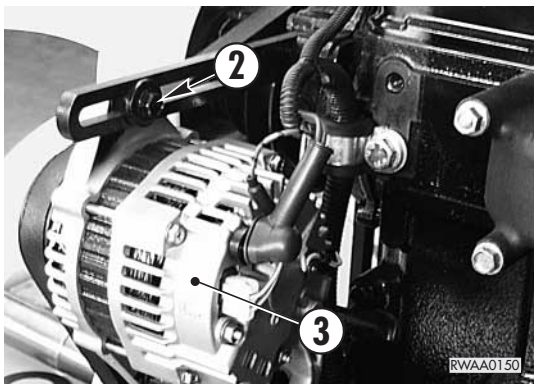

IMPORTANT

- **If the belt is worn, change it and check the tension again after a few hours of operation.**

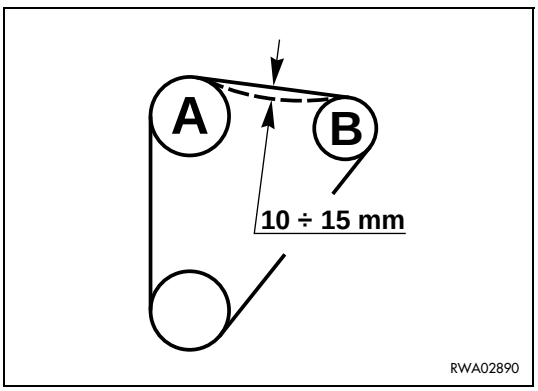

4.7.8.b ADJUSTING THE A/C COMPRESSOR BELT TENSION (Only for machines with air conditioner)

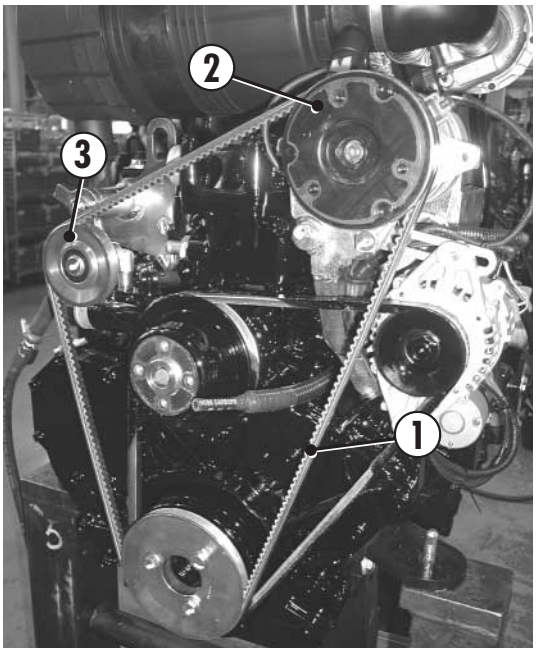

DANGER

- **The coolant used in the air conditioning system is very dangerous. If it is sprayed into the eyes or in case of contact with the skin, it may cause blindness or frostbite. Furthermore, to avoid any explosion, do not generate sparks and do not use naked flames near the air conditioner.**
- **The adjustment of the belt tension is a mechanical operation and must be carried out without working on the air conditioning system.**

The compressor belt can be reached after opening the engine hood (see “3.5.1 ENGINE HOOD”).
The check is manual and consists in exerting pressure on the belt (1) with a thumb at the centre of the section between the compressor (2) and the pulley (3).
If the pressure exerted is approx. 10 kg, the resulting deflection must be approx. 7-10 mm.
When the belt is still new, the resulting deflection must be approx. 4-6 mm.
If the deflection exceeds these values, loosen the screw (4) that fastens the cam (5). Apply a tube on the end (6) of the cam (5) to restore the correct belt tension. Lock the cam (5) in this position with the screw (4).
Use a 19 mm spanner.

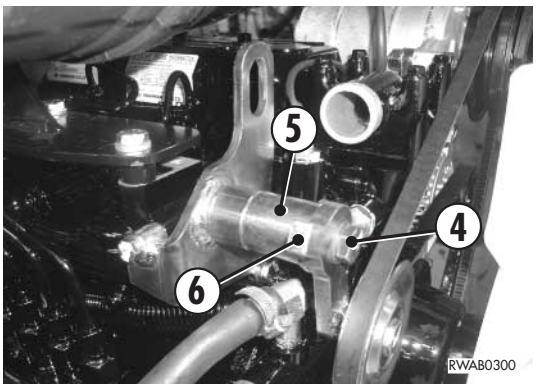

A - Compressor pulley

B - IIdle pulley

C - Engine pulley

IMPORTANT

- **If the belt is worn or in case of doubt on its conditions, change it and check the tension again after a few hours of operation.**

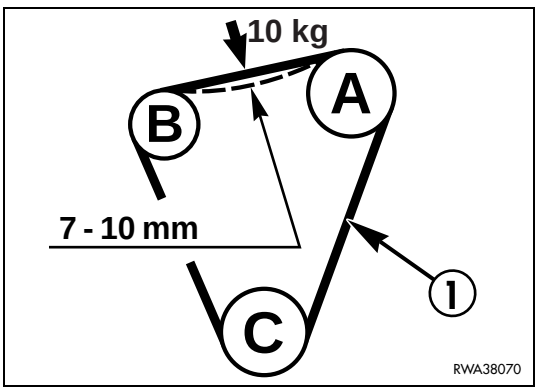

4.7.8.c CHECKING THE BATTERY ELECTROLYTE LEVEL

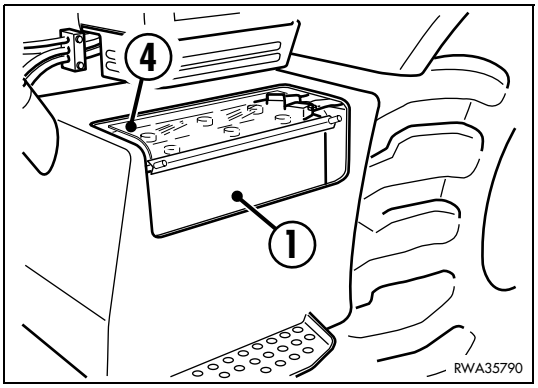

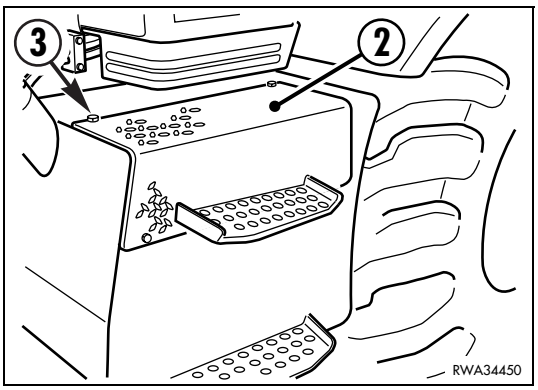

DANGER

- **Check the level with the machine parked on flat ground and raised loader arm with engaged safety lock.**
- **Check the level only after stopping the engine and if necessary add distilled water only before starting work.**
- **Always wear safety goggles and waterproof gloves.**
- **To prevent gas explosions, do not use naked flames, do not smoke and avoid producing sparks due to short circuits.**
- **The battery electrolyte is dangerous; if it comes in contact with the eyes or skin, rinse with plenty of water and consult a doctor without delay.**

The battery (1) can be reached after removing the cover (2) with the relevant fastening screws (3). Use a 17 mm hexagon spanner. The electrolyte level in each cell must be about 6 mm above the plate edge; if necessary, top up with distilled water only.
To reach the filling holes of the cells, first remove the guard (4).
If, on the contrary, the level is low because some fluid has been spilled, add sulphuric acid, after having diluted it until reaching the concentration suitable for the ambient temperature.
(See “3.10.3 BATTERY”).
After topping up, put back the guard (4) and the cover (2) with the relevant fastening screws (3).

IMPORTANT

- **It is advisable to add distilled water before starting work, in order to prevent if from freezing.**
- **Before putting back the cell plugs, make sure that the breather holes are not clogged.**
- **Make sure that the connection terminals are not oxidized; if necessary, clean them and cover them with anti-oxidation grease.**

4.7.8.d CHECKING THE FRONT AXLE OIL LEVELS

DIFFERENTIAL

This check is visual and serves to verify if the lubricant reaches the hole (1); if necessary, top up using the prescribed oil.
(See “4.3 FUEL, COOLANT AND LUBRICANTS”).
The level hole (1) must be used also as filling hole (use a 17 mm spanner).

FINAL REDUCTION GEARS

The check must be carried out on each reduction gear positioned with the plug on the horizontal axis.
If necessary, move the machine slightly until reaching the specific position that is indispensable for a precise check.
The check is visual and serves to verify if the lubricant reaches the hole (2); if this does not occur, top up using the prescribed oil.
(See “4.3 FUEL, COOLANT AND LUBRICANTS”).
(Use a 1/2” square spanner)

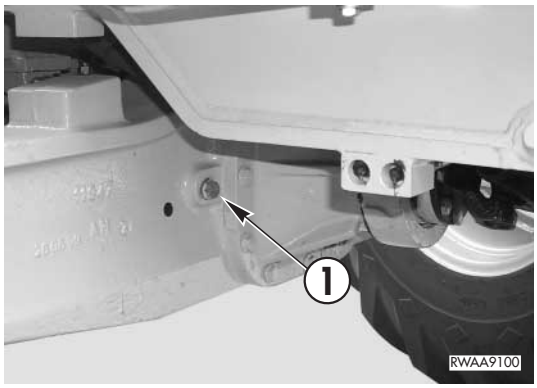

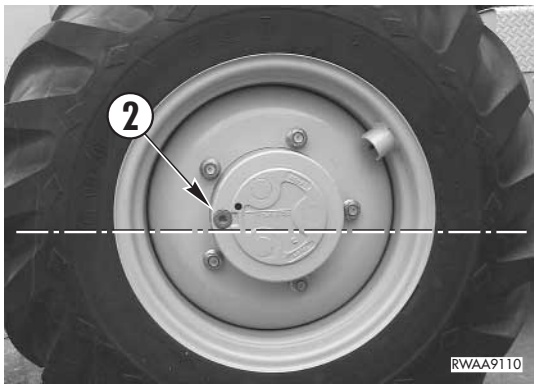

4.7.8.e CHECKING THE REAR AXLE OIL LEVELS

DIFFERENTIAL

This check is visual and serves to verify if the lubricant reaches the hole (1); if necessary, top up using the prescribed oil.
(See “4.3 FUEL, COOLANT AND LUBRICANTS”).
The level hole (1) must be used also as filling hole (use a 17 mm spanner).

FINAL REDUCTION GEARS

The check must be carried out on each reduction gear positioned with the plug on the horizontal axis.
If necessary, move the machine slightly until reaching the specific position that is indispensable for a precise check.
The check is visual and serves to verify that the lubricant reaches the hole (2); if this does not occur, top up using the prescribed oil.
(See “4.3 FUEL, COOLANT AND LUBRICANTS”).
(Use a 1/2” square spanner).

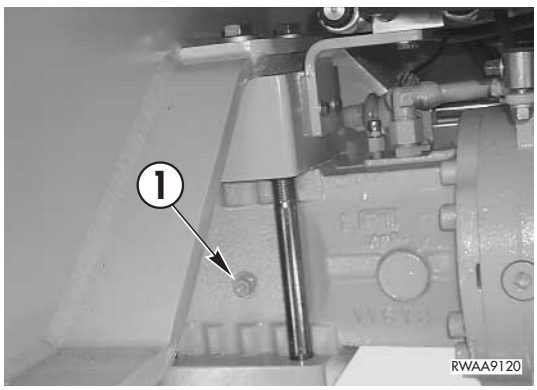

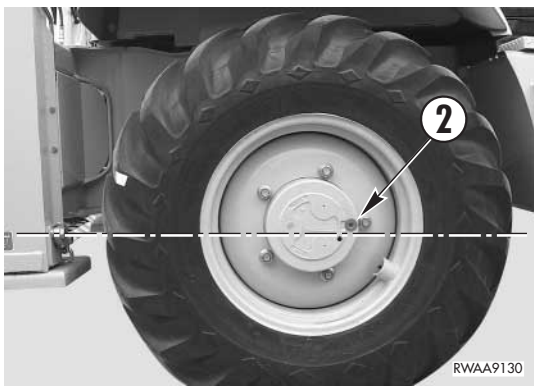

4.7.8.f CHECKING THE HYDRAULIC TRANSMISSION OIL LEVEL

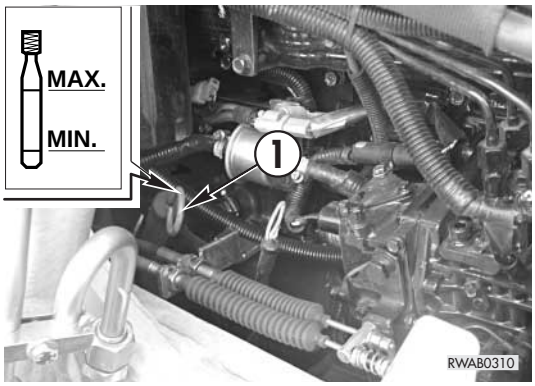

DANGER

- **The level must be checked with running engine and transmission oil at operating temperature; be very careful, in order to avoid burns.**
- **Let all the work equipment safety locks engaged, apply the parking brake and do not move the gearshift lever.**
- **If it is necessary to add oil, stop the engine before opening the engine hood.**

The dipstick (1) can be reached after opening the engine hood. See “3.5.1 ENGINE HOOD”.
The oil level must be checked with the engine idling and the oil at running temperature.
The oil must always reach the maximum level or be very near it.
To top up, use the dipstick opening (1) and the prescribed oil.
(See “4.3 FUEL, COOLANT AND LUBRICANTS”).

4.7.8.g CHECKING THE WHEEL NUT DRIVING TORQUE

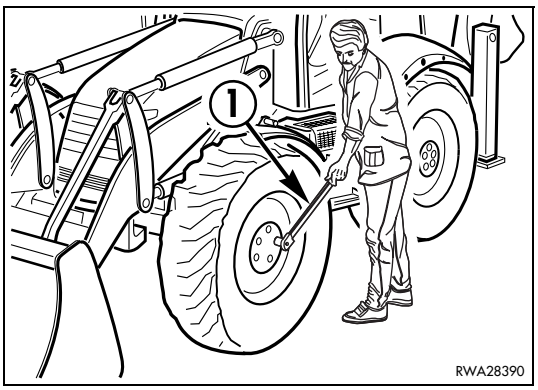

This check serves to restore the correct driving torque of the wheels on the hubs.
The driving torque must be checked by means of a dynamometric spanner (1) set according to the values indicated in paragraph “4.4.2 SPECIFIC DRIVING TORQUES”. (Use a 32 mm spanner).

IMPORTANT

- **Do not increase the specified driving torque and keep it within the prescribed ranges.**
- **When the driving torque must be checked, do not lubricate the thread.**

4.7.9 MAINTENANCE AFTER THE FIRST 500 HOURS OF OPERATION (Only for machines in which the synthetic biodegradable oil type HEES is used)

The following maintenance operation must be carried out after the first 500 hours of operation, together with the maintenance operations to be carried out “EVERY 500 HOURS”.

- HYDRAULIC OIL CHANGE AND SUCTION FILTER CLEANING

For further details on the various maintenance operations, see section “EVERY 2000 HOURS”.

4.7.10 MAINTENANCE EVERY 500 HOURS OF OPERATION

Carry out these operations together with those to be performed every 50 HOURS and every 250 HOURS.

4.7.10.a CHANGING THE ENGINE OIL

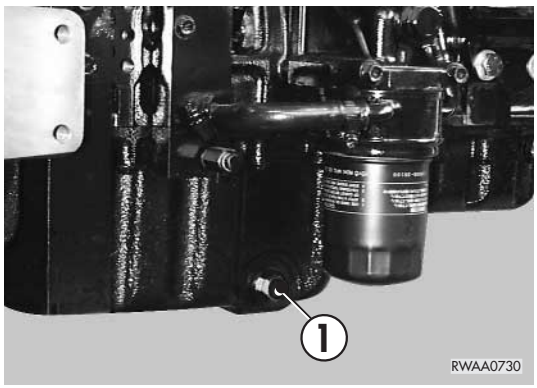

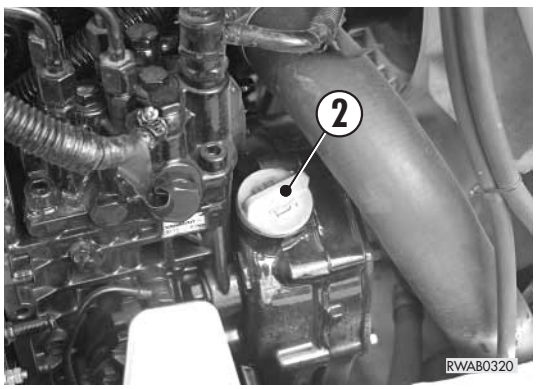

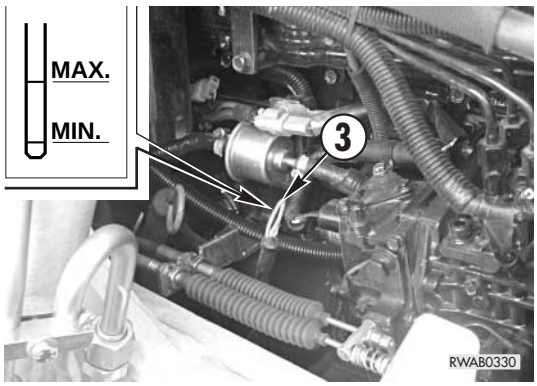

DANGER

- **Change the oil with the machine parked on level ground and raised loader arm with engaged safety lock.**
- **Soon after the machine has been stopped the engine oil is very hot and may cause burns; let the engine cool down until it reaches a temperature of 40÷45°C before draining the oil.**
- **The oil that may be spilled during the change makes the ground slippery, therefore, use anti-slip shoes and immediately remove any trace of oil from the floor.**
- **Oils, filters, the coolant and the battery are considered special waste and must be collected and disposed of according to the anti-pollution regulations in force.**

IMPORTANT

- **The engine oil must be changed when the relevant alarm signal comes on on the electronic display positioned on the front dashboard. After performing this maintenance operation, set the partial service hours to zero. For further details, see “3.3.1 FRONT INSTRUMENTS” pos. 17.**

When changing the engine oil, change also the filter (see “4.7.10.b CHANGING THE ENGINE OIL FILTER”).
Proceed as follows:

1 - Open the engine hood (see “3.5.1 ENGINE HOOD”).

2 - Remove the drain plug (1) of the oil pan, gathering the used oil that flows out into a container with suitable capacity. (Use a 19 mm spanner).
While the oil flows out, remove the filling cap (2), so that the oil can flow freely.

3 - Change the filter (see “4.7.10.b CHANGING THE ENGINE OIL FILTER”).

4 - Tighten the plug (1) onto the pan and pour the prescribed quantity of new oil, using the dipstick (3) to make sure that the oil reaches the MAX. level.

5 - Put back the filling cap (2), start the engine, let it run for 5 minutes and then stop it.
Check the level again and top up if necessary.

6 - Close the engine hood.

Use oil suitable for the ambient temperature.
(See “4.3 FUEL, COOLANT AND LUBRICANTS”).

4.7.10.b CHANGING THE ENGINE OIL FILTER

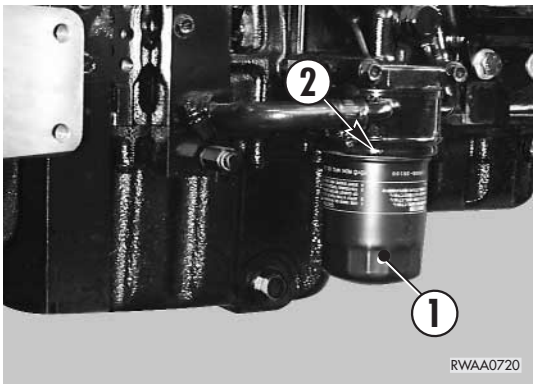

DANGER

- **Soon after the machine has been stopped the engine oil is very hot and may cause burns; let the engine cool down until it reaches a temperature of 40÷45°C before draining the oil.**
- **The oil that may be spilled during the change makes the ground slippery, therefore, use anti-slip shoes and immediately remove any trace of oil from the floor.**
- **Oils, filters, the coolant and the battery are considered special waste and must be collected and disposed of according to the anti-pollution regulations in force.**

This operation must be carried out at every oil change.
Proceed as follows:

1 - Unscrew and remove the old filter (1) by means of the special spanner provided.

2 - Clean the contact surface between the gasket and the filter support (2).

3 - Fill the new filter with engine oil, lubricate the gasket and screw thoroughly.

4 - Give another half turn by hand.

Start the engine, make sure that there are no leakages and that the oil pressure warning light goes out.

IMPORTANT

- **Do not use the spanner to lock the filter, since it may be damaged and cause oil leakages.**
- **The engine oil filter must be changed when the relevant alarm signal comes on on the electronic display positioned on the front dashboard. After performing this maintenance operation, set the partial service hours to zero. For further details, see “3.3.1 FRONT INSTRUMENTS” pos. 17.**

4.7.10.c CHANGING THE HYDRAULIC SYSTEM OIL FILTER

DANGER

- **Soon after the machine has been stopped the hydraulic oil is very hot; let it cool down until it reaches a temperature of 40÷45°C before changing it.**
- **The hydraulic system is pressurized; loosen the filling cap slowly to release the residual pressure.**
- **Oils, filters, the coolant and the battery are considered special waste and must be collected and disposed of according to the anti-pollution regulations in force.**

The filter is positioned on the hydraulic system drain outlet and blocks the metal particles that come off the various components due to their wear.
The filter can be reached after removing the upper platform (1) with the relevant fastening screws (2).
Use a 17 mm hexagon spanner.

1 - Remove the filling cap (3).
Use a 24 mm spanner.

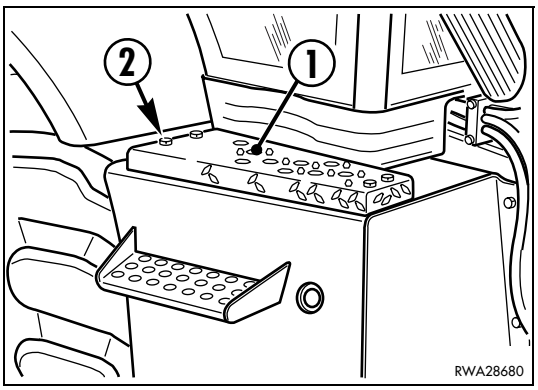

2 - Remove the screws (4) that fix the filter cover (5), remove the cartridge (6) and the filter casing (7).
Use a 13 mm spanner.

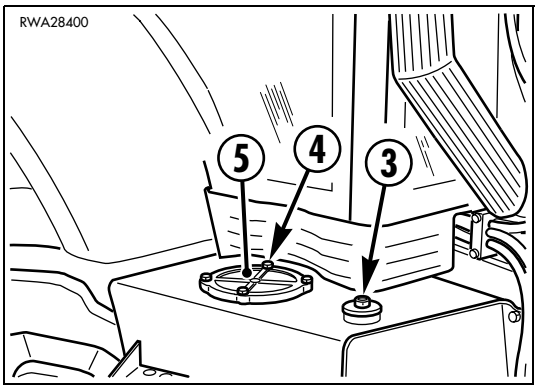

3 - Carefully clean the filter casing (7), making sure that the filter gasket (8) and the casing gasket (9) are in perfect conditions.

4 - Clean the magnetic rings (10) that are positioned on the cover to block the metal particles.

5 - Change the cartridge (6).

6 - Reassemble the whole by proceeding in the reverse order, and make sure that the gasket (11) of the cover (5) is in perfect conditions and housed in the cover seat.

7 - Put back the upper platform (1) and fix it with the relevant fastening screws (2).

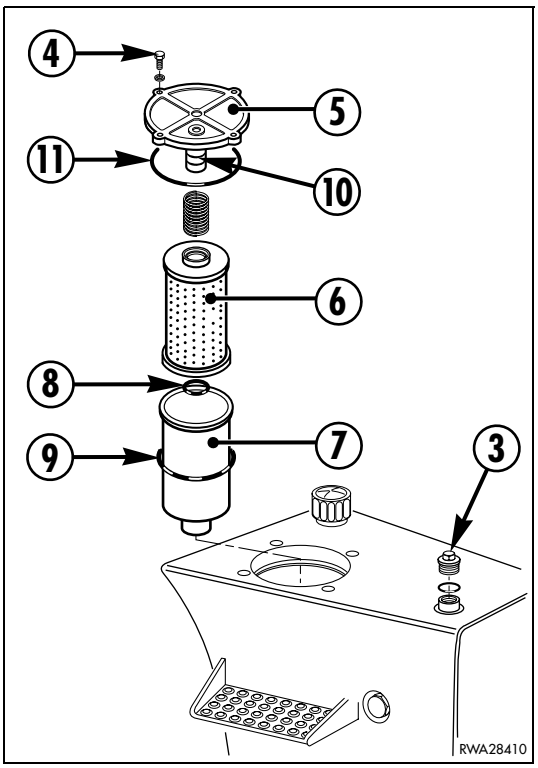

IMPORTANT

- **The hydraulic oil of the machines equipped with demolition hammer deteriorates more rapidly than the oil of the machines used for simple digging operations.**
  On new machines, change the filter after the first 100-150 hours of operation and for the successive changes keep to the indications given in the table beside.
- **If the machine contains synthetic biodegradable oil type HEES, the filter must be changed after the first 50 hours of operation.**

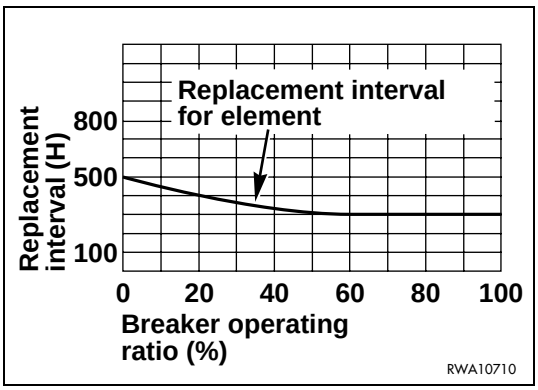

4.7.10.d CHANGING THE FUEL FILTER

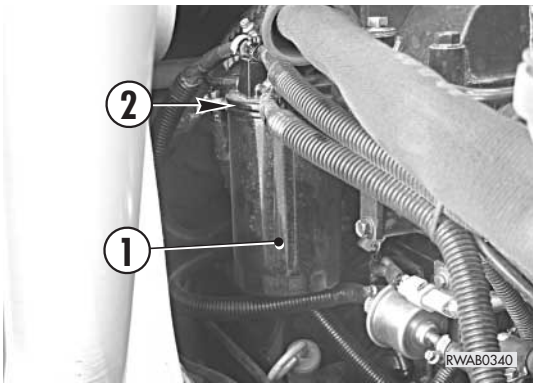

DANGER

- **Change the filtering element after work, when the engine has cooled down to 40÷45°C.**
- **When these operations are carried out, fuel may be spilled; clean the dirty areas immediately, in order to prevent any risk of slipping or fire.**
- **Oils, filters, the coolant and the battery are considered special waste and must be collected and disposed of according to the anti-pollution regulations in force.**

The fuel filter and the fuel pump can be reached after opening the engine hood (see “3.5.1 ENGINE HOOD”).

FUEL FILTER

1 - Clean the external surfaces of the unit and then unscrew and remove the old filter (1) by means of the special spanner provided.

2 - Clean the inside of the head (2).

3 - Lubricate the gasket of the new filter and tighten thoroughly.

4 - Given another half turn by hand.

5 - Bleed the fuel supply circuit.

BLEEDING THE CIRCUIT

After filling the tank, turn the ignition key to position «**I**» and wait approx. 15-20 seconds, in such a way as to bleed the fuel circuit.

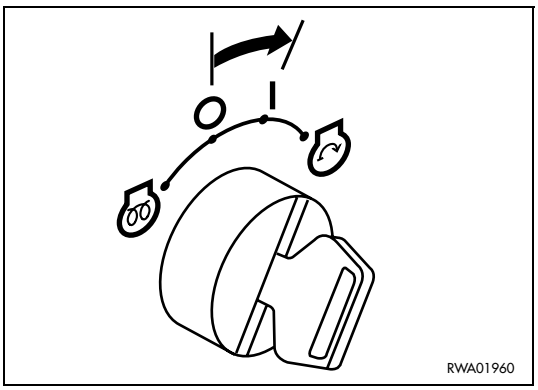

IMPORTANT

- **After bleeding the circuit, turn the ignition key to position « » for a few seconds and wait at least two minutes before starting the engine.**
- **If the engine starts regularly and then stops or works irregularly, check if there is air in the circuit; if so, check the fuel filter and the water separator for leaks.**
- **When all the fuel in the tank has been consumed, bleed the circuit by proceeding as described above and repeat the operation at least twice.**
- **The fuel filter must be changed when the relevant alarm signal comes on on the electronic display positioned on the front dashboard. After performing this maintenance operation, set the partial service hours to zero. For further details, see “3.3.1 FRONT INSTRUMENTS” pos. 17.**

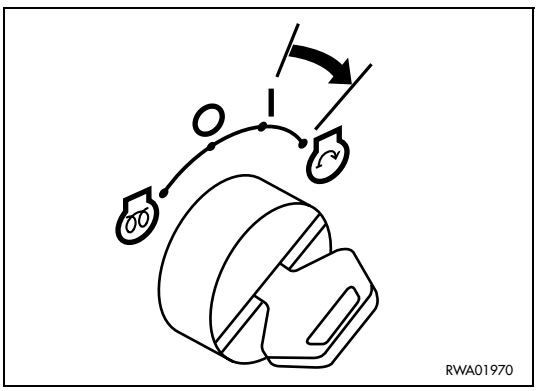

4.7.10.e DRAINING THE FUEL TANK

DANGER

- **When draining the fuel tank, avoid spilling fuel, since this may cause fires.**
- **If some fuel is accidentally spilled, clean the dirty area immediately, in order to prevent it from getting slippery and to avoid fires.**

This operation serves to let all the impurities and the condensate flow out of the tank; remove the lower plug (1) and wait until clean fuel flows out.
(Use a 19 mm spanner).

IMPORTANT

- **The tank must be drained before starting the engine, with temperatures exceeding 0°C; when the temperature is below 0°C, the tank must be drained at the end of work or in any case with the machine at operating temperature, to prevent the condensate from freezing.**
- **The condensate and the impurities that may have accumulated inside the tank must be eliminated before refuelling.**

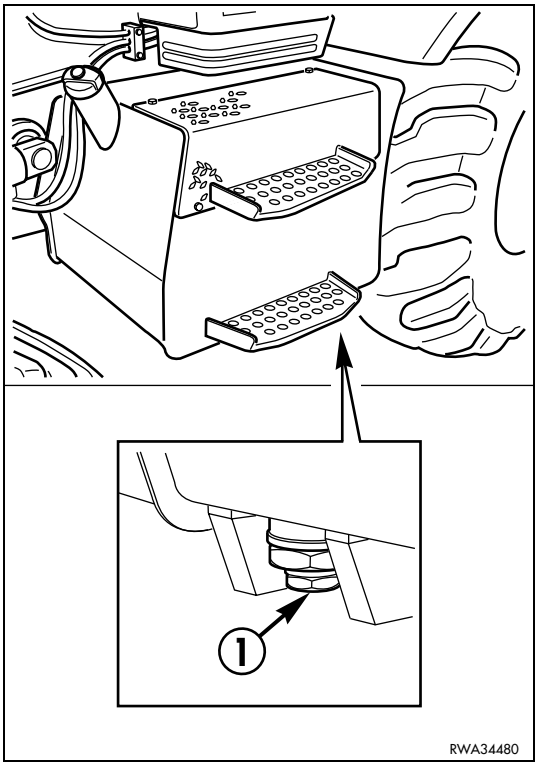

4.7.10.f DRAINING THE HYDRAULIC OIL TANK (Only for machines in which the synthetic biodegradable oil type HEES is used)

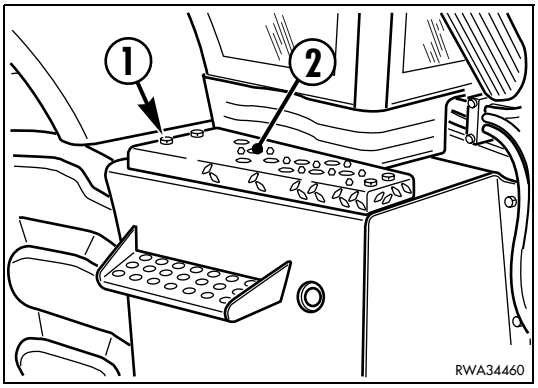

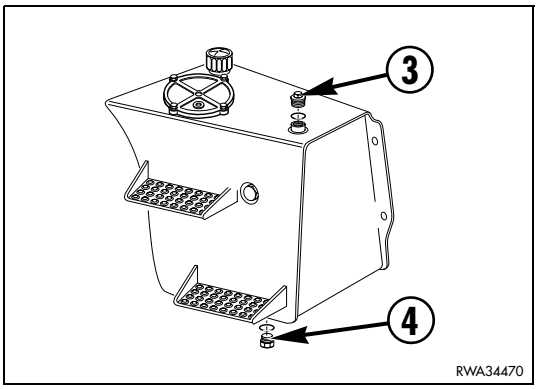

DANGER

- **After stopping the engine, with the machine in the correct position for the performance of maintenance operations, eliminate the residual pressures from the equipment (by moving the controls more than once) and from the tank (by slowly loosening the filling cap).**
- **Let the oil cool down until it reaches 40÷45°C before carrying out any maintenance operation.**
- **Immediately clean any area dirty with oil.**

This operation serves to let the condensate accumulated on the tank bottom flow out of the tank itself; for this purpose, carry out the following operations in the given sequence:

1 - Remove the screws (1) and the platform (2).
Use a 17 mm spanner.

2 - Loosen the filling cap (3) to release the residual pressure from the tank.
use a 24 mm spanner.

3 - Remove the drain plug (4) until the condensate has flown out of the tank completely.
Use a 41 mm spanner.

4 - Put back the filling cap (3) and the platform (2).

IMPORTANT

- **The draining of the tank must be carried out at temperatures exceeding 0°C, before starting the engine; when the temperature is below 0°C, the hydraulic oil tank must be drained at the end of work, or in any case when the temperature of the machine is sufficiently high to prevent the condensate from freezing and allow it to flow out of the tank without problems.**

4.7.10.g CLEANING THE OUTSIDE OF THE RADIATORS

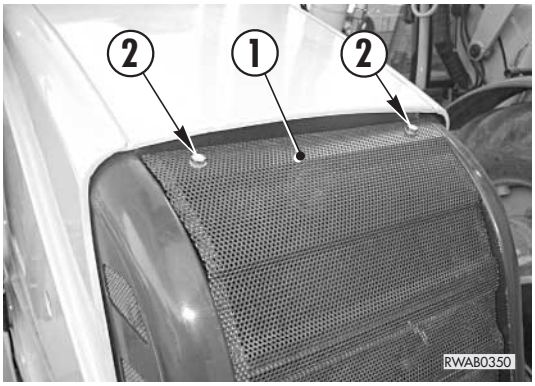

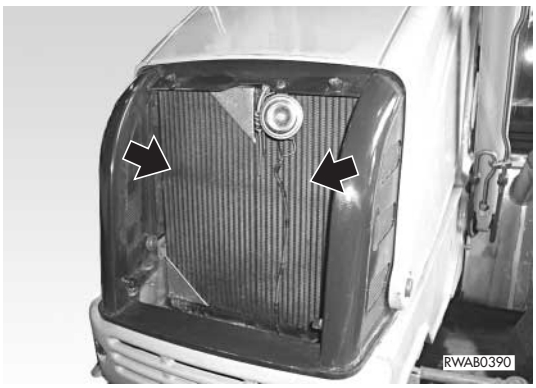

DANGER

- **If compressed air, steam or water are directed against a person, they may cause injuries.**
  Always wear an eye shield and safety shoes.

To clean the outside of the radiators it is first necessary to remove the guard (1) positioned on the front of the engine hood. To remove the guard (1), remove the relevant fastening screws (2). Use a 17 mm hexagon spanner.
The outside of the radiators must be cleaned with a jet of compressed air and, if necessary, with a low-pressure water or steam washing cycle; the specific products available on the market can certainly be used, provided that the instructions given on the package are followed and that the washed parts are carefully dried at the end of the operations.
After the washing cycle, put back the guard (1) with the relevant fastening screws (2).
Use a 17 mm hexagon spanner.

IMPORTANT

- **Do not use products containing even a slight quantity of oily substances, since these facilitate the adhesion of dust, which affects the heat exchange adversely.**
- **Clean the outside of the radiators whenever the radiator or the heat exchanger are dirtied, even if accidentally, with oil, diesel oil, greasy or oily substances.**

4.7.10.h CLEANING THE OUTSIDE OF THE A/C CONDENSER (Only for machines with air conditioner)

DANGER

- **If compressed air, steam or water are directed against a person, they may cause injuries.**
  Always wear an eye shield and safety shoes.

The condenser (1) must be cleaned at the same at as the radiators, see “4.7.10.g CLEANING THE OUTSIDE OF THE RADIATORS”.
The condenser (1) must be cleaned with a jet of compressed air and, if necessary, with a low-pressure water or steam washing cycle; the specific products available on the market can certainly be used, provided that the instructions given on the package are followed and that the washed parts are carefully dried at the end of the operations.

IMPORTANT

- **Do not use products containing even a slight quantity of oily substances, since these facilitate the adhesion of dust, which affects the heat exchange adversely.**
- **Carry out this operation whenever the condenser is dirtied, even if accidentally, with oil, diesel oil, greasy or oily substances. To clean the radiator, rotate the condenser (1) on the lower pins.**
- **If the machine is used in dusty places, clean the condenser more frequently, in order to prevent the fins from clogging.**

4.7.11 MAINTENANCE EVERY 1000 HOURS OF OPERATION

Carry out these operations together with those to be performed every 50, 250, 500 HOURS.

4.7.11.a CHANGING THE FRONT AXLE OIL

DANGER

- **Oils, filters, the coolant and the battery are considered special waste and must be collected and disposed of according to the anti-pollution regulations in force.**

This operation must be carried out with the machine positioned on level ground and at operating temperature, so that the oil becomes fluid and can be easily drained, which facilitates the elimination of any suspended solid particles.

DIFFERENTIAL

1 - Remove the drain plug (2) and let the used oil flow out completely, gathering it into a container with suitable capacity. While the oil flows out, remove the plug (1).
Use a 17 mm spanner.

2 - Once the oil has been drained, put back the plug (2) and pour oil of the prescribed type through the hole (1), until reaching the level corresponding to the lower edge of the hole itself.

3 - Put back the plug (1).

FINAL REDUCTION GEARS

1 - Move the machine until the plug (3) is in low position on the vertical axis.

2 - Remove the plug (3) and let the used oil flow out, gathering it into a container with suitable capacity.
Use a 1/2” square spanner.

3 - Once the oil has been drained, move the machine until the plug (3), which serves also as level indicator, is positioned on the horizontal axis.

4 - Pour oil of the prescribed type until reaching the lower edge of the hole itself.

5 - Put back the plug (3).

Carry out some forward and backward movements, stop the machine and check the levels again.
Always use oil of the prescribed type. (See “4.3 FUEL, COOLANT AND LUBRICANTS”).

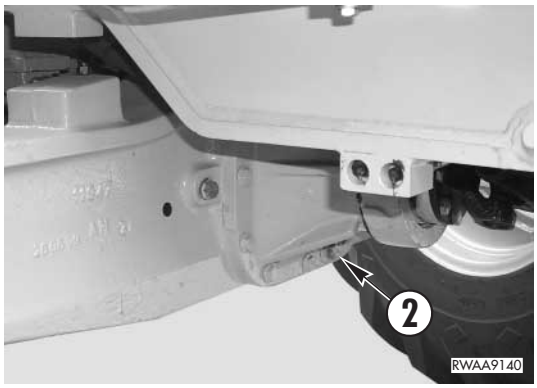

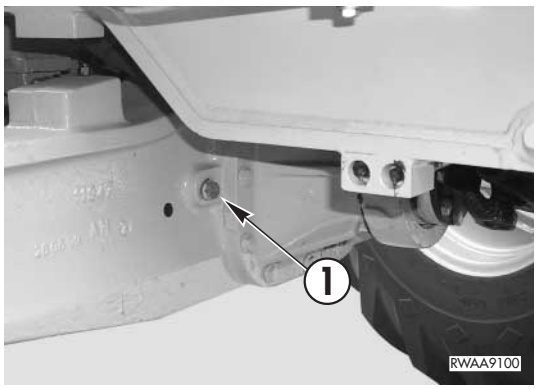

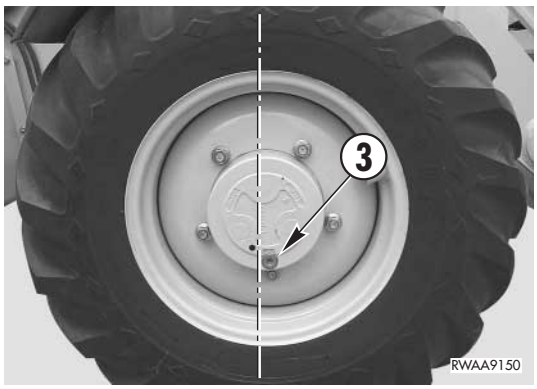

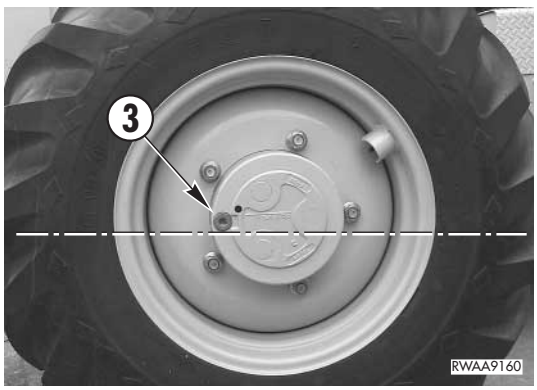

4.7.11.b CHANGING THE REAR AXLE OIL

DANGER

- **Oils, filters, the coolant and the battery are considered special waste and must be collected and disposed of according to the anti-pollution regulations in force.**

This operation must be carried out with the machine positioned on level ground and at operating temperature, so that the oil becomes fluid and can be easily drained, which facilitates the elimination of any suspended solid particles.

DIFFERENTIAL

1 - Remove the drain plug (2) and let the used oil flow out completely, gathering it into a container with suitable capacity. While the oil flows out, remove the plug (1).
Use a 1/2” square spanner and a 17 mm hexagon spanner.

2 - Once the oil has been drained, put back the plug (2) and pour oil of the prescribed type through the hole (1), until reaching the level corresponding to the lower edge of the hole itself.

IMPORTANT

- **With this operation both axle shafts are filled with oil; before checking the level definitively and putting back the plug, wait a few minutes, in order to permit the uniform distribution of the oil.**

3 - Put back the plug (1).

FINAL REDUCTION GEARS

1 - Move the machine until the drain plug (3) is in low position on the vertical axis.

2 - Remove the plug (3) and let the used oil flow out, gathering it into a container with suitable capacity.
Use a 1/2” square spanner.

3 - Once the oil has been drained, move the machine until the hole (3) that serves also as level hole is positioned on the horizontal axis.

4 - Pour oil of the prescribed type until reaching the lower edge of the hole itself.

5 - Put back the plug (3).

Carry out some forward and backward movements, stop the machine and check the levels again.
Always use oil of the prescribed type. (See “4.3 FUEL, COOLANT AND LUBRICANTS”).

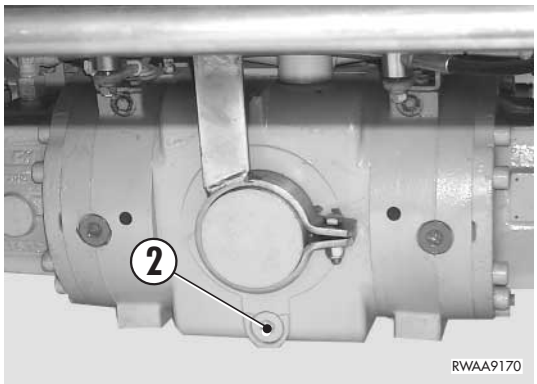

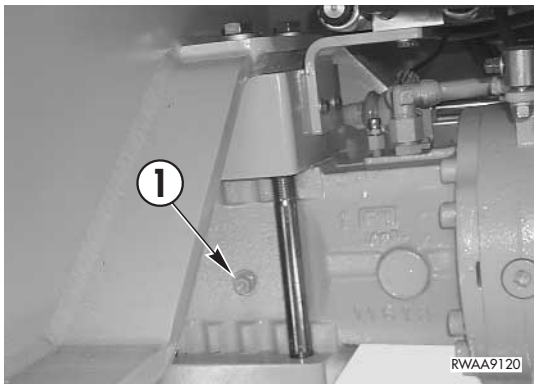

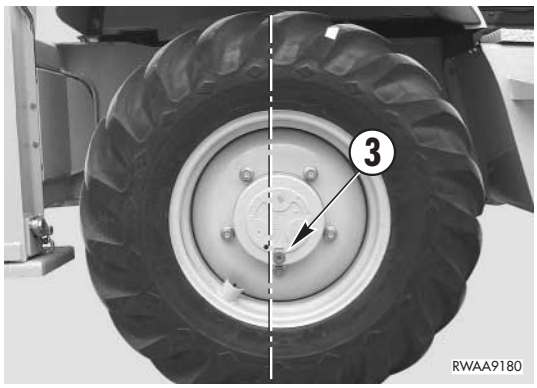

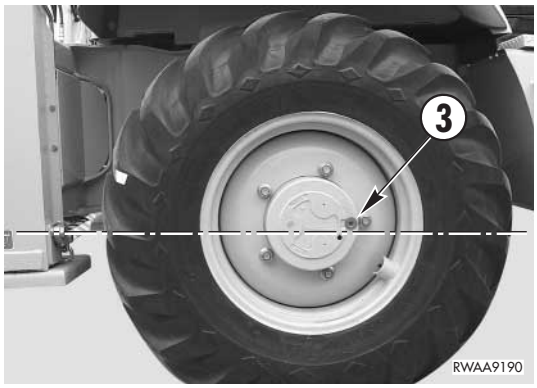

4.7.11.c CHANGING THE HYDRAULIC TRANSMISSION OIL

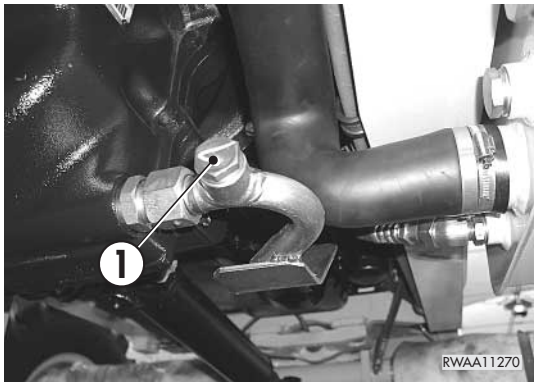

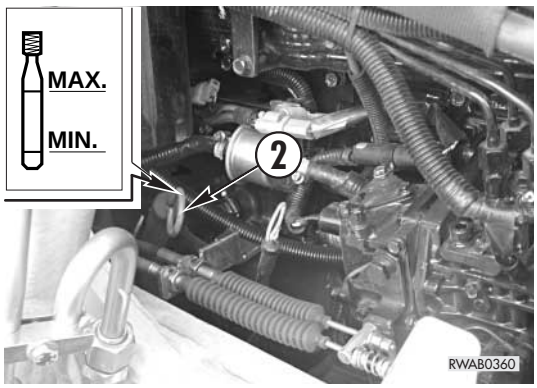

DANGER

- **Carry out this operation with the machine parked on level ground and raised loader arm with engaged safety lock.**
- **The hydraulic transmission oil must be drained at operating temperature, which is very high, and may cause serious burns; wear insulating gloves, goggles and safety shoes.**
- **Immediately clean any area dirty with oil.**
- **Oils, filters, the coolant and the battery are considered special waste and must be collected and disposed of according to the anti-pollution regulations in force.**

When changing the transmission oil, change also the filter (see “4.7.11.d CHANGING THE HYDRAULIC TRANSMISSION FILTER”).
Proceed as follows:

1 - Open the engine hood (see “3.5.1 ENGINE HOOD”).

2 - Remove the drain plug (1) and let the oil flow into a container with suitable capacity.
Use a 27 mm spanner.

3 - Carefully remove the filter and change it, (see “4.7.11.d CHANGING THE HYDRAULIC TRANSMISSION FILTER”).

4 - Put back the plug (1) and pour oil until reaching the MIN. level on the dipstick (2).

5 - Start the engine and let it idle to fill the converter and the internal circuits.

6 - While the engine is idling, add oil until reaching the MIN. level again.

7 - When the oil reaches a temperature of approximately 50°C, add oil until reaching the MAX. mark.
For the topping up, see “4.3 FUEL, COOLANT AND LUBRICANTS”.

8 - Close the engine hood.

4.7.11.d CHANGING THE HYDRAULIC TRANSMISSION FILTER

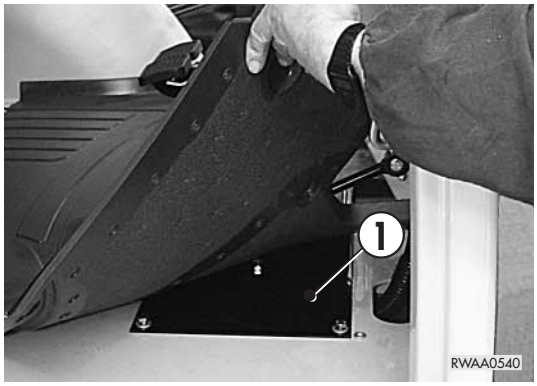

DANGER

- **Soon after the machine has been stopped the transmission unit is very hot and may cause burns; let the machine cool down before changing the filter.**
- **The oil that may be spilled during the replacement of the filter may cause the floor to become slippery: use antislip shoes and immediately remove any trace of oil from the floor and the transmission unit.**
- **Oils, filters, the coolant and the battery are considered special waste and must be collected and disposed of according to the anti-pollution regulations in force.**

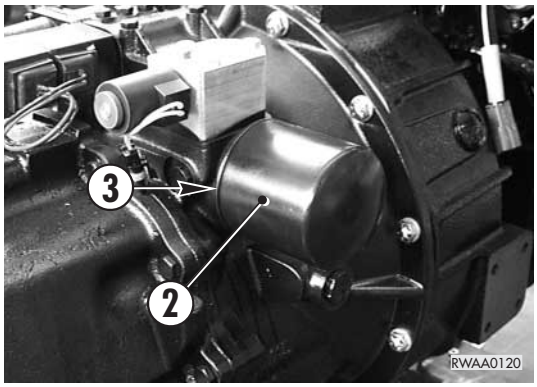

IMPORTANT

- **The hydraulic transmission filter must be changed when the relevant alarm signal comes on on the electronic display positioned on the front dashboard. After performing this maintenance operation, set the partial service hours to zero. For further details, see "3.3.1 FRONT INSTRUMENTS" pos. 17.**

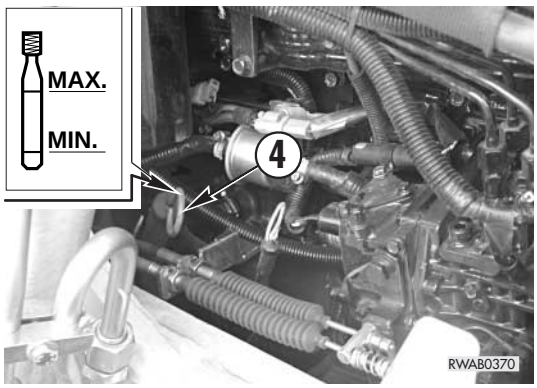

This operation must be carried out at every change of the transmission oil.
Proceed as follows:

1 - Raise the front mat and remove the cover (1).
Use a 13 mm spanner.

2 - Unscrew and remove the old filter (2) by means of the special spanner provided.

3 - Clean the contact surface between the gasket and the filter support (3).

4 - Lubricate the gasket, fit it in its seat and screw the filter thoroughly until it touches the gasket.

5 - Give another half turn by hand.

6 - Start the engine, let it idle and let the oil warm up until reaching the operating temperature.

7 - Top up until reaching the MAX. mark on the dipstick (4), (see "4.7.8.f CHECKING THE HYDRAULIC TRANSMISSION OIL LEVEL").
Always top up with suitable oil.
(See "4.3 FUEL, COOLANT AND LUBRICANTS").

8 - Put back the cover (1).

4.7.11.e CHECKING AND ADJUSTING THE ENGINE VALVE CLEARANCE

Since the check and adjustment of the engine valve clearance requires the use of special tools, have these operations carried out by your Komatsu Utility Dealer.

4.7.12 MAINTENANCE EVERY 2000 HOURS OF OPERATION

Carry out these operations together with those to be performed every 50, 250, 500 and 1000 HOURS.

4.7.12.a CHANGING THE HYDRAULIC SYSTEM OIL AND CLEANING THE SUCTION FILTER

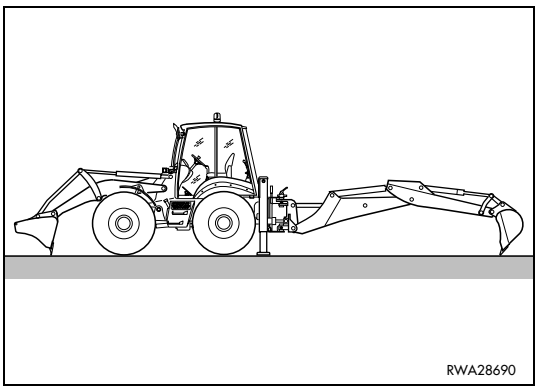

CAUTION

- **On machines containing synthetic biodegradable hydraulic oil type HEES, carry out the change after the first 500 hours of operation and successively every 2000 hours, and in any case at least once a year.**

DANGER

- **After stopping the engine, with the machine positioned so that maintenance can be performed, release the residual pressures from the work equipment circuits (by operating the controls more than once) and from the tank (by slowly loosening the filling cap).**
- **Let the oil cool down until it reaches 4045°C before carrying out any maintenance operation.**
- **Immediately clean any area dirty with oil.**
- **Oils, filters, the coolant and the battery are considered special waste and must be collected and disposed of according to the anti-pollution regulations in force.**

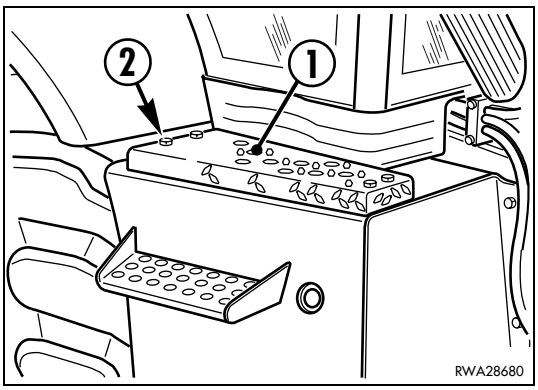

The filter can be reached after removing the platform (1) with the relevant fastening screws (2). Use a 17 mm spanner.

1 - Remove the filling cap (3).
(Use a 24 mm spanner).

2 - Remove the drain plug (4) and let the oil flow out, gathering it into a container with suitable capacity.
Use a 41 mm spanner.

3 - Remove the upper flange (5), the filter cartridge (6) and the filter casing (7).
Use a 13 mm spanner.

4 - Remove the grid filter (8), complete with gasket (9) and clean it with light solvents (petrol, kerosene, diesel oil, etc.).

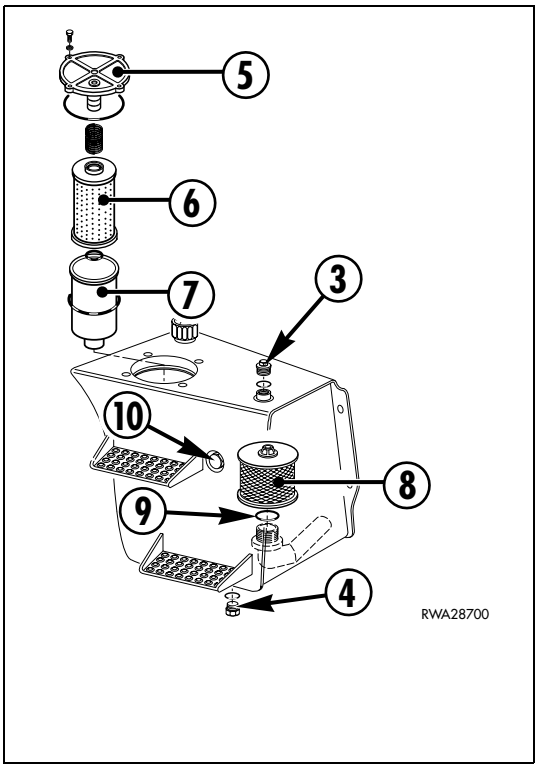

IMPORTANT

- **Carefully check the filtering element grid and if it is not in perfect conditions, change it.**

5 - Put back the filter (8) complete with the gasket (9).

6 - Change the filter cartridge (6) and reassemble the whole unit. (See “4.7.10.c CHANGING THE HYDRAULIC SYSTEM OIL FILTER”).

7 - Put back the drain plug (4) and fill the oil tank with the prescribed oil until reaching the level (10).

8 - Raise the front mat and remove the cover (11).
Use a 13 mm spanner

9 - Loosen the bleeder plug (12) positioned on the hydraulic pump, until no air bubbles can be observed in the oil that flows out (use a 3 mm setscrew spanner). Tighten the bleeder plug (12) and put back the cover (11).

10 - Put back the filling cap (3), start the engine and operate the machine making each piston move several times in order to bleed the system.
Stop the machine in maintenance position, check the oil level again and if necessary top up.
Always use oil of the prescribed type, (see “4.3 FUEL, COOLANT AND LUBRICANTS”).

11 - Put back the upper platform (1) with the relevant fastening screws (2).

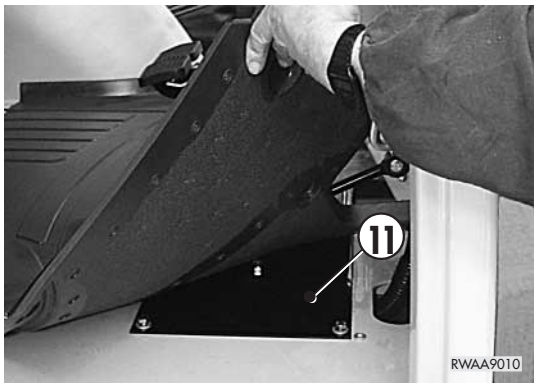

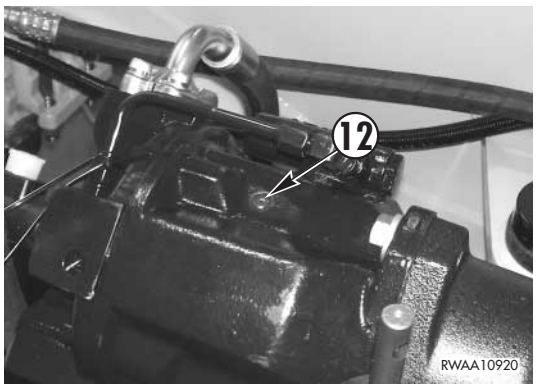

IMPORTANT

- **Do not start the engine with empty tank, since this would certainly damage the pump.**
- **The hydraulic oil must be changed when the relevant alarm signal comes on on the electronic display positioned on the front dashboard. After performing this maintenance operation, set the partial service hours to zero. For further details, see “3.3.1 FRONT INSTRUMENTS” pos. 17.**

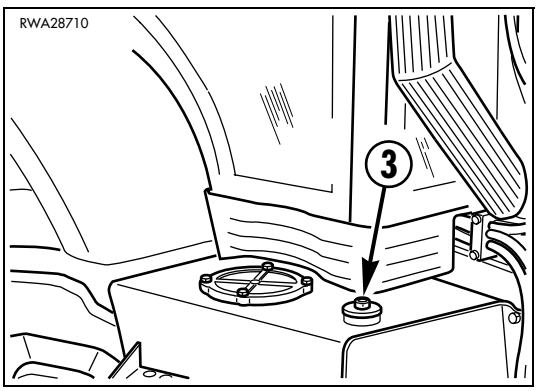

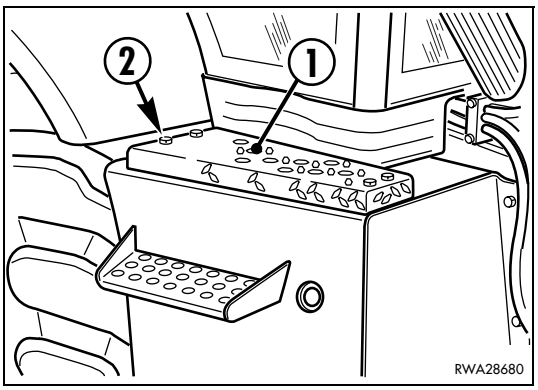

IMPORTANT

- **The hydraulic oil of the machines equipped with demolition hammer deteriorates more rapidly than the oil of the machines used for simple digging operations.**
  Perform the oil changes according to the indications given in the table beside.

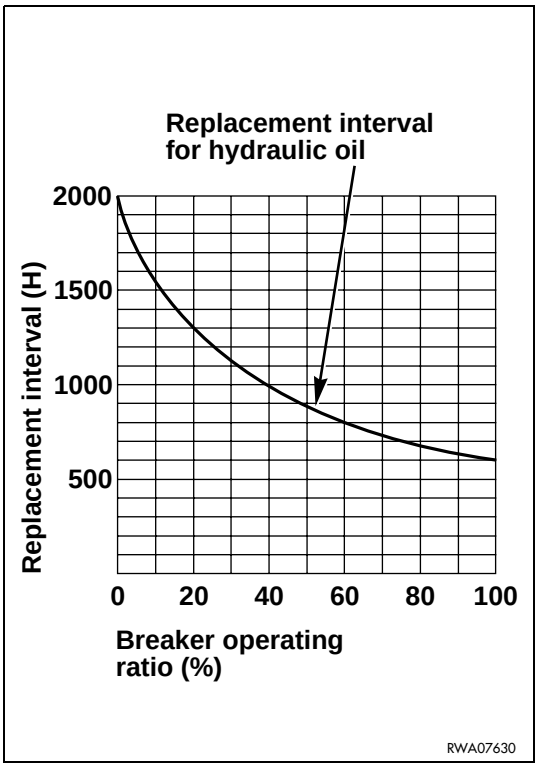

4.7.12.b CHANGING THE COOLANT

DANGER

- **Soon after the machine has been stopped the coolant is very hot and under pressure and it may cause serious burns; let the engine cool down until it reaches approximately 4045°C before changing the coolant.**
- **Slowly loosen the radiator cap, in order to release the residual pressure.**
- **Oils, filters, the coolant and the battery are considered special waste and must be collected and disposed of according to the anti-pollution regulations in force.**

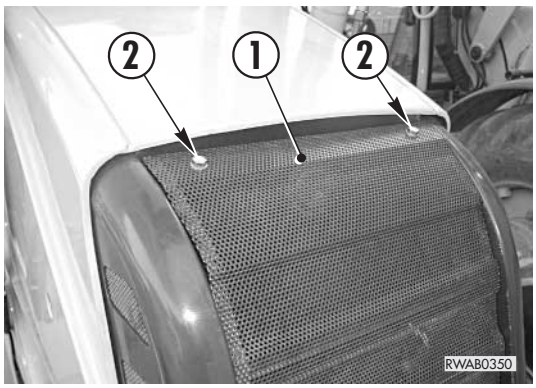

IMPORTANT

- **The change of the permanent coolant does not require any washing cycle for the descaling of the circuit.**
- **The coolant must be changed when the relevant alarm signal comes on on the electronic display positioned on the front dashboard. After performing this maintenance operation, set the partial service hours to zero. For further details, see “3.3.1 FRONT INSTRUMENTS” pos. 17.**

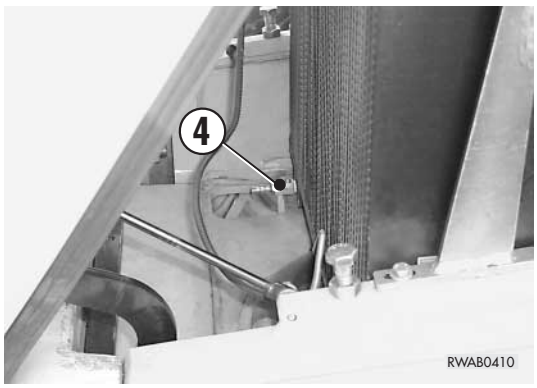

1 - Remove the front guard (1) after removing the relevant fastening screws (2).
Use a 17 mm hexagon spanner.

2 - Open the engine hood (See “14.1 ENGINE HOOD”).

3 - Loosen and remove the upper cap (3) of the radiator.

4 - Open the radiator drain cock (4) (see Fig. A), loosen the drain valve (5) positioned on the filter carrier head and let the fluid flow out, collecting it in a container with suitable capacity (remember that the capacity of the cooling system is approximately 14 liters).
Use 12 mm spanners.

5 - Close the radiator drain cock (4) (see Fig. B), tighten the valve (5) on the filter carrier head and fill the radiator with new fluid.
(See “4.3 FUEL, COOLANT AND LUBRICANTS”).

6 - Start the engine and let it idle for a few minutes; check the level again and top up before putting back the upper cap (2).

7 - Fill the tank (6) until reaching the maximum level.

8 - Close the engine hood.

9 - Put back the front guard (1) with the relevant fastening screws (2).
Use a 17 mm hexagon spanner.

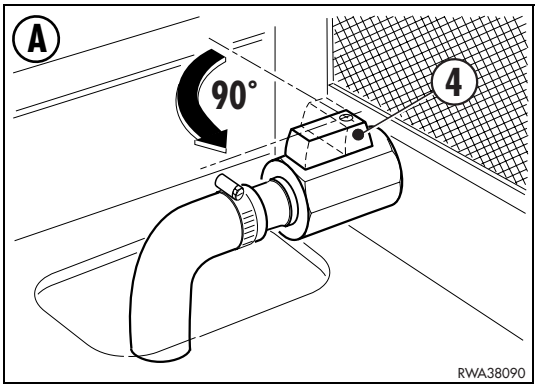

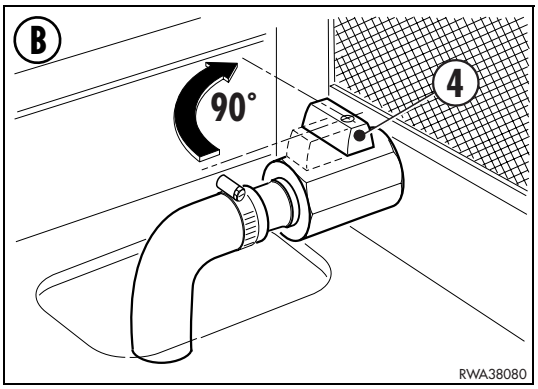

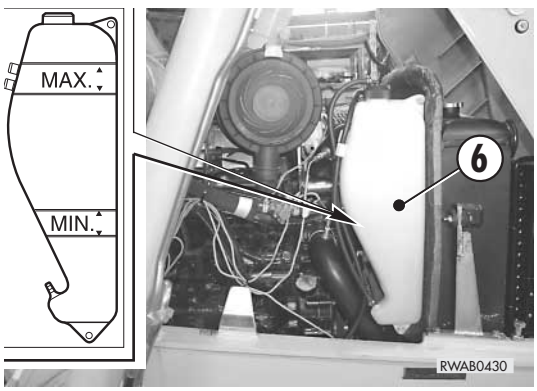

4.7.12.c CHANGING THE BRAKING SYSTEM OIL

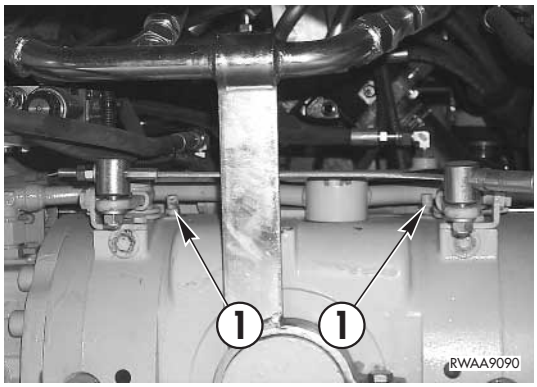

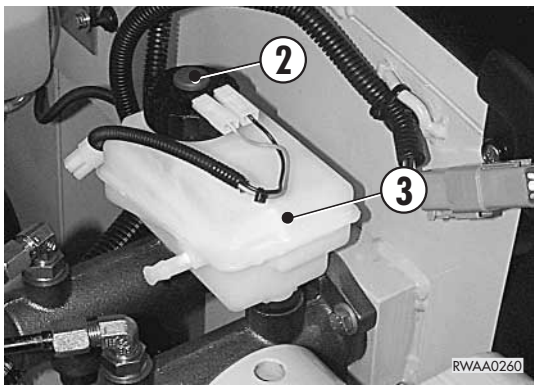

DANGER

- **Oil spilled on the floor may cause it to become slippery; immediately clean any dirty area.**
- **Oils, filters, the coolant and the battery are considered special waste and must be collected and disposed of according to the anti-pollution regulations in force.**

Before changing the braking system oil, it is advisable to brake a few times in order to warm up and fluidize the oil and therefore facilitate draining.
The oil change and the bleeding of the braking system must be carried out with the machine positioned on level ground and locked by means of the parking brake.
Drain the oil and wash the system, proceeding as follows:

1 - Apply a small pipe for the collection of the oil to the drain screws (1) and loosen them. Use a 13 mm spanner.

2 - Open the engine hood, (see “3.5.1 ENGINE HOOD”) and remove the cap (2) of the tank (3).

3 - Operate the brake pedals (connected with each other) until the oil contained in the tank (3) runs out.

4 - Fill the tank (3) with new oil and keep pumping; fill the tank (3) more than once, until the used oil (about 0.8 l.) has been changed completely; eliminate the residual air, (see “4.7.1.d BLEEDING THE BRAKING CIRCUIT”). For details on the oil to be used, see “4.3 FUEL, COOLANT AND LUBRICANTS”.

IMPORTANT

- **The braking system oil must be changed when the relevant alarm signal comes on on the electronic display positioned on the front dashboard. After performing this maintenance operation, set the partial service hours to zero. For further details, see “3.3.1 FRONT INSTRUMENTS” pos. 17.**

4.7.12.d CHECKING THE ALTERNATOR AND THE STARTER

For any inspection and/or repair, contact your Komatsu Utility Dealer.
If the engine is started frequently, have an inspection carried out every 1000 hours of operation.

4.7.12.e CHECKING THE QUANTITY OF COOLANT IN THE A/C SYSTEM (Only for machines with air conditioner)

DANGER

- **The coolant used in the air conditioning system is very dangerous. If it is sprayed into the eyes or in case of contact with the skin, it may cause blindness or frostbite. Furthermore, to avoid any explosion, do not generate sparks and do not use naked flames near the air conditioner.**
- **Oils, filters, coolants and batteries are considered special waste and must be recovered and disposed of according to the antipollution regulations in force.**
- **The maintenance of the air conditioning system must be carried out exclusively by specialized personnel.**

Specific equipment is required to check the coolant; have this maintenance operation carried out only by specialized personnel and for this purpose contact your Komatsu Utility Dealer.

4.7.13 MAINTENANCE EVERY 4000 HOURS OF OPERATION

These operations must be carried out together with those to be carried out every 50, 100, 250, 500, 1000 and 2000 hours of operation.

4.7.13.a CHANGING THE A/C DEHYDRATING FILTER (Only for machines with air conditioner)

- **The coolant used in the air conditioning system is very dangerous. If it is sprayed into the eyes or in case of contact with the skin, it may cause blindness or frostbite. Furthermore, to avoid any explosion, do not generate sparks and do not use naked flames near the air conditioner.**
- **Oils, filters, coolants and batteries are considered special waste and must be recovered and disposed of according to the antipollution regulations in force.**
- **Have the dehydrating filter changed only by specialized personnel and for this purpose contact your Komatsu Utility Dealer.**

The filter (1) must be replaced every 4000 hours of operation or every 2 years, whichever occurs first.
The filter must also be replaced in case of operations carried out on the air conditioning system.

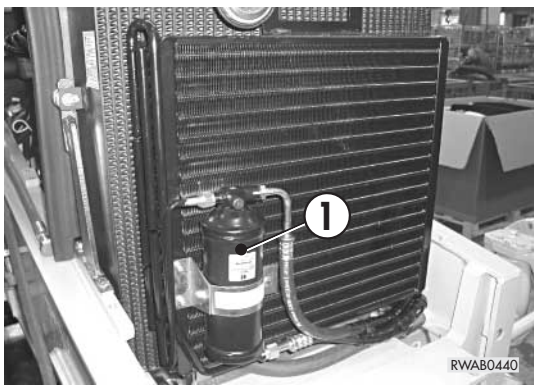

4.7.13.a CHECKING THE OPERATING CONDITIONS OF THE A/C COMPRESSOR (Only for machines with air conditioner)

Specific equipment is required to check the operating conditions of the compressor (1); have the compressor checked only by specialized personnel and for this purpose contact your Komatsu Utility Dealer.

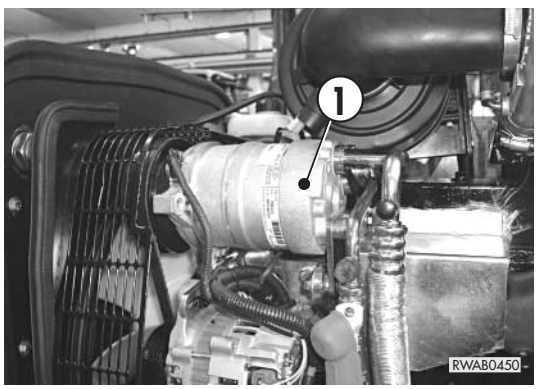

TECHNICAL SPECIFICATIONS

5.1 TECHNICAL DATA

5.1.1 STANDARD OVERALL DIMENSIONS WITH CENTERED BACKHOE

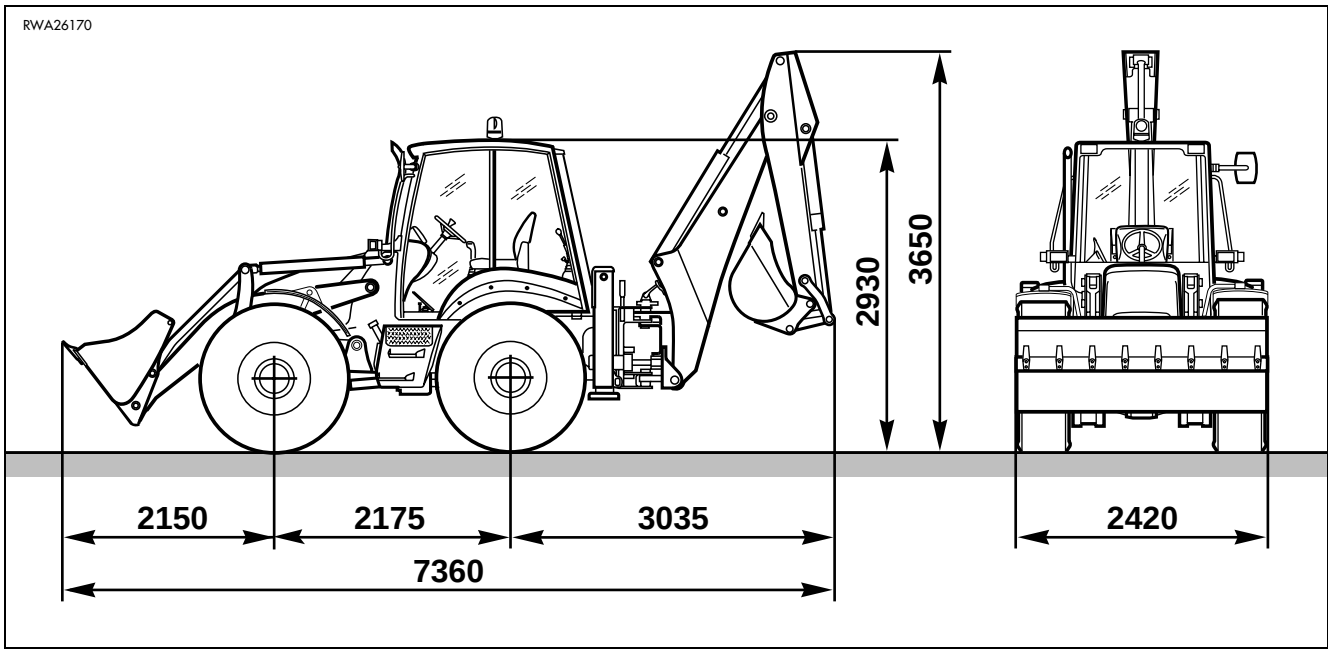

5.1.2 STANDARD OVERALL DIMENSIONS WITH FOLDED BACKHOE

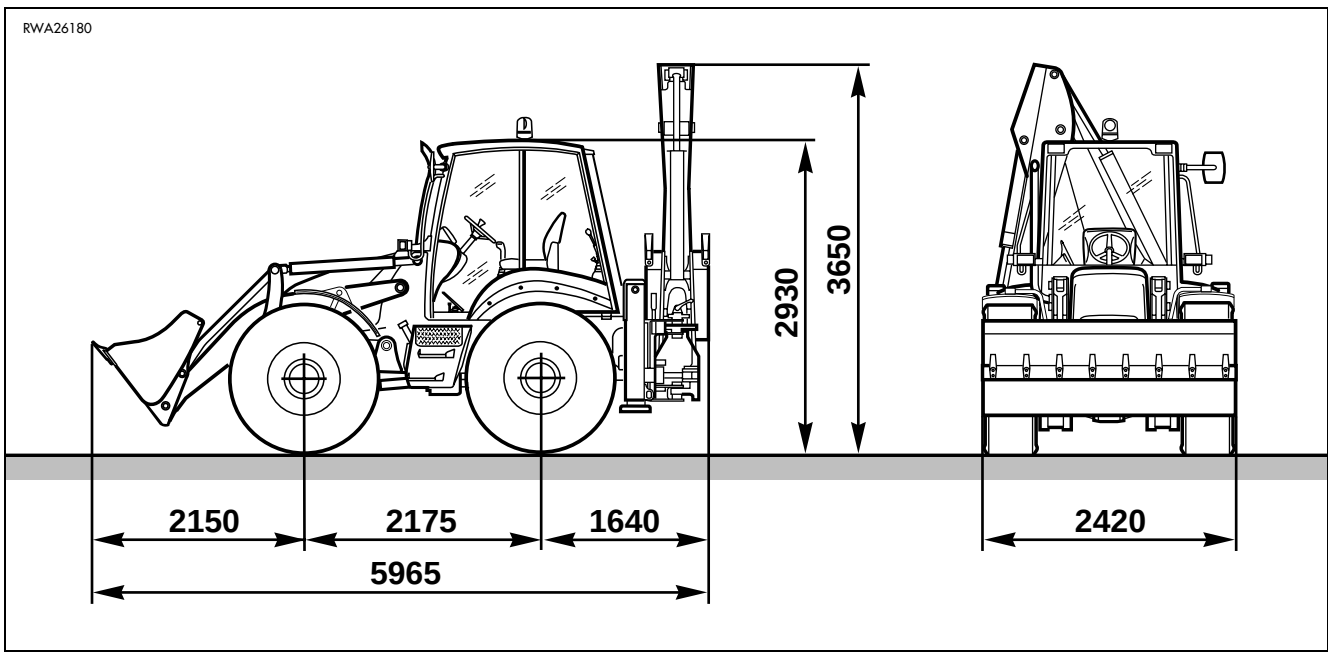

5.1.3 TECHNICAL CHARACTERISTICS

TOTAL MASS

Minimum total mass	kg	8000
Maximum total mass	kg	8900

STANDARD BUCKET CAPACITY

Front bucket capacity (SAE)	m^3	1.08
Backhoe bucket capacity (SAE)	m^3	0.20

SUPERCHARGED ENGINE

Komatsu diesel engine model		S4D106-2SFA
Maximum power (2200 rpm EEC (80/1269)	kW	72
Maximum torque (1600±100 rpm EEC 80/1269)	Nm	375

ELECTRICAL SYSTEM

Alternator		12V
Electrical output		80 A
Earthing		negative
Battery		160 Ah - 12V
Starter	kW	3.0

TRAVEL SPEEDS

(calculated with 16.9-24 tyres and engine at 2200 rpm)

GEARS	1st	2nd	3rd	4th	R1	R2	R3	R4✻
km/h	6.5	12	23	40	6.5	12	23	40

✻The machines for the German and Italian markets are not homologated with the 4th reverse gear.

FRONT TYRES

	SIZE		MAKE	INFLATION PRESSURE
Std.	16.9/24	PR12 149A8	GOOD YEAR	bar 2.2
Opt.	16.9/28	PR12 152A8	GOOD YEAR	bar 2.2
Opt.	16.9-R28	TL XM37	MICHELIN	bar 3.1

REAR TYRES

	SIZE		MAKE	INFLATION PRESSURE
Std.	16.9/24	PR12 149A8	GOOD YEAR	bar 2.6
Opt.	16.9/28	PR12 152A8	GOOD YEAR	bar 2.6
Opt.	16.9-R28	TL XM37	MICHELIN	bar 3.1

5.1.4 LIFTING CAPACITIES

CAUTION

- **According to the harmonized standard EN474-5 (§ 4.1.7.5), the machine cannot lift weights exceeding 1000 kg, unless it is provided with appropriate equipment.**
- **Carry out lifting operations only with the machine positioned on firm and flat ground.**

5.1.4.1 SYMBOL TABLE

A - Standard arm length L= 1850 mm

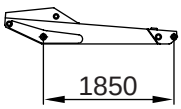

B - Telescopic arm completely retracted

C - Telescopic arm completely extended

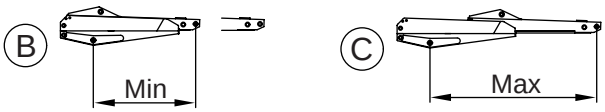

D - Standard operating mass

E - Standard backhoe bucket width and mass W= 600 mm / kg 160

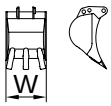

F - Operating hydraulic pressure

G - Lowered stabilizers

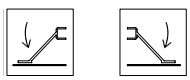

P - Lifting capacity

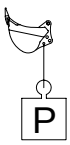

Z - Distance of the lifting point from the ground

X - Distance between the boom swing axis and the bucket lifting point

5.1.4.2 LIFTING CAPACITY (STANDARD BOOM)

RWA26190

D

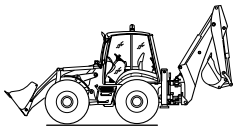

= 8000 Kg

> 1000 Kg

E

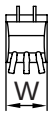

W= 600 mm

= 160 Kg

F

20 MPa
(200 Bar)

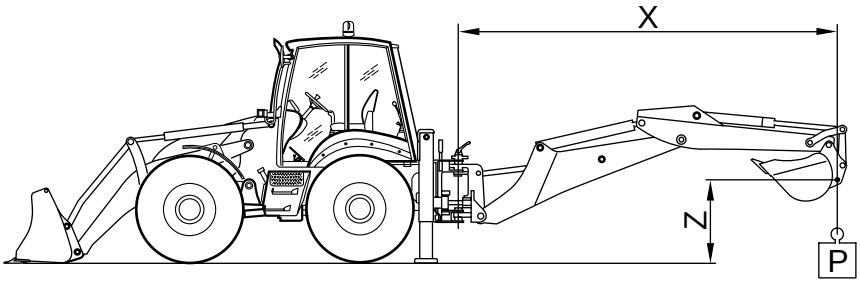

G

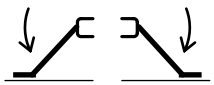

	Z \ X	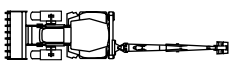 3 m	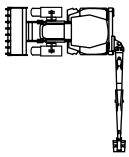 3 m	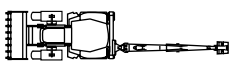 Max	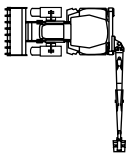 Max
A 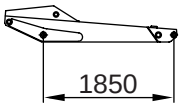 1850	2 m	990	980	950	550
	1 m	990	980	910	540
	0	990	980	850	530
	-1 m	990	980	810	520
B 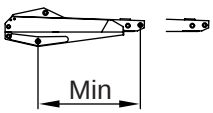 Min	2 m	980	970	850	340
	1 m	980	970	810	330
	0	980	970	760	320
	-1 m	980	970	730	310
C 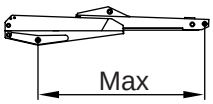 Max	2 m	/	/	400	240
	1 m	/	/	390	230
	0	700	660	380	220
	-1 m	670	620	370	210

5.1.4.3 LIFTING CAPACITY (OFFSET BOOM)

RWA26200

D

= 8000 Kg

> 1000 Kg

E

W= 600 mm

= 160 Kg

F

20 MPa
(200 Bar)

G

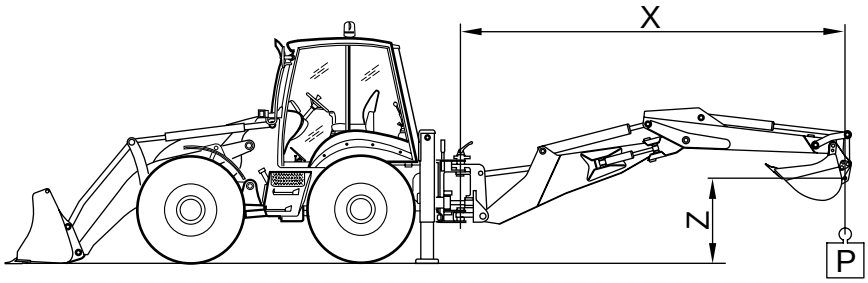

	Z \ X	3 m (Max)	3 m	Max (Max)	Max
A (1850)	2 m	990	980	950	550
	1 m	980	970	910	540
	0	960	950	850	530
	-1 m	940	890	810	520
B (Min)	2 m	990	950	850	340
	1 m	950	900	810	330
	0	890	850	760	320
	-1 m	850	810	730	310
C (Max)	2 m	/	/	400	240
	1 m	/	/	390	230
	0	490	450	380	220
	-1 m	470	430	370	210

AUTHORISED OPTIONAL EQUIPMENT

6.1 AUTHORIZED OPTIONAL EQUIPMENT

CAUTION

- **Komatsu Utility machines can be supplied with optional equipment in addition to the standard equipment; if optional equipment is installed and used, carefully read the relevant operation manual and keep to the instructions given therein.**
- **Use exclusively optional or special equipment recommended and approved by Komatsu Utility and complying with the requisites indicated in the following tables.**
- **Komatsu Utility cannot be held liable for any damage, accident, reduction of the machine efficiency due to the application and use of unauthorized equipment.**

6.1.1 CHARACTERISTICS OF THE OPTIONAL EQUIPMENT

(Specific weight of the material handled = 1.8 tons/cu.m))

MACHINE

EQUIPMENT	MAX. WEIGHT (kg)	MAX. DIMENSIONS		MAX. ISO CAPACITY (cu.m)	MAX. OPERATING PRESSURE (bar)	MAX. FLOW RATE . (l/min.)
		Width (mm)	Height (mm)			
Front bucket	450	2420	940	1.1	—	—
Front 4in1 bucket	750	2420	1015	1.04	200	75
Forks on front bucket	190	●	●	❑	—	—
Pallet forks	320	1800	800	■	—	—

BACKHOE

Backhoe bucket	200	930	—	0.305	—	—
Ditch-cleaning bucket	220	1600	—	0.250	—	—
Trapezoidal bucket	190	2100	900	0.300	—	—
Hydraulic hammer	400	—	—	—	160	80
Drill	360	800 ❋	2000 ▲	—	200	120
Clamshell bucket	350	650	1800	0.200	200	120

● Fork length 1140 mm

❑ Lifting capacity 2000 Kg.
(The loads that can be handled are also limited according to the capacity stamped on the forks, see “6.4 PALLET FORKS”).

■ Lifting capacity 2500 Kg.
(The loads that can be handled are also limited according to the capacity stamped on the forks, see “6.4 PALLET FORKS”).

❋ Measure referred to the tool diameter

▲ Measure referred to the tool length

6.2 FRONT EQUIPMENT QUICK COUPLING DEVICES

DANGER

- **The coupling and uncoupling operations must be performed on a firm and level surface.**
- **The method described is valid for all the front equipment whose operation does not require the use of pressurized oil.**
- **Before starting work, make sure that the coupling pins are completely engaged in the equipment seats.**

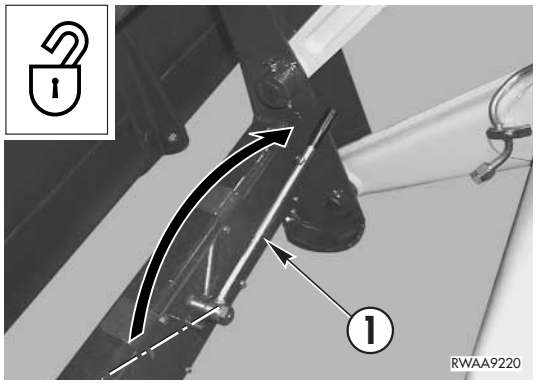

6.2.1 MANUAL CONTROL QUICK COUPLING

1 - Turn the lever (1) in such a way as to make the fulcrum pins ( )move backwards.

2 - Start the machine and position it so that it is perfectly perpendicular to the equipment to be installed.

3 - With the bucket control lever (2), operate in such a way as to position the fixed coupling pins (3) under the upper seats (4) on the bucket (5).

4 - Raise the bucket lifting arm (6) to engage the fixed pins (3) in the upper seats (4) on the bucket (5); raise the bucket slightly.

5 - Turn the lever (1) to the end of stroke to engage the fulcrum pins ( ).

6 - Hook the lever (1) with the appropriate safety hook (7).

7 - Lubricate the unit (see “4.5.3 LUBRICATION DIAGRAM”).

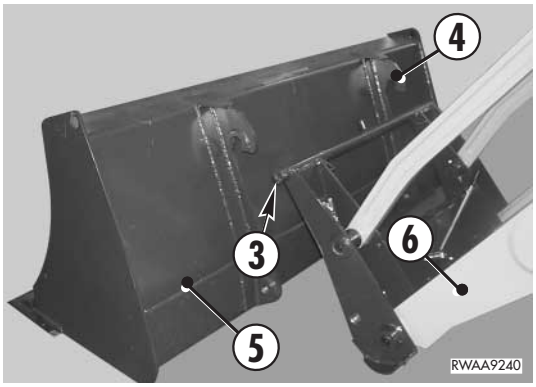

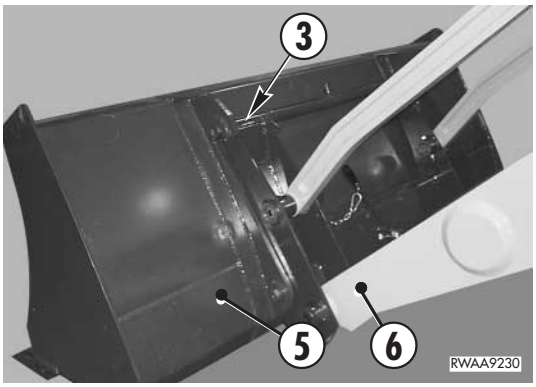

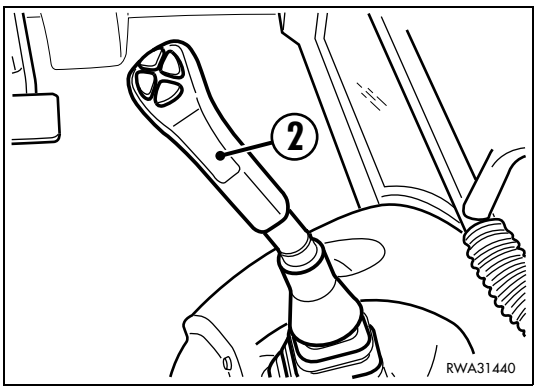

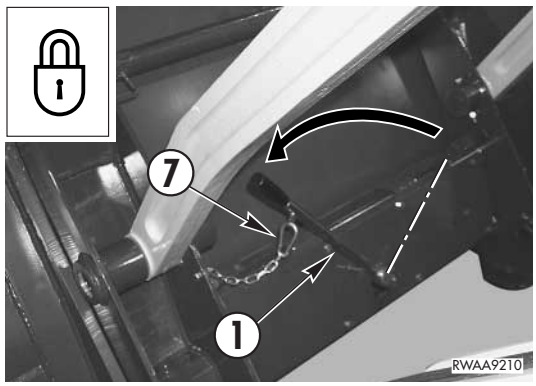

6.2.2 HYDRAULIC CONTROL QUICK COUPLING FOR STANDARD BUCKET

The operations to be performed are those described in the previous paragraph, with changes regarding the backward movement and the engagement of the fulcrum pins, which are obtained by means of the push buttons (8) and (9) located on the lever (2). (See “3.3.5 MACHINE CONTROLS pos. 12-13”).

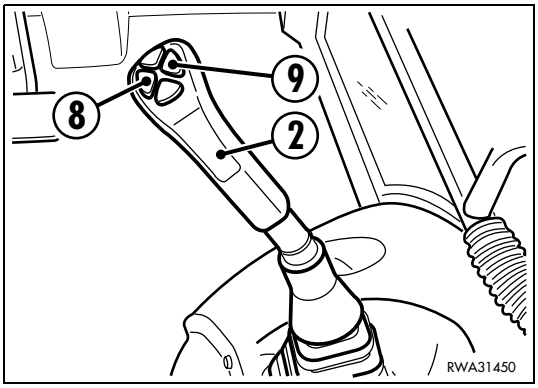

6.2.3 HYDRAULIC CONTROL QUICK COUPLING FOR 4IN1 BUCKET AND OPTIONAL EQUIPMENT WITH UNIDIRECTIONAL OIL FLOW

The 4in1 bucket and the hydraulic equipment that can be installed must be provided with quick couplings.
In this case, the backward movement and the engagement of the fulcrum pins are obtained by connecting the quick couplings (10-11) of the 4in1 bucket (or other equipment) delivery and drain pipes to the quickd coupling unit while the engine is at rest.

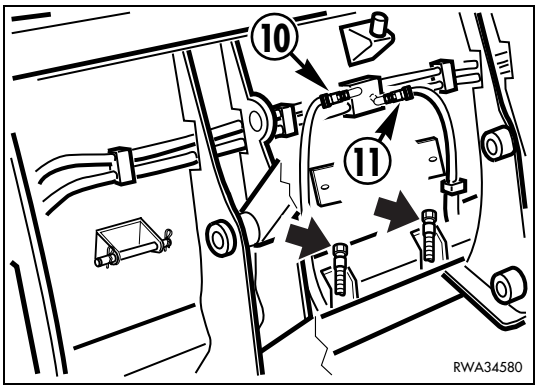

6.3 4in1 BUCKET

(For the characteristics, see “6.1 AUTHORIZED OPTIONAL EQUIPMENT”).

6.3.1 DESCRIPTION AND CONTROLS

The 4in1 bucket can be used for several applications and eliminates the need to use specific equipment.
Compared to the standard bucket, it comprises a mobile jaw (4) that can be opened to unload the material with no need to swing the bucket itself. The opening is obtained by means of two hydraulic cylinders (1) controlled by an additional distributor.
The distributor control for the opening and closing of the bucket is operated by two push buttons (5) and (6) positioned on the loader control lever (7) that also maintains all the normal functions (see “3.3.5 pos. 5 FRONT LOADER CONTROL LEVER”).

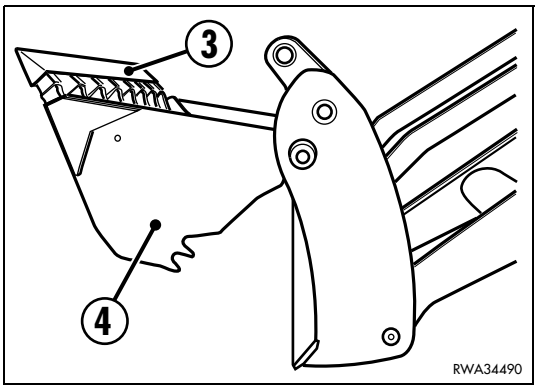

6.3.2 SAFETY DEVICES

The 4in1 bucket is provided with teeth protection casing (3).
If the bucket is equipped with pallet forks, the safety pins (2) keep the forks locked in overturned position in case of transfers or circulation on roads.
(See “6.4 PALLET FORKS”).
For the other safety locks, see “3.1.1 LOADER LOCKS”.

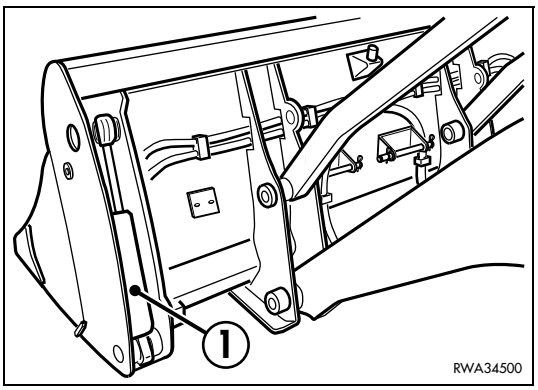

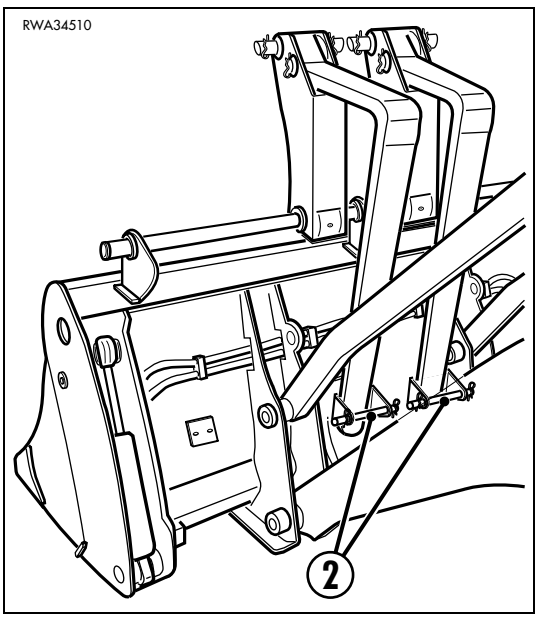

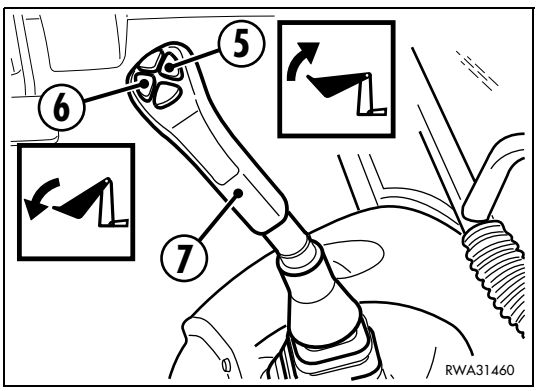

6.3.3 INSTALLING THE 4in1 BUCKET

DANGER

- **When the coupling pins are removed or installed, chips may come off; always wear gloves, safety goggles and helmet.**
- **The change of the equipment must be carried out by two operators, who must decide together the words and signals to be used during operations.**
- **Do not use your fingers to center the holes, since they may be injured or even cut.**

To install the 4in1 bucket it is necessary to engage the mechanical constraints of the loader as described in “3.12.3 CHANGING THE STANDARD FRONT BUCKET” and to carry out the hydraulic connections using the pipes provided.

CAUTION

- **After coupling the bucket and the loader mechanically, stop the engine, remove the ignition key and move the hydraulic controls more than once in all directions, in order to release the residual pressure that may be present in the circuits; apply the parking brake.**
- **When connecting the pipes, take care to prevent any impurities from getting into them.**

Proceed as follows:

1 - Loosen the protection plugs and remove them from the rigid pipes provided on the machine.

2 - Loosen and remove the protection plugs from the flexible pipes (8) and (9) of the bucket.

3 - Carry out the connections as indicated in the figure.

4 - Start the machine, raise the bucket a few centimeters from the ground and open and fold it completely more than once with the buttons positioned on the control lever to check the efficiency and tightness of the system.

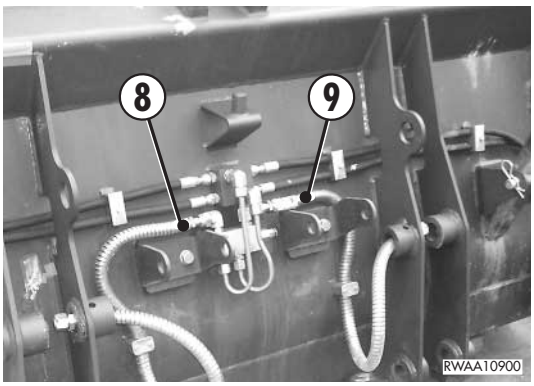

DANGER

- **Wear thick gloves and safety goggles during this check.**
- **To check the system for leaks, use a piece of cardboard or a wooden board.**

---

5 - Lower the bucket to the ground, stop the machine, lubricate the joints (see “4.5.2 LUBRICATION DIAGRAM”) and check the hydraulic oil level (see “4.7.3.e CHECKING THE HYDRAULIC CIRCUIT OIL LEVEL”).

IMPORTANT

- **Before starting work, make sure that the bucket position indicator is correctly set (see “3.12.1 BUCKET POSITION INDICATOR”).**

6.3.4 USING THE 4in1 BUCKET

The 4in1 bucket can be used for the following applications:

1 - Loading (dumping the bucket as described in “3.12.2.1 LOADING HEAPED AND LEVEL MATERIAL”).

2 - Unloading on high surfaces by opening the bucket instead of overturning (vertical unloading).

3 - Handling of logs, branches, etc. with the pliers function (opening and clamping), by using the teeth provided on the mobile jaw (4) to grasp them.

4 - Flushing and levelling (with open bucket).

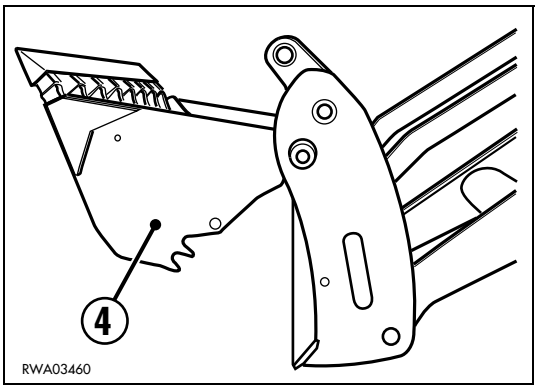

IMPORTANT

- **To flush the ground, open the bucket and move the machine forward working with the fixed part of the bucket.**
- **To level the ground, open the bucket and move the machine backward working with the mobile part of the bucket.**

The operator can check the opening of the bucket in any condition, by means of the indicator (10).

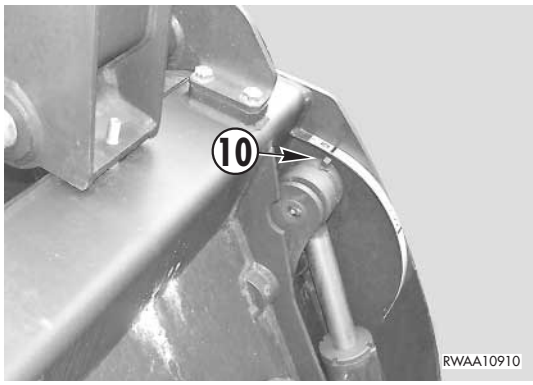

6.3.5 MAINTENANCE

The 4in1 bucket does not require particular maintenance operations in addition to those required for the standard bucket, excepting the lubrication described at point “4.5.2 LUBRICATION DIAGRAM”.

6.4 PALLET FORKS

(For the characteristics, see “6.1 AUTHORIZED OPTIONAL EQUIPMENT”).

DANGER

- **Before lifting the load, make sure that the position of its centre (G) complies with the distances indicated in the figure below. Furthermore, the load must always be centered with respect to the forks. Non-compliance with these rules may cause serious damage and even death.**
- **Before handling any load, verify the capacity of the forks. The allowed load is generally stamped on the forks.**

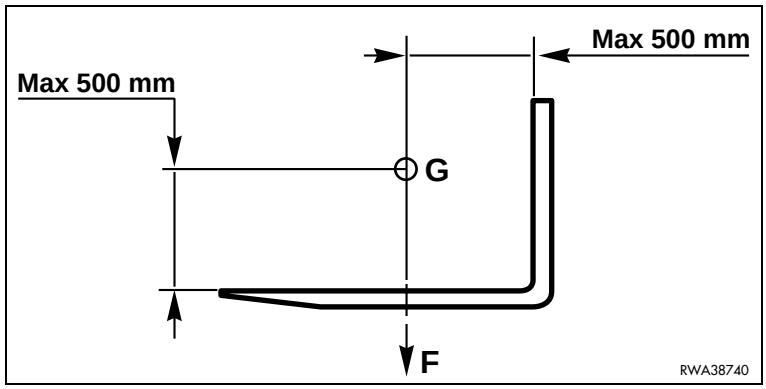

6.4.1 DESCRIPTION

They are usually applied to the 4in1 bucket and when they are not used they must be overturned towards the back of the machine and secured with the safety pins provided.
The pallet forks (1) make it possible to use the machine as a normal lift truck and the controls for the lifting and oscillation are the same used to control the standard bucket (See “3.3.5 pos. 5 FRONT LOADER CONTROL LEVER”).
The distance between the pallet forks can be varied to adapt them to the load to be handled; to do this, make them slide on the coupling bar (2).

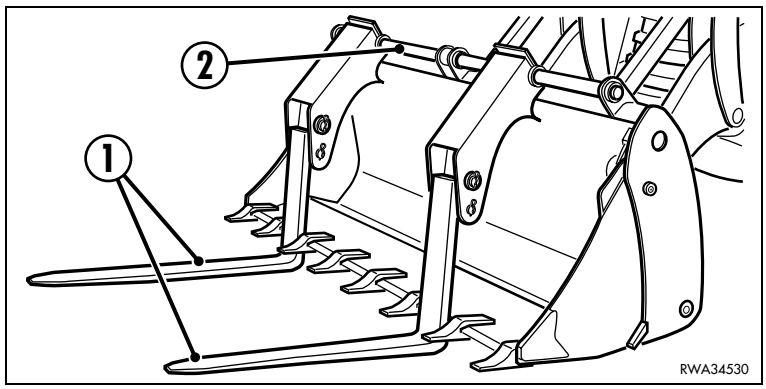

6.4.2 SAFETY DEVICES

For this application two safety pins (3) are provided that keep the forks in overturned position for the circulation on roads.

6.4.3 USING THE FORKS

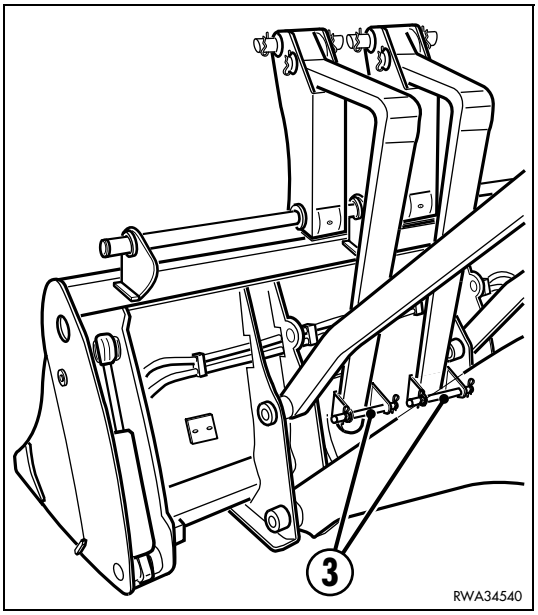

DANGER

- **Before working with the forks, the operator must evaluate the increased dimensions of the machine and learn how to use the fork controls.**
- **The forks protrude beyond the bucket outline and therefore it is necessary to be very careful when manoeuvring the machine, especially in reduced spaces.**
- **After forking the material, before suspending the load, move the forks in such a way as to lift their prongs and therefore prevent the load from slipping**

DANGER

- **When the forks are overturned for use or storage, be careful to the grasping points, since hands and feet may be injured and even cut.**
  Is advisable, this operation should be carried out by two persons.
- **Use the lifting, oscillation and shifting controls slowly and smoothly, in order to avoid vibrations that may cause the load to move.**
- **Maintain the greatest possible distance between the forks.**
- **The forks must always rest on the blade and be positioned between two teeth, in order to avoid any sideward slipping.**

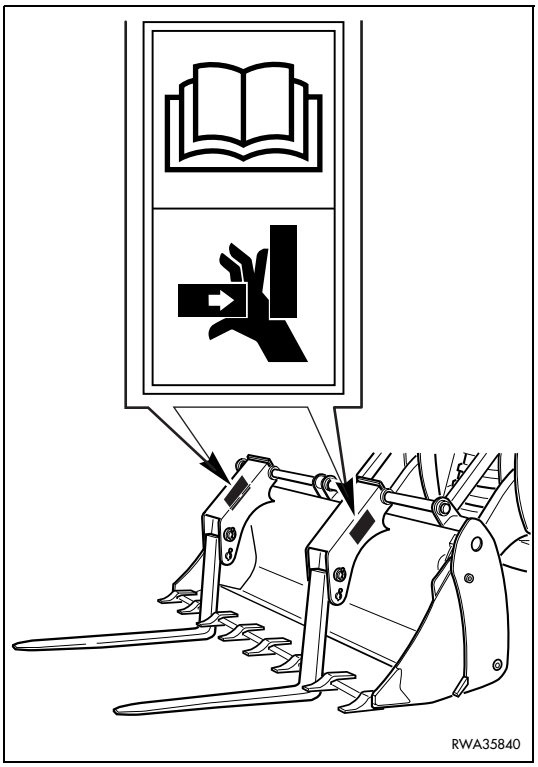

6.4.3.1 PREPARING THE PALLET FORKS FOR USE

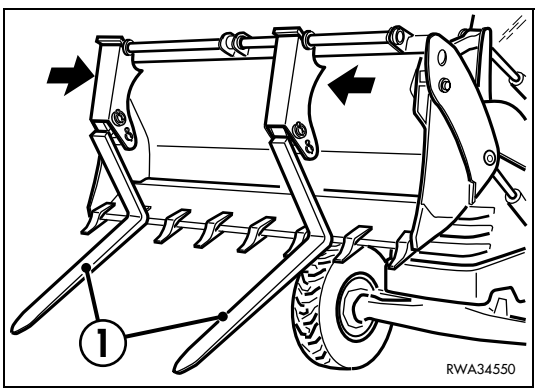

1 - Overturn the forks toward the front part of the machine.

2 - Raise the bucket and operate the control lever in such a way as to swing it forward until releasing the forks from the bucket teeth.

3 - Move the forks (1) sidewards to widen or narrow the distance between them according to the width of the load to be handled.

4 - Fold the bucket and manoeuvre the lifting arm until the forks are in horizontal position.

5 - Lubricate the fork rotation pins, (see “4.5.2 LUBRICATION DIAGRAM”).

6.4.3.2 OVERTURNING THE FORKS FOR TRAVEL ON ROADS

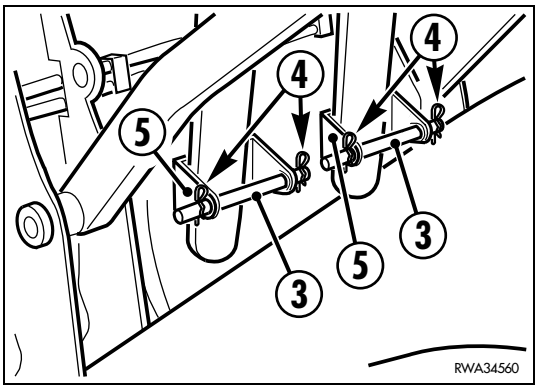

1 - Remove the safety pins (4) and the pins (3).

2 - Make the forks slide towards the centre of the bucket, overturn them and insert them in the supports (5).

3 - Install the pins (3) and the safety pins (4).

4 - Make sure that when they are overturned in rest position the forks are firmly secured inside their respective supports (5).
If any slack should be observed between the forks and the safety pin (3), immediately carry out the necessary adjustment.
The correct adjusting procedure is as follows:

- Release the stop nut (10) and loosen the adjusting screw (11) until completely eliminating the slack between the fork and the safety pin (3).
  Use a 22 mm hexagon spanner.
- After the adjustment, tighten the stop nut (10) thoroughly. If the adjusting screw (11) should be excessively worn, do not hesitate to replace it.

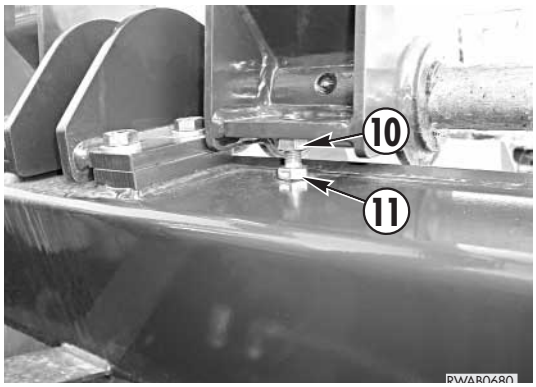

CAUTION

- **The check and adjustment of the forks must be carried out on both sides, with the forks at rest. Do not hesitate to adjust the forks as soon as the presence of a slack is noticed. Non-compliance with these instructions may lead to dangerous situations for the operator and cause serious damage to the machine.**
- **Before carrying out any movement with the machine, make sure that the safety pins (4) are correctly inserted.**

6.4.4 REMOVING THE FORKS

DANGER

- **When removing the forks, the supports and the bar, be very careful, in order not to cut or crush your hands or feet.**

1 - Manoeuvre the lifting arm and swing the bucket until resting the forks (1) on the ground in horizontal position.

2 - Remove the safety pins (6) and the pins (7).

If also the supports (8) must be removed:

3 - Loosen and remove the screws (9) that hold the slide bar (2).

4 - Hold one of the supports (8) and withdraw the slide bar (2); repeat the same operation for the other support.

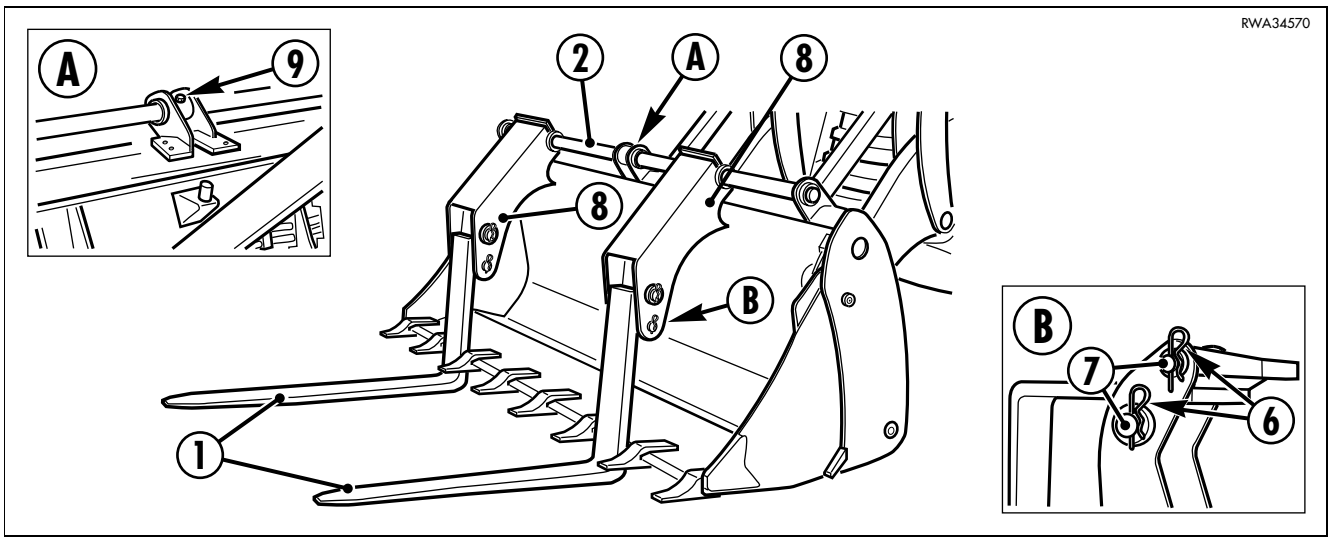

6.4.5 INSTALLING THE FORKS

To install the pallet forks, repeat the procedure described for the removal in the reverse order, taking the same precautions.

6.4.6 MAINTENANCE

No specific maintenance operation is required for this device, excepting the occasional greasing of the slide bar and of the fork fulcrum pin (see “4.5.2 LUBRICATION DIAGRAM”).

6.5 BACKHOE TELESCOPIC ARM

6.5.1 DESCRIPTION AND CONTROL

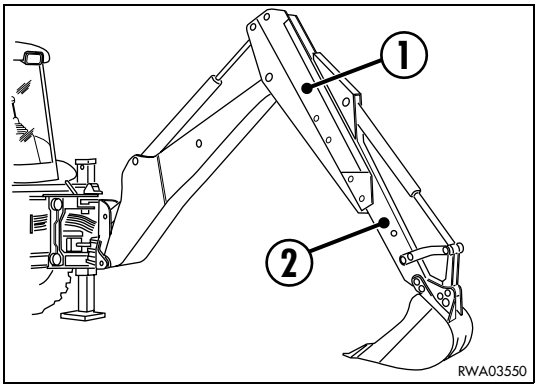

This configuration of the backhoe arm makes it possible to work with the equipment installed at a variable distance longer than the distance available with the standard arm.
With the application of this arm (and with extended arm), the breakout force at the bucket pin is reduced and only lighter loads can be handled; therefore, it is necessary to install a suitable bucket (see “6.1 AUTHORIZED OPTIONAL EQUIPMENT”).
This construction features an external hollow arm (1) into which the arm (2) supporting the equipment slides on adjustable “V”-shaped guides.
The sliding of the arm is achieved by means of a double-acting cylinder controlled by an additional distributor.

6.5.1.1 VERSION WITH STANDARD CONTROLS

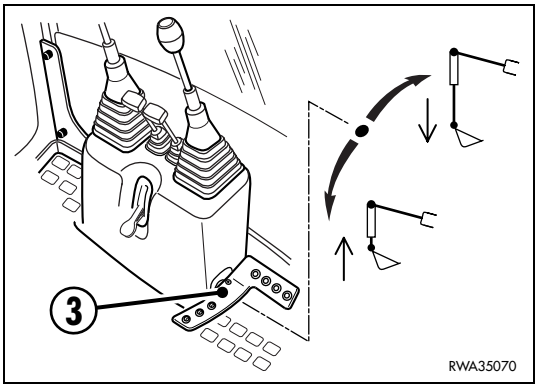

The distributor that manages the telescopic movement is controlled by means of a pedal (3) positioned on the right side of the backhoe control lever unit; the movements of the levers described in “3.3.5.1 (pos.15-16) BACKHOE CONTROL LEVERS” remain unchanged.
The movements of the telescopic arm are controlled as follows:

1 - The extension of the arm is obtained by pressing the pedal (3) with the toe.

2 - The retraction of the arm is obtained by pressing the pedal (3) with the heel.

6.5.1.2 VERSION WITH SERVO CONTROLS (if installed)

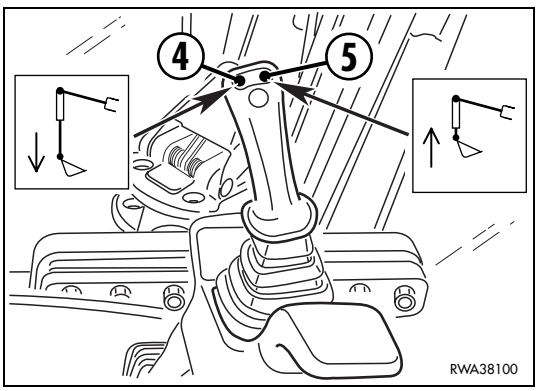

If the machine is equipped with backhoe servo controls, the movement of the telescopic arm is achieved by means of the push buttons (4) and (5) positioned on the right joystick lever.
The movements of the main equipment remain unchanged, see “3.3.5.2 MACHINE CONTROLS (Version with servo controls)” pos.15 and 16.
The movements of the telescopic arm are controlled as follows:

1 - The extension of the arm is obtained by pressing the push button (4), while the arm stops when the button is released.

2 - The retraction of the arm is obtained by pressing the push button (5), while the arm stops when the button is released.

IMPORTANT

- **All the movements of the boom, the arm and the equipment are inhibited when the control safety device is locked, see “3.3.5.2 MACHINE CONTROLS (Version with servo controls)” pos. 26.**

6.5.2 SAFETY DEVICES

The telescopic arm is equipped with a safety pin (6) that locks the sliding arm (2) when it is completely retracted and prevents any accidental extension of the same.
The safety pin (6), held in its seat by the retainer (7), must be inserted and prevent the extension of the arm as shown in Fig. A, in the following situations:

1 - when it is necessary to travel on roads or in any case when the machine must cover considerable distances;

2 - when the backhoe is not used.

In operating conditions, the safety pin (6) must be positioned as shown in Fig. B.

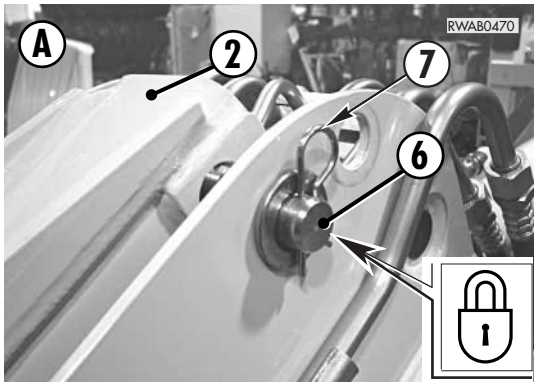

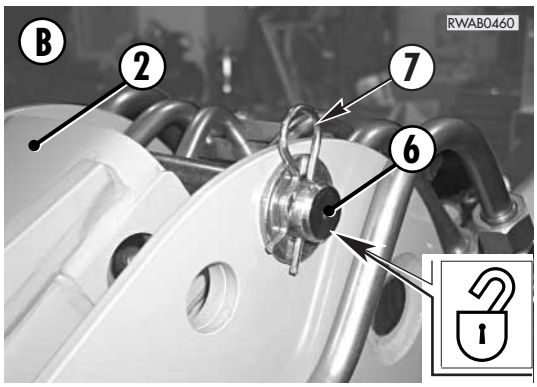

6.5.3 USING THE TELESCOPIC ARM

DANGER

- **Before releasing and extending the arm, make sure that the stabilizers rest on firm ground.**
- **If possible, work with the backhoe centered on the guides and unload the material as near the machine as possible.**
- **If it is necessary to work with misaligned backhoe or with the backhoe completely shifted on the guides, operate slowly when swinging the arm to unload the material on the misaligned side; in this conditions, the machine may lose stability.**
- **Do not use the arm retracting cylinder to increase the bucket tearing force when digging.**

For the other possible uses, see “3.13 USING THE MACHINE AS AN EXCAVATOR”.

6.5.4 MAINTENANCE

The telescopic arm requires two maintenance operations:

1 - Lubrication of the joints (see “4.5.4 LUBRICATION DIAGRAM”).

2 - Adjustment of the slide guide (8) slack, which must be carried out occasionally, when impacts or vibrations are noticed during work.

IMPORTANT

- **Lubricate the telescopic arm guides only if the sliding shoes are made of brass. Plastic shoes do not require lubrication.**

6.5.4.1 ADJUSTING THE GUIDE SLACK

DANGER

- **When leaving the operator’s seat for the adjustment of the guides, remove the ignition key.**
- **Adjust the screws and guides one by one.**
- **Do not place tools in the space between the safety locks and the arm.**

1 - Position the machine on flat ground and lower the stabilizers.

2 - Raise the boom, fold the bucket completely and extend the telescopic part (7) completely.

3 - Fold the arm until the slide guides (8) are perpendicular to the ground and in any case positioned so that the extendable part is completely free and does not strain the guides.

4 - Stop the engine.

5 - Check the side on which the adjusting dowels (9) of the guides protrude more. Adjust by working on this side only.

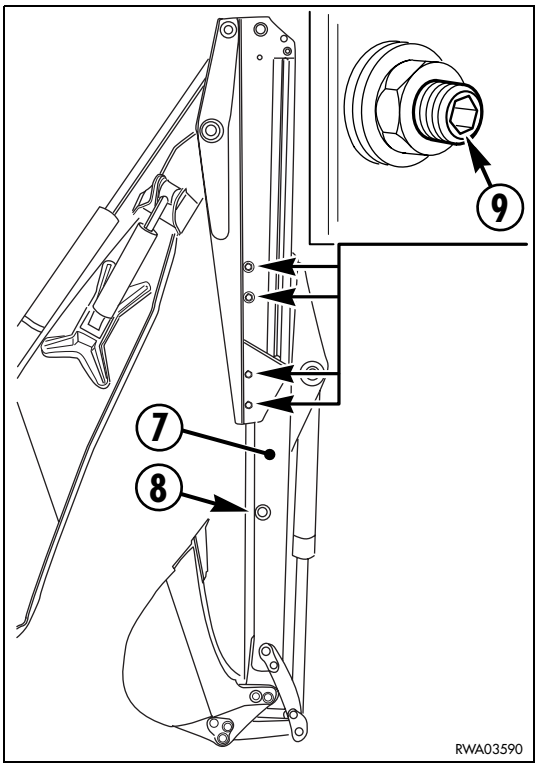

CAUTION

- **If the adjusting dowels (9) protrude to the same extent on the two sides, the operation described at point 6 can be carried out either on the right or left side.**

6 - Loosen the four lock nuts (10) and tighten the adjusting dowels (9) thoroughly, until taking up the slack completely. (Use a 27 mm spanner and a 8 mm hexagon spanner).

7 - Starting from the central positions, loosen the adjusting dowels (9) by 270° (3/4 turn) and lock them with the lock nuts (10).

8 - Start the machine, extend and retract the telescopic arm more than once to make sure that it slides correctly.

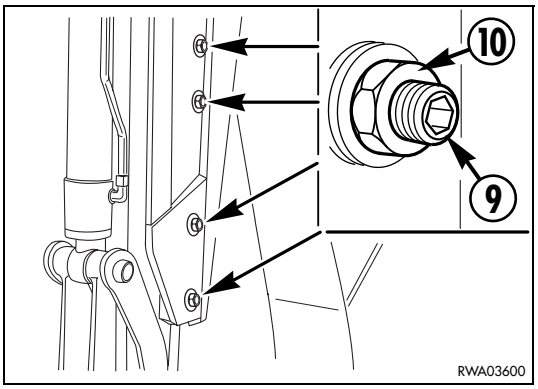

CAUTION

- **The wear limit allowed for the shoes is represented by the minimum engagement of the adjusting dowels (9) in the lock nuts; the shoes must be replaced when the heads of the dowels (9) are 5 mm back with respect to the lock nuts (10).**
- **Do not take up the slack completely, to prevent the guides from seizing.**

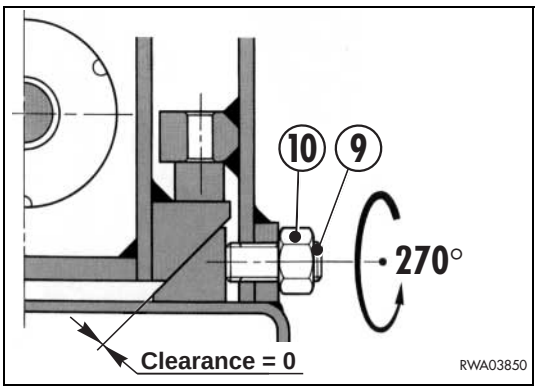

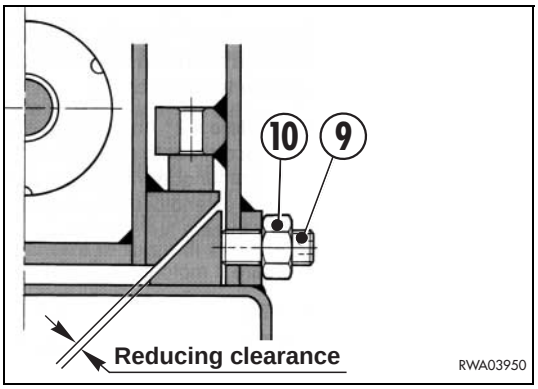

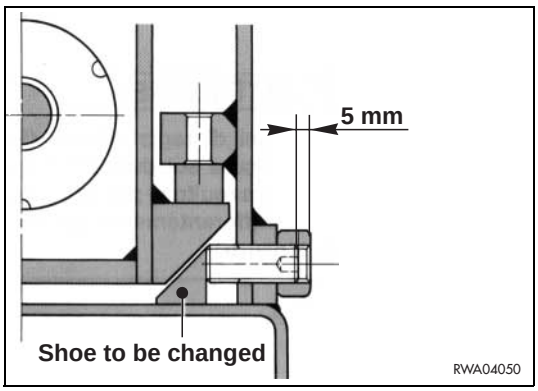

6.6 ARRANGEMENT FOR THE INSTALLATION OF THE DEMOLITION HAMMER

DANGER

- **For the characteristics of the hammer, see “6.1 AUTHORIZED OPTIONAL EQUIPMENT”.**
- **The demolition hammer is very noisy, therefore always wear headphones when using it.**

6.6.1 DESCRIPTION AND CONTROL

The machine can be fitted for the application of a demolition hammer on the backhoe; the operation of the hammer is obtained by means of an additional distributor.

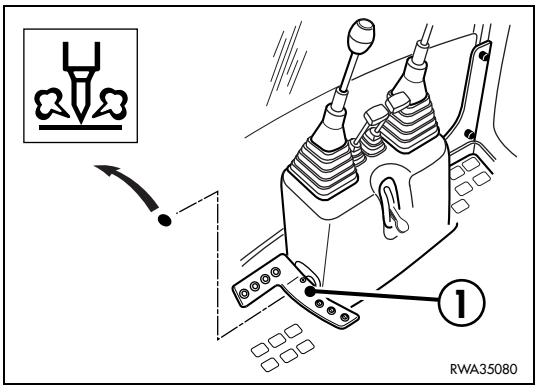

6.6.1.1 VERSION WITH STANDARD CONTROLS

The distributor is controlled by means of a pedal (1) positioned on the left side of the backhoe control lever unit. The movements of the levers described in “3.3.5.1 (pos. 15-16) BACKHOE CONTROL LEVERS” remain unchanged.
The hammer is operated by pressing the pedal (1) with the toe, since in this way pressurized oil is conveyed into the circuit; when the pedal is released, the oil flow is interrupted and therefore the hammer is stopped.

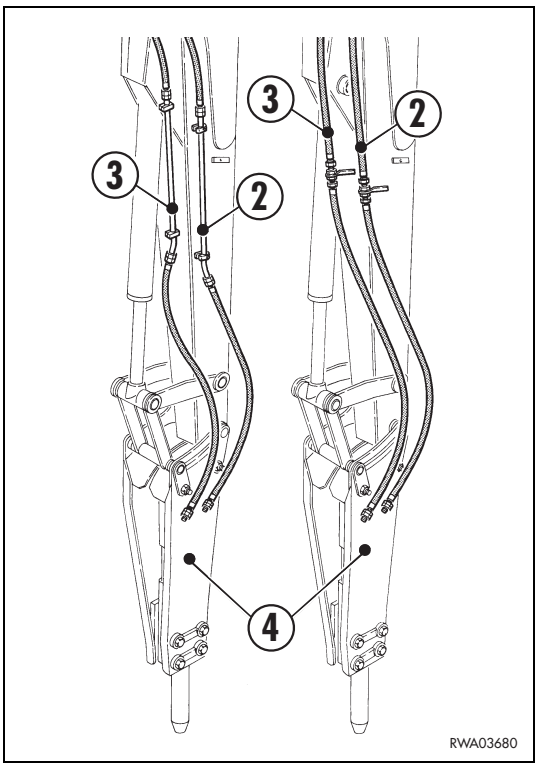

6.6.1.2 VERSION WITH SERVO CONTROLS (if installed)

If the machine is equipped with backhoe servo controls, the hammer is operated by means of the foot-operated button (5) positioned on the cab floor.
The movements of the levers described in “3.3.5.2 MACHINE CONTROLS (Version with servo controls)” pos.15-16 remain unchanged.
The hammer is operated by pressing the foot-operated button (5), since in this way pressurized oil is conveyed into the circuit; when the foot-operated button (5) is released, the oil flow is interrupted and therefore the hammer is stopped.

IMPORTANT

- **All the movements of the boom, the arm and the equipment are inhibited when the control safety device is locked, see “3.3.5.2 MACHINE CONTROLS (Version with servo controls)” pos. 26.**

This configuration includes also the fixed installation of rigid or flexible pipes, more precisely a delivery (2) and a discharge (3) pipe that convey/discharge the oil necessary for the operation of the hammer and reach the proximity of the hammer connection (4).

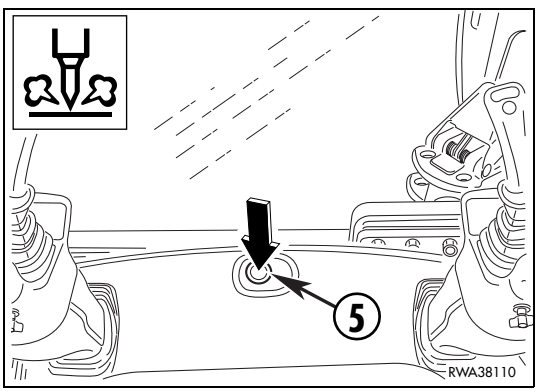

6.6.2 USE OF THE DEMOLITION HAMMER AND RULES TO BE OBSERVED

The choice of the suitable tool is a very important factor to obtain the maximum productivity from the demolition hammer.
The shape and size of the tool must be defined according to the nature of the material to be broken and to the type of work to be carried out.
The hammer is used to break floors, cement structures, walls, small rocky surfaces, excavations with open section, aspahlt, etc.
With the application of special tools it can also be used as asphalt-cutter or compactor.

FOR A CORRECT USE OF THE HAMMER, IT IS NECESSARY TO:

1 - Make sure that the position of the hammer with respect to the material to be broken is as perpendicular as possible and that the arm thrust is sufficient, so that all the power of the hammer can be exploited.

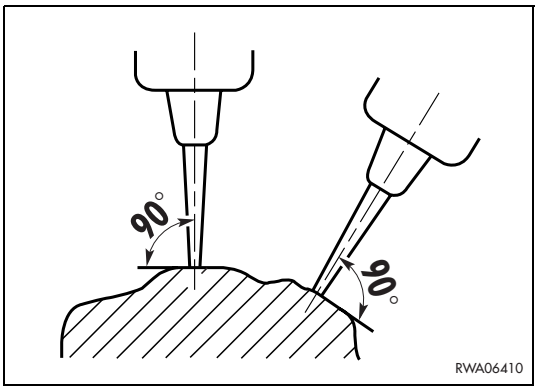

2 - Keep the pressure of the excavator on the hammer constant as the bit penetrates in the material.
Always follow the hammer while it penetrates and operate the excavator arms in order to obtain a pressure sufficient to keep the undercarriage raised at approximately 5 cm from the ground.
Do not raise the rear wheels more than necessary.

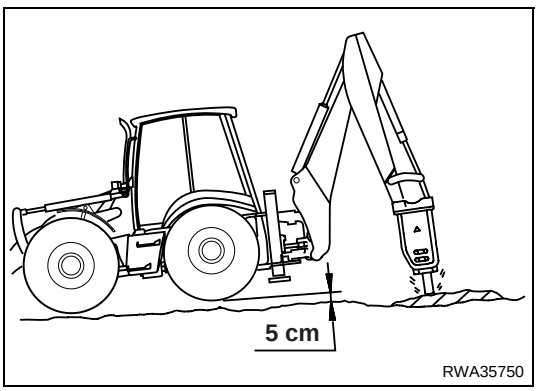

3 - When working on very hard materials, it is important to avoid hitting the same point for more than 30 seconds.
Hit the same point for a few seconds and change position very frequently, in such a way as to facilitate the breaking of the material.

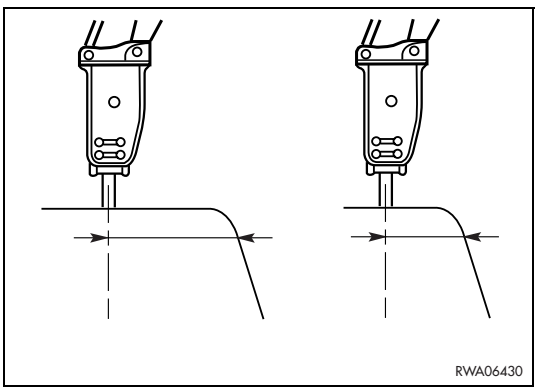

4 - To facilitate the sliding of the tool on its seat, check the thrust direction and always correct the hitting position of the hammer by means of the bucket and arm control.

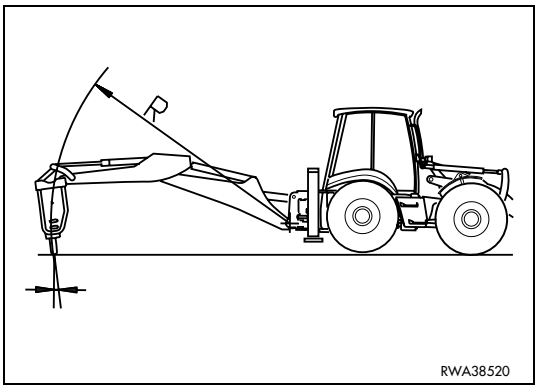

5 - Always make sure that the arm thrust is optimal, in order to avoid harmful and useless strokes.

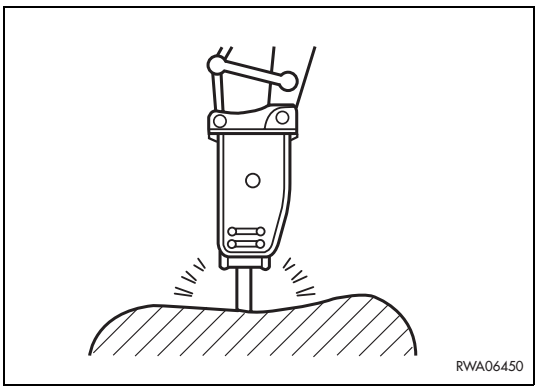

IMPORTANT

- **During work, do not use the demolition hammer with the bucket cylinder at the end of its stroke, but always leave a minimum space of 5 cm.**

ALWAYS AVOID THE FOLLOWING INCORRECT USES:

1 - Gathering or moving stones with the demolition hammer.

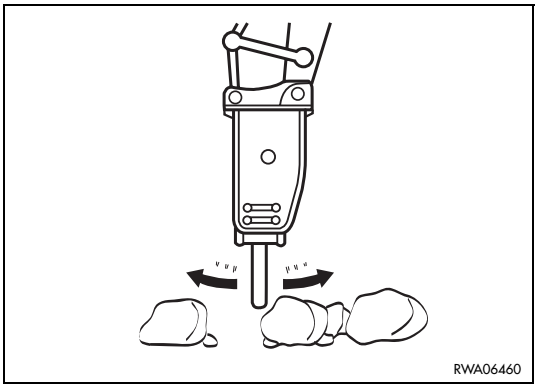

2 - Rotating the upper structure while using the hammer.

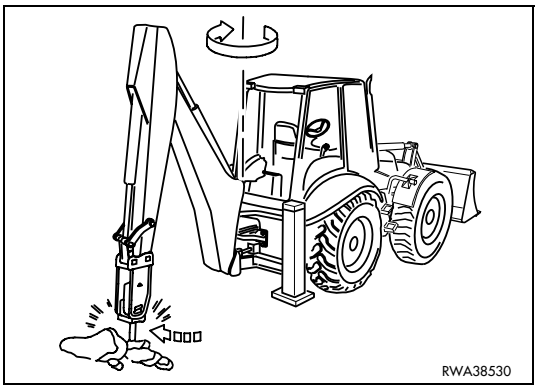

3 - Moving the tool while it is hitting the material to be broken.

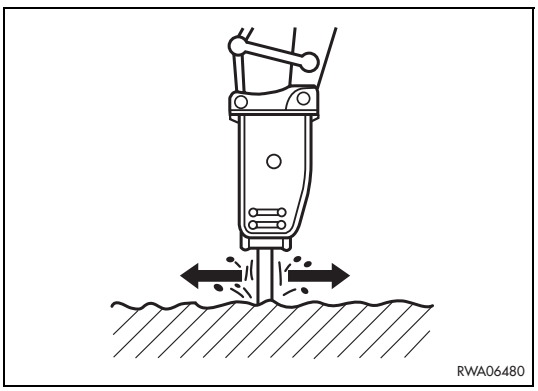

4 - Working with the hammer in horizontal position or even with greater inclination.

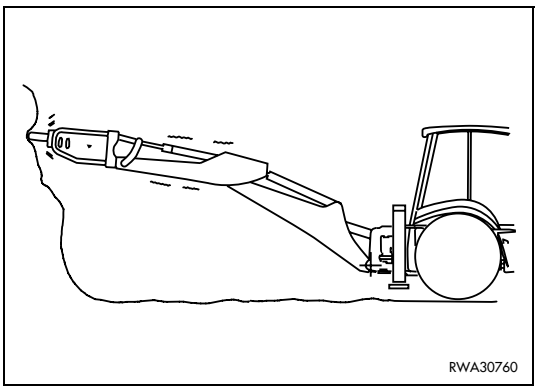

5 - Levering with the tool after driving it into the material to be broken.

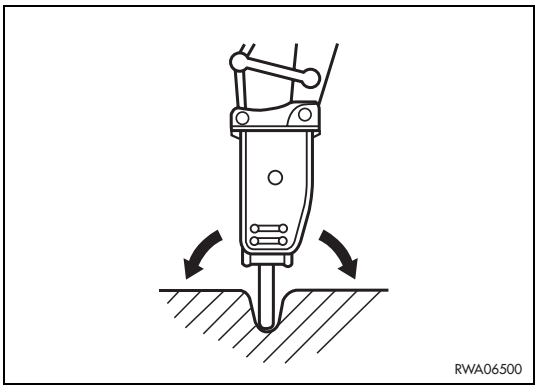

6 - Hitting the ground with the hammer bit.

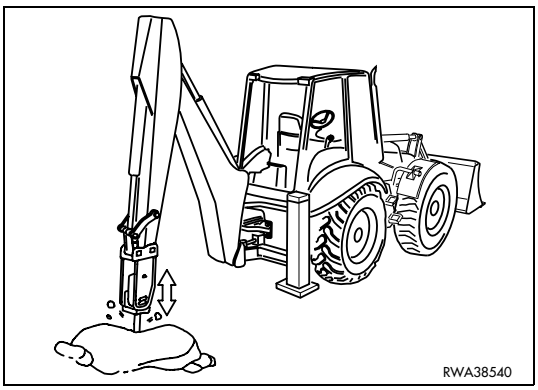

7 - Lifting the machine by levering on the hammer bit with the bucket cylinder completely extended.

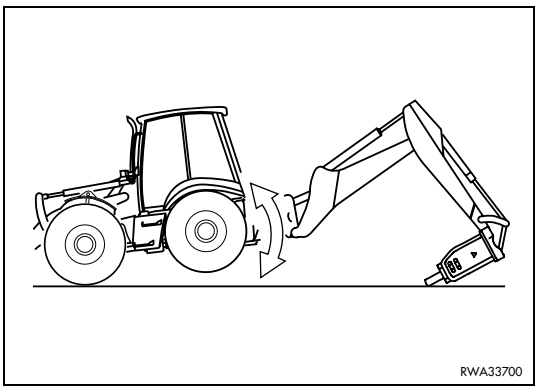

6.6.3 INSTALLING AND REMOVING THE DEMOLITION HAMMER

6.6.3.1 INSTALLING THE HAMMER

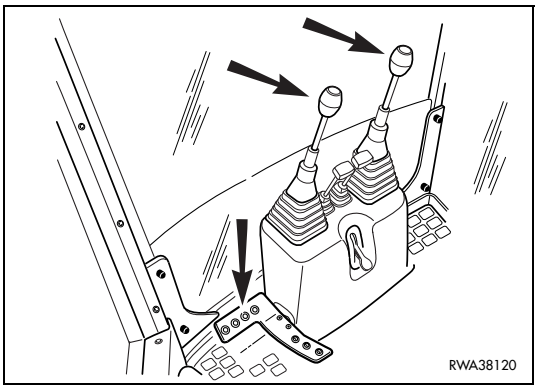

DANGER

- **The machine must be parked on flat ground, with the front equipment resting on the ground.**
- **For the installation, the hammer must be positioned horizontally, with the end directed towards the machine.**
- **When the coupling pins are removed or installed, chips may come off; always wear gloves, safety goggles and helmet.**
- **The change of the equipment must be carried out by two operators, who must decide together the words and signals to be used during operations.**
- **Do not use your fingers to center the holes, since they may be injured or even cut.**
- **Release the residual pressure that may be present in the pipes completely.**
- **Before carrying out any operation on the hydraulic circuit, eliminate the residual pressure from the equipment circuits by moving the controls more than once and from the tank by slowly loosening the filling cap.**
- **Immediately clean any area dirty with oil.**

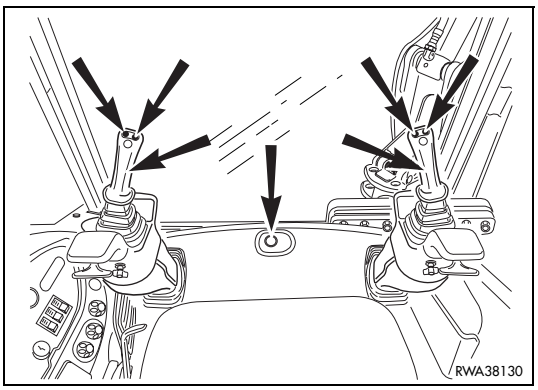

For the installation of the demolition hammer it is necessary to connect the mechanical constraints of the backhoe bucket as described in “3.13.5 CHANGING THE BACKHOE BUCKET” and to carry out the hydraulic connections using the pipes provided.
After connecting the mechanical constraints, carry out the hydraulic connections by proceeding as follows:

1 - Stop the engine and move the hydraulic controls in all directions, in order to completely release the residual pressures present in the circuits of the machine.

2 - Press the hammer control pedal to release the pressure present in the hammer delivery pipe.

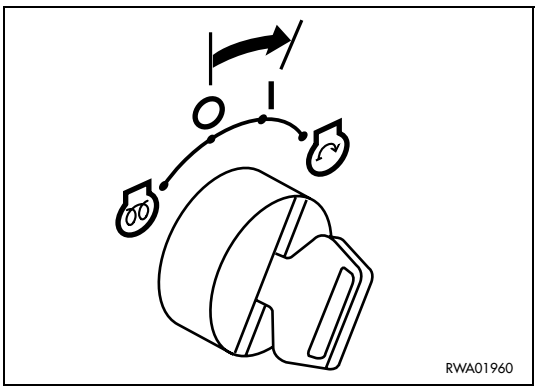

IMPORTANT

- **If the machine is equipped with backhoe servo controls, to release the residual pressure from the machine circuits it is necessary to supply power to the electric circuit, by turning the ignition key to position «I».**
  Release the backhoe control locking device, see “3.3.5.2 MACHINE CONTROLS (Version with servo controls)” pos. 26 and operate the controls.
  After releasing completely the residual pressure from the circuits, turn the ignition key to position «O».

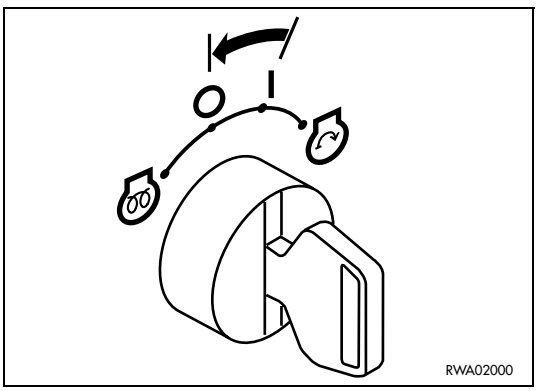

3 - Remove the plugs of the machine pipes and of the hammer flexible pipes.
Use 32, 36, 38 and 41 mm hexagon spanners.

4 - Connect the right pipe to the coupling (1) and the left pipe to the coupling (2), making sure that the sizes of the pipe fittings are as required.

CAUTION

- **When connecting the pipes, take care to prevent any impurities from getting into them.**

5 - Start the machine and raise the demolition hammer positioning it vertically.

6 - Stop the machine again and lubricate the joints (See “4.5.1 LUBRICATION DIAGRAM”) and the hammer (see the specific operation and maintenance manual).

7 - Before starting work, check the tightness of the circuit.

DANGER

- **Always wear thick gloves and safety goggles during this check.**
- **To check the system for leaks, use a piece of cardboard or a wooden board.**

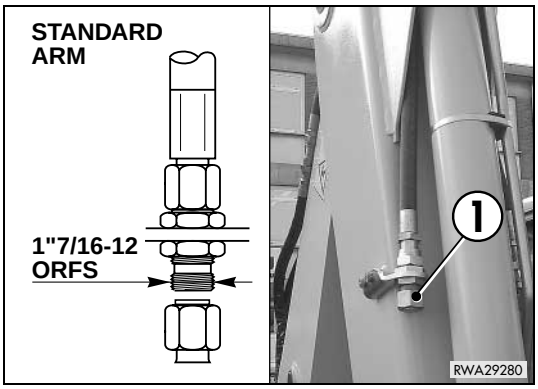

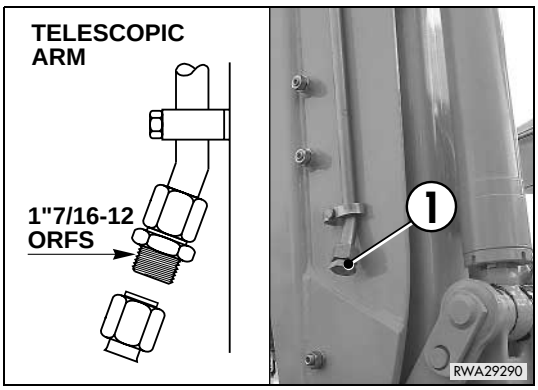

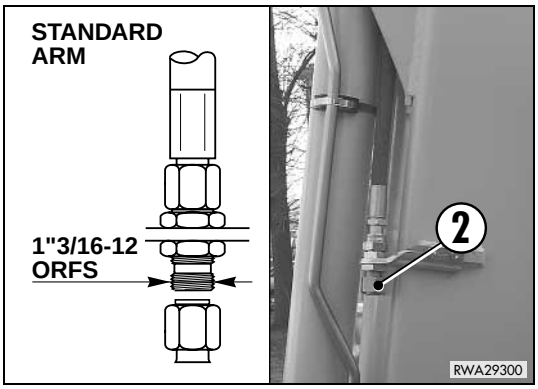

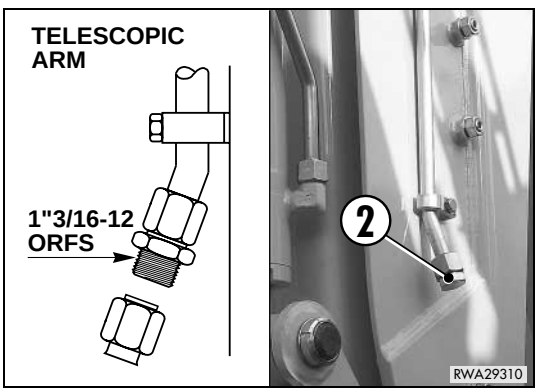

6.6.3.2 REMOVING THE HAMMER

To remove the hammer, proceed as follows:

1 - Stop the engine and move the hydraulic controls in all directions, in order to completely release the residual pressures present in the circuits of the machine.

2 - Press the hammer control pedal to release the pressure present in the hammer delivery pipe.

IMPORTANT

- **If the machine is equipped with backhoe servo controls, to release the residual pressure from the circuits, follow the procedure indicated in the previous paragraph “6.6.3.1 ASSEMBLY”.**

3 - Disconnect the hammer delivery and drain pipes.

4 - Fit the pipe sealing plugs complete with the relevant gaskets.

DANGER

- **Make sure that the plugs are properly tightened and that there are no leakages; if the circuit is inadvertently pressurized, small leakages can be turned into thin jets that may perforate the skin or injure the eyes.**
- **Always wear thick gloves and safety goggles to carry out this check.**
- **To check the system for leaks, use a piece of cardboard or a wooden board.**

5 - Disconnect the hammer from the mechanical constraints, as described in “3.13.5 CHANGING THE BACKHOE BUCKET”.

6.6.4 USING THE HAMMER

See the specific manual.

OPERATIONS WITH THE HYDRAULIC HAMMER AND COMPACTING TOOLS

CAUTION

- **If the machine is provided with telescopic arm, this must be kept only folded.**

6.6.5 MAINTENANCE

The hydraulic system does not require any maintenance operation and inspection other than those prescribed for the machine.
For the maintenance operations required by the hammer, see the specific operation manual.

6.7 APPLICATION OF THE OFFSET DEVICE

DANGER

- **When it is necessary to move the machine or travel on roads, the offset device must be positioned centrally with respect to the boom axis.**
- **To carry out digging operations on vertical walls, the fulcrum pin (1) of the revolving support (2) must be perfectly vertical; be very careful to the position of this component when digging near walls and posts, wells and underground lines.**
- **When digging near walls, take care not to weaken foundations and cause collapses.**
- **When working beyond the outline of the machine, make sure that the ground on which the stabilizers and wheels rest is solid and the area is sufficiently far from ridges, banks, coasts: remember that in these conditions the specific pressure on the ground always increases.**
  Reduce the loads and work at low speed, in order to ensure the stability of the machine.

6.7.1 DESCRIPTION AND CONTROL

The offset device is an integral part of the boom (3) and makes it possible to dig beyond the outline of the machine.
If the offset device is in neutral position, the boom can be used as a normal boom; if it is necessary to dig beyond the machine's outline, it is necessary to shift the backhoe and operate the device in order to restore the parallelism between the arm (4) and the machine axis.

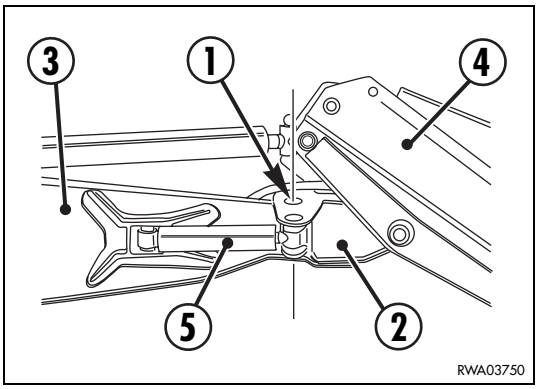

6.7.1.1 VERSION WITH STANDARD CONTROLS

The operation of the cylinder (5) that causes the rotation of the support (2) to which the arm (4) is mechanically constrained is obtained by means of an additional distributor controlled through a pedal (6) installed on the left side of the backhoe control lever unit.
The movements of the levers described in "3.3.5.1 (pos. 15-16) BACKHOE CONTROL LEVERS" remain unchanged.
The movements of the arm are controlled as follows:

1 - rotation to the right is obtained by pressing the pedal (6) with the toe;

2 - rotation to the left is obtained by pressing the pedal (6) with the heel.

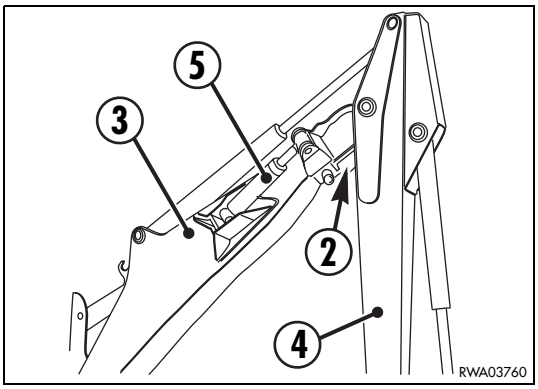

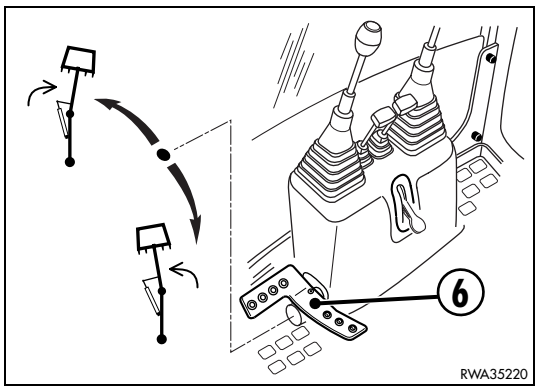

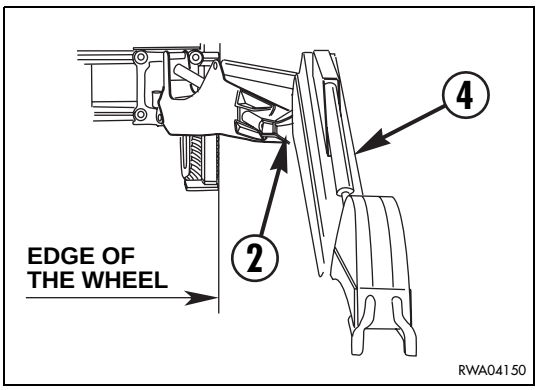

6.7.1.2 VERSION WITH SERVO CONTROLS (if installed)

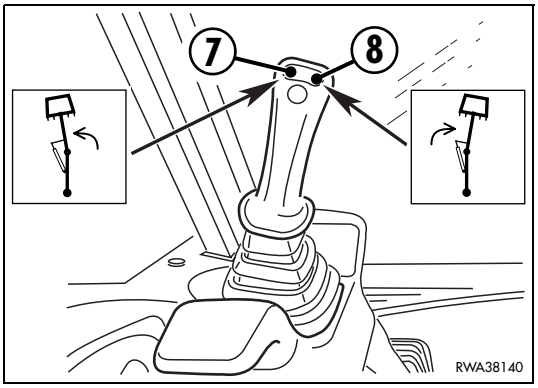

If the machine is equipped with backhoe servo controls, the movement of the equipment with offset device is obtained by means of the push buttons (7) and (8) positioned on the left joystick lever.
The movements of the main equipment remain unchanged, see “3.3.5.2 MACHINE CONTROLS (Version with servo controls)” pos. 15 and 16.
The movements of the arm are controlled as follows:

1 - when the push button (7) is pressed, the arm swings to the left and when the button is released the arm stops;

2 - when the push button (8) is pressed, the arm swings to the right and when the button is released the arm stops.

IMPORTANT

- **All the movements of the boom, the arm and the equipment are inhibited when the control safety device is locked, see “3.3.5.2 MACHINE CONTROLS (Version with servo controls)” pos. 26.**

6.7.2 MAINTENANCE

The offset device does not require any special maintenance operation, except greasing (see “4.5.5 LUBRICATION DIAGRAM”).

6.8 ARRANGEMENT FOR THE OPERATION OF OPTIONAL EQUIPMENT WITH UNIDIRECTIONAL OIL FLOW

DANGER

- **Some equipment that can be installed instead of the standard bucket make the machine unsuitable for travelling on roads.**
  Before travelling on roads, always make sure that the machine is homologated for travelling with the equipment with which it is provided.
- **The installation and removal of the equipment that is not homologated for travelling on roads must be carried out at the work site or in any case in delimited spaces with no traffic.**

6.8.1 DESCRIPTION AND CONTROL

The machine can be provided with an independent hydraulic circuit in order to permit the operation of optional equipment that can be installed on the backhoe instead of the standard bucket.

6.8.1.1 VERSION WITH STANDARD CONTROLS

The circuit is piloted by an additional hydraulic distributor that is operated by means of a pedal (1) installed on the left side of the backhoe control lever unit.
The additional circuit is operated as follows:

1 - when the pedal (1) is pressed with the toe, oil is delivered to the right side of the circuit and discharged from the left side of the same;

2 - when the pedal (1) is pressed with the heel, oil is delivered to the left side of the circuit and discharged from the right side of the same.

The movements obtained with the backhoe levers remain unchanged (see “3.3.5.1 pos. 15-16 BACKHOE CONTROL LEVERS”), except for the bucket control, which is used for the positioning of the optional equipment. This configuration includes also the fixed installation of the delivery and discharge pipes that convey/discharge the oil necessary for the operation of the equipment and reach the proximity of the equipment connection.

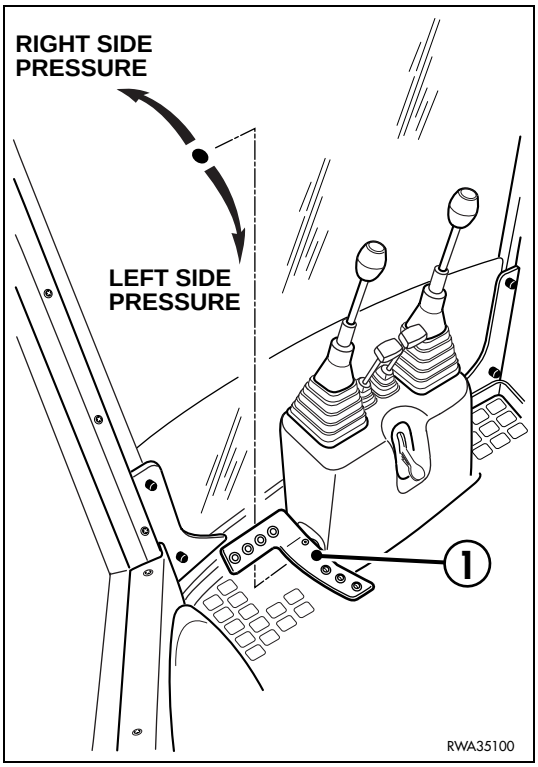

6.8.1.2 VERSION WITH SERVO CONTROLS (if installed)

If the machine is equipped with backhoe servo controls, the additional circuit is operated by means of the push buttons (2) and (3) positioned on the left joystick lever. The movements of the main equipment remain unchanged, see “3.3.5.2 MACHINE CONTROLS (Version with servo controls)” pos. 15 and 16.
The additional circuit is operated as follows:

1 - when the push button (2) is pressed, oil is delivered to the right side of the circuit and discharged from the left side of the same;

2 - when the push button (3) is pressed, oil is delivered to the left side of the circuit and discharged from the right side of the same.

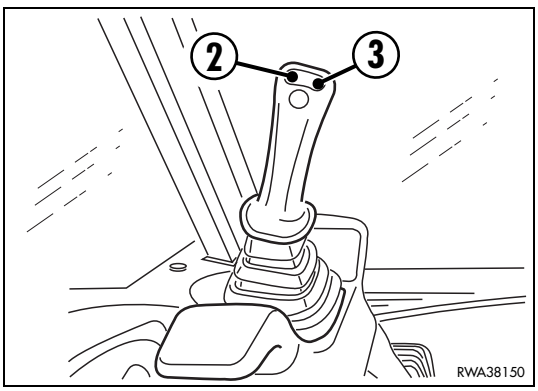

IMPORTANT

- **All the movements of the boom, the arm and the equipment are inhibited when the control safety device is locked, see “3.3.5.2 MACHINE CONTROLS (Version with servo controls)” pos. 26.**

6.8.2 INSTALLING AND CONNECTING THE EQUIPMENT

The equipment must be installed following the procedure indicated in paragraph “3.13.5 CHANGING THE BACKHOE BUCKET”. Connect the delivery and return pipes by proceeding as follows:

1 - After connecting the equipment, stop the engine and shift the hydraulic controls in all directions, in order to release the residual pressure from the machine circuits.

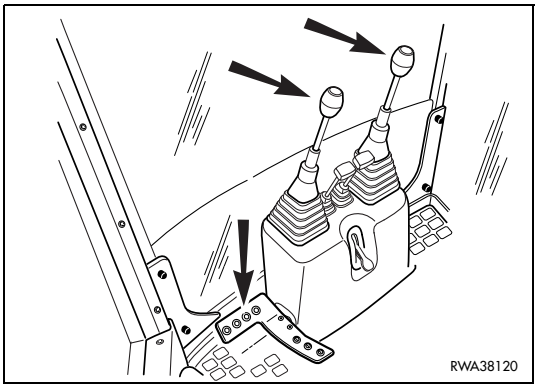

IMPORTANT

- **If the machine is equipped with backhoe servo controls, to release the residual pressure from the machine circuits it is necessary to supply power to the electric circuit, by turning the ignition key to position «I».**
  Release the backhoe control locking device, see “3.3.5.2 MACHINE CONTROLS (Version with servo controls)” pos. 26 and operate the controls.
  After releasing the residual pressure completely from the circuits, turn the ignition key to position «O».

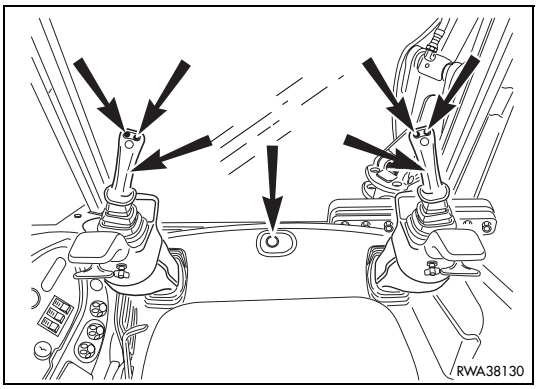

CAUTION

- **During the successive steps, take care to prevent any impurities from getting into the circuit.**

2 - Remove the plugs of the two pipes and of the installed equipment.

3 - Connect the delivery and return pipes.

4 - Start the machine, carry out several manoeuvres with the pedal (1) or with the buttons (2-3) used to control the equipment, in order to verify the tightness of the circuits.

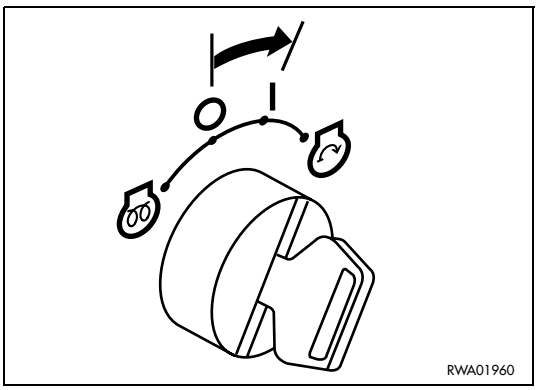

DANGER

- **Wear thick gloves and safety goggles during this check.**
- **To check the system for leaks, use a piece of cardboard or a wooden board.**

5 - Stop the machine and if necessary fasten the longer pipes in order to avoid vibrations and therefore critical conditions for the coupling connections.

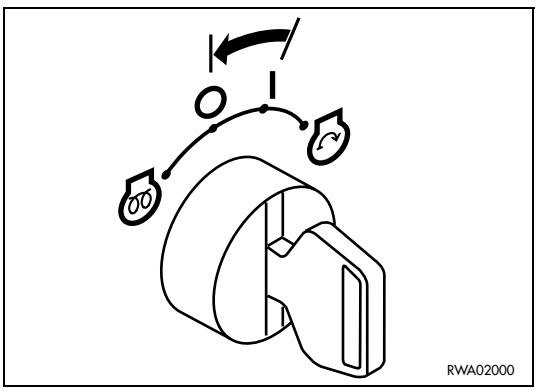

6.8.3 MAINTENANCE

The hydraulic system does not require any maintenance operation and inspection other than those prescribed for the machine. For the maintenance operations required by the equipment, see the specific operation manuals.

6.9 ARRANGEMENT FOR THE INSTALLATION OF THE CLAMSHELL BUCKET

6.9.1 DESCRIPTION AND CONTROL

DANGER

- **The machine equipped with the revolving clamshell bucket cannot travel on roads.**
- **The installation of the clamshell bucket must be carried out at the work site; if the machine must travel on roads, remove the bucket.**
- **The bucket can swing on the arm coupling; during use, take in consideration the increase in size due to the swinging.**

The machine can be arranged for the application of a revolving clamshell bucket on the backhoe, instead of the standard bucket.
For the swing of the clamshell bucket an independent hydraulic circuit controlled by an additional distributor is provided, while for its opening and closing the standard bucket opening and folding circuit is used, excluding the control cylinder (see “6.9.2 INSTALLING THE CLAMSHELL BUCKET”).

6.9.1.1 VERSION WITH STANDARD CONTROLS

The additional distributor that manages the swing of the clamshell bucket is controlled by means of a pedal (1) positioned on the left side of the backhoe control lever unit.
The other controls of the backhoe movements (boom, arm and boom swing) remain unchanged (see “3.3.5.1 pos. 15-16 BACKHOE CONTROL LEVERS”).
The rotation of the bucket is controlled as follows:

1 - when the pedal (1) is pressed with the toes, the bucket swings clockwise;

2 - when the pedal (1) is pressed with the heel, the bucket swings anticlockwise.

This configuration includes also the fixed installation of the delivery and discharge pipe that convey/discharge the oil necessary for the bucket swing and reach the proximity of the bucket connection.

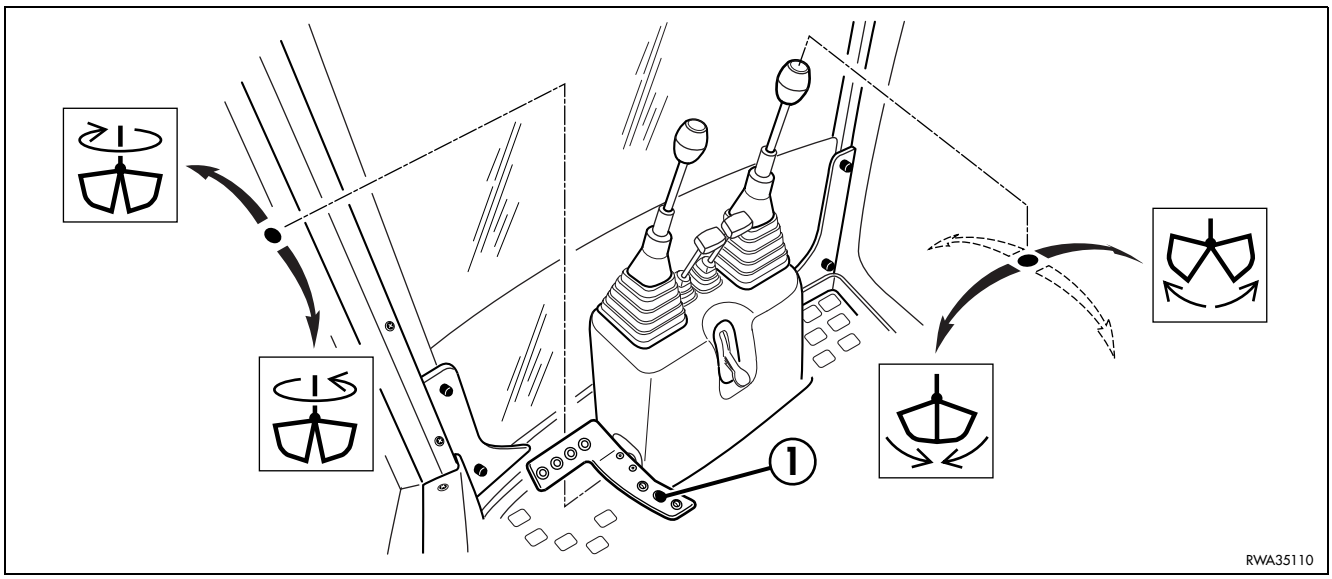

6.9.1.2 VERSION WITH SERVO CONTROLS (if installed)

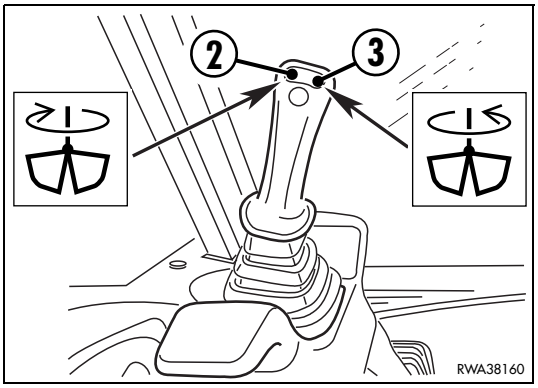

If the machine is equipped with backhoe servo controls, the swinging movements of the clamshell bucket are operated through the push buttons (2) and (3) positioned on the left joystick lever.
The movements of the main equipment (boom, arm and boom swing) remain unchanged.
The circuit used for opening and folding the standard bucket is used also for opening and closing the clamshell bucket, excluding the control cylinder.
See “3.3.5.2 MACHINE CONTROLS (Version with servo controls)” pos. 15-16 and “6.9.2 INSTALLING THE CLAMSHELL BUCKET”.
The swing movements of the bucket are controlled as follows:

1 - when the push button (2) is pressed, the bucket swings clockwise;

2 - when the push button (3) is pressed, the bucket swings anticlockwise.

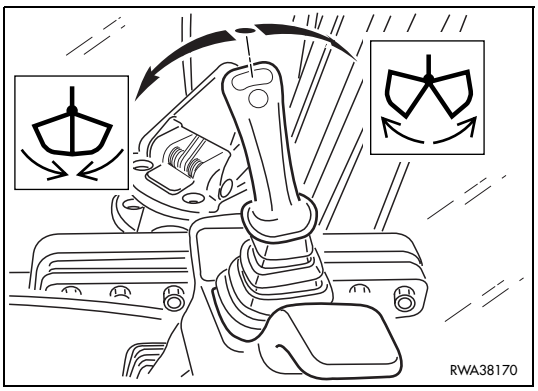

IMPORTANT

- **All the movements of the boom, the arm and the equipment are inhibited when the control safety device is locked, see “3.3.5.2 MACHINE CONTROLS (Version with servo controls)” pos. 26.**

6.9.2 INSTALLING THE CLAMSHELL BUCKET

DANGER

- **The machine must be parked on flat ground, with the front equipment resting on the ground.**
- **When the coupling pins are removed or installed, chips may come off; always wear gloves, safety goggles and helmet.**
- **The change of the equipment must be carried out by two operators, who must decide together the words and signals to be used during operations.**
- **Do not use your fingers to center the holes, since they may be injured or even cut.**
- **Release the residual pressure that may be present in the pipes completely.**

To install the revolving clamshell bucket, proceed as follows:

1 - Remove the standard bucket from the backhoe (see “3.13.5 CHANGING THE BACKHOE BUCKET”).

2 - Retract the bucket control piston completely.

3 - Connect the clamshell bucket to the arm.

4 - Stop the machine and move the controls in all directions to release the residual pressures.

IMPORTANT

- **If the machine is equipped with backhoe servo controls, to release the residual pressure from the machine circuits it is necessary to supply power to the electric circuit, by turning the ignition key to position «I».**
  Release the backhoe control locking device, see “3.3.6.2 MACHINE CONTROLS (Version with servo controls)” pos. 27 and operate the controls.
  After releasing the residual pressure from the circuits completely, turn the ignition key to position «O».

5 - Mechanically lock the standard bucket thrust lever, in such a way as to lock the piston at the end of its stroke.

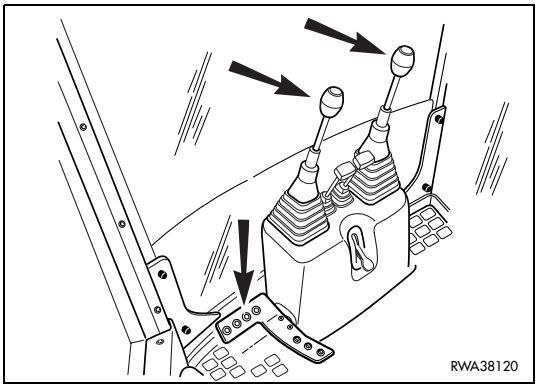

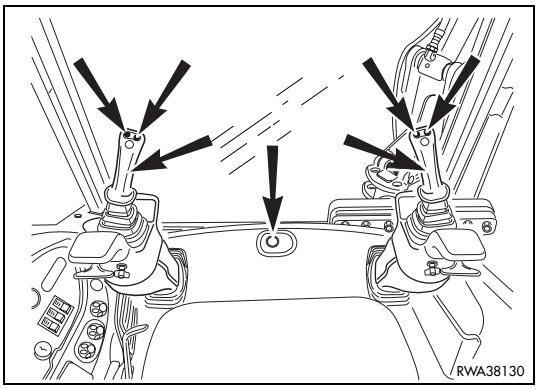

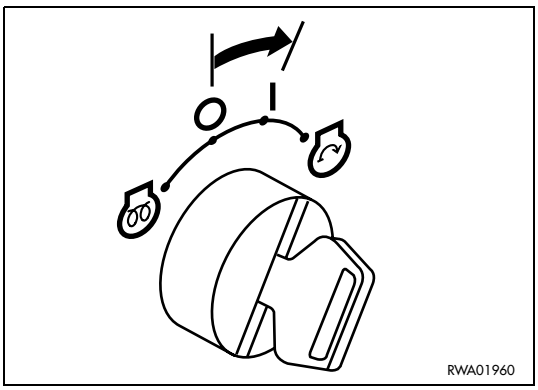

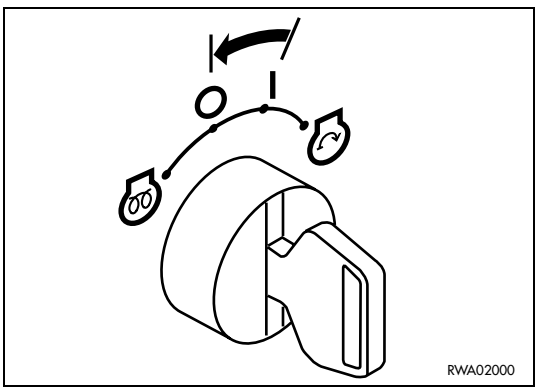

CAUTION

- **During the following steps, take care to prevent any impurities from getting into the pipes and the cylinder.**

FOR STANDARD ARM (FIG. A)

6 - Disconnect the pipes (2-3) that operate the piston from the bucket cylinder (1) and seal the cylinder couplings (4).

FOR TELESCOPIC ARM (FIG. B)

6 - Disconnect the piston control pipes (2-3) from the bucket cylinder (1) and seal the cylinder couplings (4).

7 - Connect the pipes disconnected from the cylinder to the couplings for the opening and closing of the clamshell bucket.

8 - Remove the plugs from the rigid pipes of the system and connect the pipes.

9 - Start the machine and raise the clamshell bucket a few centrimetres from the ground.

10 - Open, fold and swing the bucket several times, in order to check the tightness of the system.

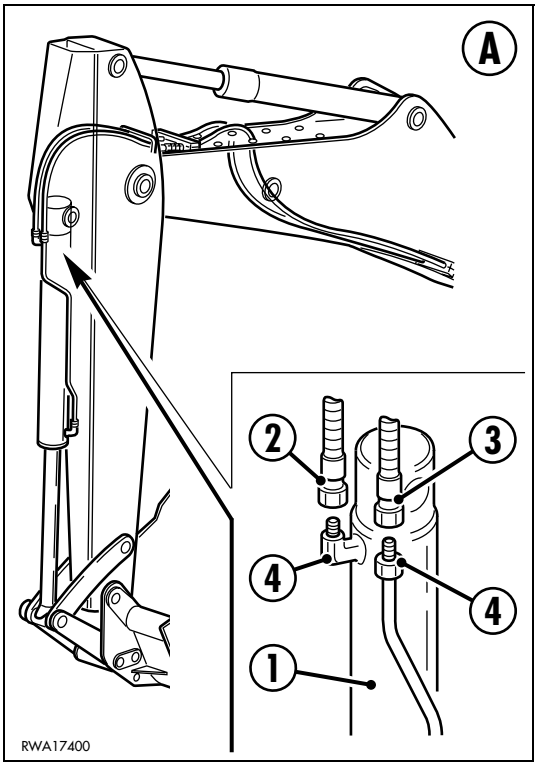

DANGER

- **Always wear thick gloves and safety goggles during this check.**
- **To check the system for leaks, use a piece of cardboard or a wooden board.**

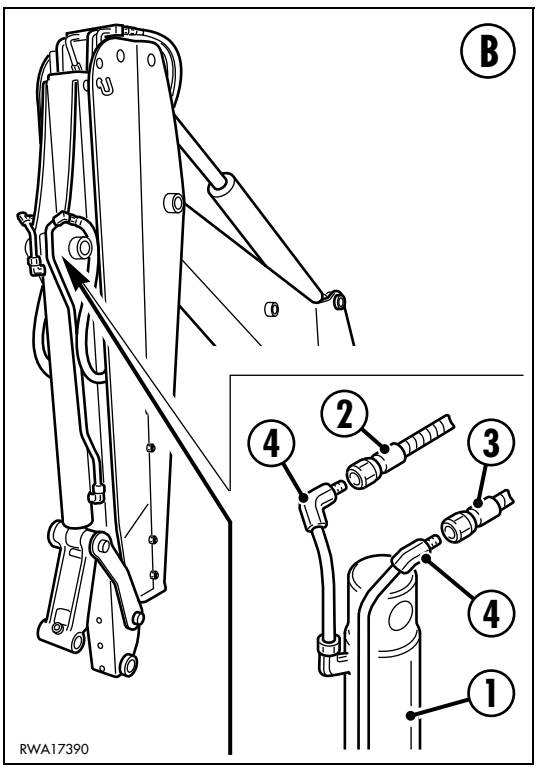

6.9.3 USING THE CLAMSHELL BUCKET

Consult the specific operation manual.

6.9.4 MAINTENANCE

The hydraulic system does not require any maintenance operation and inspection other than those prescribed for the machine. For the maintenance operations required for the clamshell bucket, see the specific operation manual.

6.10 ARRANGEMENT FOR THE INSTALLATION OF THE MANUAL HYDRAULIC HAMMER

DANGER

- **The manual hydraulic hammer is very noisy; always wear headphones when using it..**
- **The manual hydraulic hammer transmits intense vibrations that may cause psychical and physical stress to the operator; be extremely careful especially at the end of work and have short rests when you lose sensibility in the upper limbs.**

6.10.1 DESCRIPTION AND CONTROL

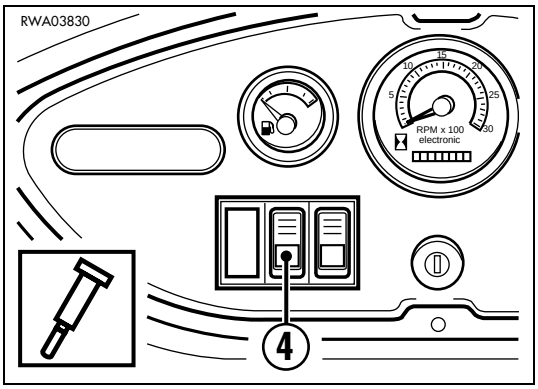

The machine can be provided with delivery (1) and drain (2) couplings for the use of a manual hydraulic hammer; the connection to the machine is made up by two flexible pipes (3).
The hammer circuit is separated from the normal circuits of the machine by means of a solenoid valve controlled by a push button positioned on the side dashboard.
The operation of the push button (4), which includes a connection warning light, energizes the solenoid valve that permits the flow of the oil necessary for the operation of the hammer; if the push button (4) is pressed a second time, the solenoid valve is deenergized and the oil flow is interrupted.
For operation, the hammer is provided with a specific control.
(See the specific operation manual).

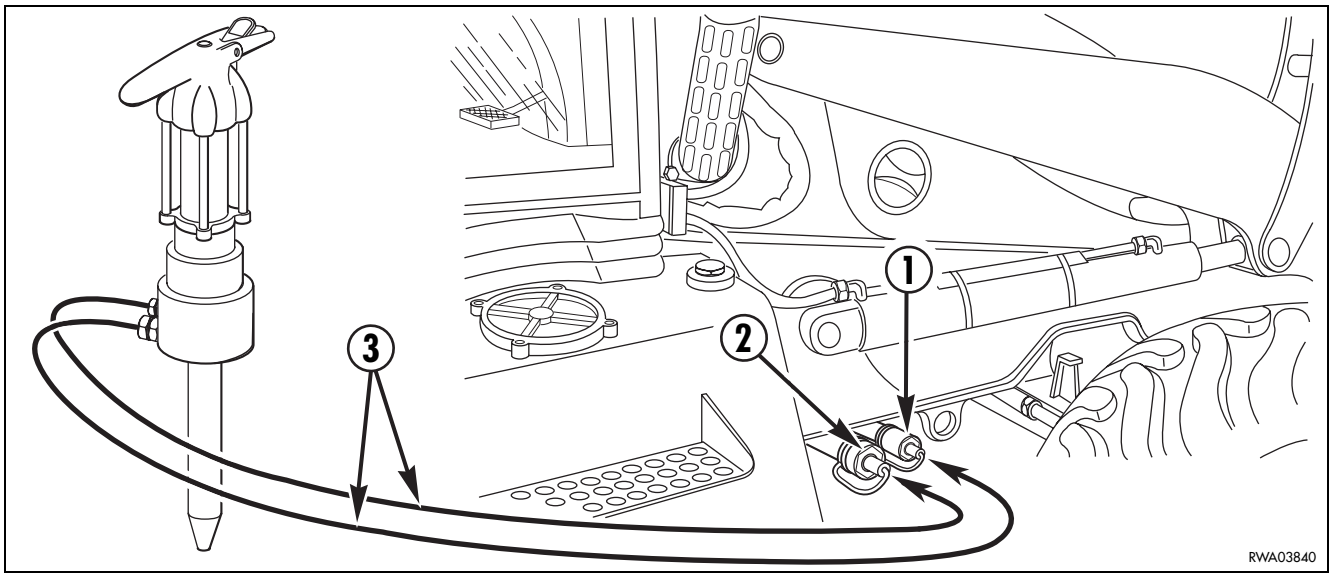

6.10.2 CONNECTING AND REMOVING THE HAMMER

DANGER

- **The connection and removal of the hammer must be carried out with the machine parked and the equipment resting on the ground, the parking brake applied and the control lever safety locks engaged.**
- **Completely release any residual pressure from the pipes before connecting or disconnecting the hammer.**

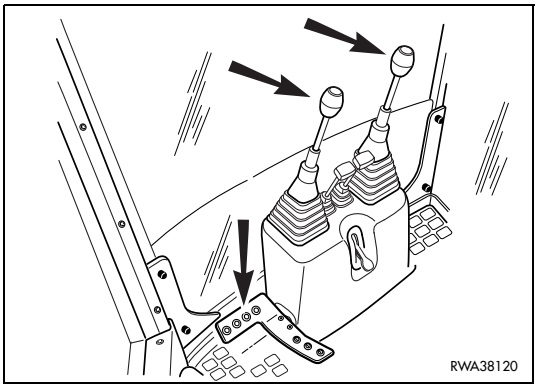

6.10.2.1 CONNECTING THE HAMMER

To connect the hammer, proceed as follows:

1 - Stop the engine and move the hydraulic controls in all directions, in order to release any residual pressure from the circuits of the machine.

IMPORTANT

- **If the machine is equipped with backhoe servo controls, to release the residual pressure from the machine circuits it is necessary to supply power to the electric circuit, by turning the ignition key to position «I». Release the backhoe control locking device, see "3.3.5.2 MACHINE CONTROLS (Version with servo controls)" pos. 26 and operate the controls. After releasing the residual pressure from the circuits completely, turn the ignition key to position «O».**

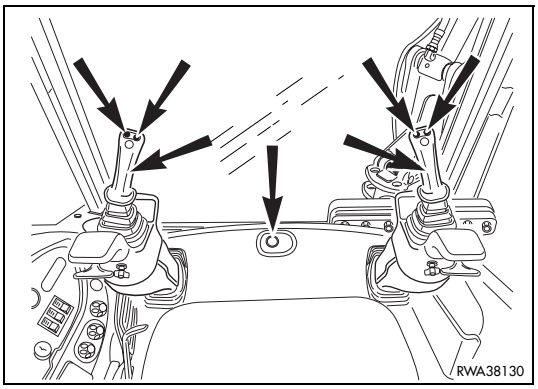

2 - Turn the ignition key to position «**I**»and press the hammer control push button (4) to release the residual pressure from the hammer delivery pipe.

3 - Turn the ignition key to position «**O**».

4 - Make sure that the couplings are perfectly clean and connect the hammer.

5 - Start the engine and press the push button (4) to enable the hammer circuit.

6 - Increase the engine speed to the rpm indicated in the technical data by means of the manual accelerator and then start working.

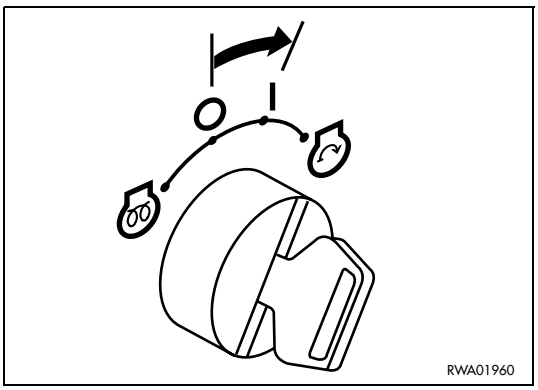

6.10.2.2 REMOVING THE CONNECTIONS

At the end of work, proceed as follows:

1 - Press the push button (4) to disconnect the circuit, reduce the engine rpm and stop the engine.

2 - Move the hydraulic controls more than once in all directions, in order to release any residual pressure from the circuits of the machine.

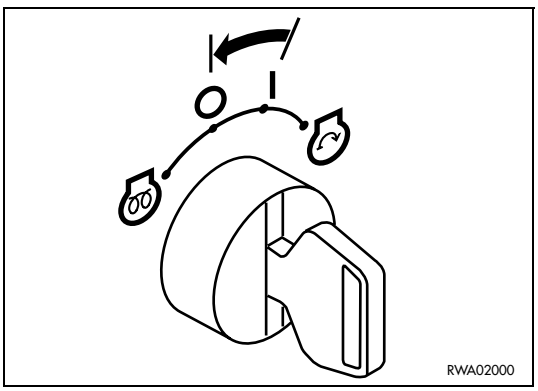

IMPORTANT

- **If the machine is equipped with backhoe servo controls, to release the residual pressure from the circuits follow the procedure indicated in the previous paragraph "6.10.2.1. CONNECTING THE HAMMER".**

3 - Turn the ignition key to position «**I**» and press the hammer control push button (4) to release the residual pressure from the hammer delivery pipe; after releasing the pressure, press the push button (4) again to disconnect the circuit.

4 - Turn the ignition key to position «**O**».

5 - Disconnect the hammer.

CAUTION

- **If quick attachments are not provided, place sealing plugs with the relevant gaskets on the couplings of the machine and of the hammer.**

DANGER

- **Make sure that the plugs are properly tightened and that there are no leakages; if the circuit is inadvertently pressurized, small leakages can be turned into thin jets that may perforate the skin or injure the eyes.**
- **Always wear thick gloves and safety goggles to carry out this check.**
- **To check the system for leaks, use a piece of cardboard or a wooden board.**

6.10.3 USING THE HAMMER

Consult the specific operation manual.

6.10.4 MAINTENANCE

The hydraulic system does not require any maintenance operation and inspection other than those prescribed for the machine.
For the maintenance operations required for the hammer, see the specific operation manual.

6.11 LOAD STABILIZER SYSTEM (LSS) (Optional)

CAUTION

- **Never operate the load stabilizer system while using the backhoe.**

The load stabilizer system (LSS) improves the performance of the machine during travel, regardless of the type of terrain and of the bucket load.
It reduces the oscillations while travelling and while carrying loads, at the same time increasing productivity and the operator's comfort.
It also reduces to a minimum the impact forces to which the machine may be subjected.
When the load stabilizer system is in operation, the loader pressure in low position is limited to that supplied by the weight of the arms and the bucket.
The bucket weight is hydraulically cushioned when the machine is moving.
To operate the load stabilizer system (LSS), press the switch positioned on the side dashboard (see "3.3.2 pos. 16 LOAD STABILIZER SYSTEM SWITCH").

IMPORTANT

- **If the machine is provided with safety valves on the front loader (see "3.3.1 pos. 15 ELECTRIC SAFETY VALVE SWITCH"), make sure that they are not connected.**

When the operation of the system is not required any longer, move the switch back to the neutral position (led off).

6.11.1 ACCUMULATOR OF THE LOAD STABILIZER SYSTEM (LSS)

CAUTION

- **If it is necessary to repair or change the accumulator of the load stabilizer system, contact your Komatsu Utility Dealer.**
  Failure to comply with this instruction may cause serious injuries and even death.

6.12 REAR EQUIPMENT RAPID COUPLING DEVICE

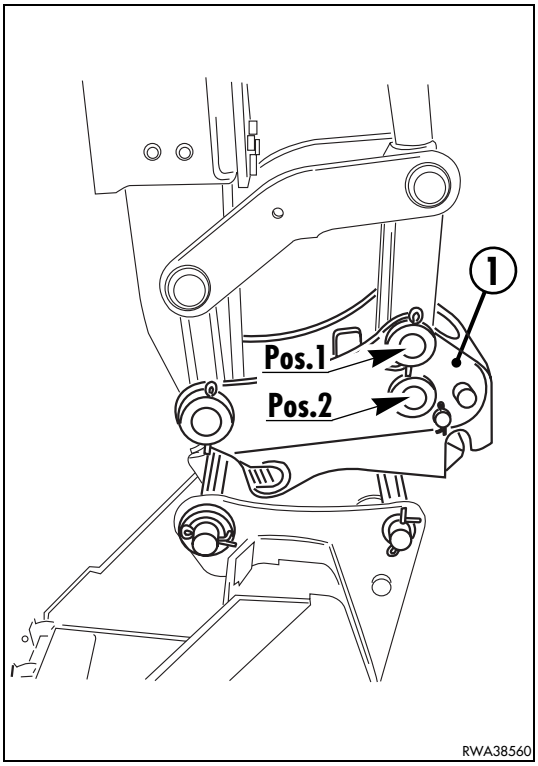

DANGER

- **The work equipment coupling and uncoupling operations must be carried out on a firm and level surface.**
- **The method described is valid for any rear equipment whose operation does not require the use of pressurized oil.**
- **Before starting work, make sure that the coupling pins are completely engaged in the equipment seats.**

The mechanical rapid coupling device (1) of the rear equipment has been developed by Komatsu to facilitate the coupling and uncopuling of the various pieces of equipment.
It is a practical and user-friendly device and therefore it makes it possible to considerably reduce the time required to change the equipment.
Furthermore, the rapid coupling device (1) ensures the coupling of several types of equipment, for example special buckets, drills, hydraulic hammers or other equipment, provided that their installation is authorized by Komatsu. If necessary, the bucket can be attached to the rapid coupling (1) even in reversed position, as shown in Fig. A.
For the assembly or disassembly of the rapid coupling device (1) on/from the backhoe arm, keep to the indications given in paragraph “3.13.5 CHANGING THE BACKHOE BUCKET”.
The rapid coupling device (1) features (like for a simple digging bucket) two different positions for the coupling to the backhoe, which can be selected according to the operation to be performed and to the equipment to be used:

Pos. 1: Normal digging position

Pos. 2: Indicated for operations on vertical walls, ensures the maximum swing and the maximum digging height along the wall.

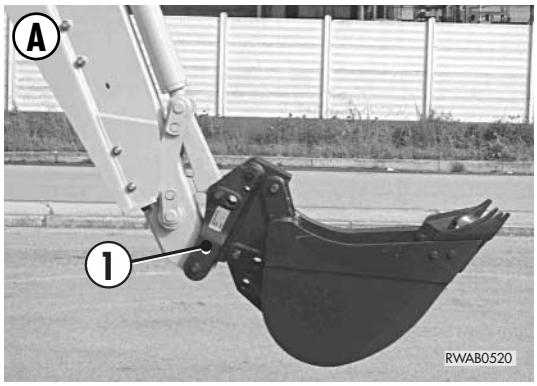

IMPORTANT

- **The slot (C) serves for the insertion of the release lever, which must always be positioned on the outside of the machine, as shown in Fig. B.**
  For any further information, see “6.12.1 EQUIPMENT COUPLING AND RELEASE PROCEDURE”.

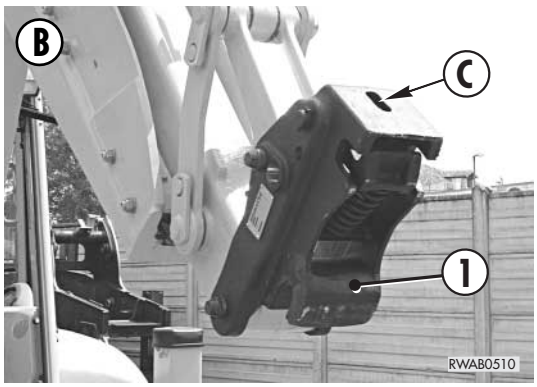

6.12.1 EQUIPMENT COUPLING AND RELEASE PROCEDURE

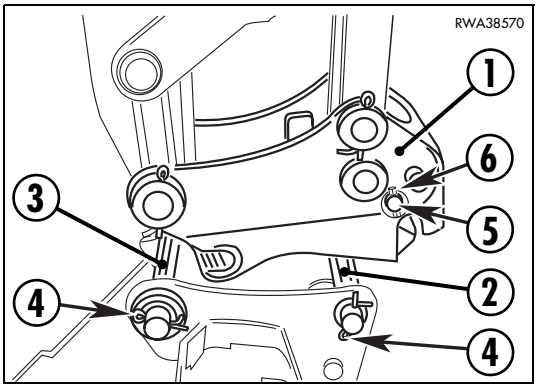

DANGER

- **During the installation or removal of the coupling pins, chips may come off; always wear safety gloves, goggles and helment during these operations.**
- **To change the equipment the operator must seek the aid of another person; the words and signs to be used for communication during these operations must be agreed upon in advance.**
- **Do not try to center the holes with your fingers, since there is a high risk of injury and cutting.**

The following description illustrates by way of example the coupling and release procedure of a standard digging bucket.
After installing the rapid coupling device (1) on the backhoe arm, proceed as indicated below.

- **Coupling procedure:**

1 - Position the bucket on the ground, taking care to choose a level surface and directing the bucket so that its flat part rests on the ground.

2 - Insert the pins (2) and (3), in this order, in the apposite coupling holes in the bucket. Lock the pins (2) and (3) with the relevant safety retainers (4).
Clean the pins (2), (3) and the bushings carefully before inserting them in the bucket and, if necessary, grease them slightly.

3 - Remove the safety pin (5) with the relevant retainer (6) from the rapid coupling (1).

4 - Move the arm near the bucket and with a simple folding movement engage the front pin (2) with the rapid coupling (1).

5 - Slightly raise the bucket, making sure that it is perfectly coupled with the pin (2).

6 - Engage the coupling pin (3) with the rapid coupling (1), using the bucket folding hydraulic movement. Once the bucket has been coupled, make sure that it is perfectly engaged and insert the safety pin (5) in the apposite hole in the rapid coupling (1). Fit the retainer (6) in its place.

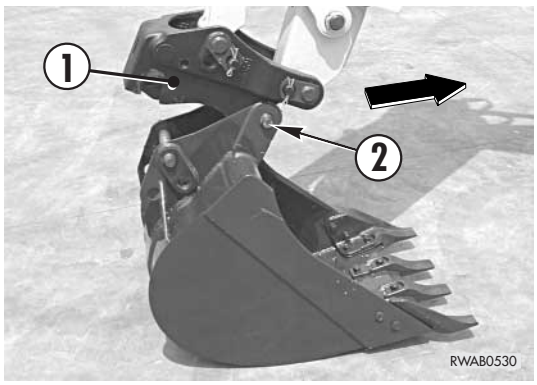

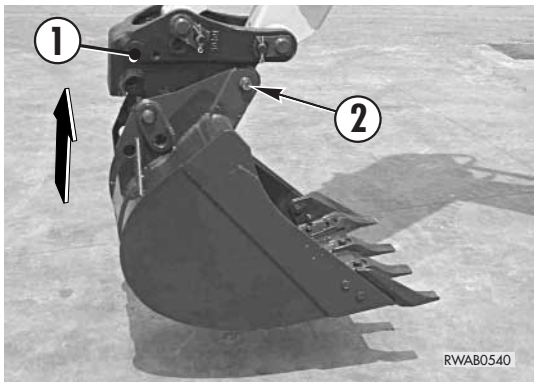

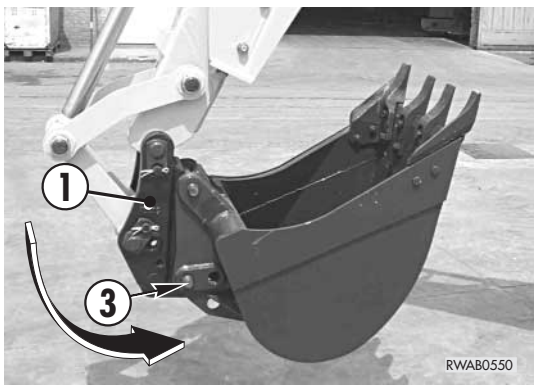

IMPORTANT

- **The engagement of the bucket in the rapid coupling must always take place first with the pin (2) and successively with the pin (3).**

- **Release procedure:**

1 - Remove the safety pin (5) after removing the relevant retainer (6).

2 - Slightly raise the bucket from the ground and insert the release lever (9) in the apposite hole in the rapid coupling (1).

3 - Exert a downward pressure with the release lever (9), until the coupling pin (3) disengages from its seat.

4 - Rest the bucket onto the ground and disengage the coupling pin (2) from the bucket, using the bucket control levers.

5 - Insert the safety pin (5) with the relevant retainer (6) in the rapid coupling (1).

6 - Put the release lever (9) in the apposite space inside the cab.

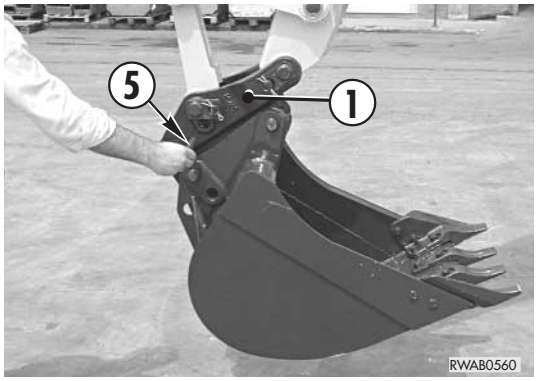

DANGER

- **Be particularly careful when releasing the equipment from the rapid coupling (1).**
  Before definitively releasing the equipment from the rapid coupling (1), make sure that the former is positioned in such a way as to constitute no danger for the operator.
  Non-compliance with these rules may cause serious damage.

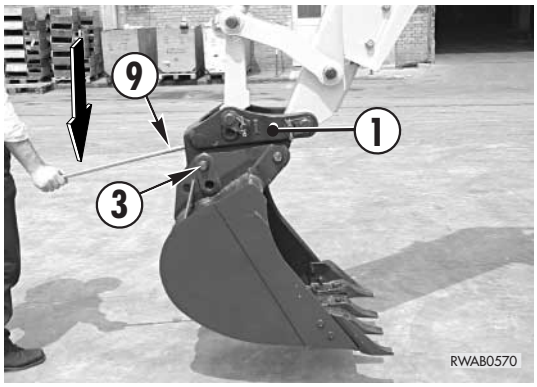

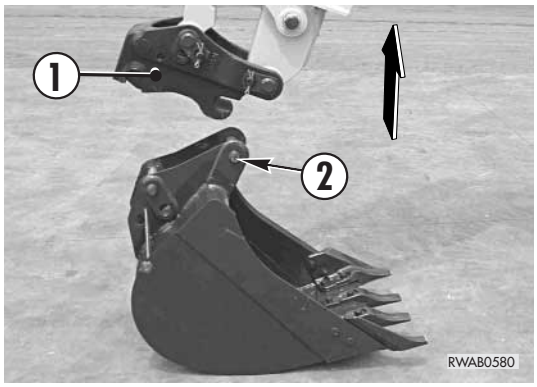

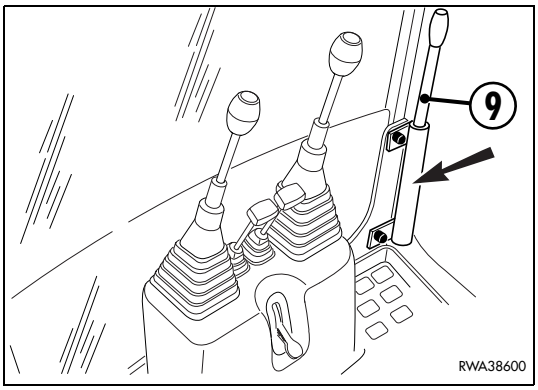

6.12.2 MAINTENANCE

For the various maintenance operations and for the checks to be carried out on the equipment rapid coupling device, see the specific manual provided.

THIS PAGE WAS INTENTIONALLY LEFT EMPTY