https://truckmanualshub.com/

Information and Basic Field Settings for TUCANO 400 - 300

CLAAS

https://truckmanualshub.com/

Content

https://truckmanualshub.com/

Introduction	4
Safety	5
Overview	6
Cab Controls, Layout	8
Cab Controls, CEBIS	14
Service Maintenance	21
Settings	24
Losses	36
EASY Steering	39
Frequent Questions	40
Wet Harvest Recommendations	41
Recommendations	43

Introduction

https://truckmanualshub.com/

This guide has been produced as a reference to operator's training. The aim is to aid operators with familiarisation and settings of CLAAS TUCANO combine harvester.

This guide does not replace the operator's manual. More in depth information is available within the operator's manual.

Your CLAAS combine is designed for output and efficiency but this can only be achieved with the correct operation and maintenance of the machine.

https://truckmanualshub.com/

Make sure you are familiar with the operator's manual before using the machine.

The operator's manual is an integral part of the machine.
It addresses the user and contains safety relevant information.
Only procedures specified in the operator's manual are safe.

Read and observe the operator's manual before starting work.

If you need help understanding the content, contact your local CLAAS Dealer.

https://truckmanualshub.com/

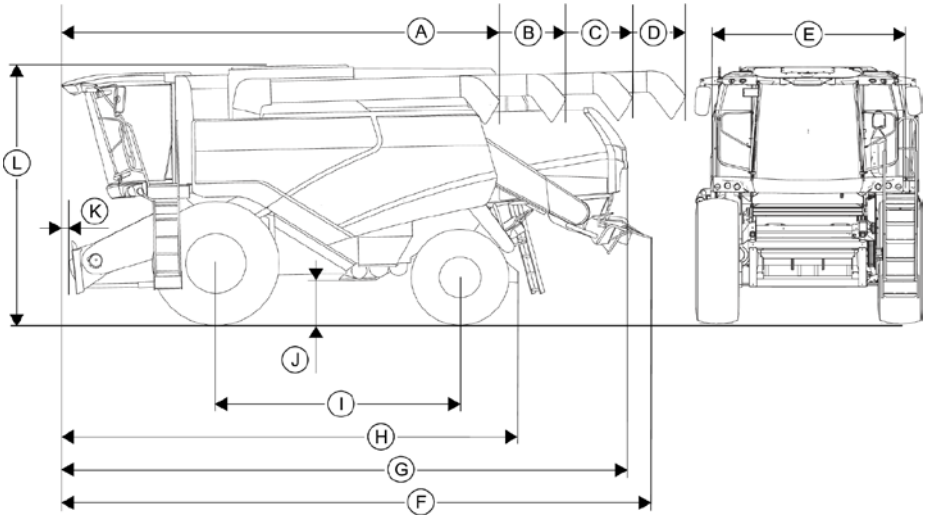

A	Length with short grain tank unloading tube* Applies to: Machine with APS threshing system	7900	mm
A	Length with short grain tank unloading tube* Applies to: Machine with conventional threshing system	7440	mm
B	Length with long grain tank unloading tube* Applies to: Machine with APS threshing system	8825	mm
B	Length with long grain tank unloading tube* Applies to: Machine with conventional threshing system	8365	mm
C	Length with extra long grain tank unloading tube* Applies to: Machine with APS threshing system	9300	mm
C	Length with extra long grain tank unloading tube* Applies to: Machine with conventional threshing system	8840	mm
C	Length with XL grain tank unloading tube* (bolted) Applies to: Machine with APS threshing system	9325	mm
C	Length with XL grain tank unloading tube* (bolted) Applies to: Machine with conventional threshing system	8865	mm
D	Length with XXL grain tank unloading tube* Applies to: Machine with APS threshing system	9932	mm
D	Length with XXL grain tank unloading tube* Applies to: Machine with conventional threshing system	9472	mm

The height was measured with the necessary tyre inflation pressure, on solid ground.

With
650/75 R 32 172A8
and
500/70 R24 164A8
tyres.

https://truckmanualshub.com/

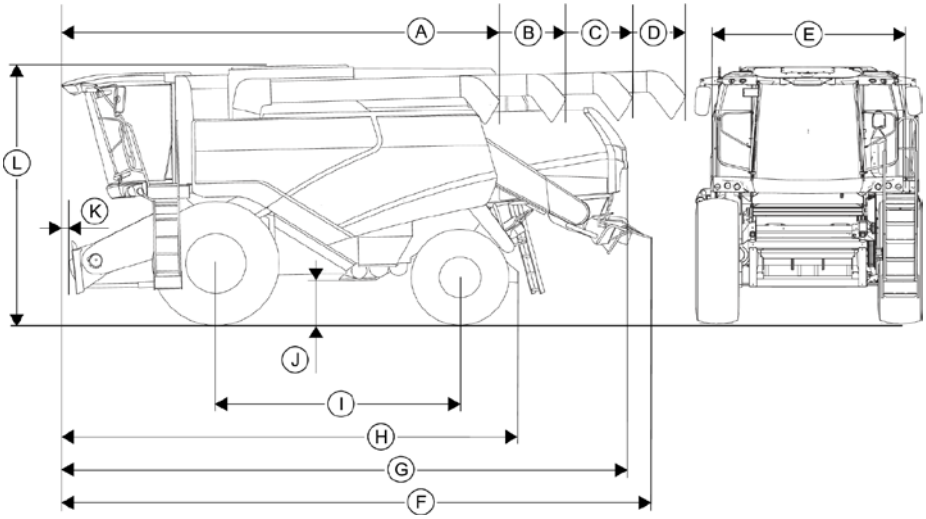

E	Width of machine body without tyres	3000	mm
F	Length with straw chopper protective cover Applies to: Machine with APS threshing system	9067	mm
F	Length with straw chopper protective cover Applies to: Machine with conventional threshing system	8543	mm
G	Length up to tailgate Applies to: Machine with APS threshing system	8845	mm
G	Length up to tailgate Applies to: Machine with conventional threshing system	8385	mm
H	Length up to trailer hitch Applies to: Machine with APS threshing system	6933	mm
H	Length up to trailer hitch Applies to: Machine with conventional threshing system	6463	mm
I	Wheel base Applies to: Machine with APS threshing system	3808	mm
I	Wheel base Applies to: Machine with conventional threshing system	3678	mm
L	Height, with grain tank closed	3965	mm
L	Height, with grain tank open	4912	mm

The height was measured with the necessary tyre inflation pressure, on solid ground.

With
650/75 R 32 172A8
and
500/70 R24 164A8
tyres.

https://truckmanualshub.com/

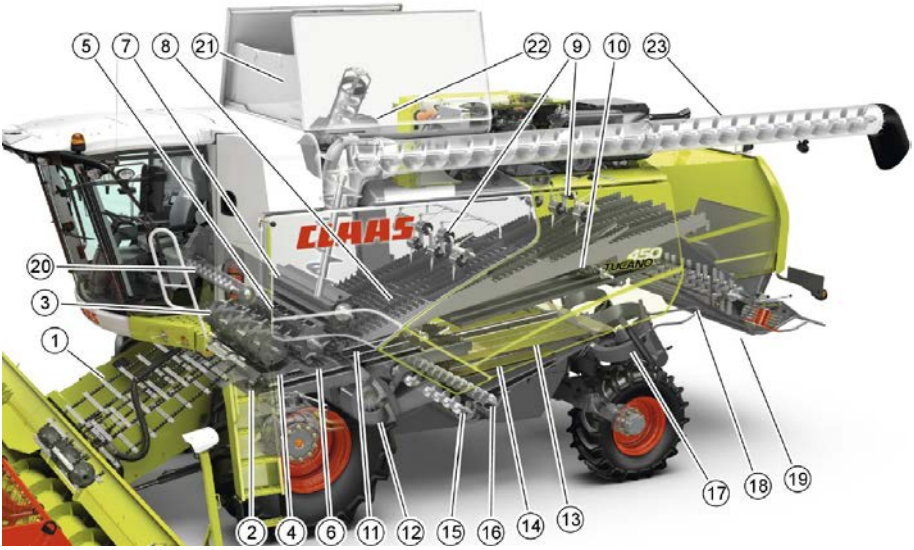

1.	Feeder chains	11.	Preparation floor
2.	Stone trap	12.	Fan
3.	Accelerator drum, applies to machine with APS threshing system	13.	Upper sieve
		14.	Lower sieve
		15.	Grain auger
4.	Preconcave, applies to machine with APS threshing system	16.	Lower returns auger
		17.	Chaff spreader
		18.	Straw chopper
5.	Threshing drum	19.	ACTIVE SPREADER
6.	Main concave	20.	Upper returns auger
7.	Impeller	21.	Grain tank
8.	Straw walker	22.	Grain elevator
9.	Intensive separation system	23.	Grain tank unloading tube
10.	Return pan		

Cab Controls: Layout

1.	CEBIS rotary switch
2.	HOTKEY rotary switch
3.	Main menu rotary switch
4.	Value select rotary switch
5.	ESC button
6.	Information button
7.	Quick access button
8.	Front attachment engagement
9.	Threshing engagement
10.	Front attachment reverser
11.	Left hand rape knife switch
12.	Front attachment cross levelling/ VARIO length adjustment/HOTKEY
13.	LASER PILOT left and right switch
14.	Engine speed switch
15.	Grain tank extension

https://truckmanualshub.com/

1. Hazard warning light
2. Road travel safety switch
3. Fold maize picker if fitted

4. Lighting panel
5. Air conditioner

https://truckmanualshub.com/

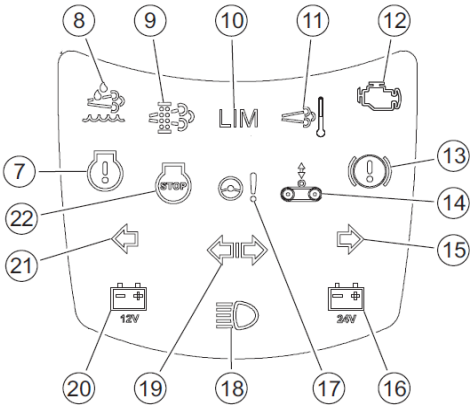

7	Engine fault
8	Urea indicator light. Minimum level
9	No function
10	Engine output reduction
11	No function
12	No function
13	Footbrake indicator light, for MONTANA
14	Rubber track tension, pressure drop in tracs.
15	Turn signal indicator
16	24 V charge light
17	No function
18	Main beam
19	Trailer turn signal indicator
20	12 V charge light
21	Turn signal indicator
22	Engine stop light, serious engine fault

https://truckmanualshub.com/

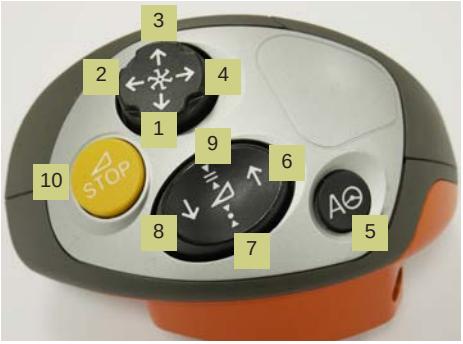

1.	Lower reel
2.	Reel forward
3.	Raise reel
4.	Reel back
5.	AUTOPILOT on
6.	Raise front attachment, slow and fast
7.	Cutting height control
8.	Lower front attachment, slow and fast
9.	Pre-set height
10.	Front attachment stop
11.	Manual cross levelling, HOTKEY adjustment, table in and out
12.	Grain tank unloading
13.	Swing out the unloading tube
14.	Swing in the unloading tube

Notes

https://truckmanualshub.com/

https://truckmanualshub.com/

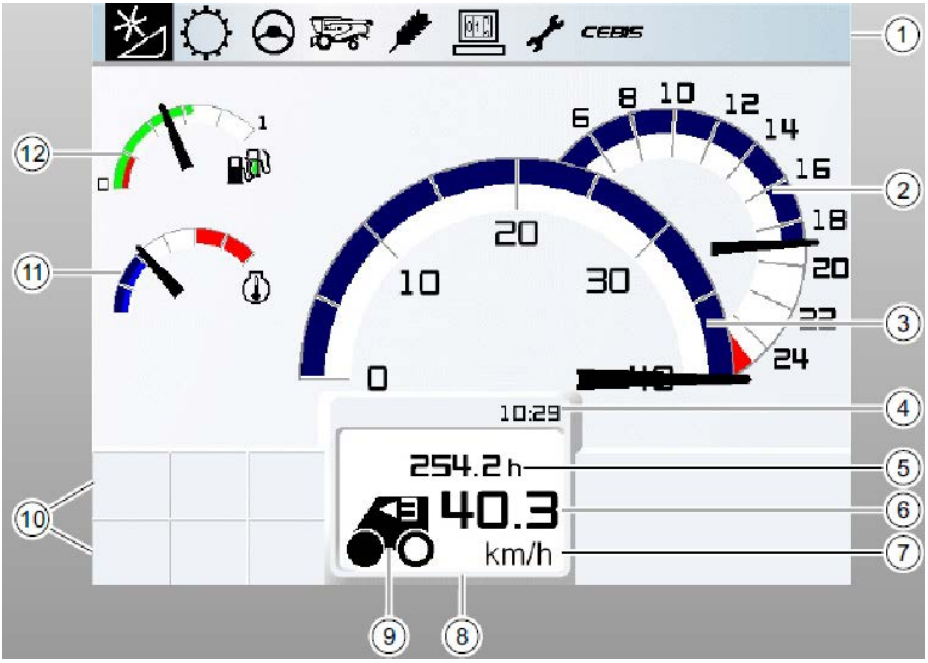

1.	Main menu	8.	Vehicle control display
2.	Engine RPM	9.	Drive status
3.	Speedometer	10.	Message fields
4.	Time	11.	Coolant temperature
5.	Operating hours	12.	Fuel (pointer)/ urea level* (green bar)
6.	Ground speed		
7.	Ground speed units		

*Engine HP is reduced if urea tank is below 20%

https://truckmanualshub.com/

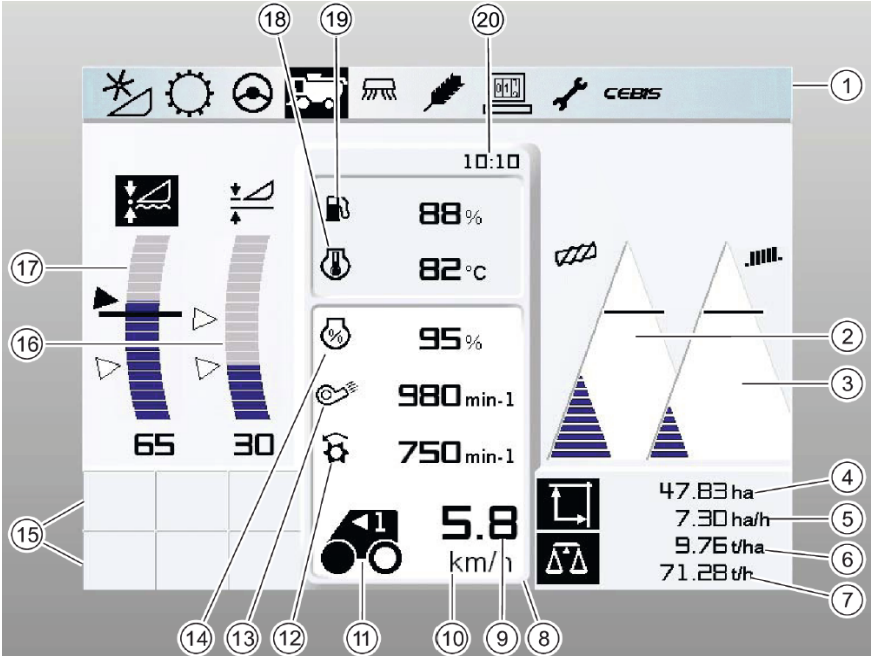

1.	Main menu	12.	Variable
2.	Separation throughout monitor	13.	Variable
3.	Cleaning throughout monitor	14.	Variable
4.	Area counter	15.	Message fields
5.	Surface output	16.	Cutting height pre-selection
6.	Yield	17.	Cutting height control
7.	Yield output	18.	Variable
8.	Harvest display central window	19.	Variable
9.	Ground speed	20.	Time
10.	Ground speed unit		
11.	Drive status		

https://truckmanualshub.com/

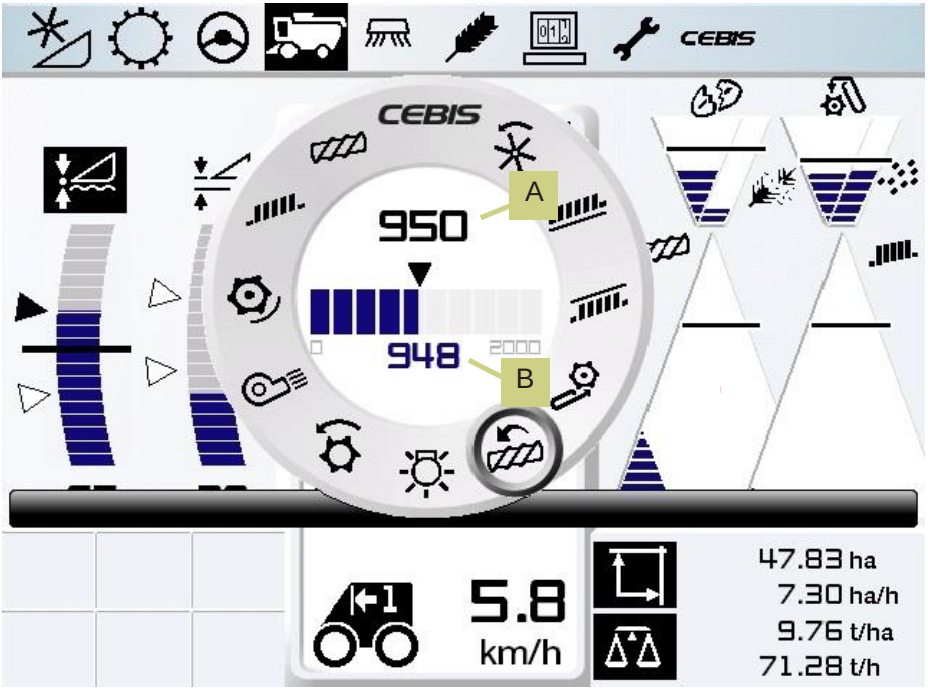

Using the CEBIS rotary switch (1) the combine settings can be adjusted. The picture shows the operating settings that can be adjusted. To navigate through the settings turn the CEBIS rotary switch (1).

Inside the CEBIS display there are two large numbers, the top number (A) shows the desired value and the lower number (B) shows the actual value.

To adjust the value turn switch (3) left or right to increase or decrease, after the required setting is completed turn the CEBIS rotary switch (1) back to the CEBIS icon on the display screen (12 o'clock).

https://truckmanualshub.com/

The HOTKEY (2) is used to adjust the more frequently changing settings on the combine for example all AUTOCONTOUR settings.

To adjust any of the HOTKEY values turn the rotary switch (2) and the HOTKEY dial will appear on CEBIS which is shown in the picture below. Turn the dial to select the required icon to make any adjustments.

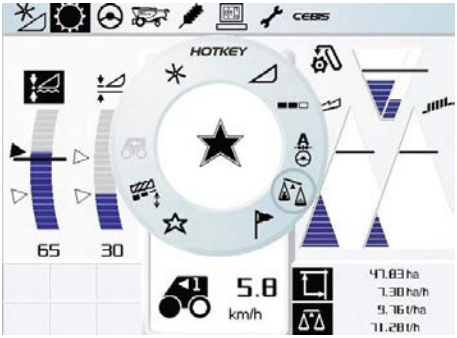

After 2 seconds the HOTKEY dial will disappear from CEBIS and the settings will be displayed in the window shown below. To change the HOTKEY setting value turn switch (4) either left or right to either increase or decrease the value.

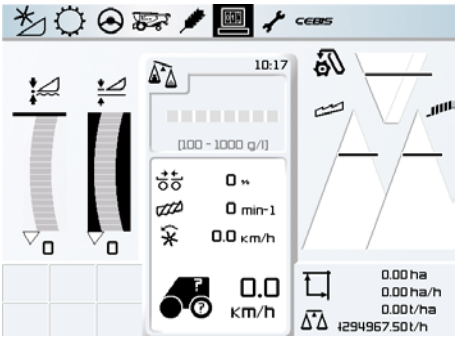

To remove the adjusted settings from the window turn the HOTKEY switch (2) back to the CEBIS (12 o'clock) position and the previous screen will be displayed.

https://truckmanualshub.com/

Exits the menu and returns to CEBIS

Manual reel speed adjustment

Top sieve adjustment

Bottom sieve adjustment

Front attachment speed adjustment (if fitted)

Rotor speed adjustment

CEBIS screen brightness adjustment

Drum speed adjustment

Fan speed adjustment

Concave clearance adjustment

Cleaning performance monitor adjustment (sieve loss)

Separation performance monitor adjustments (walker loss)

https://truckmanualshub.com/

Cutting height, VARIO length, end snapping plate adjustment

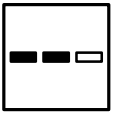

Partial working width adjustment

LASER PILOT adjustment

Hectolitre weight adjustment

Flagging function for yield mapping

Favourite crop settings

Automatic reel speed, reel height, reel fore & aft position

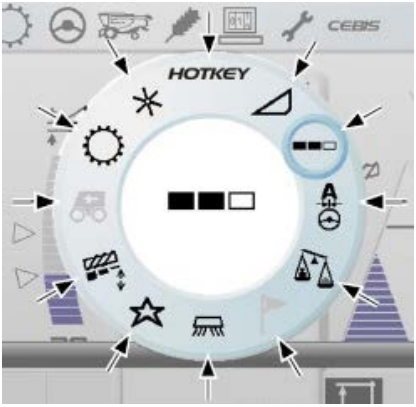

https://truckmanualshub.com/

To navigate through the CEBIS menu turn the switch (3) shown below and the different icons at the top of the CEBIS screen will be highlighted in black (8).

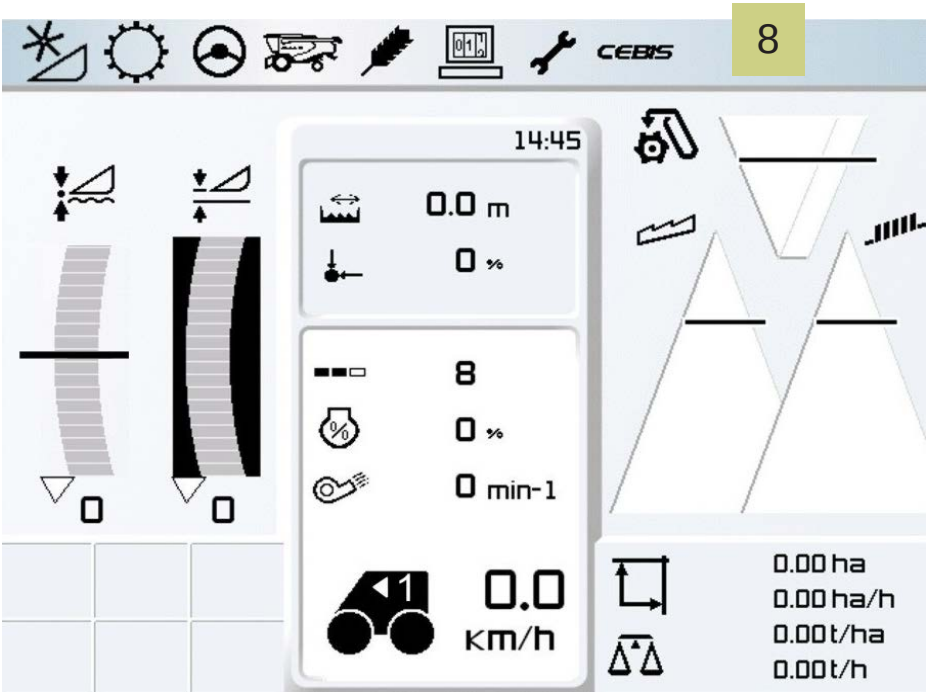

When the desired menu is highlighted push switch (3) to enter it, within any menu turn switch (3) to select the required section and push it to enter it. If a value needs to be changed within a menu push the switch (3) to display the + - signs and turn the switch the correct value and push it again to enter and save the value.

To exit any of the menu within CEBIS use the ESC button (5), this will return the screen back to the previous menu.

https://truckmanualshub.com/

When carrying out any service operation make sure that the correct procedures are followed. See operator's manual chapter 9.1 for the complete service requirements. In CEBIS there is also a quick guide to the service requirements.

Grease the appropriate grease points as per the operator's manual, it is recommended to grease the rotor bearings every day.

TIP. When blowing down the whole combine taking extra care in the following areas

- Engine
- Gearbox
- Cooling pack
- Stone trap
- Prep trays

https://truckmanualshub.com/

1

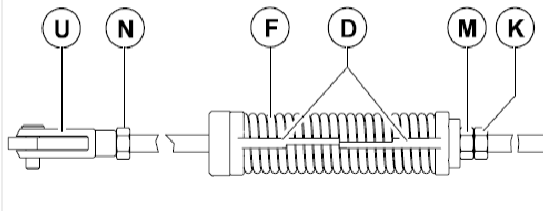

1. End to end guides
Correct tension is achieved when the ends of “D” are end to end. To tension the belt, slacken nut K from M and wind M in a clockwise direction until the ends of D meet then lock nuts M and K. If the belt needs removing please consult drives section of the operator’s manual.

2

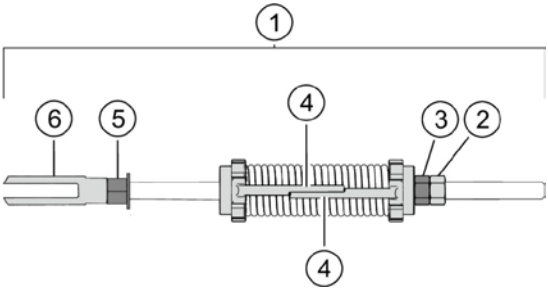

2. Centre to centre guides
They work in exactly the same way as the end to end tensioners except the belt is at the correct tension when the tabs overlap the full length of the recessed part of the tabs.

3

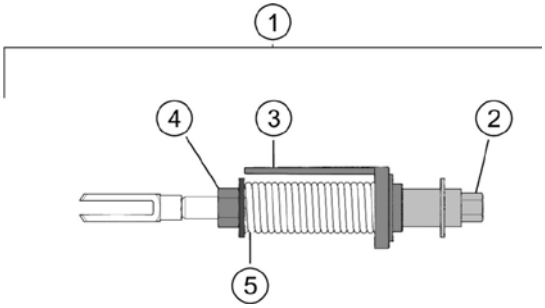

3. Gauge rod type
Under the correct tension the gauge 3, should be in line with the end of the spring. To tension slacken nut 4, tighten nut 2 until the gauge meets the end of the spring. Lock off nut 4.

https://truckmanualshub.com/

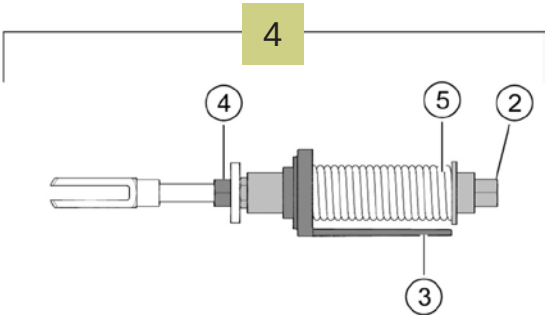

4. Gauge rod type
Under the correct tension the gauge 3, should be in line with the end of the spring. To tension slacken nut 4, tighten nut 2 until the gauge meets the end of the spring. Lock off nut 4.

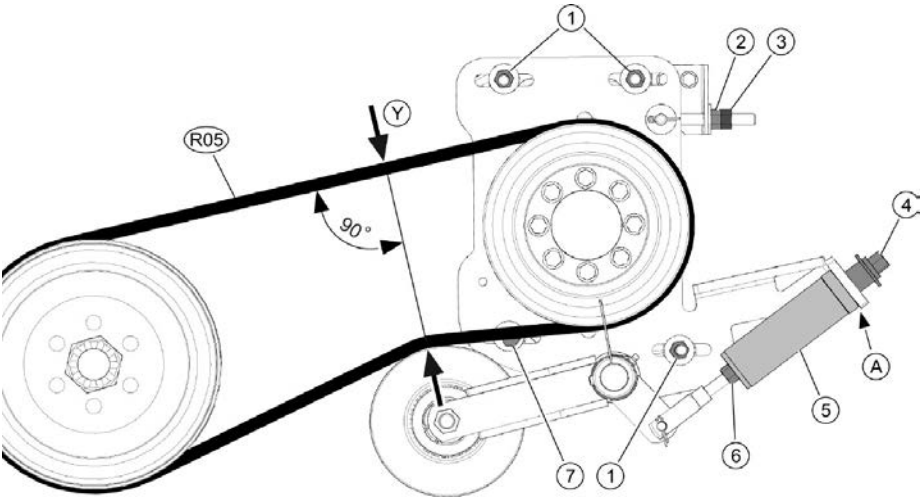

Pump drive belt tension is done with a gold tube type tensioner. Check distance Y is 205mm if it is loose then adjust as follows.

Slacken off nut 6, slacken off 4, tighten nut 6 until the tube makes contact at position A. The tube must just be able to rotate. Tighten 4 to lock nut 6.

https://truckmanualshub.com/

To allow the machine to display accurate information certain parameters need to be learnt either on a daily or seasonal basis.

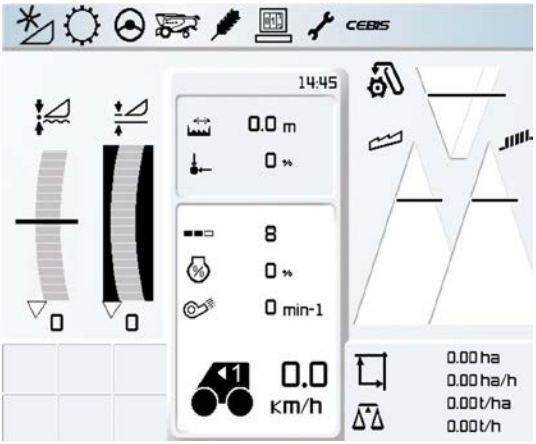

Daily zeroing
This should be carried out with the machine running with threshing engaged at maximum no load speed. The following items should be zeroed on a daily basis:

1. Set 'Zero returns'

2. Set 'Zero yield'

https://truckmanualshub.com/

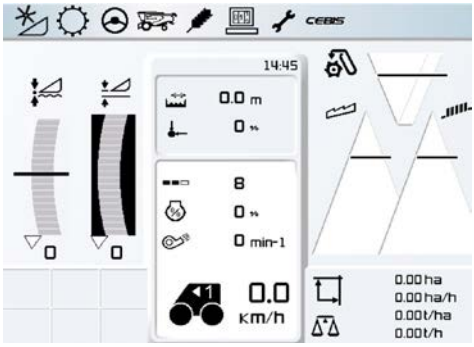

1. Learn the AUTOCONTOUR end stops at the start of the season.

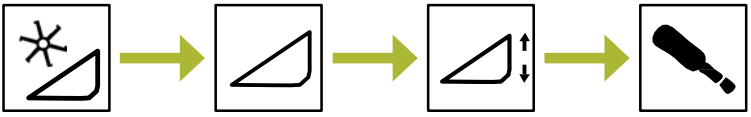

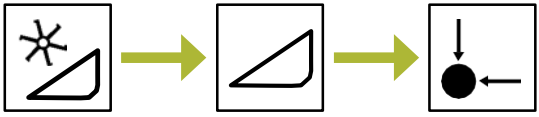

TIP. Learn the working position of the cutterbar within CEBIS.

This may also need to be changed when combining different crops.

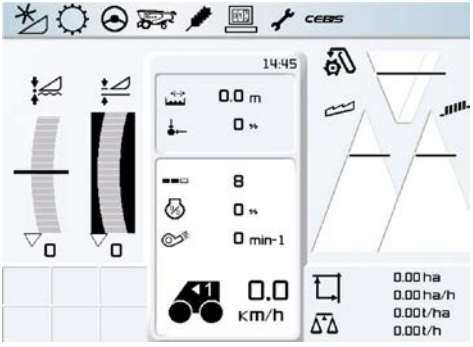

2. At the start of each crop make sure you have selected the correct crop type, or your personal crop settings.

https://truckmanualshub.com/

The cutterbar is one of the most important parts of the combine harvester. It is designed to cut and gather the crop from the field.

Dividers
The first part of the cutterbar to make contact with the crop are the dividers. There are two types, a standard and a long divider.

TIP. To make the crop lie down before the auger to aid the feed into the centre of the cutterbar, move the table in or out.

TIP. Make sure that the height of the divider is set so it does not run on the ground. Set the height the same as the stubble.

Lifters
It is recommended that lifters should be fitted to CLAAS cutterbars. The lifters should be fitted by placing the first one on the fifth finger from the RHS of the cutterbar and then on every fourth one thereafter.

TIP. Check the lifters everyday, if they are loose or bent remove and replace them.

https://truckmanualshub.com/

Check that the knife is in good condition in order for it to work effectively. This involves replacing damaged or broken sections.

TIP. Remove any knife play by adjusting the keeps, and make sure that the fingers are not rounded or bent. A cleaner cutting knife will reduce stress on the knife drive.

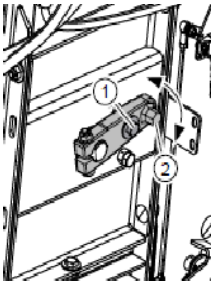

Table Auger
The table auger is important for the transportation of material to the front elevator.

The timing of the retractable fingers can be adjusted for different crops by opening up the guard on the RHS of the cutterbar and adjusting the lever with a spanner. Use the top holes for short crops and the lower holes for tall crops. The third hole from bottom is the standard setting.

Crop Wrapping
If an issue occurs with crop wrapping around the table auger in difficult conditions, there are a number of procedures that can be carried out; try one thing at a time.

Adjust the stripper plates behind the auger.

There is a second scraper under the auger that can be accessed over the top of the auger.

https://truckmanualshub.com/

TIP. Check the height of the auger within the trough of the cutterbar. There should be a minimum gap of 20mm between the trough and the auger flights.

TIP. Remove the intermediate retractable fingers along the length of the auger leaving just the middle ones.

TIP. In exceptional wrapping conditions, the speed of the auger can be slowed by optional sprockets on the chain drive shaft.

The skids underneath the cutterbar should be set to suit the local conditions.

TIP. Lift the skids as high as possible to get as much movement for the sensor bands.

https://truckmanualshub.com/

Both the side knife and the divider use the new fork locating and locking device.

For the side knife simply slide into the lock and turn the handle to lock in place. Make sure the lever has locked into the locking device.

The side knife is easily attached with a simple twist lock turnbuckle.

TIP. When fitting the side knife make sure that the cradle is tight to the underside of the tube.

Once the side knife is fitted and locked, all that is required is for two hydraulic pipes to be connected to the quick release couplings on the side of the cutterbar.

TIP. Make sure the cutterbar VARIO table is pushed out to the mark on the side of the cutterbar before fitting the knife.

TIP. There is no need for a link pipe to be connected when the side knife is removed.

https://truckmanualshub.com/

De-awning
On machines with APS, de-awning can be carried by out operating the lever by the right hand front wheel of the machine, which in turn closes or opens a set of plates under the APS concave. This gives the crop an extra 'rub' which in turn threshes it harder.

On Standard threshing machines disowning plates can be fitted in between the 1st and 2nd concave bars.

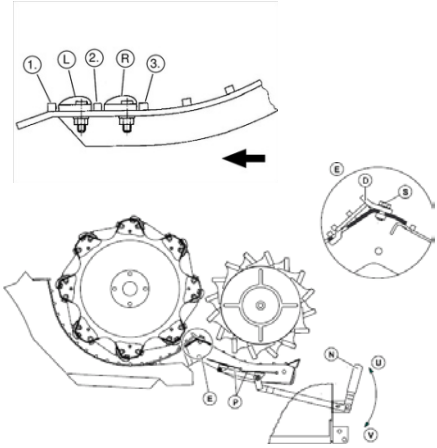

TIP. Only engage these plates if it is necessary. Try other settings first.

TIP. The threshing segment should only be fitted in hard to thresh crops. Don't forget you have fitted them.

More detailed information can be found in chapter 7.9 of the operators manual.

Stone trap
The stone trap is situated between the front elevator and the APS concave. It is important that the stone trap is emptied on a daily basis to allow for foreign objects to be expelled before they enter the drum.

https://truckmanualshub.com/

To obtain initial settings it is recommended that the ‘CLAAS settings’ are loaded through CEBIS, these are to only be used as a starting point, then adjustments should be made from there.

TIP. Only make one adjustment at a time.

TIP. Only do just enough threshing, over threshing causes overloading of the sieves and uses power unnecessarily.

TIP. It is recommended that the drum speed is adjusted by 100rpm at a time.

The prime objective here is to remove the maximum amount of seed with the minimum of damage to seed and straw. Over-threshing cracks grains, produces more chaff and uses more power.

It is imperative for the performance of the machine that the concaves are kept clean.

https://truckmanualshub.com/

The preparation pan (1) is the first part of the cleaning system that the grain will come into contact with. Its function is to separate the grain and the chaff. The grain is heavier and therefore goes to the bottom, the lighter chaff goes to the top. It is important that this is kept clean, to allow this to happen effectively. A dirty preparation pan will cause a poor sample and reduce output.

TIP. Clean the preparation trays daily, this will help keeping a clean sample.

TIP. When removing the prep trays for cleaning, blow off the top of the gear box area to remove any chaff and dust.

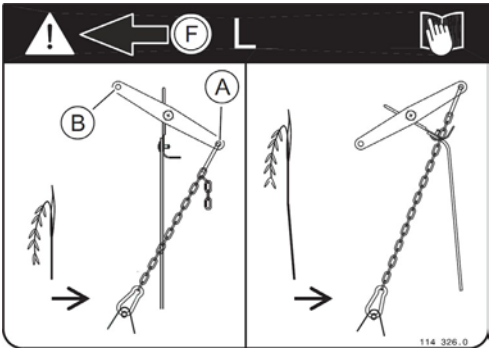

TIP. Don’t forget the deflector curtain behind the impeller. Adjust it up in longer straw and where there is any green straw.

https://truckmanualshub.com/

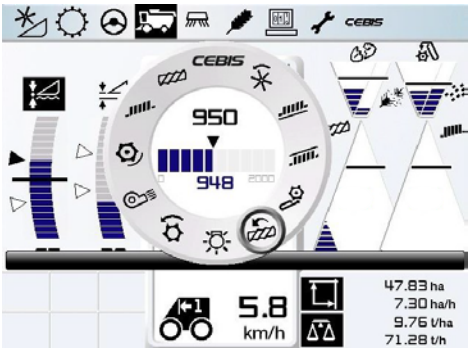

The fan speed is shown on the CEBIS screen. The speed range of the fan is 750rpm – 1600rpm.

With the standard cleaning on the TUCANO machines there are two other adjustments.

- The wind board
- The wind throttle

TIP. Only make adjustments of 50rpm at a time.

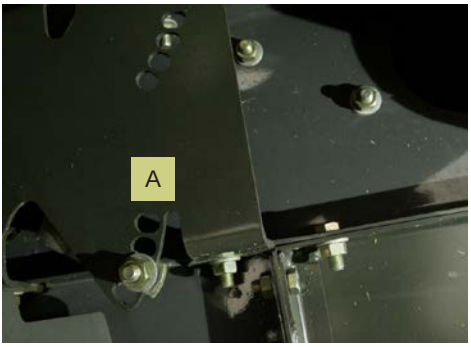

Wind board adjustment loosen nut (A) and adjust. Towards the rear of the machine more steeper the angle for the air. Do the same to both sides of the machine.

Use these two settings with the fan speed.

TIP. Steeper angle for heavier crops and a lesser angle for light crops.

TIP. Open the wind throttle for heavier crops and shut it for lighter crops.

Approximately 90% of the grain needs to be separated from the straw by the time the crop leaves the drum. This means that the remaining 10% has to be separated by the walkers.

https://truckmanualshub.com/

Grain Tank

- Pieces of straw
  1. Increase fan speed
  2. Open concave
  3. Reduce drum speed
  4. Close both sieves
- Unthreshed heads
  1. Close the lower sieve
  2. Increase the drum speed
  3. Close the concave
- Broken grains
  1. Reduce the drum speed

Sieve box

- High sieve losses
  1. Open upper sieve
  2. Reduce forward speed

Walkers

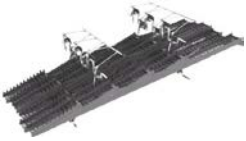

- High walker losses
  1. Close the concave
  2. Increase drum speed
  3. Slow down

Notes

https://truckmanualshub.com/

https://truckmanualshub.com/

When deciding what to adjust on the combine to reduce the amount of loss it is important to understand where the loss is coming from and what is acceptable.

At the front of the machine -

- Is the loss happening before or after the cutterbar?
- If before, it is not cutterbar related.

TIP. Adjust the reel position or check the knife for damage or wear.

TIP. Fit lifters to lift any laid crop.

At the rear of the combine -

- Are the losses acceptable?
- Are they coming from the sieves and/or walkers?

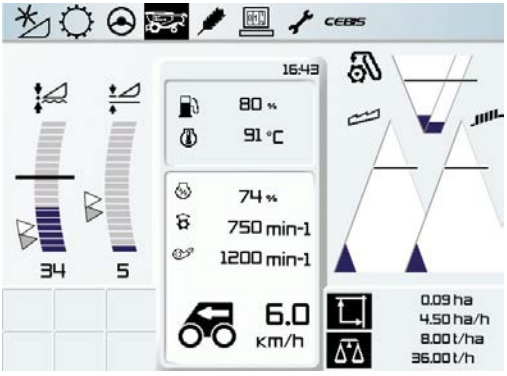

TIP. Always check the losses behind the combine after making an adjustment and then set up the monitors to show what is happening.

TIP. In the CEBIS screen there is a guide. There is also a free app, CEMOS Advisor. This will give you another tool to set up the combine and take out the guess work.

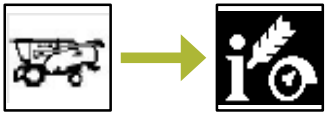

https://truckmanualshub.com/

Where are the losses coming from?
To work out what is coming from the rotors engage the chaff spreader and carry out a check behind the combine, count the grains on the floor.

To check the losses from the sieves disengage the chaff spreader and engage the chopper and spread this as wide as possible and then count the grains.

Take into account what the grains look like, unthreshed heads etc. Now make the corresponding adjustments.

TIP. The easiest way to check for losses is in the swath with the chaff spreader and chopper disengaged.

TIP. Count the number of grains within your hand print. 1 grain per foot of cutterbar is close to 1% loss.

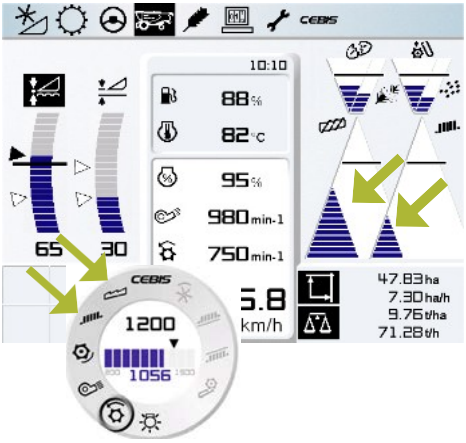

After adjusting the combine make sure that the monitors also reflect what you will accept as a loss. Adjust monitor sensitivity so that the blue area is approaching the limit lines, the black line.

Losses

Straw

- Grains in the ears
  1. Increase drum speed
  2. Close the concave
- Poor straw quality
  1. Open the concave
  2. Reduce drum speed

Returns

- Unthreshed heads
  1. Increase drum speed
  2. Close the concave
- Pieces of straw
  1. Increase fan speed
  2. Open the concave
  3. Close the upper sleeve
- Threshed grains in the returns
  1. Open the lower sieve
- Other grains
  1. Increase the fan speed
- Returns below 30%
  1. Close the lower sieve/ open the upper sieve
- Returns above 30%
  1. Close the lower sieve/ open the upper sieve

Returns-quantity and quality of grains OK

https://truckmanualshub.com/

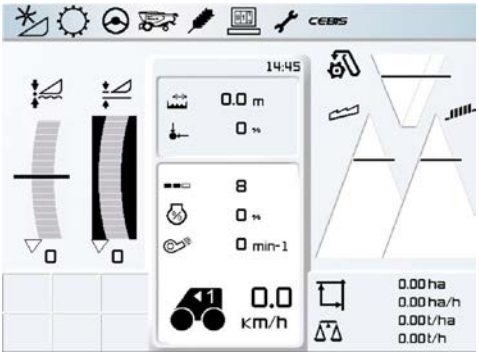

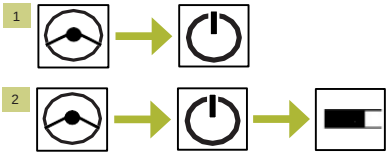

To activate LASER PILOT make sure it is turned on in CEBIS (1) and that LASER PILOT is selected (2).

Line up with the crop edge before pressing the AUTOPILOT button on the joystick.

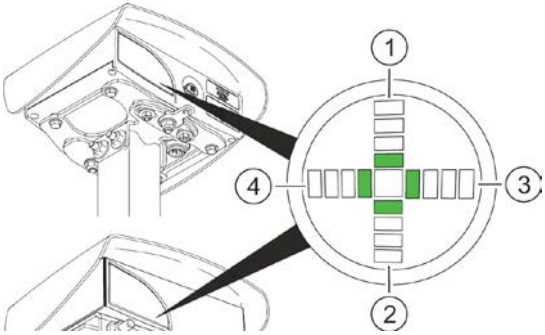

To set up the LASER PILOT, make sure the combine has a straight edge and is lined up with the crop.

With the engine running, threshing engaged the LEDs on the back of the LASER PILOT should all be in the middle.

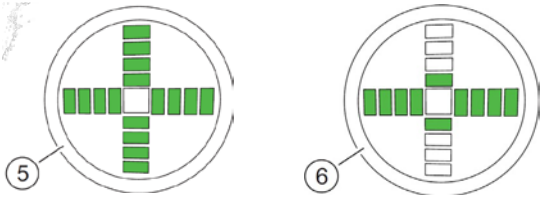

If the LEDs are up to
1 - too high
2- too low
3- too far right
4 - too far left
To adjust the LASER PILOT you only need the panel spanner.

TIP. If the LASER PILOT is not steering straight ahead, check the adjustments in the HOTKEY first.

TIP. Check the back of the LASER PILOT.
- 5 - adjust up or down and left or right, or clean glass.
- 6 - no crop edge, adjust left or right.

https://truckmanualshub.com/

Threshing won't engage and none of the hydraulics are working.
Check that the road travel switch is not engaged.

Threshing has engaged but the engine will not go to full rpm when the engine speed dial is turned.
Check that the combine is not in 3rd gear.

Getting a poor sample in Oilseed Rape.
Check that the preparation floor is clean.

The machine will not change gear.
Make sure that the multifunction lever is in its neutral position and both the footbrake pedals are applied, then briefly press the gear rocker switch once to select a gear.

The machine goes off course when AUTOPILOT is engaged.
Make sure that the LASER PILOT is set up correctly.

The machine is lacking performance.
What are the settings in CEBIS, what are the crop and field conditions.
Make sure that threshing segment is removed from the main concave and that the crop is not being over threshed.
When chopping check that the fine chop step is not engaged and the stationary knives are backed off.

https://truckmanualshub.com/

In wet and laid crops
It is even more important to get a good cut and feed into the combine. Check the knife and fingers regularly, paying particular attention to the knife to finger gap.

To pick up laid crops
The skids under the bar must be raised into their highest position. This will also reduce the amount of soil sticking to the underside of the cutterbar.

Do not try to go too low with the cutterbar in laid crops
You only need to place the point of the lifter on the ground. If you go too low, the point of the lifter will lift and hold the crop down.

Soil and foreign objects
These are more likely to enter the combine in a wet harvest, it is vital that the stone trap be emptied at least daily. The worse the conditions, the more frequently this should be done.

Emptying the stone trap
Check that the APS concaves are clean. To do this, simply open the concave to 50mm before switching off and emptying the stone trap.

Under the concave is the preparation pan
This will become dirty as wet grain and soil passes over it. The dirtier it becomes, the less effective it will be, and hence, the dirtier the sample will become. With wet grain it is important to try to keep to a cleaner sample than normal, as you then waste less fuel drying chaff etc.

If the preparation pan is dirty
This is your first indication that further cleaning inside the combine may well be required. When cleaning the rest of the combine, follow the path of grain through the machine, and open covers as you come to them.

https://truckmanualshub.com/

When unloading wet grain
Reduce the flow into the unloading auger by shutting down the slides on both the cross augers in the grain tank. This will reduce the load on the unloading system, bringing it down to a ‘normal’ level.

If wet and dirty grain is being unloaded
It is also likely that dirt will build up in the turret auger. This can and should be checked regularly through the inspection doors, and cleaned if required.

If the shear bolt on the unloading drive fails
This is often the first sign that either the slides in the tank are too high, or there is too much dirt in the system, check auger timing.

Chopping wet straw
This adds an extra load to the chopper drive. Regularly check the tension of the drive belts and the blade condition. Do not forget the 2 ‘stops’ at either end of the main tensioner.

Chopper blade wear
This can be accelerated when chopping wet straw due to the increased levels of soil in it. Check the condition of the blades regularly. Do not forget to check the stationary blades.

In wet conditions
It is possible for material to stick to the return floor under the walkers. This then impedes the flow of grain back to the preparation pan and affects the sample. Check the pan regularly and clean as required.

https://truckmanualshub.com/

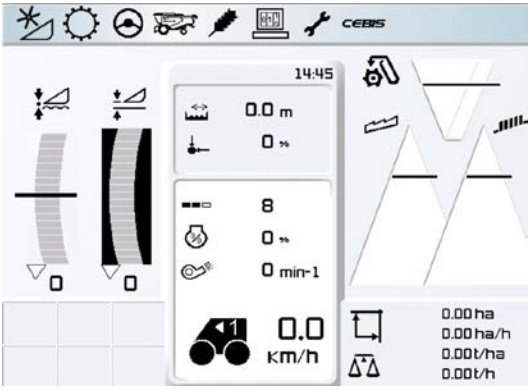

Seasonal calibration
At the beginning of the season before the combine is used, it is advised that the following items are learnt:

1.Learn AUTOCONTOUR limits (1), VARIO (2) and reel (3) ‘end stops’ in the cutterbar section of CEBIS.

2.With threshing and cutterbar engaged and the machine running at full throttle, learn the ‘Max no-load speed’ (4).

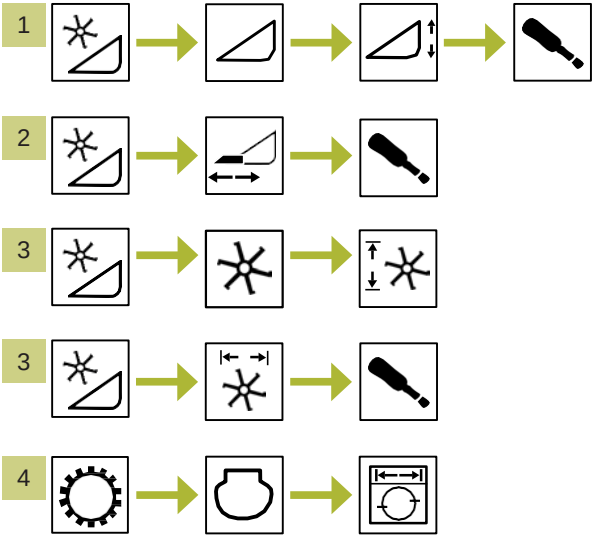

To see the end of season video, follow the QR code for the link.

https://truckmanualshub.com/

CLAAS Telematics

CLAAS CEMOS Advisor

CLAAS U.K. Ltd
Saxham
Bury St. Edmunds
Suffolk
IP28 6QZ

Tel: 01284 763100
Fax: 01284 769839

www.claas.co.uk

© 2018 All Rights Reserved by CLAAS