https://truckmanualshub.com/

TEREX

DIGGER DERRICK

OPERATOR'S MANUAL

This Operator's Manual MUST BE READ prior to operating your Telescoping Material Handling DIGGER DERRICK

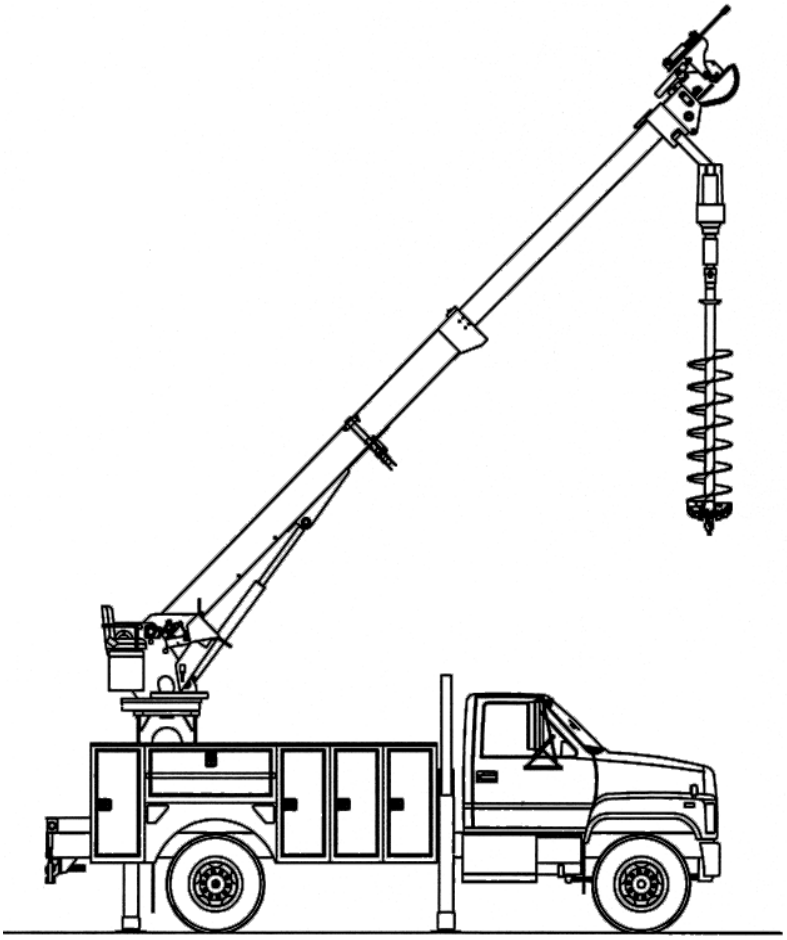

PRINTED IN THE USA
Original Instructions in English

Terex South Dakota, Inc. **463280 09/2014**

https://truckmanualshub.com/

Terex South Dakota, Inc.
500 Oakwood Road
Watertown, SD 57201

TEREX

https://truckmanualshub.com/

TABLE OF CONTENTS

INTRODUCTION . . . . . - I
OWNERS, USERS AND OPERATORS . . . . . - I
PRODUCT IDENTIFICATION . . . . . - I
INTENDED USE . . . . . - I
BULLETIN DISTRIBUTION AND COMPLIANCE . . . . . - II
CONTACTING THE MANUFACTURER . . . . . - II
TRANSFER OF MACHINE OWNERSHIP . . . . . - II
SAFETY . . . . . - III
HAZARD CLASSIFICATION SYSTEM . . . . . - III
PROPERTY DAMAGE MESSAGES . . . . . - III
GENERAL SAFETY GUIDELINES . . . . . - V
BEFORE OPERATION . . . . . - VI
DURING OPERATION . . . . . - VII
BOOM AND LIFTING OPERATIONS . . . . . - VII
DIGGING . . . . . - VIII
OPERATION WITH PERSONNEL PLATFORM ATTACHED . . . . . - IX
ELECTRICAL DANGERS . . . . . - X
ACCESSORIES . . . . . - XI
TRAVELING . . . . . - XI
MAINTENANCE . . . . . - XII
OVERVIEW OF POTENTIAL HAZARDS . . . . . - XIII
SAFETY RELATED DECALS . . . . . - XV
WHAT IS INSULATED AND NOT INSULATED . . . . . - XXVII
UPPER BOOM RATING . . . . . - XXVIII
VOLTAGE RATINGS . . . . . - XXVIII

SECTION 1 . . . . . 1 - 1
OPERATION GUIDELINES . . . . . 1 - 1
NOMENCLATURE . . . . . 1 - 1
CAB CONTROL OPERATION . . . . . 1 - 2
MASTER CONTROL . . . . . 1 - 2
POWER TAKE-OFF (OPTIONAL) . . . . . 1 - 2
CAB CONTROL FUNCTIONS . . . . . 1 - 2
OPERATOR CONTROLS AND DESCRIPTIONS . . . . . 1 - 3
MAIN DIGGER DERRICK CONTROL FUNCTIONS . . . . . 1 - 5
SINGLE STICK FUNCTIONS (IF EQUIPPED) . . . . . 1 - 9
CONTROLS BELOW ROTATION . . . . . 1 - 10
CONTROLS BELOW ROTATION FUNCTIONS . . . . . 1 - 11
PERSONNEL AND TRAINING . . . . . 1 - 12
PRE-OPERATION . . . . . 1 - 14
DAILY PRE-OPERATION CHECKS . . . . . 1 - 14
JOB SITE SURVEY . . . . . 1 - 18
OPERATING TEMPERATURE RANGE . . . . . 1 - 19
WIND SPEED . . . . . 1 - 19
JOB SITE SETUP . . . . . 1 - 20
SETTING UP ON A SLOPE . . . . . 1 - 22
SETTING UP ON A SOFT SURFACE . . . . . 1 - 23
SETTING UP FOR OPERATION ON SNOW AND ICE . . . . . 1 - 23
OUTRIGGER / UNIT CONTROL SELECTOR . . . . . 1 - 23
OUTRIGGER INTERLOCK . . . . . 1 - 24

https://truckmanualshub.com/

STABILITY . . . . . 1 - 24
DIGGER DERRICK OPERATION . . . . . 1 - 25
LOAD CHART . . . . . 1 - 27
INSTALLED OPTIONS . . . . . 1 - 28
READING THE LOAD CAPACITY CHART . . . . . 1 - 29
LOAD LINE . . . . . 1 - 29
LIFTING AND BOOM SECTIONS . . . . . 1 - 31
ROTATION . . . . . 1 - 31
LIFT CYLINDER CAPACITY . . . . . 1 - 31
INTERMEDIATE SECTION (SECOND SECTION) . . . . . 1 - 32
HYDRAULIC UPPER BOOM (FIBERGLASS THIRD SECTION) . . . . . 1 - 32
TRANSFERABLE POLE GUIDE (OPTIONAL) . . . . . 1 - 33
WINCHES . . . . . 1 - 34
TURNTABLE WINCH . . . . . 1 - 34
BOOM TIP WINCH . . . . . 1 - 34
WINCH LINE . . . . . 1 - 35
ELECTROCUTION HAZARD . . . . . 1 - 36
STRINGING THE WINCH LINE . . . . . 1 - 36
OPERATING THE WINCH . . . . . 1 - 37
DIGGING OPERATIONS . . . . . 1 - 38
LOWERING THE DIGGER/AUGER . . . . . 1 - 38
CHANGING AUGERS . . . . . 1 - 39
DIGGING POLE HOLES . . . . . 1 - 40
DIGGING IN ROCKY CONDITIONS . . . . . 1 - 41
DIGGING IN FROST OR HARD PAN . . . . . 1 - 42
DIGGING DEEP HOLES . . . . . 1 - 42
DIGGING ANCHOR HOLES . . . . . 1 - 43
SETTING SCREW ANCHORS . . . . . 1 - 44
STORING DIGGER/AUGER . . . . . 1 - 44
HANDLING AND SETTING POLES . . . . . 1 - 45
ELECTROCUTION HAZARD . . . . . 1 - 45
HYDRAULIC TILT POLE PLUMMER (OPTIONAL) . . . . . 1 - 49
HYDRAULIC TILT POLE GUIDE TRANSFERABLE (OPTIONAL) . . . . . 1 - 50
POLE GUIDE INTERLOCK . . . . . 1 - 50
RECOMMENDED USE OF HYDRAULIC TAMP . . . . . 1 - 51
RECOMMENDED PROCEDURE FOR REMOVING POLES . . . . . 1 - 52
(ZONE A ONLY) . . . . . 1 - 52
HYDRAULIC POLE PULLER . . . . . 1 - 53
AERIAL OPERATION . . . . . 1 - 55
LIFT LOCK CONTROL HANDLE . . . . . 1 - 55
AERIAL PLATFORM OPERATION . . . . . 1 - 56
WORKING ON OR NEAR ENERGIZED CONDUCTORS . . . . . 1 - 56
AERIAL PLATFORMS (OPTIONAL) . . . . . 1 - 59
AERIAL PLATFORM AND BRACKET INSTALLATION . . . . . 1 - 60
FULL PRESSURE HYDRAULIC TOP CONTROLS . . . . . 1 - 62
EXTENDING AND STORING FULL PRESSURE TOP CONTROLS . . . . . 1 - 62
UPPER CONTROL SELECTOR AT LOWER CONTROLS (OPTION VALVE) . . . . . 1 - 63
TOP CONTROLS FUNCTIONS . . . . . 1 - 64
AUXILIARY PLATFORM . . . . . 1 - 66
EMERGENCY OPERATION . . . . . 1 - 66
POWER LINE CONTACT ON GROUND . . . . . 1 - 66
CONTROL SELECTOR (EQUIPPED WITH UPPER CONTROLS) . . . . . 1 - 68

https://truckmanualshub.com/

MANUAL ROTATION (WORM DRIVE ROTATION) . . . . . 1 - 68
AUXILIARY LET DOWN POWER (OPTIONAL) . . . . . 1 - 68
HYDRAULIC LINE FAILURE . . . . . 1 - 69
ENGINE FAILURE . . . . . 1 - 70
HYDRAULIC PUMP FAILURE . . . . . 1 - 70
CONTROL VALVE FAILURE . . . . . 1 - 71
FALL PROTECTION . . . . . 1 - 71
RESPONSE TO A FALL . . . . . 1 - 71
JIB INSTALLATION AND REMOVAL . . . . . 1 - 72
TILTING AND EXTENDING JIB . . . . . 1 - 76
LEAVING THE JOB SITE . . . . . 1 - 77

SECTION 2 . . . . . 2 - 1
MAINTENANCE GUIDELINES . . . . . 2 - 1
PREVENTATIVE MAINTENANCE . . . . . 2 - 1
MAINTENANCE PROCEDURE . . . . . 2 - 1
ADJUSTMENTS AND REPAIRS . . . . . 2 - 1
LUBRICATION . . . . . 2 - 2
OPERATIONAL CHECKLISTS . . . . . 2 - 2
GENERAL INFORMATION . . . . . 2 - 2
FREQUENT AND PERIODIC INSPECTION INTERVALS . . . . . 2 - 3
DAILY . . . . . 2 - 3
90 DAYS (360 HOURS) . . . . . 2 - 3
180 DAYS (720 HOURS) . . . . . 2 - 3
12 MONTHS (1,050 HOURS) . . . . . 2 - 3
LUBRICATION CHART . . . . . 2 - 4
WIRE ROPE INSPECTION . . . . . 2 - 5
SYNTHETIC ROPE INSPECTION . . . . . 2 - 5
HOOK INSPECTION . . . . . 2 - 6
APPENDIX - A . . . . . A - 1
STANDARDS AND REGULATIONS . . . . . A - 1
OSHA EXCERPTS: (CLEARANCE DISTANCE) . . . . . A - 2
STANDARD HAND SIGNALS . . . . . A - 4
APPENDIX - B . . . . . B - 1
RESPONSIBILITIES . . . . . B - 1
ANSI A10.31-2013 (PARTIAL) . . . . . B - 1
SURVEY OF JOB SITE . . . . . B - 11

https://truckmanualshub.com/

https://truckmanualshub.com/

INTRODUCTION

OWNERS, USERS AND OPERATORS

Thank you for choosing Terex South Dakota, Inc. equipment for your application. User safety is our number one priority and this is best achieved by our joint efforts.

As equipment users and operators, you make a major contribution to safety if you:

1. Comply with OSHA, federal, state, ANSI, local and your company regulations.
2. Read, understand and follow the instructions in this manual and other manuals supplied with this vehicle.
3. Only allow trained operators, directed by informed and knowledgeable supervision, to run the unit.

If there is anything in this manual that is not clear or you believe should be added, please send your comments to:

Manager of Publications
Terex South Dakota, Inc.
500 Oakwood Road
Watertown, South Dakota 57201

You may also contact us by phone at: (605) 882-4000

This is the safety alert symbol. It is used in this manual to alert you to potential personal injury hazards. Obey all safety messages that follow this symbol to avoid possible injury or death.

This manual contains important information on the safe use of your Terex South Dakota, Inc. equipment. Your failure to read, understand and follow all safety rules, warnings and instructions will unnecessarily expose you and others to dangerous situations. For your safety and the safety of those around you, you **must** operate your Terex South Dakota, Inc. equipment as instructed in this manual.

This manual shall be stored on the vehicle for access by the operator. The Operators manual is required to be stored on the vehicle by ANSI and OSHA regulations.

PRODUCT IDENTIFICATION

The serial number is located on the ID plaque. It may be located on the turntable, pedestal or lower boom, depending on options and features. The serial number of the vehicle (VIN) will be different than the serial number for the Aerial Device. Please refer to the Aerial Device serial number when contacting Terex South Dakota, Inc. for service and parts information. Refer to the ID plaque for capacity and dielectric information.

Serial Number

INTENDED USE

This machine is intended to be used to perform multiple operations. If equipped with material handling features it may be used to lift material, including poles, only within its rated capacity. Units equipped with an auger can be used for digging operations. Use of this product in any other way is prohibited and contrary to its intended use.

https://truckmanualshub.com/

BULLETIN DISTRIBUTION AND COMPLIANCE

It is the owners responsibility to comply with all bulletins issued by Terex South Dakota, Inc. or the vehicle manufacturer. Safety of product users is of paramount importance to Terex South Dakota, Inc. Various bulletins are used by Terex South Dakota, Inc. to communicate important safety and product information to dealers and machine owners. The information contained in bulletins is tied to specific machines using the machine model number and serial number. Distribution of these bulletins is based on the most current owner on record along with their associated dealer, so it is important to register your machine and keep your contact information up to date and changes in ownership. To ensure safety of personnel and the reliable continued operation of your machine, compliance with the information and actions in the bulletins are mandatory.

CONTACTING THE MANUFACTURER

If it is necessary to contact the manufacturer of the machine, supply the unit model number, serial number and your name and contact information. At minimum, the manufacturer should be contacted for:

- Accident Reporting
- Questions regarding product applications and safety
- Standards and regulations compliance information
- Questions regarding product modifications
- Current owner updates, such as changes in machine ownership or changes in your contact information (See Transfer of Machine Ownership below)

TRANSFER OF MACHINE OWNERSHIP

If you are not the original owner of this machine, copy the following form to provide information on the ownership change.

This information will insure that you are the owner on record for this machine and you will receive applicable notices and advisories in a timely manner.

You can mail information on changes in ownership to Terex South Dakota, Inc., Inc, 500 Oakwood Road, PO Box 1050, Watertown, SD 57201 or email the information to: utilities.warranty@terex.com.

REGISTRATION CARD

Owner's Name			
Address			
City		State	Zip
Signed		Title	
Terex South Dakota, Inc. Model		Ser. #	
VIN #	Customer Truck #		
Check: ( ) Operation & Maintenance Manual Received.			
Date Placed in Service:			
Previous Owner			
Address			

Note: It is the sellers responsibilty to provide the Operator's manual to the purchaser. Replacements can be ordered from Terex, South Dakota.

https://truckmanualshub.com/

SAFETY

The operator is the single most important factor for safety when using any piece of equipment. Learn to operate your Terex South Dakota, Inc. equipment in a safe manner.

NOTE: The best method to protect yourself and others from injury or death is to use common sense. If you are unsure of any operation, do not continue until you are satisfied that it is safe to proceed.

HAZARD CLASSIFICATION SYSTEM

This machine contains safety signs to assist in hazard recognition and prevention. The hazard classification system is a multi-tier system used to alert you to potential personal injury hazards. Signal words used with the safety alert symbol indicate a specific level of severity of the potential hazard. To help you recognize important safety information, we have identified **warnings** and **instructions** that directly impact safety.

⚠	**This is the safety alert symbol. It is used in this manual to alert you to potential personal injury hazards. Obey all safety messages that follow this symbol to avoid possible injury or death.**

Danger is always used with the safety alert symbol and white letter on red background.

⚠ DANGER	Indicates a hazardous situation that, if not avoided, will result in death or serious injury.

Warning is always used with the safety alert symbol and black letters on orange background.

⚠ WARNING	Indicates a hazardous situation that, if not avoided, could result in death or serious injury.

Caution is used with the safety alert symbol and black letters on yellow background.

⚠ CAUTION	Indicates a hazardous situation that, if not avoided, could result in minor or moderate injury.

PROPERTY DAMAGE MESSAGES

The signal word NOTICE, shown without the safety alert symbol, is used to address specific practices or draw attention to supplemental information that is not related to personal injury.

Notice does not use the safety alert symbol and text is white italic letters on blue background.

NOTICE	Indicates information considered important, but not hazard related (e.g., messages related to property damage).

https://truckmanualshub.com/

In addition to maintenance and operating instructions in this manual, the operator must read and understand all the instructions in the following safety guidelines.

1. Study all safety messages and apply them on the job.
2. Modifications to this Terex South Dakota, Inc. equipment from the original design specifications without written permission from Terex South Dakota, Inc. are strictly forbidden. A modification may compromise the safety of the Terex South Dakota, Inc. equipment, subjecting users to serious injury or death. Any such modification will void any remaining warranty.
3. Terex South Dakota, Inc. reserves the right to change, improve, modify or expand features of its equipment at any time. Specifications, model or equipment are subject to change without notice and without incurring any obligations to change, improve, modify or expand features of previously delivered equipment.
4. Comply with manufacturer's instructions and requirements of current OSHA regulations and ANSI standards.

https://truckmanualshub.com/

GENERAL SAFETY GUIDELINES

1. The use of this Digger Derrick is subject to certain potential dangers that cannot be protected against by mechanical means. Only the exercise of intelligence, care, and common sense can eliminate these dangers. It is essential to have competent, careful operators who are physically and mentally fit, and thoroughly trained in the safe operation of this Digger Derrick. Learn, understand and practice safe use of all equipment and controls - before operating this Digger Derrick.
2. Never exceed the rated load capacity. Know the total weight of the object(s) to be handled. Stay within the rated capacity shown on the load chart.
3. Do not operate the Digger Derrick if any interlock or safety device is malfunctioning.
4. Do not bypass or remove any interlock or safety device.
5. Do not operate the Digger Derrick if the unit is malfunctioning or leaking. Repair before use.
6. Always operate boom controls while at the control station on the vehicle. Never operate the Digger Derrick boom controls while standing on the ground, unless operating with radio remote controls where the operator does not touch the vehicle(s) and the ground at the same time.
7. Keep your Digger Derrick control area free of obstructions that may interfere with control operation or physical access to the controls.
8. When operating this Digger Derrick, if you become aware of any dangerous condition or hear any unusual noises such as grinding, cracking or grating sounds, STOP in position. DO NOT move or operate the Digger Derrick until the problem has been diagnosed and resolved.
9. All ground personnel must be trained in the proper procedures to follow in case of emergency.
10. Do not operate the Digger Derrick in an electrical storm.
11. The hydraulic fluid is petroleum based and is flammable.
12. Perform all required maintenance.
13. Refer to the ID plate for unit specifications such as height, dielectric rating and platform capacity (if equipped.
14. Be sure of footing when entering, exiting and working on the unit, use 3-point access when required.

https://truckmanualshub.com/

BEFORE OPERATION

1. Survey the conditions of the work area. Identify situations such as; soft ground, ditches, drop-offs, holes, debris, overhead obstructions, electrical conductors, underground utilities, stored fuels, toxic dust and gases.
2. Plan the job (tailgate session) and clear the area of unauthorized personnel.
3. The vehicle must be securely parked, set parking brakes and chock wheels.
4. Verify tire are properly inflated.
5. Visually inspect condition of tires, truck suspension, and torsion bars (if equipped) for any damage.
6. The vehicle must be securely parked and stabilized before any operation is performed. If equipped with outriggers, set all outriggers.
7. Do not lower outriggers unless you can see that all personnel are clear of the outrigger path of movement and its ground contact point. Lower all outriggers onto solid footing.
8. Do not place outriggers on ice as slippage may occur regardless of solid footing. Operation on snow or slippery surfaces requires extra care during set up. The Digger Derrick vehicle must have sufficient traction to prevent sliding.
9. The Digger Derrick has been stability tested per ANSI A10.31. The lift capacity shown on the load chart must be reduced if vehicle is not level.
10. The Digger Derrick when used for lifting personal, in attached platform, has been tested per ANSI A10.31 and may be operated on firm, flat, non-level surfaces up to a 5 degree slope.
11. Ground and/or barricade the vehicle per OSHA and your company policies.
12. Inspect controls before operation, do not operate the Digger Derrick with malfunctioning controls.
13. Only operate the Digger Derrick if there is sufficient lighting at the job site to accomplish task safely.
14. Barricade or cover up any overhead electrical lines that have the potential for contact during operation.
15. Inspect and maintain personal protective equipment and fall protection.
16. Inspect winch line and hook for damage. Verify hook has a working safety latch.
17. Perform inspections and maintenance as specified in the Maintenance Guidelines.
18. Operator’s Manual must be on the vehicle available to the operator.

https://truckmanualshub.com/

DURING OPERATION

BOOM AND LIFTING OPERATIONS

1. Never operate the Digger Derrick unless you know the location, function, and operation of all the controls, including emergency and accessory operation.
2. Avoid abrupt starts, stops and reversal of direction. Operate all controls slowly for smooth motion.
3. Keep all parts of your body away from moving parts to avoid injury
4. Do not place the boom in open traffic lanes. Stop traffic or barricade lanes to divert traffic from area.
5. Never allow ground personnel to come in contact with the Digger Derrick, vehicle, or vehicle attachments while in operation near energized power lines.
6. Do not exceed the capacities (as listed on the load capacity chart) for boom extensions, angles, working zone, and winch line capacity.
7. Do not allow ground personnel to stand or walk under a suspended load.
8. Always operate boom controls while at the control station on the vehicle. Never operate the Digger Derrick boom controls while standing on the ground, unless operating with radio remote controls where the operator does not touch the vehicle(s) and the ground at the same time.
9. If the vehicle is setup on a slope, stability will be affected. Block and crib as required to level the Digger Derrick to achieve full capacity.
10. Do not pull poles embedded in the ground using the boom, winch, extension or outriggers, use a pole puller.
11. Do not attempt to lift any items embedded, frozen, or stuck to the ground.
12. Remain at the controls at all times with a suspended load on the winch line unless all the conditions for unattended operation are met.
13. The operator must always remain at the controls when personnel are in the platform if not equipped with upper controls.
14. Do not lift personnel with the load line.
15. A synthetic load line must be considered conductive due to contamination, moisture, and dirt. Do not allow the load line to contact energized power lines.
16. Inspect the load line daily for damage. Keep clean and dry to extend the life of the load line. Do not operate with a damaged or frayed load line.
17. Do not hook the load line back onto itself, use a sling
18. Inspect all slings and rigging daily. The working capacity of all rigging must be suitable for the load being lifted.
19. Hooks must be equipped with an operational safety latch
20. Use only compliant hot line tools for lifting energized conductors. Clean and inspect all fiberglass on the conductor lifter before use. Dirty or damaged fiberglass may be conductive.

https://truckmanualshub.com/

DIGGING

1. Never dig until all the underground utilities (such as, electrical lines, gas lines and other lines) have been identified and marked. Call your local "**Call before you Dig**" hotline, the national number (888) 258-0808 for assistance, or 811 if available in your area.
2. Before storing and unstoring the auger, inspect the wind-up cable, fasteners, and auger condition.
3. Before storing and unstoring the auger, raise the boom to clear all personnel and objects.
4. Before storing and unstoring the auger, clear the area of all ground personnel.
5. Never corkscrew the auger; the force exerted can exceed the load capacity.
6. Inspect all pins that secure auger to boom before and after use.
7. Only store auger when at it's shortest length.

https://truckmanualshub.com/

OPERATION WITH PERSONNEL PLATFORM ATTACHED

1. Never operate when controls are malfunctioning. Perform platform and lower controls inspection; see DAILY INSPECTION in the MAINTENANCE SECTION of this manual.
2. Per ANSI A10.31, upper controls are required when the Digger Derrick is equipped with platform(s) and used to transport a worker to an elevated position to perform work on or near energized conductors or equipment or structures with energized components.
3. When the Digger Derrick is operated from the upper controls, the pole guide and digger (if equipped) shall be rendered inoperable.
4. When platform is occupied do not dig holes, set screw anchors or handle poles. Lift loads only at reduced capacity shown on the Upper Control Load Chart, not to exceed 2700 lbs.
5. Never operate from the platform unless you know the location, function, and operation of all the controls at the platform.
6. Operator(s) must wear an OSHA compliant fall arrest system with a lanyard attached to the anchor(s) provided.
7. Wear personal protective equipment such as: Insulated hard hat, rubber gloves with leather protectors, and rubber sleeves. Hearing and eye protection, proper boots and suitable clothing may also be required. Follow OSHA and employer's policies for fire retardant (FR) clothing and arc flash protection.
8. Do not allow boom, platform, or any part of the Digger Derrick to contact fixed objects.
9. Do not use the platform for lifting material or conductors. The platform was designed for lifting personnel and tools within the platform capacity only.
10. Do not tie off to an adjacent structure, pole, or other equipment.
11. Never exceed rated capacity of platform for occupants, tools, and liner if equipped.
12. Do not pass tools, equipment, or other objects between the occupant of the platform and other personnel on poles or other platforms.
13. Do not sit or climb onto edge of platform or use planks, ladders, or other devices for a work position. Always stand with both feet on the floor of the platform.
14. Do not wear climbers while in the platform.
15. Do not allow ground personnel under the platform work area.
16. Do not operate with platform leveling or locking device malfunctioning.
17. Do not move the vehicle with personnel in the platform.
18. Do not leave the platform to build trestles between the platform and another support location.
19. Avoid careless handling of tools and equipment while aloft. Use a tool tray to help prevent dropping items.
20. If, when operating the Digger Derrick, you become aware of any dangerous conditions, unusual operation, or hear any unusual noise, such as grinding, cracking, or grating sounds-STOP-in position. Do not move the boom or platform until the problem has been diagnosed and resolved with your safety in mind. No matter how long it my take to get help, waiting is better than a serious or fatal accident.

https://truckmanualshub.com/

ELECTRICAL DANGERS

ELECTRICITY OBEYS NO LAW, BUT ITS OWN.

1. Electricity is an ever-present danger when using a Digger Derrick and working from a platform. Follow all OSHA, ANSI, state, federal and company rules and regulations when working on or near energized power lines.
2. Always maintain proper clearance from energized power lines. A Digger Derrick cannot protect you from phase-to-phase or phase-to-ground contact, which occurs above the insulating boom section when operating from the platform:
   - Allow for sag, sway or rocking.
   - If any part of boom-tip, contacts an energized conductor, the entire boom-tip, including the control handle(s), must be considered energized.
   - If any part of the boom-tip, contacts a grounded object the entire boom-tip including the control handle(s) must be considered grounded.
3. The boom and operators shall be properly insulated from any contact with electrical conductors; including neutral or ground lines, poles, cross arms, and guy wires. Utilize proper insulation such as line covers, rubber blankets and hot line tools.
4. Never place booms, platforms, or personnel between energized conductors or between an energized conductor and a grounded conductor without proper cover up.
5. Digger/auger must be in the stored position when personnel are in the platform.
6. Never operate the Digger Derrick in an electrical environment unless the unit has been properly maintained with frequent and periodic inspections and a current annual dielectric test. When the fiberglass boom components are contaminated by moisture, dirt, or improperly maintained the dielectric protection will be compromised.
7. Never allow ground personnel to come in contact with the Digger Derrick, vehicle or vehicle attachments while in operation near energized power lines.
8. When working on or near energized power lines or equipment, the vehicle must be grounded and/or barricaded according to your employer's policies and considered energized.
9. Never rely on the fiberglass platform for insulation. The platform may contain small unseen cracks that will allow an electrical path into the platform. Follow your employer's policies for use of a platform liner.
10. Never touch the controls or boom tip area when in the platform without proper protection (insulating gloves), while contacting any conductors, neutrals, grounds or other structures.
11. Ground personnel must wear insulating gloves if they may contact load line, load, auger, or screw anchor attachments while boom is in area of electrical wires.
12. Do not increase the chance of accidental contact when working on or near energized structures or power lines, defeating the purpose of the liner:
    - All tools, accessories and other objects must be contained within the platform.
    - Do not attach any metal objects from outside the platform to the inside of the platform.
    - Do not hang metal objects from the lip of the platform. This includes extension cords, guy wires or conductors.
13. Fiberglass boom section shall be fully extended when using personnel platform on or near energized power lines.
14. The load line must be considered conductive.

https://truckmanualshub.com/

15. Contact of any portion of the Digger Derrick boom below the insulating section with an energized component will energize the entire vehicle. Anyone contacting the vehicle and the ground will be a path for electric current.

ACCESSORIES

1. Only use hydraulic tools equipped with orange hoses marked NON-CONDUCTIVE both at the platform and the ground tool connections. The hoses must be kept clean, dry, and inspected before use.
2. All accessories must be inspected, maintained and operated with the same care and safety rules that apply to the Digger Derrick.
3. Tools selected for use with the Digger Derrick must be of the open center type and operate at 2250 PSI (15.51 MPa) and flow input shall not exceed the maximum tool rating.

TRAVELING

1. Never travel with personnel in the platform or at the control locations.
2. Never travel with the boom(s) raised.
3. Store boom(s) properly in the boom rest with all boom sections fully retracted. If fiberglass boom is not fully retracted, the fiberglass may craze, shatter or eventually buckle.
4. Maintain boom rest for proper securement during travel. Repair as required.
5. Secure all tools and items stored on the vehicle while traveling to prevent objects falling on the roadway.
6. Follow proper load securement procedures for loads on vehicle and trailers.
7. Fully retract the outriggers, store the outrigger pads and wheel chocks.
8. Disengage the power take-off to prevent damage.
9. Follow the vehicle manufacturer's instructions for operating the vehicle.
10. Remove and store personnel platform for road travel.
11. All operators and passengers must at all times travel in seating positions designated by the vehicle manufacturer. They shall use seat belts and/or all other personal restraint systems provided.

Drive Carefully!

https://truckmanualshub.com/

MAINTENANCE

1. Inspect, maintain, and repair the Digger Derrick in accordance with this section and the maintenance manual for your Digger Derrick.
2. Only knowledgeable, authorized and qualified personnel shall be allowed to perform maintenance on the Digger Derrick
3. Never drill holes in the platform or liner.
4. Replace all missing or illegible decals.
5. Any changes or modifications to the Digger Derrick must be compliant by the manufacturer in writing.
6. Do not alter the insulated portion of the Digger Derrick. Alterations may reduce the insulating value.
7. Do not search for hydraulic leaks with your hands or any other part of your body. Hydraulic fluid injection could occur requiring immediate medical attention.
8. Use orange hose marked NON-CONDUCTIVE at the boom tip and areas that bridge the insulation gap.
9. All hoses must meet or exceed the working pressure of the Digger Derrick.
10. Do not use replacement components that are not equal to the original components.
11. Replacement load line must meet or exceed the load line requirements listed on the load chart.
12. Before doing any work on the hydraulic system, secure the booms and outriggers. Release any hydraulic pressure before attempting repairs or disassembly of hoses, valves, cylinders or any other hydraulic components.
13. Fuel or oil spills may require notification of appropriate Federal, State, or Local officials.
14. Inspect the unit following the frequent and periodic inspection intervals.
15. The subframe, outriggers, boom rest, and vehicle mounting must be inspected following the frequent and periodic inspection intervals for fastener tightness, damaged components and weld inspections.
16. The subframe, outriggers and mounting the vehicle must be inspected following the frequent and periodic inspection intervals for fastener tightness, damaged components and weld inspections.
17. Inspect, maintain, and operate the vehicle and components following the manufacturer's guidelines.
18. A post event inspection, testing, and documentation is required when the unit has been overloaded, shock loaded, overturned, in an accident, experienced electrical contact or any application of an unintended external force.

https://truckmanualshub.com/

OVERVIEW OF POTENTIAL HAZARDS

The Digger Derrick is a heavy moving machine capable of extending its reach vertically and horizontally. There are potential hazards associated with the use of this Digger Derrick. These hazards will be minimized if the machine is properly inspected, maintained and operated. The operators shall read and understand this manual and be trained to use the machine in an appropriate and safe manner. Should any questions arise concerning the maintenance or operation of the machine contact Terex South Dakota, Inc..

Alert Symbol	DANGER: Failure to follow will cause serious injury.	Your safety is involved.
Operators Manual	DANGER: Failure to follow will cause serious injury.	Read and follow operator's manual for safe operation.
Maintenance Manual	DANGER: Failure to follow will cause serious injury.	Follow all inspection and maintenance to prevent failure.
Electrical Contact	DANGER: Will cause Serious Injury Maintain minimum clearance from or Death.	Maintain minimum clearance from overhead high voltage power lines. Refer to "Minimum Clearance for High Voltage Lines" chart in Appendix A. Maintain minimum approach distance as appropriate for your qualifications. Do not dig near underground power lines. Use machine only within its electrical rating. Consult the ID Placard for dielectric rating.
Fall 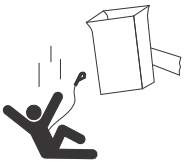	DANGER: Will cause Serious Injury or Death.	Always wear an OSHA approved fall arrest system with lanyard attached to anchor provided.
Unit Overturn 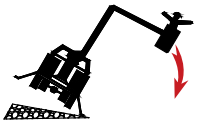	WARNING: Can Cause Serious Injury or Death.	Do not travel on steep inclines or crosswise to grades. Do not travel on soft or unstable ground or close to unsupported excavations. All tires must remain on the ground. Set outriggers (if equipped) so indicator remains in green area.

https://truckmanualshub.com/

Crushing	WARNING: Will Cause Serious Crushing Injury.	Do not operate outriggers unless you can verify all personnel and obstructions are clear. Operator must watch the outrigger while in motion.
High Pressure Air or Fluid	WARNING: Can Cause Serious Injury or Death.	Relieve pressure on hydraulic and pneumatic systems before loosening hoses or connections. Do not check for leaks with your hand.
Lanyard Attach.	WARNING: Failure to Attach Can Cause Serious Injury or Death.	Attach fall arrest lanyard to the anchor provided.

https://truckmanualshub.com/

SAFETY RELATED DECALS

Safety signs are designed and fitted to the product to warn of possible dangers, and MUST be replaced immediately if they become unreadable or lost. If the product is repaired and parts have been replaced on which safety signs were fixed, be sure new safety signs are fitted before the product is put into service. Use mild soap and water to clean safety signs - DO NOT use solvent based cleaners, as they may damage the safety sign material.

Operating this equipment without all safety and control decals in place can be hazardous.

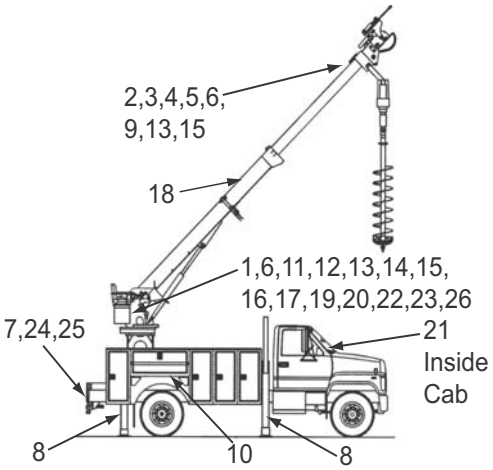

NOTE: * Use decals 419265 and 419272 when all booms are steel (not insulated) or have not been dielectrically tested.

ITEM #	DECAL	QTY	PART #
1.	ELECTROCUTION HAZARD - ENERGIZED CONTROLS	1	401066
2.	READ CAREFULLY	1	414590
3.	ELECTROCUTION HAZARD - INADEQUATE CLEARANCE	1	419263
4.	FALLING FROM PLATFORM	1	419264
5. *	ELECTROCUTION HAZARD - NON - INSULATED	1	419265
6.	UNTRAINED OPERATOR	3	419267
7.	OUTRIGGER - CRUSHING - DO NOT OPERATE	2	419268
8.	OUTRIGGER - CRUSHING - STAND CLEAR	4	419269
9.	CONDUCTIVE HOSE	1	419270
10.	ELECTROCUTION HAZARD - KEEP CLEAR	3	419271
11. *	ELECTROCUTION HAZARD - NOT INSULATED	2	419272
12.	FAILURE TO OBEY THE FOLLOWING	2	419273
13.	FAILURE TO OBEY THE FOLLOWING	3	419274
14.	FREE SWINGING AUGER	2	419275
15.	TWO - BLOCKING	3	419276
16.	ELECTROCUTION AND EXPLOSION HAZARD	2	419277
17.	ELECTROCUTION HAZARD	2	419991
18. *	NOT INSULATED	2	465703
19.	WARNING - ANSI	1	485894
20.	MAINTENANCE RECORD	1	489119

https://truckmanualshub.com/

21.	TRUCK COMPUTER	1	495845
22.	FALL HAZARD - MAINTENANCE	1	495892
23.	HAND SIGNAL CHART	1	498818
24.	OVERTURNING HAZARD	2	498819
25.	SLOPE INDICATOR	2	486277
26.	ESCAPING FLUID UNDER PRESSURE	1	H23877

1.

DANGER

ELECTROCUTION HAZARD
DEATH OR SERIOUS INJURY

- Will result if control handles become electrically charged from boom contact with energized conductors and the operator is standing on the ground.
- Operate controls from operators platform or while on vehicle only.

401066B

2.

DANGER

READ CAREFULLY

- **OCCUPANTS OF THE BASKETS OF THIS AERIAL DEVICE HAVE ABSOLUTELY NO ELECTRICAL PROTECTION FROM CONTACT BY THE HUMAN BODY WITH TWO ENERGIZED CONDUCTORS OR BETWEEN AN ENERGIZED CONDUCTOR AND A GROUNDED CONDUCTOR.**
- **It makes no difference if this contact is accidental or deliberate or whether contact is made through metallic parts of the basket, basket support, metal tools or equipment brought into the basket. The insulating components of this aerial device do not offer protection in the event of such contact.**
- **Proper conductor cover up, insulated sleeves and gloves shall be worn when working near energized lines or equipment.**

DEATH OR SERIOUS INJURY
WILL RESULT FROM SUCH CONTACT OR INADEQUATE CLEARANCE

414590A

https://truckmanualshub.com/

3.

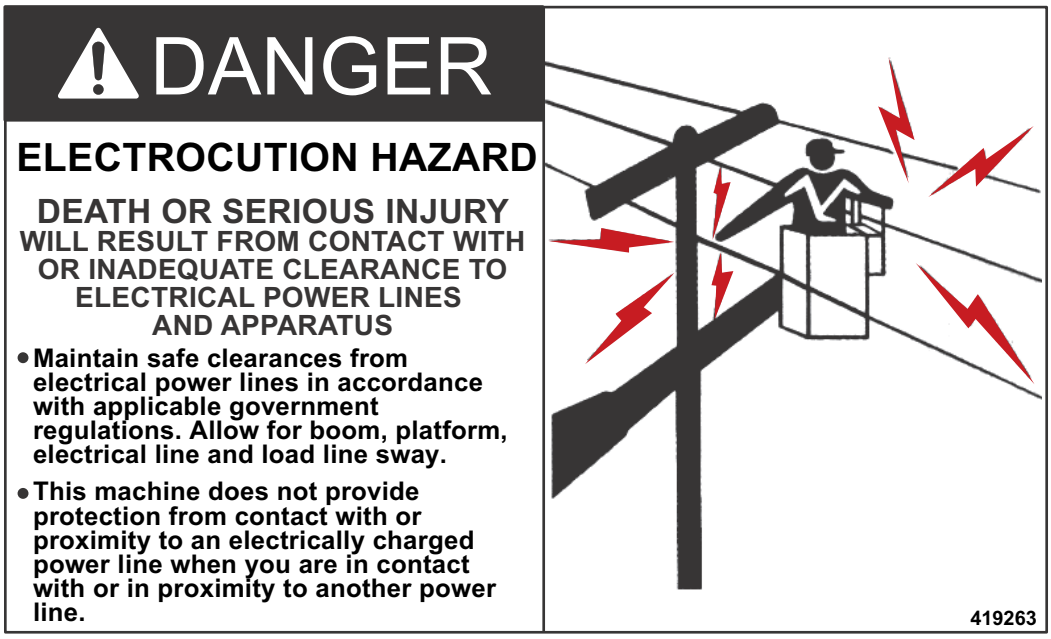

4.

https://truckmanualshub.com/

5.

DANGER

ELECTROCUTION HAZARD

THIS MACHINE IS

NOT INSULATED

DEATH OR SERIOUS INJURY

Will result from contact with or inadequate clearance to electrical power lines and apparatus

- **Maintain safe clearance from electrical power lines in accordance with applicable government regulations. Allow for boom, platform, electrical line and load line sway.**
- **This machine does not provide protection from contact with or proximity to an electrically charged power line.**
- **Boom and platform must be kept below all electric power lines.**
- **Do not use for work on electric power lines.**

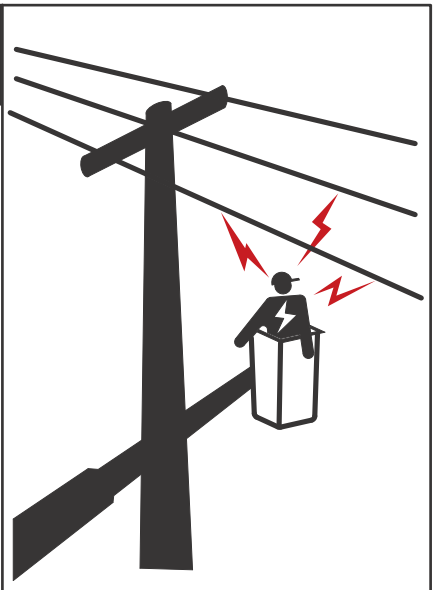

419265A

6.

DANGER

AN UNTRAINED OPERATOR SUBJECTS HIMSELF AND OTHERS TO

DEATH OR SERIOUS INJURY

YOU MUST NOT OPERATE THIS MACHINE UNLESS

- **You have been trained in the safe operation of this machine.**
- **You have read, understand and follow the safety and operating recommendations contained in the machine manufacture's manuals, safety signs attached to equipment, your employer's work rules and applicable government regulations.**
- **You are sure the machine is operating properly and has been inspected and maintained in accordance with manufacturer's manuals.**
- **You are sure that all safety signs, guards and other safety features are in place and in proper condition.**

419267

7.

DANGER

OUTRIGGER CONTACT WILL CAUSE SERIOUS CRUSHING INJURY

- **Do not operate any outrigger unless you or a signal person can see that personnel and obstructions are clear of the outrigger and its contact point.**

419268A

https://truckmanualshub.com/

8.

9.

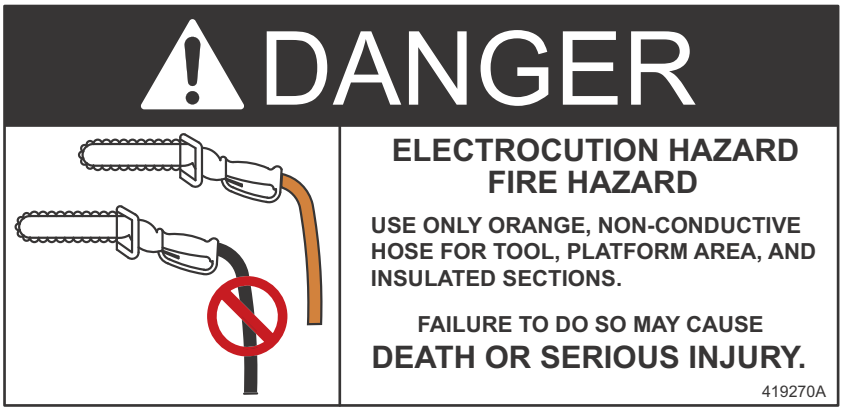

10.

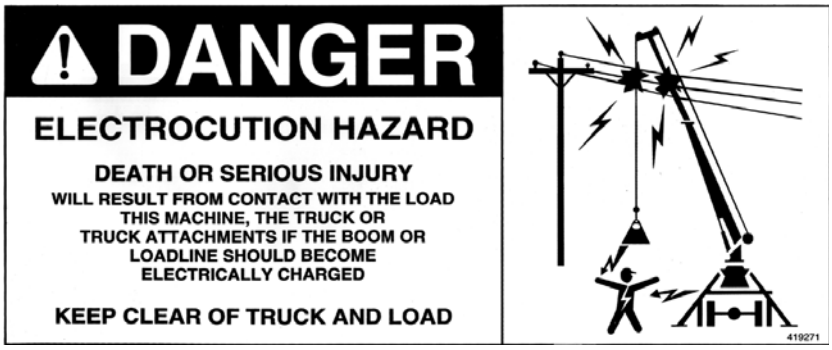

https://truckmanualshub.com/

11.

DANGER

ELECTROCUTION HAZARD

THIS MACHINE IS NOT INSULATED

DEATH OR SERIOUS INJURY

WILL RESULT FROM CONTACT WITH OR INADEQUATE CLEARANCE TO ELECTRICAL POWER LINES AND APPARATUS.

- Maintain safe clearance from electrical power lines in accordance with applicable government regulations. Allow for boom, electrical line and loadline sway.
- This machine does not provide protection from contact with or proximity to an electrically charged power line.

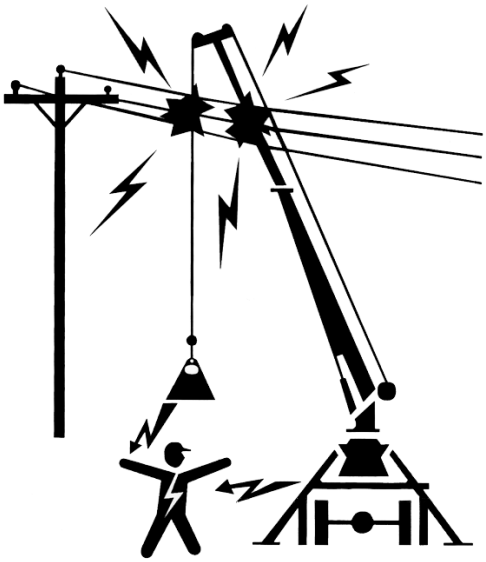

419272

12.

DANGER

FAILURE TO OBEY THE FOLLOWING WILL RESULT IN

DEATH OR SERIOUS INJURY

- For stationary operation, vehicle must be securely parked, driveline disengaged, and Digger Derrick properly stabilized prior to operation.
- To avoid tip-over, all outriggers must be properly extended on a solid level surface.
- Operate all controls slowly and smoothly and make sure controls are returned to neutral after desired operation.
- Never operate the machine with personnel under boom or load.
- Keep load under boom tip. Do not side load boom or drag loads. Avoid free swinging loads.
- Keep at least 4 wraps of loadline on winch drum.
- Never move the vehicle until the booms, auger and outriggers are in properly stowed postion and secured.
- Top Controls are required when working from platform on structures with energized lines or components.
- Refer to the operator's manual for complete instructions. If missing, replace manual.

419273A

13.

DANGER

FAILURE TO OBEY THE FOLLOWING WILL RESULT IN

DEATH OR SERIOUS INJURY,

INSTABILITY OR STRUCTURAL DAMAGE

- Read, understand and follow the machine load and work area charts.
- Do not exceed winch or machine ratings.
- Weights if accessories attached to the boom or loadline must be deducted from the load chart ratings or be added to the weight load.
- Do not exceed jib load ratings.

419274

https://truckmanualshub.com/

14.

DANGER

CONTACT WITH A FREE SWINGING AUGER WILL RESULT IN

DEATH OR SERIOUS INJURY

- **Never stow or unstow auger until all persons are clear of the area.**

419275

15.

DANGER

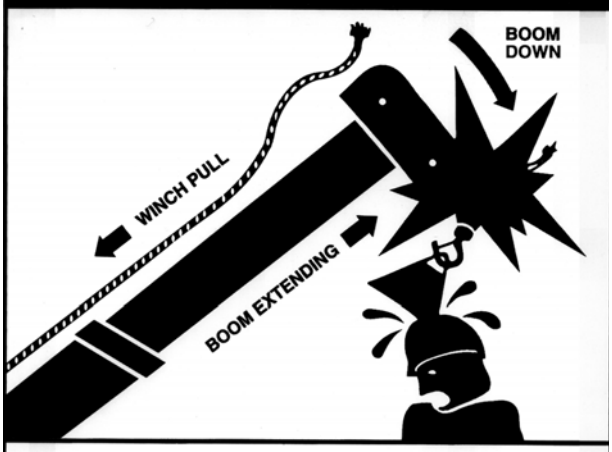

TWO BLOCKING THE MACHINE WILL RESULT IN

DEATH OR SERIOUS INJURY

Do not allow the hook block to contact the boom tip by hoisting up, extending or lowering the boom.

419276

16.

DANGER

ELECTROCUTION AND EXPLOSION HAZARD

DEATH OR SERIOUS INJURY

- **Will result from contact with buried gas lines, electrical cables and other utility lines.**
- **Determine their location before digging. Contact appropriate utility or government agency.**

419277

https://truckmanualshub.com/

17.

⚠ DANGER

ELECTROCUTION HAZARD

DEATH OR SERIOUS INJURY

WILL RESULT FROM CONTACT WITH OR INADEQUATE CLEARANCE TO ELECTRICAL POWER LINES AND APPARATUS

- Maintain safe clearance from electrical power lines in accordance with applicable government regulations. Allow for boom, electrical line and load line sway.
- This machine does not provide protection from contact with or proximity to an electrically charged power line.

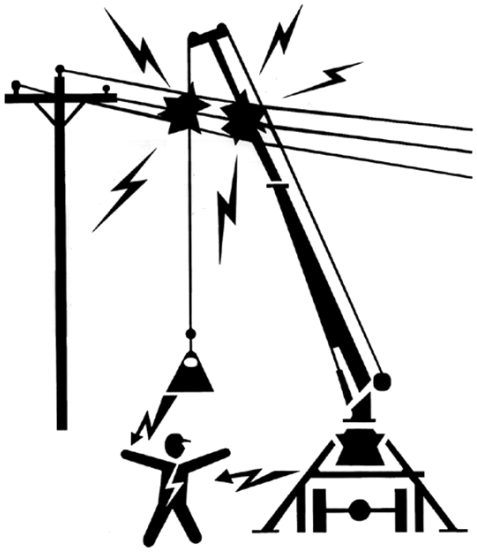

419991

18.

NOT INSULATED

19.

⚠ WARNING

FAILURE TO FOLLOW PROPER PROCEDURES

Could Result In DEATH OR SERIOUS INJURY

If YOU sell, install, offer for use, use, operate or maintain this Digger Derrick:

You MUST COMPLY with the requirements of: American National Standards Institute A10.31, National Electric Safety Code, and OSHA

485894

20.

INSPECTION DATE RECORD

Follow the Frequent and Periodic Inspection Intervals as required in the Operators and Maintenance Manuals. Maintain a record of all inspections.
Stamp or engrave below when and who performed inspections.
Follow component replacement intervals shown in your Maintenance Manual.

CRITICAL FASTENER INSPECTION		DIELECTRIC TEST		ANNUAL INSPECTION	
DATE	INITIALS	DATE	INITIALS	DATE	INITIALS

489119A

https://truckmanualshub.com/

21.

WARNING

CRUSHING HAZARD

Changes to the vehicle computer settings could affect equipment operation and could result in crushing or tip over that could cause Death or Serious Injury.

- Do not alter computer settings without full knowledge of affect of changes
- See information supplied with truck manuals or contact final stage manufacturer for required settings

495845

22.

WARNING

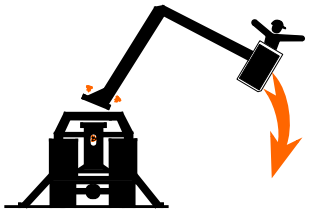

FALL HAZARD

FAILURE TO PROPERLY MAINTAIN THIS MACHINE CAN LEAD TO STRUCTURAL FAILURE AND RESULT IN DEATH OR SERIOUS INJURY

Read and follow all inspection and maintenance schedules in the manual(s). Do not operate machine unless all deficiencies are corrected. Proper maintenance and inspection is required for safe and reliable operation.

Daily Visual Inspection
- all structural components and welds
- all fasteners for damage, signs of looseness or missing from required location.
- damaged or missing covers or guards

Check torque on fasteners as required in manual(s). Fasteners include turntable to rotation bearing, pedestal to rotation bearing, cylinder and boom pivot pins and retainers, subframe mounting bolts and leveling components.

The Aerial Device or Digger Derrick you are operating must be maintained by a qualified person.

495892A

https://truckmanualshub.com/

23.

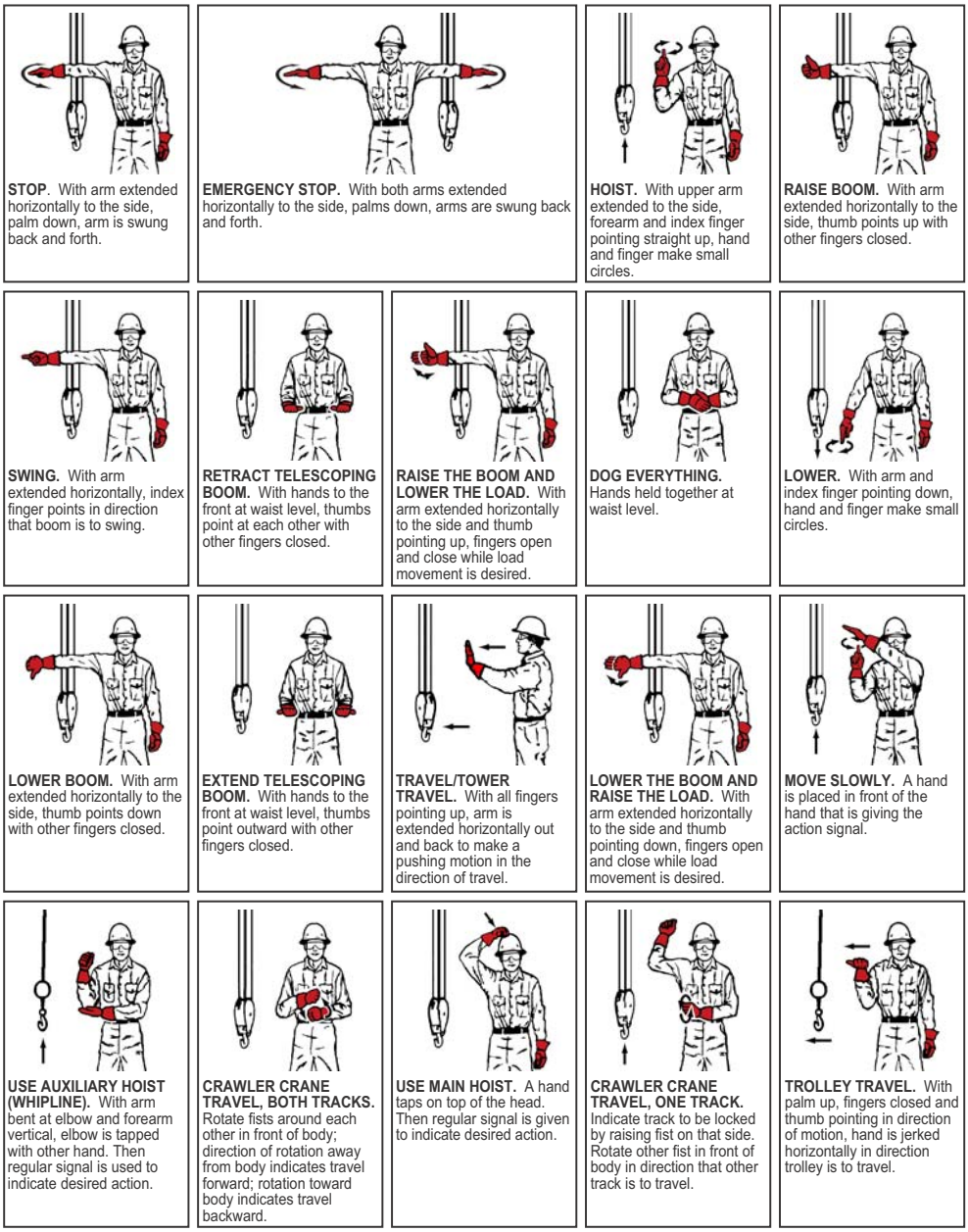

STOP. With arm extended horizontally to the side, palm down, arm is swung back and forth.

EMERGENCY STOP. With both arms extended horizontally to the side, palms down, arms are swung back and forth.

HOIST. With upper arm extended to the side, forearm and index finger pointing straight up, hand and finger make small circles.

RAISE BOOM. With arm extended horizontally to the side, thumb points up with other fingers closed.

SWING. With arm extended horizontally, index finger points in direction that boom is to swing.

RETRACT TELESCOPING BOOM. With hands to the front at waist level, thumbs point at each other with other fingers closed.

RAISE THE BOOM AND LOWER THE LOAD. With arm extended horizontally to the side and thumb pointing up, fingers open and close while load movement is desired.

DOG EVERYTHING. Hands held together at waist level.

LOWER. With arm and index finger pointing down, hand and finger make small circles.

LOWER BOOM. With arm extended horizontally to the side, thumb points down with other fingers closed.

EXTEND TELESCOPING BOOM. With hands to the front at waist level, thumbs point outward with other fingers closed.

TRAVEL/TOWER TRAVEL. With all fingers pointing up, arm is extended horizontally out and back to make a pushing motion in the direction of travel.

LOWER THE BOOM AND RAISE THE LOAD. With arm extended horizontally to the side and thumb pointing down, fingers open and close while load movement is desired.

MOVE SLOWLY. A hand is placed in front of the hand that is giving the action signal.

USE AUXILIARY HOIST (WHIPLINE). With arm bent at elbow and forearm vertical, elbow is tapped with other hand. Then regular signal is used to indicate desired action.

CRAWLER CRANE TRAVEL, BOTH TRACKS. Rotate fists around each other in front of body; direction of rotation away from body indicates travel forward; rotation toward body indicates travel backward.

USE MAIN HOIST. A hand taps on top of the head. Then regular signal is given to indicate desired action.

CRAWLER CRANE TRAVEL, ONE TRACK. Indicate track to be locked by raising fist on that side. Rotate other fist in front of body in direction that other track is to travel.

TROLLEY TRAVEL. With palm up, fingers closed and thumb pointing in direction of motion, hand is jerked horizontally in direction trolley is to travel.

https://truckmanualshub.com/

24.

25.

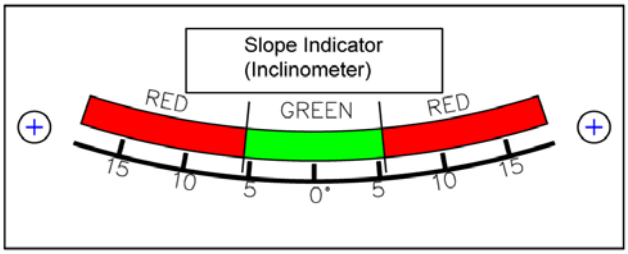

https://truckmanualshub.com/

26.

https://truckmanualshub.com/

WHAT IS INSULATED AND NOT INSULATED

The following will apply to insulated units only. If the unit is not equipped with an insulating boom the unit does not provide any electrical protection. Refer to the ID plate on the unit to determine if it is considered an insulating unit.

The term insulated means separated from other conductive surfaces by a dielectric substance (including air space) offering a high resistance to the passage of current (from OSHA 1926.960).

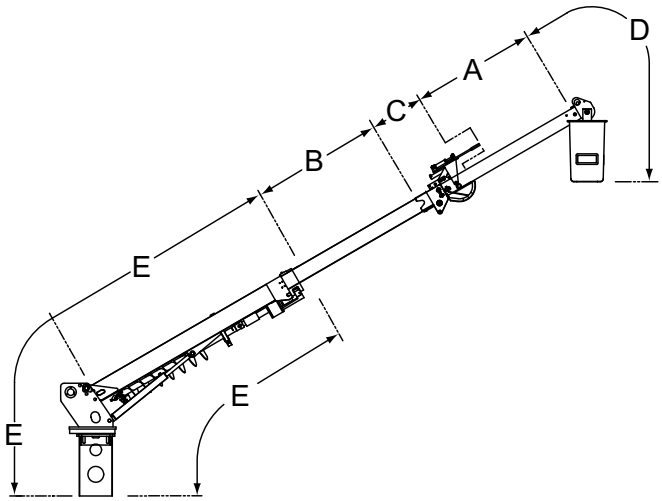

A. Provides an insulating area between section “D” and earth ground when:
   - The load line (synthetic rope or steel cable) is removed from across the fiberglass boom.
   - Upper boom is fully extended.
   - Fiberglass section is clean, dry and in properly maintained condition.

B. This area does not provide insulation. This area contains conductive materials; such as the boom structure auger drive, and cylinders. The operator shall not allow any portion of this area to come in contact with an energized phase, ground conductor or grounded objects. Proper protective devices shall be used on all conductors. Any contact with a ground and a phase or between two phase conductors will create a hazard.

C. This area does not provide insulation. This area contains conductive materials such as cylinders, pins, boom structure, and other metal components. The operator shall not allow any portion of this area to come in contact with an energized phase, ground conductor, or grounded objects. Proper protective devices shall be used on all conductors. Any contact with a ground and a phase or between two phase conductors will create a hazard. The position of the pole guides may affect the insulation gap provided by section A.

D. This area does not provide insulation. This area contains conductive materials; such as control levers, un-insulated platform(s), platform support shaft, boom tip structure and other metal components. These objects must be considered connected. The operator shall not allow any portion of this area to come in contact with an energized phase, ground conductor or grounded objects. Proper protective devices shall be used on all conductors. The operator shall not make contact with any portion of this area when working on or near an energized phase, ground conductor or grounded objects, unless wearing proper protective clothing such as rubber gloves and sleeves rated at the voltage of the lines. Any contact with a ground and a phase or between two phase conductors will create a hazard. Accidental contact of any portion of area D to an energized conductor will energize the entire area D.

NOTE: A properly maintained platform liner will only provide protection for those portions of the body or materials entirely within the liner and not in contact with any part of area D.

https://truckmanualshub.com/

E. This area does not provide insulation. This area contains conductive materials such as cylinders, pins, boom structure, turntable, pedestal and other metal components. The operator shall not allow any portion of this area to come in contact with an energized phase, ground or grounded objects. Proper protective devices shall be used on all conductors. This area is attached to the vehicle and connected trailers, which must be barricaded and/or grounded through a compliant ground system when working in the vicinity of energized conductors. Any contact with a phase or between two phase conductors will create a hazard.

UPPER BOOM RATING

The ID plate on your digger derrick will indicate if the unit is insulated and the voltage the insulation has been designed and tested to withstand. The manuals also indicate what areas of the machine will provide insulation. Look on the ID plate for the QUALIFICATION VOLTAGE. The number in this area is the voltage rating the unit was tested and qualified per ANSI standards. The date of the Manufacturing Qualification test is indicated on the ID plate as the TEST DATE. To maintain the dielectric rating, there must be a periodic dielectric test performed and documented. The digger derrick shall be considered NOT INSULATING if the periodic test is not performed.

test is indicated on the ID plate as the TEST DATE. To maintain the dielectric rating, there must be a

Not Insulated or Insulated
If the Insulated box is checked, it indicates the booms have been tested to meet the requirement of the qualification voltage. If the Not Insulated box is checked, the unit will not provide any dielectric protection.

Qualification Voltage
Maximum Phase to Phase voltage machine can be used, with proper PPE and work practice.

ID PLATE

ANSI Category
Not applicable for Digger Derricks, there is only one rating.

Date of Manufacturer's Dielectric Test

VOLTAGE RATINGS

There may be two Voltages stamped on the ID Plate near the lower controls of the Aerial Device and shown in the front of this manual.

Design Voltage - This is the maximum voltage that this machine can be rated if it is properly equipped and tested. This is normally not shown for Digger Derricks because they have one rating shown in the Qualification voltage box.

Qualification Voltage - The qualification voltage is the maximum voltage for which the upper boom insulation has been tested and is rated. The aerial can be use to work on or near electrical system lines up to this phase to phase voltage if the proper personnel protective equipment is used and the upper boom is fully extended without the load line crossing the insulating section.

https://truckmanualshub.com/

The following apply to insulated units only. If the unit is not equipped with an insulating boom the unit does not provide any electrical protection. Refer to the ID plate on the unit to determine if it is considered an insulating unit. If it is insulating, it will provide insulation only when the upper boom is fully extended, clean and dry, and maintained properly. Then it will only provide protection from current traveling from the boom tip to the truck and earth ground through the booms.

The insulated boom section only prevents current from passing from the boom tip through the vehicle to earth ground. All components above and below the insulating section must be considered conductive. This insulating section only provides protection when the load line does not span the insulating section, the upper boom is fully extended, and in clean, properly maintained condition.

The boom tip is everything past the fiberglass insulating section. All boom tip components are structurally and electrically connected. Contact with any part of the boom tip will energize the entire boom tip including, controls and platform support structure.

You must always cover the line and wear insulating gloves with insulating sleeves, and a compliant hard hat when any part of the machine is working in or near energized lines or conductors even when working on a grounded line, neutral line, or ground line.

Death or serious injury to the operator or ground personnel can occur if any part of the Digger Derrick contacts an energized conductor, ground line, grounded line, or other OBJECTS. Proper clearance must be maintained.

Working around electrical power lines is covered by ANSI and OSHA Regulations. To reduce danger to the operator and ground personnel, understand and follow all rules.

The fiberglass upper boom and platform, including its components, do not protect the platform operator from injury in case of contact between two energized lines, or between an energized line and a grounded conductor.

Anytime the platform occupant(s) contact two items at different potential without proper personal protective equipment, their body may become a path for electric current, and they may be electrocuted. This includes touching the controls, any tools, or items on the boom tip while also contacting a line or ground.

All conductors, including grounds and neutral lines are current carrying conductors and must be treated as energized unless properly grounded and tested.

You must read the operators manual thoroughly to understand any protection the machine may provide.

A well maintained fiberglass boom may provide limited electrical insulation between the boom tip and the vehicle to earth ground. All components of the upper control station and boom tip are interconnected, meaning the fiberglass will not protect the platform operator if any portion of the boom tip or upper control station, including options, is brought into contact with an energized or non-energized conductor and the operator is in contact with a different potential, such as an energized or a grounded non-energized conductor. The fiberglass will not provide protection for the operator in phase to phase contact or a phase to ground wire contact, nor will it protect the vehicle from becoming energized if the steel boom sections are brought into contact with an energized conductor. Serious injury or death could result.

https://truckmanualshub.com/

WHAT IS INSULATED AND NOT INSULATED

The fiberglass boom and platform liners must be dielectrically tested periodically to verify the insulating properties are being maintained. Do not assume it is providing any protection.

Ground personnel must stay away from vehicle and any items or components connected to the vehicle, in case of accidental boom contact between conductor and metallic portion of boom, which will cause serious injury or death.

https://truckmanualshub.com/

SECTION 1
OPERATION GUIDELINES
NOMENCLATURE

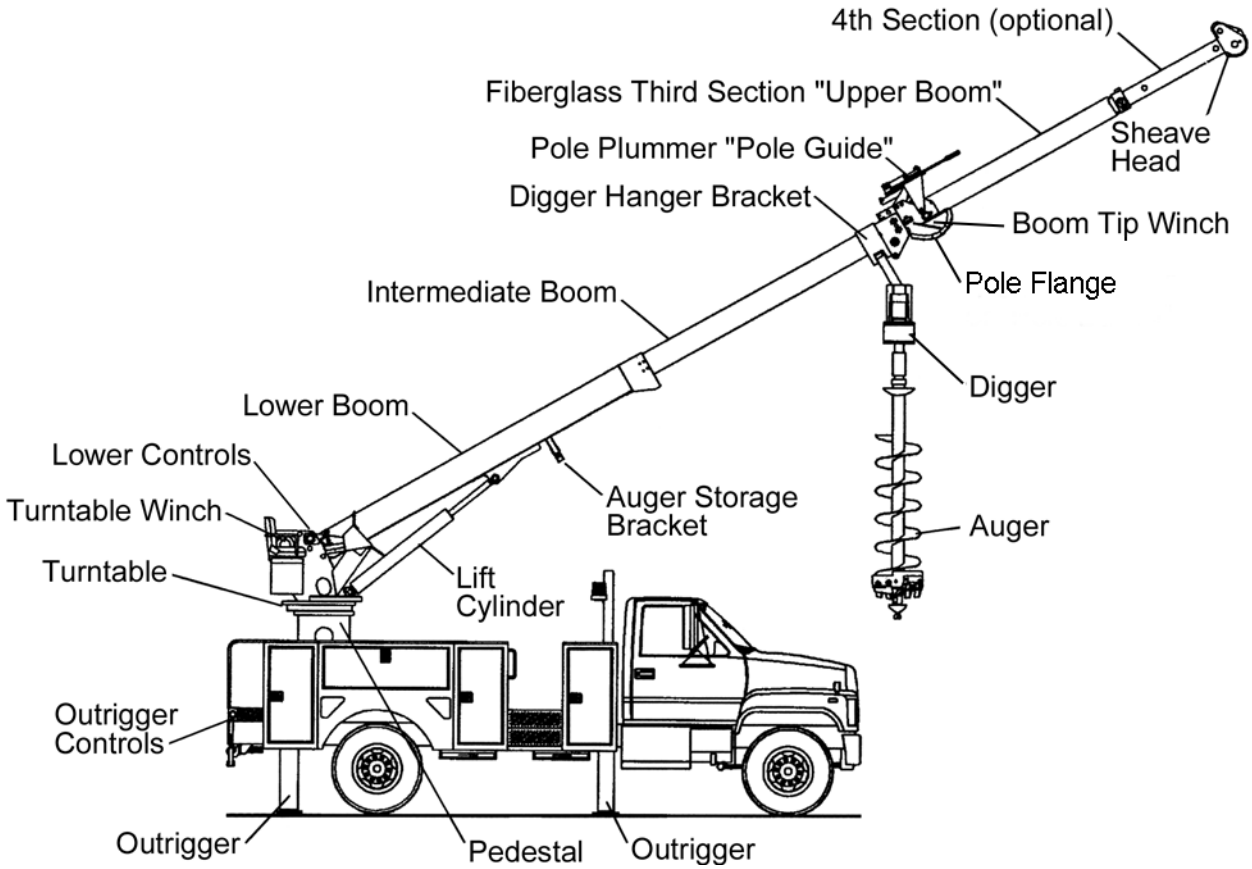

https://truckmanualshub.com/

CAB CONTROL OPERATION

MASTER CONTROL

The master control is located in the cab of the vehicle. The master switch is used to energize the engine stop/start system and the throttle control options. The same switch that activates the PTO may also function as the Master Control. When the indicator light is lit, the switch is energizing these systems. If the unit is not equipped with engine stop/start, two-speed throttle or 12V hydraulic power, it may not have a master control, only a PTO switch. The switches will vary depending on vehicles and options.

POWER TAKE-OFF (OPTIONAL)

The power take-off (PTO) is a gearbox used to transmit power from the vehicle transmission to the hydraulic pump, which provides hydraulic oil for the Digger Derrick functions. The power take-off control can be a switch on the dash, for electric control systems, or a “push-pull” knob, (usually mounted on the cab floor). An indicator light will show that the PTO is engaged.

Driving with the PTO engaged may damage both the pump and the PTO.

To engage the power take-off properly, refer to the PTO manufacturer's operating instructions and be sure the manufacturer's operating decals are posted in the cab with the PTO controls.

NOTE: Each installation may be unique depending on configuration and options.

CAB CONTROL FUNCTIONS

Master Power	MASTER POWER ON OFF 437031		Push to activate the remote electrical systems. A light indicates when the system is active. This light may be separate or built into the switch panel or display. Push again to deactivate the remote electrical systems. The indicator light will turn off. Master Power may also be the PTO switch if a separate PTO switch is not installed.
PTO	PTO 439950		Push to engage the PTO. A light indicates when the PTO is engaged. This light may be separate or built into the switch panel or display.
Warning Light			Controls vehicle warning lights such as strobe lights.

https://truckmanualshub.com/

OPERATOR CONTROLS AND DESCRIPTIONS

Please contact your Terex South Dakota, Inc. Dealer for the proper page to insert for your machine. This page is to show the Lower control station layout.

https://truckmanualshub.com/

Please contact your Terex South Dakota, Inc. Dealer for the proper page to insert for your machine.
This page is to show the Lower control station layout.

https://truckmanualshub.com/

MAIN DIGGER DERRICK CONTROL FUNCTIONS

Control location and function varies depending on purchaser's requirements and options. Some of the following control functions may not be included in the controls for this Digger Derrick. Refer to the control decals on unit for proper operation.

CONTROL	ILLUSTRATION	DESCRIPTION
Rotation		Push lever to rotate boom counterclockwise ”CCW”. Pull lever to rotate boom clockwise “CW”.
Lift		Push lever to lower “DOWN” boom sections. Pull lever to raise “UP” boom sections.
Intermediate Section “2ND”		Push lever to extend “OUT”. Pull lever to retract “IN”.
Upper Boom “3RD”		Push lever to extend “OUT”. Pull lever to retract “IN”.

https://truckmanualshub.com/

Digger		Push lever to dig and also to store auger. Pull lever to reverse auger and also to unstore auger.
Winch		Push lever to lower “DOWN” load. Pull lever to raise “UP” load.
Pole Guide “CLAW”		Push lever to close “HOLD” arms and guide pole. Pull lever to “OPEN” arms and release pole.
Pole Guide “TILT”		Push lever to tilt “DOWN”. Used to keep pole guide perpendicular to pole. **Raise pole guide before operating the third section. Otherwise, damage to the third section can occur.** Pull lever to tilt “UP”.

https://truckmanualshub.com/

Upper/Lower Selector Emergency Stop	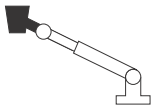 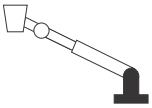 	Push lever to divert control to the boom tip. When in top controls, lower controls are inoperative. Pull lever to return to lower control operation. **The Control Selector will function as an emergency stop by taking oil flow away from the active control.**
Outrigger Controls	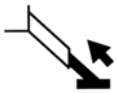 	Pull lever to raise “UP” outrigger. Generally used when control levers are mounted vertical. Push lever to lower “down” outrigger.
Auger Release		Raise auger by slowly rotating in dig direction until auger is off latch. Push and hold to release auger storage latch and slowly rotate auger in reverse direction. Release when auger clears storage bracket.
Digger Speed	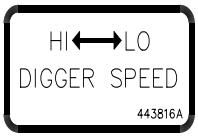	Allows operator to shift two-speed diggers from low speed to high speed. **Digger/auger must be stored and unstored in low speed. Can cause serious injury or death.**
Hydraulic Tools (Optional)		Pull lever into “DETENT” to operate tools. Push lever back to neutral to disengage tools.
Pressure Gauge		Used to monitor pressure

https://truckmanualshub.com/

Auxiliary Let Down (Optional)		Push and hold to engage auxiliary lowering system. Used when vehicle engine is not operable. Do no use to operate Digger Derrick continuously.
Foot Throttle		Depress with foot to increase engine RPM. Release to decrease engine RPM.
Tachometer (Optional)		Used to monitor the engine RPM.
Horn		Press to sound horn. Button will be located in lower control area, depending on configuration.

https://truckmanualshub.com/

SINGLE STICK FUNCTIONS (IF EQUIPPED)

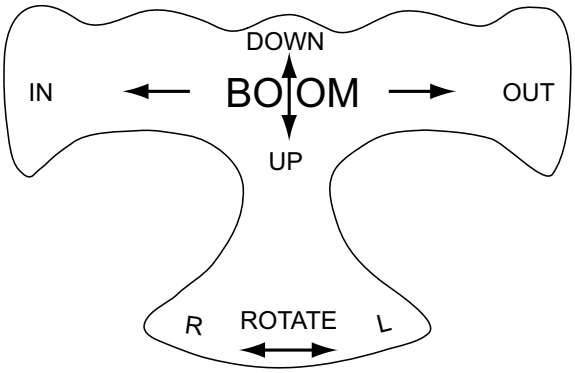

CONTROL	ILLUSTRATION	DESCRIPTION
Rotation	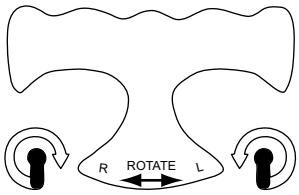	Twist control counterclockwise to rotate boom “LEFT“. Twist control clockwise to rotate boom “RIGHT”.
Lift	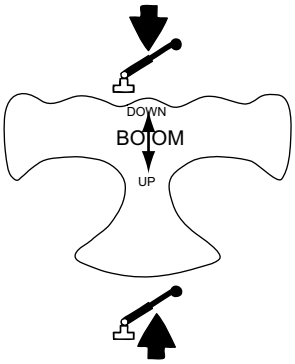	Push control to lower “DOWN” the boom. Pull control to raise “UP” the boom.
Intermediate Section (Second)	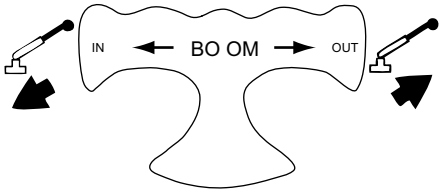	Tilt control to the left to retract “IN” the boom. Tilt control to the right to extend “OUT” the boom.

https://truckmanualshub.com/

CONTROLS BELOW ROTATION

Control locations and function varies depending on purchaser's requirements and options. Some of the following control functions may not be included in the controls for this Digger Derrick. Refer to the control decals on unit for proper operation.

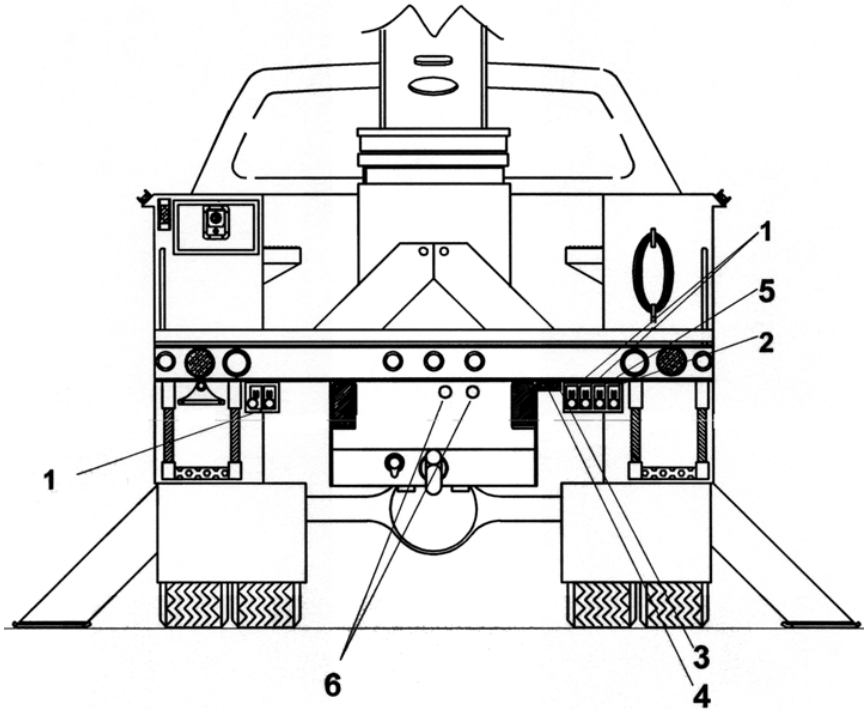

ITEM	CONTROL	DESCRIPTION
1.	Outrigger Controls	Allows extending and retracting of outriggers.
2.	Hydraulic Tools (Optional)	Directs oil flow to the tool when connected to the quick couplers.
3.	Two-speed Throttle (Optional) Auxiliary Let Down (Optional)	Two-speed throttle provides two engine speeds, low and high, with engine running. Low speed is engine idle. Auxiliary let down power provides hydraulic power to lower and stow the Digger Derrick in the event of a prime power source failure.
4.	Engine Stop/Start (Optional)	Allows operator to stop and start engine.
5.	Selector	A selector valve that allows operation of boom functions when in the "UP" position and operation of the outriggers when in the "DOWN" position. **The Selector will function as an emergency stop by taking oil flow away from the active controls.**
6.	Hydraulic Tool Couplers (Optional)	Quick couplers for hydraulic tool connection.

The decals are an integral part of this Digger Derrick. If the decals are missing or illegible, they must be replaced.

https://truckmanualshub.com/

CONTROLS BELOW ROTATION FUNCTIONS

Outrigger Controls		Pull “UP” to raise outrigger. Push “DOWN” to lower outrigger.
Hydraulic Tools (Optional)		Push “DOWN” to enable tool circuit. Pull “UP” to disengage.
Selector		Outrigger are operational when the controls are in the outrigger position. Pull “UP” to enable boom functions. Push “DOWN” to enable outriggers. **The Selector will function as an emergency stop by taking oil flow away from the active controls.**
Engine Stop/Start (Optional)		Can be used to stop vehicle engine in an emergency. Push and hold to crank vehicle engine. Push and release to stop engine.
Two-speed Throttle (Optional)		Push and release to increase engine RPM to preset high speed. Push and release to return engine RPM to idle speed.
*Auxiliary Let Down Power (Optional)		Push and hold to engage auxiliary lowering system. Used when vehicle engine is not operable. Do not use to operate Digger Derrick continuously.

NOTE: *Can be included with two-speed throttle circuit. When vehicle engine is disabled, the auxiliary let down power can be activated by the two-speed throttle switch.

NOTE: *Do not operate longer than 30 seconds. Continuous operation will drain battery and/or overheat pump motor.

Unit may be equipped with vehicle winches, capstan drives, and lower tool outlets. Use of these options while boom is elevated near energized components exposes ground personnel to death or serious injury due to electrocution if vehicle becomes energized. Follow your company policies for use of this equipment.

https://truckmanualshub.com/

PERSONNEL AND TRAINING

All vehicle operators/drivers must be trained for the specific vehicle. Follow DOT, State, Local & Company requirement for training. All personnel assigned to a Digger Derrick shall become familiar with the operation of the equipment before they operate it on a job. The operator and all other personnel shall be familiar with the operating procedures. The operator and personnel shall perform training operations until they attain a safe degree of proficiency.

NOTE: OSHA regulations may require the Digger Derrick operator to be certified, depending on the work being done. Follow your companies policy of training and certification.

The operator and ground personnel must know and understand the unit and safe operating procedures. The items listed below are not all inclusive, consult your company policies and state, federal, and local regulations:

- The purpose and use of manuals.
- Operating manuals are an integral part of the Digger Derrick and must be properly stored on the vehicle when not in use.
- A pre-start inspection.
- Responsibilities associated with problems or malfunctions affecting the operation of the Digger Derrick.
- Factors affecting stability.
- The purpose of placards and decals.
- Workplace Inspection.
- Applicable safety rules and regulations.
- Authorization to operate.
- Operate warnings and instructions.
- Actual operation of the Digger Derrick.
- Under the direction of a qualified person, the trainee shall operate the Digger Derrick for a sufficient period of time to demonstrate proficiency in the actual operation of the Digger Derrick.
- Proper use of personal fall protection equipment when the Digger Derrick is equipped with platform(s).
- Read and understand how to use the load capacity chart.

Have a tailgate session of what work needs to be done and how.

NOTE: Refer to the load chart for rated capacities, boom angles and load radius.

NOTE: Do not exceed load chart capacities.

https://truckmanualshub.com/

DANGER

AN UNTRAINED OPERATOR SUBJECTS HIMSELF AND OTHERS TO

DEATH OR SERIOUS INJURY

YOU MUST NOT OPERATE THIS MACHINE UNLESS

- **You have been trained in the safe operation of this machine.**
- **You have read, understand and follow the safe and operating recommendations contained in the machine manufacture's manuals, safety signs attached to equipment, your employer's work rules and applicable government regulations.**
- **You are sure the machine is operating properly and has been inspected and maintained in accordance with manufacturer's manuals.**
- **You are sure that all safety signs, guards and other safety features are in place and in proper condition.**

419267

DANGER

FAILURE TO OBEY THE FOLLOWING WILL RESULT IN

DEATH OR SERIOUS INJURY

- For stationary operation, vehicle must be securely parked, driveline disengaged, and Digger Derrick properly stabilized prior to operation.
- To avoid tip-over, all outriggers must be properly extended on a solid level surface.
- Operate all controls slowly and smoothly and make sure controls are returned to neutral after desired operation.
- Never operate the machine with personnel under boom or load.
- Keep load under boom tip. Do not side load boom or drag loads. Avoid free swinging loads.
- Keep at least 4 wraps of loadline on winch drum.
- Never move the vehicle until the booms, auger and outriggers are in properly stowed postion and secured.
- Top Controls are required when working from platform on structures with energized lines or components.
- Refer to the operator's manual for complete instructions. If missing, replace manual.

419273A

Signal persons and Riggers must be trained, competent, and qualified as required by OSHA standards.

- Signal persons and the operator require training in the method of communication used by your company policies.
- Riggers must be competent on the type of rigging required, the capacity of the lifting components, and the hazards involved.

Know the operator’s inspection and maintenance requirements. Simple maintenance procedures can prevent expensive breakdowns. A preliminary check of oil levels and operating conditions of the Digger Derrick shall be made daily before use.

If a deficiency is found, have maintenance performed immediately. Malfunction of one component can cause serious injury to the operator or to others if not corrected immediately.

The ground crew must be trained to operate the Digger Derrick in case of emergency.

A WELL TRAINED CREW IS A PRODUCTIVE CREW!

https://truckmanualshub.com/

PRE-OPERATION

DAILY PRE-OPERATION CHECKS

Before operating the Digger Derrick perform the daily checks and also check the following:

1. Perform the frequent and periodic inspections and lubrications as outlined in the maintenance section of this manual.
2. Store loose objects properly.
3. Check under the vehicle for leakage.
4. Required DOT inspection.

https://truckmanualshub.com/

DIGGER DERRICK

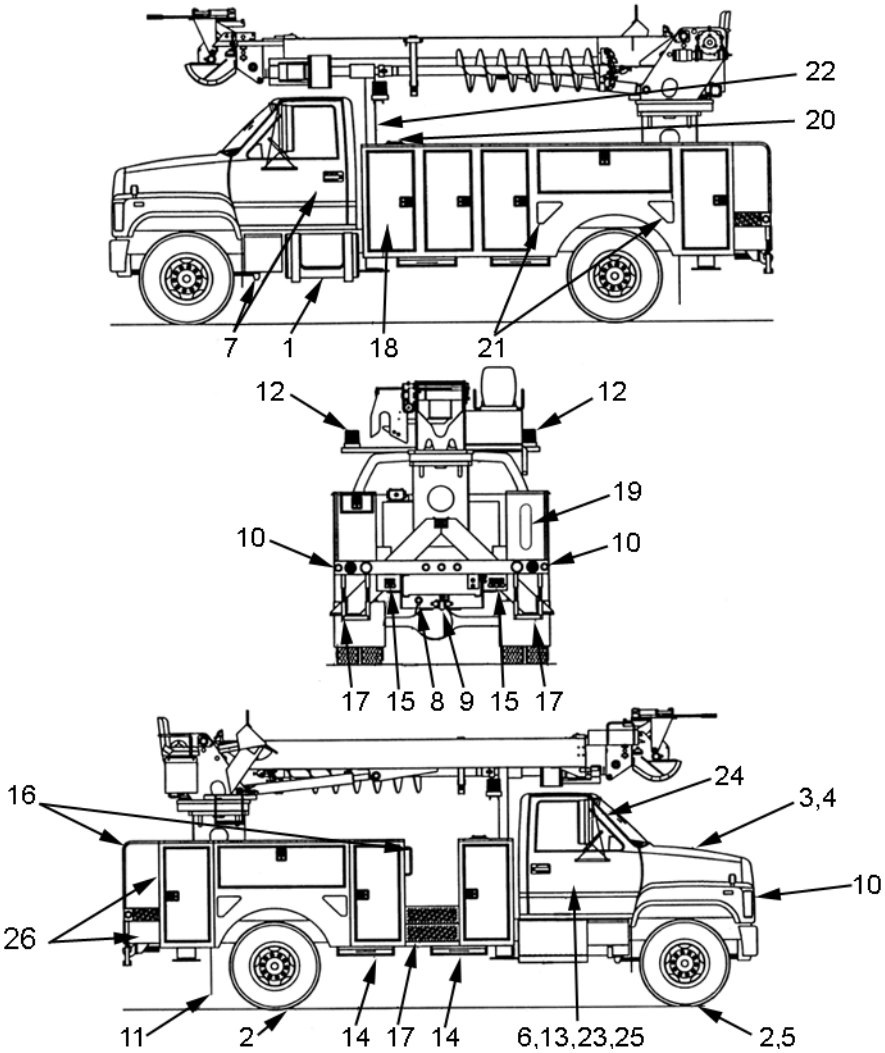

ITEM	DESCRIPTION	ITEM	DESCRIPTION
1.	Fuel Reservoir	14.	Outrigger Pads
2.	Tires and Wheels	15.	Outrigger and Tool Controls
3.	Engine, Radiator and Cooling System	16.	Body Grab Handles
4.	Battery	17.	Body Access Steps
5.	Steering Mechanism	18.	Fire Extinguisher
6.	Brakes	19.	Grounding or Barricade Kit
7.	Transmission	20.	Hydraulic Reservoir
8.	Trailer Light Socket	21.	Wheel Chokes
9.	Trailer Hitch	22.	Boom Rest
10.	Lighting	23.	Personnel Protection Equipment
11.	Mud Flaps	24.	Mirrors
12.	Strobe Lights	25.	Back Up Alarm
13.	PTO Controls	26.	Level Indicators

https://truckmanualshub.com/

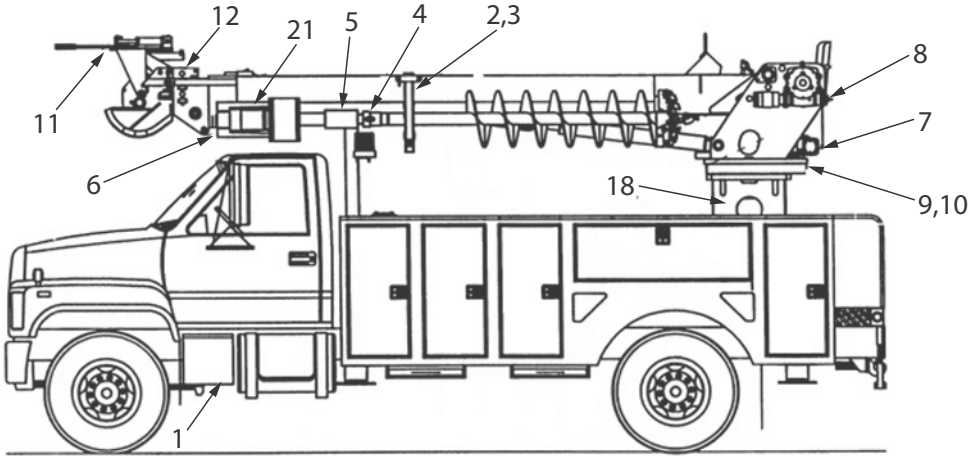

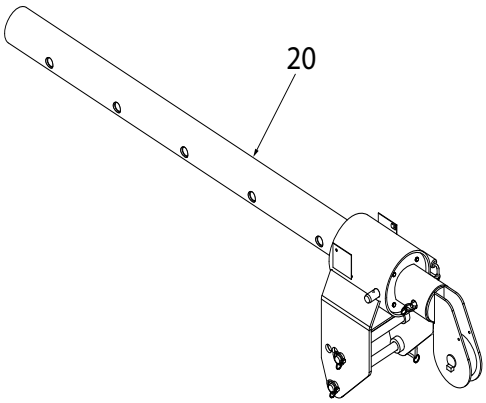

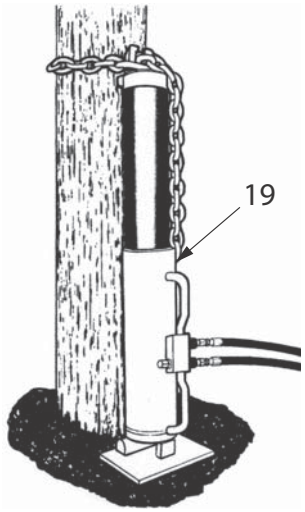

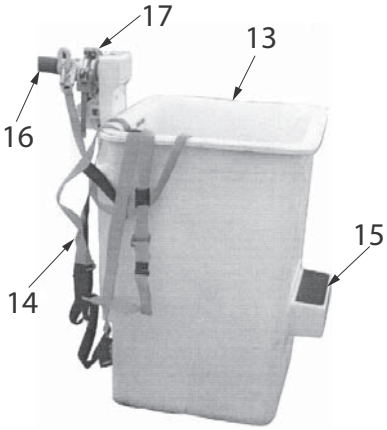

DIGGER DERRICK CHECKS

ITEM	DESCRIPTION	ITEM	DESCRIPTION
1.	Hydraulic Pump	12.	Transferable Pole Guide Mechanism
2.	Auger Storage Bracket and Mechanism	13.	Platform
3.	Auger Roll Up Cable	14.	Harness
4.	Auger to Hex Shaft Retention Bolt	15.	Non-Skid and Platform Step
5.	Digger to Hex Shaft Coupling	16.	Platform Mounting
6.	Digger Mounting and Transfer Mechanism	17.	Platform Brake
7.	Rotation Gear Box	18.	Lubrication (see Lubrication Chart)
8.	Winch Gear Box	19.	Pole Puller
9.	Rotation Bearing Bolts	20.	Jibs and Attachments
10.	Rotation Bearing	21.	Digger
11.	Pole Guide		

https://truckmanualshub.com/

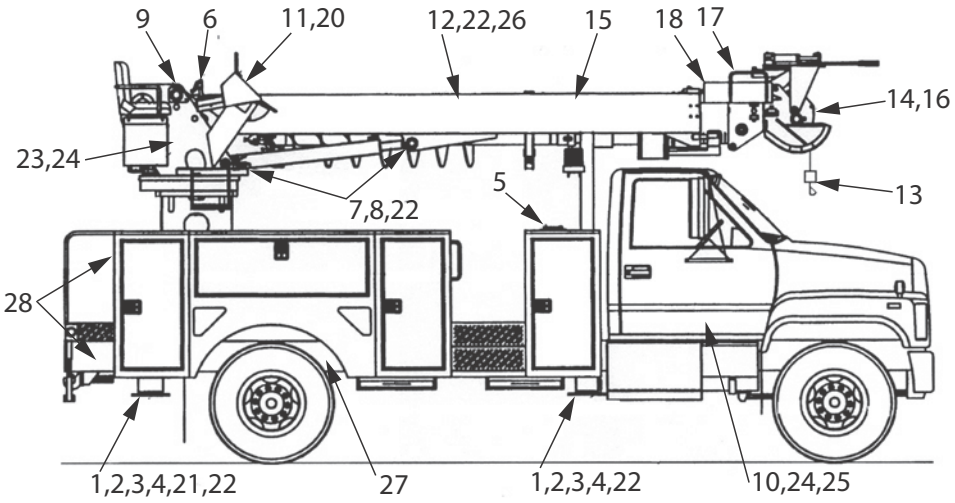

DIGGER DERRICK CHECKS

ITEM	DESCRIPTION	ITEM	DESCRIPTION
1.	Outriggers	15.	Booms
2.	Outrigger Cylinders	16.	Fiberglass Boom(s)
3.	Outrigger Motion Alarm	17.	Top Controls
4.	Outrigger Mounting	18.	Top Control Extension Mechanism
5.	Return Line Filter & Hydraulic Oil Level	19.	Lubrication (see Lubrication Chart)
6.	Lower Controls	20.	Pressure Setting
7.	Lift Cylinders	21.	Outrigger Interlock
8.	Lift Cylinder Mounting Pins	22.	Cylinder Holding Valves
9.	Boom Pivot Installation	23.	Hydraulic Plumbing
10.	Throttle Control	24.	Electrical Systems
11.	Load Capacity Charts	25.	Operator's Manual
12.	Extension Cylinder Connection	26.	Telescoping Tubes
13.	Load Line, Hook, and Safety Latch	27.	Subframe and Mounting
14.	Load Line Sheaves	28.	Boom Angle Indicator

NOTE: Some items listed above are optional and may not be installed on your Digger Derrick.

NOTE: The lower controls shown are above rotation. The lower controls on your Digger Derrick may be mounted elsewhere. Refer to the controls section.

https://truckmanualshub.com/

JOB SITE SURVEY

Before positioning the vehicle to work, perform a complete survey of the job site. During the survey, look for items including the following:

1. Ambient conditions including temperature.
2. Consider the slope of the ground:
   - Unit is tested on maximum 5 degree ground slope as a personnel lift.
   - Lift capacity is reduced if not level for material handling.
3. Determine if the ground is firm enough to support the Digger Derrick. If the ground is not firm enough, use pads under the outriggers and crib as needed to distribute the load.
4. If the vehicle must be parked on a slope, always keep the boom on the uphill side, chock the wheels, and work off the rear of the vehicle.
5. If unit has one set of outriggers, evaluate the tire contact area. All tires and axle suspension springs must be equally loaded prior to setting the outriggers.
6. Look for ditches, drop-offs, holes, debris, and overhead utility and power lines.
7. If grass or other combustible materials will be underneath when the vehicle is setup, follow company policies to prevent a fire.
8. Underground Utilities, such as sewer and water lines, electrical lines, gas lines, and other lines. If digging is to be done, mark the location of all utilities. Call your local "**Call Before You Dig**" hotline or the National hotline (888) 258-0808 or 811 if available to have all underground utilities marked before digging.

9. Determine the vehicle position needed to accomplish the work safely. If it is not safe to proceed use another method or setup.

https://truckmanualshub.com/

OPERATING TEMPERATURE RANGE

The ambient operating temperature range of the unit is given on the ID plate. Operation at the extremes of the temperature range requires extra precautions.

Cold weather operation below 10 degrees F (-12 degrees C) requires:

- The hydraulic system must be filled with hydraulic fluid having a pour point suitable for the temperature.
- The hydraulic system must be properly warmed up:
  - •Operate the pump at idling speed to allow the oil to warm up gradually. Cold, thick, sluggish oil may not move fast enough and will starve the pump, thus causing severe damage.
  - •Circulate the oil through the outrigger system by cycling each outrigger several times before setting up for boom operation.
  - •Circulate the oil through the system by cycling each function from the lower controls before operation from the platform.
  - •The addition of oil heaters may be required.
- Operate the boom and functions slowly to prevent jerking and shock loading.
- Functions may operate sluggish and not be as responsive, so allow more time and distance when starting and stopping movements.

Hot weather operation above 100 degrees F (38 degrees C) may require intermittent operation to allow the oil to cool or the addition of oil coolers. Do not exceed an oil temperature of 150 degrees F (66 degrees C).

WIND SPEED

Do not operate the Aerial device or Digger Derrick at any wind speed that would create a potential hazard or does not allow safe operation for the work to be performed.

Allow for platform, boom, load, and work-area movement, electrical line sway or sag during windy conditions.

Always account for windy conditions during the work site inspection or survey.

NOTE: OSHA 1910.269 (x) (5) allows the use of Aerial devices and Digger Derricks up to a wind speed of 30 MPH (48 km/h). The OSHA general duty clause also requires the user to determine if conditions are safe before proceeding with work.

It is both the user's and operator's responsibility to conduct a thorough work site inspection and determine if the work can be performed and the equipment operated safely in the conditions at the site. It is the responsibility of both the user and operator to also continuously monitor the work site conditions and if conditions adversely change, to halt all operations until conditions allow for safe operation.

https://truckmanualshub.com/

JOB SITE SETUP

Before locating the vehicle in position to work, perform a complete survey of the job site. Select a truck position that is as level as possible.The lift capacity is determined with the vehicle level. If not level the capacity is reduced. For use with a platform at the boom tip, select a truck position that has a ground slope of less than 5 degrees. If the platform was supplied as original equipment, the unit has been tested for stability on a flat firm surface with a maximum slope of 5 degrees. Working on slopes that exceed 5 degrees may result in vehicle tipping over. The truck as built may have torsion bars only, one set of outriggers, or two sets of outriggers or a combination of torsion bars and outriggers. The unit has been tested for stability as originally equipped. The vehicle can only be used with the stability components as originally installed and tested. If the unit has outriggers they must all be used and set up properly for stability of the unit. If the unit has torsion bars they must be inspected and maintained to provide the force needed for stability.

For use with a platform:

- Determine if the vehicle is parked on a slope of 5 degrees or less by looking at the level indicators located by the outrigger controls. The level indicators are only an operator aid, they will show if the angle at the indicator location is over 5 degrees but will not show if the ground is less than 5 degrees or how much the frame is twisted. The operator must visually verify the ground condition and that the truck axles uniformly support the truck weight. If the tires are hanging on one suspension spring, barely touching the ground, and the opposite suspension spring is up against the rubber stop, the frame angle is different than the axle angle. The axle suspension is not loaded uniformly and may not provide proper stability.
- The unit will be equipped with an inclinometer, shown below. The ball must be in the green area. If the ball is in the red area, the truck is at an angle greater than 5 degrees and the truck position must be changed before use. Change the position of the truck by repositioning the truck until it is less than 5 degrees and the suspension on each axle is uniformly loaded. If the truck is parked in a location with less than a 5 degrees slope and the tires equally support the truck and load, proceed to setup the unit.

DANGER

OVERTURNING HAZARD

DEATH OR SERIOUS INJURY

May result from overturning machine

For material handling, lifting operations the Digger Derrick must be level.

- Lift capacity is determined in a level position of the truck.
- If the truck is not level the capacity is reduced

For lifting people, in a boom tip platform, the truck must be at less than a 5 degree slope.

- This unit has been tested for stability on a maximum slope of 5-degrees.
- Working on slopes that exceed 5 degrees may result in truck tipping over.

498819

LEVEL INDICATOR

https://truckmanualshub.com/

Working on slopes that exceed 5 degrees may result in vehicle tipping over. The level indicators are only an operator aid, it will show if the angle is over 5 degrees at the indicator location but will not show if the ground is less than 5 degrees or frame twisted. The operator must visually verify the ground condition.

- If unit is not equipped with outriggers, or only has one set of outriggers the tires and suspension on each side of each axle must uniformly support the truck and load because they are part of the stability system when operating the Digger Derrick. If one tire and axle spring is not loaded the same as the other, on that axle, it will not be able to provide the stability needed.
  - A tire cannot be in a hole or depression even if the truck is parked and the indicators show less than 5 degree angle.

If unit is equipped with two sets of outriggers, the axles not between the outriggers must equally support the load of the truck so the suspension on each side is equally loaded.

Use the following procedure after the vehicle is in position at the work site:

- Turn on warning lights as you approach the work site or after the Digger Derrick is in position according to your employer's policies.
- Place vehicle in neutral and set brakes before leaving cab.
- Chock the wheels.
- Position and use signs, warning lights, and barricades in accordance with OSHA, ANSI, state, and company rules and regulations.
- When work is to be performed on or near power lines, ground and/or barricade vehicle according to your company policy. If using a temporary ground connect grounding cable clamped to a static line or neutral, or use drive or screw type ground rod to ground truck according to your company policy. Unroll ground cable fully and spread out so cable does not cross over.
- Engage the power take-off (PTO) following the directions given with the specific PTO installed on the truck.
- Turn master switch on to energize unit electrical systems. (May also function as PTO Switch.)
- Set the outriggers (if equipped).

If the unit is equipped with outriggers, all outriggers must be set properly to provide adequate stability.

https://truckmanualshub.com/

SETTING UP ON A SLOPE

If the chassis is set-up across the slope as shown below, the surface can be up to 5 degrees from level but must be firm and flat where tires are located. If one side of the chassis is low, extend the low side outrigger first and make sure that firm contact is made. If full extension does not make firm contact, the outrigger pad must be blocked up. Always chock the wheels. Keep the boom on the uphill side. If the slope exceeds 5 degrees before setting the outriggers the tires must also be blocked and cribbed so the truck is parked at less than 5 degrees. If the unit has one set of outriggers do not level the truck with the outriggers. On units with one set of outriggers using the outriggers to level the truck does not change the slope, it reduces the truck suspension's ability to support the load and provide stability.

> ⚠ Working on slopes that exceed 5 degrees may result in vehicle tipping over when used to lift personnel in boom tip platform.

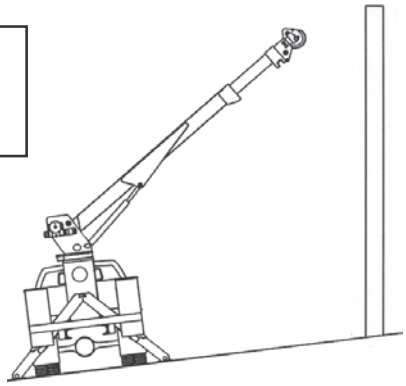

VEHICLE SETUP ACROSS THE SLOPE

If the vehicle must be set up with the slope, always keep the boom on the uphill side of the vehicle and always work off the rear of the vehicle.

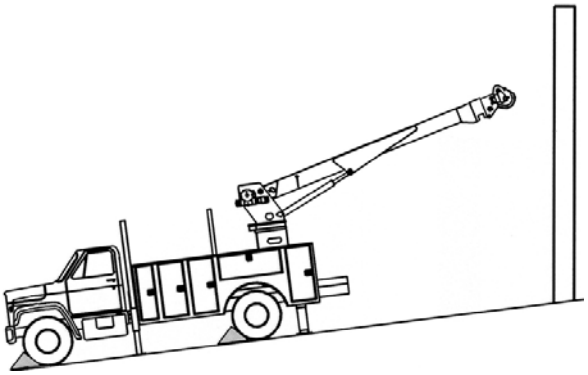

VEHICLE SETUP WITH THE SLOPE

If the outrigger support surface is not level with the truck, the bank may need to be cut away or brought up to a level so the outrigger will provide proper support. The ground must be able to support the load of the outrigger without sinking. If the chassis must be set up where an outrigger extends into a ditch or gutter and the full extension does not make firm contact, the outrigger must be blocked or cribbed up.

If the vehicle must be set up so an outrigger would be set on a curb with the vehicle in the street, the outrigger span will be shortened. Reposition the vehicle.

All of the above conditions may affect the stability of the vehicle and reduce the load capacity of the vehicle.

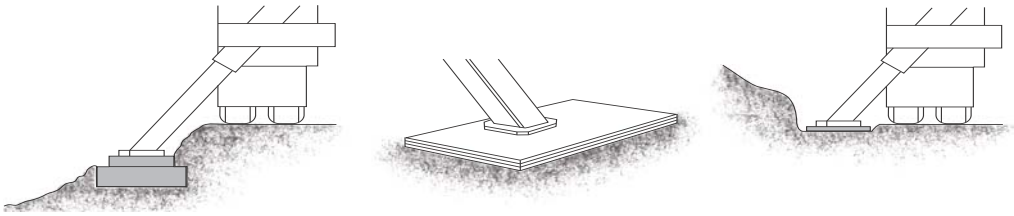

https://truckmanualshub.com/

SETTING UP ON A SOFT SURFACE

If the ground is too soft to support the outrigger load or wheel load, mats or pads must be used. If the ground will not support the load the unit cannot be used at that location. Make certain the tires and outriggers are centered on the pads and the cribbing provides stable support as the booms are moved.

SETTING UP FOR OPERATION ON SNOW AND ICE

Operation on snow and ice adds an additional problem due to the slippery conditions. Normal traction is greatly reduced. Just as you need to maintain traction to walk and drive, it is required to keep Digger Derricks and Aerial Devices in a stable position. Rotating and moving the booms may cause the truck to jerk and move. If the unit is not set up securely the truck can slide on ice and snow while operating. When planning your work remember that driving in snow causes snow dust to be deposited on all surfaces. The outriggers and outrigger pads will get snow covered and slippery. Also, as you put pressure on snow, the snow packs down and turns to ice. The person setting the unit up for operation has the entire responsibility for a stable position. The person on the site is the only one who can evaluate the conditions and terrain.

Proper set up requires:

- Outriggers do not slide on the outrigger pads during use.
- Outrigger pads do not slide on the ground during use.
- Set the parking brakes.
- Chock wheels as required, to prevent movement down hill. Evaluate chock location to prevent the truck pivoting around one chock.
- Set units with one set of outriggers so all tires are on the ground.
- Evaluate the terrain to determine the most flat and level set up position.
- Set up truck so if the truck does move slightly, the result isn't catastrophic.
- Follow Operators manual for set up instructions. Do not place outriggers on Ice as slippage may occur regardless of solid footing.

To properly set up you may need to:

- Remove snow and ice down to bare ground to prevent sliding and to evaluate the support available. Don't set outriggers on a manhole cover or the edge of a slope or drop off.
- Move as far as required into the street or road so if the truck does move, the tires and outriggers will not slide into the ditch or other hazards.
- Choose a location for the truck that gives the best stability for the work to be done.
- Come back later, to do the work, if the roads are not cleared sufficiently.
- Use traction aids under the tires and outriggers such as sand and gravel or mats.
- Operate the unit smoothly by "feathering" the controls, not jerking the levers.

OUTRIGGER / UNIT CONTROL SELECTOR

The Outrigger/Unit Control Selector must be in the "OUTRIGGER" position to raise or lower the outriggers. The lever must be in the "UNIT" position to operate the boom functions. If equipped with hydraulic tools at the outrigger valve, the tools will have priority over other operations. When the tools are "on" the "UNIT" and "OUTRIGGERS" will not get hydraulic oil flow and will not operate.

Do not use, connect, disconnect, or handle the lower hydraulic tool if the booms are in or near energized lines. Death or serious injury may result if the truck becomes energized.

https://truckmanualshub.com/

OUTRIGGER INTERLOCK

If the completed unit requires outriggers for stability it will be equipped with Outrigger Interlock. Outrigger Interlock will prevent raising the boom unless the outriggers are extended past a predetermined point. The operator is responsible to set the outriggers properly to provide stability. If the booms do not operate and the Outrigger/Unit Control Selector is selected to "UNIT", then verify the outriggers are properly extended. The operation of the outrigger interlock does not assure stability, it is only an operator aid. It only serves to remind the operator that the outriggers have not been deployed.

To verify operation of the interlock:

- With o/r's retracted, select unit and try to operate the boom. It must not operate.
- Lower all outriggers and verify boom operation.
- Retract one outrigger and try to operate the boom. It must not operate.
- After verifying operation, extend the outrigger before moving on to the next outrigger.
- Repeat for each outrigger. If the boom operates with any outrigger retracted, repair before use.

STABILITY

The stability of a vehicle equipped with a Digger Derrick depends on the gross weight of the vehicle and platform capacity, the slope of the work area, and whether the ground is firm enough to support the force on the outrigger pads. These conditions are widely variable, so the operator must exercise good judgement.

IMPORTANT: Know the platform capacities of your unit which includes operator(s), liner, tools, and debris.

This Digger Derrick with a platform has been tested for stability on a flat firm surface with a maximum slope of 5 degrees. Working on slopes that exceed 5 degrees may result in vehicle tipping over.

https://truckmanualshub.com/

DIGGER DERRICK OPERATION

Operation of a Digger Derrick as a lifting device must follow the appropriate OSHA rules, 1926 subpart CC or Subpart V. The operator may be required to be certified as a digger Derrick operator. Signal persons and riggers are required to be competent and qualified. Follow all ANSI and OSHA regulations as determined by your company's policy.

Lack of proper training and failure to follow safe work procedures may result in serious injury or death.

The following conditions must be followed when using a Digger Derrick near energized lines or equipment:

1. No part of the boom, attachments to the boom, load line, or the load shall be brought into contact with or in proximity of an electrically charged conductor.
2. While operating a Digger Derrick, the operator must not create an electrical path between the vehicle and earth ground.
3. Prior to lifting the boom assembly out of the boom rest, all ground personnel must be warned to stay away from the vehicle. Ground personnel must not make contact with the vehicle or any apparatus that is attached to the vehicle until the boom assembly has been returned to the boom rest.
4. All electrically charged conductors in proximity to the work area must be properly covered.
5. The vehicle must be properly grounded and/or barricaded according to your company policies.
6. All employer's policies and governmental rules and regulations must be followed.

A fiberglass upper boom, in clean and undamaged condition, will only provide dielectric protection when fully extended and the load line does not cross the insulating section. If the upper boom is not fully extended, or extended past the minimum extension decal (if equipped), the Digger Derrick is considered not insulating.

Always operate boom controls while at the control station on the vehicle. Never operate the Digger Derrick boom controls while standing on the ground, unless operating with radio remote controls where the operator does not touch the vehicle(s) and the ground at the same time.

All boom operations must be smooth. When starting or stopping, avoid jerking by slowly metering the control valves. Start and stop all boom movements with a low engine speed to make it easier to "feather" the controls for smooth operation.

The controls provide proportional metering of the boom function. The farther the control is moved from the neutral position the faster the function will operate.

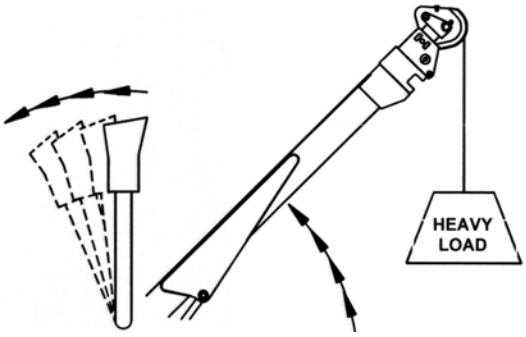

FEATHERING CONTROL VALVE

https://truckmanualshub.com/

A hydraulic pressure gauge enables the operator to determine the pressure of the fluid in the hydraulic system. Attention to this gauge permits the operator to know when the maximum allowable pressure is being approached, at which point the relief valve operates.

Lift the boom off the boom rest and elevate high enough to clear all body obstructions before rotating.

When lifting loads, the booms deflect a certain amount then when the load is relieved, the booms will return to the normal position.

Always allow extra clearance above and below the booms from any obstacle when lifting a load to allow for deflection.

Make certain that all personnel are clear of the workzone and that there is sufficient overhead clearance before operating the Digger Derrick.

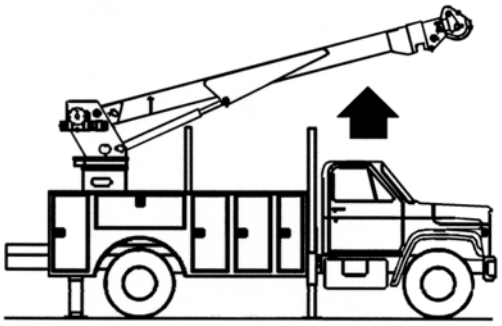

CLEAR ALL BODY OBSTRUCTIONS BEFORE ROTATING

Inspect all slings, hooks, rigging, and lifting attachments daily before use. All items must have sufficient safe working load capacity for loads being lifted.

Before lifting any loads, consult the load capacity chart located near the controls and make sure that the load to be lifted does not exceed the capacity shown for the desired boom length, elevation, and load radius. A practice run may be needed to determine if the required movements will remain within the load capacity of the Digger Derrick.

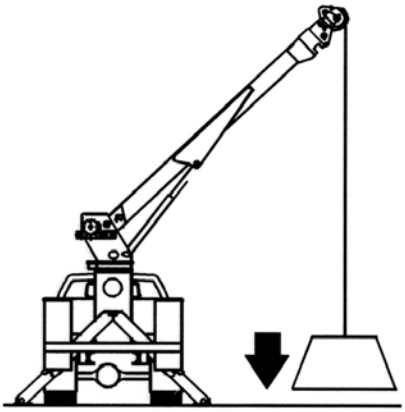

KEEP LOADS AS CLOSE TO THE GROUND AS POSSIBLE

https://truckmanualshub.com/

LOAD CHART

The load chart at the operator station provides the load capacities of the Digger Derrick when lifting a freely suspended load. The load chart gives allowable loads when the vehicle is level. If not level, the capacity is reduced.

The capacity of the unit is determined by five items:

1. The rope capacity (shown on the right upper side of the load chart).
2. The boom angle (If between angles use the lower angle).
3. The boom extension. (Consider extended if not fully retracted.)
4. Rotational position relative to the truck. (Zone A or B).
5. Jib capacity (if used is shown on separate chart).
6. Options.

The allowable load will be the lowest load permitted by the rope capacity, Load Capacity Chart, or Jib Capacity Chart. The Load Capacity Chart only gives the boom capacity, the load line may have to be multi-parted to lift the capacity shown.

Attempting to lift unknown loads may overload the unit or cause instability. Poles and items embedded in the ground, attached, or frozen to the ground are unknown weights that may overload the structure and may cause structural damage or overturning.

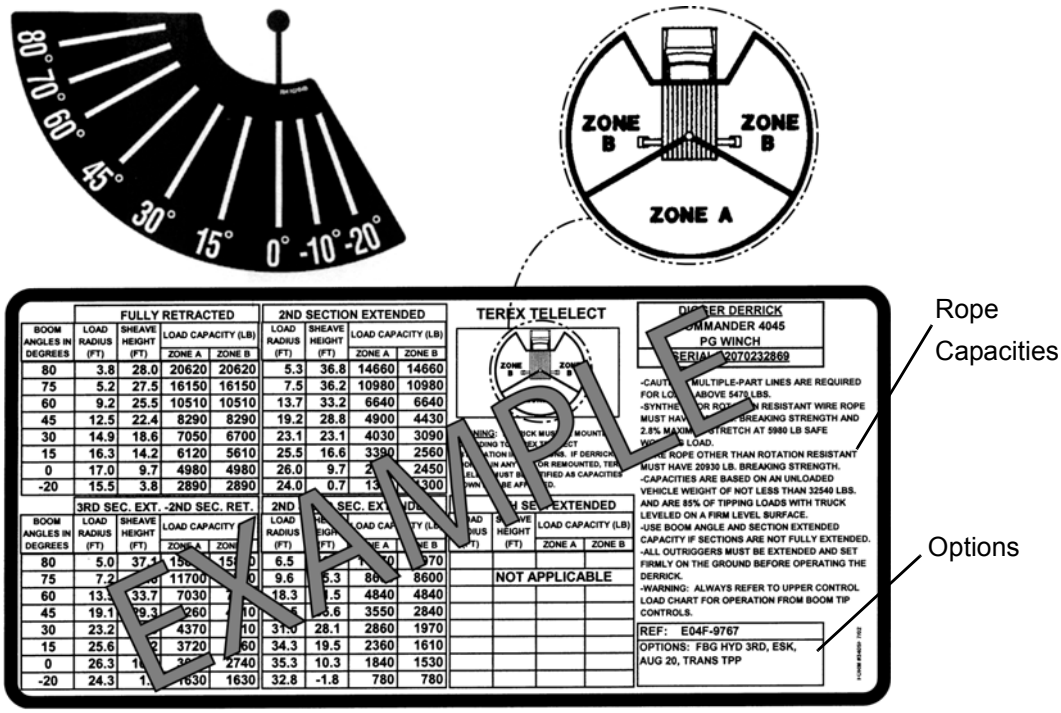

BOOM ANGLES IN DEGREES	FULLY RETRACTED LOAD RADIUS (FT)	SHEAVE HEIGHT (FT)	LOAD CAPACITY (LB) ZONE A	LOAD CAPACITY (LB) ZONE B	2ND SECTION EXTENDED LOAD RADIUS (FT)	SHEAVE HEIGHT (FT)	LOAD CAPACITY (LB) ZONE A	LOAD CAPACITY (LB) ZONE B
80	3.8	28.0	20620	20620	5.3	36.8	14660	14660
75	5.2	27.5	16150	16150	7.5	36.2	10980	10980
60	9.2	25.5	10510	10510	13.7	33.2	6640	6640
45	12.5	22.4	8290	8290	19.2	28.8	4900	4430
30	14.9	18.6	7050	6700	23.1	23.1	4030	3090
15	16.3	14.2	6120	5610	25.5	16.6	3390	2560
0	17.0	9.7	4980	4980	26.0	9.7	[illegible]	2450
-20	15.5	3.8	2890	2890	24.0	0.7	[illegible]	[illegible]300

BOOM ANGLES IN DEGREES	3RD SEC. EXT. -2ND SEC. RET. LOAD RADIUS (FT)	SHEAVE HEIGHT (FT)	LOAD CAPACITY ZONE A	LOAD CAPACITY ZONE B	2ND SEC. EXTENDED LOAD RADIUS (FT)	SHEAVE HEIGHT (FT)	LOAD CAPACITY (LB) ZONE A	LOAD CAPACITY (LB) ZONE B
80	5.0	37.[illegible]	15[illegible]	15[illegible]	6.5	[illegible]	[illegible]	[illegible]970
75	7.2	[illegible]	11700	[illegible]	9.6	5.3	86[illegible]	8600
60	13.[illegible]	33.7	7030	[illegible]	18.3	[illegible].5	4840	4840
45	19.1	29.3	[illegible]260	[illegible]10	[illegible]5	[illegible]5.6	3550	2840
30	23.2	[illegible]	4370	[illegible]10	31.0	28.1	2860	1970
15	25.6	[illegible]2	3720	[illegible]60	34.3	19.5	2360	1610
0	26.3	1[illegible]	[illegible]	2740	35.3	10.3	1840	1530
-20	24.3	1[illegible]	1630	1630	32.8	-1.8	780	780

ANGLE INDICATOR AND LOAD CAPACITY CHART DECAL

Complying with the Load Capacity Chart is very important for safe operation. If missing, illegible or damaged replace immediately. Do not assume capacity is the same as other units. Each Load Capacity Chart is only for the Digger Derrick serial number shown on the chart.

The weight of the slings, rigging, and lifting attachments are part of the gross load being lifted and must be included in the load weight. All rigging must have sufficient capacity for total load being lifted.

NOTE: All units must have a load chart for the specific serial number. Also the boom angle indicator must be functional.

https://truckmanualshub.com/

INSTALLED OPTIONS

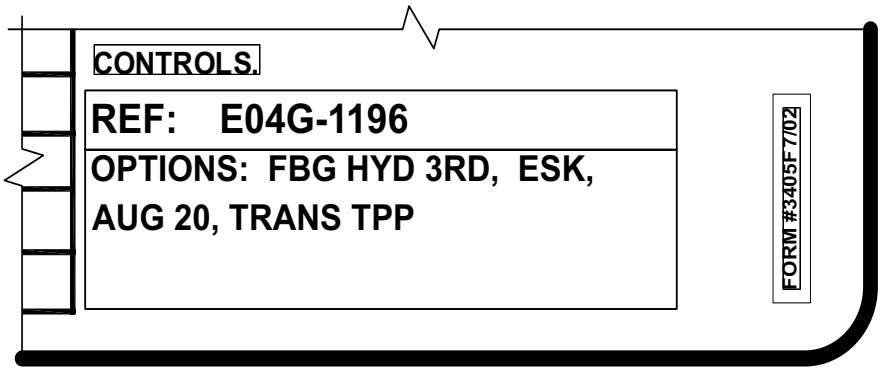

LOWER RIGHT SECTION OF LOAD CHART

This section of the load chart gives the options that are installed at the time of test to determine the capacity. If additional options have been added on unit modified, then the capacity is affected. The added weight must be deducted from the capacity shown on the load chart.

CODE	OPTIONS AVAILABLE
FBG Hyd 3rd	Fiberglass Hydraulic 3rd Section
FBG Man 3rd	Fiberglass Manual 3rd Section
Stl. 3rd	Steel 3rd Section
CTI	Top Control Selector
ATP	Auxiliary Tools
TPP	Tilt Pole Plummer
Trans. TPP	Transferrable Tilt Pole Plummer
TPP on 2nd	Tilt Pole Plummer on 2nd Section
TPP on 3rd	Tilt Pole Plummer on 3rd Section
MK IV	Mark IV Digger Drive
ESK	Eskridge Digger Drive
Aug.	Auger

https://truckmanualshub.com/

READING THE LOAD CAPACITY CHART

The chart is divided into areas depending on the extension of the boom. A section is considered extended unless fully retracted. The areas of the chart are labeled:

- FULLY RETRACTED
  - •All sections are fully retracted.
- 2ND SECTION (INTERMEDIATE) EXTENDED
  - •Only the second section extended. All other boom sections are fully retracted.
- 3RD SECTION (UPPER) EXTENDED — 2ND SECTION (INTERMEDIATE) RETRACTED
  - •Only the third section extended. All other boom sections are fully retracted.
- 2ND (INTERMEDIATE) AND 3RD (UPPER) SECTION EXTENDED
  - •Both the second section and the third section are extended.
- 4TH SECTION EXTENDED
  - •If not equipped with a fourth section this block will be blank. If the fourth section is extended, this section of the chart applies. It does not depend on position of second or third section. Any time the fourth section is not retracted, this section will give the capacity.

NOTE: A section is considered extended if it is moved out of the stowed or fully retracted position.

Each section in the chart has a column that shows:

- The angle of the lower boom.
- The maximum load radius for that boom angle and extension.
- The maximum sheave height for that boom angle and extension.
- The load capacity in Zone A (Over the rear of the vehicle).
- The load capacity in Zone B (Over either side of the vehicle).

Determine the boom angle by looking at the angle indicator on the side of the boom. The boom angle is used to determine the capacity on the load capacity chart. When the indicator falls directly on an angle, then use this value in the load capacity chart. If the indicator falls in between two angles, use the lower angle. For example, if the boom angle is between 15 and 30 degrees, the 15 degree value from the load capacity chart is used.

Determine the Zone by identifying where the boom is located relative to the truck. Zone A is over the rear of the truck between the corners of the bed. Zone B is to the sides between the corners of the truck bed.

LOAD LINE

The right side of the chart lists the Load line strength in the note:

”CAUTION: MULTIPLE PART LINES ARE REQUIRED FOR LOADS ABOVE XXXX.”

The XXXX is the load capability of the line originally supplied with the unit. If the line is replaced it must be replaced with a line that has the strength as shown of on the load chart. If the capacity determined by the Load Capacity Chart or the Jib Chart exceeds the value XXXX given on the chart the line must be multi-parted or the load limited to the line capacity.

If an optional jib is used, be sure the load does not exceed the jib capacity chart.

https://truckmanualshub.com/

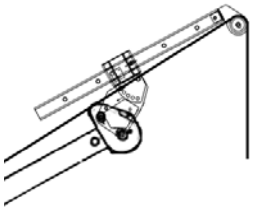

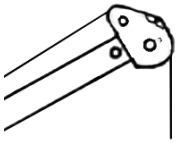

UPPER CONTROL WINCH CAPACITIES

BOOM ANGLE	WINCH CAPACITIES IN LBS		
	JIB EXT 0 FT	JIB EXT 2 FT	JIB EXT 4 FT
80º	2700	2700	1850
70º	2700	2700	1750
60º	2700	2700	1700
45º	2500	2000	1200
30º	1420	1340	1000
15º	1160	1110	900
0º	710	670	640

TEREX SOUTH DAKOTA E04G-XXXX-1 SN XXXXXXXXXX

EXAMPLE

LOAD CHART UPPER CONTROL WINCH CAPACITY WITH JIB ASSEMBLY

UPPER CONTROL WINCH CAPACITIES

BOOM ANGLE	WINCH CAPACITIES IN LBS
80º	2700
70º	2700
60º	2580
45º	1370
30º	900
15º	710
0º	660

TEREX SOUTH DAKOTA E04G-XXXX-1 SN XXXXXXXXXX

EXAMPLE

LOAD CHART UPPER CONTROL WINCH CAPACITY WITHOUT JIB ASSEMBLY

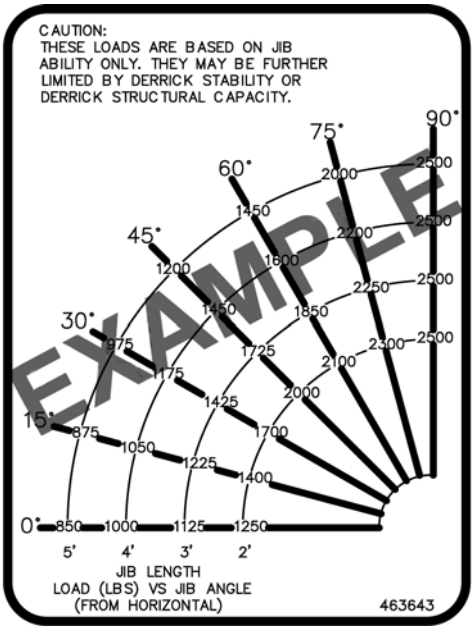

JIB LOAD CHART

https://truckmanualshub.com/

LIFTING AND BOOM SECTIONS

ROTATION

The rotation system is intended to rotate the rated working load suspended on the load line.

Do not pull, drag, or jerk while using the winch, digger, or rotation control. This can overload and damage the rotation mechanism, which can result in death or serious injury.

If the vehicle is operated on sloping ground, use extreme caution when rotating toward the low side. The load chart on the unit gives the capacity when properly stabilized on level ground. The capacity is reduced if vehicle is not level.

LIFT CYLINDER CAPACITY

When you consult your Digger Derrick load capacity chart, note that the Digger Derrick lift capacity increases at high boom angles and at shorter distances from the centerline of rotation to the centerline of the load (radius). You must know the weight of load to be lifted and the correct position of the boom so the capacity shown in the load capacity chart is not exceeded.

To determine if an unknown weight can be lifted all of the following conditions must be met:

Determine the weight using a load cell or dynamometer between the load line and the load.

- The load must only be lifted with the lift cylinders.
- The hydraulic pressure must be at the proper setting for the particular model and the hydraulic pressure shown on the pressure gauge must not exceed setting shown on the ID Plate.
- The load shown for the boom angle and extension on the load chart must not exceed the winch line capacity as shown on the right side of the load chart, multi-parting may be required.
- Rotational position of the boom relative to the truck must be in the working zone which shows the maximum load on the load chart.

https://truckmanualshub.com/

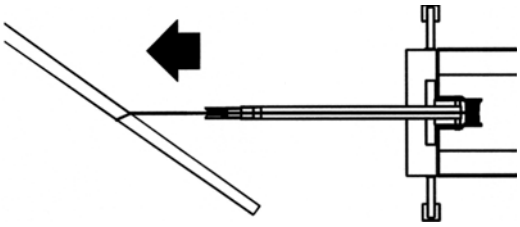

POSITION THE DIGGER DERRICK TO AVOID DRAGGING THE LOAD

Lifting speeds can be controlled with the engine throttle and by metering the control valve. Slow speeds should be used on all heavy loads or when working in close quarters. For smooth operation, start and stop with low engine speed.

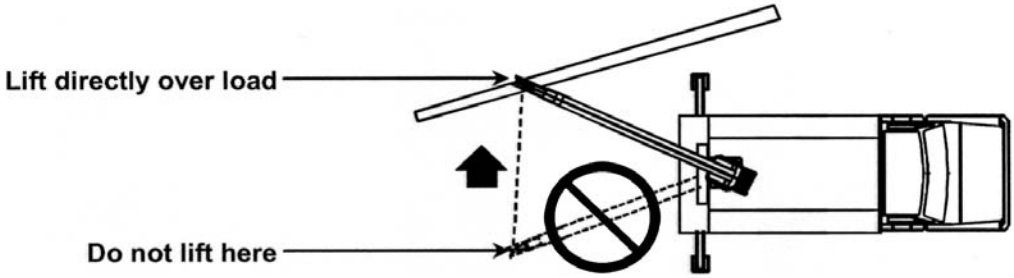

ROTATE BOOM TO THE LOAD, TO AVOID SIDE STRAINS

Do not exceed the winch line capacity, which can result in serious injury or death.

Do not use the winch, lift cylinder, or extension cylinder to lift loads that are in excess of the load capacity chart value for the boom position. This can overload and cause damage to component parts, which can result in serious injury or death.

INTERMEDIATE SECTION (SECOND SECTION)

The second section extension is used for positioning loads and keeping the digger/auger vertical when digging holes. It can also be used for plumbing poles by extending or retracting.

Use extreme care when extending the second section while handling loads. The vehicle can become unstable if the second section is extended to a larger radius with load.

Do not exceed values shown on the load capacity chart for boom position.

When the second section is moved out of fully retracted position, use extended load from load chart.

HYDRAULIC UPPER BOOM (FIBERGLASS THIRD SECTION)

The fiberglass third section is used to position loads and has provisions for attaching a platform for aerial work. Do not assume the fiberglass has any insulating value when lifting loads.

When the third section is moved out of the fully retracted position, use the third extended load from the load chart.

https://truckmanualshub.com/

TRANSFERABLE POLE GUIDE (OPTIONAL)

Use the transferable pole guide when it is necessary to handle poles with the third section. Pin the transferable pole guide to the second section so it remains with the second section when the Third section is extended or pin it to the third section so it extends with the third section.

To transfer the pole buddy to the third section, retract the third section fully into the second section. Remove the retaining pin from the second section and place it in the pin boss that retains the pole buddy to the third section.

When pinned on the second section, always raise the pole claws before extending the third section to avoid damage to pole claws. To prevent the pole guide from sliding down the third section, do not unpin from the second section with the third section extended.

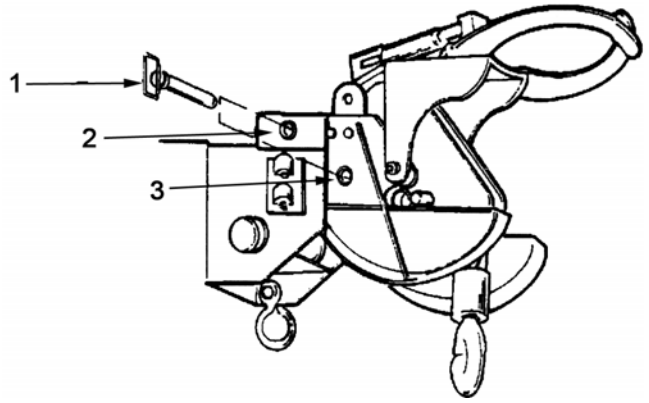

1. Retaining Pin
2. To attach to 2ND Section
3. To attach to 3RD Section

TRANSFERABLE POLE GUIDE W/POLE PLUMMER

When used with the boom tip winch, the winch line has to be routed as shown below.

Route the winch line on any Digger Derrick with a transferable pole guide and pole grabbing winch as shown in following graphic. At all times, the winch line must be routed from the winch drum over the sheave in the third section.

Failure to route the winch line in this manner will result in damage to winch line and serious injury or death.

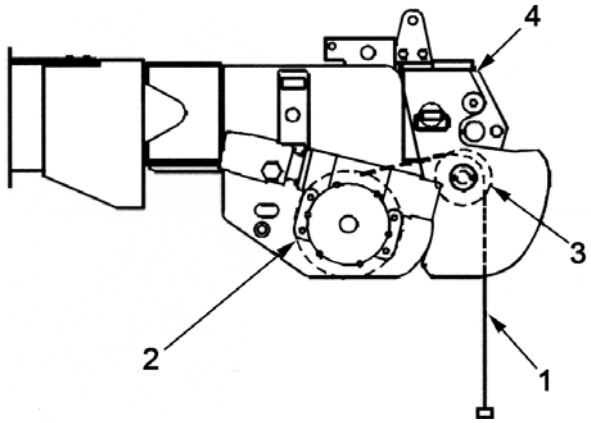

1. Winch Line
2. Winch Drum
3. Sheave
4. 3RD Section

WINCH LINE ROUTING BOOM TIP WINCH WITH TRANSFERABLE POLE GUIDE

https://truckmanualshub.com/

WINCHES

TURNTABLE WINCH

The turntable winch is located in the turntable behind the rear of the boom.

Boom movement, articulation or extension will cause load line to move relative to the boom tip sheave. Be aware you must payout or pull in on the winch line to prevent contact of the hook or load being pulled into the sheave end.

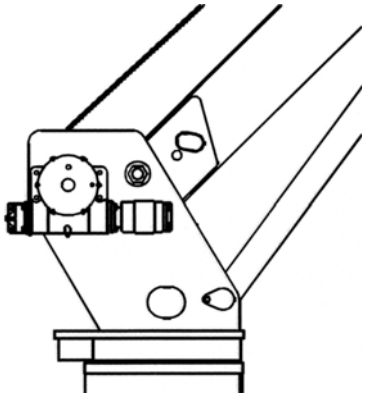

TURNTABLE WINCH

When extending either the second section or the third section, always pay out the winch line to maintain clearance between the boom tip and the winch line hook/load. Contact between the boom tip and the winch line hook/load can cause damage to the boom or break the winch line and cause serious injury or death.

BOOM TIP WINCH

Some Digger Derricks are equipped with a boom tip winch. This winch is mounted on the outer end of the second boom section and travels in and out with the second section. The third section is provided with a sheave arrangement to accept the winch line from the boom tip winch.

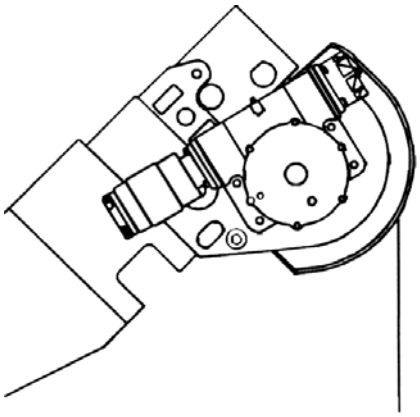

BOOM TIP WINCH

When the winch is attached to the second section, always pay out the winch line when extending the third section to maintain clearance between the boom tip and the winch line hook/load. Contact between the boom tip and the winch line hook/load can cause damage to the boom or break the winch line and cause serious injury or death.

https://truckmanualshub.com/

WINCH LINE

The recommended ropes used on this Digger Derrick should meet or exceed the following requirements and as noted on the load capacity chart:

- Synthetic rope or rotation resistant wire rope must have a minimum breaking strength as shown on load chart and a maximum stretch of 2.8 percent at the rope working load as shown on the load chart.
- Wire ropes (other than rotation resistant type) must have a minimum breaking strength as shown on the load chart.

Multiple–part lines are required for loads as shown at upper right on the load chart (safe working load). A two–part line attachment requires a shackle, snatch block, and hardware. A three–part line attachment requires a shackle, snatch block, toggle block, and hardware.

Other winch lines can be used depending on the owners requirements. If replacing a winch rope, the strength must exceed the values shown on the load chart. If not, a new load chart must be ordered. Ropes used on the winches must be recommended by the rope manufacturer for lifting service.

Remember, multiple–part lines do not increase the lifting capacity of the Digger Derrick. They only reduce the load on the winch line and the winch. Do not exceed the capacities indicated on the load capacity chart.

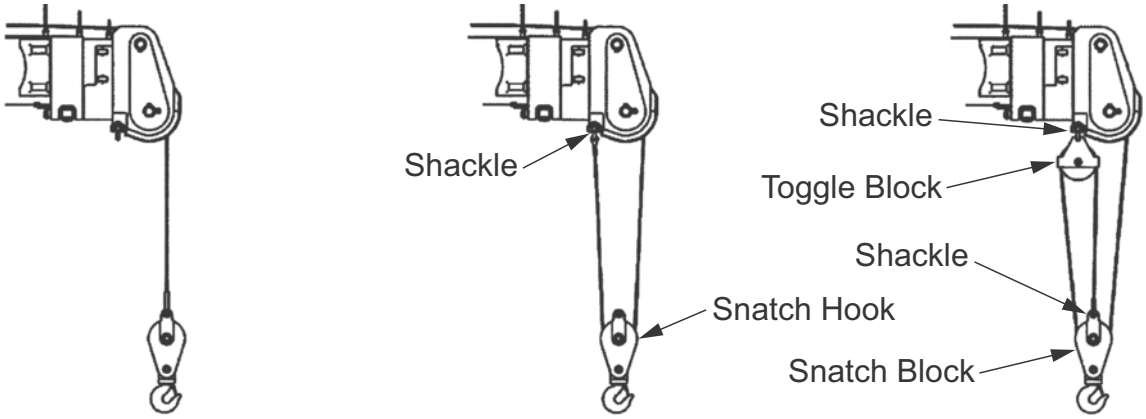

SINGLE LINE ATTACHMENT | **TWO–PART LINE ATTACHMENT** | **THREE–PART LINE ATTACHMENT**

Inspect the winch line, hook, and hook latch before lifting any loads (see Maintenance sections).

Do not shock load the winch line. Shock loading is a jerking or snatching of the winch line or a sudden change in tension from a relaxed state or low load to high load. Start and stop the load slowly to avoid shock loading. Do not lift loads that exceed the capacities indicated on the load capacity chart or the safe working load of the winch line.

Observe the following six rules on winch lines and loads.

1. The winch is designed for straight-line pulls. The boom must be placed over the load so the winch line is making a vertical pull. Do not side load, as it can damage the boom mechanism or rope and cause it to break.
2. Four wraps must be maintained on the winch drum during lifting operations. Refer to rope manufacturing used. Some require up to 8 wraps.
3. Do not allow ground personnel to ride the winch line or load.
4. If your Digger Derrick is supplied with a jib, do not exceed the jib capacity load chart.
5. Maintain proper clearance between energized conductors and boom tip, winch line, hook, and load.
6. Do not wrap the winch line back on itself. Use an appropriate sling.

https://truckmanualshub.com/

ELECTROCUTION HAZARD

Electrocution Hazard exists when any winch line contacts energized source.

Serious injury or death can result if electrical contact is made with a contaminated synthetic rope or a wire rope.

This type of contact can electrically charge the rope, the load, and the vehicle.

SYNTHETIC ROPE - The dielectric properties of a synthetic rope are obtained from a new, clean rope. These properties hold true only under ideal conditions. Dirt, grease, moisture, humidity, and other foreign matter will dramatically increase the conductivity of synthetic rope.

WIRE ROPE - Wire rope is 100 percent conductive.

STRINGING THE WINCH LINE

Properly attach the winch line to the drum with attachments furnished. See maintenance manual for proper attachments.

The first layer (wrap) around the winch drum must be put on closely and tightly. The initial winding (load) should be approximately 50 pounds (23 kg). This prevents subsequent wraps from sliding down between turns when tension is applied.

A down haul weight and hook with a latch should be attached to the free end of the winch line. This allows the winch line to drop easily the ground.

All winch line hooks used shall be equipped with a latch. Using a hook without a latch can cause serious injury or death.

DOWN HAUL WEIGHT

When winding the winch line onto the drum with no load, make sure it is wound level.

Trapped loops can damage the winch line or cause a load to drop on the next winch pay out operation causing a shock load.

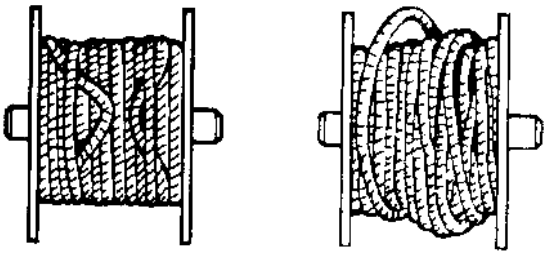

WINCH DRUMS WITH TRAPPED LOOPS

Always keep the winch line wound level and tight on the boom winch drum.

https://truckmanualshub.com/

OPERATING THE WINCH

The following instructions outline the proper method of hydraulic winch operation to give safe efficient trouble-free service.

Winch line speed should be controlled by metering the control valve with the winch control lever. Move the winch control lever in the desired direction using a slow smooth movement of the control lever. Abrupt lowering or raising of loads will cause shock loads and sudden changes in truck balance. When lifting heavy loads, use slow winch line speeds.

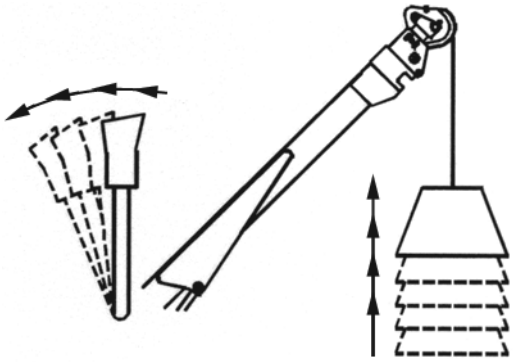

FEATHERING THE WINCH CONTROL LEVER

Increased engine speeds may be used for paying out or taking up the unloaded winch line or extremely light loads.

Continuous operation of the winch under high speeds and/or heavy loads may cause overheating of the winch gearbox or brake.

The winch is equipped with a brake on “WINCH DOWN”. When lowering loads and stopping the winch line movement, if a continued creeping down of the winch line is observed the brake may need repair or adjustment.

BOOM TIP WINCH EXTENSION SHAFT (OPTION)

When using the optional wire take-up reel, the wire should be spooled on the take-up reel in the same direction as the winch line is wound on the winch drum. Operate the winch control lever in the “WINCH UP” position.

https://truckmanualshub.com/

DIGGING OPERATIONS

Observe the following five rules to unstow or stow the digger/auger.

1. Before lowering or storing auger, make certain that all ground personnel are clear and the boom is raised high enough (approximately 45 to 50 degrees) and so the auger clears the vehicle body.
2. Maintain proper clearance from all power lines.
3. Do not stand in auger path.
4. Use low speed only to store and un-store digger. Do not shift speeds with digger in stored position; this will allow auger to free spin. Shift to high speed only when digger is un-stored.
5. A free-swinging auger can cause serious injury or death.

LOWERING THE DIGGER/AUGER

To properly lower the digger, the following steps should be taken to ensure a safe operation:

1. “BEWARE” of overhead lines. Inform your surrounding ground personnel that you are about to un-store the auger.

Raise the boom to approximately 45 to 50 degrees.

Remember, if the digger is a two-speed digger, you must un-store it in “LOW GEAR”. You must also store it in “LOW GEAR”. Do not shift when digger is storing or moving.

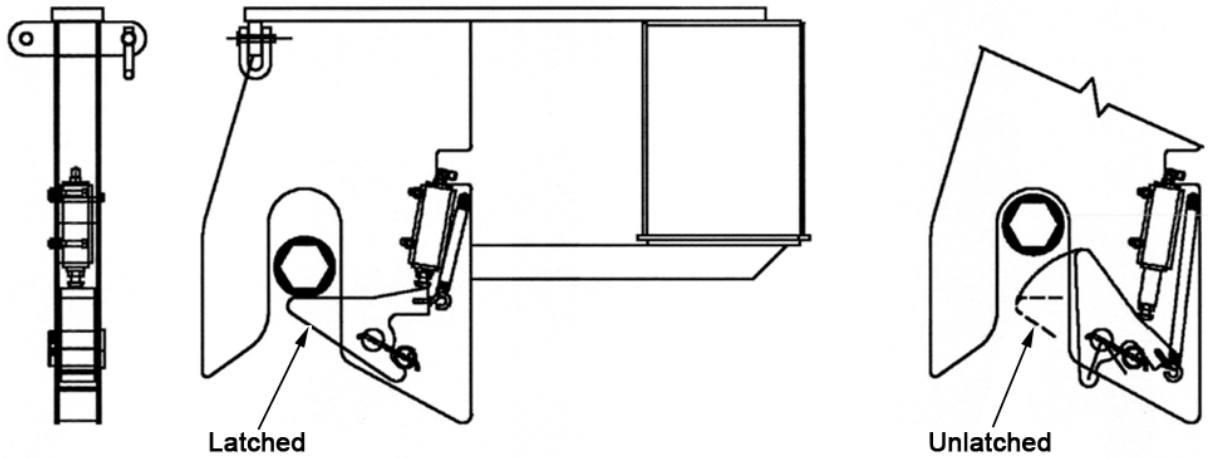

AUGER STORAGE LATCH OPERATION

2. Fully retract the second section, raise digger/auger by moving lever in the “DIG” direction to allow latch to release.

Intermediate boom section must be fully retracted prior to un-storing digger/auger.

3. Push and hold the auger release valve to open the latch. Release the auger release valve after the auger clears the storage bracket.
4. Continue to lower the digger/auger slowly to vertical position and unsnap cable.
5. When the auger is un-stored, inspect the auger roll-up cable for damage. If any damage is found, replace it.
6. To align the auger roll-up cable the second section may have to be extended.

https://truckmanualshub.com/

CHANGING AUGERS

1. DO NOT change or remove an auger directly underneath a power line.
2. Lower the outriggers. Make sure the vehicle is stable for boom movements.
3. If the changeover auger is stored on the bed of the vehicle, it must be removed to ground level. Use a sling and the winch for removing auger.

Wrap a sling around the auger above the balance point. DO NOT wrap the winch line around the auger as the sharp flights could damage the winch line.

4. When the changeover digger/auger is on the ground, remove the sling and winch line.
5. See lowering procedure.
6. There are two choices of what to do once the auger is un-stored.
   a. If you are in an area where you can digger the auger into the ground, dig down about two feet and stop. Remove the auger retaining nut and bolt. Raise boom so the hex shaft is clear of the auger. Use the winch line and a sling to pick up the changeover auger. Attach the sling to the auger above the balance point. Raise auger until it is in an upright position. Guide the auger underneath the hex shaft. Lower hex shaft into auger stem. Install the retaining bolt and nut in the desired hex shaft extension hole. Remove sling.
   b. To handle auger(s) when you cannot dig in, wrap a sling around the auger stem above the balance point. Attach winch line and raise the auger slightly so the retaining nut and bolt can be removed. Raise the boom and pay out the winch line. When the hex shaft clears the auger stem, lower auger to the ground. Use the winch line and a sling to pick up the changeover auger. Attach the sling to the auger above the balance point. Raise auger until it is in an upright position, leaving the auger head on the ground. With assistance from ground personnel, align the hex shaft with the auger stem. Lower hex shaft into auger stem. Install the retaining bolt and nuts in the desired hex shaft extension hole. Remove sling.

https://truckmanualshub.com/

DIGGING POLE HOLES

Remember to "Call before you dig" or 811 if available in your area or the number for your location.

Before digging locate all overhead lines and all underground utilities. Call **811** if available in your area, or your state or province "**Call before you dig**" number. More information is available at www.call811.com. All underground utilities such as power lines, oil and gas lines, communication lines, waterlines, sewer lines must be marked before digging. Failure to do so may result in action by your state or province.

Position the vehicle so the desired hole location is not at the fully retracted or fully extended position of the second boom. To maintain a vertical hole the extension will change as the boom is lowered during digging.

After the auger has been unstored, position the auger point on stake location by using the second section extension and rotation movement of the boom to set the point of the auger firmly on the ground. The digger moves in and out with the hydraulic extension when it is in the lowered position and has been latched to the second section.

When starting to dig on inclines, angle the digger/auger to the point where the auger head is perpendicular to the incline. Turn the auger several revolutions before starting a gradual return of the digger to a vertical position.

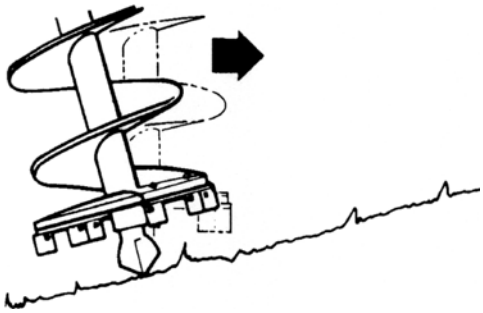

DIGGING HOLES ON AN INCLINE

If the vehicle is operated on sloping ground, use extreme caution when rotating toward the low side. The load chart on the unit gives the capacity when properly stabilized on level ground. The capacity is reduced if vehicle is not level.

An alternate method of digging on an incline is to level the digging area with a shovel before setting the auger.

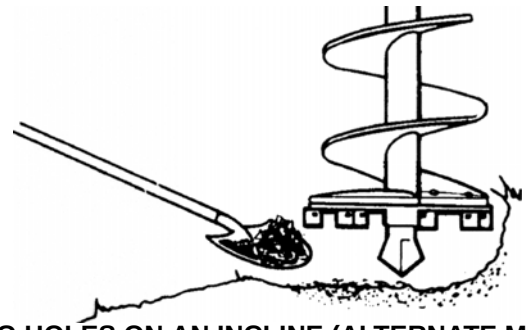

DIGGING HOLES ON AN INCLINE (ALTERNATE METHOD)

NOTE: Under normal conditions, the point of the auger is the pilot to properly locate the hole.

https://truckmanualshub.com/

Push the digger control to “DIG” position and lower the auger into the ground by slowly lowering the boom. Control the rate of lowering the boom to get maximum penetration but do not stall the digger. When using carbide teeth, always remove down pressure before reversing the auger to avoid damage to the carbide teeth.

Raise the auger periodically and spin off the soil. Soil can be spun off by rotating the auger. In sticky soil conditions, loosen soil with a shovel while rotating auger slowly. Do not bury the top flighting of the auger as soil will compact on top.

SPINNING THE DIRT OFF THE AUGER

Under “heavy” soil conditions, auger tends to corkscrew rather than dig. Regulate the down pressure of the boom to avoid this. Meter the down speed to keep the dirt “churning” and continue lifting up as the auger turns. Keep auger vertical by metering the second section extension and boom rotation controls. If operator has difficulty determining if hole is vertical, have a ground person direct moves. Move in or out to keep hole vertical.

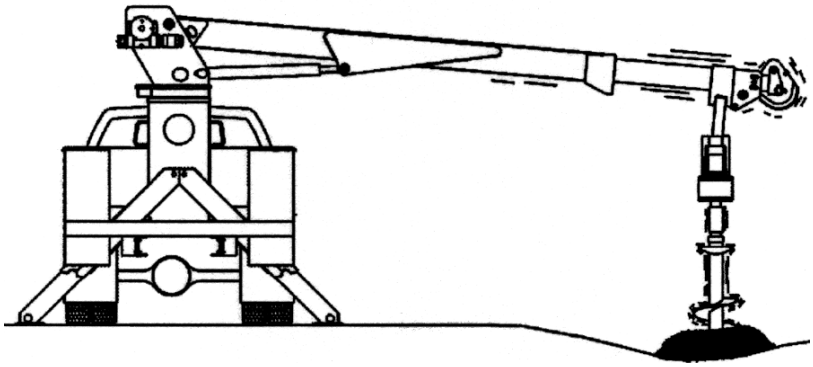

AVOID DIGGER CORKSCREW

DIGGING IN ROCKY CONDITIONS

Digging in rocky soil requires slow speed to obtain best results and to avoid damage to auger teeth, digger, and equipment from striking heavy stones.

In rocky soil, carefully lower the auger and avoid excessive down pressure. Most rocks are brought up on the auger flighting or pushed out of the way by the auger head.

Judgment dictates whether or not rocks raised to the surface should be pushed aside by the ground personnel while auger is stopped in hole to prevent falling back. Letting the auger kick out the rocks may result in rock returning to hole. If the auger strikes rocks and stalls, it may be possible to lift the rock out with the boom, keeping the digger “IN GEAR”. If that does not work, decrease down pressure and reverse the digger for a 1/2 revolution before proceeding.

https://truckmanualshub.com/

DIGGING IN FROST OR HARD PAN

When digging in frost or hard pan, use carbide auger teeth and point. For digging in these conditions, recommend using a slow speed and maximum down pressure. If auger head is allowed to slide, a tough ice slick may form, which could prevent penetration. If digging is particularly severe, move the second section in and out slightly or rotate the auger slightly to either side of vertical. This speeds digging by concentrating the down pressure first on one side and then the other.

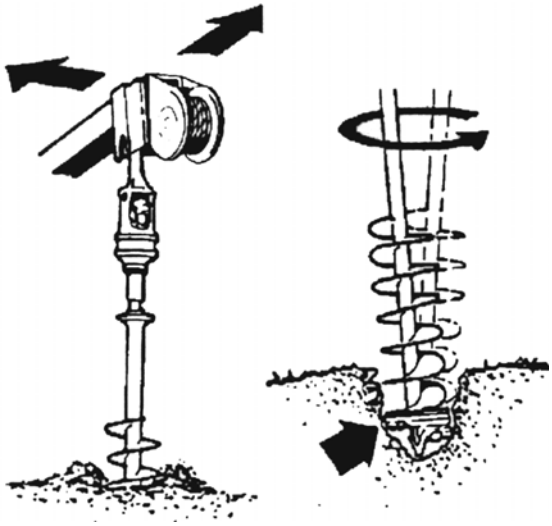

TILTING AUGER TO APPLY DOWN PRESSURE

NOTE: Always keep the auger rotating when doing this.

Too much side pressure can bend the auger stem.

DIGGING DEEP HOLES

If it is necessary to dig holes deeper than 6 or 7 feet (2 m), move the auger to a lower attaching hole on the hexagon extension shaft. This shaft is 60-inches (1.5 m) long and has several attaching holes that can be used to extend the auger for deep holes or over an embankment. Do not stow auger in an extended position. Return to shortest length before storing.

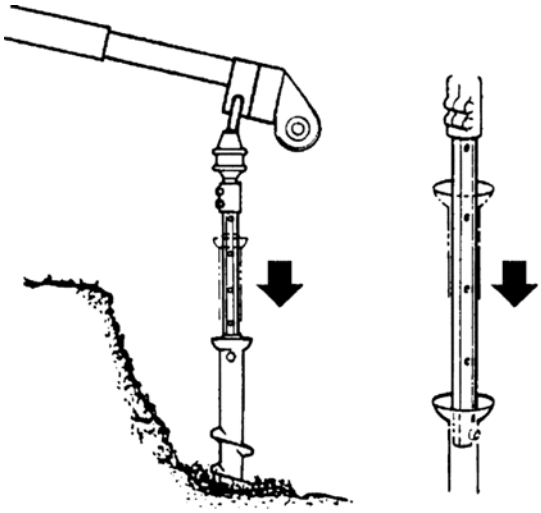

DIGGING DEEP HOLES OR OVER EMBANKMENTS WITH THE EXTENSION SHAFT

https://truckmanualshub.com/

DIGGING ANCHOR HOLES

Anchor holes can be dug at any angle, but use extreme caution when doing so. To maintain the correct angle, adjust the second section extension or rotate the boom to prevent excessive strain on the derrick when the auger is lowered and raised during the digging and cleaning operation.

Raise the auger one or two feet intermittently during the digging operation. This assists in cleaning out the hole, and a 7-foot deep hole can be dug without completely removing the auger.

It is easier to dig anchor holes as nearly in line with the Digger Derrick as possible. This permits controlling the angle of the auger and lowering the auger into the hole using only the lift cylinder and the second section cylinder.

If it is necessary to dig at any angle to the Digger Derrick, use the lift cylinder, second section, and rotation.

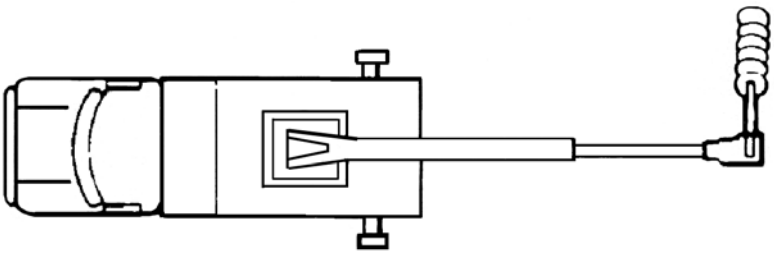

DIGGING ANCHOR HOLES AT AN ANGLE

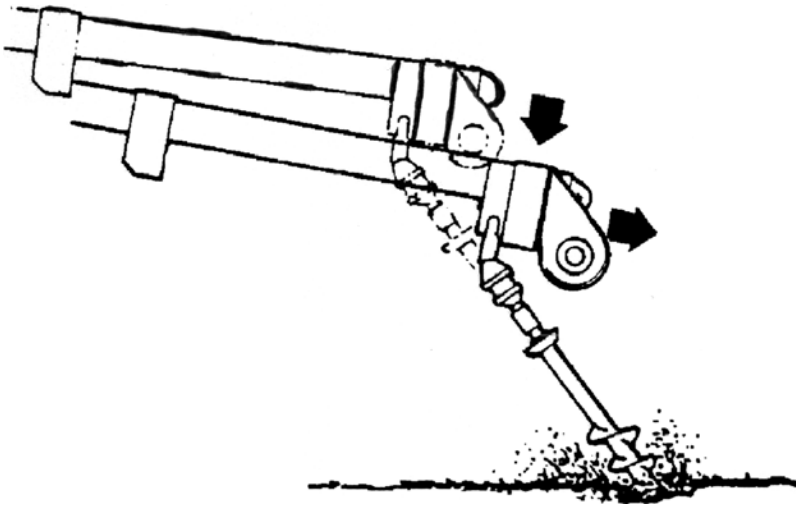

DIG AS NEARLY IN LINE WITH THE DERRICK AS POSSIBLE

Attach the anchor auger to the end of the hexagon extension shaft of the digger. The depth of the anchor hole depends on the distance between the auger head and the digger head. Coordination of the two boom movements, down and in the direction of the anchor hole, must be as nearly perfect as possible.

Use caution when exerting down pressure as well as when pulling the anchor auger from the hole. Keep the auger turning to prevent bending when pulling and while applying pressure at an angle.

Use caution around lines. The anchor and drive attachments are conductive and if the Digger Derrick booms, or anchor drive or anchor touches an energized line the entire vehicle and attachments are energized.

https://truckmanualshub.com/

SETTING SCREW ANCHORS

Insert screw anchor into hollow shaft, and secure in position with retainers.

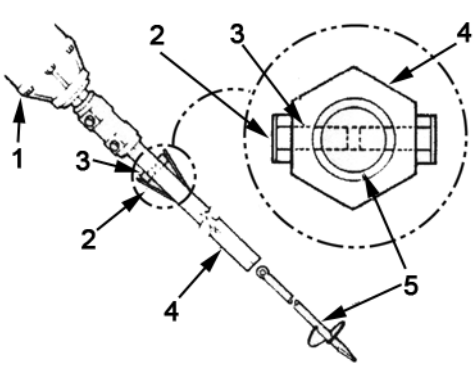

1. Digger
2. Retainer Clip
3. Retainer
4. Hollow Auger Shaft
5. Screw Anchors

ILLUSTRATION OF SCREW ANCHOR

The digger has adequate torque and proper boom control for driving screw anchors at any angle under almost all soil conditions. In stratified soils, the changes in penetration resistance from layer to layer cause changes in torque and down pressure. The operator must compensate for these changes. Inadequate down pressure may result in “churning” the soil, which destroys its holding strength. Careful coordination of digger rotational speed and rate of advance of the boom must be obtained for a low and steady rate of penetration for optimum installation.

Set the screw anchors as nearly in line with the Digger Derrick as possible. This permits controlling the proper angle of screw anchor by using only the lift cylinder and the second section cylinder.

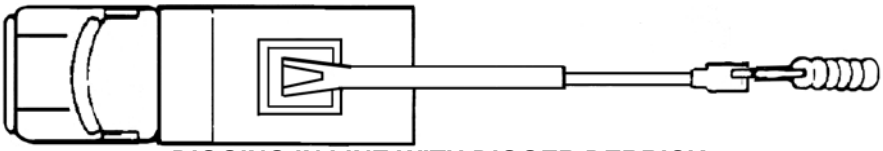

DIGGING IN LINE WITH DIGGER DERRICK

To release screw anchors from hollow auger shaft after it has been set, pull out on the retainer clips and, using boom functions, raise the shaft from the screw anchor. Coordinate the boom movements to prevent binding the auger shaft.

STORING DIGGER/AUGER

The auger can be stored using its own turning power in low speed if a two speed drive. It is wound up on a cable or rope into the auger storage bracket along side the boom for transport and when not used for lifting or using a platform. When stowing the auger the boom must be raised high enough to reduce the load on the roll up cable and have auger above all personnel and equipment if roll up cable fails.

To properly store the digger, do the following steps to ensure a safe operation:

1. Fully retract the second section.
2. Inspect the rollup cable for damage, replace if required.
3. Rest the auger point on the ground and attach the roll-up cable to auger stem.
4. Raise boom to 45 degrees. Inform your ground personnel to stay clear, that you are about to store the digger. Extend the intermediate section if required so roll-up cable does not wind over disc on auger stem.

Remember, if the digger is a two-speed digger, you must store it in “LOW GEAR”.

5. Move digger control lever to “DIG” position until auger rolls up the side of the bracket if intermediate was extended retract fully before auger and moves into the storage bracket.

https://truckmanualshub.com/

6. If the roll up cable climbs up the shield on the auger, extend the second boom. As the auger is pulled parallel with the boom, retract the second boom until it is fully retracted.

Always store and unstore two speed diggers in low speed.

Keep area clear around auger as it is stored or unstored.

7. There is an audible “click” when the latch secures the auger. Allow the auger to settle back on the latch.

If the auger continues to rotate after it reaches the top of the bracket, it is possible to break the roll-up cable, which could result in serious injury or death.

The roll-up cable can also be replaced while it is in the stored position.

HANDLING AND SETTING POLES

ELECTROCUTION HAZARD: When the boom is supporting the pole in or near energized lines, the tamp operator MUST wear suitable insulating gloves, sleeves, and hard hat. The tool hoses may be reinforced with wire braid and will become energized if the vehicle becomes electrically charged. Serious injury or death will result from contact with this equipment or vehicle should it become electrically charged.

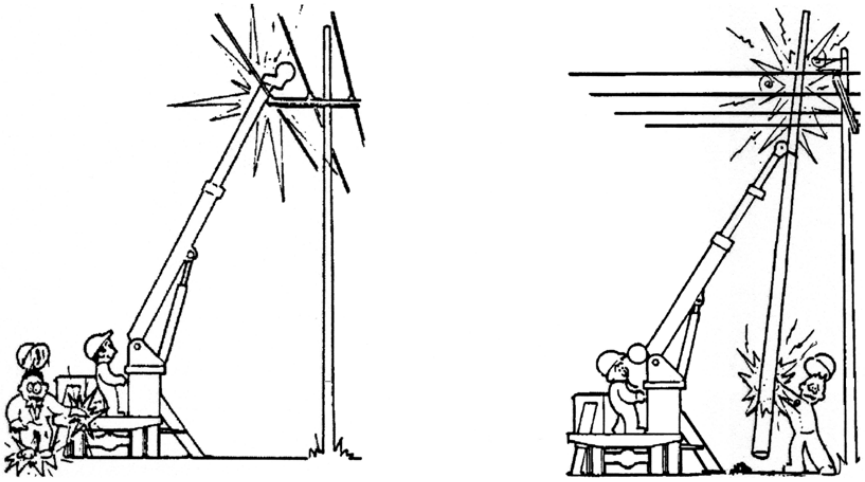

ELECTROCUTION HAZARDS FROM OVERHEAD LINES

ELECTROCUTION HAZARD

If permissible, de-energize the lines and test to verify lines are not energized.

DO NOT set, install or remove poles in, near, or among energized lines without taking the following precautions:

1. Ground the vehicle while following your companies policies.
2. Always maintain proper clearance from energized power lines. The Digger Derrick cannot protect you from phase-to-phase or phase-to-ground contact. Allow for sag, sway, or rocking. Boom tip contains conductive materials.

https://truckmanualshub.com/

3. Assign a spotter whose only responsibility is to spot the pole and boom clearance for the operator.
4. All personnel must wear suitable insulating gloves, sleeves, and hard hats. Personnel must not allow any non insulated part of their body to contact the pole, vehicle, or other equipment.
5. Pole must be covered with insulating shields and pole cap.
6. Energized lines must be covered with insulating shields.
7. Direct contact with insulated poles and lines must be avoided.
8. Never allow ground personnel to come in contact with the Digger Derrick, vehicle, or vehicle attachments while in operation near energized power lines.
9. While operating the digger derrick, the operator must not create a connection between the vehicle and ground.

Serious injury or death will result from such contact or if inadequate clearance is not maintained.

Before handling or setting poles, the operator should ensure the pre-operation procedures have been checked, the vehicle is properly positioned, and the outriggers are firmly in place.

https://truckmanualshub.com/

Once the pole hole is dug to the required depth, it is ready to accept the pole. Make sure soil is packed tight at bottom of hole, using a tamper (see Recommended Tamp section).

Before hooking the pole, two things must be determined:

- Weight of the pole.
- Proper boom angle required to support the weight of the pole (using the load capacity chart).
- Always use a sling around the pole, do not use the load line as a sling.

Place a sling or butt chain (not the winch line) on the pole above the balance point. The longer the pole, the closer the sling or butt chain must be to the balance point. If the pole is properly hooked before raising the pole, there should be little need to align the gains or cross arms once the pole is positioned.

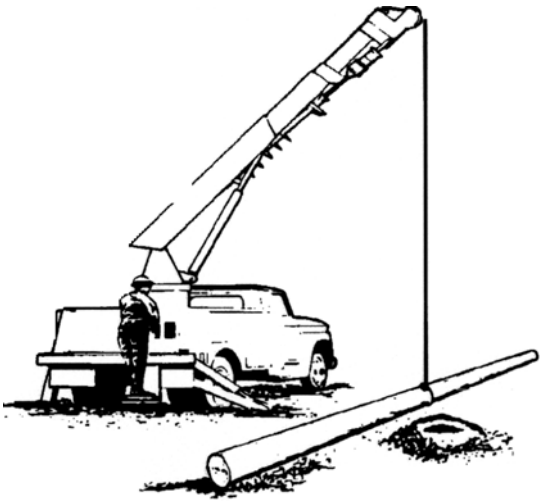

HANDLING POLE

Serious injury or death will result if control handles become electrically charged from boom contact with energized conductors and the operator is standing on or is in contact with the ground. Operate controls from operators platform or while on vehicle only.

Before raising the pole, verify the boom is at the proper angle and properly hooked to support the weight of the pole; also make sure the winch line is perpendicular and vertical with the pole. This limits the amount the pole can move when it is being raised off the ground. Raise the pole slowly.

Always use a sling rated for the weight. Use of the load line as a sling will damage the load line.

Inspect load line and all rigging before lifting load.

https://truckmanualshub.com/

When the pole has been raised to the vertical position, take up on the winch line until the pole is firmly held between the boom tip flanges. If the unit is equipped with a pole guide, bring the arms around the pole so they can be used as a guide when lowering the pole into the hole. See HYDRAULIC TILT POLE PLUMMER (Optional).

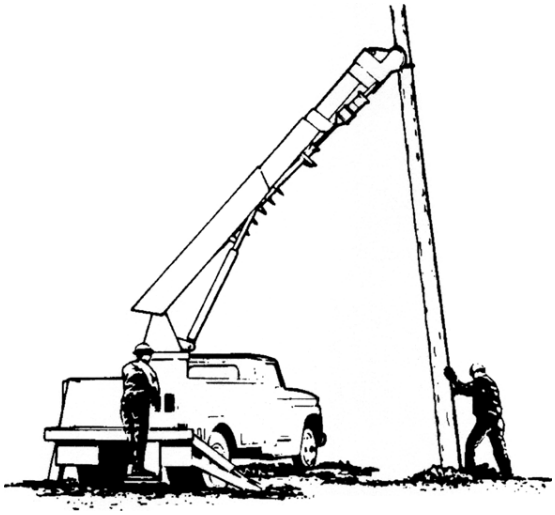

POSITIONING THE POLE INTO THE HOLE

When the pole is controlled, it can be positioned directly over the hole. Make sure all ground personnel are aware of any pole contact with energized lines and the requirements before contacting pole.

As the pole is being lowered into the hole, a second crew member should assist guiding the pole into the hole. When the pole is being lowered, it may be necessary to retract the boom section to maintain vertical alignment of pole.

If the pole needs to be rotated to align gains or cross arms, slack off slightly on the winch line so the pole can be turned. Have a crew member give directions for plumbing the pole. Meter the controls for boom functions when plumbing the pole. When the pole is properly plumbed, hold it in position with boom while replacing and tamping the soil around the pole.

After the pole is tamped, release the winch line and remove from pole.

https://truckmanualshub.com/

HYDRAULIC TILT POLE PLUMMER (OPTIONAL)

Open the tilt pole plummer circular arms to allow the pole, retained by the winch line, to be nested into the winch flanges. Then tilt the pole plummer either forward or backward to align the circular arms perpendicular to the pole. Then close the arms around the pole. With this completed, the pole can be maintained vertical to the pole hole.

Use the pole guide arms as guides only. They should not be clamped tightly to the pole or used to lift any of the pole weight. Use the winch line and winch flanges to lift and retain the pole. When raising or lowering boom during the pole setting operation, adjust the pole guide arms to a horizontal position. This helps prevent damage to the pole guide arms.

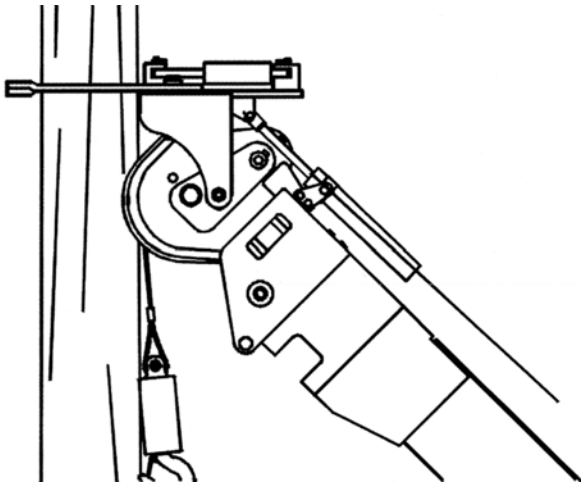

HYDRAULIC TILT POLE GUIDE WITH TURNTABLE WINCH

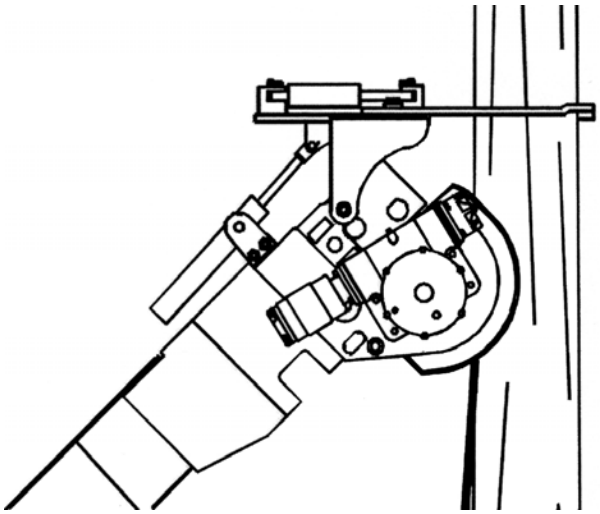

HYDRAULIC TILT POLE GUIDE WITH BOOM TIP WINCH

https://truckmanualshub.com/

HYDRAULIC TILT POLE GUIDE TRANSFERABLE (OPTIONAL)

The same method of operation as the hydraulic tilt pole plummer applies; except it can be transferred from the second boom section to the end of the third section.

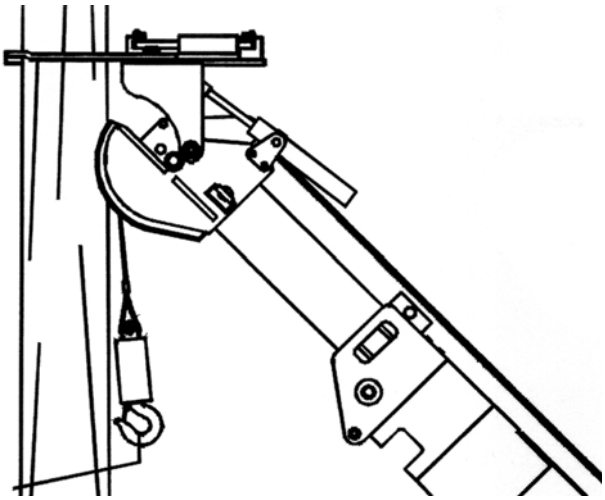

TRANSFERABLE TILT POLE GUIDE WITH TURNTABLE WINCH

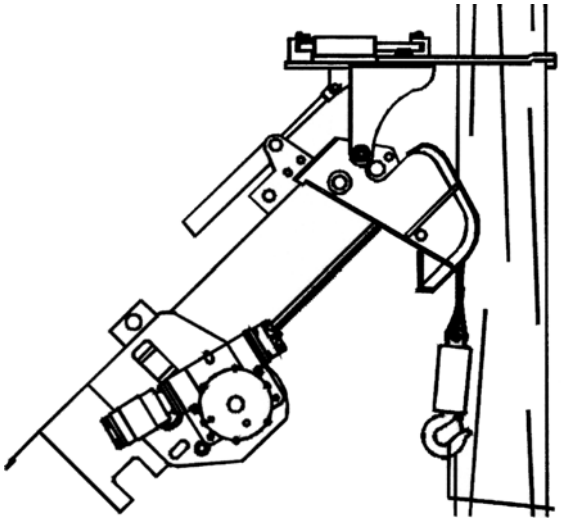

TRANSFERABLE TILT POLE GUIDE WITH POLE GRABBING WINCH

POLE GUIDE INTERLOCK

An interlock is installed as an operator aid. It does not allow the third to extend unless the pole guide is raised. Only lower the pole guide when pinned to third or third is fully retracted. Do not lower winch. It does not prevent operator from lowering pole guide on third, once it is extended.

Do not lower TPP while third is extended. Damage to the third and load line may occur.

https://truckmanualshub.com/

RECOMMENDED USE OF HYDRAULIC TAMP

After the pole is inserted and plumbed, recommend one crew member shovels dirt in around the pole and another begins tamping from the bottom of the hole. For even compaction, make sure the dirt is tamped as the hole is filled. This ensures having a uniformly tamped pole, leaving a minimum amount of excess material.

If the tamp is leaned in the direction of travel, it will tend to “walk” itself around the pole.

ELECTROCUTION HAZARD: When the boom is supporting the pole in or near energized lines, the tamp operator must wear suitable insulating gloves, sleeves, and hard hat. Tool hoses which are reinforced with wire braid will become energized if the vehicle becomes electrically charged. Serious injury or death will result from contact with this equipment or vehicle should it become electrically charged. Always use a section of non conductive hose on the tool.

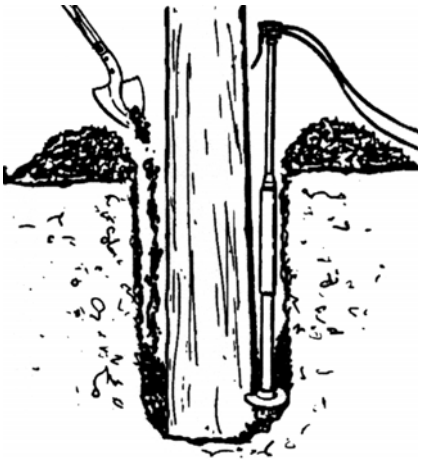

GRADUALLY FILL THE HOLE WHILE TAMPING

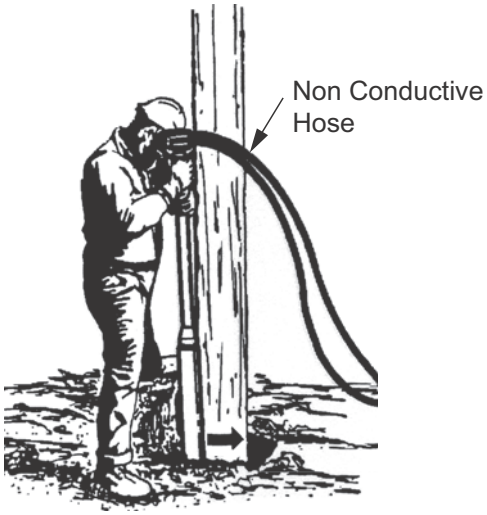

WALKING THE TAMP AROUND THE HOLE

https://truckmanualshub.com/

RECOMMENDED PROCEDURE FOR REMOVING POLES

(ZONE A ONLY)

The winch and boom on the Digger Derrick must never be used to pull poles or other objects embedded in the ground. The load imposed is an undetermined force that can damage the equipment and endanger operators and ground personnel, causing serious injury or death.

Never attempt to loosen and lift poles with the boom extension, rotation or winch. A pole puller must be used to loosen the pole from the ground. Once the pole has been loosened with the pole puller cylinder then the lift cylinders can be used to raise the pole carefully. The pole puller cylinder must be used again as many times as required to loosen the pole. Do not use the pole guide to grab the pole, it is only to guide and aid in maintaining control. Maintain control of the pole and use caution while lifting items, never lift objects that may be embedded in the ground, frozen to the ground or fastened to the ground. A sudden release of the load may cause the boom, load line or load to recoil violently.

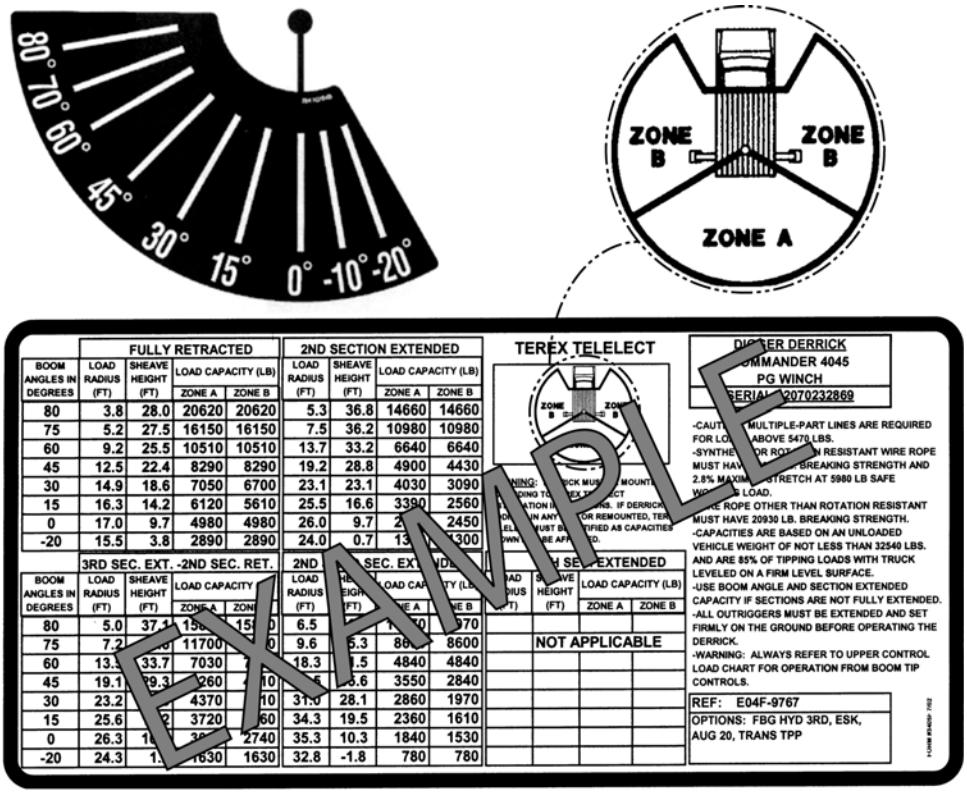

BOOM ANGLES IN DEGREES	FULLY RETRACTED LOAD RADIUS (FT)	FULLY RETRACTED SHEAVE HEIGHT (FT)	FULLY RETRACTED LOAD CAPACITY (LB) ZONE A	FULLY RETRACTED LOAD CAPACITY (LB) ZONE B	2ND SECTION EXTENDED LOAD RADIUS (FT)	2ND SECTION EXTENDED SHEAVE HEIGHT (FT)	2ND SECTION EXTENDED LOAD CAPACITY (LB) ZONE A	2ND SECTION EXTENDED LOAD CAPACITY (LB) ZONE B
80	3.8	28.0	20620	20620	5.3	36.8	14660	14660
75	5.2	27.5	16150	16150	7.5	36.2	10980	10980
60	9.2	25.5	10510	10510	13.7	33.2	6640	6640
45	12.5	22.4	8290	8290	19.2	28.8	4900	4430
30	14.9	18.6	7050	6700	23.1	23.1	4030	3090
15	16.3	14.2	6120	5610	25.5	16.6	3390	2560
0	17.0	9.7	4980	4980	26.0	9.7	[illegible]	2450
-20	15.5	3.8	2890	2890	24.0	0.7	[illegible]	[illegible]300

BOOM ANGLES IN DEGREES	3RD SEC. EXT. -2ND SEC. RET. LOAD RADIUS (FT)	3RD SEC. EXT. -2ND SEC. RET. SHEAVE HEIGHT (FT)	LOAD CAPACITY ZONE A	LOAD CAPACITY ZONE B	2ND [illegible] SEC. EXTENDED LOAD RADIUS (FT)	2ND [illegible] SEC. EXTENDED SHEAVE HEIGHT (FT)	LOAD CAPACITY (LB) ZONE A	LOAD CAPACITY (LB) ZONE B
80	5.0	37.1	15[illegible]	15[illegible]	6.5	[illegible]	[illegible]50	[illegible]970
75	7.2	[illegible]	11700	[illegible]	9.6	5.3	80[illegible]	8600
60	13.[illegible]	33.7	7030	[illegible]	18.3	[illegible].5	4840	4840
45	19.1	29.3	[illegible]260	[illegible]10	[illegible]	[illegible].6	3550	2840
30	23.2	[illegible]	4370	[illegible]10	31.0	28.1	2860	1970
15	25.6	[illegible]2	3720	[illegible]60	34.3	19.5	2360	1610
0	26.3	1[illegible]	[illegible]	2740	35.3	10.3	1840	1530
-20	24.3	1.[illegible]	1630	1630	32.8	-1.8	780	780

LOAD RADIUS (FT)	SHEAVE HEIGHT (FT)	LOAD CAPACITY (LB) ZONE A	LOAD CAPACITY (LB) ZONE B
[illegible]	[illegible]	[illegible]	[illegible]

Maintain control of poles and loads at all times. Shifting loads or losing control of the pole can cause the load line or rigging to fail, resulting in the loss of control of the load or pole

Do not use boom extension or rotation to loosen an embedded pole. Damage to the unit, loss of control of the load, or pole breaking may occur.

https://truckmanualshub.com/

HYDRAULIC POLE PULLER

The hydraulic pole puller is a large hydraulic cylinder used for removing a pole.

The pole puller is equipped with a heavy-duty steel base and a slotted head for attaching a chain loop.

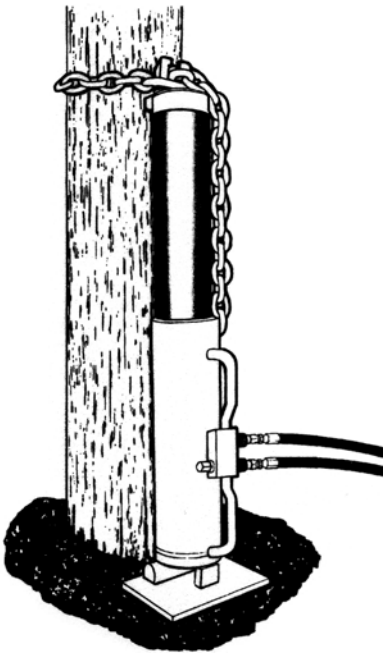

HYDRAULIC POLE PULLER

SETTING UP AND USING THE POLE PULLER

1. The steel base of the pole puller must be set on a firm level surface before operation. Shovel out a level surface if necessary. If the ground is soft, support pole puller with adequate padding and cribbing.

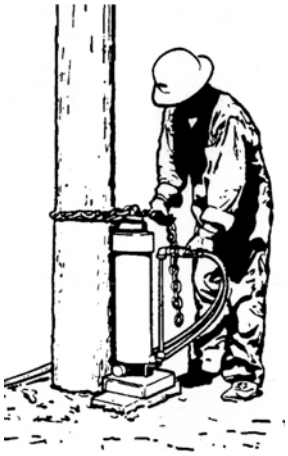

RECOMMENDED PLACEMENT OF POLE PULLER

2. Place the pole puller on the side of the pole either toward or away from the boom, so the force exerted does not result in a side pull on the Digger Derrick.

https://truckmanualshub.com/

3. Drop the eye of pulling chain on the slotted head of the pole puller ram, loop the chain snugly around the pole, and insert the chain end in the slot on the pole puller ram. Make sure the chain is not kinked or twisted.

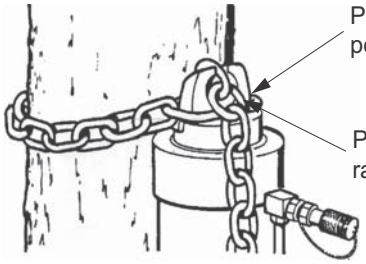

CHAIN ATTACHMENT TO POLE PULLER

Do not hook chain and pole puller together using the chain as a choker chain around the pole. Both ends of the chain must be attached to the pole puller ram.

4. Attach auxiliary hose from vehicle to the correct coupler on the pole puller. Pull on each hose to make sure they are fully engaged with the coupler to prevent damage to the pole puller.
5. Wrap a sling around the pole above the center of gravity of the pole and attach the winch line hook to the sling and snug up the winch line. Activate the pole puller by slowly operating the control valve.

STAND CLEAR! Pole puller is capable of developing 40,000 to 60,000 pounds of force (178,000 to 267,000 N.) Damage or serious injury may occur.

6. After each pull is made, take up on the load line and reposition the boom as necessary, to maintain control of the pole.
7. Reposition the chain around the pole as required to account for the tapering in the pole.
8. To prevent damage to the pole puller cylinder rod when retracting, maintain the pole puller in an upright position.
9. Use the Digger Derrick to keep the pole vertical until the pole is freely suspended and the pole puller is removed.
10. In extreme cases of pole removal, holes may be dug directly alongside the pole to loosen the soil, assisting the pole puller.
11. DO NOT use the boom to loosen the pole.

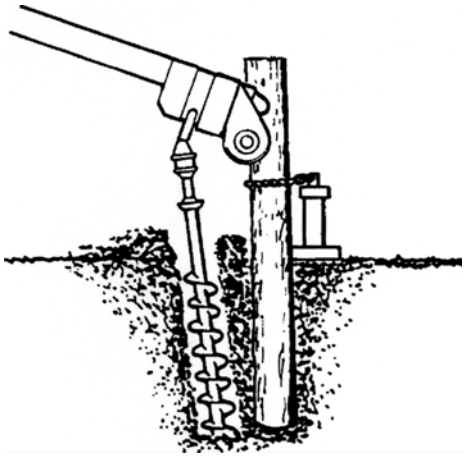

LOOSENING DIRT AROUND OLD POLE

https://truckmanualshub.com/

AERIAL OPERATION

A manual or hydraulic fiberglass third section is available on insulated digger derricks. The Digger Derrick may be equipped with single or dual fiberglass personnel platforms with brackets for attaching to the 3rd boom. Controls to operate the equipment from the platform are required when working on structures with energized components.

For use in aerial operations, the Digger Derrick must be manufactured and tested for use with a platform as an aerial. This must be indicated on the ID Placard in the areas shown below.

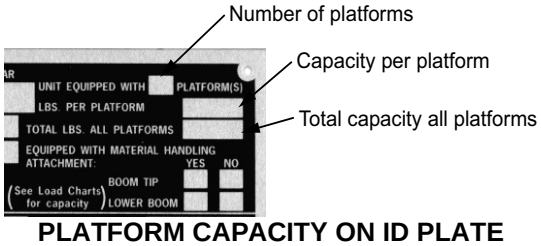

PLATFORM CAPACITY ON ID PLATE

LIFT LOCK CONTROL HANDLE

Individual control levers at the upper controls will have lift lock handles for the boom functions. Single stick controls are equipped with an enable feature.

A spring-loaded lift lock on each boom function locks the boom control lever in a neutral position and prevents accidental actuation. A control lever placard indicates the direction to move the control lever to activate a specific boom movement. To activate a boom movement, the control lever must be lifted "UP" and held, so the control lever can operate the desired boom function. When the handle is released, the control handle will return to the neutral position and the lift lock will re-engage.

LIFT LOCK

https://truckmanualshub.com/

AERIAL PLATFORM OPERATION

Perform all daily pre-operational procedures before using the Digger Derrick for aerial platform operations.

Operators must know and understand the aerial operations contained in this manual before using the Digger Derrick for aerial platform operations.

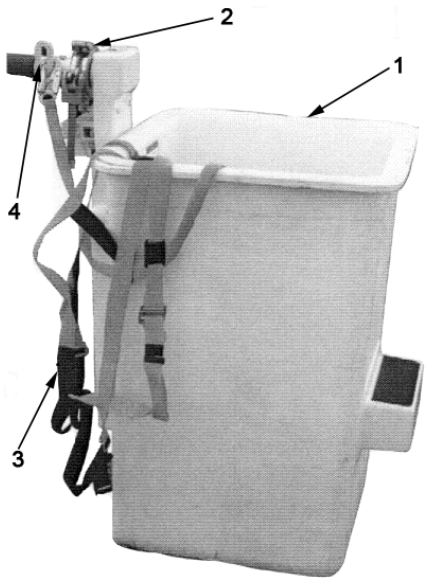

1. Platform
2. Brake
3. Fall Protection System
4. Lanyard Anchor

AERIAL PLATFORM, BRAKE, AND FALL PROTECTION SYSTEM

WORKING ON OR NEAR ENERGIZED CONDUCTORS

When working on or near energized conductors (either known or suspected), the fiberglass boom must be fully extended, clean and dry. The load line must be removed across the fiberglass boom and stored on the winch drum.

While the fiberglass upper boom may provide electrical insulation between the platform and the vehicle, there are several things it WILL NOT DO:

- It will not provide phase-to-phase protection.
- It will not provide phase-to-ground protection through static lines or guy wires.
- It will not protect the vehicle from being energized if steel booms contact a low level power source.

The fiberglass boom and platform liners must be dielectrically tested periodically to verify that the insulating properties are maintained. Do not assume the unit offers insulating properties if it does not have a current dielectric test (refer to ANSI A10.31).

https://truckmanualshub.com/

DANGER

READ CAREFULLY

- OCCUPANTS OF THE BASKETS OF THIS AERIAL DEVICE HAVE ABSOLUTELY NO ELECTRICAL PROTECTION FROM CONTACT BY THE HUMAN BODY WITH TWO ENERGIZED CONDUCTORS OR BETWEEN AN ENERGIZED CONDUCTOR AND A GROUNDED CONDUCTOR.
- It makes no difference if this contact is accidental or deliberate or whether contact is made through metallic parts of the basket, basket support, metal tools or equipment brought into the basket. The insulating components of this aerial device do not offer protection in the event of such contact.
- Proper conductor cover up, insulated sleeves and gloves shall be worn when working near energized lines or equipment.

DEATH OR SERIOUS INJURY

WILL RESULT FROM SUCH CONTACT OR INADEQUATE CLEARANCE

414590A

DANGER LABEL ABOUT OCCUPANTS OF THE PLATFORM

Platform insulation must never be depended upon when operating in an electrical environment. A tested liner is the only component offering insulation.

If the Digger Derrick has a section that is manually extended, the pin that locks the manual section in the extended position must be installed. If not pinned, the manual section will retract and can result in serious injury or death.

When using the Digger Derrick as an insulated aerial platform, the Digger Derrick must have a fiberglass section and it shall be fully extended to provide maximum insulation.

The load line shall be removed from boom tip and stored on winch drum.

The Digger Derrick upper control station has metallic parts, which are necessary to provide the structural support for the various components. These metallic parts are interconnected. The main shaft that supports the platform and controls must also support other load carrying options that can be added to the boom tip.

The fiberglass upper boom, in a well maintained condition, provides electrical insulation between the boom tip and the truck as potential to ground. This fiberglass will not protect the operator in the platform if any portion of the boom tip, including options, is brought into contact with an energized or non-energized conductor and the operator is in contact with a different potential such as, a grounded non-energized conductor. This type of contact can energize or ground the controls because as stated before, all components of the boom tip are interconnected. The fiberglass will not provide protection for the operator in phase to phase contact or a phase to ground contact, nor will it protect the vehicle from becoming energized if the steel boom section below fiberglass boom is brought into contact with an energized conductor.

https://truckmanualshub.com/

Violation of any of the following conditions can result in serious injury or death.

When using the Digger Derrick as an insulated aerial platform, the following conditions must be maintained:

1. The fiberglass section must be fully extended with a current dielectric test in accordance with ANSI A10.31.
2. The fiberglass section must be dry, clean, and free of damage.
3. The load line shall be removed from the boom tip and stored on the winch drum.
4. The fiberglass section shall not be brought into contact with or in proximity to an electrically charged or energized conductor.
5. The lower and intermediate boom sections or the components mounted on them shall not be brought into contact with or in proximity to an electrically charged or energized conductor. Maintain minimum approach distance.
6. Do not operate boom controls while standing on the ground or other structures to prevent electrocution if the vehicle or Digger Derrick becomes energized.
7. Never operate from the ground controls with personnel in the platform if working on structures containing energized components. Operation must be controlled by the platform operator, except in case of an emergency.
8. All ground personnel must be warned to stay away from the vehicle prior to lifting the boom assembly out of the boom rest. Ground personnel must not make contact with the vehicle or any apparatus that is attached to the vehicle until the boom assembly has been returned to the boom rest. This may be accomplished by barricading the vehicle.
9. All electrically charged or energized conductors in proximity to the work area must be properly covered or de-energized.
10. Ground and/or barricade the vehicle per OSHA, ANSI and your company policies.
11. Electricity is an ever-present danger when using a Digger Derrick. Follow all OSHA, ANSI, state, federal and company rules and regulations when working on or near energized power lines.
12. Never touch the controls or boom tip area when in the platform without using proper protection (wear rubber gloves with leather protectors) while holding any conductors, neutrals, grounds, or other structures.
13. Operator(s) must wear an OSHA approved fall arrest system with a lanyard attached to the anchor(s) provided.
14. Wear personal protective equipment such as: Insulated hard hat, rubber gloves with leather protectors, and rubber sleeves. Hearing and eye protection, proper boots and suitable clothing may also be required. Follow OSHA and employer's policies for fire retardant (FR) clothing and arc flash protection.
15. Do not increase the chance of accidental contact when working on or near energized structures or power lines, defeating the purpose of the liner:
    - All tools, accessories and other objects must be contained within the platform.
    - Do not attach any metal objects from outside the platform to the inside of the platform
    - Do not hang metal objects from the lip of the platform. This includes extension cords, guy wires or conductors.
16. Do not allow ground personnel under the platform work area.
17. Do not move the vehicle with personnel in the platform.

https://truckmanualshub.com/

18. If, when operating the Digger Derrick, you become aware of any dangerous condition, unusual operation, or hear any unusual noise, such as grinding, cracking, or grating sounds-STOP-in position. Do not move the Digger Derrick until the problem has been diagnosed and resolved with your safety in mind. No matter how long it may take to get help, waiting is better than a serious or fatal accident.
19. Do not adjust outriggers while booms are out of rest.
20. Do not operate upper boom controls while standing on the ground or other structures.
21. Operation on or near structures with energized components requires top controls.
22. The metal components on the end of the fiberglass section shall not be brought into contact with or in proximity to energized components.

When the aerial platform is used with the optional winch control, it provides no insulation value because the load line crosses the insulating section.

Electrical contact can cause serious injury or death.

Top controls are required when working from the platform near structures containing energized components

AERIAL PLATFORMS (OPTIONAL)

Personnel in the platform must utilize a fall arrest system and attach lanyard to the platform anchor provided before operating equipment. Verify that the brake is working properly before entering platform. The brake shall be engaged when entering or exiting the platform. Disengage platform brake before operating controls to allow platform to level. The brake should be used when the boom is stationary and the operator is performing work.

Never engage the platform brake when booms are in motion.

https://truckmanualshub.com/

AERIAL PLATFORM AND BRACKET INSTALLATION

1. To install platform on the boom tip, use the following procedures:
   a. Install sleeve (4) on platform mounting shaft (7). Insert bolt (2) through sleeve (4) and platform mounting shaft (7). Secure with nut and lock washer.
   b. Insert the platform mounting shaft (7) into the boom tip. Align ear (5) with stud (3).
   c. When ear (5) is completely engaged with stud (3), install Klik pin (1).

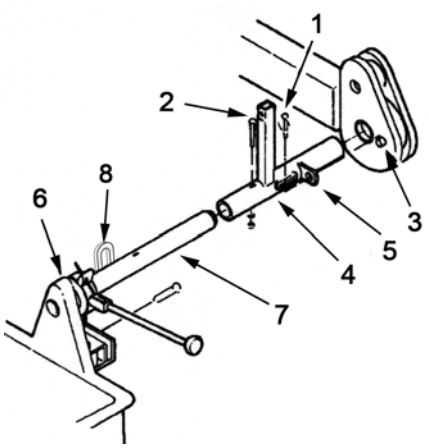

1. Klik Pin
2. Bolt, Lock washer, and Nut
3. Stud
4. Sleeve
5. Ear
6. Platform and Brake Assembly
7. Platform Mounting Shaft
8. Lanyard Anchor

RIGHT-HAND PLATFORM MOUNTING

NOTE: For left-hand platform installation with left-hand controls, use same procedure as above. This installation will require a different sleeve.

2. To install dual platforms, use the following procedures:
   a. Install sleeves (5) and (4) on platform mounting shaft (6). Install bolts (2) through sleeves (5) and (4) and platform mounting shaft (6). Secure with nut (2) and lock washer.
   b. Insert the platform mounting shaft (6) into boom tip. Align ear (8) with stud (3). When ear (8) is completely engaged with stud (3), install Klik pin (1).
   c. Install sleeve (4) on platform mounting shaft (9). Install bolt (2. through sleeve (4) and platform mounting shaft (9). Secure with nut (2) and lock washer.
   d. Insert the platform mounting shaft (9) into boom tip. Align ear (8) with stud (3). When ear (8) is completely engaged with stud (3), install Klik pin (1).

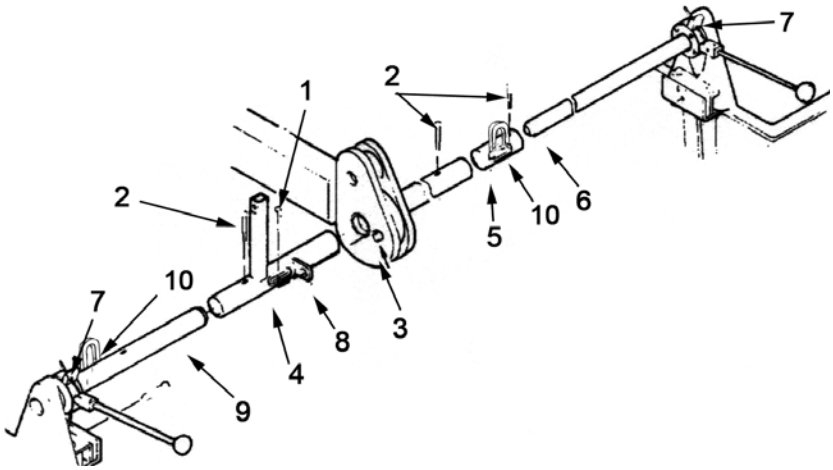

1. Klik Pin
2. Bolt, Lock washer, and Nut
3. Stud
4. Sleeve
5. Sleeve
6. Platform Mounting Shaft
7. Platform and Brake Assembly
8. Ear
9. Platform Mounting Shaft
10. Lanyard Anchor

DUAL PLATFORM MOUNTING

https://truckmanualshub.com/

3. To horizontally store platform(s), use the following procedures:
   a.Remove retaining pin (1) and release the brake (4).
   b.Swing platform (3) up until slot in arm (2) activates the spring latch (6) locks.
   c.Align hole in platform bracket.
   d.Insert retaining pin (1) and lock brake (4).

1. Retaining Pin
2. Latch Arm on Sleeve
3. Platform
4. Brake
5. Platform Mounting Shaft
6. Spring Latch
7. Lanyard Anchor

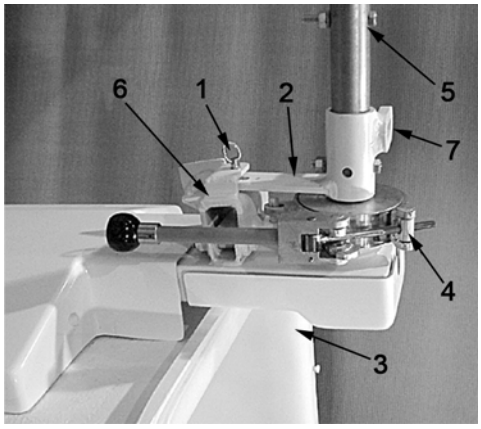

PLATFORM WITH LATCH ARM IN STORED POSITION

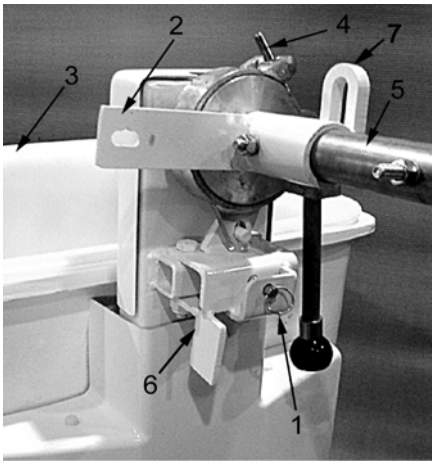

PLATFORM WITH LATCH ARM IN UN-STORED POSITION

NOTE: Platform shown removed from boom for clarity of operation.

4. To lower platform(s) to working position, use the following procedures:
   a.Remove retaining pin (1).
   b.Support platform (3) and unlock brake (4).
   c.Release spring latch (6) and lower platform(s) (3).
   d.Insert retaining pin (1) in the platform bracket for storage.

NOTE: Terex Utilities does not recommend traveling with the platform installed on the boom tip. To travel with the platform at the boom tip, a permanent platform rest must be installed.

https://truckmanualshub.com/

FULL PRESSURE HYDRAULIC TOP CONTROLS

EXTENDING AND STORING FULL PRESSURE TOP CONTROLS

To extend and store the top controls, use the following procedure:

1. Retract the second section and third section.
2. Remove Klik pin (1) from storage bracket (2) on main boom. Pull top controls (6) forward and store Klik pin (1) on storage bracket (2).
3. Roll top controls (6) forward. Lift to clear latching mechanism (4). Lower and push latching stud (3) against latching mechanism (4) until latch closes.
4. To store top controls (6), activate latch release mechanism (5). Remove Klik pin (1) from storage bracket (2). Lift top controls to clear latching mechanism (4) and roll top controls (6) rearward to engage storage bracket (2). Insert Klik pin (1).

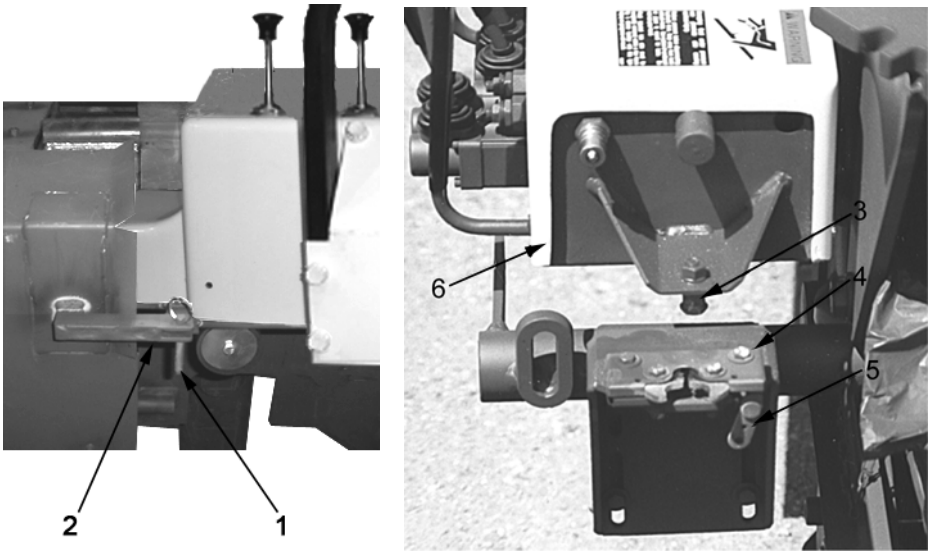

1. Klik Pin
2. Storage Bracket
3. Latching Stud
4. Latching Mechanism
5. Latch Release Lever
6. Top Controls

EXTENDING AND STORING TOP CONTROLS

Do not move vehicle with personnel in platform.
Do not perform digging or pole setting operations with personnel in platform.

https://truckmanualshub.com/

UPPER CONTROL SELECTOR AT LOWER CONTROLS (OPTION VALVE)

When the lower control valve selector is in the upper control position, oil flows to the upper controls. When lower controls are selected, oil flow is stopped to the upper controls to allow over-riding the upper controls in an emergency situation.

TOP CONTROLS

ITEM	CONTROL	DESCRIPTION
1.	Stop/Start (Optional)	Allows operator to stop and start the engine from the top controls.
2.	Two-Speed Throttle (Optional)	Provides two engine speeds, low and high. At low speed, the engine is at idle.
3.	Rotation	Allows the unit to rotate either left or right.
4.	Lift	Allows the boom to be raised or lowered.
5. *	2nd & 3rd Extension	Allows the boom to be extended or retracted. (Sequential extension)
6.	Winch	Allows winch operation
7.	Hydraulic Tool (Optional)	Allows auxiliary tools to be operated when in the detent pull position.
8.	Upper Control Stop	Disables all boom functions in detent push position.

NOTE: Sequenced HYDRAULIC THIRD SECTION: Only one valve section is provided at the upper controls which controls the extension and retraction of both the second section and fiberglass third section. The third section always extends first and then the second section, and the second section retracts first and then the third section, providing maximum insulation length at all times.

After entering the platform, attach the safety lanyard to the anchor provided on the platform-mounting sleeve. An OSHA compliant fall arrest system must be used. Disengage platform brake before operating controls.

Determine the movements required to reach the work location. Feather the controls to smoothly start and stop the Digger Derrick movements. Use slow deliberate movements, when approaching the aerial job site. Use high speed only when traveling to and from the job site in open areas with no obstacles. Use slower, controlled speeds when moving in the job site or around obstacles. Look in the direction the Digger Derrick is traveling to be certain there is clearance for the boom(s), platform, and operator.

https://truckmanualshub.com/

TOP CONTROLS FUNCTIONS

The controls shown are generic. The actual location varies depending on purchasers requirements and options. Some of the following control functions may not be included in the controls.

ITEM	CONTROL	LABEL	DESCRIPTION
1.	Engine Stop/ Start (optional)		Push the air cylinder once to start the vehicle engine. Push the air cylinder again to stop the vehicle engine. Can also be used to stop the vehicle engine in an emergency.
2.	Two-Speed Throttle (optional)		Push the air cylinder once to increase engine speed. Push the air cylinder again to return the engine to idle RPM.
3.	Rotation		Push lever to rotate boom counterclockwise “CCW”. Booms rotate 360 degrees continuously in either direction. Pull lever to rotate boom clockwise “CW”.
4.	Lift		Push lever to lower “DOWN” boom sections. Pull lever to raise “UP” boom sections.
5.	Intermediate Section “2nd” (Non-Insulated Units)		Push lever to extend “OUT”. Pull lever to retract “IN”.

https://truckmanualshub.com/

6.	Outer Boom “3rd” (Non-Insulated Units)		Push lever to extend “OUT”. Pull lever to retract “IN”.
7. *	Sequenced Second and Third Sections (Insulated Units)		Push lever to extend “OUT”. Third section always extends first and then the second section. Pull lever to retract “IN”. Second section always retracts first and then the third section.
8.	Winch		Push lever to lower “DOWN” load. Pull lever to raise “UP” load.
9.	Hydraulic Tools (optional)		Pull lever to engage tool circuit. Lever must be centered to operate boom functions.
10.	Upper Control Stop		Push lever to disable all boom functions. Lever must be centered to operate boom functions.

NOTE: *Sequenced HYDRAULIC THIRD SECTION: Only one valve section is provided at the upper controls which controls the extension and retraction of both the second section and fiberglass third section. The third section always extends first and then the second section, and the second section retracts first and then the third section, providing maximum insulation length at all times.

https://truckmanualshub.com/

AUXILIARY PLATFORM

When operator is in the auxiliary platform, the same control package is used and the operator reaches across the boom to operate the boom top controls. All controls would operate the same as from the primary platform, except the direction of operation would be in reverse.

The upper control winch capacities for use with or without jib must not be exceeded. Serious injury or death could result.

If winch is to be controlled from the top controls, the capacities shown on the load capacity chart must not be exceeded. Samples of the load capacity charts in section on “Reading the Load Capacity Chart).

EMERGENCY OPERATION

Emergency operation may be required if an operator is injured or the equipment malfunctions. In any emergency, the first priority is always the safety of the personnel involved. It is always important to remember to follow the standard work practices and the safety regulations that apply. If the Digger Derrick is operable, move the platform away from the danger and into the shortest, clear path of descent to get the operator on the ground. If the Digger Derrick is inoperable, consider using another Digger Derrick to rescue the operator from the platform. If an equipment defect is suspected, do not allow anyone to enter the platform. Instead if the situation allows safe operation from the lower controls, override the upper controls and carefully lower the platform to the ground.

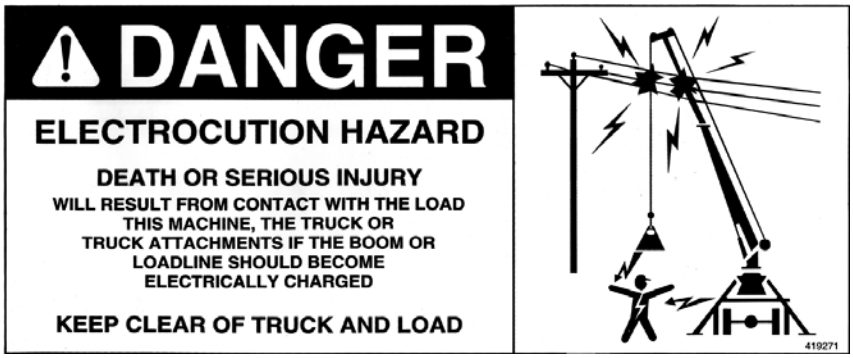

Do not touch the truck or attachments and the ground at the same time. If the truck, including Digger Derrick or any attachment connected to the truck, contacts a power line, you will be a path for the current. Death or serious injury will result.

POWER LINE CONTACT ON GROUND
VEHICLE IS TOUCHING A POWER LINE

Take these steps if your vehicle makes contact with a live power line while you are in or on the vehicle:

- Treat any line, as live unless you know for sure it is not.
- Stay inside or on the vehicle until the power is disconnected or turned off.
- Warn others to stay away from the vehicle and any trailers or attachments.
- If you must get away from the vehicle because of fire or other danger:
  - Jump out and away from vehicle.
  - Do not touch the vehicle and ground at the same time.
  - Land with your feet close together.
  - Shuffle away taking very small steps keeping feet together.
  - Do not try to help others out of the vehicle. Contact with the machine or someone on the machine will create a current path through you to ground causing serious injury or death.

https://truckmanualshub.com/

STANDING ON GROUND CLOSE TO FALLEN POWER LINE

You must shuffle keeping feet together, do not run. The voltage is highest where contact is made and decreases as you get farther away from the point of contact. The distance will depend on the ground conditions and conductivity of the ground. If you run, your legs will bridge from higher to lower voltage and current will pass through your feet and legs. Keep your feet together and shuffle to go from one voltage gradient to the next gradually. This will decrease the chance of electrocution as you move away from the vehicle or fallen wire.

- Never touch a fallen power line unless you are trained and properly equipped to handle it safely.
- Shuffle away using very small steps keeping feet together; do not run.
- Do not touch anything as you leave the area.
- Warn other people to stay away from the area.
- Immediately notify the proper authorities or people to correct the problem.

In an electrical emergency: Stay calm and think before you act. Don't become a victim while helping someone else.

APPROACHING A VEHICLE THAT MAY BE ENERGIZED

In an emergency situation, it may be necessary for ground personnel to operate the Digger Derrick. The entire vehicle and any attachments must be considered energized any time the booms are in the vicinity of power lines.

Ground personnel must know the proper operation and emergency procedures for the Digger Derrick. If there is an accident or the operator is incapacitated, the ground personnel will be required to assist in rescue operations following your company policies.

If you must approach a vehicle to perform a rescue operation, understand and follow your company policy. It will take precedence over these instructions. You must be very careful not to touch the vehicle and the ground at the same time or your body will be in a circuit and current may pass from foot to foot or foot to hand. The condition of the ground and subsurface will determine the electric gradient around the vehicle. Follow your employer’s policies for emergency situations.

BEFORE TRYING TO GET ON OR APPROACH THE VEHICLE:

- Is it necessary to approach the vehicle? Can the operator handle the problem from the platform?
- The best procedure is to disconnect or shut off the power to the lines.
- Do not let anyone approach the vehicle until you evaluate where the power line contacts the Aerial Device.
  - Is it above the insulated section of the upper boom?
  - Is it above the lower boom insulated section?
  - Is it below any insulated sections and a direct short to the vehicle?
- If the vehicle is grounded properly:
  - Use a hot stick or hot line tool to perform the operation.
  - Approach the vehicle using the shuffling step.
  - Lay a rubber blanket down by the vehicle and step on it before attempting to jump on the vehicle.
  - Do not touch the ground and the vehicle at the same time.
- If the vehicle is not grounded:
  - Do not approach the vehicle unless you use insulated blankets to step on as you approach the vehicle. Stepping from one rubber blanket to the next.
  - Use a hot stick or hot line tool to perform the rescue operation while standing on the rubber blanket.
  - As a last resort, jump onto the vehicle.
  - Do not touch the ground and the vehicle at the same time.

https://truckmanualshub.com/

CONTROL SELECTOR (EQUIPPED WITH UPPER CONTROLS)

When a situation requires use of lower controls to override the upper controls (such as, injured personnel in the platform), use the control selector at the lower controls to select the “lower” controls for operation of the Digger Derrick. This will make the upper controls inoperable. Then “lower” controls can be used to lower the operator to the ground, provided the upper controls are intact. The Control Selector functions as an emergency stop by taking oil flow away from the active controls. If the operator is unable to operate the Digger Derrick, determine if any damage has occurred to make the Digger Derrick inoperable. If the situation allows safe operation from the lower controls, override the upper controls and carefully lower the platform to the ground. If the Digger Derrick will not operate due to the damage incurred, consider one of the other auxiliary operating procedures presented in this section to solve the problem.

MANUAL ROTATION (WORM DRIVE ROTATION)

If all the hydraulic power sources become inoperable, the Digger Derrick rotation system can be actuated manually. Use a 7/8 in. hex socket, an extension, and a ratchet to rotate the input shaft on the gearbox. Actuating the lower rotation control will reduce the effort required for the rotation.

If the Digger Derrick is equipped with planetary rotation, an auxiliary power source must be used.

AUXILIARY LET DOWN POWER (OPTIONAL)

The auxiliary let down power system provides power from a DC motor-pump for operation of the Digger Derrick in case of a prime power source failure. Controls for auxiliary let down power may be located at the platform, pedestal (optional), and outrigger (optional). At the platform, the auxiliary let down power is operated by an air cylinder located with the upper controls. To activate this system, push and hold the air cylinder's plunger knob (labeled “Auxiliary Power”). The pump will engage after a 10 second delay, then operate the controls. To turn “off” the power, release the air cylinder's plunger knob. The auxiliary let down power system should not be continuously operated longer than 30 seconds. Continuous use will drain the battery and damage (overheat) the motor. At the pedestal and the outrigger controls (if equipped), the auxiliary let down power is operated by a push button switch. To activate this system, push and hold the switch, the pump will engage after a 10 seconds delay. To turn “off” the power, release the switch. The auxiliary let down power system should not be continuously operated any longer than 30 seconds. Continuous use will drain the battery and damage (overheat) the motor. Do not use the let down pump as an auxiliary pump. Use the let down pump only to lower the booms and/or raise the outriggers when either the main pump or engine malfunctions. Using the pump to raise the booms may cause damage to the let down pump motor. When the Digger Derrick is equipped with engine two-speed throttle and auxiliary let down power, the same control is used for both. When the engine is running, the engine two-speed throttle operates. When the engine is off, the auxiliary let down power operates. Test the auxiliary let-down system weekly to ensure the system will operate properly when needed.

https://truckmanualshub.com/

HYDRAULIC LINE FAILURE

Hydraulic line failure during Aerial Device operation presents numerous hazards. Be aware that a hydraulic oil mist caused by a leak or hydraulic line failure is conductive even though nonconducting oil is used.

A spray or mist produced by a hydraulic leak under pressure is very hazardous to personnel. This spray or mist can puncture the skin or become embedded beneath the skin. This condition would require immediate medical attention.

WHAT CAN CAUSE A HYDRAULIC LINE TO FAIL?

- Poorly maintained hydraulic system.
- Improperly assembled and installed hydraulic lines.
- Weather damaged hose assemblies.
- Hydraulic tool hoses that contact energized conductors phase to phase or phase to ground.
- Boom contact with phases causing a short circuit, which overheats the hydraulic line.
- Improper system pressure setting.
- Overheating the hydraulic system.
- Snagging of hydraulic lines on fixed objects.

WHAT CAN HAPPEN WHEN HYDRAULIC LINES FAIL?

Hydraulic oil, when confined within the hydraulic system and properly maintained, is non-conductive and not subject to being ignited. There are numerous hazards that develop when there is a hydraulic line separation:

- Personnel may suffer burns from contact with hot oil.
- A vacuum may be created in the line and breech the insulated portion of the booms causing the Aerial Device to be conductive.
- If the hydraulic line failure creates a mist of oil, it very easily can be ignited by any outside source of ignition; such as, electric arcing, sparks, and flames.
- The reservoir may be drained of oil, which will make the Aerial Device inoperable.

https://truckmanualshub.com/

WHAT TO DO IF HYDRAULIC LINES FAIL?

A quick response to stop oil flow caused by a hydraulic line failure is important to prevent further damage and prevent injury.

The following sequence can be used to stop the flow.

From The Platform

- Release the function being operated. Shut off tool valve if tool, tool hoses, or tool connections are involved.
- Activate the emergency stop control, which will divert the flow back to the tank.
- Activate the engine stop/start switch, if so equipped. This will stop the engine driving the pump.
- Get ground assistance if all of these fail to stop the flow of oil.

The vehicle may be energized. If mounting or operating the vehicle from the ground, use proper personal protective equipment; such as insulating rubber gloves, rubber boots, rubber mats, and/or a hot stick. See Emergency Operation section for procedure to approach vehicle.

From The Vehicle Bed

- Move the control selector at the lower controls to the lower control position. This will stop all flow to upper controls.
- Push the engine stop/start switch, if so equipped. This will stop the engine driving the pump.

From The Ground

- Shut off the pump engine. This will stop the pump.
- Disengage the power take-off. This will stop the pump.
- Move the control selector at the outrigger control valve to the outrigger position. This will stop all flow to the Aerial Device and send it to the outrigger circuit.
- Push the engine stop/start, if so equipped. This will stop the engine driving the pump.

Once the flow is stopped, determine where the line failure is located. The following examples describe some emergency procedures that can be followed for some specific types of hydraulic line failures:

- If the line failure is between the upper and lower controls, overriding the upper controls and only operating from the lower controls may reduce the rate of hydraulic oil loss. The intermittent loss of hydraulic oil may allow the Aerial Device to be stored.
- It may be necessary to use another Aerial Device to bring the operator down.

NOTE: Oil spills may require notifying Local, State, or Federal Authorities.

The Aerial Device must not be operated until repairs have been completed and the Aerial Device cycled from the lower controls to purge air.

ENGINE FAILURE

If the prime power source fails, the optional auxiliary let down power system can be used for emergency operation. If the auxiliary let down power system is not installed and the vehicle has a manual transmission, then use the engine stop/start control (if so equipped) to crank the engine.

HYDRAULIC PUMP FAILURE

If the primary hydraulic pump fails, use the auxiliary let down power system, if equipped.

https://truckmanualshub.com/

CONTROL VALVE FAILURE

A control valve malfunction could develop in either the individual control levers or the multifunction single stick control.

If the Aerial Device motion cannot be stopped because the control valve will not return to the centered or neutral position, activate the emergency stop mode by pushing down the emergency stop. The emergency stop position will disable the boom controls, which will stop the Aerial Device's motion. If the engine stop/start control is installed, shut off the engine. The engine and the Aerial Device's motion will cease. Then manually attempt to center the spring-loaded control lever before restarting the engine. If the spring-loaded control lever at the platform will not return to neutral, the Aerial Device can be returned to a stowed position by overriding the upper controls from the lower controls.

After any emergency situation, it is the operator's responsibility to notify appropriate maintenance personnel to make sure the Aerial Device is repaired and adjusted.

Identifying the problem and initiating the recommended emergency procedures will help to minimize or possibly prevent injuries.

FALL PROTECTION

Fall protection is required whenever in an aerial or digger derrick platform. An OSHA compliant fall arrest system with the lanyard attached to the provided anchor at the boom tip must be used. The issue is not falling from the platform; but being ejected. You can be ejected by failure of a component causing unexpected motion, sudden release of energy from catching or snagging and releasing, or an external force on the vehicle, boom or boom tip.

RESPONSE TO A FALL

ANSI and OSHA state that no more than 6 minutes should pass from the time a worker falls to when he is reached. These time limits are to mitigate the risks of unconsciousness or further injury of the suspended worker. Each company must have a rescue plan in place to recover a suspended worker. Practice the rescue plan with all workers including the ground persons in this training, who may be the only ones available to perform the rescue. Train all employees to follow your rescue plan to recover the fallen person as quickly as safely possible without endangering the rescue personnel. Determine whether first aid is required as quickly as possible. Notify emergency services if the worker needs to be transported to the hospital according to your companies policies.

One of the dangers of being suspended in a safety harness is suspension trauma (orthostatic intolerance). Immobile workers suspended in their harness may lead to fainting or an unconscious state. Depending on the length of time, anywhere from few minutes to about 20 minutes, the suspended worker may become unconscious and depending on the level of venous pooling, the result may lead to death. Because the person will have limited ability to move their legs, blood will pool and not be available for circulation to the other parts of the body and brain. Communicate with the fallen worker to encourage them to move their arms and legs to promote blood circulation to the extremities. If the worker has signs of physical injury, or signs of suspension trauma such as; dizziness, fainting, nausea, sweating, paleness, hot flashes, increased heart rate, breathlessness, unusually low heart rate, unusually low blood pressure, or loss of vision contact emergency medical services immediately. A dangerous condition that sometimes occurs with suspension trauma is compartment syndrome. Also watch the fallen person carefully after rescue. A condition known at Reflow Syndrome can occur. The return of pooled, hypoxic blood and its metabolic byproducts from the extremities to the heart can cause medical issues even after rescue. Refer to your safety department, rescue plan, or local health providers for more information.

https://truckmanualshub.com/

JIB INSTALLATION AND REMOVAL

When using jibs on this Digger Derrick, use the chart that is applicable to the jib operation. Do not use the Digger Derrick load capacity chart or handle poles with the jib.

The jib assembly, which consists of the jib mounting bracket and the jib, may be installed or removed as a complete assembly or as separate parts.

To install the jib in the boom tip, use the following procedures:

1. To install separated:
   a. Attach the jib mounting bracket (1) to boom tip by aligning mounting holes in jib mounting bracket with mounting holes in boom tip. Secure in place with pin(s) (5).
   b. Remove pin(s) (3) from jib mounting bracket (1) and slide jib (4) into jib mounting bracket. Secure in place with pin(s) (3).
2. To install as complete assembly:
   a. Attach the jib (4) and jib mounting bracket (1) to boom tip by aligning holes in jib mounting bracket with mounting holes in boom tip.
   b. Secure in place with pin(s) (5).
   c. After installation, check the roller(s), sheaves, and angle indicator for ease of operation. Lubricate if necessary.
   d. Route winch line to the jib sheave as depicted on the diagrams. Starting at the winch, follow A to B.

Rope damage or excessive wear may result from improper routing of winch line. The diagrams illustrate the proper procedure for rope routing.

When installing the jib assembly check pins, rollers, sheaves, jib pivot points, jib extension points, and jib rest, check for cracks, unusual wear, and missing or damaged hardware. If any discrepancies are found, repair or replace before continuing.

To remove the jib in the boom tip, use the following procedures:

1. To remove separated:
   a. Remove winch line from jib boom and jib mounting bracket (1).
   b. Remove pin(s) (3).
   c. Slide jib boom (4) clear of jib mounting bracket (1).
   d. Store jib boom (4) in a suitable storage area.
   e. Support the jib mounting bracket (1) and remove pins (5).
   f. Remove jib mounting bracket (1) from boom tip.
   g. Store the pins (5) on the jib mounting bracket (1).
   h. Store jib mounting bracket (1) in a suitable storage area.
2. To remove as complete assembly:
   a. Remove winch line from jib boom (4) and jib mounting bracket (1).
   b. Support the complete assembly and remove pins (5).
   c. Remove from boom tip.
   d. Store pins (5) on the jib mounting bracket (1).
   e. Store complete assembly in suitable storage area.

https://truckmanualshub.com/

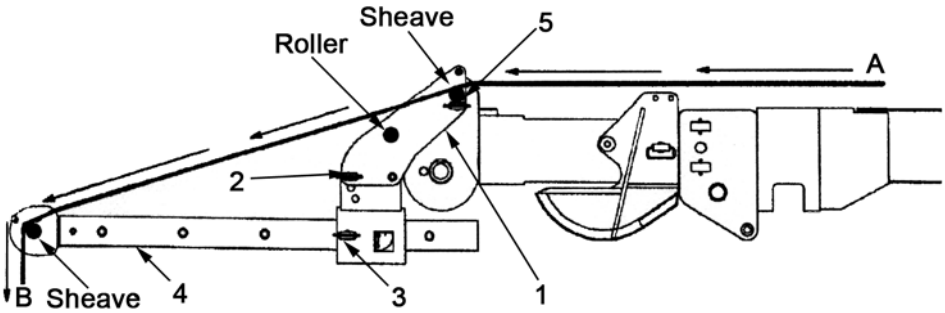

TURNTABLE MOUNT WINCH TRANSFERABLE (UNDER SLUNG)

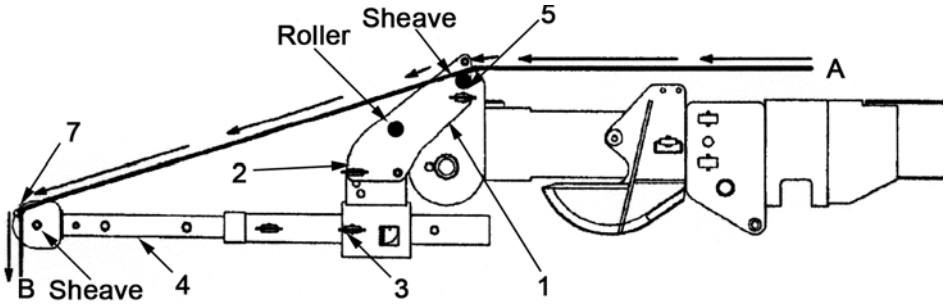

TURNTABLE MOUNT WINCH TRANSFERABLE (TWO STAGE UNDER SLUNG) END OF 3RD

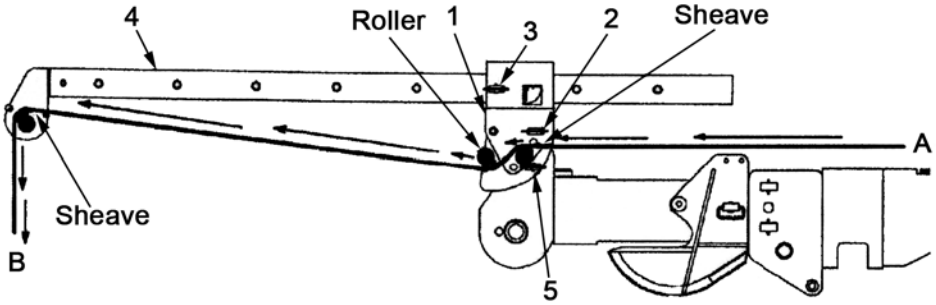

TURNTABLE MOUNT WINCH TRANSFERABLE (OVER SLUNG)

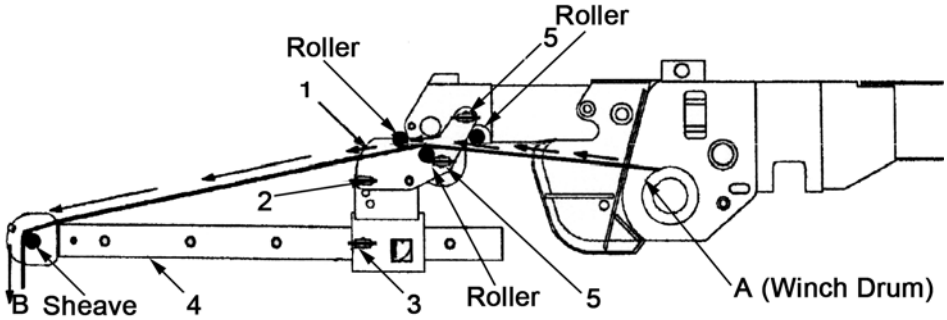

POLE GRABBING (BOOM TIP) WINCH TRANSFERABLE (UNDER SLUNG)

https://truckmanualshub.com/

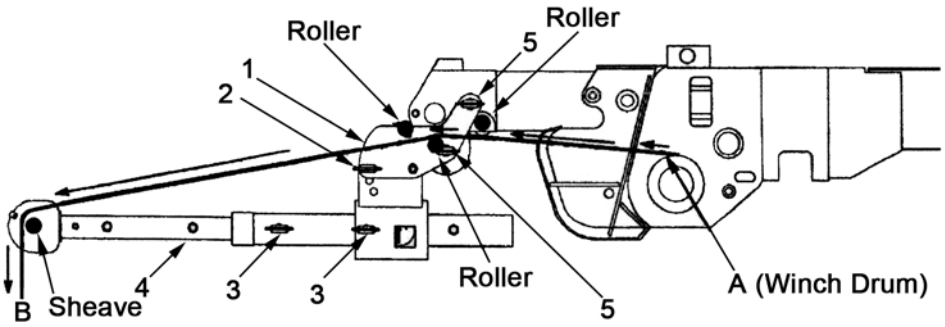

POLE GRABBING (BOOM TIP) WINCH TRANSFERABLE (UNDER SLUNG TWO STAGE)

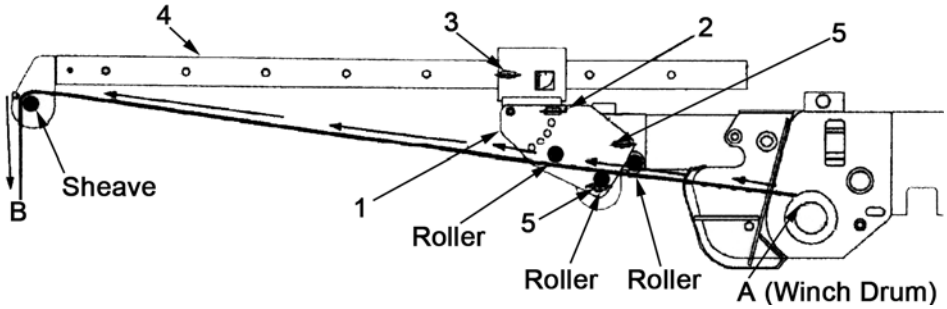

POLE GRABBING (BOOM TIP) WINCH TRANSFERABLE (OVER SLUNG)

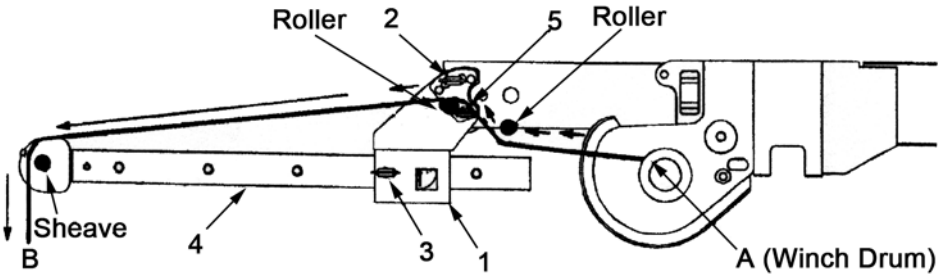

POLE GRABBING (BOOM TIP) WINCH NON-TRANSFERABLE (UNDER SLUNG)

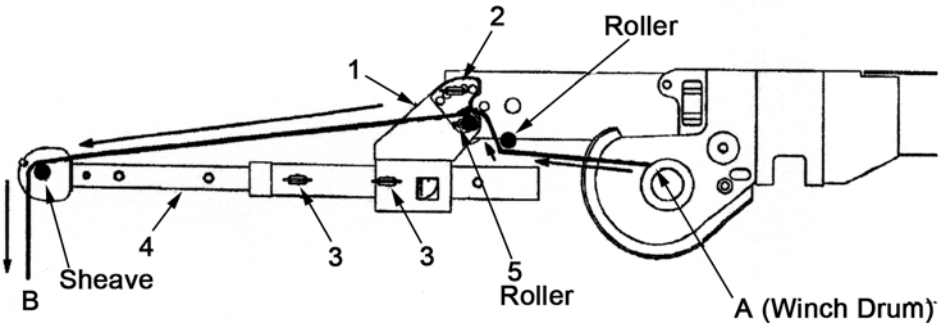

POLE GRABBING (BOOM TIP) WINCH NON-TRANSFERABLE (TWO STAGE UNDER SLUNG)

https://truckmanualshub.com/

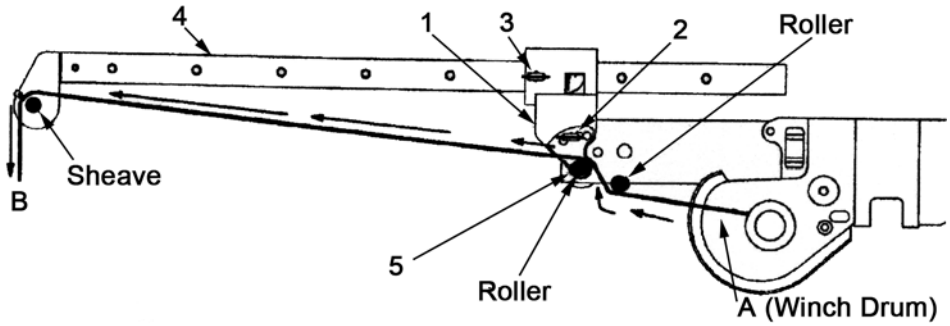

POLE GRABBING (BOOM TIP) WINCH NON-TRANSFERABLE (OVER SLUNG)

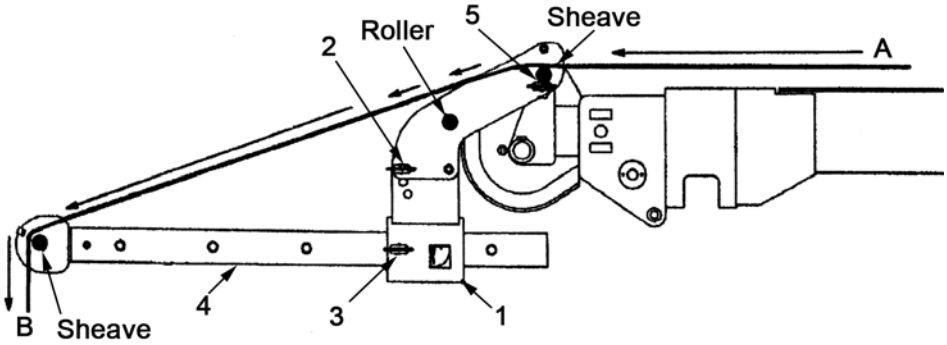

TURNTABLE MOUNT WINCH NON-TRANSFERABLE (UNDER SLUNG)

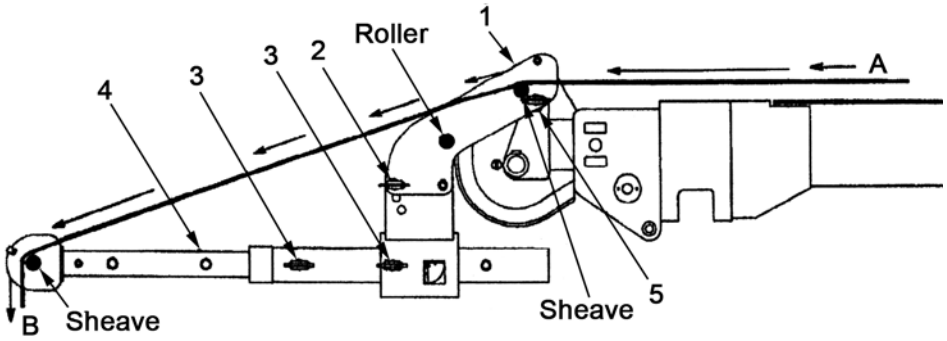

TURNTABLE MOUNT WINCH NON-TRANSFERABLE (TWO STAGE UNDER SLUNG)

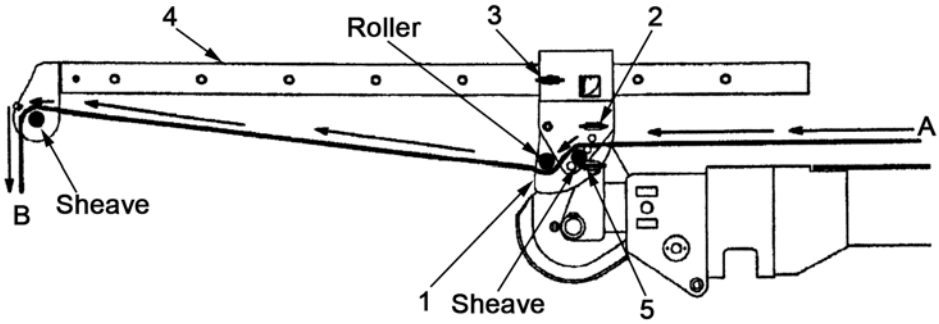

TURNTABLE MOUNT WINCH NON-TRANSFERABLE (OVER SLUNG)

https://truckmanualshub.com/

TILTING AND EXTENDING JIB

The following procedures are for tilting and extending the jib boom.

To tilt the jib boom (4), use the following procedures:

1. Support the jib boom (4) and remove pins (2).
2. Tilt jib boom (4) to desired angle.
3. Align mounting holes.
4. Secure with pin (2).

To extend and retract a single stage jib boom, use the following procedures:

1. Support the jib boom (4) and remove pin(s) (3).
2. Extend or retract jib boom (4) to desired length.
3. Align pin hole in jib boom (4) with pin hole in jib mounting bracket (1).
4. Secure with pin(s) (3).

To extend and retract a two stage jib boom, use the following procedures:

1. Support the jib boom assembly (4) and remove pin(s) (3).
2. Extend or retract second stage jib boom (4) to desired length.
3. Align pin hole in second stage with pin hole in first stage.
4. Secure with second stage pin(s) (3).
5. Extend or retract first stage of jib boom (4) to desired length.
6. Align pin hole in first stage with pin hole in jib mounting bracket (1).
7. Secure with first stage pin(s) (3).

https://truckmanualshub.com/

LEAVING THE JOB SITE

When leaving the job site, do the following:

1. If the Digger Derrick was used with the aerial platform, remove the platform and store the control package on the lower boom bracket.
2. Fully retract all boom sections. If equipped with manual fiberglass extension, pull retaining pin and return to the stored position. Reinstall the retaining pin.
3. Place boom in the boom rest.
4. Retract all outriggers and properly store outrigger pads and wheel chocks.
5. Stow all loose items or equipment.
6. Disengage PTO to prevent damage.
7. Shut off master switch, if so equipped.
8. Turn off warning lights.
9. Make final inspection that everything is stored properly.
10. Disengage brakes.
11. When traveling, remember the overall height of the vehicle.
12. Report any operational problems during operation to qualified personnel for evaluation and repair.
13. Follow the vehicle manufacturer's instructions for operating the vehicle.

DRIVE CAREFULLY!

https://truckmanualshub.com/

https://truckmanualshub.com/

SECTION 2
MAINTENANCE GUIDELINES

PREVENTATIVE MAINTENANCE

A preventative maintenance program based on the manufacturer's recommendations shall be established. Dated and detailed inspection and repair records shall be maintained.

It is recommended that the replacement parts for your digger derrick be obtained from a Terex South Dakota, Inc. distributor or Terex South Dakota, Inc..

MAINTENANCE PROCEDURE

Before maintenance, adjustments and repairs are started the following precautions shall be taken as applicable:

- You must be authorized by owner to operate unit.
- Place vehicle where it will cause the least interference with other equipment or operations in the area.
- All controls at the off position.
- Starting means rendered inoperative.
- Warning or “OUT OF ORDER” signs placed on the vehicle.
- Power plant stopped or disconnected at power takeoff.
- Boom lowered to the ground if possible or otherwise secured against dropping.
- Relax all hydraulic cylinders used for boom lift and articulation.
- Relieve hydraulic oil pressure from all hydraulic circuits before loosening or removing hydraulic components.

After adjustments and repairs have been made the digger derrick shall not be operated until all guards have been reinstalled, trapped air removed from hydraulic system, safety devices reactivated and maintenance equipment removed.

Warning or “OUT OF ORDER” signs shall be placed and removed by authorized personnel only.

ADJUSTMENTS AND REPAIRS

Any unsafe conditions disclosed by the inspection requirements of this section shall be corrected before operation of the digger derrick is resumed. Adjustments and repairs shall be done only by qualified personnel.

Adjustments shall be maintained to assure correct functioning of components. The following are examples:

- All functional operating mechanisms.
- Safety devices.
- Control systems.
- Power plants.

Repairs or replacements shall be provided promptly as needed for safe operation. The following are examples:

- All critical parts of functional operating mechanisms which are cracked, broken, corroded, bent or excessively worn.
- All critical parts of the vehicle structure which are cracked, bent, broken or excessively corroded.
- Hooks showing defects disclosed by “Frequent Inspection” requirements in the maintenance manual shall be discarded. Field repairs by welding or re-shaping shall not be permitted.

All replacement parts or repairs shall have at least the original safety factor. Do not alter, modify, remove or replace any part of the digger derrick without the approval of the manufacturer.

https://truckmanualshub.com/

LUBRICATION

All moving parts of the digger derrick and vehicle, for which lubrication is specified, shall be regularly lubricated. Lubricating systems shall be checked for proper delivery of lubricant. Particular care should be taken to follow manufacturer's recommendations as to points and frequency of lubrication, maintenance of lubricant levels and types of lubricant to be used. Consult the lubrication chart and/or the maintenance manual for the correct lubricant for the Digger Derrick.

Machinery shall be stationary while lubricants are being applied and protection provided as called for in "Maintenance Procedure".

OPERATIONAL CHECKLISTS

See Frequent and Periodic Inspection Intervals before operation of the digger derrick.

GENERAL INFORMATION

1. Keep inspection records up-to-date.
2. Record and report all discrepancies to your supervisor.
3. A dirty digger derrick cannot be properly inspected. Keep your digger derrick clean!
4. Only qualified personnel shall do repairs and inspections.
5. Oil spills may require notifying Local, State, or Federal Authorities.

The following checklists must be used daily, 90 days (360 hours), 180 days (720 hours), 12 months (1,050 hours). Failure to do so could endanger the life of the operator. Always remember, preventive maintenance can save much more than it costs.

NOTE: The following check points listed are the minimum recommended by Terex South Dakota, Inc.. They are subject to supplementation to conform with your own company regulations.

NOTE: Remember that the safety of all personnel and the operational efficiency of the digger derrick are dependent upon good inspection checks and maintenance practices.

NOTE: Dirty or dusty conditions or unusual weather conditions may require more frequent maintenance.

Changes to the vehicle computer settings could affect equipment operation and could result in crushing or tip over that could cause death or serious injury.

- Do not alter computer settings without full knowledge of affect of changes.
- See information supplied with truck manuals and contact final stage manufacturer for required settings.

https://truckmanualshub.com/

FREQUENT AND PERIODIC INSPECTION INTERVALS

DAILY

1. Check controls at platform and lower controls for proper operation.
2. Inspect fall protection equipment and attachments.
3. Inspect visual and audible devices.
4. Check condition, cleanliness, and dryness of fiberglass components.
5. Visually check for missing or loose covers and guards.
6. Check for missing and illegible operational, warning, or instructional markings.
7. Visually check oil level in hydraulic reservoir.
8. Visually inspect for leaks in hydraulic system.
9. Check all areas for evidence of physical damage.
10. Visually check all cylinders for leaks.
11. Visually inspect all fasteners for tightness.
12. Visual inspection of all structural members; booms, pins, auger, accessories, outriggers, subframe, and attachments, for cracks and permanent deformation.
13. Check for rotational obstructions.
14. Visual inspection of all electrical wires.
15. Inspect winch line, hook, and slings.
16. Inspect rollers and sheaves for flat spots and free movement.
17. Visually inspect Auger Roll Up Cable.
18. Inspect for damaged or missing auger teeth.
19. Operational test of all functions.

90 DAYS (360 HOURS)

1. Replace return filter. (First 90 days)
2. Lubricate all points per lubrication chart recommendations.
3. Repair or replace items found to be worn or damaged.
4. Daily Inspections.

180 DAYS (720 HOURS)

1. Check tightness of rotation bearing bolts, turntable to bearing, and bearing to pedestal for proper torque.
2. Inspect all exposed hoses.
3. Clean hydraulic tank breather.
4. Daily and 90 days (360 hours) inspections.

12 MONTHS (1,050 HOURS)

1. Inspect and lubricate PTO drive shaft to pump.
2. Take samples of hydraulic oil and test.
3. Perform cylinder drift test.
4. Perform structural and critical weld inspection.
5. Replace return filter
6. Perform dielectric test.
7. Check all hydraulic pressure adjustments for proper setting.
8. Daily, 90 days (360 hours), and 180 days (720 hours) inspections.

https://truckmanualshub.com/

LUBRICATION CHART

TEREX TELELECT

DIGGER DERRICK

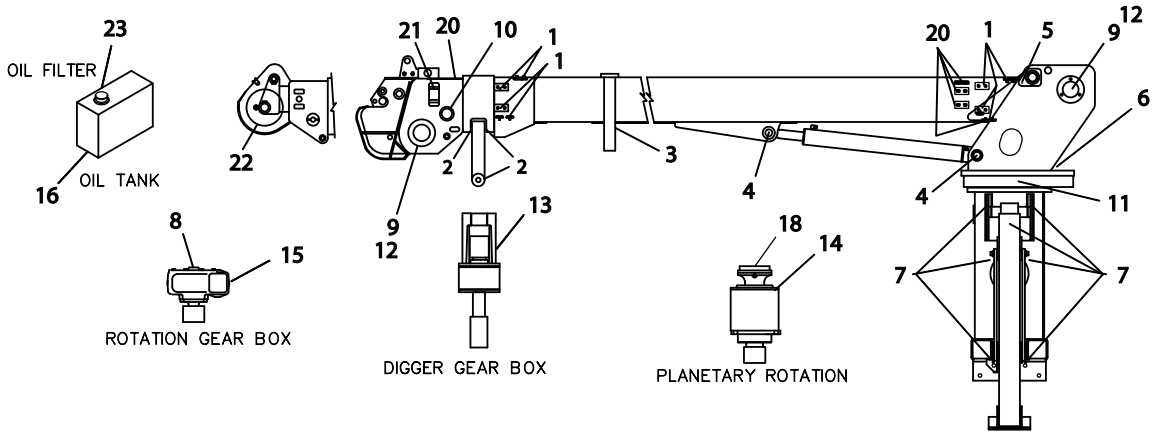

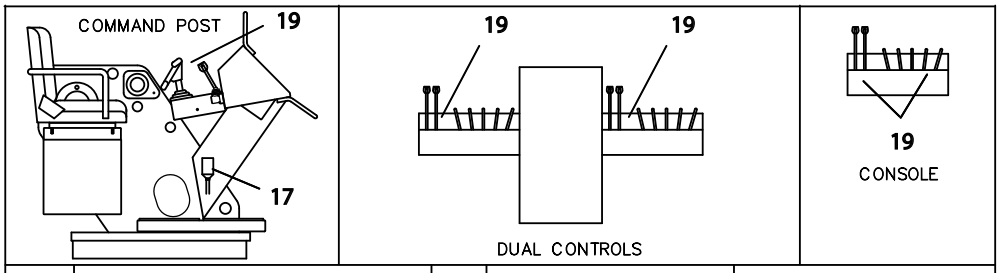

ITEM	LUBRICATION POINT	QTY	TYPE OF LUBRICATION	SERVICE INTERVAL	SERVICE METHOD
1	2ND BOOM WEAR PADS	A/R	LITHIUM–BASE EP #2 GREASE	360 HOURS OR 90 DAYS	GREASE GUN
2	DIGGER BRACKET	4			
3	AUGER STORAGE BRACKET	1			
4	LIFT CYLINDER BEARINGS	4			
5	BOOM PIVOT BEARINGS	2			
6	TURN TABLE BEARING	* 1			
7	JACKS, SWING SLANT	10			
8	ROTATION GEAR BOX BEARING	1			
9	WINCH DRUM	1		WEEKLY	
10	HYDRAULIC 3RD ROLLERS	2		SEE NOTE	REPACK
11	ROTATION GEAR TEETH	* 1			BRUSH
12	WINCH GEAR BOX	** 1	GL–5 EP GEARLUBE 85W140	360 HOURS OR 90 DAYS	***FILL IF LOW
13	DIGGER GEAR BOX	1	GL–5 EP GEARLUBE 80W90		
14	PLANETARY ROTATION GEAR BOX	1	GL–5 EP GEARLUBE 80W90		
15	WORM ROTATION GEAR BOX	1	MOBILUX EP 023		
16	HYDRAULIC RESERVE TANK	1	PREMIUM ISO 15 HYD FLUID	CHECK DAILY	
17	THROTTLE RESERVOIR	1	HYD FLUID MIL–5606A		
18	PLANETARY BRAKE	1	HYD FLUID MIL–5606A	360 HOURS OR 90 DAYS	
19	CONTROL LEVERS	A/R	LUBRICATING OIL		GREASE GUN
20	FBG 3RD WEAR PADS	A/R	LITHIUM EP #2 GREASE		SPRAY
21	3RD SIDE ROLLERS	4	SILICONE		
22	SHEAVES	A/R	SILICONE	WEEKLY	
23	RETURN LINE FILTER	1	REPLACE FILTER EVERY 250 HOURS		

USE THE ABOVE PRODUCTS OR EQUIVALENT
* LUBE SPARINGLY EVERY 1/8 REVOLUTION.
** FOR SERVICE BELOW –20° F. CONSULT OIL SUPPLIER.
*** DRAIN AND REFILL WHEN CONTAMINATED.

NOTE: ALL MOVING PARTS NOT EQUIPPED WITH GREASE FITTINGS SHOULD BE LUBRICATED WITH LPS–1 OR EQUIVALENT LUBRICANT EVERY 90 DAYS.

NOTE: ALWAYS LUBRICATE ITEMS WHEN DIS–ASSEMBLED. DERRICKS MAY VARY SLIGHTLY WITH OPTIONS. LUB–RICATE PER MANUAL.

443818D

https://truckmanualshub.com/

WIRE ROPE INSPECTION

The wire rope must be inspected daily for any deterioration, which results in appreciable loss of strength, described as follows. Refer to the maintenance manual for complete instructions on proper inspection of the wire rope and criteria for replacement.

- Reduction of rope diameter below the nominal diameter due to loss of core support, internal and external corrosion, of wear of outside wires.
- A number of broken wires and the degree of distribution and concentration of the broken strands.
- Badly worn outside wires.
- Corroded or broken wires at end connectors.
- Corroded, cracked, bent, worn or improperly applied end connections.
- Severe kinking, crushing, cutting, or unstranding.
- Lack of lubrication.

If any of the above conditions are found, report them to a qualified person to determine if the wire rope should be replaced. Further information for determining if the rope should be replaced can be found in the maintenance manual. This inspection also includes wire ropes used for slings and auger roll up cables.

SYNTHETIC ROPE INSPECTION

The synthetic rope must be inspected daily for any deterioration, resulting in appreciable loss of strength, such as described below.

- Excessive external roughness.
- Glossy or glazed areas, which indicates heat damage.
- Look for flat areas, bumps, or lumps, which indicates core or internal damage.
- Cut or badly frayed strands.
- Areas of discoloration, which could be caused by chemical contamination.
- Stiffness, which would indicate excessive dirt or grit embedded or shock load damage.
- Open the strands and look for powdered fibers, which means there is internal wear.
- Inspect eye connection for proper weaving and damage.

If any of the above conditions are found it should be reported to a qualified person to determine if the synthetic rope should remain in service. Further information can be found in the maintenance manual for determining the replacement of the synthetic rope.

If there is any doubt or question about the condition of the synthetic rope -replace it!

NOTE: To extend the useful life of the rope end for end it periodically. Refer to rope manufacturers information.

https://truckmanualshub.com/

HOOK INSPECTION

The load line hook and safety latch must be inspected prior to any lifting operation. Any hooks showing defects shall be discarded. Field repairs by welding or re-shaping shall not be permitted.

- Any damaged hook safety latch shall be replaced immediately.
- Any hook or fitting with a crack or distortion shall be removed from service immediately.
- Hook nut (if equipped) should be checked for corrosion or deformation.
- Refer to hook manufacturer for more specific inspection instructions.

If any of the above conditions are found it should be reported to a qualified person to determine if the items should remain in service.

Also inspect the clevis, snatch blocks, and sheaves used to multi-part the load line for damaged, missing, or worn components.

Hook latches are to be used only as retention devices to retain loose rigging under slack conditions. They are not intended to be anti-fouling devices and caution must be exercised to prevent a latch from supporting any portion of a load. Daily inspection of the latch must be made to verify proper operating condition. If damage to the latch occurs, the latch must be replaced immediately.

https://truckmanualshub.com/

APPENDIX - A
STANDARDS AND REGULATIONS

In addition to the operational instructions provided herein, various standards and governmental regulations must be followed in the use and operation of your Terex South Dakota, Inc. unit.

ANSI STANDARDS

ANSI standards that are applicable to the operation and maintenance of your unit:

1. ANSI A92.2 (latest revision) Vehicle Mounted Elevating and Rotating Aerial Devices,
2. ANSI A10.31 (latest revision) Digger Derricks - Safety Requirements, Definitions and Specifications (A partial extraction is included in this appendix),
3. ANSI C2, Part 4 (latest revision) (National Electric Safety Code®) Rules for the Operation of Electric Supply and Communication Lines and Equipment,
4. ANSI Z133.1 (latest revision) Safety Requirements for Tree Pruning, Trimming, Repairing, or Removal.

For complete, current copies of ANSI standards, you must annually write to the following:

American National Standards Institute

11 West 42nd Street

New York, NY 10036

Copies of the standards can also be found on the Internet at:

www.ansi.org

OSHA REGULATIONS

OSHA regulations that are applicable to the operation and maintenance of your unit:

1. OSHA Subpart V, Power Transmission and Distribution,
2. OSHA 1910.67, Vehicle Mounted Elevating and Rotating Cable Placers,
3. OSHA 1910.268, Telecommunications,
4. OSHA 1910.269, Electrical Power Generation, Transmission and Distribution,
5. OSHA Subpart M, Fall Protection,
6. OSHA 1910.147, The Control Of Hazardous Energy (Lockout/Tagout),
7. OSHA Subpart S, Electrical,
8. OSHA 1910.333, Selection and use of work practices.
9. OSHA Subpart CC, - Cranes and Derricks in Construction

For complete, current copies of OSHA regulations, you must annually write to the following or contact your OSHA Regional Office.

Technical Data Center

Frances Perkins Department Of Labor Building

Room N2439

200 Constitution Avenue

Washington, DC 20210

Copies of the standards can also be found on the Internet at:

www.osha.gov.

These are not all inclusive of the applicable codes, standards, or regulations. It is your responsibility and your employer's responsibility to identify and comply with applicable codes, standards and regulations.

The information provided herein is accurate as of the date your Terex South Dakota, Inc. unit was manufactured. You must comply with the codes, standards and regulations as they are updated over time. It is your employer's responsibility to obtain copies and comply with all standards and regulations.

https://truckmanualshub.com/

OSHA EXCERPTS: (CLEARANCE DISTANCE)

The following are excerpts from OSHA Standards. They are not complete and do not cover all safety work rules.

PARTIAL EXCERPT FROM SUBPART S - ELECTRICAL: (02-01-1998 EDITION)

1910.333 Selection and use of work practices.

(c), (i) Unqualified person.

(A) When an unqualified person is working in an elevated position near overhead lines, the location shall be such that the person and the longest conductive object he or she may contact cannot come closer to any unguarded, energized overhead line than the following distances:

1. For voltages to ground 50kV or below - 10 feet (3.05 m);
2. For voltages to ground over 50kV - 10 feet (3.05 m) plus four inches (101.6 mm) for every 10kV over 50kV.

(B) When an unqualified person is working on the ground in the vicinity of overhead lines, the person may not bring any conductive object closer to unguarded, energized overhead lines than the distances given in paragraph (c)(3)(i)(A) of this section.

NOTE: For voltages normally encountered with overhead power line, objects which do not have an insulating rating for the voltage involved are considered to be conductive.

EXCERPT FROM OSHA SUBPART V - POWER TRANSMISSION AND DISTRIBUTION (11-14-1990 EDITION)

1926.950 General Requirements (c) Clearances. The provisions of paragraph© (1) or (2) of this section shall be observed.

(1) No employee shall be permitted to approach or take any conductive object without an approved insulating handle closer to exposed energized parts than shown in Table V-1, unless:

(i) The employee is insulated or guarded from the energized part (gloves or gloves with sleeves rated for the voltage involved shall be considered insulation of the employee from the energized part), or

(ii) The energized part is insulated or guarded from him and any other conductive object at different potential, or

(iii) The employee is isolated, insulated, or guarded from any other conductive object(s), as during live-line bare-hand work.

(2)(i) The minimum working distance and minimum clear hot stick distances stated in Table V-1 shall not be violated. The minimum clear hot stick distance is that for the use of line-line tools held by lineman when performing live-line work.(e)(15) The minimum clearance distances for live-line bare-hand work shall be as specified in Table V-2. These minimum clearance distances shall be maintained from all grounded objects and from lines and equipment at a different potential than that to which the insulated Cable Placer is bonded unless such grounded objects or other lines and equipment are covered by insulated guards. These distances shall be maintained when approaching, leaving and when bonded to the energized circuit.

https://truckmanualshub.com/

ALTERNATING CURRENT MINIMUM DISTANCES	
VOLTAGE RANGE (PHASE-TO-PHASE) KILOVOLT	MINIMUM WORKING AND CLEAR HOT STICK DISTANCES
2.1 to 15	2 ft. 0 in. (0.61 m)
15.1 to 35	2 ft. 4 in. (0.71 m)
35.1 to 46	2 ft. 6 in. (0.76 m)
46.1 to 72.5	3 ft. 0 in. (0.91 m)
72.6 to 121	3 ft. 4 in. (1.02 m)
138 to 145	3 ft. 6 in. (1.07 m)
161 to 169	3 ft. 8 in. (1.12m)
230 to 242	5 ft. 0 in. (1.52 m)
345 to 362	1 7 ft. 0 in. (2.13 m)
500 to 552	1 11 ft. 0 in. (3.35 m)
700 to 765	1 15 ft. 0 in. (4.57 m)

TABLE V-1

MINIMUM CLEARANCE DISTANCES FOR LIVE-LINE BARE-HAND WORK (ALTERNATING CURRENT)		
VOLTAGE RANGE (PHASE-TO-PHASE) KILOVOLT	DISTANCE IN FEET AND INCHES FOR MAXIMUM VOLTAGE	
	PHASE-TO-GROUND	PHASE-TO-PHASE
2.1 to 15	2 ft. 0 in. (.61m)	2 ft. 0 in. (.61m)
15.1 to 35	2 ft. 4 in. (.71m)	2 ft. 4 in. (.71m)
35.1 to 46	2 ft. 6 in. (.76m)	2 ft. 6 in. (.76m)
46.1 to 72.5	3 ft. 0 in. (.91m)	3 ft. 0 in. (.91m)
72.6 to 121	3 ft. 4 in. (1.02m)	4 ft. 6 in. (1.37m)
138 to 145	3 ft. 6 in. (1.07m)	5 ft. 0 in. (1.52m
161 to 169	3 ft. 8 in. (1.12m)	5 ft. 6 in. (1.68m
230 to 242	5 ft. 0 in. (1.52m)	8 ft. 4 in. (2.54m)
345 to 362	1 7 ft. 0 in. (2.13m)	1 13 ft. 4 in.(4.06m)
500 to 552	1 11 ft. 0 in. (3.35m)	1 20 ft. 0 in.(6.1m)
700 to 765	15 ft. 0 in. (4.57m)	31 ft. 0 in.(9.45m)

TABLE V-2

NOTE: Table V-1 - 1 For 345-362kv, 500-552kvb and 700-765kv, the minimum working distance and the minimum clear hot stick distance may be reduced provided that such distances are not less than the shortest distance between the energized part and a grounded surface.

NOTE: Table V-2 - 1 For 345-362kv, 500-552kv and 700-765kv, the minimum clearance distance may be reduced provided the distances are not made less than the shortest distance between the energized part and a grounded surface.

OSHA SUBPART CC

Depending on the work being performed operation near power lines must follow OSHA 1926.1408 and 1409. This includes maintaining at least 20 foot (6.1m) clearance up to 50 feet (15.2m) depending on the voltage. All personnel must be trained of the hazards when working near or on power lines.

https://truckmanualshub.com/

STANDARD HAND SIGNALS

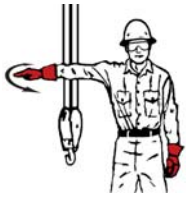

STOP. With arm extended horizontally to the side, palm down, arm is swung back and forth.

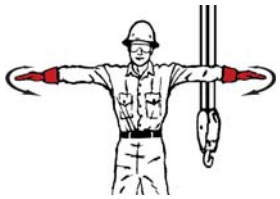

EMERGENCY STOP. With both arms extended horizontally to the side, palms down, arms are swung back and forth.

HOIST. With upper arm extended to the side, forearm and index finger pointing straight up, hand and finger make small circles.

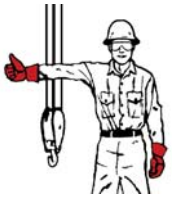

RAISE BOOM. With arm extended horizontally to the side, thumb points up with other fingers closed.

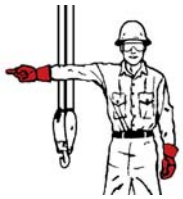

SWING. With arm extended horizontally, index finger points in direction that boom is to swing.

RETRACT TELESCOPING BOOM. With hands to the front at waist level, thumbs point at each other with other fingers closed.

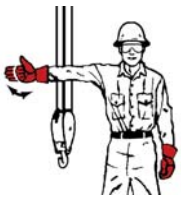

RAISE THE BOOM AND LOWER THE LOAD. With arm extended horizontally to the side and thumb pointing up, fingers open and close while load movement is desired.

DOG EVERYTHING. Hands held together at waist level.

LOWER. With arm and index finger pointing down, hand and finger make small circles.

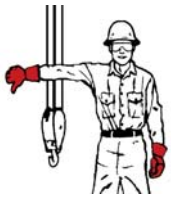

LOWER BOOM. With arm extended horizontally to the side, thumb points down with other fingers closed.

EXTEND TELESCOPING BOOM. With hands to the front at waist level, thumbs point outward with other fingers closed.

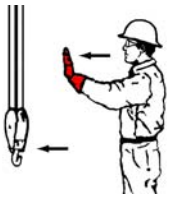

TRAVEL/TOWER TRAVEL. With all fingers pointing up, arm is extended horizontally out and back to make a pushing motion in the direction of travel.

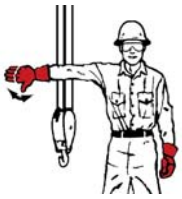

LOWER THE BOOM AND RAISE THE LOAD. With arm extended horizontally to the side and thumb pointing down, fingers open and close while load movement is desired.

MOVE SLOWLY. A hand is placed in front of the hand that is giving the action signal.

USE AUXILIARY HOIST (WHIPLINE). With arm bent at elbow and forearm vertical, elbow is tapped with other hand. Then regular signal is used to indicate desired action.

CRAWLER CRANE TRAVEL, BOTH TRACKS. Rotate fists around each other in front of body; direction of rotation away from body indicates travel forward; rotation toward body indicates travel backward.

USE MAIN HOIST. A hand taps on top of the head. Then regular signal is given to indicate desired action.

CRAWLER CRANE TRAVEL, ONE TRACK. Indicate track to be locked by raising fist on that side. Rotate other fist in front of body in direction that other track is to travel.

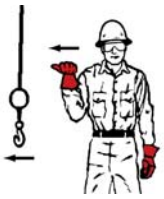

TROLLEY TRAVEL. With palm up, fingers closed and thumb pointing in direction of motion, hand is jerked horizontally in direction trolley is to travel.

NOTE: Not all signals can be used on Digger Derricks.

https://truckmanualshub.com/

APPENDIX - B

RESPONSIBILITIES

ANSI A10.31-2013 (PARTIAL)

Table of Contents:

7.	RESPONSIBILITIES OF DEALERS AND INSTALLERS	B - 1
8.	RESPONSIBILITIES OF OWNERS	B - 2
9.	RESPONSIBILITY OF USERS	B - 5
10.	RESPONSIBILITIES OF OPERATORS	B - 6
11.	RESPONSIBILITIES OF LESSORS OR LESSEES	B - 9
12.	RESPONSIBILITIES OF BROKERS	B - 10

7. RESPONSIBILITIES OF DEALERS AND INSTALLERS

7.1 General Responsibilities. Each dealer or installer as applicable shall comply with the requirements of this section.

7.2 Vehicle Specifications. Each dealer or installer, or both, who sells a digger derrick shall inform the owner or user, or both, of the manufacturer's minimum vehicle specifications.

7.3 Vehicle Weight Distribution. The installer shall be responsible for the weight distribution of the completed mobile unit in accordance with the requirements of the digger derrick and the applicable regulations. Allowance shall be made for the weight of readily removable tools and material specified by the user.

7.4 Manuals. Upon delivery of the equipment to the owner or user, the dealer or installer shall provide the manuals as required by Section 6.4 and manuals for auxiliary equipment added by the installer.

7.5 Installations. The installer shall comply with Sections 5 and 6 relating to proper installation and shall follow the instructions of the manufacturer. In the event the original manufacturer no longer exists, an equivalent entity may provide these instructions. The installer of a digger derrick shall meet the following requirements before the mobile unit is placed in operation:

(1) Complete successful stability tests in accordance with the requirements of 4.5.1, 4.5.2 and 4.5.3.

(2) Complete operational and visual tests in accordance with the requirements of 6.6.1 and 6.6.2.

(3) Complete appropriate electrical tests required in 5.4. For insulating digger derricks, the installer shall assure conformance to the qualification test requirements of 5.3.2, either by obtaining certification of the test and performing a periodic test after installation or by performing the qualification test.

(4) Measure and post the travel height of the mobile unit in a location that is readily visible to the vehicle operator.

(5) Comply with all requirements of the applicable Federal Motor Vehicle Safety Standards in effect at the time of installation when installing a digger derrick on a chassis that is a highway vehicle.

(6) Certification as a manufacturer (alteration, intermediate or final) of a motor vehicle under the Federal Motor Vehicle Safety Standards is required.

7.6 Quality Assurance. The installer shall have a documented quality assurance program that will ensure compliance with this standard.

7.7 Welding. All welds made by the installer, whose failure could result in motion of the digger derrick, shall meet the Structural Welding Code ANSI/AWS D1.1/D1.1M and ANSI/AWS D1.2/D1.2M. The installer shall establish applicable welding quality assurance procedures for all welded joints and assemblies. If nondestructive testing is designated, the particular method used shall be in accordance with ANSI/AWS B1.10.

https://truckmanualshub.com/

7.8 Training. The dealer or installer shall offer training or training materials that aid owners, users, operators, lessors or lessees and brokers in the operation, inspection, testing and maintenance of the digger derrick. This training or training materials shall be offered initially and subsequently on request.

7.9 Dealer or Installer as User. Whenever a dealer or installer directs personnel to operate a digger derrick (inspecting, sales demonstrations or any form of use), the dealer or installer shall assume the responsibilities of users as specified in Section 9. All personnel authorized to operate the digger derrick shall have been trained.

7.10 Rated Load Capacity Charts. Upon completion of the stability test(s), as required in Section 4.5.1, the installer shall permanently attach appropriate rated load capacity charts, visible to the operator at the controls. Rated load capacity charts shall be provided by the manufacturer, or by the installer at the specific instruction of the manufacturer. The rated working load of the winch line may limit the maximum capacity of the digger derrick.

Rated load capacity charts shall include the number of platforms, platform rating, the options included and the winch line rated working load (see Section 9.6).

8. RESPONSIBILITIES OF OWNERS

8.1 General Responsibilities. Each owner shall comply with the requirements of this section. The following responsibilities pertain to the owner's inspection, testing, maintenance, modification, training and transfer of ownership. These activities shall be performed by a qualified person(s).

8.2 Inspection and Testing Classifications.

8.2.1 Initial Inspection and Test. Prior to initial use, all new or modified mobile units shall be inspected and tested to ensure compliance with the provisions of this standard. Certification by the manufacturer, the installer or an equivalent entity(s), meets this requirement.

8.2.2 Regular Inspection and Test. The inspection procedure for mobile units is divided into two classifications based upon the intervals at which inspections and tests shall be performed. The owner shall set intervals in accordance with the manufacturer's recommendations. Such intervals are dependent upon component function and exposure to wear and deterioration as well as other agents that adversely affect component life. Two classifications are designated:

(1) Frequent Inspection and Test.

(2) Periodic Inspection and Test.

8.2.3 Frequent Inspection and Test. Items determined by the owner in accordance with the manufacturer's recommendations for each specific digger derrick shall be inspected for defects

Immediately prior to first use during each work shift, the operator shall perform the following tests and inspections:

(1) Conduct walk around visual inspection looking for damaged components, cracks, corrosion, excessive wear and any loose, deformed or missing bolts, pins fasteners, locking devices and covers.

(2) Check all controls and associated mechanisms for proper operation to include, but not limited to, the following:

(a.) Proper operation of interlocks.

(b.) Controls return to neutral when released and not sticking.

(c.) Control functions and operation clearly marked.

(3) Check visual and audible safety devices for proper operation.

(4) Visually inspect fiberglass and insulating components for visible damage and contamination.

(5) Check for missing or illegible operational and instructional markings.

(6) Check hydraulic and pneumatic systems for observable deterioration and excessive leakage.

(7) Check electrical systems related to the digger derrick for malfunctions, signs of excessive deterioration, dirt and moisture accumulation.

(8) Check winch lines for any area of gross damage or deterioration that would result in appreciable loss of original strength.

https://truckmanualshub.com/

(9) Perform functional test to include, but not limited to, the following:

(a.) Setup the digger derrick for operation, including outriggers.

(b.) Cycle the digger derrick functions through the complete range of motion from the lower controls, except where operation through the complete range of motion would create a hazard.

(c.) Check functionality of emergency controls.

Any suspected items shall be carefully examined or tested and a determination made by a qualified person as to whether they constitute a safety hazard.

All unsafe items shall be replaced or repaired before use.

8.2.4 Periodic Inspection and Test. An inspection of the mobile unit shall be performed at one to twelve month intervals depending upon its activity, severity of service and environment or as specifically indicated below (these inspections shall include the requirements of 8.2.3):

(1) Structural members for deformation, cracks or corrosion.

(2) Parts, such as pins, bearings, shafts, gears, rollers, locking devices, chains, chain sprockets, wire and synthetic ropes, and sheaves for wear, cracks or distortion.

(3) Hydraulic and pneumatic relief valve settings.

(4) Hydraulic system for proper oil level.

(5) Hydraulic and pneumatic fittings, hoses and tubing for evidence of leakage, abnormal deformation or excessive abrasion.

(6) Compressors, pumps, motors and generators for loose fasteners, leaks, unusual noises or vibrations, loss of operating speed and excessive heating.

(7) Hydraulic and pneumatic valves for malfunction and visible cracks in the external valve housing, leaks and sticking spools.

(8) Visually inspect any vacuum prevention systems and verify function of such systems on digger derricks that have a sheave height or platform height greater than 50 feet.

(9) Hydraulic and pneumatic cylinders and holding valves for malfunction and visible damage.

(10) Hydraulic and pneumatic filters for cleanliness and the presence of foreign material in the system indicating other component deterioration.

(11) Electrical systems and components for deterioration or wear including those not readily visible on a frequent inspection.

(12) Performance test of all boom movements.

(13) Condition and tightness of bolts and other fasteners, in accordance with the manufacturer's recommendation.

(14) Welds, in accordance with the manufacturer's recommendation

(15) Legible and proper identification, operational and instructional markings.

(16) If the digger derrick is rated as an insulating device, the electrical insulating components and system(s) shall be thoroughly inspected for lack of cleanliness and other conditions that compromise insulation.

(17) If the digger derrick is rated as insulating, it shall be tested for compliance with the rating of the digger derrick in accordance with one of the applicable methods and procedures as outlined in Section 5.4.3.

(18) If the digger derrick is rated as insulating, it shall be dielectrically tested after repair or modification of any component that crosses the insulating system(s) in accordance with Section 5.4.3.

(19) An insulating replacement boom shall be tested to ensure conformance to Section 5.4.2.

Any suspected items shall be carefully examined or tested and a determination made by a qualified person as to whether they constitute a safety hazard. All unsafe items shall be replaced or repaired before use.

https://truckmanualshub.com/

8.2.5 Post Event Inspection or Test. After any reported event during which structural members of a digger derrick are suspected of being subjected to loading of stresses in excess of design stress such as after an accident involving overturning of the digger derrick or application of unintended external mechanical or electrical forces to the digger derrick, the digger derrick shall be removed from service and subjected to the applicable periodic inspection requirements of 8.2.4. In addition to the periodic inspection, supplemental non-destructive examination procedures or other tests to assist in detecting possible structural damage to the digger derrick may be required. All damage items shall be replaced or repaired before the unit is returned to service. Return to service shall be approved by a qualified person.

8.3 Inspection Records and Test Records.

8.3.1 Frequent. Items to be inspected shall be designated to the operator or other authorized person making frequent inspections. Records of frequent inspections need not be made. However, where a safety hazard is found, it shall be reported in writing to a person responsible for the corrective action and that report and a record of the correction shall be maintained for a period of five years, or as required by applicable regulations.

8.3.2 Periodic. Written or appropriately archived electronic, dated and signed reports and records shall be made of periodic inspections and tests and retained for a period of five years or as required by applicable regulations.

8.4 Maintenance. The owner shall determine maintenance and frequency of maintenance in accordance with the manufacturer's recommendations.

8.4.1 Maintenance Training. The owner shall train their maintenance personnel in inspection and maintenance of the digger derrick in accordance with the manufacturer's recommendations and Section 8**.**

8.4.2 Welding. Welding repairs of components or welds, designated as critical in the manufacturer's manual, shall be made in accordance with the manufacturer's procedure and ANSI/AWS D1.1 or ANSI/AWS D1.2. Should the original manufacturer no longer exist, an equivalent entity may determine the required process.

8.5 Modifications. No modifications or additions that affect the stability, mechanical, hydraulic or electrical integrity or the safe operation of the digger derrick shall be made without the written approval of the manufacturer. If such modifications or changes are made, the capacity, operation and maintenance instruction markings shall be changed accordingly. In no case shall the safety factors be reduced below those specified in this standard or below the manufacturers design safety factors, whichever are greater. Should the original manufacturer no longer exist, an equivalent entity may approve required modification.

8.5.1 Alterations. Altering or disabling the function of safety devices, guards or interlocks, if so equipped, is prohibited.

8.6 Weight Distribution. The owner shall specify to the installer the payload and its distribution as well as complete vehicle specifications when the owner supplies the vehicle. Changes in loading or additions made to the mobile unit after the final acceptance that affect weight distribution shall meet applicable regulations by governmental agencies. In no case shall axle loads of the fully loaded vehicle exceed the gross axle weight ratings (GAWR) assigned by the manufacturer.

NOTE: Any change in weight distribution may adversely affect stability.

8.7 Transfer of Ownership. When a change in ownership of a digger derrick occurs, it shall be the responsibility of the seller to provide the manufacturer's manual(s) for that digger derrick to the purchaser. It is the responsibility of the purchaser to notify the manufacturer of the unit model, serial number and the name and address of the new owner within 60 days. If the owner uses other entities as agents (e.g., brokers) for the sale or the arrangement of a sale of a digger derrick(s), the owners or agents responsibilities under this section continue.

8.8 Markings. The markings on the digger derrick shall not be removed, defaced or altered. All missing or illegible markings shall be promptly replaced.

8.9 Parts. When parts or components are replaced they shall be identical in specification and function to the original digger derrick parts or components or shall provide an equal or greater factor of safety.

8.10 Safety Bulletins. Owners shall comply with safety related bulletins as received from the manufacturer, dealer or installer.

8.11 Manuals. The owner shall ensure that the operating manual(s) is stored on the mobile unit.

https://truckmanualshub.com/

8.12 Training, Retraining, and Familiarization of Operators.

8.12.1 General Training. Only personnel who have received general instructions regarding the inspection, application and operation of digger derricks, including recognition and avoidance of hazards associated with their operation, shall operate a digger derrick. Such items covered shall include, but not necessarily be limited to, the following issues and requirements:

(1) The purpose and use of manuals.

(2) That operating manuals are an integral part of the digger derrick and must be properly stored on the vehicle when not in use.

(3) A pre-start inspection.

(4) Responsibilities associated with problems or malfunctions affecting the operation of the digger derrick.

(5) Factors affecting stability.

(6) The purpose of placards and decals.

(7) Workplace inspection.

(8) Applicable safety rules and regulations, such as Part 4, ANSI/ IEEE C2, *National Electrical Safety Code* (applies to utility workers as defined in ANSI/IEEE C2). The above standard is an example, other industries using digger derricks have safety rules pertinent to that industry.

(9) Authorization to operate.

(10) Operator warnings and instructions.

(11) Actual operation of the digger derrick. Under the direction of a qualified person, the trainee shall operate the digger derrick for a sufficient period of time to demonstrate proficiency in the actual operation of the digger derrick.

(12) Proper use of personal fall protection equipment when the digger derrick is equipped with a platform(s). Fall protection systems criteria and practices are covered in 29 CFR 1926.502.

8.12.2 Retraining. The operator shall be retrained, when so directed by the user, based on the user's observation and evaluation of the operator.

8.12.3 Familiarization. When an operator is directed to operate a digger derrick they are not familiar with, the operator, prior to operating, shall be instructed regarding the following items and issues:

(1) The location of the manuals.

(2) The purpose and function of all controls.

(3) The safety devices and operating characteristics specific to the digger derrick.

(4) Under the direction of a qualified person, the trainee shall operate the digger derrick for a sufficient period of time to demonstrate proficiency in the actual operation of the digger derrick.

8.13 Owner as a Lessor. When owners function as lessors, they shall have the responsibilities of Section 11.

9. RESPONSIBILITY OF USERS

9.1 General Responsibilities. Each User shall comply with the requirements of this section.

9.2 Personnel. Only trained and authorized personnel shall be permitted to operate the digger derrick.

9.3 Training, Retraining, and Familiarization of Operators.

9.3.1 General Training. Only personnel who have received general instructions regarding the inspection, application and operation of digger derricks, including recognition and avoidance of hazards associated with their operation, shall operate a digger derrick. Such items covered shall include, but not necessarily be limited to, the following issues and requirements:

(1) The purpose and use of manuals.

(2) That operating manuals are an integral part of the digger derrick and must be properly stored on the vehicle when not in use.

(3) A pre-start inspection.

https://truckmanualshub.com/

(4) Responsibilities associated with problems or malfunctions affecting the operation of the digger derrick.

(5) Factors affecting stability.

(6) The purpose of placards and decals.

(7) Workplace inspection.

(8) Applicable safety rules and regulations, such as Part 4, ANSI/ IEEE C2, *National Electrical Safety Code* (applies to utility workers as defined in ANSI/IEEE C2). The above standard is an example; other industries using digger derricks have safety rules pertinent to that industry.

(9) Authorization to operate.

(10) Operator warnings and instructions.

(11) Actual operation of the digger derrick. Under the direction of a qualified person, the trainee shall operate the digger derrick for a sufficient period of time to demonstrate proficiency in the actual operation of the digger derrick.

(12) Proper use of personal fall protection equipment when the digger derrick is equipped with a platform(s). Fall protection systems criteria and practices are covered in 29 CFR 1926.502.

9.3.2 Retraining. The operator shall be retrained, when so directed by the user, based on the user's observation and evaluation of the operator.

9.3.3 Familiarization. When an operator is directed to operate a digger derrick with which they are not familiar, they shall receive prior instruction regarding the following items:

(1) The location of the manuals.

(2) The purpose and function of all controls.

(3) Safety devices and operating characteristics specific to the digger derrick.

(4) Under the direction of a qualified person, the trainee shall operate the digger derrick for a sufficient period of time to demonstrate proficiency in the actual operation of the digger derrick.

9.3.4 Proof of Training. Users providing training should provide successful trainees a means to evidence their training and should provide such proof if requested by the trainee. The document evidencing training shall include the following information:

(1) The name of trainee.

(2) The name of entity providing training or retraining.

(3) The name of trainer(s)

(4) Clear identification of the make(s) and model(s) of the digger derrick on which the operator has been trained.

9.4 Application. The employer and authorized operator shall ensure that the digger derrick is used only for intended applications as defined in the operating manual, and that recognized safety practices are observed.

9.5 Alterations. Altering or disabling of safety devices, guards or interlocks, if so equipped, shall be prohibited.

9.6 Winch Line Rated Load. The user shall specify to the installer the winch line rated working load to be noted on the Rated Load Capacity Chart (see Section 7.10).

9.7 Electrical Hazard. All applicable safety related work practices intended to protect from electrical hazards shall be defined and explained to the operator by a qualified person. The operator shall maintain the appropriate minimum approach distance (MAD) from energized conductors and apparatus, commensurate with the operator's qualifications. See Appendix A for the information on the minimum approach distance (MAD) and other precautions.

9.8 Manufacturer's Safety Bulletins. The user shall comply with the applicable safety-related bulletins received from the manufacturer, installer, dealer or owner.

https://truckmanualshub.com/

10. RESPONSIBILITIES OF OPERATORS

10.1 General Responsibilities. Each operator shall comply with the requirements of this section.

10.2 Personnel. Only trained and authorized personnel shall be permitted to operate the digger derrick.

Depending on their use, digger derricks may be defined as a crane by government regulations, and operator's certification may be required.

10.3 Operation. When operating the digger derrick from the lower controls, the operator shall stand or sit at the control station provided. Operation of the lower controls from any position other than designated control stations shall not be permitted. Remote controls shall be used such that the operator is not placed in the electrical path between the unit and the ground.

During operation of the digger derrick, all platform occupants shall use appropriate fall protection equipment connected to the digger derrick anchorage(s).

Operation of a digger derrick with platform occupant(s) requires the use of capacities different from those of the rated load capacity chart for the digger derrick. When operating a digger derrick with occupied platform(s) and simultaneously using material handling components, operation shall be in accordance with requirements for combined use (see 4.5.3).

NOTE: Winch ropes are not insulating.

When operating a digger derrick with the platform occupied, it shall not be used for digging holes, setting screw anchors or handling poles. When the platform is occupied, the winch line of the digger derrick shall only be used for raising or lowering equipment to the worker's position and material handling shall be limited in accordance with the manufacturer's load capacity chart provided for combined use. Combined platform and material handling load shall not exceed 3,000 pounds.

When operating a digger derrick with a platform but no top controls, the operator shall not leave the lower controls unattended when personnel are aloft in the platform.

10.4 Work Platform. The operator shall not use railings, planks, ladders or any other device in or on the work platform for achieving additional working height or reach.

10.5 Brakes. The vehicle parking brake(s) shall be set at all times that the boom is elevated.

10.6 Loading. Any loading which includes a horizontal load shall be avoided unless the mobile unit is designed for that application.

10.7 Alterations. Altering or disabling the function of safety devices, guards or interlocks, if so equipped, is prohibited.

10.8 Observations. Observations during operation for any defects shall be conducted on an ongoing basis.

10.8.1 Pre-Start Inspection. Items determined by the owner in accordance with the manufacturer's recommendations for each specific digger derrick shall be inspected for defects prior to each day's operation. The operator shall perform the following tests and inspections once daily, prior to first use:

(1) Conduct walk around visual inspection looking for damaged components, cracks or corrosion, excessive wear and any loose deformed or missing bolts, pins fasteners, locking devices and covers.

(2) Check all controls and associated mechanisms for proper operation to include, but not limited to, the following:

(a.) Proper operation of interlocks.

(b.) Controls return to neutral when released and not sticking.

(c.) Control functions and operation clearly marked.

(3) Check visual and audible safety devices for proper operation.

(4) Visually inspect fiberglass and insulating components for visible damage and contamination.

(5) Check for missing or illegible operational and instructional markings.

(6) Check hydraulic and pneumatic systems for observable deterioration and excessive leakage.

https://truckmanualshub.com/

(7) Check electrical systems related to the digger derrick for malfunctions, signs of excessive deterioration, dirt and moisture accumulation.

(8) Check winch lines for any area of gross damage or deterioration that would result in appreciable loss of original strength.

(9) Perform functional test to include, but not limited to, the following:

(a.) Set-up the digger derrick for operation, including outriggers.

(b.) Cycle the digger derrick functions through the complete range of motion from the lower controls, except where operation through the complete range of motion would create a hazard.

(c.) Check functionality of emergency controls.

Any suspected items shall be carefully examined or tested and a determination made by a qualified person as to whether they constitute a safety hazard. All unsafe items shall be replaced or repaired before use.

10.9 Work site. Before the digger derrick is used, the worksite shall be surveyed for hazards:

(1) Insufficient supporting surfaces such as soft ground or untamped earth fill.

(2) Ditches.

(3) Excessive slopes, drop-offs, curbs and obstructions.

(4) Debris.

(5) Overhead obstructions and electrical conductors.

(6) Weather conditions.

(7) Presence of unauthorized persons.

(8) Road or worksite traffic.

(9) Subsurface chambers such as underground utility components or septic systems. If digging is required, identify and mark location of all utilities. Contact the appropriate utility organizations to obtain such information and assistance.

10.10 Precautions. Before and during each use the operator shall:

(1) Check for overhead obstructions and electrical conductors.

(2) Ensure that the load on the platform and/or load lifting devices are in accordance with the manufacturer's platform capacity and/or rated load capacity.

(3) Ensure that outriggers and stabilizers are used if the manufacturer's instructions require their use.

(4) Use outrigger pads when necessary to provide firm footing.

(5) On units equipped with steel type platforms, ensure that guard rails are properly installed and the gates are closed.

(6) When using a platform, ensure proper use of fall protection equipment.

10.11 Training, Retraining and Familiarization of Operators.

10.11.1 General Training. Only personnel who have received general instructions regarding the inspection, application and operation of digger derricks, including recognition and avoidance of hazards associated with their operation, shall operate a digger derrick. Such items covered shall include, but not necessarily be limited to, the following issues and requirements:

(1) The purpose and use of manuals.

(2) That operating manuals are an integral part of the digger derrick and must be properly stored on the vehicle when not in use.

(3) A pre-start inspection.

(4) Responsibilities associated with problems or malfunctions affecting the operation of the digger derrick.

(5) Factors affecting stability.

(6) The purpose of placards and decals.

https://truckmanualshub.com/

(7) Workplace inspection.

(8) Applicable safety rules and regulations, such as Part 4, ANSI/ IEEE C2, *National Electrical Safety Code* (applies to utility workers as defined in ANSI/IEEE C2). The above standard is an example; other industries using digger derricks have safety rules pertinent to that industry.

(9) Authorization to operate.

(10) Operator warnings and instructions.

(11) Under the direction of a qualified person, the trainee shall operate the digger derrick for a sufficient period of time to demonstrate proficiency in the actual operation of the digger derrick.

(12) Proper use of personal fall protection equipment when the digger derrick is equipped with a platform(s). Fall protection systems criteria and practices are covered in 29 CFR 1926.502.

10.11.2 Retraining. The operator shall be retrained, when so directed by the user, based on the user's observation and evaluation of the operator.

10.11.3 Familiarization. When an operator is directed to operate a digger derrick they are not familiar with, the operator, prior to operating, shall be instructed regarding the following items and issues:

(1) The location of the manuals.

(2) The purpose and function of all controls.

(3) Safety devices and operating characteristics specific to the digger derrick.

(4) Under the direction of a qualified person, the trainee shall operate the digger derrick for a sufficient period of time to demonstrate proficiency in the actual operation of the digger derrick.

10.11.4 Electrical Hazard. All applicable safety related work practices intended to protect from electrical hazards shall be defined and explained to the operator by a qualified person. The operator shall maintain the appropriate minimum approach distance (MAD) from energized conductors and apparatus, commensurate with the operator's qualifications. See Appendix A for information on the minimum approach distance (MAD) and other precautions.

11. RESPONSIBILITIES OF LESSORS OR LESSEES

11.1 General Responsibilities. Each lessor or lessee shall comply with the requirements of the applicable section(s) below.

11.1.1 Lessor or Lessee as Dealer or Installer. When a lessor or lessee uses the digger derrick as a dealer or installer, they shall have the same responsibilities as specified under Section 7.

11.1.2 Lessor or Lessee as Owner. When a lessor or lessee uses the digger derrick as an owner, they shall have the same responsibilities as specified under Section 8.

11.1.3 Lessor or Lessee as User. When a lessor or lessee uses the digger derrick as a user, they shall have the same responsibilities as specified under Section 9.

11.1.4 Lessor or Lessee as Operator. When a lessor or lessee uses the digger derrick as an operator, they shall have the same responsibilities as specified under Section 10.

11.2 Ownership Responsibilities. The lessor shall carry out the responsibilities of ownership specified in this standard, which are not assigned to the lessee as the user.

11.3 Obligations. Upon delivery, each lessor of a digger derrick shall provide the operator's manual. This manual shall be stored on the mobile unit.

11.3.1 Inspection and Test. Prior to delivery, the lessor of a digger derrick shall perform frequent inspections as specified in Section 8.2.3.

11.3.2 Responsibilities. Upon delivery, each lessor of a digger derrick shall inform the lessee of their responsibilities in accordance with Section 8 as to inspections, testing and maintenance requirements, Section 9 as to user's responsibilities and Section 10 as to operator's responsibilities.

11.4 Training. The lessor shall offer training or training materials that aid the lessee in the operation, inspection, testing and maintenance of the digger derrick. This training shall be offered initially and subsequently on request.

11.4.1 General Training. Only personnel, who have received general instructions regarding the inspection, application and operation of digger derricks including recognition and avoidance of hazards associated with their operation, shall operate a digger derrick. Such items covered shall include, but not necessarily be limited to, the following issues and requirements:

https://truckmanualshub.com/

(1) The purpose and use of manuals.

(2) That operating manuals are an integral part of the digger derrick and must be properly stored on the vehicle when not in use.

(3) A pre-start inspection.

(4) Responsibilities associated with problems or malfunctions affecting the operation of the digger derrick.

(5) Factors affecting stability.

(6) The purpose of placards and decals.

(7) Workplace inspection.

(8) Applicable safety rules and regulations, such as Part 4, ANSI/ IEEE C2, *National Electrical Safety Code* (applies to utility workers as defined in ANSI/IEEE C2). The above standard is an example; other industries using digger derricks have safety rules pertinent to that industry.

(9) Authorization to operate.

(10) Operator warnings and instructions.

(11) Proper use of personal fall protection equipment when the digger derrick is equipped with a platform(s). Fall protection systems criteria and practices are covered in 29 CFR 1926.502.

(12) Electrical hazards and minimum approach distance to energized conductors and apparatus (see Appendix A).

11.4.2 Retraining. The operator shall be retrained, when so directed by the user, based on the user's observation and evaluation of the operator.

11.4.3 Familiarization. When operators are directed to operate a digger derrick with which they are not familiar, they shall be instructed, prior to operating the digger derrick, regarding the following items and issues:

(1) The location of the manuals.

(2) The purpose and function of all controls.

(3) Safety devices and operating characteristics specific to the digger derrick.

(4) Under the direction of a qualified person, the trainee shall operate the digger derrick for a sufficient period of time to demonstrate proficiency in the actual operation of the digger derrick.

11.5 Communications. In the event the manufacturer or installer provides the lessor manuals, bulletins or other materials for the information of the user of a digger derrick, the lessor shall pass them on to the user without delay.

11.6 Use of Brokers. If brokers are employed in leasing, the responsibility of lessors and lessees as specified in this section continue even though a broker may be involved in the transaction.

12. RESPONSIBILITIES OF BROKERS

12.1 Broker Involved in a Sale. A broker involved in a sale shall:

(1) Assure that the entity actually transferring ownership knows the proper location and identification of appropriate personnel of the purchasing entity.

(2) Confirm that the operator's and maintenance manuals are provided to the new owner.

(3) Confirm that all parties are aware of their responsibilities under Section 8.7.

12.2 Brokers Involved in a Lease. A broker involved in a lease shall:

(1) Assure that the entity actually transferring possession knows the proper location and identification of proper personnel of the lessee or user of the digger derrick.

(2) Confirm that the operator's manual and maintenance manual are provided to the lessee

(3) Confirm that all parties are aware of their responsibilities under Section 11.4.

https://truckmanualshub.com/

SURVEY OF JOB SITE

Appendix (This Appendix is not part of American National Standard A10.31-2013 - but is included for information only.)

Construction and electrical workers are subject to certain hazards that cannot be eliminated by mechanical means and must be controlled by care, common sense and intelligence. Terex South Dakota, Inc. realizes the importance of safety and strongly recommends that prior to commencing any operation, the employer make a survey of the conditions of the site to determine the hazards and the kind and number of safeguards that the employer will install.

The survey should include, but not be limited to, the following:

(1) Safe access and movement
- (a) Work areas
- (b) Walkways, runways and passageways
- (c) Ladders, stairways and elevators
- (d) Protection for floor and roof openings
- (e) Illumination

(2) Vehicles
- (a) Roads
  - (1) Turn space
  - (2) Parking area
  - (3) Mud areas
- (b) Materials storage areas and dump areas
- (c) Signs and signals to route vehicles on the job
- (d) Maintenance and repairs of vehicles

(3) Utilities and service
- (a) Location of temporary buildings
- (b) Location and identification of high-voltage lines (identify by signs; move, de-energize or erect barrier to prevent contact)
- (c) Location of sanitary facilities and drinking water

(4) Scheduling work for safety
- (a) Providing hard hats, life belts, goggles, work vests and the like on the job
- (b) Establishing liaison among contractors to prevent congestion among trades
- (c) Providing temporary flooring, safety nets and scaffolding where required

(5) Work Procedures
- (a) Space
- (b) Equipment such as cranes, hoists, elevators and trucks
- (c) Rigging procedures
- (d) Personal protective equipment

(6) Tools and equipment
- (a) Repair, maintenance and care
- (b) Inspection
- (c) Supplies of tools for each job

https://truckmanualshub.com/

(7) Workers and foremen
- (a) Job assignment
- (b) Training and supervision
- (c) Number of workers
- (d) Plans for maintaining interest in safety:
  - (1) Safety bulletins, record charts and posters
  - (2) Recognition for groups or individuals
  - (3) Investigation and reporting on reportable accidents
  - (4) Knowledge of safety orders
  - (5) Safety meetings
  - (6) Specific safety instructions for new employees
- (e) Establishment of provisions to take immediate action to correct unsafe conditions or acts
- (f) First aid and medical treatment of injuries