https://truckmanualshub.com/

GLEANER / S88 S78 S68

OPTIMUM HARVESTING PERFORMANCE

https://truckmanualshub.com/

Standard S8 Super Series

Optional Carbide Grey Appearance Package

https://truckmanualshub.com/

https://truckmanualshub.com/

Harvesting Performance

All combines have the same goal–to dependably harvest crop with the least amount of loss, foreign material, fuel, field damage and interruptions as possible. Most combine designs are similar to each other and therefore have similar results.

The Gleaner design is fundamentally different and offers a level of harvesting performance that other combine makes are unable to achieve.

We call it Optimum Harvesting Performance and its aim is to give you more and better results for every minute, gallon, pound and dollar the combine requires of you.

GLEANER® / S88 S78 S68

OPTIMUM HARVESTING PERFORMANCE

Harvesting performance is affected by five core elements and our approach to combine design addresses these elements in unique ways:

1. The ability of the combine to produce a clean grain sample while minimizing loss.

Gleaner combines use a two-stage cleaning process. As crop threshes and separates on the rotor, a set of distribution augers and accelerator rolls thins the crop mat and propels it at 4 times the speed of free fall through an air blast above the cleaning shoe. This air blast above the shoe pre-cleans crop material before it hits the shoe.

The cleaning shoe with its lower duct air stream finishes the cleaning.

The Gleaner system offers a superior grain sample because material is cleaned in two stages with two different processes. Because of the position and action of the distribution augers and accelerator rolls, crop material is oriented towards the front of the shoe–utilizing the full length of the shoe reducing the likelihood that grain will be lost out the back of the machine.

2. The efficiency of power delivery from the engine to the threshing and separating process.

Gleaner combines weigh significantly less that competitive designs. The reduced requirement of horsepower to move a heavy combine results in more of the combine's horsepower being directed to the processor and not wasted through parasitics.

Our design utilizes straight through shafts and avoids 90-degree gearboxes that can rob power, and does not require ancillary feeding systems such as beaters or pre-threshers. Our cooling fan and chopper designs are also designed to require less horsepower that other designs.

https://truckmanualshub.com/

3. The utilization of functional space in the combine's systems and the resulting weight, size and efficiency.

Gleaner Combines thresh and separate the entire circumference of their rotors whereas other designs have a closed top section. The 360 degree threshing and separating area allows the Gleaner to have more separating surface area in a compact design.

The design of the Gleaner cleaning system pre-cleans crop before it touches the shoe and drops material in the same spot at the front of the shoe–utilizing the entire shoe for cleaning. This differs from other designs that may drop crop in several places on the shoe or may direct crop to one side of the shoe.

4. The number of times crop must be redirected, moved, compressed or shifted by the combine.

Gleaner combines feed crop directly into the processor without shifting, bunching or changing direction. This natural feeding flow allows smooth and consistent threshing and separating.

Other designs must change crop direction between feeding and threshing. This shift in direction can increase wear, damage crop, limit capacity and negatively affect grain sample quality.

5. The time and expense needed to set and maintain the combine's peak performance across changing conditions.

Because the Gleaner design pre-cleans crop material in mid-air and always drops crop at the front of the cleaning shoe, the sensitivity to a change in crop characteristics is reduced. The mid-air Gleaner cleaning design resists the affect of gravity on up to 23+% slopes.

Competitive designs can often require complexity in different concave and rotor set up to respond to changing conditions. The axial design is also sensitive to slope that can cause material to build to one side and cause shoe loss.

Gleaner combines rarely require changing concaves and the transverse design of the processor means the majority of service points can be reached while standing on the ground beside the combine.

https://truckmanualshub.com/

https://truckmanualshub.com/

New on the S8 Super Series

https://truckmanualshub.com/

New on the S8 Super Series combines

Three new models (S68/S78/S88), including the first Class 8 transverse rotary platform in the world.

These new designs deliver the highest percentage of their rated horsepower to the separator among all combines. Their substantially lighter weight and balanced weight distribution mean minimal wasted horsepower as do reduced parasitics on key functional areas of the machine platform. The S88 represents the lightest and most efficient Class 8 platform available.

New AGCO Power engines

The S68 features a new twin turbocharged fuel-efficient, high-torque 8.4L AGCO Power engine delivering 322 rated horsepower and maximum boost horsepower of 398 horsepower.

The S78 features a new twin turbocharged, fuel-efficient, high-torque 9.8L AGCO Power engine delivering 375 rated horsepower and an awesome maximum boost horsepower of 451 horsepower.

The S88 features the same twin turbocharged, fuel-efficient high-torque 9.8L AGCO Power engine delivering 430 rated horsepower and maximum boost horsepower of 471 horsepower.

The S88 operating weight is as much as 16,400 lbs. less than a leading manufacturer's Class 8 combine, a savings of 32.1 horsepower just in moving the weight difference through the field. This is one of many ways the S88 is delivering the highest percentage of its rated engine power to the separator while saving on fuel.

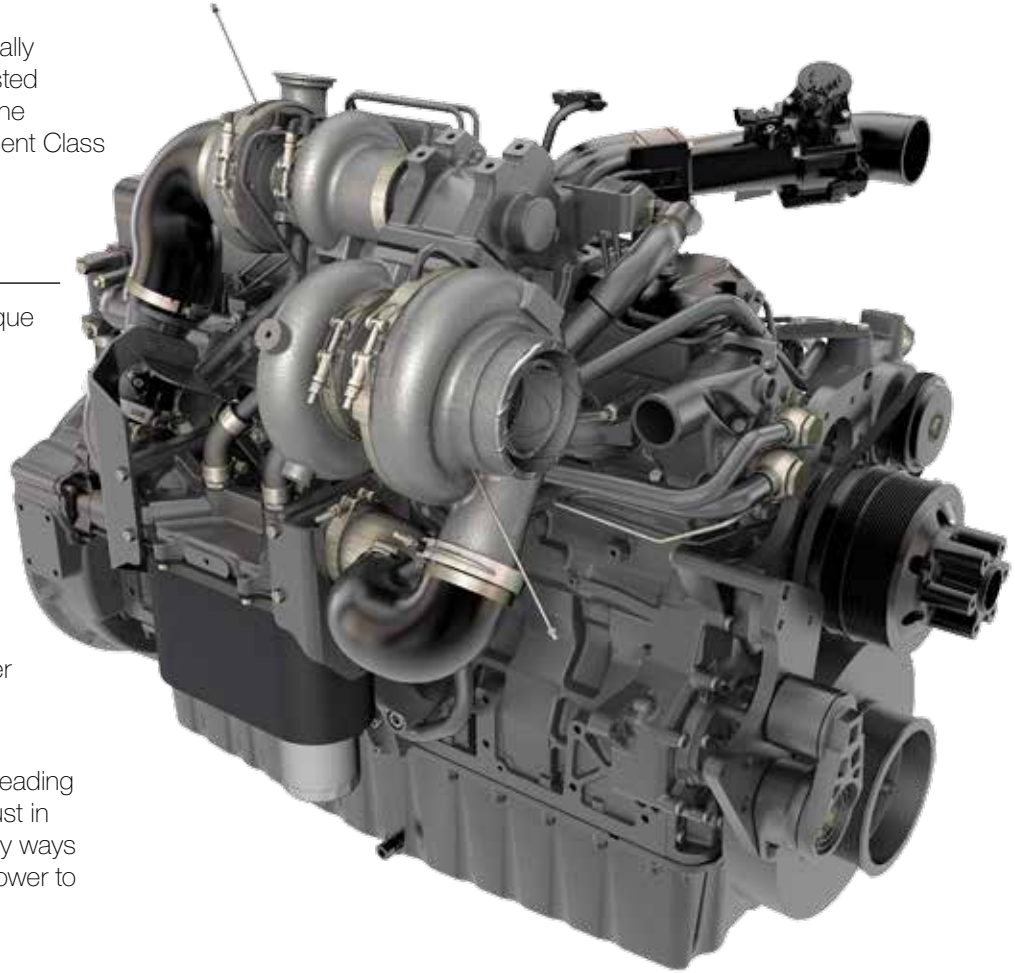

https://truckmanualshub.com/

New 230-gallon fuel capacity

All S8 models feature a new 230-gallon fuel tank, a 53% increase from S7 models, to keep you in the field longer between fill-ups for more productivity.

New DuraGuard two-speed rotor gearbox

All S8 models feature a newly designed heavy-duty DuraGuard™ two-speed rotor gearbox with larger sheave, bearings and belt built for the higher demands of the S88 machine. It features a wider overlap on rotor speeds and lets operators run on the high side of the low range in many crop conditions for maximum efficiency. It also features reversing capability.

https://truckmanualshub.com/

Other standard features included with the base S8 Super Series combines:

Front and rear feed conveyor system

The four-strand front feed conveyor chain optimizes capacity by changing feed slat configuration, resulting in faster release of crop to the rear feed conveyor.

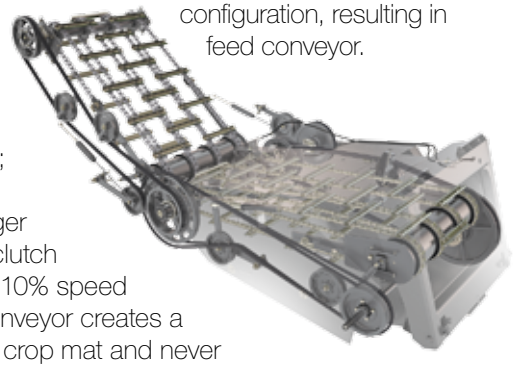

The rear feed conveyor drive can take 50% more horsepower; the 2B belt drive features five new pulleys, two belts and a larger Walterscheid feeder house slip clutch delivering 25% more torque; the 10% speed differential from the front feed conveyor creates a hyper-pull system, keeping a flat crop mat and never changing direction but feeding the Tritura™ processor quicker and reducing pinch points for greater capacity.

Clean grain auger trough

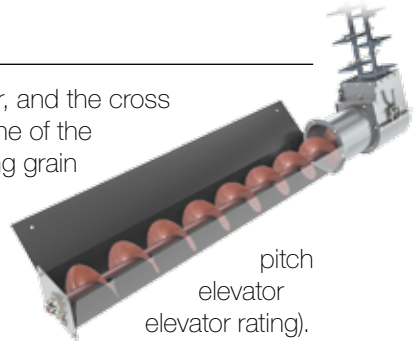

The grain auger trough is larger and deeper, and the cross auger has been lowered below the centerline of the trough to maintain speed and avoid cracking grain but increasing capacity to move grain away from the shoe quicker. This change, along with heavier paddles, increased pitch and the 557 chain increases clean grain elevator capacity by 30% (5,000 bu. per hour elevator rating). The torque rating on the clean grain elevator slip clutch has also been increased. A simplified elevator boot with incorporated curved lip provides better sealing of the elevator boot.

Revised accelerator rolls

The rear accelerator roll shaft diameter has been increased from 1 3/8 inches to 1 ½ inches with larger bearing and new cast bearing support to provide longer life at higher density crop throughputs. Polyurethane accelerator roll lugs replace rubber lugs which provide significantly longer life.

New straw chopper

New 7 ½-inch diameter chopper drum features 24 knives running at 3,250 rpm. New design features a taper lock hub, larger bearing, larger hardware and round bearing flangettes for greater strength at higher speeds. The stationary knife bed features 6 adjustable lower knives for a finer cut with a retractable feature for reduced horsepower requirements when finer cut is not required.

8 5/8-inch common feed drum

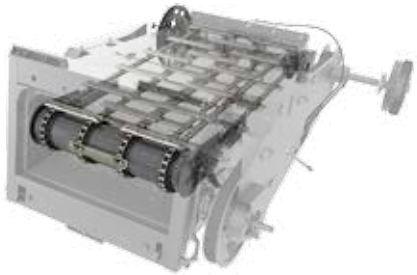

The 8 5/8-inch common feed drum diameter in both the front and rear feed conveyor system allows for a more reliable flow of crop.

SmartCooling system

The AE50 award-winning SmartCooling™ System consists of a variable pitch cooling fan with reversing capability. The “Smart” system monitors key temperatures, coolant, intake air and hydraulic oil and varies the fan pitch, automatically providing only the amount of cooling needed. The reduction in fan pitch results in a significant increase in available horsepower and can save fuel. SmartCooling is not designed only for cool weather; the system reduces the horsepower draw of the fan by more than 50% on a 90° F (32° C) day. When the separator is engaged, the fan will reverse pitch at full speed rotation for 5 seconds every 15 minutes to clean the radiator, coolers and rotary screen. This blast of air easily removes debris such as soybean fuzz and chaff. It will then revert to a 40-degree pitch for 15 seconds to clean the engine compartment and then return to its variable pitch position.

AE50 outstanding innovations

https://truckmanualshub.com/

S8 Super Series optional features:

New XR two-speed hydro transmission

All S8 models feature an optional XR™ two-speed hydro feature that provides greater climbing ability on hills and the convenience of on-the-go shifts. The two-speed on-the-go shift is operated by a convenient push button from the right-hand console (low position provides 30% more torque, high position provides 30% faster ground speed). The two-speed hydro features a 30% larger hydro pump.

Premier heated and cooled seat

The optional Premier™ vented high-back seat with leather bolsters on the seat bottom and back provides support and comfort to minimize fatigue and maximize operator comfort for long days.

NightSight lighting

NightSight™ lighting features four HID (High Intensity Discharge) lights in the cab roof, two additional LED lights on the lower cab and one LED row finder light. All provide unparalleled lighting at night for more comfortable operation and reduced operator fatigue.

AgCam camera system

You can choose either two cameras that run through the C2100 terminal or the quad display that provides up to four cameras shown simultaneously on the quad display monitor. Position cameras in grain bin, cleaning shoe, processor or unloader tube and provide unparalleled visibility in and around the machine from your seat. The cab is prewired for monitor and external camera cable connection.

Auto-Guide 3000

Optional Auto-Guide 3000 guidance system provides a lower cost guidance system with a 72-channel receiver, new light-weight top dock with snap-in modules, integrated Auto-Guide screen with current C2100 monitor and standard sub-meter, WAAS and OmniStar VBS and accuracy from the factory.

https://truckmanualshub.com/

https://truckmanualshub.com/

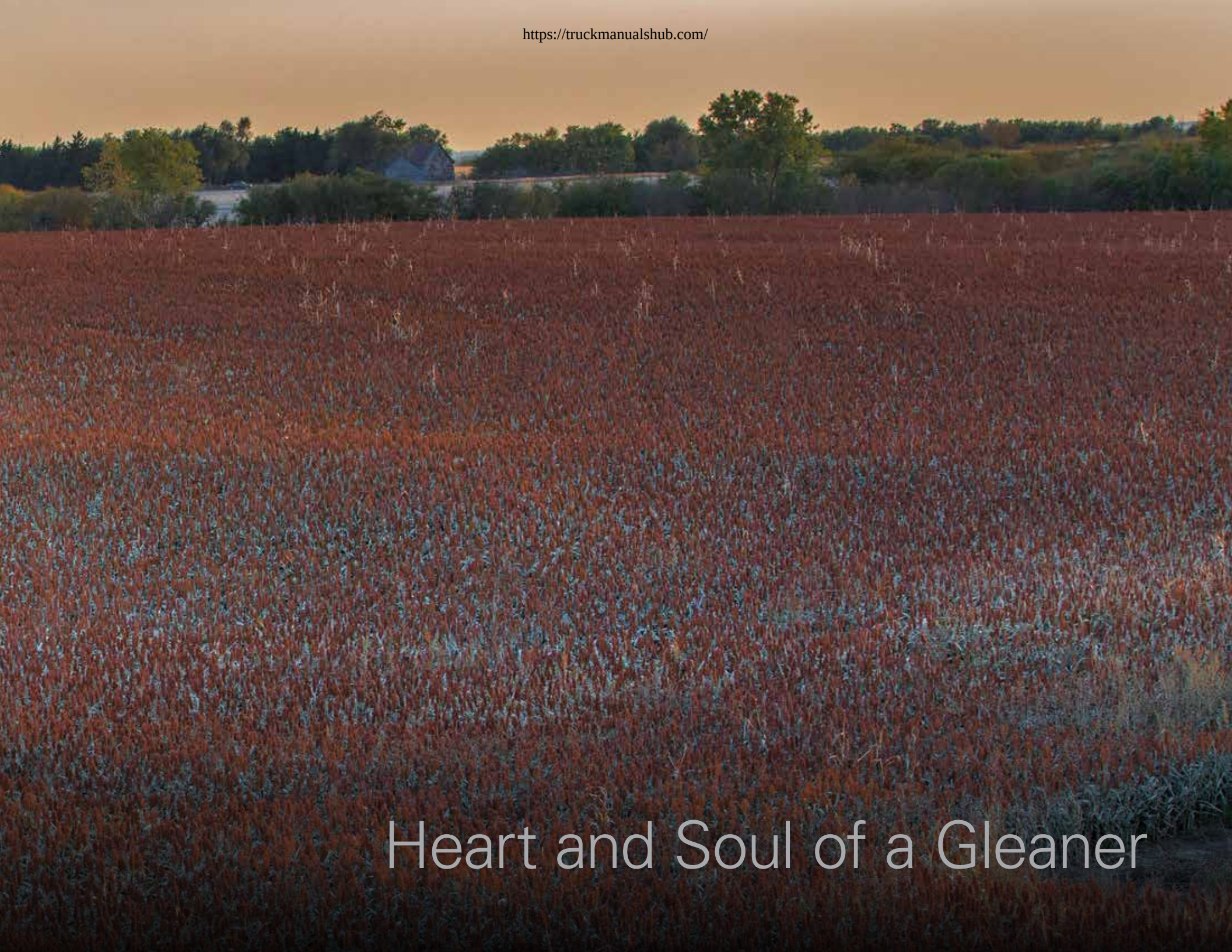

Heart and Soul of a Gleaner

https://truckmanualshub.com/

While the S8 Super Series is a new generation, its components are not untested technology. Over eight decades, the Gleaner combine has become known for its unique design and performance and many of those unique attributes and mechanisms remain in this latest edition. The Gleaner performance comes from the combination of our own patented processes and components with a design unlike any of our competitors.

Here's what makes Gleaner unique:

- The two-stage, four-strand gathering chain system allows the cylinder to be smoothly fed at the same angle regardless of the header height. The long feeder house with lowered rear feed floor provides an increase of 65 in^2 (420 cm^2) to allow a smooth and higher flow of material.
- The Natural Flow™ transverse rotor in our Tritura processor keeps crop moving in one uninterrupted direction directly from the header into the rotor and out the rear of the machine.
- Distribution augers spread material evenly before it enters the cleaning process, allowing a uniform ribbon of material without the uneven feeding and bunching of other designs.
- Accelerator rolls speed the crop's descent, allowing more air to clean the crop more thoroughly with reduced sensitivity to hills and slopes but without the expense and complexity of self-leveling cleaning systems.
- The transverse fan has exclusive two-stage cleaning. The first stage cleans heavy material right beneath the accelerator rolls, pushing chaff out the rear of the combine. The second stage comes up through the sieve and chaffer, lifting remaining chaff and carrying it out the rear of the combine. Together, they greatly improve cleaning efficiency over competitors' designs.
- Fully welded frame keeps the S8 Super Series solid and strong and provides a stable foundation for all shafts and components.
- Low center of gravity, heavy final drives and welded frames on the S8 Super Series provide for a standard bin capacity of 390 bushels (13,743 L) on the S68, S78 and new Class 8 S88, one of the largest bin capacities on any Class 6 through Class 8 combine in the industry.
- Unique "Direct Flow" two-auger design features a large 12-inch (305 mm) grain bin cross auger that feeds the 14-inch (356 mm) swivel unloader auger at a 29-degree angle. Because we use only two augers versus the 90-degree turns of competitive systems with three or more augers, we deliver better grain quality with less component wear combined with reduced horsepower and fuel requirements.

https://truckmanualshub.com/

https://truckmanualshub.com/

https://truckmanualshub.com/

A commitment to quality

https://truckmanualshub.com/

A commitment to quality: It can't join your team until our team says so.

As part of ensuring the quality of our combines, we invested in a combine dynamometer testing area. The dynamometer, or dyno for short, is a testing bay that puts the combine through a series of extensive external and internal tests while providing feedback on critical areas.

The dyno bay features a jounce test that rocks the combine back and forth, checks all its sensors, electrical, hydraulics and diagnostic systems and provides a thorough break-in of transmission and final drives. Even the cab lighting is adjusted to the proper angle. Over 120 areas are checked and monitored before a Gleaner goes to post-production inspection.

Another way we're building the kind of quality that pays off for our customers is with paint. Rising above the landscape is our unique to the industry paint system. The new paint line represents a $40 million investment in the quality and longevity of our customers' equipment.

We realize how important paint is to the value of farm machinery. Our state-of-the-art system puts on a finish like no other, and you can be confident in the durability of your Gleaner thanks to its new e-coat and powder paint finish.

AGCO is the first company to e-coat and powder paint all major parts on harvesting products. These parts go through a 17-step process from the dip system that includes removal of rust, scale and laser oxides, e-coating, and baking in e-coat ovens before powder paint. The total process takes 4 ½ hours from beginning to end.

On the following page a Gleaner welded mainframe is picked up by the special hanging device. It is carried into the first high-temperature dip tank, containing an alkaline solution at 160º F. The frame will be fully immersed for 90 seconds and coated inside and out. Each one of these 15 dip tanks has a 35,000-gallon capacity.

The second and third dip tanks rinse the mainframe at ambient temperature for 30 seconds each.

Next, two acid pickling dip tanks, one at ambient temperature and one at 160º F, remove any rust, scales and laser oxides.

Another rinse tank at ambient temperature and another alkaline solution tank at 160º F for one minute followed by two reverse-osmosis rinse tanks at ambient temperature.

Next, a zirconium coat dip tank, then two more reverse-osmosis rinses

Finally, the mainframe reaches the e-coat tank where it receives the special e-coat primer with a high-voltage and high-amperage charge for 180 seconds. Then it goes through two more rinse tanks at ambient temperature and then at 160º F.

The mainframe is now ready to go to one of ten e-coat ovens to be baked at 375º for 40 minutes. This is followed by a 20-to-60 minute cool down.

Parts going to the powder booth system can be painted one of five different colors. These booths feature an automatic section of 32 paint guns and two manual reinforcement painters. They also fully reclaim all unused powder. From there, parts go to the powder oven for 60 minutes.

The result: a Gleaner welded mainframe with a long-lasting finish that will resist rust and hold its beautiful appearance for years whether you are the first or the fourth buyer.

https://truckmanualshub.com/

https://truckmanualshub.com/

https://truckmanualshub.com/

Weight and Height

https://truckmanualshub.com/

Transport height

Even with one of the largest grain bin capacities on any combine in the industry, the Gleaner S68, S78 and S88 unique standard power foldable 390-bushel bin extensions fold down in under 20 seconds with the flip of a switch to an overall height of 12.41 feet. This compactness can make a big difference when transporting or storing the combine.

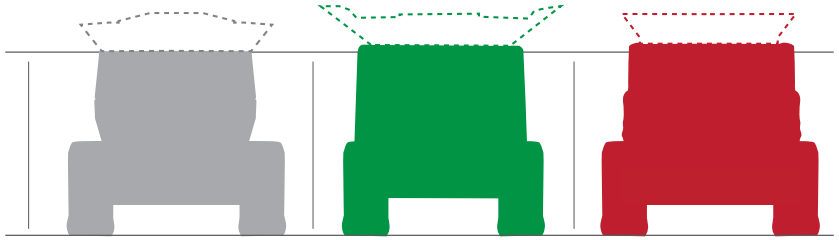

	Gleaner S78	JD S670	CaseIH 7230
	390 bu.	300 bu.	315 bu.
Bin extensions in transport position	12.41 ft.	12.69 ft.	12.91 ft.
Bin extensions in operating position	14.16 ft.	15.5 ft.	14.16 ft.

Center of gravity

The rotor in a Gleaner sits in the center of the combine, which allows the grain tank to sit low and wrap around the processor. The result is more grain bin capacity and a low center of gravity. Our competitors must accommodate their axial rotor in order to fit their grain bins in the combine, placing the weight higher and creating a higher center of gravity and smaller grain bin capacity.

Efficiency

Extra weight requires more horsepower to achieve the same result as a lighter machine. Unfortunately, the John Deere S680[1] weighs almost 17,500 lbs. more than a Gleaner S88. This extra weight requires 32.1 horsepower just to move the laden weight difference of the two machines through the field. That's the equivalent of pulling a John Deere 6210R, MFWD tractor behind your Gleaner.

For the CaseIH 8230 you'll have to hook up a CaseIH Farmall 140A, two-wheel drive tractor with cab behind your Gleaner to travel up every hill, through every mud puddle and down every road.

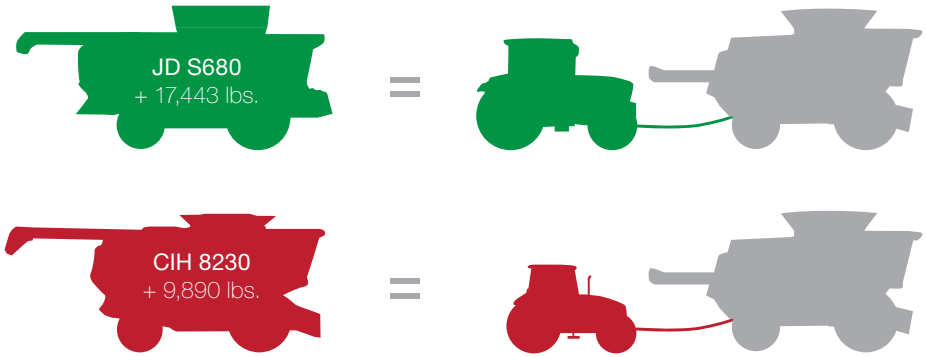

https://truckmanualshub.com/

Efficiency comparison

Class 6 Combines

Brand/Models‡	Operating Weight (lbs.)	Header Weight (30' draper) (lbs.)	Weight w/ Header (lbs.)	Difference vs. Gleaner (lbs.)	Power Required† (hp)	Grain Tank Capacity (bu.)	Grain Weight[1] (lbs.)	Total Weight (lbs.)
Gleaner S68	33,923	5,770	39,693	NA	NA	390	23,400	63,093
JD S660	44,077	5,307	49,384	9,691	**18.9**	300	18,000	67,384
CIH 6130	40,276	6,648	46,924	9,234	12.4	300	18,000	64,924

Class 7 Combines

Brand/Models‡	Operating Weight (lbs.)	Header Weight (35' draper) (lbs.)	Weight w/ Header (lbs.)	Difference vs. Gleaner (lbs.)	Power Required† (hp)	Grain Tank Capacity (bu.)	Grain Weight[1] (lbs.)	Total Weight (lbs.)
Gleaner S78	34,223	6,610	40,833	NA	NA	390	23,400	64,233
JD S670	45,930	7,683	53,613	12,780	**22.9**	300	18,000	71,613
CIH 7230	43,288	7,061	50,349	9,516	17.7	315	18,900	69,249

Class 8 Combines

Brand/Models‡	Operating Weight (lbs.)	Header Weight (40' draper) (lbs.)	Weight w/ Header (lbs.)	Difference vs. Gleaner (lbs.)	Power Required† (hp)	Grain Tank Capacity (bu.)	Grain Weight[1] (lbs.)	Total Weight (lbs.)
Gleaner S88	34,223	7,350	41,573	NA	NA	390	23,400	64,973
JD S680	50,649	8,367	59,016	17,443	**32.1**	400	24,000	83,016
CIH 8230	43,988	7,475	51,463	9,890	19.3	350	21,000	72,463

NOTE: Dimensions taken from actual machines on Holtgreven digital scales within 1% accuracy, similar equipped tires and full tank of fuel. ‡ Models compared are equipped with 2-wheel-drive. 1 Estimated @ 60 lbs. per bushel @ 17% moisture (soybeans). † Horsepower requirement achieved by multiplying an engineering calculation of rolling resistance (CRR) (an estimated 0.00196) by the weight difference in the Difference vs. Gleaner column.

https://truckmanualshub.com/

https://truckmanualshub.com/

Feeding

https://truckmanualshub.com/

One of the main things that makes a Gleaner Super Series unique is the Natural Flow™ feeding and threshing. With the rotor setting the width of the combine, the crop does not compress or change directions when moving from the feeder house to the rotor.

The process begins as grain enters the machine through the 69-inch (1,752 mm) long by 39.5-inch (1,003 mm) wide feeder house that is powered by an 8 5/8-inch (219 mm) diameter front feed drum. The feeder house can be reversed with the touch of a button from the operator's seat in the event of a plug.

The feeder house pivots vertically at the first chain, anchoring the rear chain on a fixed angle regardless of header height. The second chain outpaces the first by 6 percent to prevent bunching. Four-strand undershot feed chains offer 33 percent more chain support than competitive three-strand feed chains to help prevent bent feeder slats.

In addition to keeping the crop moving in a smooth ribbon from feeding to threshing, the Natural Flow system has an additional feature that distinguishes it from competitors' designs. Because the rotor is moving in line with the way the crop is fed into the machine, material is pulled into the rotor rather than being pushed in from the feeding system. This is a significant advantage in ensuring smooth feeding and reducing plugs. Bottlenecks are reduced because a Gleaner does not narrow the crop mat when moving from the feeder house to the rotor. The width of crop mat remains the same from the time it enters the feeder house to the time it enters the rotor, also reducing plugs and increasing threshing efficiency.

Natural Flow

We call our feeding system Natural Flow™ because the crop material flows straight into the combine, straight into and around the rotor and straight out the back. Our competitors shift the crop's path and change its direction requiring more horsepower to do the same threshing and separating as the Gleaner.

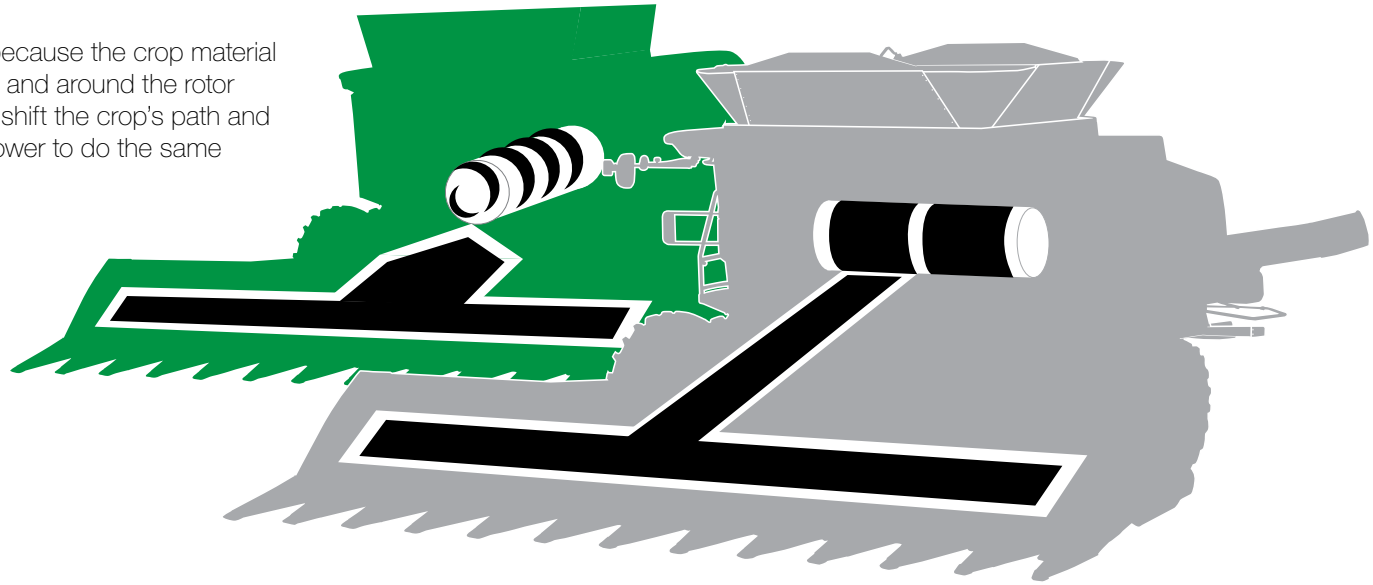

https://truckmanualshub.com/

Feeding

Our competitors' designs, which include either a beater or "elephant ears," have to stuff, bunch and shear the crop mat in order to feed their rotor. Our rotor is fed naturally and directly to ensure even and consistent threshing.

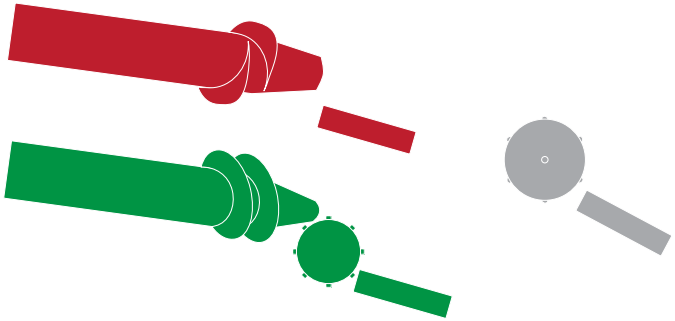

Feeder house

While a Gleaner has a narrower feeder house than other combines, the opening that feeds the rotor is actually wider. This is because Gleaner does not narrow or compress the crop mat as this would cause wear, bunching and crop damage.

https://truckmanualshub.com/

https://truckmanualshub.com/

Threshing

https://truckmanualshub.com/

Once in the rotor, separation takes place throughout the full 360 degrees of the rotor cage, meaning better effectiveness with less power.

The 30-inch (762 mm) diameter CDF rotor uses six rows of 3/4-inch (18 mm) high-profile bars that are chromed and reversible in the threshing area. The bars build just enough pressure to release grain that often escapes other rotors, while taking less of a toll between bar and cage on the green-stem material. A 4-section 17-bar concave and wider helical bars provide gentle threshing and reduce horsepower requirements.

Threshing area

Once crop enters our rotor and threshing begins, crop separates and falls from the rotor through a 360-degree cage. The wrap of this cage is important because it is crucial that crop only be threshed long enough to release it from heads, pods or cobs. Crop that remains in the threshing area can get damaged. Our 360-degree wrap means grain exits the rotor cage once it is threshed. Our competitors' designs are closed on top keeping free grain inside where it continues to impact the rotor's threshing elements.

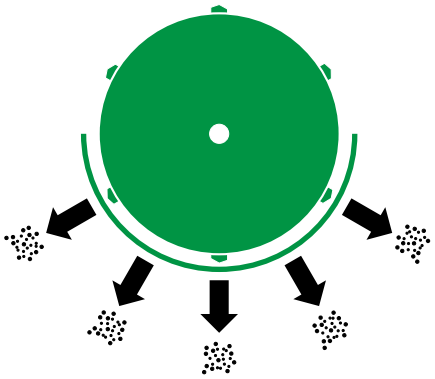

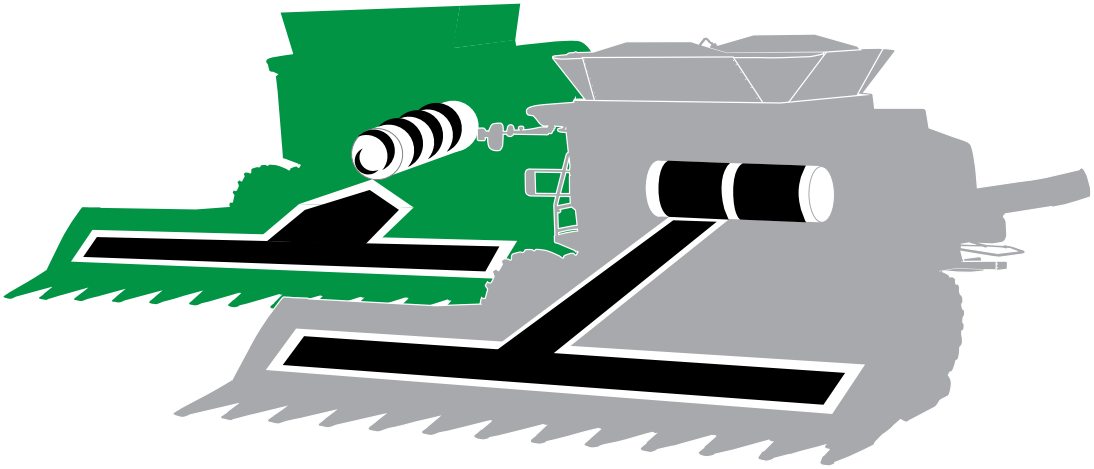

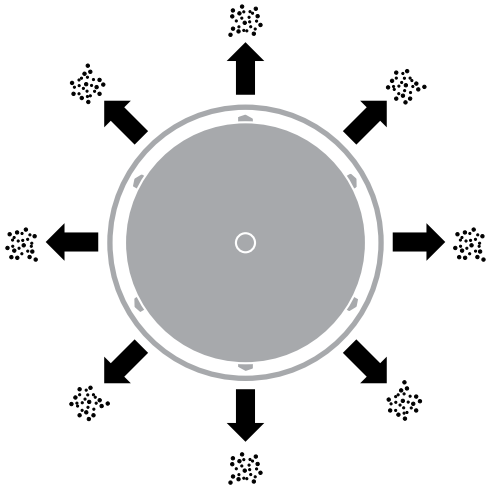

https://truckmanualshub.com/

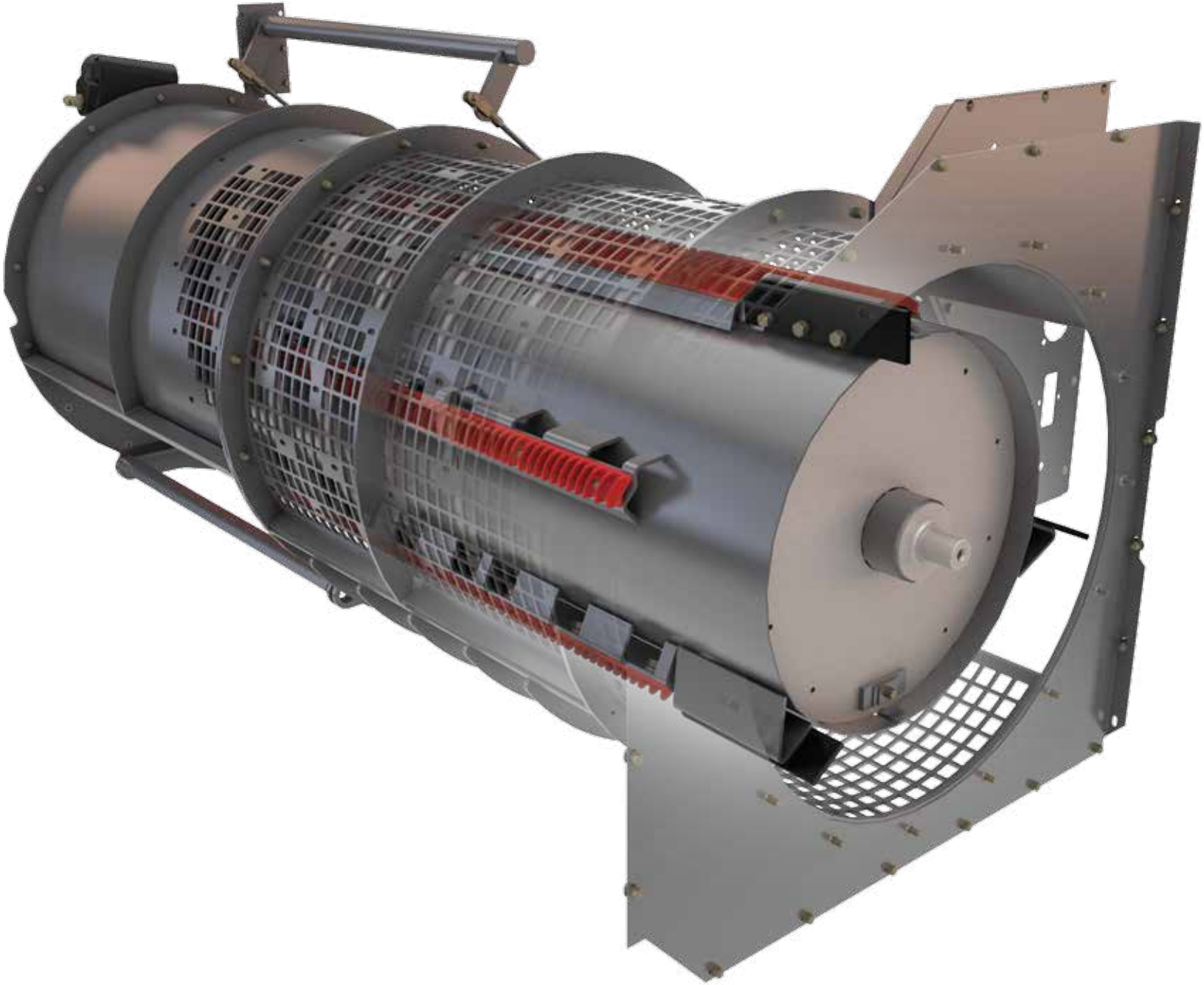

https://truckmanualshub.com/

https://truckmanualshub.com/

Cleaning

https://truckmanualshub.com/

Gleaner is renowned for its ability to clean grain and reduce loss on slopes because of the patented accelerator rolls and two-stage cleaning process.

The cleaning process begins with distribution augers just underneath the threshing and separating system distributing the material flow into a smooth and even cascade into the accelerator rolls.

Two larger-diameter five-fluted rubber accelerator rolls accelerate grain and chaff downward at four times the speed of free fall. The grain is then propelled through an evenly distributed air curtain from a larger 13-inch (330 mm) diameter, cab-controlled transverse fan. Dual-stage outlets provide air for pre-cleaning at the upper duct and final cleaning at the lower duct. The two-stage, high-velocity cleaning provides a high-quality clean tank sample, even at the highest harvesting rates. The separated grain lands on a cushion of grain on the louvered grain pan just ahead of the chaffer.

The cascade pan has a 6-degree angle to move crop quickly to the pneumatic shoe for greater capacity in higher-moisture crops and on downhill operation.

Slope sensitivity

A Gleaner propels grain through the air blast and onto the grain pan. Because Gleaner does not rely on gravity to move the grain, the direction of the grain stays consistent–even on slopes up to 23%. Competitors require the expense, complexity and wear of self-leveling shoes or undercarriages to match Gleaner.

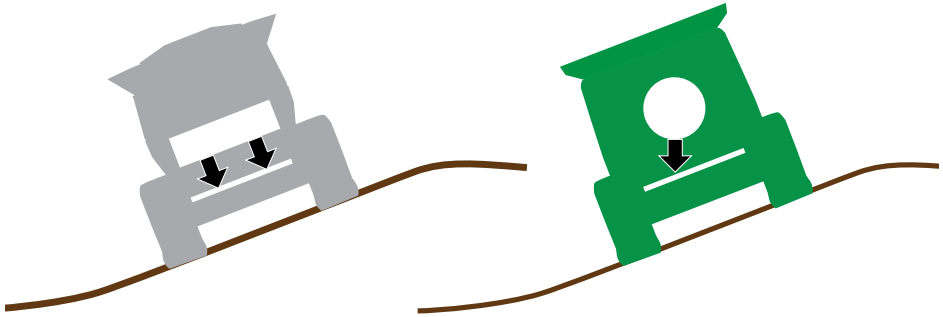

Air velocity

Our transverse system drops material in the same position parallel to the fan. This means every piece of grain is always hit with the same velocity of air. With an axial rotor, grain can drop at any point on the rotor meaning grain that drops early is hit with one air velocity while grain that drops later is hit with another velocity. The ability to preclean the grain before the shoe and use the shoe as a highly effective secondary cleaning system is why it can obtain such clean grain with low loss levels.

The same issue of where grain drops from the rotor affects the effectiveness of the shoe. The Gleaner always drops its grain and material in the same position. Axial combines tend to unevenly distribute grain to the cleaning shoe. This can cause grain loss out the back of the combine.

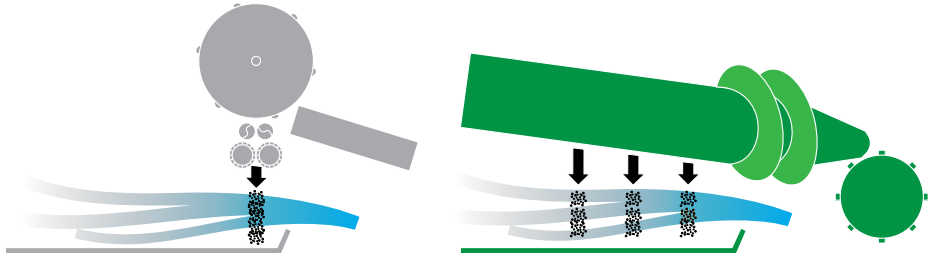

https://truckmanualshub.com/

Shoe overload

Many axial combines due to concave design tend to overload the cleaning shoe on one side of the machine.

As the rear portion of the shoe becomes over loaded with grain and MOG (material other than grain), grain can be carried out the back of the combine.

With Gleaner, after grain falls from the processor, a set of distribution augers meters the crop mat into a consistent ribbon of material. The crop is then propelled by the accelerator rolls, through an air blast at four times the speed of freefall and onto the grain pan. These distribution augers insure a uniform ribbon of crop feeding into the remainder of the cleaning system—no matter where crop falls from the processor.

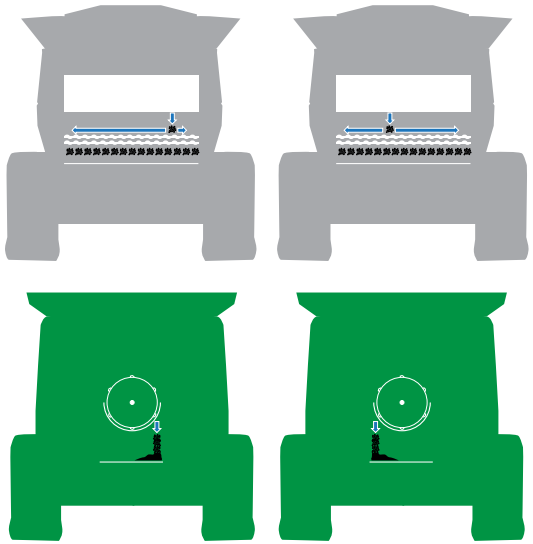

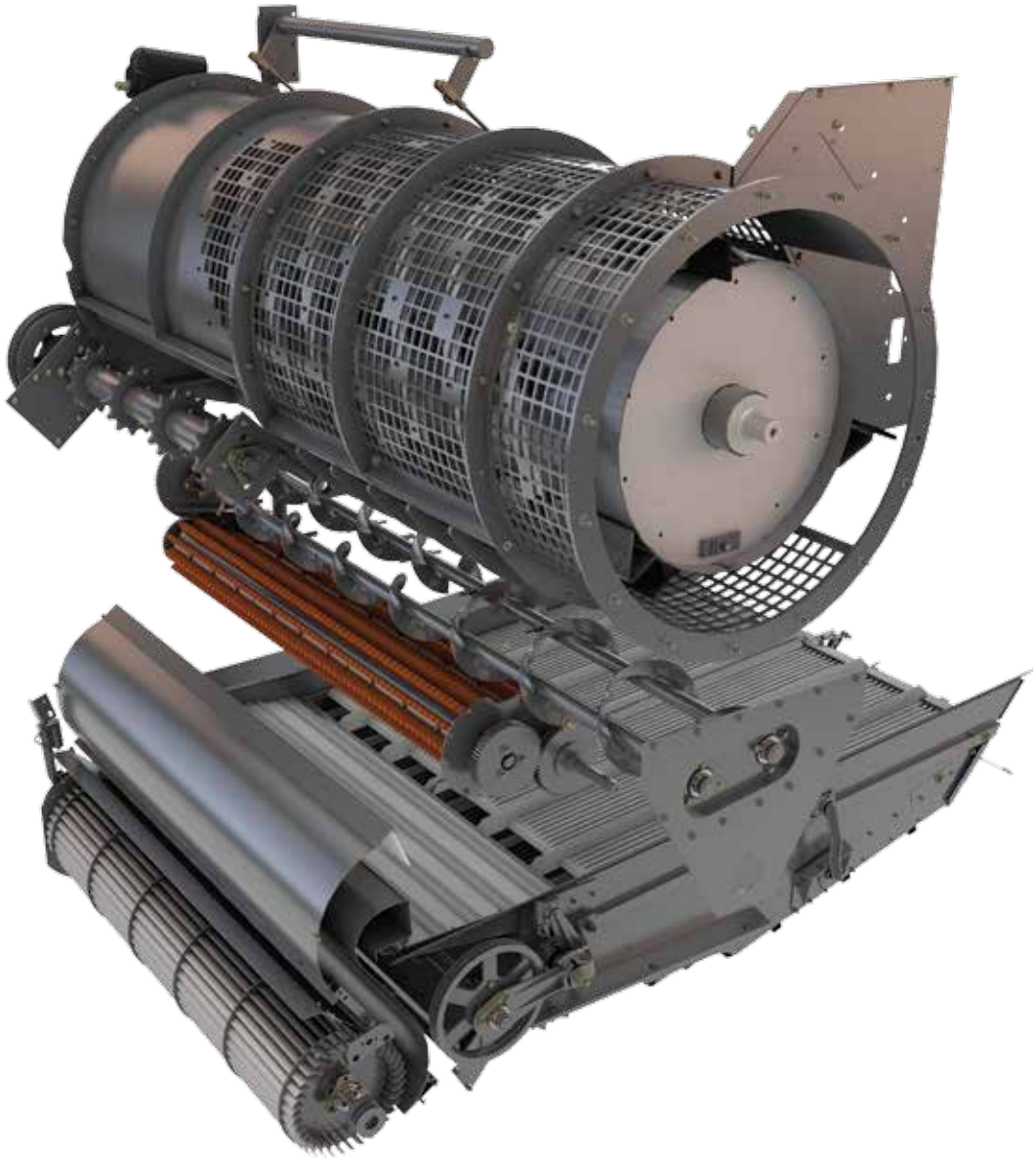

https://truckmanualshub.com/

https://truckmanualshub.com/

Grain Handling

https://truckmanualshub.com/

The unique DirectFlow™ swivel unloader on all Gleaner S8 Super Series accomplishes the marvel of an average unloading speed of 4 bushels per second throughout the entire unloading process with a larger 12-inch (305 mm) grain bin cross auger that feeds a massive 14-inch (356 mm) unloader auger. This DirectFlow two-auger design is the basis for our S8 Super Series unloading system.

Because we only use two augers rather than three or more, like our competition, Gleaner provides more efficient unloading with better grain quality and less wear. No gearboxes. No open drives. No vertical augers.

With the transition angle between the grain bin cross auger and swivel auger reduced, it takes less horsepower and less fuel to achieve this impressive unloading rate.

The unloading auger provides a 15-foot (4.54 m) discharge height and a 24.8-foot (7.56 m) reach from center.

The S68, S78 and S88 have one of the largest grain bin capacities of any Class 6 through Class 8 combine, at 390 bushels (13,743 L), with power foldable bin extensions that fold down in less than 20 seconds to the lowest overall transport height of 12 feet, 4 inches.

They also unload the entire grain bin in 98 seconds.

Class 7 unloading comparison

How much time do you invest to fill ten 1,000-bushel grain trucks?

Model	Grain Tank (bu)	Average Unloading Rate (bu/sec)	Time Per Unloading Cycle (sec)	Unloading Cycles	Total Time Invested (min)
Gleaner S78	390	4.0 peak; 4.0 avg.	98	26	42.5
JD S670	300	3.8 peak; 3.3 avg.	91	33	50.0
CIH 7130	300	3.2 peak; 3.0 avg.	100	33	55.0
CIH 7230	315	4.0 peak; 3.6 avg.	88	32	46.9
NH CR9060	315	3.7 peak; 3.3 avg.	95	32	50.6

https://truckmanualshub.com/

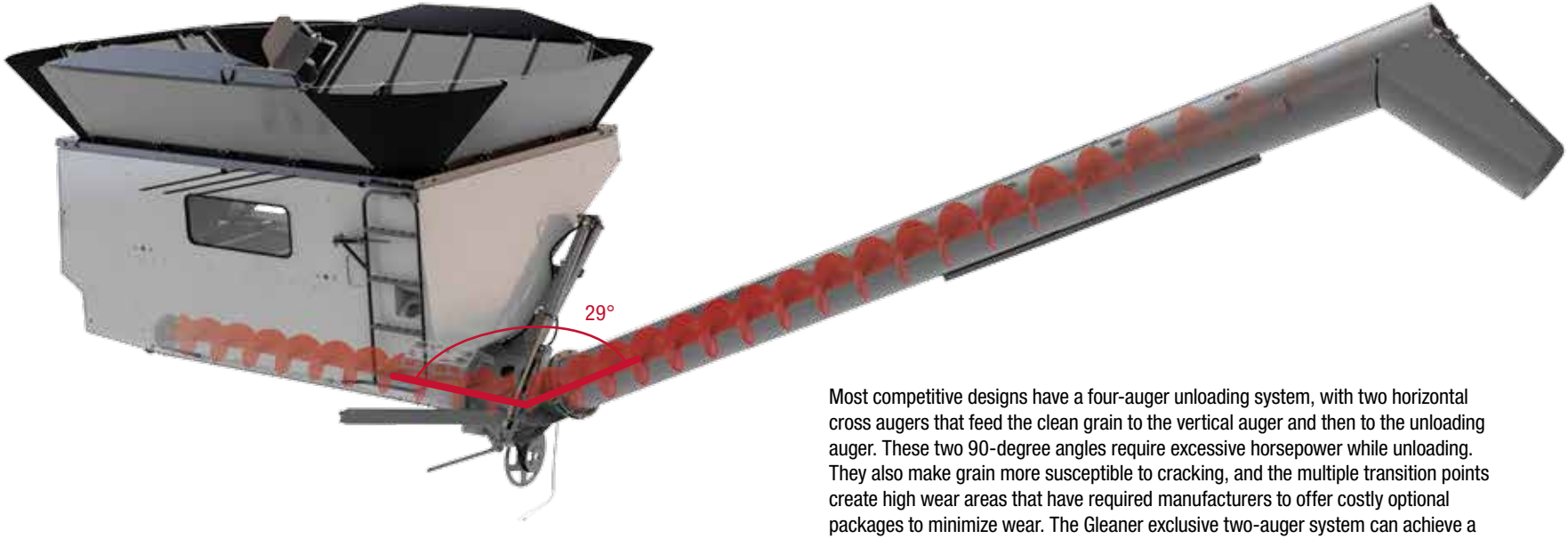

Most competitive designs have a four-auger unloading system, with two horizontal cross augers that feed the clean grain to the vertical auger and then to the unloading auger. These two 90-degree angles require excessive horsepower while unloading. They also make grain more susceptible to cracking, and the multiple transition points create high wear areas that have required manufacturers to offer costly optional packages to minimize wear. The Gleaner exclusive two-auger system can achieve a 4 bushel-per-second average unloading rate all while creating less wear, better grain quality and lower startup horsepower requirements than the competition.

A larger, deeper clean grain auger trough features a lowered cross auger below the centerline of the trough to maintain speed but avoid cracking the grain and to increase capacity to move grain away from the shoe quickly; this change, along with heavier paddles, increases elevator capacity by 30% to a 5,000 bu. per hour elevator rating.

https://truckmanualshub.com/

https://truckmanualshub.com/

Residue Management

https://truckmanualshub.com/

More chop; more spread; more efficiency

Farmers in Indiana, Ohio and Pennsylvania and Ontario want to bale their straw. In the remaining areas of the Corn Belt, higher density soybean residue places higher demand on residue chop and requires a very even wide distribution to eliminate any chance of temperature differences that cause uneven germination. In Western Canada, where the harvest time window is short, and oat, wheat, barley and canola residue is dense and tough, zero till requirements mean the shortest straw possible and the widest width of spread for no-till air drill planting. The S8 Super Series attacks this problem in two ways.

The standard integral chaff spreader on the Gleaner S8 Super Series uses the extreme high volume of air passing below the accelerator rolls to blow chaff out the back of the combine. It features an adjustable tailboard and fins to help spread material other than grain (MOG) into a wider swath as it leaves the machine. There is no stripping of material and no mechanical drives that take horsepower.

The standard hydraulic dual chaff spreader on all S8 Super Series combines delivers the ultimate in chaff spreading and when used with the hydraulic straw spreader and redesigned spreader curtain, provides an even wider spread of residue for tillage, planting and chemical applications.

Straw, corn stalks and stems exit the rotor discharge where non-grain material is handled by either an impeller or chopper.

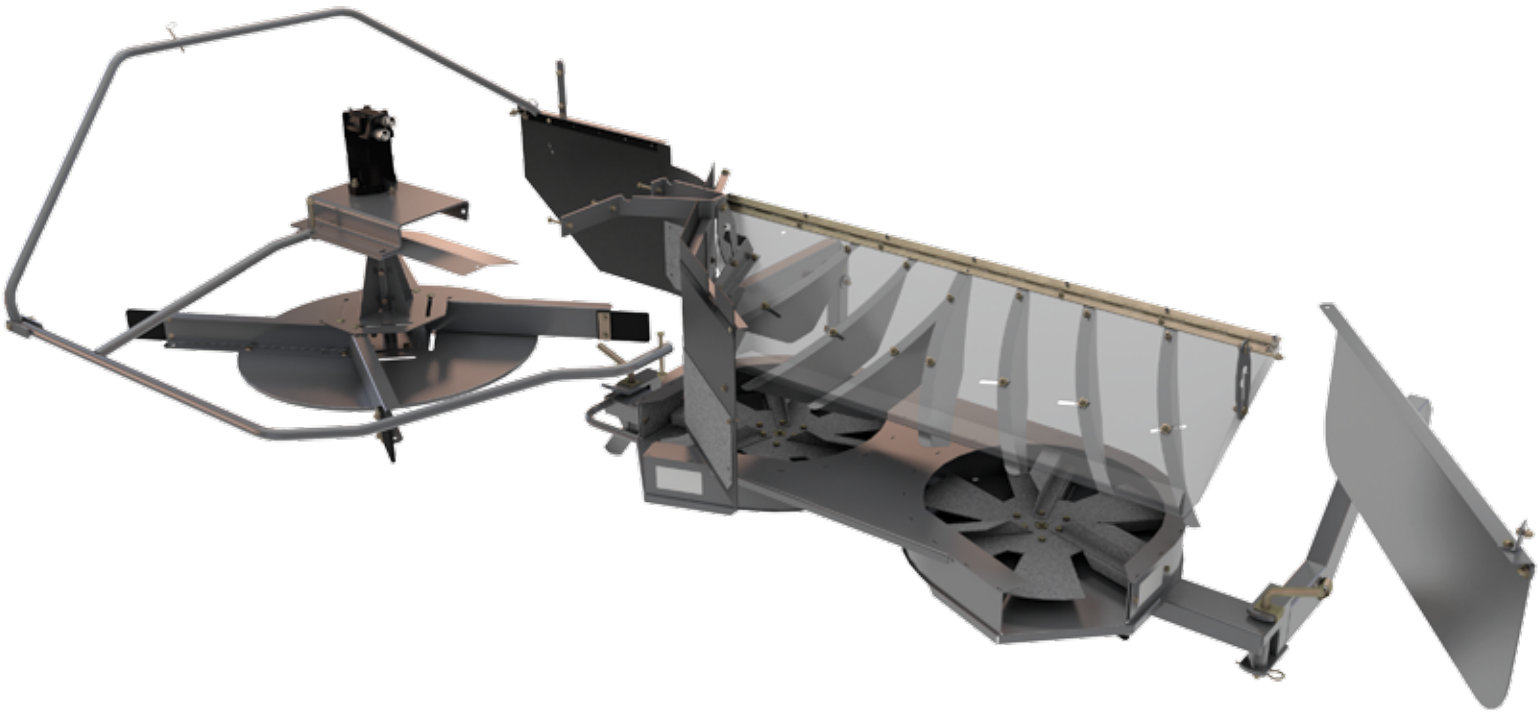

https://truckmanualshub.com/

The S8 Super Series features a completely redesigned 2-speed chopper for greater residue chopping demands when required. For high speed chopping, the smaller 7 ½-inch chopper drum features 24 knives, a 50% increase, for greater chopping and a 16% increase in speed to 3,250 rpm to create enough vacuum pressure to pull residue on through and keep the processor cage clean, optimizing processor performance.

For severe chopping requirements in zero till such as Western Canada, a new, retractable stationary 6-knife bed provides even greater chopping and straw breakup. The retractable feature allows customers not requiring extra fine chop to minimize horsepower requirements.

To bale the straw or stover, simply change from the large diameter pulley to small pulley, reduce rotor speed, remove the standard hydraulic spreader, and drop the residue into a clean, compact windrow. The Tritura™ processor delivers a higher quality straw sample because the material spends less time in the processor, creating longer undamaged straw, perfect for baling.

The new S8 Super Series residue management system provides today's chopping and spreading requirements but accomplishes it with substantially less horsepower that competitive choppers that must process all the straw and chaff across the entire width of their machine and utilize a higher velocity of air to spread their increased residue density.

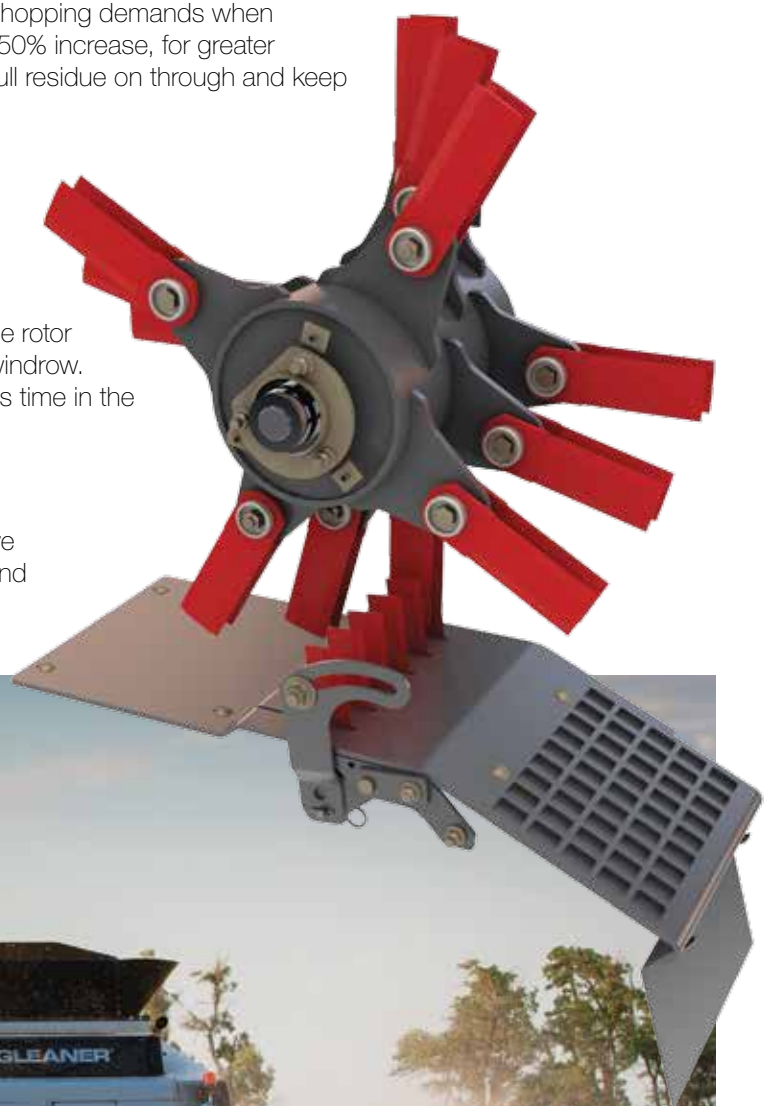

https://truckmanualshub.com/

https://truckmanualshub.com/

Serviceability

https://truckmanualshub.com/

The Gleaner Super Series is designed to have the fewest number of belts, chains, augers and gear drives possible to reduce the total number of moving parts, points of potential wear or breakage and the number of hours you have to spend on service.

The walk-in rear engine compartment is the industry's largest, and the combine's overall low center of gravity puts most machine parts within easy reach from the ground. Easily accessible suction-type hydraulic filters, single reservoir and sight-level tube all work to limit service time demands without risking hydraulic system integrity.

SmartCooling system

The optional AE50 award-winning SmartCooling™ system consists of a variable pitch cooling fan with reversing capability. The "Smart" system monitors key temperatures; coolant, intake air, and hydraulic oil and varies the fan pitch automatically resulting in only the necessary amount of cooling provided. The reduction in fan pitch results in a significant increase in available horsepower and can save fuel. SmartCooling is not designed only for cool weather; the system will reduce the horsepower draw of the fan by more than 66% on a 80° F (26° C) day. When the separator is engaged, the fan will reverse pitch at full speed rotation for five seconds every fifteen minutes to clean radiator and rotary screen, returns to a 40 degree pitch for fifteen seconds to clean engine compartment and then goes back to variable pitch to save horsepower and fuel.

AE50 outstanding innovations

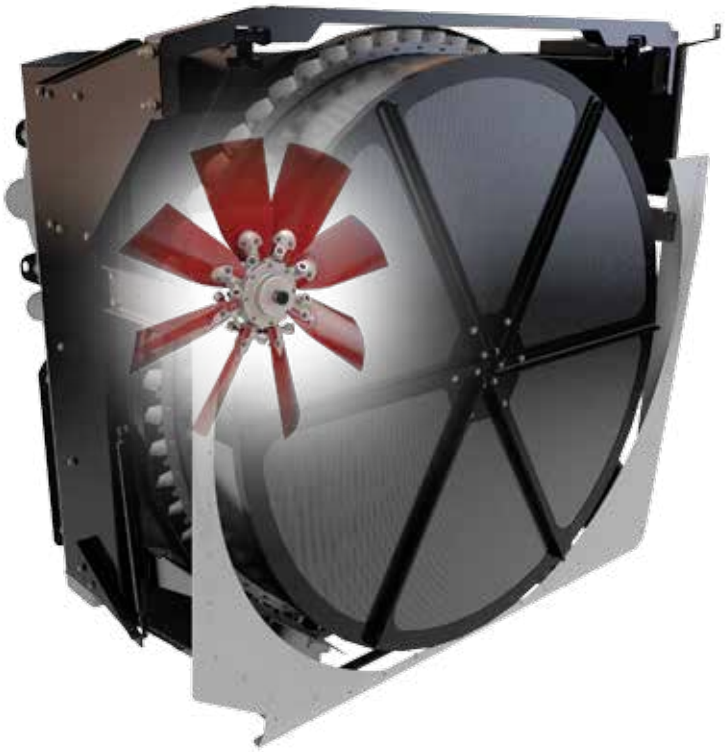

Fan Power Savings Analysis

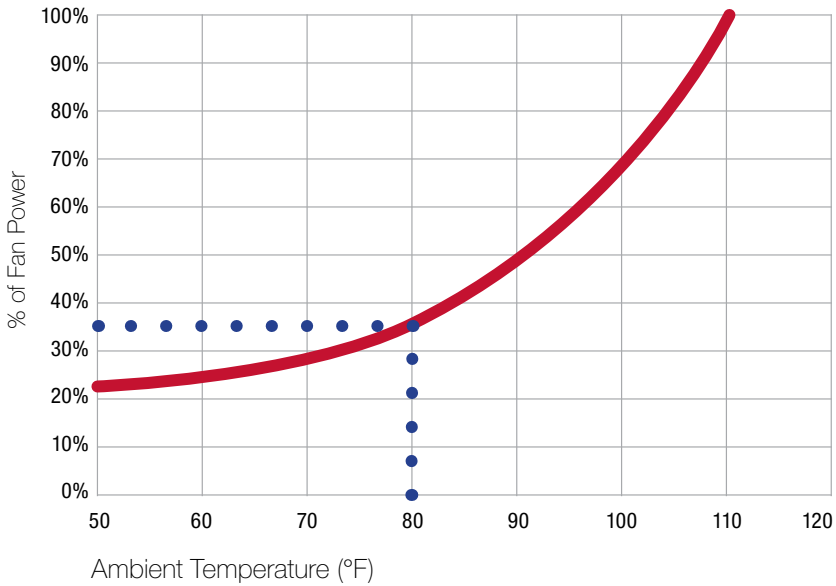

Based on fan power savings analysis conducted by FLEXXAIRE.

https://truckmanualshub.com/

Because Gleaner Super Series combines use straight-through shafts, changing belts and making adjustments to the machine is easier, which can be done with both feet on the ground, taking less time away from your harvest. The S8 Super Series rotor can be removed in literally a fraction of the time it takes to remove a rotor from our competitors' combines.

Gleaner S8 models feature a new integrated tool box located in the front of DEF tank for easy ground level access. The DEF tank support includes a pivoting feature that swings out and away from the machine for easy access to all the lower drives and drains for clean grain and tailings elevator troughs for improved serviceability.

The entire rotary screen box and coolers pivot out for easy service inspection. Exclusive SmartCooling™ eliminates the need for daily cleaning of the radiator, coolers and rotary screen even in heaviest soybean dust and chaff.

https://truckmanualshub.com/

https://truckmanualshub.com/

Environment

https://truckmanualshub.com/

The Gleaner ComforTech II™ cab and controls put comfort and convenience to work to improve the efficiency of every task and every operator. In the center of the cab is an adjustable air-ride high-back comfort seat with armrests that positions you within an easy-to-use and efficiently laid out control and monitoring system. An effective, automatic, climate-control system, rounded visor roof and tinted glass keep out the elements while still giving you full view. More than 120 cubic feet (3.4 cubic meters) of cab space is accessible by a 40.5-inch (1,028 mm) door. A large service door opposite the entry makes access to the console quick and convenient, while a large rear cab window gives you a complete view into the grain tank. Further improvements such as new curved glass and sealing materials have reduced noise levels by as much as 1.5 decibels for a more quiet comfortable environment.

New optional Premier™ vented high back heated and cooled seat with leather bolsters on the seat bottom and back provides support and comfort to minimize fatigue and maximize operator comfort for those long days.

Spoil yourself with our new optional premium sound system which, includes AM/FM radio, CD player, satellite ready, weatherband and MP3 play so you can listen to your own music.

https://truckmanualshub.com/

https://truckmanualshub.com/

https://truckmanualshub.com/

Technology

https://truckmanualshub.com/

Fuse™ Technology Systems

Fieldstar II systems

Add-on performance data analysis leaves too much to chance under today's demanding farming conditions. That's why all Gleaner S8 Super Series combines come standard with integrated Fieldstar® II yield-monitoring systems. Fieldstar II uses yield and moisture sensors, global positioning and the Advanced Technology Solutions C2100 to track yield data.

Advanced Technology Solutions Yield Sensor II features:

- Low profile. No need to remove sensor when folding tank extensions.
- Temperature-compensated load cell and full-width impact target reduce recalibration demands.
- 4X+ resolution in the load cell increases accuracy in light and low-yield crops.
- Horizontal mount for fewer slope-induced errors.
- Corrosion-resistant stainless steel impact target.

Other ATS features that bring precision agriculture performance to your Gleaner combine include:

- Unique slim-line C2100 incorporates color touch-screen technology, secure digital (SD) card slot and USB port for transferring data and console programs.
- Farm Works View software comes standard with all combines. View software gives you the ability to create color maps without additional software.

AUTO-GUIDE 3000 satellite–assisted steering

Gleaner now offers the optional AUTO-GUIDE 3000 guidance system, featuring a 72-channel navigation satellite receiver and a new TopDock (with snap-in modules for upgrades) that comes from the factory set up for WAAS and OmniStar VBS signal. The new system integrates AUTO-GUIDE 3000 control into the C2100 terminal and eliminates the need for a separate screen in the cab.

Telemetry-Ready

Monitor combine activity from your desktop computer and iOS phone or tablet with AGCOMMAND™ telemetry options. Choose the base Standard Plus or the Advanced system to monitor activity, performance and efficiency. Every Gleaner Super Series combine is AGCOMMAND Ready from the factory.

https://truckmanualshub.com/

The DGPS antenna for the Fieldstar® II yield-monitoring system receives its information from the WAAS Satellite System to pinpoint field location.

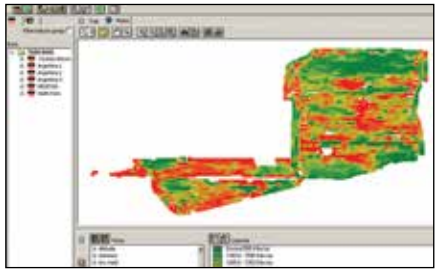

The C2100 yield monitor saves data in the ISOBUS standard format. This format can be used with most common agricultural data management software products on the market. Also included with every combine is a copy of Farm Works View software, which allows you to create color yield and moisture maps.

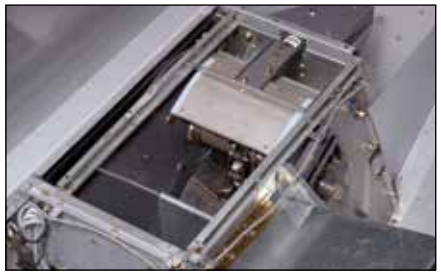

The Yield Sensor II measures the mass of grain flowing through the grain elevator.

Easily monitor combine activity from your desktop computer or iOS phone or tablet with AGCOMMAND.

Using cutting edge Global Navigation Satellite System technology, our new AUTO-GUIDE 3000 system steers the combine through the field, helping the operator maintain a full cut on the header, improving the efficiency of the entire harvest operation and reducing operator fatigue.

The unique C2100 color display incorporates touch-screen flexibility.

The AUTO-GUIDE 3000 TopDock contains a 72-channel Global Navigation Satellite System (GNSS) satellite receiver along with high-end inertials that maintain accuracy in side-hill operations. Adding the Decimeter Snap-In Module for two- to four-inch accuracy and adding a second Centimeter Snap-In Module for less than one-inch accuracy enables the system to operate at the levels the customer requires. With the Centimeter Snap-In Module, the owner can choose between a Mobile Base Station and an Internet Correction Source, such as a Continually Operating Reference Station (CORS).

https://truckmanualshub.com/

https://truckmanualshub.com/

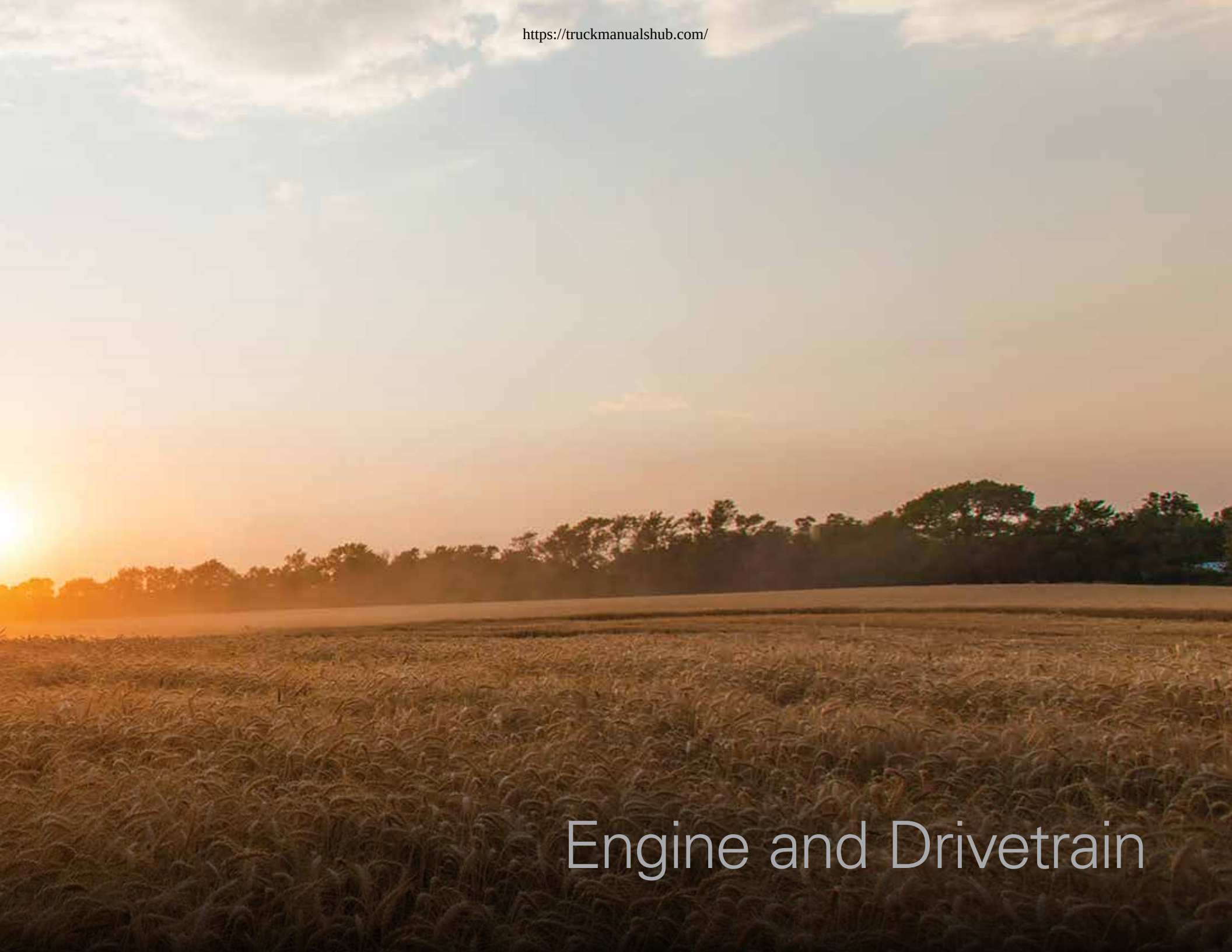

Engine and Drivetrain

https://truckmanualshub.com/

The Gleaner S8 Super Series large high-torque, 100cc split hydrostatic drive unit coupled to a four-speed transmission and heavy-duty final drives provides ultimate power and reliability. A new XR™ transmission option with larger 130cc hydro pump has a two-speed electronic shift-on-the-go from a button on the right-hand console to provide more torque for climbing in hills and fast shift–on-the-go capability. The rear adjustable steering axle and factory, or field-installed rear wheel assist (RWA), keep the combine moving through soft field conditions.

Pushing all Gleaner S68 Class 6 combines is a dependable high-torque fuel-efficient easy-to-service AGCO POWER 84 AWF liquid-cooled 8.4 L twin-turbocharged diesel engine. The Gleaner S78 Class 7 and S88 Class 8 combines feature a new high-torque, fuel-efficient AGCO POWER 98 AWF liquid-cooled 9.8L twin-turbocharged diesel engine. These engines feature SCR clean air technology that is more fuel efficient at higher horsepower ratings than previous models. From a rated 322 hp (240 kW) in the S68, 375 hp (279 kW) in the S78 and 430 hp (320 kW) in the S88, maximum boost power jumps to 398 hp (296 kW) on the S68, 451 hp (336 kW) on the S78 and 471 hp (351 kW) on the S88. The rear-mounted engine distributes weight better for less noise and vibration and is more accessible for service and maintenance.

AGCO POWER 84 AWF and 98 AWF engine features:

- Four-valve-per-cylinder cross-flow head permits our engineers to center the injector over the piston, improving fuel/air mixing to control emissions and fuel consumption better.
- Bosch common-rail fuel injection system takes its commands from the EEM3 electronic engine management software for precise, faster response and more power per gallon of diesel.
- Three-ring pistons seal tightly for efficiency and better oil control.
- Dual centrally supported cylinder liners eliminate liner cavitation, prolonging cylinder life.
- Lightweight, big-end connecting rods' fracture-split production process leaves a rough edge at the face to improve holding power and durability while minimizing vibration.
- AGCO POWER 84 AWF and 98 AWF feature SCR (Selective Catalytic Reduction) clean air technology optimized for high-performance, low-particulate emissions and lower fuel consumption (meets Tier 4f standards). A 24.5-gallon polyethylene tank holds Diesel Exhaust fluid (DEF) and is filled after approximately every third diesel fill-up.
- Large 230-gallon polyethylene fuel tank, protected by in-line canister-style separators, ensures an adequate supply of clean fuel to feed the system.
- Three-stage pilot injection.
- Automatic fuel temperature compensation.

Model	Engine hp (Kw)	Maximum Boost hp (Kw)
Gleaner S68	322 (240)	398 (296)
Gleaner S78	375 (279)	451 (336)
Gleaner S88	430 (320)	471 (351)

https://truckmanualshub.com/

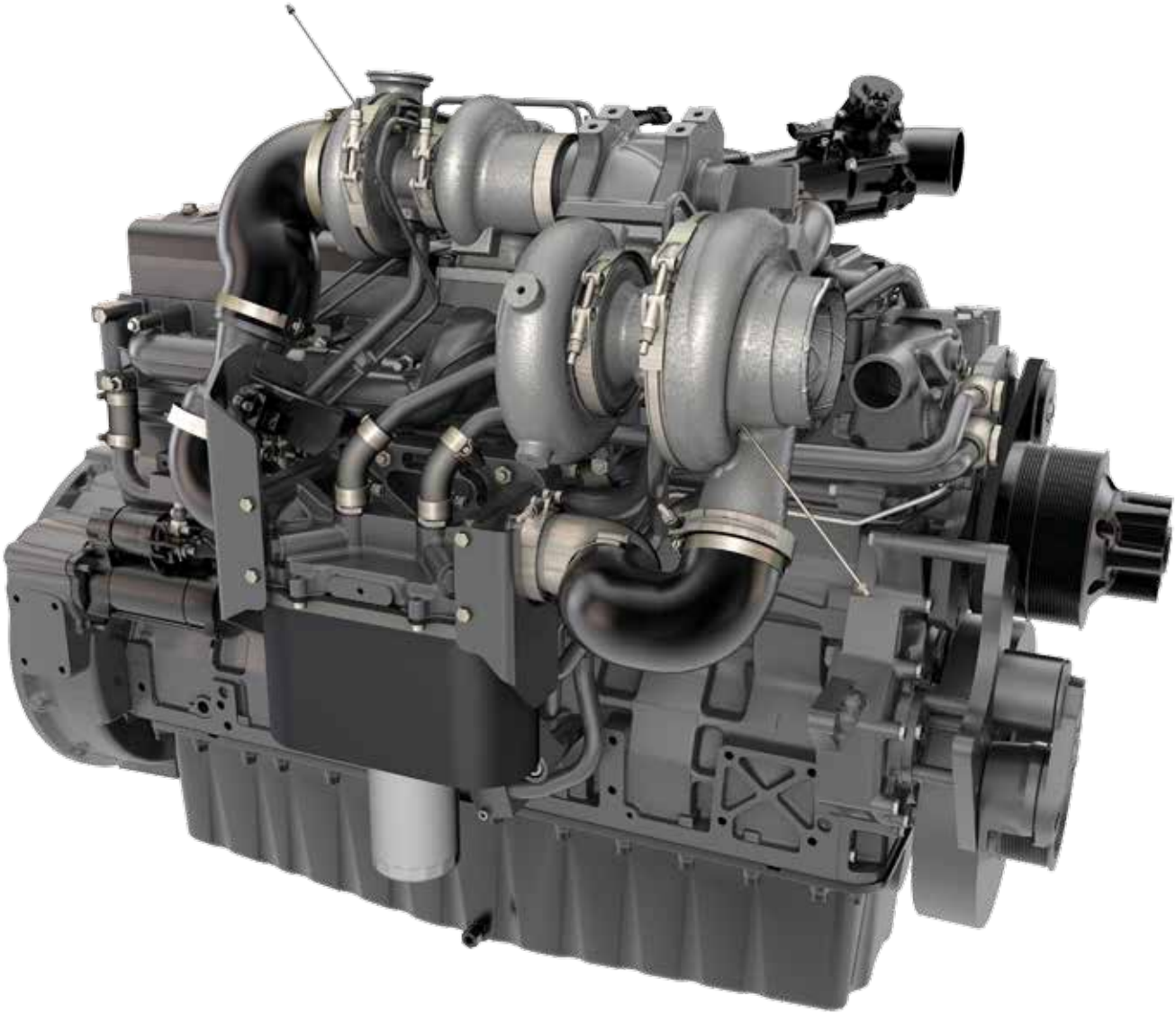

https://truckmanualshub.com/

https://truckmanualshub.com/

Headers

https://truckmanualshub.com/

7200/8200 Series headers

The 7200 Series rigid cutterbar headers begin with a welded steel frame for a solid foundation. The SCH epicyclic drive system assures a faster linear cut with less vibration. Plus, the precision factory-balanced conveyor with exclusive 7-inch (178-mm) auger flighting ensures smooth crop flow. Available with new level-2, HCC pickup reel in widths up to 35 feet (10.6 m). Electric, in-cab fore-and-aft reel adjustment comes standard, so you can adjust to changing crop conditions on the fly. Available in 25 ft. (7.6 m), 30 ft. (9.1 m) and 35 ft. (10.6 m).

The 8200 Series flex headers start with all the standard features of the 7200, then add a choice of two sickle options: new high-capacity sickle or SCH sickle. Its full-fingered auger with 7-inch (178-mm) flighting ensures smooth crop flow out to its maximum 35-foot (10.6-m) header width. Available in 20 ft. (6.0 m), 25 ft. (7.6 m), 30 ft. (9.1 m) or 35 ft. (10.6 m).

3000 Series corn heads

The 3000 Series corn heads remain the industry's lowest angle corn heads, at only 21.5 degrees. Dividers slide under downed stalks and gently straighten them for fast, easy harvesting with less damage. Standard adjustable stripper plates are electrically controlled in-cab. Available in 6-row [30 inches (762 mm) to 36 inches (914 mm)], 8-row [36 inches (914 mm) to 38 inches (965 mm)] or 12-row [20 inches (508 mm) to 22 inches (559 mm) to 30 inches (762 mm)].

4200 Series headers

The Gleaner 4200 Series high-capacity pickup headers include a 13-foot- (4.0-m) or 15-foot-wide (4.6-m) conveyor auger. Equipped with a Swathmaster, 14 feet (4.3 m) wide for the 13-foot header and 16 feet (4.9 m) wide for the 15-foot header, it provides a direct, smooth crop flow through even the densest windrows. With radial pin clutch protection, the 4200 Series comes with factory-installed adapter and pickup attachment.

9250 Series DynaFlex draper headers

With an up to 40-foot (12.2-m) cut, the DynaFlex® allows you to take more crop efficiently to optimize combine capacity and reduce operator fatigue. The fully flexible, cab-controlled cutterbar with up to 8 inches (203 mm) of vertical travel lets you take crop at ground level. The drapers' belt slats are reinforced with fiberglass and have v-belt guides for consistent, even tracking. Mechanically driven drapers and cutterbar offer more torque without requiring a separate hydraulic system.

https://truckmanualshub.com/

7200/8200 Series features

SCH fully enclosed epicyclic sickle drive provides a smooth linear movement that reduces stress, wear and vibration for better cutting performance.

All headers

All electrical and hydraulic connections are included in the single-point multicoupler for quick and clean hookup.

3000 Series features

Electric, cab-adjusted stripper plates allow the operator to make on-the-go adjustments to meet changing crop conditions.

A self-contained, modular gearbox and torque limiter on each row unit provide greater durability and allow easier row width adjustment.

4200 Series features

Gleaner Ultra-Float Suspension uses a heavy spring and shock system to dampen rugged terrain and smooth out the rough spots. An advanced, hydraulically positioned windguard, which can be raised or lowered from the cab, improves feeding and reduces crop rolling.

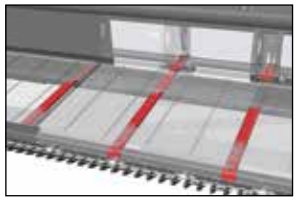

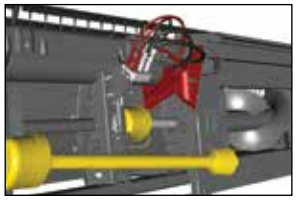

9250 Series features

The high-capacity sickle features spring hold-downs evenly spaced every 18 inches (457.2 mm) along the entire cutterbar. They reduce section and guard wear with no adjustment required and are exclusive to the high-capacity sickle, as is the SCH Rollerguide is exclusive to the SCH sickle. The Rollerguide decreases friction on the sickle, providing reduced wear on components.

A dual mechanical SCH epicyclical sickle drive is balanced for a reduced vibration, higher sickle speed (1,200 strokes/min) and up to 400% increase in cutting torque.

The fully flexible cutterbar is controlled hydraulically from the cab and allows for up to 8 inches (203 mm) of vertical travel.

The 9250 hooks directly to the combine feederhouse without an adapter. Two hydraulic cylinders allow you to tilt the header 12 degrees to adjust it on the go for the best cutting angle.

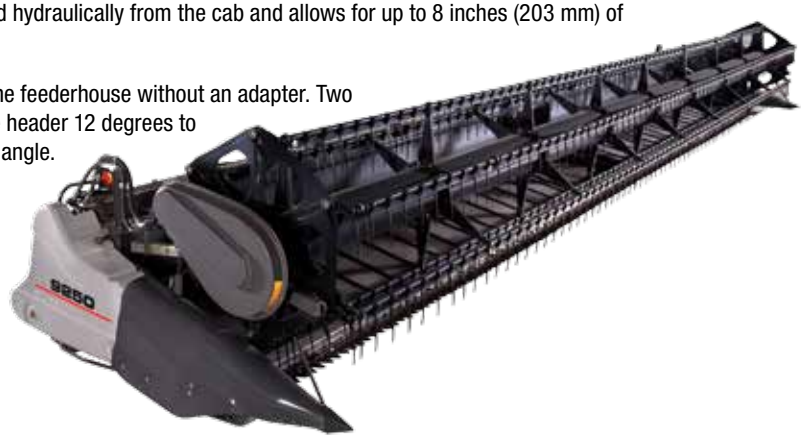

https://truckmanualshub.com/

https://truckmanualshub.com/

Service and Financing

https://truckmanualshub.com/

The Gleaner combine is backed by the strength and reputation of one of the world's largest farm equipment manufacturers: AGCO. Local Gleaner dealers support each combine with experienced, factory-trained staff and service personnel.

The Gleaner Guard™ warranty is the best in the industry from header to spreader. Nonconsumable parts found to be defective in workmanship or material as delivered will be repaired or replaced for two years from date of delivery to the initial owner regardless of the number of hours the machine has been used. Optional one-year or two-year extended comprehensive warranty packages are available.

The AGCO Parts supply network offers a complete line of high-quality replacement parts and accessories. The AGCO Live-On-Net electronic parts & service information provides immediate online access for dealers worldwide to operator manuals, service manuals and service bulletins, further improving their response time and knowledge base and ensuring that your combine is back and running quickly.

Gleaner dealers can provide Gleaner owners with access to www.agcopartsbooks.com. This gives Gleaner owners 24-hour access to online parts information for their Gleaner combines.

AGCO FINANCE

AGCO Finance remains committed to agriculture and understanding its unique needs—like the need to offer flexible programs such as seasonal payments, skip payments and waiver periods. We are proud to offer affordable, comprehensive equipment financing options for all Gleaner combines. We have the expertise, systems and flexibility to design a financing program that's as tailored to your needs as your new Gleaner combine is.

Agri Marketing "Product of the Year"

ASABE AE50 outstanding innovations AWARD 2014

Gleaner S88 Class 8 combine
"Optimal Harvesting Performance"

https://truckmanualshub.com/

https://truckmanualshub.com/

https://truckmanualshub.com/

Specifications

https://truckmanualshub.com/

Make / Model	Gleaner S68	Gleaner S78	Gleaner S88
GENERAL			
Class size	6	7	8
FEEDING SYSTEM			
Chain size	#557 serrated	#557 serrated	#557 serrated
Variable speed drive	Available	Available	Available
Feed reverser	Electro-hydraulic	Electro-hydraulic	Electro-hydraulic
Housing width in. (mm)	39.5 (1,003)	39.5 (1,003)	39.5 (1,003)
Smartrac™ Lateral tilt	Standard	Standard	Standard
THRESHING/SEPARATION SYSTEM			
System	Transverse rotor	Transverse rotor	Transverse rotor
Concave type	4 sections with 17 bars	4 sections with 17 bars	4 sections with 17 bars
Concave wrap	87°	87°	87°
Rock protection	Stone trap	Stone trap	Stone trap
Rotor/Cylinder/Threshing			
Bars, type	Chrome, reversible	Chrome, reversible	Chrome, reversible
Diameter in. (mm)	30 (762)	30 (762)	30 (762)
Length in. (mm)	88 (2,235)	88 (2,235)	88 (2,235)
Degrees of separation	360°	360°	360°
Speed, low-range rpm	180-480	180-480	180-480
Speed, high-range rpm	336-900	336-900	336-900
Concave area in² (m²)	960 (0.61)	960 (0.61)	960 (0.61)
Threshing and separating area in² (m²)	6,047 (3.89)	6,047 (3.89)	6,047 (3.89)

Make / Model	Gleaner S68	Gleaner S78	Gleaner S88
CLEANING SYSTEM			
Cleaning stages	2	2	2
Chaffer area in² (m²)	3,889 (2.51)	3,889 (2.51)	3,889 (2.51)
Sieve area in² (m²)	3,397 (2.19)	3,397 (2.19)	3,397 (2.19)
Total area in² (m²)	7,729 (4.99)	7,729 (4.99)	7,729 (4.99)
Cleaning fan	Transverse	Transverse	Transverse
Speed rpm	1,250	1,250	1,250
Diameter in. (mm)	13 (330)	13 (330)	13 (330)
GRAIN-HANDLING SYSTEM			
Tailings return	Standard	Standard	Standard
Tank capacity bu (L)	390 (13,743)	390 (13,743)	390 (13,743)
Unloading Auger			
Diameter in. (mm)	14 (356)	14 (356)	14 (356)
Unload rate bu/sec (L/s)	4.0 (141)	4.0 (141)	4.0 (141)
Length from centerline in. (m)	298 (7.56)	298 (7.56)	298 (7.56)
Discharge height in. (m)	185.5 (4.712)	185.5 (4.712)	185.5 (4.712)
Clearance height in. (m)	169.5 (4.305)	169.5 (4.305)	169.5 (4.305)
CROP RESIDUE DISPOSAL			
Chopper	2 speed	2 speed	2 speed
Straw spreader, standard	Hydraulic, Variable speed	Hydraulic, Variable speed	Hydraulic, Variable speed
Hydraulic chaff spreader	Standard	Standard	Standard

https://truckmanualshub.com/

Make / Model	Gleaner S68	Gleaner S78	Gleaner S88
ENGINE			
Model	AGCO Power 84AWF	AGCO Power 98AWF	AGCO Power 98AWF
Displacement in³ (L)	513 (8.4)	598 (9.8L)	598 (9.8L)
No. of cylinders/type	6/inline	7/inline	7/inline
Horsepower @ 2,100 rpm SAE hp (Kw)	322 (240.1)	375 (279.6)	430 (320.6)
Maximum boost hp (Kw)	398 (296.7)	451 (336.3)	471 (351.2)
Fuel tank capacity gal (L)	230 (870.6)	230 (870.6)	230 (870.6)
DEF tank capacity gal (L)	24.5 (92.7)	24.5 (92.7)	24.5 (92.7)
DRIVE/PROPULSION SYSTEM			
Transmission (Std.)	4 speed w/ single speed Hydrostatic	4 speed w/ single speed Hydrostatic	4 speed w/ single speed Hydrostatic
XR™ Transmission (Opt.)	4-speed w/2 speed Hydrostatic	4-speed w/2 speed Hydrostatic	4-speed w/2 speed Hydrostatic
Final drive type	Spur gear S-42	Spur gear S-42	Spur gear S-42
Tread width standard/ reversed in. (m)	120/145 (3.05/3.68)	120/145 (3.05/3.68)	120/145 (3.05/3.68)
Steering Axle			
Tread width adjustable axle in. (m)	119/143 (3.02/3.65)	119/143 (3.02/3.65)	119/143 (3.02/3.65)
Tread width RWA in. (m)	126/144 (3.20/3.65)	126/144 (3.20/3.65)	126/144 (3.20/3.65)
Steering type	Dual cylinder	Dual cylinder	Dual cylinder
Turning radius in. (m)	270 (6.85)	270 (6.85)	270 (6.85)

Make / Model	Gleaner S68	Gleaner S78	Gleaner S88
HYDRAULIC SYSTEM			
Hydraulic pump	Gear	Gear	Gear
Control valve	Electro-hydraulic	Electro-hydraulic	Electro-hydraulic
Tank capacity gal (L)	13 (49.2)	13 (49.2)	13 (49.2)
CAB AND CONTROLS			
Seat (Std.)	High back/air-ride cloth	High back/air ride	High back/air ride
Seat (Opt.)	Premier™ heated and cooled	Premier™ heated and cooled	Premier™ heated and cooled
Steering wheel	Tilt/telescope	Tilt/telescope	Tilt/telescope
Controls	Right hand console	Right hand console	Right hand console
Interior volume ft³ (m³)	121.4 (3.44)	121.4 (3.44)	121.4 (3.44)
Glass area ft³ (m³)	61.2 (5.69)	61.2 (5.69)	61.2 (5.69)
DIMENSIONS			
Transport height in. (m)	141 (3.58)	141 (3.58)	141 (3.58)
Length w/o header in. (m)	339 (8.61)	339 (8.61)	339 (8.61)
Wheelbase in. (m)	134 (3.40)	134 (3.40)	134 (3.40)
Base weight with tires lb. (kg)	31,920 (14,479)	32,220 (14,615)	32,220 (14,615)
Ground clearance in. (mm)	23.5 (596.9)	23.5 (596.9)	23.5 (596.9)

https://truckmanualshub.com/

AGCO FINANCE

AGCO ADVANCED TECHNOLOGY SOLUTIONS

AGCO PARTS

Play It Safe. Work Safely.

AGCO ANSWERS
(877) 525-4384 AGCOanswers@AGCOcorp.com

GLEANER

AGCO • 4205 River Green Parkway, Duluth, GA 30096 • www.gleanercombines.com

AGCO Your Agriculture Company

AGCO may at any time, and from time to time, for technical or other necessary reasons, modify any of the data, specifications or warranty of the products described herein. Some equipment shown may be optional. Attention: Photographs in this publication may show protective shields or guards open or removed for the purposes of illustration. Be certain all shields and guards are in place during operation.

AGCO, Gleaner & DynaFlex are registered trademarks of AGCO Corporation • © 2013 AGCO • Replaces GL13B002ST • GL13B004ST (12) 5 PD