https://truckmanualshub.com/

XT1600

Operator's Manual

CMW®

Issue 2.0

Original Instruction

053-1064

https://truckmanualshub.com/

Overview

Chapter Contents

Serial Number Location 2

Intended Use 3

Unit Components 3

Operator Orientation. 4

About This Manual 4

- Bulleted Lists. 4
- Numbered Lists. 4

https://truckmanualshub.com/

Serial Number Location

Record serial numbers and date of purchase in spaces provided. XT1600 serial number is located as shown.

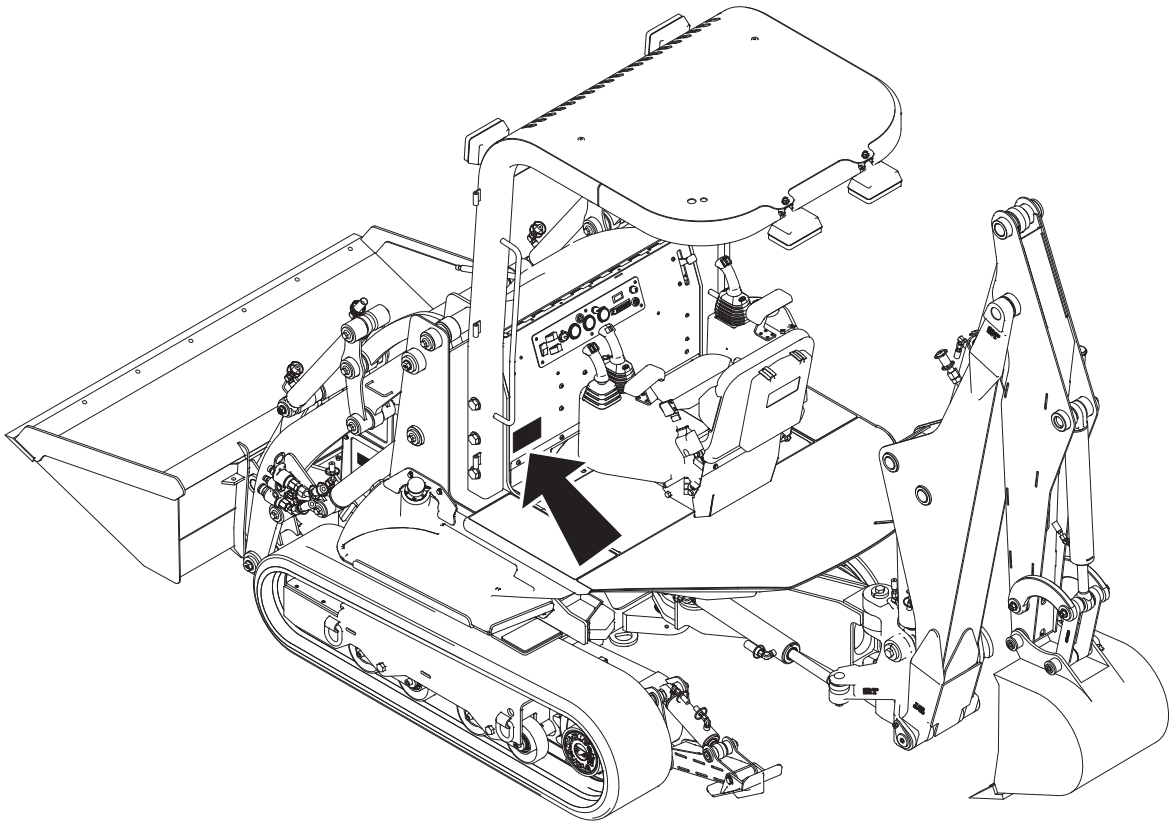

t19om007h.eps

Date of manufacture	
Date of purchase	
XT1600 serial number	
Engine serial number	
Attachment serial number(s)	

https://truckmanualshub.com/

Intended Use

The XT1600 is a ride-on, track-driven excavator/tool carrier unit designed for light- to medium-duty construction work. The XT1600 excavator allows 260° swing and digging depths to 11' 2" (3.4 m). The XT1600 lift arms have a quick attach mount plate which makes it easy for an operator to connect different attachments. The unit is designed for operation in temperatures typically experienced in earth moving and construction work environments. Provisions may be required to operate in extreme temperatures. Contact your Ditch Witch dealer. Use in any other way is considered contrary to the intended use.

The XT1600 should be operated, serviced, and repaired only by persons familiar with its particular characteristics and acquainted with the relevant safety procedures.

Unit Components

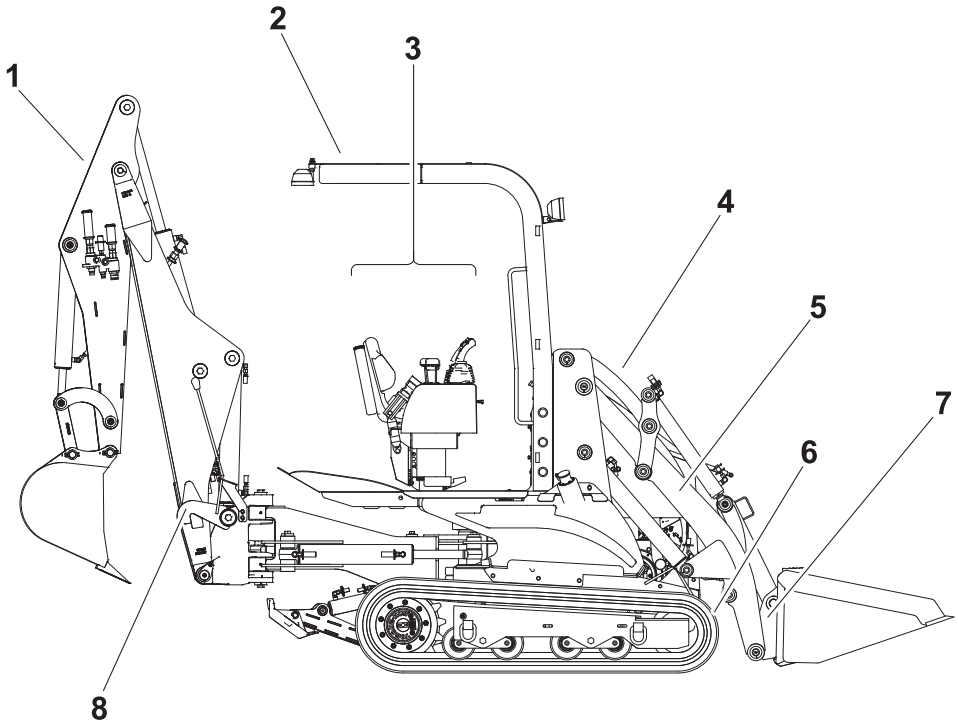

t19om008h.eps

1. excavator
2. ROPS/FOPS
3. operator's station
4. engine compartment
5. lift arms
6. tracks
7. attachment mount plate
8. excavator stow lock

https://truckmanualshub.com/

Operator Orientation

1. Front of unit
2. Right of unit
3. Rear of unit
4. Left of unit

Right and left sides of machine are determined by facing front (toward lift arms) of unit while seated in the operator's station.

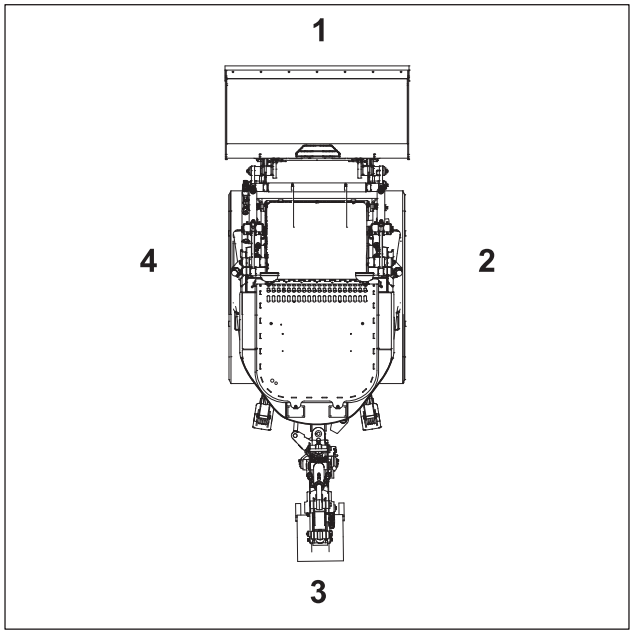

About This Manual

This manual contains information for the proper use of this machine. See **Operation Overview** for basic operating procedures. Cross references such as "See page 50" will direct you to detailed procedures.

Bulleted Lists

Bulleted lists provide helpful or important information or contain procedures that do not have to be performed in a specific order.

Numbered Lists

Numbered lists contain illustration callouts or list steps that must be performed in order.

https://truckmanualshub.com/

Foreword

This manual is an important part of your equipment. It provides safety information and operation instructions to help you use and maintain your Ditch Witch equipment.

Read this manual before using your equipment. Keep it with the equipment at all times for future reference. If you sell your equipment, be sure to give this manual to the new owner.

If you need a replacement copy, contact your Ditch Witch dealer. If you need assistance in locating a dealer, visit our website at **www.ditchwitch.com** or write to the following address:

The Charles Machine Works, Inc.
Attn: Marketing Department
PO Box 66
Perry, OK 73077-0066
USA

The descriptions and specifications in this manual are subject to change without notice. The Charles Machine Works, Inc. reserves the right to improve equipment. Some product improvements may have taken place after this manual was published. For the latest information on Ditch Witch equipment, see your Ditch Witch dealer.

Thank you for buying and using Ditch Witch equipment.

https://truckmanualshub.com/

XT1600
Operator's Manual

Issue number 2.0/9/11
Part number 053-1064

Copyright 2006, 2008, 2011
by The Charles Machine Works, Inc.

Ditch Witch®, Ditch Witch, CMW, AutoCrowd, Modularmatic, Jet Trac, Roto Witch, Subsite, Fluid Miser, Perma-Soil, Power Pipe, Super Witch, Super Witch II, Pierce Airrow, The Underground, and The Underground Authority Worldwide are registered trademarks of The Charles Machine Works, Inc.

This product is covered by one or more of the following patents:
Community Design: 000205117-0001; 000506126-0001; **U.S.** D511, 531; D527, 027; other U.S. and foreign patents pending.

https://truckmanualshub.com/

Contents

Overview 1
machine serial number, information about the type of work this machine is designed to perform, basic machine components, and how to use this manual

Foreword 5
part number, revision level, and publication date of this manual, and factory contact information

Safety 9
machine safety alerts and emergency procedures

Controls 19
machine controls, gauges, and indicators and how to use them

Operation Overview 35
an overview for completing a job with this machine: planning, setting up, installing product, and restoring the jobsite; with cross references to detailed procedures

Prepare 37
procedures for inspecting and classifying the jobsite, planning the installation path, and preparing the jobsite for work

Drive 43
procedures for startup, cold start, driving, and shutdown

Transport 49
procedures for lifting, hauling, and towing

Dig 57
procedures for using excavator to dig trenches and move material

Systems and Equipment 63
procedures for changing excavator control pattern, using SK attachments, and a list of optional equipment

Complete the Job 69
procedures for restoring the jobsite and rinsing and storing equipment

Service 71
service intervals and instructions for this machine including lubrication, replacement of wear items, and basic maintenance

https://truckmanualshub.com/

Specifications 91
machine specifications including weights, measurements, power ratings, and fluid capacities

Support 97
the warranty policy for this machine, and procedures for obtaining warranty consideration and training

Service Record 101
a record of major service performed on the machine

https://truckmanualshub.com/

Safety

Chapter Contents

Guidelines 10

Safety Alert Classifications 11

Safety Alerts 12

Emergency Procedures 15

- Electric Strike Description 15
- If an Electric Line is Damaged 16
- If a Gas Line is Damaged 16
- If a Fiber Optic Cable is Damaged 17
- If Machine Catches on Fire 17

https://truckmanualshub.com/

Guidelines

Follow these guidelines before operating any jobsite equipment:

- Complete proper training and read operator's manual before using equipment.
- Contact One-Call (888-258-0808) and any utility companies which do not subscribe to One-Call. Have all underground pipes and cables located and marked before operating equipment. If you damage a utility, contact utility company.
- Classify jobsite based on its hazards and use correct tools and machinery, safety equipment, and work methods for jobsite.
- Mark jobsite clearly and keep spectators away.
- Wear personal protective equipment.
- Review jobsite hazards, safety and emergency procedures, and individual responsibilities with all personnel before work begins. Safety videos are available from your Ditch Witch dealer.
- Replace missing or damaged safety shields and safety signs.
- Use equipment carefully. Stop operation and investigate anything that does not look or feel right.
- Do not operate unit where flammable gas is present.
- Contact your Ditch Witch dealer if you have any question about operation, maintenance, or equipment use.

https://truckmanualshub.com/

Safety Alert Classifications

These classifications and the icons defined on the following pages work together to alert you to situations which could be harmful to you, jobsite bystanders or your equipment. When you see these words and icons in the book or on the machine, carefully read and follow all instructions. YOUR SAFETY IS AT STAKE.

Watch for the three safety alert levels: **DANGER**, **WARNING** and **CAUTION**. Learn what each level means.

DANGER indicates an imminently hazardous situation which, if not avoided, will result in death or serious injury.

WARNING indicates a potentially hazardous situation which, if not avoided, could result in death or serious injury.

CAUTION indicates a potentially hazardous situation which, if not avoided, may result in minor or moderate injury.

Watch for two other words: **NOTICE** and **IMPORTANT**.

NOTICE can keep you from doing something that might damage the machine or someone's property. It can also alert you against unsafe practices.

IMPORTANT can help you do a better job or make your job easier in some way.

https://truckmanualshub.com/

Safety Alerts

DANGER Electric shock. Contacting electric lines will cause death or serious injury. Know location of lines and stay away.

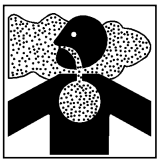

DANGER Deadly gases. Lack of oxygen or presence of gas will cause sickness or death. Provide ventilation.

WARNING Jobsite hazards could cause death or serious injury. Use correct equipment and work methods. Use and maintain proper safety equipment.

WARNING Crushing weight could cause death or serious injury. Use proper procedures and equipment or stay away.

WARNING Moving parts could cut off hand or foot. Stay away.

WARNING Explosion possible. Serious injury or equipment damage could occur. Follow directions carefully.

WARNING Incorrect procedures could result in death, injury, or property damage. Learn to use equipment correctly.

https://truckmanualshub.com/

WARNING Fall possible. Riders can fall from machine and be injured or killed. Only operator is allowed on machine.

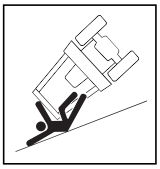

WARNING Rollover possible. If machine rolls over, you could be thrown from seat and killed or crushed. Wear seat belt.

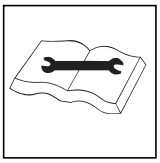

WARNING Improper control function could cause death or serious injury. If control does not work as described in instructions, stop machine and have it serviced.

WARNING Looking into fiber optic cable could result in permanent vision damage. Do not look into ends of fiber optic or unidentified cable.

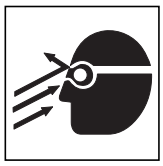

WARNING Fluid or air pressure could pierce skin and cause injury or death. Stay away.

WARNING Runaway possible. Machine could run over you or others. Learn how to use all controls. Start and operate only from operator's position.

WARNING Fire or explosion possible. Fumes could ignite and cause burns. No smoking, no flame, no spark.

https://truckmanualshub.com/

WARNING Moving traffic - hazardous situation. Death or serious injury could result. Avoid moving vehicles, wear high visibility clothing, post appropriate warning signs.

WARNING Flying objects may cause injury. Wear hard hat and safety glasses.

WARNING Hot parts may cause burns. Do not touch until cool.

WARNING Exposure to high noise levels may cause hearing loss. Wear hearing protection.

WARNING Fall possible. Slips or trips may result in injury. Keep area clean.

WARNING Battery acid may cause burns. Avoid contact.

WARNING Improper handling or use of chemicals may result in illness, injury, or equipment damage. Follow instructions on labels and in material safety data sheets (MSDS).

https://truckmanualshub.com/

Emergency Procedures

Before operating any equipment, review emergency procedures and check that all safety precautions have been taken.

EMERGENCY SHUTDOWN - Turn ignition switch to STOP.

Electric Strike Description

When working near electric cables, remember the following:

- Electricity follows all paths to ground, not just path of least resistance.
- Pipes, hoses, and cables will conduct electricity back to all equipment.
- Low voltage current can injure or kill. Almost one-third of work-related electrocutions result from contact with less than 440 volts.

Most electric strikes are not noticeable, but indications of a strike include:

- power outage
- smoke
- explosion
- popping noises
- arcing electricity

If any of these occur, assume an electric strike has occurred.

https://truckmanualshub.com/

If an Electric Line is Damaged

If you suspect an electric line has been damaged and you are **on unit**, DO NOT MOVE. Remain on unit and take the following actions. The order and degree of action will depend upon the situation.

- Warn people nearby that an electric strike has occurred. Instruct them to leave the area and contact utility.
- Raise attachment and/or excavator and drive from immediate area.
- Contact utility company to shut off power.
- Do not return to jobsite or allow anyone into area until given permission by utility company.

If you suspect an electric line has been damaged and you are **off unit**, DO NOT TOUCH UNIT. Take the following actions. The order and degree of action will depend upon the situation.

- LEAVE AREA. The ground surface may be electrified, so take small steps with feet close together to reduce the hazard of being shocked from one foot to the other. For more information, contact your Ditch Witch dealer.
- Contact utility company to shut off power.
- Do not return to jobsite or allow anyone into area until given permission by utility company.

If a Gas Line is Damaged

If you suspect a gas line has been damaged, take the following actions. The order and degree of action will depend on the situation.

- Immediately shut off engine(s), if this can be done safely and quickly.
- Remove any ignition source(s), if this can be done safely and quickly.
- Warn others that a gas line has been cut and that they should leave the area.
- Leave jobsite as quickly as possible.
- Immediately call your local emergency phone number and utility company.
- If jobsite is along street, stop traffic from driving near jobsite.
- Do not return to jobsite until given permission by emergency personnel and utility company.

https://truckmanualshub.com/

If a Fiber Optic Cable is Damaged

Do not look into cut ends of fiber optic or unidentified cable. Vision damage can occur.

If Machine Catches on Fire

Perform emergency shutdown procedure and then take the following actions. The order and degree of action will depend on the situation.

- Immediately move battery disconnect switch (if equipped) to disconnect position.
- If fire is small and fire extinguisher is available, attempt to extinguish fire.
- If fire cannot be extinguished, leave area as quickly as possible and contact emergency personnel.

https://truckmanualshub.com/

https://truckmanualshub.com/

Controls

Chapter Contents

Front Console 20

- Controls. 20
- Indicators. 23

SAE/ISO Control 26

Joysticks 27

Seat 32

Battery 34

https://truckmanualshub.com/

Front Console

Controls

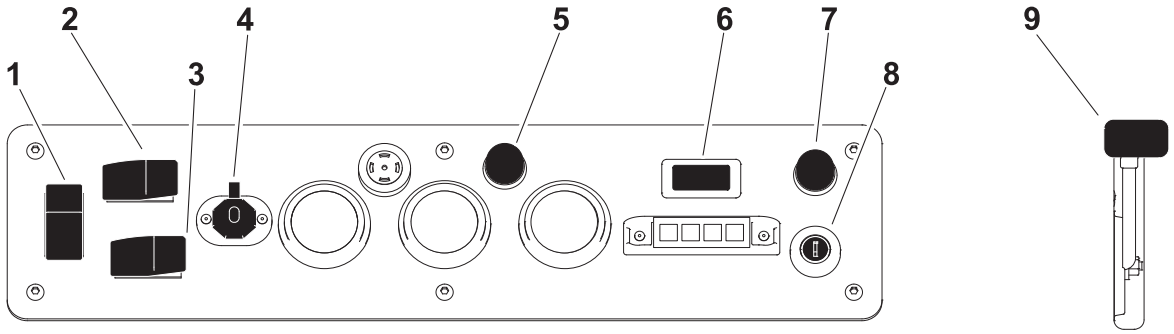

t19om010h.eps

1. 2-Speed flow switch
2. Front light switch
3. Rear light switch
4. Auxiliary power outlet
5. Horn
6. Front attachment lock switch
7. Glow plug switch
8. Ignition switch
9. Throttle

Item	Description	Notes
1. 2-Speed flow switch 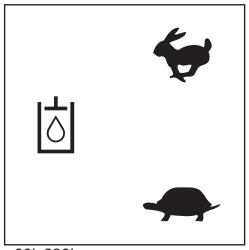 c00ic230h.eps	To select high flow, press top. To select low flow, press bottom.	Increasing engine speed also increases attachment speed.
2. Front light switch 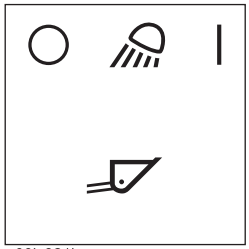 c00ic321h.eps	To turn on, press right side. To turn off, press left side.	

https://truckmanualshub.com/

Item	Description	Notes
3. Rear light switch 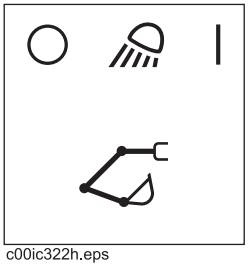 c00ic322h.eps	To turn on, press right side. To turn off, press left side.	
4. Auxiliary power outlet 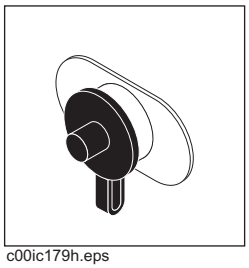 c00ic179h.eps	To operate work lights or other 12V devices, plug into outlet.	
5. Horn 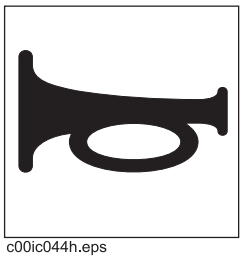 c00ic044h.eps	To sound horn, press.	
6. Attachment lock (optional) 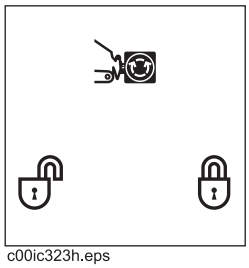 c00ic323h.eps	To lock front attachment, press right side. To unlock front attachment, press left side.	
7. Glow plug button 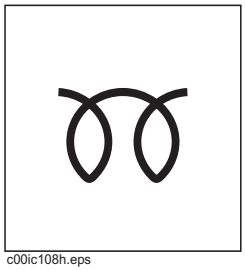 c00ic108h.eps	To help start cold engine, turn ignition switch to first position. Press glow plug button as directed in notes. Release button, then turn ignition switch all the way clockwise.	**IMPORTANT:** Press glow plug button according to temperatures below. • If ambient temperature is below 40° F (4° C), press and hold button for 15 seconds. • If ambient temperature is below 20° F (-7° C), press and hold button for 60 seconds.

https://truckmanualshub.com/

Item	Description	Notes
8. Ignition switch 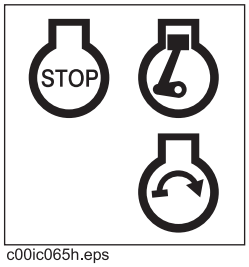 c00ic065h.eps	To start engine, insert key and turn clockwise. To stop engine, turn key counterclockwise.	**IMPORTANT:** If engine does not start or stalls, turn key to STOP and then restart.
9. Throttle c00ic007c.eps	To increase engine speed, push up. To decrease engine speed, pull down.	Increasing engine speed also increases attachment speed.

https://truckmanualshub.com/

Indicators

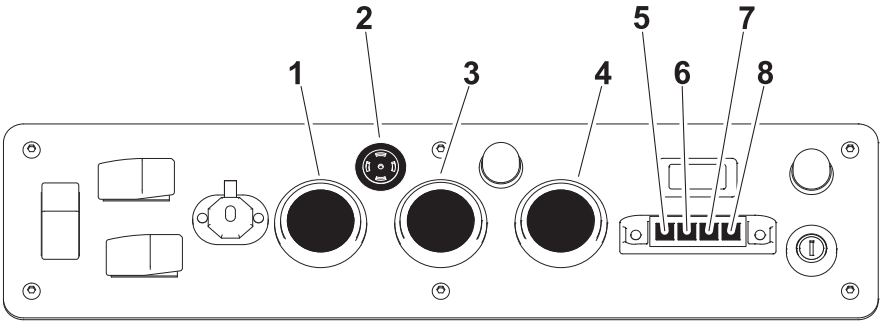

t19om043h.eps

1. Hourmeter
2. Hydraulic fluid temperature alarm
3. Tachometer
4. Fuel gauge
5. Engine coolant temperature indicator
6. Hydraulic fluid temperature indicator
7. Glow plug indicator
8. Hydraulic fluid filter restriction indicator

Item	Description	Notes
1. Hourmeter 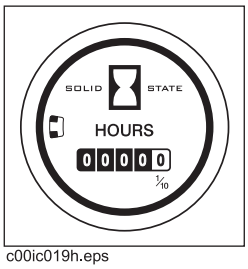 c00ic019h.eps	Displays engine operating time.	Use these times to schedule service.
2. Hydraulic fluid temperature alarm 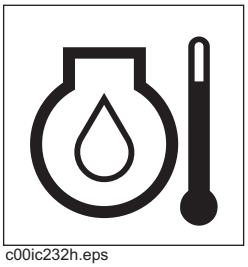 c00ic232h.eps	Sounds when hydraulic fluid temperature is above 210°F (100°C).	• Allow unit to cool. • Check hydraulic fluid level.

https://truckmanualshub.com/

Item	Description	Notes
3. Tachometer 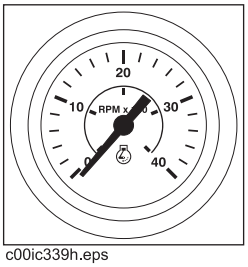 c00ic339h.eps	Displays engine RPM x 100.	
4. Fuel gauge 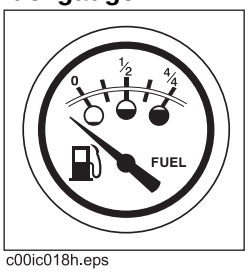 c00ic018h.eps	Displays fuel level in tank.	Use only #2 diesel fuel. Tank holds 20 gal (75.7 L).
5. Engine coolant temperature indicator 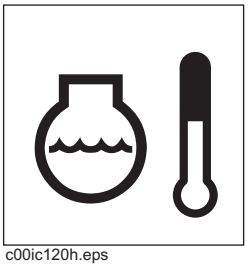 c00ic120h.eps	Lights when coolant temperature exceeds 230°F (110°C).	
6. Hydraulic fluid temperature indicator 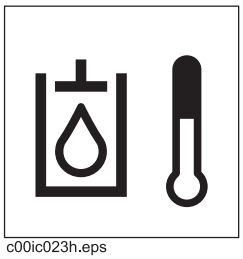 c00ic023h.eps	Lights when hydraulic fluid is over 210°F (100°C).	• Allow engine to cool. • Check hydraulic fluid level.

https://truckmanualshub.com/

Item	Description	Notes
7. Glow plug indicator 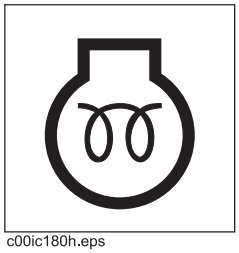 c00ic180h.eps	Lights when glow plugs are activated.	
8. Hydraulic fluid filter indicator 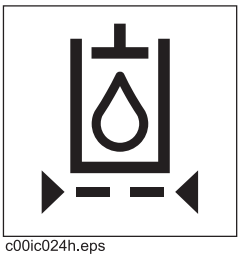 c00ic024h.eps	Lights when hydraulic fluid filter is restricted.	

https://truckmanualshub.com/

SAE/ISO Control Valve

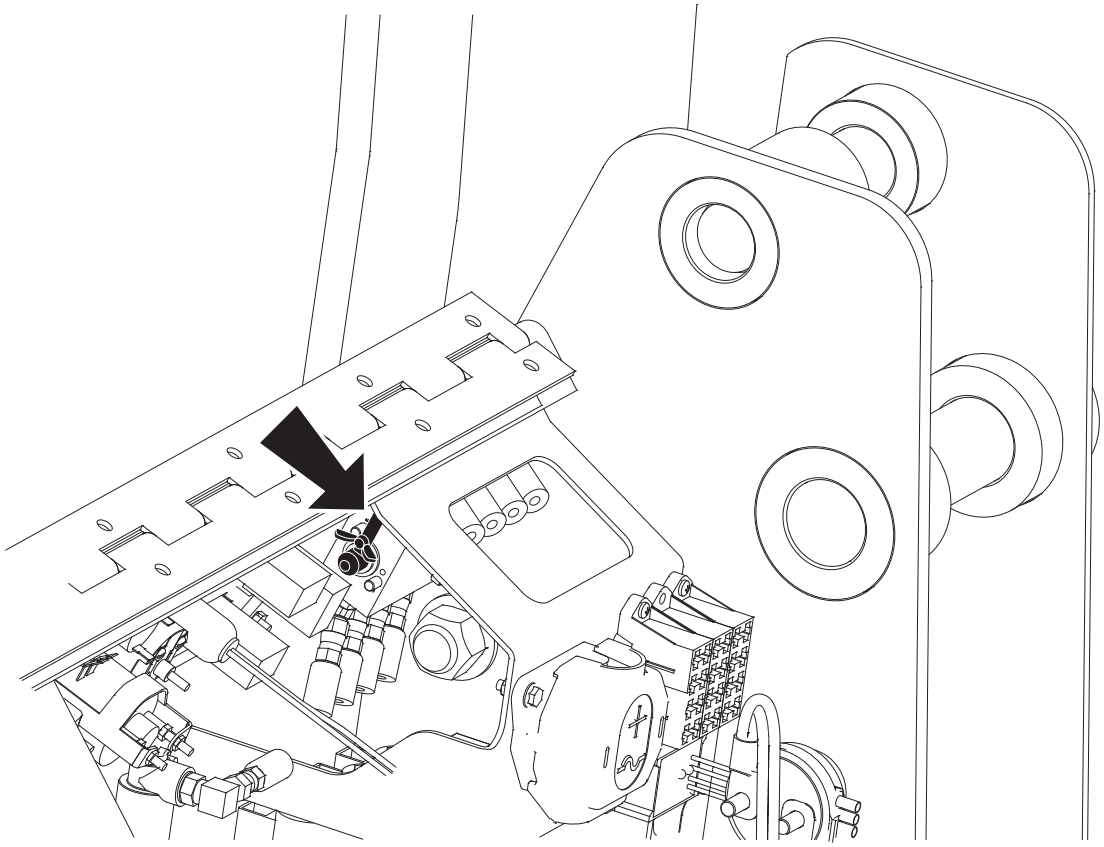

t19om042h.eps

1. SAE/ISO control

Item	Description	Notes
1. SAE/ISO control ISO SAE c00ic340h.eps	To operate in ISO mode, turn lever to position 1. To operate in SAE mode, turn lever to position 2	Loosen wing bolt to unlock lever. Tighten wing bolt to lock lever into place. For information on SAE/ISO operating patterns, see "Joysticks" on page 27.

https://truckmanualshub.com/

Joysticks

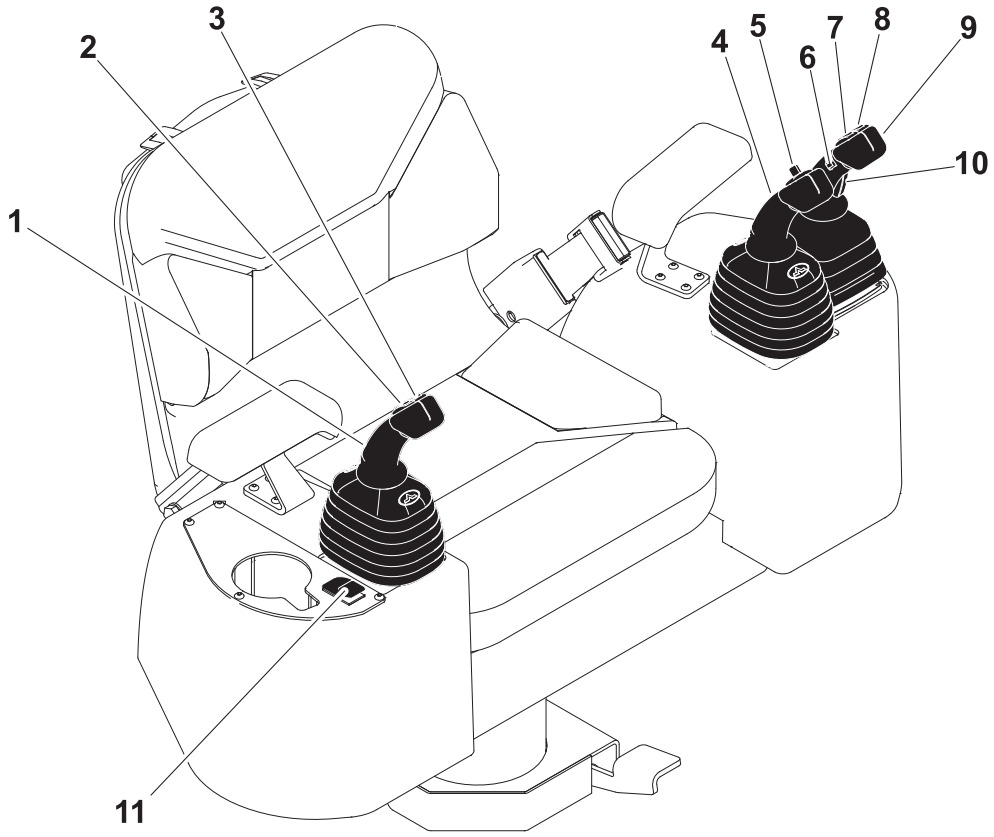

t19om011h.eps

1. Right joystick
2. Attachment drive switch
3. Attachment power switch (optional)
4. Left joystick
5. Boom offset switch
6. 2-Speed ground drive switch
7. Left stabilizer switch
8. Right stabilizer switch
9. Ground drive joystick
10. Operator presence switch
11. Work mode switch

https://truckmanualshub.com/

Item	Description	Notes
1. Right joystick 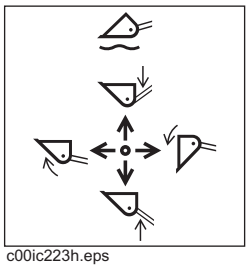 c00ic223h.eps	With work mode switch in **tool carrier mode**: • To move lift arms down, push. • To float, push forward to end. Control will lock into float position. • To move lift arms up, pull. • To curl attachment up, move to left. • To curl attachment down, move to right.	**IMPORTANT:** • Control can perform more than one action at a time. Using them together, operator can "feather" or combine operations. • Do not exceed rated operating capacity when lifting loads. See page 91.
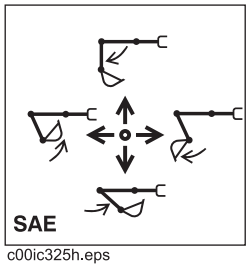 c00ic325h.eps	With work mode switch in **excavator mode**: • To open bucket, move right. • To close bucket, move left. • To move dipper in, pull. • To move dipper out, push.	**IMPORTANT:** • SAE excavator control pattern is shown. To switch from ISO to SAE mode, see page 26. • Control can perform more than one action at a time. Using them together, operator can "feather" or combine operations.
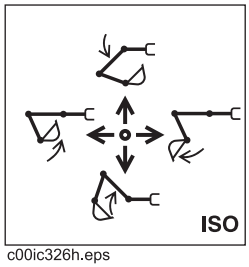 c00ic326h.eps	With work mode switch in **excavator mode**: • To open bucket, move right. • To close bucket, move left. • To raise boom, pull. • To lower boom, push.	**IMPORTANT:** • ISO excavator control pattern is shown. To switch from SAE to ISO mode, see page 26. • Control can perform more than one action at a time. Using them together, operator can "feather" or combine operations.
2. Attachment drive switch 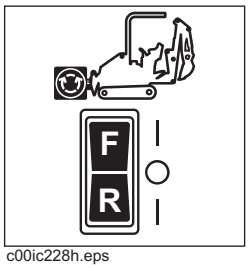 c00ic228h.eps	To engage attachment drive in forward, push top. Switch will lock into forward position. To engage attachment drive in reverse, push and hold bottom.	

https://truckmanualshub.com/

Item	Description	Notes
3. Attachment power switch 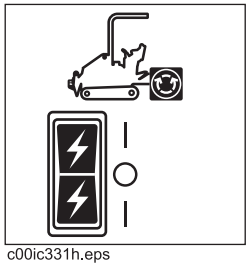 c00ic331h.eps	To activate attachment electric power in forward, push top. To activate attachment electric power in reverse, push bottom.	**IMPORTANT:** Optional auxiliary electric kit must be installed for this switch to function.
4. Left joystick 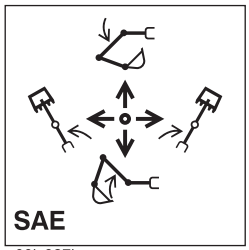 c00ic327h.eps	With work mode switch in **excavator mode**: • To swing excavator right, move right. • To swing excavator left, move left. • To raise boom, pull. • To lower boom, push.	**IMPORTANT:** • SAE excavator control pattern is shown. To switch from ISO to SAE mode, see page 26. • Control can perform more than one action at a time. Using them together, operator can "feather" or combine operations. • Do not exceed rated operating capacity when lifting loads. See page 91.
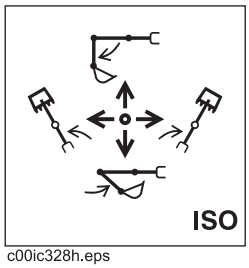 c00ic328h.eps	With work mode switch in **excavator mode**: • To swing excavator to right, move right. • To swing excavator to left, move left. • To move dipper in, pull. • To move dipper out, push.	**IMPORTANT:** • ISO excavator control pattern is shown. To switch from SAE to ISO mode, see page 26. • Control can perform more than one action at a time. Using them together, operator can "feather" or combine operations.
5. Boom offset switch 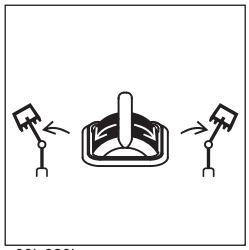 c00ic329h.eps	To swing boom to right, press right. To swing boom to left, press left.	

https://truckmanualshub.com/

Item	Description	Notes
6. 2-Speed ground drive switch 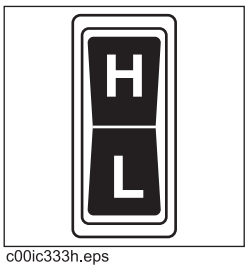 c00ic333h.eps	To select high speed, press top. To select low speed, press bottom.	
7. Left stabilizer switch 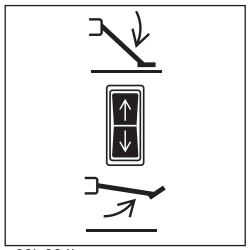 c00ic334h.eps	While facing the **excavator**: • To lower stabilizer on the operator's right side, press top. • To raise stabilizer, press bottom.	**IMPORTANT:** If operator is facing **tool carrier**, control operates stabilizer on operator's left side.
8. Right stabilizer switch 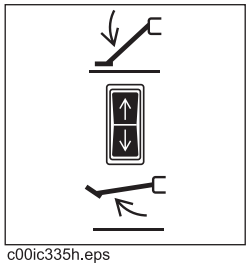 c00ic335h.eps	While facing the **excavator**: • To lower stabilizer on the operator's left side, press top. • To raise stabilizer, press bottom.	**IMPORTANT:** If operator is facing **tool carrier**, control operates stabilizer on operator's right side.
9. Ground drive joystick 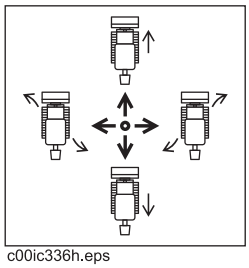 c00ic336h.eps	To move forward, push. To move backward, pull. To go faster in either direction, move farther from neutral. To stop, return to neutral.	**IMPORTANT:** • If operator is facing excavator, control functions are reversed. • For steering instructions, see page 47.

https://truckmanualshub.com/

Item	Description	Notes
10. Operator presence switch 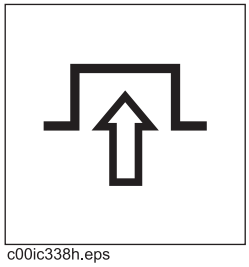 c00ic338h.eps	For use in **excavator** mode: • To enable ground drive, press. • To disable ground drive, release.	**IMPORTANT:** The operator presence switch is not necessary in **tool carrier** mode**.**
11. Work mode switch 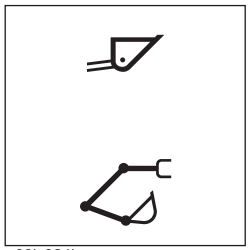 c00ic324h.eps	To select tool carrier mode and control lift arms, press top. To select excavator mode and control excavator, press bottom.	

https://truckmanualshub.com/

Seat

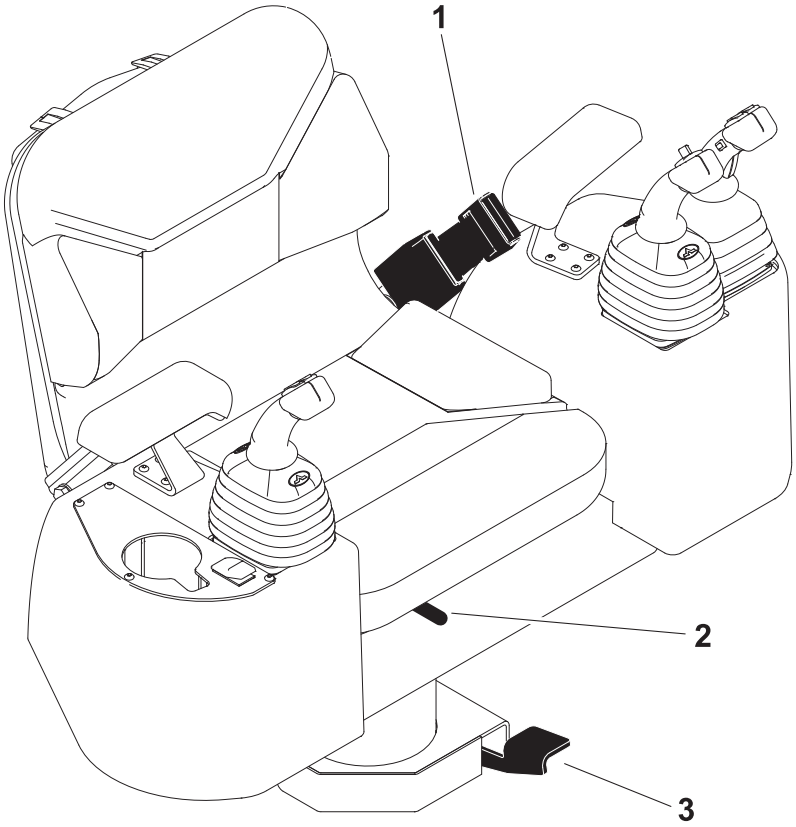

t19om012h.eps

1. Seat belt
2. Seat slide control
3. Operator's station pivot control

Item	Description	Notes
1. Seat belt	To fasten, insert latch into buckle. Adjust until seat belt is low and tight.	**NOTICE:** Always fasten seat belt when operating unit.

https://truckmanualshub.com/

Item	Description	Notes
2. Seat slide control c00ic095h.eps	To slide forward or backward, move left. To lock seat in position, move right.	
3. Operator's station pivot control	To pivot, press and swing station to desired position. To lock into position, release.	

https://truckmanualshub.com/

Battery

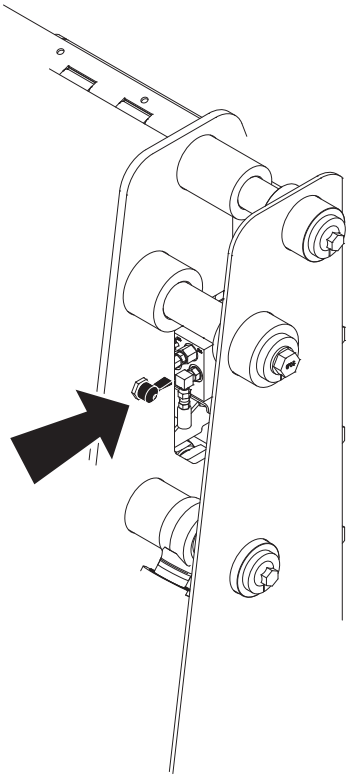

t19om013h.eps

1. Battery disconnect switch

Item	Description	Notes
1. Battery disconnect switch 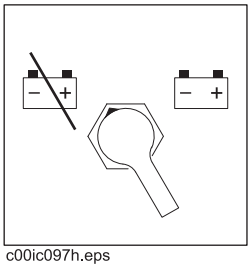 c00ic097h.eps	To disconnect, move switch so that indicator points left. To connect, move switch so that indicator points right.	Use when servicing unit and during long-term storage.

https://truckmanualshub.com/

Operation Overview

Chapter Contents

Planning 36

Using Tool Carrier Mode 36

Using Excavator Mode 36

Leaving Jobsite 36

https://truckmanualshub.com/

Planning

1. Gather information about jobsite. See page 38.
2. Inspect jobsite. See page 39.
3. Classify jobsite. See page 40.
4. Check supplies and prepare equipment. See page 42.
5. Load unit onto truck or trailer. See page 52.

Using Tool Carrier Mode

1. Unload from trailer. See page 54.
2. Drive to job. See page 45.
3. Connect front attachment. See page 64.
4. Operate attachment. See page 66 and attachment operator's manual.
5. Disconnect front attachment. See page 70.

Using Excavator Mode

1. Unload from trailer. See page 54.
2. Drive to job. See page 45.
3. Dig trench or hole. See page 57.

Leaving Jobsite

1. Rinse unit and stow tools. See page 70.
2. Load unit onto trailer. See page 52.

https://truckmanualshub.com/

Prepare

Chapter Contents

Gather Information 38

- Review Job Plan 38
- Notify One-Call Services 38
- Arrange for Traffic Control. 38
- Plan for Emergency Services 38

Inspect Site 39

- Identify Hazards 39

Classify Jobsite. 40

- Inspect Jobsite 40
- Select a Classification 40
- Apply Precautions 41

Check Supplies and Prepare Equipment 42

- Supplies 42
- Fluid Levels 42
- Condition and Function 42
- Accessories 42

https://truckmanualshub.com/

Gather Information

A successful job begins before you dig. The first step in planning is reviewing information already available about the job and jobsite.

Review Job Plan

Review blueprints or other plans. Check for information about existing or planned structures, elevations, or proposed work that may be taking place at the same time.

Notify One-Call Services

Call area One-Call or similar services and have existing lines located and marked. Call any utilities in your area that do not subscribe to One-Call.

Arrange for Traffic Control

If working near a road or other traffic area, contact local authorities about safety procedures and regulations.

Plan for Emergency Services

Have the telephone numbers for local emergency and medical facilities on hand. Check that you will have access to a telephone.

https://truckmanualshub.com/

Inspect Site

Inspect jobsite before transporting equipment. Check for the following:

- changes in elevation such as hills or other open trenches
- obstacles such as buildings, railroad crossings, or streams
- signs of utilities (See "Inspect Jobsite" on page 40.)
- traffic
- access
- soil type and condition

Identify Hazards

Identify safety hazards and classify jobsite. See "Classify Jobsite" on page 40.

WARNING Jobsite hazards could cause death or serious injury. Use correct equipment and work methods. Use and maintain proper safety equipment.

NOTICE:

- Wear personal protective equipment including hard hat, safety eye wear, and hearing protection.
- Do not wear jewelry or loose clothing.
- Notify One-Call and companies which do not subscribe to One-Call.
- Comply with all utility notification regulations before digging or drilling.
- Verify location of previously marked underground hazards.
- Mark jobsite clearly and keep spectators away.

Remember, jobsite is classified by hazards in place -- not by line being installed.

https://truckmanualshub.com/

Classify Jobsite

Inspect Jobsite

- Follow U.S. Department of Labor regulations on excavating and trenching (Part 1926, Subpart P) and other similar regulations.
- Contact your local One-Call (811 in USA) or the One-Call referral number (888-258-0808 in USA and Canada) to have underground utilities located before working. Also contact any utilities that do not participate in the One-Call service.
- Inspect jobsite and perimeter for evidence of underground hazards, such as:
  - "buried utility" notices
  - utility facilities without overhead lines
  - gas or water meters
  - junction boxes
  - drop boxes
  - light poles
  - manhole covers
  - sunken ground
- Have an experienced locating equipment operator sweep area within 20' (6 m) to each side of work path. Verify previously marked line and cable locations.
- Mark location of all buried utilities and obstructions.
- Classify jobsite.

Select a Classification

Jobsites are classified according to underground hazards present.

If working . . .	then classify jobsite as . . .
within 10' (3 m) of a buried electric line	electric
within 10' (3 m) of a natural gas line	natural gas
in sand, granite, or concrete which is capable of producing crystalline silica (quartz) dust	crystalline silica (quartz) dust
within 10' (3 m) of any other hazard	other

NOTICE: If you have any doubt about jobsite classification, or if jobsite might contain unmarked hazards, take steps outlined previously to identify hazards and classify jobsite before working.

https://truckmanualshub.com/

Apply Precautions

Once classified, precautions appropriate for jobsite must be taken.

Electric Jobsite Precautions

Use one or both of these methods.

- Expose line by careful hand digging or soft excavation.
- Have service shut down while work is in progress. Have electric company test lines before returning them to service.

Natural Gas Jobsite Precautions

In addition to positioning equipment upwind from gas lines, use one or both of these methods.

- Expose lines by careful hand digging or soft excavation.
- Have gas shut off while work is in progress. Have gas company test lines before returning them to service.

Crystalline Silica (Quartz) Dust Precautions

Cutting, drilling, or working materials such as concrete, sand or rock containing quartz may result in exposure to silica dust. use water spray or other means to control dust. If workers are exposed to dust they must wear appropriate breathing protection. Silica dust may cause lung disease and is known in the State of California to cause cancer.

Other Jobsite Precautions

You may need to use different methods to safely avoid other underground hazards. Talk with those knowledgeable about hazards present at each site to determine which precautions should be taken or if job should be attempted.

https://truckmanualshub.com/

Check Supplies and Prepare Equipment

Supplies

- fuel
- keys
- personal protective equipment, such as hard hat and safety glasses

Fluid Levels

- fuel
- hydraulic fluid
- engine oil

Condition and Function

- filters (air, oil, hydraulic)
- tracks
- pumps and motors
- hoses and valves
- signs, guards, and shields

Accessories

Fire Extinguisher

If required, mount a fire extinguisher near the power unit but away from possible points of ignition. The fire extinguisher should always be classified for both oil and electric fires. It should meet legal and regulatory requirements.

https://truckmanualshub.com/

Drive

Chapter Contents

Start Unit 44

Drive 45

Steer 47

Shut Down 48

https://truckmanualshub.com/

Start Unit

EMERGENCY SHUTDOWN: Turn ignition switch to STOP.

1. Fasten and adjust seat belt.
2. Ensure all controls are in neutral.
3. If necessary, use glow plug button to warm cold engine. See page 21.
4. Turn ignition switch to start position and release when engine starts.

IMPORTANT:

- After starting in cold temperatures, allow unit to warm up by running it at low throttle for several minutes.
- When working in low ambient temperatures, pay special attention to fuel, oil viscosity, antifreeze, and water adhering to filter.

https://truckmanualshub.com/

Drive

General Operation

NOTICE: When driving unit more than a few feet (meters), pivot seat so that operator is facing lift arms. If operator is facing excavator, operation of track drive controls is reversed.

1. Verify that excavator boom lock is engaged.
2. Adjust throttle as needed.
3. Ensure that work mode switch is in tool carrier mode.
4. Use right joystick to raise mount plate (and attachment) off ground.
5. Move ground drive joystick to forward or reverse. See "Joysticks" on page 27.

https://truckmanualshub.com/

Safe Slope Operation

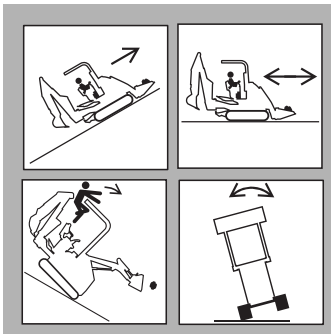

WARNING Tipover possible. Machine can tip over and crush you.

- Always operate with heavy end uphill.
- Always carry load low. High load can cause tipping, loss of load or loss of visibility.
- Drive cautiously at all times.
- Never jerk control levers. Use a steady even motion.
- Do not park unit on slope without lowering attachment to the ground, returning all controls to neutral position, shutting down unit, and applying parking brake.
- See "Tipping capacity" on page 93.

Operating safely on a slope depends upon many factors including:

- Distribution of machine weight, including front loading and absence of load
- Height of load
- Even or rough ground conditions
- Potential for ground giving way causing unplanned tilt forward, reverse or sideways
- Nearness of ditches, ruts, stumps or other obstructions and sudden changes in slope
- Speed
- Turning
- Braking performance
- Operator skill

These varying factors make it impractical to specify a maximum safe operating angle in this manual. It is therefore important for the operator to be aware of these conditions and adjust operation accordingly. Maximum engine angle and braking performance are two absolute limits which must never be exceeded. These maximums are stated below since they are design limits. These design limits usually exceed the operating limits and must never be used alone to establish safe operating angle for variable conditions.

Maximum engine lubrication angle – 30°

Maximum service brake retarding force – equal to traction of both tracks.

Maximum secondary brake retarding force – equal to traction of one track.

Maximum park brake holding force – equal to traction of both tracks.

https://truckmanualshub.com/

Steer

NOTICE: When driving unit more than a few feet (meters), pivot seat so that operator is facing lift arms. If operator is facing excavator, operation of track drive controls is reversed.

To steer while moving forward, push forward and then move to left or right. Unit will turn to left or right.

To steer while moving backward, pull back and then move to left or right. Unit will turn to left or right.

For tight steering in low speed, move control to center position and then to left or right side. Tracks will counter-rotate and turn unit in a tight circle.

Reducing Track Wear

Rubber tracks are best suited at soil-based job sites with minimal rock and debris. Sharp objects such as gravel, steel shards, and broken concrete will damage rubber tracks and undercarriage components. Excessive operation on concrete or asphalt will shorten track life. When storing your machine, keep tracks away from rain and direct sunlight.

Wash tracks daily to remove foreign objects and abrasive soil from sprockets and idler rollers. Drive slowly and make wide turns when possible. Regularly check undercarriage components (sprocket, rollers, idler) for wear and damage. Maintain proper track tension. (See "Check Track Tension" on page 79.)

To prevent premature wear, avoid the following:

- Spinning tracks under heavy load.
- Turning on sharp objects such as stones, stumps and debris.
- Quick turns or "spin" turns on asphalt or concrete.
- Driving over curbs, ledges, and sharp objects.
- Driving with sidewall edges pressed against hard walls, curbs or other objects.
- Driving on slopes.
- Operating on corrosive materials such as salt or fertilizer. Wash immediately.

https://truckmanualshub.com/

Shut Down

1. Move all controls to neutral position.
2. Ensure lift arms are lowered to ground and ensure excavator boom lock is engaged.
3. Run engine at low idle for three minutes to cool.
4. Turn ignition switch to STOP.
5. Remove key.

NOTICE: Do not park unit on slope without lowering attachment to the ground and turning ignition switch to STOP.

IMPORTANT: This unit has a built-in parking brake. The parking brake sets when one of these conditions exist:

- No hydraulic pressure (engine stopped).
- Seat switch is not activated.
- Unit is in excavator mode.

https://truckmanualshub.com/

Transport

Chapter Contents

Lift 50

- Points 50
- Procedure 50

Haul 51

- Inspect Trailer 51
- Hitch Trailer 51
- Load 52
- Tie Down 53
- Unload 54
- Unhitch Trailer 54

Tow 55

https://truckmanualshub.com/

Lift

WARNING Crushing weight. If load falls or moves it could kill or crush you. Use proper procedures and equipment or stay away.

Points

Lifting points are identified by lifting decals. Lifting at other points is unsafe and can damage machinery.

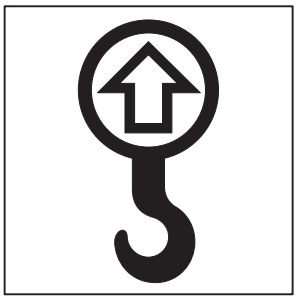

ic1319a.eps

Procedure

Use a crane capable of supporting the equipment's size and weight. See "General Dimensions" on page 91 or measure and weigh equipment before lifting.

1. Attach chains to four lift points (two on each side of unit).
2. Attach each chain securely to cross members.

IMPORTANT: Length of spreader bars should be equal to width of unit.

3. Bring chains together to a central pull point.

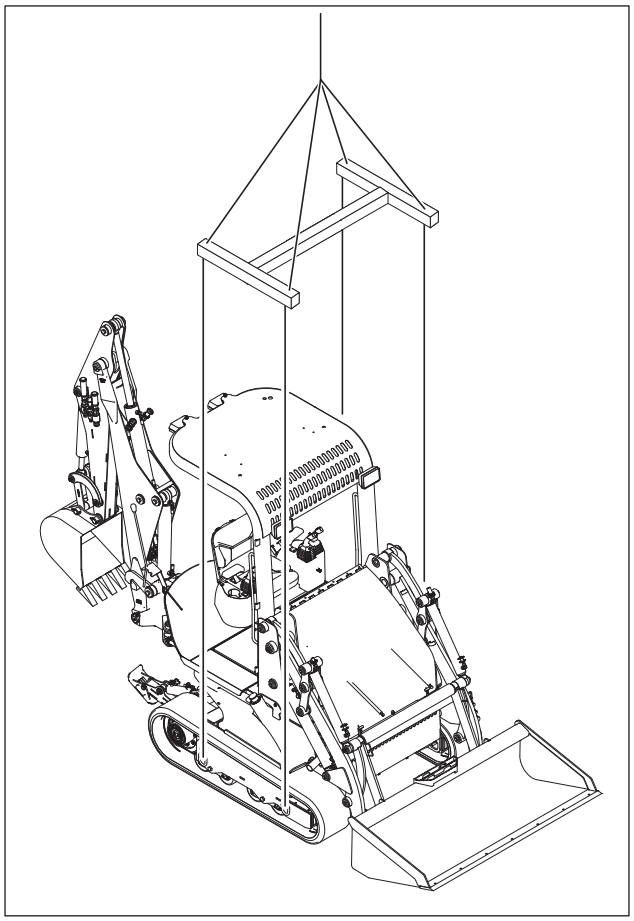

t19om014h.eps

https://truckmanualshub.com/

Haul

Inspect Trailer

- Check hitch for wear and cracks. Lubricate if needed.
- Check u-bolts and axles for wear. Replace if needed.
- Check fasteners for wear and tightness. Replace or tighten if needed.
- Check battery for 12V charge.
- Inspect lights for cleanliness and correct operation. Inspect reflectors and replace if needed.
- Check tire pressure. Check lug nut torque with a torque wrench. Adjust if needed.
- Ensure trailer brakes are adjusted to come on in synchronization with tow vehicle brakes.
- Check ramps and trailer bed for cracks.

Hitch Trailer

1. Back tow vehicle to trailer.
2. Put manual transmission into first or reverse gear or automatic transmission into park. Turn off ignition. Set parking brake.
3. Connect trailer drawbar, lunette or coupler to tow vehicle hitch and lock in place with lock pin. If needed, adjust drawbar, lunette or coupler height to level load.
4. Connect safety chains to tow vehicle.
5. Connect breakaway switch cable to tow vehicle. Do not connect to pintle hook or hitch ball.
6. Plug trailer electrical connector into tow vehicle connector.
7. Use jack crank to raise jack base and stow.
8. Remove wheel blocks.

https://truckmanualshub.com/

Load

WARNING Crushing weight. If load falls or moves it could kill or crush you. Use proper procedures and equipment or stay away.

NOTICE:

- Load and unload trailer on level ground.
- Verify that trailer wheels are blocked.
- Incorrect loading can cause trailer swaying.
- Attach trailer to vehicle before loading or unloading.
- Ten to fifteen percent of total vehicle weight (equipment plus trailer) must be on tongue to help prevent trailer sway.

IMPORTANT: Disconnect and stow front attachment before loading unit. Rear stability is reduced when operating machine with no attachment on excavator end.

1. Start engine.
2. Ensure work mode switch is in tool carrier mode.
3. Raise mount plate off ground.
4. Move unit to rear of trailer and align with ramps.
5. Slow engine to low throttle and slowly drive unit onto trailer.
6. Once unit is correctly positioned on trailer, lower mount plate to trailer floor.
7. Verify that excavator boom lock is engaged.
8. Stop engine.
9. Attach tiedowns where indicated on page 53.

https://truckmanualshub.com/

Tie Down

Points

Tiedown points are identified by tiedown decals. Securing to trailer at other points is unsafe and can damage machinery.

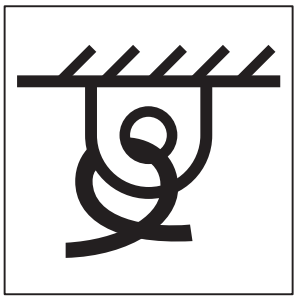

ic1320a.eps

Procedure

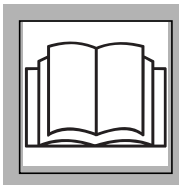

WARNING Incorrect procedures could result in death, injury, or property damage. Learn to use equipment correctly.

IMPORTANT: Do not use any point on excavator and swing arm as tiedown point.

Loop tiedowns around unit at tiedown points. Make sure tiedowns are tight before transporting.

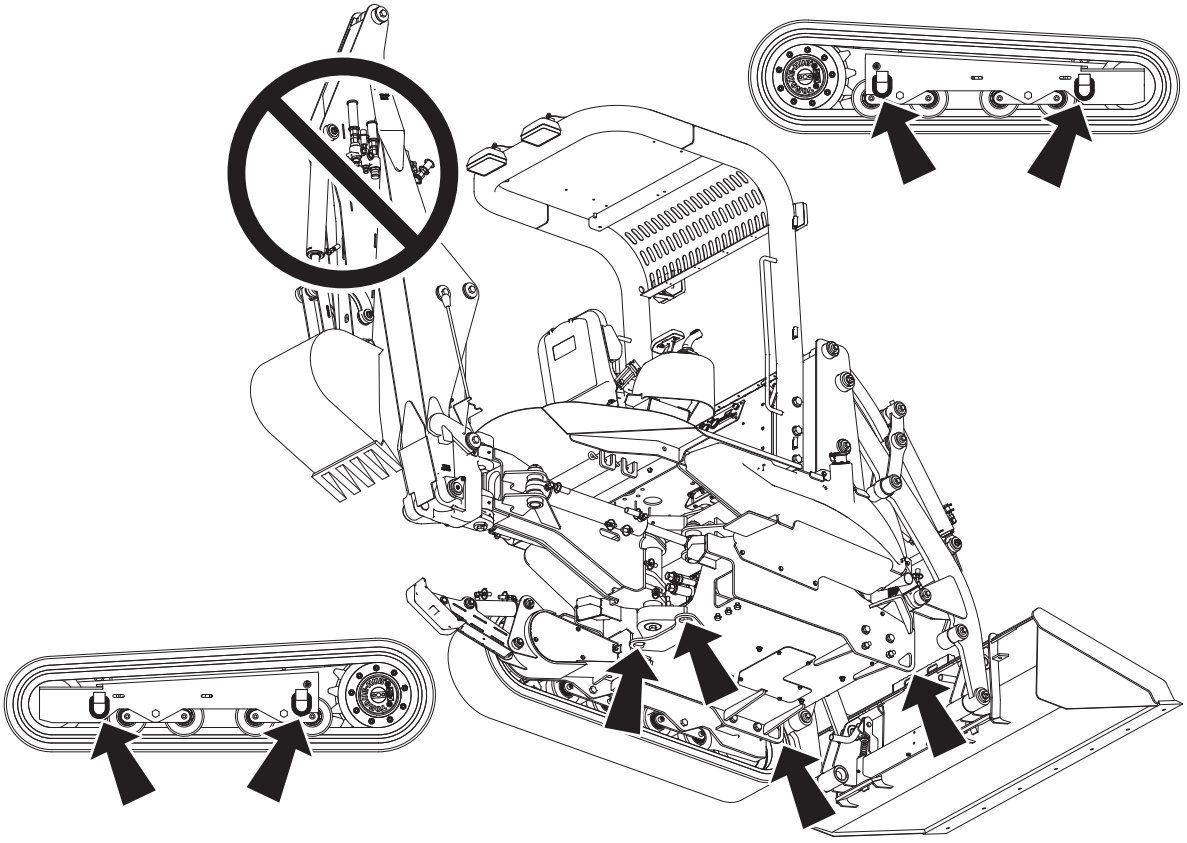

t19om015h.eps

https://truckmanualshub.com/

Unload

WARNING Crushing weight. If load falls or moves it could kill or crush you. Use proper procedures and equipment or stay away.

NOTICE:

- Load and unload trailer on level ground.
- Ensure trailer wheels are blocked.
- Attach trailer to vehicle before loading or unloading.

1. Lower ramps.
2. Remove tiedowns.
3. Start engine.
4. Ensure work mode switch is in tool carrier mode.
5. Raise mount plate.
6. Slow engine to low throttle and slowly back unit down ramps.

Unhitch Trailer

1. Stop tow vehicle and trailer on level ground.
2. Put unit in excavator mode. Turn off ignition.
3. Block trailer wheels.
4. Reverse "Hitch Trailer " steps to unhitch trailer from tow vehicle.

https://truckmanualshub.com/

Tow

Under normal conditions, unit should not be towed. If unit breaks down and towing is necessary:

- Do not tow for more than 200 yd (180 m).
- Tow at less than 1 mph (1.6 km/h).
- Use maximum towing force of 1.5 times unit weight.

Procedure

Prepare for Towing

1. Attach tow line to available tow points facing towing vehicle.
2. Disengage track planetaries:
   - For normal operation, plate faces outward (B).
   - Remove top and bottom bolt from cover plate (shown).
   - Reverse cover plate so that indention faces inward (A).
   - Install bolts.

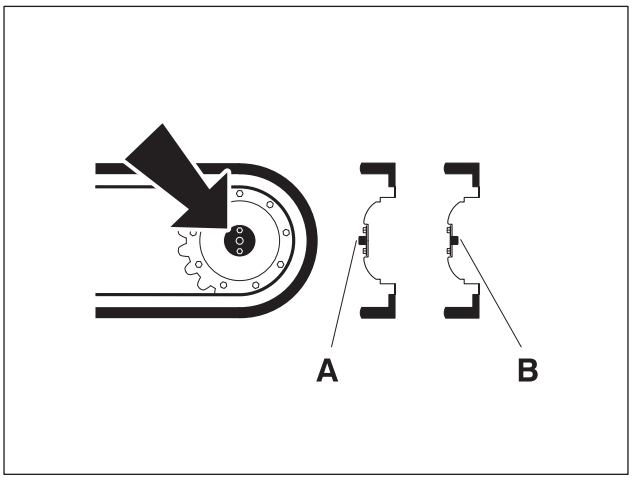

Planeteries.eps

https://truckmanualshub.com/

https://truckmanualshub.com/

Dig

Chapter Contents

Overview 58

- Filling Bucket 58
- Dumping Bucket 59

Digging 60

- Single Inline Trench 61
- Single Offset Trench 61
- Multiple Trenches 62

https://truckmanualshub.com/

Overview

IMPORTANT: This chapter covers how to use the excavator. For information on how to use front-mounted attachments, refer to controls chapter and attachment operator's manual.

The XT1600 can perform a variety of different kinds of work in excavator mode. All basic excavator work involves filling and dumping the bucket.

Filling Bucket

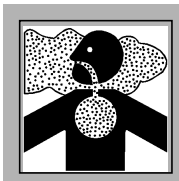

DANGER Jobsite hazards could cause death or serious injury. Use correct equipment and work methods. Use and maintain proper safety equipment.

NOTICE: Cutting, drilling, or working materials such as concrete, sand, or rock containing quartz may result in exposure to silica dust. Use water spray or other means to control dust. If workers are exposed to dust they must wear appropriate breathing protection. Silica dust may cause lung disease and is known to the State of California to cause cancer.

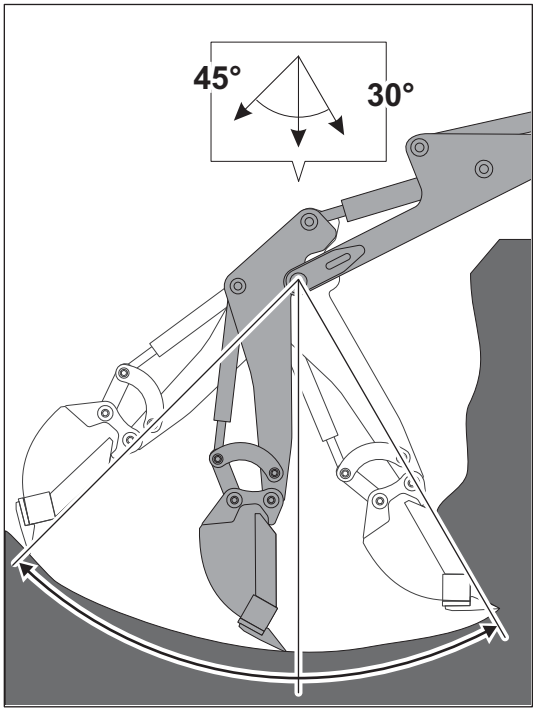

t10om058h.eps

Use right and left joysticks to control excavator dipper, boom, and bucket.

1. Keep dipper and boom at right angles as much as possible for maximum power.
2. Keep bucket in line with dipper as much as possible.
3. Position bucket so teeth cut soil. As soil is cut, curl bucket under dipper.
4. Move dipper and bucket together. Increasing engine speed will increase excavator speed but not excavator force.
5. When job is finished, stow excavator, pivot seat to face tool carrier end, switch unit into tool carrier mode and drive away from area.

https://truckmanualshub.com/

Dumping Bucket

Use right and left joysticks to control excavator dipper, boom, and bucket.

1. Position unit.

Onto truck	Into hole or onto ground
Position unit between material to be loaded and back end of truck, if possible.	Position unit to minimize the need for travel.

2. Fill bucket.
3. Dump bucket.

Onto truck	Into hole or onto ground
• Swing boom into position over truck. • Raise boom above truck bed. • Move dipper out and open bucket. • Swing boom back into position over fill site.	• Swing boom into position over dump site. • Move dipper out and open bucket. • Swing boom back into position over fill site.

4. Continue filling and dumping buckets.
5. Reposition unit as needed to complete job.

IMPORTANT: If operator is facing excavator when driving, unit movements are reversed.

6. When job is finished, stow excavator, pivot seat to face tool carrier end, switch unit into tool carrier mode and drive away from area.

https://truckmanualshub.com/

Diggin g

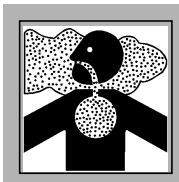

WARNING Jobsite hazards could cause death or serious injury. Use correct equipment and work methods. Use and maintain proper safety equipment.

NOTICE: Cutting, drilling, or working materials such as concrete, sand, or rock containing quartz may result in exposure to silica dust. Use water spray or other means to control dust. If workers are exposed to dust they must wear appropriate breathing protection. Silica dust may cause lung disease and is known to the State of California to cause cancer.

NOTICE:

- Do not lift loads heavier than lift capacity for unit.
- Keep bystanders clear of work area.

IMPORTANT:

- Unit lift capacity is limited by stability. Unit is most likely to tip when arms are horizontal. A load picked up when arms are above or below horizontal can cause unit to tip when arms are moved to the horizontal position.
- When filling bucket from materials piled higher than unit, keep unit bucket about 2' (610 mm) above ground and work around pile instead of cutting deeply into one side.
- Do not use impact force of excavator bucket to break materials. Unit damage and loss of stability can occur.
- Take care to avoid digging deeply under the tracks. Ground under the tracks can collapse and cause unit to fall.

https://truckmanualshub.com/

Single Inline Trench

1. Position unit with tracks parallel with the intended digging path.
2. Fill and dump buckets.
3. Reposition unit as needed to continue trench.

IMPORTANT: If operator is facing excavator when driving, unit movements are reversed.

4. When trench is finished, stow excavator, pivot seat to face tool carrier end, switch unit into tool carrier mode and drive away from trench.

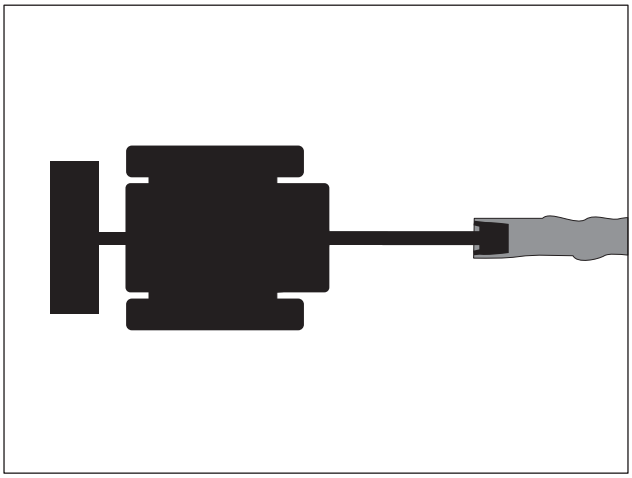

xt-Digging-InlineTrench.eps

Single Offset Trench

1. Position unit near the intended digging path.
2. Swing excavator and offset boom as needed to align with digging path.
3. Fill and dump buckets.
4. Reposition unit as needed to continue trench.

IMPORTANT: If operator is facing excavator when driving, unit movements are reversed.

5. When trench is finished, stow excavator, pivot seat to face tool carrier end, switch unit into tool carrier mode and drive away from trench.

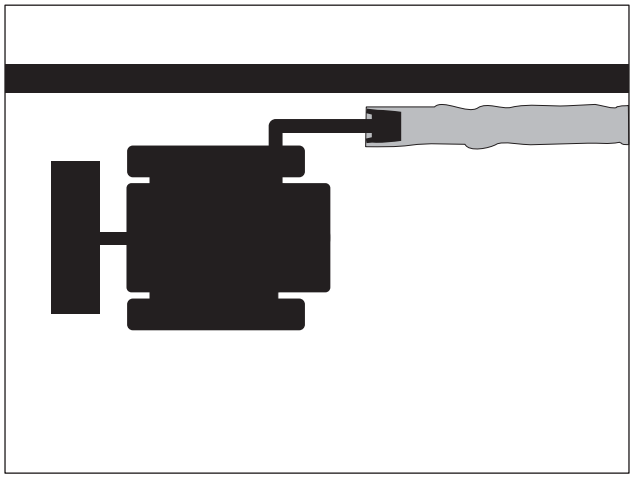

xt-Digging-InlineTrench.eps

https://truckmanualshub.com/

Multiple Trenches

1. Position unit in a central location to the intended digging paths.
2. Swing excavator and offset boom as needed to align with first digging path.
3. Fill and dump buckets.
4. Reposition excavator and boom as need to dig additional trenches.
5. When all trenches are finished, stow excavator, pivot seat to face tool carrier end, switch unit into tool carrier mode and drive away from area.

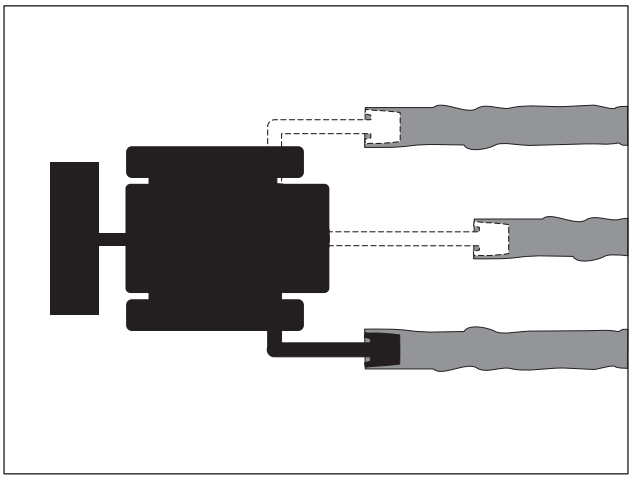

xt-Digging-MultipleTrenches.eps

IMPORTANT:

- Unit lift capacity is limited by stability. Unit is most likely to tip when arms are horizontal. A load picked up when arms are above or below horizontal can cause unit to tip when arms are moved to the horizontal position.
- When filling bucket from materials piled higher than unit, keep unit bucket about 2' (610 mm) above ground and work around pile instead of cutting deeply into one side.
- Do not use impact force of excavator bucket to break materials. Unit damage and loss of stability can occur.
- Take care to avoid digging deeply under the tracks. Ground under the tracks can collapse and cause unit to fall.

https://truckmanualshub.com/

Systems and Equipment

Chapter Contents

Front Attachments 64

- Connect Attachment 64
- Operate Attachment 66

Optional Equipment 67

https://truckmanualshub.com/

Front Attachments

Connect Attachment

Attachment

IMPORTANT: Before connecting attachment to unit, ensure that mount and receiver plates are free of dirt and debris.

1. Position attachment on level surface with enough space behind it to accommodate unit.
2. Ensure that lock pin handles on mount plate are turned up, as shown.

   Note: If unit is equipped with hydraulic attachment lock option, move attachment lock switch to the unlock position. For information on this control, see page 21.

3. Start engine.

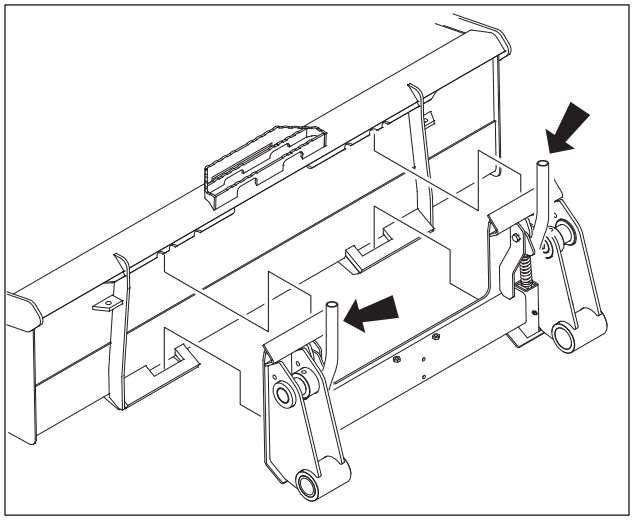

t19om041h.eps

4. Tilt mount plate (2) forward.
5. Position mount plate in the upper lip of the receiver plate (1) on attachment.
6. Raise lift arms while tilting back mount plate.

   IMPORTANT: Attachment should be raised enough to clear the ground. Mount plate should be tilted back fully.

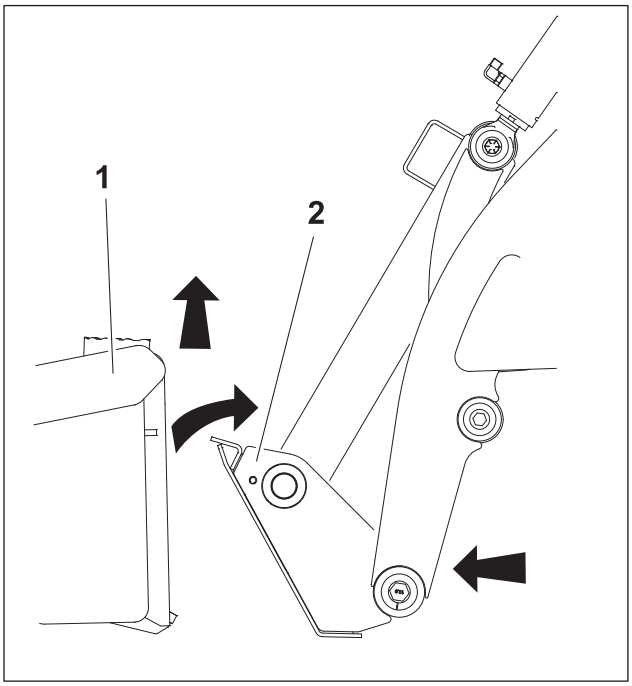

t19om005h.eps

https://truckmanualshub.com/

7. Turn ignition switch off and remove key.
8. Push lock pin handles down to secure attachment to lift plate.

> **Note:** If unit is equipped with hydraulic attachment lock option, move attachment lock switch to the lock position. For information on this control, see page 21.

9. Visually check that pins are extended through bottom of attachment (shown).

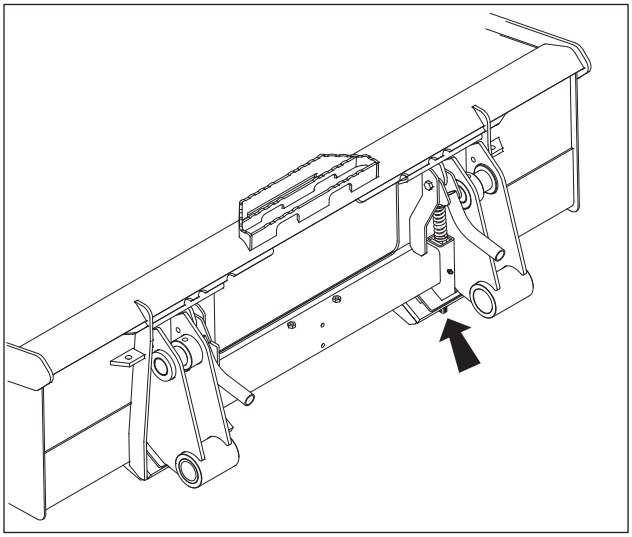

t19om004h.eps

Hydraulic Hoses

If attachment requires hydraulic power for operation, connect hydraulic hoses.

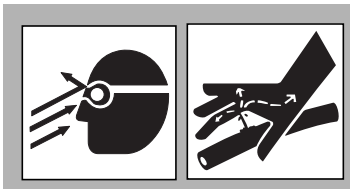

WARNING Pressurized fluid or air could pierce skin and cause injury or death. Stay away.

NOTICE:

- Escaping pressurized fluid can cause injury or pierce skin and poison.
- Before disconnecting a hydraulic line, turn engine off. Lower, block, or support any raised component with a hoist. Cover connection with heavy cloth and loosen connector nut slightly to relieve residual pressure. Catch all fluid in a container.
- Before using system, check that all connections are tight and all lines are undamaged.
- Fluid leaks can be hard to detect. Use a piece of cardboard or wood, rather than hands, to search for leaks.
- Wear protective clothing, including gloves and eye protection.
- If you are injured, seek immediate medical attention from a doctor familiar with this type of injury.

https://truckmanualshub.com/

WARNING Hot parts may cause burns. Do not touch until cool.

NOTICE: Hydraulic couplers, hoses and fluid may be hot. Wear gloves when connecting and disconnecting hydraulic hoses and wait until unit has cooled before touching hydraulic components.

1. Remove dirt and debris from hydraulic couplers.
2. Connect male coupler on attachment to female coupler (3) on unit.
3. Connect female coupler on attachment to male coupler (1) on unit.
4. Connect female coupler on case drain hose to case drain coupler (2) on unit, if attachment requires it.
5. Ensure that connections are secure by pulling on hoses.

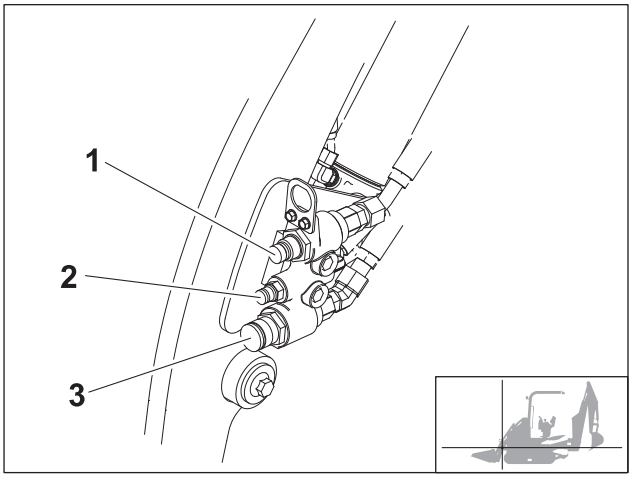

t19om001h.eps

Operate Attachment

NOTICE:

- Do not lift loads heavier than lift capacity for unit.
- Keep bystanders clear of work area.
- Do not walk or work under raised attachments unless lift arms are securely supported.

See "Joysticks" on page 27 for a description of XT1600 front-attachment controls and refer to attachment operator's manual for specific attachment operating instructions.

https://truckmanualshub.com/

Optional Equipment

See your Ditch Witch dealer for more information about the following optional equipment.

Equipment	Description
Ditch Witch XT series buckets and SK series attachments	a variety of attachments are available to expand the capabilities of the tool carrier end of the unit
excavator quick attachment kit	allows excavator end of unit to accept attachments other than bucket with minimal effort
excavator attachments	several attachments are available to expand the capabilities of the excavator end of the unit
excavator auxiliary hydraulic kit	puts hydraulic power to excavator attachments through quick connect couplers
excavator auxiliary electric kit	puts attachment electric power connections on the excavator
tool carrier auxiliary electric kit	puts attachment electric power connections on the tool carrier

https://truckmanualshub.com/

https://truckmanualshub.com/

Complete the Job

Chapter Contents

Rinse Equipment 70

Disconnect Attachment 70

Stow Tools 70

https://truckmanualshub.com/

Rinse Equipment

1. Spray water onto equipment to remove dirt and mud.

> **NOTICE:** Do not spray water onto operator's console. Electrical components could be damaged. Wipe down instead.

2. Open hood and remove debris from inside of unit.
3. Remove mud from track sprockets and rollers.

Disconnect Attachment

1. Lower attachment to the ground.
2. Turn off engine.
3. Disengage lock pins by lifting handles up.

> **Note:** If unit is equipped with hydraulic attachment lock option, move attachment lock switch to the unlock position. For information on this control, see page 21.

4. Disconnect hydraulic hoses, if used.
5. Start engine.
6. Tilt mount plate forward and back unit away from attachment.

Stow Tools

Make sure all tools and accessories are loaded and properly secured on trailer.

https://truckmanualshub.com/

Service

Chapter Contents

Service Precautions 72

Lubrication Overview 73

Recommended Lubricants/Service Key 74

10 Hour 77

50 Hour 80

100 Hour 83

200 Hour 84

250 Hour 85

500 Hour 87

1000 Hour 87

2000 Hour 88

As Needed 89

https://truckmanualshub.com/

Service Precautions

WARNING Incorrect procedures could result in death, injury, or property damage. Learn to use equipment correctly.

NOTICE: Unless otherwise instructed, all service should be performed with engine off.

Working Under Raised Lift Arms

WARNING Crushing weight could cause death or serious injury. Use proper procedures and equipment or stay away.

Before working under raised lift arms, stop engine, remove stow lock from storage location and place into position (shown), start engine, and lower arms until props support lift arms.

To return to normal operation, start engine, raise lift arms slightly, stop engine, and move stow locks into stowed position.

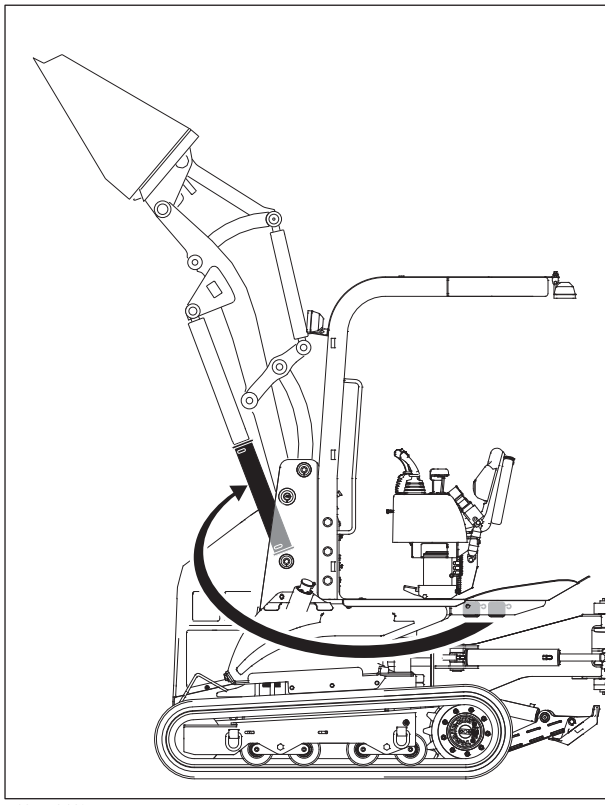

t19om019h.eps

https://truckmanualshub.com/

Lubrication Overview

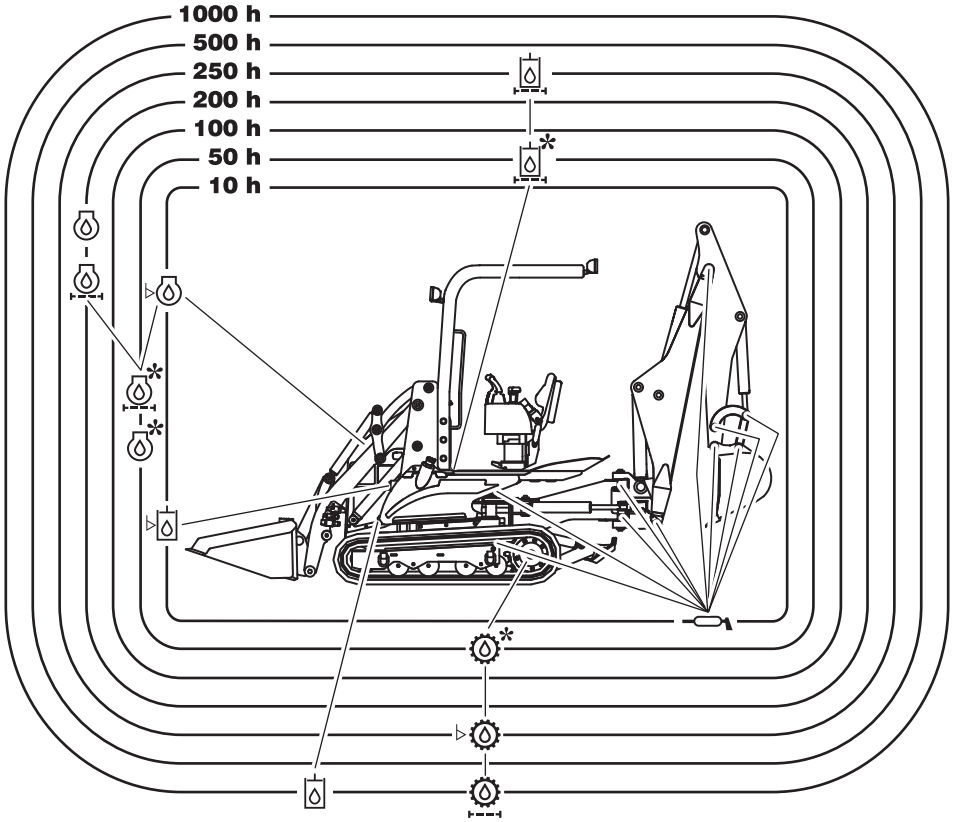

t19om040h.eps

See next page for service key.

https://truckmanualshub.com/

Recommended Lubricants/Service Key

Item	Description
DEO	Diesel engine oil meeting or exceeding CH-4 per the API service classification or E5 per the European Automobile Manufacturer's Association (ACEA) and SAE viscosity recommended by engine manufacturer (SAE 10W30)
MPG	Multipurpose grease meeting ASTM D217 and NLGI 5
	SAE 85W-140 lubricating oil. Synthetic oil 75W-140 is recommended in operating temperatures above 80° F (27°C).
THF	Tractor hydraulic fluid, similar to Phillips 66 HG, Mobilfluid 423, Chevron Tractor Hydraulic Fluid, Texaco TDH Oil, or equivalent
DEAC	Diesel engine antifreeze/coolant meeting ASTM D5345 (prediluted) or D4985 (concentrate)
	Check level of fluid or lubricant
	Check condition
	Filter
	Change, replace, adjust, service or test

Proper lubrication and maintenance protects Ditch Witch equipment from damage and failure. Service intervals listed are for minimum requirements. In extreme conditions, service machine more frequently. Use only recommended lubricants. Fill to capacities listed in "Fluid Capacities" on page 94.

For more information on engine lubrication and maintenance, see your Kubota® engine manual.

NOTICE:

- Use only genuine Ditch Witch parts, filters, approved lubricants, and approved coolants to maintain warranty.
- Use the "Service Record" on page 101 to record all required service to your machine.

https://truckmanualshub.com/

Engine Oil Temperature Chart

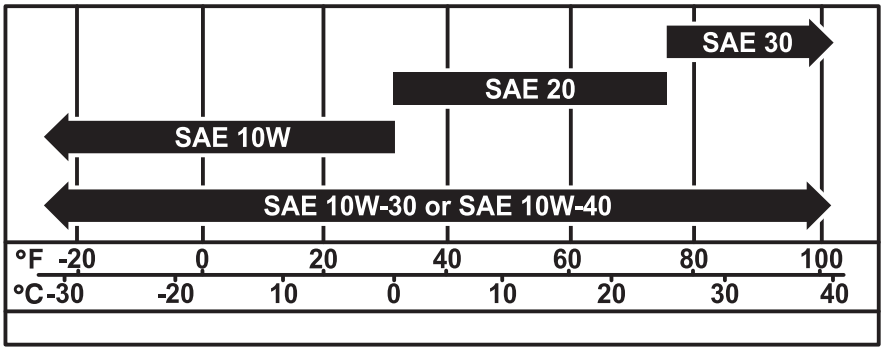

t19om046h.eps

Temperature range anticipated before next oil change

Track Planetary Gear Oil Temperature Chart

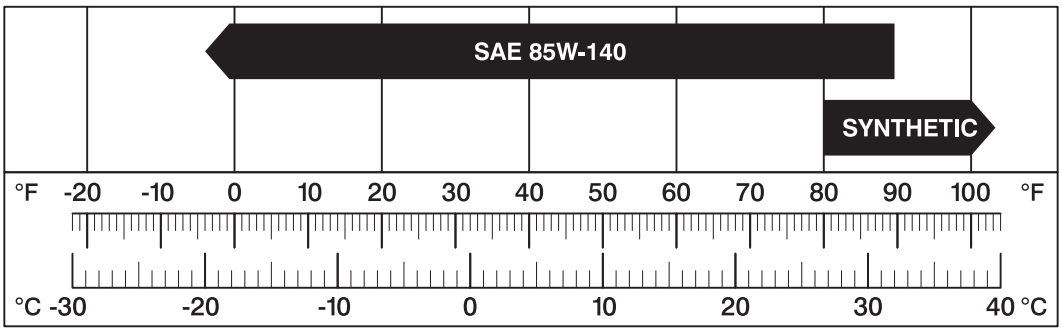

t19om001a.eps

Use SAE 85W-140 lubricating oil in operating temperatures up to 90°F (32°C).
Synthetic oil 75W-140 is recommended in operating temperatures above 80°F (27°C).

https://truckmanualshub.com/

Approved Fuel

IMPORTANT:

- For machines operated in the U.S.: The engine in this product is certified to operate on low sulfur diesel fuel (LSD) with a sulfur content of 500 ppm (0.05%) or less. Use LSD or ultra low sulfur fuel (ULSD) only. Using fuels with higher sulfur content will affect exhaust emissions. Such action is a violation of the US Clean Air Act and US EPA regulations and will result in fines.
- For machines operated outside the U.S.: Fuel sulfur content should be less than 5000 ppm (0.05%). Worldwide fuel sulfur regulations vary widely. Fuel used should always comply with local regulations. If fuel sulfur content exceeds 5000 ppm, use a lube oil meeting API CF (or equivalent) with a TBN value of 10 or greater. Do not use lube oils meeting API CJ-4 (or other low SAPS equivalent) under any conditions.

Biodiesel blends up to 5% (B5) are approved for use in this unit. The fuel must meet the specifications for diesel fuel shown above. In certain markets, higher blends may be used if certain steps are taken. Extra attention is needed when using biodiesel, especially when operating in cold weather or storing fuel. Contact your Ditch Witch dealer or the engine manufacturer for more information.

Approved Coolant

Any coolant is approved for use with this unit. However, it was filled with John Deere Cool-Gard coolant before shipment from factory. Add only Cool-Gard (p/n 255-006) or any fully-formulated, ethylene glycol based, low-silicate, heavy-duty diesel engine coolant meeting ASTM specification D5345 (prediluted) or D4985 (concentrate). Before using any other kind of coolant, completely flush radiator.

NOTICE: Do not mix heavy-duty diesel engine coolant and automotive-type coolant. This will lead coolant breakdown and engine damage.

https://truckmanualshub.com/

10 Hour

Location	Task	Notes
	Check coolant level	DEAC
	Check engine oil level	DEO
	Clean radiator screen	
	Check radiator fins	
	Check hydraulic fluid level	THF
	Lubricate excavator	MPG
	Check track tension	
	Wash tracks and undercarriage	

Check Coolant Level

Check coolant level every 10 hours. Add coolant as needed to maintain proper level indicated on overflow bottle.

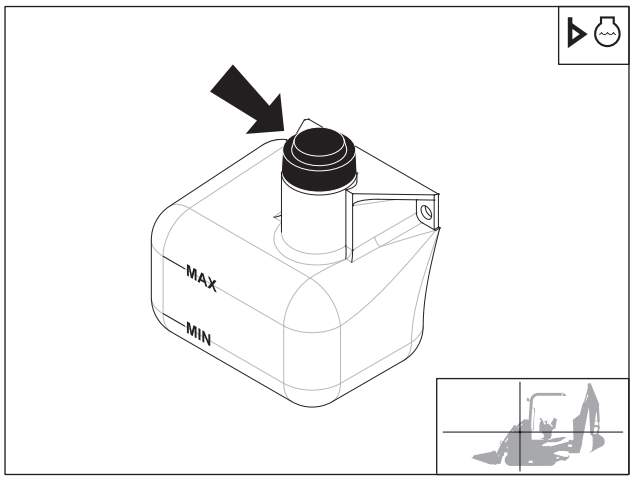

t19om020h.eps

Check Engine Oil Level

Check engine oil level at dipstick (2) every 10 hours. Add DEO at fill (1) as needed to maintain oil level at highest line on dipstick. Do not overfill.

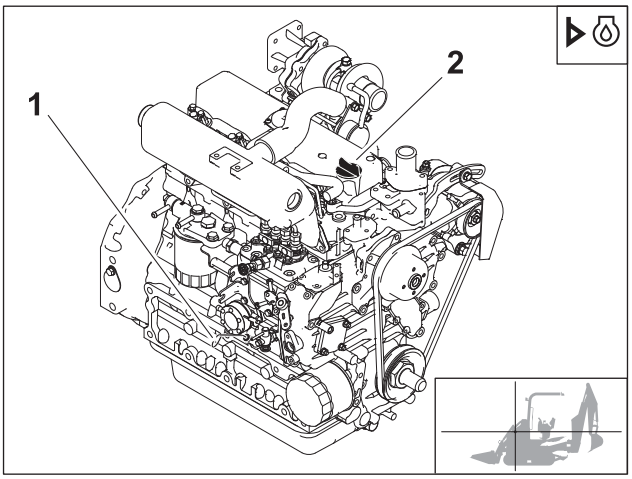

t19om021h.eps

https://truckmanualshub.com/

Clean Radiator Screen

Clean radiator screen every 10 hours. To access radiator screen, remove bolts and lift screen up.

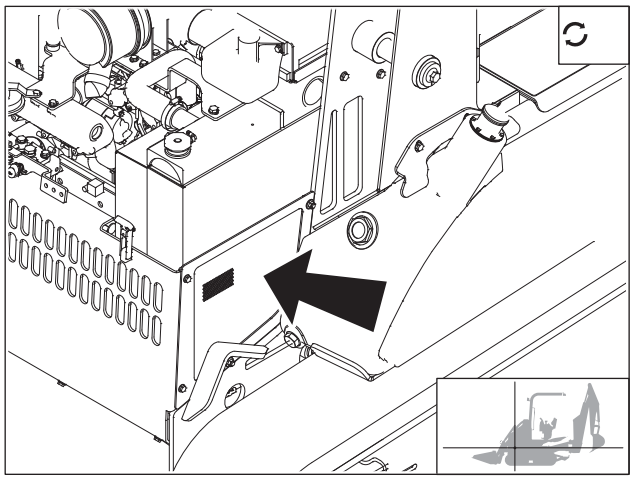

t19om044h.eps

Check Radiator Fins

Check radiator fins for dirt, grass, and other foreign matter every 10 hours. Clean out with compressed air or spray wash if required. Be careful not to damage fins with high-pressure air or water. Check more often if operating in dusty or grassy conditions.

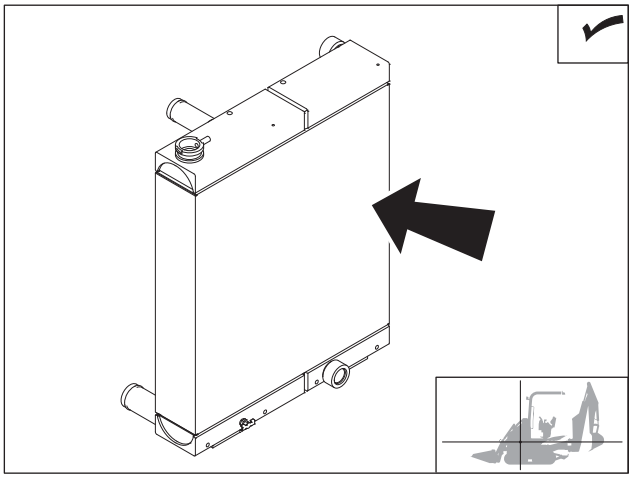

t19om025h.eps

Check Hydraulic Fluid Level

Check warm hydraulic fluid level every 10 hours. Maintain level at halfway point on sight glass (2). Add THF as needed at fill (1).

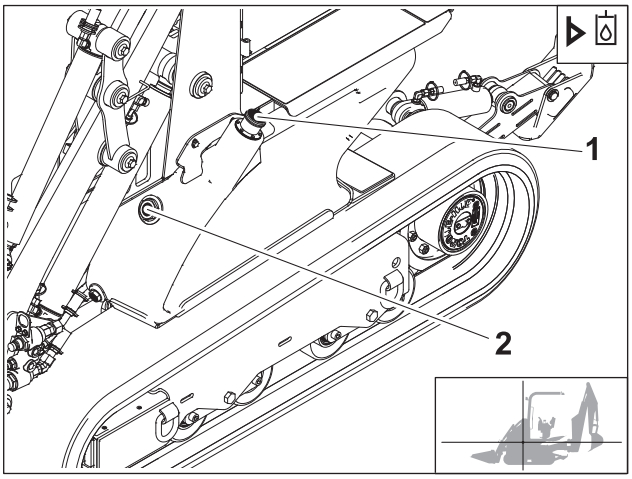

t19om024h.eps

https://truckmanualshub.com/

Lubricate Excavator

Lubricate excavator every 10 hours of use. Apply MPG at each of the 13 zerks.

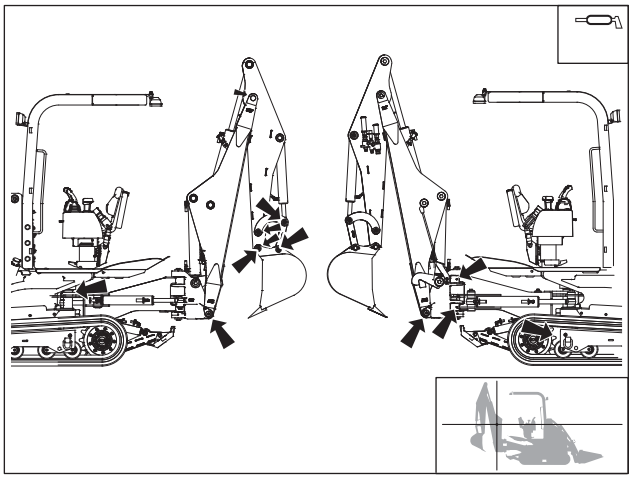

t19om036h.eps

Check Track Tension

Check track tension every 10 hours. Tracks are properly tensioned when inner rod (1) is flush with end of cylinder (2).

Tension can also be checked by measuring spring length through slots in track frame. Dimension A should measure 15 1/2" (39.4 cm).

Adjust as needed (see page 89).

See "Reducing Track Wear" on page 47

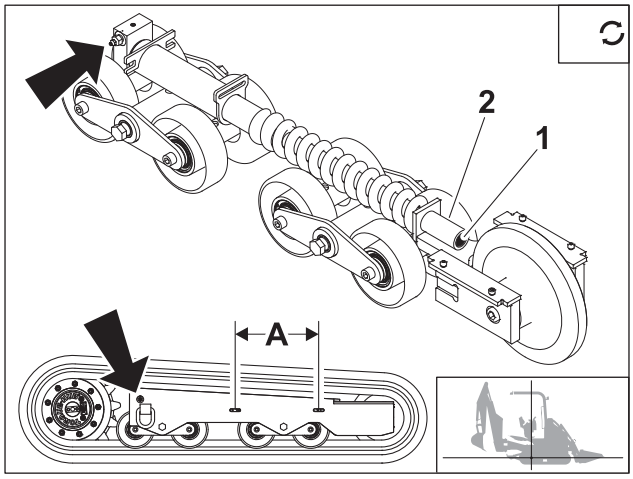

t19om027h.eps

Wash Tracks and Undercarriage

Wash tracks and undercarriage every 10 hours to remove abrasive soil. Remove stones and other foreign objects. Check tracks for oil, fuel or other corrosive materials and clean thoroughly to remove.

https://truckmanualshub.com/

50 Hour

Location	Task	Notes
	Check air filter	
	Check battery	
	Change engine oil and filter	Initial, DEO, 8 qt (7.5 L)
	Change hydraulic filter	Initial
	Check pump drive belt tension	
	Change planetary gearbox oil, initial	SAE 85W-140 or synthetic 75W-140

Check Air Filter

Check air filter for dirt or holes every 50 hours. Replace as needed.

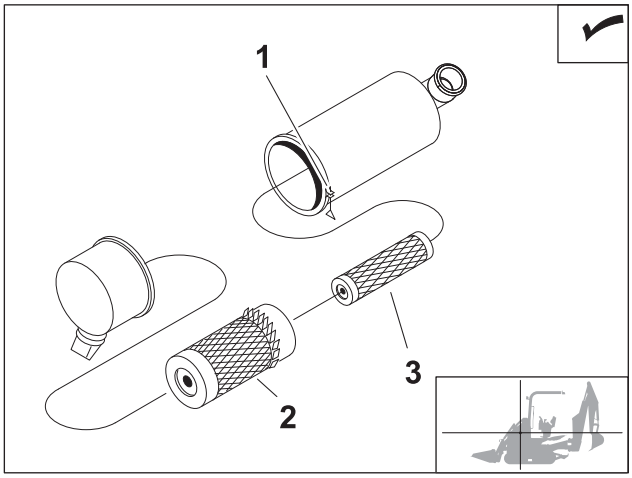

t19om028h.eps

Check Battery

Check battery connections for wear or corrosion every 50 hours. Keep connections clean and tight. Batteries supplied by the factory are maintenance free. Service replacement batteries according to manufacturer's instructions.

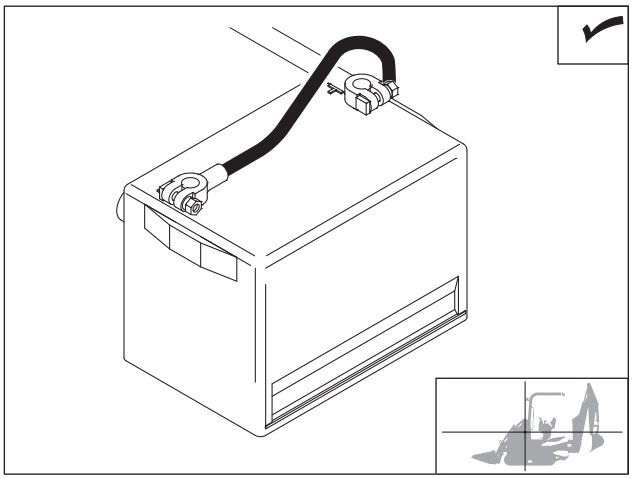

t19om029h.eps

https://truckmanualshub.com/

Change Engine Oil and Filter (Initial)

Change engine oil and filter after 50 hours.

1. Remove large cover plate under unit to access drain (3, on side of pan).
2. Drain crankcase while oil is warm.
3. Replace filter (4).
4. Close drain and install cover.
5. Add DEO at fill (1) until oil level is at highest line on dipstick (2).

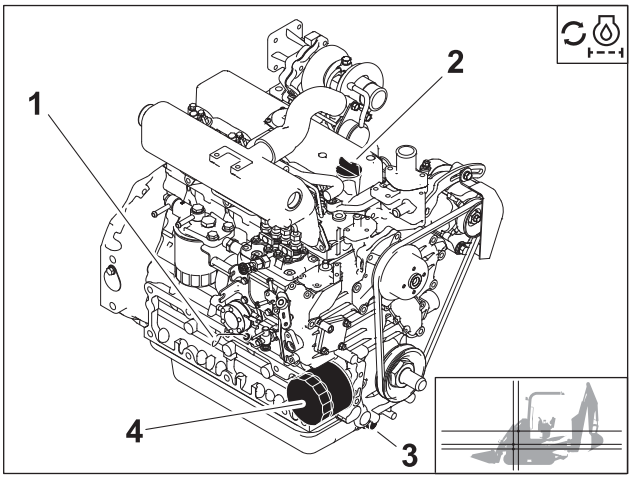

t19om022h.eps

Change Hydraulic Filter (Initial)

Change hydraulic filter after 50 hours. Remove floor panel to access filter (shown.)

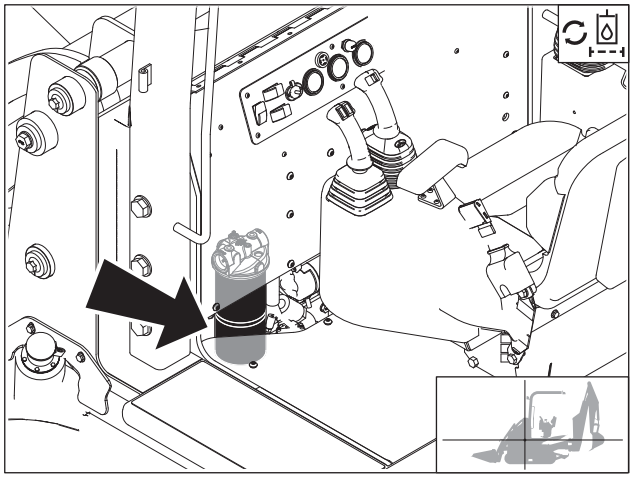
t19om039h.eps

Check Pump Drive Belt Tension

Check pump drive belt tension every 50 hours.

1. Turn off engine and remove key.
2. Apply moderate thumb pressure to top of belt.
3. Belt is properly tensioned when deflection (A) is 1/4-3/8" (5-9.5 mm). To adjust, see page 90.

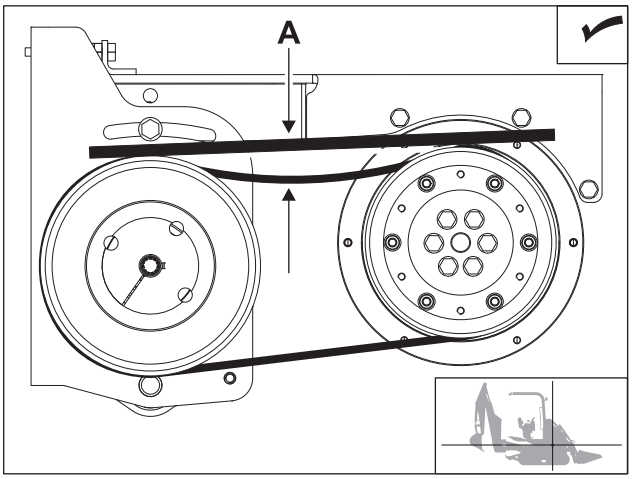

t19om037h.eps

https://truckmanualshub.com/

Change Planetary Gearbox Oil (Initial)

Change planetary gearbox oil after 50 hours.

To change

1. Position one plug level with center of track and the other at the bottom as shown.
2. Remove plugs (1, 2) and drain oil.
3. Install drain plug (2).
4. Add approximately 25 oz (740 mL) of recommended oil at fill plug (1) or until visible at plug.
5. Install fill plug.

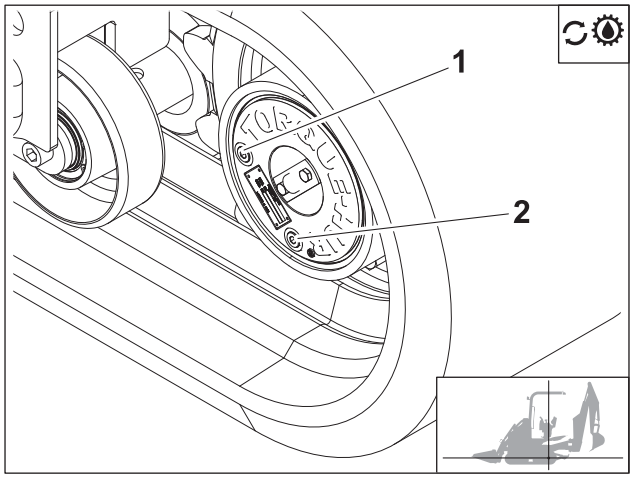

t19om051h.eps

https://truckmanualshub.com/

100 Hour

Location	Task	Notes
	Change fuel filter	
	Change inline fuel filter	
	Check track rollers	

Change Fuel Filter

Change fuel filter every 100 hours.

1. Remove filter.
2. Fill new filter with clean fuel.
3. Apply fuel oil over the gasket and hand-tighten.

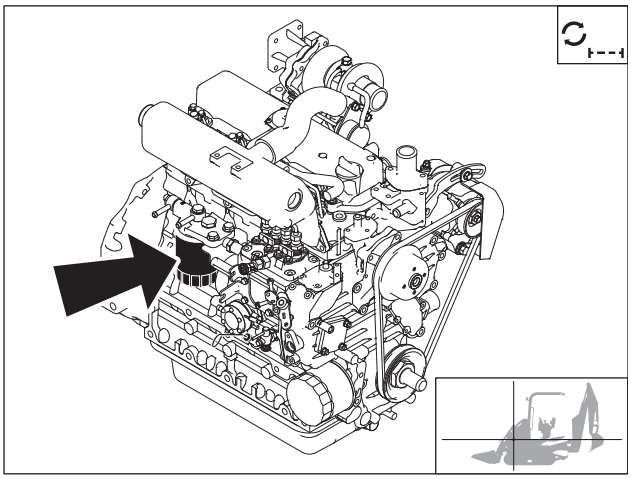

t19om023h.eps

Change Inline Fuel Filter

Change inline fuel filter (mounted inside engine compartment) every 100 hours.

1. Remove filter.
2. Install new filter.

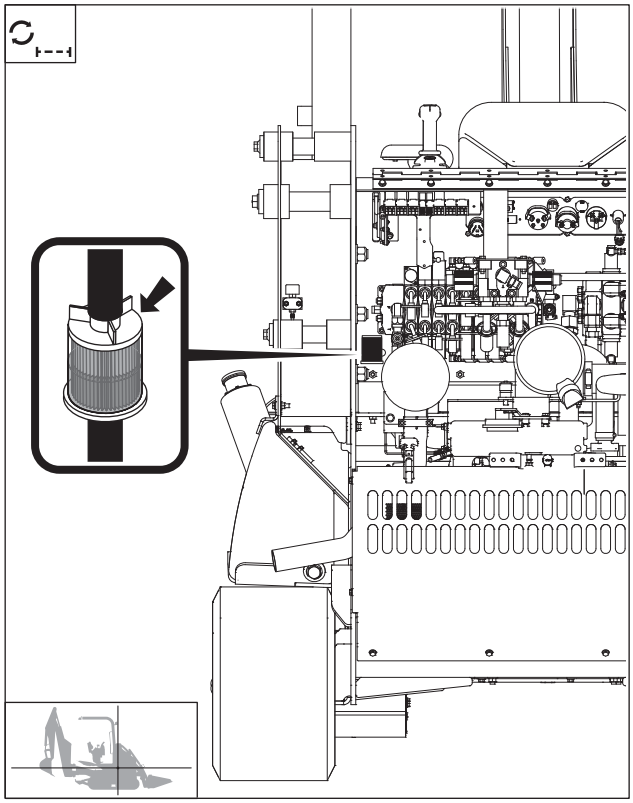

t19om045h.eps

https://truckmanualshub.com/

Check Track Rollers

Check track rollers for wear every 100 hours. Replace as needed.

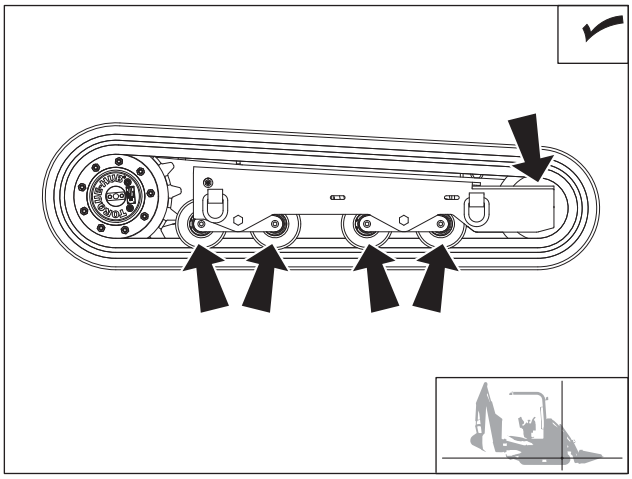

t19om032h.eps

200 Hour

Change Engine Oil and Filter

Change engine oil and filterevery 150 hours.

1. Remove large cover plate under unit to access drain (3, on side of pan).
2. Drain crankcase while oil is warm.
3. Replace filter (4).
4. Close drain and install cover.
5. Add DEO at fill (1) until oil level is at highest line on dipstick (2).

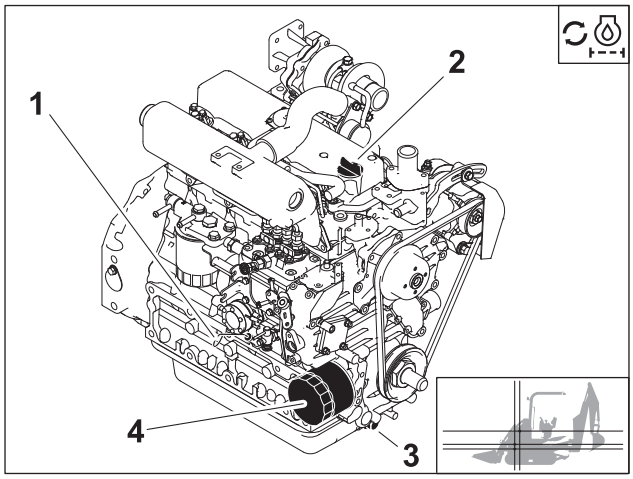

t19om022h.eps

https://truckmanualshub.com/

250 Hour

Location	Task	Notes
	Change air filter	
	Check planetary gearbox oil	SAE 80W140 or synthetic 75W140
	Change hydraulic filter	

Change Air Filter

Change air filter every 250 hours. Change more frequently if operating in dusty conditions.

1. Open air filter housing at latches (1).
2. Remove primary (2) and secondary (3) elements.
3. Wipe inside of housing and wash end cup.
4. Insert new primary and secondary elements.
5. Close air filter case.

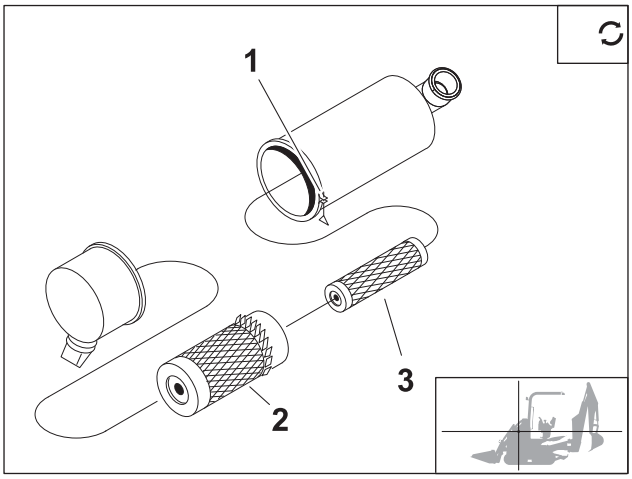

t19om032h.eps

https://truckmanualshub.com/

Check Planetary Gearbox Oil Level

Check planetary gearbox oil level every 50 hours. Position one plug level with center of track and the other at the bottom as shown. Oil level should be visible at fill plug (shown). Add recommended oil as needed.

IMPORTANT: Oil goes in very slowly so wait a few seconds and recheck level before installing plug.

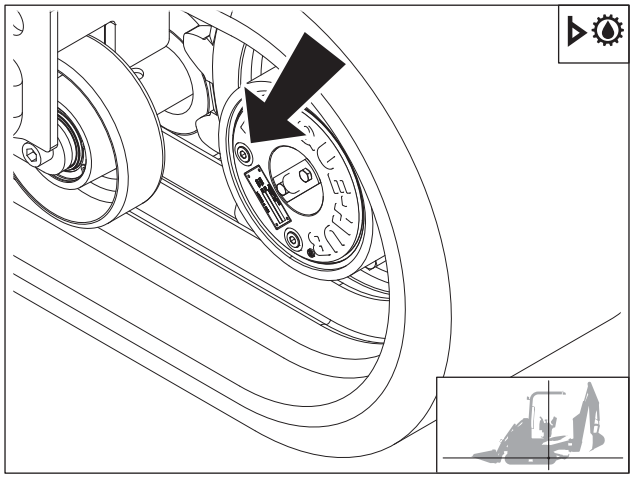

t19om050h.eps

Change Hydraulic Filter

Change hydraulic filter every 250 hours. Remove floor panel to access filter (shown.)

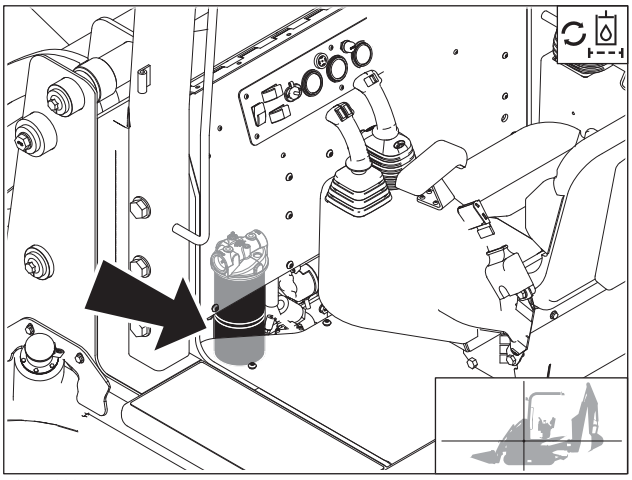

t19om039h.eps

https://truckmanualshub.com/

500 Hour

Replace Fan Belt

Replace fan belt every 500 hours. Adjust properly. See page 89.

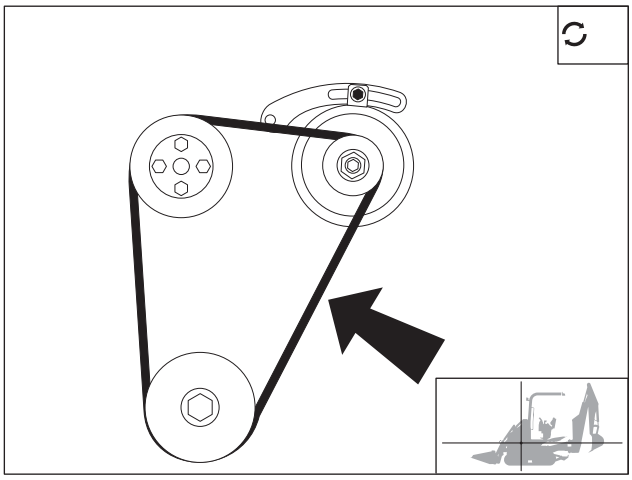

t19om035h.eps

1000 Hour

Location	Task	Notes
	Change hydraulic fluid and filter	THf16 gal (60.5 L)
	Change track planetary oil	SAE 85W-140 or synthetic 75W-140

Change Hydraulic Fluid and Filter

Drain (3) hydraulic fluid and change filter every 1000 hours. Add THF at fill (1) until oil level is at halfway point on sight glass (2). Change fluid and filter every 500 hours if jobsite temperature exceeds 100°F (38°C) more than 50% of the time.

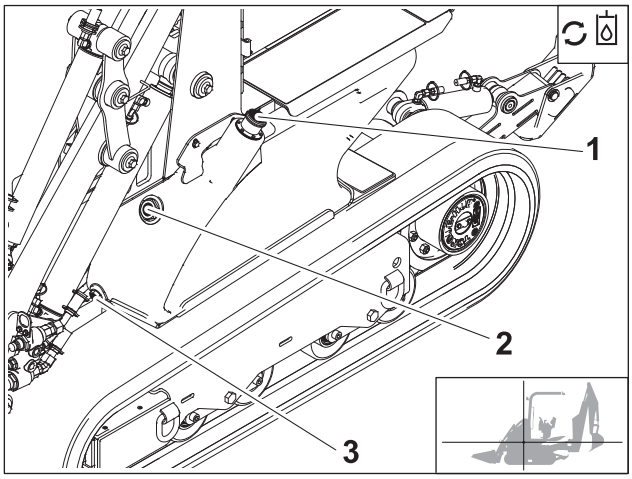

t19om033h.eps

https://truckmanualshub.com/

Change Planetary Gearbox Oil

Change planetary gearbox oil every 1000 hours.

To change

1. Position one plug level with center of track and the other at the bottom as shown.
2. Remove plugs (1, 2) and drain oil.
3. Install drain plug (2).
4. Add approximately 25 oz (740 mL) of recommended oil at fill plug (1) or until visible at plug.

IMPORTANT: Oil goes in very slowly so wait a few seconds and recheck level before installing plug.

5. Install fill plug (1).

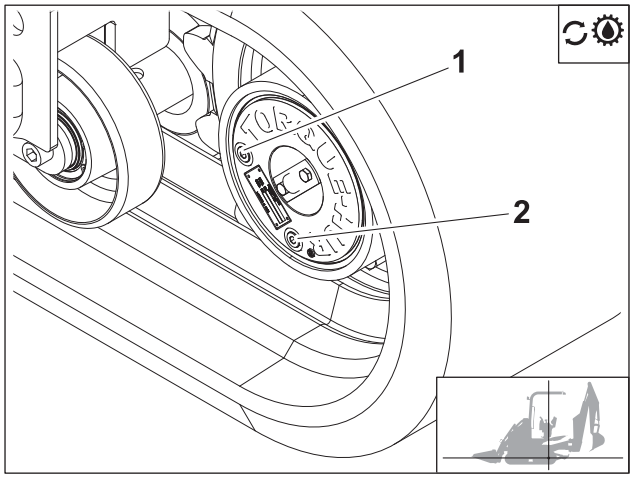

t19om051h.eps

2000 Hour

Change Engine Coolant

Drain cooling system at drain (2). Refill (1) with approved coolant every two years or 2000 hours.

NOTICE:

- The use of non-approved coolant may lead to engine damage or premature engine failure and will void engine warranty.
- See "Approved Coolant" on page 76. for list of approved coolants.

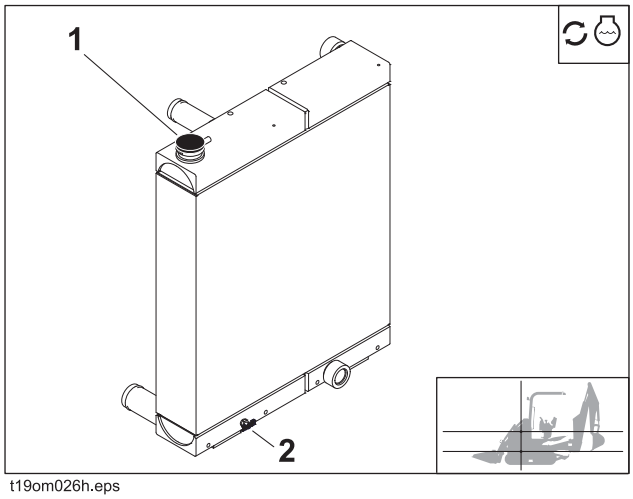

t19om026h.eps

https://truckmanualshub.com/

As Needed

Location	Task	Notes
	Adjust track tension	
	Empty radiator cleanout	
	Adjust fan belt	
	Adjust pump drive belt	

Adjust Track Tension

Adjust track tension as needed. To increase tension, pump MPG into cylinder at point shown. To reduce tension, loosen relief on grease cylinder.

Tracks are properly tensioned when inner rod (1) is flush with end of cylinder (2), or when dimension A measures 15 1/2" (39.4 cm).

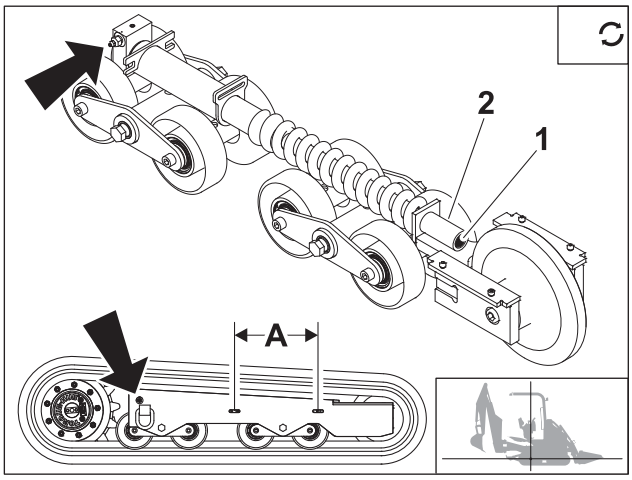

t19om031h.eps

Adjust Fan Belt

Adjust fan belt as needed.

1. Turn off engine and remove key.
2. Apply moderate thumb pressure to belt between pulleys where shown.
3. Belt is properly tensioned when deflection is about 1/4-3/8" (6-10 mm).
4. If needed, loosen alternator bolts (shown) and pull alternator out until correct tension is reached.

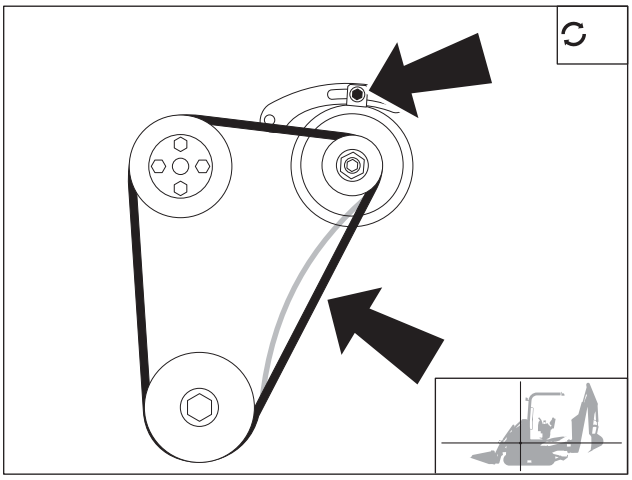
t19om034h.eps

https://truckmanualshub.com/

Adjust Pump Drive Belt

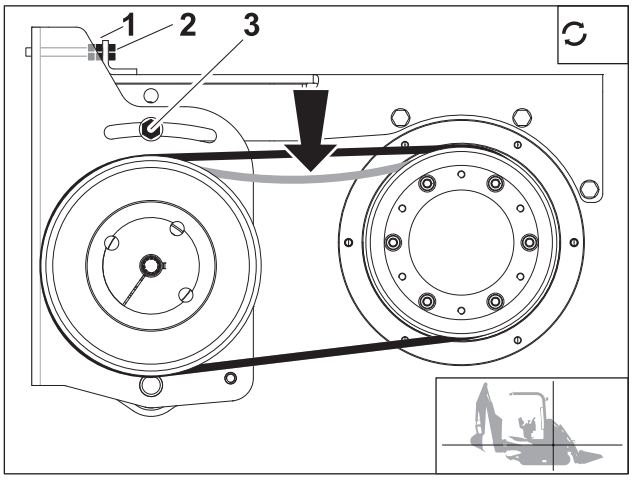

t19om038h.eps

Adjust pump drive belt as needed.

1. Raise lift arms and engage props. See "Working Under Raised Lift Arms" on page 72.
2. Turn off engine and remove key.
3. Open hood.
4. Check tension by applying moderate thumb pressure in center of top of belt. Belt is properly tensioned when deflection is 1/4 - 3/8" (6-10 mm).
5. Adjust tension. Use belt tensioner tool (p/n 499-938) to adjust new belt tension to 0.22" (5.6 mm) deflection in center of span with 13 lb (kg) force.

IMPORTANT:

- Adjust new belt at room temperature.
- Adjust used belt at operating temperature.

https://truckmanualshub.com/

Specifications

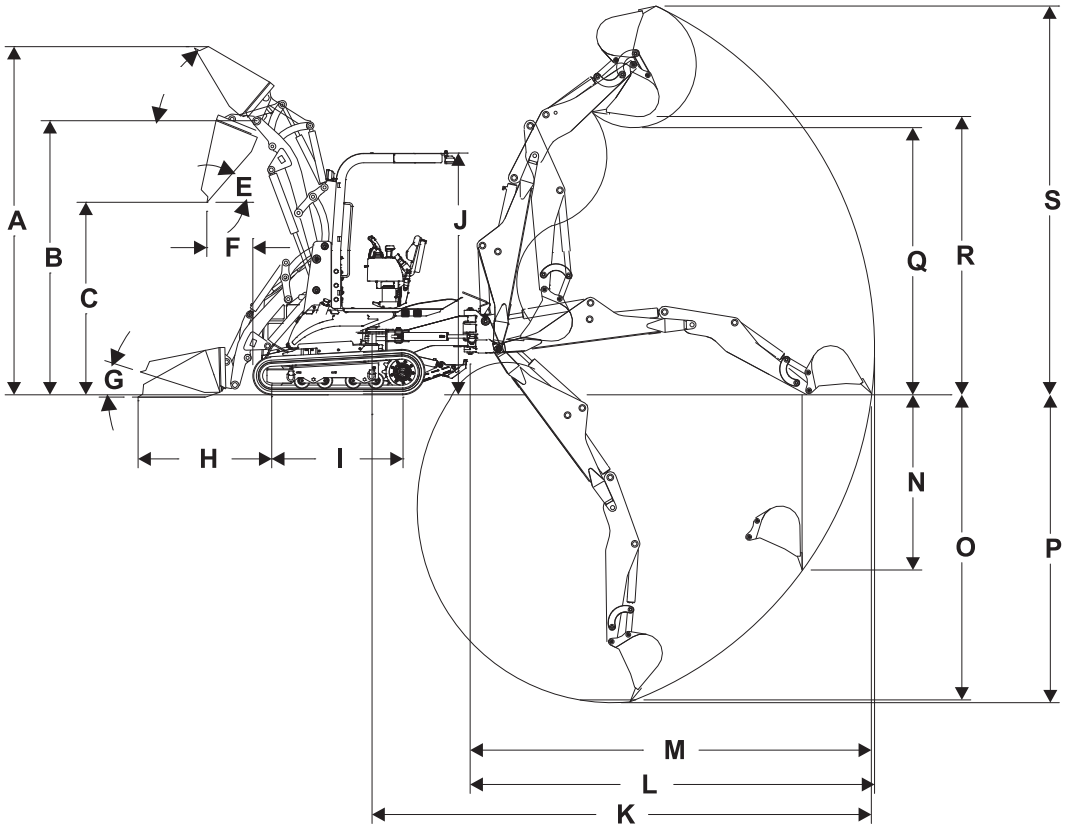

General Dimensions		U.S.	Metric
I	Wheelbase/track length	58”	1.5 m
J	Overall height of machine	107”	2.7 m

Tool Carrier Dimensions		U.S.	Metric
A	Operating height with standard bucket, max	155”	3.9 m
B	Hinge pin height, max	121”	3.0 m
C	Dump height with standard bucket, max	85”	2.2 m
D	Bucket rollback angle, top	60°	60°
E	Dump angle, standard bucket	50°	50°
F	Reach with standard bucket, fully raised	20”	508 mm
G	Bucket rollback angle, ground level	23°	23°
H	Reach at grade	61”	1.5 m

https://truckmanualshub.com/

Excavator Dimensions		U.S.	Metric
K	Reach from main swing joint	219”	5.6 m
L	Max reach from swing post	177”	4.5 m
M	Reach from swing post at grade	176”	4.5 m
N	Vertical wall depth, max.	77”	1.9 m
O	Dig depth, 2’ (.6-m) flat bottom	133”	3.4 m
P	Dig depth, max.	134”	3.4 m
Q	Dump height, min.	117”	2.9 m
R	Dump height, max.	122”	3.1 m
S	Excavator operating height, max.	170”	4.3 m

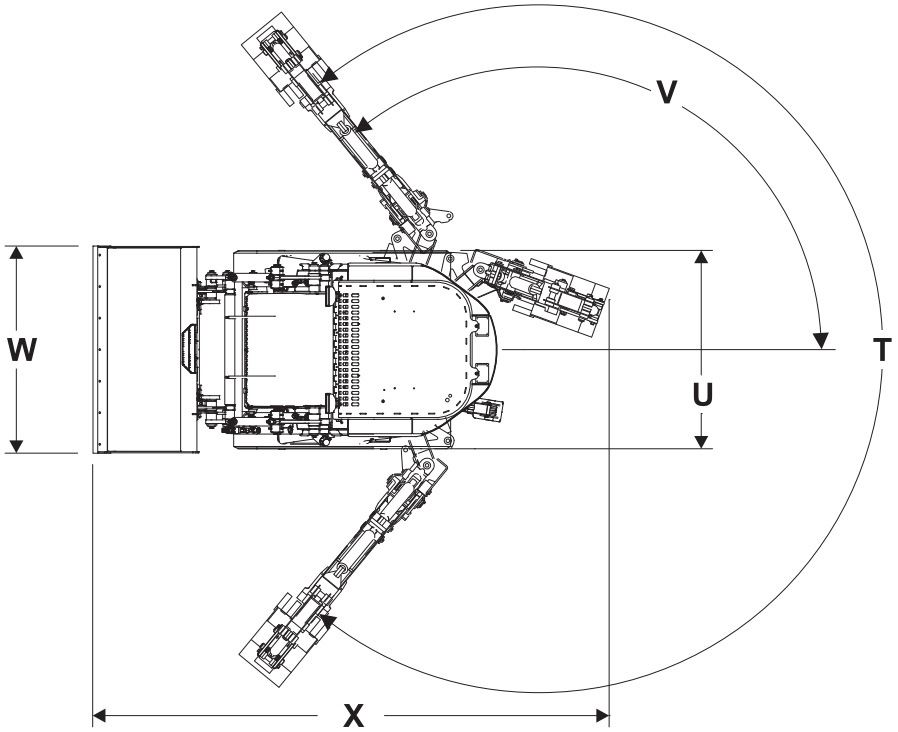

t19om018h.eps

General Dimensions		U.S.	Metric
U	Machine width	69 in	1.8 m
X	Overall machine length, excavator stowed	179 in	4.5 m
	Weight	9420 lb	4273 kg

https://truckmanualshub.com/

Tool Carrier Dimensions		U.S.	Metric
W	Bucket width, max	73”	1.8 m

Excavator Dimensions		U.S.	Metric
V	Swing angle from center	130°	130°
T	Total swing angle	260°	260°

Performance	U.S.	Metric
Ground drive speed, forward	3.5/6.8 mph	5.6/10.9 km/h
Ground drive speed, reverse	3.5/6.8 mph	5.6/10.9 km/h
Ground pressure	5.8 psi	0.4 bar
Angle of departure	20°	20°
Tipping capacity	4600 lb	2087 kg
Rated operating capacity @ 35% of tipping capacity	1600 lb	726 kg
Drawbar pull	8800 lb	39.1 kN

Hydraulic System	U.S.	Metric
Auxiliary: dual gear pumps		
Flow rate	15/26 gpm	56.7/98.4 L/min
Pressure	3000 psi	206.8 bar
Ground drive: dual hydrostat		
Flow rate	27 gpm	102.2 L/min
Pressure	4400 psi	303.4 bar

https://truckmanualshub.com/

Power	U.S.	Metric
Engine: Kubota V2003-M-DI-TE2B diesel		
Cooling medium: liquid coolant (see "Approved Coolant" on page 76)		
Number of cylinders: 4		
Injection: direct		
Displacement	112 in^3	1835 cm^3
Bore	3.27"	83 mm
Stroke	3.64"	92.4 mm
* Maximum tilt angle, fore and aft	30°	30°
* Maximum tilt angle, side	30°	30°
Installed net power per SAE J1349 (@ 2800 rpm)	53 hp	39.5 kW
Gross power per SAE J1995	59 hp	44 kW
Maximum governed speed (no load, standard unit)	3000 rpm	3000 rpm
Maximum governed speed (no load, EC-compliant unit)	2800 rpm	2800 rpm

* Exceeding these operating angles will cause engine damage. This DOES NOT IMPLY machine is stable to maximum angle of safe engine operation.

Fluid Capacities	U.S.	Metric
Fuel tank	20 gal	75.7 L
Engine oil, with filter	8 qt	7.6 L
Hydraulic tank	16 gal	60.6 L
Hydraulic system	21 gal	79.5 L

https://truckmanualshub.com/

Battery
SAE reserve capacity 80 min, SAE cold crank @ 0°F (-18°C) 800 amp, 12V electrical system

Vibration Levels
Under normal operation of the excavator or tool carrier of the XT1600, the vibration level to the arms does not exceed 6.18 m/sec^2. Under the same conditions, the vibration level to the body does not exceed 1.69 m/sec^2.

Noise Levels (EC-compliant units only)
Exterior 103 dBA sound power per ISO 6365
Operator 89 dBA sound pressure per ISO 6394

Specifications are called out according to SAE recommended practices. Specifications are general and subject to change without notice. If exact measurements are required, equipment should be weighed and measured. Due to selected options, delivered equipment may not necessarily match that shown.

https://truckmanualshub.com/

https://truckmanualshub.com/

Support

Procedure

Notify your dealer immediately of any malfunction or failure of Ditch Witch equipment.

Always give model, serial number, and approximate date of your equipment purchase. This information should be recorded and placed on file by the owner at the time of purchase.

Return damaged parts to dealer for inspection and warranty consideration if in warranty time frame.

Order genuine Ditch Witch replacement or repair parts from your authorized Ditch Witch dealer. Use of another manufacturer's parts may void warranty consideration.

Resources

Publications

Contact your Ditch Witch dealer for publications and videos covering safety, operation, service, and repair of your equipment.

Ditch Witch Training

For information about on-site, individualized training, contact your Ditch Witch dealer.

https://truckmanualshub.com/

Warranty

Ditch Witch Equipment and Replacement Parts Limited Warranty Policy

Subject to the limitation and exclusions herein, free replacement parts will be provided at any authorized Ditch Witch dealership for any Ditch Witch equipment or parts manufactured by The Charles Machine Works, Inc. (CMW) that fail due to a defect in material or workmanship within one (1) year of first commercial use (Exception: 2 years for all SK5 attachments). Free labor will be provided at any authorized Ditch Witch dealership for installation of parts under this warranty during the first year following "initial commercial" use of the serial-numbered Ditch Witch equipment on which it is installed. The customer is responsible for transporting their equipment to an authorized Ditch Witch dealership for all warranty work.

Exclusions from Product Warranty

- All incidental or consequential damages.
- All defects, damages, or injuries caused by misuse, abuse, improper installation, alteration, neglect, or uses other than those for which products were intended.
- All defects, damages, or injuries caused by improper training, operation, or servicing of products in a manner inconsistent with manufacturer's recommendations.
- All engines and engine accessories (these are covered by original manufacturer's warranty).
- Tires, belts, and other parts which may be subject to another manufacturer's warranty (such warranty will be available to purchaser).
- ALL IMPLIED WARRANTIES NOT EXPRESSLY STATED HEREIN, INCLUDING ANY WARRANTY OF FITNESS FOR A PARTICULAR PURPOSE AND MERCHANTABILITY.

IF THE PRODUCTS ARE PURCHASED FOR COMMERCIAL PURPOSES, AS DEFINED BY THE UNIFORM COMMERCIAL CODE, THEN THERE ARE NO WARRANTIES WHICH EXTEND BEYOND THE FACE HEREOF AND THERE ARE NO IMPLIED WARRANTIES OF ANY KIND WHICH EXTEND TO A COMMERCIAL BUYER. ALL OTHER PROVISIONS OF THIS LIMITED WARRANTY APPLY INCLUDING THE DUTIES IMPOSED.

Ditch Witch products have been tested to deliver acceptable performance in most conditions. This does not imply they will deliver acceptable performance in all conditions. Therefore, to assure suitability, products should be operated under anticipated working conditions prior to purchase.

Defects will be determined by an inspection within thirty (30) days of the date of failure of the product or part by CMW or its authorized dealer. CMW will provide the location of its inspection facilities or its nearest authorized dealer upon inquiry. CMW reserves the right to supply remanufactured replacements parts under this warranty as it deems appropriate.

Extended warranties are available upon request from your local Ditch Witch dealer or CMW.

Some states do not allow exclusion or limitation of incidental or consequential damages, so above limitation of exclusion may not apply. Further, some states do not allow exclusion of or limitation of how long an implied warranty lasts, so the above limitation may not apply. This limited warranty gives product owner specific legal rights and the product owner may also have other rights which vary from state to state.

For information regarding this limited warranty, contact CMW's Product Support department, P.O. Box 66, Perry, OK 73077-0066, or contact your local Ditch Witch dealer.

First version: 1/91; Latest version: 7/05

A Note To Ditch Witch Equipment Owners:

If your equipment was purchased through a Ditch Witch dealer, there is no need to read further.

However, if you purchased from any other source, please fill out the form on the reverse side and return it to us.

This will enable you to receive updates on this equipment as well as information on new products of interest.

Thanks for using Ditch Witch equipment.

(Please Fold Along This Line And Seal At Bottom With Tape)

NO POSTAGE NECESSARY IF MAILED IN THE UNITED STATES

BUSINESS REPLY MAIL

FIRST CLASS PERMIT NO 23 PERRY OKLAHOMA

POSTAGE WILL BE PAID BY

The Charles Machine Works, Inc.
P.O. Box 66
Perry, Oklahoma 73077-9989

A Note To Ditch Witch Equipment Owners:

If your equipment was purchased through a Ditch Witch dealer, there is no need to read further.

However, if you purchased from any other source, please fill out the form on the reverse side and return it to us.

This will enable you to receive updates on this equipment as well as information on new products of interest.

Thanks for using Ditch Witch equipment.

(Please Fold Along This Line And Seal At Bottom With Tape)

NO POSTAGE NECESSARY IF MAILED IN THE UNITED STATES

BUSINESS REPLY MAIL

FIRST CLASS PERMIT NO 23 PERRY OKLAHOMA

POSTAGE WILL BE PAID BY

The Charles Machine Works, Inc.
P.O. Box 66
Perry, Oklahoma 73077-9989

https://truckmanualshub.com/

Ditch Witch® Registration Card

Please Type or Print All Information

Purchaser's Company Name

Attention

Street Address or P.O. Box

City County

State Zip Nation

( )

Phone Number With Area Code

Model Serial Number

Attachments/Accessories Serial Numbers

Attachments/Accessories Serial Numbers

Attachments/Accessories Serial Numbers

Name of Ditch Witch Dealership

Your Signature

Ditch Witch® Registration Card

Please Type or Print All Information

Purchaser's Company Name

Attention

Street Address or P.O. Box

City County

State Zip Nation

( )

Phone Number With Area Code

Model Serial Number

Attachments/Accessories Serial Numbers

Attachments/Accessories Serial Numbers

Attachments/Accessories Serial Numbers

Name of Ditch Witch Dealership

Your Signature

https://truckmanualshub.com/

https://truckmanualshub.com/

Service Record

Service Performed	Date	Hours

https://truckmanualshub.com/

Service Performed	Date	Hours