https://truckmanualshub.com/ 1

800-428-5655

www.landoll.com/mhp

STANDARD FEATURES

- Four-Wheel Configuration - 6,000 lb. (2,722kg) and 8,000 lb. (3,629kg) Capacity
- 80 Volt Electrical System
- AC Dual Traction Motor Controllers
- AC Hydraulic Motor Controller
- Battery Discharge Indicator with Lift Interrupt
- Hydrostatic Power Steering
- 30" (762mm) of Shift-Includes 3" (76mm) of Reach
- 40" (1,016mm) Long Shank Forks with Standard Taper
- Poly Drive and Steer Tires
- 42" (1,066mm) High Load Backrest
- Type E Construction
- Anderson SBX350 Black Connector
- Seat Belt (Retractable)
- Horizontal Fork Indicator, Overhead Guard
- Key Switch, Hand Parking Brake and Hour Meter
- Meets ANSI B56.1

OPTIONAL FEATURES

- EE Construction (Includes Battery Side Cover)
- Non-Standard Fork Lengths
- Dual Overhead Guard Mounted LED Headlights
- Dual Rear Safety LED Light Bars
- Safety Flashing LED Light
- Backup Alarm - Beeping Tone (“smart” dB adjusting)
- Fire Extinguisher - OHG Post Mounted
- Cold Storage Conditioning to -22° F (-30° C)
- Roller Slide-Out Battery Tray
- Lazer Fork Height Indicator
- Fork Positioner
- Keyless Key Pad On-Off
- Long Load Handling Package
- Auxiliary Hydraulics
- Overload Sensor with Alarm

SL60AC
SL80AC

SWING MAST™ VNA/Sideloading
Electric Multi-Purpose
6,000 lb. (2,722kg) Capacity
8,000 lb. (3,629kg) Capacity

LANDOLL®

Material Handling Products

https://truckmanualshub.com/ 2

DREXEL SL60AC & SL80AC

VNA Sideloading | Electric Multi-Purpose

TECHNICAL DATA

MODEL				SL60AC	SL80AC
Capacity			lbs/kg	6,000 / 2,722	8,000 / 3,629
Load Center			in/mm	24 / 600	24 / 600
Power Source				Battery, electric	Battery, Electric
Weight with Battery			lbs/kg	18,700 / 8,500	20,900 / 9,500
Travel Speed		Loaded	mph/kph	6.9 / 11.1	6.9 / 11.1
		Unloaded	mph/kph	7.7 / 12.3	7.7 / 12.3
Lift Speed		Loaded	fpm/mpm	55 / 16.7	55 / 16.7
		Unloaded	fpm/mpm	70 / 21.3	70 / 21.3
Lower Speed		Loaded	fpm/mpm	95 / 28.9	95 / 28.9
		Unloaded	fpm/mpm	60 / 18.2	60 / 18.2
Mast Tilt		Forward / Backward	deg	3 / 4	3 / 4
Lost Load Center	A	with Triple Mast	in/mm	24 / 607	24 / 607
Wheelbase	B		in/mm	56 / 1,422	56 / 1,422
Overall Length to Face of Forks	C	with Triple Mast	in/mm	105 / 2,667	109 / 2,769
Underclearance	D		in/mm	4 / 102	4 / 102
Cab Floor Height	E		in/mm	32 / 889	32 / 889
Seat Height	F		in/mm	52 / 1,321	52 / 1,321
Overhead Guard Height	G		in/mm	90 / 2,286	90 / 2,286
Chassis Width	H		in/mm	52 / 1,321	56 / 1,422
Mast Shift	I		in/mm	30 / 762	30 / 762
Side Reach	J		in/mm	3 / 76	3 / 76
Side Deck Height	K		in/mm	52 / 1,321	52 / 1,321
Side Deck Width	L		in/mm	24 / 610	27 / 686
Fork Carriage Width	M		in/mm	41 / 1,041	41 / 1,041
Turning Radius	N		in/mm	93.5 / 2,375	96.5 / 2,451
Fork Length			in/mm	40 / 1,016	40 / 1,016
Gradeability		Loaded	%	15	15
Lift Motor Rating			kWh	17.6	17.6
Steer Motor Rating			kWh	6.5	6.5
Drive Motor Rating		2 Each	kWh	7.5 x 2	7.5 x 2
Wheel Sizes		Front (2 Each)	in/mm	20x9 / 508x229	20x9 / 508x229
		Rear (2 Each)	in/mm	16.25x7 / 413x178	16.25x7 / 413x178
Battery Recommended		Electric 80 Volt	kWh	53-55	53-55
Minimum Battery Weight			lbs/kg	4,300 / 1,955	4,300 / 1,955
Control Type		Traction, Dual		AC	AC
		Hydraulic		AC	AC

MAST DIMENSIONS

SL60AC Triple (3 Stage) Mast					
LIFT HEIGHT		LOWERED HEIGHT		FREE LIFT*	
Inches	Meters	Inches	Meters	Inches	Meters
141	3.58	83	2.11	41	1.04
159	4.04	89	2.26	47	1.19
177	4.50	95	2.41	53	1.35
197	5.00	103	2.62	61	1.55
221	5.61	113	2.87	71	1.80
245	6.22	125	3.17	83	2.11
259	6.58	131	3.33	89	2.26
289	7.34	141	3.58	99	2.51
SL60AC Quad (4 Stage) Mast					
294	7.47	117	2.98	75	1.91
SL80AC Duplex (2 Stage) Mast					
108	2.74	98	2.49	56	1.42
SL80AC Triple (3 Stage) Mast					
141	3.58	85	2.16	43	1.09
159	4.04	91	2.31	49	1.24
177	4.50	97	2.46	55	1.40
197	5.00	104	2.64	62	1.57
220	5.59	112	2.84	70	1.78
245	6.22	121	3.07	79	2.01
259	6.58	126	3.20	84	2.13
281	7.14	134	3.40	92	2.34

* Free Lift Based on 42" (1067mm) High Load Backrest

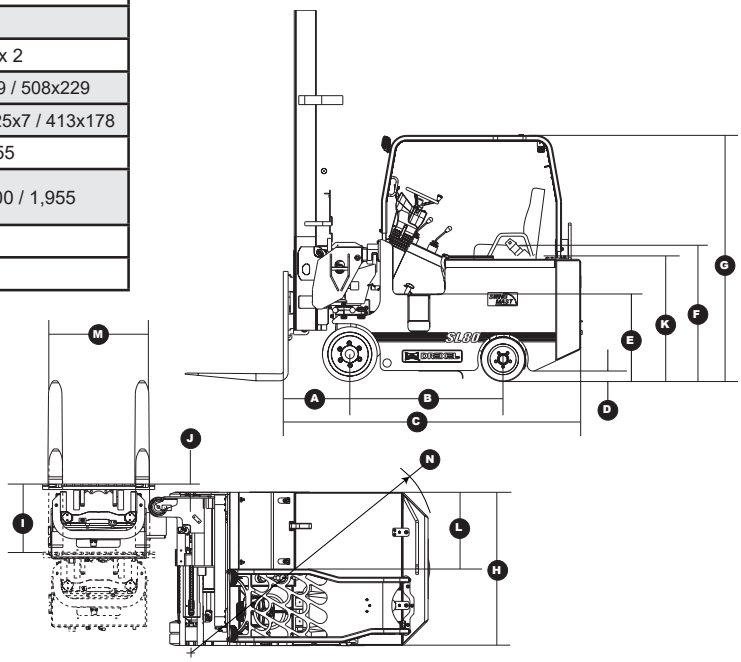

RECOMMENDED BATTERY

BATTERY DESIGNATION: 40-85-17, 80 VOLT, 680 AHC (6 HOUR RATE)
Battery Weight Min: 4,300 lbs. (1955 kg) - Max. 4,700 lbs. (2136 kg)
Leads: Position D, 36" Long, with SBX 350 Amp Black Connector, 2/0 Cable
Nominal Size: 39.9" x 44.625" x 22.625" (101 x 113 x 57.5 cm)
Compartment Size: 40.875" x 45.75" x 25" (104 x 116 x 63.5 cm)

Landoll continuously improves products. We reserve the right to make any changes in illustrations, specifications, equipment, and prices without prior notice and without changes on previous models.

www.landoll.com/mhp | 1900 North Street | Marysville, KS 66508 | (800) 428-5655

Intertek
YOUR INDUSTRY CONNECTION MHEDA
MATERIAL HANDLING INDUSTRY OF AMERICA Member Company
Member IWLA The Resource for Warehouse Logistics
IARW International Association of Refrigerated Warehouses