https://truckmanualshub.com/

FOREWORD

This manual is designed to serve as a reference for DAEWOO Heavy Industries & Machinery Ltd's (here after DAEWOO's) customers and distributors who wish to gain basic product knowledge on DAEWOO's **DE12T, DE12TI, DE12TIA and DE12TIS** diesel engines.

These economical and high-performance diesel engines (6 cylinders, 4 strokes, in-line type) have been so designed and manufactured to be used for the industrial application. They meet all the requirements such as low noise, fuel economy, high engine speed and durability.

To maintain the engine in optimum condition and retain maximum performance for a long time, CORRECT OPERATION and PROPER MAINTENANCE are essential.

In this manual, the following symbols are used to indicate the type of service operations to be performed.

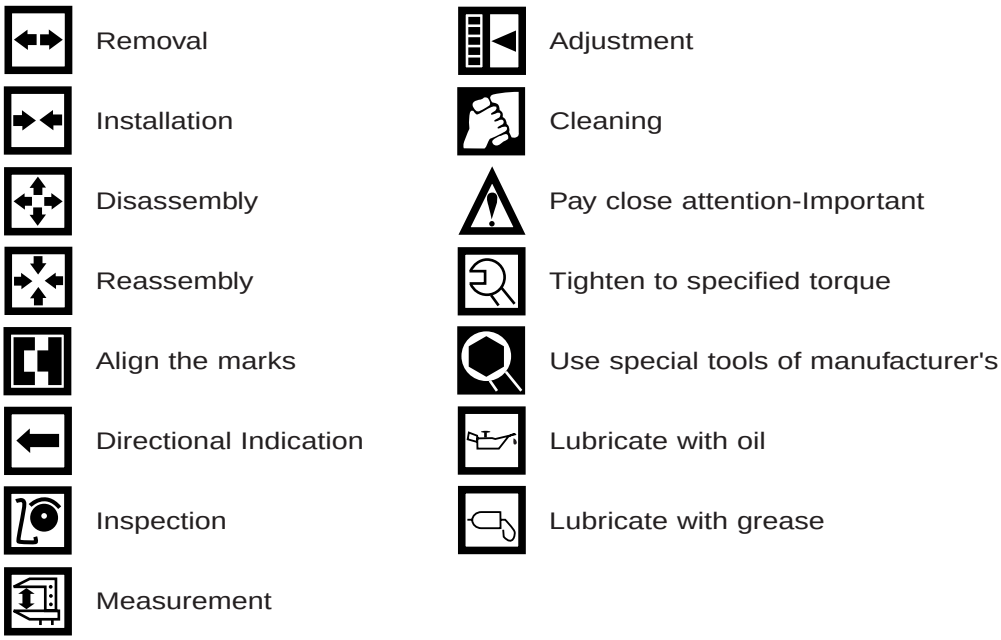

During engine maintenance, please observe following instructions to prevent environmental damage;

- Take old oil to an old oil disposal point only.
- Ensure without fail that oil will not get into the sea or rivers and canals or the ground.
- Treat undiluted anti-corrosion agents, antifreeze agents, filter element and cartridges as special waste.
- The regulations of the relevant local authorities are to be observed for the disposal of spent coolants and special waste.

If you have any question or recommendation in connection with this manual, please do not hesitate to contact our head office, dealers or authorized service shops near by your location for any services.

For the last, the content of this maintenance instruction may be changed without notice for some quality improvement. Thank you.

DAEWOO Heavy Industries & Machinery LTD.
Feb. 2005

https://truckmanualshub.com/

https://truckmanualshub.com/

CONTENTS

1. SAFETY REGULATIONS & ENGINE SPECIFICATIONS 1

1.1. General Notes
1.2. Regulations Designed to Prevent Accidents
1.3. Regulations Designed to prevent Damage to Engine and Premature Wear
1.4. Regulations Designed to Prevent Pollution
1.5. Notes on Safety in Handling Used Engine Oil
1.6. General Repair instructions
1.7. Engine Specification
1.8. Engine Assembly

2. TECHNICAL INFORMATION 16

2.1. Engine Model and Serial Number
2.2. Engine Type
2.3. Engine Timing
2.4. Valves
2.5. Lubrication System
2.6. Fuel System
2.7. Cooling System
2.8. Fan Belt
2.9. Air Cleaner
2.10. Intercooler
2.11. Valve Clearance Adjust Procedure
2.12. Cylinder Compression Pressure
2.13. Injection Nozzle
2.14. Fuel Injection Nozzle
2.15. Battery
2.16. Air Removal of Fuel System
2.17. Fuel Supply Pump
2.18. Turbocharger
2.19. Starting Motor
2.20. Electrical Equipment
2.21. Diagnosis and Remedy
2.22. Engine Inspection

3. DISASSEMBLY AND REASSEMBLY OF MAJOR COMPONENTS 48

3.1. Disassembly
3.2. Inspection and Measurement
3.3. Reassembly

4. COMMISSIONING AND OPERATION 99

4.1. Preparation
4.2. Breaking-In
4.3. Inspections After Starting
4.4. Operation in Winter Time
4.5. Tuning the Engine

5. MAINTENANCE AND CARE 103

5.1. Periodical Inspection and Maintenance
5.2. Lubrication System
5.3. Adjustment of Valve Clearance
5.4. Replacement of Fuel Filter
5.5. Fuel System Checks
5.6. Injection Nozzle Maintenance

https://truckmanualshub.com/

6. MAINTENANCE OF MAJOR COMPONENTS 111

6.1. Fuel Injection Pump
6.2. Cooling System
6.3. Lubricating System
6.4. Turbocharger
6.5. Air Intake System
6.6. V-belts

7. SPECIAL TOOL LIST 174

- **Appendix**
- **Part & After service center**
- **Applications for Daewoo Engine**
- **Worldwide Network**

https://truckmanualshub.com/

1. SAFETY REGULATIONS & ENGINE SPECIFICATIONS

1.1. General Notes

Day-to-day use of power engines and the service products necessary for running them presents no problems if the persons occupied with their operation, maintenance and care are given suitable training and think as they work

This summary is a compilation of the most important regulations. These are broken down into main sections which contain the information necessary for preventing injury to persons, damage to property and pollution. In addition to these regulations those dictated by the type of engine and its site are to be observed also.

Important :
If, despite all precautions, an accident occurs, in particular through contact with caustic acids, fuel penetrating the skin, scalding from oil, antifreeze being splashed in the eyes etc., consult a doctor immediately.

1.2. Regulations Designed to Prevent Accidents

1.2.1. During commissioning, starting and operation

Before putting the engine into operation for the first time, read the operating instructions carefully and familiarize yourself with the “critical” points, If you are unsure, ask your DAEWOO representative.

- For reasons of safety we recommend you attach a notice to the door of the engine room prohibiting the access of unauthorized persons and that you draw the attention of the operating personal to the fact that they are responsible for the safety of persons who enter the engine room.
- The engine must be started and operated only by authorized personnel. Ensure that the engine cannot be started by unauthorized persons.
- When the engine is running, do not get too close to the rotating parts. Wear close-fitting clothing.
- Do not touch the engine with bare hands when it is warm from operation risk of burns.
- Exhaust gases are toxic. Comply with the installation instructions for the installation of DAEWOO diesel engines which are to be operated in enclosed spaces. Ensure that there is adequate ventilation and air extraction.
- Keep vicinity of engine, ladders and stairways free of oil and grease.
  Accidents caused by slipping can have serious consequences.

https://truckmanualshub.com/

1.2.2. During maintenance and care

- Always carry out maintenance work when the engine is switched off. If the engine has to be maintained while it is running, e.g. changing the elements of change-over filters, remember that there is a risk of scalding. Do not get too close to rotating parts.
- Change the oil when the engine is warm from operation.

Caution :
There is a risk of burns and scalding. Do not touch oil drain valve or oil filters with bare hands.

- Take into account the amount of oil in the sump. Use a vessel of sufficient size to ensure that the oil will not overflow.
- Open the coolant circuit only when the engine has cooled down. If opening while the engine is still warm is unavoidable, comply with the instructions In the chapter entitled “Cooling”.
- Neither tighten up nor open pipes and hoses (lube oil circuit, coolant circuit and any additional hydraulic oil circuit) during the operation. The fluid which flow out can cause injury,
- Fuel is inflammable. Do not smoke or use naked lights in its vicinity. The tank must be filled only when the engine is switched off.
- Keep service products (anti-freeze) only in containers which can not be confused with drinks containers.
- Comply with the manufacturer’s instructions when handling batteries.

Caution :
Accumulator acid is toxic and caustic. Battery gases are explosive.

1.2.3. When carrying out checking, setting and repair work

- Checking, setting and repair work must be carried out by authorized personnel only.
- Use only tools which are in satisfactory condition. Slip caused by the worn open-end wrench could lead to Injury.
- When the engine is hanging on a crane, no-one must be allowed to stand or pass under it. Keep lifting gear in good condition.
- When checking injectors, do not put your hands under the jet of fuel.
  Do not inhale at atomized fuel.
- When working on the electrical system disconnect the battery earth cable first.
  Connect it up again last in prevent short circuits.

https://truckmanualshub.com/

1.3. Regulations Designed to Prevent Damage to Engine and Premature Wear

(1) Never demand more of the engine than it was designed to yield for its intended purpose. Detailed information on this can be found in the sales literature. The injection pump must not be adjusted without prior written permission of DAEWOO.

(2) If faults occur, find the cause immediately and have it eliminate in order to prevent more serious of damage.

(3) Use only genuine DAEWOO spare parts. DAEWOO will accept no responsibility for damage resulting from the installation of other parts which are supposedly “just as good”.

(4) In addition to the above, note the following points.

- Never let the engine run when dry, i.e. without lube oil or coolant. Use only DAEWOO approved service products (engine oil, anti-freeze and anticorrosion agent).
- Pay attention to cleanliness, The Diesel fuel must be free of water. See “Maintenance and care”.
- Have the engine maintained at the specified intervals.
- Do not switch off the engine immediately when it is warm, but let it run without load for about 5 minutes so that temperature equalization can take place.
- Never put cold coolant into an overheated engine. See “Maintenance and care”.
- Do not add so much engine oil that the oil level rises above the max. marking on the dipstick. Do not exceed the maximum permissible tilt of the engine. Serious damage to the engine may result if these instructions are not adhered to.
- Always ensure that the testing and monitoring equipment (for battery charge, oil pressure, and coolant temperature) function satisfactorily.
- Comply with instructions for operation of the alternator. See “Commissioning and operation”.
- Do not let the water pump run dry. If there is a risk of frost, drain the water when the engine switched off.

1.4. Regulations Designed to Prevent Pollution

1.4.1. Engine oil, filter catridge, fuel filter

- Take old oil only to an oil collection point. Take strict precautions to ensure that oil does not get into the drains or into the ground.
- The drinking water supply may be contaminated.
- Oil and fuel filter elements are classed as dangerous waste and must be treated as such.

1.4.2. Coolant

- Treat undiluted anti-corrosion agent and / or antifreeze as dangerous waste.
- When disposing of spent coolant comply with the regulations of the relevant local authorities.

https://truckmanualshub.com/

1.5. Notes on Safety in Handling Used Engine Oil

Prolonged or repeated contact between the skin and any kind of engine oil decreases the skin. Drying, irritation or inflammation of the skin may therefore occur. Used engine oil also contains dangerous substances which have caused skin cancer in animal experiments. If the basic rules of hygiene and health and safety at work are observed, health risks are not to the expected as a result of handling used engine oil.

Health precautions

- Avoid prolonged or repeated skin contact with used engine oil.
- Protect your skin by means of suitable agents (creams etc.) or wear protective gloves.
- Clean skin which has been in contact with engine oil.
  - Wash thoroughly with soap and water, A nailbrush is an effective aid.
  - Certain products make it easier to clean your hands.
  - Do not use petrol, Diesel fuel, gas oil, thinners or solvents as washing agents.
- After washing apply a fatty skin cream to the skin.
- Change oil-soaked clothing and shoes.
- Do not put oily rags into your pockets.

Ensure that used engine oil is disposed of properly.
- Engine oil can endanger the water supply -

For this reason do not let engine oil get into the ground, waterways, the drains or the sewers. Violations are punishable. Collect and dispose of used engine oil carefully.
For information on collection points please contact the seller, the supplier or the local authorities.

https://truckmanualshub.com/

1.6. General Repair Instructions

1. Before performing service operation, disconnect the grounding cable from the battery for reducing the chance of cable damage and burning due to short-circuiting.
2. Use covers for preventing the components from damage or pollution.
3. Engine oil and anti-freeze solution must be handled with reasonable care as they cause paint damage.
4. The use of proper tools and special tools where specified is important to efficient and reliable service operation.
5. Use genuine DAEWOO parts necessarily.
6. Used cotter pins, gaskets, O-rings, oil seals, lock washer and self-lock nuts should be discarded and new ones should be prepared for installation as normal function of the parts can not be maintained if these parts are reused.
7. To facilitate proper and smooth reassemble operation, keep disassembled parts neatly in groups. Keeping fixing bolts and nut separate is very important as they vary in hardness and design depending on position of installation.
8. Clean the parts before inspection or reassembly. Also clean oil ports, etc. using compressed air to make certain they are free from restrictions.
9. Lubricate rotating and sliding faces of parts with oil or grease before installation.
10. When necessary, use a sealer on gaskets to prevent leakage.
11. Carefully observe all specifications for bolts and nuts torques.
12. When service operation is completed, make a final check to be sure service has been done property.

https://truckmanualshub.com/

1.7. Engine Specification

1.7.1. Specification

Items \ Engine Model		DE12T	DE12TI/A	DE12TIS
Engine type		4 cycle in-line, Water-cooled type Turbo charged	4 cycle in-line, Water-cooled type Turbo charged & intercooled	
Combustion chamber type		Direct injection type		
Cylinder liner type		Replaceable dry liner		
Timing gear system		Gear driven type		
No. of piston ring		2 Compression ring , 1 oil ring		
No. of cylinder-bore x stroke (mm)		6 - 123 x 155		
Total piston displacement (cc)		11,051		
Compression ratio		17.1 : 1	16.5 : 1	19.5 : 1
Engine dimension (length x width x height) (mm)		1,317 x 847 x 1,064	1,379 x 1,017 x 1,310	
Engine weight (kg)		909	900	
Rotating direction (viewed from flywheel)		Counter clockwise		
Fuel injection order		1 - 5 - 3 - 6 - 2 - 4		
Injection pump type		Mechanical	Mechanical	Mechanical
Governor type		RSV	RSV / RFD	RSV
Injection nozzle type		Multi-hole (5-ϕ0.31)	Multi-hole(5-ϕ0.31)	Multi-hole(5-ϕ0.29)
Fuel injection pressure (kg/cm^2)		220	220	160 / 220
Compression pressure (kg/cm^2)		28 (at 200rpm)		
Intake and exhaust valve clearance(at cold) (mm)		0.3		
Intake valve	Open at	18° (B.T.D.C)		18.2° (B.T.D.C)
	Close at	34° (A.B.D.C)		32.2° (A.B.D.C)
Exhaust valve	Open at	46° (B.B.D.C)		69.8° (B.B.D.C)
	Close at	14° (A.T.D.C)		29.8° (A.T.D.C)
Lubrication method		Full forced pressure feed type		
Oil pump type		Gear type driven by crankshaft		
Oil filter type		Cartridge type		
Lubricating oil capacity (max./min) (liter)		25/17		
Oil cooler type		Water cooled		
Water pump		Centrifugal type driven by gear		
Cooling method		Fresh water forced circulation		
Cooling water capacity (engine only) (liter)		21		
Thermostat type (opening temperature)		Wax pallet type (71 or 85 °C)		
Alternator voltage - capacity (V - A)		24V - 50A		
Starting motor voltage - output (V - kW)		24 - 6.6		

https://truckmanualshub.com/

1.7.2. Engine power

Production tolerance : ±5%

Engine Model		Performance					Remark
Model	Suffix	Injection timing (BTDC °)	Power (PS / rpm)	Torque (kg.m / rpm)	Low idle (rpm)	High idle (rpm)	
DE12T	EBHEA	14	252 / 1,950	104 / 1,400	1,000~1,025	2,350~2,410	TIER-I
	EBHLA	14	216 / 2,200	86 / 1,400	975±25	2,420±50	
DE12TI	EBIEA	14	216 / 1,950	86 / 1,400	975±25	2,095~2,195	
	EBIEB	14	286 / 2,000	114 / 1,400	1,100±25	2,200±50	
DE12TIA	EBIEC	17	320 / 2,000	128 / 1,400	1,000~1,025	2,250~2,275	
	EBIED	17	294 / 2,000	115 / 1,400	1,000~1,025	2,250~2,275	
	EBIEE	17	282 / 2,000	110 / 1,400	1,000~1,025	2,250~2,275	
	EBILA	14	305 / 2,100	115 / 1,400	975±25	2,310±50	
	EBILB	14	302 / 2,100	132 / 1,200	1,000±25	2,380~2,410	
	EBILC	14	302 / 2,100	132 / 1,200	1,000±25	2,380~2,410	
	EBILD	17	282 / 2,100	132 / 1,200	1,000±25	2,380~2,410	
DE12TIS	ECIEA	17	282 / 2,000	132 / 1,200	1,000±25	2,380~2,410	TIER-II
	ECIEB	6.5 ~ 7	294/ 2,000	115 / 1,400	1,000~1,025	2,250~2,275	
	ECIEC	5 ~ 6	257 / 1,900	105 / 1,400	1,000~1,025	2,090~2,140	
	ECIED	6.5 ~ 7.5	282 / 2,000	110 / 1,300	1,000~1,025	2,250~2,275	
	ECILA	5 ~ 6	305 / 2,100	132 / 1,200	1,000~1,025	2,350~2,410	
	ECILB	5 ~ 6	235 / 2,100	112 / 1,200	1,000~1,025	2,350~2,410	
	ECILC	5 ~ 6	282 / 2,100	132 / 1,200	1,000~1,025	2,350~2,410	

* Note : All data are based on operation without cooling fan at ISO 1585 (SAE J1349).

https://truckmanualshub.com/

1.7.3. Performance curve

1) DE12TIS : S470 EXCAVATOR

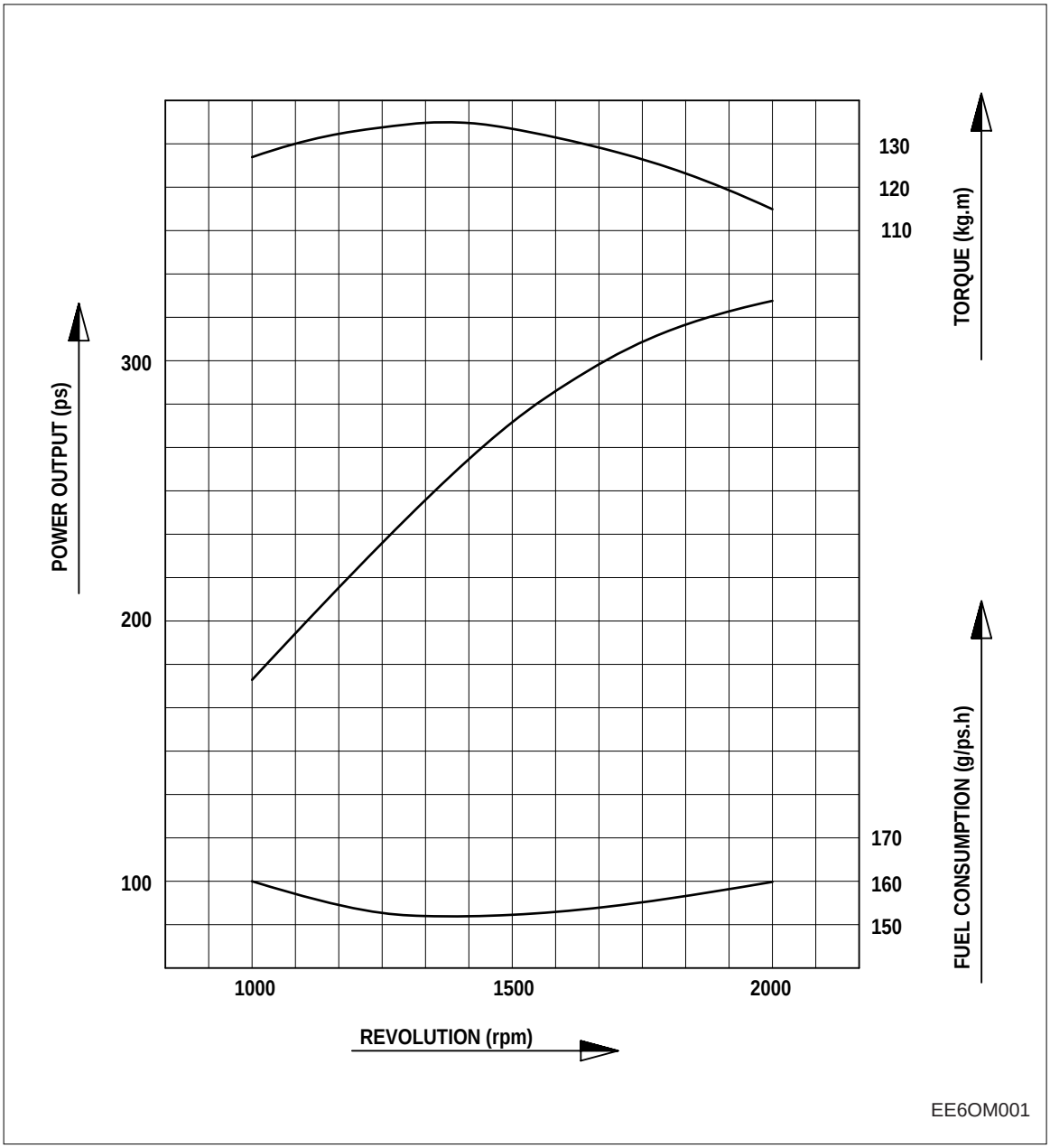

Performance		ISO 1585 (SAE J1349)
Output	(rated)	323 ps / 2,000 rpm
Torque	(max.)	135 kg.m / 1,400 rpm
Fuel consumption	(rated)	160 g / ps.h

https://truckmanualshub.com/

2) DE12TIS : S420 EXCAVATOR

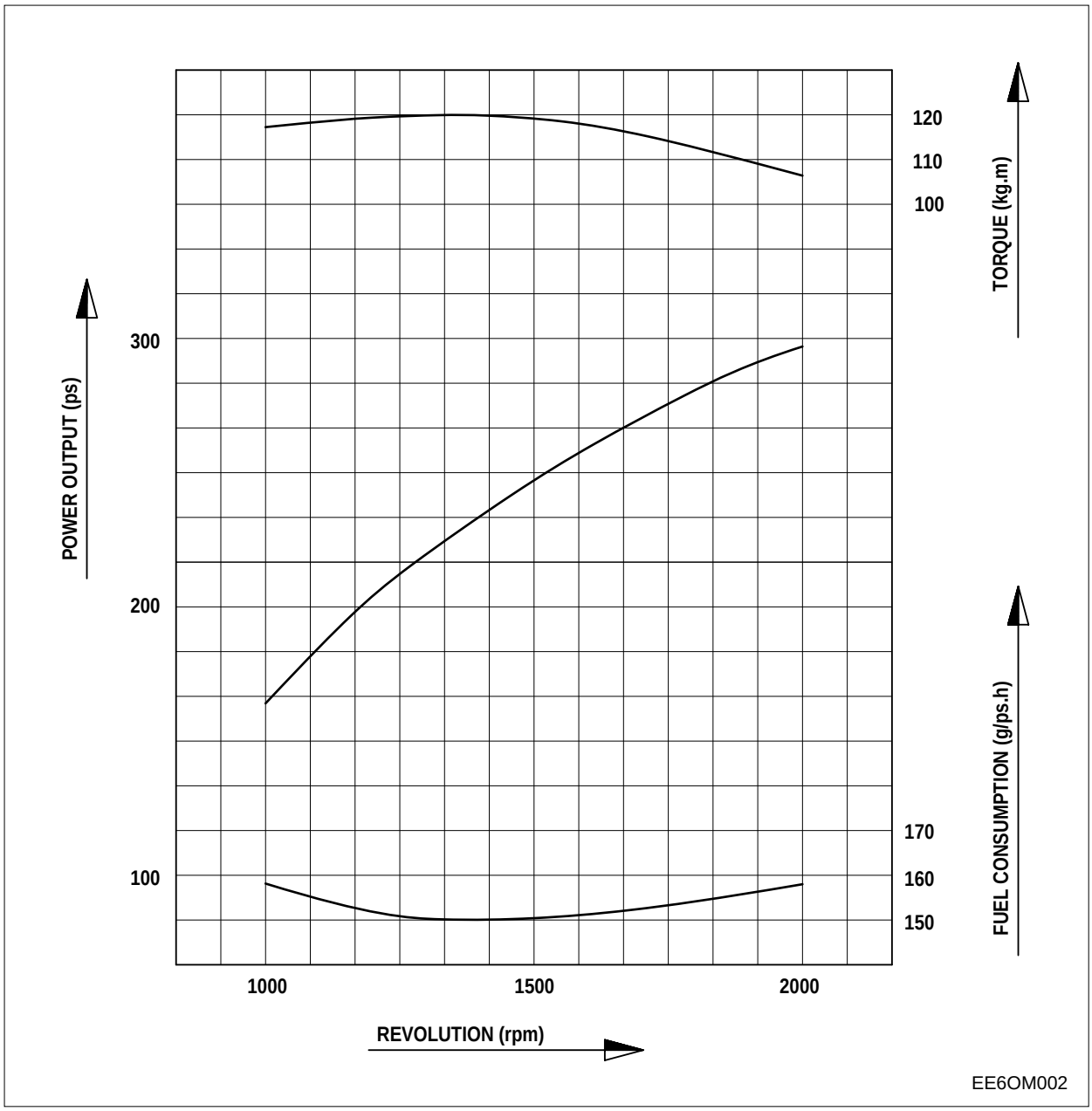

Performance		ISO 1585 (SAE J1349)
Output	(rated)	297 ps / 2,000 rpm
Torque	(max.)	120 kg.m / 1,400 rpm
Fuel consumption	(rated)	158 g / ps.h

3) DE12TIS : S340 EXCAVATOR

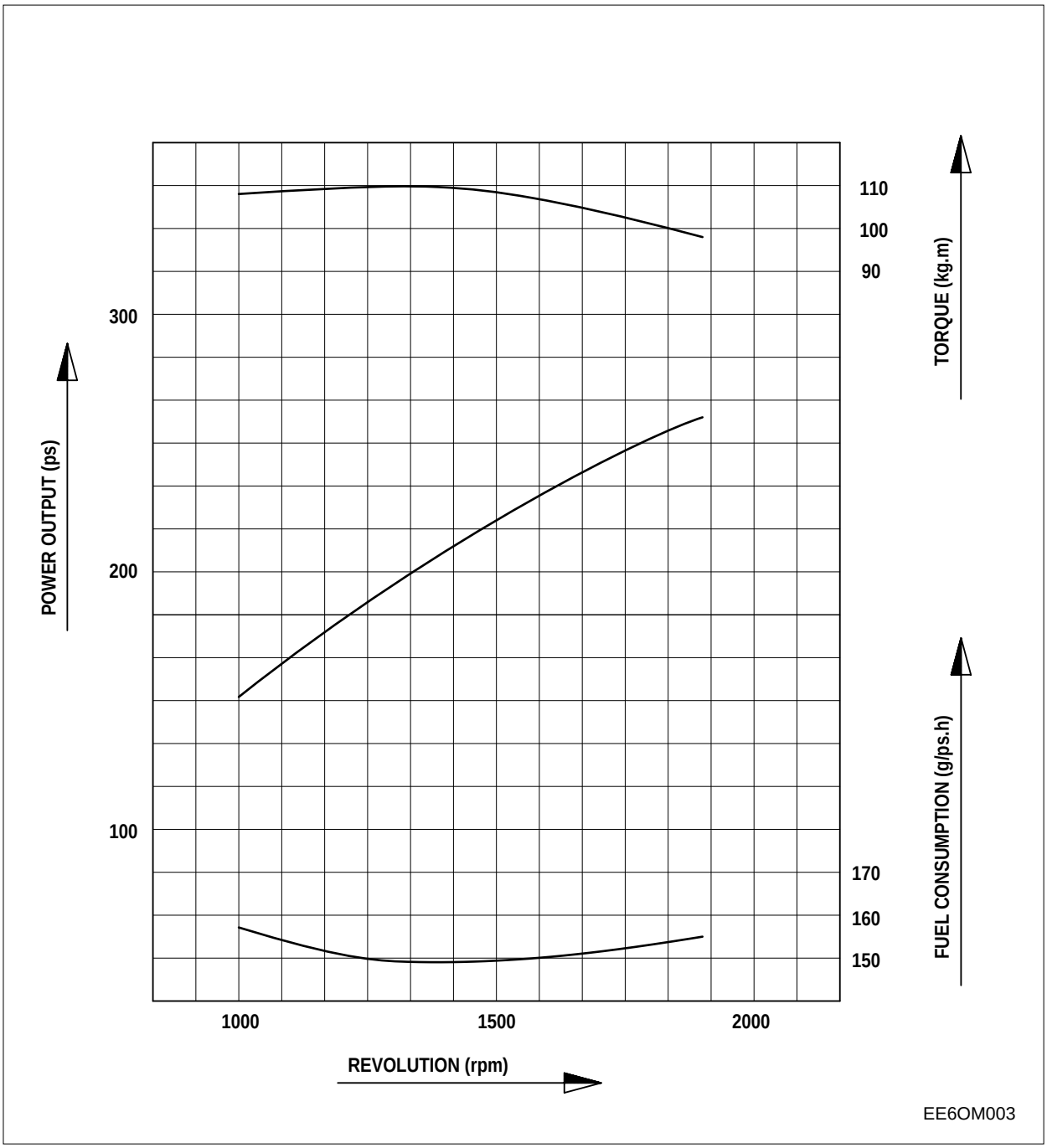

Performance		ISO 1585 (SAE J1349)
Output	(rated)	260 ps / 1,900 rpm
Torque	(max.)	110 kg.m / 1,400 rpm
Fuel consumption	(rated)	155 g / ps.h

4) DE12TIS : M400 - V LOADER

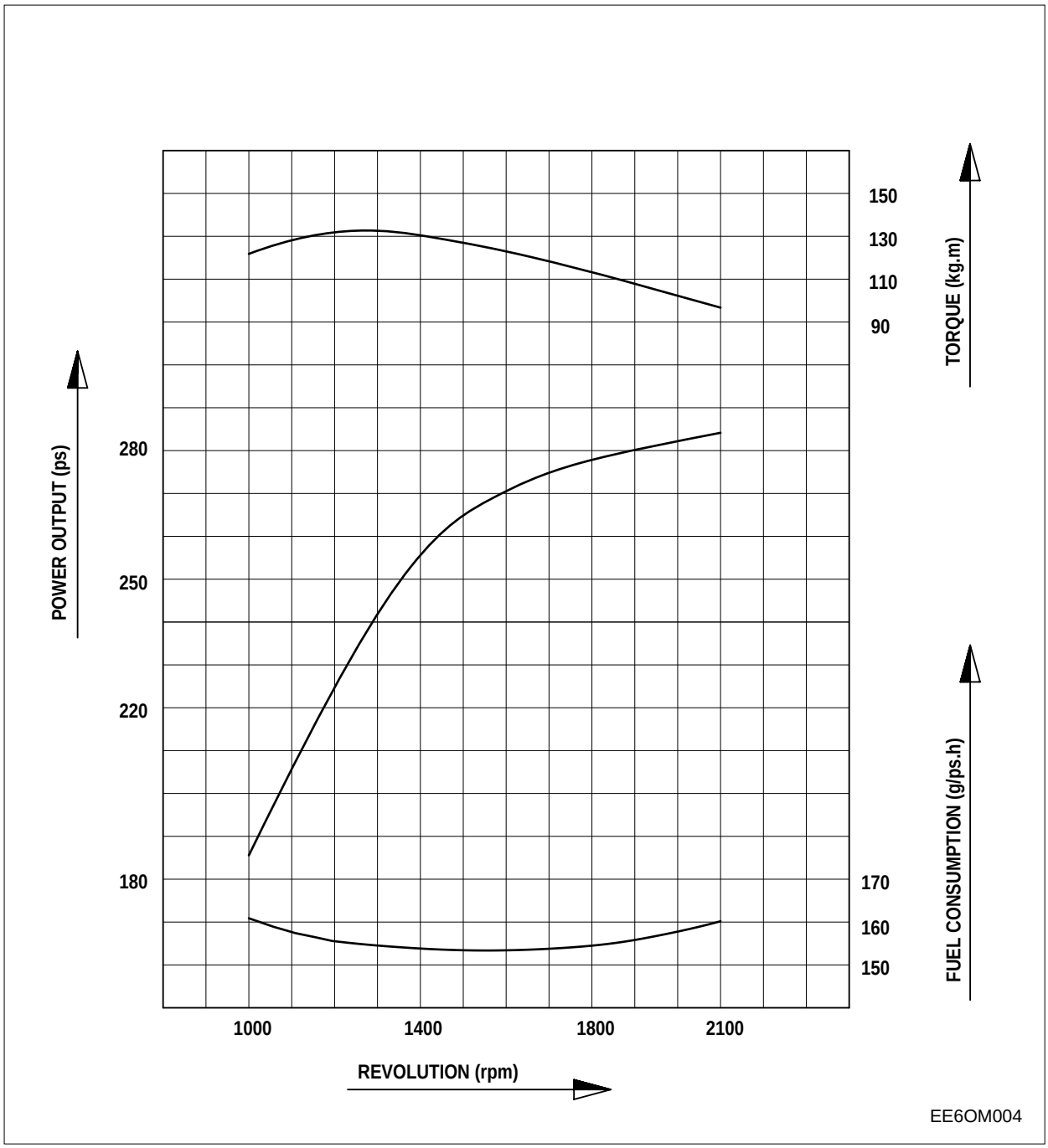

Performance		ISO 1585 (SAE J1349)
Output	(rated)	285 ps / 2,100 rpm
Torque	(max.)	130 ↑ kg.m / 1,200 rpm
Fuel consumption	(rated)	160 g / ps.h

https://truckmanualshub.com/

1.8. Engine Assembly

1.8.1. Engine sectional view (longitudinal)

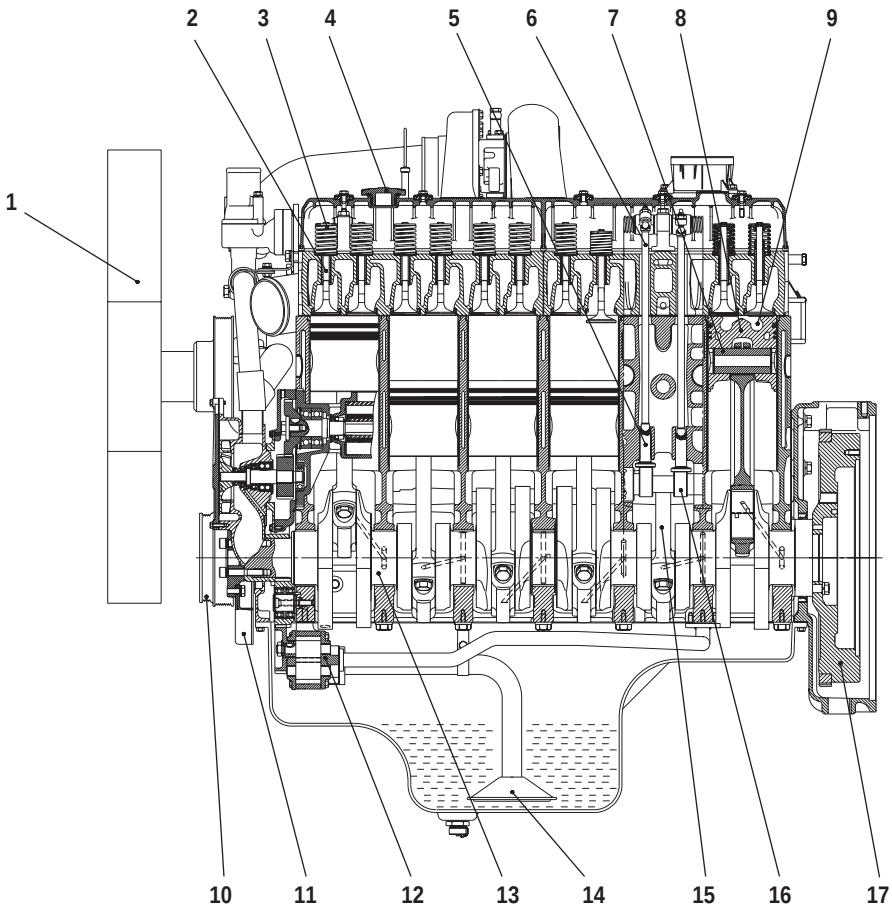

EE6OM018

1. Cooling water pump
2. Valve
3. Valve spring
4. Oil filler
5. Tappet
6. Push rod
7. Piston pin
8. Piston
9. Piston chamber
10. Crank shaft pulley
11. Vibration damper
12. Oil pump
13. Crank shaft
14. Oil suction pipe
15. Connecting rod
16. Cam shaft
17. Flywheel

https://truckmanualshub.com/

1.8.2. Engine sectional view (cross)

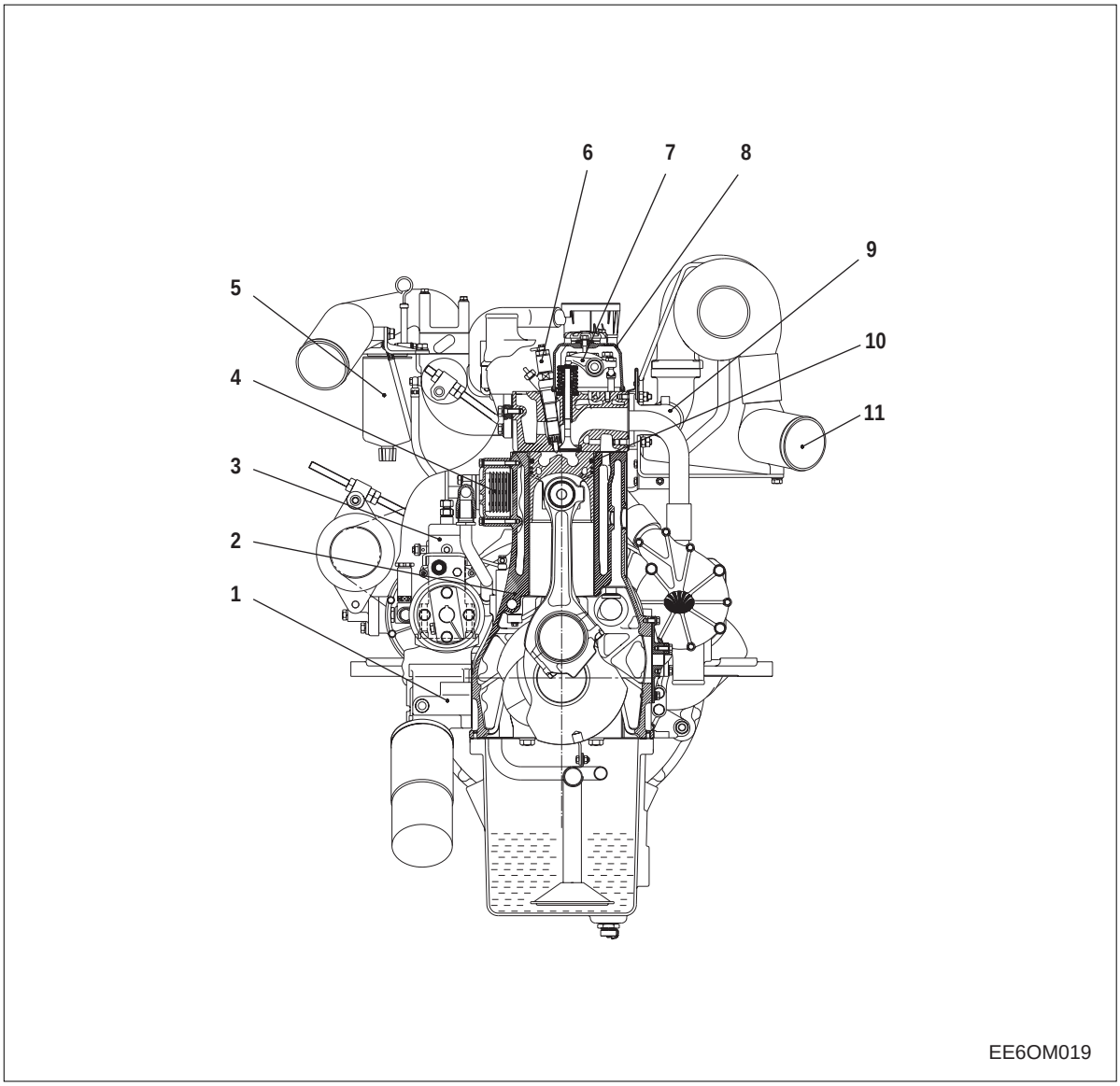

1. Oil filter
2. Cylinder block
3. Fuel injection pump
4. Oil cooler
5. Fuel filter
6. Fuel injection nozzle
7. Rocker arm
8. Cylinder head cover
9. Exhaust manifold
10. Piston ring
11. Air pipe

https://truckmanualshub.com/

1.8.3. Engine assembly views

1) DE12TI / A

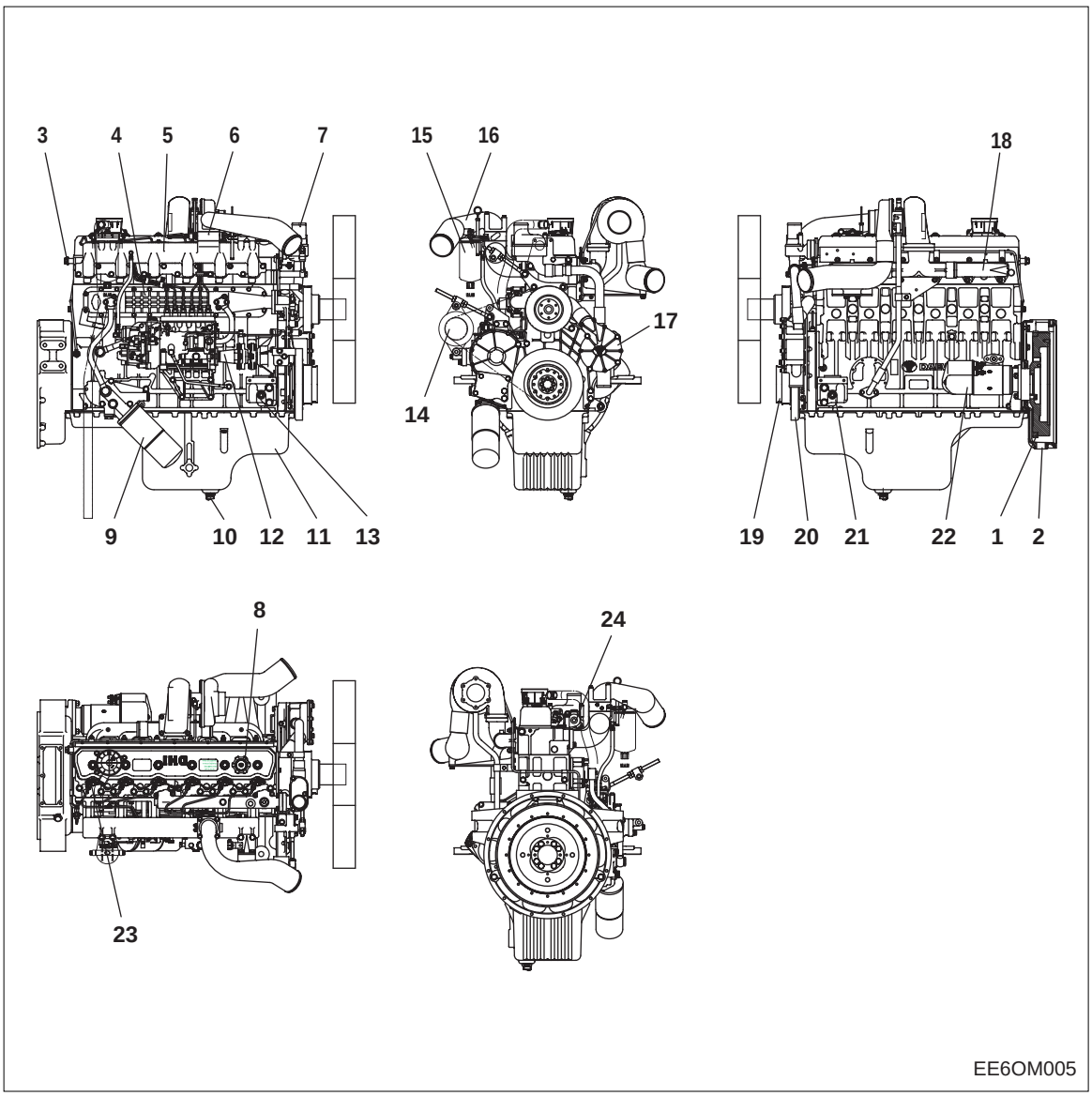

1. Fly wheel
2. Flywheel housing
3. Lifting hook
4. Oil cooler
5. Intake manifold
6. Air heater
7. Water outlet
8. Oil filler cap
9. Oil filter
10. Oil drain plug
11. Oil pan
12. Fuel injection pump
13. Mounting bracket
14. Alternator
15. Fuel filter
16. Air pipe
17. Cooling water pump
18. Exhaust manifold
19. Crank shaft pulley
20. Vibration damper
21. Mounting bracket
22. Starting motor
23. Fuel injection nozzle
24. Cooling water pipe

https://truckmanualshub.com/

2) DE12TIS

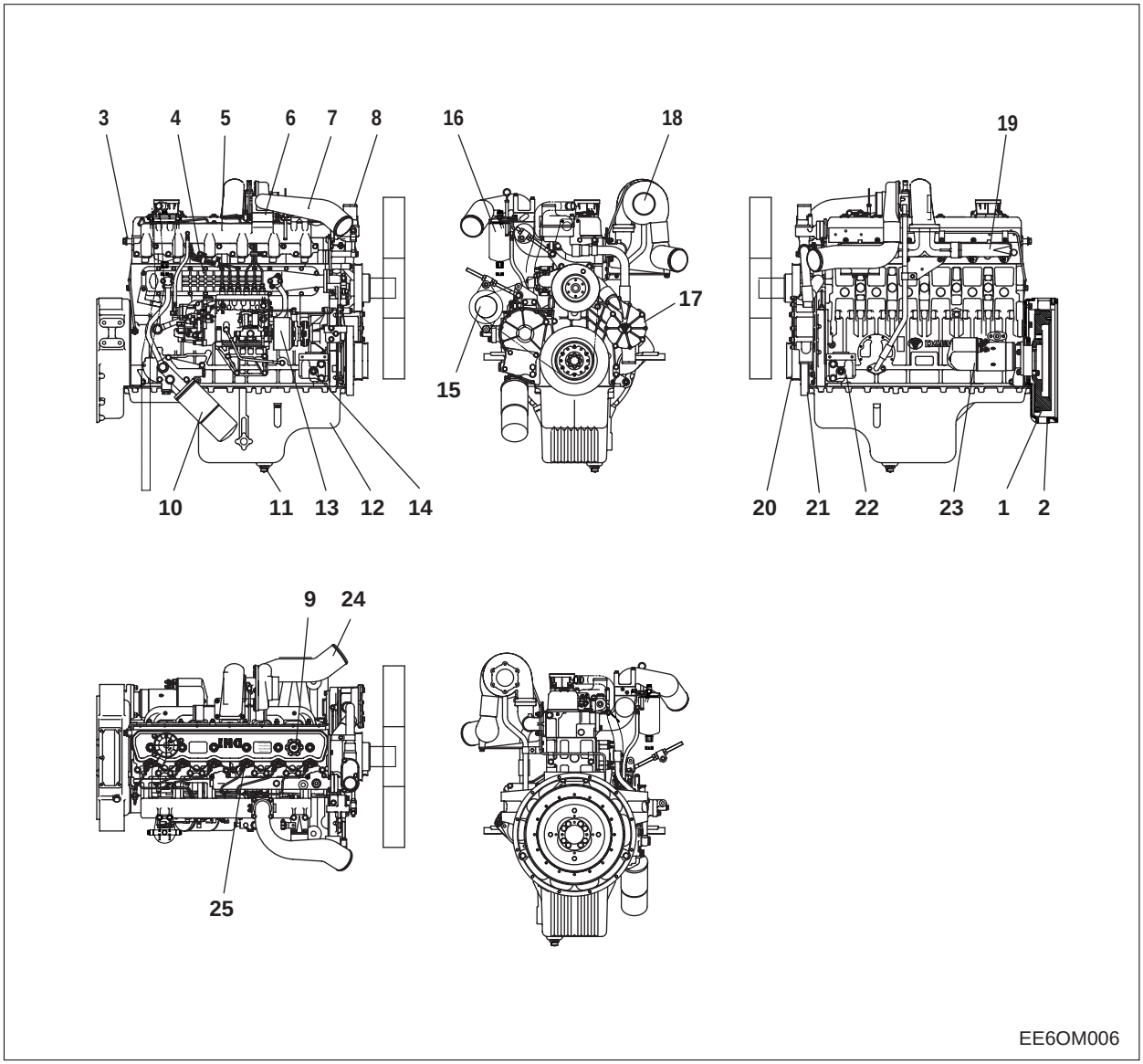

1. Fly wheel
2. Flywheel housing
3. Lifting hook
4. Oil cooler
5. Intake manifold
6. Air heater
7. Air pipe
   (Intercooler to intake manifold)
8. Water outlet
9. Oil filler cap
10. Oil filter
11. Oil drain plug
12. Oil pan
13. Fuel injection pump
14. Mounting bracket
15. Alternator
16. Fuel filter
17. Cooling water pump
18. Turbocharger
19. Exhaust manifold
20. Crank shaft pulley
21. Vibration damper
22. Mounting bracket
23. Starting motor
24. Air pipe
    (Turbocharger to intercooler)
25. Fuel injection nozzle

https://truckmanualshub.com/

2. TECHNICAL INFORMATION

2.1. Engine Model and Serial Number

The engine model and serial number is located on the engine as illustrated. These numbers are required when requesting warranty and ordering parts. They are also referred to as engine model and serial number because of their location.

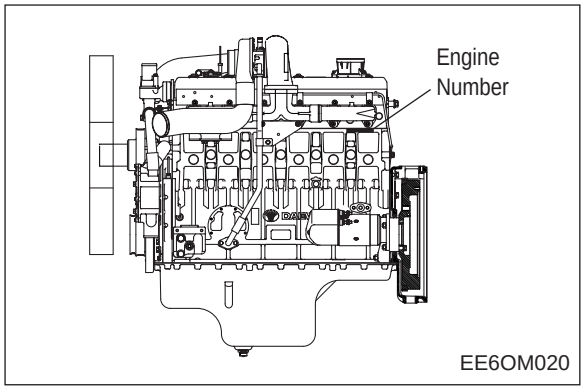

● **Engine serial No. (example 2 : DE12T)**

DE12T 5 00001 EA

- EA — Engine Suffix(EBHEA)
- 00001 — Serial No.
- 5 — Production Year (2005)
- DE12T — Engline Model

● **Engine serial No. (example 3 : DE12TI)**

DE12TI 5 00001 EA

- EA — Engine Suffix(EBIEA)
- 00001 — Serial No.
- 5 — Production Year (2005)
- DE12TI — Engline Model

● **Engine serial No. (example 4 : DE12TIS)**

DE12TIS 5 00001 EA

- EA — Engine Suffix (ECIEA)
- 00001 — Serial No.
- 5 — Production Year (2005)
- DE12TIS — Engline Model

https://truckmanualshub.com/

2.2. Engine Type

The Engines **DE12T, DE12TI, DE12TIA, DE12TIS** are in-line vertical water-cooled 6-cylinder four-stroke diesel engines with direct injection. **DE12T** is turbo-charged engine, and **DE12TI, DE12TIA, DE12TIS** model is turbo-charged and inter-cooled engine.

2.2.1. OMEGA combustion bowl

The OMEGA combustion bowl is a unit designed to perform high efficiency, low emission combustion. As the rim around the combustion bowl port of the upper of the piston has been machined in a smaller size than the interior of the combustion bowl, strong swirl is produced in the combustion bowl and strong squish flow makes the fuel be mixed more sufficiently with air.

Due to the application of **OMEGA** combustion system and optimal utilization of intake and exhaust port configuration within the cylinder head, the **DE12** series diesel engines discharge very low level of hazardous exhaust gases such as smoke, nitrogen oxide, hydrocarbon, or carbon monoxide and thus ensure high performance and low fuel consumption.

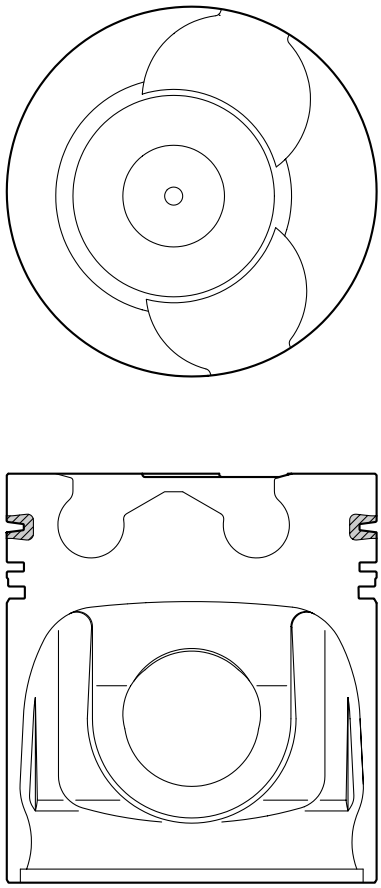

EA8M1001

2.2.2. Cylinder block

The cylinder block is a single piece of alloy cast iron. To increase its stiffness, it is extended to a level below the crankshaft center line. The engine has replaceable dry cylinder liners and individual cylinder heads with struck-in valve seat rings and replaceable valve guides,

2.2.3. Piston con-rod / crankshaft

The forged crankshaft is a ingrate type (Counterweight is integrated with crank shaft body). Radial oil seal on crankshaft and flywheel are provided to seal the flywheel housing inside penetrations.

The con-rods (connecting rods) are die-forged, diagonally split and can be removed through the top of the cylinders together with the pistons. Crankshaft and connecting rods run in steel-backed lead bronze ready-to fit type bearings.

https://truckmanualshub.com/

2.3. Engine Timing

Camshaft, oil pump and injection pump are driven by a gear train arranged at the front end.

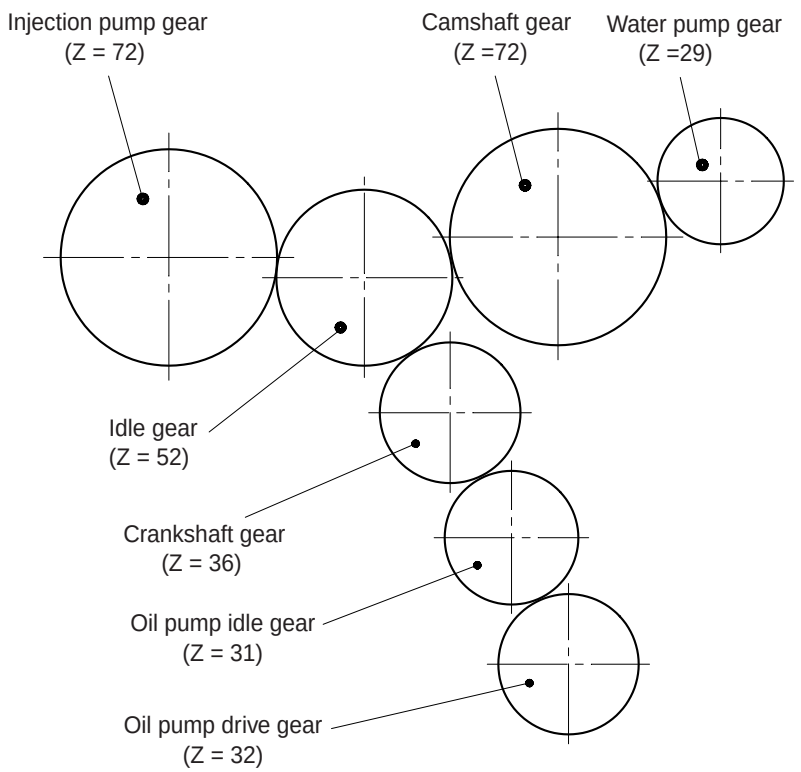

2.4. Valves

The overhead valves are actuated via chilled cast iron tappets , push rods and rocker arms from the camshaft.

2.5. Lubrication System

The engine is equipped with force-feed lubrication.
The pressure is produced by a gear pump whose drive gear is in direct mesh with the crankshaft gear at the front end of cylinder block.
The oil pump draws the oil from the oil sump and delivers it through the oil cooler and oil filter to the main distributor gallery and from there to the main bearings, big-end bearings and camshaft bearings as well as to the small-end bearings and the rocker arms.
The injection pump and the turbocharger are also connected to the engine lubricating system.
The cylinder walls and timing gears are splash-lubricated.
Each cylinder has an oil jet provided for cooling the underside of the pistons.
The lube oil is cleaned in a full-flow oil filter.

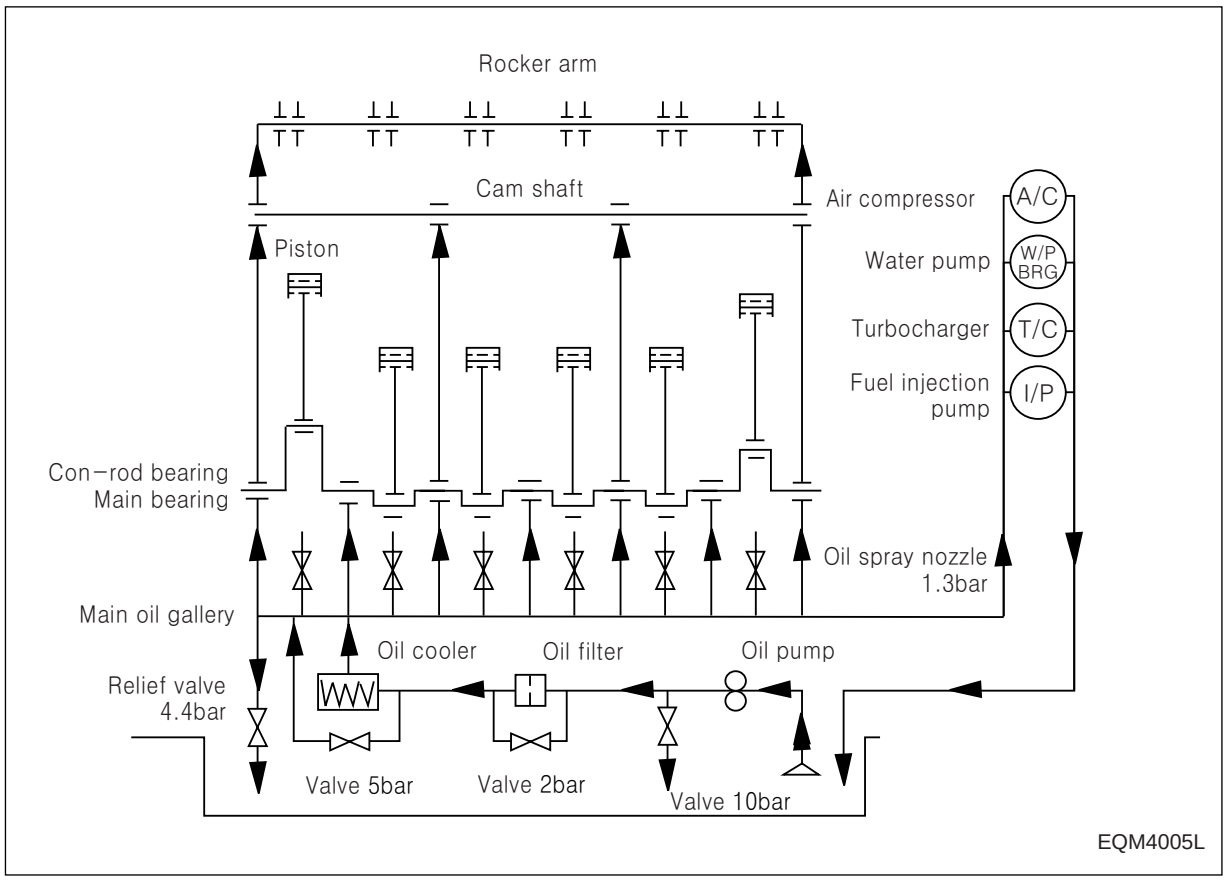

2.5.1. Engine Oil

- Check oil level with the oil level gauge and replenish if necessary.
- Check the oil level with the engine cooled. If the engine is warm, allow time for 5 ~ 10 minutes for oil drain into the crankcase before checking oil level. The oil level must be between Max and Min. lines on the gauge.
- Engine oil should be changed at the specified intervals. Oil in the oil filter should be changed simultaneously.

First oil change	After 1,000km (50hr) operation	
Construction equipments	**DE12T/TI/TIA**	every 250hr
	DE12TIS	

- The following oils are also recommended

Engine model	**Recommend oil**	
	SAE No.	**API No.**
DE12T/TI/TIA	SAE 15W40	above CD or CE
DE12TIS	SAE15W40 SAE10W40	ACEA-E2 or ACEA-E3 (API CH-4)

* If long oil change intervals are to be used, ACEA-E3 oil must be used.

https://truckmanualshub.com/

● Engine Oil capacity

Engine oil capacity				
Engine model	Vehicle	in Oil pan		Total (lit)
		Max. (lit)	Min. (lit)	
DE12T/TI/TIA/TIS	Excavator	25	17	28
	Loader	21	17	24

2.5.2. Oil filter

● Check for oil pressure and oil leaks, and repair or replace the oil filter if necessary.

● Change the oil filter cartridge simultaneously at every replacement of engine oil.

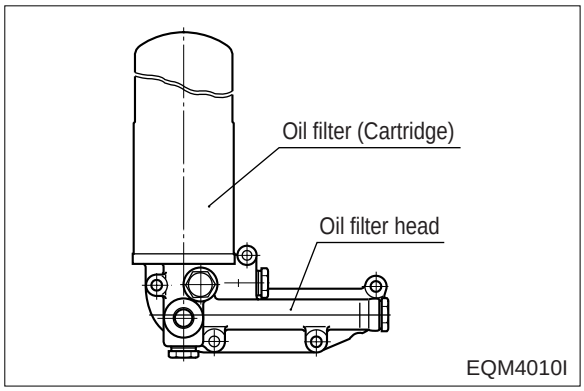

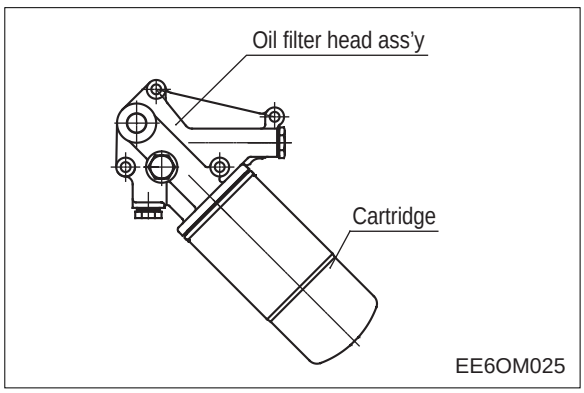

https://truckmanualshub.com/

2.6. Fuel System

The fuel is delivered by the fuel feed pump via the fuel filter to the injection pump and from there to the injection nozzles.

The fuel is sprayed into the cylinders through nozzles fitted in screw-fit injection nozzle holders in the cylinder heads.

Excessively delivered fuel and leak fuel from the nozzle flow through the return pipe back to the tank.

A strainer is arranged ahead of the fuel feed pump.

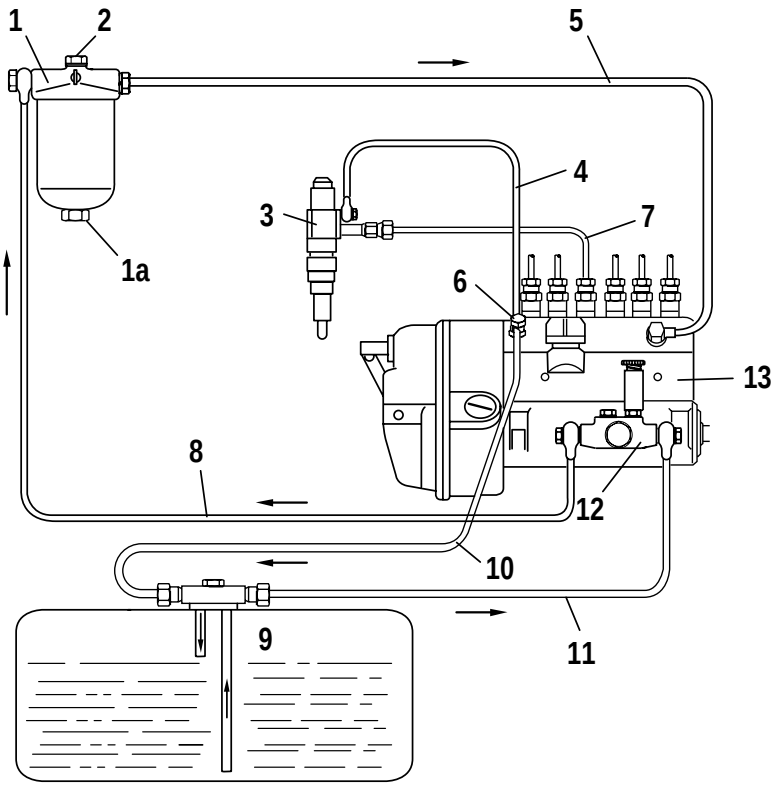

1. Fuel filter
1a. Fuel water drain plug
2. Air bleeding screw (for fuel filter)
3. Injection nozzle
4. Overflow tube
5. Fuel pipe (filter → injection pump)
6. Overflow valve
7. Fuel injection pipe
8. Fuel pipe (feed pump → filter)
9. Fuel tank
10. Fuel return pipe
11. Suction pipe
12. Feed pump
13. Injection pump

https://truckmanualshub.com/

2.6.1. Injection pump

The in-line injection pump is driven via gears from the crankshaft. It is connected to the force feed lubricating system of the engine and consequently maintenance-free.
The governor flange-mounted on the pump casing is a variable range governor designed to keep the speed set by the speed control unit constant under conditions of varying load.

2.6.2. Fuel filter

- This fuel filter has two functions not only oil filtering but also water separating.
- Before entering the suction chamber of the injection pump, the fuel is cleaned in a strainer of fuel feed pump and a fuel filter.
- Drain water in cartridge with loosening the cock under filter manually (6) from time to time.
- The fuel filter should be replaced at every 500 hours.

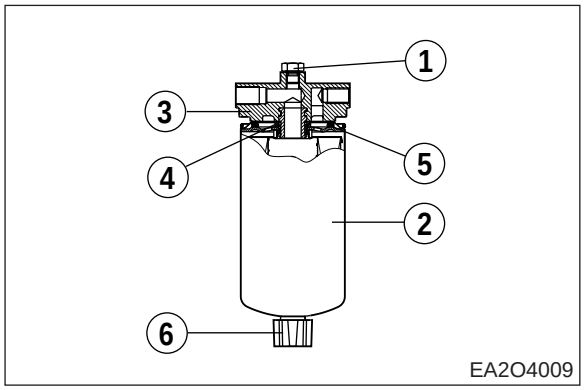

2.6.3. Fuel requirements

DAEWOO diesel engines was designed to use Number 2-D diesel fuel or equivalent that meets specification DIN 51601-DK. For maximum fuel economy, Number 2-D fuel whenever possible. When temperatures are below -7 °C (20 °F), use Number 1-D fuel.
If Number 1-D fuel is not available, the mixture of one kerosene to two gallons of Number 2-D fuel can be used. Once kerosene has been added, the engine should be run for several minutes to mix the fuel.

2.6.4. How to select fuel oil

Fuel quality is an important factor in obtaining satisfactory engine performance, long engine life, and acceptable exhaust emission levels. DAEWOO engines are designed to operate on most diesel fuels marketed today. In general, fuels meeting the properties of ASTM Designation D975 (grades 1-D and 2-D) have provided satisfactory performance.
The ASTM 975 specification, however, does not in itself adequately define the fuel characteristics needed for assurance of fuel quality.
The properties listed in the fuel oil selection chart below have provided optimum engine performance. Grade 2-D fuel is normally available for generator service. Grade 1-D fuel should not be used in pleasure craft engines, except in an emergency.

Fuel Oil Selection Chart

General Fuel Classification	ASTM Test	No. 1 ASTM 1-D	No. 2 ASTM 2-D	DIN 51601
Gravity,˚API #)	D 287	40 ~ 44	33 ~ 37	0.815 ~ 0.855
Flash Point Min. ˚F (˚C)	D 93	100 (38)	125 (52)	131 (55)
Viscosity, Kinematic CST 100 ˚F (40 ˚C)	D 445	1.3 ~ 2.4	1.9 ~ 4.1	1.8 ~ 10
Cloud Point ˚F #)	D 2500	See Note 1)	See Note 1)	See Note 1)
Sulfur Content wt%, Max.	D 129	0.5	0.5	0.15
Carbon Residue on 10%, wt%, Max.	D 524	0.15	0.35	0.1
Accelerated Stability Total Insolubles mg/100 ml, Max. #)	D 2274	1.5	1.5	
Ash, wt%, Max.	D 482	0.01	0.01	
Cetane Number, Min. +)	D 613	45	45	> 45
Distillation Temperature, ˚F(˚C)	D 86			
IMP, Typican #)		350(177)	375(191)	
10% Typical #)		385(196)	430(221)	
50% Typical #)		45(218)	510(256)	680(360)
90% +)		500 (260) Max.	625(329) Max.	
End Point #)		550(288) Max.	675(357) Max.	
Water & Sediment %, Max.	D 1796	0.05	0.05	0.05

#) Not specified In ASTM D 975

+) Differs from ASTM D 975

Note : ***The cloud point should be 6 ˚C (10 ˚F) below the lowest expected fuel temperature to prevent clogging of fuel fitters by crystals.***

https://truckmanualshub.com/

2.7. Cooling System

The engine has a liquid-cooling system. The fresh water pump is a maintenance-free by gear from the crankshaft.
Depending on the agreed extent of delivery and the design of the engine, the coolant circuit can be equipped with temperature monitors which, in the event of loss of coolant, shut the engine down.

- Check the coolant level of the expansion tank by removing the expansion tank filler cap, and add coolant if necessary.
- When injecting antifreeze solution, first drain out the old coolant from the cylinder block and radiator, and then clean them with cleaning solution.
- Be sure to mix soft water with antifreeze solution.

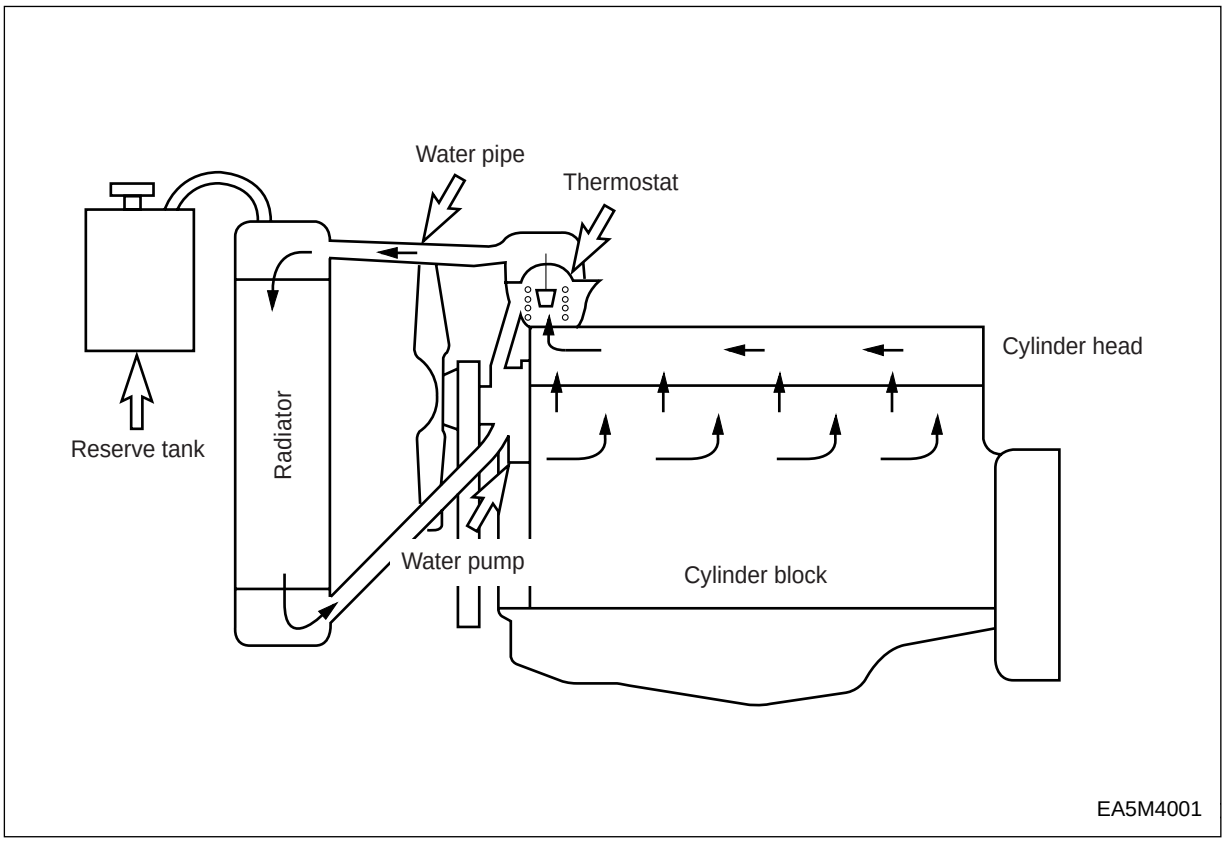

https://truckmanualshub.com/

2.7.1. Coolant pressure cap

- Check the pressure valve opening pressure using a expansion tank cap tester.
- Replace the filler cap assembly if the measured valve does not reach the specified limit. (pressure valve opening pressure : 0.9 kg/cm^2)

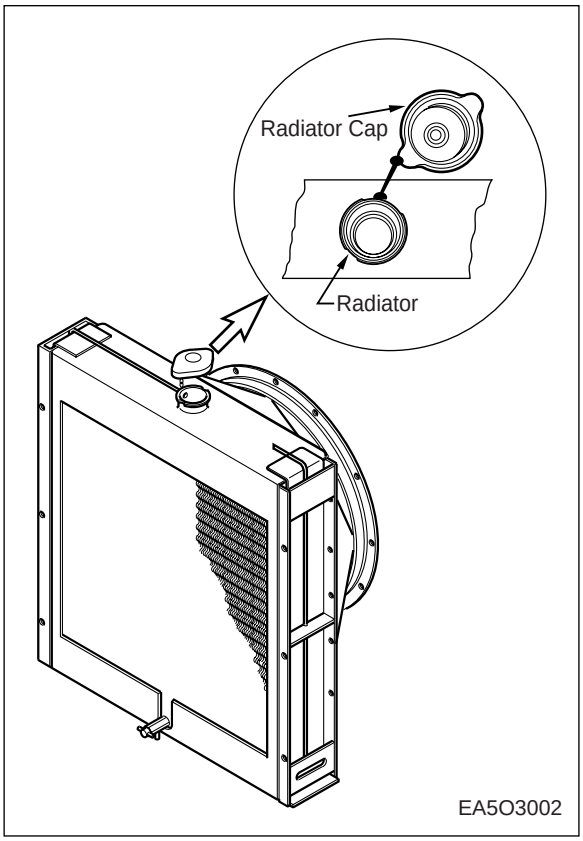

Caution :
Because it is dangerous to open the pressure cap quickly when coolant is hot, after lowering the inside pressure of the tank by slow-opening at first open it fully.

2.7.2. Cooling water

- Regarding the cooling water that is to be used for engine, the soft water not the hard water must be used.he use of proper tools and special tools where specified is important to efficient and reliable service operation.
- The engine cooling water can be used diluting it with antifreezing solution 40% and the additive for rust prevention (DCA4) 3 ~ 5 %.
- The density of above solution and additive must be inspected every 500 hours to maintain it properly.

NOTE :
The proper density control of antifreezing solution and rust preventing additive will be able to prevent the rusting effectively and maintain the stable quality of engine. For the improper control might give the fatal damage to the cooling water pump and cylinder liners, detail care is needed.

- Since **DE12T, DE12TI, DE12TIA** and **DE12TIS** (diesel engine of **DE12** series) cylinder liner is dry type, particularly the cooling water control should be applied thoroughly.
- The density of antifreezing solution and additive for rust prevention is able to be confirmed by the cooling water test kit (Fleetguard CC2602M) or DAEWOO No. : 60.99901-0038
- How to use the cooling water test kit
  (1) When the cooling water temp. of engine is in the range of 10 ~ 55 ˚C, loosen the plug for cooling water discharge and fill the plastic cup about a half.

NOTE :
In taking the cooling water sample, if the water in auxiliary tank were taken, it is hard to measure the accurate density. Take the cooling water sample necessarily loosening the cooling water discharge plug.

(2) At the state of a test paper soaked in the sampled water, after taking the paper out through water agitation, shake off the water.
(3) Wait for about 45 sec. till the color change of test paper.

NOTE :
However, it should not elapse longer than 75 sec, and if it did, the hue would change.

(4) Make the numerical value by comparing the test paper which hue has changed with the color list of label on storage bottle.
(5) By comparing the hue changed into yellowish green or so with the green color indication of test paper storage bottle, confirm the density. (Then, the density indication must be in the hue range of 33% to 50%).
(6) The brown at the middle of test paper and the lower pink color indication represent the additive state for rust prevention, and the proper range is that the meeting numerical value of brown (vertical) and pink color (horizontal) locates in the range of 0.3 to 0.8 at the color list of label on the test paper storage bottle.
(7) In case of less than 0.3, replenish the additive for rust prevention (DCA4), and in case of more than 0.8, pour out the cooling water about 50% and then readjust the density after refilling with clean fresh water.

● Amount of Anti-freeze in winter

Ambient Temperature (˚C)	Cooling water (%)	Anti-freeze (%)
Over -10	85	15
-10	80	20
-15	73	27
-20	67	33
-25	60	40
-30	56	44
-40	50	50

https://truckmanualshub.com/

2.7.3. Cleaning of the cooling inside system circuit

(by authorized specialist personnel)

When the cooling system circuit are fouled with water scales or sludge particles, the cooling efficiency will be lowered.

Investigations have shown that in many cases the poor condition of the coolant and /or the cooling system accounts for damage to the water pump mechanical seal, The poor condition of the cooling system is normally due to use of unsuitable or no anti-freezing agents and corrosion inhibitor or defect, not early enough replaced covers for filler neck and working valves.

If twice in a short time the water pump of an engine develops leases or the coolant is heavily contaminated (dull, brown, mechanically contaminated, grey or black sings of a leakage on the water pump casing) clean the cooling system prior to removing that water pump as follows.

a) Drain coolant
b) Remove thermostats, so that the whole cooling system is immediately flown through when cleaned.
c) Fill the cooling system with a mixture of potable water and 1.5% by volume of cleaner. (Henkel P3T5175)
d) Warm up engine under load. After a temperature of 60 ℃ is reached, run engine for a further 15 minutes.
e) Drain cleaning fluid.
f) Repeat steps c) and d).
g) Flush cooling system.
h) Run engine at idle for 30 minutes. At the same time continuously replenish the water leaking from the bore in drain plug by adding fresh water.

Caution :

Periodically clean the circuit interior with a cleaner.

https://truckmanualshub.com/

2.8. Fan Belt

● **V-belt**

- Use a fan belt of specified dimensions, and replace if damaged, frayed, or deteriorated.
- Check the fan belt for belt tension.
  If belt tension is lower than the specified limit, adjust the tension by relocating the alternator. (specified deflection: 10 ~ 15 mm when pressed down with thumb)

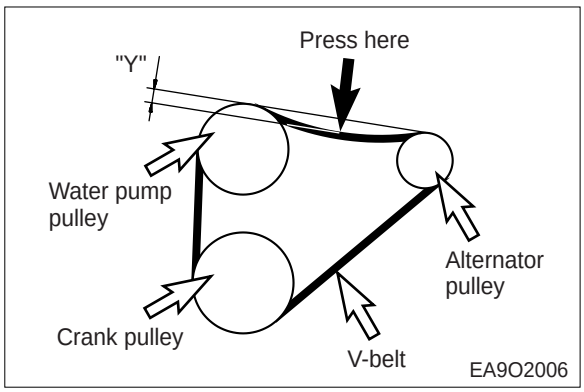

● **Poly belt**

Poly belt will be properly tensioned if the deflection force "F" is applied mid-way between the belt's tangent points with the pulley.

T = 0.015 x S (about 1.5 mm per 100 mm)

T = 0.015 x *S (mm)
(T : Deflection, S : Span)

$$*S = \sqrt{C^2 - \frac{(D-d)^2}{2}} \text{ (mm)}$$

C : Distance of pulleys (mm),
D : Large pulley diameter (mm),
d : Small pulley diameter (mm)

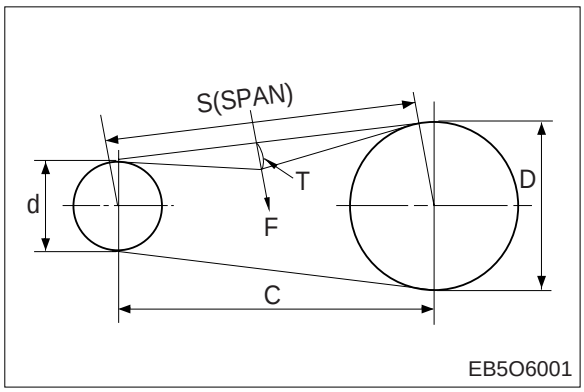

2.9. Air Cleaner

● In case that elements are deformed, damaged or if the air cleaner has a crack, replace it.
● By the definite interval, the elements must be cleaned and replaced.

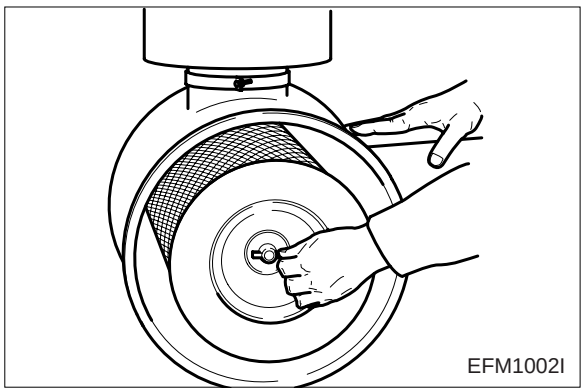

https://truckmanualshub.com/

2.10. Intercooler

The intercooler is air to air type and has a large cooling fan capacity. The intercooler life and performance depends on the intake air condition greatly. Fouled air pollutes and clogs the air fins of intercooler. As a result of this, the engine output is decreased and engine malfunction is occurred. So you always check whether the intake air systems like air filter element are worn or polluted.

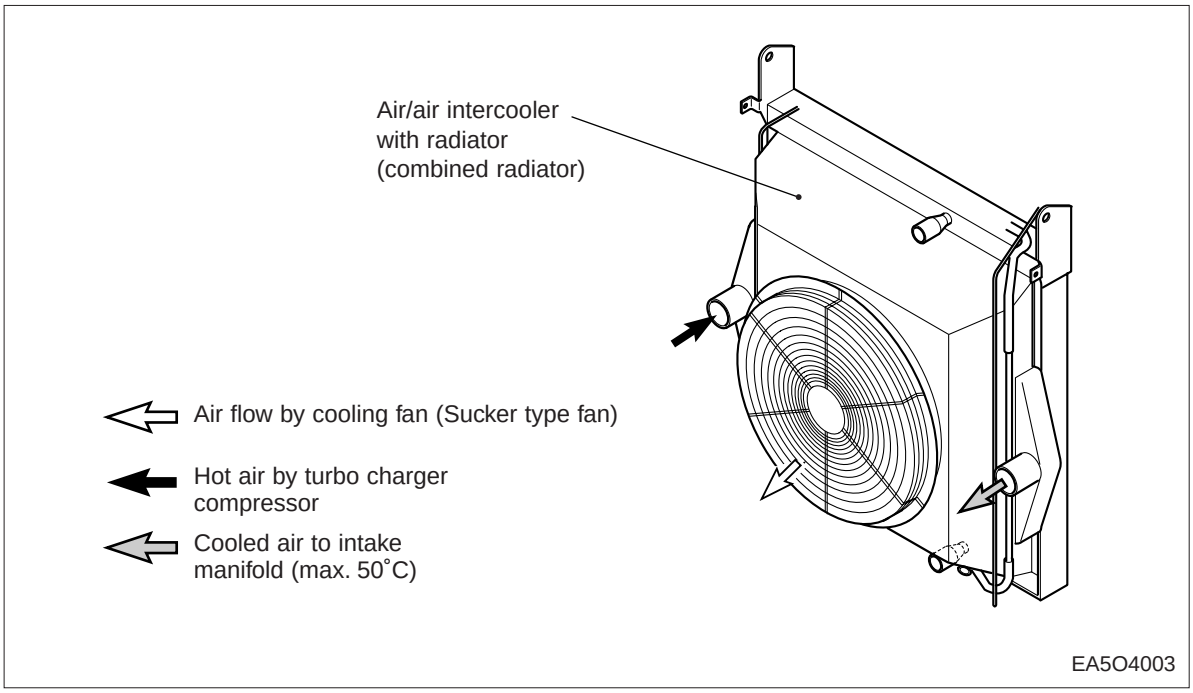

2.11. Valve Clearance Adjust Procedure

- After letting the #1 cylinder's piston come at the compression top dead center by turning the crankshaft, adjust the valve clearances.
- Loosen the lock nuts of rocker arm adjusting screws and push the feeler gauge of specified value between a rocker arm and a valve stem and adjust the clearance with adjusting screw respectively and then tighten with the lock nut.
- As for the valve clearance, adjust it when in cold, as follow.

Model	Intake Valve	Exhaust Valve
DE12T **DE12TI** **DE12TIA** **DE12TIS**	0.3 mm	0.3 mm

1) Rotate the crankshaft to overlap the intake and the exhaust valves of #6, then #1 cylinder become the compression state of top dead center.
2) Therefore adjust the valve clearance corresponding to " ⇨ " of lower figure.
   At this time there are no force on the push rods of #1 cylinder.
3) Rotating the crankshaft by one revolution, #6 cylinder become the compression state of top dead center.
4) Thereafter adjust the valve clearances corresponding to " ➡ " of lower figure.
5) After reinsuring the valve clearances, retighten if necessary.

- No. 1 Cylinder is located at the side where flywheel was installed.

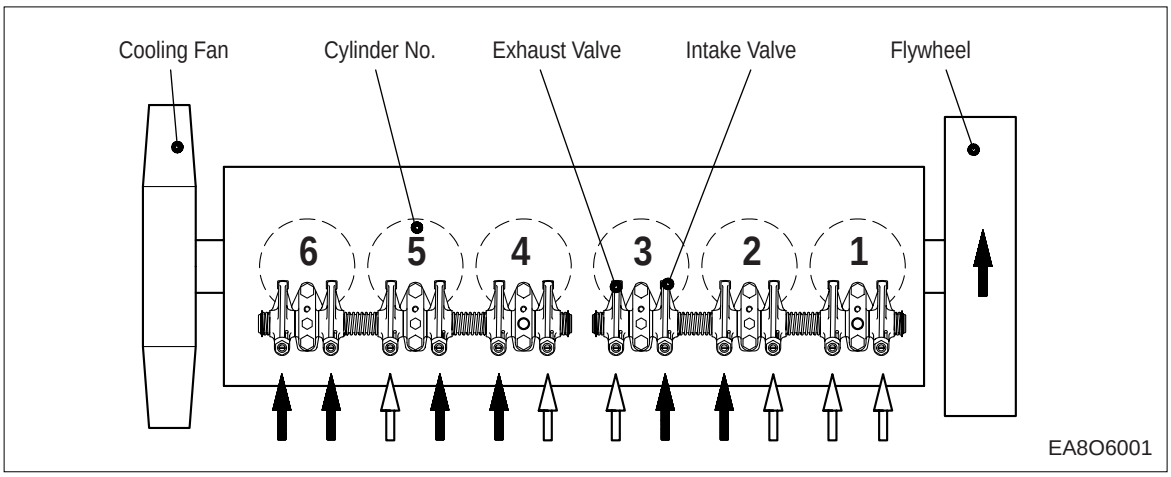

https://truckmanualshub.com/

2.12. Cylinder Compression Pressure

- Stop the engine after warming up, and take out nozzle holder assembly.

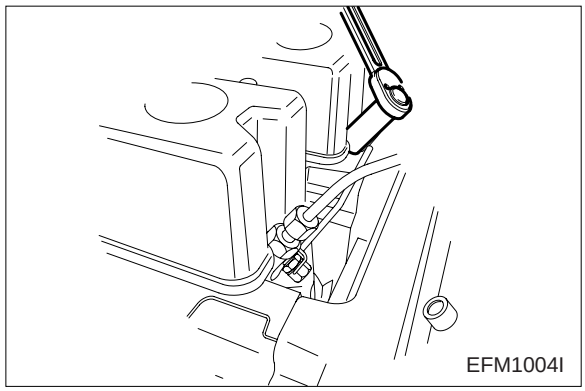
EFM1004I

- Install the special tool (compression gauge adapter) at the nozzle holder hole, and connect the compression pressure gauge there.

Standard value	28kg/cm² over
Limit value	24kg/cm²
Difference between each cylinder	Within ± 10 %

- Condition : Water temperature 20˚C, Engine rotation 200rpm

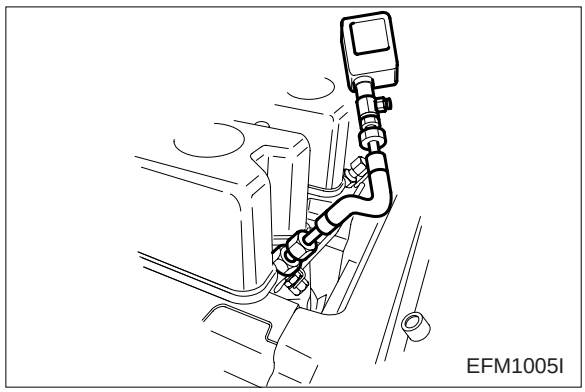
EFM1005I

2.13. Injection Nozzle

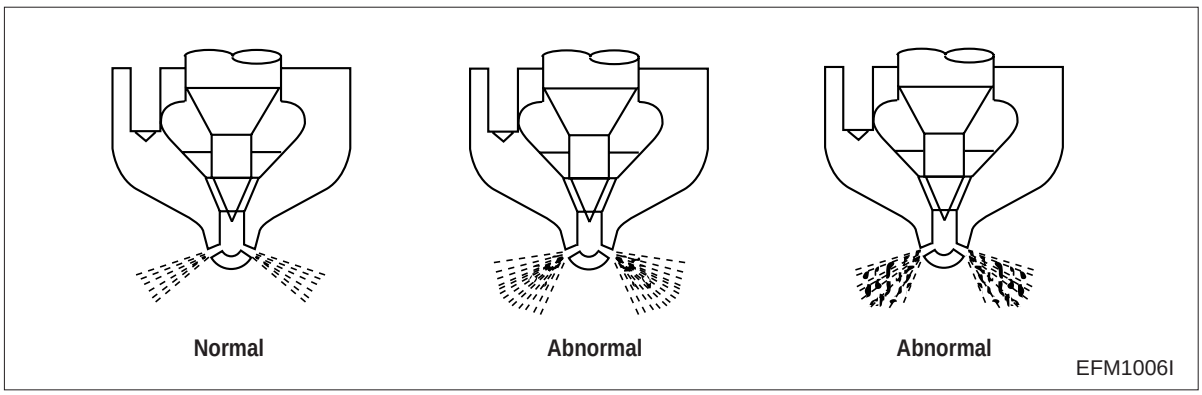

EFM1006I

- Install a nozzle on the nozzle tester.
- If the inspected injection pressure is less than the specified value, adjust using the adjusting shims.

Engine model	DE12T/TI/TIA	DE12TIS
Injection nozzle Pressure	220 kg/cm²	160 / 220 kg/cm²

- Check the atomizing state and replace it if abnormal.

https://truckmanualshub.com/

2.14. Fuel Injection Nozzle

- Check the housing crack, damage etc. and replace it if abnormal.
- Check if the idle operation and speed regulating lever's sealing is removed.
- The adjustment and testing of fuel injection pump should necessarily be done at the test bench.

2.15. Battery

- Inspect for any leakage of electrolytic solution owing to battery crack, and replace the battery in case of poor condition.
- Inspect for amount of electrolytic solution, and replenish if insufficient.
- Measure the gravity of electrolytic solution, if less than specified value (1.12 ~ 1.28), replenish.

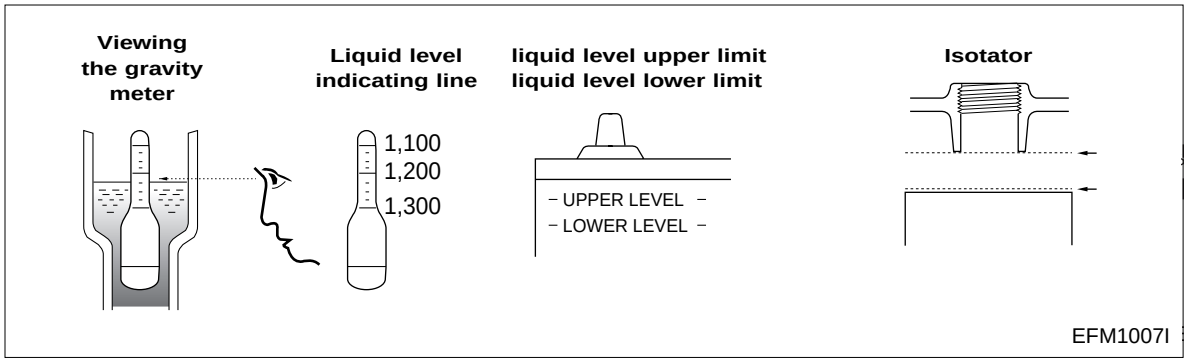

2.16. Air Removal of Fuel System

The suction room of fuel injection pump has the function of air removal continuously during the operation through a relief valve.

In case that the suction room lacks fuel at all, for instance, in case of new installation of injection pump, after loosening the air removing screws of cartridge filter respectively, remove the air by operating the manual pump of fuel supply pump until bubble will disappear.

2.17. Fuel Supply Pump

Every time of engine oil replacement, the fuel strainer installed at the fuel supply pump should be removed and cleaned.

https://truckmanualshub.com/

2.18. Turbocharger

The turbocharger needs not arty special equipment.

Every time of engine replacement, a leakage or clogging of oil pipes should be inspected. Air cleaner should be maintained carefully for nut or foreign material not to get in. Periodic inspection should be applied on the compressed air and exhaust gas pipes, For leaking air will bring the overheat engine, an immediate repair must be done.

During the operation that is surrounded by the dust and oil mixed air, frequent cleaning must be done on the impellers. Tear down the impeller casing (attention: be careful not to bend) and must clean with non-acid solvent solution. If necessary, use plastic scraper If impeller is severely polluted, dip the impeller into solution and may be better to clean it with stiff brush.Then one thing to beware is to dip only impeller part and so do not support by impeller but bearing housing.

2.19. Starting Motor

In case of engine maintenance, clean pinion and ring gear thoroughly putting in the fuel, and coat them with grease.

Also, In case of washing car and so forth, inspect the wiring state being careful for not to get.

https://truckmanualshub.com/

2.20. Electrical Equipment

2.20.1. Starting of winter

Caution :

1. Preheating devices are attached to the engine for improving the starting abilities at extremely low temperature.

2. Do not actuate the starter for longer than 10 seconds. If starting fails regardless of the preheating, start the preheating again after 30 seconds.

Operation 1 : Turn the key switch to the HEAT position, then the pilot lamp lights up for about 20 seconds When the pilot lamp is extinguished, do operation 2

Behavior
- When the coolant temperature is below 10 °C in cold weather, you'd better operate the pre-heating system (Air heater)
- If the pre-heating is not necessary, the pre-heating system is not operated with the pilot lamp.

Operation 2 : After checking the pilot lamp, turn the key switch to the **START** position to crank the engine, at once.

Behavior
- When the key switch is placed in the **START** position, air heater is continuously heated to facilitate starting operation and to reduce white smoke during 19 seconds automatically.
- If the coolant temperature is above 15 °C, air heater needs not be heated.

Operation 3 : After the engine is cranked, convert the key switch to the ON position.

Behavior
- As the engine is cranked, air heater is heated for 150 seconds (after-heating) to reduce and to element quickly white smoke.

2.20.2. Alternator

a) Alternator (24V x 45A)

The alternator is fitted with integral silicon rectifiers. A transistorized regulator mounted on the alternator body interior limits the alternator voltage. The alternator should not be operated except with the regulator and battery connected in circuit to avoid damage to the rectifier and regulator.

24V X 50A

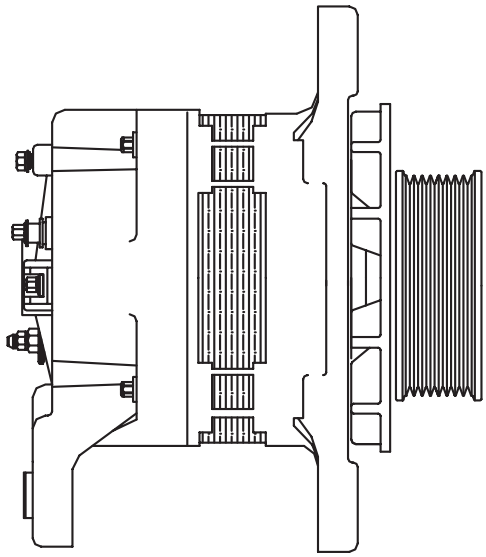

EE6OM027

The alternator is maintenance-free, nevertheless, it must be protected against dust and, above all, against moisture and water.

Wiring Diagram

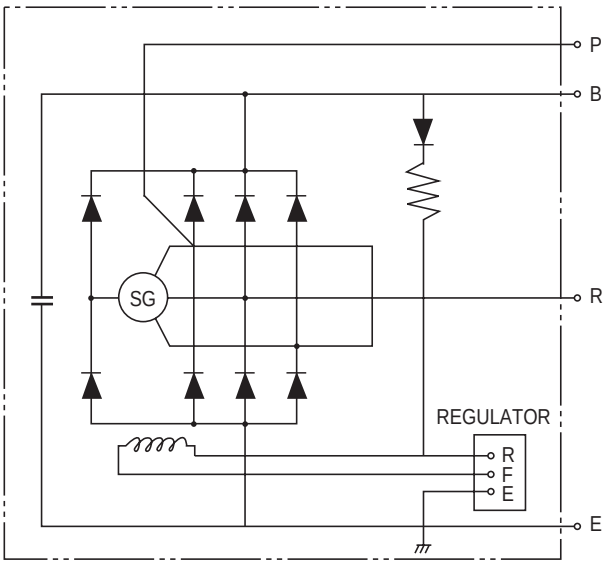

EE6OM028

Operate the alternator according to the instructions given in the chapter.

2.20.3. Starting motor

The sliding-gear starter motor is flanged to the rear of the flywheel housing on the left-hand side. As parts of every engine overhaul, the starter pinion and ring gear should be cleaned with a brush dipped in fuel and then a coat of grease should be applied again.

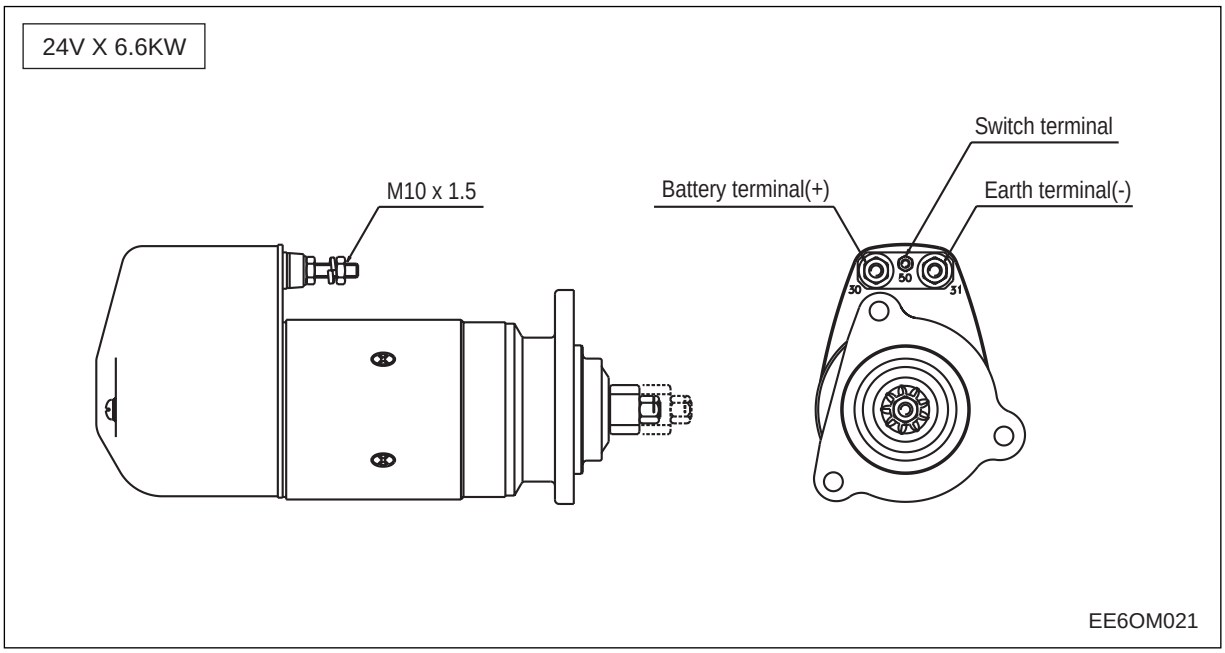

Always protect starter motor against moisture.

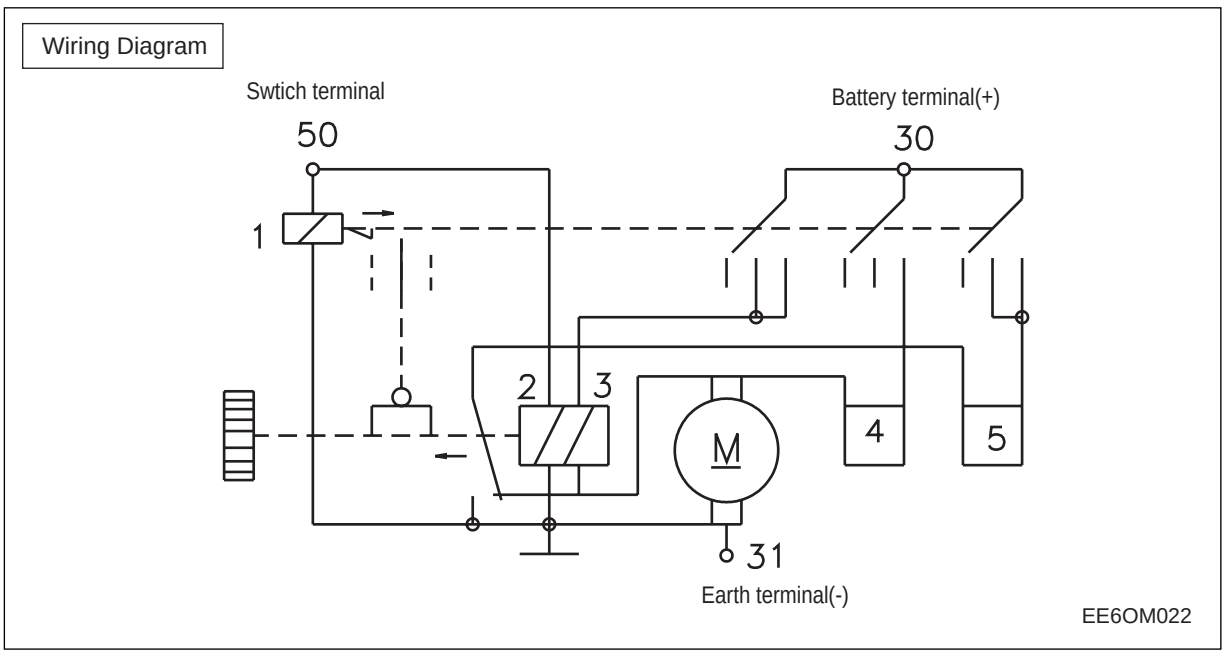

Warning :

Always disconnect the battery earth cable before starting work on the electrical system. Connect up the earth cable last, as there is otherwise a risk of short-circuits.

2.21. Diagnosis and Remedy

- The following description summarizes the probable cause of and remedy for general failure by item.
- Immediate countermeasures should be taken before a failure is inflamed if any symptom is detected.

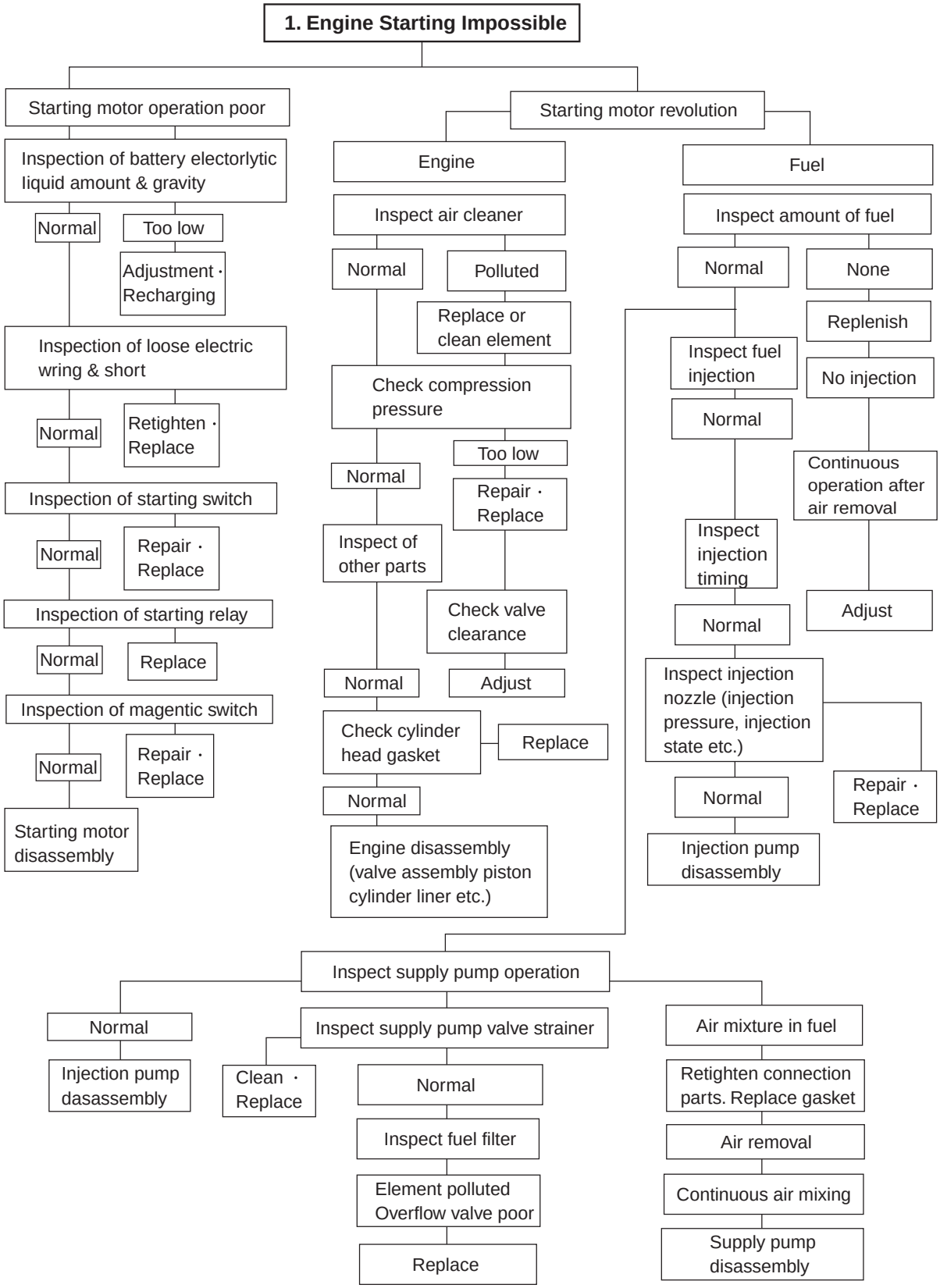

https://truckmanualshub.com/

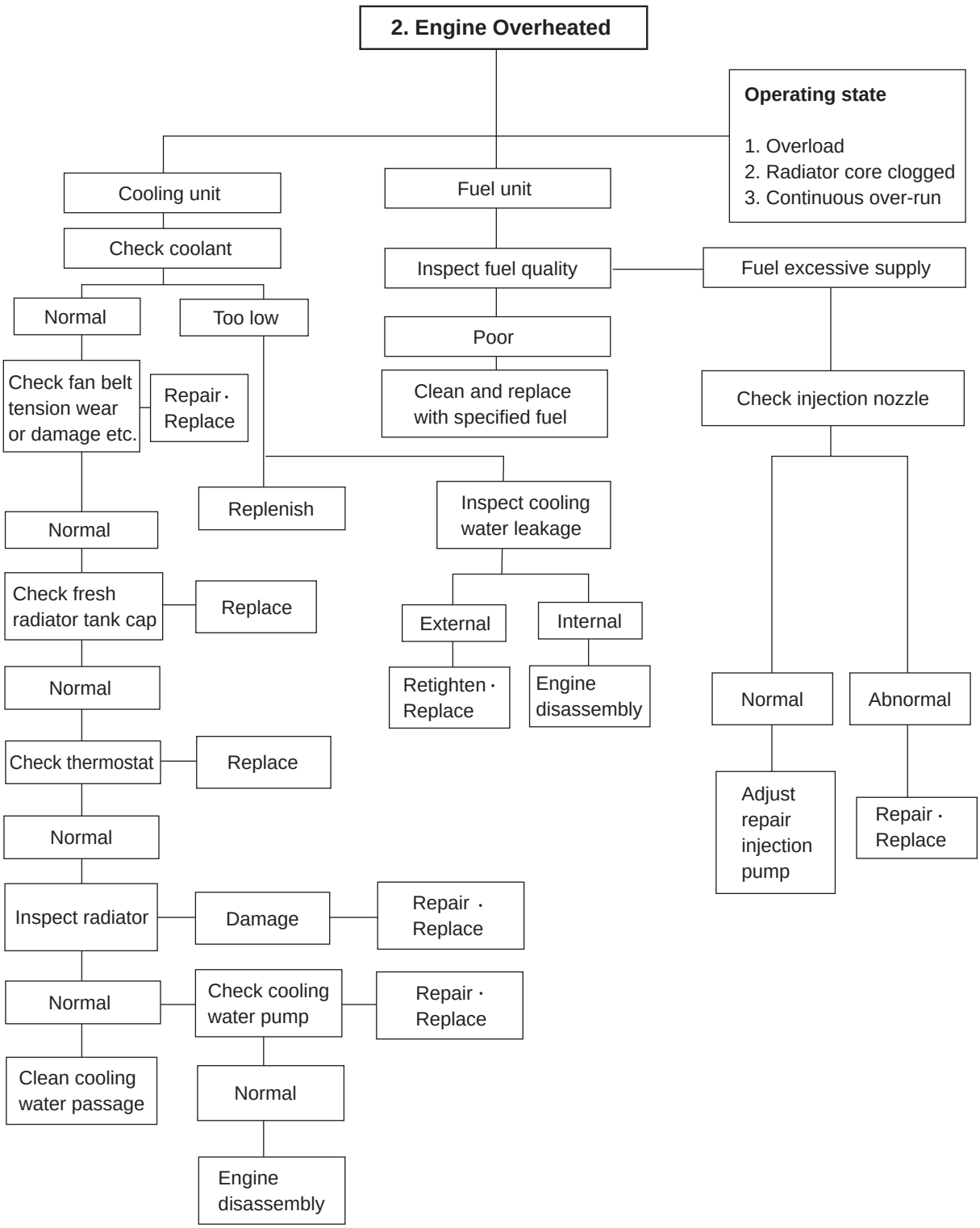

https://truckmanualshub.com/

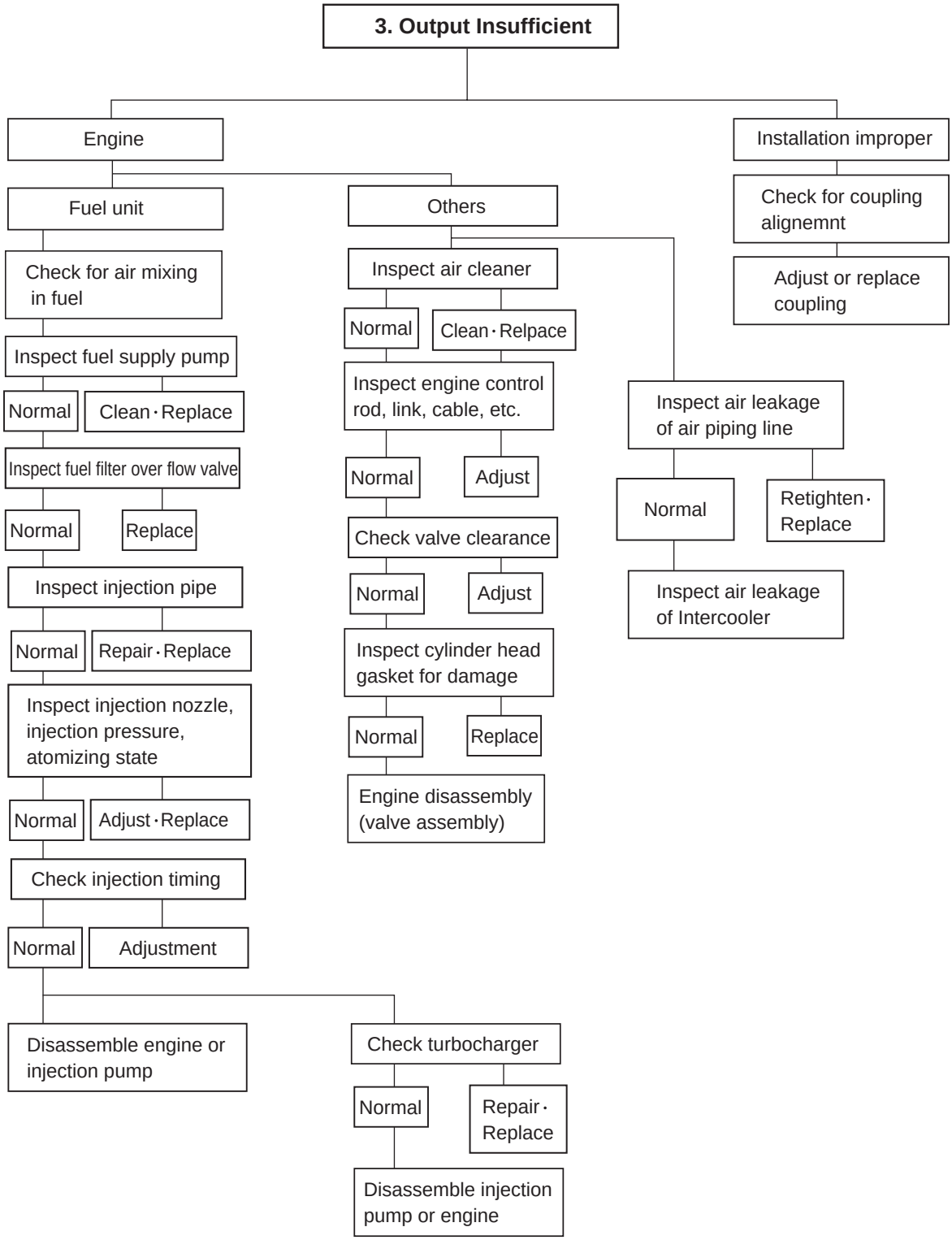

https://truckmanualshub.com/

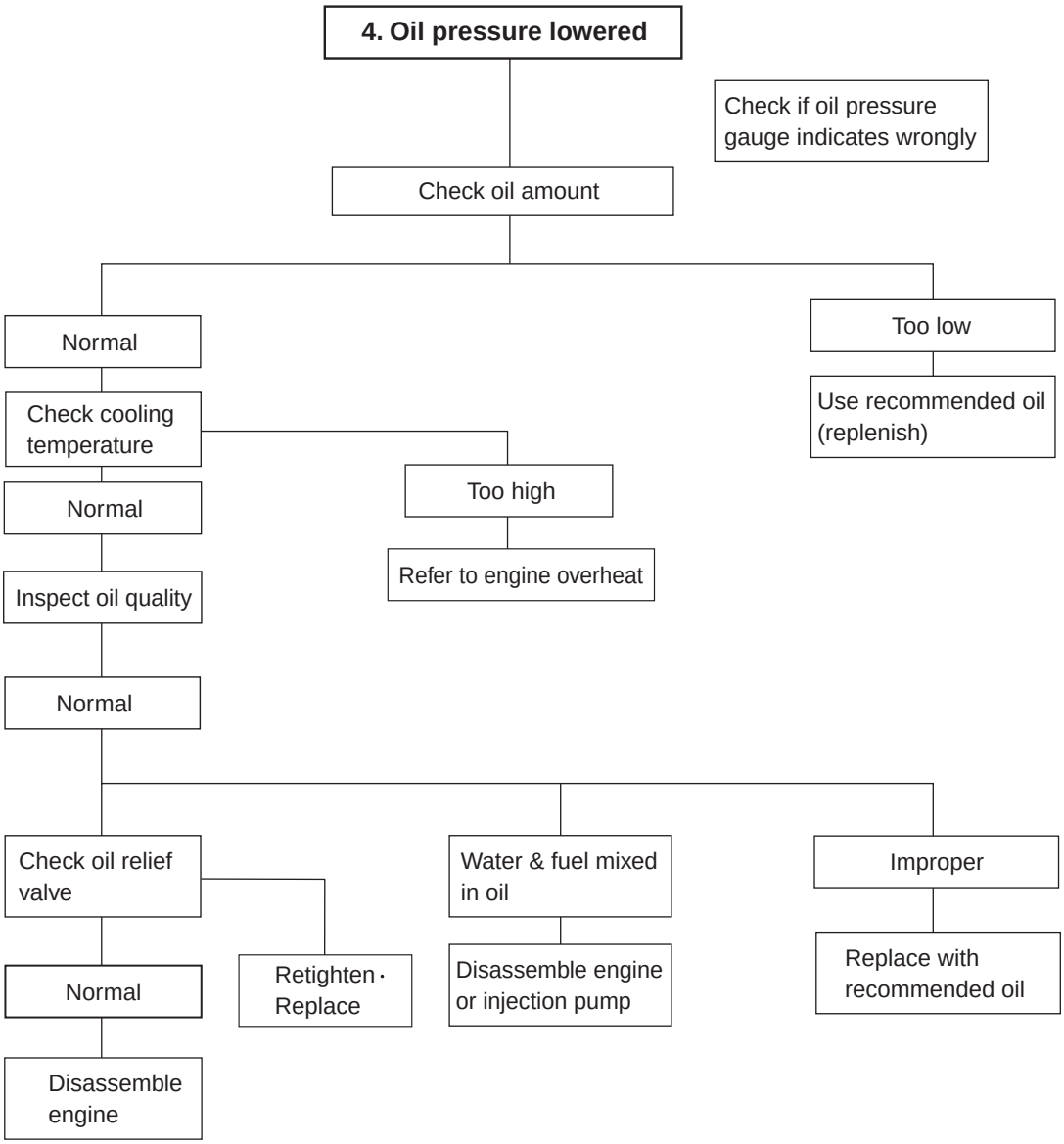

https://truckmanualshub.com/

5. Fuel Consumption Excessive

Causes according to Use Conditions
1. Overload
2. Frequent use of low gear position at high speed
3. Frequent use of high gear position at low speed
4. Clutch slip
5. Too low tire inflation pressure

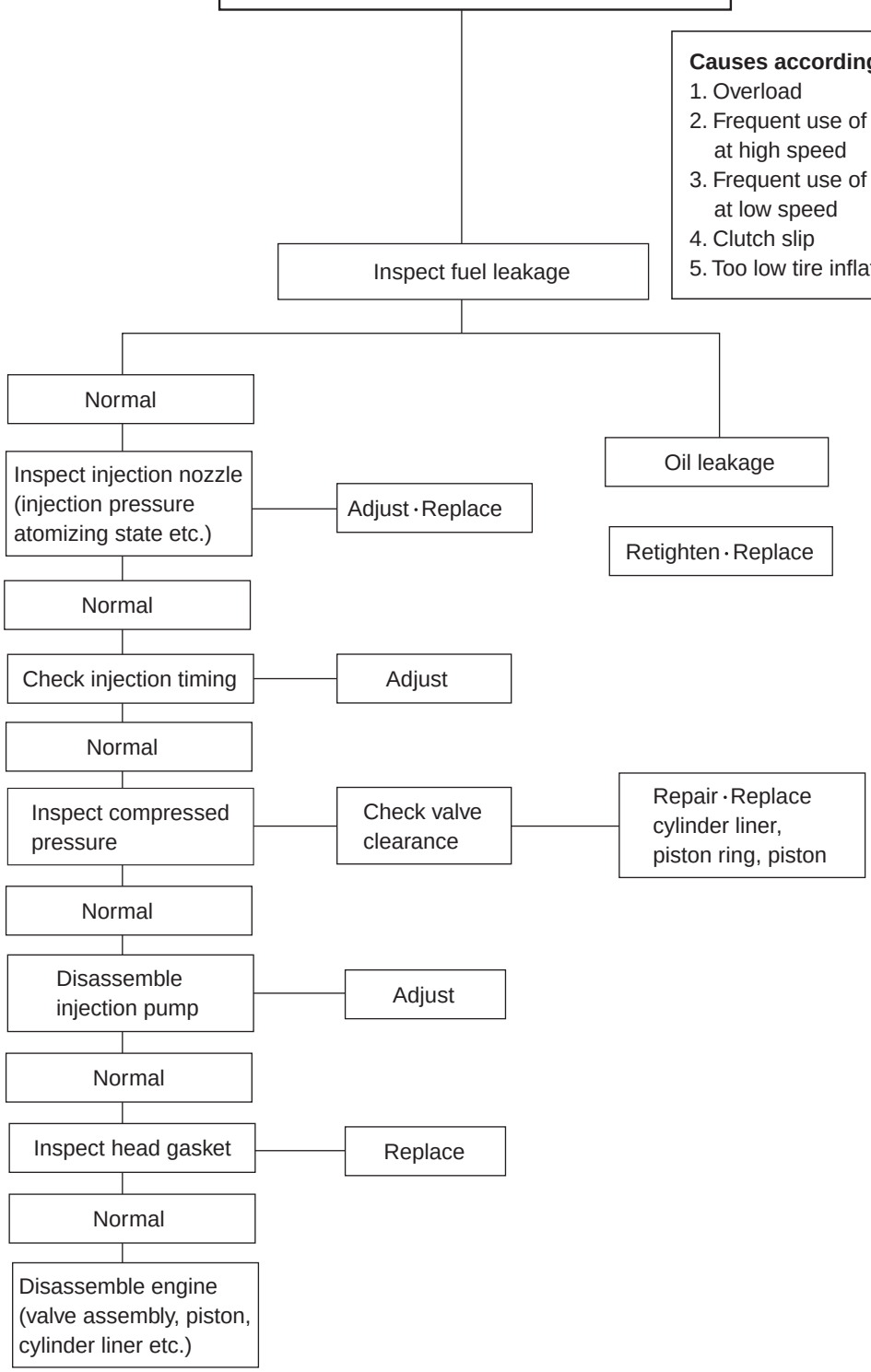

https://truckmanualshub.com/

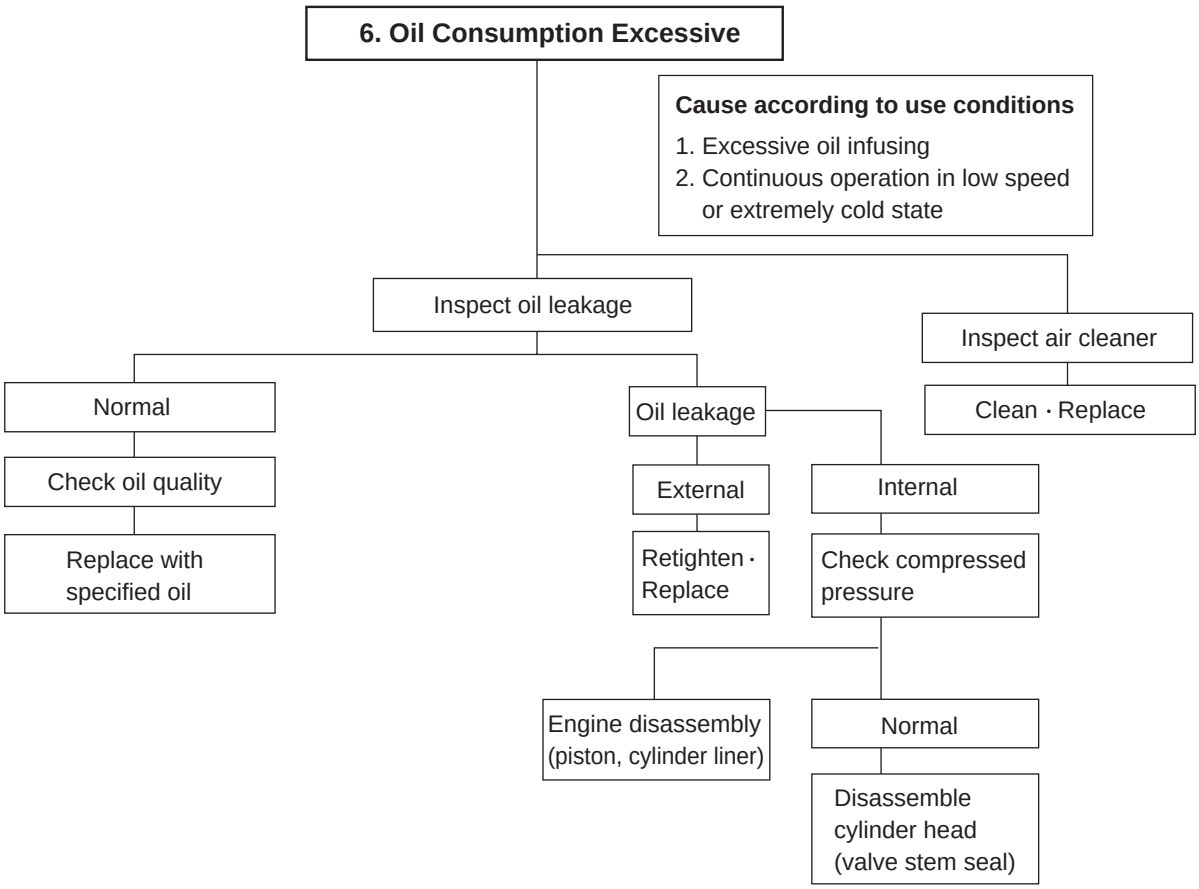

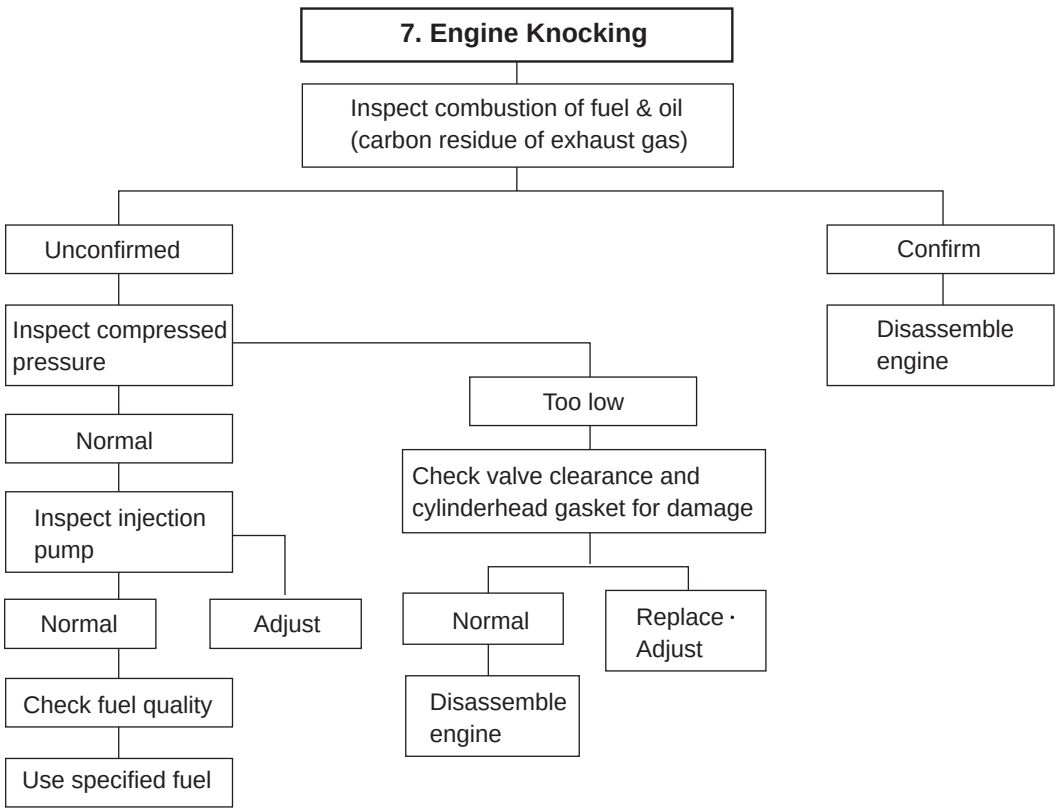

https://truckmanualshub.com/

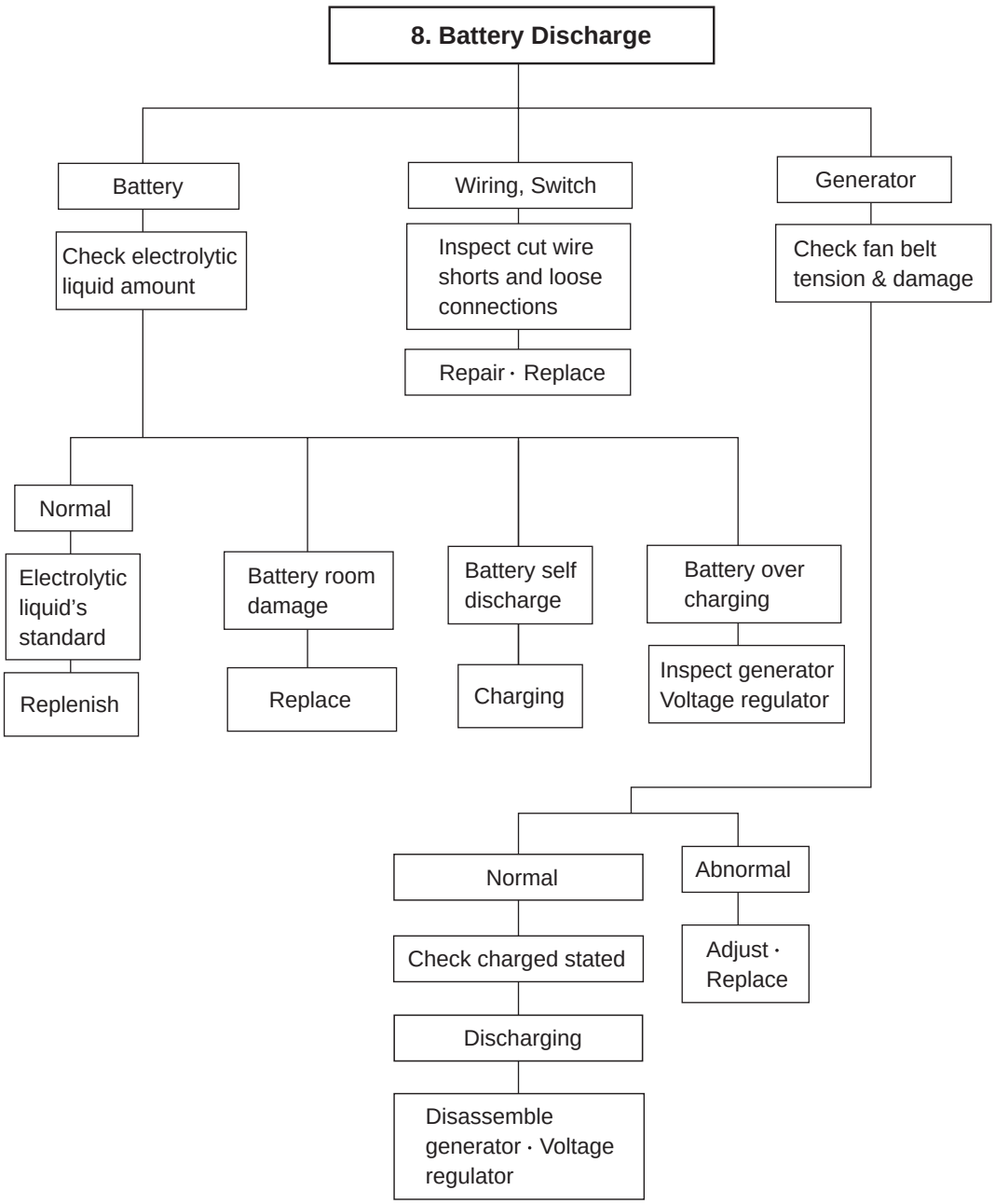

https://truckmanualshub.com/

Condition	Causes	Remedies
1) Starting difficult		
(1) Starting motor trouble	● Refer to diagnostics	
(2) Fuel system trouble	● Refer to diagnostics	
(3) Compression pressure lack	● Valve's poor shut, stem distortion	Repair or replace
	● Valve spring damage	Replace valve spring
	● Cylinder head gasket's leak	Replace gasket
	● Wear of piston, piston ring or liner	Adjust
2) Idle operation abnormal	● Injection timing incorrect	Adjust
	● Air mixing at injection pump	Remove air
3) Engine output insufficient		
(1) Continuous output insufficient	● Valve clearance incorrect	Adjust
	● Valve tightness poor	Repair
	● Cylinder head gasket's leak	Replace gasket
	● Wear, stick, damage of piston ring	Replace piston ring
	● Injection timing incorrect	Adjust
	● Fuel injection amount insufficient	Adjust injection pump
	● Nozzle injection pressure improper or stuck	Adjust or replace
	● Supply pump's function lowered	Repair or replace
	● Fuel pipe system clogged	Repair
	● Air suction amount insufficient	Clean or replace air cleaner
	● Turbocharger poor	Repair or replace
(2) Output insufficient when in acceleration	● Compression pressure insufficient	Disassemble engine
	● Injection timing incorrect	Adjust
	● Fuel injection amount insufficient	Adjust injection pump
	● Injection pump timer's function insufficient	Repair or replace
	● Nozzle injection pressure, injection angle improper	Repair, replace
	● Supply pump's function lowered	Repair or replace
	● Air intake amount insufficient	Clean or replace air cleaner
4) Overheating	● Engine oil insufficient or poor	Replenish or replace
	● Cooling water insufficient	Replenish or replace
	● Fan belt loosened, worn, damaged	Adjust or replace
	● Cooling water pump's function lowered	Repair or replace
	● Water temp. regulator's operation poor	Replace
	● Valve clearance incorrect	Adjust
	● Exhaust system's resistance increased	Clean or replace

https://truckmanualshub.com/

Condition	Causes	Remedies
5) Engine noisy	For noises arise compositely such as rotating parts, lapping parts etc., there is necessity to search the cause of noises accurately.	
(1) Crankshaft	● As the wear of bearing or crankshaft progress, the oil clearances increase.	Replace bearing & grind crankshaft
	● Lopsided wear of crankshaft	Grind or replace
	● Oil supply insufficient due to oil passage clogging	Clean oil passage
	● Stuck bearing	Replace bearing & Grind
(2) Con-rod and Con-rod bearing	● Lopsided wear of con rod bearing	Replace bearing
	● Lopsided wear of crank pin	Grind crankshaft
	● Connecting rod distortion	Repair or replace
	● Stuck bearing	Replace & grind crankshaft
	● Oil supply insufficiency as clogging at oil passage progresses	Clean oil passage
(3) Piston, piston pin & piston ring	● Piston clearance increase as the wear of piston and piston ring progresses	Replace piston & piston ring
	● Wear of piston or piston pin	Replace
	● Piston stuck	Replace piston
	● Piston insertion poor	Replace piston
	● Piston ring damaged	Replace piston
(4) Others	● Wear of crankshaft, thrust bearing	Replace thrust bearing
	● Camshaft end play increased	Replace thrust plate
	● Idle gear end play increased	Replace thrust washer
	● Timing gear backlash excessive	Repair or replace
	● Valve clearance excessive	Adjust valve clearance
	● Abnormal wear of tappet, cam	Replace tappet, cam
	● Turbocharger inner part damaged	Repair or replace
6) Fuel Consumption Excessive	● Injection timing incorrect	Adjust
	● Fuel injection amount excessive	Adjust injection pump

https://truckmanualshub.com/

Condition	Causes	Remedies
7) Oil Consumption Excessive		
(1) Oil level elevated	● Clearance between cylinder liner & piston	Replace
	● Wear of piston ring, ring groove	Replace piston, piston ring
	● Piston ring's damage, stick, wear	Replace piston ring
	● Piston ring opening's disposition improper	Correct position
	● Piston skirt part damaged or abnormal wear	Replace piston
	● Oil ring's oil return hole clogged	Replace piston ring
(2) Oil level lowered	● Looseness of valve stem & guide	Replace in set
	● Wear of valve stem seal	Replace seal
	● Cylinder head gasket's leak	Replace gasket
(3) Oil leak	● Looseness of connection parts	Replace gasket, repair
	● Various parts' packing poor	Replace packing
	● Oil seal poor	Replace oil seal

2.22. Engine Inspection

2.22.1. Stopping engine

After checking the engine for any unusual condition at the idling speed, then turn the key switch to stop the engine.

2.22.2. General engine inspection cycle

○: Check & adjust ●: Replace

Inspection		Daily	Every 50hrs	Every 200hrs	Every 500hrs	Every 600hrs	Every 1200hrs	Remark
Cooling System	Check for leakage(hoses, clamp)	○						
	Check the water level	○						
	Change the coolant water						●	
	Adjust the V-belt tension	○						Every 2,000hrs
	Clean the radiator						○	
Lubrication System	Check for leakage	○						
	Check the oil level gauge	○						
	Change the lubricating oil		●1st	●				
	Replace the oil filter cartridge		●1st	●				
Intake & Exhaust System	Check the leakage for intercooler (hoses, clamp)	○						
	Clean and change the air cleaner element			○clean		●		
Fuel System	Check the leakage fuel line	○						
	Clean the fuel strainer of fuel feed pump			○				
	Remove sediment from fuel tank						○	
	Drain the water in separator			○				
	Replace the fuel filter element				●			
	Check fuel injection timing necessary			○				When necessary
	Check the injection nozzles			○				When necessary
Engine Adjust	Check the state of exhaust gas	○						
	Check the battery charging	○						
	Check the compression pressure						○	When necessary
	Adjust Intake/Exhaust valve clearance		○1st					When necessary

2.22.3. Use of original parts for repair and replacement

For engine is being mechanically harmonized with many parts, only when the original parts that the manufacture recommends to use is used, the engine trouble would be preventively maintained and capable to keep up the maximum performances.

For the analogous parts not the original parts are poor in qualities and gives ill performances, it may rather bring early engine failure

https://truckmanualshub.com/

3. DISASSEMBLY AND REASSEMBLY OF MAJOR COMPONENTS

3.1. Disassembly

3.1.1. General precautions

- Maintenance operation should be carried out in a bright and clean place.
- Before disassembly, provide parts racks for storage of various tools and disassembled parts.
- Arrange the disassembled parts in the disassembly sequence and use care to prevent any damage to them.

3.1.2. Cooling water

- Remove the radiator cap. Open the drain plug at the radiator lower part to drain the coolant as the right figure.

CAUTION :
When removing radiator filler cap while the engine is still hot, cover the cap with a rag, then turn it slowly to release the internal steam pressure This will prevent a person from scalding with hot steam spouted out from the filler port.

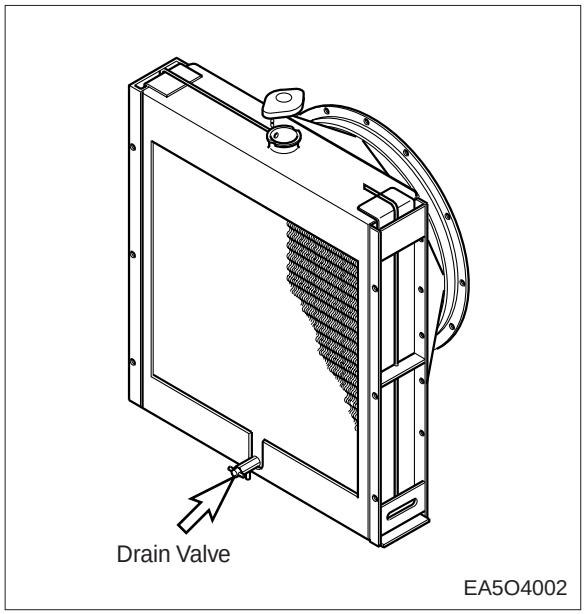

- Remove the drain plug from the cylinder block and drain out the cooling water into a container.

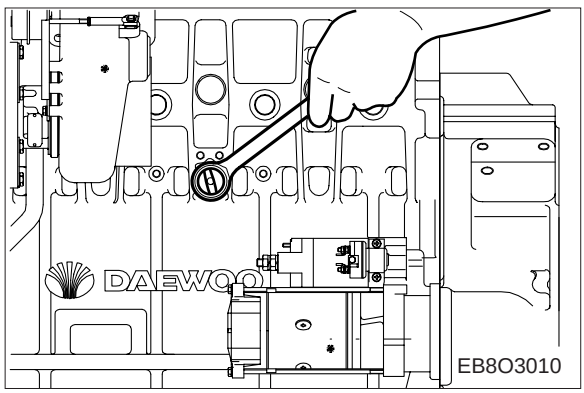

https://truckmanualshub.com/

3.1.3. Engine oil

- Take out the oil level gauge.
- Remove the oil drain plug of oil pan and drain out the engine oil into a prepared container.
- Reassemble the drain plug with the oil pan after draining out the engine oil.

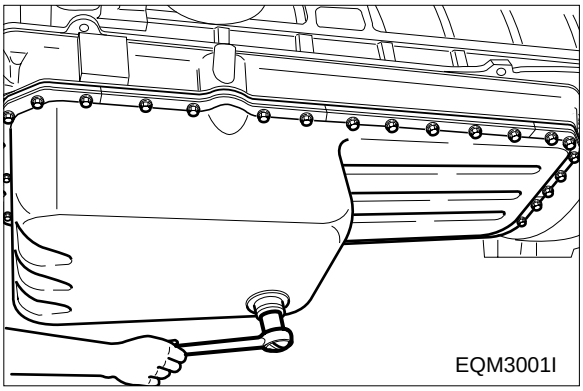

3.1.4. Cooling fan

- Remove the flange fixing bolts, then take off the flange and cooling fan.

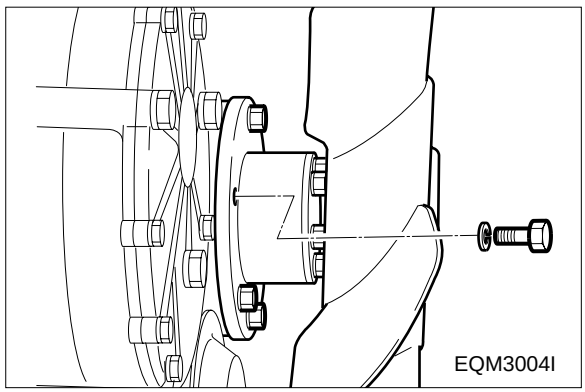

3.1.5. V-Belt

- Loosen the tension adjusting nuts on the alternator, and take off the alternator belts.

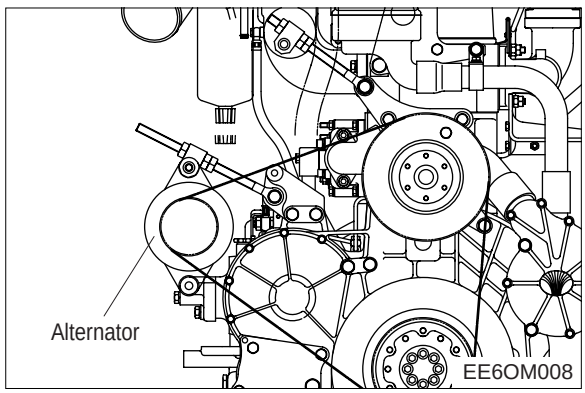

3.1.6. Oil level gauge guide tube

- Loosen the flange nut installed on the ladder frame to remove the guide tube.

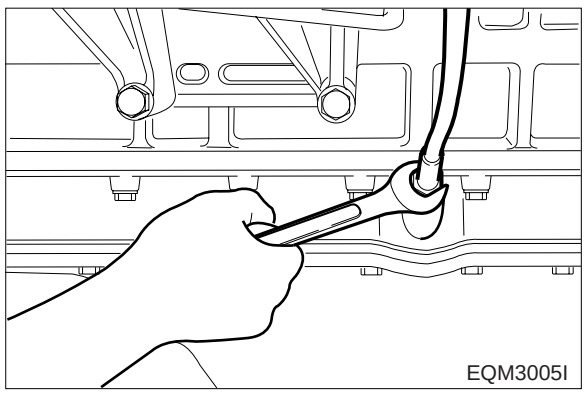

https://truckmanualshub.com/

3.1.7. Fuel filter

- Remove fuel hoses connected to the fuel injection pump, take off the bracket fixing bolts, then disassemble the fuel filter.

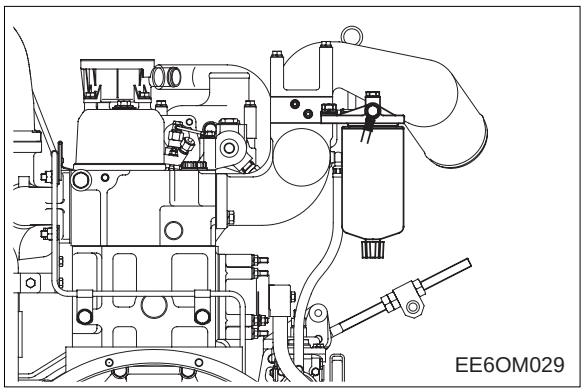

3.1.8. Breather

- Loosen the clamp screw to remove the rubber hose.

3.1.9. Intercooler

- Tear down the various hoses and air pipes from the inter cooler
- Remove the intercooler fixing bolts and tear it down.

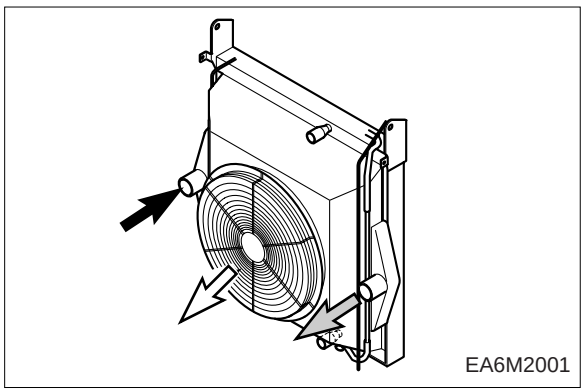

3.1.10. Fuel injection pipe

- Unscrew the hollow screws to disassemble the fuel return pipe.
- Remove the nuts installed on the fuel injection pump and nozzles, then disassemble the injection pipe.

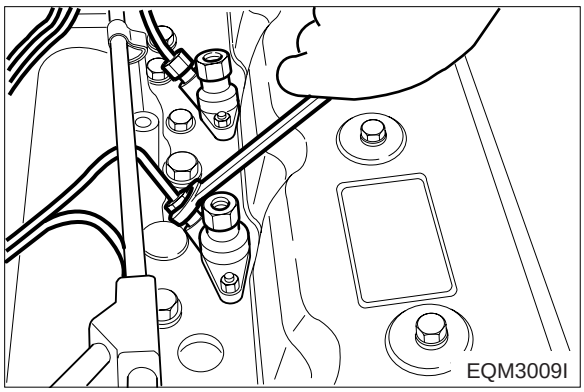

https://truckmanualshub.com/

3.1.11. Air heater

- Remove the electrical wiring for the air heater.
- Disassemble the intake pipes by loosening the nuts installed thereon.
- Disassemble the air heater and gasket.

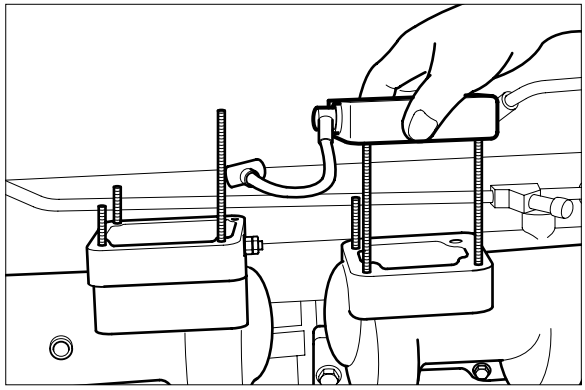

3.1.12. Intake manifold

- Remove the air hose connected to the fuel injection pump.
- Loosen the intake manifold fixing bolts, then disassemble the intake manifold.

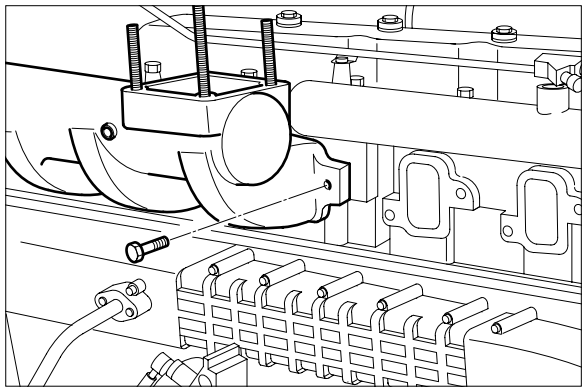

3.1.13. Turbo charger

- Release the clamp screw of the rubber hose connected to the intake manifold, and take off the intake pipes both simultaneously.
- Unscrew the exhaust pipe bracket fixing bolts, release the nuts installed on the turbocharger, then disassemble the exhaust pipe.
- Remove the turbocharger after removing the oil supply pipe and return pipe and releasing the fixing nuts.

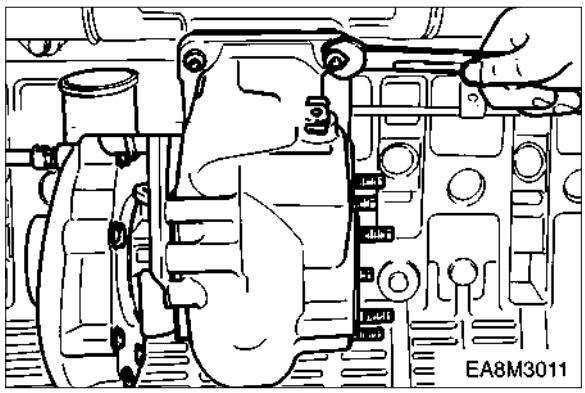

3.1.14. Exhaust manifold

- Release the exhaust manifold fixing bolts, disassemble the exhaust manifold, then remove the heat shield and gasket.

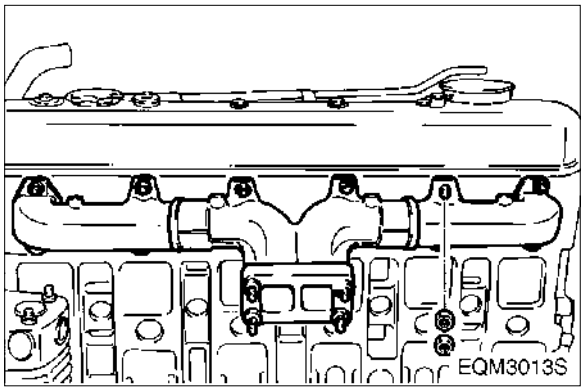

NOTE :
Make sure to release the nuts one after another because the exhaust manifold will be removed if you unscrew two nuts simultaneously.

3.1.15. Thermostat

- Remove the by-pass pipe connected to the water pump, unscrew the thermostat fixing bolts, then disassemble the thermostat housing.
- Disassemble the thermostat housing and remove the thermostat.
- Disassemble the water pipe by unscrewing the bolts and nuts installed on the cylinder head.

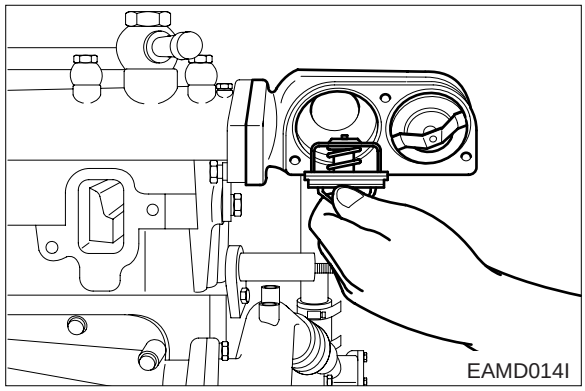

3.1.16. Starter

- Unscrew the starter fixing bolts, then disassemble the starter.

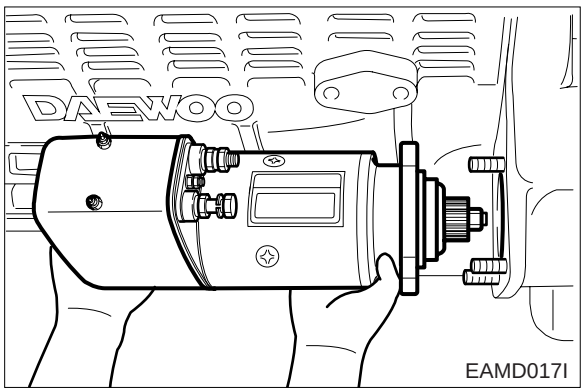

3.1.17. Cooling water pump

- Remove the water pipe connected to the expansion tank.
- Remove the water pipe and hoses connected to the water pump.
- Unscrew the water pump fixing bolts and remove the water pump.

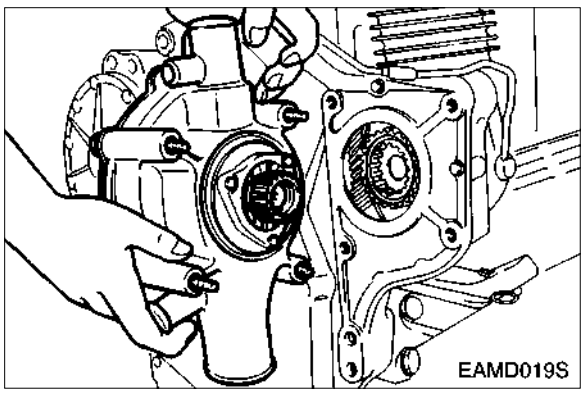

https://truckmanualshub.com/

3.1.18. Fuel injection pump

- Remove the oil supply pipe and return pipe connected to the fuel injection pump.
- Unscrew the bolts connecting the coupling and drive shaft, loosen the injection pump attaching bolts, then disassemble the injection pump.

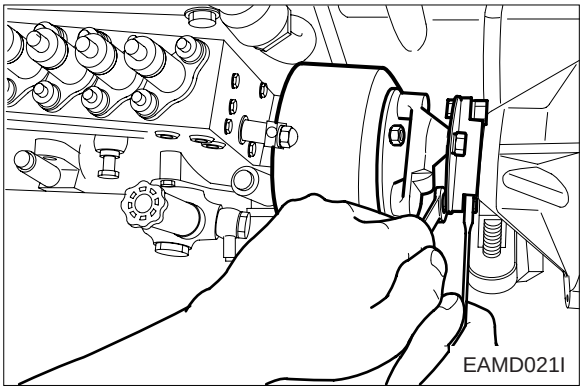

NOTE :
Place the No.1 cylinder in 'OT' in exact position to disassemble the injection pump.

- Release the pump fixing bracket bolts to disassemble the bracket from the cylinder block.

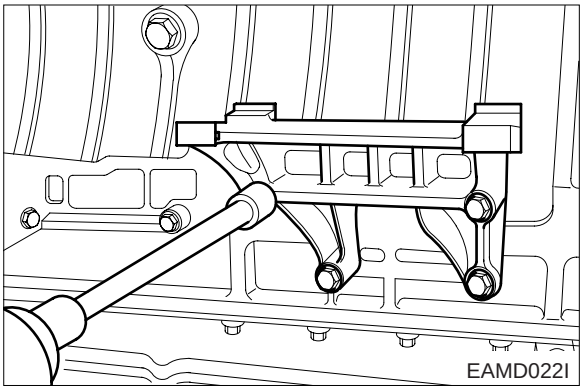

NOTE :
Do not interchange the shims as they must be installed in their original positions at reassembly

3.1.19. Oil filter

- Using a filter remover wrench, remove the oil filter cartridge.
- Remove the pipe connected to the oil cooler.
- Loosen the oil filter fixing bolts and disassemble the oil filter head from the cylinder block.

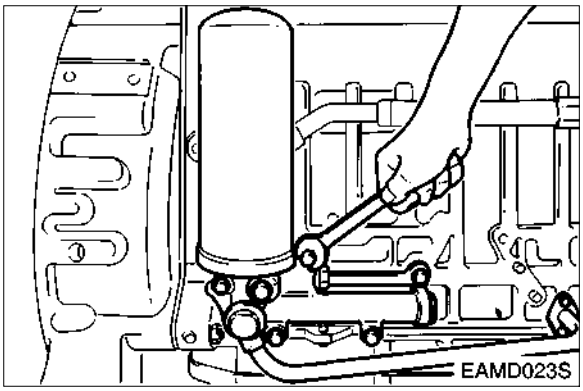

3.1.20. Vibration damper

- Unscrew the pulley fixing bolts and disassemble the pulley-vibration damper assembly.
- Unscrew the vibration damper fixing bolts and disassemble the damper from the pulley.

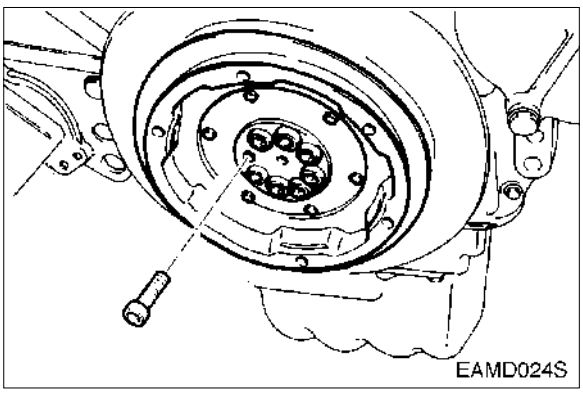

https://truckmanualshub.com/

3.1.21. Timing gear case cover

- Disassemble the oil seal using an oil seal removing jig.
- Remove the cover fixing bolts and disassemble the cover from the timing gear case.

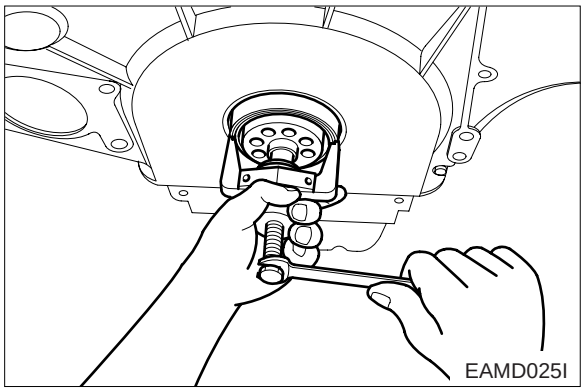

3.1.22. Idle gear

- Unscrew the idle gear fixing bolts and disassemble the thrust washer and idle gear.
- Disassemble the idle gear pin using a rubber hammer to prevent damage to them.

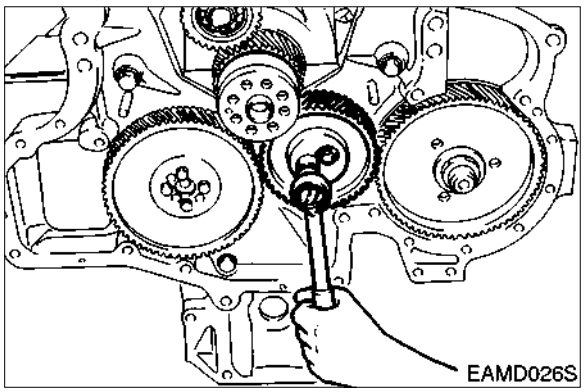

3.1.23. Fuel injection pump drive

- Remove the dowel pin for the steering pump.
- Unscrew the injection pump drive shaft bearing housing fixing bolts and remove the injection pump drive assembly in which the shaft, gear, bearings, and housing are put together.

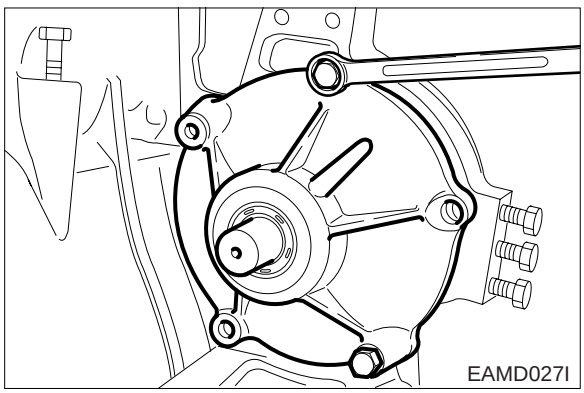

3.1.24. Cylinder head cover

- Unscrew the cover fixing bolts and disassemble the cover.
- Keep the bolts in an assembly state so that the gaskets and washers may not be lost, and keep the cover gasket as assembled with the cover.

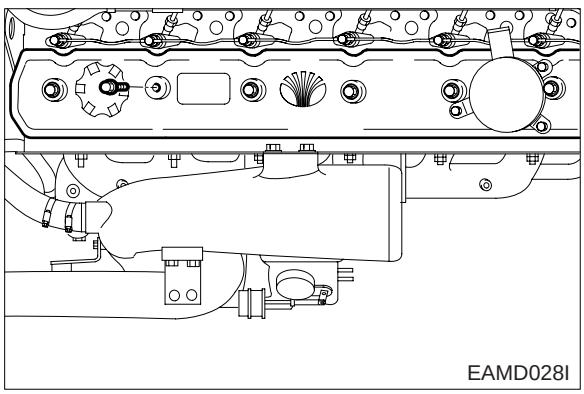

https://truckmanualshub.com/

3.1.25. Rocker arm

- Unscrew the rocker arm bracket bolts and remove the rocker arm assembly.
- Take off the snap rings to remove the washers and rocker arm, then unscrew the bracket fixing bolts to take off the bracket and springs.
- Take out the push rods.

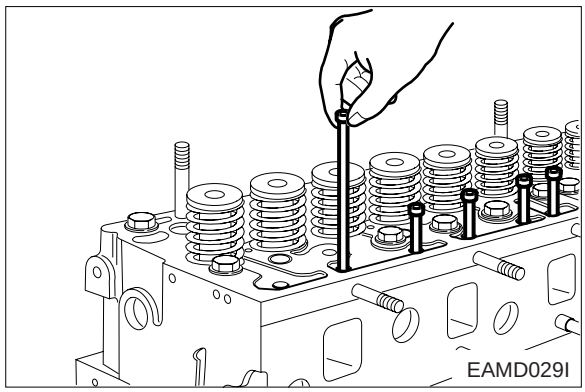
EAMD029I

3.1.26. Injection nozzle and tube

- Remove the nozzle fixing nuts and extract the nozzles.
- Remove the nozzle tube using nozzle tube removing jig.

NOTE :
Do not disassemble the nozzle tube if coolant or gas, etc. does not come out during engine operation.

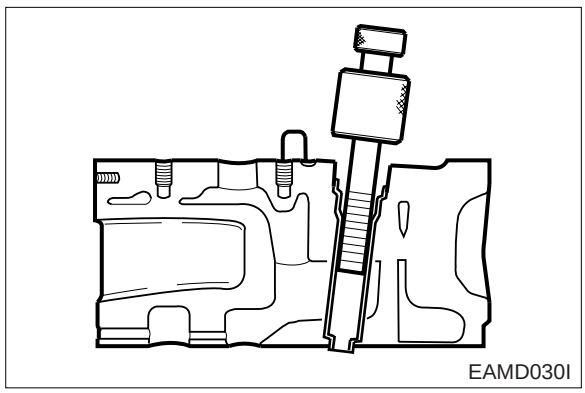
EAMD030I

3.1.27. Cylinder head

- Unscrew the cylinder head fixing borts and take off the cylinder head.
- Remove the cylinder head gasket.

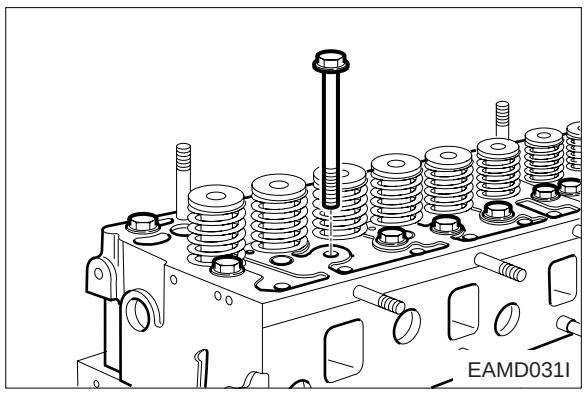
EAMD031I

3.1.28. Valve and stem seal

- Compress the valve spring retainer using a jig and take off the valve cotter pins.
- Disassemble the valve springs and retainers.
- Take off the valves.
- Remove and discard the valve stem seal using a general tool as it should not be re-used.

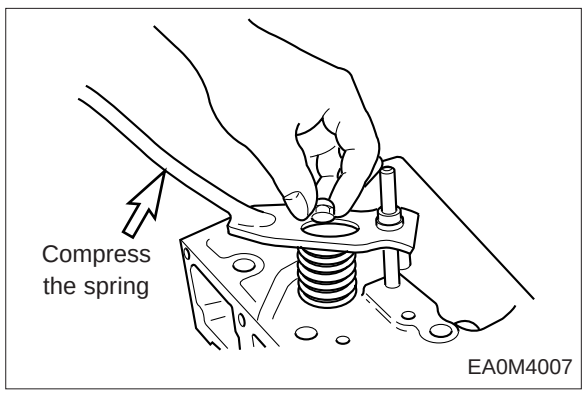

EA0M4007

https://truckmanualshub.com/

3.1.29. Oil cooler

- Remove the water pipe connected to the water pump.
- Remove the oil pipe connected to the cylinder block and oil filter.
- Unscrew the oil cooler cover fixing bolts and disassemble the oil cooler assembly from the cylinder block.
- Unscrew the oil cooler fixing bolts and remove the oil cooler from the oil cooler cover.

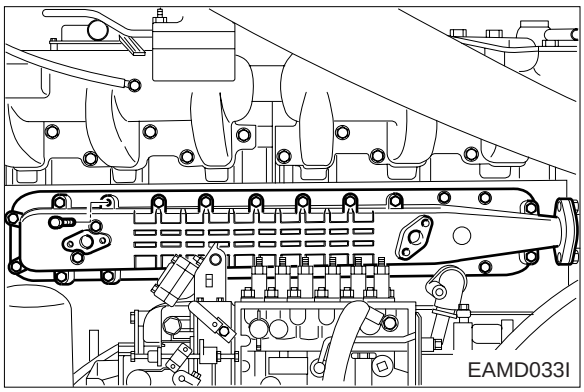

3.1.30. Oil pan

- Stand the engine with the flywheel housing facing the bottom.
- Release the oil pan fixing bolts, remove the stiffeners then disassemble the oil pan.

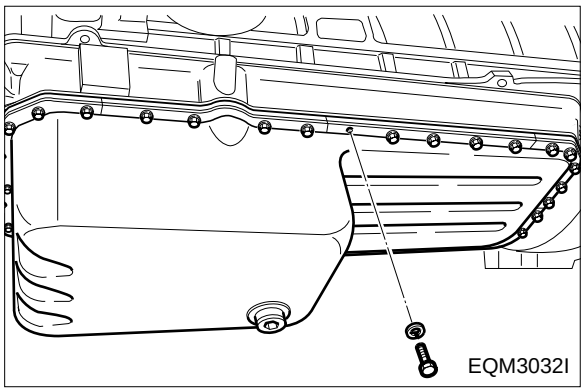

3.1.31. Oil pump and pipe

- Unscrew the oil suction pipe bracket bolts, releasing the pipe fixing bolts, then disassemble the oil suction pipe assembly.
- Disassemble the oil pipe feeding oil from the oil pump to the cylinder block.
- Unscrew the oil pump fixing borts and disassemble the oil pump.

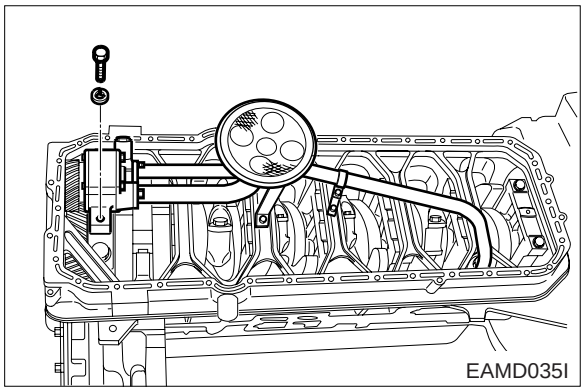

3.1.32. Relief valve

- Disassemble the relief valve.

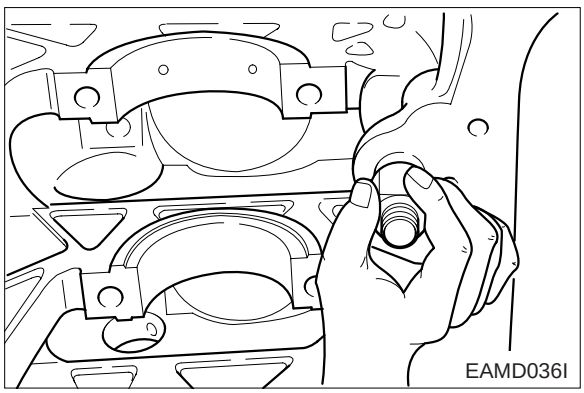

https://truckmanualshub.com/

3.1.33. Piston and connecting rod

- Disassemble the pistons by two cylinders while turning the crankshaft.
- Unscrew the connecting rod fixing bolts and take off the pistons and connecting rods in the direction of piston.

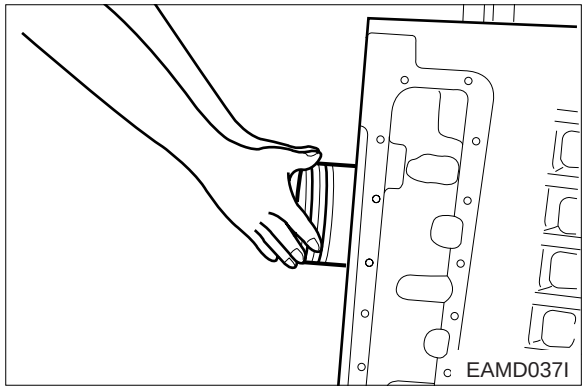

- Remove the piston pin snap rings, take off the piston pin, then disconnect the connecting rod from the piston.

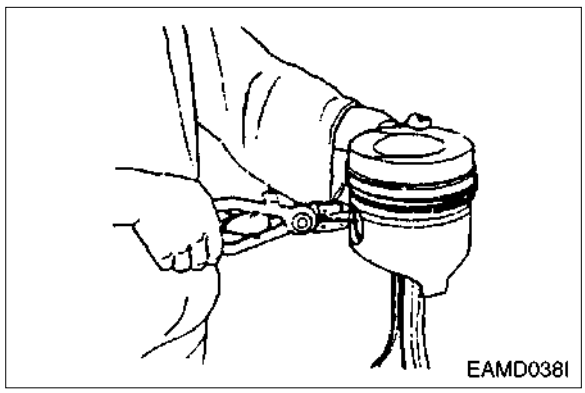

- Disassemble the piston rings using ring pliers.
- Use care not to interchange the disassembled parts and keep them in the sequence of cylinder No.

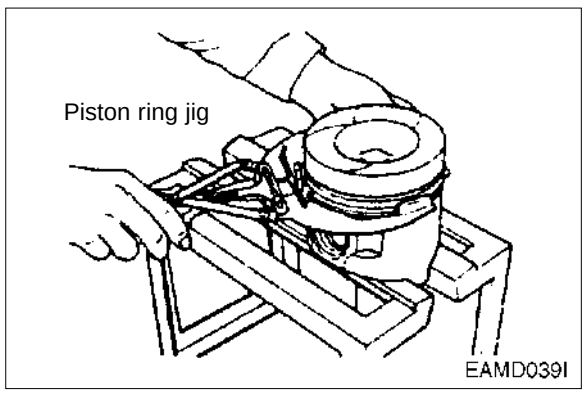

3.1.34. Cylinder liner

- Disassemble the cylinder liner using a liner puller.

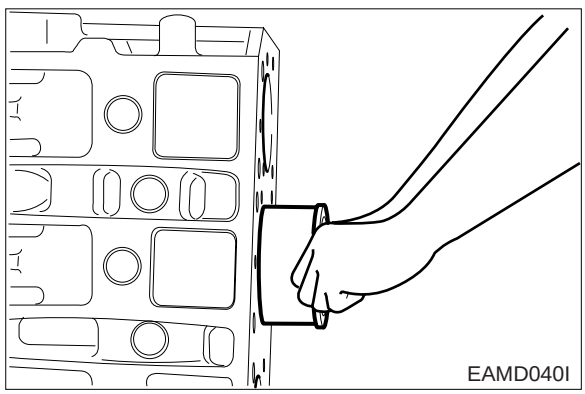

https://truckmanualshub.com/

3.1.35. Fly wheel

- Position the engine so that the head installing surface of the cylinder block faces down.
- Unscrew the flywheel fixing bolts and fit a dowel pin.
- Install flywheel disassembling bolts in the bolt holes machined on the fly-wheel, and disassemble the flywheel.

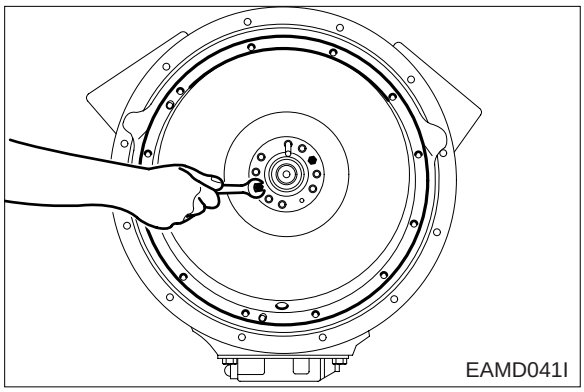

3.1.36. Oil seal

- Take off the rear oil seal using an oil seal disassembling jig.
- If only the inside guide ring is removed, use a special tool to take off the outside seal.

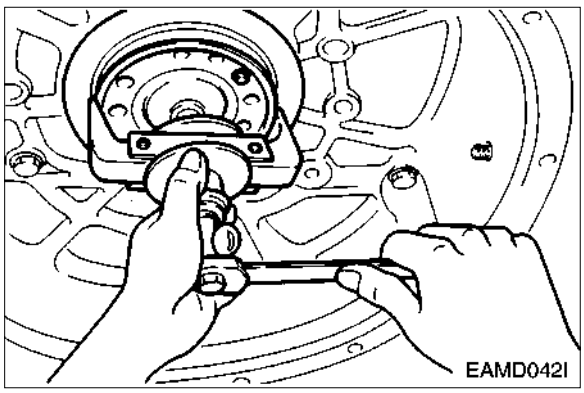

3.1.37. Flywheel housing

- Loosen the housing fixing bolts and disassemble the flywheel housing.

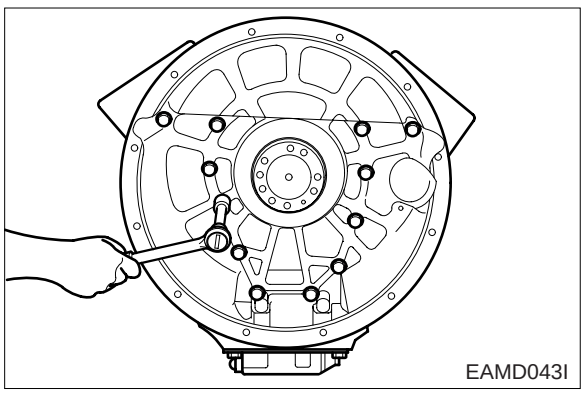

3.1.38. Cam shaft and tappet

- Remove the cam shaft gear.
- Take off the cam shaft gear and thrust washer.
- Take out the cam shaft care not to damage the cam shaft.
- Slide out the tappets by hand.

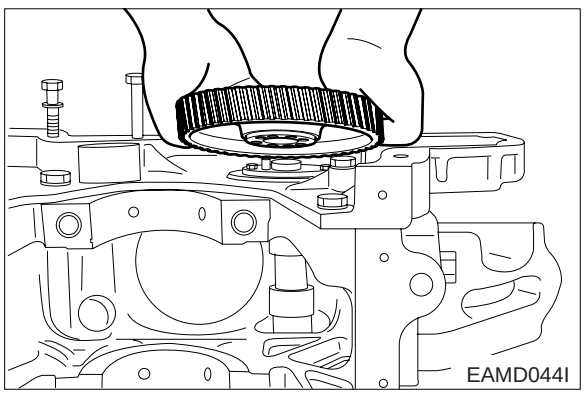

https://truckmanualshub.com/

3.1.39. Crankshaft gear and oil pump idle gear

- Loosen the socket head bolts and take out the oil pump idle gear.
- Use a puller to remove the crankshaft gear.

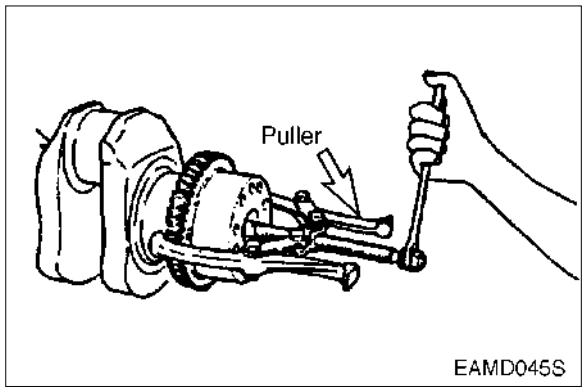

3.1.40. Timing gear case

- Unscrew the case fixing bolts and disassemble the timing gear case.

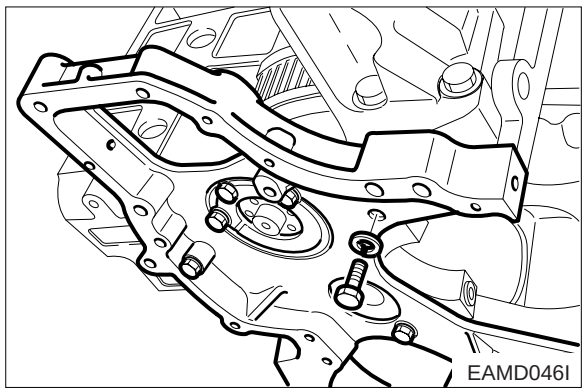

3.1.41. Crank shaft

- Remove the main bearing cap fixing bolts in the opposite direction of assembling.
- Maintain the removed bearing caps in the order of cylinders.
- Temporarily install the bolts at the both side of crankshaft, and lift the shaft with a rope.

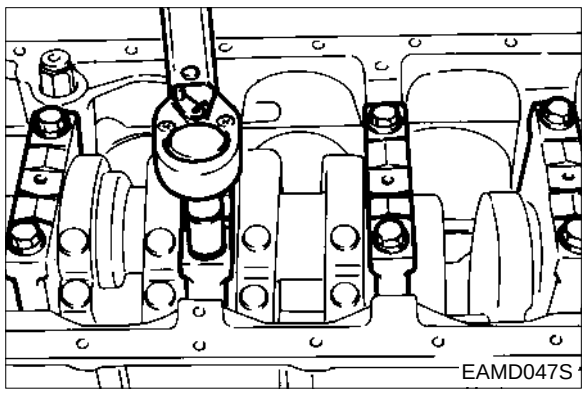

NOTE :

Do not mingle with the metal bearings and bearing caps randomly. To prevent mixing, temporarily assemble the metal bearings to the corresponding bearing caps in turn.

https://truckmanualshub.com/

3.1.42. Oil spray nozzle

- Unscrew the fixing bolt and remove the oil spray nozzles.

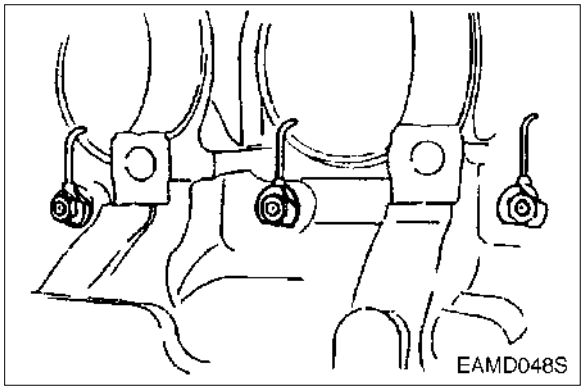

https://truckmanualshub.com/

3.2. Inspection and Measurement

3.2.1. Cylinder block

1) Clean the cylinder block thoroughly and make a visual inspection for cracks or damage.
2) Replace if cracked or severely damaged, and correct if slightly damaged.
3) Check oil and water flow lines for restriction or corrosion.
4) Make a hydraulic test to check for any cracks or air leaks.

Hydraulic test

Stop up each outlet port of water/oil passages in the cylinder block, apply air pressure of about 4kg/cm^2 against the inlet ports, then immerse the cylinder block in water for about 1 minute to check any leaks. (Water temperature: 70 ˚C)

3.2.2. Cylinder head

1) Inspection

- Carefully remove carbon from the lower lace of the cylinder head using nonmetallic material to prevent scratching of the valve seat faces.
- Check the entire cylinder head for very fine cracks or damage invisible to ordinary sight using a hydraulic tester or a magnetic flaw detector.

2) Distortion at the lower face

- Measure the amount of distortion using a straight edge and a feeler gauge at six positions (A ~ F) as shown in the right figure.
- If the measured value exceeds the standard value, retrace the head with grinding paper of fine grain size to correct such defect.
- If the measured value exceeds the maximum allowable limit, replace the cylinder head.

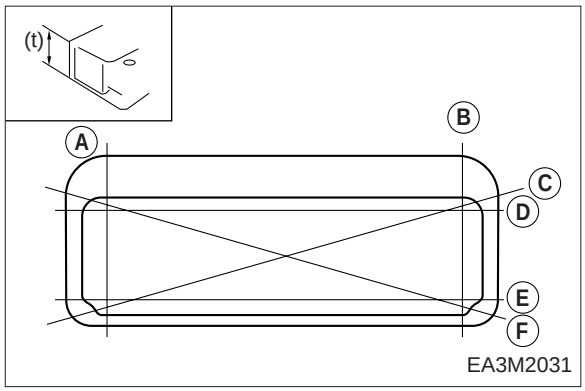

Low face warpage and height

	Standard	Limit
Warpage	0.2 mm or less	0.3 mm
Thickness : t (reference)	114.95 ~ 115.0 mm	113.9 mm

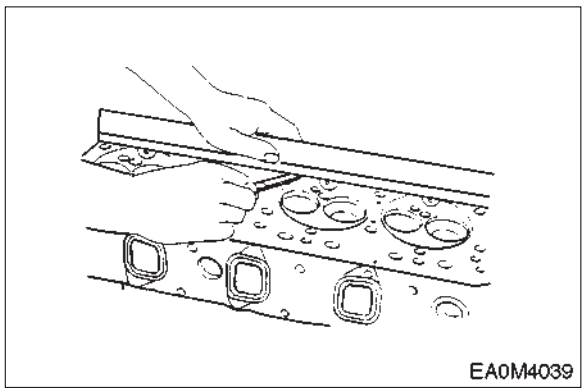

https://truckmanualshub.com/

3) flatness

● Measure flatness of the intake/exhaust manifolds fitting surfaces on the cylinder head using a straight edge and a feeler gauge.

Standard	Limit
0.05 mm	0.2 mm

4) Hydraulic test

● Hydraulic test method for the cylinder head is same as that for cylinder block.

3.2.3. Valve and valve guide

1) Valve

Clean the valves with clean diesel oil, then inspect them as follows :

● **Valve stem outer diameter**

Measure the valve stem outer diameter at 3 positions. (top, middle, and bottom) If the amount of wear is beyond the limit, replace the valve.

Dimension / Description	Standard	Limit
Intake valve stem	ϕ10.950 ~ ϕ10.970 mm	ϕ10.87 mm
Exhaust valve stem	ϕ10.935 ~ ϕ10.955 mm	ϕ10.84 mm

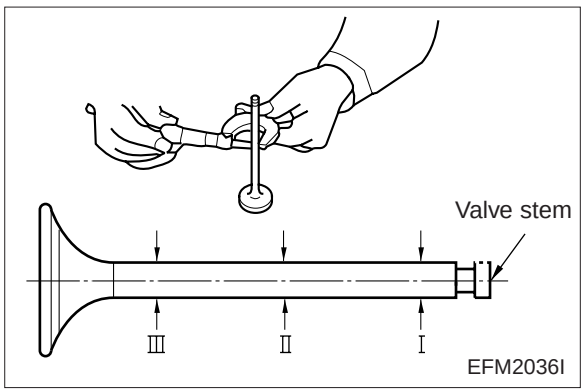

● **Valve seat contacting faces**

Check the valve seat contacting faces for scratches or wear, and correct the faces with grinding paper as necessary. Replace if severely damaged.

● **Valve head thickness**

Measure the valve head thickness, and replace the valve if the measured value is beyond the limit.

Dimension / Description	Standard	Limit
Intake valve	1.5 mm	1 mm or less
Exhaust valve	1.5 mm	0.9 mm or less

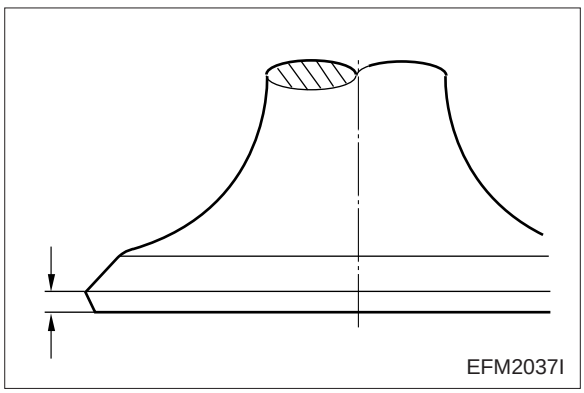

https://truckmanualshub.com/

2) Valve guide

- Install the valve into the valve guide and measure the clearance between them by valve movement. If the clearance is excessive, measure the valve and replace either the valve or the valve guide, whichever worn more.

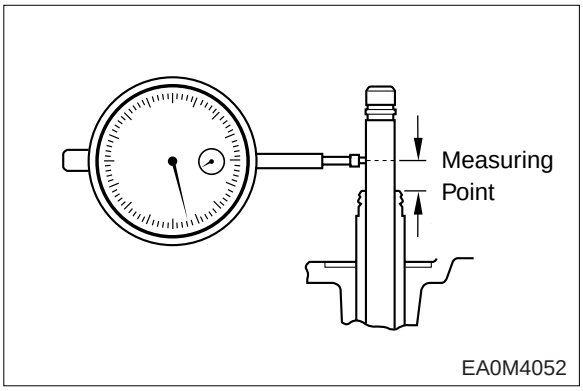

Valve stem end play

	Standard	Limit
Intake valve	0.04 ~ 0.07 mm	0.2 mm
Exhaust valve	0.06 ~ 0.09 mm	0.25 mm

- Install the valve into the cylinder head valve guide, then check and see if it is centered with the valve seat using a special tool.

3) Valve seat

- **Contacting face amount**
  Measure the contacting face between the intake valve seat and exhaust valve seat for valve seat wear, and replace if the measured value exceeds the specified limit.

- Install the valve into the valve seat on the cylinder head, and check the amount of depression of the valve from the lower portion of the cylinder head using a dial gauge.

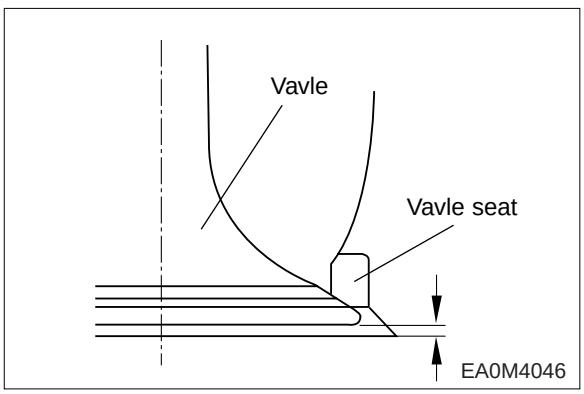

Valve depression

	Standard	Limit
Intake & Exhaust	0 ~ 0.03 mm	0.55 mm

- If the amount of depression is beyond the specified limit, replace the valve seat.

https://truckmanualshub.com/

- For removal of the valve seat, apply arc welding work to two points of valve seat insert, and pull out the valve seat insert with inner extractor.

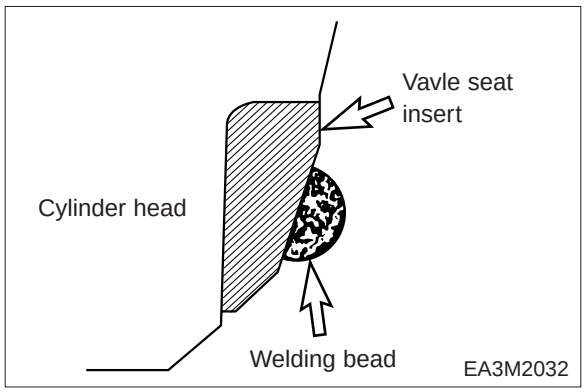

- Undercool a new valve seat with dry ice for about 2 hours and press the valve seat insert into position in the cylinder head using a special tool (bench press).
- Apply valve lapping compound to the valve head seating face on the valve seat and lap the valve seat by turning it until it is seated in position, then wipe out the lapping compound.

4) Valve spring

- **Visual check**
  Visually check the exterior of the valve springs for damage, and replace if necessary.

- **Functional check**
  - Measure free length and spring tension with a valve spring tester.
    (Refer to appendix)
  - Measure the spring inclination with a square.
  - Compare the measured value with the standard value to determine whether to replace or repair.

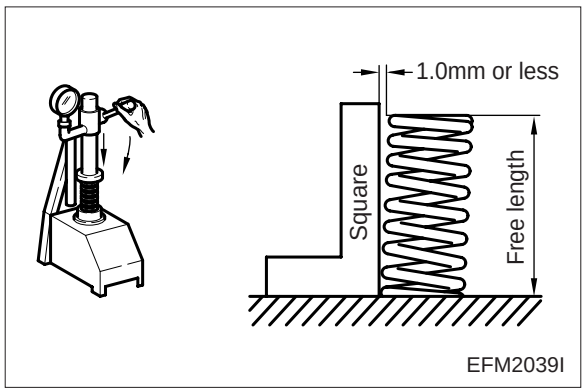

		Standard	Limit
Valve spring inclination	**DE12T/TI/TIA**	1.0 mm	2.0 mm
	DE12TIS	1.7 mm	

https://truckmanualshub.com/

3.2.4. Rocker arm shaft assembly

1) Rocker arm shaft

● **Rocker arm shaft run-out**

Place the rocker arm shaft on two V blocks and inspect the shaft for bend using a dial gauge.

● If the amount of this run-out is small, press the shaft with a bench press to correct the run-out. Replace the shaft if the measured value exceeds the limit.

Limit	0.2 mm

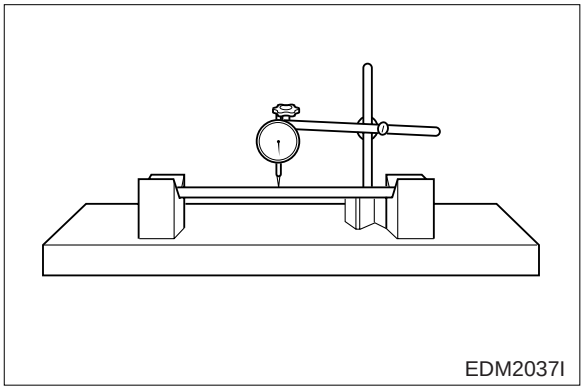
EDM2037I

● **Rocker arm shaft diameter**

With an outside micrometer, measure the rocker arm shaft diameter at the point where the rocker arms have been installed. I

Replace the rocker arm if the amount of wear is beyond the specified limit.

Standard	Limit
ϕ23.978 ~ ϕ23.959 mm	ϕ23.75 mm

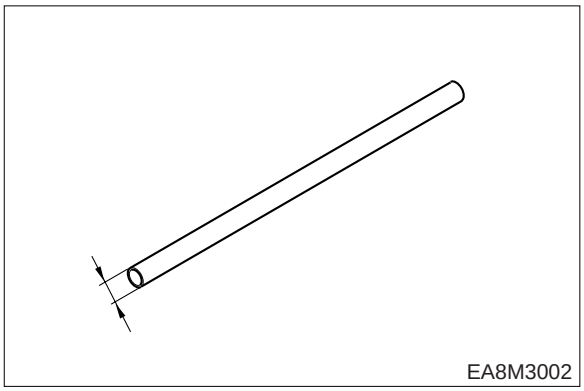
EA8M3002

2) Rocker arm

● **Visual check**

Visually check the face of the rocker arm in contact with the valve stem end for scores and step wear. If the wear is small, correct it with an oil stone or grinding paper of fine grain size. Rocker arm with a considerable amount of step wear should be replaced.

● **Diameter of the rocker arm bushing**

Measure the inside diameter of the rocker arm bushing with an inside micrometer or vernier calipers, and compare the measured values with the rocker arm shaft diameter. If the clearance exceeds the limit, replace either bushing or shaft, whichever worn more.

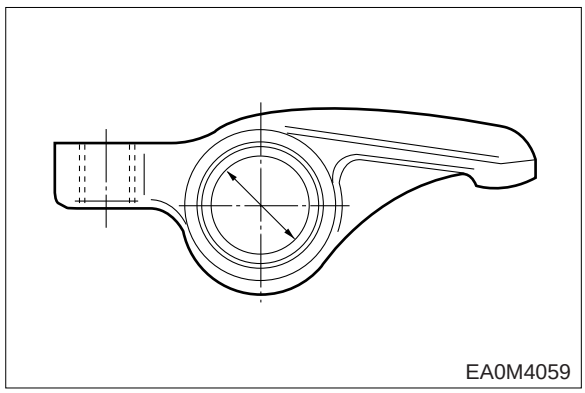
EA0M4059

<Clearance>

Standard	Limit
0.020 ~ 0.093 mm	0.2 mm

https://truckmanualshub.com/

3) Tappet and push rod

● **Clearance**

Measure the clearance of the tappet and tappet holes of the cylinder block. If the value is beyond the specified limit, replace tappets.

● **Visual check of tappet**

Visually check the face of the tappets in contact with the cam for pitting, scores or cracks, and replace if severely damaged. If the amount of cracks or pitting is small, correct with an oil stone or grinding paper.

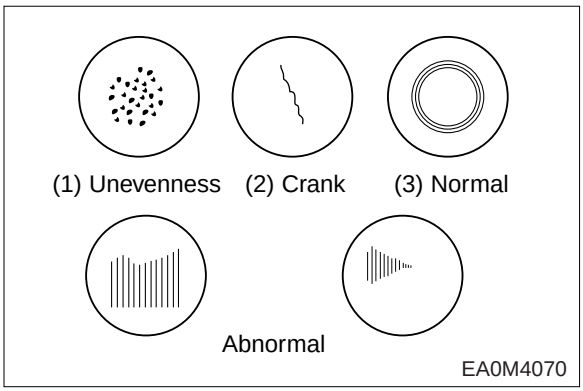

● **Outside diameter**

With an outside micrometer, measure the tappet outside diameter If the measured value is beyond the limit, replace tappets.

	Standard	Limit
Tappet clearance	0.035 ~ 0.077 mm	0.15 mm

Tappet diameter	ϕ19.944 ~ ϕ19.965 mm

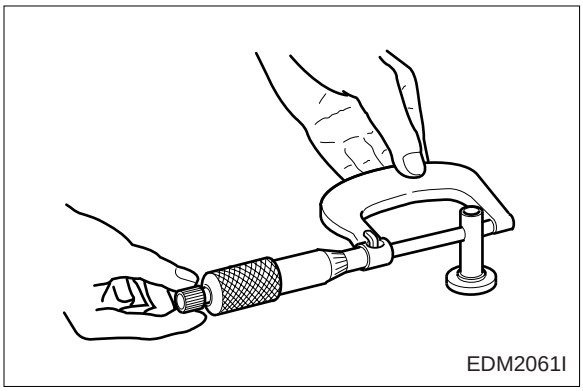

● **Push rod run-out**

Limit	0.3 mm or less

Use a feeler gauge to measure the push rod run-out.

Roll the push rod along a smooth flat surface as shown in the figure.

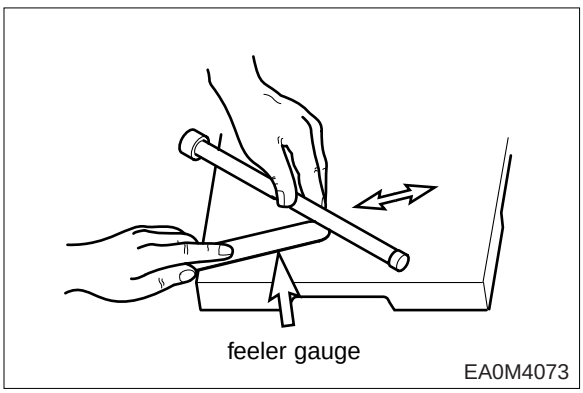

https://truckmanualshub.com/

3.2.5. Cam shaft

1) Cam

● **Cam lobe height**

Use a micrometer to measure the cam lobe height and journal diameter. If the measured value is less than the specified limit, the camshaft must replaced.

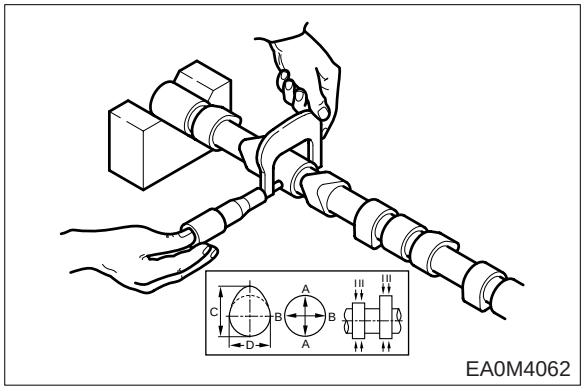

unit : mm

		Standard	Limit
Cam lobe height (C)	Intake	ϕ49.37 ~ϕ49.57	ϕ49.00
	Exhaust	ϕ49.09 ~ϕ50.19	ϕ49.00
Cam journal diameter (A,B)		ϕ59.86 ~ϕ59.88	ϕ59.52

● **Cam surface**

Inspect the cam face for scratch or damage.

● Slight step wear or damage on the cam face may be corrected with oil stone or oiled grinding paper. But, replace if severely damaged.

2) Cam shaft

● **Clearance between camshaft journal and camshaft bush**

- With an outside micrometer, measure the camshaft journal diameter.
- Measure the inside diameter of the camshaft bushing on the cylinder block using a cylinder bore indicator, and compare the measured value with the camshaft outside diameter to determine the clearance.

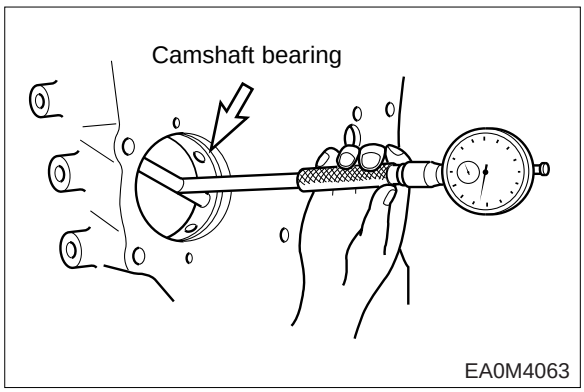

<Clearance>

Standard	Limit
0.050 ~ 0.128 mm	0.2 mm

Replace the bushing if the measured value is beyond the specified limit.

- **Run-out**

  Support the camshaft on two V blocks and check for run-out using a dial indicator. Correct or replace the cam shaft if the amount of run-out is beyond the value indicating need for servicing.

Standard	Limit
0.05 mm	0.2 mm

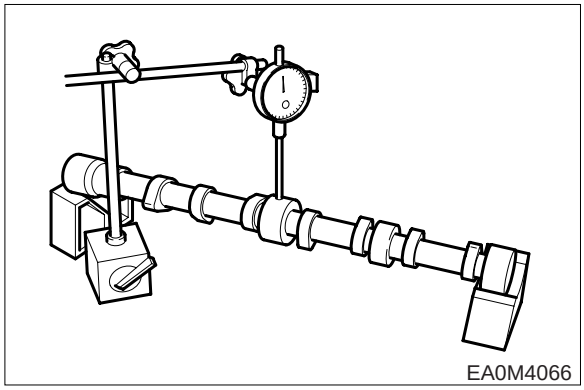

3) Cam shaft end play

- Push the thrust plate toward the cam gear.
- With a feeler gauge, measure the clearance between the thrust plate and camshaft gear.
- If the end play is excessive, replace the thrust plate.

Standard	Limit
0.13 ~ 0.27 mm	0.30 mm

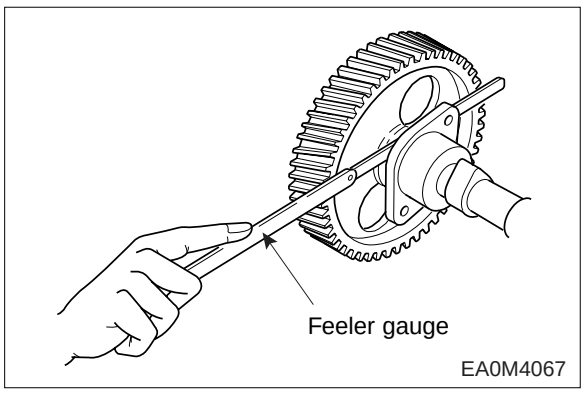

3.2.6. Cam shaft

1) Defect check

- Visually check the crankshaft journal and crank pins for scores or cracks.
- Using a magnetic particle test and color check, inspect the crankshaft for cracks, and replace the crankshaft which has cracks.

2) Wear

- With an outside micrometer measure the diameter of the crankshaft journals and pins in the directions as shown, and compare the measured values to determine the amount of wear.

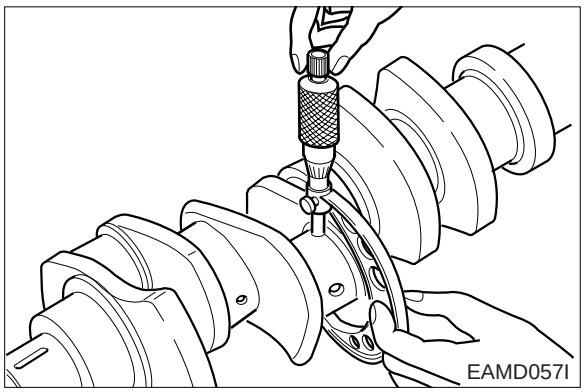

- If the amount of wear is beyond the limit, have the crankshaft grind and install undersize bearings. However, if the amount of wear is within the limit, you can correct the wear using an oil stone or oiled grinding paper of fine grain size. (Be sure to use grinding paper which has been immersed in oil.)

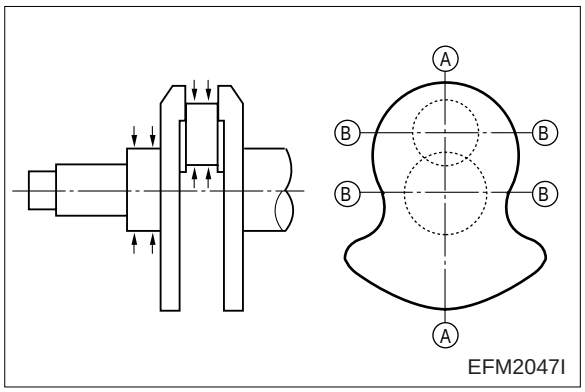

	Standard	Limit
Journal diameter	ϕ95.966 ~ ϕ95.988	ϕ94.966 mm
Pin diameter	ϕ82.966 ~ ϕ82.988	ϕ81.966 mm

*** Undersize bearings available**

- Standard
- 0.25 (Inside diameter is 0.25 mm lesser than the standard size.)
- 0.50 (Inside diameter is 0.50 mm lesser than the standard size.)
- 0.75 (Inside diameter is 0.75 mm lesser than the standard size.)
- 1.00 (Inside diameter is 1.00 mm lesser than the standard size.)

Undersize bearings are available in 4 different sizes as indicated above, and the crankshaft can be reground to the above sizes.

NOTE :

When regrinding the crankshaft as described below, the fillet section 'R' should be finished correctly. Avoid sharp corners or insufficient fillet.

*** Standard values of 'R'**

① Crankshaft Pin 'R' : $5^{0}_{-0.2}$

② Crankshaft journal 'R': $5^{0}_{-0.2}$

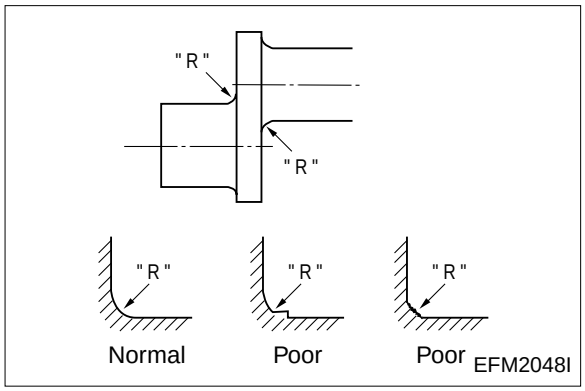

3) Crankshaft run-out

- Support the crankshaft on V blocks.
- Turn the crankshaft with a dial indicator placed on the surface plate and take the amount of crankshaft run-out.

Standard	Limit
0.1 mm	0.15 mm

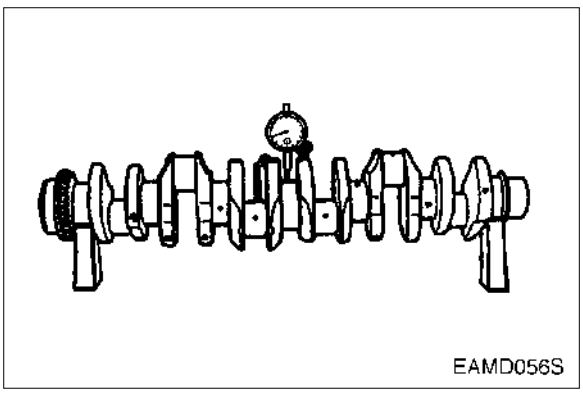

https://truckmanualshub.com/

3.2.7. Crank shaft bearing and connection rod bearing

1) Visual check

- Visually check the crankshaft bearing and connecting rod bearing for scores, uneven wear or damage.

2) Oil clearance between crankshaft and bearing.

- **Main bearing clearance**

Install the main bearing in the cylinder block, tighten the bearing cap to specified torque, then measure the inside diameter.

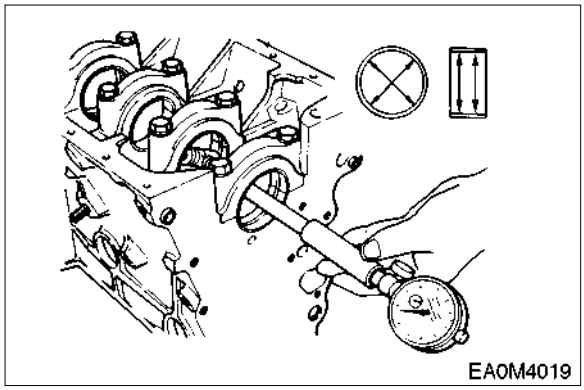

Torque	30 kg·m

Standard	ϕ96.06 ~ ϕ96.108 mm

Compare the two values obtained through measurement of main bearing inside diameter with the outside diameters of crankshaft journals to determine the oil clearance.

<Main bearing oil clearance>

Standard	Limit
0.072 ~ 0.142 mm	0.25 mm

- **Connecting rod bearing clearance**

Install the connecting rod bearing in the connecting rod bearing cap, tighten the connecting rod cap bolts to the specified torque, then measure the inside diameter.

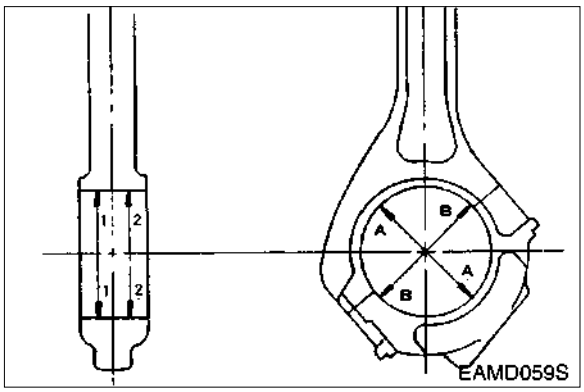

Torque	28 kg·m

Standard	ϕ83.02 ~ ϕ83.092 mm

Compare the two values obtained through measurement of connecting rod bearing inside diameter with the outside diameters of crankshaft pins to determine the oil clearance.

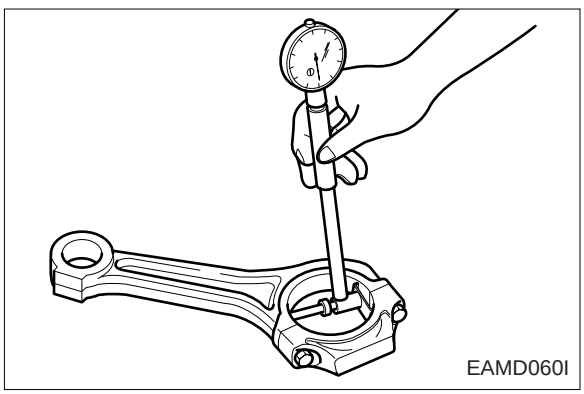

Standard	Limit
0.049 ~ 0.119 mm	0.20 mm

https://truckmanualshub.com/

- If the clearance deviates from the specified range, have the crankshaft journals and pins grind and install undersize bearings.

3) Bearing spread and crush

- **Inspection**

  Check to see that the bearing requires a considerable amount of finger pressure at reassembly operation.

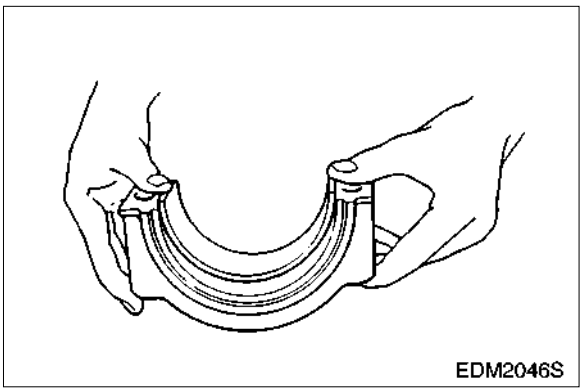

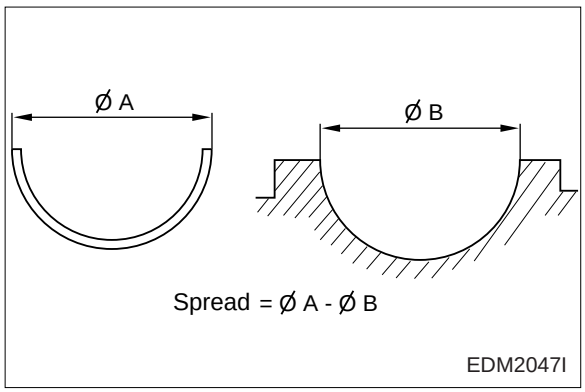

- **Crankshaft bearing crush**

  Install the bearing and cap in the cylinder block, retighten the bolts to specified torque, unscrew out one bolt completely, then measure the clearance between the bearing cap and cylinder block using a feeler gauge.

Standard	0.11 ~ 0.13 mm

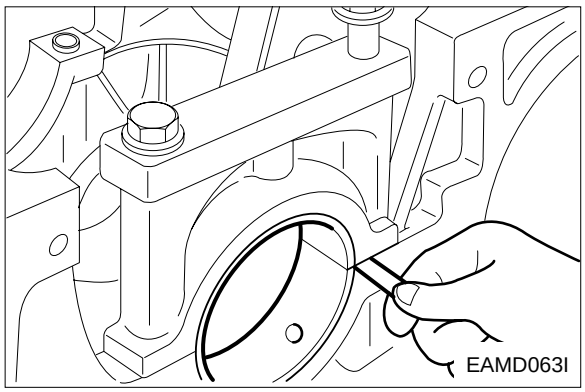

- **Connecting rod bearing crush**

  Install the bearing and cap in the connecting rod big end, retighten the bolts to specified torque, unscrew out one bolt completely, then measure the clearance between the bearing cap and connecting rod big end using a feeler gauge.

Standard	0.086 ~ 0.116 mm

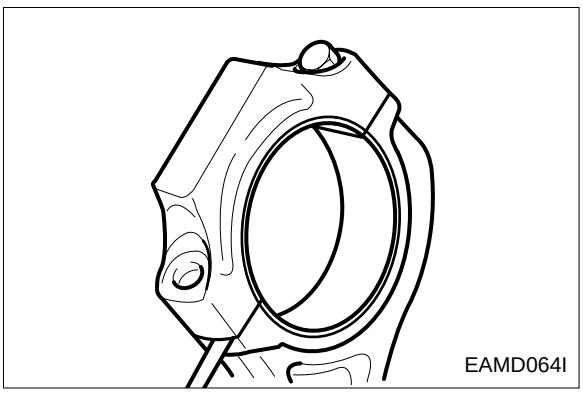

4) Crank shaft end play

- Assemble the crankshaft to the cylinder block.
- With a dial gauge, measure crankshaft end play.

Standard	Limit
0.15 ~ 0.325 mm	0.5 mm

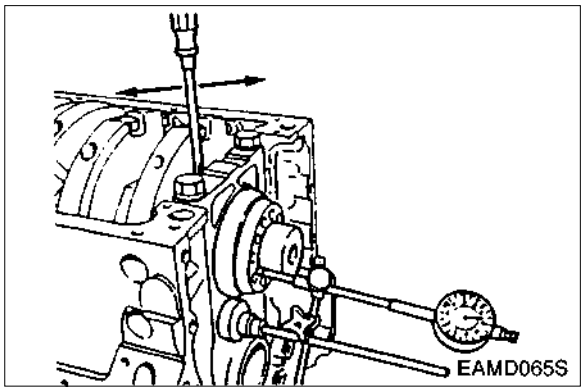

3.2.8. Piston

1) Visual check

- Visually check the pistons for cracks, scuff or wear, paying particular attention to the ring groove.

2) Clearance between the piston and cylinder liner

- With an outside micrometer, measure the piston outside diameter at a point 18mm away from the lower end of piston skirt in a direction at a right angle to the piston pin hole.

Standard	ϕ122.873 ~ ϕ122.877 mm

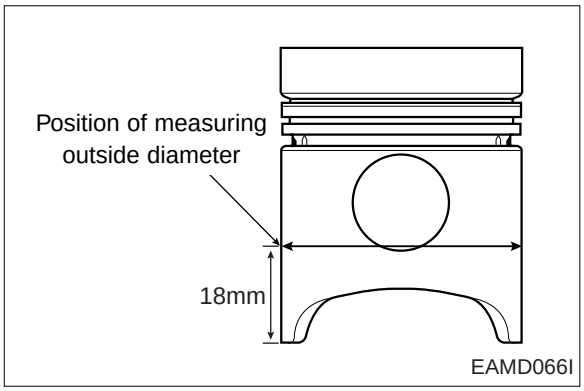

- Using a cylinder bore gauge, measure cylinder liner inside diameter at 3 points (cylinder top ring contacting face, middle, and oil ring contacting face on BDC) in a direction at an angle of 45° Take the mean value with the largest and smallest values excepted.

Standard	Limit
ϕ123 ~ ϕ123.023 mm	ϕ123.223 mm

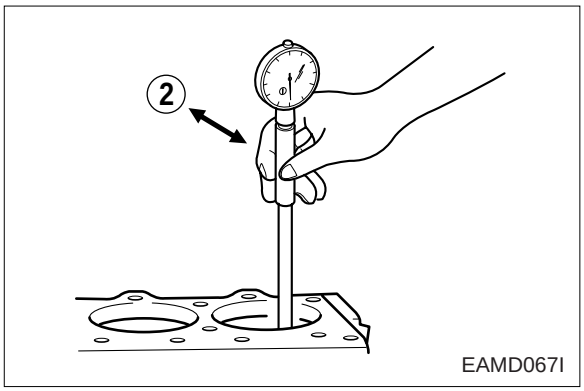

- The clearance is computed by subtracting the piston outside diameter from the cylinder liner inside diameter. Replace either piston or cylinder liner, whichever damaged more, if the clearance is beyond the specified limit.

Clearance between piston and liner

Standard	0.113 ~ 0.152 mm

https://truckmanualshub.com/

3.2.9. Piston rings

1) Visual check

Replace the piston rings with new ones if detected worn or broken when the engine is overhauled.

2) Piston ring gap

- Insert the piston ring into the upper portion of the cylinder liner bore so that it is held at a right angle to the cylinder liner wall.
- Measure the piston ring gap with a feeler gauge.

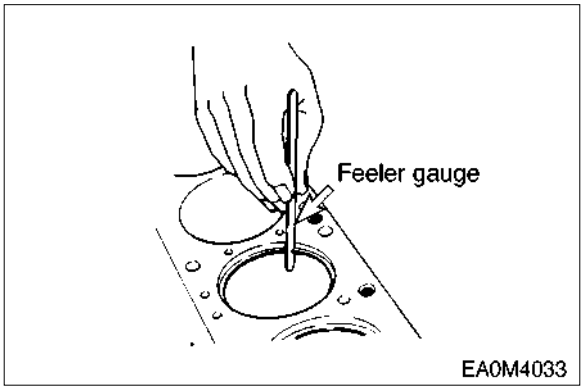

		Standard	Limit
Top ring		0.30 ~ 0.45 mm	1.5 mm
2nd ring		0.35 ~ 0.50 mm	1.5 mm
Oil ring	DE12T/TI/TIA	0.30 ~ 0.50 mm	1.5 mm
	DE12TIS	0.40 ~ 0.70 mm	

- Replace piston rings with new ones if the gap is beyond the limit

3) Piston ring side clearance

- Fit the compression ring and oil ring in the piston ring groove.
- With a feeler gauge, measure side clearance of each ring, and replace either the ring or piston if the measured value is beyond the specified limit.

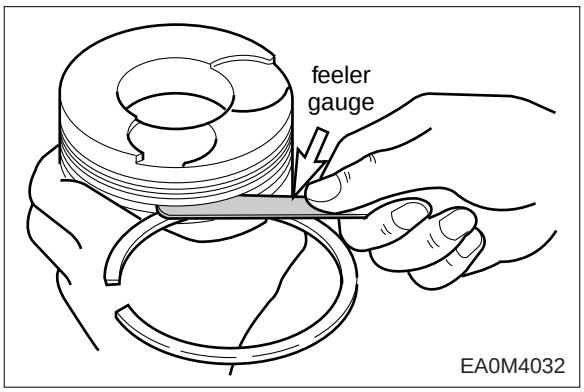

	Standard	Limit
Top ring	-	
2nd ring	0.07 ~ 0.102 mm	0.15 mm
2nd ring	0.05 ~ 0.085 mm	0.15 mm

4) Piston ring tension

- With a tension tester, measure piston ring tension.
- Replace the piston ring if the measured value is beyond the limit.

	Standard
Top ring	2.27 ~ 3.41 kg
2nd ring	2.0 ~ 3.0 kg
Oil ring	4.03 ~ 5.57 kg

https://truckmanualshub.com/

3.2.10. Piston pin

1) Wear

- Measure the amount of wear on the piston pin at the points as shown.
- If the measured values are beyond the limit (0.005 mm or greater), replace the pin.

Standard	Limit
ϕ44.995 ~ ϕ45.0 mm	ϕ44.990 mm or less

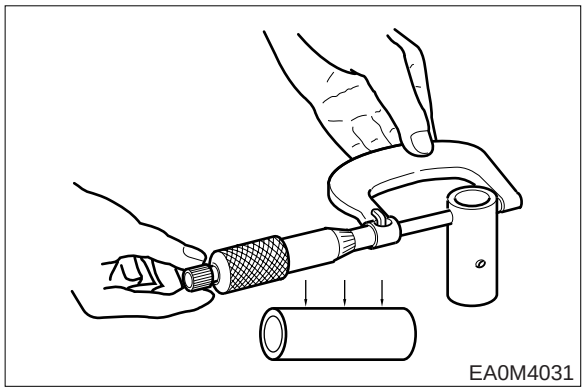
EA0M4031

2) Clearance

- Measure the clearance between the piston pin and connecting rod bushing, and replace either of them, whichever damaged more, if the measured value is beyond the limit.

Limit	0.011 mm

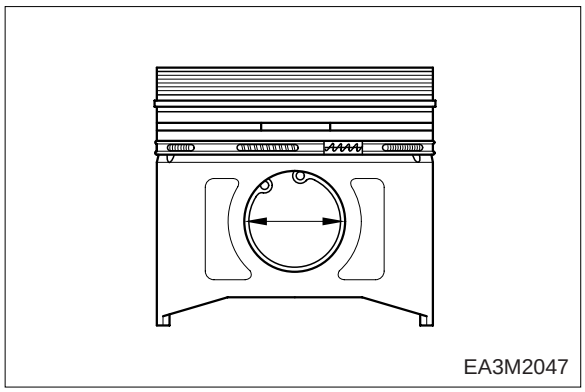
EA3M2047

3) Condition check

- Check the engaged condition of the piston and piston pin. If it is possible to force the pin into the piston heated with piston heater, the piston is normal.

When replacing the piston, be sure to replace the piston pin together.

3.2.11. Connecting rod

1) Distorsion

- Check the connecting rod for distortion.
- As shown in the figure below, install the connecting rod to the connecting rod tester, and check for distortion using a feeler gauge.
- If the connecting rod is found distorted, never re-use it but replace with a new one.

2) Holes alignment (parallelism)

- Measure the alignment of the connecting rod small bushing hole with connecting rod big end hole.
- At this time also, use both connecting rod tester and feeler gauge.

Standard	Limit
0.05 mm	0.1 mm or less

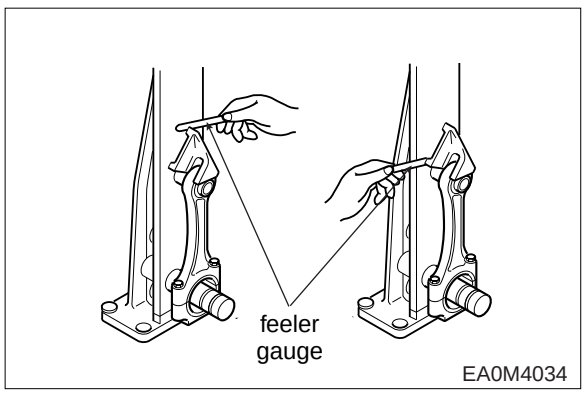

EA0M4034

https://truckmanualshub.com/

3) Wear

- Assemble the connecting rod to the crankshaft and measure connecting rod big end side clearance using a feeler gauge.
- Assemble the connecting rod to the piston and measure connecting rod small end side clearance.
- If the measured values are beyond the limit, replace the connecting rod.

Limit	0.5 mm

3.2.12. Fuel injection nozzle

- Insert a seal ring and injection nozzle on the cylinder head.
- Measure the clearance between the cylinder head bottom and nozzle tip. If the measured values are beyond the limit, replace the seal ring.

Standard	DE12T/TI/TIA	DE12TIS
A (Thickness of seal ring)	1mm	3mm
B (Projection of nozzle)	3.4 ~ 3.5 mm	2.4 ~ 2.5 mm

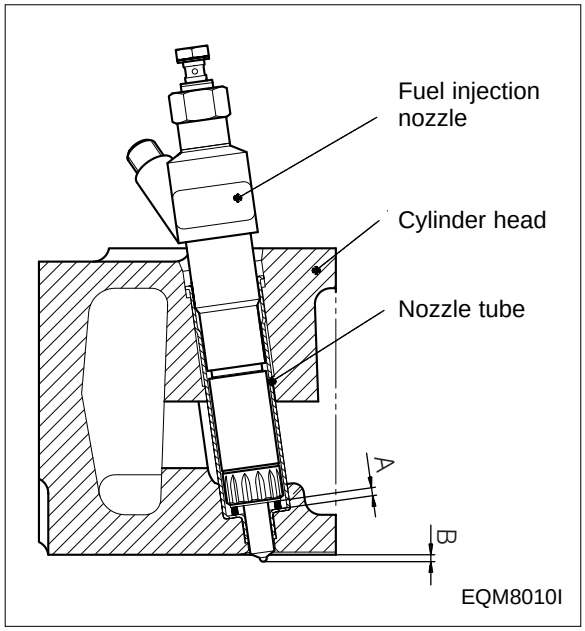

https://truckmanualshub.com/

3.3. Reassembly

3.3.1. General precautions

- Wash clean all the disassembled parts, particularly oil and water ports, using compressed air, then check that they are free from restrictions.
- Arrange the general and special tools in order for engine assembly operation.
- To wet each sliding part, prepare the clean engine oil.
- Prepare service materials such as sealant, gaskets, etc.
- Discard used gaskets, seal rings, and consumable parts, and replace with new ones.
- Apply only the specified torque for bolts in the specified tightening order and avoid over-tightening.
- Be sure to check that all the engine parts operate smoothly after being reassembled.
- Check the bolts for looseness after preliminary reassembly.
- After completing the engine reassembly operation, check if there is missing parts or shortage of parts.
- Keep your hands clean during the working.

3.3.2. Cylinder block

- Cover the floor of the workshop with wood plate or thick paper to prevent damage to the cylinder head and place the cylinder block with the head fitting surface facing downward.

3.3.3. Oil spray nozzle

- Tighten and assemble the oil spray nozzle flange with fixing bolts using the spray nozzle jig.

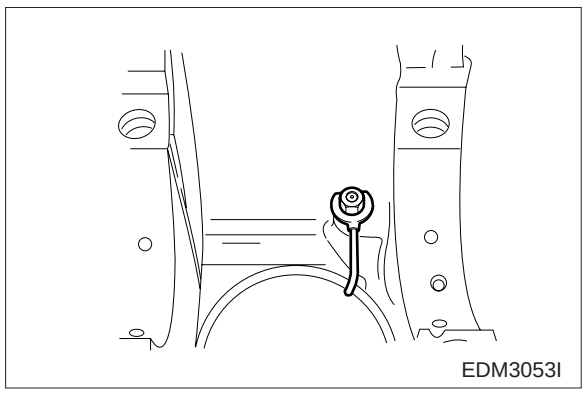

3.3.4. Tappet and cam shaft

- Undercool a new bush with dry ice for about 2 hours and press it into position in the cylinder block using a bench press. After the pressing operation, measure the inside diameter of the cam bush to check if it is not deformed.

- Apply engine oil to the entire face of the tappets and slide them into the tappet holes on the cylinder block.

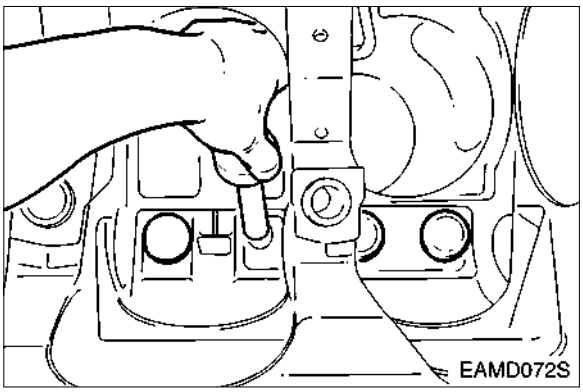

- Wet the cam bush inside diameter and camshaft with oil, and carefully assemble them while turning the camshaft.
- Check to see that the camshaft rotates smoothly.

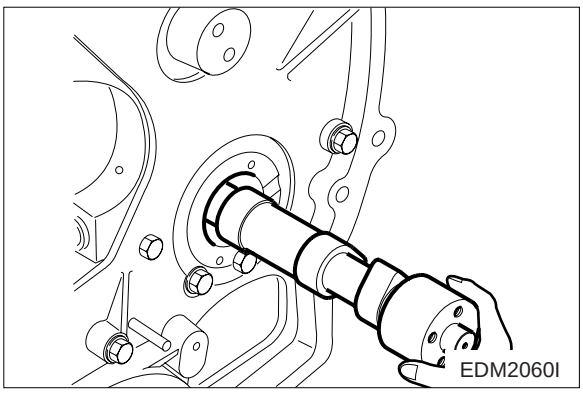

3.3.5. Crankshaft

- Install the main bearing machined with two holes in the cylinder block so that the key is aligned with the key groove, then apply oil to the bearing surface.

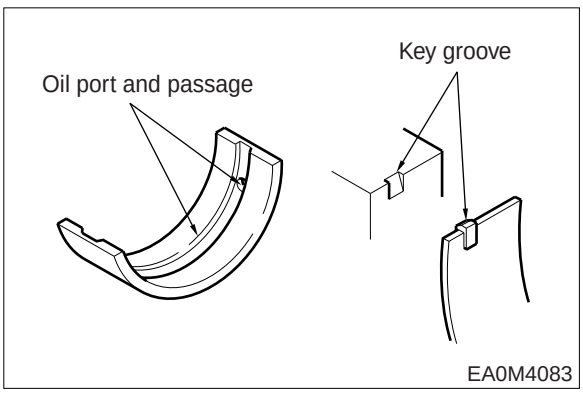

- Heat the crankshaft gear for at least 10 minutes to 120˚C, then apply sealant (Loctite # 641) to the inside wall of the heated crankshaft gear evenly before inserting it to the end of crankshaft.

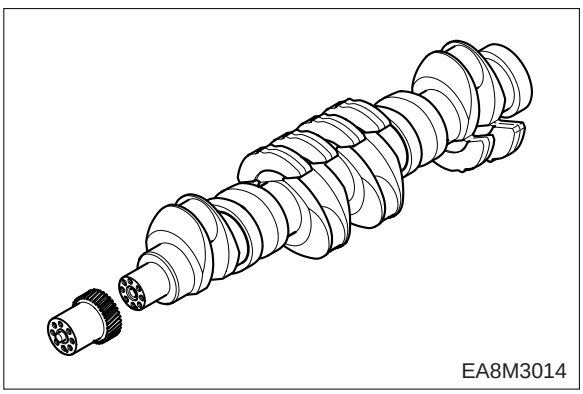

https://truckmanualshub.com/

- Semi-tighten a bolt at both sides of the crankshaft, apply engine oil to journals and pins, then assemble the crankshaft with the cylinder block by tightening the fixing bolts.

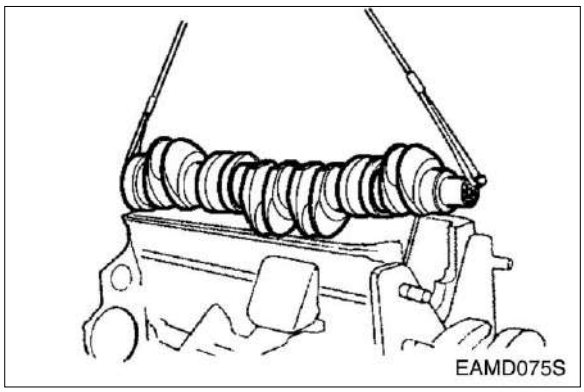

- Install the oiled thrust washers with the oil groove facing outward.

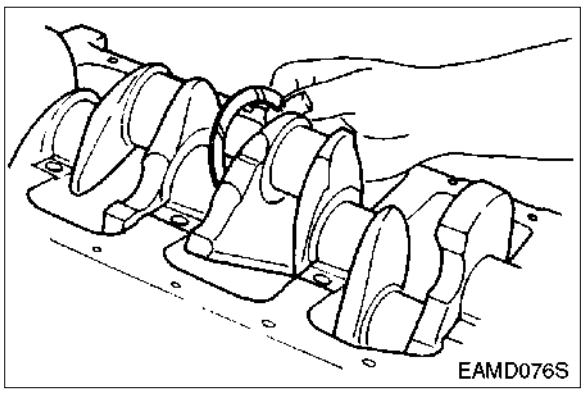

- Install the bearing and thrust washers to the bearing cap and apply oil to the bearing and thrust washers.

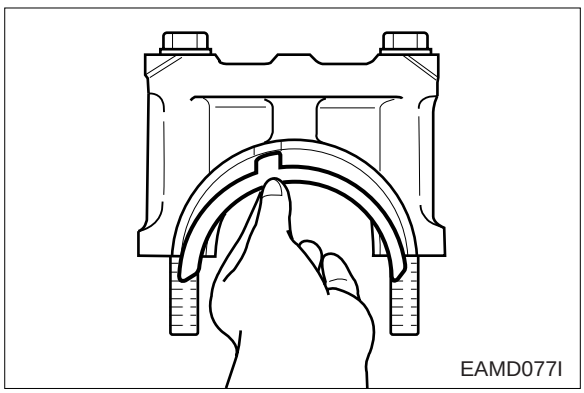

- Install the bearing cap by matching the cylinder block No. with the bearing cap No.

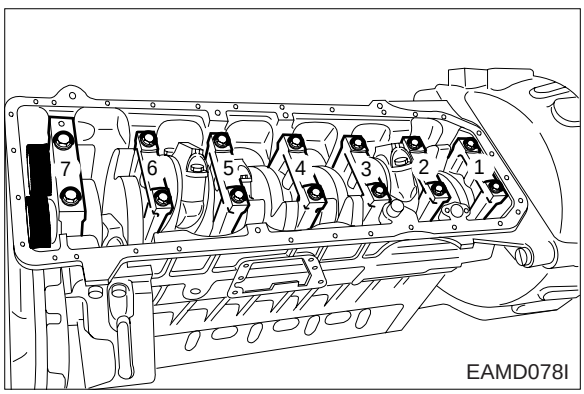

https://truckmanualshub.com/

- Apply oil to the entire part of the bearing cap bolts, then tighten in tightening sequence to specified torque.

Torque	30 kg·m

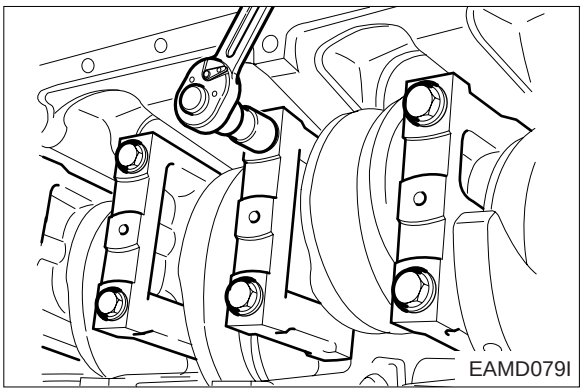

- After semi-tightening both bolts evenly, tighten them diagonally to about 15kg·m for the first stage and 25 kg·m for the second stage respectively, then tighten them completely to the specified torque using a torque wrench.
- Tighten the bearing cap in the sequence of 4-3-5-2-6-1-7.
- Check to see that the assembled crankshaft turns smoothly.

3.3.6. Flywheel housing

- Temporarily install the guide bar on the cylinder block.
- Apply gasket to the cylinder block.
- Using the dowel pin and guide bar, install the flywheel housing and tighten the fixing bolts in a diagonal sequence to specified torque.

Torque	12 kg·m

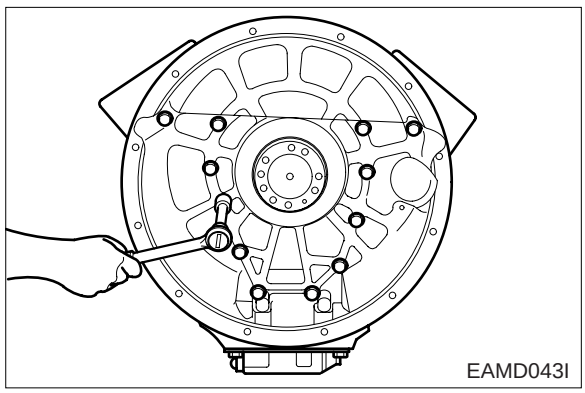

3.3.7. Rear oil seal

- Apply lubricating oil to the outside of the oil seal and flywheel housing inside diameter and fit them over the crank shaft, then assemble the oil seal using an oil seal fitting jig.

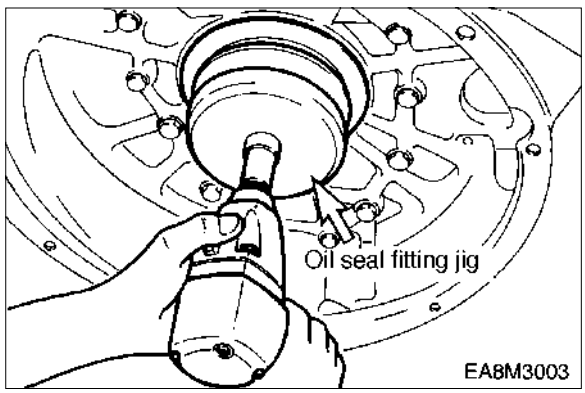

https://truckmanualshub.com/

3.3.8. Flywheel

- Install a guide bar into a bolt hole on the crank shaft, and lift the flywheel to align the dowel pin with the pin hole on the flywheel for temporary assembly operation.
- Install bolts in the remaining holes, take out the guide bar, then install a bolt in the hole where the guide bar had been inserted.

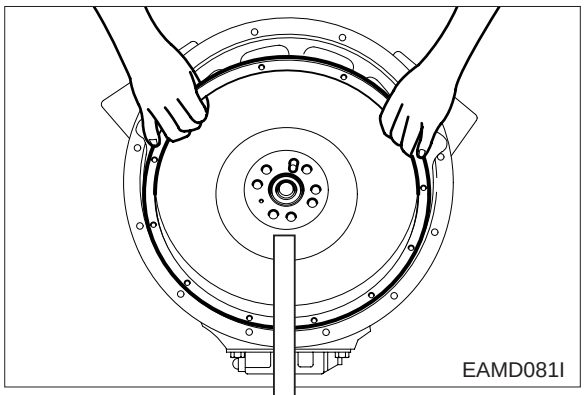

- Tighten the fixing bolts using a torque wrench in a diagonal sequence to specified torque.

Torque	18 kg·m

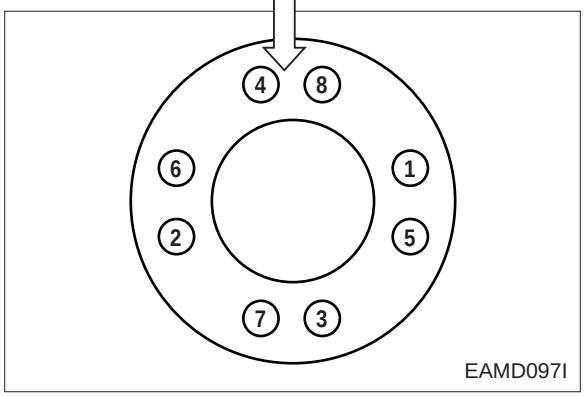

3.3.9. Magnetic pick-up sensor

- Move the lock nut to hexagonal side of sensor completely.
- Rotate (Clcokwise) the pick-up sensor on flywheel housing, until the end of it reach on fly wheel ring gear.
- Then rotate (Counter clockwise) the pick-up sensor for 270˚ (gap 1.0 mm) and fix lock nut.
- Tolerance limit is 27˚ (gap ± 0.1 mm)

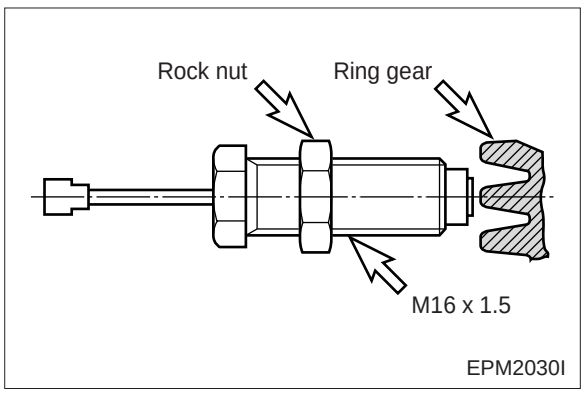

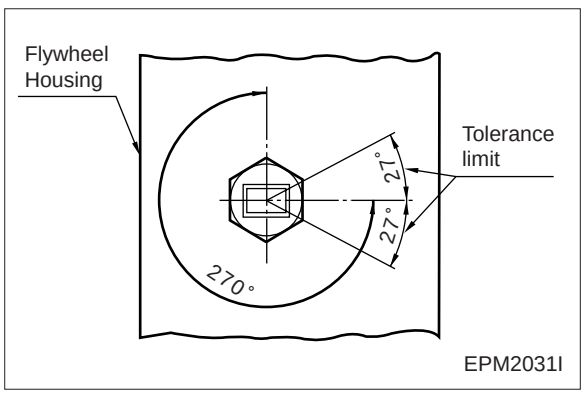

https://truckmanualshub.com/

3.3.10. Timing gear case

- Mount gasket using dowel pin on the cylinder block.
- Install the timing gear case by aligning the dowel pin with the dowel pin hole on the timing gear case.

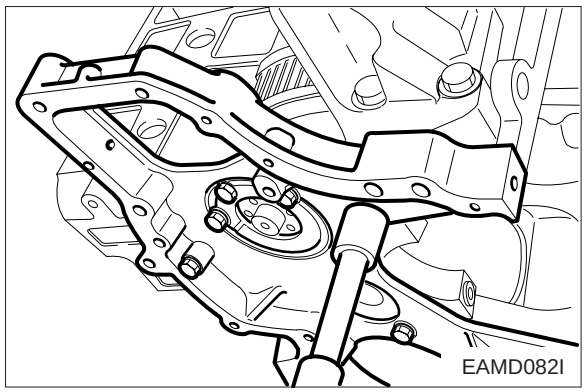

3.3.11. Timing gear

- Install the oil pump idle gear onto the No.7 bearing cap.
- Install a thrust washer over the camshaft and assemble the cam gear by aligning it with camshaft key groove.

Torque	3.8 kg·m

End play	Limit
0.13 ~ 0.27 mm	0.30 mm

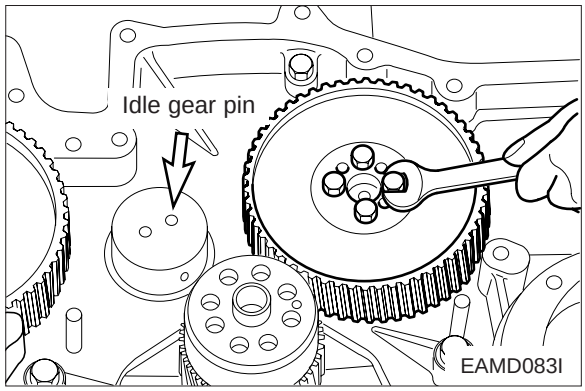

- With the oil port on the idle gear pin facing the cylinder block, install the idle gear pin.

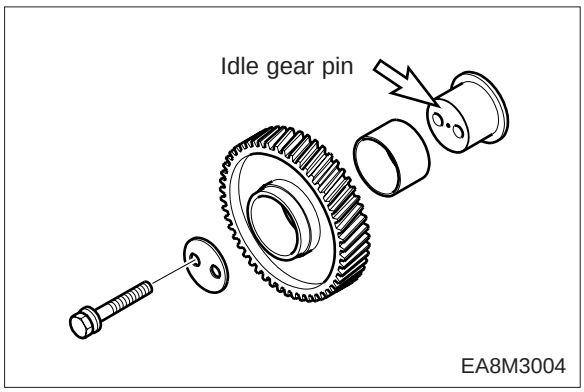

- Install the idle gear by coinciding the marks impressed on the crank gear, cam gear, fuel injection pump drive gear, and idle gear.
- Install a thrust washer on the idle gear and tighten to specified torque.

Torque	7.4 kg·m

- Check and adjust the amount of back-lash between gears using a feeler gauge.

Backlash	0.15 ~ 0.25 mm

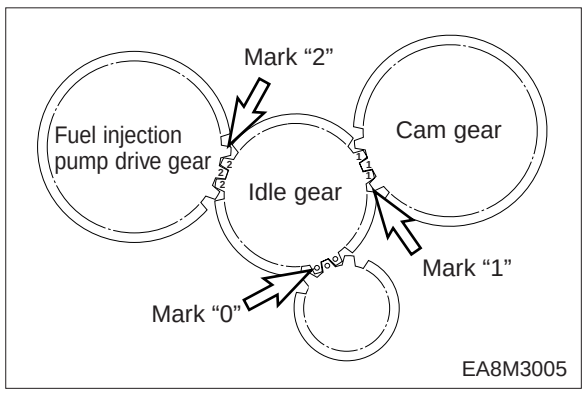

https://truckmanualshub.com/

3.3.12. Fuel injection pump drive gear

- Mount gasket by aligning the bolt holes with the pin holes on the bearing housing.
- Tighten the fixing bolts in the direction of fuel injection pump.

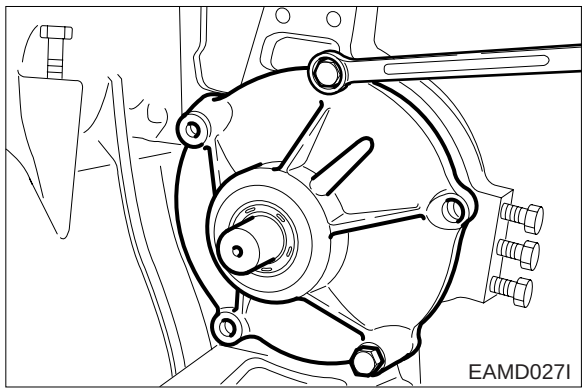

3.3.13. Timing gear case cover

- Install dowel pin on the timing gear case.
- Mount a gasket by aligning the fixing bolt holes with those on the gasket.
- Align the dowel pin with the cover pin hole, then install the cover with light tap.
- Tighten the fixing bolts beginning with the oil pan fitting face.

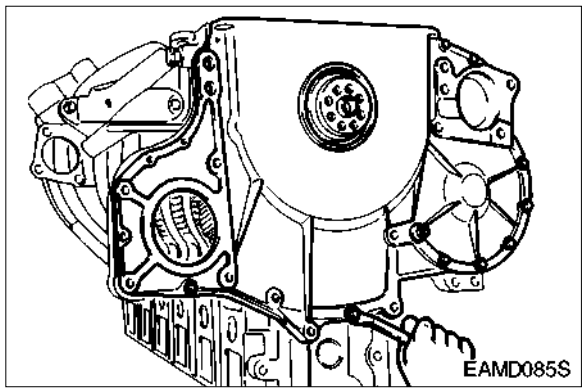

3.3.14. Front oil seal

- Apply lubricating oil to the outside of the oil seal and timing gear case inside diameter and fit them over the crankshaft, then assemble the oil seal using an oil seal fitting jig.

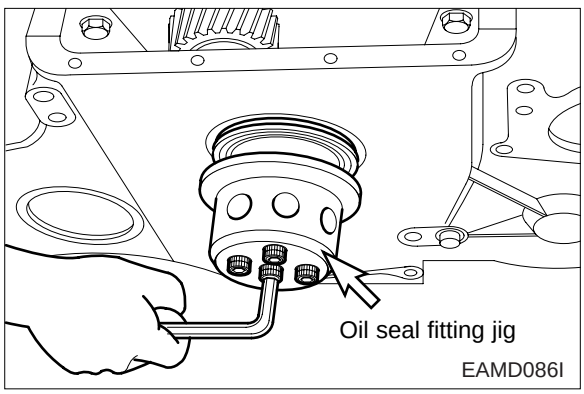

3.3.15. Cylinder liner

- Stand the cylinder block so that the flywheel faces downward.
- Thoroughly clean the liner flange fitting surface and bore inside with compressed air to prevent the entry of foreign substances.
- After the cleaning operation, make the cylinder liner dried up and push it into the cylinder block by hand.
- Wet the liner inside diameter with engine oil.

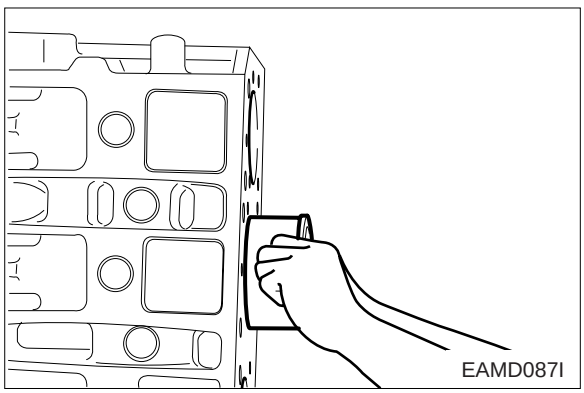

https://truckmanualshub.com/

3.3.16. Piston and connecting rod

- Use a piston heater to heat the piston approximately 100 ˚C (212 ˚F) for 5 minutes.

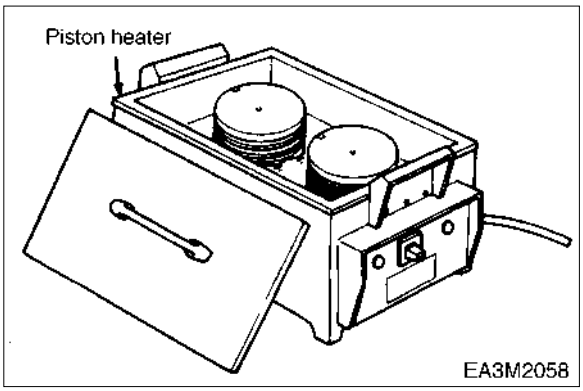

- Align the piston pin hole with the oiled connecting rod small end and press the piston pin (by lightly tapping with a rubber hammer) to assemble the connecting rod with the piston.

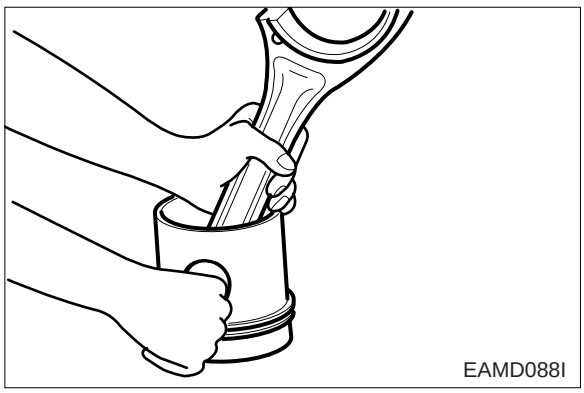

- Noting the direction of the piston, make the longer side (machined with key groove on the bearing) of the connecting rod big end and the mark of " " impressed on the inside of the piston face each other in opposite directions. On the piston head surface, the longer side of connecting rod big end is in opposite direction from the valve seating surface as well as in the same direction with the narrow margin of combustion chamber.

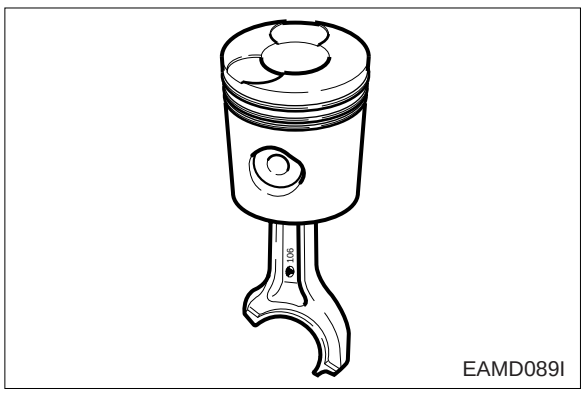

- Install the snap rings and check to see that it is securely assembled.

- Install the piston ring in the piston using piston ring pliers.

https://truckmanualshub.com/

- Identify the mark **"Y"** or **"TOP"** on the ring end to prevent the top and bottom of the piston ring from being interchanged and make the marked portion face upward.

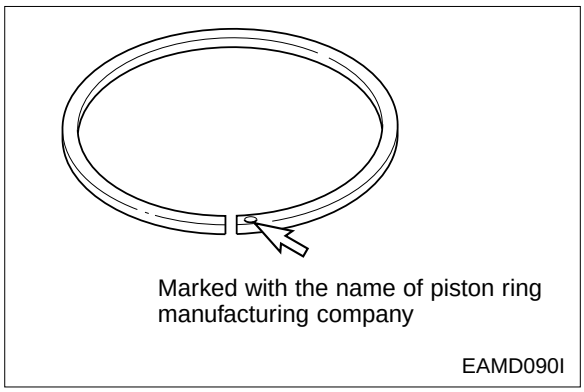

- Adjust the angle among individual piston ring gaps to 90° and fit a piston assembling jig onto the piston, Use care not to match the ring gaps with the pin direction.
- Install the bearing by aligning it with the connecting rod key groove and apply oil to the bearing and piston.

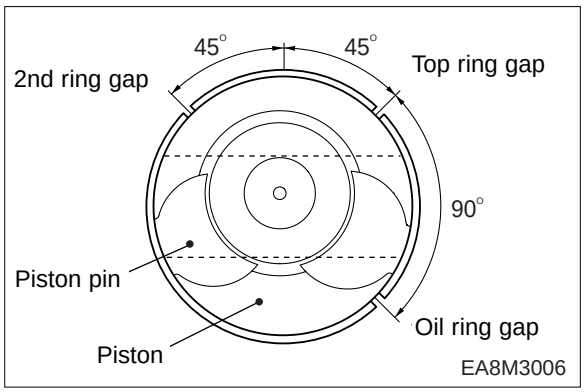

- Position the valve seating surface toward the tappet hole and insert the piston with hand.
  Use care not to damage the cylinder liner and piston, and slightly lift and insert the piston into the cylinder so that the ring may not be damaged by the fillet of the liner.
- Install the bearing in the connecting rod cap and apply oil.

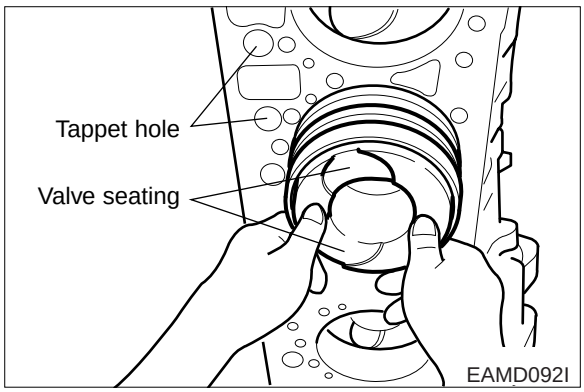

- Make sure that the manufacture serial numbers impressed on the connecting rod cap and connecting rod big end are identical, and install the connecting rod cap by aligning it with dowel pin.
- Wet the fixing bolts with oil, semi-tighten them with hand, tighten them to 15 kg.m for 1st stage and 22 kg.m for 2nd stage respectively, and finally to specified torque.

Torque	28 kg·m

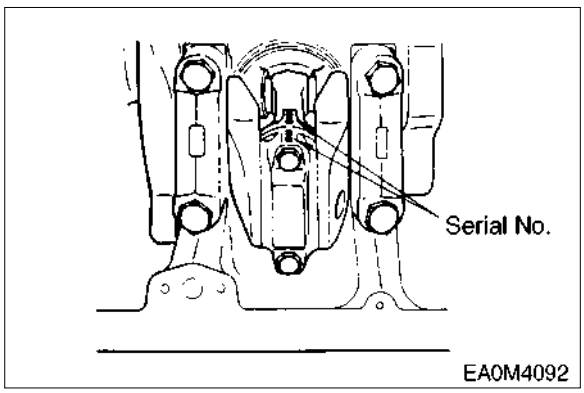

https://truckmanualshub.com/

- Move the bearing cap with hand, and release and reassemble it if no movement is detected.

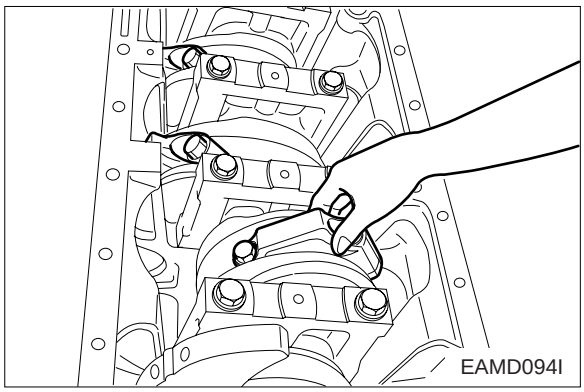

3.3.17. Relief valve

- Assemble the relief valve.

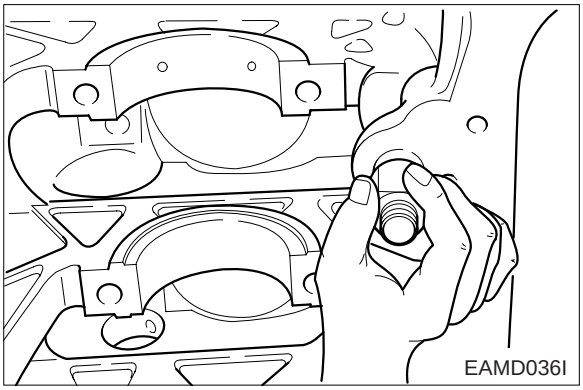

3.3.18. Oil pump and oil pipe

- Install a dowel pin in the No.7 bearing cap, then assemble the oil pump with specified torque.

Torque	4.4 kg·m

- Assemble the oil suction pipe with the delivery pipe, then install the bracket on the bearing cap.

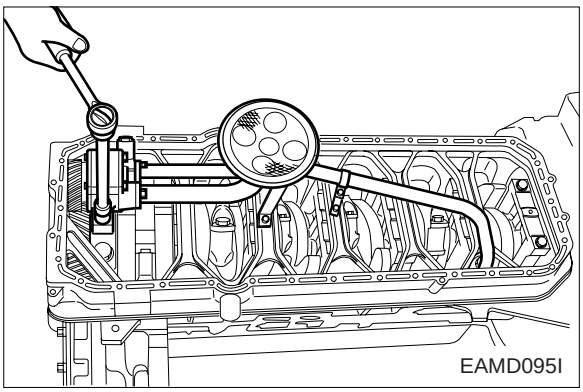

3.3.19. Oil pan

- Mount gasket and put the oil pan thereon.
- Place stiffeners and tighten bolts.
- Align the bolt holes with gasket holes to prevent damage to the gasket and tighten to specified torque.

Torque	2.2 kg·m

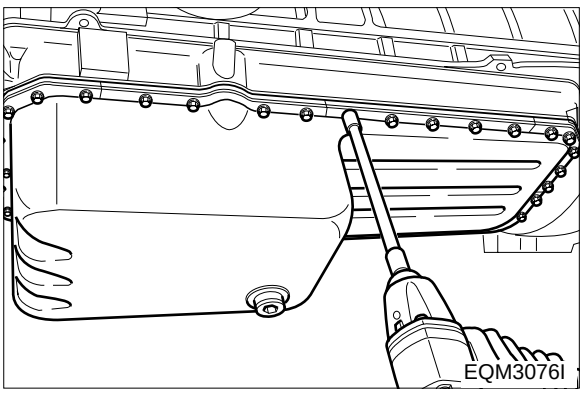

https://truckmanualshub.com/

3.3.20. Intake and exhaust valves

- Identify the marks of "**IN**" and "**EX**" impressed on the valve head before assembling the valve with the valve head.
- Using the valve stem seal fitting jig, assemble the valve stem seal with the valve guide.

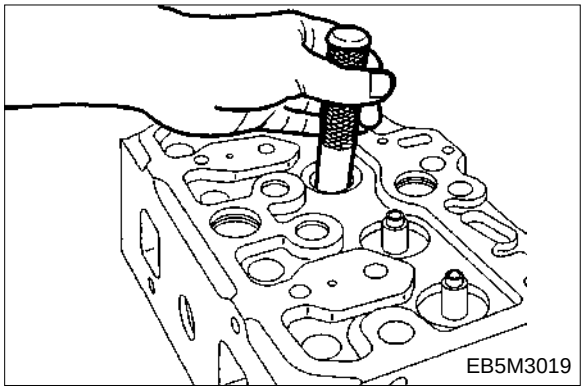

- After installing valve springs and spring retainer, press the retainer with a jig, then install cotter pin.
- Tap the valve stem lightly with a rubber hammer to check that the valve is assembled correctly.

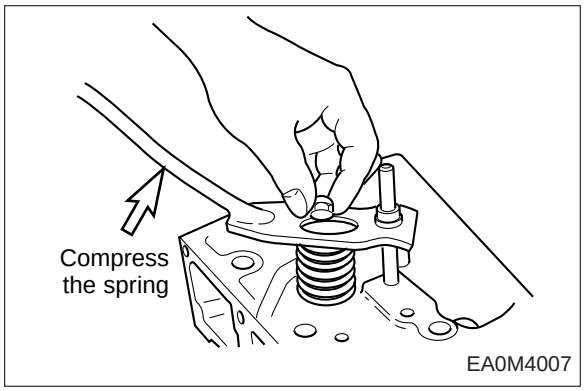

3.3.21. Nozzle tube

- Apply sealant (LOCTITE # 620) to the nozzle tube and place the O-ring over the cylinder head fitting face on the nozzle tube, then install the nozzle tube in the cylinder head.
- Install a guider of the nozzle tube insert assembly (Guider + Expander) on the cylinder head, then tighten the nozzle fixing nuts.

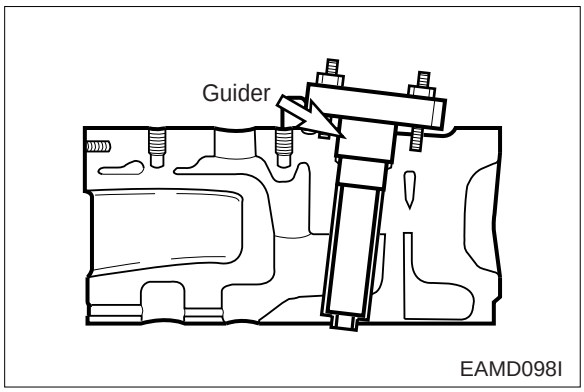

- Apply engine oil to an expander and install it onto the special tool (guider).
- Tighten the bolts until the expander is forced out of the cylinder head bottom.
- After mounting the nozzle tube, make a hydraulic test to check for water leaks.

Test pressure	2 kg/cm²

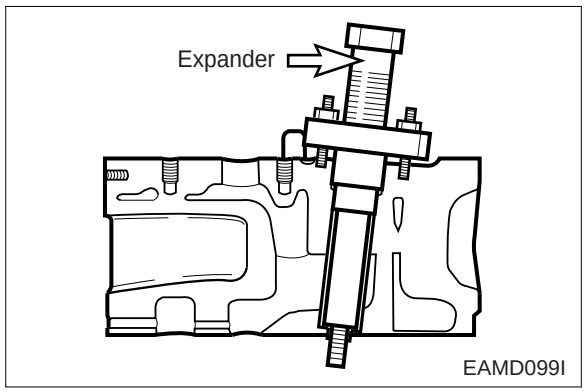

3.3.22. Rocker arm assembly

- Apply lubricating oil to the rocker arm bush and shaft, and assemble the intermediate bracket with the rocker arm using fixing bolts.

Torque	4.4 kg·m

- Semi-install valve clearance adjusting bolts onto the rocker arm.

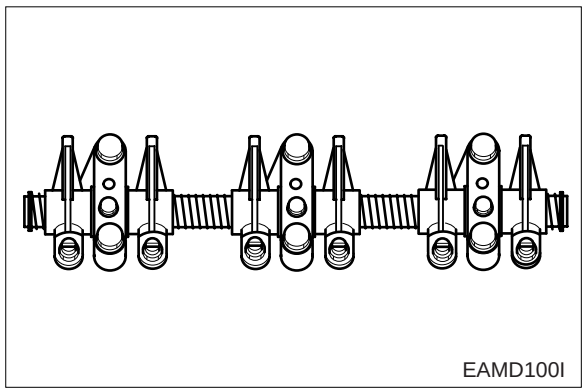

- Install the spring, rocker arm, bracket, rocker arm, spring, washer, and snap ring in the described sequence.
- Install the rocker arm and bracket in the same direction.

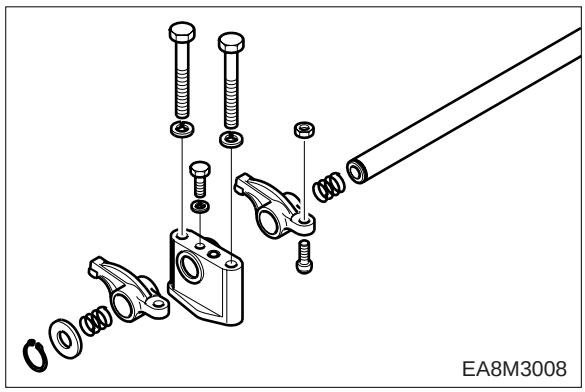

https://truckmanualshub.com/

3.3.23. Cylinder head

- Install the injection nozzle fixing stud bolts and water pipe fixing stud bolts.
- Clean the head bolt holes on the cylinder block with compressed air to remove foreign substances and thoroughly clean the gasket fitting face of the cylinder block.
- Install head gasket, with “TOP” mark facing upward, on the cylinder block by aligning the holes with dowels.

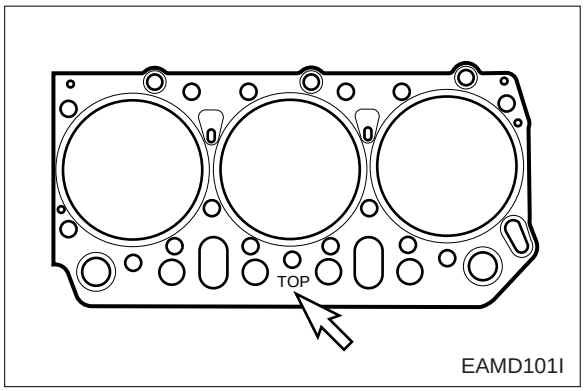

Cylinder head gasket	Asbestos core type Rubber color ; Black		Semi steel type Rubber color ; Red		
Use bolt	TY 12.9T	TY 10.9T		TY	DL08

- Check the inside of combustion chamber for foreign substances, and carefully mount the cylinder head assembly in the block by aligning the dowel pin with the dowel pin hole.
- Be careful not to damage the head gasket. If the dowel pin is not in alignment, lift the cylinder head again and then remount it.

https://truckmanualshub.com/

- Coat the head bolts with engine oil, then tighten them in proper sequence to the specified torque.

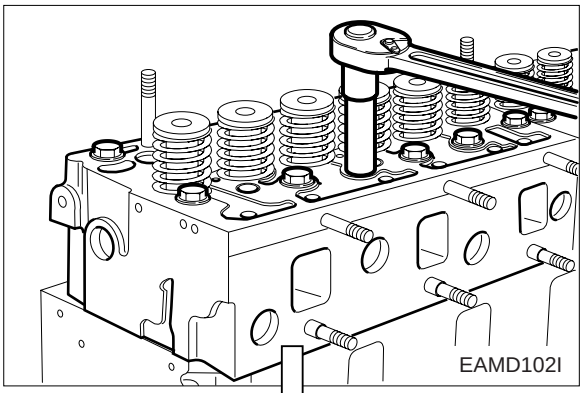

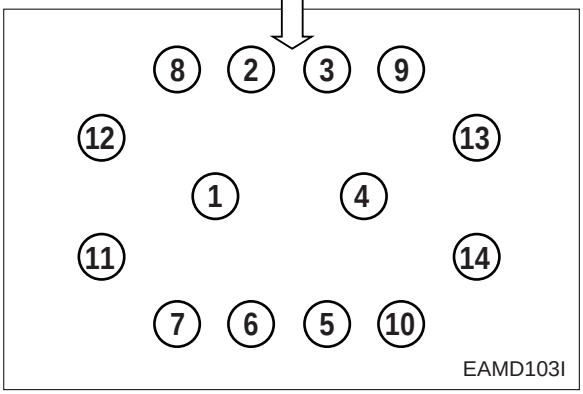

<Cylinder Head Bolts>

	Type 1	Type 2	Type 3(12.9T)	Type 4(12.9T)	Type 5(10.9T)
	TY 12.9T M14x1.5x153	TY 10.9T M14x1.5x150	M14x1.5x153	TY M14x1.5x150	DL08 M14x1.5x150
Tighten torque	24.5 kg.m	1st : 6 kg.m 2nd : 180˚ Finished : 150˚	1st : 6 kg.m 2nd : 90˚ + 90˚ Finished : 30˚	1st : 7 kg.m 2nd : 90˚ + 90˚	1st : 6 kg.m 2nd : 90˚ + 90˚ Finished : 90˚

- Coat the push rod with engine oil and insert it into the push rod hole.
- Adjust the valve clearance as following guide.

https://truckmanualshub.com/

<Guide for valve clearance adjustment>

- After letting the #1 cylinder's piston come at the compression top dead center by turning the crankshaft, adjust the valve clearances.
- Loosen the lock nuts of rocker arm adjusting screws and push the feeler gauge of specified value between a rocker arm and a valve stem and adjust the clearance with adjusting screw respectively and then tighten with the lock nut.
- As for the valve clearance, adjust it when in cold, as follow.

Model	Intake Valve	Exhaust Valve
DE12T DE12TI DE12TIA DE12TIS	0.3 mm	0.3 mm

- By cranking the engine, let #6 cylinder's valves overlap.
- In time, adjust the valve clearance corresponding to " ⇨ " of lower figure.
- Rotating the crankshaft by one revolution, #6 cylinder become the compression state of top dead center.
- Adjust the valve clearance corresponding to " ➡ " of lower figure.
- After reinsuring the valve clearances, retighten if necessary.

- No. 1 Cylinder is located at the side where flywheel was installed.

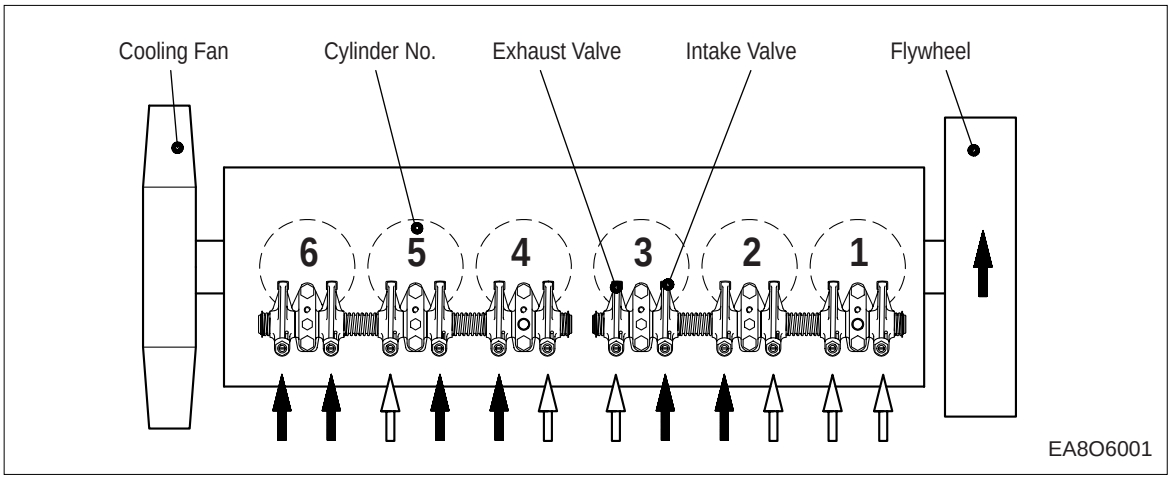

- Adjust valve clearance with a feeler gauge and tighten the fixing nuts to specified torque.

Torque	4.4 kg·m

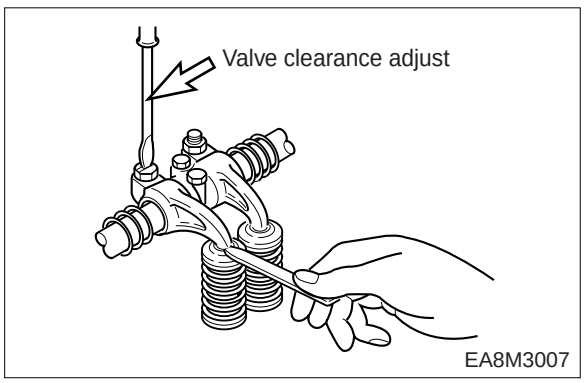

https://truckmanualshub.com/

3.3.24. Injection nozzle

- Install the dust seal with its round portion facing downward.
- Mount a seal ring on the seal ring seating surface of the nozzle tube and assemble nozzle holder assembly with the stud bolt with the nozzle pipe installing direction facing outward.

Engine model	Seal ring
DE12T/TI/TIA	1 mm
DE12TIS	3 mm

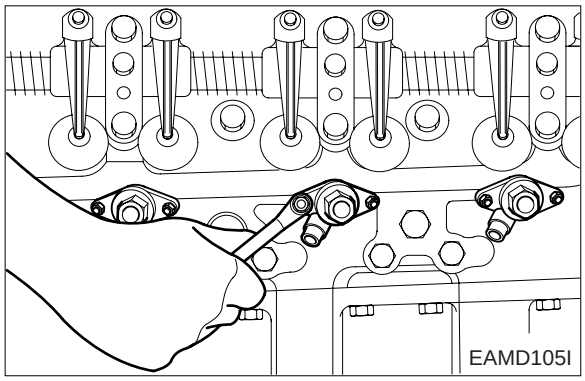

- Be sure to follow the specified torque.

Torque	1.0 kg·m

3.3.25. Cooling water pipe and thermostat

- Install the water pipe onto the cylinder head.
- Insert the thermostat in the housing.
- With socket head bolt, install the thermostat housing onto the water pipe.

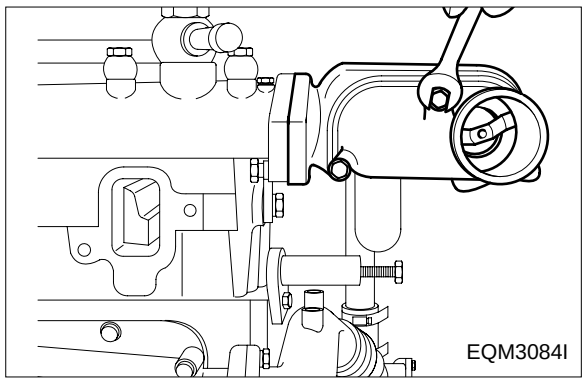

3.3.26. Oil cooler

- Install the oil cooler onto the oil cooler cover.
- Carefully apply the gasket to prevent oil leakage.
- Do not damage the gasket and install the cover onto the cylinder block.
- Connect a connection pipe between the water pump and oil cooler.

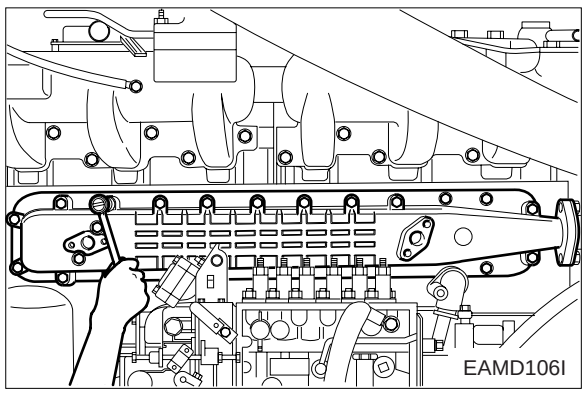

https://truckmanualshub.com/

3.3.27. Oil filter

- Install the oil filter onto the cylinder block, and tighten the fixing bolts.
- With the hollow screw, assemble the oil pipe connected between the oil cooler and cylinder block.
- Install a connection pipe between the oil cooler and oil filter.
- Assemble the cartridge using a filter wrench.

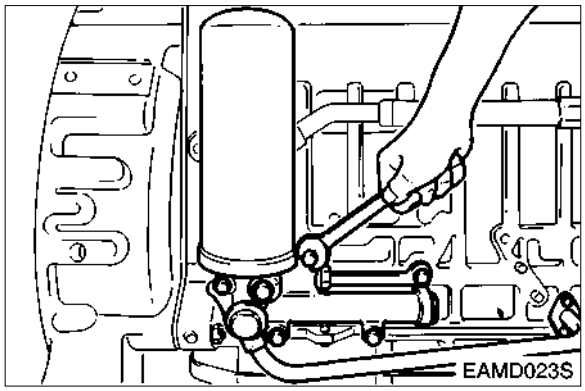

3.3.28. Injection pump

- Install the injection pump bracket in the cylinder block.
- After measuring the amount of run-out with an alignment setting jig, disassemble the bracket, adjust the shims, then reassemble it.

Run out	0.2 mm or less

- Mount the top/bottom adjusting shims in the bracket and then mount the fuel injection pump.

- Tighten the fixing bolts in a diagonal sequence to specified torque.

Torque	4.4 kg·m

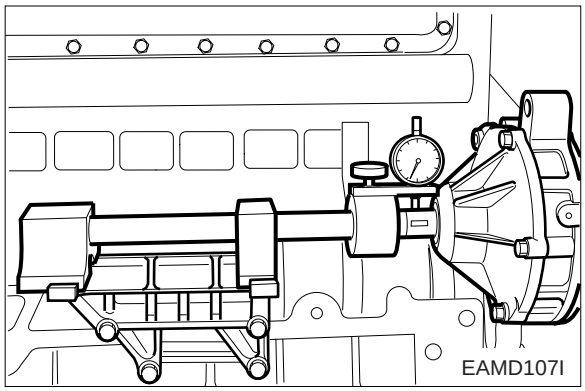

https://truckmanualshub.com/

- Turn the flywheel until No. 1 piston is placed in the “OT” position of notch marks on the flywheel, and then turn again the flywheel clockwise until showing the notch mark of the right figure corresponding to the injection timing is aligned with the pointer (↓) on the flywheel housing

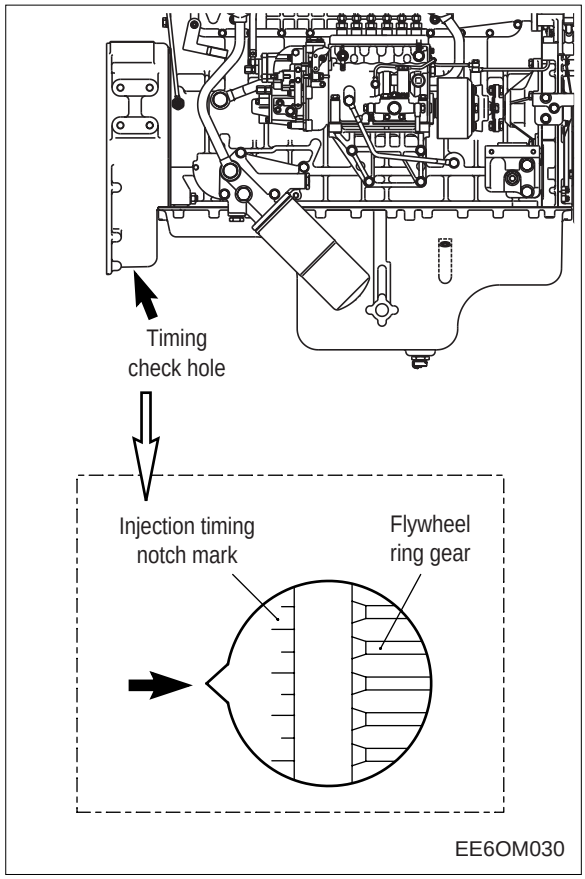

- Turn the timer until the notch mark of the indicator plate attached to the fuel injection pump is aligned with the notch mark of the timer.

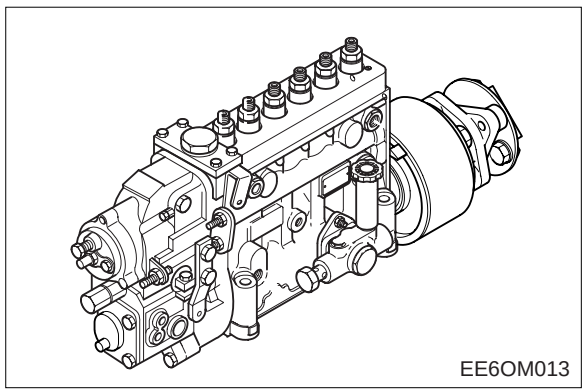

- Tighten the Coupling fixing bolts and nuts to specified torque.

Torque	6.0 kg·m

- Tighten the drive shaft connecting flange fixing bolts to specified torque

Torque	7.5 ~ 8.5 kg·m

- Install the oil delivery pipe and return pipe.

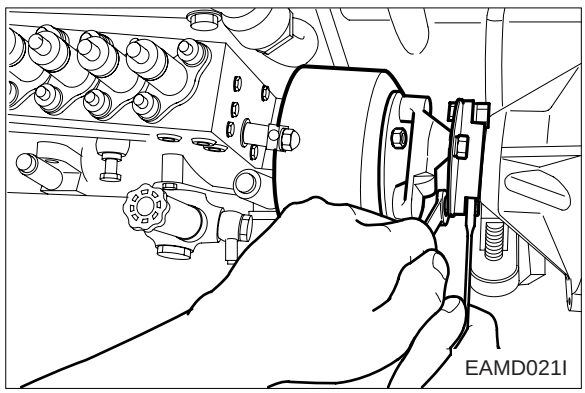

3.3.29. Vibration damper and pulley

- Install the vibration damper on the crankshaft pulley.
- Install the crankshaft pulley assembly on the crankshaft, then tighten the bolts and thrust washers.

Torque	13.4 kg·m

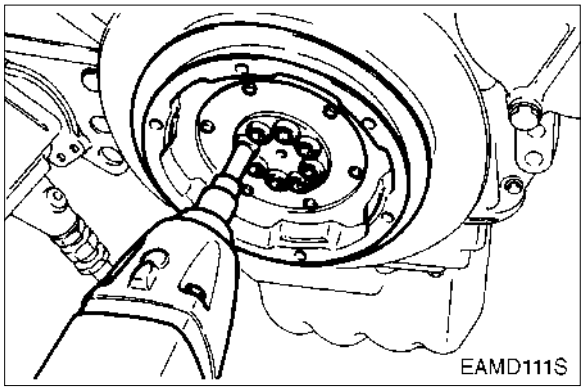

3.3.30. Water pump

- Mount a new O-ring.
- Install the water pump drive pinion over the air compressor spline.
- Connect water pipes and by-pass pipe to the water pump.
- Connect a water pipe to the expansion tank.

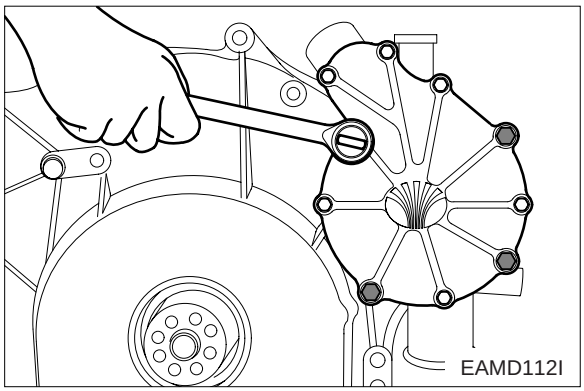

3.3.31. Exhaust manifold

- Install the exhaust manifold gasket over the stud bolts by aligning the gasket with the exhaust port on the cylinder head so that the face and back of the gasket can be positioned correctly.
- Semi-assemble the exhaust manifold and install the heat resisting plate.

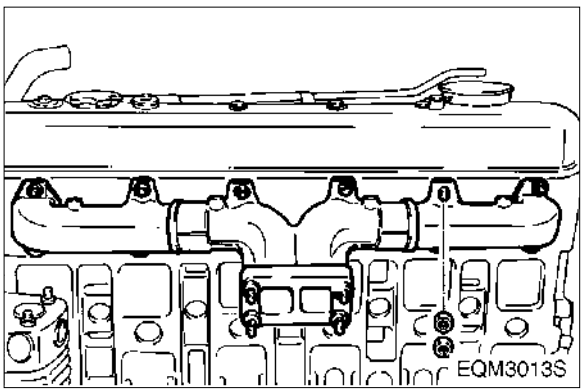

3.3.32. Turbocharger

- Fit a new gasket over the stud bolts of the exhaust manifold before tightening those turbocharger fixing bolts.
- Install the oil supply pipe and return pipe.

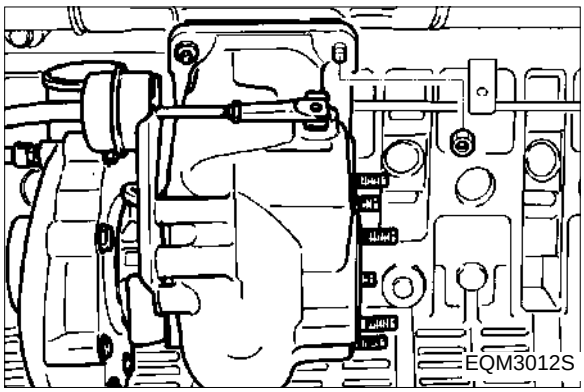

https://truckmanualshub.com/

3.3.33. Air pipe

- Semi-assemble the bracket to the intake pipe, connect a rubber hose between the turbocharger and intake pipe using the clamps, then assemble the bracket completely.

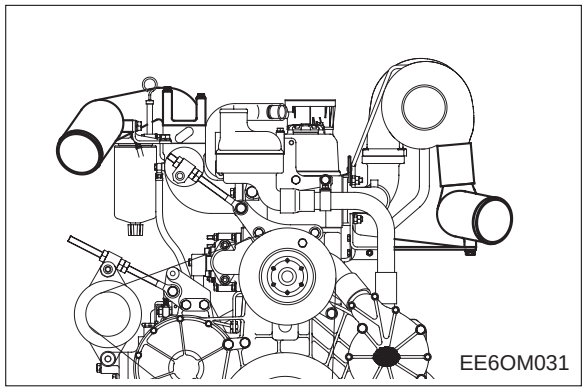

3.3.34. Starter

- Assemble the starter in position on the flywheel housing.

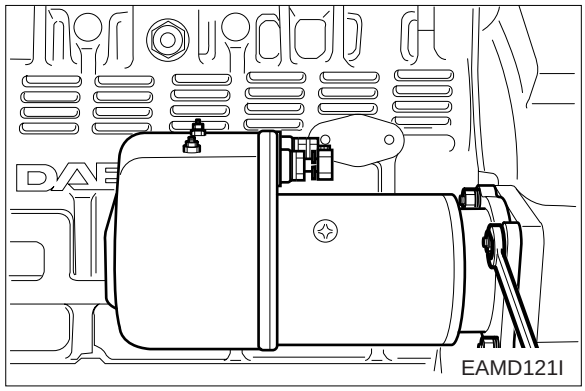

3.3.35. Intake manifold

- Fit a gasket on the intake manifold before assembling the intake manifold.
- Mount the air heater gasket on the intake manifold, then assemble the air heater with the intake manifold.
- Connect the air hoses to the boost compensator mounted on the fuel injection pump.

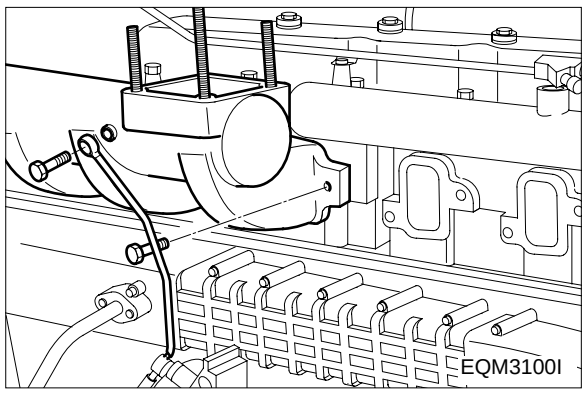

https://truckmanualshub.com/

3.3.36. Injection pipe

- Semi-assemble a nut at both ends of the fuel high pressure pipe and tighten them up one by one to specified torque.

Torque	3.0 kg·m

- Tighten hollow screws to assemble the fuel return pipe.
- Assemble the fuel return hose on the fuel injection pump.

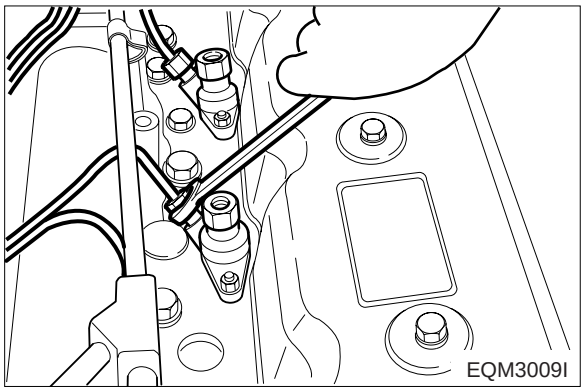

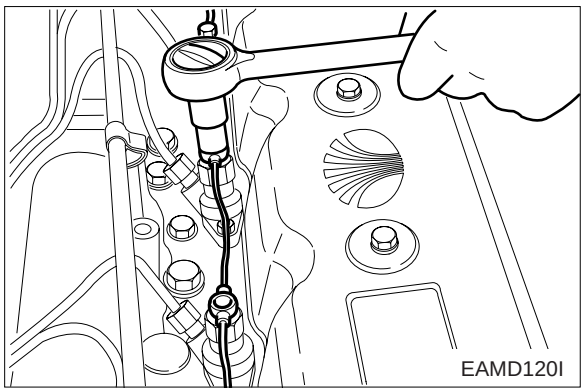

3.3.37. Fuel filter

- Assemble the fuel filter with the air pipe bracket.
- Assemble the fuel feed hose according to the direction of an arrow impressed on the fuel filter head so that fuel can be fed in the sequence of **FUEL FEED PUMP → FUEL FILTER → FUEL INJECTION PUMP.**

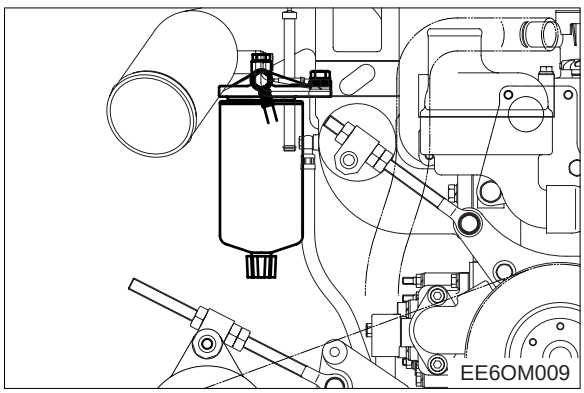

3.3.38. Cylinder head cover

- Assemble the cover packing with the cover, install the cover on the head, then tighten the fixing bolts in sequence to specified torque.

Torque	1.2 kg·m

- Assemble the breather hose with PCV valve.

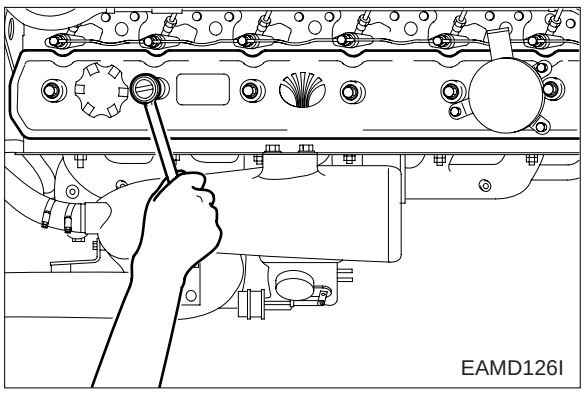

https://truckmanualshub.com/

3.3.39. Alternator

- Install the alternator mounting bracket.
- Install the alternator with fixing bolts to the mounting bracket.

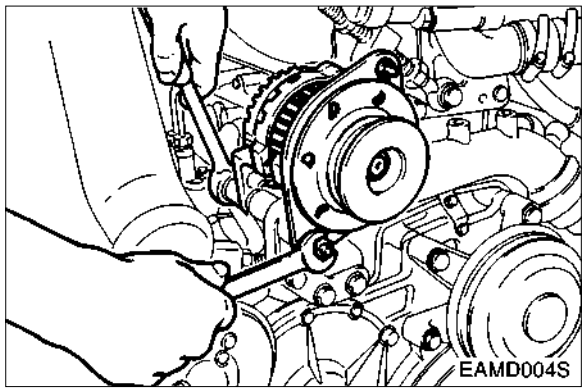

3.3.40. Cooling fan

- Install the cooling fan and flange, then tighten the fixing bolts.

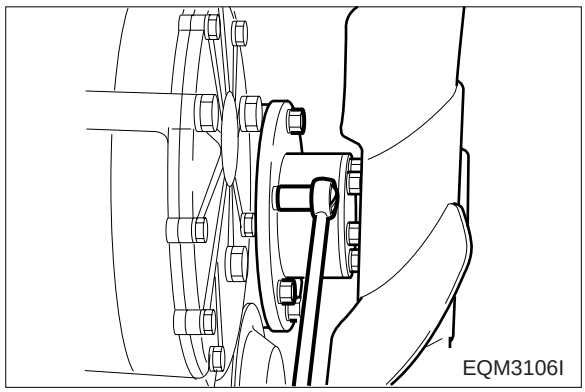

3.3.41. V- belt

- Install the V-belt on the crank pulley and alternator pulley.
- Adjust the V-belt tension using the tension adjusting bolt.

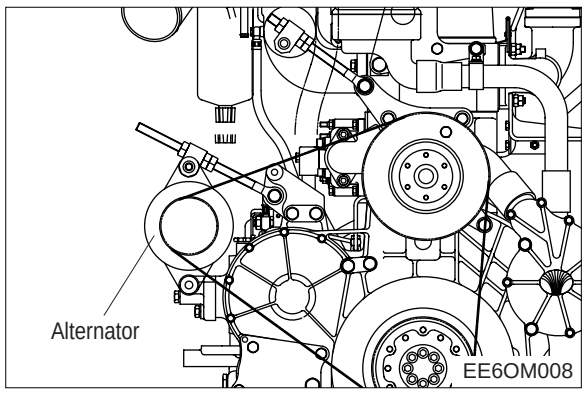

3.3.42. Cooling fan guide

- Install the three fan guide brackets then assemble the fan guide and bracket.

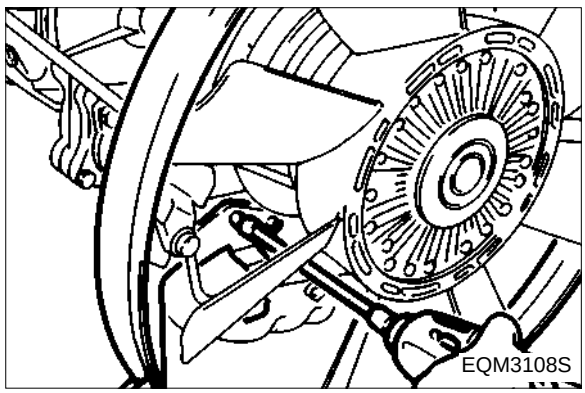

https://truckmanualshub.com/

3.3.43. Oil level gauge

- Assemble the oil level gauge and guide tube on the oil pan.

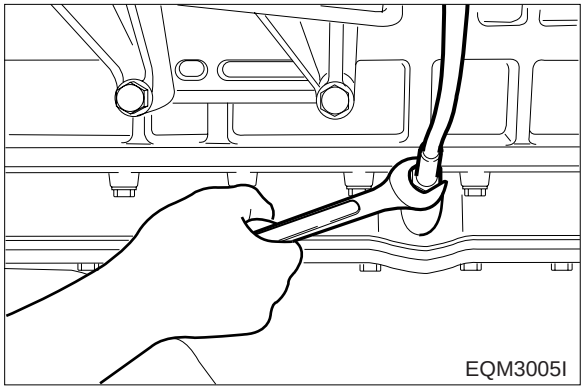

https://truckmanualshub.com/

4. COMMISSIONING AND OPERATION

4.1. Preparation

At the time of initial commissioning of a new or overhauled engine make sure to have observed the “Technical Information for the installation DAEWOO vehicle engines”.

- Oil filler neck on cylinder head cover
  Before daily starting of the engine, check the fuel, coolant and oil level, replenish if necessary.
  The notches in the oil level gauge indicate the highest and lowest permissible oil levels.
  The oil required in the sump is specified in the “Engine Specification”.

Important :
Do not fill above the top of the mark. Oil levels anywhere within the crosshatch are considered in the acceptable operating range. Over lifting will result in damage to the engine.

- Cleanliness
  Ensure outmost cleanliness when handling fuels, lubricants and coolants

4.2. Breaking-In

4.2.1. Operation of a new engine (Break-in)

Because the sliding surfaces of a new engine are not lapped enough, the oil film can be destroyed easily by overload or overspeed and the engine life-time may be shortened.
Therefore the following things must be obeyed by all means.

Up to the first 50 hours

- Engine should be run at fast idling until the temperature of the engine becomes normal operating condition.
- Overload or continuous high speed operation should be avoided.
- High speed operation with no load should be prevented.
- Abrupt start and stop of the engine should be avoided.
- Engine speed must be under 70% of its maximum speed.
- Maintenance and inspection must be accomplished thoroughly.

4.2.2. Check points for break-in

During the break-in (the initial running of the engine) period, be particularly observant as follows :

a) Check engine oil level frequently. Maintain oil level in the safe range, between the “min.” and “max.” marks on oil level gauge.

Note :
If you have a problem getting a good oil level reading on the oil level gauge, rotate the oil level gauge 180° and re-insert for check.

b) Watch the oil pressure warning lamp. If the lamp blinks, it may be the oil pick-up screen is not covered with oil. Check oil level gauge. Add oil to the oil pan, if required. Do not overfill. If level is correct and the status still exists, see your DEALER for possible switch or oil pump and line malfunction.

Note :

Oil pressure will rise as RPM increases, and fall as RPM decreases. In addition, cold oil will generally show higher oil pressure for any specific RPM than hot oil. Both of these conditions reflect normal engine operation.

c) Watch the engine water temperature gauge and be sure there is proper water circulation. The water temperature gauge needle will fluctuate if water level in expansion tank is too low. At the end of the break-in period, remove break-in oil and replace the oil filter. Fill oil pan with recommended engine oil. Refer to following table.

4.2.3. Operating after break-In

When starting a cold engine, always allow the engine to warm up gradually. Never run the engine at full throttle until the engine is thoroughly warmed up. Be sure to check the oil level frequently during the first 1,000km(50 hours) of operation, since the oil consumption will be high until the piston rings are properly seated.

4.2.4. Engine oil

- Check oil level with the oil level gauge and replenish if necessary.
- Check the oil level with the engine cooled. If the engine is warm, allow time for 5 ~ 10 minutes for oil drain into the crankcase before checking oil level. The oil level must be between Max and Min. lines on the gauge.
- Engine oil should be changed at the specified intervals. Oil in the oil filter should be changed simultaneously.

First oil change	**After 1,000 km 50 hr operation**	
Construction Equipment	**DE12T/TI/TIA**	250 hr
	DE12TIS	250 hr

- The following oils are also recommended

Engine model	**Recommend oil**	
	SAE No.	**API No.**
DE12T/TI/TIA	SAE 15W40	above CD or CE
DE12TIS	SAE15W40 SAE10W40	ACEA-E2 or ACEA-E3 (API CH-4)

* If long oil change intervals are to be used, ACEA-E3 oil must be used.

● Engine Oil capacity

Engine oil capacity				
Engine model	**Vehicle**	**in Oil pan**		**Total (lit)**
		Max.(lit)	**Min.(lit)**	
DE12T/TI/TIA/TIS	Excavator	25	17	28
	Loader	21	17	24

4.3. Inspections After Starting

During operation the oil pressure in the engine lubrication system must be monitored. If the monitoring devices register a drop in the lube oil pressure, switch off the engine immediately. And the charge warning lamp of the alternator should go out when the engine is running.

- Do not disconnect the battery or pole terminals or the cables.
- If, during operation, the battery charge lamp suddenly lights up, stop the engine immediately and remedy the fault in the electrical system.
- Engine should be stopped if the color, the noise or the odor of exhaust gas is not normal.
- Confirm the following things through warning lamps and gauge panel.

4.3.1. Pressure of lubricating oil

The normal pressure comes up to 1 kg/cm^2 (1.0 bar) at idling and 3 ~ 5 kg/cm^2 (3.0 ~ 4.9 bar) at maximum speed. If the pressure fluctuates at idling or does not reach up to the expected level at high speed, shut down the engine immediately and check the oil level and the oil line leakage.

4.3.2. Temperature of cooling water

The cooling water temperature should be 79 ~ 95℃ in normal operating conditions.
Abnormally high cooling water temperature could cause the overheating of engine and the sticking of cylinder components. And excessively low cooling water temperature increases the fuel consumption, accelerates the wears of cylinder liners and shortens the engine life-time.

4.4. Operation in Winter Time

Pay special attention to the freezing of cooling water and the viscosity of lubricating oil.

4.4.1. Prevention against the freeze of cooling water

When not using anti-freeze, completely discharge the whole cooling water after engine running. The freeze of cooling water causes the fatal damages of the engine. Because the anti-freeze is used to prevent cooling water from freeze, consult “The amount of anti-freeze”.

4.4.2. Prevention against excessive cooling

Drop of thermal efficiency caused by excessive cooling increases fuel consumption, therefore prevent the engine from excessive cooling. If the temperature of coolant does not reach to normal condition (79 ~ 95℃) after continuous operation, examine the thermostat or the other cooling lines.

4.4.3. Lubricating oil

As cold weather leads to the rise of oil viscosity, engine speed becomes unstable after starting. Therefore the lubricating oil for winter should be used to prevent this unstability. Refer to Lubricating System section.

4.5. Tuning the Engine

The purpose of an engine tune-up is to restore power and performance that’s been lost through wear, corrosion or deterioration of one or more parts or components. In the normal operation of an engine, these changes can take place gradually at a number of points, so that it’s seldom advisable to attempt an improvement in performance by correction of one or two items only.
Time will be saved and more lasting results will be obtained by following a definite and thorough procedure of analysis and correction of all items affecting power and performance.
Economical, trouble-free operation can better be ensured if a complete tune-up is performed once every years, preferably in the spring. Components that affect power and performance to be checked are:

- Components affecting fuel injection ;
  Nozzle, delivery valve, fuel filter, water separator, etc.
- Components affecting Intake & exhaust ;
  Air cleaner, inter-cooler, turbo charger, silencer, etc.
- Components affecting lubrication & cooling ;
  Air & oil filter, anti- freeze, etc.

https://truckmanualshub.com/

5. MAINTENANCE AND CARE

5.1. Periodical Inspection and Maintenance

In order to insure maximum, trouble-free engine performance at all times, regular inspection, adjustment and maintenance are vital.

- Daily inspections in below figure should be checked every day.
- The maintenance should be executed thoroughly at regular internals.
  (refer to appendix “General Engine Inspection Cycle”.)

5.2. Lubrication System

5.2.1. Exchanging of lubrication oil

Engine oil and the oil filter are important factors affecting engine life. They affect ease of starting, fuel economy, combustion chamber deposits and engine wear.
At the end of the break-in period 1,000km (50hours), change the oil sump oil and replace the oil filter cartridge.

5.2.2. Oil level gauge

Check the oil level in the engine sump daily with a oil level gauge.

- The notches in oil level gauge must indicate the oil level between the max. and the min. permissible.
- The oil level should be checked with the engine horizontal and only after it has been shut down for about 5 minutes.
- Examining the viscosity and the contamination of the oil smeared at the oil level gauge replace the engine oil if necessary.

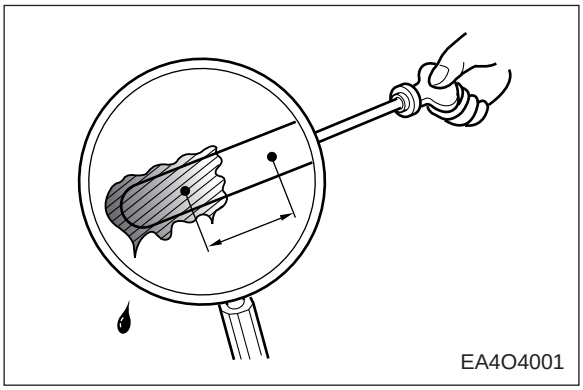

Caution :
Do not add so much engine oil that the oil level rises above the max. marking on the oil level gauge. Over lifting will result in damage to the engine.

https://truckmanualshub.com/

5.2.3. Oil exchange procedure

While the oil is still hot, exchange oil as follows:

- Take out the oil level gauge.
- Remove the drain plug from oil pan, then drain out the engine oil into a container.

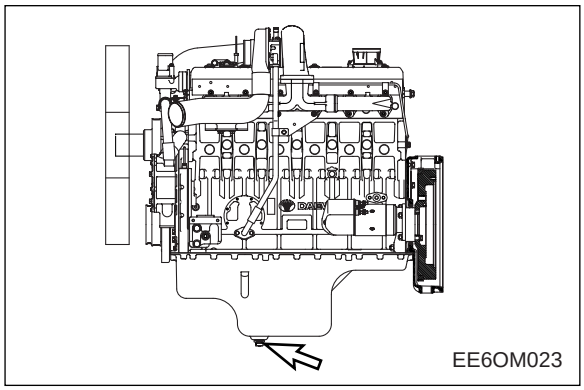

- Reassemble the drain valve with the oil pan and the drain plug with oil filter head after draining out the engine oil.

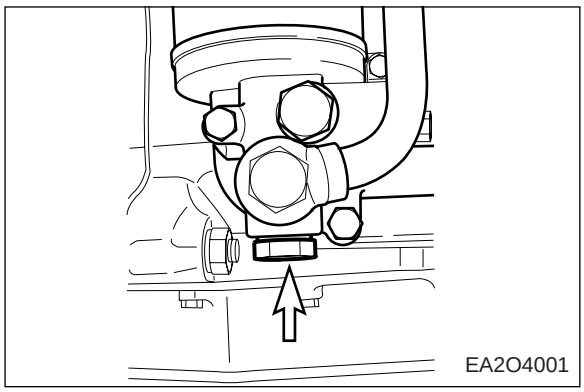

- Refill with new engine oil at the oil filler neck on the head cover and the lubricating oil in accordance with the oil capacity of the engine through oil filler.
  Be careful about the mixing of dust or contaminator during the supplement of oil. Then confirm that oil level gauge indicates the vicinity of its maximum level.
- For a few minutes, operate the engine at idling in order to circulate oil through lubrication system.
- Thereafter shut down the engine. After waiting for about 10 minutes measure the quantity of oil and refill the additional oil if necessary.

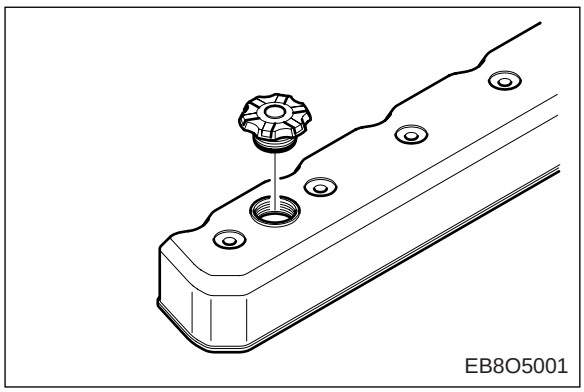

https://truckmanualshub.com/

5.2.4. Replacement of oil filter cartridge

At the same times of oil exchanges, replace the oil filter cartridge.

- Drain engine oil by loosening the drain plug on the filter head.

Caution :

Don't forget tightening the drain plug after having drained engine oil.

- Loosen the oil filter by turning it counter-clockwise with a filter wrench.
- With a rag wipe clean the fitting face of the filter body and the oil filter body so that new oil filter cartridge can be seated properly.
- Lightly oil the O-ring and turn the oil filter until sealing face is fitted against the O-ring. Turn 1-1/4 turns further with the filter wrench.

Note :

It is strongly advisable to use DAE-WOO genuine oil filter cartridge for replacement.

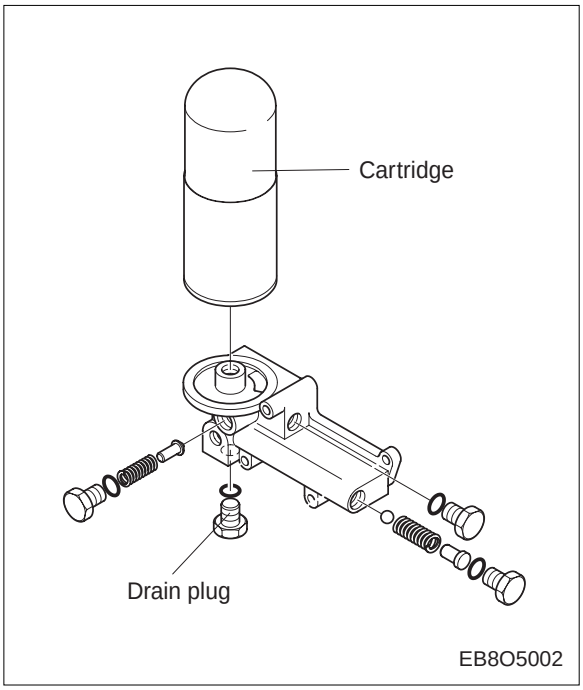

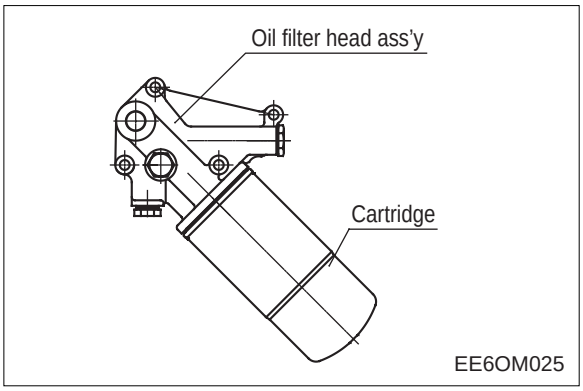

https://truckmanualshub.com/

5.3. Adjustment of Valve Clearance

5.3.1. General information

The valve clearances are to be adjusted at the times of the following situations.

- When the engine is overhauled and the cylinder heads are disassembled.
- When severe noise comes from valve train.
- When the engine is not normally operated, even though there is no trouble in the fuel system.
  The valve clearance of the cold engine are as follows.
  - Intake valves : 0.3 mm
  - Exhaust valves : 0.3 mm

5.3.2. Method of adjusting the valve clearance

1) Loosen the lock-nuts ① using a ring spanner.
2) Insert a thickness gauge of 0.3mm between valve stem ② and rocker arm ③ .
3) Turn the adjusting bolts ④ using a screw driver until the gauge can be pulled out with some restriction.
4) After the adjustment fix the adjusting bolt not to rotate and tighten the lock-nut at the same time.
5) Measure the clearance one more time and if necessary adjust again.

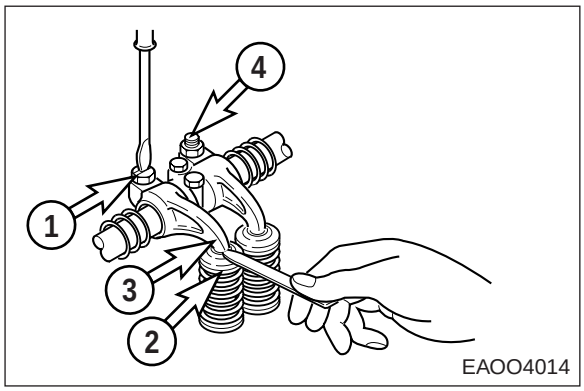

https://truckmanualshub.com/

5.4. Replacement of Fuel Filter

- Clean the area around the fuel filter head ③.
- Remove the fuel filter ② by turning it counter-clockwise with filter wrench. (Discard the used filter.)
- Use a clean lint free cloth to clean the gasket surface of the fuel filter head ③.
- Use clean oil to lubricate the filter seal ⑤, and fill the new filter with clean fuel.
- Install the filter on the filter head ③.
- Tighten the filter until the gasket contacts the filter head surface.
- Tighten the filter on additional 3/4 ~ 1 of a turn with the filter wrench, on as specified by the filter manufacturer.

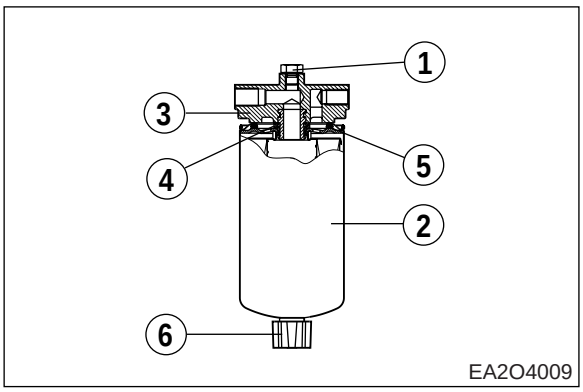

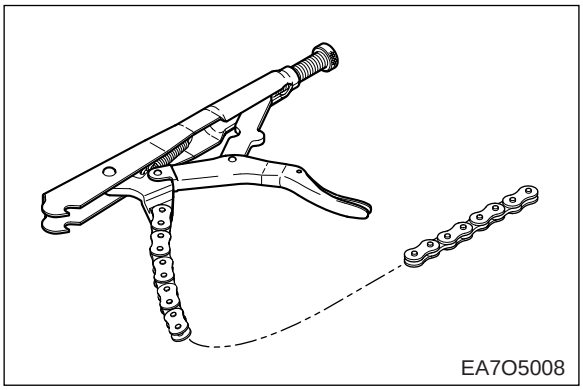

Note :
Mechanical over tightening of the filter can distort the thread or damage the filter element seal.

5.5. Fuel System Checks

Fill the tank with the recommended fuel. Keeping tanks full reduces water condensation and helps keep fuel cool, which is important to engine performance.
Make sure fuel supply valves (if used) are open.
To insure prompt starting and even running, the fuel system must be primed with the fuel feed pump manually before starting the engine the first time, or after a fuel filter change.
Refill at the end of each day's operation to prevent condensation from contaminating the fuel. Condensation formed in a partially filled tank promotes the growth of microbial organisms that can clog fuel filters and restrict fuel flow.
If the engine is equipped with a fuel water separator, drain off any water that has accumulated. Water in fuel can seriously affect engine performance and may cause engine damage.
DAEWOO recommends installation of a fuel water separator on vehicles.

https://truckmanualshub.com/

5.5.1. Fuel contamination and water trap

In the generator environment, the most likely fuel contaminants are water and microbial growth (black “slime”). Generally, this type of contamination is the result of poor fuel handling practices. Black “slime” requires water in the fuel to form and grow, so the best prevention is to keep water content to a minimum in storage tanks.

If diesel fuel which contains moisture is used the injection system and the cylinder liners / pistons will be damaged. This can be prevented to same extent by filling the tank as soon as the engine is switched off while the fuel tank is still warm (formation of condensation is prevented). Drain moisture from storage tanks regularly. Installation of a water trap upstream of the fuel filter is also advisable.

Note :

A galvanized steel tank should never be used for fuel storage, because the fuel oil reacts chemically with the zinc coating to form powdery flakes which can quickly clog the fuel filters and damage the fuel pump and injection nozzles.

5.5.2. Priming pump strainer cleaning

Clean the priming pump strainer every 10,000km (200 hours) operation.

The strainer is incorporated in the priming pump inlet side joint bolt.

Clean the strainer with the compressed air and rinse it in the fuel oil.

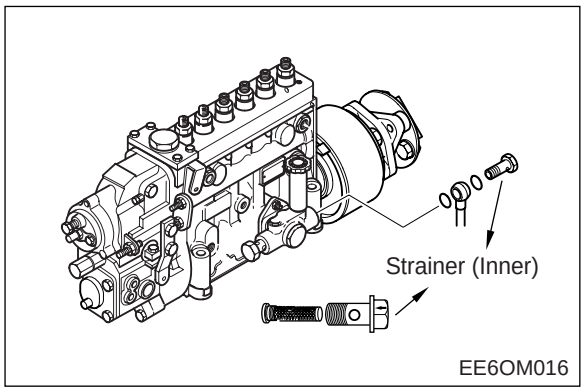

5.5.3. Bleeding the fuel system

After the cleaning of the fuel filter or after the engine stop by the lack of fuel, the bleeding of the fuel system must be executed by all means.

Bleed the system by manually operating the priming pump with fuel filter outlet joint bolt and injection pump bleeder screw loosened.

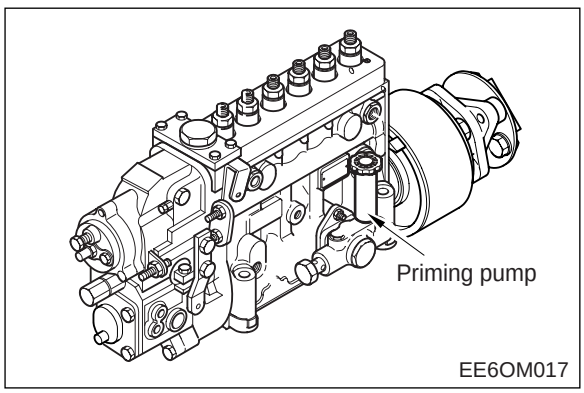

- Press the feed pump cap repetitively until the fuel without bubbles comes out from the bleeding valves.
- After the whole air is pulled out, close the valve of the filter.
- Confirm the resistance of fuel delivery by the repetition pressing of the feed pump cap, Pressure and turn the feed pump cap simultaneously to close it.

https://truckmanualshub.com/

5.5.4. Injection pump

- Check the fuel injection pump housing for cracks or breaks, and replace if damaged.
- Check and see if the lead seal for idling control and speed control levers have not been removed.
- No alterations must be made to the injection pump. If the lead seal is damaged the warranty on the engine will become null and void.
- We strongly recommended that any faults developing in the injection pump should be taken care of by authorized specialist personnel.

5.6. Injection Nozzle Maintenance

(by authorized specialist personnel)

- The injectors are designed to spray the fuel delivered by the injection pump directly into the spherical combustion chamber in the piston crown.
- The injector consists of the nozzle and the nozzle holder.
- A copper seal fitted to the injector ensures gas-tight seating and good heat dissipation.
- The opening pressure of the nozzle is adjusted by means of shims at the compression spring.

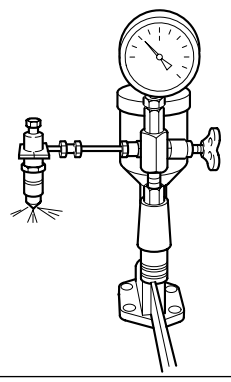

EA0M3003

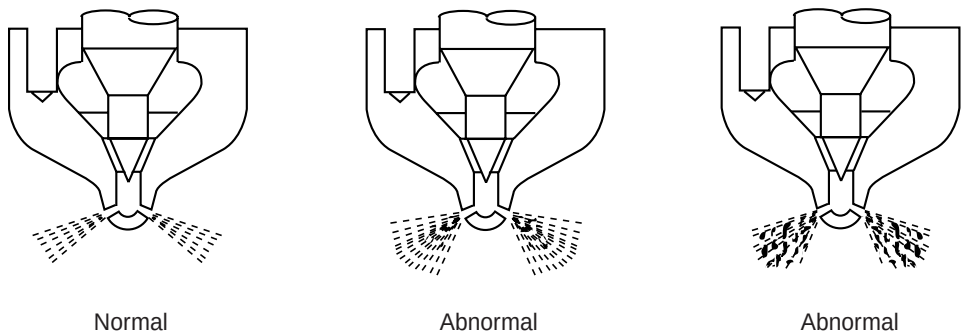

EFM1006I

- Install a nozzle to a nozzle tester.
- Check injection pressure, and adjust the nozzle using the adjusting shim if the pressure does not meet the specified limit.
- Check nozzle spray patterns and replace if damaged.

Engine Model	DE12T/TI/TIA	DE12TIS
Injection nozzle pressure	220 kg/cm²	160 / 220 kg/cm²

https://truckmanualshub.com/

Caution :

The injection lines are designed for high operating pressures and should thus be handled with particular care.

- When mounting the pipes to the engine take care of good fitness.
- Do not bend pipes to permanent deformation (not for replacing the nozzles either).
- Do not mount any heavily bent pipes.
- Avoid bending the pipes at the ends by more than 2 to 3 degrees.

In case of faults in the injection system which might have resulted in excessive operating pressures, not only the failed part but also the injection line has to be replaced.

https://truckmanualshub.com/

6. MAINTENANCE OF MAJOR COMPONENTS

6.1. Fuel Injection Pump

6.1.1. General information of fuel system

The fuel system consists of the fuel tank, injection pump, injection nozzle, fuel filter, and fuel lines such as pipes and hoses necessary to connect those components.

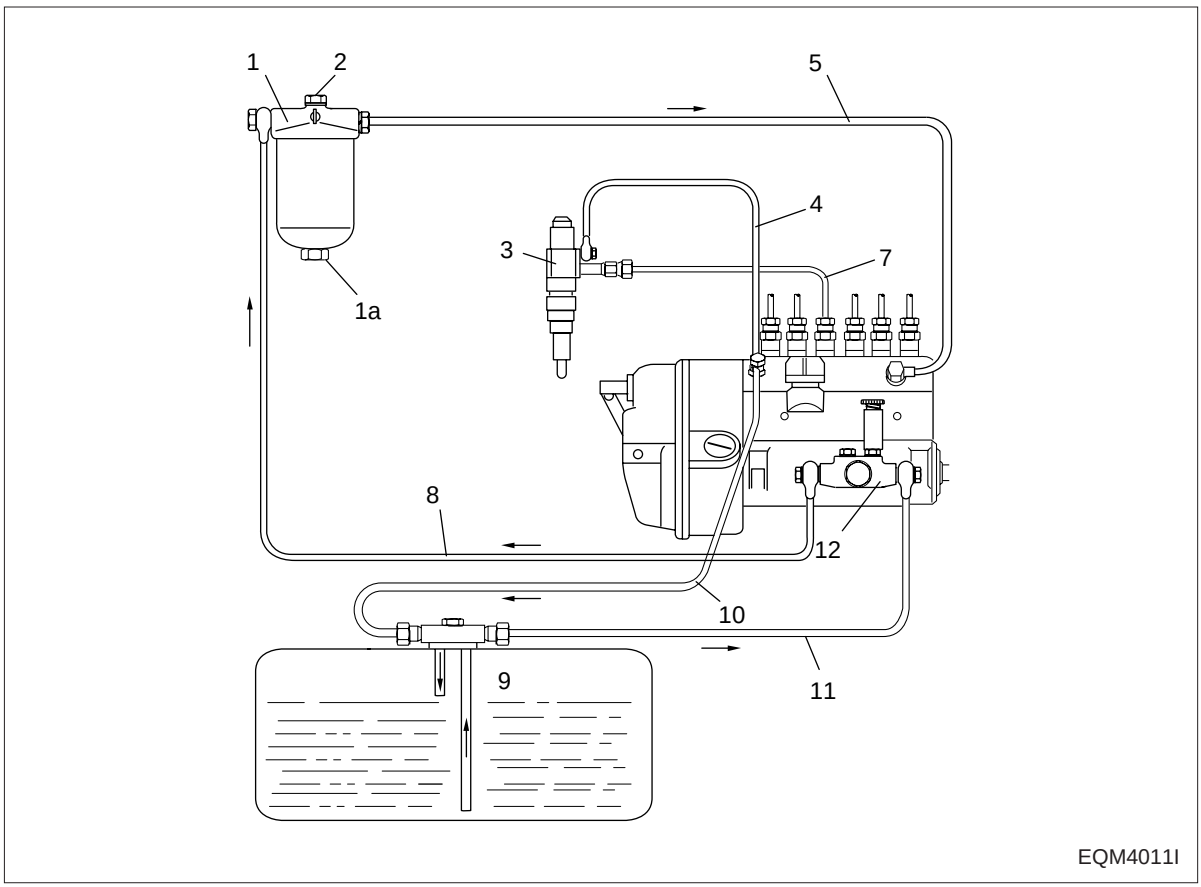

1. Fuel filter
1a. Fuel water drain plug
2. Air bleeding screw (for fuel filter)
3. Injection nozzle
4. Overflow tube
5. Fuel pipe (filter → injection pump)
6. Overflow valve
7. Fuel injection pipe
8. Fuel pipe (manual pump → filter)
9. Fuel tank
10. Fuel return pipe
11. Suction pipe
12. Feed pump
13. Injection pump

6.1.2. Injection pump

The components relating to the injection pump should be serviced at regular intervals as the plunger and delivery valve may be worn after a given length of time for use and cause the deterioration of the engine.

Make sure that servicing should be performed at the professional maintenance shop as authorized by Bosch or Zexel Company.

For adjustment of fuel injection volume, refer to the ‘Specifications of fuel injection pump’ described on the following pages.

https://truckmanualshub.com/

1) Parts no of injection system

a) Injection pump assembly

Engine model	Part no.	Suffix
DE12T	65.11101-7245B	EBHEA, EBHLA
DE12TI	65.11101-7378	EBIEA. EBIEB
DE12TIA	65.11101-7378	EBIED, EBIEE, EBILA
	65.11101-7394	EBILB
	65.11101-7393	EBILC
	65.11101-7402	EBILD
	65.11101-7368A	EBIEC
DE12TIS	65.11101-7358A	ECIEA
	65.11101-7361A	ECIEB
	65.11101-7362A	ECIEC
	65.11101-7419	ECIED
	65.11101-7396	ECILA
	65.11101-7395	ECILB
	65.11101-7403	ECILC

b) Injection nozzle & holder assembly (injection nozzle)

Engine model	Part no.	Suffix
DE12T	65.10101-7300 (65.10102-6046)	EBHEA, EBHLA
DE12TI		EBIEA, EBIEB
DE12TIA		EBIEC, EBIED, EBIEE EBILA, EBILB, EBILC, EBILD
DE12TIS	65.10101-7298 (65.10102-6053)	ECIEA, ECIEB, ECIEC, ECIED ECILA, ECILB, ECILC

c) Injection pipe assembly

Engine model	Part no.	Suffix
DE12T DE12TI DE12TIA DE12TIS	65.10301-6289	EBHEA, EBHLA, EBIEA, EBIEC, EBIED, EBIEE, EBILA, EBILB, EBILC, EBILD, ECIEA, ECIEB, ECIEC, ECIED, ECILA, ECILB, ECILD

2) DE12T (EBHEA, EBHLA)

Bellow rack curve data are standard injection pump

(1) Fuel injection pump : 65.11101-7245B (106675-4083 ZEXEL)
- Fuel injection pump : KP-PE6P120/720RS3000 (106061-7840 DOOWON)
- Governor : KP-EP/RSV200-1300PQ39C311(105407-5063)
- Fuel feed pump : KP-FP/K-P (105207-1400)
- Coupling : 105663-0470

(2) Nozzle holder assembly : 65.10101-7300 (105160-4351 DOOWON)

(3) Nozzle : 65.10102-6046 (105029-1330 DOOWON)

(4) Fuel injection pipe : 65.10301-6289

(5) Injection order : 1 – 5 – 3 – 6 – 2 – 4

(A) Test condition for Fuel injection pump	Nozzle & Holder ass'y	105780-8140	Opening pressure :175 bar
	Nozzle	105780-0000	-
	Fuel Injection pipe (ID×OD-L)	-	ϕ3.0 × ϕ8.0 - 600 mm
	Test oil	ISO4113	Temperature :40 ± 5 ˚C
(B) Engine standard parts	Nozzle & holder ass'y	65.10102-6046	Nozzle (5 × ϕ0.31)
		65.10101-7300	Opening pressure : 220 kg/cm²
	Fuel Injection pipe (ID×OD-L)	65.10301-6289	ϕ2.2 × ϕ6 - 650 mm

Rack diagram and setting valve at each point

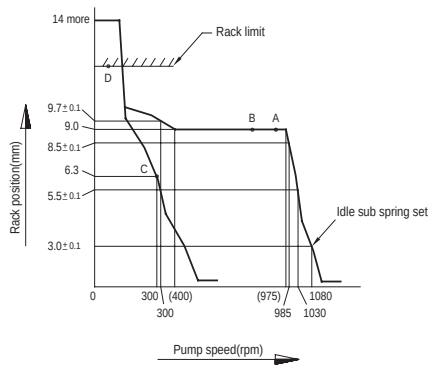

Check point	Rack position (mm)	Pump speed (rpm)	Injection Q`ty on RIG (mm³ / 1,000st) Test condition for inj. pump	Pressure (mmHg)
A	9.0	950	113.3 ± 2	Basis
B	9.0	700	(110.6) ± 3	-
C	6.3	300	(13.5) ± 1.5	650 or more
D	-	100	155 ± 10	Rack limit

Governor weight	740 g	Lever ratio(min./max.)		1 : 1.2 / 1 : 1.2
Governor spring	k = 7.2 kgf/mm	Boost compensator spring		k = 0.51 kgf/mm
Idle sub spring	k = 2.5 kgf/mm	Adapter spring		-
Start spring	k = 0.01 kgf/mm	Delivery valve	Retraction pressure	-
Plunger	ϕ12 right hand 22+45 lead		Opening pressure	-
Idle spring	k = 1.9 kgf/mm		Spring	-

3) DE12TI (ECIEA, EBIEB), DE12TIA (EBIED, EBIEE, EBILA)

Bellow rack curve data are standard injection pump

(1) Fuel injection pump : 65.11101-7378 (106675-4690 DOOWON)
- Fuel injection pump : KP-PE6P120/720RS3S (106067-6220 DOOWON)
- Governor : KP-EP/RSV200-1300PQ39C311(105407-759B)
- Fuel feed pump : KP-FP/K-PS (105207-1540)
- Coupling : 105663-0740

(2) Nozzle holder assembly : 65.10101-7300 (105160-4351 DOOWON)

(3) Nozzle : 65.10102-6046 (105029-1330 DOOWON)

(4) Fuel injection pipe : 65.10301-6289

(5) Injection order : 1 – 5 – 3 – 6 – 2 – 4

(A) Test condition for Fuel injection pump	Nozzle & Holder ass'y	105780-8140	Opening pressure :175 bar
	Nozzle	105780-0000	-
	Fuel Injection pipe (ID×OD-L)	-	ϕ3.0 × ϕ8.0 - 600 mm
	Test oil	ISO4113	Temperature :40 ± 5 ˚C
(B) Engine standard parts	Nozzle & holder ass'y	65.10102-6046	Nozzle (5 × ϕ0.31)
		65.10101-7300	Opening pressure : 220 kg/cm²
	Fuel Injection pipe (ID×OD-L)	65.10301-6289	ϕ2.2 × ϕ6 - 650 mm

Rack diagram and setting valve at each point

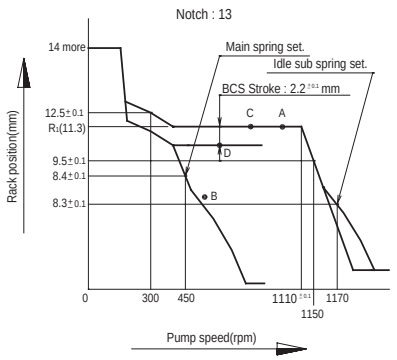

Check point	Rack position (mm)	Pump speed (rpm)	Injection Q`ty on RIG (mm³ / 1,000st) Test condition for inj. pump	Pressure (mmHg)
A	R1(11.3)	1,050	155 ± 2	650 or more
B	6.3	490	16 ± 1.5	-
C	(R1)	700	(162)	650 or more
D	R1-2.2	550	(120)	-

Governor weight	740 g	Lever ratio(min./max.)		1 : 1.2 / 1 : 1.2
Governor spring	k = 7.2 kgf/mm	Boost compensator spring		k = 0.51 kgf/mm
Idle sub spring	k = 1.2 kgf/mm	Adapter spring		k = 6.5 kgf/mm
Start spring	k = 0.01 kgf/mm	Delivery valve	Retraction pressure	130mm³/st(ϕ8×2.6mm), t = 0.07
Plunger	ϕ12 right hand 22+45 lead		Opening pressure	19.6 kgf/cm²
Idle spring	k = 1.9 kgf/mm		Spring	k = 0.87 kgf/mm

https://truckmanualshub.com/

(6) Performance curve of governor

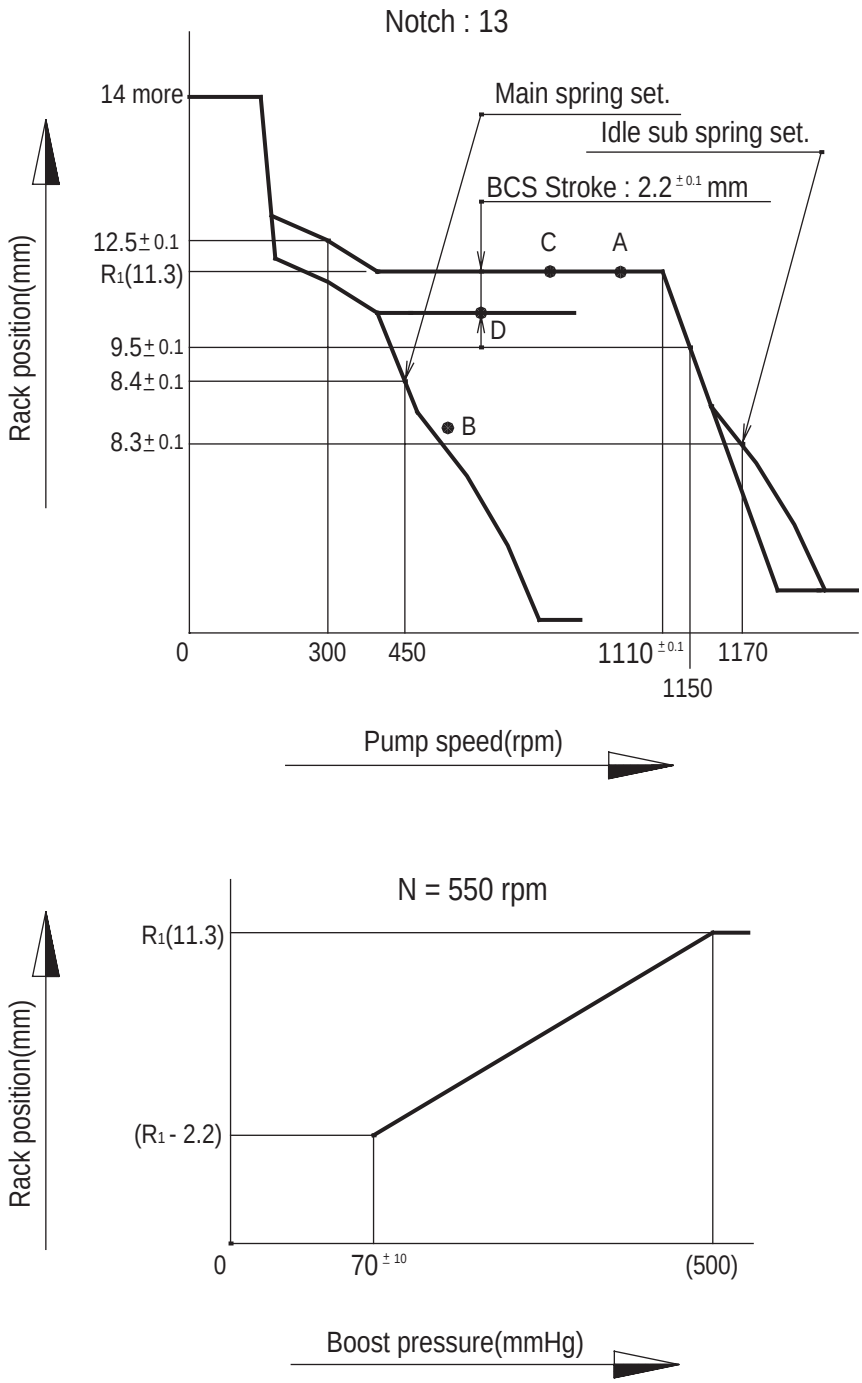

EE6OM033

4) DE12TIA (EBILB)

(1) Fuel injection pump : 65.11101-7394 (106675-400A DOOWON)
- Fuel injection pump : KP-PE6P120/720RS3S (106067-6220 DOOWON)
- Governor : KP-EP/RFD200/1300PQ39C311(105407-7590)
- Fuel feed pump : KP-FP/K-PS (105207-1540)
- Coupling : 105663-0740

(2) Nozzle holder assembly : 65.10101-7300 (105160-4351 DOOWON)
(3) Nozzle : 65.10102-6046 (105029-1330 DOOWON)
(4) Fuel injection pipe : 65.10301-6289
(5) Injection order : 1 – 5 – 3 – 6 – 2 – 4

(A) Test condition for Fuel injection pump	Nozzle & Holder ass'y	105780-8140	Opening pressure :175 bar
	Nozzle	105780-0000	-
	Fuel Injection pipe (ID×OD-L)	-	ϕ3.0 × ϕ8.0 - 600 mm
	Test oil	ISO4113	Temperature :40 ± 5 ˚C
(B) Engine standard parts	Nozzle & holder ass'y	65.10102-6046	Nozzle (5 × ϕ0.31)
		65.10101-7300	Opening pressure : 220 kg/cm²
	Fuel Injection pipe (ID×OD-L)	65.10301-6289	ϕ2.2 × ϕ6 - 650 mm

Rack diagram and setting valve at each point

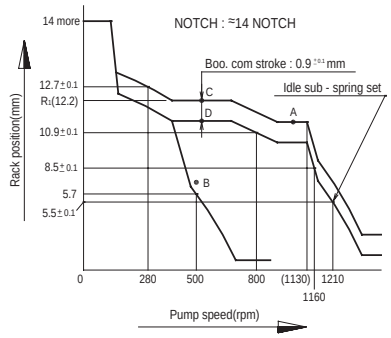

Check point	Rack position (mm)	Pump speed (rpm)	Injection Q`ty on RIG (mm³ / 1,000st) Test condition for inj. pump	Pressure (mmHg)
A	11.2	1,050	148 ± 2	-
B	≈ 6.3	500	20 ± 1.5	-
C	R1(12.2)	500	(180)	-
D	(R1-0.9)	550	(161)	-

Governor weight	740 g	Lever ratio(min./max.)		1 : 1.2 / 1 : 1.2
Governor spring	k = 7.2 kgf/mm	Boost compensator spring		k = 0.51 kgf/mm
Idle sub spring	k = 1.2 kgf/mm	Adapter spring		k = 6.5 kgf/mm
Start spring	k = 0.01 kgf/mm	Delivery valve	Retraction pressure	130mm³/st(ϕ8×2.6mm), t = 0.07
Plunger	ϕ12 right hand 22+45 lead		Opening pressure	19.6 kgf/cm²
Idle spring	-		Spring	k = 0.87 kgf/mm

5) DE12TIA (EBILC)

(1) Fuel injection pump : 65.11101-7393 (106675-300A DOOWON)
- Fuel injection pump : KP-PE6P120/720RS3S (106067-6220 DOOWON)
- Governor : KP-EP/RFD200/1300PQ39C311(105407-759B)
- Fuel feed pump : KP-FP/K-PS (105207-1540)
- Coupling : 105663-0740

(2) Nozzle holder assembly : 65.10101-7300 (105160-4351 DOOWON)
(3) Nozzle : 65.10102-6046 (105029-1330 DOOWON)
(4) Fuel injection pipe : 65.10301-6289
(5) Injection order : 1 – 5 – 3 – 6 – 2 – 4

(A) Test condition for Fuel injection pump	Nozzle & Holder ass'y	105780-8140	Opening pressure :175 bar
	Nozzle	105780-0000	-
	Fuel Injection pipe (ID×OD-L)	-	ϕ3.0 × ϕ8.0 - 600 mm
	Test oil	ISO4113	Temperature :40 ± 5 ˚C
(B) Engine standard parts	Nozzle & holder ass'y	65.10102-6046	Nozzle (5 × ϕ0.31)
		65.10101-7300	Opening pressure : 220 kg/cm²
	Fuel Injection pipe (ID×OD-L)	65.10301-6289	ϕ2.2 × ϕ6 - 650 mm

Rack diagram and setting valve at each point

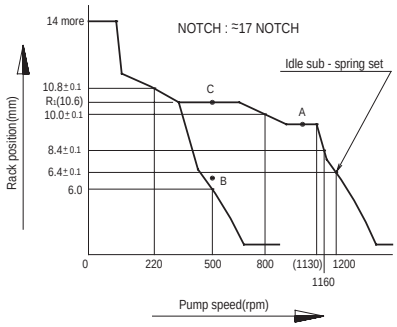

Check point	Rack position (mm)	Pump speed (rpm)	Injection Q`ty on RIG (mm³ / 1,000st) Test condition for inj. pump	Pressure (mmHg)
A	9.4	1,050	114 ± 2	-
B	≈ 6.2	500	20 ± 1.5	-
C	R1(10.6)	500	(148)	-

Governor weight	740 g	Lever ratio(min./max.)		1 : 1.2 / 1 : 1.2
Governor spring	k = 7.2 kgf/mm	Boost compensator spring		k = 0.51 kgf/mm
Idle sub spring	k = 1.2 kgf/mm	Adapter spring		k = 6.5 kgf/mm
Start spring	k = 0.01 kgf/mm	Delivery valve	Retraction pressure	130mm³/st(ϕ8×2.6mm), t = 0.07
Plunger	ϕ12 right hand 22+45 lead		Opening pressure	19.6 kgf/cm²
Idle spring	k = 1.9 kgf/mm		Spring	k = 0.87 kgf/mm

6) DE12TIA (EBILD)

(1) Fuel injection pump : 65.11101-7402 (106675-460A DOOWON)
- Fuel injection pump : KP-PE6P120/720RS3S (106067-6220 DOOWON)
- Governor : KP-EP/RFD200/1300PQ39C311(105407-759A)
- Fuel feed pump : KP-FP/K-PS (105207-1540)
- Coupling : 105663-0740

(2) Nozzle holder assembly : 65.10101-7300 (105160-4351 DOOWON)

(3) Nozzle : 65.10102-6046 (105029-1330 DOOWON)

(4) Fuel injection pipe : 65.10301-6289

(5) Injection order : 1 – 5 – 3 – 6 – 2 – 4

(A) Test condition for Fuel injection pump	Nozzle & Holder ass'y	105780-8140	Opening pressure :175 bar
	Nozzle	105780-0000	-
	Fuel Injection pipe (ID×OD-L)	-	ϕ3.0 × ϕ8.0 - 600 mm
	Test oil	ISO4113	Temperature :40 ± 5 ˚C
(B) Engine standard parts	Nozzle & holder ass'y	65.10102-6046	Nozzle (5 × ϕ0.31)
		65.10101-7300	Opening pressure : 220 kg/cm²
	Fuel Injection pipe (ID×OD-L)	65.10301-6289	ϕ2.2 × ϕ6 - 650 mm

Rack diagram and setting valve at each point

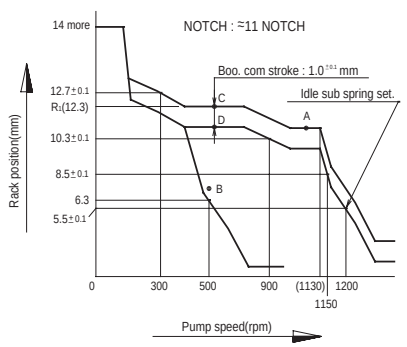

Check point	Rack position (mm)	Pump speed (rpm)	Injection Q`ty on RIG (mm³ / 1,000st) Test condition for inj. pump	Pressure (mmHg)
A	10.7	1,050	142 ± 2	500 or more
B	≈ 6.4	500	20 ± 1.5	-
C	R1(12.3)	500	(187)	500 or more
D	(R1-0.9)	500	(163)	-

Governor weight	740 g	Lever ratio(min./max.)		1 : 1.2 / 1 : 1.2
Governor spring	k = 7.2 kgf/mm	Boost compensator spring		k = 0.51 kgf/mm
Idle sub spring	k = 1.2 kgf/mm	Adapter spring		k = 1.9 kgf/mm
Start spring	k = 0.01 kgf/mm	Delivery valve	Retraction pressure	130mm³/st(ϕ8×2.6mm), t = 0.07
Plunger	ϕ12 right hand 22+45 lead		Opening pressure	19.6 kgf/cm²
Idle spring	k = 1.9 kgf/mm		Spring	k = 0.87 kgf/mm

https://truckmanualshub.com/

(6) Performance curve of governor

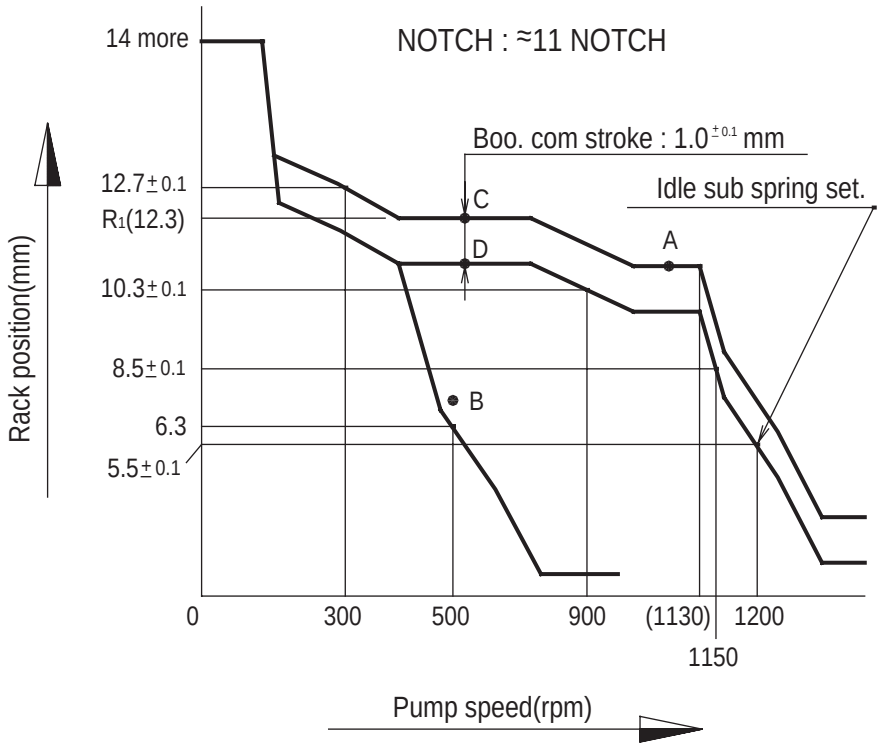

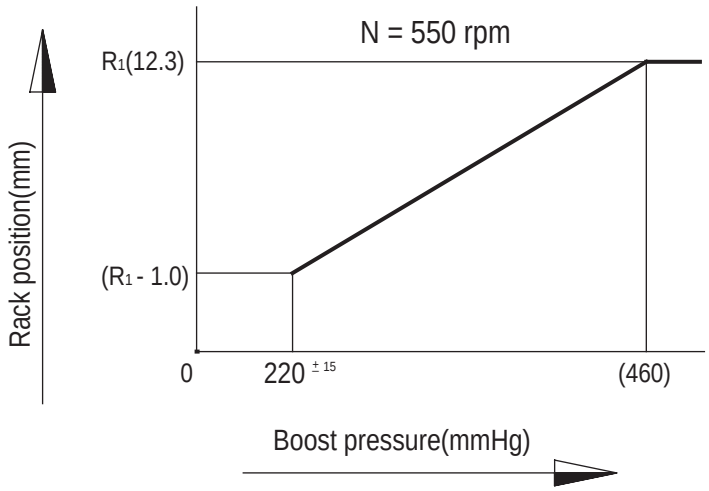

EE6OM036

7) DE12TIA (EBIEC)

(1) Fuel injection pump : 65.11101-7368A (106675-4590 DOOWON)
(Modified by 65.11101-7300A injection pump)
- Fuel injection pump : KP-PE6P120/720RS3S (106067-6150 DOOWON)
- Governor : KP-EP/RSV200-1300PQ39C311(105407-7590)
- Fuel feed pump : KP-FP/K-PS (105207-1520)
- Coupling : 105663-0470

(2) Nozzle holder assembly : 65.10101-7300 (105160-4351 DOOWON)
(3) Nozzle : 65.10102-6046 (105029-1330 DOOWON)
(4) Fuel injection pipe : 65.10301-6289
(5) Injection order : 1 – 5 – 3 – 6 – 2 – 4

(A) Test condition for Fuel injection pump	Nozzle & Holder ass'y	105780-8140	Opening pressure :175 bar
	Nozzle	105780-0000	-
	Fuel Injection pipe (ID×OD-L)	-	ϕ3.0 × ϕ8.0 - 600 mm
	Test oil	ISO4113	Temperature :40 ± 5 ˚C
(B) Engine standard parts	Nozzle & holder ass'y	65.10102-6046	Nozzle (5 × ϕ0.31)
		65.10101-7300	Opening pressure : 220 kg/cm²
	Fuel Injection pipe (ID×OD-L)	65.10301-6289	ϕ2.2 × ϕ6 - 650 mm

Rack diagram and setting valve at each point

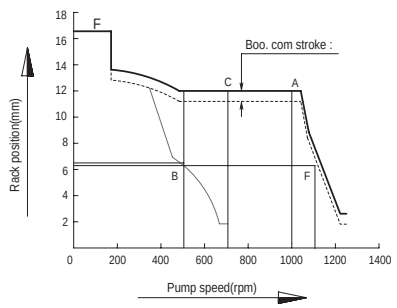

Check point	Rack position (mm)	Pump speed (rpm)	Injection Q`ty on RIG (mm³ / 1,000st) Test condition for inj. pump	Pressure (mmHg)
A	12.1	1,000	173.5 ± 2	Basis
B	6.5	500	16.5 ± 1.5	-
C	12.1	700	176 ± 4	-
E	-	100	-	Rack limit
F	7.2	1100	-	-

Governor weight	740 g	Lever ratio(min./max.)		1 : 1.2 / 1 : 1.2
Governor spring	k = 7.2 kgf/mm	Boost compensator spring		k = 0.51 kgf/mm
Idle sub spring	k = 1.2 kgf/mm	Adapter spring		k = 6.5 kgf/mm
Start spring	k = 0.01 kgf/mm	Delivery valve	Retraction pressure	130mm³/st(ϕ8×2.6mm), t = 0.07
Plunger	ϕ12 right hand 22+45 lead		Opening pressure	19.6 kgf/cm²
Idle spring	k = 1.9 kgf/mm		Spring	k = 0.87 kgf/mm

https://truckmanualshub.com/

(6) Performance curve of governor

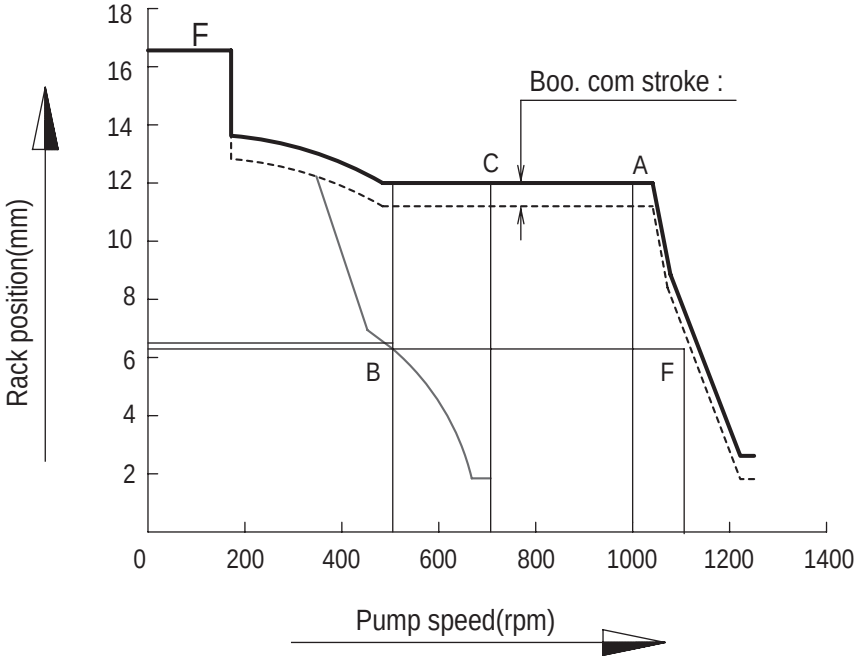

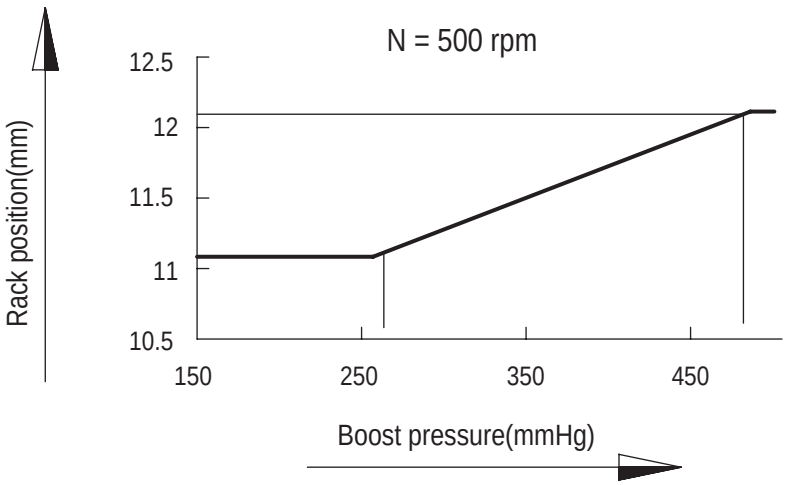

EE6OM037

8) DE12TIS - (ECIEA)

(1) Fuel injection pump : 65.11101-7358A (106675-461B DOOWON)
- Fuel injection pump : KP-PE6P120/720RS3S (106067-7590 DOOWON)
- Governor : KP-EP/RSV200-1300PQ39C311(105407-7590)
- Timer : KP-EP/SPG700-1100Z3/R (105681-1910)
- Fuel feed pump : KP-FP/K-PS (105207-1540)
- Coupling : 105663-0740

(2) Nozzle holder assembly : 65.10101-7298 (105101-8460 DOOWON)

(3) Nozzle : 65.10102-6053 (105025-2240 DOOWON)

(4) Fuel injection pipe : 65.10301-6289

(5) Injection order : 1 – 5 – 3 – 6 – 2 – 4

(A) Test condition for Fuel injection pump	Nozzle & Holder ass'y	105780-8140	Opening pressure :175 bar
	Nozzle	105780-0000	-
	Fuel Injection pipe (ID×OD-L)	-	ϕ3.0 × ϕ8.0 - 600 mm
	Test oil	ISO4113	Temperature :40 ± 5 ˚C
(B) Engine standard parts	Nozzle & holder ass'y	65.10102-6053	Nozzle (5 × ϕ0.29)
		65.10101-7298	Opening pressure 1st : 160 kg/cm² 2nd : 220 kg/cm²
	Fuel Injection pipe (ID×OD-L)	65.10301-6289	ϕ2.2 × ϕ6 - 650 mm

Rack diagram and setting valve at each point

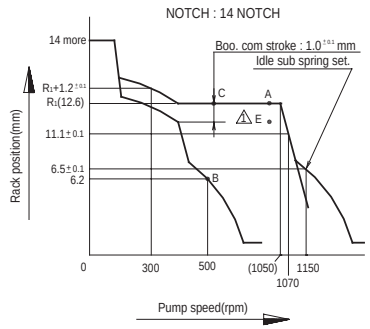

Check point	Rack position (mm)	Pump speed (rpm)	Injection Q`ty on RIG (mm³ / 1,000st) Test condition for inj. pump	Pressure (mmHg)
A	12.6	1,000	182 ± 2	600 or more
B	≈ 6.2	500	12 ± 1.5	-
C	R1(12.6)	550	(193)	600 or more
E	11.6	1,000	(165)	600 or more

Governor weight	740 g	Lever ratio(min./max.)		1 : 1.2 / 1 : 1.2
Governor spring	k = 7.2 kgf/mm	Boost compensator spring		k = 0.51 kgf/mm
Idle sub spring	k = 1.2 kgf/mm	Adapter spring		k = 6.5 kgf/mm
Start spring	k = 0.01 kgf/mm	Delivery valve	Retraction pressure	130mm³/st(ϕ8×2.6mm), t = 0.07
Plunger	ϕ12 right hand 22+45 lead		Opening pressure	19.6 kgf/cm²
Idle spring	k = 1.9 kgf/mm		Spring	k = 0.87 kgf/mm

https://truckmanualshub.com/

(6) Performance curve of governor

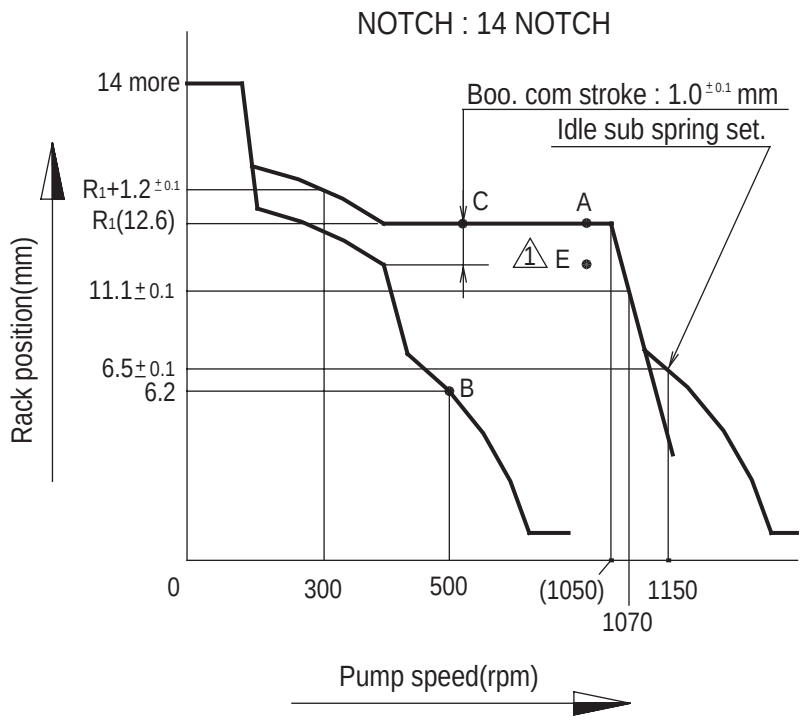

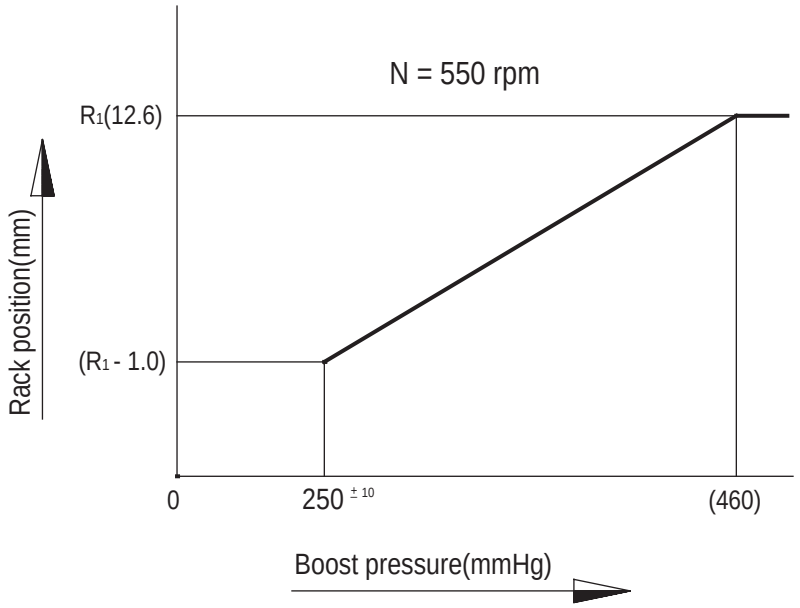

EE6OM038

9) DE12TIS - (ECIEB)

(1) Fuel injection pump : 65.11101-7361A (106675-461A DOOWON)
- Fuel injection pump : KP-PE6P120/720RS3S (106067-622A DOOWON)
- Governor : KP-EP/RSV200-1300PQ39C311(105407-7590)
- Timer : KP-EP/SPG700-1100Z3/R (105681-1910)
- Fuel feed pump : KP-FP/K-PS (105207-1540)
- Coupling : 105663-0740

(2) Nozzle holder assembly : 65.10101-7298 (105101-8460 DOOWON)
(3) Nozzle : 65.10102-6053 (105025-2240 DOOWON)
(4) Fuel injection pipe : 65.10301-6289
(5) Injection order : 1 – 5 – 3 – 6 – 2 – 4

(A) Test condition for Fuel injection pump	Nozzle & Holder ass'y	105780-8140	Opening pressure :175 bar
	Nozzle	105780-0000	-
	Fuel Injection pipe (ID×OD-L)	-	ϕ3.0 × ϕ8.0 - 600 mm
	Test oil	ISO4113	Temperature :40 ± 5 ˚C
(B) Engine standard parts	Nozzle & holder ass'y	65.10102-6053	Nozzle (5 × ϕ0.29)
		65.10101-7298	Opening pressure 1st : 160 kg/cm² 2nd : 220 kg/cm²
	Fuel Injection pipe (ID×OD-L)	65.10301-6289	ϕ2.2 × ϕ6 - 650 mm

Rack diagram and setting valve at each point

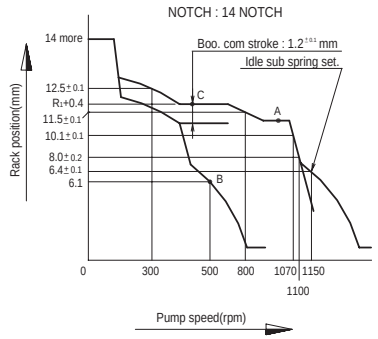

Check point	Rack position (mm)	Pump speed (rpm)	Injection Q`ty on RIG (mm³ / 1,000st) Test condition for inj. pump	Pressure (mmHg)
A	R1(11.3)	1,000	153 ± 2	600 or more
B	≈ 6.1	500	12 ± 1.5	-
C	R1+0.4	500	(170)	600 or more

Governor weight	740 g	Lever ratio(min./max.)		1 : 1.2 / 1 : 1.2
Governor spring	k = 7.2 kgf/mm	Boost compensator spring		k = 0.51 kgf/mm
Idle sub spring	k = 1.2 kgf/mm	Adapter spring		k = 6.5 kgf/mm
Start spring	k = 0.01 kgf/mm	Delivery valve	Retraction pressure	130mm³/st(ϕ8×2.6mm), t = 0.07
Plunger	ϕ12 right hand 22+45 lead		Opening pressure	19.6 kgf/cm²
Idle spring	k = 1.9 kgf/mm		Spring	k = 0.87 kgf/mm

https://truckmanualshub.com/

(6) Performance curve of governor

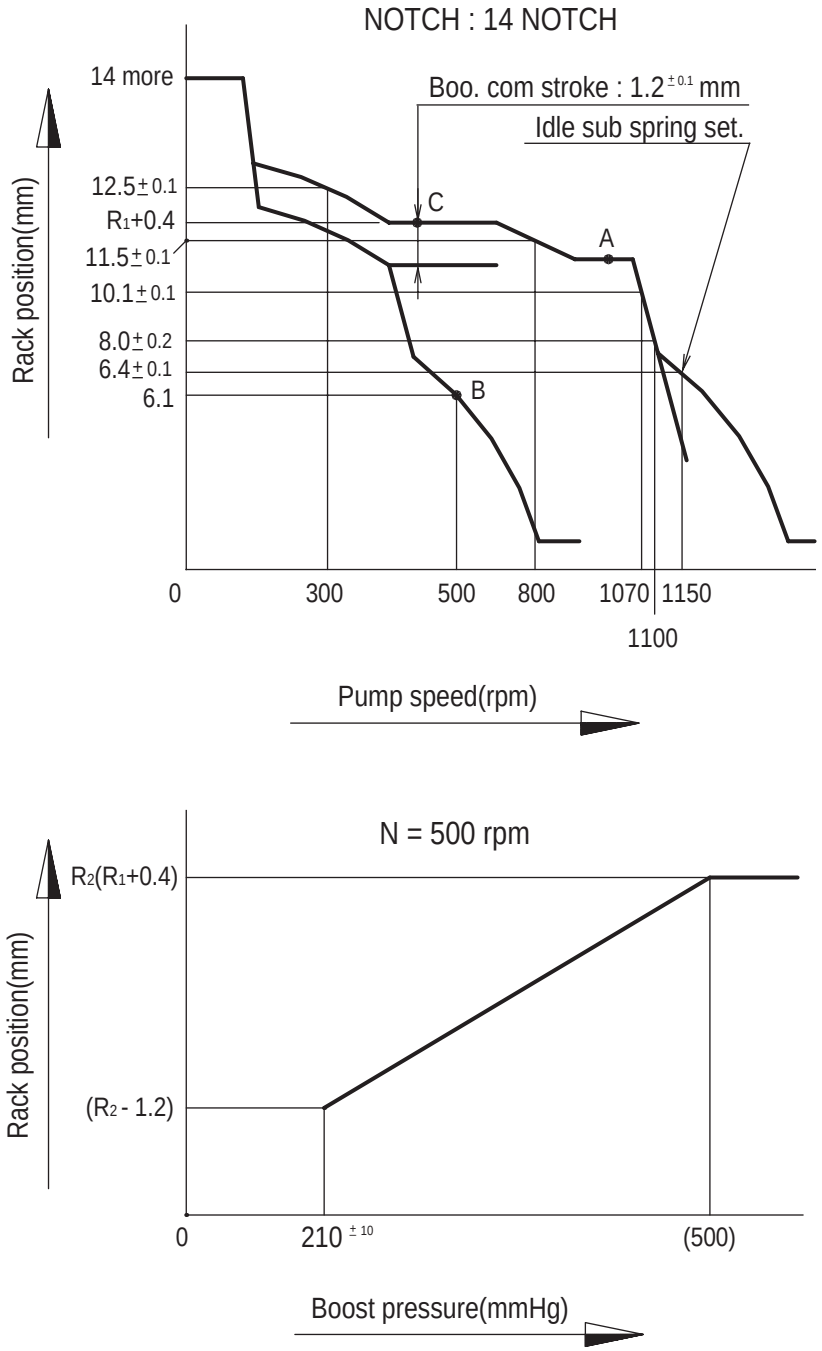

EE6OM039

10) DE12TIS - (ECIEC)

(1) Fuel injection pump : 65.11101-7362A (106675-461C DOOWON)
- Fuel injection pump : KP-PE6P120/720RS3S (106067-622A DOOWON)
- Governor : KP-EP/RSV200-1300PQ39C311(105407-7590)
- Timer : KP-EP/SPG700-1100Z3/R (105681-1910)
- Fuel feed pump : KP-FP/K-PS (105207-1540)
- Coupling : 105663-0740

(2) Nozzle holder assembly : 65.10101-7298 (105101-8460 DOOWON)
(3) Nozzle : 65.10102-6053 (105025-2240 DOOWON)
(4) Fuel injection pipe : 65.10301-6289
(5) Injection order : 1 – 5 – 3 – 6 – 2 – 4

(A) Test condition for Fuel injection pump	Nozzle & Holder ass'y	105780-8140	Opening pressure :175 bar
	Nozzle	105780-0000	-
	Fuel Injection pipe (ID×OD-L)	-	ϕ3.0 × ϕ8.0 - 600 mm
	Test oil	ISO4113	Temperature :40 ± 5 ˚C
(B) Engine standard parts	Nozzle & holder ass'y	65.10102-6053	Nozzle (5 × ϕ0.29)
		65.10101-7298	Opening pressure 1st : 160 kg/cm² 2nd : 220 kg/cm²
	Fuel Injection pipe (ID×OD-L)	65.10301-6289	ϕ2.2 × ϕ6 - 650 mm

Rack diagram and setting valve at each point

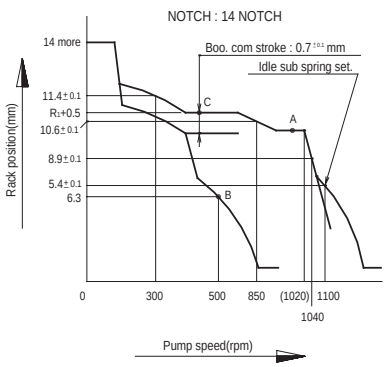

Check point	Rack position (mm)	Pump speed (rpm)	Injection Q`ty on RIG (mm³ / 1,000st) Test condition for inj. pump	Pressure (mmHg)
A	R1(10.4)	950	135 ± 2	600 or more
B	≈ 6.3	500	16 ± 1.5	-
C	R1+0.5	500	(150)	600 or more

Governor weight	740 g	Lever ratio(min./max.)		1 : 1.2 / 1 : 1.2
Governor spring	k = 7.2 kgf/mm	Boost compensator spring		k = 0.51 kgf/mm
Idle sub spring	k = 1.2 kgf/mm	Adapter spring		k = 6.5 kgf/mm
Start spring	k = 0.01 kgf/mm	Delivery valve	Retraction pressure	130mm³/st(ϕ8×2.6mm), t = 0.07
Plunger	ϕ12 right hand 22+45 lead		Opening pressure	19.6 kgf/cm²
Idle spring	k = 1.9 kgf/mm		Spring	k = 0.87 kgf/mm

https://truckmanualshub.com/

(6) Performance curve of governor

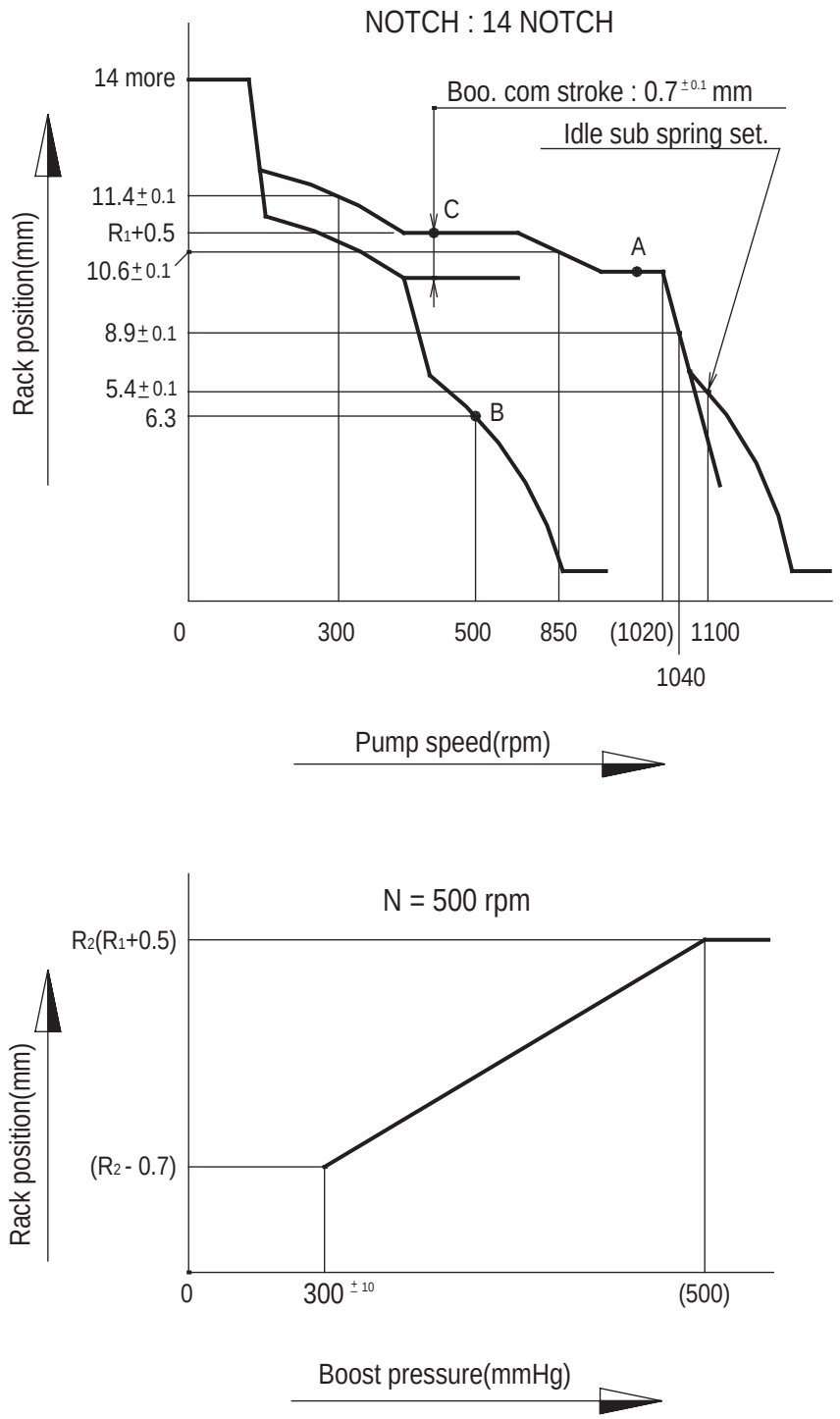

EE6OM040

11) DE12TIS - (ECIED)

(1) Fuel injection pump : 65.11101-7419 (106675-461E DOOWON)
- Fuel injection pump : KP-PE6P120/720RS3S (106067-622A DOOWON)
- Governor : KP-EP/RSV200-1300PQ39C311(105407-7590)
- Timer : KP-EP/SPG700-1100Z3/R (105681-1910)
- Fuel feed pump : KP-FP/K-PS (105207-1540)
- Coupling : 105663-0740

(2) Nozzle holder assembly : 65.10101-7298 (105101-8460 DOOWON)
(3) Nozzle : 65.10102-6053 (105025-2240 DOOWON)
(4) Fuel injection pipe : 65.10301-6289
(5) Injection order : 1 – 5 – 3 – 6 – 2 – 4

(A) Test condition for Fuel injection pump	Nozzle & Holder ass'y	105780-8140	Opening pressure :175 bar
	Nozzle	105780-0000	-
	Fuel Injection pipe (ID×OD-L)	-	ϕ3.0 × ϕ8.0 - 600 mm
	Test oil	ISO4113	Temperature :40 ± 5 ˚C
(B) Engine standard parts	Nozzle & holder ass'y	65.10102-6053	Nozzle (5 × ϕ0.29)
		65.10101-7298	Opening pressure 1st : 160 kg/cm² 2nd : 220 kg/cm²
	Fuel Injection pipe (ID×OD-L)	65.10301-6289	ϕ2.2 × ϕ6 - 650 mm

Rack diagram and setting valve at each point

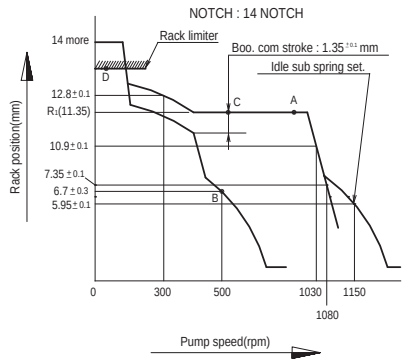

Check point	Rack position (mm)	Pump speed (rpm)	Injection Q`ty on RIG (mm³ / 1,000st) Test condition for inj. pump	Pressure (mmHg)
A	R1(11.35)	1,000	157 ± 2	600 or more
B	6.7	500	26 ± 1.5	-
C	(R1)	600	(163)	600 or more
D	-	100	214 ± 10	-

Governor weight	740 g	Lever ratio(min./max.)		1 : 1.2 / 1 : 1.2
Governor spring	k = 7.2 kgf/mm	Boost compensator spring		k = 0.51 kgf/mm
Idle sub spring	k = 1.2 kgf/mm	Adapter spring		k = 6.5 kgf/mm
Start spring	k = 0.01 kgf/mm	Delivery valve	Retraction pressure	130mm³/st(ϕ8×2.6mm), t = 0.07
Plunger	ϕ12 right hand 22+45 lead		Opening pressure	19.6 kgf/cm²
Idle spring	k = 1.9 kgf/mm		Spring	k = 0.87 kgf/mm

https://truckmanualshub.com/

(6) Performance curve of governor

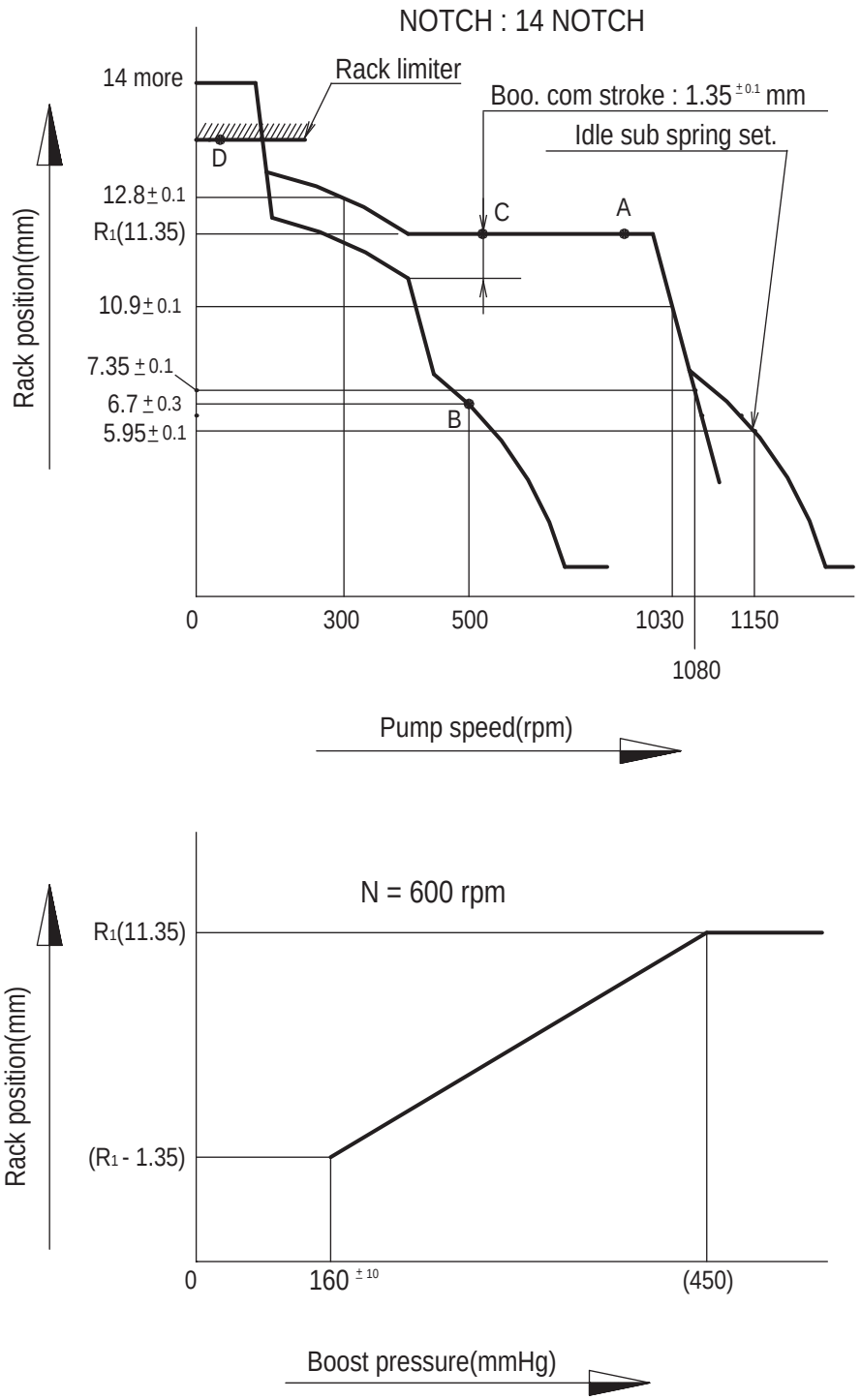

EE6OM041

12) DE12TIS - (ECILA)

(1) Fuel injection pump : 65.11101-7396 (106675-400B DOOWON)
- Fuel injection pump : KP-PE6P120/720RS3S (106067-622A DOOWON)
- Governor : KP-EP/RSV200-1300PQ39C311(105407-7590)
- Timer : KP-EP/SPG700-1100Z3/R (105681-1910)
- Fuel feed pump : KP-FP/K-PS (105207-1540)
- Coupling : 105663-0740

(2) Nozzle holder assembly : 65.10101-7298 (105101-8460 DOOWON)
(3) Nozzle : 65.10102-6053 (105025-2240 DOOWON)
(4) Fuel injection pipe : 65.10301-6289
(5) Injection order : 1 – 5 – 3 – 6 – 2 – 4

(A) Test condition for Fuel injection pump	Nozzle & Holder ass'y	105780-8140	Opening pressure :175 bar
	Nozzle	105780-0000	-
	Fuel Injection pipe (ID×OD-L)	-	ϕ3.0 × ϕ8.0 - 600 mm
	Test oil	ISO4113	Temperature :40 ± 5 ˚C
(B) Engine standard parts	Nozzle & holder ass'y	65.10102-6053	Nozzle (5 × ϕ0.29)
		65.10101-7298	Opening pressure 1st : 160 kg/cm² 2nd : 220 kg/cm²
	Fuel Injection pipe (ID×OD-L)	65.10301-6289	ϕ2.2 × ϕ6 - 650 mm

Rack diagram and setting valve at each point

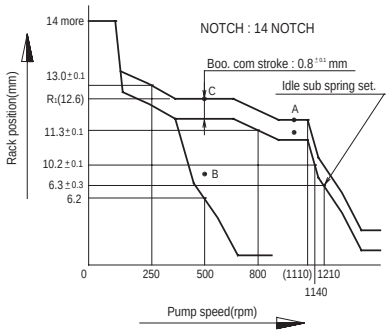

Check point	Rack position (mm)	Pump speed (rpm)	Injection Q`ty on RIG (mm³ / 1,000st) Test condition for inj. pump	Pressure (mmHg)
A	11.7	1,050	167 ± 2	500 or more
B	≈ 6.4	500	20 ± 1.5	-
C	R1(12.6)	500	(195)	500 or more
D	11.5	1,050	(163)	500 or more

Governor weight	740 g	Lever ratio(min./max.)		1 : 1.2 / 1 : 1.2
Governor spring	k = 7.2 kgf/mm	Boost compensator spring		k = 0.51 kgf/mm
Idle sub spring	k = 1.2 kgf/mm	Adapter spring		k = 6.5 kgf/mm
Start spring	k = 0.01 kgf/mm	Delivery valve	Retraction pressure	130mm³/st(ϕ8×2.6mm), t = 0.07
Plunger	ϕ12 right hand 22+45 lead		Opening pressure	19.6 kgf/cm²
Idle spring	k = 1.9 kgf/mm		Spring	k = 0.87 kgf/mm

https://truckmanualshub.com/

(6) Performance curve of governor

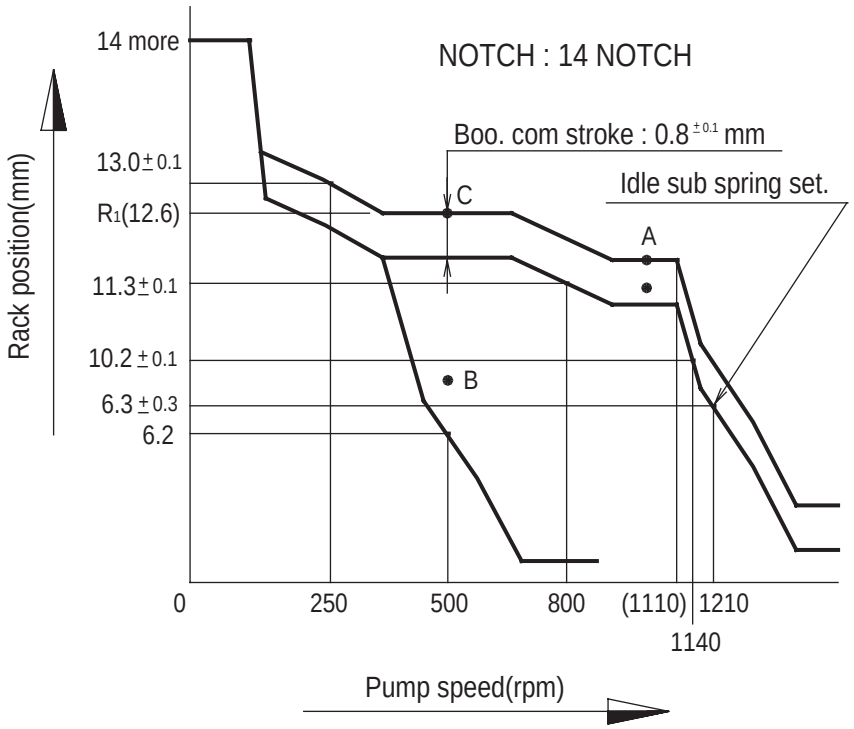

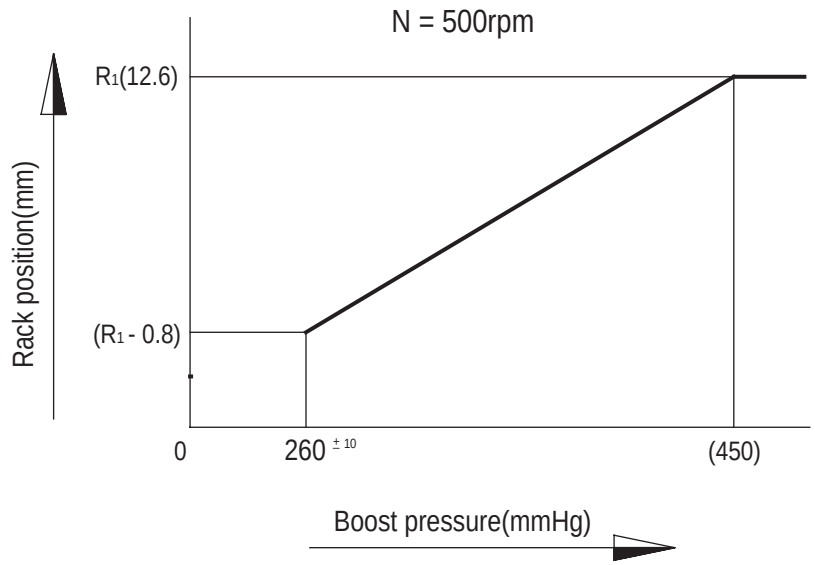

EE6OM042

13) DE12TIS - (ECILB)

(1) Fuel injection pump : 65.11101-7395 (106675-300B DOOWON)
- Fuel injection pump : KP-PE6P120/720RS3S (106067-622A DOOWON)
- Governor : KP-EP/RSV200-1300PQ39C311(105407-759A)
- Timer : KP-EP/SPG700-1100Z3/R (105681-1910)
- Fuel feed pump : KP-FP/K-PS (105207-1540)
- Coupling : 105663-0740

(2) Nozzle holder assembly : 65.10101-7298 (105101-8460 DOOWON)
(3) Nozzle : 65.10102-6053 (105025-2240 DOOWON)
(4) Fuel injection pipe : 65.10301-6289
(5) Injection order : 1 – 5 – 3 – 6 – 2 – 4

(A) Test condition for Fuel injection pump	Nozzle & Holder ass'y	105780-8140	Opening pressure :175 bar
	Nozzle	105780-0000	-
	Fuel Injection pipe (ID×OD-L)	-	ϕ3.0 × ϕ8.0 - 600 mm
	Test oil	ISO4113	Temperature :40 ± 5 ˚C
(B) Engine standard parts	Nozzle & holder ass'y	65.10102-6053	Nozzle (5 × ϕ0.29)
		65.10101-7298	Opening pressure 1st : 160 kg/cm² 2nd : 220 kg/cm²
	Fuel Injection pipe (ID×OD-L)	65.10301-6289	ϕ2.2 × ϕ6 - 650 mm

Rack diagram and setting valve at each point

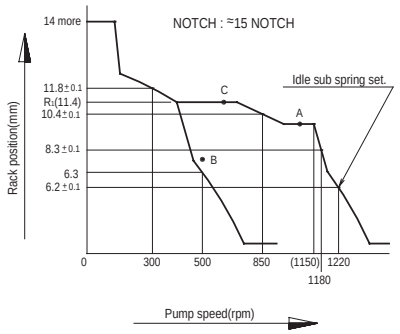

Check point	Rack position (mm)	Pump speed (rpm)	Injection Q`ty on RIG (mm³ / 1,000st) Test condition for inj. pump	Pressure (mmHg)
A	9.7	1,050	120 ± 2	-
B	≈ 6.5	500	20 ± 1.5	-
C	R1(11.4)	700	(158)	-

Governor weight	740 g	Lever ratio(min./max.)		1 : 1.2 / 1 : 1.2
Governor spring	k = 7.2 kgf/mm	Boost compensator spring		k = 0.51 kgf/mm
Idle sub spring	k = 1.2 kgf/mm	Adapter spring		k = 6.5 kgf/mm
Start spring	k = 0.01 kgf/mm	Delivery valve	Retraction pressure	130mm³/st(ϕ8×2.6mm), t = 0.07
Plunger	ϕ12 right hand 22+45 lead		Opening pressure	19.6 kgf/cm²
Idle spring	k = 1.9 kgf/mm		Spring	k = 0.87 kgf/mm

14) DE12TIS - (ECILC)

(1) Fuel injection pump : 65.11101-7403 (106675-410A DOOWON)
- Fuel injection pump : KP-PE6P120/720RS3S (106067-622A DOOWON)
- Governor : KP-EP/RSV200-1300PQ39C311(105407-7590)
- Timer : KP-EP/SPG700-1100Z3/R (105681-1910)
- Fuel feed pump : KP-FP/K-PS (105207-1540)
- Coupling : 105663-0740

(2) Nozzle holder assembly : 65.10101-7298 (105101-8460 DOOWON)
(3) Nozzle : 65.10102-6053 (105025-2240 DOOWON)
(4) Fuel injection pipe : 65.10301-6289
(5) Injection order : 1 – 5 – 3 – 6 – 2 – 4

(A) Test condition for Fuel injection pump	Nozzle & Holder ass'y	105780-8140	Opening pressure :175 bar
	Nozzle	105780-0000	-
	Fuel Injection pipe (ID×OD-L)	-	ϕ3.0 × ϕ8.0 - 600 mm
	Test oil	ISO4113	Temperature :40 ± 5 ˚C
(B) Engine standard parts	Nozzle & holder ass'y	65.10102-6053	Nozzle (5 × ϕ0.29)
		65.10101-7298	Opening pressure 1st : 160 kg/cm² 2nd : 220 kg/cm²
	Fuel Injection pipe (ID×OD-L)	65.10301-6289	ϕ2.2 × ϕ6 - 650 mm

Rack diagram and setting valve at each point

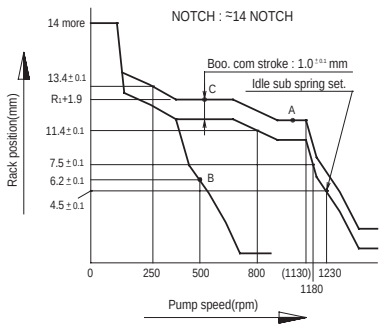

Check point	Rack position (mm)	Pump speed (rpm)	Injection Q`ty on RIG (mm³ / 1,000st) Test condition for inj. pump	Pressure (mmHg)
A	R1(11.3)	1,050	157 ± 2	500 or more
B	≈ 6.2	500	16 ± 1.5	-
C	(R1+1.9)	500	(210)	500 or more

Governor weight	740 g	Lever ratio(min./max.)		1 : 1.2 / 1 : 1.2
Governor spring	k = 7.2 kgf/mm	Boost compensator spring		k = 0.51 kgf/mm
Idle sub spring	k = 1.2 kgf/mm	Adapter spring		k = 6.5 kgf/mm
Start spring	k = 0.01 kgf/mm	Delivery valve	Retraction pressure	130mm³/st(ϕ8×2.6mm), t = 0.07
Plunger	ϕ12 right hand 22+45 lead		Opening pressure	19.6 kgf/cm²
Idle spring	k = 1.9 kgf/mm		Spring	k = 0.87 kgf/mm

https://truckmanualshub.com/

(6) Performance curve of governor

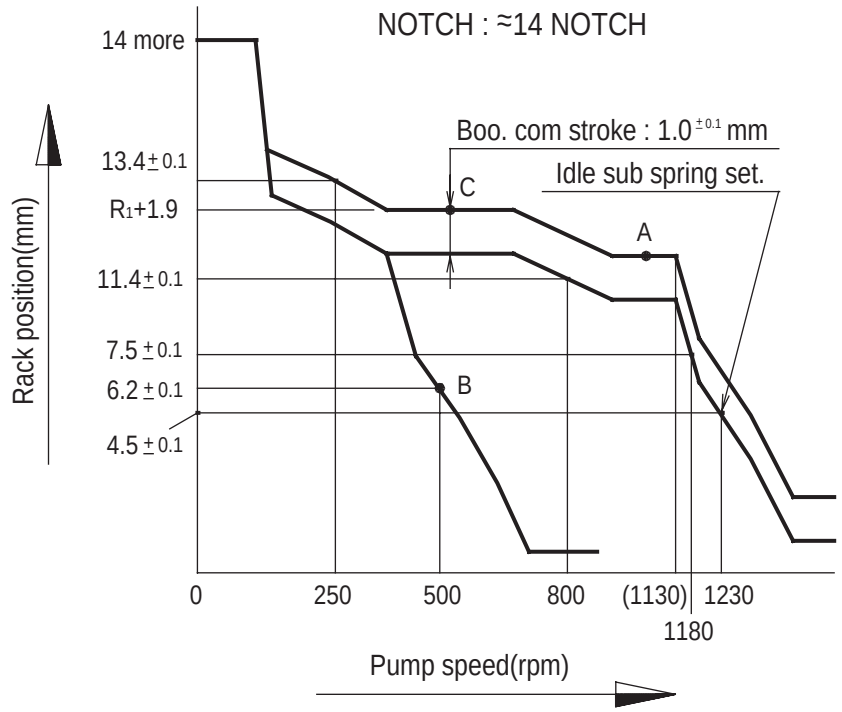

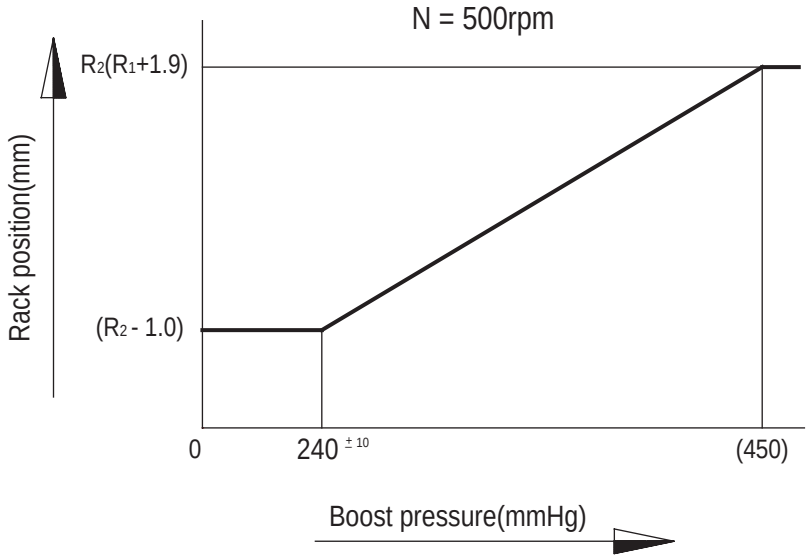

EE6OM044

6.1.3. Fuel feed pump

1) General descriptions and construction

The P-type injection pump is mounted with K-ADS or KP type feed pump. These pumps have the same basic construction and operation, and the general descriptions of the KP type pump are given below :

The figures show its construction (right figure) and operation (below figure). The piston in the fuel feed pump is driven by the push rod and tappet via the camshaft of injection pump and performs reciprocating operation to control the suction and delivery of fuel. When the cam reaches the Bottom Dead Center as shown in the figure, the fuel is drawn in through the check valve on the inlet side.

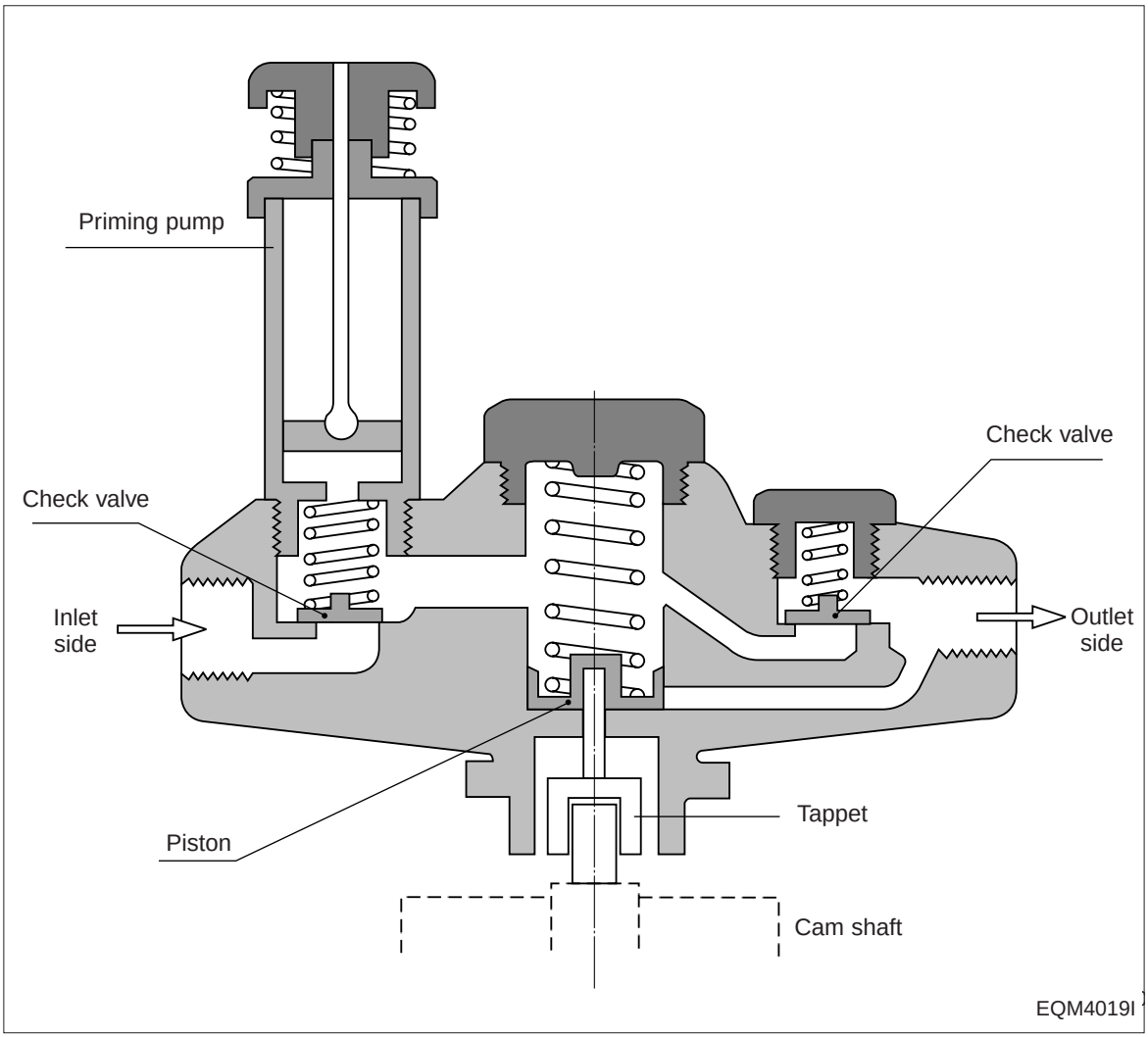

https://truckmanualshub.com/

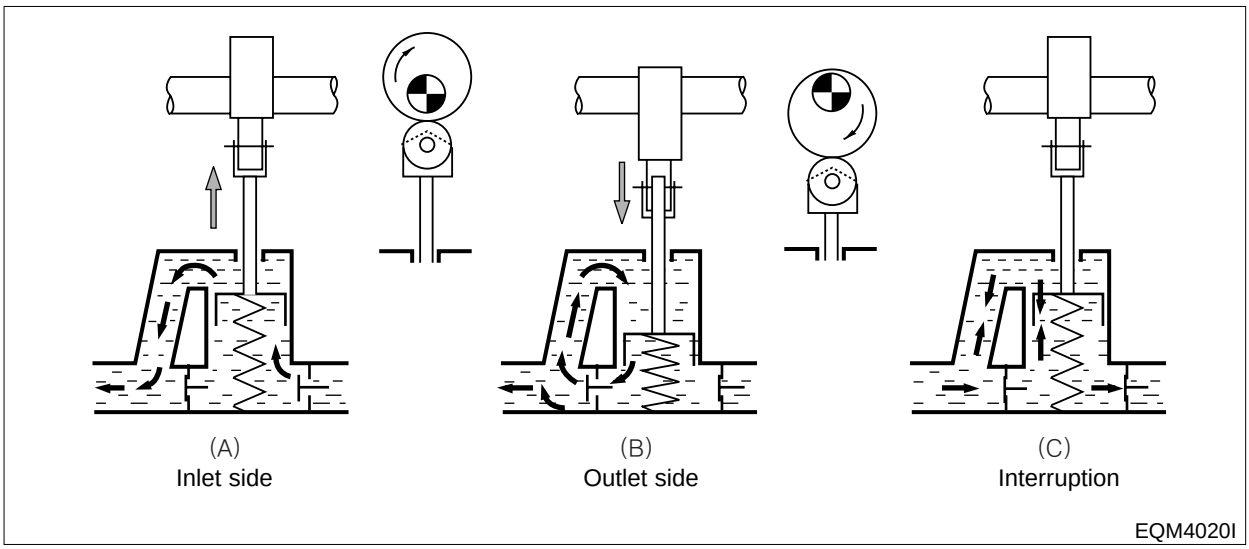

The fuel pressurized as the cam rotates on flows through the check valve on the outlet side as shown in (B). If the feeding pressure increases abnormally, the spring is compressed, resulting in interrupting further delivery of fuel as shown in (C).

This feed pump is mounted with a priming pump designed to permit manual feeding of fuel from the fuel tank with the injection pump mounted in the engine. During the manual feeding operation, air must be bled from the fuel lines.

When using the priming pump, fix it securely to prevent the possible entry of moisture or other foreign substances in the inside of feed pump.

In addition, a strainer is fitted into joint bolt on the inlet side of the fuel feed pump to filtrate any foreign substances possibly mixed in fuel.

2) Disassembly

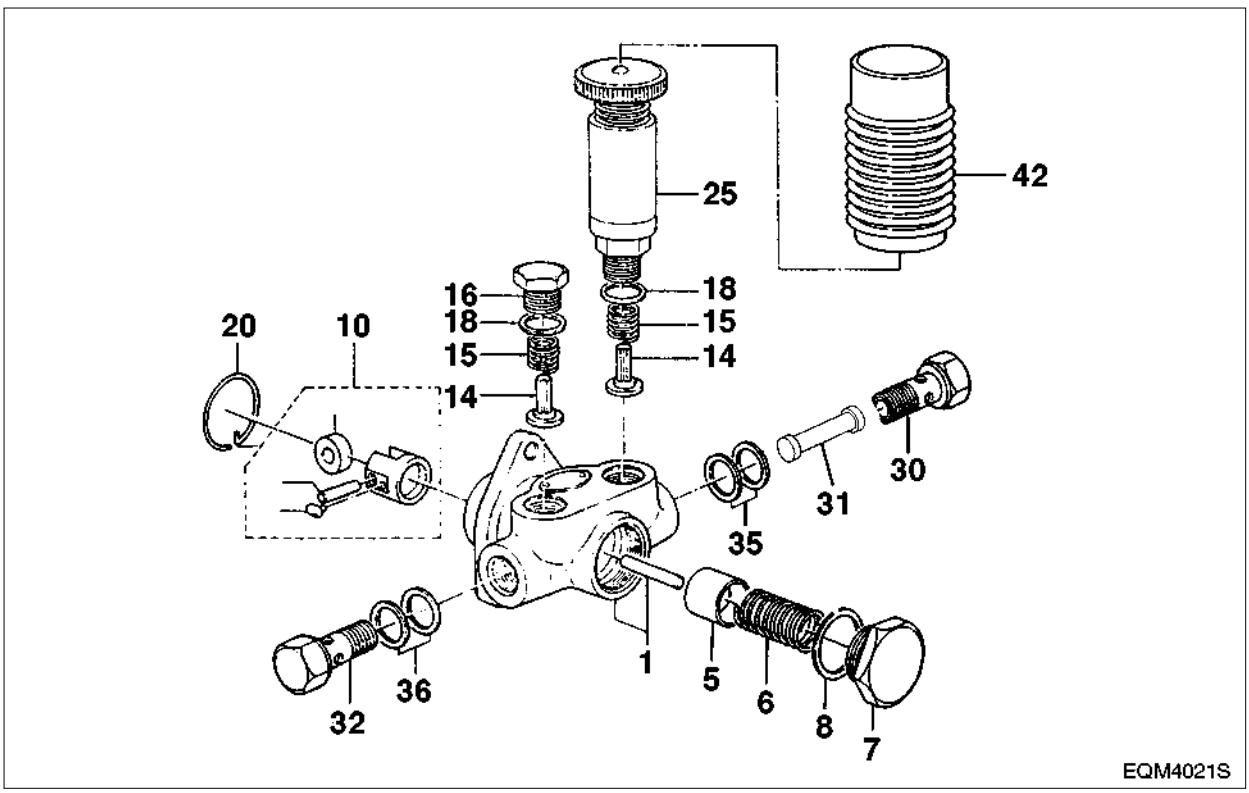

https://truckmanualshub.com/

- Clamp the feed pump with a vise and disassemble the plugs (30, 32), strainer (31) and gaskets (35, 36).
- Take off the priming pump (25), plug (16), both gaskets (18), spring (15), and check valve (14).
- Take off the prig (7), gasket (8), spring (6), and piston (5) on the piston side.
- Pull out the snap ring (20) holding the tappet (10).
- Disassemble the snap ring, then take off the tappet (10) and push rod (1).

3) Inspection

- If the check valve is damaged or scored on its seat face, replace it with a new one.
- Inspect the piston and tappet for damage.
- Replace the push rod if excessively worn, and replace together with the pump housing if required. The inspection for wear should be performed in the same procedure as for suction pressure test described below.

4) Reassembly

Reassembly operation is performed in reverse order of disassembly. All the gaskets must be replaced with new ones at reassembly.

NOTE :
Check the item no. 30 before assembling it whether it is the fuel strainer bolt.
Clean it when fuel filter cartridge is replaced.

5) Testing

(1) Suction capacity test

Connect one end of a hose to the inlet side of the feed pump and immerse the other end of it into the fuel tank as illustrated.
Hold the feed pump in position about 1 m above the level of fuel in the fuel tank.
Operate the tappet at the rate of 100 rpm and check to see if fuel is drawn in and delivered for 40 seconds or so.

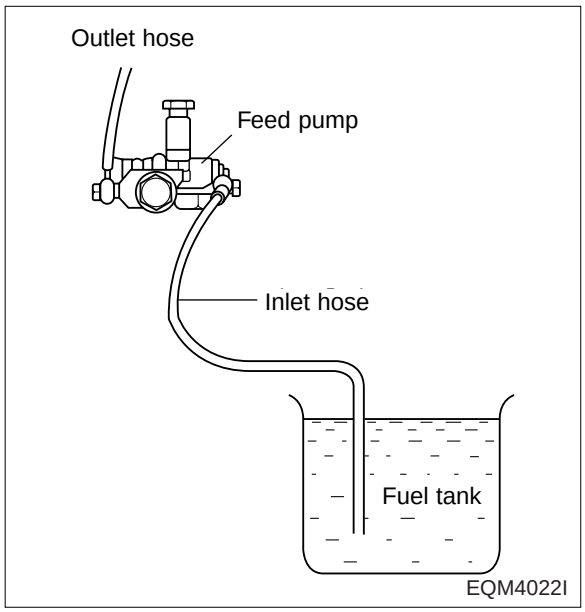

https://truckmanualshub.com/

(2) Delivery test

Make a test with the feed pump mounted on a pump tester as illustrated. Operate the pump at the rate of 1,000 rpm and check to see if the pump delivery is more than 405 cc/15 seconds.

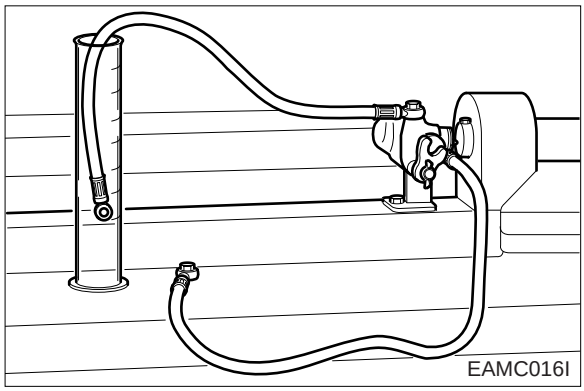

(3) Sealing test

Plug up the delivery port on the feed pump and apply compressed air of 2 kg/cm² into the inlet side. Submerge the feed pump in a container of diesel fuel and check for air leak.

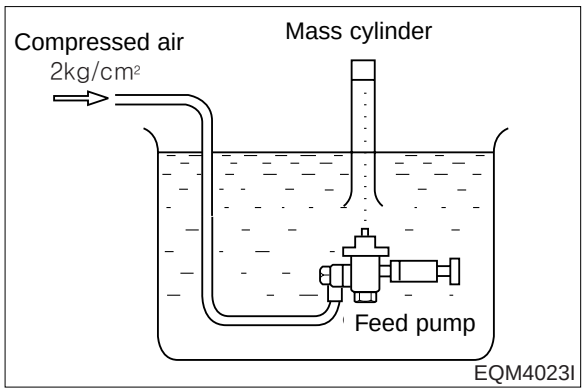

6.1.4. Injection nozzle

1) General descriptions

Pressurized fuel delivered from the fuel injection pump is sprayed into the combustion chamber past the injection nozzle at proper spray pressure and spray angle, then burnt completely to achieve effective engine performance.

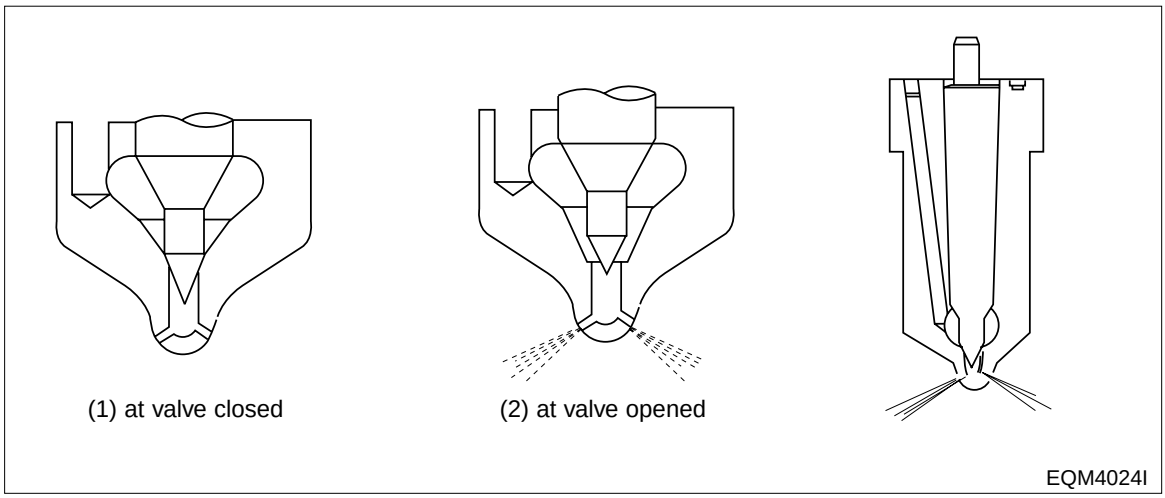

https://truckmanualshub.com/

2) 1-spring type (DE12T)

(1) Disassembly

1. Cap nut
2. Adjusting screw
3. Spring
4. Push rod
5. Connector
6. Retaining nut
7. Needle valve
8. Nozzle
9. Nozzle holder

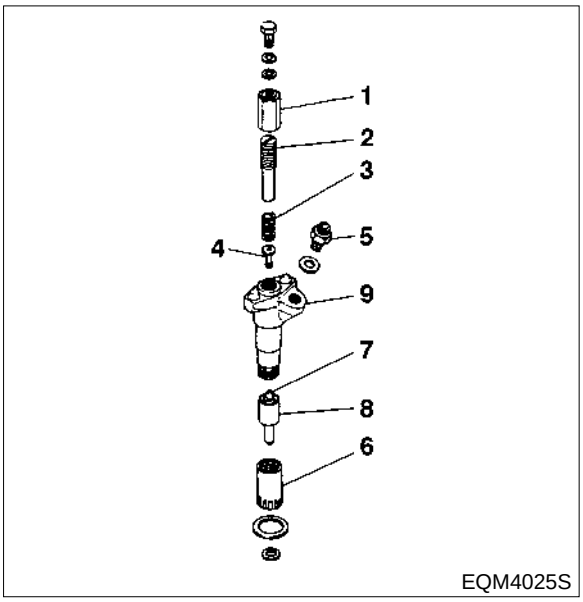

EQM4025S

(2) Reassembly

- After removing carbon deposit, submerge the nozzle in diesel oil and clean it.
- Replace all the gaskets with new ones.
- Assemble the parts and tighten them to specified torque.

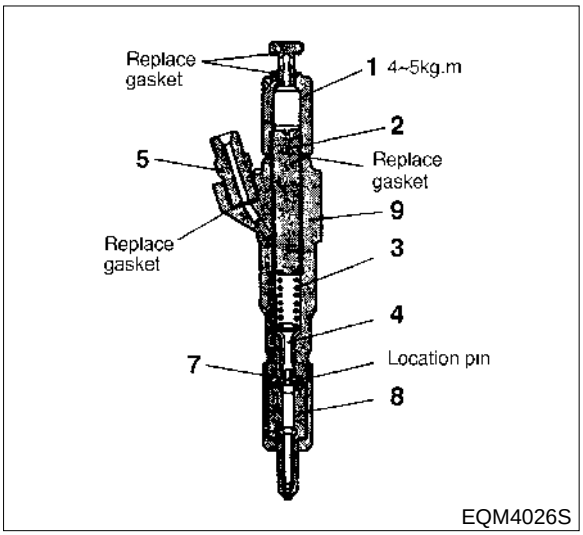

EQM4026S

(3) Adjustment

- Remove the cap nut and assemble a nozzle to a nozzle tester.
- With the adjusting screw loosened, operate the nozzle 2 ~ 3 times to bleed it.
- Operate the nozzle tester lever at the specified rate.
- Adjust the injection pressure to the standard pressure by spring tension shims.
- After adjusting the injection pressure, tighten the cap nut to specified torque.
- Re-check the injection pressure and see if the spray pattern is normal.

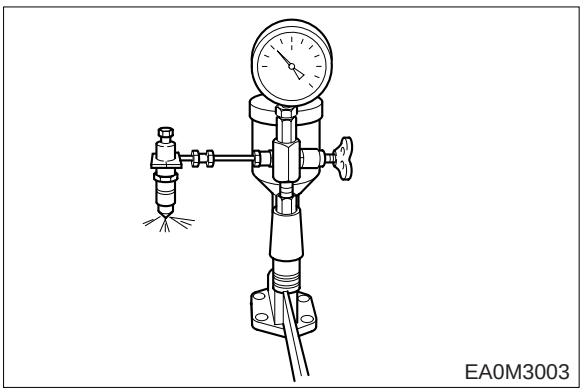
EA0M3003

(4) Testing

With the nozzle assembled to a nozzle tester and pressure of specified applied, check the nozzle for fuel leakage.

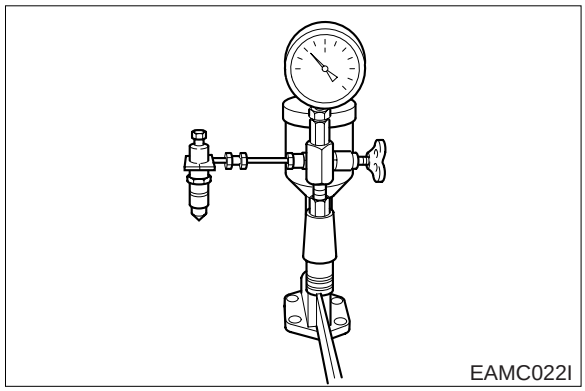

3) 2-spring type (DE12TIS)

This inspection data is base DE12TI engine.

(1) Disassembly

1. Nozzle holder body
2. Push rod
3. Primary spring
4. Adjusting screw
6. Gasket
7. Cap nut
10. Adjusting shim
11. Secondary spring
12. Spring seat
13. Lift pin
14. Pin
15. Spacer
16. Pin
17. Retaining nut
30. Gasket
31. Eye bolt

A. Nozzle

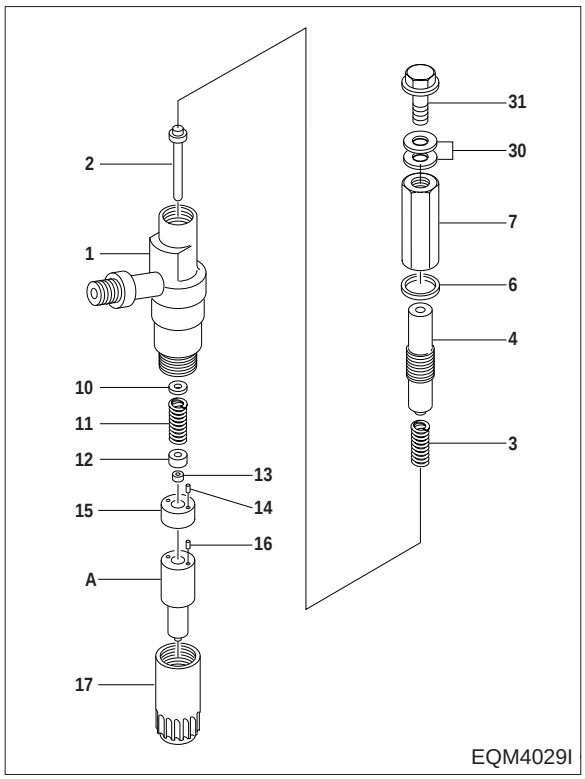

(2) Inspection and adjustment

Adjusting the primary opening pressure

a. Install the plate of plate assembly (157944-9520) onto a vise.

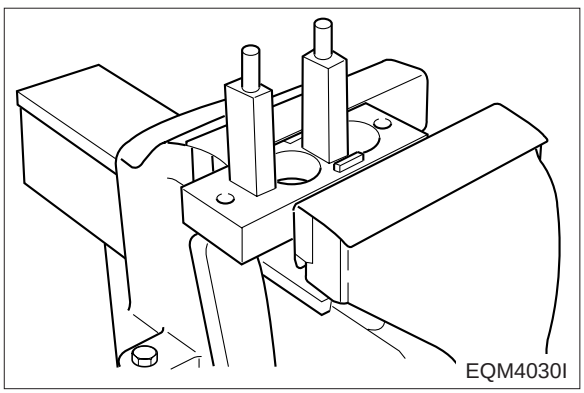

NOTE :

Use the plate assembly (157944-9520) in fixing a nozzle holder having a flange. A nozzle holder without flange should be directly installed onto a vise.

b. With the nut, install the two pins on the plate.

https://truckmanualshub.com/

c. Install the nozzle holder body (1) onto the plate with the cap nut side facing downward.

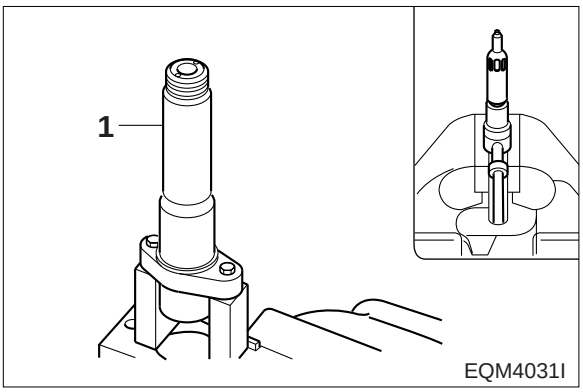

d. Assemble adjusting shim (10), secondary spring (11), and spring seat (12) on the nozzle holder body in the order as described.

NOTE :

The secondary spring is the same one as the primary spring.

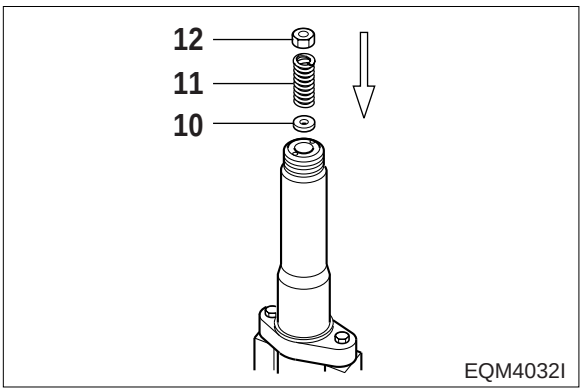

e. Assemble the pin (14), lift piece (13), and spacer (15) with the nozzle holder body.

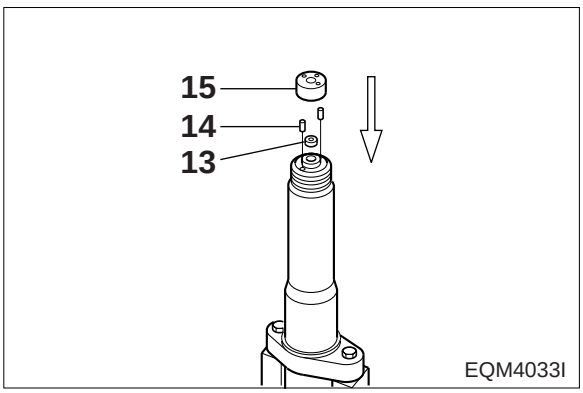

f. Install the pin (16) and nozzle (A) onto the spacer.

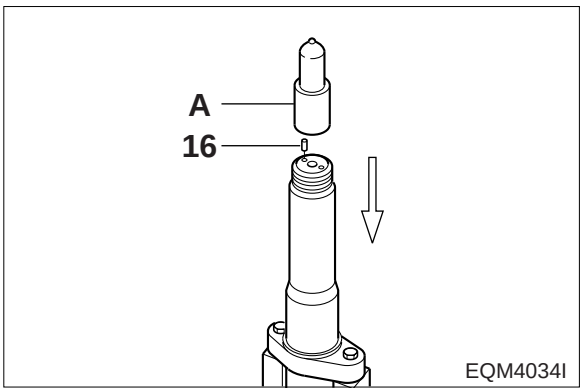

g. After installing the gasket (157892-1500) on the nozzle, use the cap nut (157892-4000 : SW22mm) to fix the nozzle onto the nozzle holder.

NOTE :
While tightening the cap nut, keep checking to see if the lock pin comes all the way into the nozzle.

NOTE :
Tighten the retaining nut until it resists hand tightening, then further tighten it using a torque wrench.

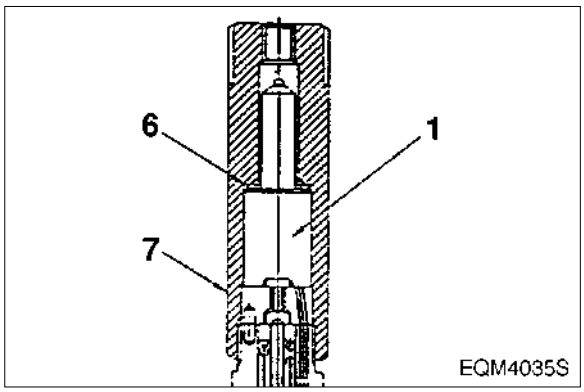

h. Be sure to follow the specified torque rating when tightening the adjusting retaining nut.

Torque	6.0 ~ 8.0 kg·m

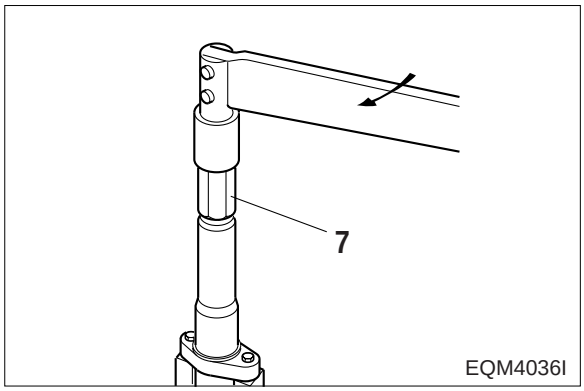

i. With the cap nut facing upward, install the nozzle holder on the plate.

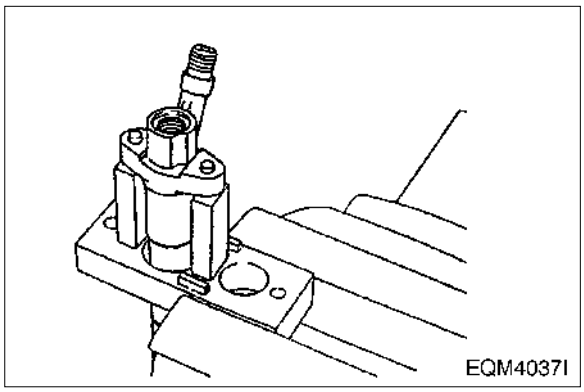

j. Assemble the push rod (2), primary spring (3), and adjusting screw (4) on the nozzle holder in the order described.

k. Install the gasket and cap nut onto the adjusting screw.

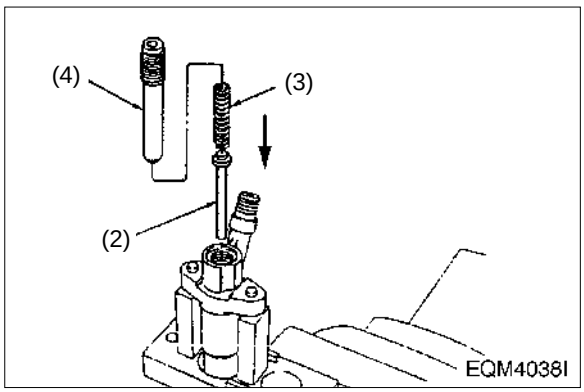

https://truckmanualshub.com/

l. Assemble the nozzle and nozzle holder assembly to the nozzle tester (105785-1010).

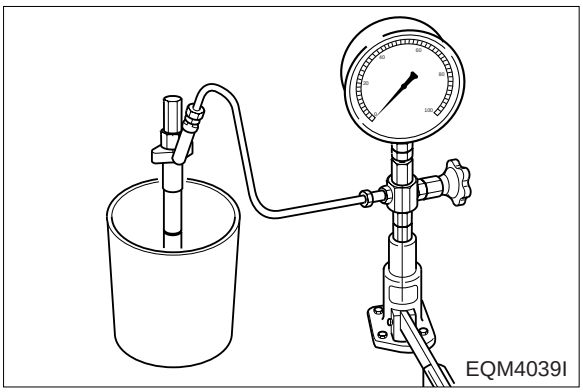

m. Adjust the primary opening pressure to the specified pressure using the adjusting screw (4).

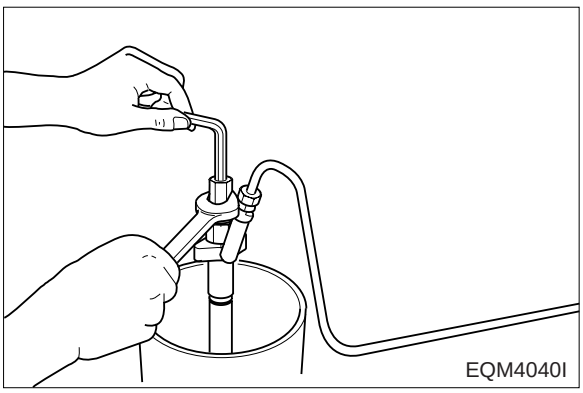

n. With a monkey wrench, fix the nozzle holder securely and tighten the cap nut (SW 19mm) to specified torque.

Torque	3.0 ~ 4.0 kg·m

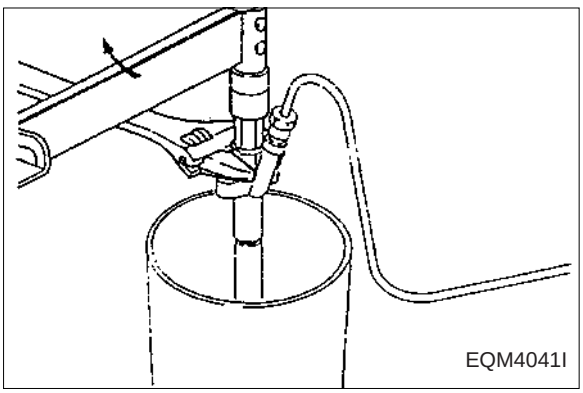

■ **Inspecting the needle valve for full lift**

a. Install gasket (026508-1140) and plug (157892-1600 : SW12mm) onto the adjusting retaining nut (157892-1400).

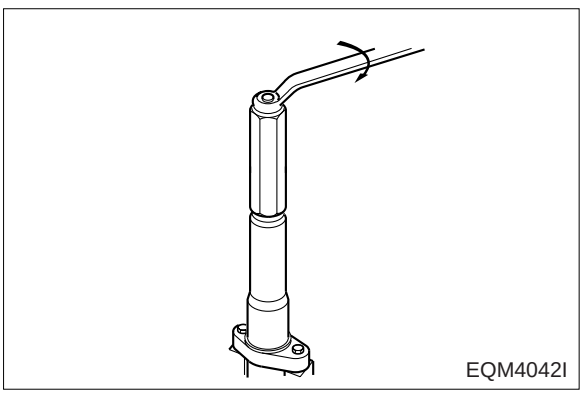

https://truckmanualshub.com/

b. Install the nozzle holder on the plate with the cap nut facing upward.
c. Install the holder into the cap nut.

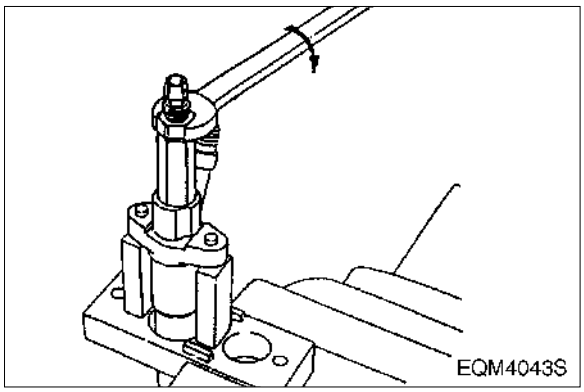

d. Install a nut (157892-1000 : SW 17mm) on the holder.

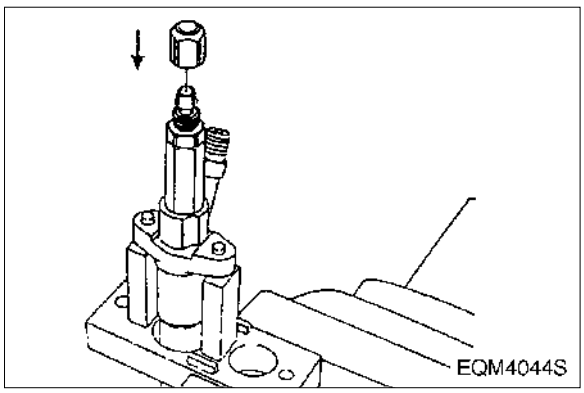

e. Assemble the pin (157892-4200 or 157892-4300) to the dial gauge (157954-3800).

Part No.	L (mm)
157892-4200	160
157892-4300	110

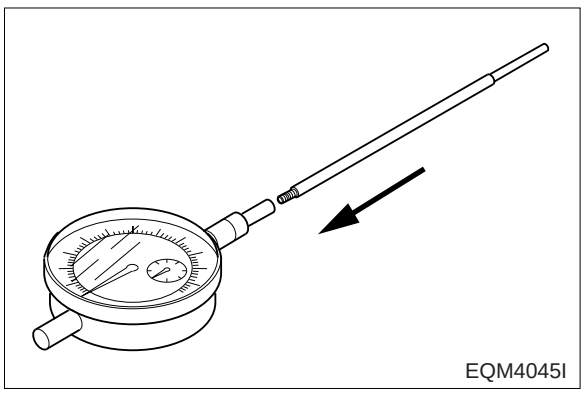

NOTE :
"L" means the length of the pin except the threaded portion.

f. Install the dial gauge on the holder assembly so that the pin is brought into contact with the upper end of the push rod, then fix the pin with the nut.

NOTE 1 :
Fix the dial gauge so that a stroke of 2 mm or so can be measured.

NOTE 2 :
Overtightening the nut may cause a sticking of the dial gauge seat.

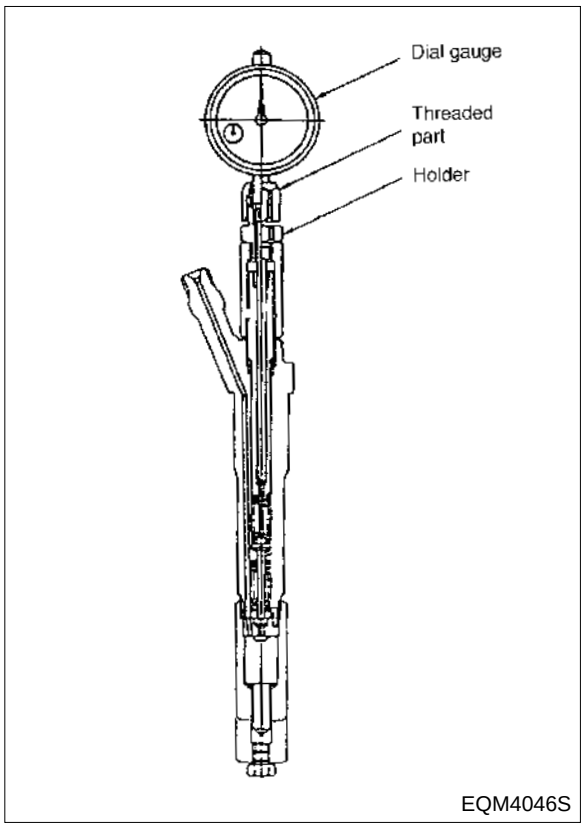

g. Assemble the nozzle and nozzle holder assembly to the nozzle tester and zero the dial gauge.
h. Operate the nozzle tester, bleed the retaining nut, and check for fuel leakage.

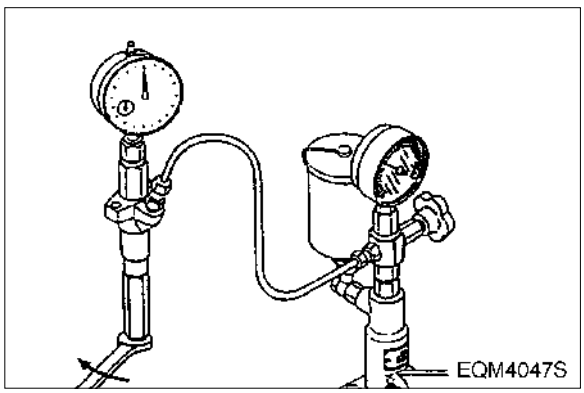

I. Operate the nozzle tester and increase the tester pressure up to 350 ~ 450 kgf/cm² in order that the needle valve can be fully lifted. Then, record the full lift value “L”.

NOTE :
This testing is to be made in order to check the nozzle seat portion for unusual wear or whether the nozzle assembly is a standard item.

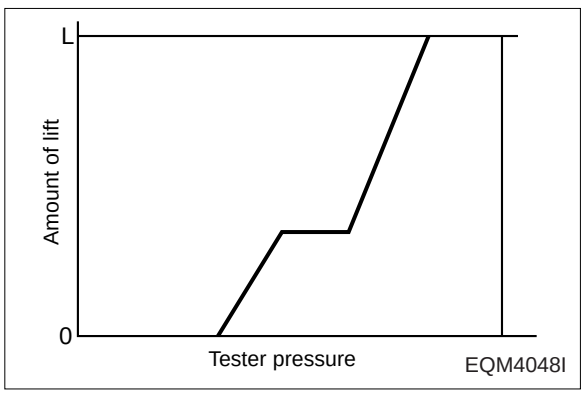

■ **Inspection of pre-lift**

a. If the nozzle tester handle is released with the needle valve engaged in a full lift condition, the tester pressure drops, being accompanied by decrease in the needle valve lift value (indicated value on the dial gauge).

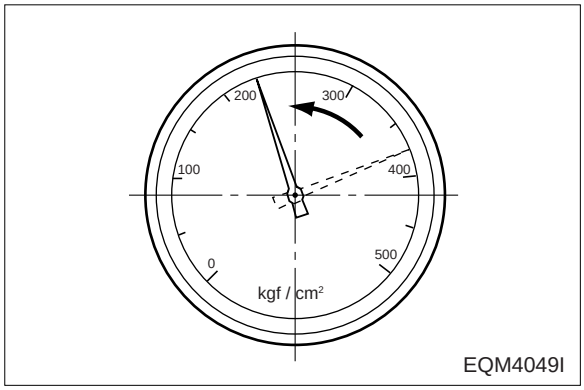

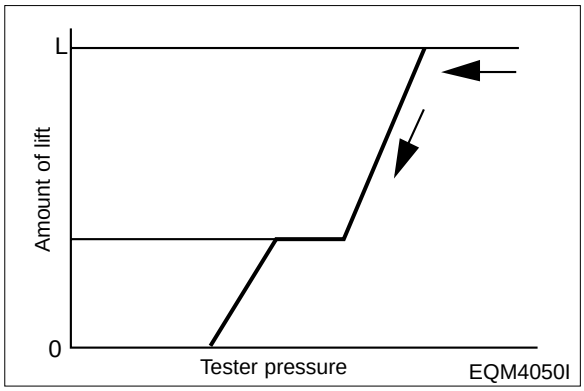

b. Take the indicated value on the dial gauge at the point of time when the secondary spring completes its operation and the needle valve puts an end to descent (the position of needle valve lift value " ℓ " as shown in the above and right figures) and check that the value is within the specified limit.

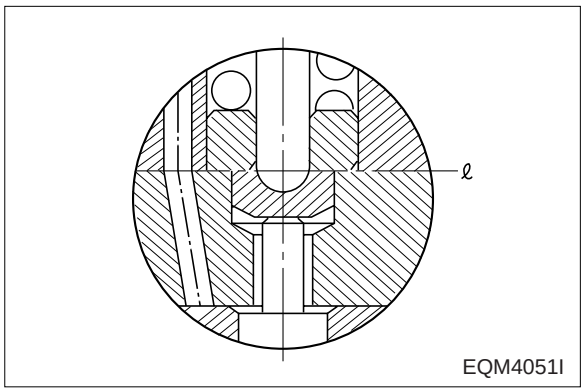

Measuring point for pre-lift

Take the indicated value on the dial gauge at a point of primary opening pressure + approx. 1 0 kgf/cm².

NOTE :

Locate the point of primary opening pressure + approx. 10kgf/cm² while dropping the pressure.

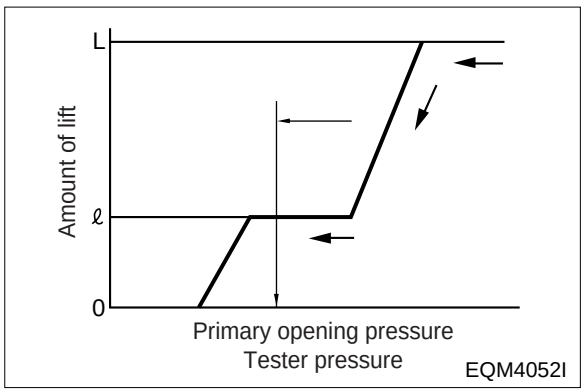

c. If the measured pre-lift value deviates from the specified limit, replace the pin (14, 16), lift piece (13), spacer (15), and nozzle assembly (A) with a new “nozzle service kit”.

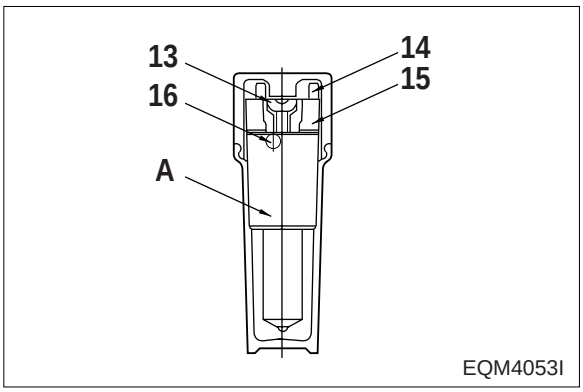

■ **Inspection of secondary opening pressure**

a. After confirming the pre-lift, operate the nozzle tester and increase the internal pressure up to 350 ~ 450 kgf/cm² to fully lift the needle valve.

b. Release the nozzle tester handle to decrease the tester pressure, then take a note of the movements of the dial gauge.

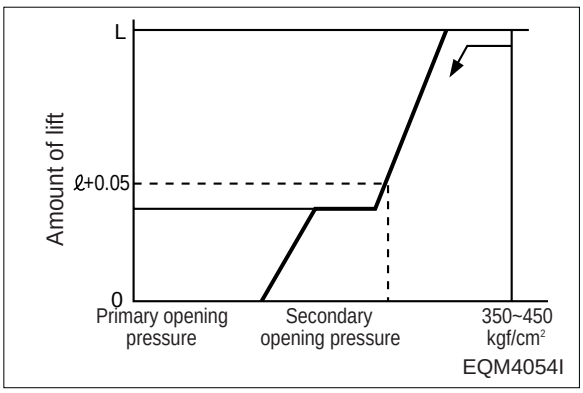

c. Take the indicated value on the pressure gauge at the point of time when the needle of the dial gauge indicates the specified needle valve lift value. (In general, pre-lift “ ℓ “ + 0.05mm. Refer to following figure.)

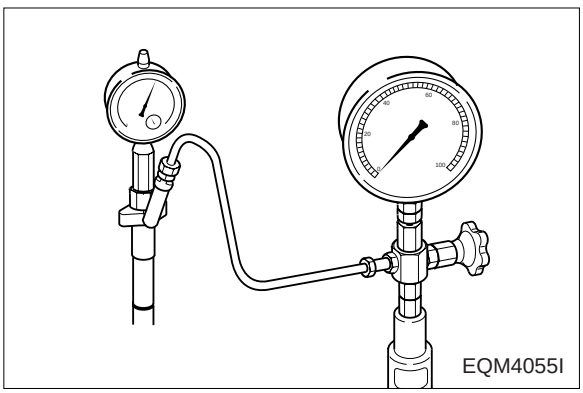

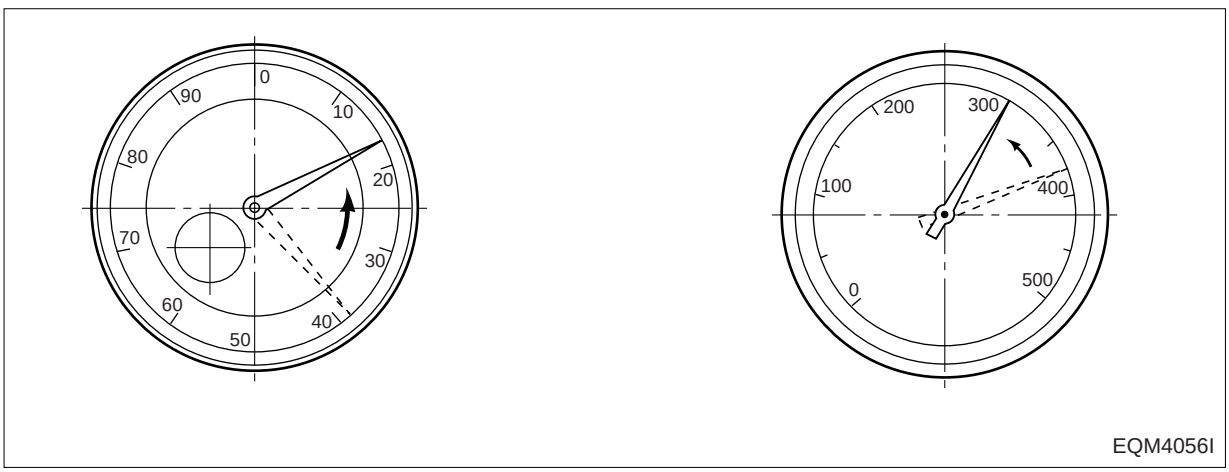

https://truckmanualshub.com/

■ **Adjusting secondary opening pressure**

a. In the event that the measured value deviates from the specified limit, readjust the primary opening pressure if the amount of deviation is small. (to the standard range of the primary opening pressure)
   - If the secondary opening pressure is lower than the standard value: Adjust the primary opening pressure up to the top limit of the standard vague, and then measure the secondary opening pressure.
   - If the secondary opening pressure is higher than the standard value: In a reverse manner, readjust the primary opening pressure down to the bottom limit of the standard value.

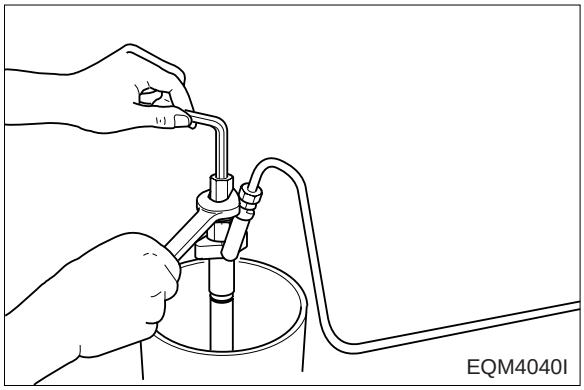

b. If the secondary opening pressure still deviates from the specified limit in spite of the readjusting the primary opening pressure, take off the nozzle fixing portion from the nozzle holder and remove the adjusting shim (10).

c. If the secondary opening pressure is higher than the standard value, fit a thinner adjusting shim than the existing one.

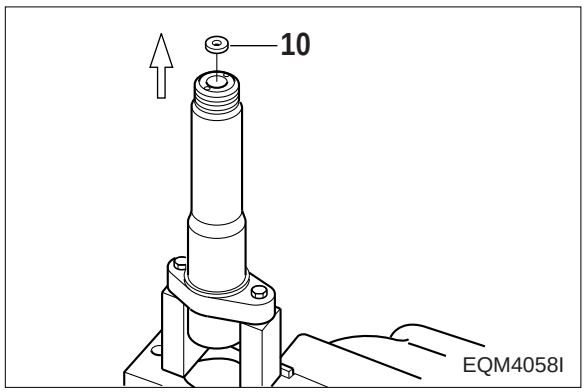

d. After replacing the existing adjusting shim, measure the secondary opening pressure and continue the adjustment until a value satisfying the standard value.

Adjusting shim for secondary opening pressure

(Out diameter = ϕ9.5, Inner diameter = ϕ4.5)

Part No.	Thickness (mm)	Part No.	Thickness (mm)
150538-4900	0.40	150538-5300	0.56
150538-5000	0.50	150538-5400	0.58
150538-5100	0.52	150538-5500	0.60
150538-5200	0.54	150538-5600	0.70

https://truckmanualshub.com/

■ **Retaining nut**

a. Take out the dial gauge, nut, holder and gasket from the cap nut.

b. Remove the adjusting retaining nut and gasket, and install the original retaining nut. (SW 19mm)

Torque	6.0 ~ 8.0 kg·m

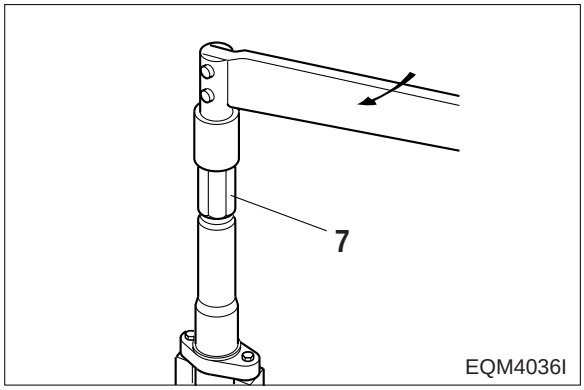

■ **Inspection at completion**

a. Assemble the nozzle holder to a nozzle tester and check the primary opening pressure, spray patterns, oil tightness of seat portion, and oil leakage from each part.

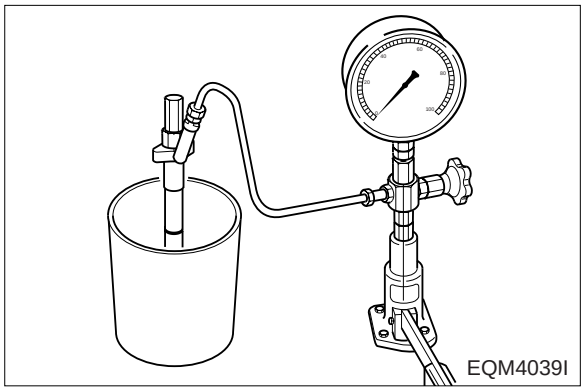

b. When replacing the nozzle, replace it with a new “nozzle service kit” integrated with a nozzle, lift piece, and spacer as a complete set.

NOTE :

If only a nozzle is replaced, the amount of pre-lift will deviate from the specified value.

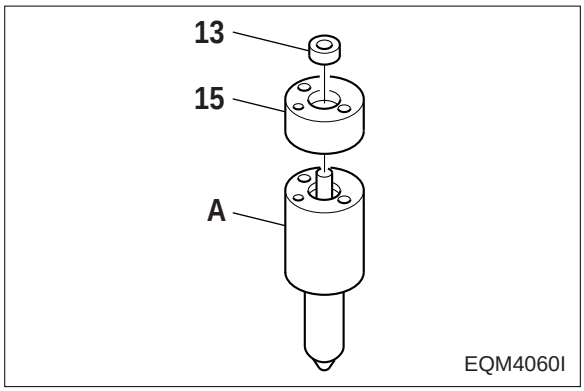

6.1.5. Diagnostics and troubleshooting

Complaints	Possible causes	Corrections
1. Engine won't start		
1) Fuel not being pumped out from feed pump	①Fuel pipes clogged or air into pipe fine	Correct
	②Feed pump valve defective	Replace
	③Feed pump piston or Push rod sticking	Disassemble, correct
2) Fuel not being injected from injection pump	①Fuel filter element restricted	Clean
	②Air in fuel filter or injection pump	Bleed
	③Plunger and/or delivery valve sticking or defective	Disassemble, correct
3) Fuel injection timing incorrect	①Injection pump not properly installed on pump bracket	Check, correct
	②Injection pump tappet incorrectly adjusted	Check, correct
	③Cams on cam shaft worn excessively	Replace
4) Injection nozzles inoperative	①Needle valves sticking	Correct or replace
	②Fuel leaking past clearance between nozzle and needle valve	Correct or replace
	③Injection pressure incorrect	Adjust
2. Engine starts but stalls immediately	①Pipe from feed pump to injection pump clogged or filter clogged	Clean
	②Air in fuel	Bleed
	③Feed pump delivery insufficient	Disassemble, correct
	④Fuel delivery insufficient due to clogging of fuel tank air breather	Replace breather
3. Engine lacks power	①Plunger worn excessively	Replace
	②Injection timing incorrect	Adjust
	③Delivery valves defective	Replace
	④Nozzle leaks excessively	Correct or replace
	⑤Nozzle not working normally	Disassemble, correct
4. Engine knocking	①Injection timing too fast	Adjust
	②Nozzle injection pressure too high	Adjust
	③Nozzles not working normally	Disassemble, correct
5. Engine knocks seriously producing excessive exhaust smoke	①Injection timing incorrect	Adjust
	②Nozzle Injection Pressure too low	Adjust
	③Nozzle spring broken	Replace
	④Nozzles not working normally	Replace
	⑤Plungers worn excessively	Adjust
	⑥Delivery valves seat defective	Replace
	⑦Supply of fuel excessively	Check feed pump

https://truckmanualshub.com/

Complaints	Possible causes	Corrections
6. Engine output unstable	①supply of fuel insufficient	Check feed pump
	②Air in fuel	Bleed
	③Water in fuel	Replace fuel
	④Operation of plungers unsmooth	Disassemble, correct
	⑤Movement of control rack sluggish	Disassemble, correct
	⑥Nozzles defective	Disassemble, correct
	⑦Injection starting pressure of each barrel incorrect	Adjust
	⑧Automatic timer defective	Disassemble, correct
7. Engine does not reach maximum speed	①Nozzles not working normally	Disassemble, correct
	②Governor defective	Disassemble, correct
8. Engine idling Unstable	①Movement of control rod sluggish	Disassemble, correct
	②Operation of plungers unsmooth	Disassemble, correct
	③Control pinions not engaged with control rod correctly	Disassemble, correct

https://truckmanualshub.com/

6.2. Cooling System

6.2.1. General information

This engine is water-cooling type. Heat from the combustion chamber and engine oil heat are cooled down by coolant and radiated to the outside, resulting in the normal operation of the engine.

Looking into the cooling system, the water pumped up by the water pump circulates around the oil cooler through the water pipe to absorb the oil heat, and then flows through the water jacket of the cylinder block and water passage of the cylinder head to absorb the heat of the combustion chamber.

The water absorbing the oil heat and combustion chamber heat goes on to the thermostat through the water pipe, and circulates to the water pump if water temperature is lower than the valve opening temperature on the thermostat, while circulating to the radiator at water temperature higher than the valve opening temperature. At the radiator, the heat absorbed in the coolant is radiated to cool down and the coolant recirculates to the water pump.

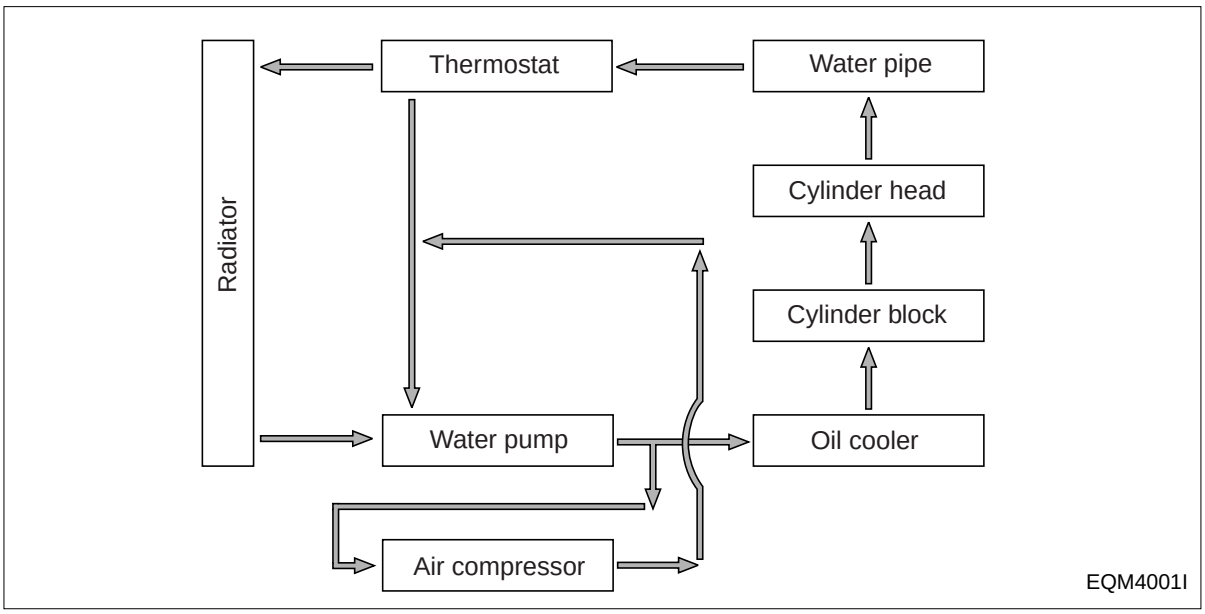

6.2.2. Specification

	Description	Specification
1. Water pump	Type	Centrifugal type
	Delivery	About 350 liter/min
	Pumping speed	2,100 rpm
	Pumping back pressure	760 mmHg
2. Thermostat	Operating temperature	71 ~ 85°C
3. Cooling fan and belt	Fan diameter - Number of blades	∅812.8 mm - 9
	Fan belt tension	15 mm / deflection by thumb

https://truckmanualshub.com/

6.2.3. Water pump

- Loosen the bolt (14) to disassemble the housing cover (13).
- Heat the impeller (5) slightly, then remove it using a puller jig.
- Remove the mechanical seal.
- Remove the shaft and bearing assembly from the housing.
- With a press, remove the spline shaft and bearing.
- Reverse the disassembly sequence for reassembly operation.
- Replace the oil seal (6) with a new one at reassembly.
- To reassemble the impeller, maintain a constant gap (0.3 ~ 0.6 mm) between the impeller and pump housing using a feeler gauge.

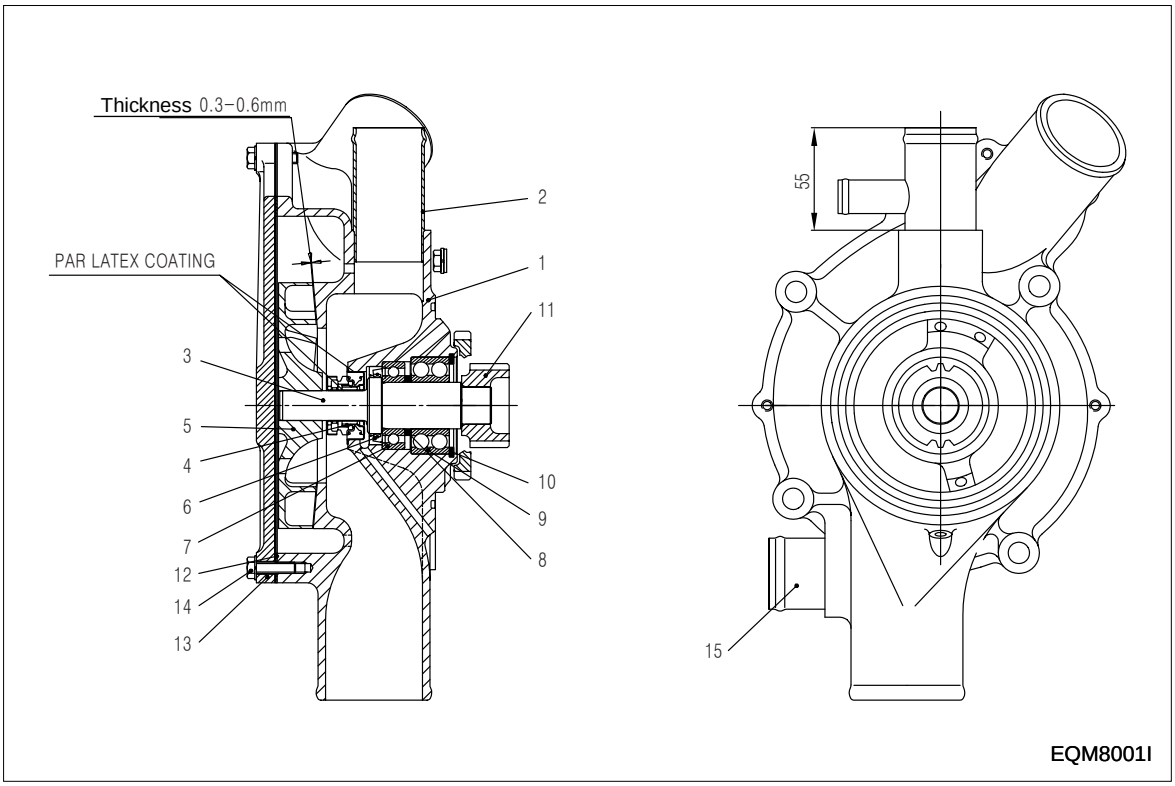

<Construction of water pump>

1. Water pump housing
2. Pipe
3. Shaft
4. Mechanical seal
5. Impeller
6. Oil seal
7. Ball bearing
8. Space
9. Ball bearing
10. Stopper ring
11. Spline shaft
12. Gasket
13. Housing cover
14. Bolt
15. Pipe

https://truckmanualshub.com/

6.2.4. Thermostat

● **General descriptions and main data**

The thermostat maintains a constant temperature of coolant (90 ~ 95 °C) and improves thermal efficiency of the engine by preventing heat loss.

Namely, when the temperature of coolant is low, the thermostat valve is closed to make the coolant bypass to directly enter the water pump; when the coolant temperature rises to open wide the thermostat valve, the bypass circuit is closed and the water passage to the radiator is opened so that the coolant is forced to flow into the radiator.

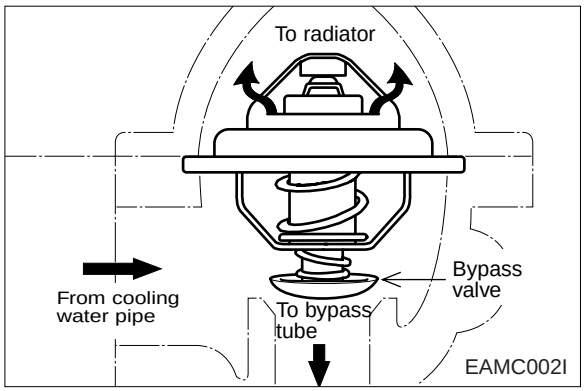

Item	Specification	
	In moderate climates	In tropical climates
Type	Wax-pallet type	Wax-pallet type
Open at	83 °C	71 °C
Open wide at	95 °C	85 °C
Valve lift	8 mm or more	Truck : 8 mm or more

NOTE :

There are 2 kinds of thermostats according to surrounding and operating conditions. One is named by 71 °C type and the other is 83 °C.

● **Inspecting**

(1) Check the wax pallet and spring for damage.

(2) Put the thermostat in a container of water, then heat the water slowly and check temperature with a thermometer. If the valve lift is 0.1 mm (starting to open) at temperature of 83 °C and 8 mm or more (opening wide) at temperature of 95 °C, the thermostat is normal.

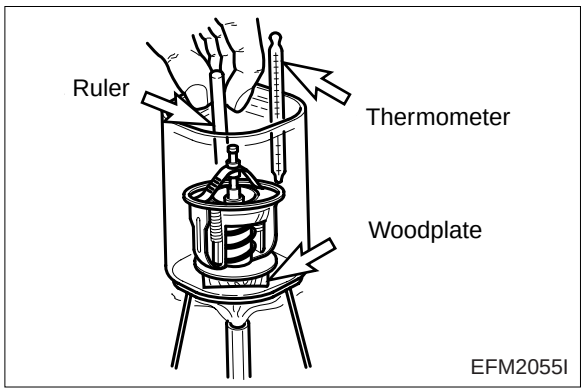

https://truckmanualshub.com/

● **Replacing thermostat and precautions for handling**

(1) Precautions for handling

The wax pallet type thermostat does not react as quickly as bellows type one to a variation of temperature of coolant. Such relatively slow reaction is mainly due to the large heat capacity of the wax pellet type thermostat. Therefore, to avoid a sharp rise of coolant temperature, it is essential to idle the engine sufficiently before running it. In cold weather, do not run the engine at overload or overspeed it immediately after engine starting.

(2) When draining out or replenishing coolant, do it slowly so that air is bled sufficiently from the entire cooling system.

(3) Replacing thermostat

If the thermostat is detected defective, retrace with a new one.

6.2.5. Diagnostics and troubleshooting

Complaints	Possible causes	Corrections
1. Engine overheating	● Lack of coolant ● Radiator cap pressure valve spring weakened ● Fan belt loosened or broken ● Fan belt fouled with oil ● Thermostat inoperative ● Water pump defective ● Restrictions in water passages due to deposit of scales ● Injection timing incorrect ● Restriction in radiator core ● Gases leaking into water jacket due to broken cylinder head gasket	● Replenish coolant ● Replace cap ● Adjust or replace fan belt ● Replace fan belt ● Replace thermostat ● Repair or replace ● Clean radiator and water passages ● Adjust injection timing correctly ● Clean exterior of radiator ● Replace cylinder head gasket
2. Engine overcooling	● Thermostat inoperative ● Ambient temperature too low	● Replace thermostat ● Install radiator curtain
3. Lack of coolant	● Radiator leaky ● Radiator hoses loosely connected or damaged ● Radiator cap valve spring weakened ● Water pump leaky ● Heater hoses loosely connected or broken ● Cylinder head gasket leaky ● Cylinder head or cylinder block cracked	● Correct or replace ● Retighten clamps or replace hoses ● Replace cap ● Repair or replace ● Tighten or replace hoses ● Replace cylinder head gasket ● Replace cylinder head or block
4. Cooling system noisy	● Water pump bearing defective ● Fan loosely fitted or bent ● Fan out of balance ● Fan belt defective	● Replace bearing ● Retighten or replace fan ● Replace fan ● Replace fan belt

https://truckmanualshub.com/

6.3. Lubricating System

6.3.1. General descriptions and main data

● **General descriptions**

All the engine oil pumped up from the oil pan by the gear type oil pump is filtrated through the oil cooler and oil filter, and this filtrated oil is forced through the main oil gallery in the cylinder block from where it is distributed to lubricate the various sliding parts, and fuel injection pump in order to ensure normal engine performance.

● **Specifications**

Item	Specifications	Item	Specifications
Lubricating system	Forced pressure circulation	Oil filter type	Full flow
Oil pump type Relief valve opening pressure	Gear type 10±1.5 kg/cm²	Bypass for filter element Valve opening pressure	1.8 ~ 2.3 kg/cm²
Bypass for oil cooler Opening pressure	5+1 kg/cm²	Relief valve Cylinder block main oil gallery	4.0 ~ 4.8 kg/cm²
Adjusting valve for spray nozzle Opening pressure	1.5 ~ 1.8 kg/cm²		

● **Diagram of lubricating system**

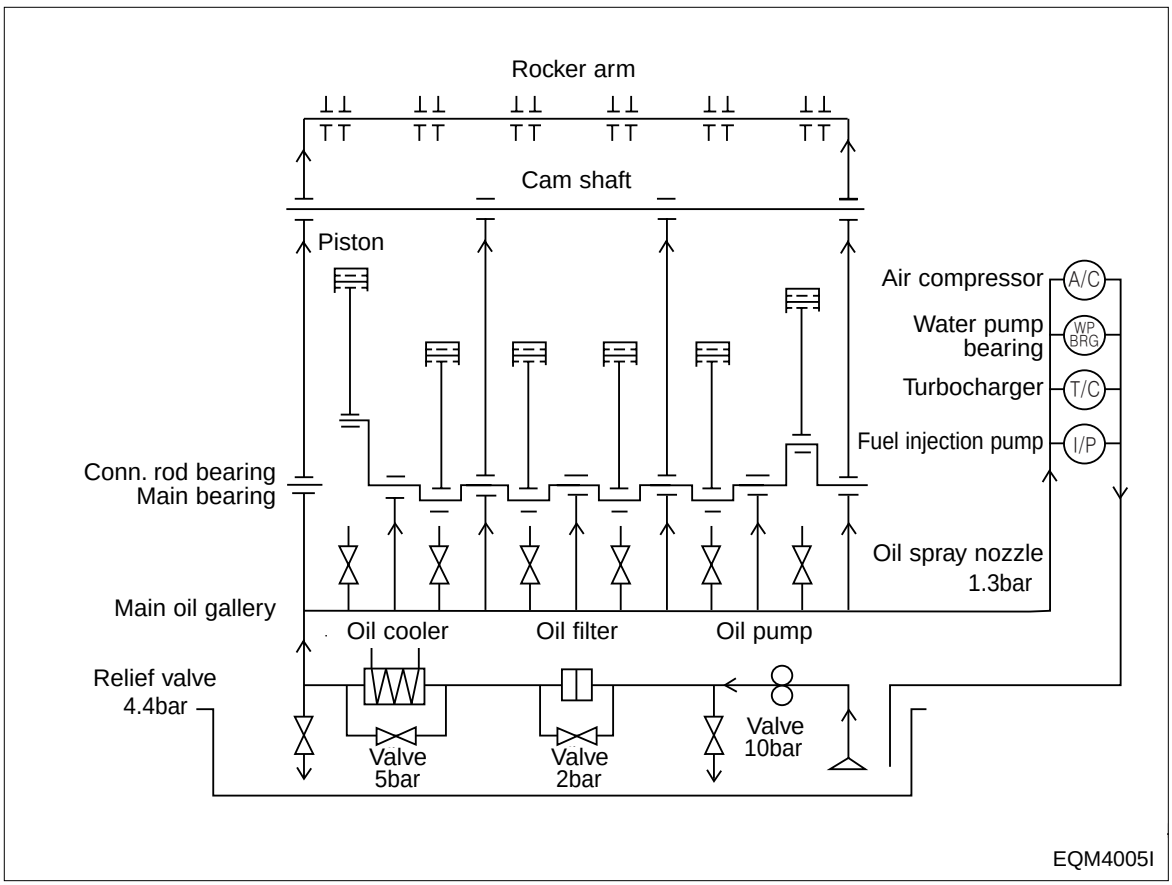

https://truckmanualshub.com/

6.3.2. Oil pump

● **Disassembly**

(1) Disassembly of oil pump drive gear

a. Unscrew the screw and disassemble the oil relief valve.

b. Unfold the washer for the oil pump drive gear fixing nut and remove the nut.

c. Disassemble the drive gear.

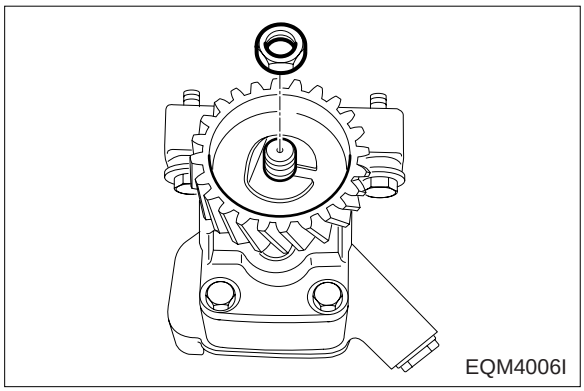

(2) Remove the oil pump cover fixing nuts and disassemble the oil pump cover.

The oil pump cover is fixed with the two dowel pins.

(3) Disassemble the drive gear and driven gear.

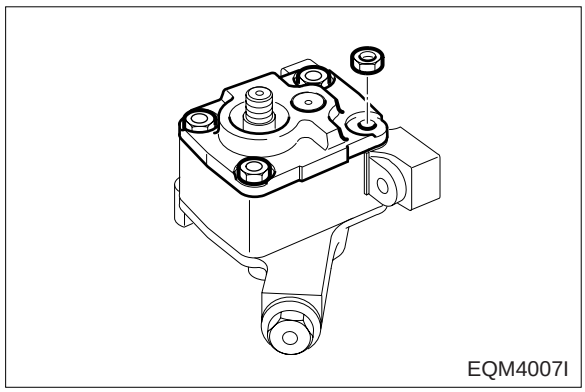

● **Inspection and correction**

(1) With steel rule and feeler gauge, measure the axial end play of the oil pump gear. Replace if the measured value is beyond the limit.

End play	0.025 ~ 0.089 mm

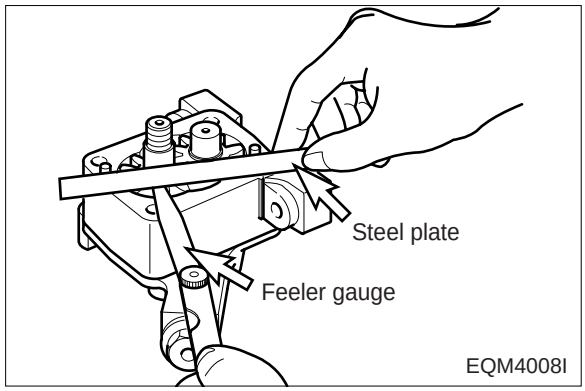

(2) With a feeler gauge, measure the amount of backlash between the oil pump drive gear and driven gear. Replace if the measured value is beyond the limit.

Backlash	0.50 ~ 0.64 mm

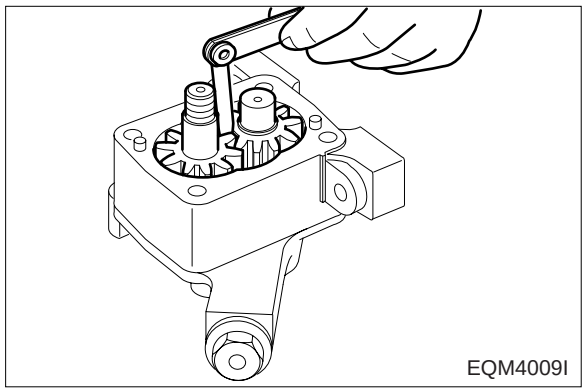

https://truckmanualshub.com/

(3) Measuring clearance between drive shaft and bushing

a. Measure the outside diameters of the drive shaft and driven shaft, and replace if the measured values are less than the limit.

Standard	ϕ16.95 ~ ϕ16.968 mm

b. Measure the inside diameter of the pump body bushing to determine the clearance between the bushing and shaft, and compare the measured value with the standard value to determine whether to replace or not.

Clearance	0.032 ~ 0.077 mm

● **Reassembly**

(1) For reassembly, reverse the disassembly sequence.

6.3.3. Oil filter

ClearanceThe oil filter mounted in this engine is of cartridge type, so it is necessary to replace it with a new one at the specified intervals.

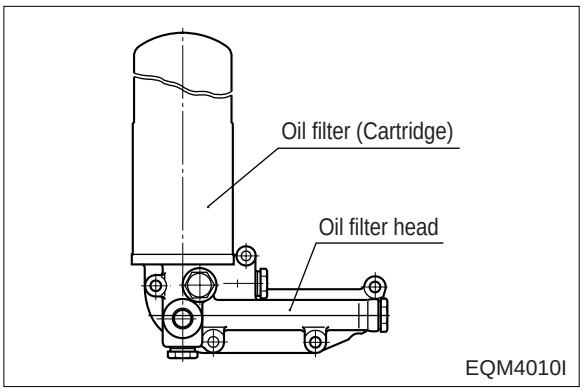

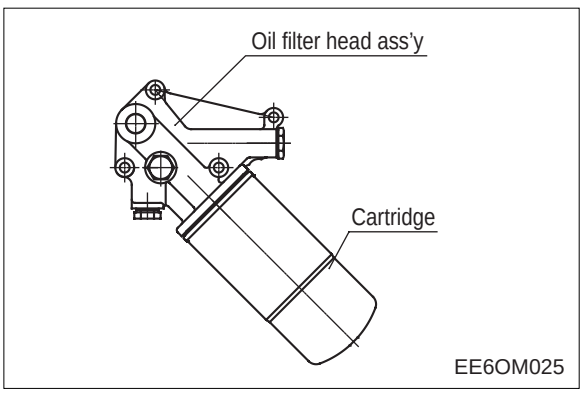

https://truckmanualshub.com/

6.3.4. Diagnostics and troubleshooting

Complaints	Possible causes	Corrections
1. Oil consumption excessive	● Poor oil ● Oil seal or packing leaky ● Pistons or piston rings worn ● Cylinder liner worn ● Piston rings sticking ● Valve guide oil seals or valve guides, or valve stem worn	● Use suggested oil ● Replace ● Replace pistons and/or piston rings ● Replace cylinder liner ● Replace pistons and/or piston rings ● Replace
2. Oil pressure too low	● Poor oil ● Relief valve sticking ● Restrictions in oil pump strainer ● Oil pump gear worn ● Oil pump feed pipe cracked ● Oil pump defective ● Oil pressure gauge defective ● Various bearings worn	● Use suggested oil ● Replace ● Clean strainer ● Replace ● Replace ● Correct or replace ● Correct or replace ● Replace
3. Oil deteriorates quickly	● Restriction in oil filter ● Gases leaking ● Wrong oil used	● Replace filter element ● Replace piston rings and cylinder liner ● Use suggested oil

https://truckmanualshub.com/

6.4. Turbocharger

6.1.1. Main data and specifications

1) Main data and specifications

Specification		DE12TI	DE12TIA, DE12TIS
Turbocharger Model		T45	GT42
At maximum output	Air pressure at compressor outlet	Approx. 1.2 kg/cm²	Approx. 1.3 kg/cm²
	Air suction volume	Approx. 22.0 m³/min	Approx. 22.5 m³/min
	Speed of turbine revolution	Approx. 96,000 rpm	Approx. 94,000 rpm
Maximum allowable		113,000 rpm	109,000 rpm
Max. allowable temperature of exhaust gas at turbine inlet		750 ℃	750 ℃
Lubricating system		External oil supply	External oil supply
Weight		14 kg	14 kg

2) Operating principle

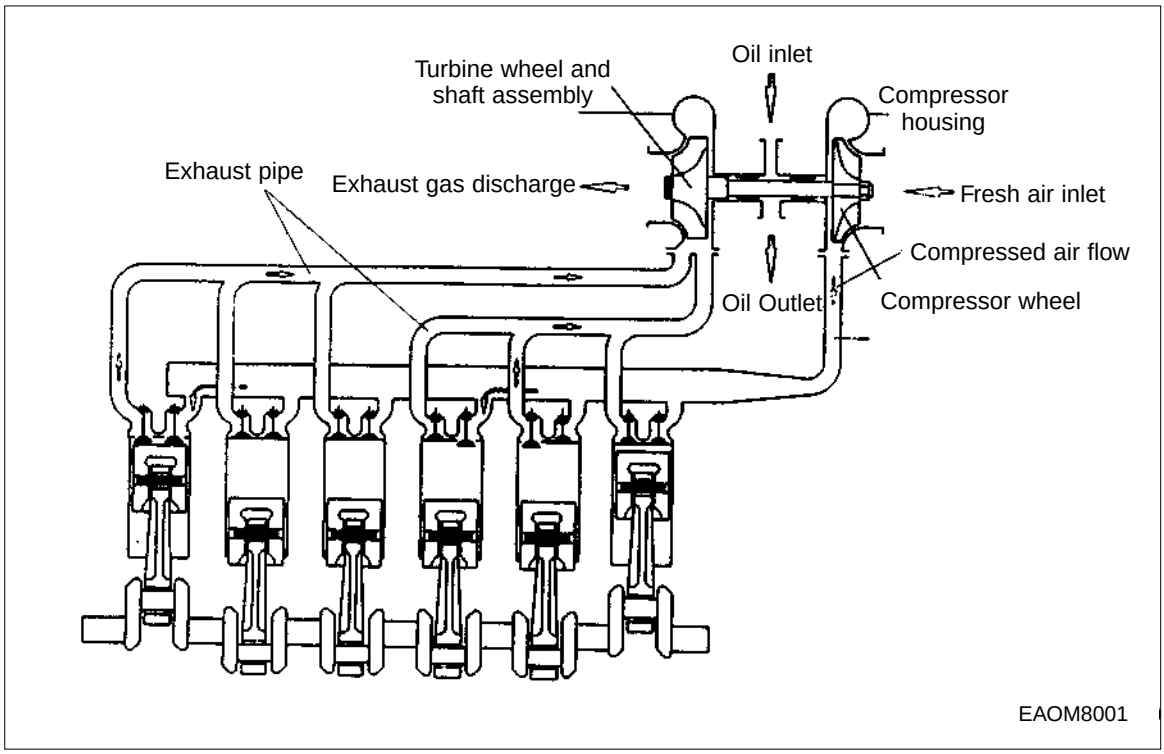

The turbocharger is a system designed to make use of the engine exhaust gas energy to charge high-density air into the cylinders, thereby to increase the engine output.

https://truckmanualshub.com/

3) Construction

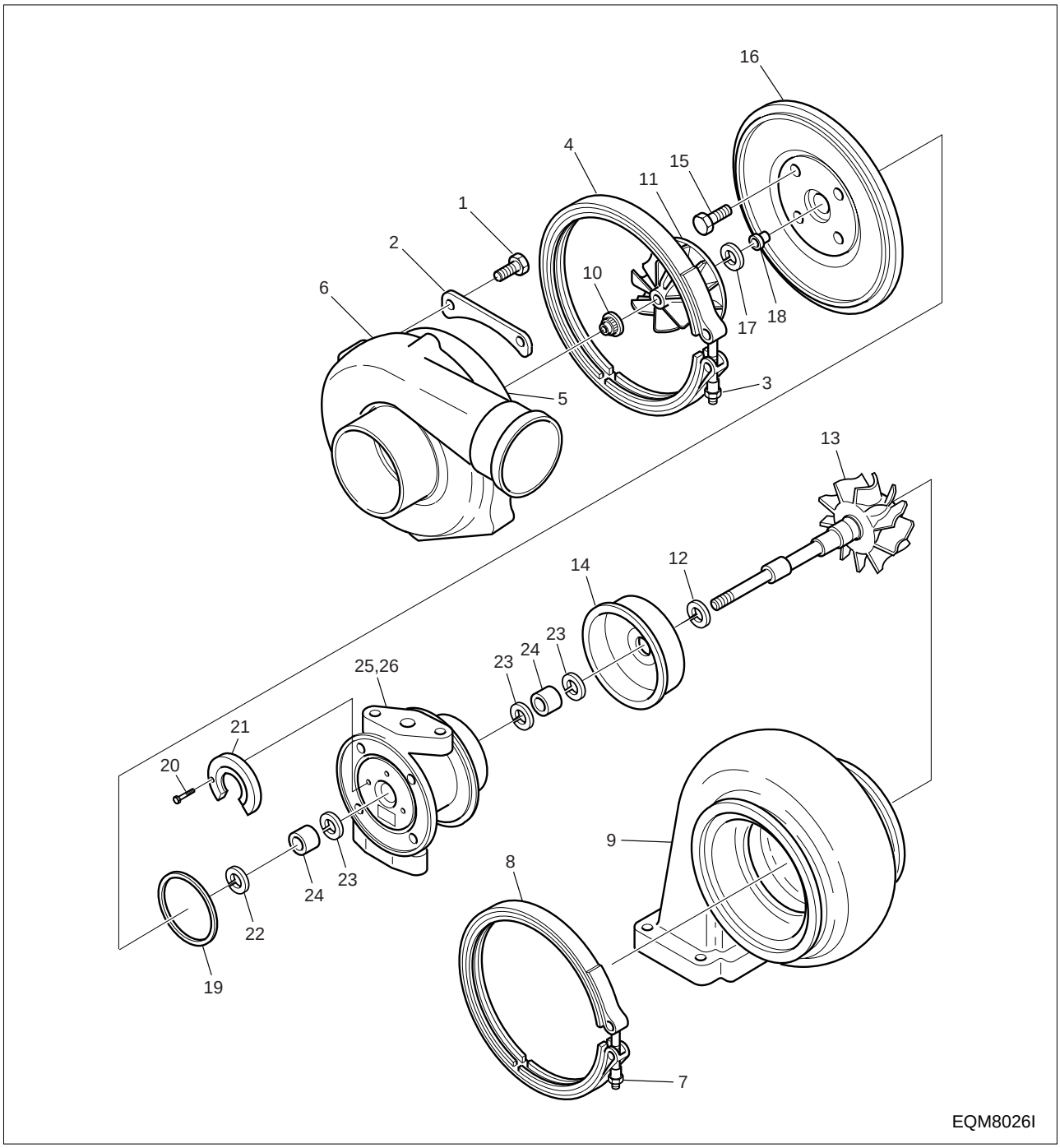

1. Bolt
2. Clamp
3. Lock nut
4. V-band
5. O-ring
6. Compressor housing
7. Lock nut
8. V-band
9. Turbine housing
10. Lock nut
11. Compressor wheel
12. Piston ring
13. Wheel assembly
14. Wheel shroud
15. Bolt
16. Plate assembly
17. Piston ring
18. Thrust spacer
19. Seal ring
20. Screw
21. Thrust bearing
22. Thrust collar
23. Retainer ring
24. Journal bearing
25. Housing assembly

https://truckmanualshub.com/

6.4.2. General descriptions

The engine output is determined by the fuel delivery volume and engine efficiency.
To burn the supplied fuel completely to change into effective power for the engine, the volume of air enough to burn the fuel completely should be supplied into the cylinders.
Therefore, the engine output is determined substantially by the cylinder capacity, and a greater volume of compressed air is charged into cylinders of given capacity, the greater engine output can be obtained as a greater volume of air charged into the cylinders burns so much more fuel.
As explained, the compressing of air to supply into the cylinders is called “Supercharging” and the making use of the energy of exhaust gas discharged from the combustion chamber to charge the compressed air into the cylinders is called “Turbocharging”.

6.4.3. Functions

1) Turbine

Exhaust gas discharged from the combustion chamber distributes its own energy to the turbine blades while passing the inside of the turbine housing, with the result that the turbine shaft can get rotating force. This is the operating principle of ‘turbine’, which is mounted with seal rings and heat protector to prevent exhaust gas from affecting the bearings adversely.

2) Compressor

The compressor, which is connected to the turbine over the one and same shaft to form a rotating body, takes in and compresses ambient air with rotating force transmitted from the turbine shaft. Then, the compressed air is delivered to the intake stake. This is the operating principle of the compressor.

3) Bearings

(1) Thrust bearing

The turbine wheel creates thrust force. Therefore, exercise care so that the shaft is not deviated from its the original position due to this thrust.

(2) Journal bearing

This journal bearing of floating type forms a dual oil film on both the inside and outside of the bearing so that the bearing can rotate independently. As the dual oil film plays a role as a damper, the sliding speed of the bearing surface becomes lower than the rotating speed of the shaft, resulting in assurance of stability in its movement.

4) Sealing-Compressor shaft

The compressor is of a dual construction type composed of seal plate and seal ring to prevent the leak of compressed air or lubricating oil.

6.4.4. Precautions for operation

1) Precautions for operation of engine

The following precautions should be observed when starting, operating, or stopping the engine :

Operations	Precautions	Reasons
When starting the engine	1) Check oil level 2) Crank the engine with starter to check the increase in oil pressure(until the needle of pressure gauge starts to move or pressure indicator lamp is actuated) before starting the engine. 3) When having replaced oil, oil filter element, or lubricating parts, or when having stopped the engine for extended period of time, or in a cold place, loosen the oil pipe connections and operate the starter motor until oil is discharged. After completing the operation, be sure to retighten the oil pipe connections portion before starting the engine.	2) Abrupt starting of the engine causes the engine to rotate with oil not being distributed not only to each part but also to the turbocharger, resulting in abnormal wear or seizure on the bearing due to insufficient supply of oil. 3) In the case of the engine stopped for extended time or in a cold place, oil fluidity within the pipes can be deteriorated
Immediately after starting	1) Run the engine at idle for 5 minutes after starting off. 2) Check each part for leakage of oil, gas, and air, and take proper measure.	1) Applying load abruptly If load is abruptly applied with the engine and turbocharger rotating unsmoothly, such parts that a sufficient amount of oil has not reached can be seized up. 2) Leakage of oil, gas, and air (especially, oil leak) causes drop in oil pressure and loss of oil results in seizure of the bearing.
During operation	Check the followings: 1) Oil pressure At idle: 0.8 kg/cm^2 or more At full load: 3.0 ~ 4.8 kg/cm^2 2) If unusual sound or vibration is heard or felt, reduce engine revolutions slowly and locate the cause.	1) Excessively low oil pressure causes unusual wear or seizure of the bearing. Too high pressure causes oil leakage. 2) The engine is operated continuously with unusual sound or vibration not corrected, it can be damaged beyond repair.
When stopping the engine	1) Run the engine at idle for 5 minutes before stopping.	1) If the engine is put to a stop after being operated at high load, heat from the red-hot turbine blades is transmitted to the bearing portion and burns oil to cause seizure of the bearing metal and rotating shaft.

https://truckmanualshub.com/

6.4.5. Walk-around check and servicing

As the condition of turbocharger depends greatly on how well the engine is serviced, it is very important to maintain the engine in accordance with the specified maintenance procedure.

1) Intake system

Pay particular attention to the air cleaner when servicing the intake system.

In the case of wet-type air cleaner, if the level of oil surface is lower than specified, cleaning effect is poor; if too high, the cleaner draws in oil to foul the case.

Especially, if the rotor is fouled, the sophisticatedly-tuned balance is broken to create vibration and to cause seizure and unusual wear to the bearing.

Therefore, it is very important to use a good quality air cleaner all the time.

In the case of dry-type air cleaner, it is essential to clean it to reduce intake resistance as much as possible.

2) Exhaust system

Pay particular attention to prevent gas leaks and seizure when servicing the exhaust system because leakage of exhaust gas from discharge pipes, turbocharger fixing portions, etc. lowers charging effect.

As such components as turbine chamber that becomes red-hot during operation use heat resisting steel nuts, do not interchange these nuts with ordinary steel nuts. In addition, apply anti-seizure coating to fixing nuts on the portions as designated.

3) Fuel system

If the full load stopper regulating the maximum injection volume and the maximum speed stopper regulating the maximum speed in the fuel injection pump are adjusted without using a pump tester, the turbocharger rotates at excessively rapid speed and may suffer damage. Besides of it, if spray pattern from the fuel injection nozzles is bad or the injection timing is incorrect, temperature of exhaust gas rises up to affect the turbocharger adversely. To avoid such trouble, be sure to make a nozzle test.

4) Lubricating system

Pay particular attention to oil quality and oil filter change intervals when servicing the lubricating system. Deteriorated engine oil affects adversely not only the engine but torso the turbocharger. Suggested engine oils for the turbocharger-mounted engine are as follows :

Engine model	Recommend oil	
	SAE No.	API No.
DE12T/TI/TIA	SAE 15W40	above CD or CE
DE12TIS	SAE 15W40 SAE 10W40	ACEA-E2 or ACEA-E3 (API CH-4)

* If long oil change intervals are to be used, ACEA-E3 oil must be used.

https://truckmanualshub.com/

6.4.6. Periodical checking and servicing

Make it a rule to check the turbocharger assembly for condition and contamination periodically.

1) Guide for checking the rotor for rotating condition

The inspection of the rotor assembly for rotating condition should be performed by the degree of unusual sound. If a sound detecting bar is used, install its tip on the turbocharger housing and increase the engine revolutions slowly. If a high-pitch sound is heard continuously, it means that the rotor assembly is not normal. In this case, as the metal bearing and rotor are likely to be in abnormal conditions, the turbocharger should be replaced or repaired.

2) Guide for checking rotor end play

Disassemble the turbocharger from the engine, then check the rotor axial play and radial play.

When disassembling the turbocharger, be sure to plug the oil inlet and outlet ports with taps, etc.

(1) Rotor axial play

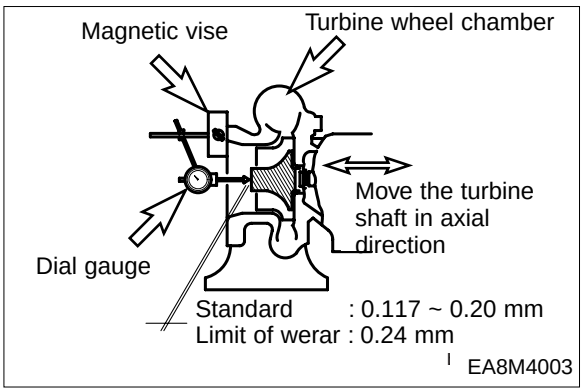

(2) Rotor radial play

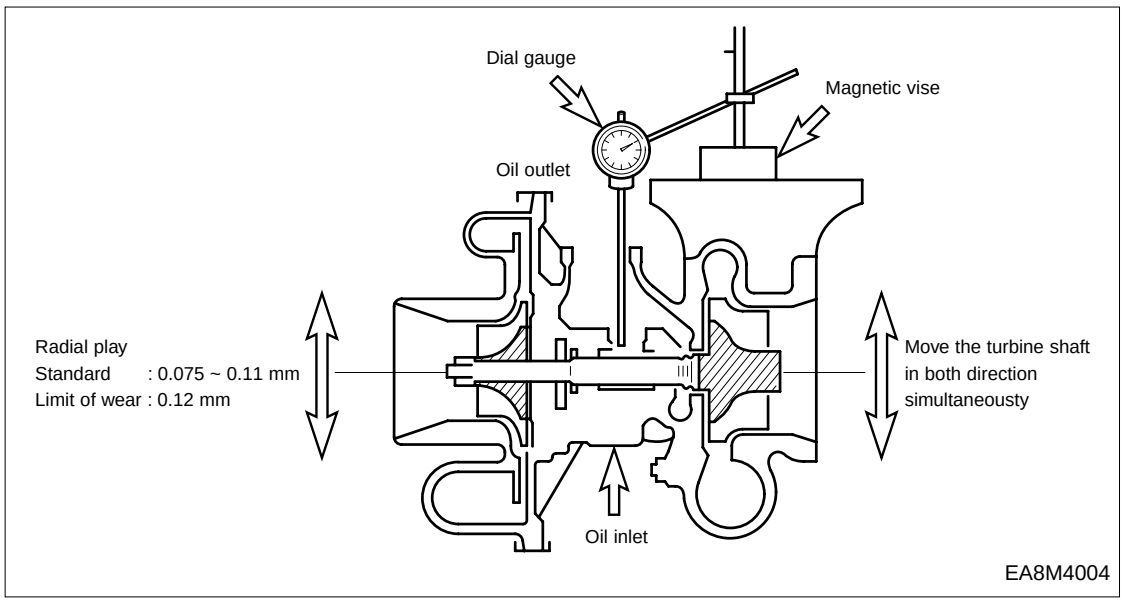

(3) If the measured axial and radial plays are beyond the limit of wear, replace or repair the turbocharger.

https://truckmanualshub.com/

3) Guide for disassembling/cleaning and checking the turbocharger

First, disassemble the turbocharger from the engine and clean/check it with the oil inlet and outlet plugged with tape and so on.

4) Precautions for reassembling the turbocharger onto the engine

For reassembly of the turbocharger or handling it after reassembly operation, be sure to observe the following precautions :

Especially, exercise extreme care to prevent foreign matters from entering the inside of the turbocharger.

(1) Lubricating system

- Before reassembling the turbocharger onto the engine, inject new oil in the oil inlet port and lubricate the journal and thrust bearings by rotating them with hand
- Clean not only the pipes installed between the engine and oil inlet port but also the oil outlet pipe and check them for damage or foreign matters.
- Assemble each joint on oil pipes securely to prevent oil leaks.

(2) Intake system

- Check the inside of the intake system for foreign matters.
- Assemble each joint on the intake duct and air cleaner securely to prevent air leaks.

(3) Exhaust system

- Check the inside of the exhaust system for foreign matters.
- Be sure to use heat resisting steel bolts and nuts. Do not interchange them with ordinary steel bolts and nuts when performing reassembly operation. Apply anti-seizure coating to the bolts and nuts.
- Assemble each joint on the exhaust pipes securely to prevent gas leaks.

https://truckmanualshub.com/

6.4.7. Diagnostics and troubleshooting

Complaints	Possible causes	Corrections
1. Excessive black smoke	1) Air cleaner element clogged	Replace or clean
	2) Restrictions in air duct	Check and correct
	3) Leakage at intake manifold	Check and correct
	4) Turbocharger seized up and not rotating	Disassemble/repair or replace
	5) Turbine blades and compressor blades coming in contact with each other or damaged	Disassemble/repair or replace
	6) Exhaust piping deformed or clogged	Check and correct
2. Excessive white smoke	1) Oil leak into turbine and compressor	Disassemble/repair or replace
	2) Worn or damaged seal ring due to excessive wear of bearing	Disassemble/repair or replace
3. Low engine output	1) Gas leak at each part of exhaust system	Check and correct
	2) Air cleaner element restricted	Replace or clean
	3) Turbocharger fouled or damaged	Disassemble/repair or replace
	4) Leakage at discharge port on compressor side	Check and correct
4. Unusual sound or vibration	1) Rotor assembly coming in contact	Disassemble/repair or replace
	2) Unbalanced rotation of rotor	Disassemble/repair or replace
	3) Seized up	Disassemble/repair or replace
	4) Each joint loosened	Check and correct

https://truckmanualshub.com/

6.5. Air Intake System

6.5.1. Maintenance

(only when engine is switched off)

Empty the dust bowl (7) regularly. The bowl should never be filled more than halfway with dust. On slipping off the two clamps (3), the dust bowl can be removed. Take off the cover (6) of the dust bowl and empty.

Be careful to assemble cover and bowl correctly.

There is a recess in the cover rim and a lug on the collector which should register.

Where the filter is installed horizontally, watch for “top” mark on cleaner bowl.

1. Connection port, fouling indicator
2. Cleaner housing
3. Clamp
4. Element
5. Hexagon nut
6. Cover
7. Dust bowl

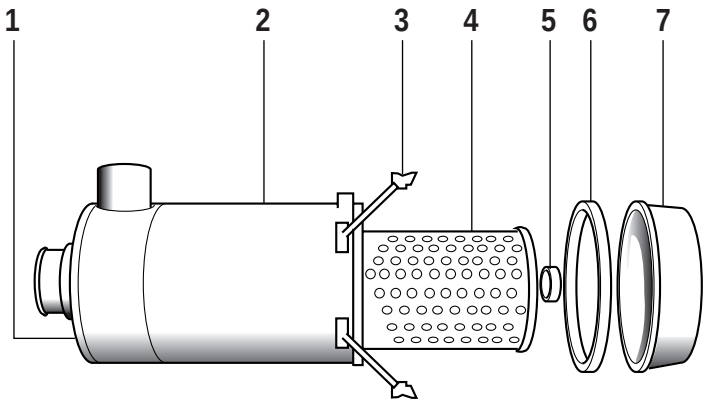

EA6O5012

6.5.2. Changing filter element

Caution :

Do not allow dirt to get into the clean air end.

- On removing the hexagon nut, take out the dirty cartridge and renew or clean.
- Wipe the cleaner housing with a damp cloth, in particular the sealing surface for the element.

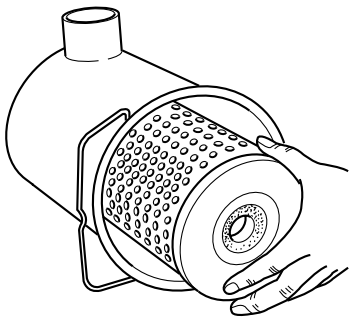

EA6O5013

https://truckmanualshub.com/

6.5.3. Cleaning filter elements

- **By compressed air**

  (wear goggles)

  - For the purpose, the air gun should be fitted with a nozzle extension which is bent 90° at the discharge end and which is long enough to reach down inside to the bottom of the element.
  - Moving the air gun up and down, blow out the element from the inside (maximum 5 bar) until no more dust comes out of the filter pleats.

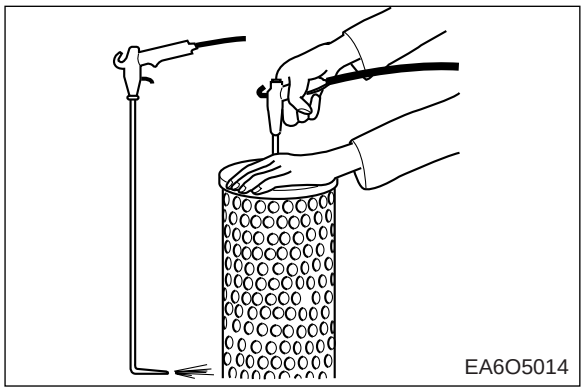

- **By washing**

  - Before washing, the element should be precleaned by means of compressed air, as described above.
  - Then allow the element to soak in lukewarm washing solvent for 10 minutes, and then move it to and for in the solvent for about 5 minutes.
  - Rinse thoroughly in clean water, shake out and allow drying at room temperature. The cartridge must be dry before it is reinstalled.
  - Never use steam sprayers, petrol (gasoline), alkalis or hot liquids etc. to clean the filter elements.

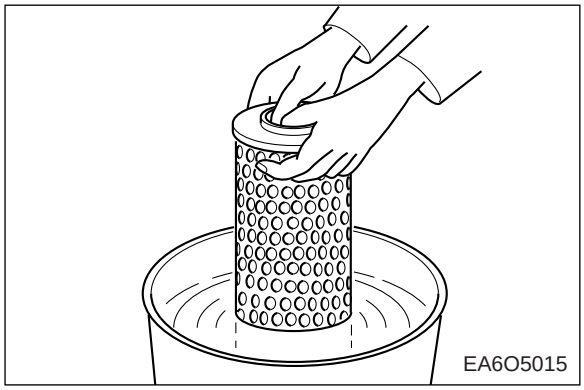

- **Knocking out dirt by hand**

  - In emergencies, when no compressed air or cleaning agent is available, it is possible to clean the filter cartridge provisionally by hitting the end disk of the cartridge with the ball of one's thumb.
  - Under no circumstances should the element be hit with a hard object or knocked against a hard surface to loosen dirt deposits.

https://truckmanualshub.com/

- **Checking the air cleaner cartridge**
  - Before reinstalling the cartridge, it must be checked for damage e.g. to the paper pleats and rubber gaskets, or for bulges and dents etc. in the metal jacket.
  - Cracks and holes in the paper pleating can be established by inspecting the cartridge with a flashlight.
  - Damaged cartridges should not be reused under any circumstances. In cases of doubt, discard the cartridge and install a new one.

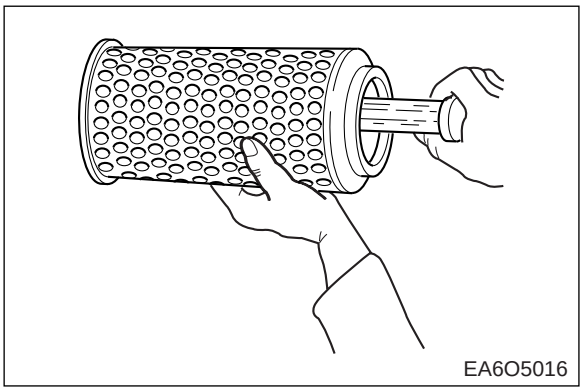

6.6. V-belts

(1) Change the V-belts if necessary

If in the case of a multiple belt drive, wear or differing tensions are found, always replace the complete set of belts.

(2) Checking condition

Check V-belts for cracks, oil, overheating and wear.

(3) Testing by hand

- **V-belt**

The tension is correct if the V-belts can be pressed in by about the thickness of the V-belt. (no more midway between the belt pulleys)

A more precise check of the V-belt tension is possible only by using a V-belt tension tester.

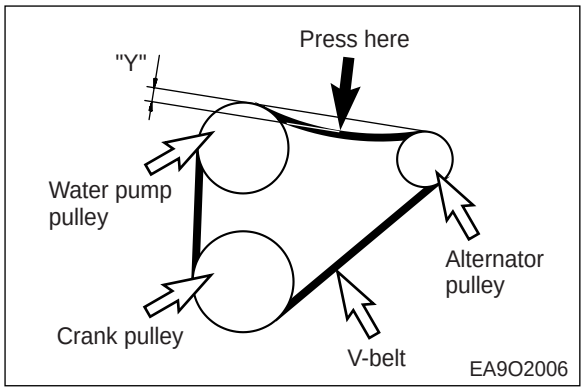

- **Poly belt**

Poly belt will be properly tensioned if the deflection force "F" is applied mid-way between the belt's tangent points with the pulley.

T = 0.015 x S (about 1.5 mm per 100 mm)

T = 0.015 x *S (mm)

(T : Deflection, S : Span)

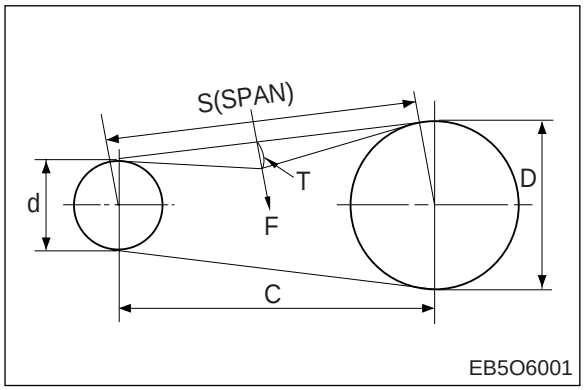

$$*S = \sqrt{C^2 - \frac{(D-d)^2}{2}} \text{ (mm)}$$

C : Distance of pulleys (mm),

D : Large pulley diameter (mm),

d : Small pulley diameter (mm)

https://truckmanualshub.com/

4) Measuring tension

① Lower indicator arm (1) into the scale.

- Apply tester to belt at a point midway between two pulleys so that edge of contact surface (2) is flush with the V-belt.
- Slowly depress pad (3) until the spring can be heard to disengage. This will cause the indicator to move upwards. If pressure is maintained after the spring has disengaged a false reading will be obtained!

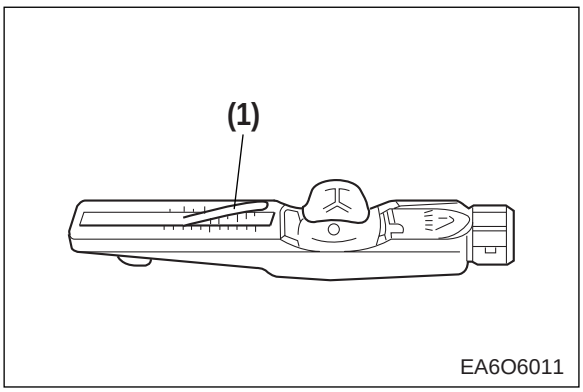

② Reading of tension

- Read of the tensioning force of the belt at the point where the top surface of the indicator arm (1) intersects with the scale.
- Before taking readings make ensure that the indicator arm remains in its position.

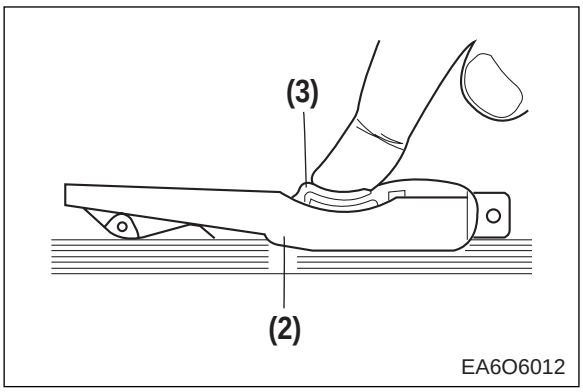

Type	Drive belt width	Tensioning forces on the tester		
		new installation		When servicing after long running time
		Installation	After 10 min. running time	
M	9.5 mm	50 kg	45 kg	40 kg
A	11.8 mm	55 kg	50 kg	45 kg
B	15.5 mm	75 kg	70 kg	60 kg
C	20.2 mm	75 kg	70 kg	60 kg

(5) Tensioning and changing V-belt

- Remove fixing bolts. (1)
- Remove lock nut. (2)
- Adjust nut (3) until V-belts have correct tensions.
- Retighten lock nut and fixing bolts.

To change the V-belts loosen mounting bolts (1) and lock nut (2) and push tension pulley inwards by turning adjusting nut (3).

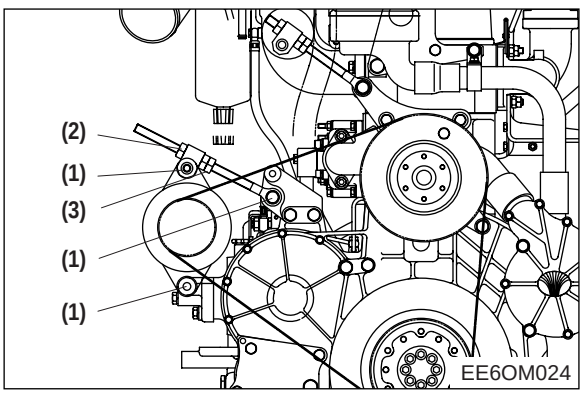

https://truckmanualshub.com/

7. SPECIAL TOOL LIST

No.	Part No.	Figure	Tool Name	Remark
1	DPN-5337	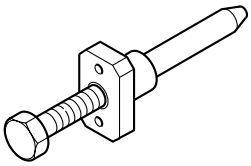	Nozzle tube insert ass'y	
2	EF.123-082	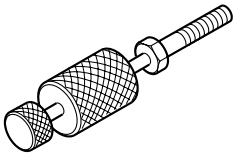	Nozzle tube extractor	
3	EF.123-015	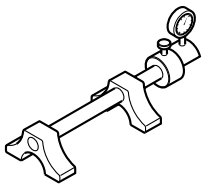	Injection pump setting ass'y	D2366 DE12/T/TI
	EF.123-156			DE12TIS
4	EF.123-127	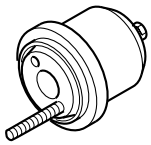	Oil seal insert ass'y (Front)	CR : made USA (up to 2000. Apr.)
	EF.123-173			NOK : made Japan (From 2000. may.)
5	EF.123-053	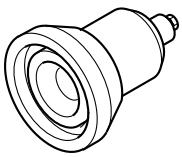	Oil seal insert ass'y (Rear)	CR : made USA (up to 2000. Apr.)
	EF.123-194			NOK : made Japan (From 2000. may.)
6	EF.123-052	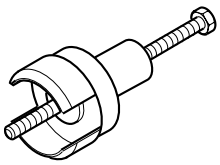	Oil seal puller ass'y (Front)	
7	EF.123-048	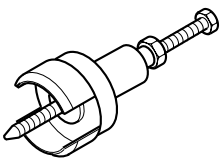	Oil seal puller ass'y (Rear)	
8	EU.2-0531	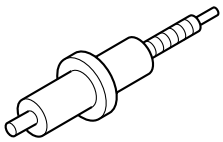	Cylinder pressure tester adapter	
9	EU.123-087	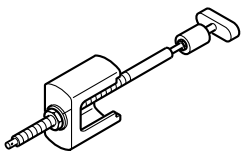	Cylinder liner puller ass'y	

https://truckmanualshub.com/

No.	Part No.	Figure	Tool Name	Remark
10	EF.123-066	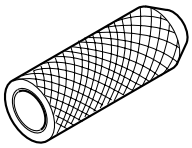	Valve stem seal punch	
11	EU.2-0131	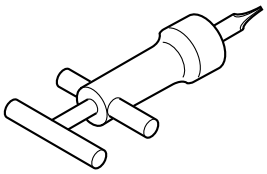	Valve clearance adjust ass'y	
12	EF.123-065	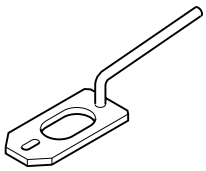	Valve spring press	
13	EU.2-0647	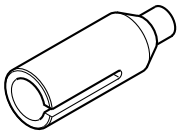	Crankshaft gear punch	
14	EF.123-079	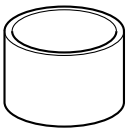	Piston sleeve	DE12/T/TI/TIS
	EF.120-208			Use all engine
15	60.99901-0027	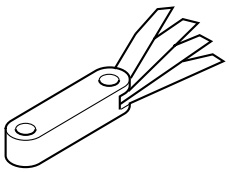	Feeler gauge	
16	T7610001E	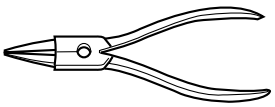	Snap ring plier	
17	T7621010E		Piston ring plier	

https://truckmanualshub.com/

APPENDIX

● Tightening torque for major parts

Major Parts	Screw (Diameter x pitch)	Strength (grade)	Tightening Torque	Remarks
Cylinder head bolt	M14 × 1.5	10.9T	1st : 6 kg•m 2nd : 180° Finished : 150° (angle torque)	Dodecagon
		12T	24.5 kg•m	hexagon
			1st : 6 kg•m 2nd : 90° + 90° Finished : 30° (angle torque)	Dodecagon
Cylinder head cover bolt	M8	8.8T	1.2 kg•m	
Connecting rod bearing cap bolt	M16 × 1.5	12.9T	1st : 15 kg•m 2nd : 22 kg•m 3rd : 30 kg•m	
Crankshaft main bearing cap bolt	M16 × 1.5	12.9T	1st : 15 kg•m 2nd : 25 kg•m 3rd : 30 kg•m	
Balance weight fixing bolt	M14 × 1.5	10.9T	14.0 kg•m	Split type
Flywheel fixing bolt	M14 × 1.5	10.9T	18.0 kg•m	
Crankshaft pulley fixing bolt	M12 × 1.5	12.9T	13.4 kg•m	
Oil spray nozzle	M6	8.8T	1.0 kg•m	

● Tightening torque for injection pump system

Major Parts	Screw (Diameter x pitch)	Strength (grade)	Tightening Torque	Remarks
Injection nozzle holder nut	M6	8.8T	1.0 kg•m	
Injection pump bracket	M10	8.8T	4.4 kg•m	
Injection pump coupling bolt	M10	-	6.0 kg•m	
Injection pump driving gear nut	M24 × 1.5	8.8T	25.0 kg•m	
High pressure injection pipe fixing cap nut	M14 × 1.5	8.8T	3.0 kg•m	
Injection pump delivery valve holder	-	-	13 ~ 14 kg•m	

● Standard bolt tightening torque table

Refer to the following table for bolts other then described above

Diameter × pitch (mm)	Degree of strength										
	3.6	4.6	4.8	5.6	5.8	6.6	6.8	6.9	8.8	10.9	12.9
	(4A)	(4D)	(4S)	(5D)	(5S)	(6D)	(6S)	(6G)	(8G)	(10K)	(12K)
	Limit value for elasticity (kg/mm^2)										
	20	24	32	30	40	36	48	54	64	90	108
	Tightening torque (kg•m)										
M5	0.15	0.16	0.25	0.22	0.31	0.28	0.43	0.48	0.5	0.75	0.9
M6	0.28	0.30	0.45	0.4	0.55	0.47	0.77	0.85	0.9	1.25	0.5
M7	0.43	0.46	0.7	0.63	0.83	0.78	1.2	1.3	1.4	1.95	2.35
M8	0.7	0.75	1.1	1	1.4	1.25	1.9	2.1	2.2	3.1	3.8
M8 × 1	0.73	0.8	1.2	1.1	1.5	1.34	2.1	2.3	2.4	3.35	4.1
M10	1.35	1.4	2.2	1.9	2.7	2.35	3.7	4.2	4.4	6.2	7.4
M10 × 1	1.5	1.6	2.5	2.1	3.1	2.8	4.3	4.9	5	7	8.4
M12	2.4	2.5	3.7	3.3	4.7	4.2	6.3	7.2	7.5	10.5	12.5
M12 × 1.5	2.55	2.7	4	3.5	5	4.6	6.8	7.7	8	11.2	13.4
M14	3.7	3.9	6	5.2	7.5	7	10	11.5	12	17	20
M14 × 1.5	4.1	4.3	6.6	5.7	8.3	7.5	11.1	12.5	13	18.5	22
M16	5.6	6	9	8	11.5	10.5	17.9	18.5	18	26	31
M16 × 1.5	6.2	6.5	9.7	8.6	12.5	11.3	17	19.5	20	28	33
M18	7.8	8.3	12.5	11	16	14.5	21	24.2	25	36	43
M18 × 1.5	9.1	9.5	14.5	12.5	18.5	16.7	24.5	27.5	28	41	49
M20	11.5	12	18	16	22	19	31.5	35	36	51	60
M20 × 1.5	12.8	13.5	20.5	18	25	22.5	35	39.5	41	58	68
M22	15.5	16	24.5	21	30	26	42	46	49	67	75
M22 × 1.5	17	18.5	28	24	34	29	47	52	56	75	85
M24	20.5	21.5	33	27	40	34	55	58	63	82	92
M24 × 1.5	23	25	37	31	45	38	61	67	74	93	103

Others : 1. The above torque rating have been determined to 70% or so of the limit value for bolt elasticity.

2. Tension is calculated by multiplying tensile strength by cross section of thread.

3. Special screws should be tightened to 85% or so of the standard value.
For example, a screw coated with MoS2 should be tightened to 60% or so of the standard value.

● Tightening torque for hollow screw (4-hole)

Material	M8	M10	M12	M14	M16	M18	M22	M26	M30	M38
SM25C	-	1.6	2.5	3.5	4.5	5.5	9.0	13.0	18.0	30.0
*SUM22L	0.8	1.8	3.0	4.0	5.5	6.5	11.0	16.0	20.0	35.0
STS304	0.8	1.8	3.0	4.0	5.5	6.5	11.0	16.0	20.0	35.0

* : Adopted in DAEWOO engine

● Maintenance specification table

(unit : mm)

Group	Part	Inspection Item		Stand value for assembly	Limit for use	Correction	Remark
Engine body	Cylinder block & liner	Inside diameter of Cylinder liner for wear		ϕ123 ~ ϕ123.023	ϕ123.223	Replace liner	Measure unworn portion beneath the rim of the upper side
		Projected portion of liner		0.03 ~ 0.08			
		The upper surface of Cylinder block of distortion		0.05	-	Correct with a surface grinder	Per distortion length for 200 mm
		Hydraulic test for 1 minute (kg/cm²)		4			
	Cylinder head & valve	Valve seat depression	Intake	0 ~ 0.3	0.55		In case of new valve and seat
			Exhaust	0 ~ 0.3	0.55		
		Height		114.95 ~ 115	113.9	Replace cyl. head	
		Hydraulic test for 1 minute (kg/cm²)		4	-	Replace if leaky	Water temp. 70˚C
Major moving parts	Piston	Piston diameter (18 mm from the lower side)		ϕ122.873 ~ ϕ122.887	-		
		Clearance between piston and liner		0.113~0.152	- -		
		Width of piston ring grooves	Top ring	3.5	-	Replace piston if groove width is beyond specified value	
			2nd ring	3.060 ~ 3.080	-		
			Oil ring	4.040 ~ 4.060	-		
		Piston projection from cylinder block upper surface		0 ~ 0.12	-		Measure unworn portion beneath the rim of the upper side
		Permissible weight difference of each piston		±15 g	96 g		
	Piston ring	Piston ring gap	Top ring	0.30 ~ 0.45	1.5		Standard gauge inside diameter : ϕ123 *mark DE12TIS
			2nd ring	0.35 ~ 0.50	1.5		
			Oil ring	0.30 ~ 0.50 *0.30 ~ 0.70	1.5		
		Piston ring side clearance	Top ring	-	-	Replace ring or piston	Limit for use if for standard clearance
			2nd ring	0.07 ~ 0.102	0.15		
			Oil ring	0.05 ~ 0.085	0.15		
		Direction of ring gap		-	-	Install ring by 120˚C	

(unit : mm)

Group	Part	Inspection Item	Stand value for assembly	Limit for use	Correction	Remark
Major moving parts	Crank shaft	Axial run-out of journal and pin	0.05	0.1	Correct with a grinder	In horizontal and vertical directions
		Outside diameter of journal	ϕ95.966 ~ ϕ95.988	ϕ94.966	Replace crankshaft	ϕ96 g6
		Outside diameter of pin	ϕ82.966 ~ ϕ82.988	ϕ81.966	Replace crankshaft	ϕ83 g6
		Out of round of journal and pin	0.008	0.025		
		Permissible radial run out of journal and pin	0.01	0.03		
		Permissible taper of journal and pin	0.02	0.03		
		Clearance between crankshaft and bearing	0.072 ~ 0.142	0.25	Replace bearing	Measure in the position of crown
		End play of crankshaft	0.15 ~ 0.325	0.5	Replace thrust bearing	
		Run out of crankshaft	0.1	0.15 or less	Adjust by a press if bent	No.4 bearing (holding no.1 & 7)
		Balance of crankshaft	60	60 or less	Check dynamic balance	Measure at 400 rpm
		Tightening torque of journal bearing cap bolt (kg•m)	30	-	Apply oil to bolt	No foreign, matters on bearing cap install surface
		Journal bearing crush	0.11 ~ 0.13	-		Measure by tightening metal cap & then loosening one stud bolt
		Oil seal for wear	-	-	Replace oil seal if oil leaking	Replace with new one, use shim
	Connec-ting rod	Clearance between con-rod bearing & crank pin	0.049 ~ 0.119	0.20	Replace bearing	
		End play of con-rod crush	0.22 ~ 0.319	0.5	Replace con-rod	
		Clearance between small end bush & piston pin	0.050 ~ 0.080	0.12		
		Connecting rod bearing crush height	0.086 ~ 0.116	-		After completing of bearing loosen one stud bolt & measure
		Permissible weight difference of each con-rod	±18 g	-		
		Tighening torque of con-rod bearing cap bolt (kg•m)	28	-	Apply oil to bolt	
	Cam shaft	Outside diameter of cam shaft	ϕ59.860 ~ ϕ59.880	ϕ59.52		ϕ60
		Clearance between cam shaft and bush	0.050 ~ 0.128	0.20		
		Axial play of camshaft	0.13 ~ 0.27	0.30	Replace thrust place	
	Timing gear	Clearance between idle gear shaft and inserting hole	0.025 ~ 0.091	0.15		
		End play of idle gear shaft	0.043 ~ 0.167	0.3	Replace thrust collar	
		Between crank gear & idle gear	0.10 ~ 0.20	-	Replace gear	
		Between idle gear & camshaft gear	0.10 ~ 0.20	-		

https://truckmanualshub.com/

(unit : mm)

Group	Part	Inspection Item			Stand value for assembly	Limit for use	Correction	Remark
Valve system	Valve	Outside diameter of intake valve stem			ϕ10.950 ~ ϕ10.970	ϕ10.87	Replace valve & guide	Replace valve guide together when replacing valve
		Outside diameter of exhaust valve stem			ϕ10.935 ~ ϕ10.955	ϕ10.84		
		Clearance between valve stem and valve guide	Intake		0.030 ~ 0.065	0.15	Replace valve & guide	
			Exhaust		0.045 ~ 0.080	0.18	Replace	
		Thickness of valve	Intake		1.5	1 or more	Replace	
			Exhaust		1.5	0.9 or more		
		Perm. radial run-out between valve stem & valve head	Intake		0.03	0.2	Replace	
			Exhaust		0.03	0.25		
		Clearance between valve guide & cyl. head installing hole			0.01 ~ 0.39	-		Apply oil to valve guide & press in
		Clearance between valve guide & vavle spring seat	Intake		22	-		
			Exhaust		22	-		
		Intake valve spring	Free length		75.5 *85.9	72 *82.5		* Mark DE12TIS
			Spring tension (set length : 37 mm) kg		61.8 ~ 68.3 *74.4 ~ 82.4	61.8 *74.4		
			Straightness (against free length)		1.0 *1.5	2.0		
		Exhaust spring	Inner	Free length	65 *76.4	61.75 *72		
				Spring tension (set length : 34 mm) kg	36.1 ~ 39.9 *45.1 ~ 50.1	36.1 *45.1	Replace valve spring	
				Straightness (against free length)	1.0 *1.5	2.0		
			Outer	Free length	75.5 *85.9	72 *82.5		
				Spring tension (set length : 37 mm) kg	61.8 ~ 68.3 *74.4 ~ 82.4	61.8 *74.4	Replace valve spring	
				Straightness (against free length)	1.0 *1.7	2.0		
		Valve clearance (at cold)	Intake		0.3	-	Adjust	
			Exhaust		0.3	-		
		Contacting face fo valve stem & rocker arm			-	-	Correct or replace if severely pitted on tip of arm and stem	
		Clearance between rocker arm shaft & rocker arm bush			0.020 ~ 0.093	2.0	Replace bush or shaft	

(unit : mm)

Group	Part	Inspection Item	Stand value for assembly	Limit for use	Correction	Remark
Valve system	valve	Rocker arm shaft for wear	ϕ23.978 ~ ϕ23.959	ϕ23.75	Replace	
		Permissible taper of push rod	0.3	-	Replace	
	Tappet	Clearance between tappet & cylinder block	0.035 ~ 0.077	0.15	Replace tappet	
		Outside diameter of tappet	ϕ19.944 ~ ϕ19.965	-	Replace tappet	
		Contacting face of tappet & cam	-	-	Replace if excessively worn or deformed	
Lubricating system	Oil pressure	Oil pressure (at normal speed)	4.5 or less	3.5	Correct oil leakage and clearance between each part	
		Oil pressure (idling)kg/cm²	0.8 ~ 1.4	0.6	Use recommended oil	
	Oil temperature	Max. permissible oil temperature (˚C)	-	105		Temperature above this not allowable
		Permissible oil temperature in short time (˚C)	-	120		
	Oil pump	Axial play of oil pump gear	0.055 ~ 0.105	-	Replace gear or cover	
		Clearance between gear shaft & oil pump cover hole	0.032 ~ 0.068	-		
		Clearance between drive gear shaft & cover hole	0.040 ~ 0.082	-	Replace bush or cover	
		Outside diameter of gear shaft	ϕ16.950 ~ ϕ16.968	-	Replace gear	ϕ17e7
		Outside diameter of drive gear bushing	ϕ27.939 ~ ϕ27.960	-	Replace bushing	ϕ28e7
		Backlash: Between crank gear & oil pump drive gear	0.15 ~ 0.25	0.8	Adjust backlash	
		Backlash: Between oil pump drive gear & intermediate gear	0.15 ~ 0.25	0.8		
	Valve opening Valve	Oil pressure control valve (kg/cm²)	4.3 ~ 4.7	-	Replace valve	
		By-pass valve for filter element (kg/cm²)	1.8 ~ 2.3	-		
		By-pass valve for full oil filter (kg/cm²)	4.0 ~ 4.8	-		
		By-pass valve for oil cooler (kg/cm²)	5 ~ 6	-		
		Relief valve for oil pump (kg/cm²)	8.5 ~ 11.5	-		
		Control valve for spray nozzle (kg/cm²)	1.5 ~ 1.8	-		
	Oil filter	Oil filter element for damage	-	-	Clean or replace	

(unit : mm)

Group	Part	Inspection Item	Stand value for assembly	Limit for use	Correction	Remark
Cooling system	Radiator	Radiator & water pump for corrosion, damage & improper connecting	-	-	Correct or replace	
		Test for leakage (air pressure) (kg/cm²)	1.0	-	Submerge in water and replace if air bubbles found	
		Pressure valve for opening pressure (kg/cm²)	0.5	-		
		Negative pressure valve for opening pressure (kg/cm²)	0.2	-		
	Water pump	Delivery volume l/min - Engine speed 2,100rpm - Water temp.24 ˚C - Back pressure : 1 kg/cm²	Approx. 350	-		
		Clearance between pump impeller & pump body	0.3 ~ 0.6	-	Replace if contacted impeller & pump body	
	Cooling water temp	Operating temperature (permissible temp.) ˚C	90 ~ 95	95	Temperature above this not allowable	
		Permissible temperature in a short time. ˚C	103	103		
	Thermostat	Thermostat opening temp. ˚C (under atmospheric pressure)	83	-	Replace if defective	
		Full opening temp. ˚C	95 or lower	-		Stroke : min. 8mm
Fuel system	Piping & the other	Fuel pipe, injection pipe & nozzle holder for damage, cracks, looseness, bad packing	-	-	Correct or replace	
		Fuel filter element for damage	-	-	Clean or replace	
	Injection pressure of injection nozzle (kg/cm²)		DE12T/TI/TIA:220	-	Adjust by shim	DE12TIS : 160/220
	Operating pressure of overflow valve (kg/cm²)		1.6	-	Replace valve	
	Height of projected nozzle on the cylinder head (mm)		DE12T/TI : 3.4 ~ 3.5	- -	Replace cylinder head, nozzle tube or seal ring	DE12TIS : 2.4 ~ 2.5
	Misalingnment between injection pump coupling and coupling (mm)		0.2 or less	-	Adjust by shim	With pump bracket
Inspection at completion	Running-in the engine		-	-	Refer to supplement "running-in"	Retighten head bolt after running in
	Cylinder pressure	Cylinder compression pressure of cylinder (kg/cm²)	24 ~ 28	24 or more	Overhaul the engine	
		Compression pressure difference of each cylinder	±10% or less against average	-	Correct	at 200rpm or more (20℃)

● Engine Assembly (DE12TIS - ECIEA)

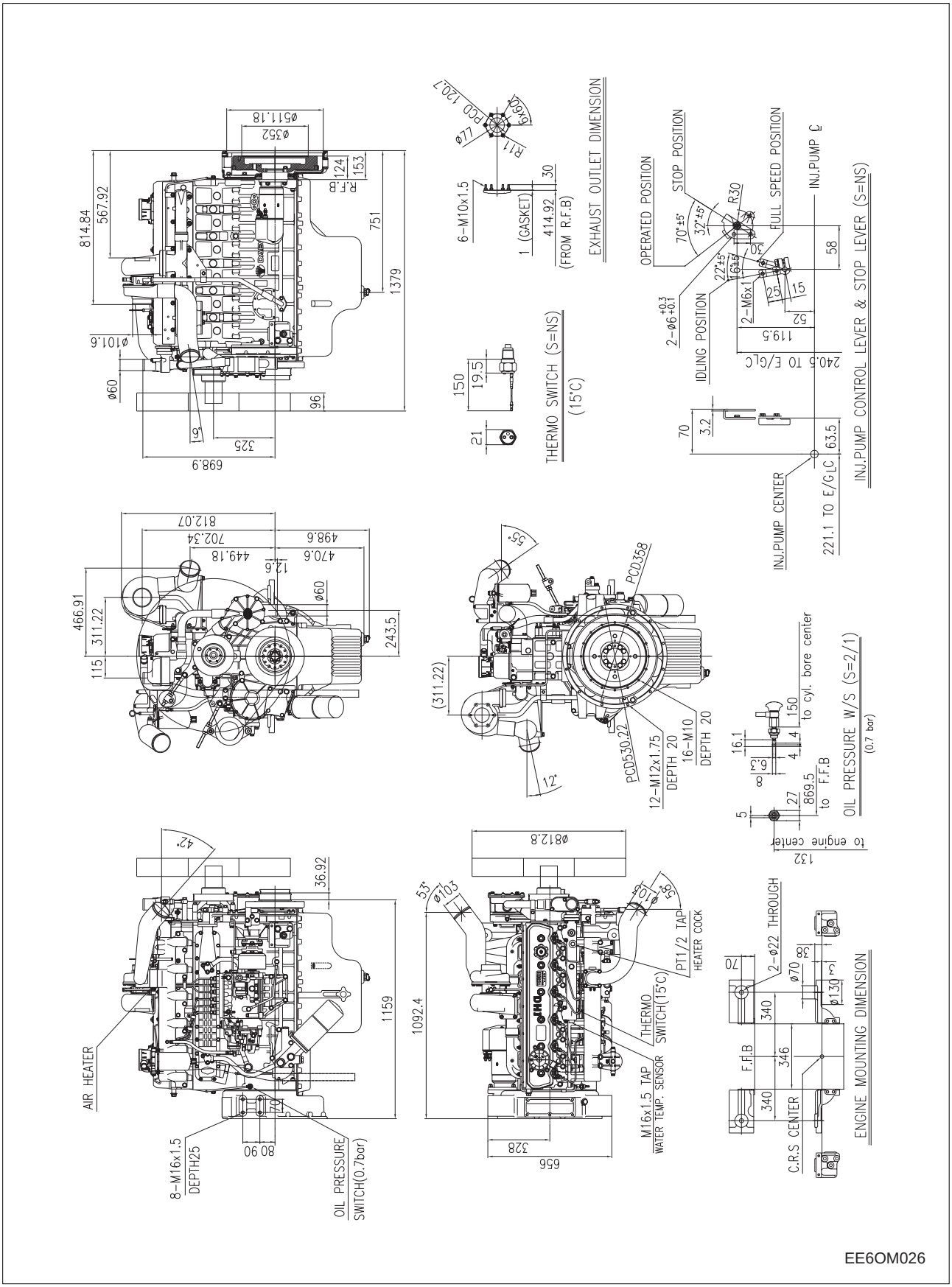

https://truckmanualshub.com/