https://truckmanualshub.com/

Quality Changes the World

SANYI

Off-Highway Truck

Safety,Operation and Maintenance Manual

Courtesy of Machine.Market

https://truckmanualshub.com/

www.sanyhe.com

SANY MINING EQUIPMENT CO.,LTD

ADD: Sany Industry Town,Dongcheng Avenue,Economic and Technological Development Zone,Kunshan,Jiangsu.

Tel:0086-10-60738666 Fax: 0086-10-60738831

E-mail:crd@sany.com.cn

Courtesy of Machine.Market

https://truckmanualshub.com/

SANYI

SRT45 Off-Highway Truck

Safety,Operation and Maintenance Manual

WARNING

Read and follow the safety precautions and instructions in this manual and on the machine decals. Failure to do can cause serious injury, death or property damage. Keep this manual with the machine for reading and future reference.

Courtesy of Machine.Market

https://truckmanualshub.com/

Sany Group

SANY Mining Equipment CO.,LTD

Sany Industry Town,Dongcheng Avenue,Economic and Technological Development Zone,Kunshan,Jiangsu, P.R. of China 215300

http://www.sanyhe.com

Tel: 0086-10-60738666

Fax: 0086-10-60738831

© 2014 by Sany Group. All right reserved. No part of this publication may be reproduced,used, distributed or disclosed except during normal operation of the machine as described herein. All information included within this publication was accurate at the time of publication. Product improvements ,revisions, etc., may result in differences between your machine and what is presented here. Sany Group assumes no liability. For more information, Contact Sany Group.

Courtesy of Machine.Market

https://truckmanualshub.com/

Exemption Clauses

SPECIFIC DECLARATION

Mining truck is a critical earth/rock moving machine with high traffic ability,which is mainly distributed to coal, iron ore, limestone, quarry,hydropower...

Sany assumes no responsibility for consequences caused by the following factors:

- Misuse of the truck due to failure to observe the information provided hereunder in this manual;
- Unauthorized restructuring or modification to the truck;
- Use of non-genuine parts, or untested or unapproved parts or tools.
- Machine failure or damage resulted from natural disasters (such as earthquake, typhoon,etc.), wars and other force majeure.
- Sany cannot anticipate all potential hazards that may occur on work site. Therefore, dump truck operator and owner shall attach great importance to the issue of safety.
- Local government may impose higher standards for use of a dump truck. If local regulations have conflicts to the safety rules described herein, whichever the stricter applies.

Obligations of Sany

- Offer quality truck along with correct information.
- Abide by after-sales service commitment and keep a record for all maintenance work and repair work.
- Provide training for truck operators and service persons as required.

Obligations of owners or authorized persons

- Only trained personnel who fully understand the Parts Book and the Safety, Operation and Maintenance Manual are allowed to operate and service the dump truck.
- Make sure that the truck operator and service person are qualified for this job and know their responsibilities.
- Regularly inspect the safety awareness of related persons at work.
- Should any fault threatening safety occurs, shut down the truck immediately.
- Sany service personnel have the right to carry out safety inspection to the truck when required.
- Besides the checks specified by Sany, local laws and regulations on truck shall also be observed.
- Ensure timely maintenance and repair of the dump truck.
- Make a detailed plan for proper use of the dump truck.

Courtesy of Machine.Market

https://truckmanualshub.com/

Obligations of all operating personnel

- Any abnormalities that could bring improper operation of the dump truck or potential hazards should be reported to your supervisor. The abnormalities should be corrected timely if possible.
- All workers around the dump truck must know and obey all warning signals, and be alert to safety of oneself and others.
- All operators must know the operating items and procedures.
- Be alert to any hazardous situation and immediately inform operator and signalman of the hazards such as high voltage cables, irrelevant people and worse ground condition.

Obligations of manager

- The operator must have been trained and fully understand the provision of the Safety, Operation
- and Maintenance Manual. The operator must be healthy and licensed. Otherwise he/she is not allowed to operate the dump truck.
- Make sure that the operator has good sense, cooperation awareness and psychological quality, or he/she is not allowed to operate or service the dump truck.
- Make sure that the signal person has good visibility and hearing ability, knows standard command signals and can give signals clearly and correctly. The signal person shall also have enough experience to recognize hazardous factors and timely tell the operator to avoid the hazards.
- Make sure that the assistant person can positively identify the model and working condition of dump truck and choose a suitable dump truck.
- Each operating personnel of a project shall bear certain safety responsibilities and is required to timely report unsafe factors to the supervisor.

Courtesy of Machine.Market

https://truckmanualshub.com/

Table of Contents

1 Foreword

1.1 Overview 1-1
1.2 Safety Information 1-3
1.3 Page Numbers 1-5
1.4 Regulation of Use 1-5
1.4.1 Machine applications 1-5
1.4.2 Directions of machine 1-5
1.5 Breaking in a New Machine 1-6
1.6 Visibility from Operator's Seat 1-7
1.7 Machine Information 1-9
1.7.1 Product identification plate 1-9
1.7.2 Engine identification plate 1-10
1.7.3 Display screen 1-11
1.7.4Table for serial number and distributor information 1-11

2 Safety

2.1 Safety Labels 2-5
2.1.1 Position for attaching safety labels 2-5
2.1.2 Safety labels 2-6
2.2 General Precautions 2-12
2.2.1 Safety rules 2-12
2.2.2 Abnormalities 2-12
2.2.3 Personal protective equipment 2-12
2.2.4 Fire extinguisher and first aid kit 2-13
2.2.5 Safety equipment 2-14
2.2.6 Cleaning your machine 2-14
2.2.7 Keeping the cab clean 2-15
2.2.8 Precautions when leaving the machine 2-15
2.2.9 Handholds and steps 2-16
2.2.10 Preventing burns 2-17
2.2.10.1 Hot coolant 2-17
2.2.10.2 Hot oil 2-17

Courtesy of Machine.Market

https://truckmanualshub.com/

2.2.11 Preventing fire and explosion 2-18
2.2.11.1 Fire caused by fuel or oils 2-18
2.2.11.2 Fire caused by flammable materials 2-19
2.2.11.3 Fire caused by electric lines 2-19
2.2.11.4 Fire caused by hydraulic lines 2-19
2.2.11.5 Fire caused by illumination equipment 2-20
2.2.12 In the event of fire 2-20
2.2.13 Windshield cleaning detergent 2-20
2.2.14 Precautions when using ROPS(Roll over protective structure) 2-21
2.2.15 Attachment installation 2-21
2.2.16 Cab windows glasses 2-22
2.2.17 Unauthorized modification 2-22
2.2.18 Examination and confirmation of worksite 2-22
2.2.19 Operation on soft ground 2-23
2.2.20 Overhead power cables 2-24
2.2.21 Alternate exit 2-25
2.2.22 Ensure good visibilty 2-25
2.2.23 Asbestos hazard 2-26
2.3 Safe Operation Precautions 2-27
2.3.1 Safe starting 2-27
2.3.1.1 Safe mounting 2-27
2.3.1.2 Seat adjustment 2-27
2.3.1.3 Seat belt 2-28
2.3.1.4 Before starting the engine 2-28
2.3.1.5 Engine starting rules 2-29
2.3.1.6 Starting engine in cold season 2-29
2.3.1.7 Engine starting aid 2-30
2.3.1.8 After starting the engine 2-31
2.3.2 Operation 2-31
2.3.2.1 Inspection before operation 2-31
2.3.2.2 Prior-operation precautions 2-31
2.3.2.3 Precautions when traveling 2-32
2.3.2.4 Precautions when traveling on slopes 2-34
2.3.2.5 Precautions when operating 2-34
2.3.2.6 Precautions for accumulated snow, and ice 2-34
2.3.2.7 Parking the machine 2-35
2.3.2.8 Preparing the machine 2-36

Courtesy of Machine.Market

https://truckmanualshub.com/

2.3.3 Transportation 2-37
2.3.3.1 Loading and unloading the machine 2-37
2.3.3.2 Transporting the machine 2-38
2.3.4 Battery 2-39
2.3.5 Towing 2-41
2.4 Precautions for Maintenance 2-42
2.4.1 Lock-out and tag-out 2-42
2.4.2 Select a working area 2-42
2.4.3 Prior-maintenance precautions 2-42
2.4.4 Preparing yourself 2-43
2.4.5 Stop engine before carrying out maintenance 2-44
2.4.6 Maintenance with engine running 2-45
2.4.7 Using proper tools 2-46
2.4.8 Handling suspension cylinder 2-46
2.4.9 Working under the machine 2-46
2.4.10 Work in loud noise 2-47
2.4.11 Use compressed air 2-47
2.4.12 Use a hammer 2-47
2.4.13 Welding operation 2-47
2.4.14 Precautions with high-pressure oil 2-48
2.4.15 High-pressure hoses 2-49
2.4.16 Hot cooling system 2-49
2.4.17 Air-conditioning system 2-50
2.4.18 High voltage precautions 2-50
2.4.19 Accumulator 2-51
2.4.20 Avoiding fire and explosion 2-51
2.4.21 Regular replacement of safetyrelated parts 2-52
2.4.22 Maintenance operation 2-52
2.4.23 Proper disposal of wastes 2-53
2.5 Precautions With Tires 2-54
2.5.1 Handling tires 2-54
2.5.2 Precautions when storing tire 2-55

3 CONTROLS AND OPERATING 3-1
3.1 Controls and Instruments 3-1
3.2 Indicator 3-2

Courtesy of Machine.Market

https://truckmanualshub.com/

3.3 Instruments 3-4
3.4 Reversing monitor system 3-6
3.5 Switches 3-7
3.6 Combined switch 3-8
3.7 Air Conditioner Control Panel 3-9
3.8 Driver Seat 3-11
3.9 Seat Belt 3-11
3.10 Truck Controls 3-12
3.10.1 Braking 3-12
3.10.2 Service brake 3-12
3.10.3 Parking brake 3-13
3.10.4 Emergency brake 3-13
3.10.5 Retarder 3-13
3.11 Engine 3-15
3.11.1 Accelerator pedal 3-15
3.11.2 QUANTUM electronic fuel system 3-15
3.11.3 Quantum electronic fuel system - description 3-17
3.11.4 QUANTUM electronic fuel system - operation 3-18
3.11.5 Electronic fuel system diagnostic codes 3-20
3.12 Steering 3-24
3.13 Transmission 3-25
3.13.1 CEC2 Shift System 3-25
3.13.2 Introduction and operation 3-28
3.13.3 General Transmission Operation 3-32
3.13.4 Retrieving Diagnostic Codes 3-33
3.13.5 Clearing Diagnostic Codes 3-33
3.14 Body Control 3-38
3.15 The common fault code of vehicle monitor system 3-40

4 OPERATING THE TRUCK 4-1
4.1 Pre-Starting Inspection 4-1
4.2 Check of each component 4-3
4.3 Engine Operation 4-6
4.4 Start the Engine 4-8
4.5 Starting the Engine with Jumper Cables 4-10
4.6 Pre-Operating Checks 4-11

Courtesy of Machine.Market

https://truckmanualshub.com/

4.7 Braking Function Check 4-12
4.8 Service Brake Performance Check 4-12
4.9 Emergency Brake Performance Check 4-13
4.10 Driving and Stopping 4-13
4.11 Stopping the Engine 4-14
4.12 Parking 4-16
4.13 Prolonged Storage 4-16

5 WORKING THE TRUCK 5-1
5.1 Working the Truck 5-1
5.2 Loading 5-1
5.3 Hauling 5-3
5.4 Dumping 5-4
5.5 Empty Return 5-6

6 ROADING 6-1
6.1 General 6-1
6.2 Preparation Prior to Roading 6-1
6.3 In Case of Trouble 6-2

7 MOVING DISABLED TRUCK 7-1
7.1 Moving Disabled Truck 7-1

8 LUBRICATION AND SERVICING 8-1
8.1 Safety Precautions 8-1
8.2 Lubrication and Maintenance 8-2
8.3 Other Maintenance 8-8
8.4 Service Capacity 8-12
8.5 Recommended Lubricants 8-13
8.6 Maintenance Procedures 8-15
8.6.1 Daily (10hrs) maintenance inspection form 8-15
8.6.2 Maintenance inspection form for 150hrs 8-21
8.6.3 Maintenance inspection form for 250hrs 8-23
8.6.4 Maintenance inspection form for 300hrs 8-25
8.6.5 Maintenance inspection form for 450hrs 8-27
8.6.6 Maintenance inspection form for 500hrs 8-29
8.6.7 Maintenance inspection form for 600hrs 8-33

Courtesy of Machine.Market

https://truckmanualshub.com/

8.6.8 Maintenance inspection form for 750hrs 8-35
8.6.9 Maintenance inspection form for 900hrs 8-37
8.6.10 Maintenance inspection form for 1000hrs 8-39
8.6.11 Maintenance inspection form for 1050hrs 8-43
8.6.12 Maintenance inspection form for 1200hrs 8-45
8.6.13 Maintenance inspection form for 1250hrs 8-47
8.6.14 Maintenance inspection form for 1350hrs 8-49
8.6.15 Maintenance inspection form for 1500hrs 8-51
8.6.16 Maintenance inspection form for 1650hrs 8-55
8.6.17 Maintenance inspection form for 1750hrs 8-57
8.6.18 Maintenance inspection form for 1800hrs 8-59
8.6.19 Maintenance inspection form for 1950hrs 8-61
8.6.20 Maintenance inspection form for 2000hrs 8-63
8.6.21 Maintenance inspection form for 2100hrs 8-67
8.6.22 Maintenance inspection form for 2250hrs 8-69
8.6.23 Maintenance inspection form for 2400hrs 8-71
8.6.24 Maintenance inspection form for 2500hrs 8-73
8.6.25 Maintenance inspection form for 2550hrs 8-77
8.6.26 Maintenance inspection form for 2700hrs 8-79
8.6.27 Maintenance inspection form for 2750hrs 8-81
8.6.28 Maintenance inspection form for 2850hrs 8-83
8.6.29 Maintenance inspection form for 3000hrs 8-85
8.6.30 Maintenance inspection form for 3150hrs 8-91
8.6.31 Maintenance inspection form for 3250hrs 8-93
8.6.32 Maintenance inspection form for 3300hrs 8-95
8.6.33 Maintenance inspection form for 3450hrs 8-97
8.6.34 Maintenance inspection form for 3550hrs 8-99
8.6.35 Maintenance inspection form for 3600hrs 8-101
8.6.36 Maintenance inspection form for 3750hrs 8-103
8.6.37 Maintenance inspection form for 3900hrs 8-107
8.6.38 Maintenance inspection form for 4000hrs 8-109
8.6.39 Maintenance inspection form for 4050hrs 8-115
8.6.40 Maintenance inspection form for 4200hrs 8-117
8.6.41 Maintenance inspection form for 6000hrs 8-119
8.6.42 Maintenance inspection form for 10000hrs 8-125

Courtesy of Machine.Market

https://truckmanualshub.com/

9 TECHNICAL DATA 9-1

Courtesy of Machine.Market

https://truckmanualshub.com/

BLANK PAGE

Courtesy of Machine.Market

https://truckmanualshub.com/

1 FOREWORD

1.1 Overview

The explanations, values, and illustrations in this manual have been prepared based on the latest information available as of the date of its publication. Continuing improvements in the design of this machine may lead to additional changes that are not reflected in this manual. Consult SANY or your SANY distributor for the latest available information concerning your machine or with questions regarding information contained in this manual.

This manual gives details of the operation and methods of inspection and maintenance for this machine that must be obeyed in order to use the machine safely. Most accidents are caused by the failure to follow fundamental safety rules for the operation and maintenance of machines.

Read, understand and follow all precautions and warnings in this manual and on the machine before performing operation and maintenance. Failure to do so may result in serious injury or death.

SANY cannot predict every circumstance that might involve a potential hazard when the machine is used. Therefore, the safety messages in this manual and on the machine may not include all possible safety precautions.

If you carry out any operation, inspection, or maintenance under conditions that are not described in this manual, understand that it is your responsibility to take the necessary precautions to ensure safety. In no event should you or others engage in the prohibited uses or actions described in this manual. If the machine is operated mistakenly when carrying out inspection and maintenance, there is danger that it may lead to serious injury or death.

Courtesy of Machine.Market

https://truckmanualshub.com/

If you sell the machine, be sure to give this manual to the new owner together with the machine, so that all relevant personnel can read it at any time.

If this manual is lost or damaged, contact your distributor immediately to arrange for its replacement. To ensure that the correct manual is sent, check the serial number of the machine and inform your SANY distributor.

The explanations, values, and illustrations in this manual have been prepared based on the latest information available as of the date of its publication. Continuing improvements in the design of this machine may lead to additional changes that are not reflected in this manual. Consult SANY Mining Equipment Co.,Ltd. or your SANY distributor for the latest available information concerning your machine or with questions regarding information contained in this manual.

The numbers in the illustrations correspond to the numbers in ( ) in the text.

(For example: 1→(1))

The letters in the illustrations correspond to the letters in ○ in the text.

(For example: A→ Ⓐ)

SANY delivers machines that comply with all applicable regulations and standards of the country to which it has been shipped. If this machine has been purchased in another country, it may lack certain safety devices and specifications that are necessary for use in your country. If there is any question about whether your product complies with the applicable standards and regulations of your country, consult SANY Mining Equipment Co. or your SANY distributor before operating the machine.

Courtesy of Machine.Market

https://truckmanualshub.com/

1.2 Safety Information

Hazard alert words are used in this manual and on some machine decals to inform the operator of imminent or potential hazards that lead to death, personal injury or property damage.

1)Alert words

The sign is used for warning you the potential danger of human injuries, when it is used together with notes such as “DANGER, WARING, CAUTION”, it indicate the degree of hazard.

DANGER It indicates an imminently hazardous situation which, if not avoided, will result in death or serious injury.

WARNING It indicates a potentially hazardous situation which, if not avoided, could result in death or serious injury.

CAUTION It indicates a potentially hazardous situation which, if not avoided, may result in minor or moderate injury. It can also be used to alert unsafe operation as which may cause property loss.

Courtesy of Machine.Market

https://truckmanualshub.com/

2)An example alert wording and alert text

WARNING

To prevent personal injury and property damage, be sure lifting equipment is of adequate capacity and properly secured to do the job safely.

3)Other alert words

In addition to the safety-related alert words above, the following words are used in this manual to provide additional information to which extra attention must be paid.

Note:

It is followed by information on how to avoid reduction of machine service life.

Remark:

It is followed by very useful information.

4)Safety decals

Safety decals on the machine are used to alert operator or maintenance personnel that potential hazards might be involved when the machine is being operated or serviced.

We use textual and graphical (or combined) decals to indicate a hazardous situation and how to avoid such situation.

a.Textual safety decals

Fig. 1.2-1 is an example of textual safety decals.

Fig. 1.2-1

b.Graphical safety decals

Graphical safety decals use images or symbols to indicate a hazardous situation and how to avoid it.

Fig. 1.2-2 is an example of graphical safety decals.

Fig. 1.2-2

Courtesy of Machine.Market

https://truckmanualshub.com/

1.3 Your Documentation Package

The documentation for this machine includes the following items:

- Safety, Operation & Maintenance Manual (SOMM) — This manual is in the operator cab seat pocket.
- Parts Book — This publication consists of parts lists and matching drawings for ordering spare parts as-needed. If it was not already shipped with your machine, the parts book for your machine is available directly from Sany.

1.3.1 Recommendations on using the documentation

- This documentation applies only to this machine and should not be used with any other machines.
- To ensure that the documentation is always complete and up to date:
- Keep all pages inside its binder (if shipped loose leaf).
- Insert Sany replacement pages mmediately into the appropriate book; destroy old versions of those pages.

1.3.2 Documentation storage

- Always keep the operator manual and load charts with the machine in the operator cab.
- The parts book is best left either shelved in the workshop area or office. It should always be available to the maintenance and service personnel as required.

Courtesy of Machine.Market

https://truckmanualshub.com/

1.4 Page Numbers

The pages in this manual are numbered as the following:

2-10

Page 10 of Chapter 2

Chapter 2

1.5 Regulation of Use

1.5.1 Machine applications

Sany Mining Trucks are designed to be used mainly for the following work:
Traveling with a load

1.5.2 Directions of machine

In this manual, the directions of the machine (front, rear, and left, right) are determined according to the view from the operator's seat in the direction of travel (front) of the machine.

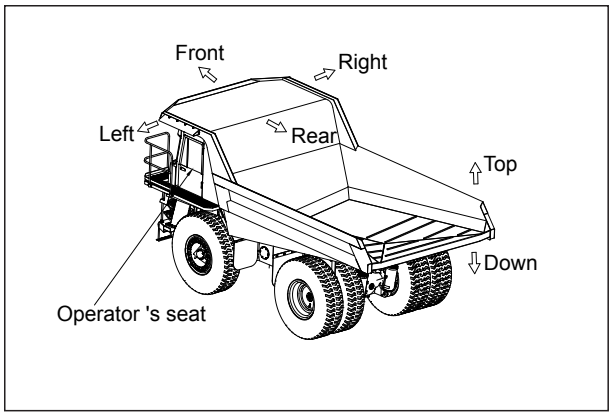

Fig. 1.5-1

1.6 Breaking in a New Machine

Your machine has been thoroughly adjusted and tested before shipment. However, initial operation of the machine under severe conditions can adversely affect the performance of the machine or shorten the machine life.

Therefore, Sany recommends that you allow a break-in period of 100 operating hours for a new machine.

During the break-in period:

- Let the machine preheat prior to any operation.
- Avoid engaging gear or operating the pedal.
- Avoid sudden starts or fast movements or

Courtesy of Machine.Market

https://truckmanualshub.com/

stops.

- Always let the system cool down at the end of the working day.

1.7 Visibility from Operator's Seat

The visibility standards (ISO 5006) for this machine require a view shown in the diagram below.

Visibility in immediate area

The visibility of this machine in the area 1 m from the outside surface of the machine at a height of 1.5 m is shown in the diagram below. The hatched area (A) shows the area where the view is blocked by part of the machine when mirrors or other aids to visibility are installed as standard. Please be fully aware that there are places that cannot be seen when operating the machine.

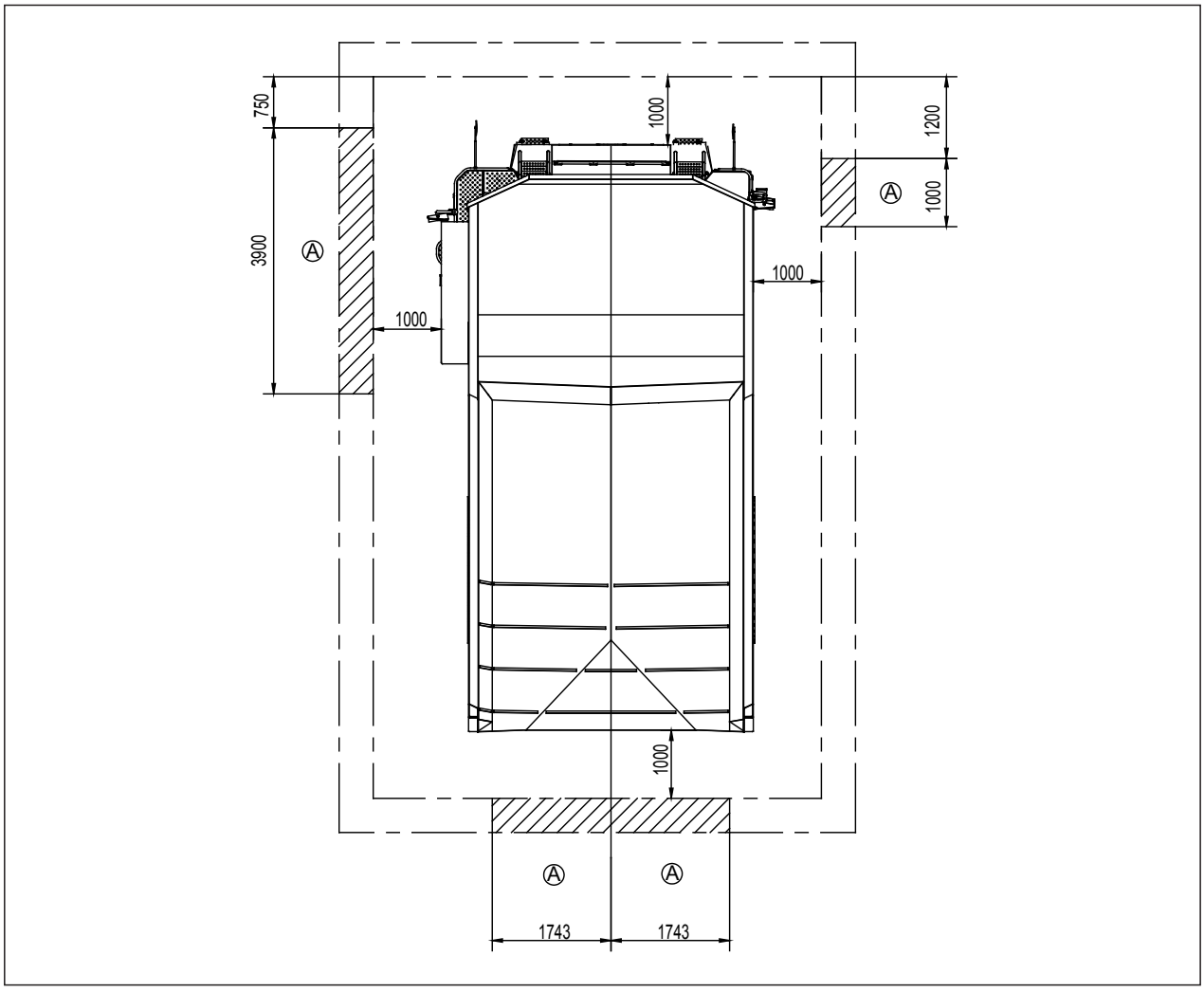

Fig. 1.7-1

Courtesy of Machine.Market

https://truckmanualshub.com/

24-M radius visibility

The visibility at a radius of 24 m from the machine is as shown in the diagram below. The hatched areas (B) show the areas where the view is blocked when mirrors or other aids to visibility are installed as standard. Please be fully aware that there are places that cannot be seen when operating the machine.

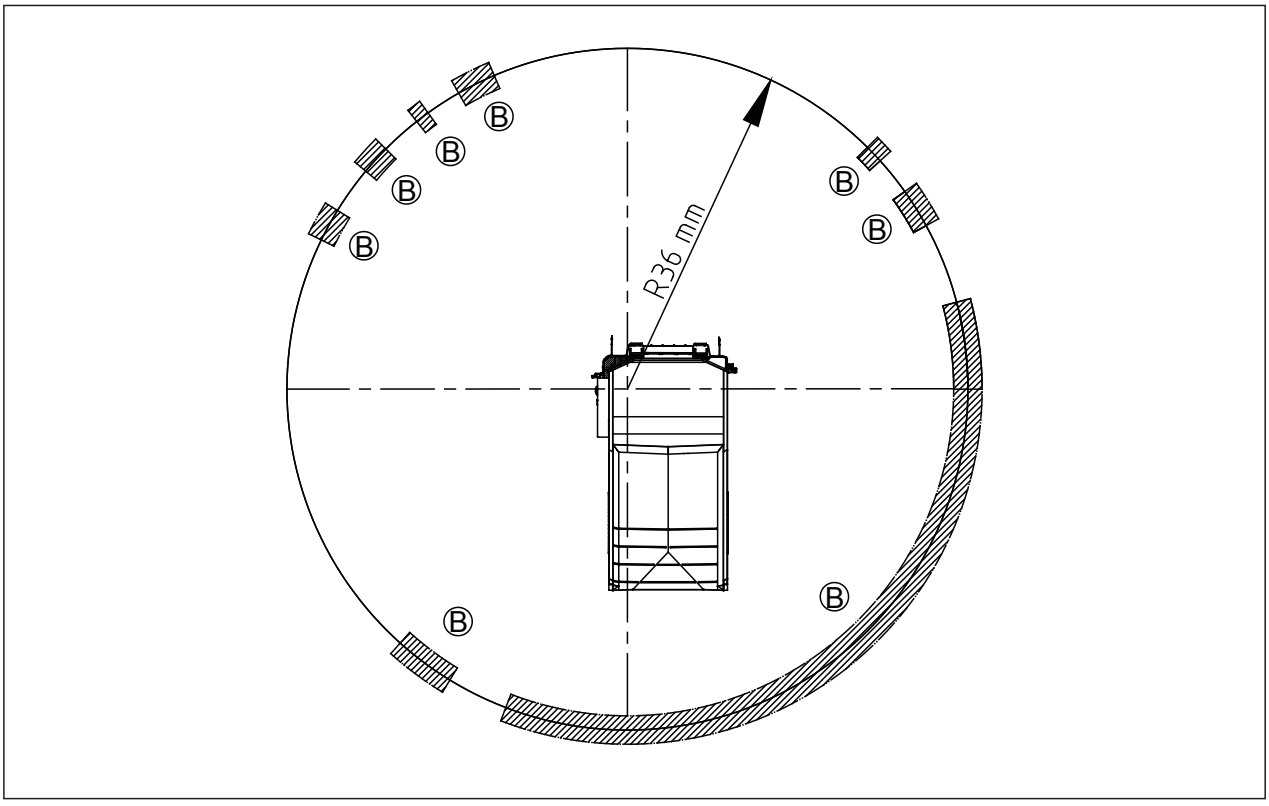

Fig. 1.7-2

Courtesy of Machine.Market

https://truckmanualshub.com/

1.8 Machine Information

The serial numbers and model numbers on the components are the only numbers that your Sany distributor will need when ordering replacement parts or requiring assistance for your equipment. It is a good idea to record this information in this manual for future use. Below are the locations of the data plates.

1.8.1 Product identification plate

It is located on the left front end of the frame.

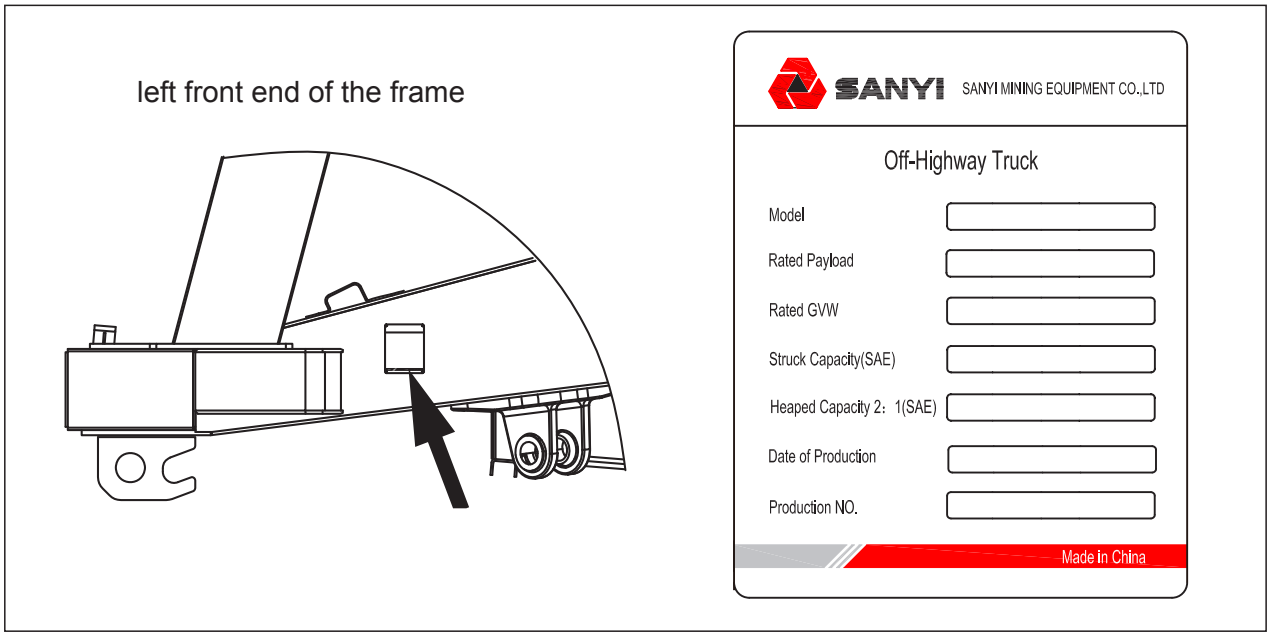

Fig. 1.8-1

Courtesy of Machine.Market

https://truckmanualshub.com/

1.8.2 Engine identification plate

The engine identification plate is on the right front of engine cylinder head.

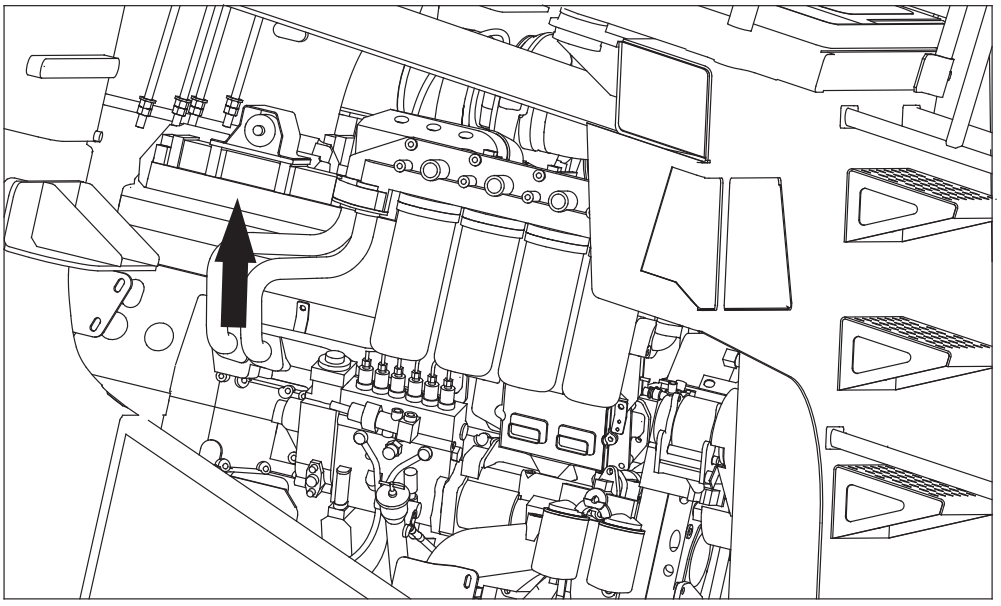

Engie No. 37256546	Displacement 30.5/1860 L:in³	Valve Lash Cold (mm/in)	Cummins	Warrty Start Date	
Family D57	Static Injection Timing 0.5 °BTDC	Intake 0.432/0.017			IMPORTANT ENGINE INFORMATION In the U.S. this engine is soley for export and is therefore exempt under 40 CFR 1068.240 from U.S. emssions standards and related requirements. Outside the U.S. this engine may be subject to other emissions regulations.
Model QST30	Fuel Rate @ Advertised Power 270 mm³/stroke	Exhaust 0.813/0.032			
S.O. No. so10727		Advertised Power 783 /1050	kW:HP at 2100 RPM		
Ref. No.WZU2-SY-SRT95-Q30-1	WARNING: Injury may result and warranty is volded if fuel rate, speed or altitude exceeds published maximum values for this modeland application.	Peak Torque 4629 /3414	Nm:ft-lb at 1300 RPM		
Engie No.37256546		Assembled by Cummins Engine Co.,Inc. U.S.A. 4295379			

Fig. 1.8-2

Courtesy of Machine.Market

https://truckmanualshub.com/

1.8.3 Display screen

The position of display screen is shown as follows:

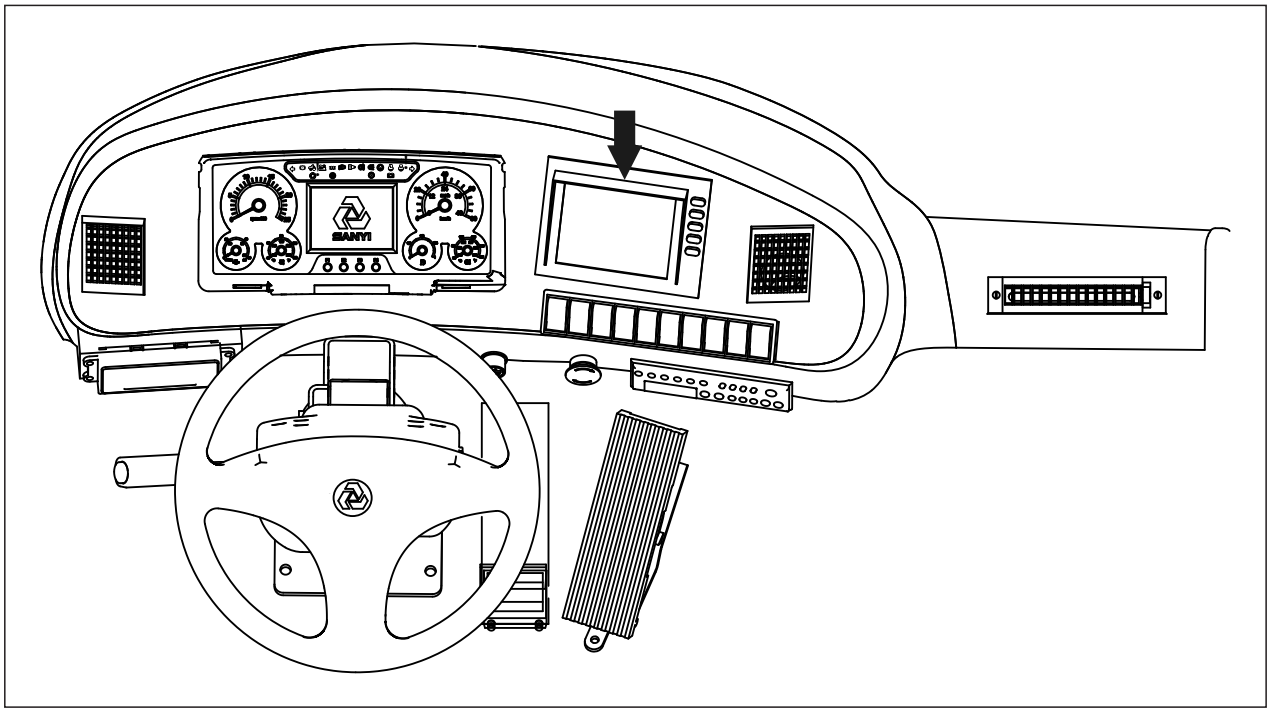

Fig. 1.8-3

1.8.4 Table for serial number and distributor information

Machine Serial No.	
Engine Serial No.	
Distributor Name:	
Address:	
Service Personnel	
Phone/Fax	

Courtesy of Machine.Market

https://truckmanualshub.com/

BLANK PAGE

Courtesy of Machine.Market

https://truckmanualshub.com/

Safety

2 Safety 2-5

2.1 Safety Labels 2-5
2.1.1 Position for attaching safety labels 2-5
2.1.2 Safety labels 2-6

2.2 General Precautions 2-12
2.2.1 Safety rules 2-12
2.2.2 Abnormalities 2-12
2.2.3 Personal protective equipment 2-12
2.2.4 Fire extinguisher and first aid kit 2-13
2.2.5 Safety equipment 2-14
2.2.6 Cleaning your machine 2-14
2.2.7 Keeping the cab clean 2-15
2.2.8 Precautions when leaving the machine 2-15
2.2.9 Handholds and steps 2-16
2.2.10 Preventing burns 2-17
2.2.10.1 Hot coolant 2-17
2.2.10.2 Hot oil 2-17
2.2.11 Preventing fire and explosion 2-18
2.2.11.1 Fire caused by fuel or oils 2-18
2.2.11.2 Fire caused by flammable materials 2-19
2.2.11.3 Fire caused by electric lines 2-19
2.2.11.4 Fire caused by hydraulic lines 2-19
2.2.11.5 Fire caused by illumination equipment 2-20

Courtesy of Machine.Market

https://truckmanualshub.com/

2.2.12 In the event of fire 2-20
2.2.13 Windshield cleaning detergent 2-20
2.2.14 Precautions when using ROPS(Roll over protective structure) 2-21
2.2.15 Attachment installation 2-21
2.2.16 Cab windows glasses 2-22
2.2.17 Unauthorized modification 2-22
2.2.18 Examination and confirmation of worksite 2-22
2.2.19 Operation on soft ground 2-23
2.2.20 Overhead power cables 2-24
2.2.21 Alternate exit 2-25
2.2.22 Ensure good visibilty 2-25
2.2.23 Asbestos hazard 2-26

2.3 Safe Operation Precautions 2-27
2.3.1 Safe starting 2-27
2.3.1.1 Safe mounting 2-27
2.3.1.2 Seat adjustment 2-27
2.3.1.3 Seat belt 2-28
2.3.1.4 Before starting the engine 2-28
2.3.1.5 Engine starting rules 2-29
2.3.1.6 Starting engine in cold season 2-29
2.3.1.7 Engine starting aid 2-30
2.3.1.8 After starting the engine 2-31
2.3.2 Operation 2-31
2.3.2.1 Inspection before operation 2-31
2.3.2.2 Prior-operation precautions 2-31
2.3.2.3 Precautions when traveling 2-32
2.3.2.4 Precautions when traveling on slopes 2-34
2.3.2.5 Precautions when operating 2-34
2.3.2.6 Precautions for accumulated snow, and ice 2-34
2.3.2.7 Parking the machine 2-35
2.3.2.8 Preparing the machine 2-36
2.3.3 Transportation 2-37
2.3.3.1 Loading and unloading the machine 2-37
2.3.3.2 Transporting the machine 2-38
2.3.4 Battery 2-39
2.3.5 Towing 2-41

Courtesy of Machine.Market

https://truckmanualshub.com/

2.4 Precautions for Maintenance 2-42
2.4.1 Lock-out and tag-out 2-42
2.4.2 Select a working area 2-42
2.4.3 Prior-maintenance precautions 2-42
2.4.4 Preparing yourself 2-43
2.4.5 Stop engine before carrying out maintenance 2-44
2.4.6 Maintenance with engine running 2-45
2.4.7 Using proper tools 2-46
2.4.8 Handling suspension cylinder 2-46
2.4.9 Working under the machine 2-46
2.4.10 Work in loud noise 2-47
2.4.11 Use compressed air 2-47
2.4.12 Use a hammer 2-47
2.4.13 Welding operation 2-47
2.4.14 Precautions with high-pressure oil 2-48
2.4.15 High-pressure hoses 2-49
2.4.16 Hot cooling system 2-49
2.4.17 Air-conditioning system 2-50
2.4.18 High voltage precautions 2-50
2.4.19 Accumulator 2-51
2.4.20 Avoiding fire and explosion 2-51
2.4.21 Regular replacement of safetyrelated parts 2-52
2.4.22 Maintenance operation 2-52
2.4.23 Proper disposal of wastes 2-53

2.5 Precautions With Tires 2-54
2.5.1 Handling tires 2-54
2.5.2 Precautions when storing tire 2-55

Courtesy of Machine.Market

https://truckmanualshub.com/

Courtesy of Machine.Market

https://truckmanualshub.com/

2 SAFETY

2.1 Safety Labels

The following warning signs and safety are used on this machine.

- Be sure that you fully understand the correct position and content of labels.
- To ensure that the content of labels can be read properly, be sure the they are in the correct place and always keep them clean. When cleaning them, do not use organic solvents or gasoline. These may cause the labels to peel off.
- There are also other labels in addition to the warning signs and safety labels. Handle those labels in the same way.
- If labels are damaged, lost, or cannot be read properly, replace them with new ones.

2.1.1 Position for attaching safety labels

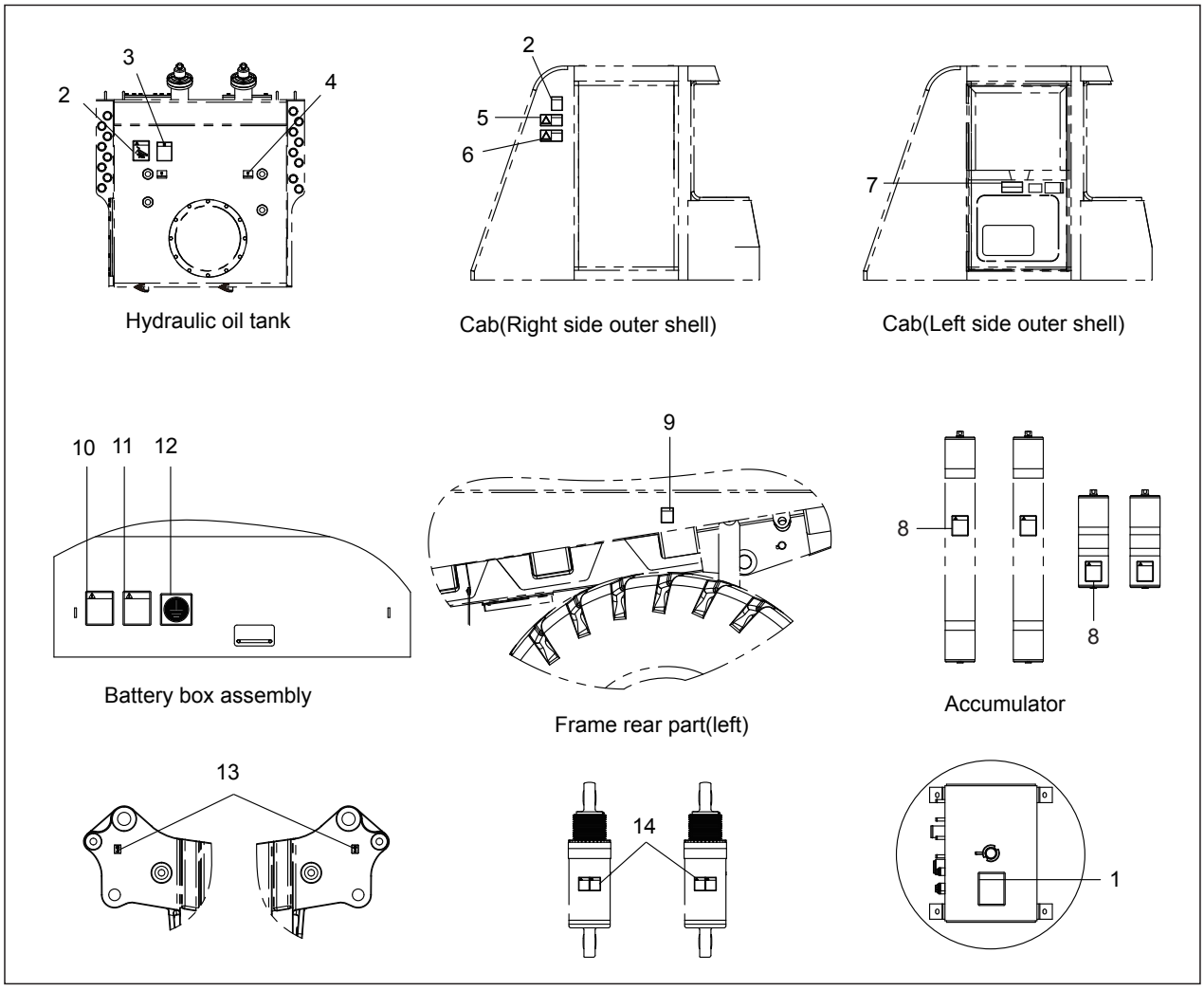

Fig. 2.1-1

Courtesy of Machine.Market

https://truckmanualshub.com/

2.1.2 Safety labels

(1)Lifting control label

- This label is located at the left hand side of the cab driver seat.
- This location of lifting handle means the carriage dip angle increases and unload.

Fig. 2.1-2

- This location of lifting handle means the carriage dip angle remain unchanged.

Fig. 2.1-3

- This location of lifting handle means the carriage is in suspension state.
- The handle must be in this location when the machine is stopped or moving.

Fig. 2.1-4

- This location of lifting handle means the carriage dip angle decreases,and the carriage will be downward to locate on the frame.

Fig. 2.1-5

Courtesy of Machine.Market

https://truckmanualshub.com/

(2) Carriage warning labels

- This label are located at right cab gate of cab, hydraulic oil tank and fuel tank. When the carriage dip angle decrease until located on the frame, neighboring people should be careful to prevent be hurt.

Fig. 2.1-6

(3)Hydraulic oil instruction label

- This label is located on the hydraulic oil tank.
- Check engine running and accumulator charged. Oil should be visible in sight gauge. If not, shut off engine and turn steering wheel to discharge accumulator, check it again in upper sight gauge.

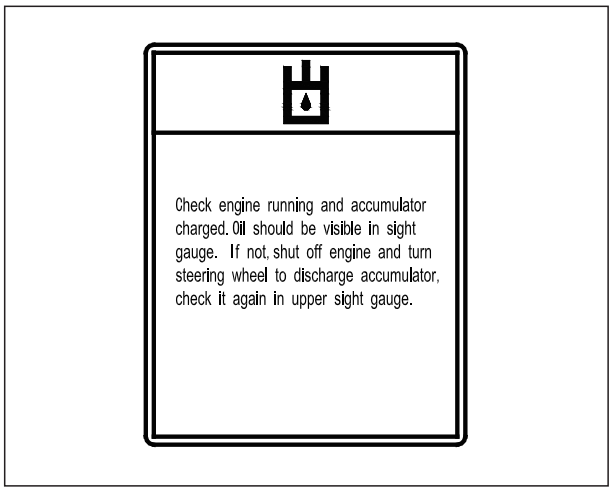

Fig. 2.1-7

(4)Hydraulic oil position

- This label is located on the hydraulic oil tank.
- It means the hydraulic oil position, oil should be visible in sight gauge.

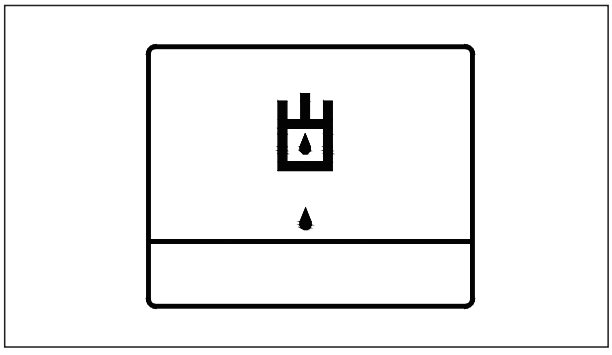

Fig. 2.1-8

Courtesy of Machine.Market

https://truckmanualshub.com/

(5)Cab welding warning label

- This label is located at the right cab gate side.
- Do not weld or burn CAB components unless acoustical foam is removed.

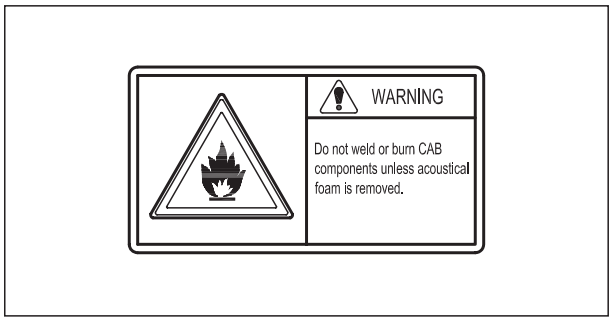

Fig. 2.1-9

(6)No standing warning label

- This label is located at the right cab gate side.
- The people is not allowed standing on the platform when the engine running, and should fall down and hold up handrail to prevent tumbling.

Fig. 2.1-10

(7)Machine moving high warning label

- This label is located at the middle side of right cab gate.
- The machine whole high is 4.92meters unloaded and 4.89 meters full loaded. Be care when the machine pass through cave or bridge.

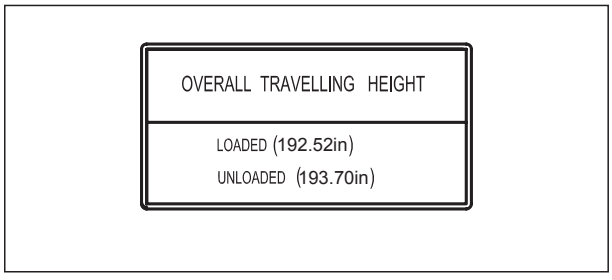

Fig. 2.1-11

Courtesy of Machine.Market

https://truckmanualshub.com/

(8)Accumulator warning label

- This label is located on the barrel wall of accumulator.
- To prevent personal injury and equipment damage, be sure pressure in the accumulator is relieved completely before disassembling valves and connects.

Fig. 2.1-12

(9)Tyre warning label

- To prevent personal injury and equipment damage, please read service manual carefully before tyre aeration or maintenance.

Fig. 2.1-13

(10)Battery cable warning label

- This label is located on the top battery box.
- Weld will produce big electric current which may damage electric elements , so
- just do according with warning label and operator's handbook.

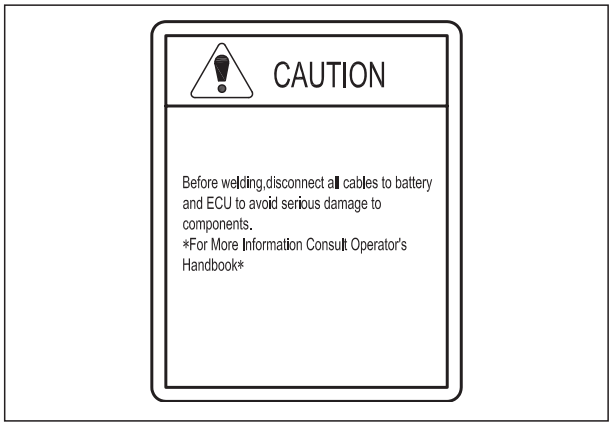

Fig. 2.1-14

Courtesy of Machine.Market

https://truckmanualshub.com/

(11)Alternator warning label

- This label is located on the battery box. Please do as the warning label and handbook when operating machine.

Fig. 2.1-15

(12)Grounding label

- This label is located on the top battery box.
- It means there is a negative electrode grounding system in battery assembly.

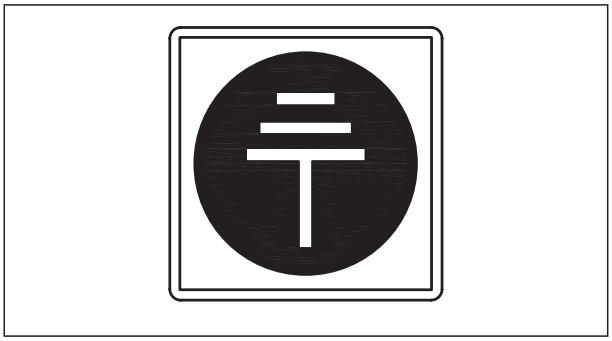

Fig. 2.1-16

(13)Cliver label

- There are four cliver position, two borrow joint hole between rear tail seat and carriage, two located below bumper.

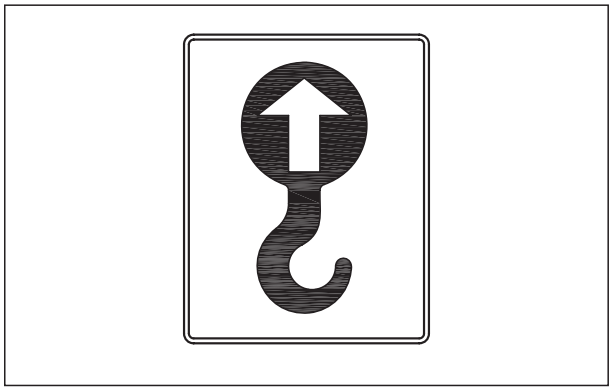

Fig. 2.1-17

Courtesy of Machine.Market

https://truckmanualshub.com/

(14)Suspension warning label

- This label is located on the barrel wall of suspension cylinder.
- To prevent personal injury and equipment damage, please do as the warning label and service manual when maintenance.

Fig. 2.1-18

(15) Open water cap warning label

- This label is located on the distance water box.
- To prevent personal injury ,never remove hot radiator cap.

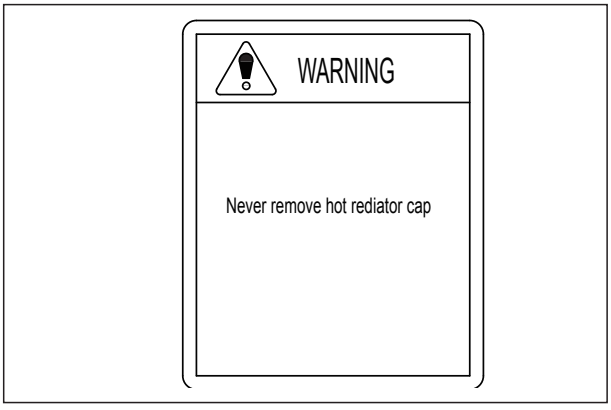

Fig. 2.1-19

Courtesy of Machine.Market

https://truckmanualshub.com/

2.2 General Precautions

2.2.1 Safety rules

- Only trained personnel are allowed to operate and service the machine.
- All safety rules, precautions and instructions must be followed when operating and servicing the machine.
- Taking alcohol or drug could seriously impair one's ability in operating or repairing the machine, and it is hazardous for you and other persons.
- When working with another operator or job site traffic signalman, be sure to make all people understand all hand signals to be used.

2.2.2 Abnormalities

In case of any abnormalities found during operation and maintenance, such as noise, vibration,odor, incorrect gauge display, smoke,or oil leakage, contact your Sany distributor and take necessary measures. Never operate the machine before the faults are corrected.

2.2.3 Personal protective equipment

Wear proper work clothes and personal protective equipment (PPE) suitable for the environment of the job site. You may need:

- Hard hat
- Safety shoes
- Safety glasses, goggles or face shield
- Reflective protective clothing
- Hearing protection
- Dust mask

Wear all necessary PPEs as well as other equipment required by your employer, local government, and local laws and regulations.

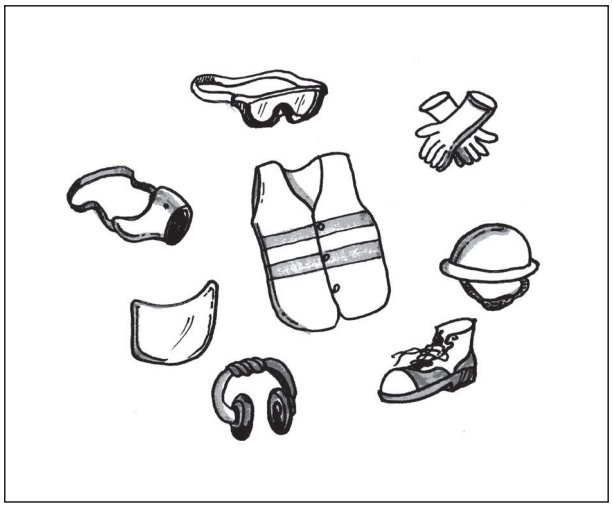

Fig. 2.2-1

Courtesy of Machine.Market

https://truckmanualshub.com/

Never take a risk.

CAUTION

Never wear slack clothing and jewelry,which may get caught by control evers
or other machine parts.
Long hair can be caught in moving parts. Tie your hair if necessary to avoid such hazard.
Always have your hard hat and safety shoes on. Wear safety goggles, face masks, gloves, hearing protection and safety belt if necessary.
Make sure all PPEs are in good condition before use.
Never listen to radio or music with ear plugs on during operation.

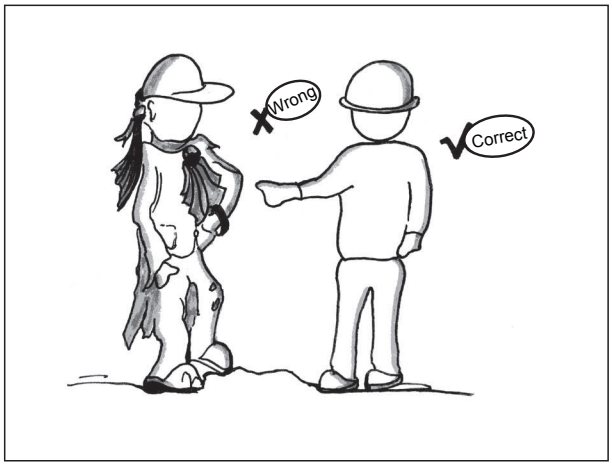

Fig. 2.2-2

2.2.4 Fire extinguisher and first aid kit

To prevent injury or fire, observe the following precautions:

- First aid kit and fire extinguisher should be available nearby.
- Read and understand the instruction attached to fire extinguisher. Use fire extinguisher properly.
- Regular inspection and maintenance shall be done to ensure proper functioning of fire extinguisher at any time.
- Check the first aid kit regularly and replenish it when necessary.
- Make emergency scheme to deal with fire and accidents.

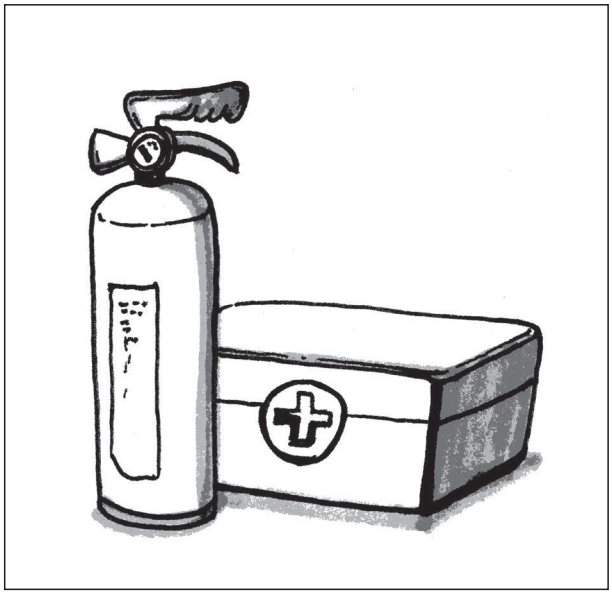

Fig. 2.2-3

Courtesy of Machine.Market

https://truckmanualshub.com/

2.2.5 Safety equipment

To protect you and others around you, your machine may be equipped with the following safety equipment. Make sure that they are secured in place and in good condition.

- Falling Object Protection (Body pivot pin)
- Rollover Protection
- Sealt belt
- Lamps
- Horn
- Guards
- Backup alarm
- Mirrors
- **Fire extinguisher**

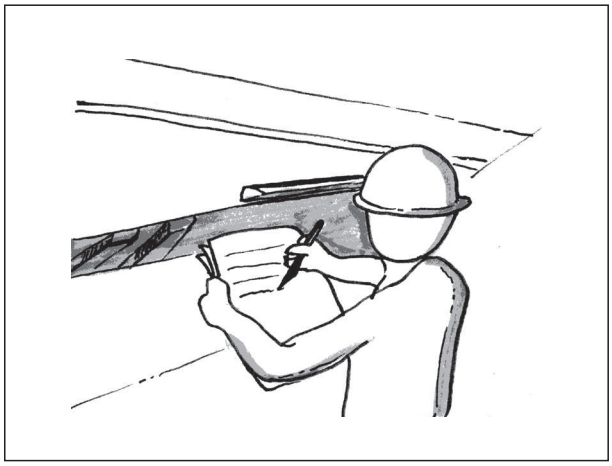

Fig. 2.2-4

CAUTION

- Make sure all covers and caps are in proper place. Repair or replace any of them immediately once found damaged.
- Know how to use these facilities and use them correctly.
- Never remove the guard rail of the operator cab (unless necessary) .

2.2.6 Cleaning your machine

- Clean the windshields, mirrors and lights. Make sure that the operating area, steps and handholds are free from oil, grass, snow, ice or mud, which can cause you to slip and fall. Remove the mud on your soles before getting on the machine.
- If water has penetrated into the electrical system, never rush to power on your machine and start the engine, which can cause machine failure or PC board damage. Never flush the electrical system (including sensors, connectors, etc.) with water or steam.

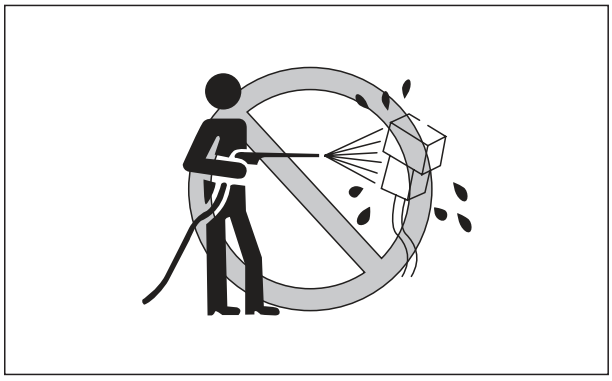

Fig. 2.2-5

Courtesy of Machine.Market

https://truckmanualshub.com/

2.2.7 Keeping the cab clean

- Clean the mud and oil on your soles when getting into the cab. Mud or oil under your shoes can cause your foot to slip on the pedal during operation, and serious accident could result.
- Remove all loose personal items or other objects from the operator's area. Secure these items in the tool box or remove them from the machine.
- Never use cellular phone when operating or driving the machine.
- Never bring Hazardous articles, such as flammable or explosive products, into the cab.

2.2.8 Precautions when leaving the machine

- If the correct procedures are not followed when stopping the machine, the machine may suddenly move off with no operator on it. This may lead to serious personal injury. Always observe the following precautions strictly.
- When leaving the operator’s cab, place gear shift lever (1) at Neutral, set parking brake switch to PARKING, set the dump
- control lever to HOLD, then stop the engine.
- Remove the key from the starting switch.
- Lock all the doors of the operator’s compartment.Take the key with you and leave it in the specified place.

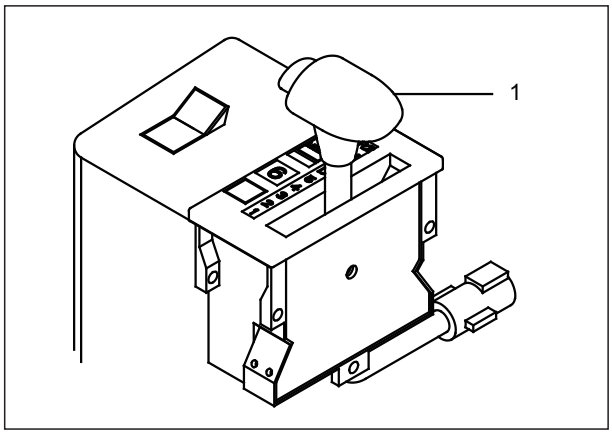

Fig. 2.2-6

Courtesy of Machine.Market

https://truckmanualshub.com/

2.2.9 Handholds and steps

To avoid risk of injury when getting on or off the machine.

- Always face the machine and maintain at least three-point contact (both feet and one hand, or both hands and one foot) with the handrail and steps to ensure that you support yourself.
- Always check the handrails and steps for oil, grease, or mud. Wipe them clean before using.
- Repair any damage and tighten any loose bolts.
- Never get on or off the machine while holding tools in your hand.
- Never climb onto the engine hood, covers, or other places where there are no anti-slip pads.
- When entering the operator's compartment, never hold the dump control lever. If the dump control lever is gripped, it may move.
- Never jump onto the machine. There is danger that your feet will slip, and you will fall and be seriously injured.
- Never jump off the machine. There is danger that you will break a bone or suffer other serious injury when landing.
- Never get on or off a moving machine. You may be unable to support yourself with the handrail or steps, and fall from the machine, suffering injury. Even if the machine starts off with no operator on it, do not jump on the machine and try to stop it.

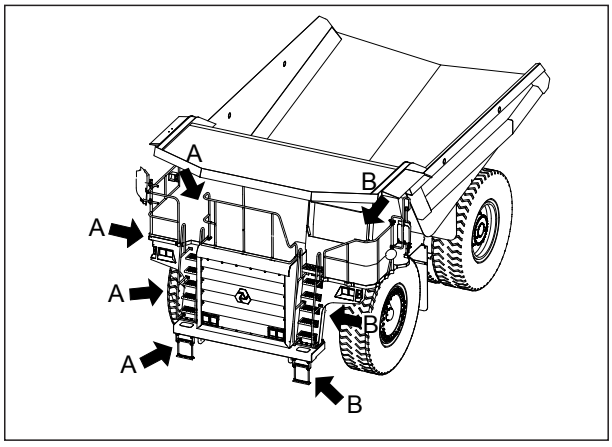

Fig. 2.2-7

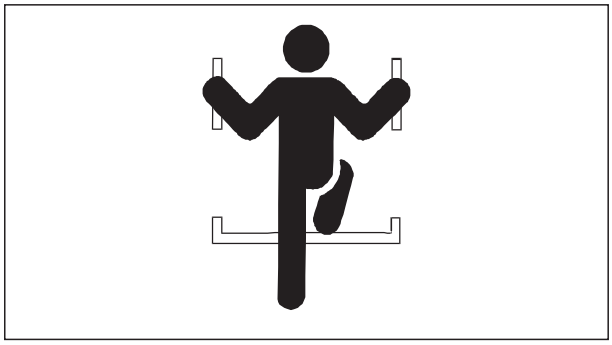

Fig. 2.2-8

Courtesy of Machine.Market

https://truckmanualshub.com/

2.2.10 Preventing burns

2.2.10.1 Hot coolant

- To prevent burns caused by hot coolant or steam when checking or discharging the coolant, wait until the engine coolant is cool enough before proceeding.
- Never open the cap of radiator before the engine cools down. Loosen the cap of the radiator slowly before removing it. Internal pressure of radiator must be relieved to avoid serious burns.

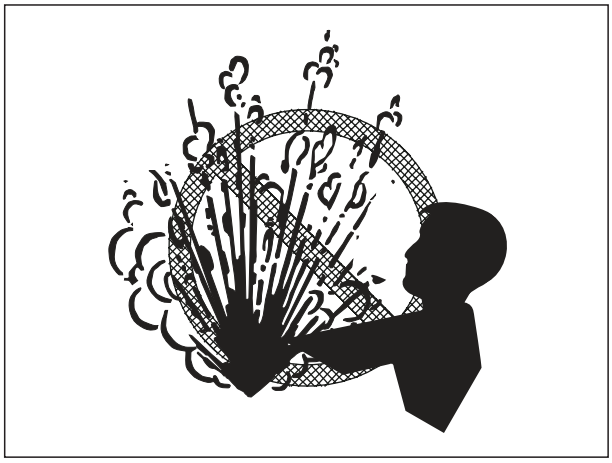

Fig. 2.2-9

2.2.10.2 Hot oil

- To prevent scalds caused by hot oil when checking or discharging the oil, always wait for the engine oil to cool down before you proceed.
- When the engine has cooled down, loosen the cover or screw plug slowly to relieve internal pressure.

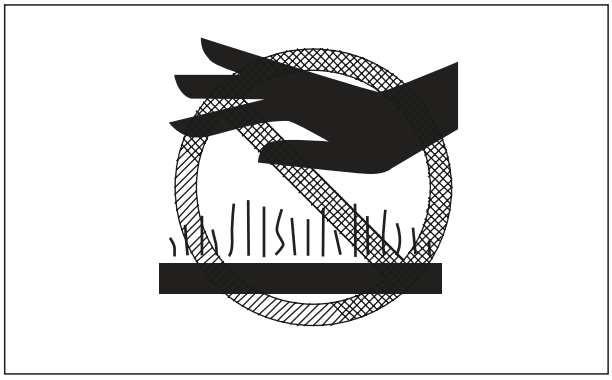

Fig. 2.2-10

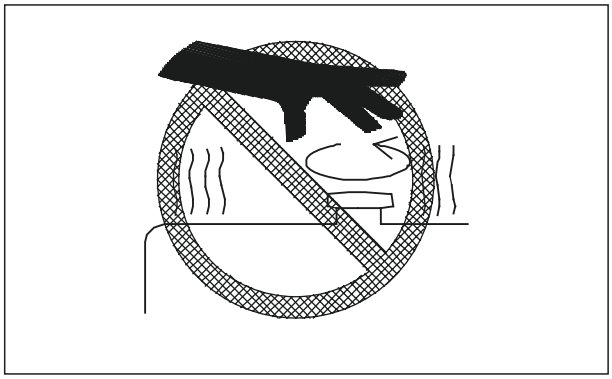

Fig. 2.2-11

Courtesy of Machine.Market

https://truckmanualshub.com/

2.2.11 Preventing fire and explosion

2.2.11.1 Fire caused by fuel or oils

- Engine oil and fuel must be stored in designated place, where unauthorized persons cannot enter.
- Never smoke or use fire near fuel or engine oil.
- Check for missing or loose pipe clamps, twisted hoses, hoses rubbing against pipeline,damaged oil cooler, and loose bolts in flange of oil cooler, so as to avoid oil leakage.
- Tighten, repair or replace any missing,loose or damaged pipe clamps, pipelines,hoses, oil coolers or other flange bolts.
- Refuel or store oils in a place with good ventilation.

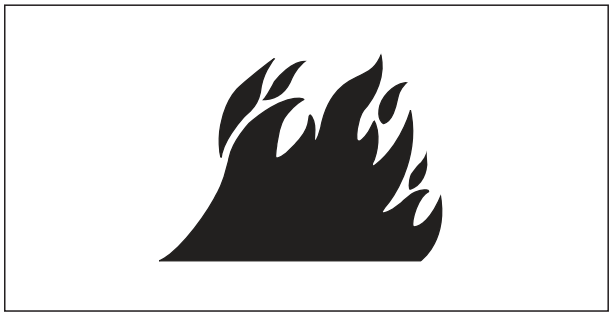

Fig. 2.2-12

Fig. 2.2-13

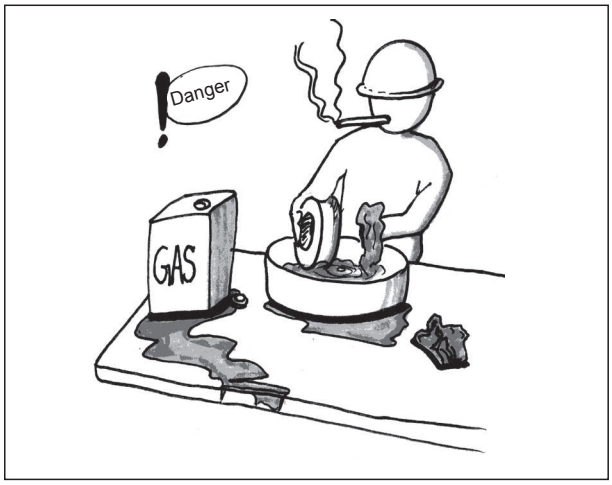

Fig. 2.2-14

Courtesy of Machine.Market

https://truckmanualshub.com/

2.2.11.2 Fire caused by flammable materials

- Remove at any time dry leaves, wood chips, paper pieces, dirt and other flammable materials built up or stuck on engine, exhaust manifold, battery or interior of engine hood to prevent fire.

2.2.11.3 Fire caused by electric lines

- Short circuit of electrical system can cause fire.
- Keep electric terminals clean and fastened.
- Check power cables and electric lines for looseness, entanglement, hardening or break each day after operating for 8-10 hours. Check the presence or damage of wiring terminal cover.
- In case of slack or entangled power cables or electric wires, tighten the connections or wire clips, and repair or replace broken wires.

2.2.11.4 Fire caused by hydraulic lines

- Check the clamps, guards and gaskets of all hoses and pipes to see whether they are tightened in position.
- In case of loosening, their vibration in operation may lead to friction against other components, resulting damage of hose, ejection of high-pressure oil, disastrous fire or serious injury.

Courtesy of Machine.Market

https://truckmanualshub.com/

2.2.11.5 Fire caused by illumination equipment

- Anti-blast illumination equipment shall be used to avoid explosion when fuel, oil,electrolyte, window cleaning detergent or cooling fluid is being checked.
- Instructions in this manual must be followed when power outlet on the machine is used for illumination.

2.2.12 In the event of fire

When a fire breaks out, leave the machine immediately by the following steps.

- Turn start switch to the OFF position to shut down the engine.
- Leave the machine with the help of hand-holds and steps.

2.2.13 Windshield cleaning detergent

- Use alcohol based detergent. Never use methanol based detergent as it irritates eyes.

Courtesy of Machine.Market

https://truckmanualshub.com/

2.2.14 Precautions when using ROPS(Roll over protective structure)

- The operator's cab has a ROPS structure. In addition to supporting of the load if the machine tips over, it also absorbs the impact energy and protects the operator. If the function of ROPS is reduced, it cannot protect the operator and he may be injured.
- Always do the following. Do not weld, drill holes, or make any other modification to the operator's cab structure.
- Repair or replace the operator's cab if it is deformed by falling objects or when the machine tips over. For details of repair, please consult your SANY distributor.

Fig. 2.2-15

Fig. 2.2-16

2.2.15 Attachment installation

- Installation of optional parts or attachments may involve safety issues or be limited by the law. In this case, contact your Sany distributor in advance.
- Sany assumes no responsibility for the injury,accidents and product failure caused by the use of unauthorized attachments and parts.
- Before installing and using machine attachments,read related instructions regarding the attachment and general precautions on attachment in this manual.

Courtesy of Machine.Market

https://truckmanualshub.com/

2.2.16 Cab windows glasses

- Broken cab windows at the side of the work equipment may expose the operator in direct contact with the work equipment. In this case, stop operation immediately and replace the glasses.
- Broken or damaged window provides no protection to the operator. When the roof window is damaged, replace it immediately with a new one.

2.2.17 Unauthorized modification

Any modification unauthorized by Sany may lead to safety problems, personal injury or death. Improper modification can affect machine's strength and operator's view. Contact your Sany distributor before making any modification.

Sany assumes no responsibility for the accidents, failure or damage caused by unauthorized modification.

2.2.18 Examination and confirmation of worksite

Before starting operations, check first if there is any danger on the jobsite. If you do not understand the dangers of the jobsite before starting operations, the machine may tip over, or the ground may collapse, or rocks may fall,causing injury to the operator. Always:

- Check the terrain and condition of the ground at the worksite, and determine the safest method of operation. Do not operate where there is a hazard of landslides or falling rocks.
- Prevent any unauthorized person from entering the operating area.
- Before operating in shallow water or on

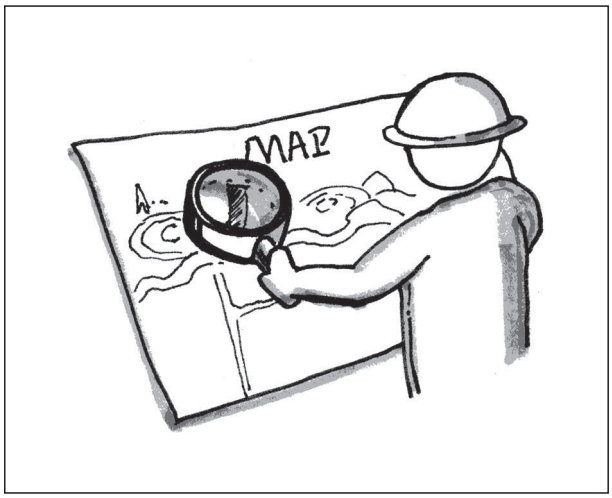

Fig. 2.2-17

Courtesy of Machine.Market

https://truckmanualshub.com/

soft ground, check the depth of the water, speed of the current, and the firmness and shape of the ground. Avoid any area where there is any obstruction to travel operations.

- Maintain the travel path on the jobsite so that there is no obstruction to travel operations.

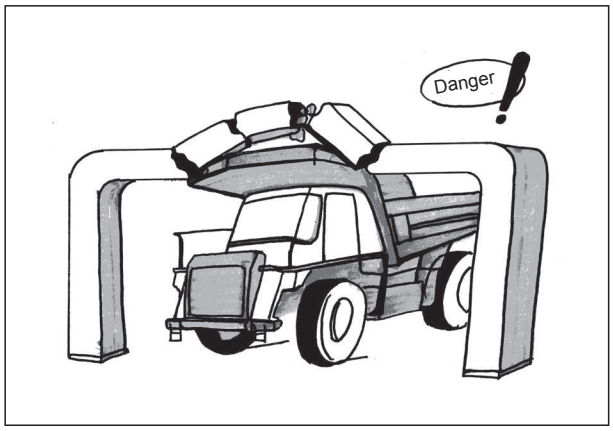

Fig. 2.2-18

2.2.19 Operation on soft ground

- Avoid traveling or operating your machine near cliffs, road shoulders or trenches. The soft ground plus machine weight and vibration can cause your machine to sink or tip over. The ground may become even softer after heavy rain, explosion or earthquake.
- When operating on a dam or near an excavated ditch, vibration and machine weight may trigger a landslide. Before operation, take protective measures to prevent your machine from tipping over or falling.

Courtesy of Machine.Market

https://truckmanualshub.com/

2.2.20 Overhead power cables

Never drive or operate your machine near power cables, which may bring electrocution hazard and cause machine damage, personal injury or death. The following steps are to be followed while working at where power cables could be nearby.

- Before operation in the vicinity of power cables, inform local power company of the coming operation and ask them to take necessary measures.
- If your machine is too close to power cable, electrocution is most likely to occur and cause burns or death. A safe distance must be kept between machine and power cable (See Table 1-1). Before operation, communicate with local power company regarding safety measures.
- A signalman is to be designated to give signals if your machine is too close to power cables.
- Nobody is allowed to approach the machine when it is operated near high-voltage cables.
- If your machine is too close to the cable or touches the cable, to prevent electrocution, operator shall not leave the cab until machine power is surely cut off. In addition, Nobody is allowed to approach the machine.
- To prevent accidents, wear rubber shoes and rubber gloves during operation. Cover the operator's seat with rubber sheet and pay attention to exposed part of body that should not touch the lower part of machine.

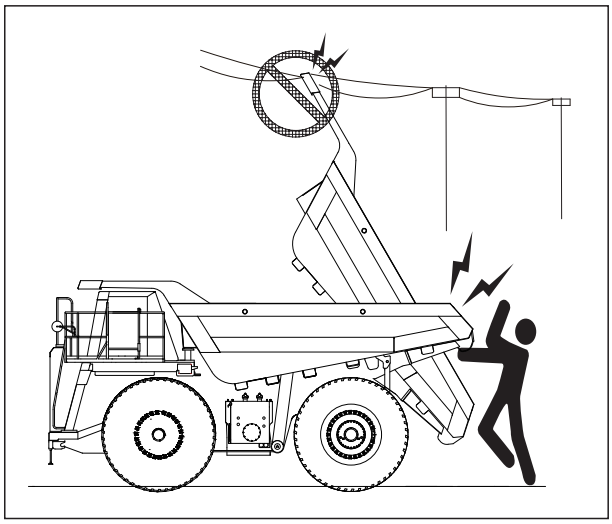

Fig. 2.2-19

Cable Voltage	Safe Distance
100V - 200V	2 m (7 ft) or above
6，600V	2 m (7 ft) or above
22，000V	3m（10 ft）or above
66，000V	4m（14 ft）or above
154，000V	5m（17 ft）or above
187，000V	6m（20 ft）or above
275，000V	7m（23 ft）or above
500，000V	11m（36 ft）or above

Table 1-1

Courtesy of Machine.Market

https://truckmanualshub.com/

2.2.21 Alternate exit

- If you are unable to open the cab door in case of emergency, use the safety hammer to break the rear window to escape.
- Remove the pieces of glass from the window frame before escaping. Be careful not to be cut by broken glass. Pay attention to the broken glass on the ground, which may cause you to slip and fall.

Fig. 2.2-20

2.2.22 Ensure good visibilty

This machine is equipped with mirrors to improve the visibility, but even with mirrors, there are places, which cannot be seen from the operator's seat, so always be careful when operating.

When operating or traveling in places with poor visibility, if it is impossible to confirm the condition of the job side or obstacle is in the area around the machine, there is danger that the machine may suffer damage or the operator may suffer serious personal injury. Whenoperating or traveling in places with poor visibility, always observe the following items strictly.

- If the visibility cannot be sufficiently assured, position a flagman if necessary. The operator should pay careful attention to the signs and follow the instructions of the flagman.
- The signals should be given only by one flagman.
- When working in dark places, turn on the working lamps and front lamps of the machine, and if necessary, set up additional lighting in the area.
- Stop operations if there is poor visibility,

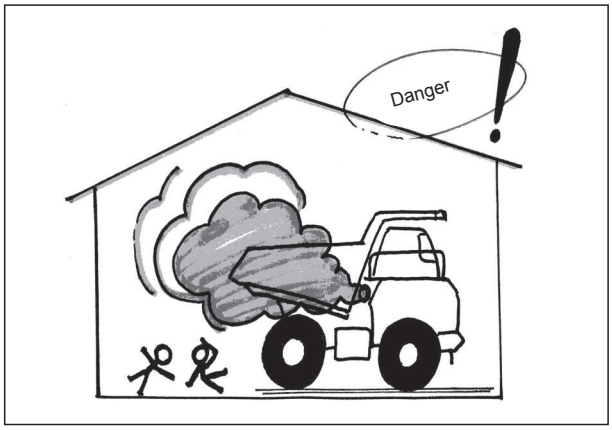

Fig. 2.2-21

Courtesy of Machine.Market

https://truckmanualshub.com/

such as in fog, snow, rain, or sand storms.

- Check the mirrors on the machine before starting operations every day. Clean off any dirt and adjust the view to ensure good visibility.
- In areas where it is impossible to confirm the area behind the machine and observation cameras have been set
- up, clean off any dirt from the lens and make sure that the camera gives a clear view of the rear.

2.2.23 Asbestos hazard

Inhalation of asbestos dust can cause lung cancer. It is possible to inhale asbestos dust when performing tear-down operation or handling industrial wastes at job site. The following rules must be followed.

- Use water, instead of compressed air, to remove the dust.
- If the air contains asbestos dust, operate the machine following the wind. All persons shall wear acceptable filter mask.
- Nobody is allowed to approach the machine during operation.
- The regulations, rules and environment criterion at job site shall be observed.

WARNING

No asbestos is used in this machine. But aftermarket parts could contain asbestos. Therefore,use only the parts and components supplied by Sany.

Courtesy of Machine.Market

https://truckmanualshub.com/

2.3 Safe Operation Precautions

2.3.1 Safe starting

2.3.1.1 Safe mounting

When you mount or dismount the machine:

- Always face the machine and maintain a three-point contact (one hand and two feet or two hands and one foot).
- Never jump on/off the machine. Never mount a moving machine.
- Never use any control lever as handhold. Remove the mud, oil dirt and water from the pedals, handholds and your soles at all times.
- The cab must be aligned with the undercarriage centerline before you enter or exit the cab.

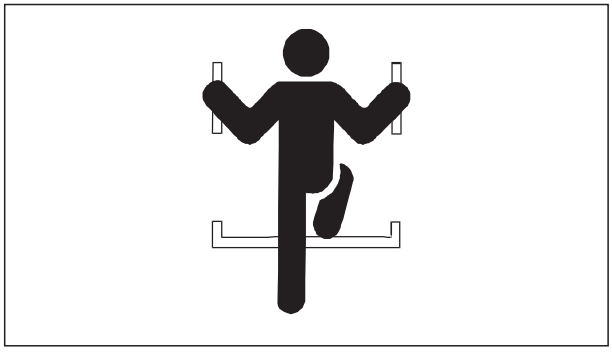

Fig. 2.3-1

2.3.1.2 Seat adjustment

- Uncomfortable seat position can easily lead to operator fatigue and mistakes. The seat position should be adjusted upon change of operator. Leaning against the back of seat, operator shall be able to push the pedal to its limit with his foot, and operate the control lever properly. Otherwise, the seat should be readjusted by moving it forward or backward.

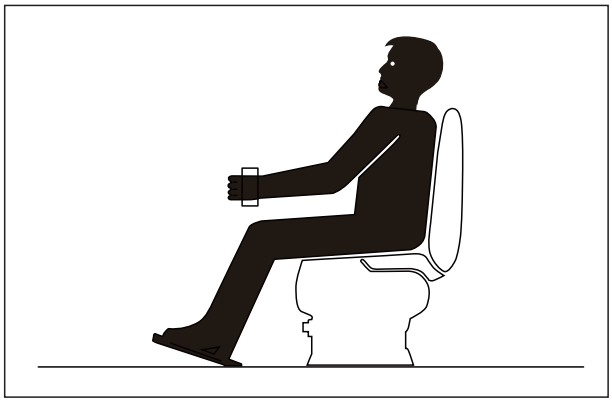

Fig. 2.3-2

Courtesy of Machine.Market

https://truckmanualshub.com/

2.3.1.3 Seat belt

- The operator may get seriously injured or killed when the machine tips over. Before operating the machine, check carefully your seat belt, the buckles and the anchor point. Replace the seat belt if damage or excessive wear is observed. When the machine is being operated, keep your seat belt buckled up.
- The seat belt must be replaced every three years regardless of its condition.

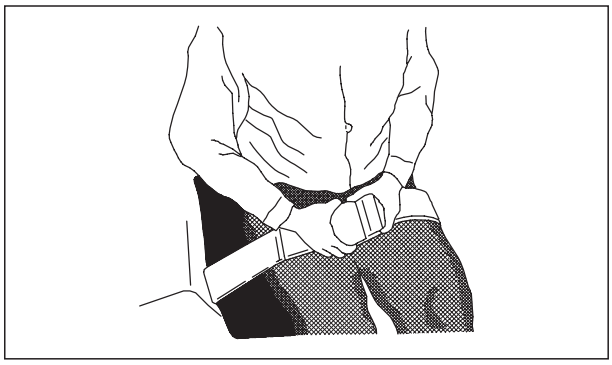

Fig. 2.3-3

2.3.1.4 Before starting the engine

Before starting your daily work, the following items must be observed before starting the engine.

- Clean the windows to ensure a good visibility.
- Clean the head lamps and work lamps, and check if they are in good condition.
- Check coolant level, fuel level and engine oil level.
- Check for blocked air filter and damaged electrical wires.
- Check that there is no mud or dust accumulated around the movable parts of the accelerator pedal or brake pedal, and check that the pedals work properly.
- Adjust the operator's seat so that it is easy to see to the front, and check that there is no damage or wear to the seatbelt or seatbelt mounts.
- Check that the instruments and gauges are working properly, that the gear shift lever is at the Neutral position, and that the dump control lever is at the FLOAT position.

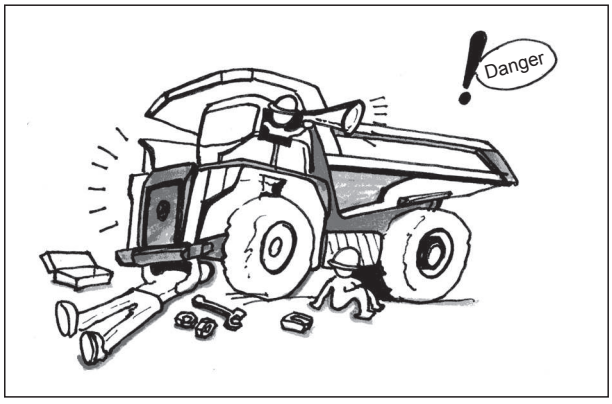

Fig. 2.3-4

Courtesy of Machine.Market

https://truckmanualshub.com/

- Adjust the mirrors so that the rear of the machine can be seen clearly from the operator's seat.
- Check that there are no persons or obstacles above, below, or in the area around the machine.
- Check that the parking brake switch is in the PARKING position.

2.3.1.5 Engine starting rules

- Before starting the machine, make sure nobody is on, under or around the machine. Sound the horn to warn people around.
- Always start and operate the machine from the operator seat.
- No one is allowed to stay on the machine except the operator.
- Never start the engine by shorting the start motor circuit, which is dangerous and may cause machine damage.

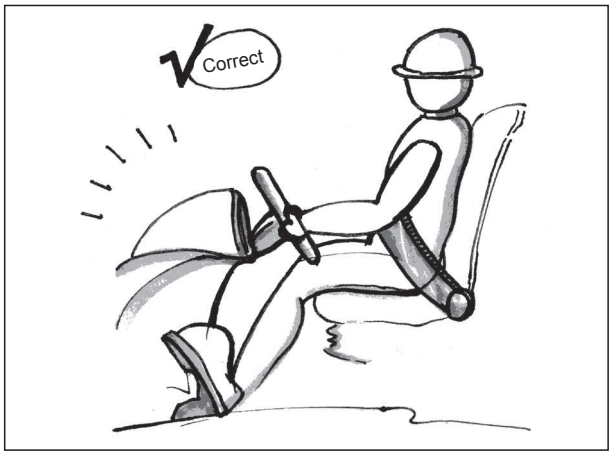

Fig. 2.3-5

2.3.1.6 Starting engine in cold season

- Sufficient warm-up operation is necessary. Incomplete warming up may result in slow reaction and accidents.
- Before starting, check the battery electrolyte.In case of frozen electrolyte, never charge the battery or use alternative power source to start the engine; instead, melt the electrolyte first. Otherwise, fire may break out on the battery.

Courtesy of Machine.Market

https://truckmanualshub.com/

2.3.1.7 Engine starting aid

Follow procedures in the Operation sectionwhen using jumper cables to start the engine. Improper handling may cause battery explosion or loss of machine control, resulting in personal injury and death. Never use jumper cables to start the engine unless necessary. Contact your Sany distributor before such an attempt.

- Using jumper cables to start the engine needs two persons working together with one seated in the operator seat and the other handling the battery.
- Wear goggles and rubber gloves before starting the engine with jumper cables.
- When connecting a normal machine with a faulty machine with jumper cables, battery voltage of the two machines shall be the same. Be careful not to allow the two machines to contact with each other.
- Turn both start switches to OFF position when connecting the two machines. Otherwise, the machine may move and cause danger when it is powered on.
- Start with the positive terminal when connecting the jumper cable. Start with the ground or negative terminal when disconnecting the jump cable.
- When disconnecting the jumper cable, take care not to allow the clips of jumper cable to contact with each other or with the machine.
- Ether is a liquid used for cold start, which is extremely flammable and explosive. Read the instructions on the ether container before application.
- Never use ether if the engine is equipped with spark-plug preheater or other forms of preheater.

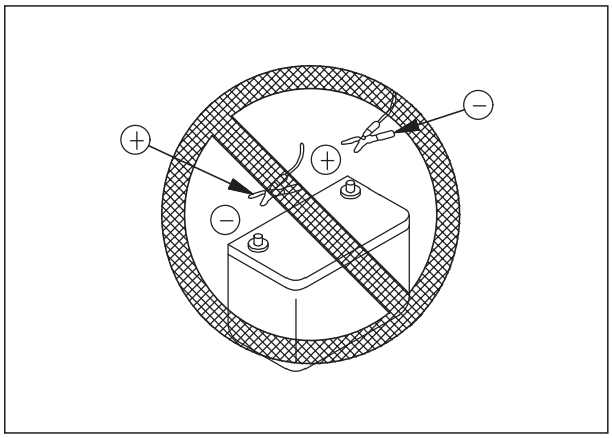

Fig. 2.3-6

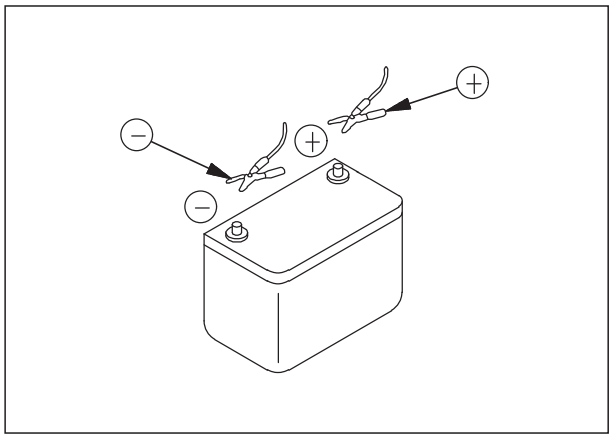

Fig. 2.3-7

Courtesy of Machine.Market

https://truckmanualshub.com/

2.3.1.8 After starting the engine

- Run the engine at low idle for 3 to 5 minutes after engine startup, and check the running parameters and make sure they are normal and all readings are within normal working range.

2.3.2 Operation

2.3.2.1 Inspection before operation

- When conducting inspection, move the machine to a spacious area without barriers and operate slowly. Any other person is not allowed to approach the machine.
- Be sure to buckle the seat belt. Check the gauges and machine operation for abnormality; check the swivel system and steering system for abnormal operation.
- Check for abnormal noise, vibration, heating, odor or gauge reading; check oil or fuel for leakage.
- In case of any abnormality, stop operation and take corrective measures immediately.

2.3.2.2 Prior-operation precautions

To prevent serious injury or death, follow the items below before moving the machine.

- It is dangerous to stay in the working range during machine operation. Sound the horn to warn people within the working range before operating your machine.
- Nobody is allowed to stay on and near the machine, or within the working range.
- To improve the visibility in the travel direction, you may turn the cab if necessary.

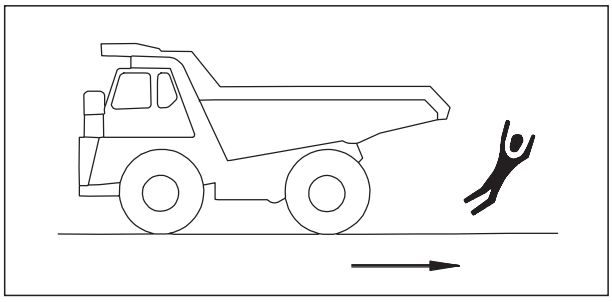

Fig. 2.3-8

Courtesy of Machine.Market

https://truckmanualshub.com/

- Assign a signalman at where visibility is poor.

2.3.2.3 Precautions when traveling

- Do not load the dump body above the maximum payload. The brakes will lose their effect.
- Never turn the starting switch key to the OFF position when the machine is traveling. If the engine stops when the machine is traveling, the steering will become heavy. There is danger that this may cause mistaken operation of the steering wheel and lead to serious personal injury. If the engine stops, depress the brake pedal immediately and stop the machine.
- Lower the dump body, setting the dump lever at FLOAT position, then travel.
- Never transport anyone riding on the body or carry out any other operation besides the main use for the machine. This is dangerous.

Fig. 2.3-9

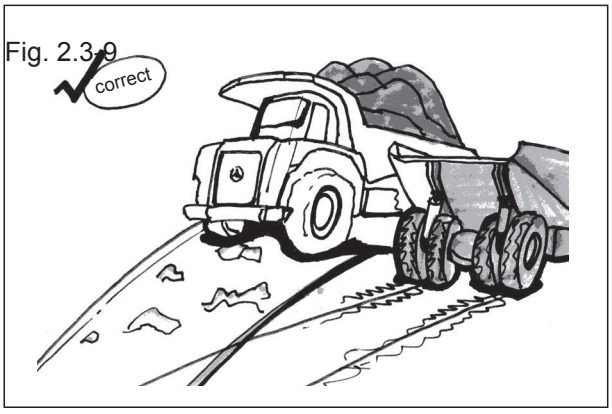

- To avoid accidents caused by coming in contact with people, structures, and other machines, always maintain the proper distance when traveling.
- When traveling on rough ground, travel at low speed and avoid sudden changes in direction to prevent the machine from turning over.
- When operating in tunnels, inside buildings, or under bridges or electric wires, or other places where the height is

Fig. 2.3-10

Courtesy of Machine.Market

https://truckmanualshub.com/

limited, operate slowly and be extremely careful not to let the machine or dump body contact anything.

- Continuous long time traveling at high speed may cause tires to heat up, abnormally increasing the inflation pressure inside the tires, and to blow up. The explosion of the tire is very destructive, and it can lead to serious injury or death.
- Contact with SANY before doing long continuous traveling.
- Do not move the gear shift lever to the N position when the machine is traveling or when it is traveling down a slope. Always place the transmission in gear before traveling.
- If the transmission is in Neutral, the engine cannot provide any braking effect and the steering wheel will become heavier. In addition, there will be lack of cooling oil for the retarder, so there is danger that it will overheat or that the actuation of the brake will be poor.
- There may also be damage to the transmission or other parts of the power train, and there is danger of unexpected accidents.

Fig. 2.3-11

Courtesy of Machine.Market

https://truckmanualshub.com/

2.3.2.4 Precautions when traveling on slopes

To prevent the machine from tipping over or slipping to the side, always do as follows.

- When traveling downhill, use the retarder brake to reduce speed. Do not turn the steering wheel suddenly.
- Travel on grass, fallen leaves, or wet steel plates with low speed. Even with slight slopes there is a hazard that the machine may slip.
- If the engine should stop on a slope, apply the brakes fully and apply the parking brake also to stop the machine.

2.3.2.5 Precautions when operating

- Before starting the dumping operation, check to be sure there is no person or object behind the machine.
- Stop the machine in the correct position, and check again that there is no person or object behind the machine. Give the determined signal, then slowly operate the dump body.If necessary, use blocks for the wheels or position a flagman.
- Do not carry out dumping operations on slopes. The machine stability will become poor and there is the danger that it could tip over.
- Do not travel with the body raised.
- Do not leave or return to the operator's seat during loading work.

Fig. 2.3-12

2.3.2.6 Precautions for accumulated snow, and ice

- When traveling on snow-covered or icy roads, there is danger that the machine may slip when traveling and tip over or

Courtesy of Machine.Market

https://truckmanualshub.com/

fall off the road. This may lead to serious personal injury and damage. Always do as follows.

- Fit tire chains.
- Do not apply the brake suddenly on slopes. Reduce the speed and use the braking force of the engine together with the foot brake (depress the foot brake repeatedly; do not keep it depressed) to stop the machine.
- Do not enter areas where the snow is deep. There is danger of driving off the road.

Fig. 2.3-13

2.3.2.7 Parking the machine

Select a parking place

- Park your machine on a solid and flat surface.
- Park the machine in an ares free of such hazards as falling stones or landslide. If the terrain is low, park it in a relatively higher place.
- Never park your machine on a road undergoing construction. If you have to park your machine in such a place, flags are to be used on daytime and signal lamps at night to warn other people or vehicles according to local regulations.
- Chock the wheels to prevent unexpected movement.

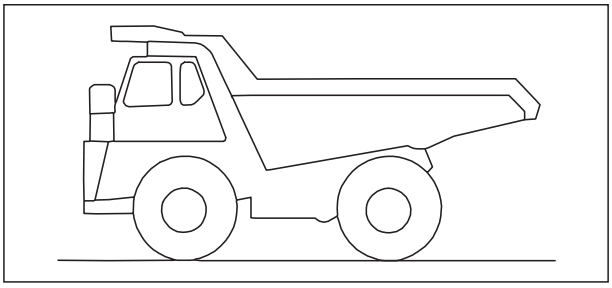

Fig. 2.3-14

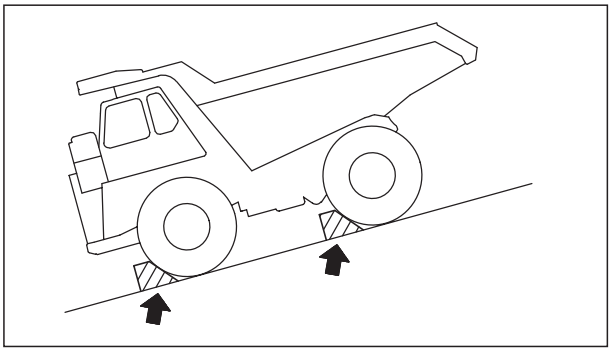

Fig. 2.3-15

Courtesy of Machine.Market

https://truckmanualshub.com/

2.3.2.8 Preparing the machine

Before maintaining the machine:

- Place the parking switch to "Park" position.
- Move the transmission to Neutral position.
- Raise the hand lever to "Float" position.
- Run the engine at idle speed for 3 to 5 minutes to cool the engine.
- Move the steering wheel back and forth to release the residual pressure in the accumulator.
- Turn the start switch to OFF position and stop the engine.
- Close the windows and the cab door.
- Lock all access doors, boxes and chambers.
- When leaving your machine, face the machine and maintain a three-point contact with it. Never jump off the machine.
- Be careful with slippery aisle and ladder when dismounting the machine.

Courtesy of Machine.Market

https://truckmanualshub.com/

2.3.3 Transportation

This machine must be disassembled for transportation. When transporting the machine, please consult your Sany distributor.

2.3.3.1 Loading and unloading the machine

Improper loading and unloading of the machine may cause it to fall or tip over. Follow the procedures below:

- Load or unload the machine only on a solid and flat surface.Keep it a safe distance away from road sides or a cliff.
- Keep on-lookers away.
- Use an access ramp with enough strength.Make sure that the width, length and thickness of the access ramp is capable of providing a safe loading/ unloading operation(at an angle ≤ 15°).
- Make sure the access ramp is free from grease, oil, water and debris. Clean the track if necessary. Be extremely careful when loading or unloading the machine in rainy or snowy weather.
- Run the engine at low speed and operate slowly.
- Gravity center of the machine may alter when it passes the jointing area between the ramp and the trailer. The machine may tilt at this moment. Travel slowly when the machine is on the joint area.
- Never reposition the machine on the access ramp. If necessary, drive it off the ramp, reposition, and get on the ramp again.
- When loading or unloading the machine on a platform, make sure the platform has adequate width, strength and a proper grade.
- Once the machine is loaded, lock the cab door. Otherwise, it may swing open during transportation.

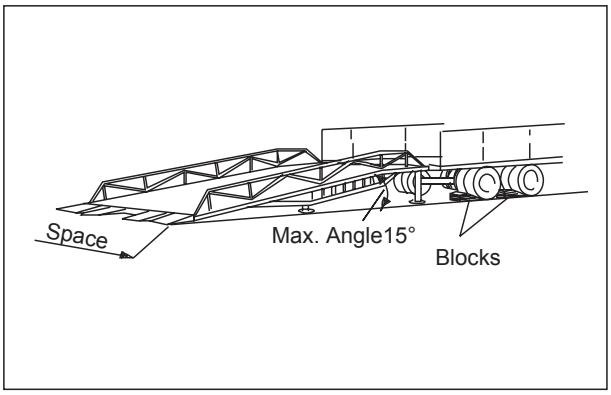

Fig. 2.3-16

Courtesy of Machine.Market

https://truckmanualshub.com/

- Secure the machine with chains and chocks.

2.3.3.2 Transporting the machine

Observe the following items when transporting
the machine:

- Note the dimension of the trailer and the machine, especially the height. Watch outfor barriers overhead and in narrow passages
- Check the structure and strength of a bridge before crossing it. Obey local traffic regulations and traffic police directions when transporting the machine on highways.

Courtesy of Machine.Market

https://truckmanualshub.com/

2.3.4 Battery

Electrolyte contains sulfuric acid, which gives off flammable and explosive gases. Improper handling may cause personal injury or fire. Observe the instructions below when handling battery:

- Never smoke or use fire near a battery.
- Turn the engine ignition key to the OFF position before working on the battery.
- Wear safety glasses and rubber gloves when handling battery.
- Electrolyte is a strong acid. If electrolyte contacts your clothing or skin, flush immediately with plenty of water. Electrolyte may cause blindness if it contacts your eyes. Flush immediately with plenty of clean water under such circumstances and seek medical treatment.

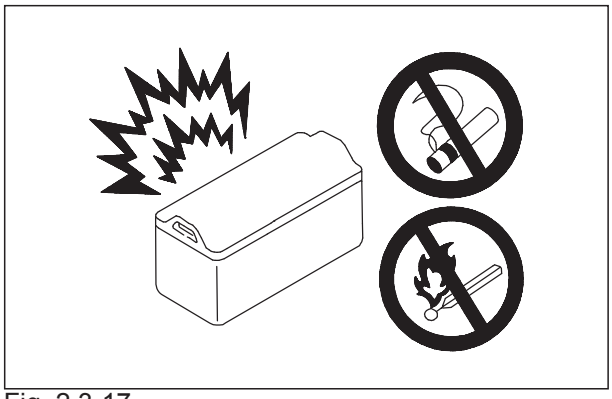

Fig. 2.3-17

To avoid battery-induced explosion, observe
the following precautions:

- Never allow tools and other metal parts to contact with battery terminals. Keep tools or metal parts away from batteries.
- Stop the engine and wait for one minute before you proceed. Always disconnect the grounding terminal (negative(-)) first. To connect battery cables, always begin with the positive (+) terminal, and then connect the negative (-) terminal. Ensure all terminals are securely connected.
- Battery temperature rises when it is being charged. When battery temperature exceeds 45°C, stop charging and wait till it is at ambient temperature. Reduce the charging current by half and continue the charging process.
- A battery being charged may give off flammable gases. Before charging a battery, remove it from the undercarriage, put it in well-ventilated area and remove the cap.

Courtesy of Machine.Market

https://truckmanualshub.com/

- A battery being charged may give off flammable gases. Before charging a battery, remove it from the undercarriage, put it in well-ventilated area and remove the cap.
- If acid squirts out of battery vent during charging, stop charging immediately.
- Never smoke and keep flames or sparks out when charging.
- When the battery has been fully charged, a green indicator will be on. Stop the charging process at this time.
- Restore the battery cover after charging.
- Put the battery back to its original position.

Courtesy of Machine.Market

https://truckmanualshub.com/

2.3.5 Towing

- When towing a damaged machine, improper operation or use of unacceptable wire cable could lead to serious accident:
- Never tow the machine on a slope.
- Wear protective gloves and a had hat when using wire ropes.
- Check the strength of wire cable and make sure it could bear the weight of machine.
- Never use ropes with broken wires (A), reduced diameter (B) and twisting (C). Such ropes may break when towing.
- Never stand between the towing machine and the towed machine during towing operation.
- Operate the machine slowly. Never add load to the wire cable suddenly.

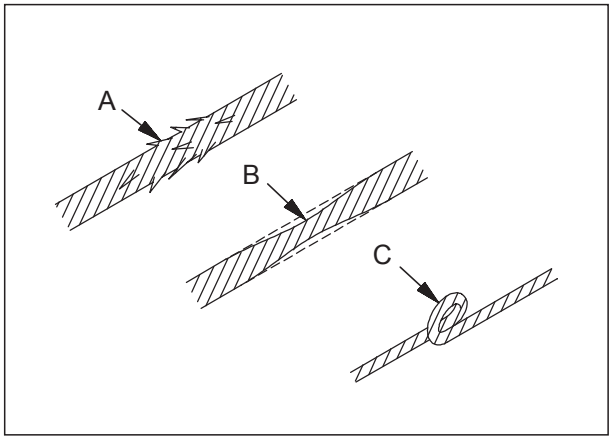

Fig. 2.3-18

Courtesy of Machine.Market

https://truckmanualshub.com/

2.4 Precautions for Maintenance

2.4.1 Lock-out and tag-out

- Before maintenance, attach a Never OPERATE tag or similar sign to the cab's retarder lever to warn others that this machine is under maintenance.
- Attach other warning tags around the machine if necessary.
- When maintenance is underway, starting the engine or moving the control levers or pedals could lead to serious accident.

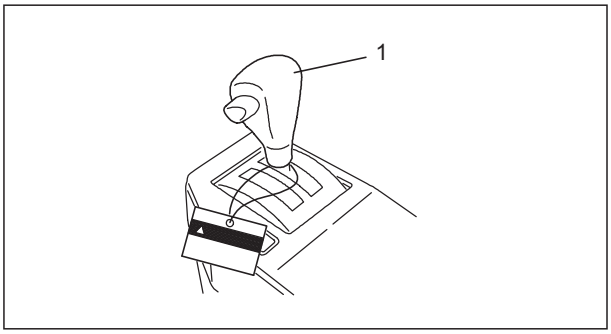

Fig. 2.4-1

⚠ DANGEROUS

Never OPERATE !
When this tag is not being used keep it in the storage compartment.Still more,when there is no storage compartment,keep it in the operation manual case.

2.4.2 Select a working area

- For maintenance work, select a clean flat area with plenty of space, ample sunlight and good ventilation.
- Clean the working area by removing fuel, lubricant and water, and covering slippery ground with sand or other absorptive materials.
- Never leave your hammer or other tools at the working area.
- If a clean, tidy working area cannot be guaranteed, there would be danger of tipping, thus resulting in personal injury.

2.4.3 Prior-maintenance precautions

To prevent accidents:

- Understand maintenance procedure before operation.
- Keep a clean and dry working area.
- Never spray water or steam in the cab.
- Never add lubricant and carry out other maintenance work when your machine is

Courtesy of Machine.Market

https://truckmanualshub.com/

moving.

- Keep your hands, feet and clothing away from rotating parts.

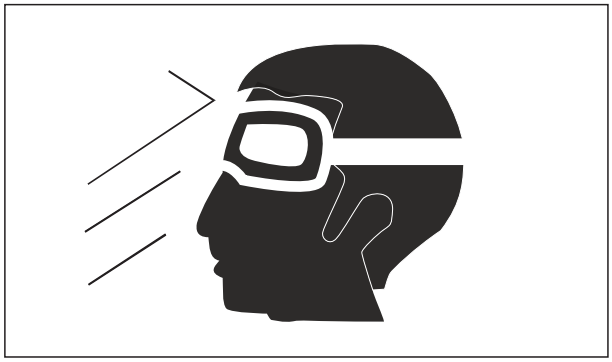

Fig. 2.4-2

2.4.4 Preparing yourself

Only approved personnel can maintain or repair the machine. An observer may be assigned if necessary.

- Wear protective clothing and shoes necessary for the job.
- Wear rubber apron and rubber gloves when handling corrosive materials. Wear heavy gloves when handling wooden materials,wire ropes or sharp-edged metals.
- Wear a face shield when removing spring or elastic parts, or adding acid to battery. Wear safety hat and goggles when you weld or cut with a torch.
- Never carry out grinding, flame cutting or welding without an aspirator and ventilation equipment.

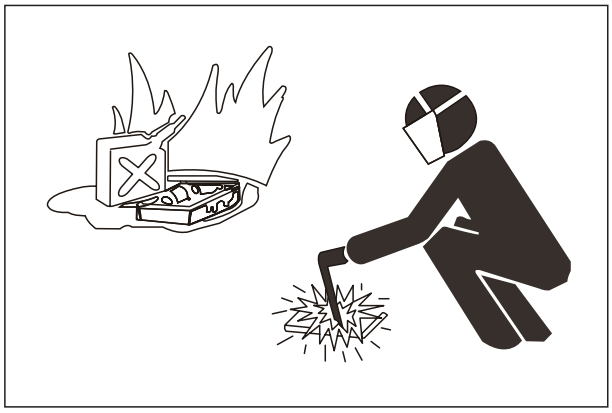

Fig. 2.4-3

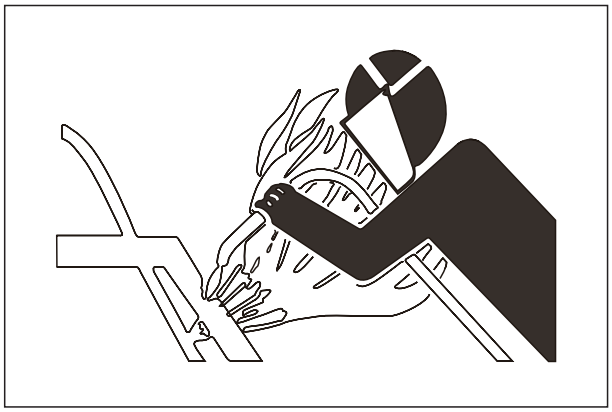

Fig. 2.4-4

Courtesy of Machine.Market

https://truckmanualshub.com/

2.4.5 Stop engine before carrying out maintenance

- Park the machine on solid and flat ground.
- Lower the bucket to the ground.
- Lower the dump body, set dump control lever (1) to the HOLD position, lock the dump control lever , then stop the engine.

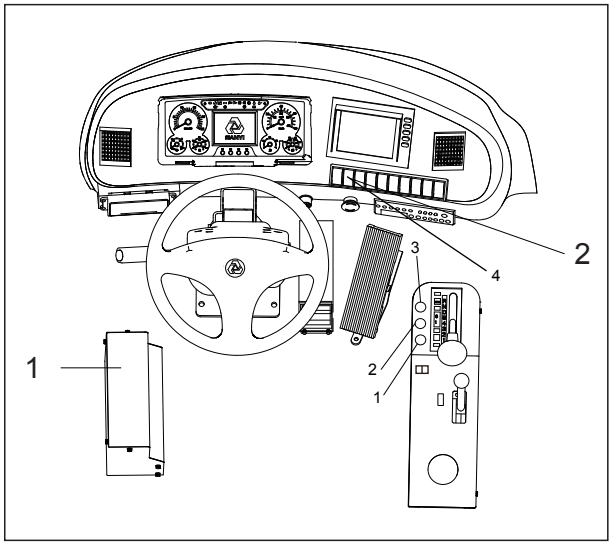

Fig. 2.4-5

- Set parking brake switch (2) to the PARKING position and put blocks under the tires to prevent the machine from moving.

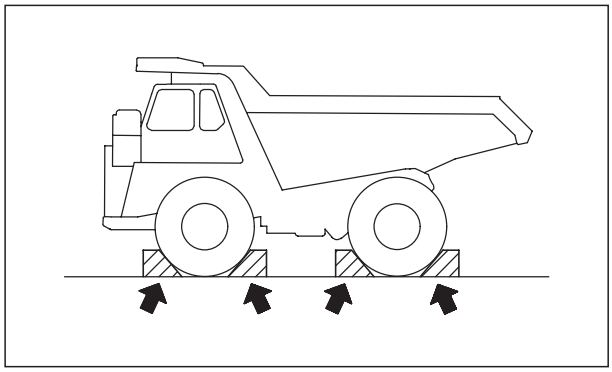

Fig. 2.4-6

Courtesy of Machine.Market

https://truckmanualshub.com/

2.4.6 Maintenance with engine running

To prevent injury, no maintenance shall be carried out when the engine is running. However, if maintenance has to be done on a running engine, at least two worker are needed to carry out the maintenance.

- One of the workers shall stay in the operator seat ready to shut down the engine at any time. All the workers involved shall keep in touch.
- set dump control lever (1) to the HOLD position,then set parking brake switch (2) to the PARKING position.

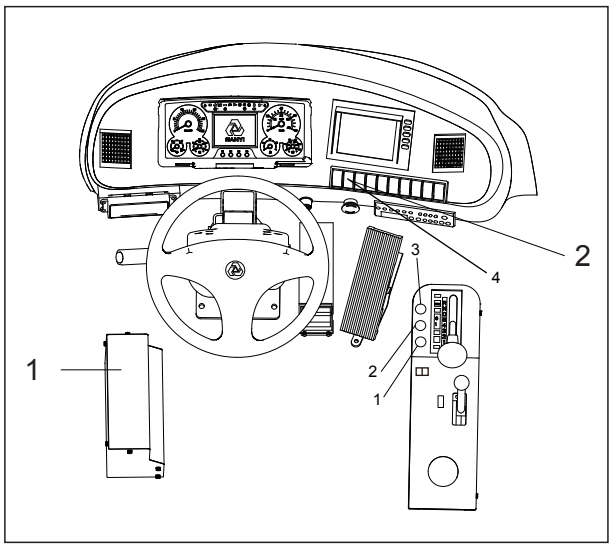

Fig. 2.4-7

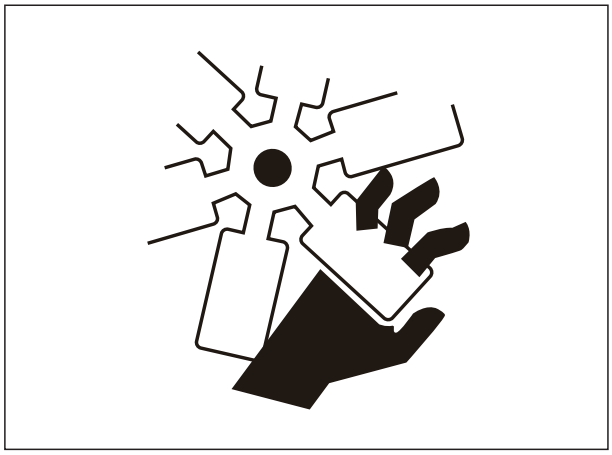

Fig. 2.4-8

Courtesy of Machine.Market

https://truckmanualshub.com/

2.4.7 Using proper tools

Use proper tools and use them correctly. Using damaged, inferior, defective, temporary tools or using the tools incorrectly could lead to serious accidents.

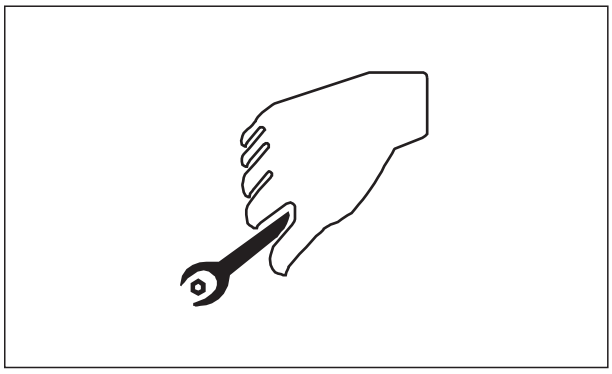

Fig. 2.4-9

2.4.8 Handling suspension cylinder

The suspension cylinder and accumulator are charged with high-pressure nitrogen gas. If any mistake is made in handling, there is danger that it may cause an explosion or serious personal injury.

- Do not remove or disassemble unless necessary.
- Do not bring it near flame or dispose of it in fire.
- Do no make holes in it weld it, or use a cutting torch.
- Do not bear any shock by hammering, rolling or similar activity.
- Ask your Sany distributor when sealing gas into the cylinder or replacing gas from it.

2.4.9 Working under the machine

- If the machine or work equipment has to be lifted for maintenance, blocks or supports that are strong enough to support the machine or work equipment should be used.
- When carrying out inspection with the dump body raised, always set the dump control lever to the HOLD position, then insert the body pivot pin.

Fig. 2.4-10

Courtesy of Machine.Market

https://truckmanualshub.com/

2.4.10 Work in loud noise

- Wearing ear covers or ear plugs if you have to work in loud noise for a long time.
- Loud noise may impair your hearing permanent or temporary.

2.4.11 Use compressed air

- When compressed air is used for cleaning, flying particles may cause personal injury. In this case, wear goggles, dust-preventive mask, gloves and other protective gear.

2.4.12 Use a hammer

- When using a hammer to strike hard metal parts such as pin, bucket teeth, cutting edge or shaft, the flying of parts and metal pieces may cause bodily injury. Therefore, wear goggles and gloves and ensure the surrounding area is clear of any other people.

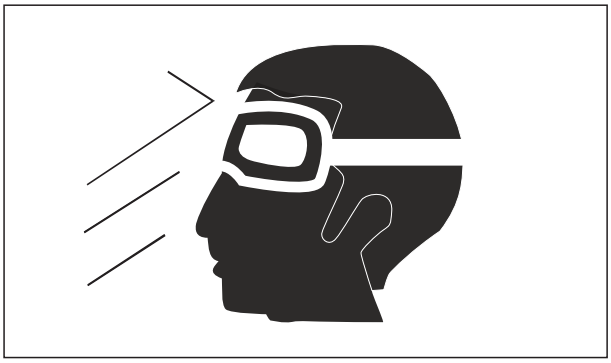

Fig. 2.4-11

2.4.13 Welding operation

- Welding operation may lead to fire or electrocution.Only qualified welders are allowed to conduct welding operation using proper equipment.

Courtesy of Machine.Market

https://truckmanualshub.com/

2.4.14 Precautions with high-pressure oil

The hydraulic system is always under pressure.Make sure pressure in hydraulic circuits has been relieved before checking or replacing the lines. Residual pressure in the circuit may cause serious accidents.

Release system pressure before maintainingthe hydraulic system:

1) Remove thebutterfly nut of the vent valve and pressthe venting button to release the internalpressure of the hydraulic tank;

2) Shut down engine.Rotate steering wheel to the two directions for several turns and release steering system pressure. Press foot valve continuously to release pressure of brake accumulator.

- Open fire is not allowed around the hydraulic system. Remove splashed hydraulic oil as quickly as possible.
- Diesel oil or pressurized hydraulic oil can penetrate skin or eyes, causing serious injury, blindness or death. It is hard to find the leaking of hydraulic oil with naked eyes.A cardboard or wooden board is necessary for checking for leaks. Never touch leaking liquid with bare hand. Wear face shield or safety goggles to protect your eyes. If any liquid penetrates your skin, flush with clean water immediately and get medical attention as soon as possible.
- The fuel lines are under high pressure when the engine is running. When checking or servicing the fuel system, shut down the engine and wait for 30 seconds till internal pressure drops before operation.

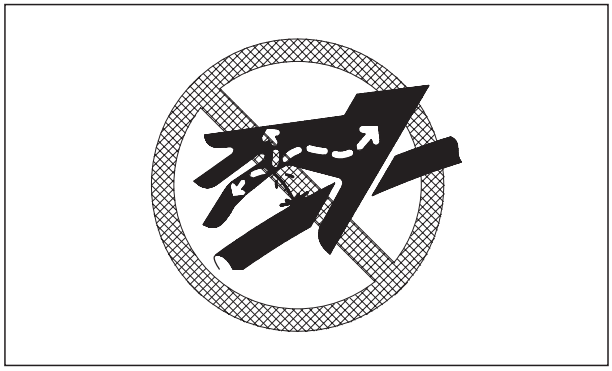

Fig. 2.4-12

Courtesy of Machine.Market

https://truckmanualshub.com/

2.4.15 High-pressure hoses

If oil leaks from high-pressure hose, fault or even fire may occur. If any bolt on hose is loose, stop operation and tighten it to specified torque. In case of hose damage, stop operation immediately and contact Sany HM authorized dealer.

Replace the hose immediately in case of the following problems:

- Damage or leak of hydraulic hose fitting.
- Damage or break of outer cover, or exposed steel wires of reinforcement layer.
- Ballooning outer cover in some places.
- Distortion or crushing of movable parts.
- Impurities in outer cover.

2.4.16 Hot cooling system

- When engine temperature rises, pressure of the cooling system increases. Before removing the radiator cover, stop the engine and let the system cool down. The radiator cover could only be removed after the coolant in it has cooled down.

WARNING

Touching hot high-pressure coolant may cause serious injury.

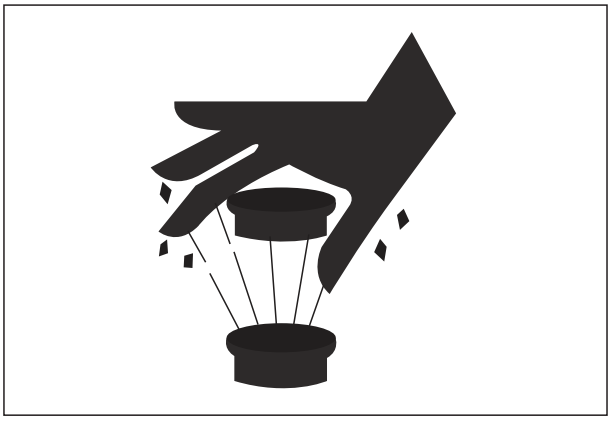

Fig. 2.4-13

Courtesy of Machine.Market

https://truckmanualshub.com/

2.4.17 Air-conditioning system

Keep fire source away when servicing airconditioning system.

- In maintenance of air-conditioning system, observe the instruction on the refrigerant cylinder and use it correctly. The type of refrigerant is R134a. Use of other refrigerants may damage the air-conditioning system.
- Refrigerant getting into eyes may cause blindness. It may cause frostbite if splashed on your skin.
- Obey local material disposal regulations. Never discharge refrigerant directly into the air.

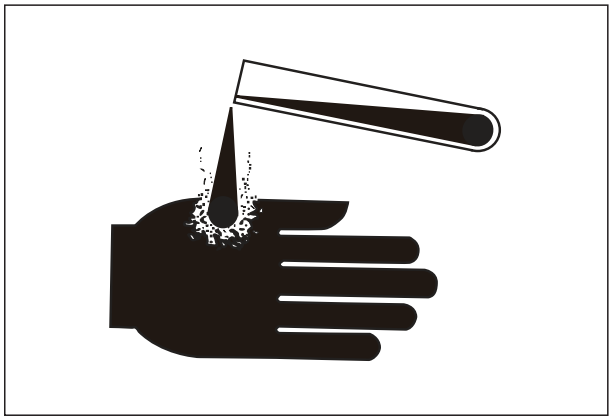

Fig. 2.4-14

WARNING

Refrigerant R134 a is a harmless gas under room temperature. It will change into highly toxic gas when burning.

2.4.18 High voltage precautions

- When the engine is running or has just been shut down, high voltage can occur in fuel injector terminal and engine controller. Since there is danger of electrocution, never touch fuel injector or interior of engine controller.
- Please contact Sany distributor if you have to access fuel injector terminal or interior of engine controller.

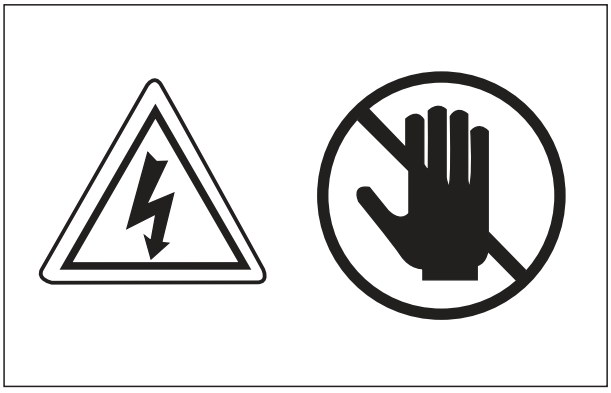

Fig. 2.4-15

Courtesy of Machine.Market

https://truckmanualshub.com/

2.4.19 Accumulator

Accumulator contains highly pressurized nitrogen.Improper operation of accumulator can cause explosion and serious accidents. Therefore, the following precautions must be observed:

- Never disassemble the accumulator.
- Never let the accumulator be near a fire source or exposed in flame.
- Never punch, weld or flame-cut on accumulator.
- Never strike or roll the accumulator, or let it bear any impact.
- The gas must be released when disposing of the accumulator. Contact Sany distributor for this disposal.

Fig. 2.4-16

2.4.20 Avoiding fire and explosion

DANGER

Never smoke when handling the fuel or maintaining the fuel system. The gases in empty fuel tank can cause explosion easily. Never carry out flame-cutting or welding operation on fuel pipe, fuel tank or fuel vessels, which can lead to fire, explosion, injury or death.

- Then engine must be shut down and electrical equipment must be switched off when refueling the tank. Be extremely careful when adding fuel to a hot engine. No sparks shall occur around the grounding nozzle.
- Handle all solvents and dry chemicals in a place with good ventilation according to the steps indicated on vessel.

Courtesy of Machine.Market

https://truckmanualshub.com/

- Clean the machine of all dust and residuals. Never place greasy rag or other flammable materials on machine.
- When cleaning the parts and components, use nonflammable solvents instead of gasoline, diesel oil or other flammable fluids.
- Store flammable liquids and materials in suitable vessels as required by safety laws and regulations.
- Check fire extinguishers, fire-fighting system and fire detectors (if equipment) and make sure they are ready for use.

2.4.21 Regular replacement of safetyrelated parts

Safety-related parts such as hoses and seat belt must be replaced regularly for the consideration of operating the machine safely in a long term.

- Materials of some parts may deteriorate naturally when exceeding specific time limit. Repeated use may lead to deterioration, wear and damage, hence the accidents and serious injury. Through merely visual inspection or feel it is hard to find out how long the parts could serve. Therefore, regular replacement is necessary.
- Repair or replace any safety parts once found defective regardless of its service time.

2.4.22 Maintenance operation

- Check all parts and replace the worn, broken and damaged parts during repairing operation. Over-worn and over-damaged parts may fail in operation and cause injury and death. Replace damaged

Courtesy of Machine.Market

https://truckmanualshub.com/

or illegible signs and marks.

- Tighten all fasteners and connectors to specified torque.
- Install all guards, covers and hoods after repair and service. Replace or repair damaged guards. Only the type of hydraulic oil approved or recommended by Sany should be used to make up the hydraulic system.
- Start the engine and check for any leaks (check the hydraulic system), and operate all control devices to be sure of their proper functioning. Make road test if necessary. Shut down the engine and check the work you have done (see if there are missing pins, gaskets and nuts). Check again all hydraulic oil levels before operation.

2.4.23 Proper disposal of wastes

Improper disposal of wastes harms the environment and ecology. Consult local environmental protection department or Sany distributors for methods of recycling and waste disposal.

- Potential harmful substances used in Sany products include hydraulic oil, fuel, cooling liquid, refrigerant, filter and batteries etc.
- Use leak-proof vessels to hold discharged fluids. Never use food or beverage containers.
- Never dump waste fluids directly to the ground, sewage or water source.
- Leaking of refrigerant from air conditioner can spoil the atmosphere of the globe. Related laws and regulations must be followed to recover or regenerate the refrigerant.

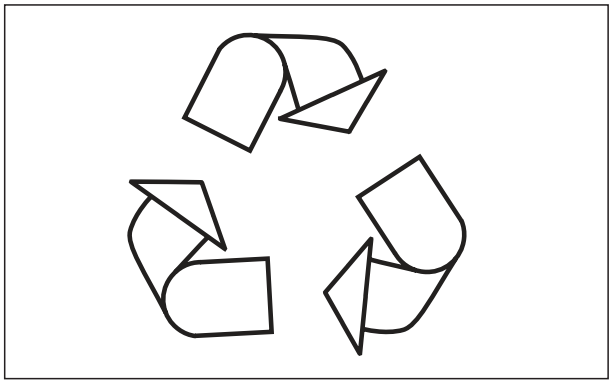

Fig. 2.4-17

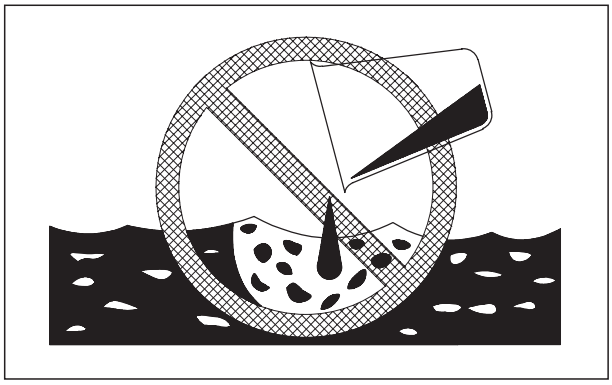

Fig. 2.4-18

Courtesy of Machine.Market

https://truckmanualshub.com/

2.5 Precautions With Tires

2.5.1 Handling tires

Explosive separation of a tire and/or rim parts can cause serious injury or death.To ensure safety, always do as follows.

- When carrying out maintenance, disassembly, repair, or assembly of the tire or rim, special tools and procedures must be used. Always ask your Komatsu distributor to do the work.
- Use only specified tires and inflate them to the specified pressure.
- When pumping up the tires, check that no other person is standing near the tire, and install an air chuck with a clip that can be secured to the air valve. To prevent the tire inflation pressure from becoming too high, measure the pressure from time to time with an air gauge while pumping up the tire.
- If the pressure goes down abnormally or the rim parts go not fit the tire, there is a problem with the tires or rim parts. Always contact your Komatsu distributor for repairs.
- If the rim parts are not fitted properly when the tire is being pumped up, there is danger that the rim parts may fly off, so set up a protective fence around the tire, and do not stand directly in front of the rim. Stand beside the tread when pumping up the
- Do not adjust the tire inflation pressure immediately after traveling at high speed or carrying out operations under heavy load.
- Never carry out welding or light a fire near the tire.
- Always release all pressure from a single tire, or from both tires of a dual assembly, prior to removing any rim components.

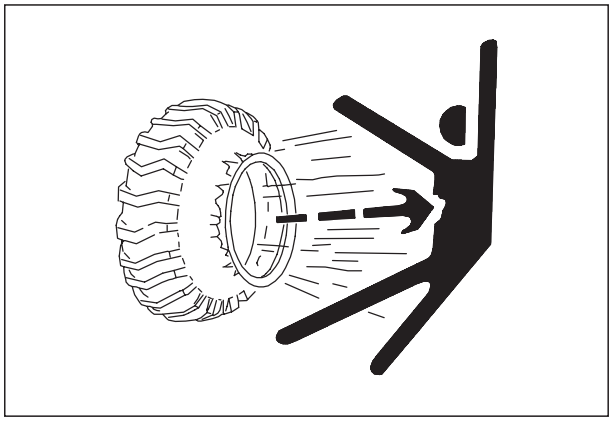

Fig. 2.5-1

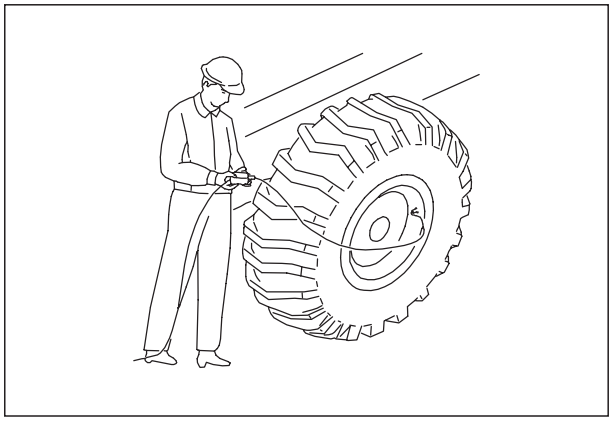

Fig. 2.5-2

Courtesy of Machine.Market

https://truckmanualshub.com/

2.5.2 Precautions when storing tire

- Store the tires in a warehouse where unauthorized persons cannot enter. Always erect a fence and put up "No Entry" signs if the tires must be stored outside. Stand the tire on level ground, and block it securely so that it cannot roll or fall over if any person should touch it.
- Do not lay the tire on its side. This will deform the tire and cause it to deteriorate.
- If the tire should fall over, do not attempt to stop it. Get out of the way quickly.

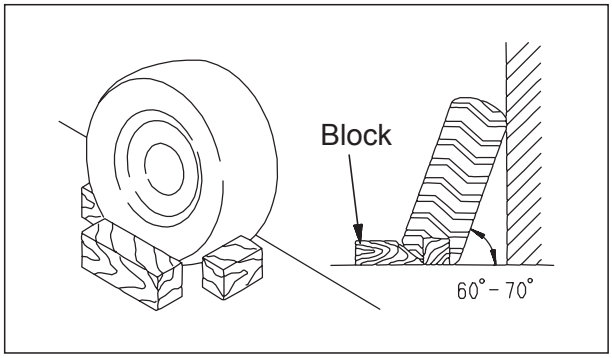

Fig. 2.5-3

Courtesy of Machine.Market

https://truckmanualshub.com/

BLANK PAGE

Courtesy of Machine.Market

https://truckmanualshub.com/

TABLE OF CONTENTS

3 CONTROLS AND OPERATING 3-1

3.1 Controls and Instruments 3-1

3.2 Indicator 3-2

3.3 Instruments 3-4

3.4 Reversing monitor system 3-6

3.5 Switches 3-7

3.6 Combined switch 3-8

3.7 Air Conditioner Control Panel 3-9

3.8 Driver Seat 3-11

3.9 Seat Belt 3-11

3.10 Truck Controls 3-12

3.10.1 Braking 3-12

3.10.2 Service brake 3-12

3.10.3 Parking brake 3-13

3.10.4 Emergency brake 3-13

3.10.5 Retarder 3-13

3.11 Engine 3-15

3.11.1 Accelerator pedal 3-15

3.11.2 QUANTUM electronic fuel system 3-15

3.11.3 Quantum electronic fuel system - description 3-17

3.11.4 QUANTUM electronic fuel system - operation 3-18

3.11.5 Electronic fuel system diagnostic codes 3-20

3.12 Steering 3-24

3.13 Transmission 3-25

3.13.1 CEC2 Shift System 3-25

3.13.2 Introduction and operation 3-28

3.13.3 General Transmission Operation 3-32

3.13.4 Retrieving Diagnostic Codes 3-33

3.13.5 Clearing Diagnostic Codes 3-33

3.14 Body Control 3-38

3.15 The common fault code of vehicle monitor system 3-40

4 OPERATING THE TRUCK 4-1

4.1 Pre-Starting Inspection 4-1

Courtesy of Machine.Market

https://truckmanualshub.com/

4.2 Check of each component 4-3
4.3 Engine Operation 4-6
4.4 Start the Engine 4-8
4.5 Starting the Engine with Jumper Cables 4-10
4.6 Pre-Operating Checks 4-11
4.7 Braking Function Check 4-12
4.8 Service Brake Performance Check 4-12
4.9 Emergency Brake Performance Check 4-13
4.10 Driving and Stopping 4-13
4.11 Stopping the Engine 4-14
4.12 Parking 4-16
4.13 Prolonged Storage 4-16

5 WORKING THE TRUCK 5-1
5.1 Working the Truck 5-1
5.2 Loading 5-1
5.3 Hauling 5-3
5.4 Dumping 5-4
5.5 Empty Return 5-6

6 ROADING 6-1
6.1 General 6-1
6.2 Preparation Prior to Roading 6-1
6.3 In Case of Trouble 6-2

7 MOVING DISABLED TRUCK 7-1
7.1 Moving Disabled Truck 7-1

8 LUBRICATION AND SERVICING 8-1
8.1 Safety Precautions 8-1
8.2 Lubrication and Maintenance 8-2
8.3 Other Maintenance 8-8
8.4 Service Capacity 8-12
8.5 Recommended Lubricants 8-13
8.6 Maintenance Procedures 8-15
8.6.1 Daily (10hrs) maintenance inspection form 8-15
8.6.2 Maintenance inspection form for 150hrs 8-21

Courtesy of Machine.Market

https://truckmanualshub.com/

8.6.3 Maintenance inspection form for 250hrs 8-23
8.6.4 Maintenance inspection form for 300hrs 8-25
8.6.5 Maintenance inspection form for 450hrs 8-27
8.6.6 Maintenance inspection form for 500hrs 8-29
8.6.7 Maintenance inspection form for 600hrs 8-33
8.6.8 Maintenance inspection form for 750hrs 8-35
8.6.9 Maintenance inspection form for 900hrs 8-37
8.6.10 Maintenance inspection form for 1000hrs 8-39
8.6.11 Maintenance inspection form for 1050hrs 8-43
8.6.12 Maintenance inspection form for 1200hrs 8-45
8.6.13 Maintenance inspection form for 1250hrs 8-47
8.6.14 Maintenance inspection form for 1350hrs 8-49
8.6.15 Maintenance inspection form for 1500hrs 8-51
8.6.16 Maintenance inspection form for 1650hrs 8-55
8.6.17 Maintenance inspection form for 1750hrs 8-57
8.6.18 Maintenance inspection form for 1800hrs 8-59
8.6.19 Maintenance inspection form for 1950hrs 8-61
8.6.20 Maintenance inspection form for 2000hrs 8-63
8.6.21 Maintenance inspection form for 2100hrs 8-67
8.6.22 Maintenance inspection form for 2250hrs 8-69
8.6.23 Maintenance inspection form for 2400hrs 8-71
8.6.24 Maintenance inspection form for 2500hrs 8-73
8.6.25 Maintenance inspection form for 2550hrs 8-77
8.6.26 Maintenance inspection form for 2700hrs 8-79
8.6.27 Maintenance inspection form for 2750hrs 8-81
8.6.28 Maintenance inspection form for 2850hrs 8-83
8.6.29 Maintenance inspection form for 3000hrs 8-85
8.6.30 Maintenance inspection form for 3150hrs 8-91
8.6.31 Maintenance inspection form for 3250hrs 8-93
8.6.32 Maintenance inspection form for 3300hrs 8-95
8.6.33 Maintenance inspection form for 3450hrs 8-97
8.6.34 Maintenance inspection form for 3550hrs 8-99
8.6.35 Maintenance inspection form for 3600hrs 8-101
8.6.36 Maintenance inspection form for 3750hrs 8-103
8.6.37 Maintenance inspection form for 3900hrs 8-107
8.6.38 Maintenance inspection form for 4000hrs 8-109

Courtesy of Machine.Market

https://truckmanualshub.com/

8.6.39 Maintenance inspection form for 4050hrs 8-115
8.6.40 Maintenance inspection form for 4200hrs 8-117
8.6.41 Maintenance inspection form for 6000hrs 8-119
8.6.42 Maintenance inspection form for 10000hrs 8-125

9 TECHNICAL DATA 9-1

Courtesy of Machine.Market

https://truckmanualshub.com/

3 CONTROLS AND OPERATING

3.1 Controls and Instruments

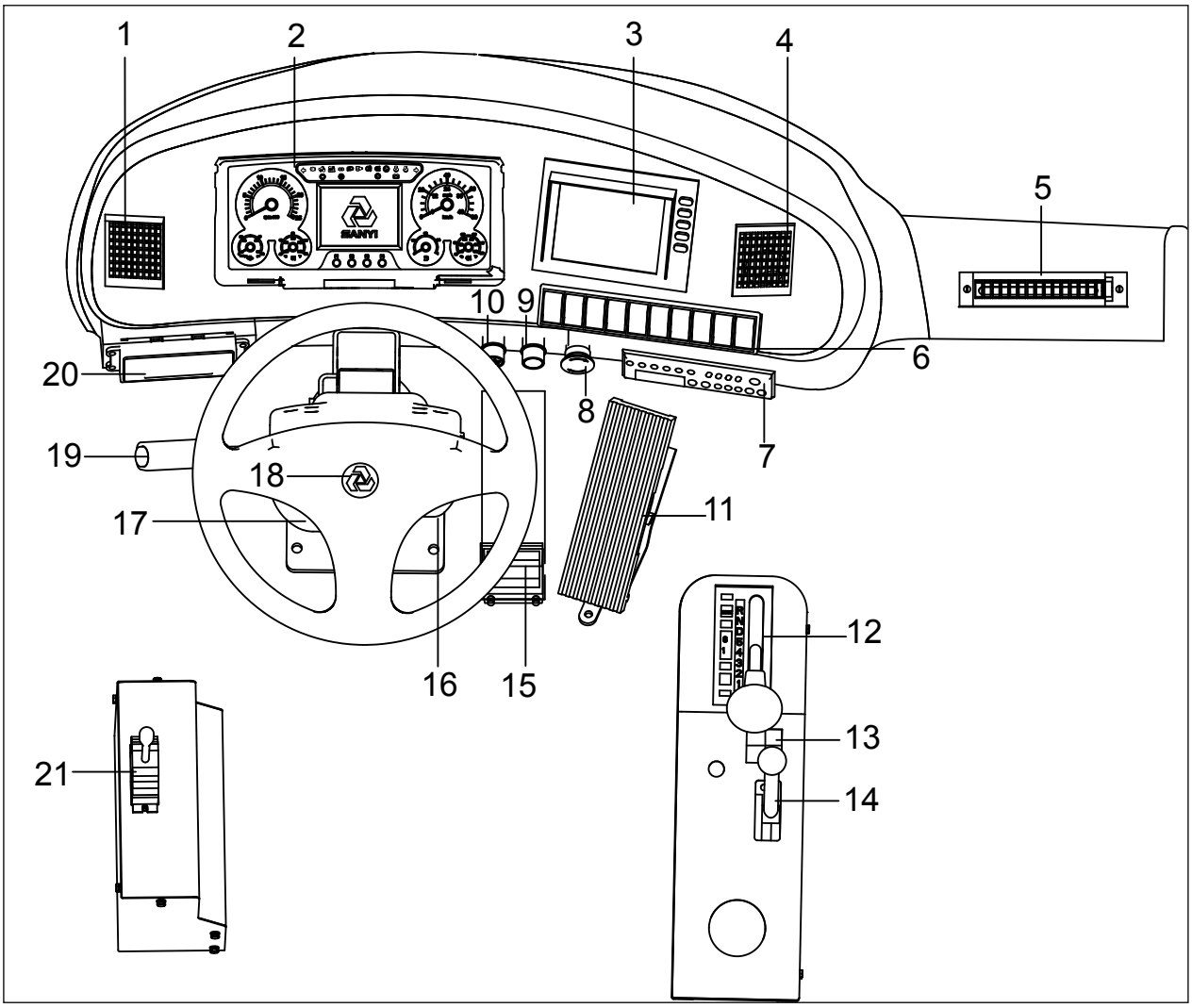

Fig 3-1

1. Air outlet
2. Combination instrument
3. Reversing monitor
4. Air outlet
5. Air outlet
6. Switch
7. Radio / MP3
8. Emergency brake button
9. Botton of solenoid valve for body stably control
10. Cigar lighter
11. Accelerator pedal
12. Gear shift lever
13. Transmission retarder switch
14. Retarder lever
15. Service brake pedal
16. Ignition key switch
17. Steering column assembly
18. Horn
19. Combination switch
20. Air conditioner control
21. Body control lever

Courtesy of Machine.Market

https://truckmanualshub.com/

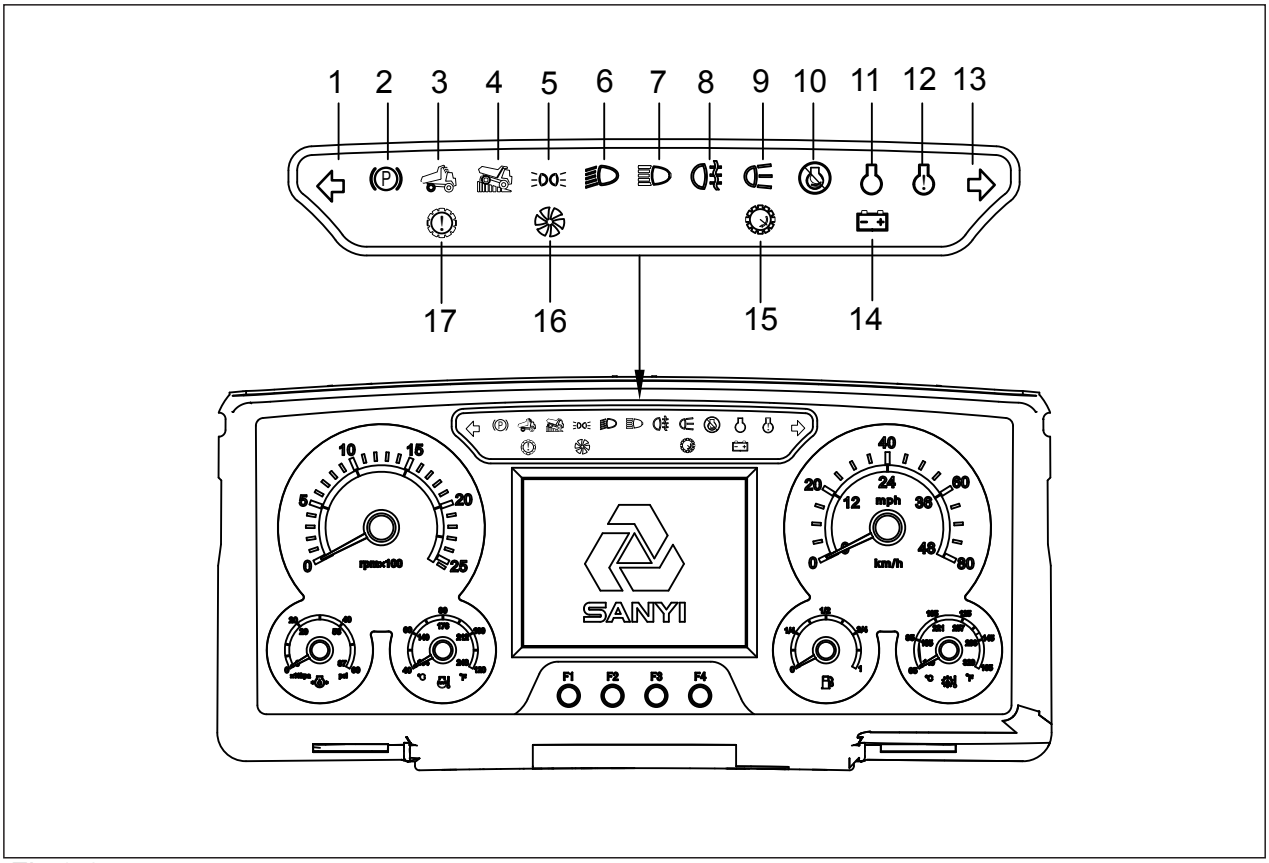

Fig 3-2

3.2 Indicator

1. Left steering indicator (green) - Flashes when the left indicator lights are operating.
2. Parking brake (red)-Illuminates when the parking brake is applied.
3. Body up (Yellow) - Illuminates to indicate that the body is NOT resting on the chassis. Never move the machine until this light goes OUT.
4. Retarder indicator (yellow) - Illuminates when the retarder is applied.
5. Side marker lamp (yellow) - Such lamp will be on when side marker lamp starts to work.
6. Dipped beam Indicator (green)-Illuminates when dipped beam start to work.
7. High beam indicator (blue)-Illuminates when high beam start to work.
8. Fog indicator (yellow) - Such lamp will be on when fog lamps start to work.

Courtesy of Machine.Market

https://truckmanualshub.com/

9. Engine stop indicator (red)- Illuminates when rear lamps start to work.
10. Engine Stop Indicator Red) - When the 'Stop' indicator comes on, the computer has detected a major malfunction in the engine that requires immediate attention.
Stop the machine when this light illuminates and do not operate until the fault is removed.
11. Engine maintenance indicator (white)- Indicates that the engine needs to be maintained. See Cummins Manual for details about specific maintenance items.
12. Engine warning indicator (yellow) - When the 'Warning' indicator comes on, the computer has detected a fault in the engine which may result in a power loss. The fault should be diagnosed and removed at the earliest opportunity.
13. Right steering indicator (green)- Flashes when the right indicator lights are operating.
14. Alternator charging (red) - Illuminates to indicate when the alternator is not charging.
15. Transmission over speed indicator (red) - Illuminates when the transmission ECU senses engine speed above 2350 rev/min.
16. Transmission over speed indicator- Illuminates when the transmission is in Torque Converter drive. It goes OUT when Lockup is engaged.
17. Check trans indicator (red) - Illuminates to alert of a fault in the transmission shift system or abnormal transmission temperature. The light will illuminate when the ignition key switch is turned to position '1' to provide a bulb and system check and should go off a few seconds after the engine is started.

Courtesy of Machine.Market

https://truckmanualshub.com/

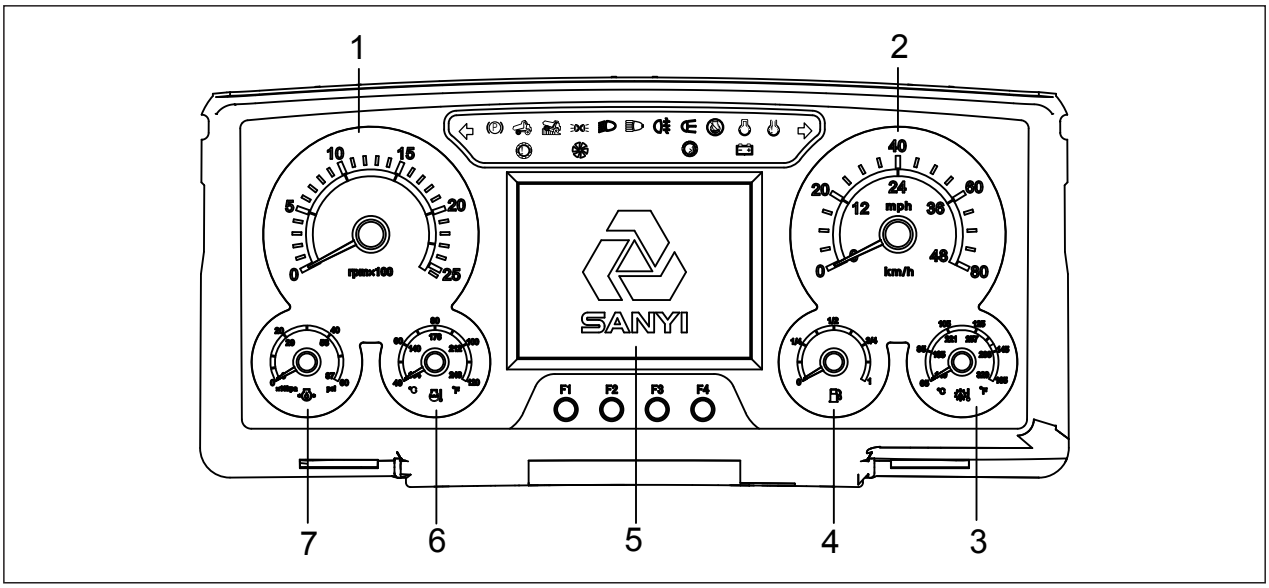

Fig 3-3

3.3 Instruments

1. Tachometer

Driven by CAN bus; it indicates engine speed in revolutions per minute. When the pointer is located in white area said speed is normal, and once the pointer is located in red area that speed is too high, should reduce speed immediately.

2. Speedometer

Driven by CAN bus; it indicates vehicle running speed. When the pointer is located in white area said speed is normal, and once the pointer is located in red area that speed is too high, should reduce speed immediately.

3. Transmission oil temperature gauge

The pointer indicates transmission oil temperature value. Such meter is directly connected to transmission temperature sensor. When the pointer is located in white area said transmission oil temperature is normal, and once the pointer is located in red area that transmission oil temperature is too

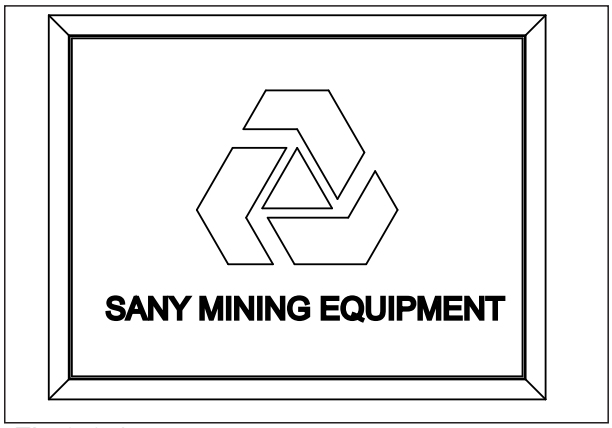

Fig 3-3.1

Courtesy of Machine.Market

https://truckmanualshub.com/

high, movement, the buzzer for 10 seconds, then shut down automatically. In the electric power the same fault buzzer action only once.

4. Fuel level gauge

The pointer indicates percent of full tank a actual fuel level. Such meter is directly connected to fuel level sensor. When the pointer is located in white area said fuel level is normal, and once the pointer is located in red area that fuel level is too low, movement, the buzzer for 10 seconds, then shut down automatically. In the electric power the same fault buzzer action only once.

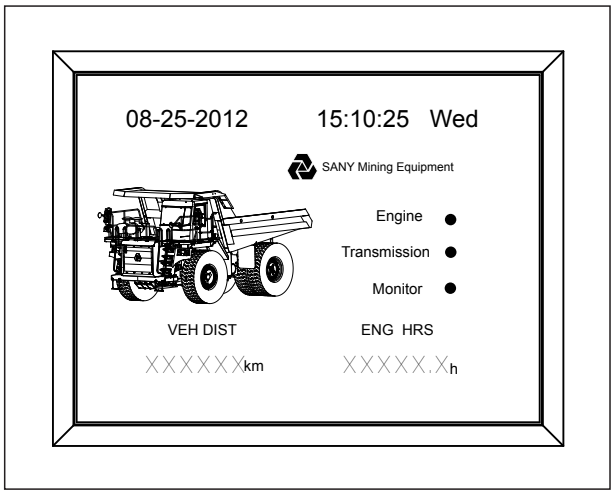

Fig 3-3.2

5. Display

1. Turn on power supply, start the key switch tol, the display shows "sany " boot screen(see fig3-3.1), and all of the signal indicators are applied, 3 seconds after the display shows work interface, the lights go out at the same time.

2. Click F2 key to change from work interface to system function interface, and the work interface is default(see fig3-3.2).

3. Enter the system function interface, F1 key to return, F2 key for confirmation key, the F3 key to move up, and F4 for down key(see fig3-3.3),.

4. Under the system function interface, click the F3 key or F4 key to choose the function and click F2 key to confirm.

Take the case of setting system time to demonstrate operation method.

Under the system function interface:

a. click F3 key or F4 key to choose the number of the time;

b. click F2 key to confirm, then the cursor will automatically move to the next number(see fig3-3.4);

c. When the cursor to the last digit (the second single digits) , click F2 key to confirm the current changes, and then click F2 key again to end the modify Settings until appear a

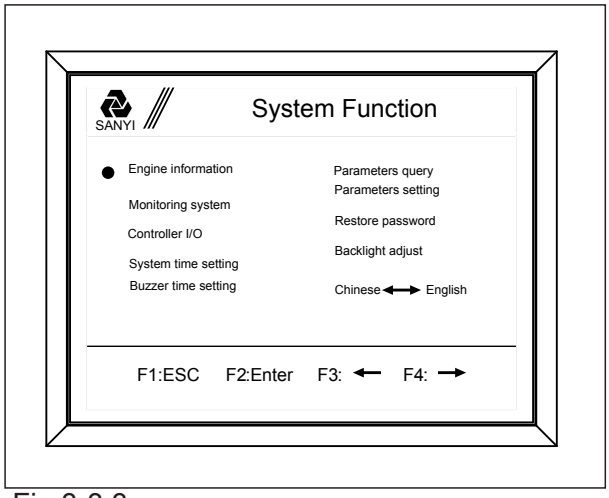

Fig 3-3.3

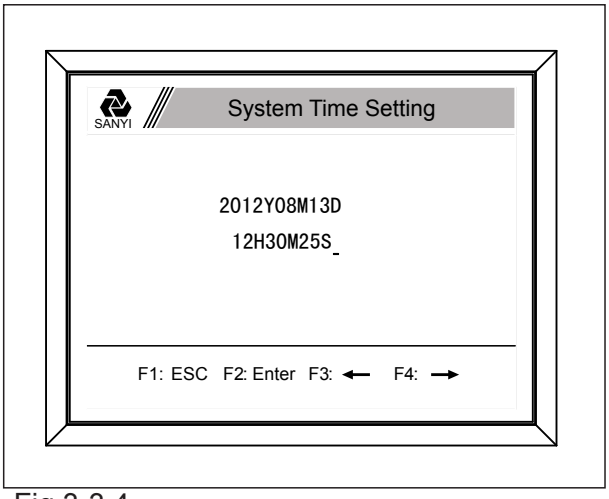

Fig 3-3.4

Courtesy of Machine.Market

https://truckmanualshub.com/

square green claim(see fig3-3.5),
d. Click F1 key to return to the system function interface.

6. Engine Water Temperature Gauge
Driven by CAN bus; it indicates engine coolant temperature value. When the pointer is located in white area said engine coolant temperature is normal, and once the pointer is located in red area that engine coolant temperature is too high, movement, the buzzer for 10 seconds, then shut down automatically. In the electric power the same fault buzzer action only once.

7. Engine Oil Pressure Gauge
Driven by CAN bus; it indicates engine oil pressure value. When the pointer is located in white area said engine oil pressure is normal, and once the pointer is located in red area that engine oil pressure is too high, movement, the buzzer for 10 seconds, then shut down automatically. In the electric power the same fault buzzer action only once.

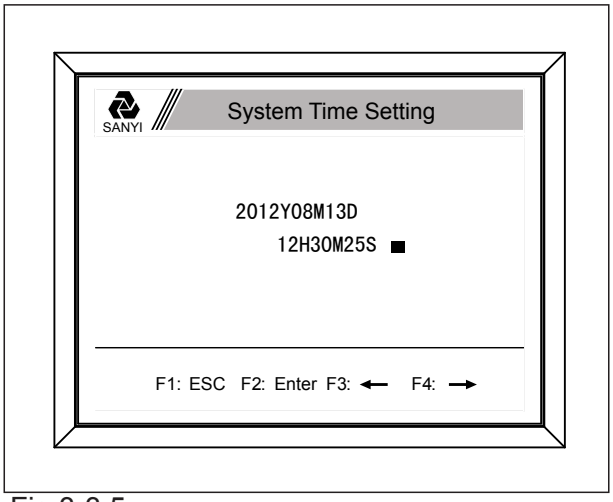

Fig 3-3.5

3.4 Reversing monitor system

The monitor (see Fig 3-4) on instrument panel is mainly used for monitoring the reversing truck as well as watching the situation behind truck. The matching camera is at the rear part of truck.
Operation instructions:
1.Power supply switch
There are two methods available for turning on the monitor: The monitor will be turned on automatically when the transmission gear shift selector is placed at REVERSE position; press down the power supply key on monitor to turn on the monitor, and press again to turn off the monitor.
The power supply indicator(red) will be on when the monitor is turned on and it will be off when the monitor is turned off.
2.Contrast control

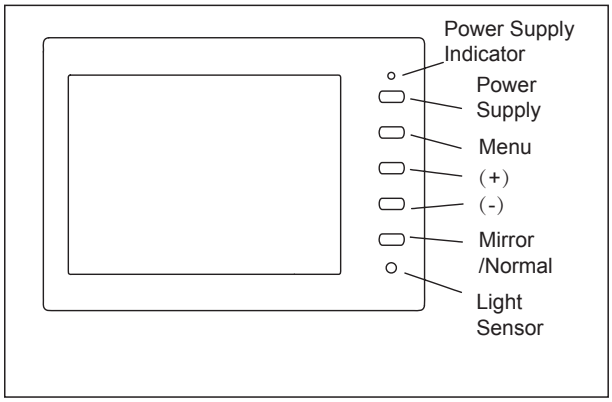

Fig 3-4

Courtesy of Machine.Market

https://truckmanualshub.com/

Press the MENU key until contrast appears on the screen, then press “+” or “-” key to increase or decrease image contrast.

3.Brightness control

Press the MENU key until brightness appears on the screen, then press “+” or “-” key to increase or decrease image brightness.

4.Volume control

Press the MENU key until volume appears on the screen, then press “+” or “-” key to increase or decrease volume.

5.Mirror/ Normal selection

Press such button to set reversal effect of image.

Reversal image can be displayed when switch is placed at MIR position.

Normal image can be displayed when switch is placed at the NOR position.

3.5 Switches

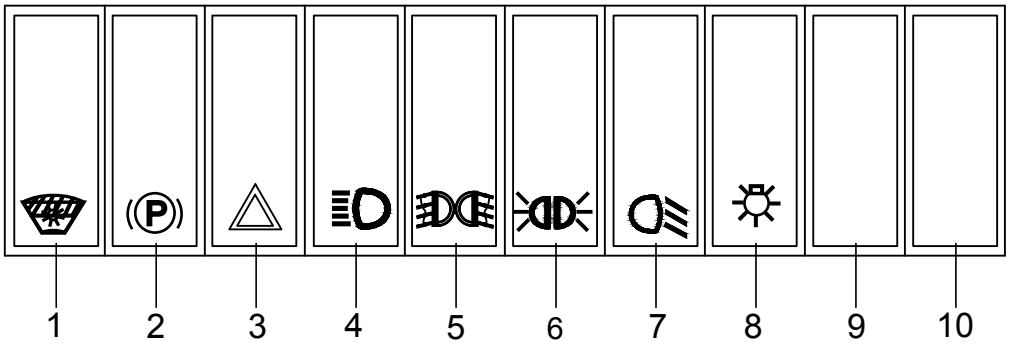

Fig 3-5

1. Economical/Powerful mode switch

Allows the operator to select between the transmission 'POWER' and 'ECONOMY' shift schedules.

Caution: Move the transmission shift lever to Neutral before selecting schedule.

2. Parking brake switch

The driver can perform rear braking independently. Such brake can be used for load parking or stopping.

3. Hazard warning lamp switch

Press bottom of switch to make four steering

Courtesy of Machine.Market

https://truckmanualshub.com/

lamp flash simultaneous; press the top of the switch to turn them off.

4. Headlamp switch

Press the bottom of the switch to electrify the headlamp (dipped beam/high beam); the dipped beam/high beam of the combined switch will be effective; otherwise, they will be ineffective.

5. Fog lamp switch

Press switch bottom to turn on the rear fog lamp. Press the upper part of switch to turn off the rear fog lamp.

6. Clearance lamp switch

Press switch bottom to turn on the front and rear clearance lamp. Press down the upper part of switch to turn off the lamp.

7. Rear lamp switch

Press switch bottom to turn on rear lamp, Press down the upper part of switch to turn off rear lamp.

8. Small lamp switch

Press switch bottom to turn on rocker switch indicator. Press down the upper part of switch to turn off indicator.

9. Backup Switch

10. Backup Switch

3.6 Combined switch

1. Horn

Button pushed in = Horn sounds.

2. Washer

Ring Pushed = Windscreen wash

3. Windscreen Wiper

Position J = Not used

Position 0 = Stop, reset wiper

Position I = Wiper slow speed

Position Ⅱ = Wiper fast speed

4. Headlight dipper and flasher

Control downwards = Main beam

Neutral position = Dipped beam

Control upwards = Headlight flash

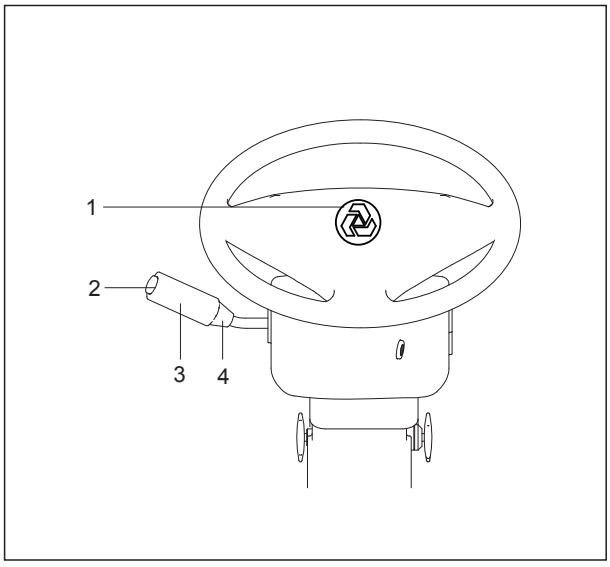

Fig 3.6

Courtesy of Machine.Market

https://truckmanualshub.com/

3.7 Air Conditioner Control Panel

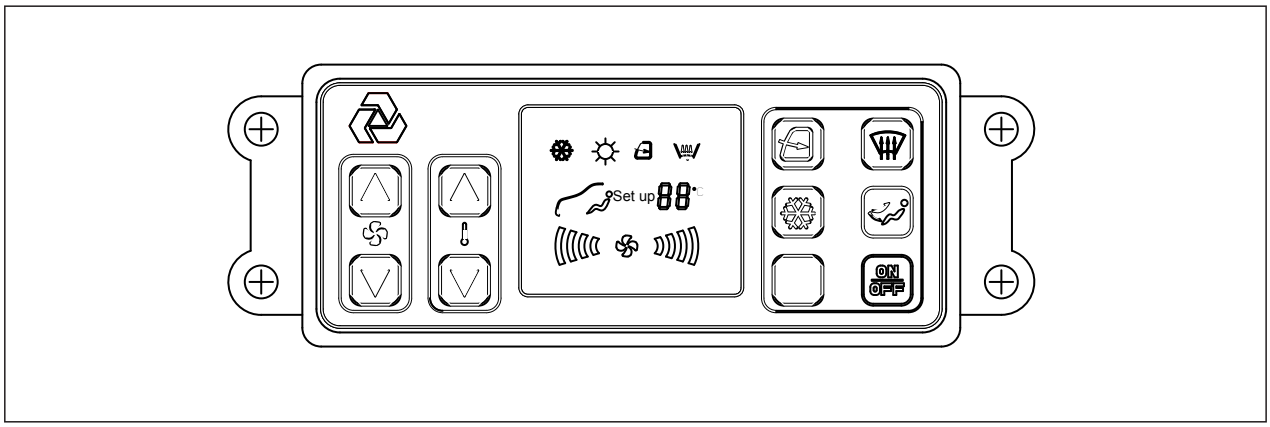

Fig 3.7

1. Panel display instructions

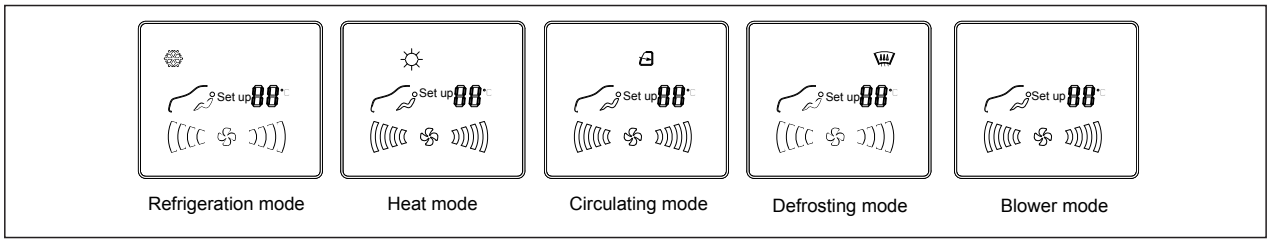

Fig 3.7.1

2. Panel key-press instructions

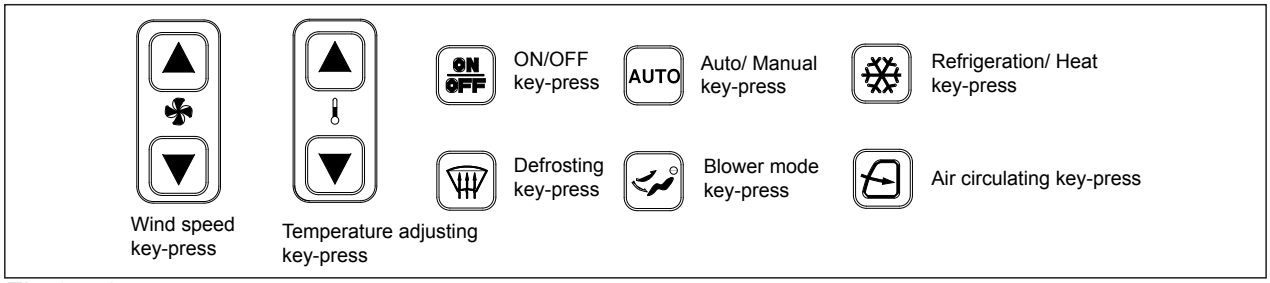

Fig 3.7.2

3. Operation instructions

a. Open

Press power supply key to turn on the machine; the controller will automatically select the working mode according to the air conditioning system inside truck; then press power supply key to turn off power supply and all the outputs.

b. Blower mode

Press mode key to set air conditioner working mode (automatic, refrigerating, heating,

Courtesy of Machine.Market

https://truckmanualshub.com/

ventilating).

c. Refrigeration

Forced refrigerating function:

1. On blower mode, press Refrigeration/ Heat key-press, air conditioner is on refrigeration statues, LO will be displayed to activate forced refrigerating mode when the temperature is set smaller than 15℃ (larger than 30℃) under refrigerating mode. On refrigeration statues, press wind speed key-press can adjust wind speed(low、middle and high).

2. On refrigeration statues, wind speed is on high(wind speed and night mode can adjust but temperature can not).

d. Heating mode

Forced heating function: HI will be displayed to activate forced heating mode when the temperature is set larger than 30 ℃ (smaller than 15 ℃) under heating mode. On heating statues, press wind speed key-press can adjust wind speed(low、middle and high).

e. Defrosting mode

1. Press defrosting key-press, it is on defrosting statues, press wind speed key-press can adjust wind speed(low、middle and high).

2. Automatic defrosting function: During refrigerating, the temperature of defrosting sensor is smaller than 1.5℃ , the compressor will turn off; it will turn on if the temperature of defrosting sensor is smaller than 4℃ .On other status it will enter core defrosting.

f. Press circulation key, i.e., fresh air function; the external circulation is used for blowing fresh air and the internal circulation for stopping fresh air intake.

CAUTION

Air conditioner uses the manual valve to control warm water, in summer, must de sure the valve is shut when refrigerate; in winter, must be sure the valve is on when heat.

Courtesy of Machine.Market

https://truckmanualshub.com/

3.8 Driver Seat

1. The travel of suspension device is 100mm.
2. Body weight and height adjustment. Pull up the seat can adjust height, there are three levels(low、middle、high), when the seat is on high level, if pull up the seat, it will return low level. The adjusting handle (1) on seat can adjust the rigidity of suspension mechanism, (the green indication belt on body weight adjustment indication strip is at a visible position).
3. Front/rear adjustment. Pull handle (2) on the right side to slide seat to a proper position. The maximum front and rear adjustment distance is 210mm.
4. Back angle adjustment. This is used to make the driver lean tightly on the seat back. Pull handle (3) on the left to move the back to a proper position, and then put down the handle. The back angle adjustment scope is larger than 90° .
5. Headrest height adjustment. Adjustment scope of 105mm (see Fig 3-8).

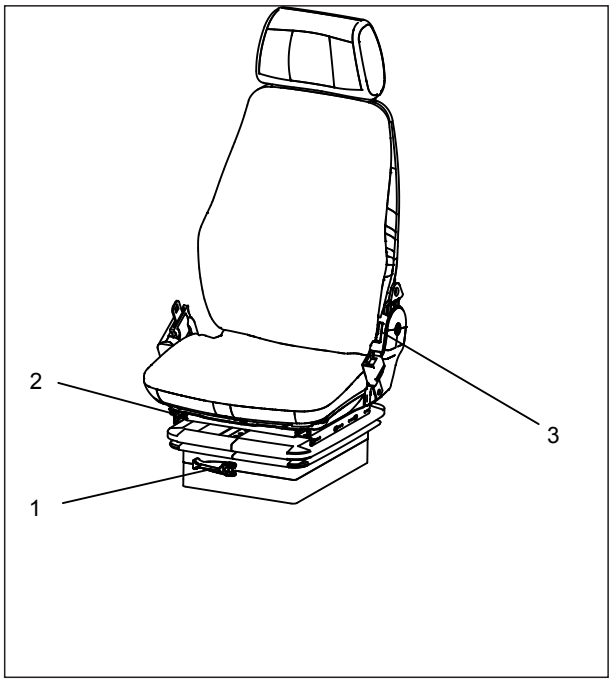

Fig 3.8

WARNING

Do not attempt to adjust the seat or seat belt while the machine is moving. Loss of control may result. Stop the machine; apply the brakes;then adjust.

3.9 Seat Belt

Adjust the seat to the best height which does not affect the driving. Completely release the seat belt (1), sit down on the seat, pull out seat belt (1), and buckle up lock catch (2). In order to remove the seat belt, press the button on lock catch (2) to pop up seat belt (1) (see Fig 3-9).

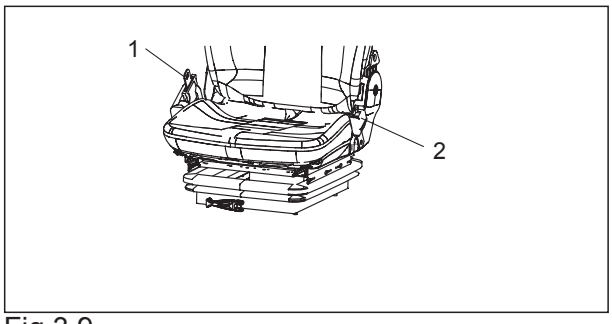

Fig 3.9

Courtesy of Machine.Market

https://truckmanualshub.com/

3.10 Truck Controls

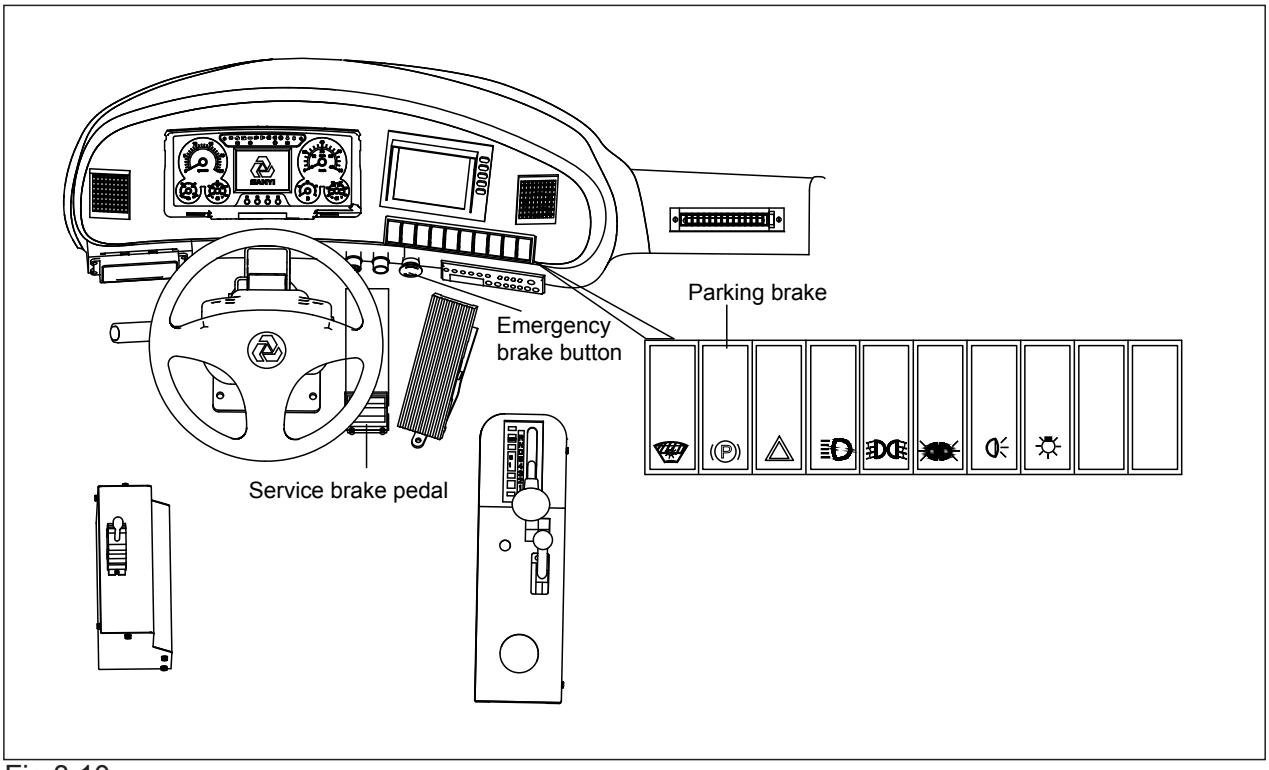

Fig 3.10

3.10.1 Braking

The truck is provided with following brake methods: Service brake, parking brake, emergency brake, retarder, which can be selected according to the actual condition.

Use service brake during normal operation; Use parking brake during stopping; Use emergency brake in an emergency. A continuous braking force to hold the truck to a safe steady speed.

3.10.2 Service brake

This is a floor mounted pedal operated by the right foot. Depress the pedal as required by speed, load and road conditions to slow or stop the machine. Release the pedal as the machine slows until, when stopped, the pedal is depressed just enough to hold it stationary. (see Fig 3-10).

Courtesy of Machine.Market

https://truckmanualshub.com/

3.10.3 Parking brake

Pushing the switch in will apply the spring operated parking brakes within the rear brake assemblies and the service brakes at all wheels. The parking brake indicator on the combination instrument will illuminate when the control is pushed in. Push the switch at top to release the brakes.

WARNING

Always apply the parking brake before leaving the operator's seat.

3.10.4 Emergency brake

Pushing the control switch in an emergency. To release the brakes, turn the control clockwise.

Note: Try to avoid using the control switch. For normal braking the service brake pedal should be employed.

3.10.5 Retarder

Refer to Fig3-11, this truck is equipped with two retarders: the transmission retarder and the rear disk brake retarder. The handle (2) is used to control the rear disk brake retarder. The transmission retarder switch (1) is used to control the transmission retarder.

Retardation is the term used for applying a continuous braking force to hold the truck to a safe steady speed when descending grades. The retarder may be used anytime to slow down. If additional braking is required apply the service brakes. The retarder is not meant for bringing the machine to a halt, or for sudden deceleration - the service brakes should be employed for this purpose.

When the retarder is applied, the ' Retarder Indicator Light ' on the instrument panel will illuminate and an orange coloured warning indicator at the rear of the truck will illuminate to warn following trucks.

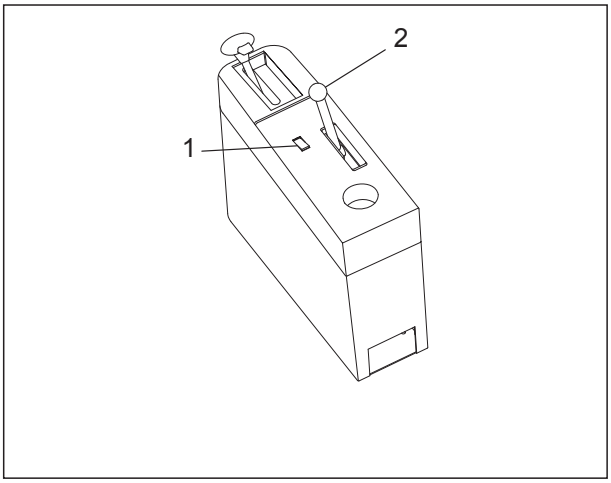

Fig 3.11

Courtesy of Machine.Market

https://truckmanualshub.com/

The retarder is off when the lever is fully forward and is applied as the lever is pulled back. Rear disc brake retarder can obtain different retardation by shifting handle from front to rear. Maximum retardation is obtained when the lever is in the fully back position.

(1) Retarder operation

Before the machine crests the top of a grade and starts down, the operator should slow the machine with the service brakes and downshift to the gear range which would be used to ascend the grade. The retarder should be applied before starting the descent. Machine downgrade speed (with the retarder applied as required) in the gear range selected should be high enough to keep the engine operating at governed speed with the throttle closed (operator's foot off the accelerator pedal). This will ensure maximum oil circulation and cooling. If the rate of descent is too slow, the transmission should be upshifted to the next highest gear range. If the rate of descent is too fast, the gear range selected is too high and the operator must slow the machine by using the service brakes, then downshift into a lower gear range which will allow a safe descent and efficient retarder operation.

The two retarders can be used at the same time, it is strongly recommended that just one of them is used and the transmission retarder is prior. Only when maximum transmission retardation is obtained and additional retardation is required, the rear disk brake retarder be used.

Note: In order to obtain the maximum retardation and cooling effect during retardation, the engine speed should be maintained as high as possible without exceeding the maximum recommendation.

(2) Oil temperature - rear disc brake

The disc brake hydraulic temperature warning indicator on the instrument panel will illuminate and an electric horn will sound if the oil flowing through the disc brake assemblies overheats.

Courtesy of Machine.Market

https://truckmanualshub.com/

If alarm is activated, reduce downgrade travel speed. If the trouble persists, stop the machine and have the fault corrected.
(3) Oil temperature - transmission
During normal operation the transmission oil temperature gauge should read in the white z-one, should not enter the red zone. Otherwise, reduce downgrade travel speed immediately to avoid the oil overheating and possible damage to the transmission.

WARNING

Great care should be used if applying the retarder when road surfaces are slippery. Retarder braking effect will occur only at the driving axle and could make truck control difficult.

3.11 Engine

3.11.1 Accelerator pedal

The accelerator pedal provides an electrical signal to the engine's fuel control system in proportion to the degree of pedal actuation. (see Fig3-12).

Note: The electronically controlled engine will override the accelerator pedal position until the engine is warmed up to the correct operating temperature. The engine MUST be started with foot 'OFF' the accelerator pedal.

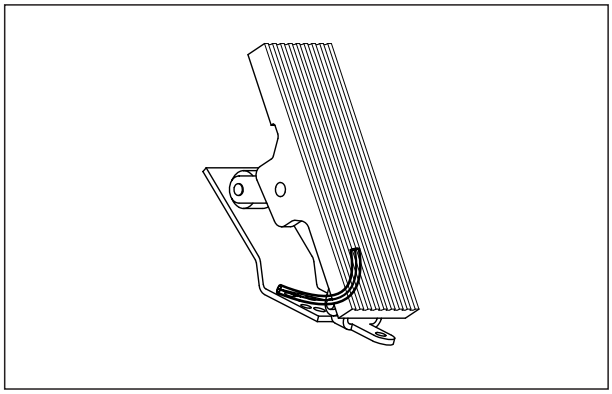

Fig 3.12

3.11.2 QUANTUM electronic fuel system

This machine is equipped with the Quantum Electronic Fuel System, an electronic engine control system, which continually monitors the engine and warns the operator when a problem develops. The system also takes action to prevent damage to the engine and, provides the serviceman with diagnostic capabilities so that problems can be corrected quickly and easily.

Courtesy of Machine.Market

https://truckmanualshub.com/

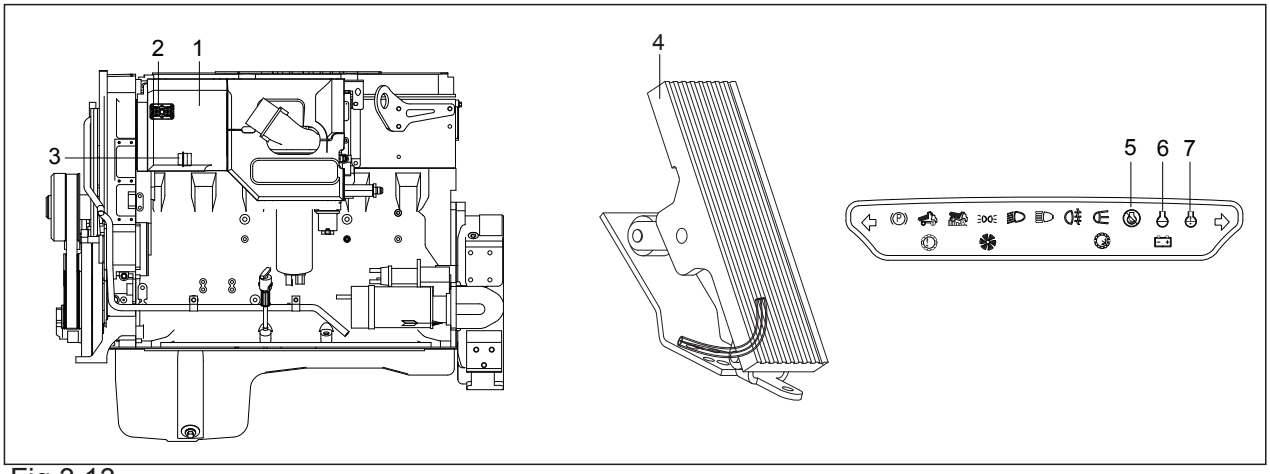

Fig 3.13

1.Electronic control module (ECM)
2&3. Harness connector (50 and 31pin RHS)
4. Accelerator pedal
5. Stop indicator
6. Maintenance indicator
7. Warning indicator

WARNING

Before any welding is done on a machine equipped with the Quantum Electronic Fuel System, disconnect the following in this order:
Battery earth cable, battery supply cable, alternator earth cables, alternator supply cables, transmission black box connector, ECM interface harness connector (30 pin RHS), ECM power harness connector (5 pin RHS) and ECM sensor harness connector (30 pin LHS). Turn off ignition key switch to isolate the batteries before disconnecting any components.
After welding connect all of the above in the reverse order.

Courtesy of Machine.Market

https://truckmanualshub.com/

3.11.3 Quantum electronic fuel system - description

1. Electronic Control Module (ECM)
Receives electronic inputs from the driver as well as from mounted sensors that provide information electronically, such as oil pressure and temperature and intake manifold pressure. This information is used to control both the quantity of fuel injected and injection timing.

2. Programmable Read Only Memory
Located in the ECM and encoded with the operating software. Additional information is programmed into the EEPROM. This information controls the horsepower rating, torque curve, maximum engine speed and engine protection devices. The ECM processes this information and sends electronic signals to the Electronic Fuel System Injectors where the precise amount of fuel is injected into the engine.

3.Electronic Fuel System Injectors
The injector is a lightweight, compact unit that injects diesel fuel directly into the combustion chamber. The amount of fuel injected and the beginning of injection timing is determined by the ECM. The ECM sends a command pulse which activates the injector solenoid.
The injector performs four functions:
a - Creates the high fuel pressure required for efficient injection.
b - Meters and injects the exact amount of fuel required to handle the load.
c - Atomizes the fuel for mixing with the air in the combustion chamber.
d - Permits continuous fuel flow for component cooling.
Electronic fuel system injectors are self compensating and virtually eliminate engine tune-ups.
Note: Never apply 12V or 24V directly to terminals on the injector as it will burn out. Before removing injectors.

Courtesy of Machine.Market

https://truckmanualshub.com/

3.11.4 QUANTUM electronic fuel system - operation

When the 'Stop' indicator on the dash panel illuminates, the computer has detected a major malfunction in the engine that requires immediate attention. It is the operators responsibility to shut down the engine to avoid serious damage.

The machine is equipped with an engine protection derate system, which records fault codes when an out-of-range conditions is found. The Maintenance indicator illuminates when the engine protection derate system is initiated. The engine power and speed will be gradually reduced depending on the level of severity of the out-of-range condition. The Maintenance indicator will start to flash if the out-of-range condition continues to get worse. The operator MUST shut down the engine to avoid serious damage,The engine should not be restarted after it has been shut down after activation of the engine protection derate system unless the problem has been diagnosed and corrected.

Conditions that will cause the amber Maintenance indicator to come on are：Low coolant level, High coolant temperature, Idle validation/throttle pedal switch mismatch, High intake manifold temperature, Low oil pressure and High fuel rail pressure.

Whenever the 'Stop', 'Warning' or Maintenance indicator comes on, the Electronic Fuel System computer will determine where the problem is and will store this information in its memory. If the malfunction is intermittent, the indicators will come on and go off as the computer senses the changing engine condition.

A special diagnostic data reader (INSITE) is available that can be plugged into the engine computer memory to extract information related to the cause of the problem. Once the malfunction has been corrected, the

Courtesy of Machine.Market

https://truckmanualshub.com/

Electronic Fuel System will return the engine to normal operation. The data reader can now distinguish between active codes and those stored in the historic code memory (inactive codes). Inactive codes can only be viewed using the data reader. The fault code recorded in the ECM memory will remain until it is erased by a technician.

The operator can check for active faults by turning the ignition key switch to the 'OFF' position, switching the diagnostic switch 'ON' and then turning the ignition key switch to position '1'. If no active fault codes are recorded, all three ('Stop', 'Warning' & Maintenance) indicators will come on and stay on. If active codes are recorded, all three indicators will come on momentarily. The yellow ('Warning') and red ('Stop') indicators will begin to flash the code of the recorded fault. The fault codes flash in the following sequence: the yellow indicator flashes once, then there is a pause where both indicators are off. Then the numbers of the recorded fault code flash in red. There is a pause between each number. When the number is done, the yellow indicator flashes again. e.g. yellow flashes once - pause - red flashes twice - pause - red flashes three times - pause - red flashes five times - pause - yellow flashes once, indicates fault code 235. The number will repeat in the same sequence until the system is advanced to the next active fault code or the diagnostic switch is switched to the 'OFF' position.

Refer to 'Electronic Fuel System Diagnostic Codes' table for fault code descriptions.

Courtesy of Machine.Market

https://truckmanualshub.com/

3.11.5 Electronic fuel system diagnostic codes

Detection Codes of Electronically Controlled Fuel System		
Error Code	Description	Fault lamp
111	Engine Control Module – Critical internal failure	Red
115	Engine Speed/Position Sensor Circuit - lost both of two signals from the magnetic pickup sensor	Red
121	Engine Speed/Position Sensor Circuit - lost one of two signals from the magnetic pickup sensor	Yellow
122	Intake Manifold Pressure Sensor #1 Circuit - shorted high	Yellow
123	Intake Manifold Pressure Sensor #1 Circuit - shorted low	Yellow
131	Accelerator Pedal Position Sensor Circuit - shorted high	Red
132	Accelerator Pedal Position Sensor Circuit - shorted low	Red
133	Remote Accelerator Pedal Position Sensor Circuit - shorted high	Red
134	Remote Accelerator Pedal Position Sensor Circuit - shorted low	Red
135	Engine Oil Pressure Sensor Circuit - shorted high	Yellow
141	Engine Oil Pressure Sensor Circuit - shorted low	Yellow
143	Engine Oil Pressure Low – Warning	Yellow
144	Engine Coolant Temperature Sensor Circuit - shorted high	Yellow
145	Engine Coolant Temperature Sensor Circuit - shorted low	Yellow
147	Accelerator Pedal Position Sensor Circuit - low frequency	Red
148	Accelerator Pedal Position Sensor Circuit - high frequency	Red
151	Engine Coolant Temperature High – Critical	Red
153	Intake Manifold Temperature Sensor #1 Circuit - shorted high	Yellow
154	Intake Manifold Temperature Sensor #1 Circuit - shorted low	Yellow
155	Intake Manifold Temperature #1 High -Critical	Red
187	Sensor Supply Voltage #2 Circuit -shorted low	Yellow
211	Additional OEM/Vehicle Diagnostic Codes have been logged. Check other ECM's for DTC's.	None
212	Engine Oil Temperature Sensor Circuit - shorted high	Yellow
213	Engine Oil Temperature Sensor Circuit - shorted low	Yellow
214	Engine Oil Temperature High - Critical	Red
219	Low Oil Level in the Centinel makeup oil tank	Maint.
221	Ambient Air Pressure Sensor Circuit – shorted high	Yellow
222	Ambient Air Pressure Sensor Circuit – shorted low	Yellow
223	Engine Oil Burn Valve Solenoid Circuit – shorted low	Yellow
227	Sensor Supply Voltage #2 Circuit - shorted high	Yellow
234	Engine Speed High – Critical	Red

Courtesy of Machine.Market

https://truckmanualshub.com/

235	Engine Coolant Level Low - Critical	Red
241	Vehicle Speed Sensor Circuit – data incorrect	Yellow
242	Vehicle Speed Sensor Circuit - tampering has been detected	Yellow
245	Fan Clutch Circuit - shorted low	Yellow
254	Fuel Shutoff Valve Circuit - shorted low	Red
255	Fuel Shutoff Valve Circuit - shorted high	Yellow
259	Fuel Shutoff Valve - stuck open	Red
284	Engine Speed/Position Sensor #1 (Crankshaft) Supply Voltage Circuit - shorted low	Yellow
285	SAE J1939 Multiplexing PGN Timeout Error	Yellow
286	SAE J1939 Multiplexing Configuration Error	Yellow
287	SAE J1939 Multiplexing Accelerator Pedal Sensor System Error	Red
288	SAE J1939 Multiplexing Remote Throttle Data Error	Red
293	Auxiliary Temperature Sensor Input # 1 Circuit – shorted high	Yellow
294	Auxiliary Temperature Sensor Input # 1 Circuit – shorted low	Yellow
295	Ambient Air Pressure Sensor Circuit - data incorrect	Yellow
297	Auxiliary Pressure Sensor Input # 2 Circuit – shorted high	Yellow
298	Auxiliary Pressure Sensor Input # 2 Circuit – shorted low	Yellow
299	Engine Shutdown Commanded by J1939	Yellow
311	Injector Solenoid Valve Cylinder #1 Circuit – grounded circuit	Yellow
312	Injector Solenoid Valve Cylinder #5 Circuit – grounded circuit	Yellow
313	Injector Solenoid Valve Cylinder #3 Circuit – grounded circuit	Yellow
314	Injector Solenoid Valve Cylinder #6 Circuit - grounded circuit	Yellow
315	Injector Solenoid Valve Cylinder #2 Circuit – grounded circuit	Yellow
319	Real Time Clock - Power Interrupt	Maint.
341	Engine Control Module – data lost	Yellow
343	Engine Control Module – Warning internal hardware failure	Yellow
346	Engine Control Module – Warning Software error	Yellow
349	Transmission Output Shaft (Tailshaft) Speed High – Warning	Yellow
352	Sensor Supply Voltage #1 Circuit - shorted low	Yellow
378	Fueling Actuator #1 Circuit - open circuit	Yellow
379	Fueling Actuator #1 Circuit – grounded circuit	Yellow
386	Sensor Supply Voltage #1 Circuit - shorted high	Yellow
387	Accelerator Pedal Position Sensor Supply Voltage Circuit - shorted high	Yellow
394	Timing Actuator #1 Circuit - open circuit	Yellow
395	Timing Actuator #1 Circuit – grounded circuit	Yellow
396	Fueling Actuator #2 Circuit - open circuit	Yellow

Courtesy of Machine.Market

https://truckmanualshub.com/

397	Fueling Actuator #2 Circuit – grounded circuit	Yellow
398	Timing Actuator #2 Circuit - open circuit	Yellow
399	Timing Actuator #2 Circuit – grounded circuit	Yellow
415	Engine Oil Pressure Low – Critical	Red
418	Water in Fuel Indicator High –Maintenance	WIF / Maint.
422	Engine Coolant Level Sensor Circuit - data incorrect	Yellow
426	SAE J1939 datalink - cannot transmit	None
428	Water in Fuel Sensor Circuit – shorted high	Yellow
429	Water in Fuel Sensor Circuit – shorted low	Yellow
431	Accelerator Pedal Idle Validation Circuit - data incorrect	Yellow
432	Accelerator Pedal Idle Validation Circuit - out of calibration	Red
433	Intake Manifold Pressure Sensor Circuit - data incorrect	Yellow
434	Power Lost without Ignition Off	Yellow
435	Engine Oil Pressure Sensor Circuit - data incorrect	Yellow
441	Battery #1 Voltage Low - Warning	Yellow
442	Battery #1 Voltage High - Warning	Yellow
443	Accelerator Pedal Position Sensor Supply Voltage Circuit - shorted low	Yellow
449	Fuel Pressure High - Warning	Yellow
451	Injector Metering Rail #1 Pressure Sensor Circuit - shorted high	Yellow
452	Injector Metering Rail #1 Pressure Sensor Circuit - shorted low	Yellow
466	Turbocharger #1 Wastegate Control Circuit - shorted low	Yellow
482	Fuel Pressure Low - Warning	Yellow
483	Injector Metering Rail #2 Pressure Sensor Circuit - shorted high	Yellow
484	Injector Metering Rail #2 Pressure Sensor Circuit - shorted low	Yellow
485	Injector Metering Rail #2 Pressure High - Warning	Yellow
486	Injector Metering Rail #2 Pressure Low - Warning	Yellow
489	Transmission Output Shaft (Tailshaft) Speed Low – Warning	Yellow
496	Engine Speed/Position Sensor #2 (Camshaft) Supply Voltage	Yellow
527	Auxiliary Input/Output #2 Circuit - shorted high	Yellow
528	OEM Alternate torque validation switch - data incorrect	Yellow
529	Auxiliary Input/Output #3 Circuit - shorted high	Yellow
546	Fuel Delivery Pressure Sensor Circuit - shorted high	Yellow
547	Fuel Delivery Pressure Sensor Circuitshorted low	Yellow
551	Accelerator Pedal Idle Validation Circuit - shorted low	Yellow
553	Injector Metering Rail #1 Pressure High - warning level	Yellow
581	Fuel Supply Pump Inlet Pressure Sensor Circuit - shorted high	Yellow
582	Fuel Supply Pump Inlet Pressure Sensor Circuit – shorted low	Yellow

Courtesy of Machine.Market

https://truckmanualshub.com/

583	Fuel Supply Pump Inlet Pressure Low - warning level	Yellow
595	Turbocharger #1 Speed High – warning level	Yellow
596	Electrical Charging System Voltage High - warning level	Yellow
597	Electrical Charging System Voltage Low - Warning Level	Yellow
598	Electrical Charging System Voltage Low - Critical Level	Red
611	Engine Hot Shutdown	None
753	Engine Speed/Position #2 - Cam sync error	None
755	Injector Metering Rail #1 Pressure Malfunction	Yellow
758	Injector Metering Rail #2 Pressure Malfunction	Yellow
951	Cylinder Power Imbalance between cylinders	None

Courtesy of Machine.Market

https://truckmanualshub.com/

3.12 Steering

The steering wheel position can be adjusted as required for the most convenient operating position. To adjust, pull out adjustment lock and tilt steering wheel up or down as desired; release lever to lock adjustment.

The steering system provides full-time hydraulic power with a continuous-running pump and a pressurized accumulator. The accumulator helps maintain a constant flow of hydraulic power to operate the steering cylinders (Fig 3-14, 3-15).

To steer the front wheels, rotate the steering wheel in the desired direction to the required radius of turn. The front wheels will turn only as the steering wheel is turned and at a rate of turning directly proportional to steering wheel speed. The front wheels will stop and hold position when the steering wheel is stopped. To return the front wheels to the straight ahead position or to the opposite direction, turn the steering wheel in the opposite direction.

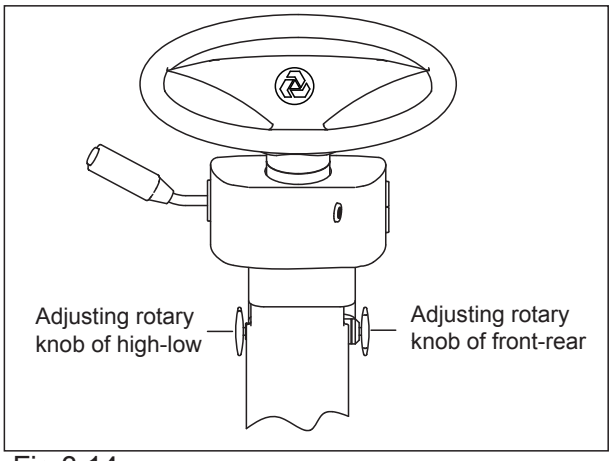

Fig 3.14

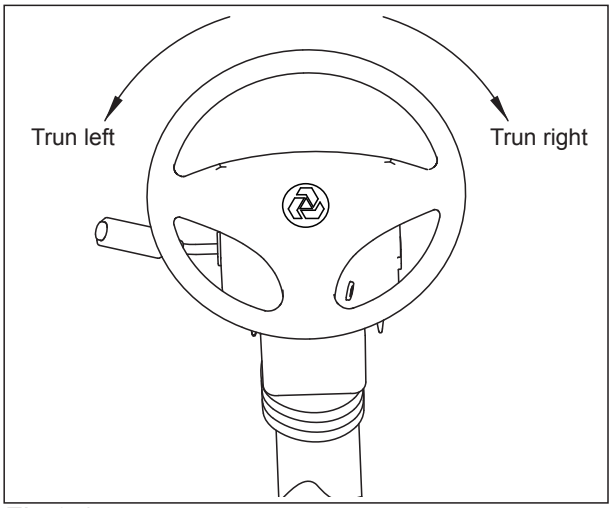

Fig 3.15

WARNING

In the event of loss of steering pump output pressure, a fully-pressurize accumulator provides a maximum of two lock to lock turns of the front wheels. A red warning indicator on the instrument panel illuminates and a buzzer sounds when steering pressure falls below 11.5MPa (1660 pound/in2). If this warning indicator illuminates, indicating a loss of steering power, the machine must be stopped immediately and no further operation attempted until the fault is corrected. The accumulator slowly bleeds down after engine shut-off to prevent accidental steering. However, accumulator pressure should be dissipate after engine shut-off by turning the steering

Courtesy of Machine.Market

https://truckmanualshub.com/

wheel in both directions to avoid accidental steering during bleed down. Improper steering control unit repair or hose connections can cause sudden and forceful steering wheel movement when engine is started.Keep hands off steering wheel when starting engine.

3.13 Transmission

3.13.1 CEC2 Shift System

The transmission of the truck adopts the CEC2 (2nd generation commercial electronic control) shift system. CEC2 is a well designed computer-controlled automatic shift system, which integrates functions including automatic gear-shift, misoperation screening, diagnostic capabilities, etc., so as to effectively reduce the fatigue of the driver and make the driver work safely, easily and simply by focusing on the road conditions.

Automatic Gear-shift: CEC2 can automatically select appropriate gear position according to throttle position, engine speed and truck speed. Do not move the gear shift handle frequently during driving. The truck speed can be controlled through controlling oil supplied to throttle position by foot pedal. CEC2 can select economy mode and power mode. So as to meet the different requirements of customers.

Reverse Inhibit: Prevents gear selection if engine is operating at more than 20% throttle.

Hoist interlock pressure switch - The ECU will shift the transmission from Reverse to Neutral if the body control lever is moved to the 'Raise' position.When the body is held in the 'Raise' position,will prevent to engage reverse gear.

Body Up Interlock: When the body is raised, the CEC2 system will only allow the transmission to operate in first gear. This feature is only operational in the normal automatic driving mode, either power or economy. It is not

Courtesy of Machine.Market

https://truckmanualshub.com/

activated during the manual mode.

Parking Brake Interlock: If the parking brake is applied while the transmission is in neutral, the CEC2 system will prevent a shift out of neutral to protect the brake components. If the parking brake is applied while the transmission is in gear, the parking brake interlock will not function and normal shifts will occur.

Lock-in-gear: The lock-in-gear feature is designed to protect the transmission from damage should wheel spinning or lockup occur due to poor traction or panic braking. The ECU will delay making a shift for several seconds and then, if the condition fails to correct itself, locks in gear and prevents any further shifting. The transmission fault indicator will come on. If this occurs, the ECU must be reset before normal operation may be resumed.

Reset procedure: if the transmission has locked in gear because of wheel spinning or emergency brake, stop the truck, select neutral, apply the parking brake, and shut down the engine. Turn off battery main switch, wait ten seconds, then reconnect the main switch and restart the engine. Select reverse, then neutral. The "check transmission" and "inhibit gear shift" warning indicator should go off.

Cold Weather Starts: During cold weather starts, if the transmission temperature is below -24℃ (-10°F), The "check transmission" and "forbid gear shifting" warning indicator will come on, and the ECU will keep the transmission at neutral gear. Between -24° C (-10°F) and -7℃ (19°F) ,the warning indicator will go out and the ECU will only permit operation in First or Reverse gears. Above -7℃ (19°F), normal operation will be permitted.

⚠ WARNING

Before any welding is done on a machine equipped with a CEC shift

Courtesy of Machine.Market

https://truckmanualshub.com/

system, disconnect battery equalizer ground cables, battery cables from terminal posts (ground cable first), battery equalizer positive cables and electrical connections at the ECU to avoid damage to electrical components. Turn off ignition key switch to isolate the batteries before disconnecting any components.
The standard procedure for raising the body must still be adhered to.

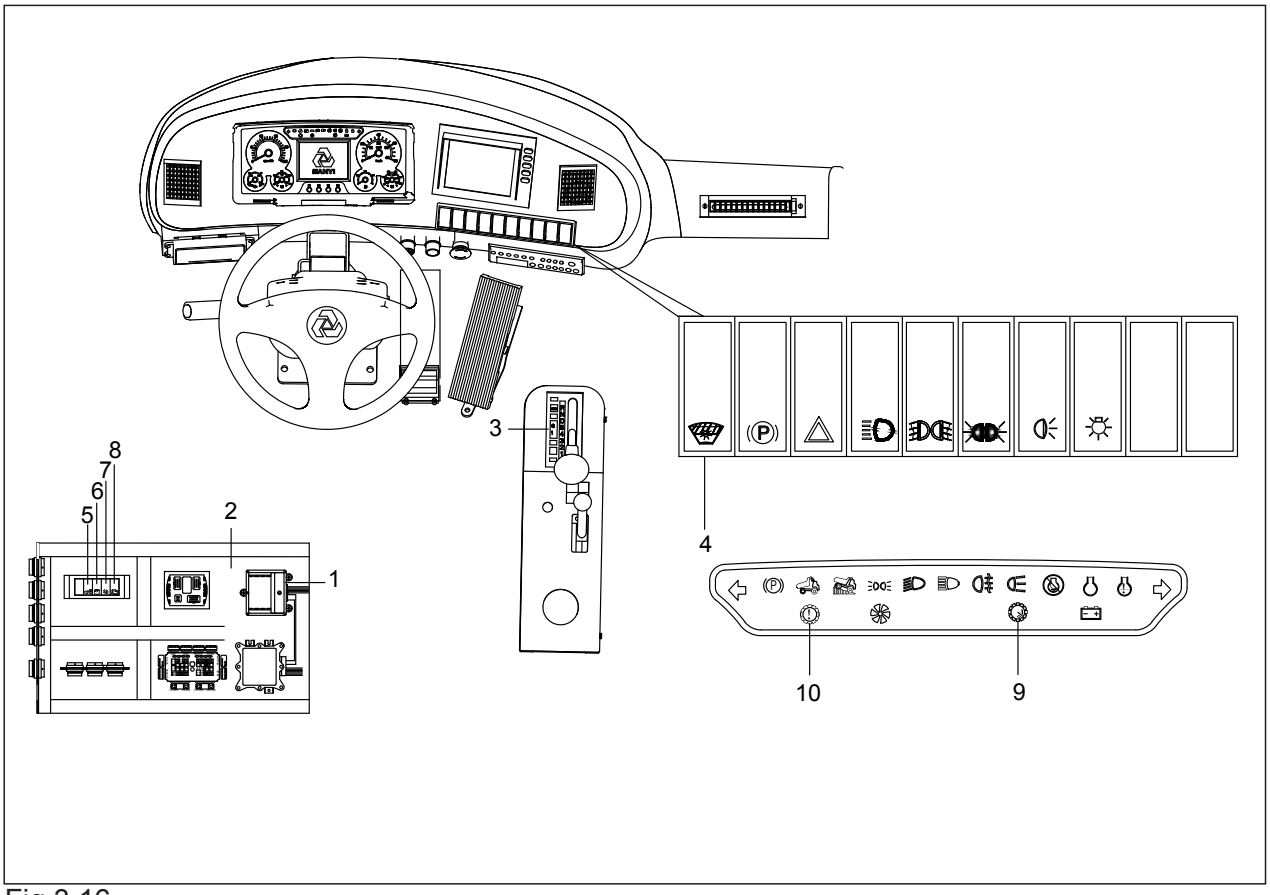

Fig 3.16

1.Electronic control unit (ECU)
2.Control box
3.Gear shift selector
4.Mode selection switch
5.Reversing switch
6. Diagnosis switch
7.Stalling detection switch
8.Idling adjustment switch
9. Transmission overspeed indicator
10.Transmission fault indicator

Courtesy of Machine.Market

https://truckmanualshub.com/

3.13.2 Introduction and operation

(1) Electronic Control Unit (ECU) – The ECU contains an electronic microcomputer.It receives information in the form of electronic signals from switches and sensors, processes the information, and sends electronic signals to the appropriate solenoids which control the transmission.

(2) Control box -- contains VIM and ECU.

(3) Gear shift selector -- the shift selector is a remote mounted lever type. The gear shift selector is connected to the ECU by a wiring harness. The shift lever has 6 forward ranges and 1 reverse ranges, as well as a neutral position.

The shift selector has a single digit LED display, which during normal operation will display the gear selected. Diagnostic information can be displayed on the single digit LED display by pressing the diagnostic display button. There is a hold override button that must be pressed when shifting between R, N and D. The hold override button is released when desired selector position is reached. The selector lever can move freely between D and the number ranges without pressing the hold override button. (Refer to fig.3-17)

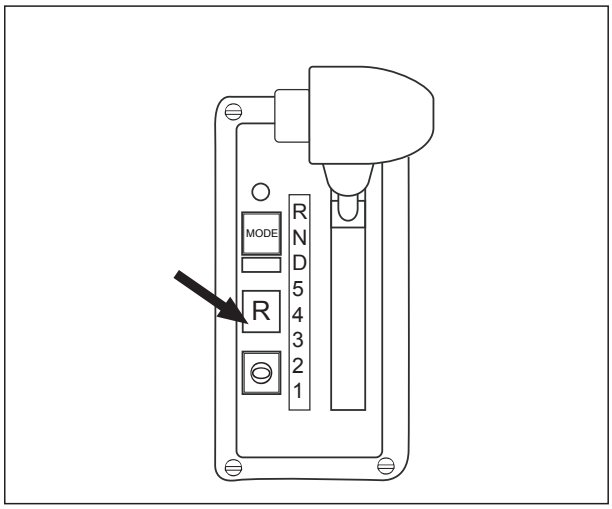

Fig 3.17

WARNING

Do not allow the vehicle to coast in Neutral. This practice can result in severe transmission damage.

The transmission upshifts and downshifts automatically between first range and the highest range selected on the range selector in direct response to throttle position, engine speed and transmission output speed.

When Reverse is selected the reverse alarm sounds and the reverse indicator illuminates at the rear of the vehicle. This feature warns personnel to the immediate rear of the vehicle

Courtesy of Machine.Market

https://truckmanualshub.com/

that the operator has shifted to reverse.

When drive 'D' is selected, the transmission automatically upshifts and downshifts through all six forward ranges as required by loads and travel speeds. Selecting a lower range (4th, 3rd etc.) limits the highest range to which the transmission will automatically upshift.

If a lower range is selected while moving forward, the transmission automatically downshifts sequential to the selected lower range at maximum controlled engine speeds. Downshifts will not occur until vehicle is slowed by use of the service brakes and/or retarder.

When shifting from neutral to start from a standstill, or to reverse direction, decelerate the engine to idle speed. To move forward, select drive 'D' and accelerate the engine to the vehicle load and speed requirements. The transmission will automatically upshift from 1st through 6th ranges as travel speed increases.

With the throttle fully depressed, and the mode selection switch in the Power position, the transmission upshifts to the next higher range when the engine attains 2175rpm, since maximum power train output is needed under this condition. At lower throttle settings where minimum power train performance is required, the transmission will upshift to the next higher range at less than maximum rated engine speed.

Upgrades or soft spots might slow travel speed, even at full throttle, requiring transmission downshifts to maintain maximum powertrain performance. When this occurs, the transmission downshifts automatically.

Shift the transmission to the next lowest range if transmission 'Hunting' or 'Shift Cycling' occurs.

When temporarily stopped, such as for yielding the right-of-way to a loaded vehicle, the transmission can be left in the selected range and the vehicle held stationary with the service brakes.

Courtesy of Machine.Market

https://truckmanualshub.com/

However, when stopped for a more extended period with the engine left running, shift the transmission to neutral to avoid unnecessary heat buildup and apply the parking brake.

WARNING

Always select Neutral and apply the parking brake before leaving the operator's seat.

(4) Mode selection switch - Gives the option to select between transmission 'POWER' and 'ECONOMY' shift schedules.

Note: The transmission must be in neutral before the switch will function; otherwise,this practice can result in transmission damage.

The transmission torque converter is equipped with a lockup clutch which, when engaged by the ECU, locks the converter pump and turbine together as a single unit and allows power to be transmitted mechanically from the engine directly to the transmission gearing on a 1 to 1 ratio. When the lockup clutch is disengaged, the torque converter acts as a fluid coupling, multiplying torque when engine speed is significantly higher than transmission output shaft speed.

When the mode selection switch is in the 'POWER' position, the ECU controls operation of the lockup clutch according to signals received by the throttle position sensor (giving engine speed as a percent of throttle), the transmission output shaft speed sensor, and range selector. The ECU may delay application of the lockup clutch and allow torque multiplication by the torque converter to take place until a balance is achieved between engine speed and transmission output shaft speed before activating the lockup clutch.

Power versus Economy Mode

The POWER mode is designed for applications involving heavy loads and hilly

Courtesy of Machine.Market

https://truckmanualshub.com/

duty cycles where performance rather than fuel economy is of prime importance.

The ECONOMY mode is designed for applications involving lighter loads and level duty cycles or where fuel economy is more important than performance.

In the ECONOMY mode, the ECU controls operation of the lockup clutch with a timed, preprogrammed schedule where in second through sixth gears the lockup clutch is disengaged only long enough to allow the torque converter's fluid coupling to absorb shift shock. Otherwise, the lockup clutch is engaged and no torque multiplication takes place in Second through Sixth gears.

(5)Reversing switch-This switch is provided for reversing function,Operator can use.

(6)Diagnosis switch -- This switch is provided for the professional service technician of the engine, and is used to retrieve fault codes of the engine. By default, this switch is opened by pressing its bottom (lower) part.

(7) Stall check -- This switch is provided for the professional service technician of the transmission, and is used to test the matching between the transmission and the engine output torque. By default, this switch is opened by pressing its top (upper) part.

(8)Idling adjustment switch-This switch is provided for idling adjustment function, operator can use to increase or decrease idling.

(9)Transmission over speed indicator (Red) -- Illuminates when the transmission ECU senses engine speed above 2350 r/min.

(10) Transmission fault indicator(Red) -- Illuminates to alert of a minor fault in the transmission shift system or abnormal transmission temperature. The warning indicator will come 'On' when the ignition key switch is turned to position '1' to provide a bulb and system check and should go 'Off' a few seconds after the engine is started and the transmission oil pressure rises.

Courtesy of Machine.Market

https://truckmanualshub.com/

The transmission fault indicator will come 'On' during operation if the ECU has detected a minor fault in an electrical component or abnormal transmission oil temperature. If transmission oil temperature is too high, stop the machine, select Neutral (N), and increase engine speed to allow a greater flow of oil to the oil cooler until oil temperature drops to normal operating range. In most cases, a minor fault triggering the transmission fault indicator will not prevent normal operation from continuing but, depending on the nature of the problem, the ECU could take action to protect the transmission from damage, such as preventing operation in high gear ranges. If the ' check trans ' warning indicator comes on, have the problem diagnosed and corrected at the earliest opportunity.

WARNING

Do not operate engine for more than 30 seconds at full throttle with transmission in gear and output stalled as this will result in severe overheat damage to the transmission.

3.13.3 General Transmission Operation

Watch for wide deviations from normal readings on the transmission oil
temperature gauge during truck operation. If the transmission oil
temperature gauge, on vehicles which do not have a transmission retarder fitted, shows oil temperature consistently rising above the green zone (65°C - 135°C; 149°F - 275°F) under normal operating conditions; check for external causes. If none are evident shift to Neutral (N) and operate the engine at 1200 - 1500 r/min. If the transmission oil temperature does not decrease into the green zone within 2 or 3 minutes, the cause of the overheating

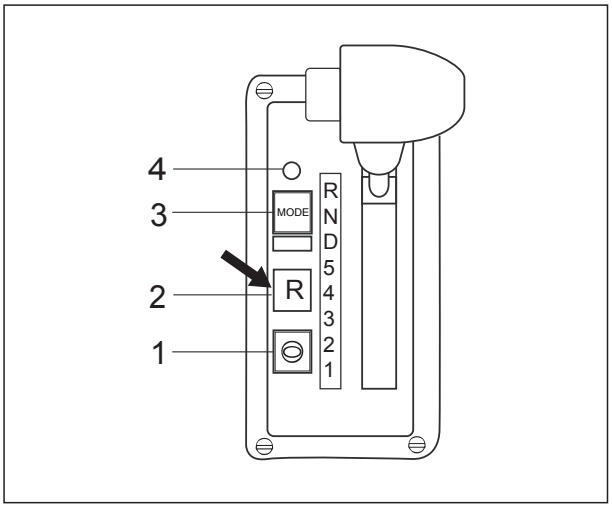

Fig 3.18

Courtesy of Machine.Market

https://truckmanualshub.com/

should be corrected before the machine is operated further. Watch the oil temperature gauge when operating on upgrades, also. If the oil temperature goes into the red zone (135°C -165°C; 275°F- 392°F), select the range which will limit upshifts to the highest range in which the transmission will operate within the normal temperature range. If upshifting must be consistently limited to ranges lower than normal for the loads and the grades encountered to prevent overheating the transmission oil, the causes should be determined and corrected.

3.13.4 Retrieving Diagnostic Codes

Diagnostic fault codes can be retrieved from the CEC2 system using the gear shift selector or by plugging in the diagnostic data reader (DDR). To obtain diagnostic codes using the gear shift selector:

※Check transmission warning indicator on dash will illuminate when ECU detects a fault.

※Stop truck and select 'Neutral'.

※Press diagnostic button (1) on gear shift selector. Display (2) on gear shift selector will flash one digit at a time.

※Display starts with code position D1, D2, etc, followed by the two digit main code, then the two digit subcode.

※To advance to the next code, press the mode button (3). Up to five codes can be stored.

※Active codes are indicated by illumination of the mode light (4).

3.13.5 Clearing Diagnostic Codes

To clear active codes, press and hold mode button (4) for 3 to 5 seconds.

To clear inactive codes, press and hold mode button (4) for 8 to 10 seconds.

To exit diagnostic mode, press diagnostic button (6). Refer to table for diagnostic code description.

Courtesy of Machine.Market

https://truckmanualshub.com/

BLANK PAGE

Courtesy of Machine.Market

https://truckmanualshub.com/

3.13.6 Diagnostic Codes

Main code	Sub Code	Description	Check Trans Light	Inhibited Operation Description
13	12	ECU input voltage, low	Yes	DNS
	23	ECU input voltage, high	Yes	DNS
21	12	Throttle position sensor, failed low	Yes	Use throttle default values
	23	Throttle position sensor, failed high	Yes	Use throttle default values
22	14	Engine speed sensor reasonableness test	Yes	Use default engine speed
	15	Turbine speed sensor reasonableness test	Yes	DNS, lock in current range
	16	Output speed sensor reasonableness test	Yes	DNS, lock in current range
23	12	Primary shift selector or RSI link fault	Yes	Hold in last valid direction. May cause “cateye” display
	13	Primary shift selector mode function fault	No	Mode change not permitted
	14	Secondary shift selector or RSI link fault	Yes	Hold in last valid direction. May cause “cateye” display
	15	Secondary shift selector mode function fault	No	Mode change not permitted
	16	Shift Selector display line fault	Yes	None. May cause “cateye” display
24	12	Sump fluid temperature, cold	Yes	DNS, lock-to-range
	23	Sump fluid temperature, hot	Yes	No upshifts above a calibration range
25	11	Output speed sensor, detected at 0 output rpm, 1st	Yes	DNS, lock in current range (1st)
	22	Output speed sensor, detected at 0 output rpm, 2nd	Yes	DNS, lock in current range (2nd)
	33	Output speed sensor, detected at 0 output rpm, 3rd	Yes	DNS, lock in current range (3rd)
	44	Output speed sensor, detected at 0 output rpm, 4th	Yes	DNS, lock in current range (4th)
	55	Output speed sensor, detected at 0 output rpm, 5th	Yes	DNS, lock in current range (5th)

Courtesy of Machine.Market

https://truckmanualshub.com/

25	66	Output speed sensor, detected at 0 output rpm, 6th	Yes	DNS, lock in current range (6th)
	77	Output speed sensor, detected at 0 output rpm, 7th	Yes	DNS, lock in current range (7th)
	88	Output speed sensor, detected at 0 output rpm, 8th	Yes	DNS, lock in current range (8th)
26	00	Throttle source not detected	No	Use throttle default values
33	12	Sump fluid temperature sensor failed low	Yes	Use default value of 93°C (200°F)
	23	Sump fluid temperature sensor failed high	Yes	Use default value of 93°C (200°F)
34	12	Factory calibration compatibility number wrong	Yes	DNS, SOL OFF
	13	Factory calibration fault	Yes	DNS, SOL OFF
	14	Power off fault	Yes	Use previous location, or factory calibration
	15	Diagnostic queue fault	Yes	Use previous location, or clear diagnostic queue
	16	Real time fault	Yes	DNS, SOL OFF
	17	Customer modifiable constants fault	Yes	DNS, SOL OFF
35	00	Power interruption (code set after power restored)	No	None (hydraulic default during interruption)
	16	Real time write interruption	Yes	DNS, SOL OFF
36	00	Hardware/software not compatible	Yes	DNS, SOL OFF
45	12	General solenoid failure - F	Yes	DNS
	13	General solenoid failure - K	Yes	DNS, Inhibit lockup
	14	FGeneral solenoid failure - B	Yes	DNS, Inhibit Reverse
	15	General solenoid failure - G	Yes	DNS
	21	General solenoid failure - H/J	Yes	Turn off trim boost J, DNS H
	22	General solenoid failure – A	Yes	No action taken
	23	General solenoid failure – D	Yes	DNS
	24	General solenoid failure - I	Yes	No action taken
	26	General solenoid failure - C	Yes	DNS
46	21	Hi side overcurrent, H/J solenoid	Yes	Turn off H/J solenoid, DNS
	26	Hi side overcurrent, C, D, E solenoid circuit	Yes	Turn off C, D, E solenoids
	27	Hi side overcurrent, A, B, F, G, I, K	Yes	DNS. Turn off A, B, F, G, I, K solenoids
56	11	Range verification ratio test, 1st	Yes	DNS
	22	Range verification ratio test, 2nd	Yes	DNS
	33	Range verification ratio test, 3rd	Yes	DNS
	44	Range verification ratio test, 4th	Yes	DNS

Courtesy of Machine.Market

https://truckmanualshub.com/

56	55	Range verification ratio test, 5th	Yes	DNS
	66	Range verification ratio test, 6th	On	DNS
	77	Range verification ratio test, 7th or R1	Yes	DNS
	88	Range verification ratio test, 8th or R2	Yes	DNS
65	00	Engine rating too high	Yes	DNS, Lock-in-neutral
66	00	Serial communications interface fault	No	Use default throttle values
69	27	ECU, inoperative A, B, F, G, I, K solenoid	Yes	DNS, SOL OFF
	28	ECU, inoperative H/J solenoid	Yes	DNS, SOL OFF
	29	ECU, inoperative C, D, E solenoid	Yes	DNS, SOL OFF
	33	ECU, Computer Operating Properly (COP) fault	Yes	Reset ECU, shutdown ECU on 2nd occurrence (power loss; hydraulic defaults). May cause “cateye” display or all segments blank display
	34	ECU, EEPROM, fault	Yes	DNS, SOL OFF
	35	ECU, EEPROM, fault	Yes	Reset ECU
	39	Communication chip addressing error	Yes	Use defaults for J1939 data
	42	SPI output failure	No	GPO 1–8 and reverse warning inoperable
	43	SPI input failure	Yes	DNS, lock-in-range

Courtesy of Machine.Market

https://truckmanualshub.com/

3.14 Body Control

Operate the hoist lever(see Fig 3-19) the left of operator's seat to raise or lower body. The four operating positions of the lever from front to rear are as follows :

Raise -this position directs oil to extend the body hoists and raise the body.

When released, the lever will be spring-returned to the 'HOLD' position.

HOLD - Lever to this position while the body is being raised and lowered to stop movement and hold the body to the expected height. The lever will be locked and kept at " HOLD" position during releasing.

FLOAT – While the body drops via gravity, the lever will be moved to and kept at this position until the body will be operated again. The lever shall be kept at "float" position during the truck is in motion .

Lower -This position provides hydraulic force to power-down the body. The body raised to the highest position needs to be dropped with hydraulic power, i.e., the lever shall be pushed to this position; when the body is dropped to a certain height, it will drop via gravity. Then, release lever and the lever will be moved to the float position via spring which inside of the valve (see Fig 3-20).

1. Hoist

Preparation:

(1) Run the engine in idling speed;

(2) Make sure the rear wheels are on the firm level ground;

(3)Shift the transmission to Neutral and hold the machine stationary by applying the brakes with the Parking-Emergency brake control.

Hoisting:

(1) Pull the lever backward to the "Raise" position, hold the lever and accelerate engine to raise body;

(2) Moves the raise lever to "hold" position when the body is required to stay at a certain height;

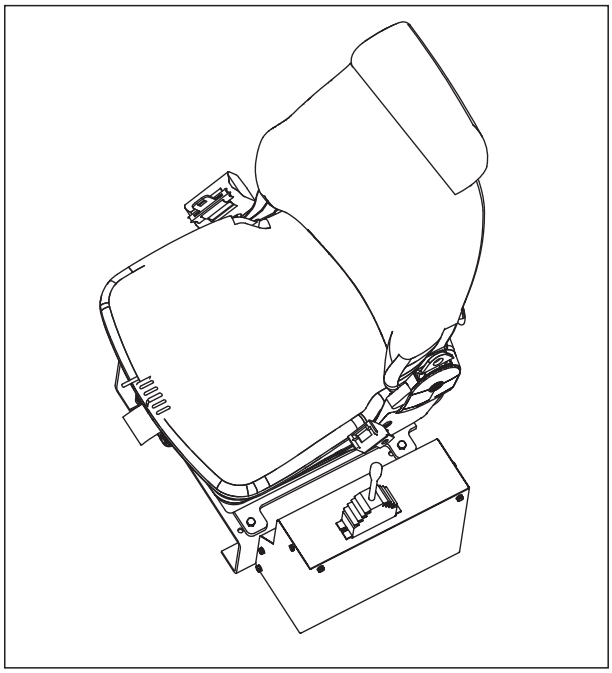

Fig 3.19

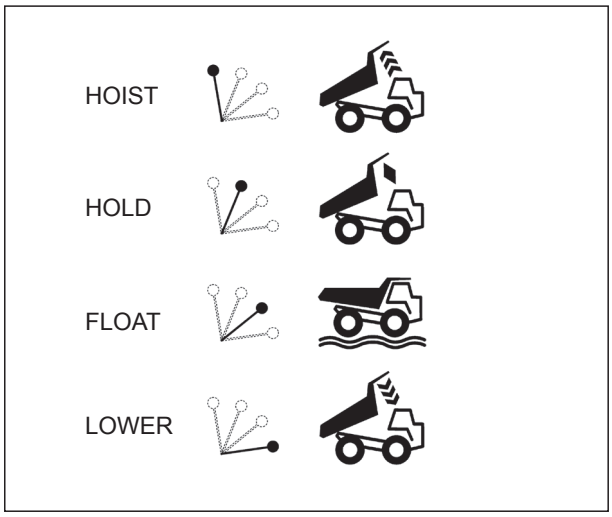

Fig 3.20

Courtesy of Machine.Market

https://truckmanualshub.com/

(3) Decelerate the engine when the last stages of the body hoists begin to extend to slow the raising speed as the hoists approach their maximum extensions;
(4) Pull the lever to “HOLD” position when the body is raised to the desired height.

WARNING

Drain the pressure form the pilot valve before while repairing the raise system and its control system .
Method: Turn off the engine, operate the RAISE lever for about 15 times in two directions, to drain the pressure oil form the pilot valve.

2. Lower
Lowering the body:
(1) Move the handle to “float” position; then the body will lower to the frame via gravity;
(2) If the body is required to stay at a certain height, the handle shall be moved to “HOLD” position;
(3) If the body does not begin to lower by its own weight, such as after dumping downgrade, move the control lever all the way forward to the 'LOWER' position and power the body downward until it begins lowering by gravity. Then move the lever to 'FLOAT' position in the specially situation.
Caution : Make sure that the body is completely lowered and the control lever is in 'FLOAT' before releasing the brakes and moving the machine.

Courtesy of Machine.Market

https://truckmanualshub.com/

3.15 The common fault code of vehicle monitor system

There is an indicator of vehicle monitor system state in display. The indicator is green when the vehicle is normal, and turns red when any one or more of the following fault accruing.

Fault code	Description	Operation Instruction
2685	Disc brake cooling oil returning Temperature high	Must check
2690	Transmission oil filter block	Must check
2691	Transmission oil temperature high	Must check
2693	Brake accumulator pressure F low	Must check
2694	Brake accumulator pressure B low	Must check
2696	Steering accumulator pressure low	Must check
2697	Steering oil returning temperature high	Need check
2698	Steering oil returning filter block	Need check
2700	Water in fuel indicator	Need check
2701	Parking pressure low	Must check
2705	Over speed	Reduce speed
2706	Hoist oil returning filter block	Must check

Courtesy of Machine.Market

https://truckmanualshub.com/

4 OPERATING THE TRUCK

4.1 Pre-Starting Inspection

※ Before the engine is started ensure the machine is ready for operation.
※ The machine should be in a level position to permit accurate checking of fluid quantities in the engine and other components.
※ Make sure parking brake is applied and block wheels securely to prevent accidental movement of the machine while checking component levels.
※ Test all lights, warning signals, controls and instruments for proper operation.
※ Walk around the machine and carry out the Inspections and Component Checks described in the drawing opposite and on the following pages.

Courtesy of Machine.Market

https://truckmanualshub.com/

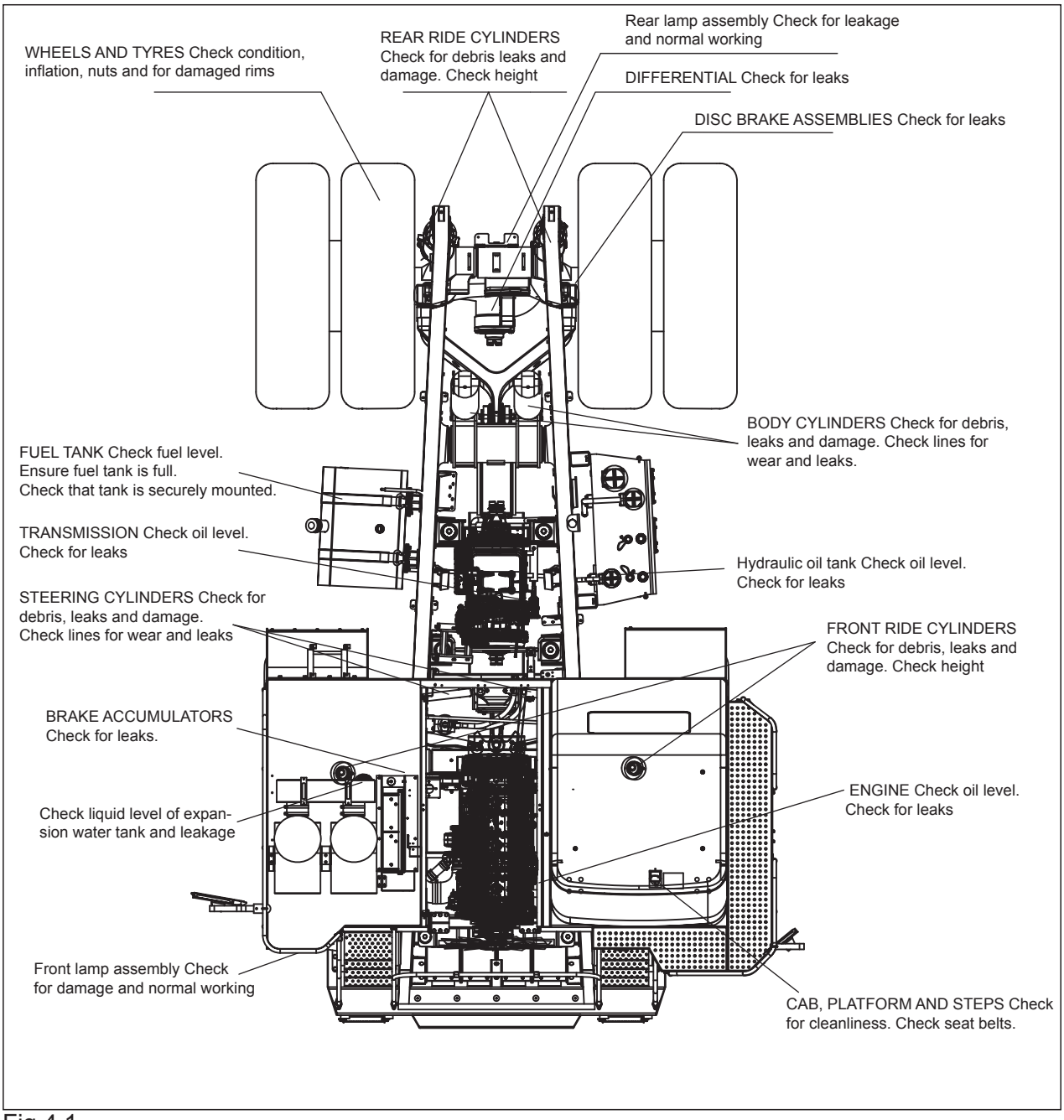

Fig 4.1

Courtesy of Machine.Market

https://truckmanualshub.com/

4.2 Check of each component

1. Engine

With the engine off, check oil level. The oil level should be between the lower and upper marks on the dipstick. Add oil if low (see Fig 4-2).

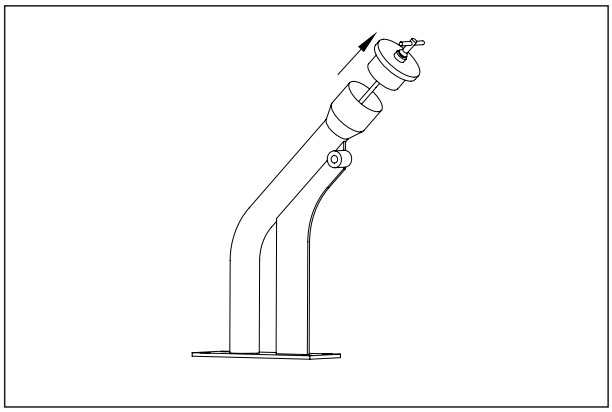

Fig 4.2

2. Fuel filters

Drain sediment and water from sump until fuel runs clear (see Fig 4-3).

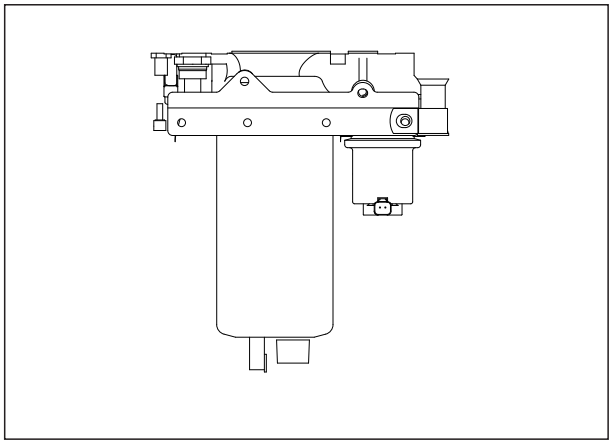

Fig 4.3

3.Radiator header tank

Check coolant level. Add if low. (see Fig 4-4). In subfreezing temperatures, be sure that the coolant contains sufficient antifreeze.

WARNING

Press button in centre of cap to bleed pressure before removing cap completely. Fill to bottom of filler neck.

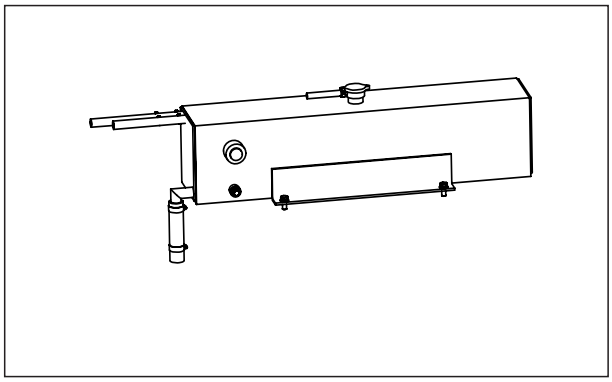

Fig 4.4

Courtesy of Machine.Market

https://truckmanualshub.com/

4. Air Cleaner vacuator valve(s)
Check for proper operation. Clean if Required (see Fig 4-5).

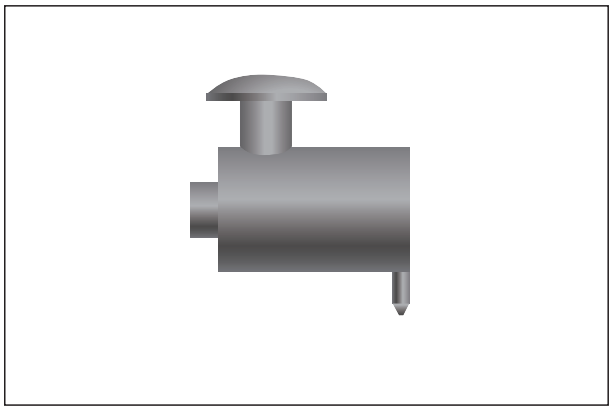

Fig 4.5

5. Tyres
Carefully inspect all tyres for cuts, bruises, or other damage and proper inflation for the loads to be carried. Inflate all tyres to the recommended pressure while cold (see Fig 4-6).

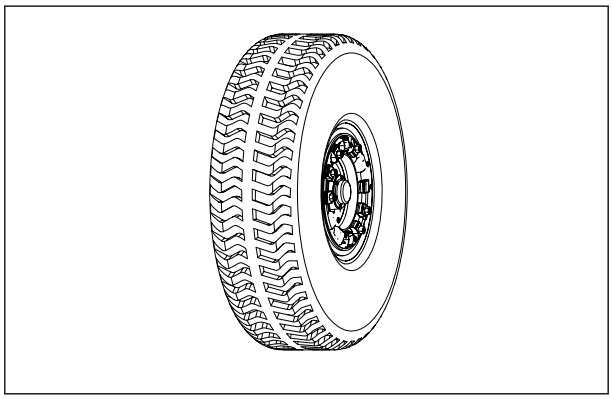

Fig 4.6

6. Fuel level gauge
Check fuel level. Tank should be filled at end of each shift to prevent condensation(see Fig 4-7).

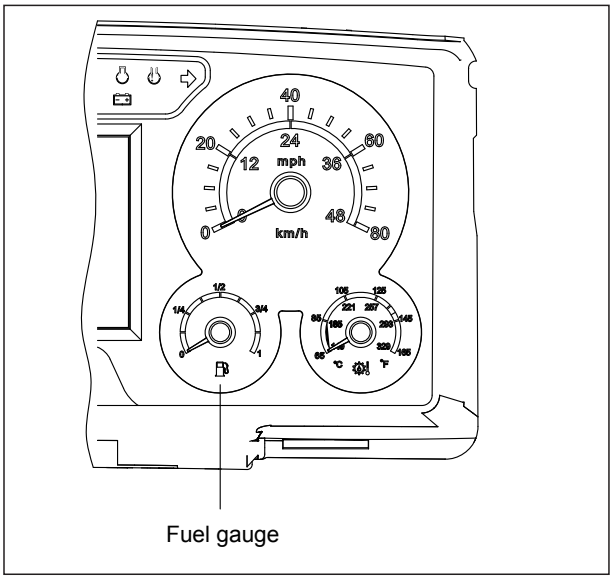

Fig 4.7

Courtesy of Machine.Market

https://truckmanualshub.com/

7. Body and disc brake cooling tank - cold oil level

The bottom sight gauge should show full. Add fluid, if low (see Fig 4-8)

8. Steering and braking tank - cold oil level

With the engine off, turn the steering wheel back and forth to dissipate any pressure in the steering accumulator. Oil should be showing in the middle sight gauge. Add fluid, if low (see Fig 4-8).

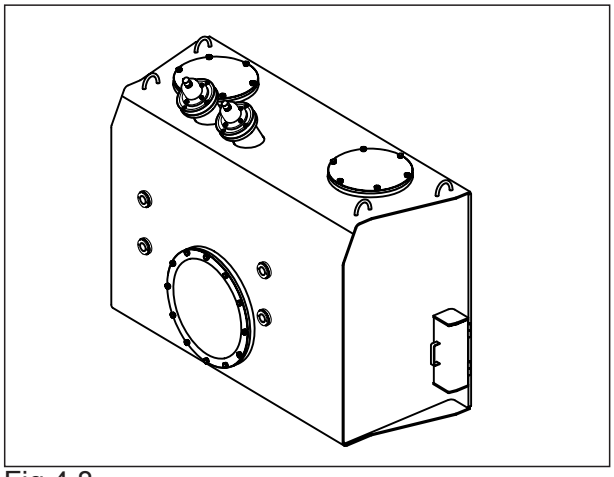

Fig 4.8

9. Transmission - cold oil level

This check is made only to determine if the transmission contains sufficient oil for safe starting. Make sure there is some oil showing on the sight gauge before starting the engine. Add oil if low (see Fig 4-9).

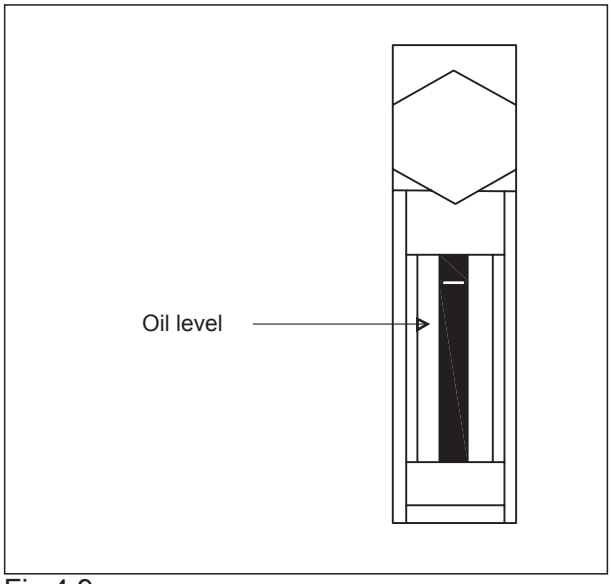

Fig 4.9

Courtesy of Machine.Market

https://truckmanualshub.com/

10. Seat and seat belts

Adjust the seat position and lap belt as required to allow complete machine control at all times with minimum fatigue. Make sure the seat belt does not restrict movement for proper machine operation (see Fig 4-10 and 4-11).

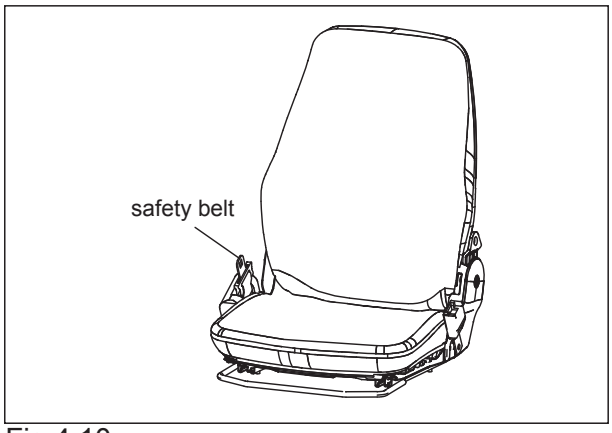

Fig 4.10

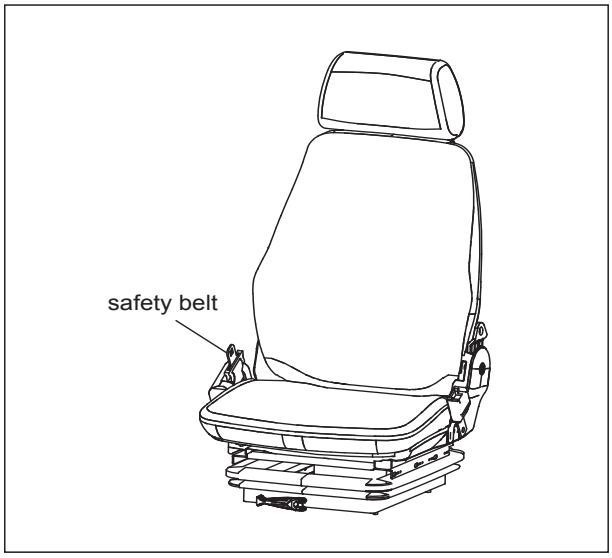

Fig 4.11

4.3 Engine Operation

Note: The electronic controlled engine will override the electronic foot pedal position until the engine is warmed up to the correct operating temperature. The engine MUST be started with foot 'OFF' the electronic foot pedal.

Do not place engine under FULL LOAD at FULL SPEED IMMEDIATELY after starting. ALWAYS allow the engine to fully circulate lubricant and warm up gradually before operating at full speed and full load.

Operate engine at top rated speed when maximum power is needed for the load.

Courtesy of Machine.Market

https://truckmanualshub.com/

NEVER idle the engine more than 5 minutes at a time; shut it off.

If any gauge operates outwith its normal operating range or a warning indicator illuminates, shut engine down immediately and report to service or maintenance personnel.

Turn off the engine if the “stop”, “warning”, and “maintenance” indicators are lighted simultaneously when the engine is working, and the engine state indicator in display is red at the same time.clear the fault following the" Charpter 3 of this manual -----Operation of Electronic-Control Fuel System "

WARNING

Never start the engine indoors unless proper exhaust ventilation is provided to remove deadly exhaust gases. Once the engine is running, move the machine outdoors as soon as possible. Exhaust gases are hazardous and can cause unconsciousness and death.

Operating the engine beyond high idle speed can cause severe engine damage. The engine speed must not exceed 2400 rev/min under any circumstances. When descending a steep grade, use a combination of transmission gears, retarder and service brakes to control the vehicle and engine speed.

Courtesy of Machine.Market

https://truckmanualshub.com/

4.4 Start the Engine

Attention to the warning indicators and instruments when starting the engine, and operating, will help the operator monitor the machine systems and components.

1. Make sure the parking brake switch is in the 'PARK' position.(see Fig 4-12).

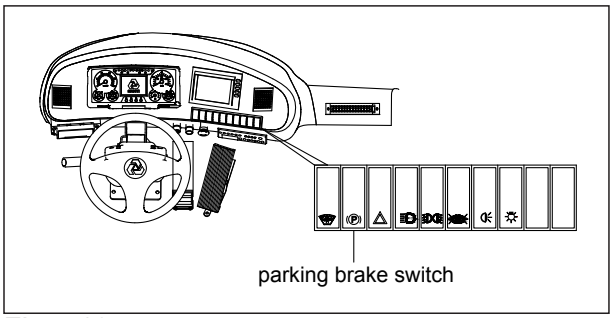

Fig 4.12

2.Make sure the body control lever is in the 'FLOAT' position.(see Fig 4-13).

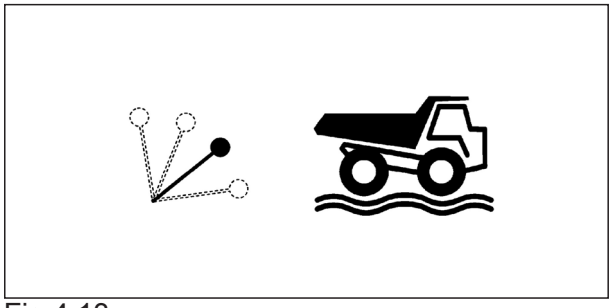

Fig 4.13

3. Make sure the transmission shift selector is in the 'NEUTRAL' position.(see Fig 4-14).

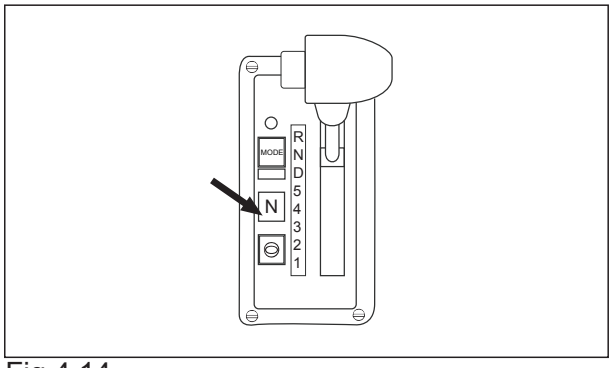

Fig 4.14

4. Insert Ignition key and turn clockwise to position 'I'.(see Fig 4-15).

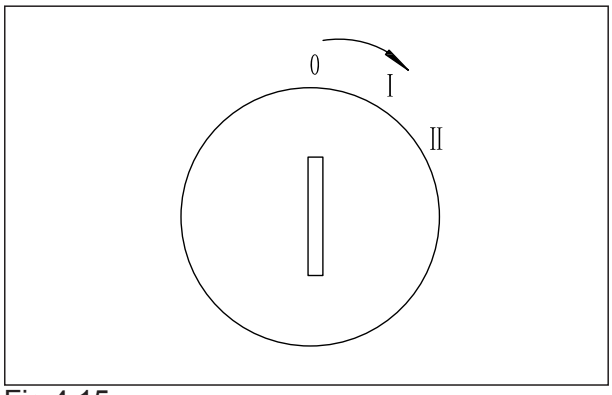

Fig 4.15

Courtesy of Machine.Market

https://truckmanualshub.com/

5. Check the instrument panel; the engine “maintenance”, “warning”, and “stop” indicators shall flash for several seconds and then extinguish; the “Alternator Charging” and “transmission fault” indicators shall be constantly on; “transmission state” indicator show red, “engine state” and “vehicle monitor system state” indicators show green, no buzzer alarm (see Fig4-16).

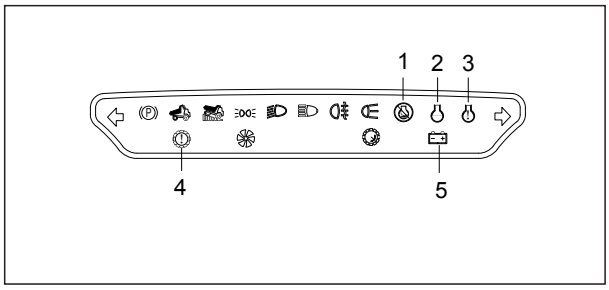

Fig 4.16

1.Engine stop indicator
2.Engine maintenance indicator
3.Engine warning indicator
4.Transmission fault indicator
5.Alternator charging indicator

6. Press horn control to sound horn. (see Fig 4-17).
Caution:Always sound horn before starting engine or operating anycontrol.

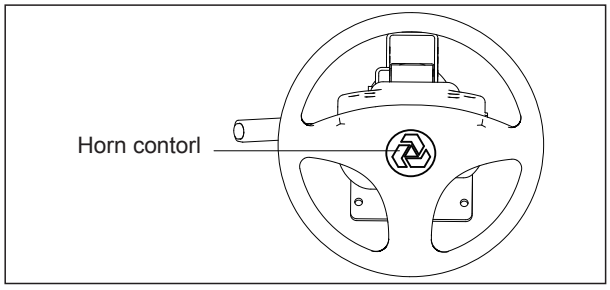

Fig 4.17

7. Turn key further clockwise against spring pressure to position 'II' to crank the engine. Release the key as soon asthe engine starts firing.
Caution: Never crank the engine more than 30 seconds continuously. Allowstarter(s) at least 2 minutes cooling time between cranking periods to avoid overheating. (see Fig4-18).

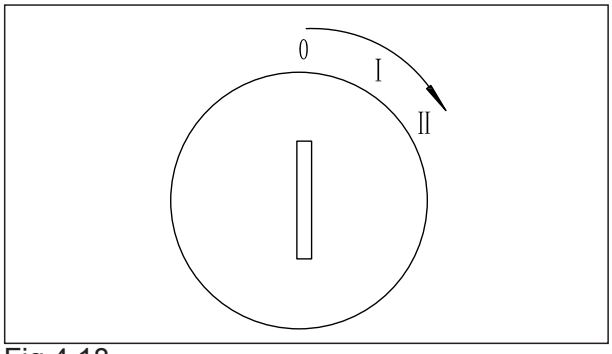

Fig 4.18

8.Check the engine oil pressure gauge. Within 10 to 15 seconds at engine idle,the gauge needle should rise into the white zone. If the needle does not rise within 15 seconds, shut off the engine and do not operate until the fault is identified and corrected. (see Fig 4-19).

9. Observe the engine water temperature gauge. After a few minutes running time at moderate load and varying speed, the gauge needle should be in the white zone. If the needle moves into the red zone, the engine is over heated and should be shut down

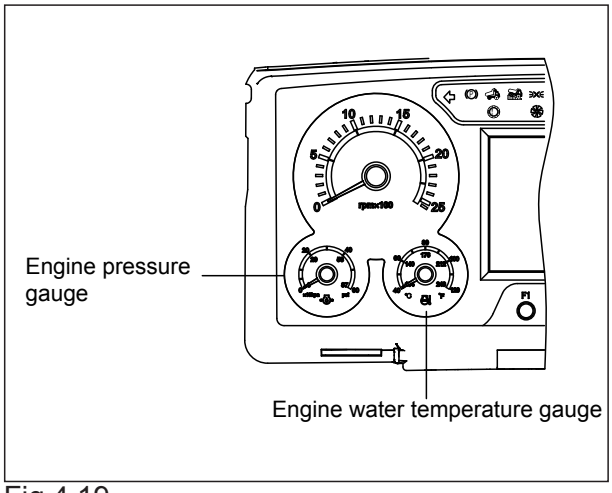

Fig 4.19

Courtesy of Machine.Market

https://truckmanualshub.com/

immediately.(see Fig 4-19).

4.5 Starting the Engine with Jumper Cables

Caution: Be sure machines are not touching each other. Use cables that are equal to cable size on the machine.

If jumper cables are used to start an engine, be sure to follow this procedure:

Connect one end of a jumper cable, usually coloured red, to the discharged battery 'POSITIVE' (+) post. Connect the other end of the same cable to the 'POSITIVE' (+) post on the booster or charged battery.

Connect one end of the second cable, usually coloured black, to the 'NEGATIVE' (-) post of the booster battery. Connect the other end of the 'NEGATIVE' (-) cable to machine frame.

WARNING

Hazardous hydrogen gas and sulphuric acid. Check for required voltage and polarity connections to discharged batteries. Excessive booster voltage and/or incorrect jumper cable connections, open flame, lighted cigar, or other ignition source can cause battery explosion/fire. Keep all sources of ignition away from batteries. Do not lean over batteries, and wear eye protection at all times to prevent personal injury.

Do not jump start a vehicle by using arc welding equipment. Currents and voltages are dangerously high and cannot be sufficiently reduced to make the method safe.

Courtesy of Machine.Market

https://truckmanualshub.com/

4.6 Pre-Operating Checks

Make sure all cab glass, mirrors and lights are clean. Test all controls to ensure they are functioning properly. Select 'REVERSE' momentarily on the transmission shift selector to make sure the reverse alarm sounds.

1. Transmission - Hot Oil Level - The parking brake must be applied and the road wheels securely blocked while carrying out this check. With the engine idling, transmission in 'NEUTRAL' and at normal operating temperature, the top of the oil column should be visible in the sight gauge. Add oil if low. If the top of the column is above the sight gauge, the transmission is overfull and oil should be drained.

2. Body and Rear Brake Cooling Hydraulic Tank - Hot Oil Level - Operate the body hoist cylinders to their fully-extended positions to charge all cylinders and lines then lower the body. With the engine running, and body fully lowered, the oil level should show in the top sight gauge. Add oil if low. Under all conditions the bottom sight gauge should show full.

3. Steering and Braking Hydraulic Tank - Hot Oil Level - With the engine running, oil at operating temperature and accumulators charged, oil must be between the top and middle sight gauges. Shut down the engine and operate the steering left and right to discharge steering accumulator. Operate treadle valve continuously to discharge braking accumulators. Oil should show in the top sight gauge.

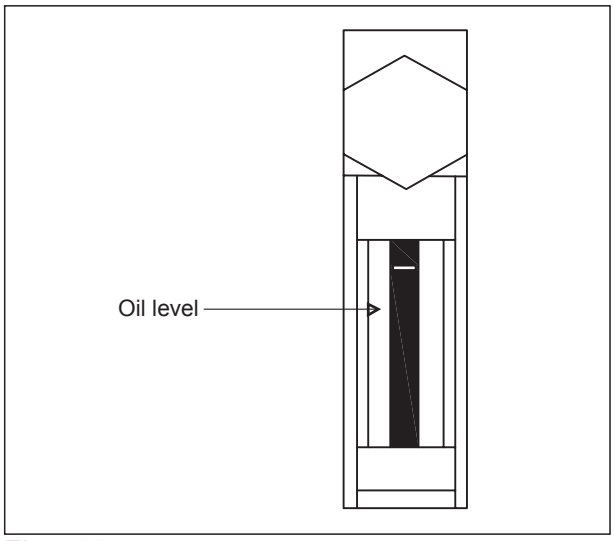

Fig 4.20

Courtesy of Machine.Market

https://truckmanualshub.com/

4.7 Braking Function Check

Determination the function of the braking system before the working each times for safety !

Caution:The following checks are NOT intended to measure maximum brake holding ability. If NEW brake pads are fitted, they MUST be burnished as per the manufacturers recommendations before carrying out the checks.

WARNING

Make sure the surrounding area of truck is free of person and barrier before checking brake function.

If the truck moves during these checks, the operator shall stop, use the parking brake and don't operate again until all of fault are corrected .

4.8 Service Brake Performance Check

Following the methods and sequence at below for checking:

1. Depress the foot brake pedal;
2. Select 1st gear on the transmission shift selector;
3. Release parking brake;
4. Depress the accelerator pedal.

Inspection,the machine should not move before engine speed increased to 1350 r/min.

following sequence as below when the checking has been finish:

1. Decelerate the engine;
2. Shift transmission to NEUTRAL brake;
3. Apply the parking brake;
4. Release the service brake pedal.

Courtesy of Machine.Market

https://truckmanualshub.com/

4.9 Emergency Brake Performance Check

Following the methods and sequence at below for checking in sequence :
1. Depress the service brake pedal;
2. Release emergency brake;
3. Select 1st gear on the transmission shift selector;
4. Apply emergency brake;
5. Release service brake pedal;
6. Depress the accelerator pedal,

Inspection,the machine should not move before engine speed increased to 1350 r/min. Then, decelerate the engine and select 1st gear on the transmission shift selector.

Caution**:**

1. Brake holding effort required to hold a machine static at a specific engine speed, can vary from machine to machine due to differences in engine performance, power train efficiency, etc., as well as differences in brake holding ability.
2. As an indication of system deterioration, the engine speed at which point the machine moved, with the service or emergency brakes applied, can be compared against the engine speed your machine was able to hold to on a previous check.

4.10 Driving and Stopping

Before driving off observe all instruments and warning indicators. All instruments should operate in their normal range and all warning indicators should be out except possibly the Direction Indicator and Headlight Main Beam warning indicators.

Make sure the area around the machine is clear of personnel and obstructions before driving off.

In the first few minutes of travel, check carefully for the required steering, braking, engine and transmission power response for

Courtesy of Machine.Market

https://truckmanualshub.com/

maximum operating safety.

1. Make sure the body is fully down and body control lever is in the 'FLOAT' position.(see Figure 4-21)
2. Apply the service brake and release the parking brake.
3. Select the driving direction and the required range.(see Figure 4-22)
4. Sound horn; two blasts for forward and three blasts for reverse.
5. Release the service brake, apply the accelerator and move off.
6. To stop the machine release the accelerator and depress the service brake pedal. Release the service brake as the machine slows until, when stopped, the pedal is depressed just enough to hold the machine stationary. The retarder brake is recommended to decelerate the truck unless the truck must be stopped immediately.
7. When the machine has stopped, shift the transmission to Neutral, apply the parking brake and release the service brake.
8.If the service brake does not stop the machine. Apply the emergency brake. This should only be applied to stop the machine in an emergency.

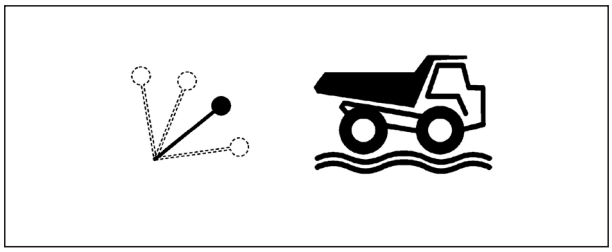

Fig 4.21

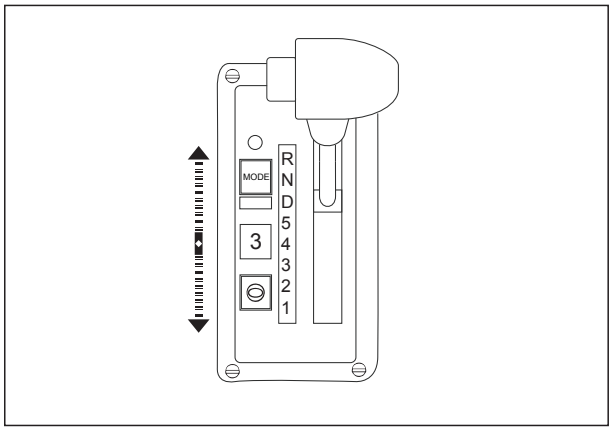

Fig 4.22

4.11 Stopping the Engine

1. Make sure the rocker switch is in the 'PARK' position. (see Fig4-23).

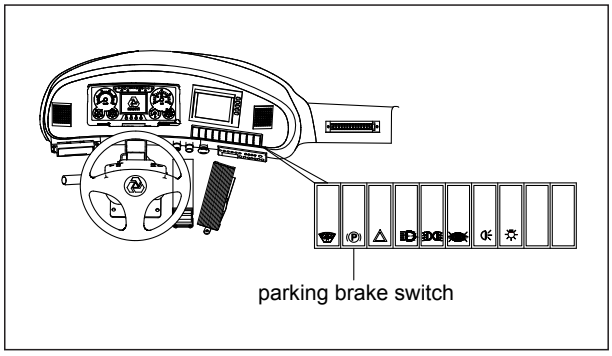

Fig 4.23

2. Make sure the transmission is in 'NEUTRAL'.(see Fig 4-24).
3. Allow the engine to idle 3 - 5 minutes after a full load operation before shutting it off. This allows the engine to cool gradually and uniformly.

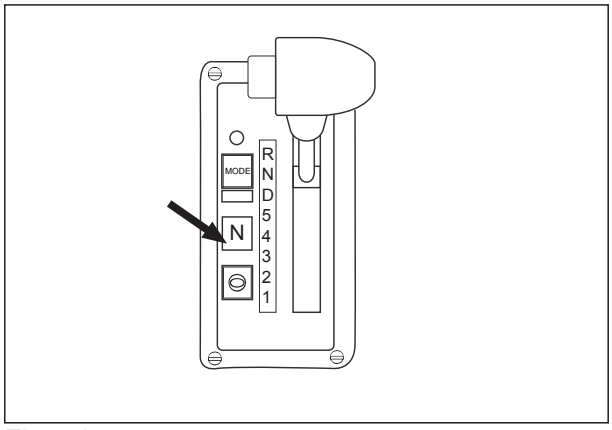

Fig 4.24

Courtesy of Machine.Market

https://truckmanualshub.com/

WARNING

There is no mechanical connection between the engine and wheels on machines with converter transmissions. The parking brake must always be applied when the engine is switched off.

4. Turn the steering wheel in both directions to dissipate the pressure in the steering accumulator to prevent accidental steering during bleed down.(see Fig 4-25).

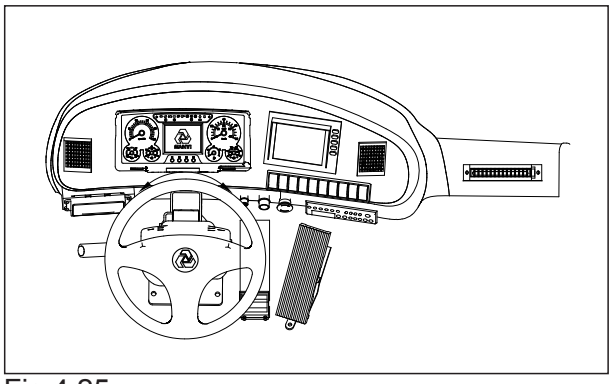

Fig 4.25

5. Make sure the body control lever is in the 'FLOAT' position. (see Fig 4-26).

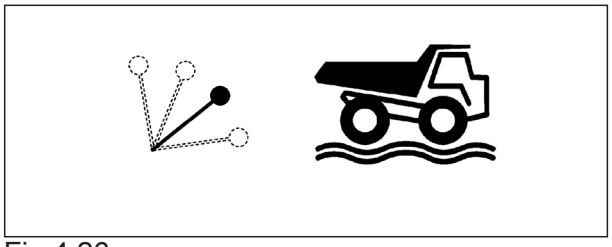

Fig 4.26

6. Turn the ignition key switch to the 'OFF' position ('0'). (see Fig 4-27).

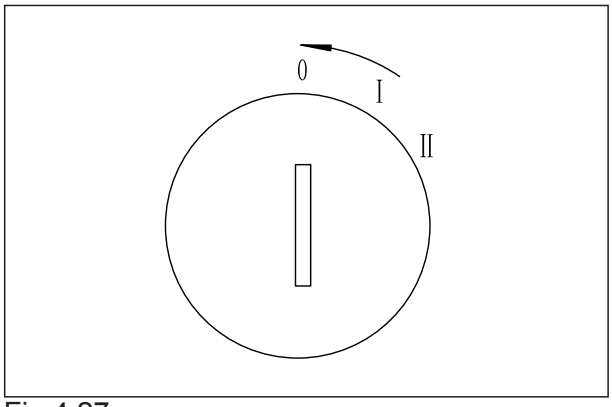

Fig 4.27

Courtesy of Machine.Market

https://truckmanualshub.com/

4.12 Parking

When parking the machine overnight, or for an extended period, the following procedure in addition to that given in 'Stopping the Engine' will help maintain it in good condition for subsequent use:

1. Fill the fuel tank completely, to prevent condensation. If security kit is supplied, keep it locked.
2. Always park the machine on level ground where possible. If the machine must be parked on a grade, position the machine at right angles to the grade and block the wheels securely.
3. If below freezing temperatures are expected, make sure the cooling system has sufficient antifreeze to prevent the coolant freezing. If antifreeze cannot be added to the cooling system, drain the cooling system completely.

Check all tyres, hoses, wiring, tubing and fittings for cuts, ply separation, abrasion, fraying, or other damage or deterioration. Inspect for structural damage to the cab, body and chassis. Attach warning signs to the steering wheel or to a control to alert others if lubricant has been drained, batteries removed etc.

4.13 Prolonged Storage

Turn the circuit breaker beside battery to “shutoff” position to prevent battery leakage when removing CEC memory and radio power supply.

Retune the radio if the circuit breaker is set again.

Note: The code in CEC memory may be lost after the power supply is disconnected.

Courtesy of Machine.Market

https://truckmanualshub.com/

5 WORKING THE TRUCK

5.1 Working the Truck

Mining Dump trucks are used on a variety of hauling jobs, from mine overburden removal to dam building. Every truck operation, regardless of the type of job, can be divided into four phases; loading, hauling, dumping and the empty return.

Note: After coming to a stop for loading or unloading the truck, the Parking-Emergency Brake control can be pushed in to hold the brakes in the applied position as though the foot brake is depressed. (see Fig 5-1).

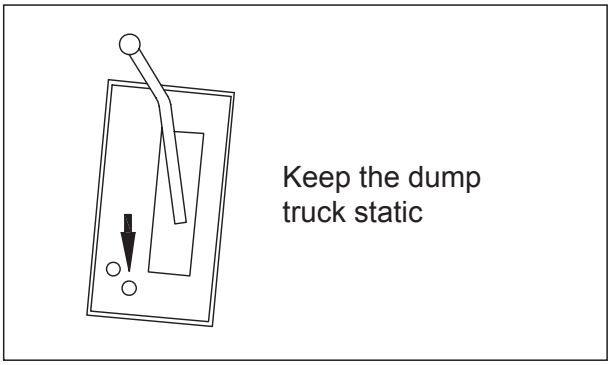

Fig 5.1

5.2 Loading

The most common methods of loading trucks are with hydraulic excavators, rope shovels, and front end loaders. For maximum material movement, the truck operator must help the loading machine operator hold loading time to a minimum. The fewer manoeuvres the truck must make to get into loading position, the sooner loading can start. And the shorter the distance the loading unit bucket must travel between the cut, or stockpile and the truck body, the more passes it can make in a given period of time and the quicker the truck can be loaded.

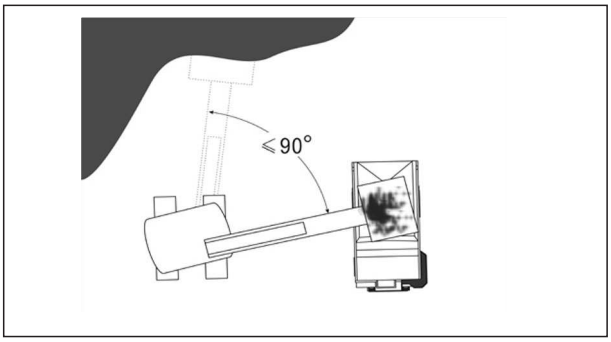

Fig 5.2

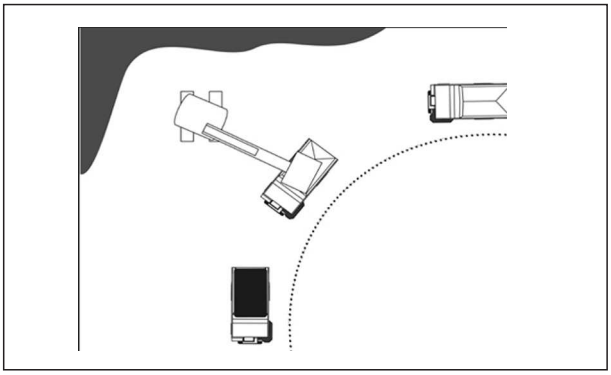

Fig 5.3

Courtesy of Machine.Market

https://truckmanualshub.com/

Ideally, the hydraulic excavator or rope shovel should require 90o or less swing to dump into the truck body for best loading efficiency. Required turning and backing to position the truck for loading should be held to a minimum. A common loading method is to have trucks travel a semicircle in the loading area. This method eliminates all backing. Waiting machines should stay about two truck lengths behind the one being loaded to avoid any spillage from the loading machine bucket or truck body. The operator of the waiting truck is also better able to judge the best spot for his truck when it is his turn to be loaded(refer to fig.5-4).

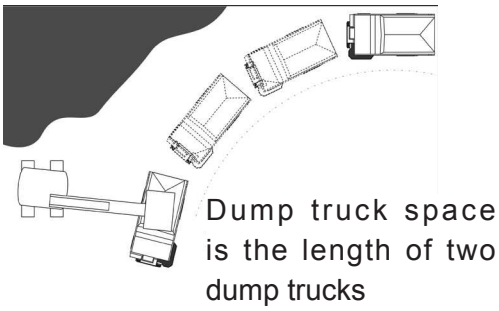

Fig 5.4

On some jobs, the loading machine might work most efficiently when trucks are positioned on both sides of the loader. Thus, while one truck is being loaded, another can move into position on the opposite side of the loader and the loading machine can swing over to load the next truck with a minimum of lost time. Since the truck is usually backed into the loading position with this method, the operator must be alert and careful while backing(refer to fig.5-5).

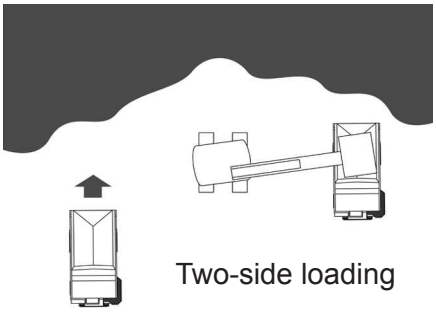

Fig 5.5

For fastest, most accurate loading when being loaded by a front end loader, the truck operator should spot his machine on the most level area and at an angle to the face of the bank or stockpile. This minimizes loader travel time, particularly with a raised, full bucket. Where possible, the truck should also locate downwind of the loader when dusty-type material is being loaded on a windy day. This practice improves both working conditions and visibility for the loader operator(refer to fig.5-6).

Fig 5.6

A cleanup dozer or small loader is often working in conjunction with the main loading machine to keep the area clear of bucket spillage for maximum efficiency of the loading operation. The truck operator must always be alert to the position of the cleanup machine

Courtesy of Machine.Market

https://truckmanualshub.com/

when entering the loading area to avoid congestion, and for maximum safety(fig.5-7).
The following precautions should be observed when approaching the loading area and while being loaded.
Avoid rocks and other shovel spillage that can needlessly damage tyres or other truck components. Allow the cleanup machine sufficient time to clear up such debris.
Do not move the truck into loading position with the shovel bucket swinging overhead. Large rocks that might fall from the bucket can be dangerous to both the truck and operator.
Keep your head and arms inside the cab during loading to avoid the danger of falling rocks or other shovel spillage.
When the loader operator signals that the truck is loaded, sound two blasts on the horn, release the brakes and shift the transmission to drive (D). Move out of the loading area and onto the haul road with the least possible delay to allow any waiting truck to move into the loading position as soon as possible(refer to fig.5-8).

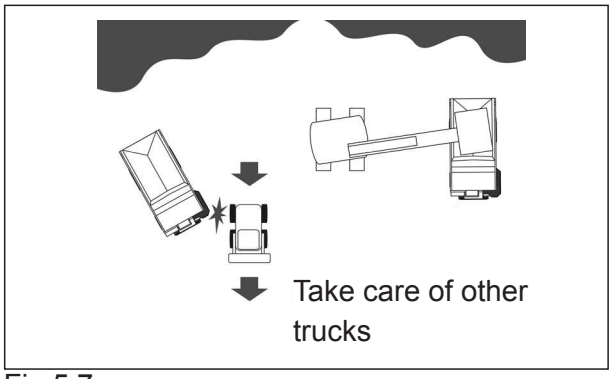

Fig 5.7

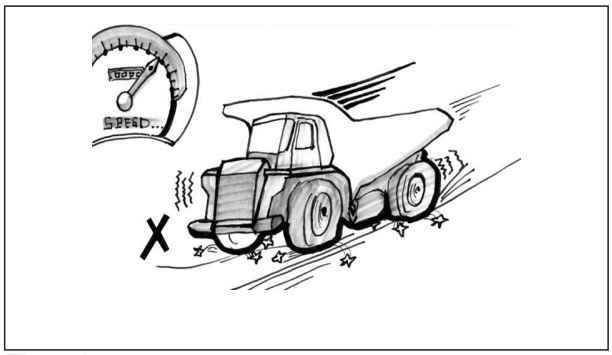

Fig 5.8

5.3 Hauling

While travelling the haul road, always maintain a safe speed for the haul road conditions and grades. Never allow the machine to move or coast with the transmission in 'NEUTRAL'!
When approaching downgrades, select the proper transmission range and use the retarder and service brakes as required to maintain safe descent speed without over-speeding the engine or gaining excess travel speed. Generally, the transmission range required for ascending is also correct for descending a grade(refer to fig.5-9).
Always remain a safe distance behind the machine ahead, particularly on downgrades. A good rule-of-thumb to follow is to allow two (2) truck-lengths between machines for each 15 km/h (10 mile/h) of travel speed under

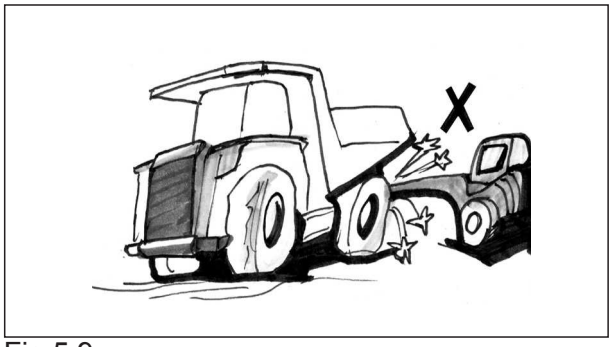

Fig 5.9

Courtesy of Machine.Market

https://truckmanualshub.com/

normal operating conditions. Under adverse conditions, allow more room for safe operation. On jobs on which minimum distance between machines is specified for the haul road, be sure to observe the regulations at all times. Such regulations would be established for the safety of everyone on the job(refer to fig.5-10).
Pay attention to haul road conditions to avoid rocks, holes, or other obstacles. Such obstacles not only present hazards to safe operation, but can needlessly damage tyres and rides if not avoided(refer to fig.5-11).
Be sure to reduce speed and come to a full stop, as required, at intersections, rail-roads, public highways etc.. Where a 'FLAGMAN' is stationed to direct traffic, always stay alert and follow his directions.

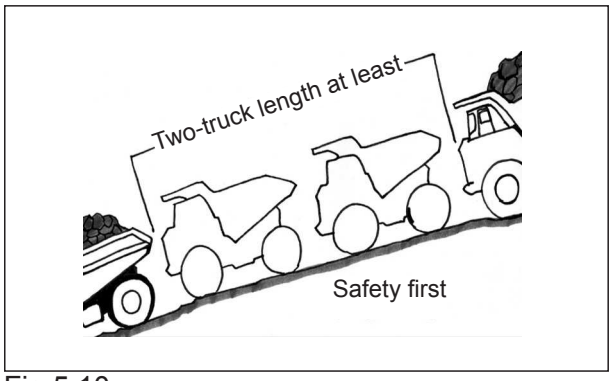

Fig 5.10

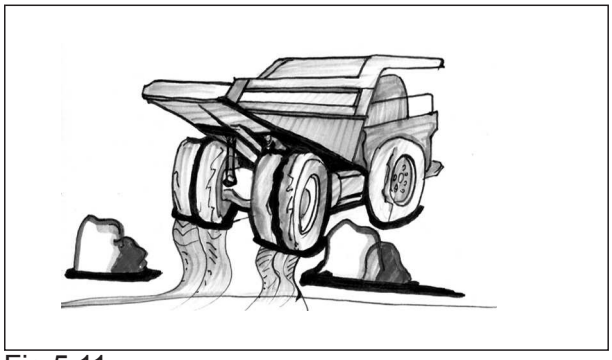
Fig 5.11

5.4 Dumping

The dumping operation usually depends upon the type of material being hauled. For instance, overburden and other waste material is usually dumped over a spoil bank or piled into large mounds. The dumping on a job of this type might be controlled by a dump 'SPOTTER', 'FLAGMAN' or 'BANKSMAN' or second person who directs the truck to its dumping area. The 'SPOTTER' is needed due to the limited rear visibility the operator has with a loaded truck of this size. While backing to dump, the operator must watch the 'SPOTTER' at all times and follow his direction. Under no circumstances should the operator leave his seat to gain better visibility while backing(refer to fig.5-12).
Always remain seated to maintain maximum machine control(refer to fig.5-13).
Mineral ores, blasted rock etc., are usually dumped into a hopper or crusher where it is processed before shipment. When dumping into a hopper, the operator, in order to avoid excess wear on the tyres, must avoid hitting the protecting rail at the hopper. If a DRIVEOVER HOPPER is used, the operator

Fig 5.12

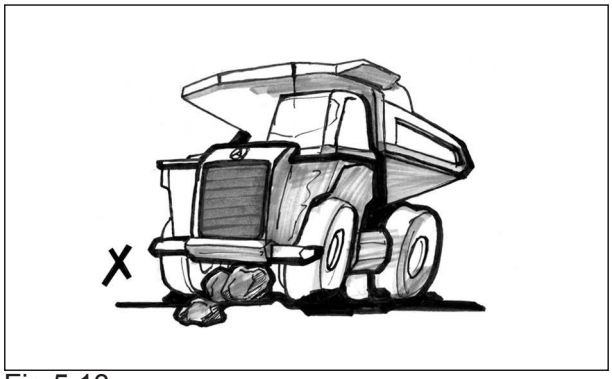
Fig 5.13

Courtesy of Machine.Market

https://truckmanualshub.com/

must avoid rubbing the tyre inner sidewalls.

When hauling dirt or rock from a borrow pit into a fill area such as an earth-fill dam, the load is usually dumped in a string with other loads and the loads smoothed out with a crawler tractor. When dumping on a fill of this type, the operator usually works alone and picks his own dumping place. To save bulldozer work and cleaning up, the load should be dumped as close as possible to the preceding load. The operator should pull past the preceding load, turn in line with the string and back his truck until it is within a few feet of the last load. This assures that the load will fall in the right place.

No matter what kind of job the operator is working, there are a few things which are common to all jobs and which the operator should observe. When dumping over a spoil bank without a 'SPOTTER', know how close the machine can safely approach the edge under all weather conditions. If in doubt as to dumping safety, dump the load a safe distance from the edge so that it can be pushed over the edge later(refer to fig.5-14).

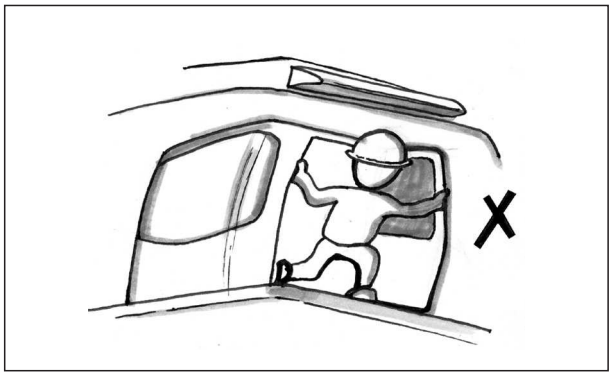

Fig 5.14

Before raising the body, make sure the rear wheels are on firm level ground. If one wheel is higher than the other, a twisting strain is imposed upon the body hinge pins, hoists and chassis. Stop the machine, allow the engine to slow to idle, shift the transmission to 'NEUTRAL' and apply the brakes with the Parking-Emergency Brake control to hold the machine stationary(refer to fig.5-15).

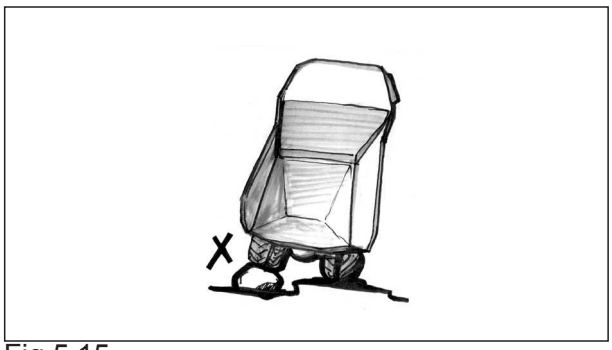

Fig 5.15

Push the body control lever back into the 'RAISE' position and accelerate the engine. Decelerate the engine to slow the raising speed as the hoists approach their maximum extension. When the body has been raised to the desired height, release the control lever into the 'HOLD' position until the body is to be lowered. Do not hold the lever in the 'RAISE' position when the hoists are fully extended to prevent unnecessary hydraulic system

Courtesy of Machine.Market

https://truckmanualshub.com/

relivalve operation.

NEVER 'JUMP DUMP' the machine by bouncing the rear tyres against a stop block, or otherwise jarring the body in its raised position to dislodge stuck or frozen material. The tremendous loads that this practice develops on the body pin area, chassis and hydraulic system can cause needless, extensive stresses. (refer to fig.5-16)

Fig 5.16

Once the load has been dumped, push the control lever down into the 'FLOAT' position to allow the body's weight to lower it to the chassis. If the body does not begin to lower by its weight, push the control lever down into the 'LOWER' position and power the body down until it begins to lower by gravity. Then release the control lever into the 'FLOAT' position.

Note: For the truck running stably that should be operated the hoisting handle slowly while the body hoisting period and lowing period.

5.5 Empty Return

Make sure the body is completely lowered, the body control lever is in the 'FLOAT' position, and the transmission is shifted to the correct range before releasing the brakes and moving away from the dump site.

Except for the above, the procedure for returning empty to the loading area is the same as that given earlier for 'HAULING'.

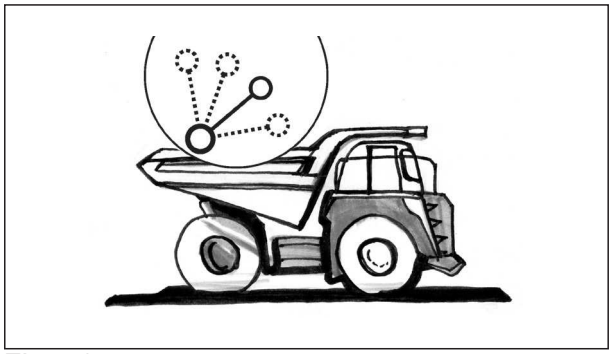

Fig 5.17

WARNING

DO NOT drive the truck with the body up. Apart from effecting the stability of the truck, there can be severe danger from contacting overhead electric cables, trees, or bridges over the haul route.

Courtesy of Machine.Market

https://truckmanualshub.com/

6 ROADING

6.1 General

‘ROADING’ (operating a truck over public highways) requires special care and attention. Trucks, because of their large size, are slower and less manoeuvrable than most other vehicles encountered on the road. Yet, while on the road, they must be operated for extended periods of time at or near maximum speeds.

Before 'ROADING' a truck for an extended distance between jobs, or between widely scattered sections of a job, the machine must be properly equipped and in good condition. It is also recommended to carry a 'Warning Triangle'.

The operator must use extra care while on the public highways and remain constantly alert, especially for overhead cables and low bridges.

Necessary permits must be obtained from the proper authorities before the machine is 'ROADED' on public highways.

6.2 Preparation Prior to Roading

Lubrication

Thoroughly lubricate and service all components and systems as described under 'LUBRICATION AND SERVICING' in this handbook and/or service manuals for this machine.

Inspection

Perform all pre-starting and post-starting checks described in this Handbook. Pay particular attention to the function of all instruments and lights, and make any repairs necessary.

Note: Improper tyre inflation during over-the-road operation can cause rapid tyre deterioration by overheating. Tyre pressures

Courtesy of Machine.Market

https://truckmanualshub.com/

increase with heat. Always check pressures while tyre is cold. Consult your tyre dealer for proper pressures and tyre speed limits for roading.

Note: Make sure the body control lever is in the 'FLOAT' position. Failure to comply to this caution could result in overheating the hydraulic oil and failure of the hydraulic system components.

Check the inflation pressures of all tyres, while cold, with an accurate tyre pressure gauge. Inflate tyres if necessary, while cold, to the recommended pressure for 'ROADING'. Inspect all tyres thoroughly and carefully for stones or other debris embedded in the treads or carcasses. Inspect for cuts, bruises, burned beads, abnormal wear and damaged wheels rims. Replace any damaged or excessively worn tyres.

Check all hoses, drain cocks, fuel level check cocks, and other potential sources of leaks. Make sure that all leaks are repaired and that all drain cocks are sufficiently tightened to avoid subsequent loosening. Make sure that all warning flags, oversize load signs etc. are in place and secure.

Clean all glass and adjust the seat for proper operation of all controls.

Check all lights and other controls for proper operation.

Make sure the truck body is empty, fully lowered and the body control lever is in the 'FLOAT' position.

6.3 In Case of Trouble

If trouble develops en route, move machine off the road at the first safe parking place, and shut off the engine. Carefully note as many of the symptoms of the trouble as possible, such as rough engine operation with loss of power and overheating, or, loss of speed and transmission clutch pressure with normal engine operation etc.

Courtesy of Machine.Market

https://truckmanualshub.com/

If the area in which the trouble occurs requires that the machine be left unattended while the trouble is reported by phone, disconnect a battery cable and apply security locks, if so equipped, before leaving the parked machine.
Make sure body is completely lowered and the parking brake is applied. Report the following data as soon as possible.

1. Exact location.
2. Destination.
3. The nature of the trouble (with as many details as possible) and the time and conditions under which it happened.
4. The telephone number at which the machine operator can be reached.

Note: Do not attempt to restart or operate the machine unless instructed to do so. An engine, pump, transmission or other component that develops a minor defect can be completely destroyed in just a few extra minutes of unnecessary operation.

Courtesy of Machine.Market

https://truckmanualshub.com/

BLANK PAGE

Courtesy of Machine.Market

https://truckmanualshub.com/

7 MOVING DISABLED TRUCK

7.1 Moving Disabled Truck

Any unusual power train noises noted while operating the truck should be reported to those responsible for maintenance. Should the power train, hydraulic or electrical systems fail, the machine should be stopped and shut down immediately until suitable repairs can be made. If the failure is in the power train and the truck must be moved to a service area or workshop to make required repairs, remove the drive flange covers from the drive wheels and pull the axle shafts and final drive planetary sun gears from the planetary assemblies. This will prevent any possible additional damage, which may be caused by the drive wheels turning the power train as the machine is towed. Replace the covers on the drive wheels to retain lubricant and prevent entry of dirt(refer to fig.7-1).

If possible, start the engine to provide the required hydraulic pressure for steering and braking. Never allow riders on a machine being towed without sufficient hydraulic pressure for safe steering and braking.

If the nature of the trouble prevents engine operation, repairs must be made on the site of the breakdown, or special arrangements made for towing the machine safely to the repair area without steering and braking power.

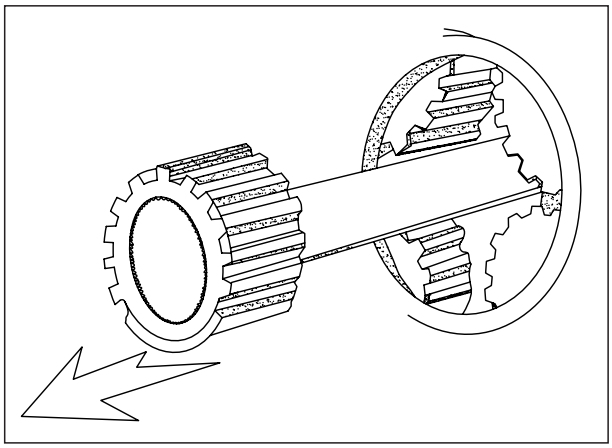

Fig 7.1

WARNING

Uncontrolled machine movement hazard. There is no mechanical connection between the machine wheels and the engine when the parking brake is released. Before releasing the parking brake, make sure the machine wheels are secured with chock-blocks to prevent or restrict unexpected machine movement. When

Courtesy of Machine.Market

https://truckmanualshub.com/

moving the machine with insufficient hydraulic pressure and power for safe steering and braking, use extreme caution to ensure personnel and property safety.

Connect a suitable towing bar to one of the lugs on the front bumper of the disabled machine and reverse another machine, in a straight and in-line manoeuvre, towards the disabled machine. Connect the opposite end of the towing bar to the towing point on the rear axle of the recovery machine and ensure that it is securely locked.

Note: An alternative method of towing a disabled machine is by connecting an A-Frame arrangement to the lugs on the front bumper of the disabled machine and the towing point of the recovery machine.

To prevent possible damage to the transmission, the towing speed should never exceed 10 km/h (6.2 mile/h) and the distance towed should not be longer than 10 km (6.2 miles).

WARNING

If using a chain or cable, be sure it is strong enough for the expected load and properly secured.

When pulling, take up the slack slowly to avoid jerking. A chain or cable which fails under load can cause serious injury. Stand clear. Do not pull through a kinked chain or cable. Do not pull or tow unless the operator's compartment is guarded against or out of reach of a whipping chain or cable. Attach only to the towing points. Failure to follow these instructions could cause serious injury or death.

Courtesy of Machine.Market

https://truckmanualshub.com/

8 LUBRICATION AND SERVICING

8.1 Safety Precautions

Do not allow unauthorized personnel to service or maintain this truck. Study the Operator's Handbook and Maintenance Manual before starting, operating or servicing this truck. Always follow procedures and safety precautions detailed in the Service Manual.

Always attach a 'DO NOT OPERATE' or similar warning sign to ignition switch or a control before cleaning, lubricating or servicing the truck. Never allow anyone to work on the truck while it is moving. Make sure no one is on the truck before working on it. Do not work under or near an unblocked or unsupported body. Always use the body safety pins. Do not work under or near any unblocked or unsupported linkage, part or truck.

Always relieve pressure before servicing any pressurized system. Follow the procedures and safety precautions detailed in the Maintenance Manual. Always shut down the engine according to the procedure under 'Stopping The Engine', described on page 4-11, before cleaning, lubricating or servicing the truck, except as called for in this Handbook or the Maintenance Manual.

When changing oil in the engine, transmission and hydraulic systems, or removing hydraulic lines, remember that the oil may be hot and can cause burns to unprotected skin. When working on or around exhaust components, remember that the components may be hot and can cause burns to unprotected skin.

Always deflate the tyre before attempting to remove any embedded objects or removing the tyre and rim assembly from the truck. Always use a self-attaching chuck with a long airline, and, stand to one side while the tyre is inflating. Refer to 4.11 in the Maintenance Manual.

Courtesy of Machine.Market

https://truckmanualshub.com/

8.2 Lubrication and Maintenance

Lubrication

Lubrication is an essential part of preventive maintenance. It is important that the instructions, regarding types of lubricants and the frequency of their application, be followed to prolong the useful life of the truck. Periodic lubrication of moving parts reduces to a minimum the possibility of mechanical failures.

WARNING

These trucks s are equipped with engine and transmission oil pans which permit operation on longitudinal slopes up to 30° (60%). For operation on steeper slopes, the factory should be consulted.

All change and service periods are recommendations based on average operating conditions. Lubricants showing evidence of excessive heat, oxidation or dirt should be changed more frequently to prevent these conditions.

Lubricant change and service periods must be established on the basis of individual job conditions utilizing oil sampling and recommendations from lubricant suppliers.

Thoroughly clean all fittings, caps, plugs etc., to prevent dirt from entering any system while carrying out servicing procedures. Lubricants must be at operating temperature when draining.

Note: Do not operate any system unless oil level is within the recommended operating levels as indicated on oil level dipstick, sight gauge or level plug.

Courtesy of Machine.Market

https://truckmanualshub.com/

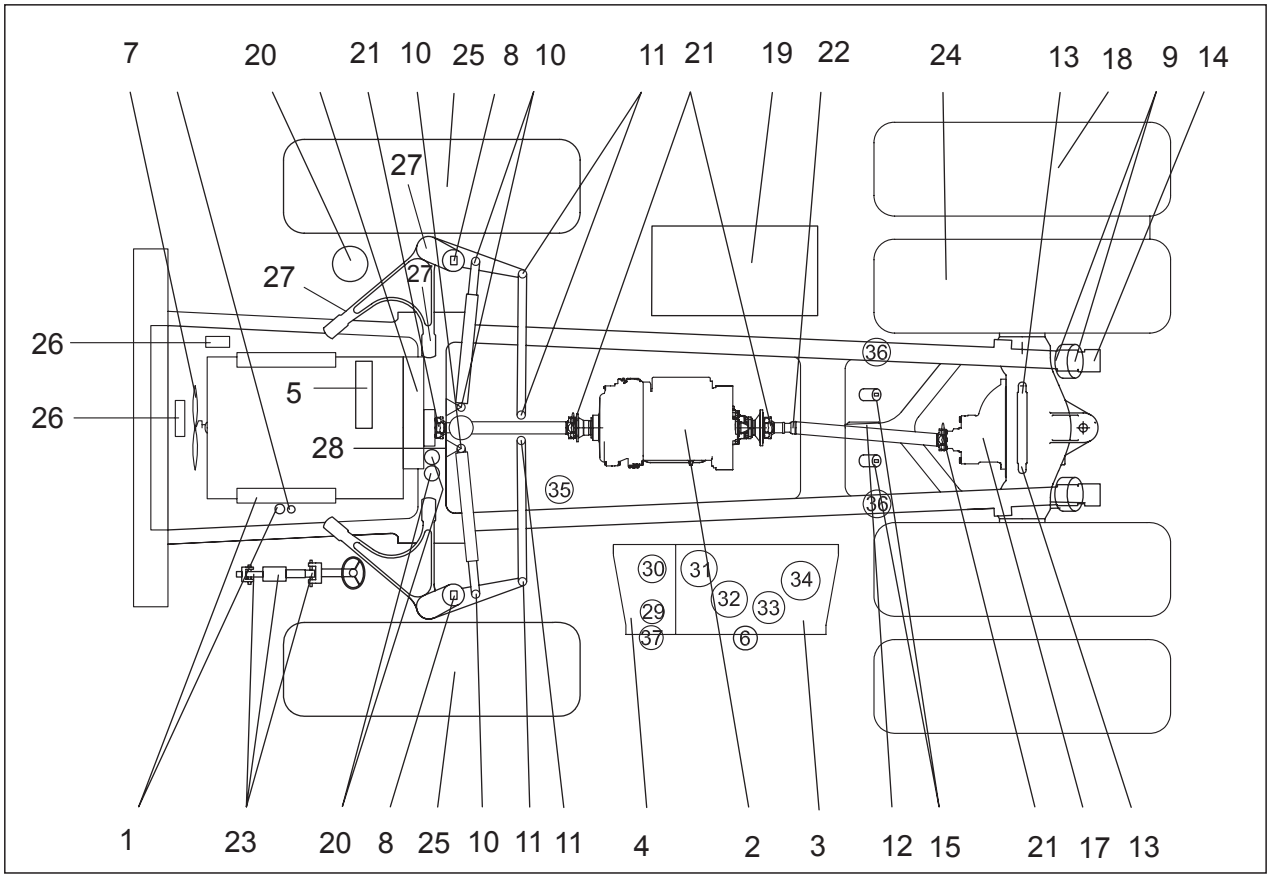

Fig 8.1

Courtesy of Machine.Market

https://truckmanualshub.com/

Lubrication and Service Chart

Interval hours	Ref. Points	Identification	Service Instructions	No. of Points	Lubricant	Service/Quantities
10	1	Engine	Check oil level. Add if low.	1	EO	As Required
	2	Transmission	Check oil level. Add if low.	1	HTF	As Required
	3	Hoisting/Cooling hydraulic tank	Check oil level. Add if low.	-	HO	As Required
	4	Steering/Braking hydraulic tank	Check oil level. Add if low.	-	HO	As Required
	5	Expansion tank	Check coolant level. Add if low.	1	Antifreeze	Refer to 'Remote Water Tank'
	7	Cooling fan of the engine	Visually inspect for debris and damage	1	-	-
	-	Belt	Visually inspect all belts	-	-	Refer to the Engine Manual
	8&9	Front & rear suspension cylinders	Visually inspect heights	-	-	Refer to 'Front Suspension Cylinder' and 'Rear Suspension System'
	-	Mechanical air resistance indicator	Check. Replace element if reqd.	1	-	Refer to the label 'Requirements for Air Filter Maintenance'
	-	Air cleaner vacuator valve	Check for proper operation	1	-	-
	-	Oil-water separator for engine fuel	Discharge water	1	-	-
	-	Tyre	Check condition. Check pressures when tyres are cold.	6	-	Refer to 'Front Wheel Assembly' and 'Rear Wheel Assembly' in the Maintenance Manual
	-	Controls, instruments and warning indicators	Check for proper operation.	-	-	-
	-	General Inspection	Check for leaks and worn/damaged parts. Repair/replace as required.	-	-	-

Courtesy of Machine.Market

https://truckmanualshub.com/

10	30	Steering oil return filter	Check. Replace element if reqd.	-	-	-
	35	Steering pipeline filter	Check. Replace element if reqd.	-	-	-
50	8	Front suspension cylinder bearing	Lubrication	2	EP,NLGI	
	9	Rear suspension cylinder bearing	Lubrication	4	EP,NLGI	
	10	Steering cylinder bearing	Lubrication	4	EP,NLGI	
	11	Steering tie rod bearing	Lubrication	4	EP,NLGI	
	12	A frame spherical bearing	Lubrication	1	EP,NLGI	
	13	Transverse stabilizer spherical bearing	Lubrication	2	EP,NLGI	
	14	Body hinge pin	Lubrication	2	EP,NLGI	
	15	Hoisting cylinder bearing	Lubrication	4	EP,NLGI	
	21	Front and rear drive shaft/ spider	Lubrication	6	EP,NLGI	
	27	A arm bearing	Lubrication	6	EP,NLGI	
	28	Steering crank pin	Lubrication	2	EP,NLGI	
250	1	Engine	Drain and refill	1	EO	-
	-	Engine oil flters	Replace filters	2	-	Refer to the Engine Manual
	-	Engine fuel filters	Replace filters	2	-	Refer to the Engine Manual
	-	Engine fuel filters	Check DCA concentration and replenish	-	DCA4	Refer to the Engine Manual
	-	Engine coolant filters	Replace filters if required	1	-	-
	-	Engine crankcase breather	Clean	1	-	Refer to the Engine Manual
	7	Engine cooling fan	Check condition	1	-	-

Courtesy of Machine.Market

https://truckmanualshub.com/

250	16	Engine Power Takeoff (PTO)	Check condition	1	EPL	-
	18	Wheel planetaries	Check oil level. Add if low.	2	EPL	-
	-	Rear axle breather	Clean	1	EPL	-
	-	Transmission breather	Clean	1	-	-
	-	Air conditioning compressor belt	Check belt tension. Adjust if required.	1	-	Refer to the Engine Manual
	-	Accessory drive belts (if fitted)	Check belt tension. Adjust if required.lt	2	-	Refer to the Engine Manual
	-	Engine fuel filter	Replace filter	1		-
	-	Air cleaner	Clean primary tubes and inlet screens	-	-	-
	-	Front brake disk	Replace	4	-	-
500	6	Hydraulic Tank Breather	Replace breather	-	-	-
	19	Fuel Tank	Clean filler neck screen and cap.	-	-	-
	20	Accumulators	Check nitrogen pressures.	-	-	-
	23	Steering Column Universal Joints	Lube.	2	*EP,NLGI	See note
	37	Steering Tank Breather	Replace breather	-	-	-
1000	2	Transmission	Discharge and refill	1	HTF	-
	-	Transmission cleaner	Replace filter element	1	-	-
	30	Steering oil return filter	Replace filter element	-	-	-
	-	Hydraulic system pressure checks	Check pressures at check points	-	-	-
	33	Hoisting oil return filter	Replace filter element	-	-	-
	34	Cooling oil return filter	Replace filter element	-	-	-

Courtesy of Machine.Market

https://truckmanualshub.com/

1000	35	Steering pipeline filter	Replace filter element	-	-	-
	36	Cooling pipeline filter	Replace filter element	-	-	-
1200	-	Engine crankcase filter	Clean/replace filter element	1	-	-
	16	Engine PTO	Drain, clean and refill	1	EPL	-
	17	Main reducer and differential assembly	Drain, clean and refill	2	EPL	-
	18	Wheel planetaries	Drain and refill	1	EPL	-
2000	3	Hoisting/Cooling hydraulic tank	Wash,clean and refill	-	-	-
	4	Steering/braking hydraulic tank	Wash,clean and refill	-	-	-
	19	Fuel tank	Wash,clean and refill	1	Diesel	-
	24	Rear brake packs	Drain and refill	2	HO	-
	25	Front wheel bearing	Repack	2	*EP NLGI	-
	26	Cooling system	Drain, flush and refill	-	Antifreeze	-
	29	Steering in-line filter	Replace the filter element	-	-	-
	31	Hoisting in-line filter	Wash and replace	-	-	-
	32	Cooling in-line filter	Wash and replace	-	-	-
4000	-	Air conditioning compressor	Drain, flush and refill	1	PAG 100	-

Fill compartment one half full.

Note – Lubricate slowly until excess lube is seen.

EO —Engine oil, refer to **'Recommended Lubricants'.**

EPL—Extreme Pressure Gear Lubricant meeting
specification MIL-L-2105C

HTF—Allison C-4 hydraulic transmission oil,

Courtesy of Machine.Market

https://truckmanualshub.com/

refer to **'Recommended Lubricants'.**
HO—hydraulic transmission oil, refer to **'Recommended Lubricants'.**
EP, NLGI — #2 EP lithium base grease, refer to **'Recommended Lubricants'.**
*EP, NLGI—Extreme Pressure Lithium No. 2 Grease(without 'Molybdenum')., refer to **'Recommended Lubricants'.**
PAG OIL - Polyalklene Glycol (PAG) Compressor Lubricating oil-Low Viscosity (ISO46).
Small circles on the following illustration represent points at which lubrication and/or servicing must take place, at the intervals indicated on the left hand side of the lubrication and service chart. The numbered circles on the illustration contain reference numbers which correspond to the reference numbers in the 'Ref. Points' column of the lubrication and service chart.
Note: At each scheduled maintenance interval, perform all previous checks in addition to the ones specified.

8.3 Other Maintenance

As required
Seat belt – Inspect seat belts and replace if damaged.
Note: Replace seat belt at least once 3 years regardless of external appearance.
Wipers and cleaners –Inspect wiper blades and replace if damaged. Top up washer reservoir.
After first 10 hours of operation re-torque nuts to1000-1300 N.m (739-961 pound-foot). Check torque every 50 hours (weekly) thereafter.

Every 10 hours of operation
Walk around for inspection – Inspect the truck according to instructions in Chapter 4 of the Operation Manual.
Engine - Visually check engine for damage, loose or frayed belts and listen for any unusual

Courtesy of Machine.Market

https://truckmanualshub.com/

noises.
Engine Air Cleaners - Check air cleaner piping, hoses and clamps. Change or clean air cleaner element only when the color of mechanical air resistance indicator turns blue to red. Service vacuator valve daily. Inspect and remove any obstructions from the vacuator valve lips. Valve lips should be open and pliable with engine stopped.

Note: Service air cleaners more often under extremely dusty operating conditions.Radiator Header Tank - Check coolant level and add if low. Fill radiator header tank with coolant until coolant reaches the bottom of the filler neck and holds at that level.
Note: Any time a significant amount of coolant is added, the DCA4 concentration MUST be checked. If the concentration is low, engine damage will result. Conversely, over-inhibiting antifreeze solutions can cause silicate dropout.
Steering, braking and lifting systems- Check for correct operation of all systems beforeoperating the truck.
Steering hydraulic tank filter - Check steering filter restriction warning indicator with the truck empty,brakes released, oil at normal operating temperature, engine operating at 1 500 r/min and while turning the steering wheel at one turn/sec. If the warning indicator illuminates, the filter element should be replaced.
Replace the filter element,If the warning indicator illuminates.
Fuel pre-filter - Discharge water and impurities. Refer to Chapter 14 'Installation of Fuel Tank and Pipeline'，in the Maintenance Manual.

After first 150 hours of operating new or rebuilt components.
Transmission - Drain oil, replace filters and refill.
Differential - Drain oil and refill.
Planetaries - Drain oil and refill

Courtesy of Machine.Market

https://truckmanualshub.com/

Every 250 hours of operation

Coolant Additive - Check and replenish DCA4 concentration as described.Coolant Filter(s) - Replace coolant filter(s) if required. When testing the DCA4 concentration, depending on the level of DCA4, the coolant filter(s) may not necessarily have to be changed.Refer to Chapter 15 'Remote Water Tank'，in the Maintenance Manual.

Cooling Fan - Visually check the fan for cracks, loose rivets, and bent or loose blades. Check fan mounting and tighten if required. Replace any fan that is damaged.

Note: The fan belt is maintained to the correct belt tension by a spring loaded idler arm, therefore, there is no need to check or adjust belt tension.

Drive Belts - Visually check the belts and replace if they are cracked or frayed. Adjust belts that have a glazed or shiny surface which indicates belt slippage. Correctly installed and tensioned belts will show even pulley and belt wear.Refer to Chapter 6 'Installation of Engine' in the Maintenance Manual for drive belt tension and adjustment of new and used drive belts.

Front Brakes -Check pads and discs for wear and replace where necessary.

Note: This service interval applies to normal driving Check more frequently under more severe conditions. Thickness of pad friction material should never be allowed to wear below 3 mm (0.12 in).

Oil Can Points - Oil hinges, and other working parts with engine oil.

Fuel pre-filter - Replace filter element of fuel pre-filter. Refer to Chapter 14 'Installation of Fuel Tank and Pipeline'，in the Maintenance Manual.

Every 1000 hours of operation

Hydraulic System Pressure Checks - Check all steering, body and braking system pressures.

Note: Instructions for checking pressure, and

Courtesy of Machine.Market

https://truckmanualshub.com/

locations of pressure check points, are contained in the relevant service manual section. If the pressures are outwith the specified settings then components in the relevant system should be inspected, repaired or replaced to ensure the correct operation of the system. All safety instructions in the relevant sections should be strictly adhered to.
Steering oil return filter-
Clean the housing for the filter , follow the failure code from the display or working time to replace filter if time over 1000hours.
Hoisting oil return filter - Clean the filter shell, and install a new filter element.
Cooling oil return filter - Clean the housing for the filter and replace new filter for it.
Steering In-line Filter - Clean the housing for the filter , follow the failure code from the display or working time to replace filter if time over 500 hours.
Cooling pipeline filter - Replace with a new spin-on filter element.

Every 2000 hours of operation
Steering In-line Filter - Clean filter housing and install new element when indicated, or after 1 000 hours of operation,whichever comes first.
Steering in-line filter - Clean filter housing and install new element.
Hoisting in-line filter - Clean filter housing and install new element.
Cooling in-line filter - Clean filter housing and install new element.

Engine and transmission
All information contained in the 'Lubrication and Service Chart' was extracted from the relevant manufacturers 'Operation and Maintenance Manual',and was correct at time of publication.User should ensure that information contained in this chart reflects the information shown in the relevant manufacturers 'Operation and Maintenance Manual' supplied with the Truck.

Courtesy of Machine.Market

https://truckmanualshub.com/

8.4 Service Capacity

Ref. Points	Identification	Lubricant	Service Capacities	
			liters	US gal
1	Engine Crankcase and Filters	EO	55	14.6
2	Transmission and Filters	HTF	85	22.5
3	Hoisting cooling tank	HO	158	41.8
4	Hoisting system and brake cooling system(Total)	HO	237	62.7
5	Steering Hydraulic Tank	HO	63	16.7
6	Steering and Braking Hydraulic System	HO	71	18.8
7	Cooling System	Coolant	130	34.4
8	Fuel Tank	Disel	470	124.2
9	Front Ride Cylinder(each)	HO	19	5.0
10	Rear Ride Cylinder(each)	HO	16	4.2
11	Engine Power Takeoff	EPL	4	1.1
12	Main reducer and differential assembly	EPL	52	13.3
13	Wheel Planetaries (Total)	EPL	43	11.9
14	Air Conditioning Compressor	PAG Oil	0.125	0.033

Courtesy of Machine.Market

https://truckmanualshub.com/

8.5 Recommended Lubricants

Component	Lubricant	Viscosity (see note 1)	
Engine	Engine oil with 1.00% sulphated ash is recommended. Sulphated ash must not exceed 1.85% limit. API code CH-4, ACEA-E5. See Note 2*	Ambient temperature -10℃ and above -25℃ to 20℃ -40℃ to20℃	Recommendation SAE 15W-40 SAE 10W-30 SAE 5W-30
Transmission	Engine oil, API code CH-4, ACEA-E5. Preheat is required below minimum temperatures shown. See Note 3.	Ambient temperature -30℃ to 25℃ -27℃ to 25℃ -20℃ to 15℃ -15℃ to 45℃ 0℃ to 35℃ 10℃ to 45℃	Recommendation SAE 0W-20 (cold) DERON- III SAE 10W SAE15W-40 SAE 30 SAE 40
Cooling System	Heavy Duty Coolant. Refer to Section "Remote water tank", COOLING SYSTEM, in the Service Manual.	Mobil antifreeze	
Fuel Tank	Diesel Fuel Oil with maximum sulphur 0.5%.	0#GB252	
Differential Planetary Gears Power Takeoff	Multipurpose Extreme Pressure type gear oil meeting MIL-L-2105C Specifications (No Zinc Additive). See Note 4.	SAE GL-5 80W-90 at ambient temperatures of -25℃～40℃	
Grease Fittings	Multipurpose Extreme Pressure Lithium Grease (which may or may not contain 'Molybdenum'), with a melting point of 190℃ .typical	No. 2 Consistency	
Transmission shaft/cross shaft Steering column Wheel hub bearing	Multi-functional extreme-pressure Li-based grease (including or excluding “Mo”); typical melting point is 190℃ .	No. 2 viscosity	
Ride Cylinder	Oil comply with HD10WATFC-4 standard	SAE 10W The applicable ambient temperature is -18℃～32℃	
Hydraulic System	Hydraulic oil complies with Caltex 414 transmission oil standard	SAE 10W at ambient temperatures of -18℃～32℃ SAE 30W at ambient temperatures of above 32℃	

Courtesy of Machine.Market

https://truckmanualshub.com/

Note 1 - Consult your lubricant supplier for the correct viscosity of lubricant to use when ambient temperatures are consistently above or below those listed.

Note 2 - Cummins Engine Co., does not recommend any specific brand of engine oil but the use of oils that meet API categories. Cummins recommends use of only the multi-graded viscosity oils shown for the various ambient temperatures listed.

Note 3-Operation below the minimum temperatures listed for the oil used without proper preheat or warm-up results in greatly reduced transmission life. If auxiliary heating is available, preheat the oil to the minimum temperature limit. If not available, run the engine at part throttle with the transmission in neutral to raise the fluid temperature.Hydraulic Transmission Oil meeting the Allison C-4 requirements. Consult your lubricant supplier for confirmation.

Note 4 - If rear axle has limited slip differential, use of standard SAE 90 oil may result in very loud noise and jerking of the wheels when driving slowly round sharp corners and an EP oil with limited slip additives should be used.

Other lubricant suppliers may have comparable products and should be consulted for confirmation.

Temperature conversion																		
℃	-32	-30	-27	-25	-20	-18	-15	-10	0	10	15	25	32	35	38	45	93	190
℉	-26	-22	-17	-13	-4	0	5	14	32	50	59	77	90	95	100	113	200	375

Courtesy of Machine.Market

https://truckmanualshub.com/

8.6 Maintenance Procedures

8.6.1 Daily (10hrs) maintenance inspection form

For regular inspection and duty, fills this form out each 10 hrs. This form should be used with other forms in this manual.

1.For normally checking

Check all operation devices by driving……☐

2.Lubrication

Check and ensure of all lubrication points work well……☐

3. Electronic system

Check all of indicator lamps, caution lamps, gauges and assistant devices……☐

4. Cummins engine

Check liquid level, refill as required……☐

Check leakages……☐

Check damaged for fan……☐

Check the oil temperatures and oil pressures……☐

Check the driving belt tension and adjust as required……☐

Fuel system

Check leakages for fuel system……☐

Check liquid level and refill after daily job……☐

Cooling system

Check coolant level, refill as required……☐

Check leakages for hose and other components……☐

Air cleaner

Check air cleaner Restriction W/Light……☐

Check air cleaner vacuator valve(S)……☐

Check leakages and cracks for filter……☐

5. Transmission

Check leakages……☐

Check liquid level, refill as required……☐

Check oil temperatures and pressures……☐

Checker		Date	
Remarks			

Courtesy of Machine.Market

https://truckmanualshub.com/

Repair and Maintenance Record Table

Date	Repair and main-tenance performed	Cost	Time required	Unused time	Remarks

Courtesy of Machine.Market

https://truckmanualshub.com/

Daily (10hrs) maintenance inspection form (supplement)

For regular inspection and duty, fills this form out each 10 hrs. This form should be used with other forms in this manual.

6. Suspension system

Check for altitude of front and rear ride cylinder according to service manual.....☐

Check leakages.....☐

7. Wheels

Check status and pressures.....☐

8. Rims

Check fasteners by torque.....☐

9. Hydraulic system

Hoisting and cooling hydraulic system

Check hoisting system oil level, , refill if required.....☐

Replace the breather valve for the steering hydraulic tank in period.....☐

Note: replace new filter for the system if it working time over 500hrs.

Replace the breather valve for the hoisting hydraulic tank in period.....☐

Note: replace new filter for the system if it working time over 500hrs.

Replace new filter for the return system in period.....☐

Note: replace oil return filter of hoisting system if it working time over 500hrs.

Replace the oil suction filter of hoisting system in period.....☐

Note: replace new filter for the system if it working time over 2000hrs(The first replace at 1000 hrs).

Replace the oil suction filter of cooling system in period.....☐

Note: replace new filter for the system if it working time over 2000hrs(The first replace at 1000 hrs).

Replace the Pipeline filter of cooling system in period.....☐

Note: replace new filter for the system if it working time over 500hrs.

Check leakages for hydraulic system and its components , check worn and damaged for hoses. .....☐

Checker		Date	
Remarks			

Courtesy of Machine.Market

https://truckmanualshub.com/

Repair and Maintenance Record Table

Date	Repair and main-tenance performed	Cost	Time required	Unused time	Remarks

Courtesy of Machine.Market

https://truckmanualshub.com/

Daily (10hrs) maintenance inspection form (supplement)

For regular inspection and duty, fills this form out each 10 hrs. This form should be used with other forms in this manual.

Steering and braking hydraulic system

Check status for steering control unit…….....……..……☐

Shutdown the engine and rotate the wheel to check the ability of steering system in emergency co ndition……☐

Check status for foot brake system and parking brake system.……..……☐

Check steering system oil level, refill if required…….....…☐

Replace the oil suction filter of steering system in period.……....…….……..…..……☐

Note: replace new filter for the system if it working time over 500hrs.

Replace the oil return filter of steering system in period.……....…….……..…☐

Note: replace new filter for the system if it working time over 2000hrs(The first replace at 1000 hrs).

Replace the Pipeline filter of steering system in period.……....…….……☐

Note: replace new filter for the system if it working time over 500hrs.

Replace the filter which mounted inside of the rear braking valve group in period……☐

Note: replace new filter for the system if it working time over 500hrs.

Change oil for the tank and clean the whole tank and accessories.....…☐

Check the pressure for the system…….……..……☐

Check the pressure for the steering system…….……..……☐

Check the pressure for the front breaking system……..…….……..……☐

Caution: Replace all of o–rings for hoist steering, brake and cooling system if maximum adjustments as required for ensure systems with high performance and safety above.

Checker		Date	
Remarks			

Courtesy of Machine.Market

https://truckmanualshub.com/

Repair and Maintenance Record Table

Date	Repair and main-tenance performed	Cost	Time required	Unused time	Remarks

Courtesy of Machine.Market

https://truckmanualshub.com/

8.6.2 Maintenance inspection form for 150hrs

Except daily (10hrs) inspection projects, the following projects also have to finish after running 150hrs.

1. For normally checking

Check leakages, loosened and damaged parts for truck.....☐

Observe the cracks and welder seam for frame.....☐

2. Cummins engine

Check the fasteners for engine.....☐

Check PTO liquid level, refill as required.....☐

3. Transmission

Drain, replace filter and refill (first time after 150hrs, next time after each 1200hrs).....☐

Remark: drain, replace filter and refill after 150hrs, if transmission has been fixed.

Clean the breather valve for transmission and lubricates again.....☐

Check status about block caution lamp for filter.....☐

4. Main reducer and differential assembly,Planetary assemblyand power take-off (PTO)

Change the gear oil of Main reducer and differential assembly,Planetary assembly and PTO .....☐

Check liquid level, refill as required.....☐

Check and clean the breather valve for rear axle.....☐

Check and clean the breather valve for PTO.....☐

Remark: change oil when replace new one or after fixed.

Check the driveline bolts torque(first time after 150hrs, next time after each 1200hrs).....☐

Bolt code	Use of the site	Tightening torque (N·m)	Check torque (N·m)
60011099	Front driveline	145	140
60011098	Rear driveline	230	220

Caution: The scene conducts the driveline assembly:

Upon assembly, the first, cleaning threaded hole oil of driveline and yoke to install.

At the beginning of operation, three consecutive days of checking the driveline bolts torque.

5. Lubrication

Front, rear transmissions cross shafts.....4 points

Front, rear transmission shafts.....2 points

6.Clean up the dust on the pin shaft of foot-operated valve,and add the lubricating oil.....☐

Checker		Date	
Remarks			

Courtesy of Machine.Market

https://truckmanualshub.com/

Repair and Maintenance Record Table

Date	Repair and main-tenance performed	Cost	Time required	Unused time	Remarks

Courtesy of Machine.Market

https://truckmanualshub.com/

8.6.3 Maintenance inspection form for 250hrs

Except daily (10hrs) inspection projects, the following projects also have to finish after running 250hrs.

1. Cummins engine

Drain, replace filter and refill…….....……..…☐

Check breather valve for crankcase…….....……☐

Fuel system

Replace fuel filter…….……☐

Cooling system

Replace coolant filter……..……☐

Check and supplement DCA to coolant…….....…☐

2. Front brake system

Check status about disc worn to determinate replace it if required.……...……☐

3. Lubrication

Front, rear transmissions cross shafts…….…….....….....…..4 points

Front, rear transmission shafts…….....….....…..2 points

4.Hydraulic system

Check the pressure for the system.....…☐

Check the pressure for the steering system.....…☐

Check the pressure for the front breaking system.....…☐

Check the pressure for the rear breaking system.....…☐

Check the pressure for the parking system.....…☐

Steering system: Check the pre-charge pressure for the accumulator before the checks pressure for the steering system

Breaking system: check the pre-charge pressure for the accumulator before the checks pressure for the breaking system

note:

a . The instruction about how to make a inspection for the hoisting , steering and breaking system are contained in manual book

Check and replace old components with new one to ensure of the system work well if the inspection result are different with requirement

b. Make sure the pressure drain out of the accumulator before checks the pre-charge for the accumulator

Checker		Date	
Remarks			

Courtesy of Machine.Market

https://truckmanualshub.com/

Repair and Maintenance Record Table

Date	Repair and main-tenance performed	Cost	Time required	Unused time	Remarks

Courtesy of Machine.Market

https://truckmanualshub.com/

8.6.4 Maintenance inspection form for 300hrs

Except daily (10hrs) inspection projects, the following projects also have to finish after running 300hrs.

1. For normally checking

Check leakages, loosened and damaged parts for truck.....☐

Observe the cracks and welder seam for frame.....☐

2. Cummins engine

Check the fasteners for engine.....☐

Check PTO liquid level, refill as required.....☐

3. Transmission

Clean the breather valve for transmission and lubricates again.....☐

Check status about block caution lamp for filter.....☐

Remark: drain, replace filter and refill after 150hrs, if transmission has been fixed.

4. Main reducer and differential assembly,Planetary assembly and power take-off (PTO)

Extract lubrication sample from Main reducer and differential assembly and Planetary assembly for checking and analysis.....☐

Check liquid level, refill as required.....☐

Check and clean the breather valve for rear axle.....☐

Check and clean the breather valve for PTO.....☐

Remark: change oil when replace new one or after fixed.

5. Lubrication

Front, rear transmissions cross shafts.....4 points

Front, rear transmission shafts.....2 points

6.Clean up the dust on the pin shaft of foot-operated valve,and add the lubricating oil.....☐

Checker		Date	
Remarks			

Courtesy of Machine.Market

https://truckmanualshub.com/

Repair and Maintenance Record Table

Date	Repair and main-tenance performed	Cost	Time required	Unused time	Remarks

Courtesy of Machine.Market

https://truckmanualshub.com/

8.6.5 Maintenance inspection form for 450hrs

Except daily (10hrs) inspection projects, the following projects also have to finish after running 450hrs.

1. For normally checking

Check leakages, loosened and damaged parts for truck.....☐

Observe the cracks and welder seam for frame.....☐

2. Cummins engine

Check the fasteners for engine.....☐

Check PTO liquid level, refill as required.....☐

3. Transmission

Clean the breather valve for transmission and lubricates again.....☐

Check status about block caution lamp for filter.....☐

Remark: drain, replace filter and refill after 150hrs, if transmission has been fixed.

4. Main reducer and differential assembly,Planetary assembly and power take-off (PTO)

Extract lubrication sample from Main reducer and differential assembly and Planetary assembly for checking and analysis .....☐

Check liquid level, refill as required.....☐

Check and clean the breather valve for rear axle.....☐

Check and clean the breather valve for PTO.....☐

Remark: change oil when replace new one or after fixed.

5. Lubrication

Front, rear transmissions cross shafts.....4 points

Front, rear transmission shafts.....2 points

6.Clean up the dust on the pin shaft of foot-operated valve,and add the lubricating oil.....☐

Checker		Date	
Remarks			

Courtesy of Machine.Market

https://truckmanualshub.com/

Repair and Maintenance Record Table

Date	Repair and main-tenance performed	Cost	Time required	Unused time	Remarks

Courtesy of Machine.Market

https://truckmanualshub.com/

8.6.6 Maintenance inspection form for 500hrs

Except daily (10hrs) inspection projects, the following projects also have to finish after running 500hrs.

1. Cummins engine

Drain, replace filter and refill…….....……..…☐

Check breather valve for crankcase…….....…….....……☐

Fuel system

Replace fuel filter…….……☐

Cooling system

Replace coolant filter……..……☐

Check and supplement DCA to coolant…….....…☐

2. Front brake system

Check status about disc worn to determinate replace it if required……...……☐

3. Front, rear transmissions cross shafts

Refill enough grease…….……..……☐

4. Lubrication

Front, rear transmissions cross shafts…….…….....….....…..4 points

Front, rear transmission shafts…….....….….....…..2 points

5. Hydraulic system

Replace new filter for the return flter of hoisting system……..……☐

Replace new filter for the return filter of cooling system…….……☐

Replace new filter for the return filter of steering system……..……☐

Replace new filter for the filter which mounted on the pipeline of the steering syst.....…☐

Replace new filter for the filter which mounted on the pipeline of the cooling system……..…☐

Replace new filter which mounted inside of the rear braking valve group……..……☐

Replace new filter for the suction filter of the steering system……..……☐

Replace new filter for the suction filter of the hoisting system……..……..……☐

Replace new filter for the suction filter of the cooling system……..……☐

Replace the breather valve for the steering hydraulic tank……..……☐

Replace the breather valve for the hoisting hydraulic tank……..……☐

Checker		Date	
Remarks			

Courtesy of Machine.Market

https://truckmanualshub.com/

Repair and Maintenance Record Table

Date	Repair and main-tenance performed	Cost	Time required	Unused time	Remarks

Courtesy of Machine.Market

https://truckmanualshub.com/

Maintenance inspection form for 500hrs(supplement)

Except daily (10hrs) inspection projects, the following projects also have to finish after running 500hrs.

6.Steering

Check screw between steering arm and front suspension cylinder. If loosed or damaged ,tighten or replace new screw.…….....……..……☐

7. Body

Check the single clearance of brace piece axial pin seat and flange end face of frame .The shims needs to be increased or replaced when the single clearance is above 1mm……..……☐

8. Bearing

Check the wearing status for oscillating bearings of steering drag link , replace new one if the clearance of the bearing S≥ 0.48mm .Conversely, you could continue to use it.

…….....☐

Check the wearing status for oscillating bearings of A-shape arm , replace new one if the clearance of the bearing S≥ 0.36mm .Conversely, you could continue to use it.

…….....☐

Check the wearing status for oscillating bearings of ends of the A-shape arm , replace new one if the clearance of the bearing S≥ 0.55mm .Conversely, you could continue to use it.

…….....☐

Check the wearing status for oscillating bearings of steering cylinder , replace new one if the clearance of the bearing S≥ 0.78mm .Conversely, you could continue to use it.

…….....☐

Checker		Date	
Remarks			

Courtesy of Machine.Market

https://truckmanualshub.com/

Repair and Maintenance Record Table

Date	Repair and main-tenance performed	Cost	Time required	Unused time	Remarks

Courtesy of Machine.Market

https://truckmanualshub.com/

8.6.7 Maintenance inspection form for 600hrs

Except daily (10hrs) inspection projects, the following projects also have to finish after running 600hrs.

1. For normally checking

Check leakages, loosened and damaged parts for truck.....☐

Observe the cracks and welder seam for frame.....☐

Check displacement and worn for transmission shaft by lever.....☐

2.Lubrication

Check and ensure of all lubrication points work well.....☐

3. Electrical system

Check harnesses status.....☐

Check status about cables for storage battery.....☐

4. Cummins engine

Check the fasteners for engine.....☐

Check PTO liquid level, refill as required.....☐

Air cleaner.....☐

Clean pipeline and filter for air cleaner.....☐

5. Transmission

Clean the breather valve for transmission and lubricates again.....☐

Check status about block caution lamp for filter.....☐

Remark: drain, replace filter and refill after 150hrs, if transmission has been fixed.

6. Main reducer and differential assembly,Planetary assembly and power take-off (PTO)

Extract lubrication sample from Main reducer and differential assembly and Planetary assembly for checking and analysis .....☐

Check liquid level, refill as required.....☐

Check and clean the breather valve for differential.....☐

Check and clean the breather valve for PTO.....☐

Remark: change oil when replace new one or after fixed.

7.Clean up the dust on the pin shaft of foot-operated valve,and add the lubricating oil.....☐

Checker		Date	
Remarks			

Courtesy of Machine.Market

https://truckmanualshub.com/

Repair and Maintenance Record Table

Date	Repair and main-tenance performed	Cost	Time required	Unused time	Remarks

Courtesy of Machine.Market

https://truckmanualshub.com/

8.6.8 Maintenance inspection form for 750hrs

Except daily (10hrs) inspection projects, the following projects also have to finish after running 750hrs.

1. For normally checking

Check leakages, loosened and damaged parts for truck.....☐

Observe the cracks and welder seam for frame.....☐

2. Cummins engine

Check the fasteners for engine.....☐

Check PTO liquid level, refill as required.....☐

Drain, replace filter and refill.....☐

Check breather valve for crankcase.....☐

Fuel system

Replace fuel filter.....☐

Cooling system

Replace coolant filter.....☐

Check and supplement DCA to coolant.....☐

3. Transmission

Clean the breather valve for transmission and lubricates again.....☐

Check status about block caution lamp for filter.....☐

Remark: drain, replace filter and refill after 150hrs, if transmission has been fixed.

4. Front brake system

Check status about disc worn to determinate replace it if required.....☐

5. Differential, planetary gearing and power take-off (PTO)

Extract lubrication sample from differential and planetary gearing for checking and analysis.....☐

Check liquid level, refill as required.....☐

Check and clean the breather valve for differential.....☐

Check and clean the breather valve for PTO.....☐

Remark: change oil when replace new one or after fixed.

6. Lubrication

Front, rear transmissions cross shafts.....4 points

Front, rear transmission shafts.....2 points

7.Clean up the dust on the pin shaft of foot-operated valve,and add the lubricating oil.....☐

Checker		Date	
Remarks			

Courtesy of Machine.Market

https://truckmanualshub.com/

Repair and Maintenance Record Table

Date	Repair and main-tenance performed	Cost	Time required	Unused time	Remarks

Courtesy of Machine.Market

https://truckmanualshub.com/

8.6.9 Maintenance inspection form for 900hrs

Except daily (10hrs) inspection projects, the following projects also have to finish after running 900hrs.

1. For normally checking

Check leakages, loosened and damaged parts for truck.....☐

Observe the cracks and welder seam for frame.....☐

2. Cummins engine

Check the fasteners for engine.....☐

Check PTO liquid level, refill as required.....☐

3. Transmission

Clean the breather valve for transmission and lubricates again.....☐

Check status about block caution lamp for filter.....☐

Remark: drain, replace filter and refill after 150hrs, if transmission has been fixed.

4. Main reducer and differential assembly,Planetary assembly and power take-off (PTO)

Extract lubrication sample from Main reducer and differential assembly and Planetary assembly for checking and analysis.....☐

Check liquid level, refill as required.....☐

Check and clean the breather valve for rear axle.....☐

Check and clean the breather valve for PTO.....☐

Remark: change oil when replace new one or after fixed.

5.Clean up the dust on the pin shaft of foot-operated valve,and add the lubricating oil.....☐

Checker		Date	
Remarks			

Courtesy of Machine.Market

https://truckmanualshub.com/

Repair and Maintenance Record Table

Date	Repair and main-tenance performed	Cost	Time required	Unused time	Remarks

Courtesy of Machine.Market

https://truckmanualshub.com/

8.6.10 Maintenance inspection form for 1000hrs

Except daily (10hrs) inspection projects, the following projects also have to finish after running 1000hrs.

1. Cummins engine

Drain, replace filter and refill…….....……..…☐

Check breather valve for crankcase…….....…….....……☐

Fuel system

Replace fuel filter…….……☐

Cooling system

Replace coolant filter……..……☐

Check and supplement DCA to coolant…….....…☐

2. Front brake system

Check status about disc worn to determinate replace it if required.……...……☐

3. Lubrication

Front, rear transmissions cross shafts…….…….....….....…..4 points

Front, rear transmission shafts…….....…….....…..2 points

4.Hydraulic system

Replace new filter for the return filter of hoisting system.....…☐

Replace new filter for the return filter of cooling system.....…☐

Replace new filter for the return filter of steering system.....…☐

Replace new filter for the filter which mounted on the pipeline of the steering system….....☐

Replace new filter for the filter which mounted on the pipeline of the cooling system.….....☐

Replace new filter which mounted inside of the rear braking valve group.....…☐

Replace new filter for the suction filter of the steering system.....…☐

Replace new filter for the suction filter of the hoisting system.....…☐

Replace new filter for the suction filter of the cooling system.....…☐

Replace the breather valve for the steering hydraulic tank.....…☐

Replace the breather valve for the hoisting hydraulic tank.....…☐

Checker		Date	
Remarks			

Courtesy of Machine.Market

https://truckmanualshub.com/

Repair and Maintenance Record Table

Date	Repair and main-tenance performed	Cost	Time required	Unused time	Remarks

Courtesy of Machine.Market

https://truckmanualshub.com/

Maintenance inspection form for 1000hrs(supplement)

Except daily (10hrs) inspection projects, the following projects also have to finish after running 1000hrs.

5. Body

Check the single clearance of brace piece axial pin seat and flange end face of frame .The shims needs to be increased or replaced when the single clearance is above 1mm……..……☐

6.Bearing

Check the wearing status for oscillating bearings of steering drag link , replace new one if the clearance of the bearing S≥ 0.48mm .Conversely, you could continue to use it

……...……☐

Check the wearing status for oscillating bearings of A-shape arm , replace new one if the clearance of the bearing S≥ 0.36mm .Conversely, you could continue to use it

……...……☐

Check the wearing status for oscillating bearings of ends of the A-shape arm , replace new one if the clearance of the bearing S≥ 0.55mm .Conversely, you could continue to use it

……...……☐

Check the wearing status for oscillating bearings of steering cylinder , replace new one if the clearance of the bearing S≥ 0.78mm .Conversely, you could continue to use it

……...……☐

Check the wearing status for oscillating bearings of front suspension cylinder , replace new one if the clearance of the bearing S≥ 0.55mm .Conversely, you could continue to use it

……...……☐

Check the wearing status for oscillating bearings of rear suspension cylinder , replace new one if the clearance of the bearing S≥ 0.63mm .Conversely, you could continue to use it

……...……☐

7.Steering

Check screw between steering arm and front suspension cylinder. If loosed or damaged ,tighten or replace new screw.…….....……..……☐

Checker		Date	
Remarks			

Courtesy of Machine.Market

https://truckmanualshub.com/

Repair and Maintenance Record Table

Date	Repair and main-tenance performed	Cost	Time required	Unused time	Remarks

Courtesy of Machine.Market

https://truckmanualshub.com/

8.6.11 Maintenance inspection form for 1050hrs

Except daily (10hrs) inspection projects, the following projects also have to finish after running 1050hrs.

1. For normally checking

Check leakages, loosened and damaged parts for truck.....☐

Observe the cracks and welder seam for frame.....☐

2. Cummins engine

Check the fasteners for engine.....☐

Check PTO liquid level, refill as required.....☐

3. Transmission

Clean the breather valve for transmission and lubricates again.....☐

Check status about block caution lamp for filter.....☐

Remark: drain, replace filter and refill after 150hrs, if transmission has been fixed.

4.Main reducer and differential assembly,Planetary assembly and power take-off (PTO)

Extract lubrication sample from Main reducer and differential assembly and Planetary assembly for checking and analysis.....☐

Check liquid level, refill as required.....☐

Check and clean the breather valve for rear axle.....☐

Check and clean the breather valve for PTO.....☐

Remark: change oil when replace new one or after fixed.

5.Clean up the dust on the pin shaft of foot-operated valve,and add the lubricating oil.....☐

Checker		Date	
Remarks			

Courtesy of Machine.Market

https://truckmanualshub.com/

Repair and Maintenance Record Table

Date	Repair and main-tenance performed	Cost	Time required	Unused time	Remarks

Courtesy of Machine.Market

https://truckmanualshub.com/

8.6.12 Maintenance inspection form for 1200hrs

Except daily (10hrs) inspection projects, the following projects also have to finish after running 1200hrs.

1. For normally checking

Check leakages, loosened and damaged parts for truck.....☐

Observe the cracks and welder seam for frame.....☐

Check displacement and worn for transmission shaft by lever.....☐

2.Lubrication

Checking and ensure of all lubrication points work wel.....☐

3. Electrical system

Check harnesses status.....☐

Check status about cables for storage battery.....☐

4. Cummins engine

Check the fasteners for engine.....☐

Check PTO liquid level, refill as required.....☐

Air cleaner.....☐

Clean pipeline and filter for air cleaner.....☐

5. Transmission

Clean the breather valve for transmission and lubricates again.....☐

Check status about block caution lamp for filter.....☐

Remark: drain, replace filter and refill after 150hrs, if transmission has been fixed.

6. Main reducer and differential assembly,Planetary assembly and power take-off (PTO)

Extract lubrication sample from Main reducer and differential assembly and Planetary assembly for checking and analysis.....☐

Check liquid level, refill as required.....☐

Check and clean the breather valve for rear axle.....☐

Check and clean the breather valve for PTO.....☐

Remark: change oil when replace new one or after fixed.

7.Clean up the dust on the pin shaft of foot-operated valve,and add the lubricating oil.....☐

Checker		Date	
Remarks			

Courtesy of Machine.Market

https://truckmanualshub.com/

Repair and Maintenance Record Table

Date	Repair and main-tenance performed	Cost	Time required	Unused time	Remarks

Courtesy of Machine.Market

https://truckmanualshub.com/

8.6.13 Maintenance inspection form for 1250hrs

Except daily (10hrs) inspection projects, the following projects also have to finish after running 1250hrs.

1. Cummins engine

Drain, replace filter and refill…….....……..…☐

Check breather valve for crankcase…….....….....……☐

Fuel system

Replace fuel filter…….……☐

Cooling system

Replace coolant filter……..……☐

Check and supplement DCA to coolant…….....….☐

2. Front brake system

Check status about disc worn to determinate replace it if required.……...……☐

3. Lubrication

Front, rear transmissions cross shafts…….…….....….....…..4 points

Front, rear transmission shafts…….....…….....…..2 points

Checker		Date	
Remarks			

Courtesy of Machine.Market

https://truckmanualshub.com/

Repair and Maintenance Record Table

Date	Repair and main-tenance performed	Cost	Time required	Unused time	Remarks

Courtesy of Machine.Market

https://truckmanualshub.com/

8.6.14 Maintenance inspection form for 1350hrs

Except daily (10hrs) inspection projects, the following projects also have to finish after running 1350hrs.

1. For normally checking

Check leakages, loosened and damaged parts for truck.....☐

Observe the cracks and welder seam for frame.....☐

2. Cummins engine

Check the fasteners for engine.....☐

Check PTO liquid level, refill as required.....☐

3. Transmission

Clean the breather valve for transmission and lubricates again.....☐

Check status about block caution lamp for filter.....☐

Remark: drain, replace filter and refill after 150hrs, if transmission has been fixed.

Check the driveline bolts torque(first time after 150hrs, next time after each 1200hrs).....☐

Bolt code	Use of the site	Tightening torque (N·m)	Check torque (N·m)
60011099	Front driveline	145	140
60011098	Rear driveline	230	220

Caution: The scene conducts the driveline assembly:

Upon assembly, the first, cleaning threaded hole oil of driveline and yoke to install.

At the beginning of operation, three consecutive days of checking the driveline bolts torque.

4. Main reducer and differential assembly,Planetary assembly and power take-off (PTO)

Change the gear oil of Main reducer and differential assembly,Planetary assembly and PTO .....☐

Check liquid level, refill as required.....☐

Check and clean the breather valve for rear axle.....☐

Check and clean the breather valve for PTO.....☐

Remark: change oil when replace new one or after fixed.

5.Clean up the dust on the pin shaft of foot-operated valve,and add the lubricating oil.....☐

Checker		Date	
Remarks			

Courtesy of Machine.Market

https://truckmanualshub.com/

Repair and Maintenance Record Table

Date	Repair and main-tenance performed	Cost	Time required	Unused time	Remarks

Courtesy of Machine.Market

https://truckmanualshub.com/

8.6.15 Maintenance inspection form for 1500hrs

Except daily (10hrs) inspection projects, the following projects also have to finish after running 1500hrs.

1. For normally checking

Check leakages, loosened and damaged parts for truck.....☐

Observe the cracks and welder seam for frame.....☐

2. Cummins engine

Check the fasteners for engine.....☐

Check PTO liquid level, refill as required.....☐

Drain, replace filter and refill.....☐

Check breather valve for crankcase.....☐

Fuel system

Replace fuel filter.....☐

Cooling system

Replace coolant filter.....☐

Check and supplement DCA to coolant.....☐

3. Transmission

Check the status of the pin of injector, tighten it if required.....☐

Clean the breather valve for transmission and lubricates again.....☐

Check status about block caution lamp for filter.....☐

Remark: drain, replace filter and refill after 150hrs, if transmission has been fixed.

4. Front brake system

Check status about disc worn to determinate replace it if required.....☐

5. Main reducer and differential assembly,Planetary assembly and power take-off (PTO)

Extract lubrication sample from Main reducer and differential assembly and Planetary assembly for checking and analysis.....☐

Check liquid level, refill as required.....☐

Check and clean the breather valve for rear axle.....☐

Check and clean the breather valve for PTO.....☐

Remark: change oil when replace new one or after fixed.

6. Lubrication

Front, rear transmissions cross shafts.....4 points

Front, rear transmission shafts.....2 points

7.Clean up the dust on the pin shaft of foot-operated valve,and add the lubricating oil.....☐

Checker		Date	
Remarks			

Courtesy of Machine.Market

https://truckmanualshub.com/

Repair and Maintenance Record Table

Date	Repair and main-tenance performed	Cost	Time required	Unused time	Remarks

Courtesy of Machine.Market

https://truckmanualshub.com/

Maintenance inspection form for 1500hrs (supplement)

Except daily (10hrs) inspection projects, the following projects also have to finish after running 1500hrs.

8.Hydraulic system
Replace new filter for the return filter of hoisting system…….....……...…☐
Replace new filter for the return filter of cooling system…….....……...…☐
Replace new filter for the return filter of steering system…….....……...…☐
Replace new filter for the filter which mounted on the pipeline of the steering system…...…☐
Replace new filter for the filter which mounted on the pipeline of the cooling system.……☐
Replace the filter which mounted inside of the rear braking valve group.....……...…☐
Replace the breather valve for the steering hydraulic tank…….....……...…☐
Replace the breather valve for the hoisting hydraulic tank…….....……...…☐
9. Body
Check the single clearance of brace piece axial pin seat and flange end face of frame .The shims needs to be increased or replaced when the single clearance is above 1mm……..……☐
9.Bearing
Check the wearing status for oscillating bearings of steering drag link , replace new one if the clearance of the bearing S≥ 0.48mm .Conversely, you could continue to use it.
……☐
Check the wearing status for oscillating bearings of A-shape arm , replace new one if the clearance of the bearing S≥ 0.36mm .Conversely, you could continue to use it.
……☐
Check the wearing status for oscillating bearings of ends of the A-shape arm , replace new one if the clearance of the bearing S≥ 0.55mm .Conversely, you could continue to use it.
……☐
Check the wearing status for oscillating bearings of steering cylinder , replace new one if the clearance of the bearing S≥ 0.78mm .Conversely, you could continue to use it.
……☐
10.Steering
Check screw between steering arm and front suspension cylinder. If loosed or damaged ,tighten or replace new screw.…….....……..……☐

Checker		Date	
Remarks			

Courtesy of Machine.Market

https://truckmanualshub.com/

Repair and Maintenance Record Table

Date	Repair and main-tenance performed	Cost	Time required	Unused time	Remarks

Courtesy of Machine.Market

https://truckmanualshub.com/

8.6.16 Maintenance inspection form for 1650hrs

Except daily (10hrs) inspection projects, the following projects also have to finish after running 1650hrs.

1. For normally checking

Check leakages, loosened and damaged parts for truck.....☐

Observe the cracks and welder seam for frame.....☐

2. Cummins engine

Check the fasteners for engine.....☐

Check PTO liquid level, refill as required.....☐

3. Transmission

Clean the breather valve for transmission and lubricates again.....☐

Check status about block caution lamp for filter.....☐

Remark: drain, replace filter and refill after 150hrs, if transmission has been fixed.

4. Main reducer and differential assembly,Planetary assembly and power take-off (PTO)

Extract lubrication sample from Main reducer and differential assembly and Planetary assembly for checking and analysis.....☐

Check liquid level, refill as required.....☐

Check and clean the breather valve for rear axle.....☐

Check and clean the breather valve for PTO.....☐

Remark: change oil when replace new one or after fixed.

5.Clean up the dust on the pin shaft of foot-operated valve,and add the lubricating oil.....☐

Checker		Date	
Remarks			

Courtesy of Machine.Market

https://truckmanualshub.com/

Repair and Maintenance Record Table

Date	Repair and main-tenance performed	Cost	Time required	Unused time	Remarks

Courtesy of Machine.Market

https://truckmanualshub.com/

8.6.17 Maintenance inspection form for 1750hrs

Except daily (10hrs) inspection projects, the following projects also have to finish after running 1750hrs.

1. Cummins engine

Drain, replace filter and refill…….....……..…☐

Check breather valve for crankcase…….....…….....…☐

Fuel system

Replace fuel filter…….……☐

Cooling system

Replace coolant filter……..……☐

Check and supplement DCA to coolant…….....…☐

2. Front brake system

Check status about disc worn to determinate replace it if required.……...……☐

3. Lubrication

Front, rear transmissions cross shafts…….…….....….....…..4 points

Front, rear transmission shafts…….....…….....…..2 points

Checker		Date	
Remarks			

Courtesy of Machine.Market

https://truckmanualshub.com/

Repair and Maintenance Record Table

Date	Repair and main-tenance performed	Cost	Time required	Unused time	Remarks

Courtesy of Machine.Market

https://truckmanualshub.com/

8.6.18 Maintenance inspection form for 1800hrs

Except daily (10hrs) inspection projects, the following projects also have to finish after running 1800hrs.

1. For normally checking

Check leakages, loosened and damaged parts for truck.....☐

Observe the cracks and welder seam for frame.....☐

Check displacement and worn for transmission shaft by lever.....☐

2.Lubrication

Check and ensure of all lubrication points work well.....☐

3. Electrical system

Check harnesses status.....☐

Check status about cables for storage battery.....☐

4. Cummins engine

Check the fasteners for engine.....☐

Check PTO liquid level, refill as required.....☐

Air cleaner.....☐

Clean pipeline and filter for air cleaner.....☐

5. Transmission

Clean the breather valve for transmission and lubricates again.....☐

Check status about block caution lamp for filter.....☐

Remark: drain, replace filter and refill after 150hrs, if transmission has been fixed.

6. Differential, planetary gearing and power take-off (PTO)

Extract lubrication sample from Main reducer and differential assembly and Planetary assembly for checking and analysis.....☐

Check liquid level, refill as required.....☐

Check and clean the breather valve for rear axle.....☐

Check and clean the breather valve for PTO.....☐

Remark: change oil when replace new one or after fixed.

7. Fuel tank

Drain, clean and refill.....☐

8.Clean up the dust on the pin shaft of foot-operated valve,and add the lubricating oil.....☐

Checker		Date	
Remarks			

Courtesy of Machine.Market

https://truckmanualshub.com/

Repair and Maintenance Record Table

Date	Repair and main-tenance performed	Cost	Time required	Unused time	Remarks

Courtesy of Machine.Market

https://truckmanualshub.com/

8.6.19 Maintenance inspection form for 1950hrs

Except daily (10hrs) inspection projects, the following projects also have to finish after running 1950hrs.

1. For normally checking

Check leakages, loosened and damaged parts for truck.....☐

Observe the cracks and welder seam for frame.....☐

2. Cummins engine

Check the fasteners for engine.....☐

Check PTO liquid level, refill as required.....☐

3. Transmission

Clean the breather valve for transmission and lubricates again.....☐

Check status about block caution lamp for filter.....☐

Remark: drain, replace filter and refill after 150hrs, if transmission has been fixed.

4. Main reducer and differential assembly,Planetary assembly and power take-off (PTO)

Extract lubrication sample from Main reducer and differential assembly and Planetary assembly for checking and analysis.....☐

Check liquid level, refill as required.....☐

Check and clean the breather valve for rear axle.....☐

Check and clean the breather valve for PTO.....☐

Remark: change oil when replace new one or after fixed.

5.Clean up the dust on the pin shaft of foot-operated valve,and add the lubricating oil.....☐

Checker		Date	
Remarks			

Courtesy of Machine.Market

https://truckmanualshub.com/

Repair and Maintenance Record Table

Date	Repair and main-tenance performed	Cost	Time required	Unused time	Remarks

Courtesy of Machine.Market

https://truckmanualshub.com/

8.6.20 Maintenance inspection form for 2000hrs

Except daily (10hrs) inspection projects, the following projects also have to finish after running 2000hrs.

1. Cummins engine

Drain, replace filter and refill…….....……..…☐

Check breather valve for crankcase…….....……☐

Fuel system

Replace fuel filter…….……☐

Cooling system

Replace coolant filter……..……☐

Check and supplement DCA to coolant…….....……☐

2. Front brake system

Check status about disc worn to determinate replace it if required……...……☐

3.Rear brake system

Check and record the worn status about rear brake disc unit.....……☐

4.Air-condition

Check evaporimeter and cooling “S” pipe, clean as required.....……☐

Check fasteners to replace or adjust for compressor.....……☐

Check status about coolant via window.....……☐

Check all system hoses and fittings for leakages.....……☐

Check working status for air-condition.....……☐

5.Lubrication

Front, rear transmissions cross shafts…….....….....…..4 points

Front, rear transmission shafts…….....….....…..2 points

6. Body

Check the single clearance of brace piece axial pin seat and flange end face of frame .The shims needs to be increased or replaced when the single clearance is above 1mm……..……☐

7.Steering

Check screw between steering arm and front suspension cylinder. If loosed or damaged ,tighten or replace new screw.…….....……..……☐

Checker		Date	
Remarks			

Courtesy of Machine.Market

https://truckmanualshub.com/

Repair and Maintenance Record Table

Date	Repair and main-tenance performed	Cost	Time required	Unused time	Remarks

Courtesy of Machine.Market

https://truckmanualshub.com/

Maintenance inspection form for 2000hrs (supplement)

Except daily (10hrs) inspection projects, the following projects also have to finish after running 2000hrs.

8.Hydraulic system

Replace new filter for the return filter of hoisting system..... ☐
Replace new filter for the return filter of cooling system..... ☐
Replace new filter for the return filter of steering system..... ☐
Replace new filter for the filter which mounted on the pipeline of the steering system..... ☐
Replace new filter for the filter which mounted on the pipeline of the cooling system..... ☐
Replace new filter which mounted inside of the rear braking valve group..... ☐
Replace new filter for the suction filter of the steering system..... ☐
Replace new filter for the suction filter of the hoisting system..... ☐
Replace new filter for the suction filter of the cooling system..... ☐
Replace the breather valve for the steering hydraulic tank..... ☐
Replace the breather valve for the hoisting hydraulic tank..... ☐
Change oil for the tank and clean the whole tank and accessories..... ☐
Check the pressure for the hydraulic system..... ☐
Check the pressure for the steering system..... ☐
Check the pressure for the front braking system..... ☐

9.Bearing

Replace new bearings for steering drag link..... ☐
Replace new bearings for A-shape arm..... ☐
Replace new bearings for ends of the A-shape arm..... ☐
Replace new bearings for steering cylinder..... ☐
Check the wearing status for oscillating bearings of front suspension cylinder , replace new one if the clearance of the bearing S≥ 0.55mm .Conversely, you could continue to use it
..... ☐
Check the wearing status for oscillating bearings of rear suspension cylinder , replace new one if the clearance of the bearing S≥ 0.63mm .Conversely, you could continue to use it
..... ☐

Checker		Date	
Remarks			

Courtesy of Machine.Market

https://truckmanualshub.com/

Repair and Maintenance Record Table

Date	Repair and main-tenance performed	Cost	Time required	Unused time	Remarks

Courtesy of Machine.Market

https://truckmanualshub.com/

8.6.21 Maintenance inspection form for 2100hrs

Except daily (10hrs) inspection projects, the following projects also have to finish after running 2100hrs.

1. For normally checking

Check leakages, loosened and damaged parts for truck.....☐

Observe the cracks and welder seam for frame.....☐

2. Cummins engine

Check the fasteners for engine.....☐

Check PTO liquid level, refill as required.....☐

3. Transmission

Clean the breather valve for transmission and lubricates again.....☐

Check status about block caution lamp for filter.....☐

Remark: drain, replace filter and refill after 150hrs, if transmission has been fixed.

4. Main reducer and differential assembly,Planetary assembly and power take-off (PTO)

Extract lubrication sample from Main reducer and differential assembly and Planetary assembly for checking and analysis.....☐

Check liquid level, refill as required.....☐

Check and clean the breather valve for rear axle.....☐

Check and clean the breather valve for PTO.....☐

Remark: change oil when replace new one or after fixed.

5.Clean up the dust on the pin shaft of foot-operated valve,and add the lubricating oil.....☐

Checker		Date	
Remarks			

Courtesy of Machine.Market

https://truckmanualshub.com/

Repair and Maintenance Record Table

Date	Repair and main-tenance performed	Cost	Time required	Unused time	Remarks

Courtesy of Machine.Market

https://truckmanualshub.com/

8.6.22 Maintenance inspection form for 2250hrs

Except daily (10hrs) inspection projects, the following projects also have to finish after running 2250hrs.

1. For normally checking

Check leakages, loosened and damaged parts for truck.....☐

Observe the cracks and welder seam for frame.....☐

2. Cummins engine

Check the fasteners for engine.....☐

Check PTO liquid level, refill as required.....☐

Drain, replace filter and refill.....☐

Check breather valve for crankcase.....☐

Fuel system

Replace fuel filter.....☐

Cooling system

Replace coolant filter.....☐

Check and supplement DCA to coolant.....☐

3. Transmission

Clean the breather valve for transmission and lubricates again.....☐

Check status about block caution lamp for filter.....☐

Remark: drain, replace filter and refill after 150hrs, if transmission has been fixed.

4. Front brake system

Check status about disc worn to determinate replace it if required.....☐

5. Differential, planetary gearing and power take-off (PTO)

Extract lubrication sample from differential and planetary gearing for checking and analysis.....☐

Check liquid level, refill as required.....☐

Check and clean the breather valve for differential.....☐

Check and clean the breather valve for PTO.....☐

Remark: change oil when replace new one or after fixed.

6. Lubrication

Front, rear transmissions cross shafts.....4 points

Front, rear transmission shafts.....2 points

7.Clean up the dust on the pin shaft of foot-operated valve,and add the lubricating oil.....☐

Checker		Date	
Remarks			

Courtesy of Machine.Market

https://truckmanualshub.com/

Repair and Maintenance Record Table

Date	Repair and main-tenance performed	Cost	Time required	Unused time	Remarks

Courtesy of Machine.Market

https://truckmanualshub.com/

8.6.23 Maintenance inspection form for 2400hrs

Except daily (10hrs) inspection projects, the following projects also have to finish after running 2400hrs.

1. For normally checking

Check leakages, loosened and damaged parts for truck.....☐
Observe the cracks and welder seam for frame.....☐
Check displacement and worn for transmission shaft by lever.....☐

2.Lubrication

Check and ensure of all lubrication points work well.....☐

3. Electrical system

Check harnesses status.....☐
Check status about cables for storage battery.....☐
Tighten for alternator and generator.....☐

4. Cummins engine

Check the fasteners for engine.....☐
Check PTO liquid level, refill as required.....☐
Air cleaner.....☐
Clean pipeline and filter for air cleaner.....☐

5. Transmission

Drain and refill for transmission.....☐
Clean the breather valve for transmission and lubricates again.....☐
Check status about block caution lamp for filter.....☐
Clean and replace filters.....☐
Clean filling port for transmission.....☐
Remark: drain, replace filter and refill after 150hrs, if transmission has been fixed.

6.Main reducer and differential assembly,Planetary assembly and power take-off (PTO)

Extract lubrication sample from Main reducer and differential assembly and Planetary assembly for checking and analysis.....☐
Check liquid level, refill as required.....☐
Check and clean the breather valve for rear axle.....☐
Check and clean the breather valve for PTO.....☐
Remark: change oil when replace new one or after fixed.

7.Clean up the dust on the pin shaft of foot-operated valve,and add the lubricating oil.....☐

Checker		Date	
Remarks			

Courtesy of Machine.Market

https://truckmanualshub.com/

Repair and Maintenance Record Table

Date	Repair and main-tenance performed	Cost	Time required	Unused time	Remarks

Courtesy of Machine.Market

https://truckmanualshub.com/

8.6.24 Maintenance inspection form for 2500hrs

Except daily (10hrs) inspection projects, the following projects also have to finish after running 2500hrs.

1. Cummins engine

Drain, replace filter and refill…….....……..…☐

Check breather valve for crankcase…….....….....……☐

Fuel system

Replace fuel filter…….……☐

Cooling system

Reassemble coolant filter…….……..……☐

Check and supplement DCA to coolant…….....……☐

2. Front brake system

Check status about disc worn to determinate replace it if required.……...……☐

3. Lubrication

Front, rear transmissions cross shafts…….…….....….....…..4 points

Front, rear transmission shafts…….....…….....…..2 points

4. Hydraulic system

Replace new filter for the return filter of hoisting system.....…☐

Replace new filter for the return filter of cooling system.....…☐

Replace new filter for the return filter of steering system.....…☐

Replace new filter for the filter which mounted on the pipeline of the steering system.....…☐

Replace new filter for the filter which mounted on the pipeline of the cooling system.....…☐

Replace new filter which mounted inside of the braking valve group.....…☐

Replace the breather valve for the steering hydraulic tank.....…☐

Replace the breather valve for the hoisting hydraulic tank.....…☐

5.Steering

Check screw between steering arm and front suspension cylinder. If loosed or damaged ,tighten or replace new screw.…….....……..……☐

Checker		Date	
Remarks			

Courtesy of Machine.Market

https://truckmanualshub.com/

Repair and Maintenance Record Table

Date	Repair and main-tenance performed	Cost	Time required	Unused time	Remarks

Courtesy of Machine.Market

https://truckmanualshub.com/

Maintenance inspection form for 2500hrs(supplement)

Except daily (10hrs) inspection projects, the following projects also have to finish after running 2500hrs.

6. Bearing

Check the wearing status for oscillating bearings of steering drag link , replace new one if the clearance of the bearing S≥ 0.36mm .Conversely, you could continue to use it

……☐

Check the wearing status for oscillating bearings of A-shape arm , replace new one if the clearance of the bearing S≥ 0.48mm .Conversely, you could continue to use it

……☐

Check the wearing status for oscillating bearings of ends of the A-shape arm , replace new one if the clearance of the bearing S≥ 0.55mm .Conversely, you could continue to use it

……☐

Check the wearing status for oscillating bearings of steering cylinder , replace new one if the clearance of the bearing S≥ 0.78mm .Conversely, you could continue to use it

……☐

7. Body

Check the single clearance of brace piece axial pin seat and flange end face of frame .The shims needs to be increased or replaced when the single clearance is above 1mm

……☐

Checker		Date	
Remarks			

Courtesy of Machine.Market

https://truckmanualshub.com/

Repair and Maintenance Record Table

Date	Repair and main-tenance performed	Cost	Time required	Unused time	Remarks

Courtesy of Machine.Market

https://truckmanualshub.com/

8.6.25 Maintenance inspection form for 2550hrs

Except daily (10hrs) inspection projects, the following projects also have to finish after running 2550hrs.

1. For normally checking

Check leakages, loosened and damaged parts for truck.....☐

Observe the cracks and welder seam for frame.....☐

2. Cummins engine

Check the fasteners for engine.....☐

Check PTO liquid level, refill as required.....☐

3. Transmission

Clean the breather valve for transmission and lubricates again.....☐

Check status about block caution lamp for filter.....☐

Remark: drain, replace filter and refill after 150hrs, if transmission has been fixed.

Check the driveline bolts torque(first time after 150hrs, next time after each 1200hrs).....☐

Bolt code	Use of the site	Tightening torque (N·m)	Check torque (N·m)
60011099	Front driveline	145	140
60011098	Rear driveline	230	220

Caution: The scene conducts the driveline assembly:

Upon assembly, the first, cleaning threaded hole oil of driveline and yoke to install.

At the beginning of operation, three consecutive days of checking the driveline bolts torque.

4. Main reducer and differential assembly,Planetary assembly and power take-off (PTO)

Change the gear oil of Main reducer and differential assembly,Planetary assembly and PTO .....☐

Check liquid level, refill as required.....☐

Check and clean the breather valve for rear axle.....☐

Check and clean the breather valve for PTO.....☐

Remark: change oil when replace new one or after fixed.

5.Clean up the dust on the pin shaft of foot-operated valve,and add the lubricating oil.....☐

Checker		Date	
Remarks			

Courtesy of Machine.Market

https://truckmanualshub.com/

Repair and Maintenance Record Table

Date	Repair and main-tenance performed	Cost	Time required	Unused time	Remarks

Courtesy of Machine.Market

https://truckmanualshub.com/

8.6.26 Maintenance inspection form for 2700hrs

Except daily (10hrs) inspection projects, the following projects also have to finish after running 2700hrs.

1. For normally checking

Check leakages, loosened and damaged parts for truck.....☐

Observe the cracks and welder seam for frame.....☐

2. Cummins engine

Check the fasteners for engine.....☐

Check PTO liquid level, refill as required.....☐

3. Transmission

Clean the breather valve for transmission and lubricates again.....☐

Check status about block caution lamp for filter.....☐

Remark: drain, replace filter and refill after 150hrs, if transmission has been fixed.

4. Main reducer and differential assembly,Planetary assembly and power take-off (PTO)

Extract lubrication sample from Main reducer and differential assembly and Planetary assembly for checking and analysis.....☐

Check liquid level, refill as required.....☐

Check and clean the breather valve for rear axle.....☐

Check and clean the breather valve for PTO.....☐

Remark: change oil when replace new one or after fixed.

5.Clean up the dust on the pin shaft of foot-operated valve,and add the lubricating oil.....☐

Checker		Date	
Remarks			

Courtesy of Machine.Market

https://truckmanualshub.com/

Repair and Maintenance Record Table

Date	Repair and main-tenance performed	Cost	Time required	Unused time	Remarks

Courtesy of Machine.Market

https://truckmanualshub.com/

8.6.27 Maintenance inspection form for 2750hrs

Except daily (10hrs) inspection projects, the following projects also have to finish after running 2750hrs.

1. Cummins engine

Drain, replace filter and refill…….....……..…☐

Check breather valve for crankcase…….....….....……☐

Fuel system

Replace fuel filter…….……☐

Cooling system

Replace coolant filter……..……☐

Check and supplement DCA to coolant…….....….☐

2. Front brake system

Check status about disc worn to determinate replace it if required.……...……☐

3. Lubrication

Front, rear transmissions cross shafts…….…….....….....…..4 points

Front, rear transmission shafts…….....…….....…..2 points

Checker		Date	
Remarks			

Courtesy of Machine.Market

https://truckmanualshub.com/

Repair and Maintenance Record Table

Date	Repair and main-tenance performed	Cost	Time required	Unused time	Remarks

Courtesy of Machine.Market

https://truckmanualshub.com/

8.6.28 Maintenance inspection form for 2850hrs

Except daily (10hrs) inspection projects, the following projects also have to finish after running 2850hrs.

1. For normally checking

Check leakages, loosened and damaged parts for truck.....☐

Observe the cracks and welder seam for frame.....☐

2. Cummins engine

Check the fasteners for engine.....☐

Check PTO liquid level, refill as required.....☐

3. Transmission

Clean the breather valve for transmission and lubricates again.....☐

Check status about block caution lamp for filter.....☐

Remark: drain, replace filter and refill after 150hrs, if transmission has been fixed.

4. Main reducer and differential assembly,Planetary assembly and power take-off (PTO)

Extract lubrication sample from Main reducer and differential assembly and Planetary assembly for checking and analysis.....☐

Check liquid level, refill as required.....☐

Check and clean the breather valve for rear axle.....☐

Check and clean the breather valve for PTO.....☐

Remark: change oil when replace new one or after fixed.

5.Clean up the dust on the pin shaft of foot-operated valve,and add the lubricating oil.....☐

Checker		Date	
Remarks			

Courtesy of Machine.Market

https://truckmanualshub.com/

Repair and Maintenance Record Table

Date	Repair and main-tenance performed	Cost	Time required	Unused time	Remarks

Courtesy of Machine.Market

https://truckmanualshub.com/

8.6.29 Maintenance inspection form for 3000hrs

Except daily (10hrs) inspection projects, the following projects also have to finish after running 3000hrs.

1. For normally checking

Check leakages, loosened and damaged parts for truck.....☐

Observe the cracks and welder seam for frame.....☐

Check displacement and worn for transmission shaft by lever.....☐

2. Lubrication

Front, rear transmissions cross shafts.....4 points

Front, rear transmission shafts.....2 points

Checking and ensure of all lubrication points work well.....☐

3. Electrical system

Check harnesses status.....☐

Check status about cables for storage battery.....☐

4. Cummins engine

Check fasteners for engine, tighten them if required.....☐

Check oil level for PTO, refill as required.....☐

Drain, replace filter and refill.....☐

Check breather valve for crankcase.....☐

Fuel system

Replace fuel filter.....☐

Cooling system

Replace coolant filter.....☐

Check and supplement DCA to coolant.....☐

Air cleaner

Clean pipeline and filter for air cleaner.....☐

5.Steering

Check screw between steering arm and front suspension cylinder. If loosed or damaged ,tighten or replace new screw.....☐

6.Clean up the dust on the pin shaft of foot-operated valve,and add the lubricating oil.....☐

Checker		Date	
Remarks			

Courtesy of Machine.Market

https://truckmanualshub.com/

Repair and Maintenance Record Table

Date	Repair and main-tenance performed	Cost	Time required	Unused time	Remarks

Courtesy of Machine.Market

https://truckmanualshub.com/

Maintenance inspection form for 3000hrs (supplement)

Except daily (10hrs) inspection projects, the following projects also have to finish after running 3000hrs.

7. Transmission

Check the status of the pin of injector, tighten it if required…… ☐
Clean the breather valve for transmission and lubricates again…… ☐
Check status about block caution lamp for filter…… ☐
Remark: drain, replace filter and refill after 150hrs, if transmission has been fixed.

8. Main reducer and differential assembly,Planetary assembly and power take-off (PTO)

Extract lubrication sample from Main reducer and differential assembly and Planetary assembly for checking and analysis…… ☐
Check liquid level, refill as required…… ☐
Check and clean the breather valve for rear axle…… ☐
Check and clean the breather valve for PTO…… ☐
Remark: change oil when replace new one or after fixed.

9. Front brake system

Check status about disc worn to determinate replace it if required…… ☐

10. Hydraulic system

Replace new filter for the return filter of hoisting system…… ☐
Replace new filter for the return filter of cooling system…… ☐
Replace new filter for the return filter of steering system…… ☐
Replace new filter for the filter which mounted on the pipeline of the steering system…… ☐
Replace new filter for the filter which mounted on the pipeline of the cooling system…… ☐
Replace new filter which mounted inside of the rear braking valve group…… ☐
Replace the breather valve for the steering hydraulic tank…… ☐
Replace the breather valve for the hoisting hydraulic tank…… ☐

Checker		Date	
Remarks			

Courtesy of Machine.Market

https://truckmanualshub.com/

Repair and Maintenance Record Table

Date	Repair and main-tenance performed	Cost	Time required	Unused time	Remarks

Courtesy of Machine.Market

https://truckmanualshub.com/

Maintenance inspection form for 3000hrs (supplement)

Except daily (10hrs) inspection projects, the following projects also have to finish after running 3000hrs.

11. Bearing

Check the wearing status for oscillating bearings of steering drag link , replace new one if the clearance of the bearing S≥ 0.36mm .Conversely, you could continue to use it

……☐

Check the wearing status for oscillating bearings of A-shape arm , replace new one if the clearance of the bearing S≥ 0.48mm .Conversely, you could continue to use it

……☐

Check the wearing status for oscillating bearings of ends of the A-shape arm , replace new one if the clearance of the bearing S≥ 0.55mm .Conversely, you could continue to use it

……☐

Check the wearing status for oscillating bearings of steering cylinder , replace new one if the clearance of the bearing S≥ 0.78mm .Conversely, you could continue to use it

……☐

Replace new bearings for front suspension cylinder……☐

Replace new bearings for rear suspension cylinder……☐

Check the wearing status for oscillating bearings of link , replace new one if the clearance of the bearing S≥ 0.63mm .Conversely, you could continue to use it

……☐

Check the wearing status for oscillating bearings of A-shape , replace new one if the clearance of the bearing S≥ 0.84mm .Conversely, you could continue to use it

……☐

12. Body

Check the single clearance of brace piece axial pin seat and flange end face of frame .The shims needs to be increased or replaced when the single clearance is above 1mm

……☐

Checker		Date	
Remarks			

Courtesy of Machine.Market

https://truckmanualshub.com/

Repair and Maintenance Record Table

Date	Repair and main-tenance performed	Cost	Time required	Unused time	Remarks

Courtesy of Machine.Market

https://truckmanualshub.com/

8.6.30 Maintenance inspection form for 3150hrs

Except daily (10hrs) inspection projects, the following projects also have to finish after running 3150hrs.

1. For normally checking

Check leakages, loosened and damaged parts for truck.....☐

Observe the cracks and welder seam for frame.....☐

2. Cummins engine

Check the fasteners for engine.....☐

Check PTO liquid level, refill as required.....☐

3. Transmission

Clean the breather valve for transmission and lubricates again.....☐

Check status about block caution lamp for filter.....☐

Remark: drain, replace filter and refill after 150hrs, if transmission has been fixed.

4. Main reducer and differential assembly,Planetary assembly and power take-off (PTO)

Extract lubrication sample from Main reducer and differential assembly and Planetary assembly for checking and analysis.....☐

Check liquid level, refill as required.....☐

Check and clean the breather valve for rear axle.....☐

Check and clean the breather valve for PTO.....☐

Remark: change oil when replace new one or after fixed.

5.Clean up the dust on the pin shaft of foot-operated valve,and add the lubricating oil.....☐

Checker		Date	
Remarks			

Courtesy of Machine.Market

https://truckmanualshub.com/

Repair and Maintenance Record Table

Date	Repair and main-tenance performed	Cost	Time required	Unused time	Remarks

Courtesy of Machine.Market

https://truckmanualshub.com/

8.6.31 Maintenance inspection form for 3250hrs

Except daily (10hrs) inspection projects, the following projects also have to finish after running 3250hrs.

1. Cummins engine

Check the fasteners for engine…….....……☐

Check PTO liquid level, refill as required……..…….....……☐

Drain, replace filter and refill…….....……..…☐

Check breather valve for crankcase…….....……☐

Fuel system

Replace fuel filter…….……☐

Cooling system

Replace coolant filter……..……☐

Check and supplement DCA to coolant…….....…☐

2. Front brake system

Check status about disc worn to determinate replace it if required……...……☐

3. Lubrication

Front, rear transmissions cross shafts…….....…….....……..4 points

Front, rear transmission shafts…….....…….....…….2 points

Checker		Date	
Remarks			

Courtesy of Machine.Market

https://truckmanualshub.com/

Repair and Maintenance Record Table

Date	Repair and main-tenance performed	Cost	Time required	Unused time	Remarks

Courtesy of Machine.Market

https://truckmanualshub.com/

8.6.32 Maintenance inspection form for 3300hrs

Except daily (10hrs) inspection projects, the following projects also have to finish after running 3300hrs.

1. For normally checking

Check leakages, loosened and damaged parts for truck.....☐

Observe the cracks and welder seam for frame.....☐

2. Cummins engine

Check the fasteners for engine.....☐

Check PTO liquid level, refill as required.....☐

3. Transmission

Clean the breather valve for transmission and lubricates again.....☐

Check status about block caution lamp for filter.....☐

Remark: drain, replace filter and refill after 150hrs, if transmission has been fixed.

4. Main reducer and differential assembly,Planetary assembly and power take-off (PTO)

Extract lubrication sample from Main reducer and differential assembly and Planetary assembly for checking and analysis.....☐

Check liquid level, refill as required.....☐

Check and clean the breather valve for rear axle.....☐

Check and clean the breather valve for PTO.....☐

Remark: change oil when replace new one or after fixed.

5.Clean up the dust on the pin shaft of foot-operated valve,and add the lubricating oil.....☐

Checker		Date	
Remarks			

Courtesy of Machine.Market

https://truckmanualshub.com/

Repair and Maintenance Record Table

Date	Repair and main-tenance performed	Cost	Time required	Unused time	Remarks

Courtesy of Machine.Market

https://truckmanualshub.com/

8.6.33 Maintenance inspection form for 3450hrs

Except daily (10hrs) inspection projects, the following projects also have to finish after running 3450hrs.

1. For normally checking

Check leakages, loosened and damaged parts for truck.....☐

Observe the cracks and welder seam for frame.....☐

2. Cummins engine

Check the fasteners for engine.....☐

Check PTO liquid level, refill as required.....☐

3. Transmission

Clean the breather valve for transmission and lubricates again.....☐

Check status about block caution lamp for filter.....☐

Remark: drain, replace filter and refill after 150hrs, if transmission has been fixed.

4. Main reducer and differential assembly,Planetary assembly and power take-off (PTO)

Extract lubrication sample from Main reducer and differential assembly and Planetary assembly for checking and analysis.....☐

Check liquid level, refill as required.....☐

Check and clean the breather valve for rear axle.....☐

Check and clean the breather valve for PTO.....☐

Remark: change oil when replace new one or after fixed.

5.Steering

Check screw between steering arm and front suspension cylinder. If loosed or damaged ,tighten or replace new screw.....☐

6.Clean up the dust on the pin shaft of foot-operated valve,and add the lubricating oil.....☐

Checker		Date	
Remarks			

Courtesy of Machine.Market

https://truckmanualshub.com/

Repair and Maintenance Record Table

Date	Repair and main-tenance performed	Cost	Time required	Unused time	Remarks

Courtesy of Machine.Market

https://truckmanualshub.com/

8.6.34 Maintenance inspection form for 3550hrs

Except daily (10hrs) inspection projects, the following projects also have to finish after running 3550hrs.

1. Hydraulic system

Replace new filter for the return filter of hoisting system.....☐
Replace new filter for the return filter of cooling system.....☐
Replace new filter for the return filter of steering system.....☐
Replace new filter for the filter which mounted on the pipeline of the steering system.....☐
Replace new filter for the filter which mounted on the pipeline of the cooling system.....☐
Replace new filter which mounted inside of the rear braking valve group.....☐
Replace the breather valve for the steering hydraulic tank.....☐
Replace the breather valve for the hoisting hydraulic tank.....☐

2. Cummins engine

Drain, replace filter and refill.....☐
Check breather valve for crankcase.....☐

Fuel system

Replace fuel filter.....☐

Cooling system

Replace coolant filter.....☐
Check and supplement DCA to coolant.....☐

3. Front brake system

Check status about disc worn to determinate replace it if required.....☐

4. Lubrication

Front, rear transmissions cross shafts.....4 points
Front, rear transmission shafts.....2 points

Checker		Date	
Remarks			

Courtesy of Machine.Market

https://truckmanualshub.com/

Repair and Maintenance Record Table

Date	Repair and main-tenance performed	Cost	Time required	Unused time	Remarks

Courtesy of Machine.Market

https://truckmanualshub.com/

8.6.35 Maintenance inspection form for 3600hrs

Except daily (10hrs) inspection projects, the following projects also have to finish after running 3600hrs.

1. For normally checking

Check leakages, loosened and damaged parts for truck.....☐
Observe the cracks and welder seam for frame.....☐
Check displacement and worn for transmission shaft by lever.....☐

2. Lubrication

Front, rear transmissions cross shafts.....4 points
Front, rear transmission shafts.....2 points
Checking and ensure of all lubrication points work well.....☐

3. Electrical system

Check harnesses status.....☐
Check status about cables for storage battery.....☐
Tighten for alternator and generator.....☐

4. Cummins engine

Check the fasteners for engine.....☐
Check PTO liquid level, refill as required.....☐
Air cleaner.....☐
Clean pipeline and filter for air cleaner.....☐

5. Transmission

Clean the breather valve for transmission and lubricates again.....☐
Check status about block caution lamp for filter.....☐
Remark: drain, replace filter and refill after 150hrs, if transmission has been fixed.

6. Main reducer and differential assembly,Planetary assembly and power take-off (PTO)

Extract lubrication sample from Main reducer and differential assembly and Planetary assembly for checking and analysis.....☐
Check liquid level, refill as required.....☐
Check and clean the breather valve for rear axle.....☐
Check and clean the breather valve for PTO.....☐
Remark: change oil when replace new one or after fixed.

7. Fuel tank

Rain ,clean it and refilling.....☐
8.Clean up the dust on the pin shaft of foot-operated valve,and add the lubricating oil.....☐

Checker		Date	
Remarks			

Courtesy of Machine.Market

https://truckmanualshub.com/

Repair and Maintenance Record Table

Date	Repair and main-tenance performed	Cost	Time required	Unused time	Remarks

Courtesy of Machine.Market

https://truckmanualshub.com/

8.6.36 Maintenance inspection form for 3750hrs

Except daily (10hrs) inspection projects, the following projects also have to finish after running 3750hrs.

1. For normally checking

Check leakages, loosened and damaged parts for truck.....☐

Observe the cracks and welder seam for frame.....☐

2. Cummins engine

Check the fasteners for engine.....☐

Check PTO liquid level, refill as required.....☐

Drain, replace filter and refill.....☐

Check breather valve for crankcase.....☐

Fuel system

Replace fuel filter.....☐

Cooling system

Replace coolant filter.....☐

Check and supplement DCA to coolant.....☐

3. Transmission

Clean the breather valve for transmission and lubricates again.....☐

Check status about block caution lamp for filter.....☐

Remark: drain, replace filter and refill after 150hrs, if transmission has been fixed.

Check the driveline bolts torque(first time after 150hrs, next time after each 1200hrs).....☐

Bolt code	Use of the site	Tightening torque (N·m)	Check torque (N·m)
60011099	Front driveline	145	140
60011098	Rear driveline	230	220

Caution: The scene conducts the driveline assembly:

Upon assembly, the first, cleaning threaded hole oil of driveline and yoke to install.

At the beginning of operation, three consecutive days of checking the driveline bolts torque.

Checker		Date	
Remarks			

Courtesy of Machine.Market

https://truckmanualshub.com/

Repair and Maintenance Record Table

Date	Repair and main-tenance performed	Cost	Time required	Unused time	Remarks

Courtesy of Machine.Market

https://truckmanualshub.com/

Maintenance inspection form for 3750hrs(supplement)

Except daily (10hrs) inspection projects, the following projects also have to finish after running 3750hrs.

4. Front brake system

Check status about disc worn to determinate replace it if required.....☐

5. Main reducer and differential assembly,Planetary assembly and power take-off (PTO)

Change the gear oil of Main reducer and differential assembly,Planetary assembly and PTO .....☐

Check liquid level, refill as required.....☐

Check and clean the breather valve for rear axle.....☐

Check and clean the breather valve for PTO.....☐

Remark: change oil when replace new one or after fixed.

6. Lubrication

Front, rear transmissions cross shafts.....4 points

Front, rear transmission shafts.....2 points

7.Clean up the dust on the pin shaft of foot-operated valve,and add the lubricating oil.....☐

Checker		Date	
Remarks			

Courtesy of Machine.Market

https://truckmanualshub.com/

Repair and Maintenance Record Table

Date	Repair and main-tenance performed	Cost	Time required	Unused time	Remarks

Courtesy of Machine.Market

https://truckmanualshub.com/

8.6.37 Maintenance inspection form for 3900hrs

Except daily (10hrs) inspection projects, the following projects also have to finish after running 3900hrs.

1. For normally checking

Check leakages, loosened and damaged parts for truck.....☐

Observe the cracks and welder seam for frame.....☐

2. Cummins engine

Check the fasteners for engine.....☐

Check PTO liquid level, refill as required.....☐

3. Transmission

Clean the breather valve for transmission and lubricates again.....☐

Check status about block caution lamp for filter.....☐

Remark: drain, replace filter and refill after 150hrs, if transmission has been fixed.

4. Main reducer and differential assembly,Planetary assembly and power take-off (PTO)

Extract lubrication sample from Main reducer and differential assembly and Planetary assembly for checking and analysis.....☐

Check liquid level, refill as required.....☐

Check and clean the breather valve for rear axle.....☐

Check and clean the breather valve for PTO.....☐

Remark: change oil when replace new one or after fixed.

5.Clean up the dust on the pin shaft of foot-operated valve,and add the lubricating oil.....☐

Checker		Date	
Remarks			

Courtesy of Machine.Market

https://truckmanualshub.com/

Repair and Maintenance Record Table

Date	Repair and main-tenance performed	Cost	Time required	Unused time	Remarks

Courtesy of Machine.Market

https://truckmanualshub.com/

8.6.38 Maintenance inspection form for 4000hrs

Except daily (10hrs) inspection projects, the following projects also have to finish after running 4000hrs.

1. Cummins engine

Drain, replace filter and refill…… ☐

Check breather valve for crankcase…… ☐

Fuel system

Replace fuel filter…… ☐

Cooling system

Replace coolant filter…… ☐

Check and supplement DCA to coolant…… ☐

2. Front brake system

Check status about disc worn to determinate replace it if required…… ☐

3.Rear brake system

Check and record the worn status about rear brake disc unit…… ☐

4.Air-condition

Check evaporimeter and cooling “S” pipe, clean as required…… ☐

Check fasteners to replace or adjust for compressor…… ☐

Check status about coolant via window…… ☐

Check all system hoses and fittings for leakages…… ☐

Check working status for air-condition…… ☐

5.Lubrication

Front, rear transmissions cross shafts……4 points

Front, rear transmission shafts……2 points

6.Hydraulic system

Replace new filter for the return filter of hoisting system…… ☐

Replace new filter for the return filter of cooling system…… ☐

Replace new filter for the return filter of steering system…… ☐

Replace new filter for the filter which mounted on the pipeline of the steering system…… ☐

Replace new filter for the filter which mounted on the pipeline of the cooling system…… ☐

Replace new filter which mounted inside of the rear braking valve group…… ☐

Checker		Date	
Remarks			

Courtesy of Machine.Market

https://truckmanualshub.com/

Repair and Maintenance Record Table

Date	Repair and main-tenance performed	Cost	Time required	Unused time	Remarks

Courtesy of Machine.Market

https://truckmanualshub.com/

Maintenance inspection form for 4000hrs (supplement)

Except daily (10hrs) inspection projects, the following projects also have to finish after running 4000hrs.

7.Hydraulic system pressure checking

Replace new filter for the suction filter of the steering system.....☐
Replace new filter for the suction filter of the hoisting system.....☐
Replace new filter for the suction filter of the cooling system.....☐
Replace the breather valve for the steering hydraulic tank.....☐
Replace the breather valve for the hoisting hydraulic tank.....☐
Change oil for the tank and clean the whole tank and accessories.....☐
Check the pressure for the steering system.....☐
Check the pressure for the front breaking system.....☐
Check the pressure for the rear breaking system.....☐
Check the pressure for the parking system.....☐

Steering system: Check pre-charge pressure for accumulator first then does check pressure for steering system.

Braking system: Check pre-charge pressure for accumulator first then does check pressure for steering system.

Note: when the data compared with maintenance manual are different. the operator has to check ,fix problems for system to make it work well.

Drain all pressure oil out from the accumulator before when you decided to check pressure of it .

Checker		Date	
Remarks			

Courtesy of Machine.Market

https://truckmanualshub.com/

Repair and Maintenance Record Table

Date	Repair and main-tenance performed	Cost	Time required	Unused time	Remarks

Courtesy of Machine.Market

https://truckmanualshub.com/

Maintenance inspection form for 4000hrs (supplement)

Except daily (10hrs) inspection projects, the following projects also have to finish after running 4000hrs.

8.Bearing

Replace new bearings for steering drag link.....☐

Replace new bearings for A-shape arm.....☐

Replace new bearings for ends of the A-shape arm.....☐

Replace new bearings for steering cylinder.....☐

Check the wearing status for oscillating bearings of front suspension cylinder , replace new one if the clearance of the bearing S≥ 0.55mm .Conversely, you could continue to use it.....☐

Check the wearing status for oscillating bearings of rear suspension cylinder , replace new one if the clearance of the bearing S≥ 0.63mm .Conversely, you could continue to use it.....☐

9. Body

Check the single clearance of brace piece axial pin seat and flange end face of frame .The shims needs to be increased or replaced when the single clearance is above 1mm.....☐

10. Tyres

Front Wheel

Inspect the bearings, readjust the gap,replace the grease as the case may be.....☐

Rear Wheel

Inspect the bearings, readjust the gap.....☐

11.Steering

Check screw between steering arm and front suspension cylinder. If loosed or damaged ,tighten or replace new screw.....☐

Checker		Date	
Remarks			

Courtesy of Machine.Market

https://truckmanualshub.com/

Repair and Maintenance Record Table

Date	Repair and main-tenance performed	Cost	Time required	Unused time	Remarks

Courtesy of Machine.Market

https://truckmanualshub.com/

8.6.39 Maintenance inspection form for 4050hrs

Except daily (10hrs) inspection projects, the following projects also have to finish after running 4050hrs.

1. For normally checking

Check leakages, loosened and damaged parts for truck.....☐

Observe the cracks and welder seam for frame.....☐

2. Cummins engine

Check the fasteners for engine.....☐

Check PTO liquid level, refill as required.....☐

3. Transmission

Clean the breather valve for transmission and lubricates again.....☐

Check status about block caution lamp for filter.....☐

Remark: drain, replace filter and refill after 150hrs, if transmission has been fixed.

4. Main reducer and differential assembly,Planetary assembly and power take-off (PTO)

Extract lubrication sample from Main reducer and differential assembly and Planetary assembly for checking and analysis.....☐

Check liquid level, refill as required.....☐

Check and clean the breather valve for rear axle.....☐

Check and clean the breather valve for PTO.....☐

Remark: change oil when replace new one or after fixed.

5.Clean up the dust on the pin shaft of foot-operated valve,and add the lubricating oil.....☐

Checker		Date	
Remarks			

Courtesy of Machine.Market

https://truckmanualshub.com/

Repair and Maintenance Record Table

Date	Repair and main-tenance performed	Cost	Time required	Unused time	Remarks

Courtesy of Machine.Market

https://truckmanualshub.com/

8.6.40 Maintenance inspection form for 4200hrs

Except daily (10hrs) inspection projects, the following projects also have to finish after running 4200hrs.

1. For normally checking

Check leakages, loosened and damaged parts for truck and Clean whole truck by vapour ..... ☐

Observe frame for cracks and weld seam opening..... ☐

Check displacement and worn for transmission shaft by lever..... ☐

Check status for body lining plate..... ☐

Check hoist guide rail, electroplate it again as required..... ☐

Check status for all hoses; replace all worn, leaked and damaged ones..... ☐

2. Lubrication

Front, rear transmissions cross shafts.....4 points

Front, rear transmission shafts.....2 points

Checking and ensure of all lubrication points work well..... ☐

3. Electrical system

Check harnesses status..... ☐

Check status about cables for storage battery..... ☐

4. Cummins engine

Check the fasteners for engine..... ☐

Check PTO liquid level, refill as required..... ☐

Air cleaner..... ☐

Clean pipeline and filter for air cleaner..... ☐

5. Transmission

Check and tighten for transmission according to requirement..... ☐

Clean the breather valve for transmission and lubricates again..... ☐

Check status about block caution lamp for filter..... ☐

Remark: drain, replace filter and refill after 150hrs, if transmission has been fixed.

6. Main reducer and differential assembly,Planetary assembly and power take-off (PTO)

Extract lubrication sample from Main reducer and differential assembly and Planetary assembly for checking and analysis..... ☐

Check liquid level, refill as required..... ☐

Check and clean the breather valve for differential..... ☐

Check and clean the breather valve for PTO..... ☐

Remark: change oil when replace new one or after fixed.

7.Clean up the dust on the pin shaft of foot-operated valve,and add the lubricating oil..... ☐

Checker		Date	
Remarks			

Courtesy of Machine.Market

https://truckmanualshub.com/

Repair and Maintenance Record Table

Date	Repair and main-tenance performed	Cost	Time required	Unused time	Remarks

Courtesy of Machine.Market

https://truckmanualshub.com/

8.6.41 Maintenance inspection form for 6000hrs

Except daily (10hrs) inspection projects, the following projects also have to finish after running 6000hrs.

1. Engine PTO

Disassemble, inspect and fix or replace some parts if required which parts has been worn..... ☐

Check Pin Spindle and Bush ,replace them as required..... ☐

2. Hoist cylinder

Disassemble, inspect and fix or replace some parts if required which parts has been worn..... ☐

Check Pin Spindle and Bush ,replace them as required..... ☐

3. Front, rear ride cylinder

Disassemble, inspect and fix or replace some parts if required which parts has been worn..... ☐

Check Pin Spindle and Bush ,replace them as required..... ☐

4. Steering connecting-rod gear

Check and fix or replace some parts if required which parts has been worn..... ☐

5. Steering cylinder

Dismounting ,checking and repair or replace damaged components for the cylinder if required..... ☐

Check the pins and bearings or replace damaged parts for the cylinder if reqiured..... ☐

6. Oil cooling unit

Disassembly, fixing and reassembly..... ☐

7. Radiator

Disassembly, fixing and reassembly..... ☐

8.Transmission shaft

Check and fix or replace some parts if required which parts has been worn..... ☐

Check balance..... ☐

Checker		Date	
Remarks			

Courtesy of Machine.Market

https://truckmanualshub.com/

Repair and Maintenance Record Table

Date	Repair and main-tenance performed	Cost	Time required	Unused time	Remarks

Courtesy of Machine.Market

https://truckmanualshub.com/

Maintenance inspection form for 6000hrs(supplement)

Except daily (10hrs) inspection projects, the following projects also have to finish after running 6000hrs.

9. Body

Replace lining plate as required.....☐

Replace Pin Spindle and Bush as required.....☐

Check the single clearance of brace piece axial pin seat and flange end face of frame .The shims needs to be increased or replaced when the single clearance is above 1mm.....☐

10.Rear Axle

Replace a frame, drag link and bush.....☐

11.Transmission

Check fasteners for spray equipment, fasten as required .....☐

Check the driveline bolts torque(first time after 150hrs, next time after each 1200hrs).....☐

Bolt code	Use of the site	Tightening torque (N·m)	Check torque (N·m)
60011099	Front driveline	145	140
60011098	Rear driveline	230	220

Caution: The scene conducts the driveline assembly:

Upon assembly, the first, cleaning threaded hole oil of driveline and yoke to install.

At the beginning of operation, three consecutive days of checking the driveline bolts torque.

12.Steering

Check screw between steering arm and front suspension cylinder. If loosed or damaged ,tighten or replace new screw.....☐

13.Hydraulic system

Replace new filter for the return filter of hoisting system.....☐

Replace new filter for the return filter of cooling system.....☐

Replace new filter for the return filter of steering system.....☐

Replace new filter for the filter which mounted on the pipeline of the steering system.....☐

Replace new filter for the filter which mounted on the pipeline of the cooling system.....☐

Replace new filter which mounted inside of the rear braking valve group.....☐

Replace new filter for the suction filter of the steering system.....☐

Replace new filter for the suction filter of the hoisting system.....☐

Checker		Date	
Remarks			

Courtesy of Machine.Market

https://truckmanualshub.com/

Repair and Maintenance Record Table

Date	Repair and main-tenance performed	Cost	Time required	Unused time	Remarks

Courtesy of Machine.Market

https://truckmanualshub.com/

Maintenance inspection form for 6000hrs (supplement)

Except daily (10hrs) inspection projects, the following projects also have to finish after running 6000hrs.

Replace new filter for the suction filter of the cooling system.....☐
Replace the breather valve for the steering hydraulic tank.....☐
Replace the breather valve for the hoisting hydraulic tank.....☐
Change oil for the tank and clean the whole tank and accessories.....☐
Hydraulic system pressure checking
Check system pressure of steering system.....☐
Check pressure of front brake system.....☐
Check pressure of rear brake system.....☐
Check pressure of parking system.....☐
Steering system: Check pre-charge pressure for accumulator first then does check pressure for steering system.
Braking system: Check pre-charge pressure for accumulator first then does check pressure for steering system.
Note: when the data compared with maintenance manual are different. the operator has to check ,fix problems for system to make it work well.
Drain all pressure oil out from the accumulator before when you decided to check pressure of it .
14.Bearing
Replace new bearings for steering drag link.....☐
Replace new bearings for A-shape arm.....☐
Replace new bearings for ends of the A-shape arm.....☐
Replace new bearings for steering cylinder.....☐
Replace new bearings for front suspension cylinder.....☐
Replace new bearings for rear suspension cylinder.....☐
Replace new bearings for A-shape.....☐
Replace new bearings for link.....☐
15.Clean up the dust on the pin shaft of foot-operated valve,and add the lubricating oil.....☐

Checker		Date	
Remarks			

Courtesy of Machine.Market

https://truckmanualshub.com/

Repair and Maintenance Record Table

Date	Repair and main-tenance performed	Cost	Time required	Unused time	Remarks

Courtesy of Machine.Market

https://truckmanualshub.com/

8.6.42 Maintenance inspection form for 10000hrs

Except daily (10hrs) inspection projects, the following projects also have to finish after running 10000hrs.
According to the sample of the oil to determinate whether replace components or not.
1. Engine
Contacting with manufacturer for further information.....☐
2. Transmission
Disassemble, inspect and fix or replace some parts if required which parts has been worn.....☐
Remark: drain, replace filter and refill after 150hrs, if transmission has been fixed.
3. Main reducer and differential assembly,Planetary assembly
Disassemble, inspect and fix or replace some parts if required which parts has been worn.....☐
4. Bearing
Replace new bearings for steering drag link.....☐
Replace new bearings for A-shape arm.....☐
Replace new bearings for ends of the A-shape arm.....☐
Replace new bearings for steering cylinder.....☐
Check the wearing status for oscillating bearings of front suspension cylinder , replace new one if the clearance of the bearing S≥ 0.55mm .Conversely, you could continue to use it
.....☐
Check the wearing status for oscillating bearings of rear suspension cylinder , replace new one if the clearance of the bearing S≥ 0.63mm .Conversely, you could continue to use it
.....☐
Check the wearing status for oscillating bearings of link , replace new one if the clearance of the bearing S≥ 0.63mm .Conversely, you could continue to use it
.....☐
Check the wearing status for oscillating bearings of A-shape , replace new one if the clearance of the bearing S≥ 0.84mm .Conversely, you could continue to use it
.....☐
5.Steering
Check screw between steering arm and front suspension cylinder. If loosed or damaged ,tighten or replace new screw.....☐
6.Clean up the dust on the pin shaft of foot-operated valve,and add the lubricating oil.....☐

Checker		Date	
Remarks			

Courtesy of Machine.Market

https://truckmanualshub.com/

BLANK PAGE

Courtesy of Machine.Market

https://truckmanualshub.com/

9 TECHNICAL DATA

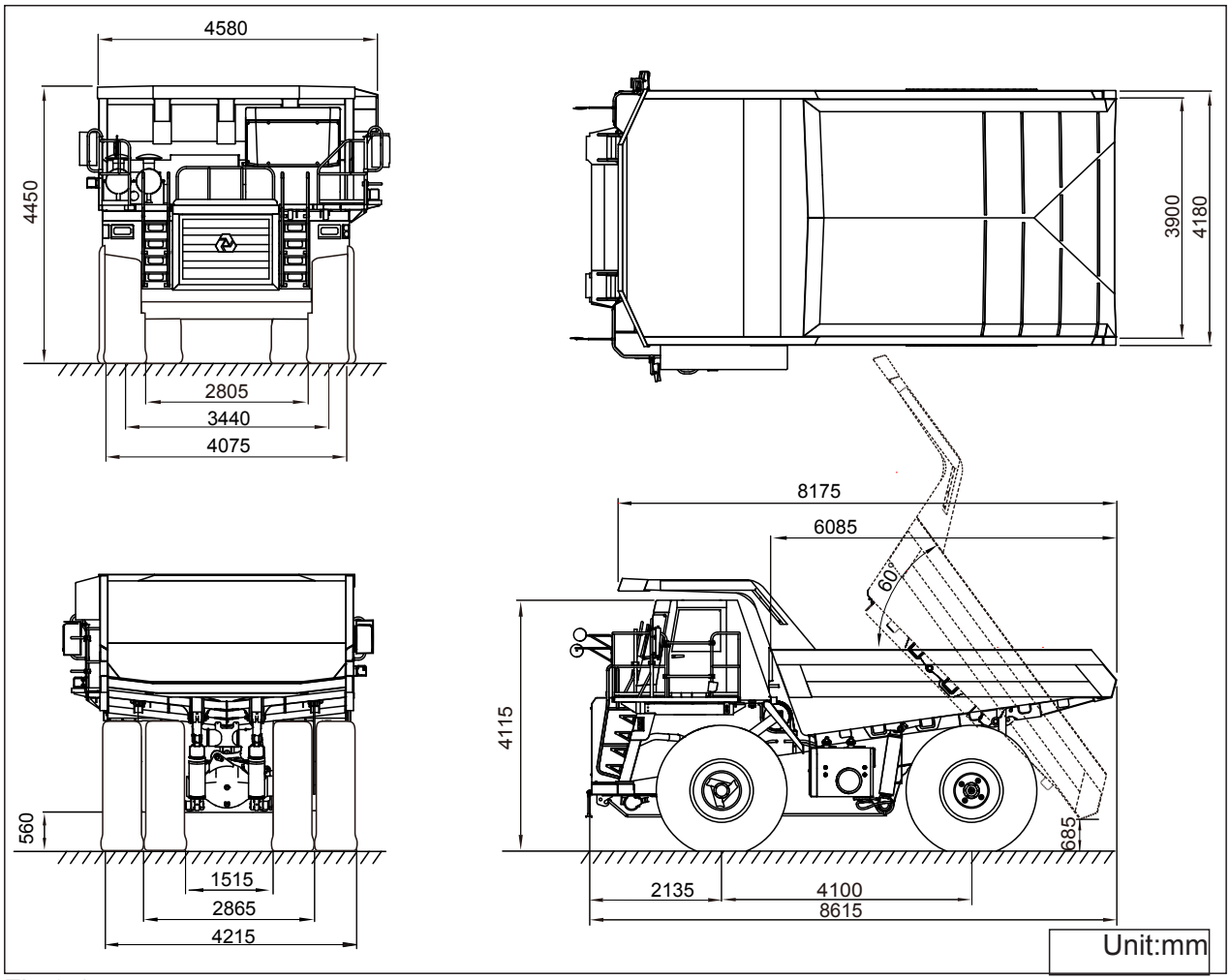

Fig 9.1

Engine

Model·····Cummins engine QSX15-C525-C525

Type·····4 Cycle, water-cooled direct injection, Turbocharged/Aftercooled

Gross power

At the rate of 2100 r/min·····391 KW (525 hp)

Net power

At the rate of 2100 r/min·····360 KW (483 hp)

Note: Power ratings to SAE J1995 June 1990; the engine emission shall comply with TIER

Courtesy of Machine.Market

https://truckmanualshub.com/

II USA EPA/CARB MOH 40 CFR 89 and EU non-highway vehicle standard.
Maximum torque (1400 r/min)·····2440 N• m (1800 lb ft)
Number of Cylinders/Configuration 6V
Bore x Stroke .....137×169mm (5.33×6.65 in)
Total Displacement ·····15 L (915 in^3)

Transmission

Make/model·····Allison H5620AR
Automatic electronic control with soft shift feature.Remote mounted in the frame.
Integral TC 682 torque converter and planetary gearing. Six speeds forward, two reverse. Automatic converter lockup action in all speed ranges. Downshift inhibitor. Integral hydraulic retarder.

Forward gear	1st gear	2nd gear	3rd gear	4th gear	5th gear	6th gear
Ratio	4.00	2.68	2.01	1.35	1.00	0.67
km/h	8.41	12.45	16.57	24.50	33.38	50.00
mile/h	5.28	7.79	10.60	15.30	20.60	32.50

Reversing gear	R1				
Ratio	5.15				
km/h	6.7				
mile/h	4.2				

Drive axle

Heavy duty axle with single reduction spiral bevel gear differential, full floating axle shafts, and planetary reduction at each wheel.

Ratios:

Differential·····3.73 : 1
Planetary·····5.80 : 1
Total reduction·····21.63 : 1

Suspension

Courtesy of Machine.Market

https://truckmanualshub.com/

Front: Macpherson type independent suspension with variable rate ,nitrongen/oil cylinder for effective absorption of road shocks
Rear: Variable rate nitrogen/oil cylinders with A-frame linkage,lateral stabilizer bar .
Maximum strut stroke:
Front·····300 mm (11.8 in)
Rear·····186 mm (7.3 in)
Maximum rear axle oscillation·····±6.5°

Wheel and tyres

Wheel rim width·····15in
Tyre·····21.00-35/(36PR)E-4
Note: Under certain working conditions,TKPH (ton-km/h)capabilities of standard tyres could be exceeded.consult tyre manufactures for optimum tyre selection.

Brakes

Service:
All hydraulic brake system control.Transmission PTO mounted pressure compensating piston pump provides hydraulic pressure for brake and steering. Independent circuits front and rear.Each circuit incorporates a accumulator which stores energy to provide instant braking response.
Front brake circuit pressure·····15.9MPa (2300 lbf/ in^2)
Rear brake circuit pressure·····5.2MPa (750 lbf/in^2)
Accumulators:
Nitrogen precharge pressure·····5.5MPa (800 lbf/in^2)
Front:
Type·····Dry disc with 1 calliper per wheel
Disc diameter·····710 mm (28 in)
Pad area,total·····1400 cm^2 (217 in^2)
Rear:
Type·····Oil cooled, multiple friction discs,completely sealed from dirt and water.
Braking surface, total·····49000 cm^2 (7595 in^2)
Parking:
Application of rear brakes by springs in brake

Courtesy of Machine.Market

https://truckmanualshub.com/

disc pack.Hydraulically released.
Hold-off pressure·····8.3MPa
(1200 lbf/in^2)

Steering system

Independent hydrostatic steering with closed-centre steering valve, accumulator and pressure compensating piston pump.
Accumulator provides uniform steering regardless of engine speed. In the event of loss of engine power it provides steering of approximately two lock-to-lock turns.
A low pressure indicator light warns of system pressure below 11.5MPa (1660 lbf/in^2).
Steering meets ISO 5010 and SAE J53.
Steering angle (left /right)·····±40°
Minimun turning radius(SAE).....9400mm

Hoist system

It is set up separately from the power hydraulic system.Two body hoist cylinders are mounted between the frame rails. Cylinders are two-stage with power down in the second stage.
System pressure·····180bar
(2610 lbf/in^2)

Hoist pump:
Type·····Gear type
Capacity at (at 2100 r/min)·····307 L/min
（81US gal/min）

Control valve:
Type·····Servo control, neutral gear open
Body raise time·····13 s
Body lower time·····11 s

Body

Longitudinal 'V' type floor with integral transverse box-section stiffeners. The body is exhaust heated and rests on resilient impact absorption pads.
Body wear surfaces are high hardness abrasion resistant steel.

Plate thicknesses:
Floor·····18 mm (0.70 in)
Side·····10 mm (0.39 in)

Courtesy of Machine.Market

https://truckmanualshub.com/

Front lower·····10 mm (0.39 in)
Deluxe operator cabin with integrated ROPS/ FOPS conform to ISO 3471 and SAE JI040C Fed86.

Volume:
Struck(SAE std) ·····22m^3(28.8yd^3)
Heaped 2:1 (SAE std) ·····29.5m^3(38.6yd^3)

Frame
Highly rigid frame with the whole box-shaped section, which is equipped with anti-twisting beam, is adopted. Integral front bumper and closed-loop crossmember are equipped. Front and rear beam, twisting drum, rear mounting rack and bumper are made of low-carbon steel. At the stress concentrated areas, cast steel parts with high tenacity are used, and in this way, the frame boasts high tenacity and stronger impact resistance.

Cab
Large area of windscreen gives operator an all-around visibility. Acoustic lining material provides quiet operator space. Suspension seat reduces vibration efficiently.
The cab provides a sound exposure Leq (equivalent sound level) of less than 78 dB(A) when tested with doors and windows closed.

Maintenance service capacities

Description	Maintenance volume	
	L	US gal
Engine crankcase and filters	55	14.6
Transmission and filters	85	22.5
Cooling system	130	34.4
Fuel tank	470	124.4
Steering hydraulic tank	63	16.7
Steering system	71	18.8
Lifting hydraulic tank	158	41.8

Courtesy of Machine.Market

https://truckmanualshub.com/

Lifting and brake cooling system	237	67.2
Planetaries (total)	43	11.4
Differential	52	13.7
Front ride strut (each)	19	5.0
Rear ride strut (each)	16.0	4.2
Power takeoff	4	1.1

Typical noise levels

Operator ear (ISO 6394)·····78dB
*Exterior sound rating (ISO 6395) ·····89dB
*The above result is for the mode giving the highest exterior sound level when measured and operated as per the prescribed procedures of the standard. Results shown are for the vehicle in base configuration.
Note: Noise Level Exposure to the operator and bystander personnel may be higher depending upon proximity to buildings, rock piles, machinery etc.. The actual job site Noise Level Exposure must be measured and applicable regulations complied with in respect to Employee Hearing Protection.

Vehicle weights (Mass)

Vehicle weights (Mass)		
	kg	lb
Chassis, with hoists Body, standard Net weight	28200 8600 36800	61858 18865 80723
Rated loading capacity	45000	98710
Maximum gross weight*	81800	179432
*Maximum total weight of truck includes alternative device, all the accessories and full fuel tank and load.		
Weight distribution Empty Loaded	Front axle 49% 33%	Rear axle 51% 67%

Courtesy of Machine.Market