https://truckmanualshub.com/

MECALAC

OPERATING INSTRUCTIONS
FRONT LOADER (Translation)

GB

AF 1050 / AF 1200

MECALAC Baumaschinen GmbH Am Friedrichsbrunnen 2 D-24782 Büdelsdorf
Telefon (+49) (0)4331/351-325 Internet: www.mecalac.de
Telefax (+49)(0)4331/351-404 E-Mail: info@mecalac.de

https://truckmanualshub.com/

You will find the

spare parts documentation

online at:

https://www.mecalac.de/abm_doc/

Log in as final customer and specify the **FIN** number (truck identification number) of your MECALAC truck. When you already own an MECALAC truck, you can also view the spare parts documentation here. To do so, please specify the **FIN** number of this truck.
If required, you can print the documentation.

https://truckmanualshub.com/

Introduction

Preface

MECALAC's swivel shovel loaders, articulated loaders and loader excavators with backhoe are machines included in **MECALAC's** vast product range covering a wide variety of working tasks.

Decades of experience in the construction of earth-moving machines, the wide range of attachments available as well as modern production facilities, careful testing and highest quality demands guarantee the highest degree of reliability of your **MECALAC** machine.

The documentation delivered by the manufacturer includes the following:

- Loader operating instructions
- Engine operating instructions
- Loader spare parts list (https://www.ahlmann.com/abm_doc/)
- Engine spare parts list
- EC conformity declaration

Operating instructions

The operating instructions contain all the information which the user requires for operation and maintenance.

In the "Maintenance" section, all maintenance work and operation tests are described which can be carried out by trained personnel.

This section does not cover more extensive maintenance work that is reserved to personnel authorized and trained by the manufacturer. In particular, this applies to facilities governed by Motor Vehicle Construction and Use Regulations and the Regulations for the Prevention of Accidents.

Due to the construction modifications reserved by the manufacturer, there may be differences in the figures; however, this has no influence on the technical contents.

How to use this manual

Begriffserläuterungen

- The designations **"left"<CTRACK 0>** and **"right"<CTRACK 0>** are to be seen from the driver's seat in the driving direction.
- Special equipment
  means: not fitted in series.

Information about illustrations

- (3-35)
  means: chapter 3, fig. 35
- (3-35/1)
  means: chapter 3, fig. 35, item 1
- (3-35/arrow)
  means: chapter 3, fig. 35, ←

https://truckmanualshub.com/

Abbreviations used

UVV = Unfallverhütungsvorschrift (Accident Prevention Regulations)

StVZO = Straßenverkehrzulassungsordnung (German Traffic Regulations)

Edition: 11.2013
Printed: 11.2013

https://truckmanualshub.com/

Table of Contents

1 Fundamental safety instructions

1.1 Warnings and symbols ..... 1 - 2
1.2 Proper use of the loader ..... 1 - 2
1.3 Organizational measures ..... 1 - 2
1.4 Selection of personnel and necessary qualifications; basic responsibilities ..... 1 - 3
1.5 Safety Information for Certain Operating Phases ..... 1 - 4
1.5.1 Normal Operation ..... 1 - 4
1.5.2 Special work regarding the use of the machine and elimination of defects during work; disposal ..... 1 - 7
1.6 Instructions regarding special categories of danger ..... 1 - 9
1.6.1 Electrical energy ..... 1 - 9
1.6.2 Hydraulics ..... 1 - 10
1.6.3 Noise ..... 1 - 10
1.6.4 Oil, grease and other chemical substances ..... 1 - 10
1.6.5 Gas, dust, steam, smoke ..... 1 - 11
1.7 Transport and towing; recommissioning ..... 1 - 11
1.8 Safety information for the contractor or the contractor's authorized personnel ..... 1 - 12
1.8.1 Organizational measures ..... 1 - 12
1.8.2 Selection of personnel and necessary qualifications; basic responsibilities ..... 1 - 12

2 Signs

3 Protection against theft

3.1 Identifying features on the loader ..... 3 - 2
3.2 Parking the loader ..... 3 - 2
3.3 Drive-away interlocks ..... 3 - 3
3.3.1 Drive-away interlock transponder ..... 3 - 3
3.3.2 Encodable drive-away interlock ..... 3 - 3

4 Description

4.1 Overview ..... 4 - 2
4.2 Loader ..... 4 - 3
4.3 Wheel change ..... 4 - 6
4.4 Controls ..... 4 - 7
4.4.1 Multifunction panel ..... 4 - 9
4.4.2 Fuses/relays ..... 4 - 10

5 Operation

5.1 Checks before start-up ..... 5 - 2
5.2 Commissioning ..... 5 - 2
5.2.1 Start the diesel engine ..... 5 - 2
5.2.2 Winter operation ..... 5 - 3
5.2.2.1 Fuel ..... 5 - 3
5.2.2.2 Engine oil change ..... 5 - 3
5.2.2.3 Oil change, hydraulic system ..... 5 - 3
5.2.2.4 Anti-freezing agent for windshield washer system ..... 5 - 4
5.2.3 Driving the loader on public roads ..... 5 - 4
5.2.4 Working with the loader ..... 5 - 5
5.2.5 Heater and ventilation system ..... 5 - 6
5.2.5.1 Setting the air flow ..... 5 - 6
5.2.5.2 Switch on the heater ..... 5 - 6
5.3 Decommissioning the loader ..... 5 - 7
5.3.1 Parking the loader ..... 5 - 7

https://truckmanualshub.com/

5.3.2 Switch off the diesel engine ..... 5 - 7
5.3.3 Switching off the heater and ventilation system ..... 5 - 7
5.3.4 Leaving the loader ..... 5 - 7
5.4 Adjusting the driver's seat ..... 5 - 8
5.4.1 Grammer seat ..... 5 - 8
5.4.2 KAB seat ..... 5 - 10
5.5 Switching the steering type ..... 5 - 11
5.5.1 Overview of switching options ..... 5 - 11

6 Attachments

6.2 Mounting and dismounting attachments with hydraulic connections ..... 6 - 2
6.2.1 Multi-purpose bucket ..... 6 - 2
6.3 Mounting and dismounting rear attachments ..... 6 - 4
6.3.1 Rear mounting plate ..... 6 - 4
6.4 Use of additional attachments ..... 6 - 5

7 Rescue, towing, lashing, craning

7.1 Rescue, towing, lashing ..... 7 - 2
7.1.1 Towing the front loader if the engine has failed of if the propulsion drive has failed ..... 7 - 2
7.1.1.1 Towing the front loader if the engine has failed ..... 7 - 2
7.1.1.2 Towing the front loader if the propulsion drive has failed ..... 7 - 4
7.2 Lifting by crane ..... 7 - 5

8 Maintenance

8 Maintenance schedule ..... 8 - 1
8.1 Notes regarding maintenance ..... 8 - 2
8.2 Maintenance work ..... 8 - 3
8.2.1 Engine inspections ..... 8 - 3
8.2.1.1 Engine oil level check ..... 8 - 3
8.2.1.2 Cooling water check ..... 8 - 3
8.2.1.3 V-belt check ..... 8 - 4
8.2.1.4 V-belt tension check ..... 8 - 4
8.2.1.5 Other important engine checks ..... 8 - 4
8.2.2 Oil level check for axles ..... 8 - 4
8.2.2.1 Rear axle ..... 8 - 4
8.2.2.2 Planetary gear ..... 8 - 4
8.2.2.3 Front axle ..... 8 - 5
8.2.2.4 Oil level check of ancillary/distribution gear ..... 8 - 5
8.2.3 Oil level check, hydraulic oil reservoir ..... 8 - 5
8.2.4 Fuel filter ..... 8 - 6
8.2.4.1 Draining the water trap of the fuel filter ..... 8 - 6
8.2.4.2 Replacing the fuel filter ..... 8 - 6
8.2.5 Oil change, engine ..... 8 - 7
8.2.6 Changing the engine oil filter insert ..... 8 - 9
8.2.7 Oil change, axles ..... 8 - 10
8.2.7.1 Rear axle ..... 8 - 10
8.2.7.2 Planetary gear ..... 8 - 10
8.2.7.3 Front axle ..... 8 - 11
8.2.7.4 Oil change of ancillary/distribution gear ..... 8 - 12
8.2.8 Oil change, hydraulic system ..... 8 - 12
8.2.9 Changing the hydraulic oil filter insert ..... 8 - 13
8.2.10 Maintaining/replacing the air filter ..... 8 - 14
8.2.11 Replacing the safety cartridge ..... 8 - 15
8.2.12 Replacing the starter battery ..... 8 - 15
8.2.13 Checking/topping up the brake fluid level ..... 8 - 16

https://truckmanualshub.com/

8.3 Grease lubrication points ..... 8 - 16
8.3.1 bucket assembly ..... 8 - 16
8.3.2 Rear axle ..... 8 - 18
8.3.3 Rear axle pivot bolts ..... 8 - 18
8.3.4 Front axle ..... 8 - 19
8.3.5 Engine hood ..... 8 - 19
8.3.6 Multi-purpose bucket ..... 8 - 19

10 Circuit diagrams

10.1 Electric wiring diagram ..... 10 - 3
10.2 Hydraulic circuit diagram ..... 10 - 7

11 Technical data (loader)

1.1 **AF 1050** ..... 11 - 2
11.1.1 Loader ..... 11 - 2
11.1.2 Engine ..... 11 - 2
11.1.2.1 48 kW engine ..... 11 - 2
11.1.2.2 55 kW engine ..... 11 - 2
11.1.3 Starter ..... 11 - 2
11.1.4 Alternator ..... 11 - 2
11.1.5 Hydrostatic drive motor ..... 11 - 2
11.1.6 Axle loads ..... 11 - 3
11.1.7 Tyres ..... 11 - 3
11.1.8 Steering system ..... 11 - 3
11.1.9 Brakes ..... 11 - 3
11.1.10 Electrical system ..... 11 - 3
11.1.11 Hydraulic system ..... 11 - 4
11.1.12 Fuel supply system ..... 11 - 4
11.1.13 Heater and ventilation system ..... 11 - 4
11.1.14 Suction/return flow filter ..... 11 - 4
11.1.15 Electric contamination indicator ..... 11 - 4
11.1.16 Combination cooler with temperature-controlled fan ..... 11 - 4
11.1.17 Noise emission ..... 11 - 4
11.2.18 Vibrations ..... 11 - 4
11.2 **AF 1200** ..... 11 - 5
11.2.1 Loader ..... 11 - 5
11.2.2 Engine ..... 11 - 5
11.2.2.1 55 kW engine ..... 11 - 5
11.2.2.2 63 kW engine ..... 11 - 5
11.2.3 Starter ..... 11 - 5
11.2.4 Alternator ..... 11 - 5
11.2.5 Hydrostatic drive motor ..... 11 - 5
11.2.6 Axle loads ..... 11 - 6
11.2.7 Tyres ..... 11 - 6
11.2.8 Steering system ..... 11 - 6
11.2.9 Brakes ..... 11 - 6
11.2.10 Electrical system ..... 11 - 6
11.2.11 Hydraulic system ..... 11 - 7
11.2.12 Fuel supply system ..... 11 - 7
11.2.13 Heater and ventilation system ..... 11 - 7
11.2.14 Suction/return flow filter ..... 11 - 7
11.2.15 Electric contamination indicator ..... 11 - 7
11.2.16 Combination cooler with temperature-controlled fan ..... 11 - 7
11.2.17 Noise emission ..... 11 - 7
11.2.18 Vibrations ..... 11 - 7

https://truckmanualshub.com/

12 Technical data (attachments)

12.1 **AF 1050** ..... 12 - 2
12.1.1 Buckets ..... 12 - 2
12.1.2 Fork-lift attachment ..... 12 - 4
12.1.3 Lifting hook ..... 12 - 4
12.2 **AF 1200** ..... 12 - 6
12.2.1 Buckets ..... 12 - 6
12.2.2 Fork-lift attachment ..... 12 - 8
12.2.3 Lifting hook ..... 12 - 8

13 Additional options

13.1 Additional options ..... 13 - 2
13.1.1 Hand throttle ..... 13 - 2
13.1.2 Inching speed ..... 13 - 2

https://truckmanualshub.com/

Safety regulations

https://truckmanualshub.com/

1 Fundamental safety instructions

1.1 Warnings and symbols

In this operation manual, the following designations or symbols are used for important information.

NOTE
Extra information about the economical use of the loader.

CAUTION
Special information for regulations and prohibitions for avoiding damage.

DANGER
Information or regulations and prohibitions for prevention of damage to persons or extensive damage to goods.

1.2 Proper use of the loader

1.2.1 This machine was designed according to the state of the art and recognised safety rules. Nevertheless, use of the machine may cause danger for the user or third parties or impairments to the machine or other objects.

1.2.2 The machine and manufacturer-approved attachments may only be used in a technical non-objectionable condition, taking all safety regulations into account, especially with regard to the operating manuals (machine and engine). In particular, defects which could have a detrimental effect on the safety of the machine should be eliminated immediately.

1.2.3 The machine is designed exclusively for the purposes described in this operating manual. Any other use beyond these purposes is regarded as being improper use. The manufacturer is not liable for any damage caused in this connection. The risk is solely that of the user.

Authorised use of the machine also requires that the operating manual (machine and engine) be heeded and the inspection and maintenance conditions are complied with.

1.3 Organizational measures

1.3.1 The operating manuals (machine and engine) must be available at all times and at the site where the machine is in operation.

https://truckmanualshub.com/

1.3.2 In addition to the operating manuals (machine and engine), the general applicable and other binding regulations for the prevention of accidents (especially the safety regulations of the German Trade Association - VBG 40) as well as the regulations for environmental protection must be observed; personnel must be instructed accordingly. Also heed all regulations governing public traffic.

1.3.3 The personnel who are to work with the machine must read the operating manuals (machine and engine) before starting work, especially the chapter concerning safety precautions.
This also applies to personnel working occasionally with the machine, e.g. during maintenance work.

1.3.4 The driver must wear a seat belt during operation.

1.3.5 Personnel working with the machine must not wear long flowing hair, loose clothing or jewellery, including rings. Danger of injuries, e.g. by getting caught or being pulled in.

1.3.6 All safety and danger plates on the machine must be observed!

1.3.7 All safety and danger plates must be attached to the machine and must be kept legible.

1.3.8 In case of modifications to the machine, especially in case of damage or changes in the operating behaviour of the machine which could influence its safety, stop the machine immediately and inform the responsible person in charge about the incident.

1.3.9 Do not make any modifications or conversions to the machine which could affect safety without the manufacturer's consent. This also applies to the installation and adjustment of safety devices, valves and welding of supporting parts.

1.3.10 Check the hydraulic system, especially hydraulic pipes, at regular intervals for defects and immediately eliminate any defects found.

1.3.11 The inspection periods specified in the operating manual (machine and engine) and the maintenance plan must be observed.

1.4 Selection of personnel and necessary qualifications

Basic responsibilities

1.4.1 The machine may be driven and maintained only by personnel selected by the employer for this purpose.

https://truckmanualshub.com/

These persons must:

- have attained the age of 18 years,
- be physically and intellectually suitable,
- have been instructed in the operation or maintenance of the machine and must have demonstrated their ability to their employer,
- must be expected to carry out the work conveyed to them in a diligent manner.

1.4.2 Electrical work on the machine may be carried out only by a qualified electrician or persons supervised by a qualified electrician according to the electrical regulations.

1.4.3 Only qualified specialists may carry out work on the chassis, the brake and steering system.

1.4.4 Only personnel with special experience and the necessary know-how are permitted to carry out work on the hydraulic system.

1.5 Safety Information for Certain Operating Phases

1.5.1 Normal Operation

1.5.1.1 Other persons must not be transported!

1.5.1.2 Start and drive the machine from the driver's seat only!

1.5.1.3 Observe the control lamps according to the operation manual (machine and engine) during starting and switching-off operation!

1.5.1.4 Before commencing work / driving, make sure that the brakes, steering, signal beacons and lights function!

1.5.1.5 Before moving the machine, always check that the attachments are safely stowed so that no accident may occur!

1.5.1.6 Before commencing work, make yourself familiar with the working environment. This means observing obstacles on the working site, quality and resistance of the soil, undertaking the necessary protection precautions between the building site and public traffic.

1.5.1.7 Before starting the machine, make sure that no person is endangered by the moving machine!

1.5.1.8 Take measures so that the machine can be operated **only** in a safe and functional manner. The machine may only be operated when all safety devices, e.g. detachable safety devices and sound absorption, exist and function.

https://truckmanualshub.com/

1.5.1.9 Avoid any action which appears to be dangerous!

1.5.1.10 Persons must not be carried in the working equipment, e.g. in the attachments!

1.5.1.11 The operator may carry out work with the machine only if no persons are in the danger zone.
The danger zone is the area near the machine where persons may be injured

- by work-induced movements of the machine,
- by work attachments and devices,
- by loads swinging out,
- by dropping loads,
- by attachments falling from the machine.

1.5.1.12 In case of danger to persons, the operator must give appropriate warning signs. It may be necessary to stop work.

1.5.1.13 In case of functional defects, stop the machine **immediately** and secure it. Eliminate defects immediately!

1.5.1.14 Check the machine at least once every shift for external visible damage and defects. Report any defects (including changes in the operational behaviour) immediately to the person in charge. If necessary, stop the machine immediately and secure it.

1.5.1.15 The driver may slew the attachments in overhead driving, operating and working areas only if these areas are suitably safeguarded by protective roofing. These protection roofs must offer appropriate safety against loads and falling goods. If you are in doubt, assume **no** protection roofs are present.

1.5.1.16 When driving, the attachment is to be kept as close to the ground as possible.

1.5.1.17 Please observe the applicable traffic regulations when driving on public roads, paths or open spaces. The machine must be brought into road-worthy condition beforehand.

1.5.1.18 Make sure to always switch on the lights in the dark and when visibility is poor.

1.5.1.19 If the lights of the machine are not adequate for the safe execution of certain work, additional lighting must be provided on the working site, especially at dumping points.

1.5.1.20 Should the driver's sight of his driving and working area be restricted due to work-induced influences, he must be given guidance or he must safeguard the working area by a firm barrier.

https://truckmanualshub.com/

1.5.1.21 Only reliable persons may act as guides. They must be informed of their duties prior to commencing work.

1.5.1.22 The driver and guide must agree on signals for communication. These signals may only be given by the driver and guide.

1.5.1.23 The guide must be easily recognizable – e.g. by wearing warning clothing – and must always be in the driver's field of vision.

1.5.1.24 When passing under subways, bridges, tunnels, electrical overhead lines, etc., make sure that there is adequate clearance!

1.5.1.25 Maintain adequate clearance when working at the edge of quarries, pits, rubbish dumps and embankments to eliminate any danger of the machine plunging down. The contractor or his deputy must stipulate the distance from the edge, taking the soil bearing capacity into consideration.

1.5.1.26 The machine may only be used at stationary dumping areas when firmly integrated installations are provided to prevent the machine from running or sliding down.

1.5.1.27 Avoid such work which could have a detrimental effect on the stability of the machine.
The following may affect the stability:
- overloading,
- ground that is too soft,
- abrupt acceleration or deceleration of driving or working movement,
- reversing out of a high driving speed,
- working on slopes,
- driving too quickly round sharp bends,

1.5.1.28 Do not traverse across slopes. Always carry working equipment and loads near the ground, especially when driving down slopes. Sudden cornering is forbidden!

1.5.1.29 On steep inclines and gradients, the load is to be carried on the uphill side.

1.5.1.30 Reduce speed before inclines; always adapt the speed of the machine to the local conditions!
Never change into low gear when driving on slopes, but rather before the slope!

1.5.1.31 Reversing over a longer period must be avoided!

1.5.1.32 When leaving the machine, always safeguard the machine to prevent it from unintentionally rolling away; prevent non-authorised persons from using it!

1.5.1.33 The driver must not leave the machine if the attachments are not lowered or safeguarded.

1.5.1.34 During breaks and after work hours, the driver must park the machine on solid and, if possible, level ground and safeguard it against unintentionally rolling away.

https://truckmanualshub.com/

1.5.2 Special work regarding the use of the machine and elimination of defects during work; disposal

1.5.2.1 The dates for adjustment work, maintenance work and inspections laid down in the operating manual (machine and engine) must be strictly observed. This also applies to information regarding the replacement of parts/ part equipment. This work may only be executed by skilled personnel.

1.5.2.2 For all work involving the operation, conversion or adjustment of the machine and its safety devices as well as inspection, maintenance and repair work, please observe the switch-on and switch-off procedures in accordance with the operating manual (machine and engine) as well as the related instructions for maintenance work.

1.5.2.3 The engine must be switched off before maintenance or repair work is carried out.

1.5.2.4 The stability of the machine or the attachments must be guaranteed at all times during maintenance and repair work.

1.5.2.5 Maintenance and repair work may only be carried out when the attachment is set down on the ground or supported or when equivalent measures against unintentional movement were taken.
During maintenance and repair work under the bucket arm:

- the bucket arm must be mechanically supported, e.g. insert the bucket arm support (option) (1-1/arrow)
- secure the hand lever for the working and auxiliary hydraulics (actuate toggle switch 1-2/arrow **„top“**).

1.5.2.6 If necessary, secure the maintenance area on a large scale.

1.5.2.7 The machine must be protected from unintentionally starting after it has been switched off for maintenance and repair work:

- remove the ignition key and
- attach a warning sign to the main battery switch.

This applies especially to works on the electrical equipment.

1.5.2.8 Individual pieces and large assemblies must be carefully secured to hoisting equipment when being replaced to avoid any damage. Only suitable and technically sound hoisting equipment may be used as well as crane equipment with adequate payload. Do not stand or work underneath suspended loads!

1.5.2.9 Only experienced personnel should be entrusted with the securing of loads! Loads must be secured so that they cannot slip or fall down.

1.5.2.10 Attached loads may only be moved with the machine when the road is graded.

Figure 1-1

Figure 1-2

https://truckmanualshub.com/

1.5.2.11 When working with hoisting equipment / elevators the slingers may only work with the approval of the driver and from the side of the boom. The driver may only give his consent if the machine is standing still and the working attachment is not being moved.

1.5.2.12 Persons assisting with the guidance of loads and slingers may only stay in visual or communication reach of the driver.

1.5.2.13 The operator must move the load as close to the ground as possible and avoid swivelling the load.

1.5.2.14 The operator may not move the load over the heads of persons.

1.5.2.15 In the case of erection work that must be carried out above normal human height, suitable safety ascent devices and working platforms must be used. Do not use engine parts, especially attachments such as buckets, as climbing and descending facilities. Use safety harnesses when working at very great heights. All handles, steps, railings, platforms, scaffolds, and ladders must be kept free from dirt and ice.

1.5.2.16 Clean the machine, especially connections and screw connections, before commencement of maintenance work and make sure that the machine is free from oil, fuel oil or dirt. Do not use aggressive detergents. Use lintless cleaning rags!

1.5.2.17 Before cleaning the machine with water or steam jet (high pressure cleaning unit) or with detergent, protect all areas where water/steam/detergent may penetrate and affect the functions or safety of the machine by a suitable cover or by applying tape. In particular, engine components such as the injection pump, generator, generator governor and starter are very delicate.

1.5.2.18 After cleaning, completely remove all protective covering and tape.

1.5.2.19 After cleaning, check all fuel, engine oil and hydraulic oil pipelines for leakages, loose connections, abraded parts and damage. Eliminate defects immediately!

1.5.2.20 Always fasten screw connections after completion of maintenance and repair work.

1.5.2.21 Should it be necessary to dismantle safety devices during mounting, maintenance or repair work, these safety devices must be re-installed and checked carefully after completed maintenance and repair work.

1.5.2.22 Make sure that fuel, accessory materials and exchanged parts are safely disposed of with no danger to the environment.

1.5.2.23 The machine should be checked by a specialist before commissioning and after essential modifications before it returns to service.

https://truckmanualshub.com/

1.5.2.24 The machine must be checked by a specialist once a year. Furthermore, a specialist must check the machine whenever necessary according to operating conditions.

1.5.2.25 The test results must be recorded and kept in the archives at least until the following inspection date.

1.6 Instructions regarding special categories of danger

1.6.1 Electrical energy

1.6.1.1 Only use original fuses with stipulated ratings. Immediately switch off the machine if the electrical supply fails.

1.6.1.2 When working near overhead lines and overhead wires, a safety clearance must be kept between the machine and its working equipment in order to prevent sparking over. The safety clearance depends on the nominal voltage of the overhead/wire line. This also applies to the distance between the lines and to the attachments and slung loads.
The following safety clearances must be observed to meet the above mentioned requirement:

Nominal voltage			Safety clearance
(kilovolts)			(meters)
	to	1 kV	1.0 m
above 1 kV	to	110 kV	3.0 m
above 110 kV	to	220 kV	4.0 m
above 220 kV	to	380 kV	5.0 m
unknown nominal voltage			5.0 m

When approaching overhead lines, all working movements of the machine must be taken into consideration, e.g. the position of jibs, the swinging of ropes and the dimensions of attached loads.
In addition, attention must be paid to any roughness of soil which could cause an inclined position of the machine, thus getting it closer to the overhead line.
The fact that overhead lines may swing out during windy weather and may reduce the distance must also be taken into consideration.

1.6.1.3 In the case of sparking over, the driver must bring the machine out of the danger area by lifting or lowering the attachments or by swivelling away or driving the machine out of the danger area. If this is not possible then the following rules must be observed:
- Do not leave the driver's cabin!
- Warn persons standing near the machine not to approach or touch the machine!
- Give immediate instructions to have the power cut off!
- Leave the machine only when it is sure that the electricity in the damaged / contacted power line is switched off so that the line is dead!

https://truckmanualshub.com/

1.6.1.4 Work on the electrical system or on the operating system may only be carried out by a skilled electrician or by personnel instructed or supervised by such a trained electrician according to electrotechnical regulations.

1.6.1.5 The electrical installation of a machine must be reviewed/inspected at regular intervals. Any defects, e.g. loose connections or scorched cabling, must be eliminated immediately.

1.6.1.6 The main battery switch must be disconnected before inspection, maintenance or repair of machine parts and components so that they are not under power.

1.6.1.7 Electric welding operations may only be performed if the main battery switch has been removed.

1.6.2 Hydraulics

1.6.2.1 Only experts with special expertise and experience may carry out work on the hydraulic system!

1.6.2.2 All pipelines, hoses and screw connections must be checked regularly for leakages and visible damage! Immediately repair such defects! Spurting hydraulic oil may cause injuries and fire.

1.6.2.3 Those hydraulic system segments which are to be opened must be depressurised before commencement of the repair work according to the assembly group description!

1.6.2.4 The hydraulic pipelines must be correctly laid and connected! Do not mix up the connections. Spare parts must meet the technical requirements of the manufacturer. Original spare parts ensure the fulfilment of these requirements.

1.6.2.5 The factory settings of hydraulic components (e.g. the maximum permissible speed of the axial piston engine) must not be altered. Any adjustment will render the warranty invalid.

1.6.3 Noise

Sound protection equipment must be in the protective position during operation of the machine.

1.6.4 Oil, grease and other chemical substances

1.6.4.1 The relevant safety regulations must be observed when handling oil, grease or other chemical substances.

1.6.4.2 Caution when working with hot fuel and other accessory materials (danger of burning and scalding).

https://truckmanualshub.com/

1.6.4.3 Caution when working with brake fluid and battery acid.

TOXIC AND CAUSTIC!

1.6.4.4 Be careful when working with fuel.

FIRE HAZARD!

- Before refuelling, switch off the engine and remove the ignition key.
- Do not refuel in an enclosed area.
- Never refuel near open fires or sparks.
- Do not smoke during refuelling.
- Immediately wipe up spilled fuel.
- Keep the machine free of fuel, oil and grease.

1.6.5 Gas, dust, steam, smoke

1.6.5.1 The machine may be operated in closed rooms only if sufficient ventilation is ensured! Ensure sufficient ventilation prior to starting the machine!
The regulations for the respective working site must be strictly observed.

1.6.5.2 Carry out welding, burning and grinding work on the machine only when this is explicitly approved. Otherwise, there is the danger of fire and explosion!

1.6.5.3 Before carrying out welding, burning and grinding work, clean the machine and its vicinity of combustibles and make sure that the room is adequately ventilated.

Explosion hazard!

1.7 Transport and towing; recommissioning

1.7.1 The machine may only be towed if the brakes and steering function.

1.7.2 Towing may be carried out only by means of an adequately dimensioned towing bar in connection with towing devices.

1.7.3 Start towing at a low speed. Persons must not be near the towing bar.

1.7.4 When the machine is loaded and transported, the necessary auxiliary equipment must be fitted to prevent any unintended movement. The tyres must be kept clean of mud, snow and ice so that the machine can drive on ramps without danger of sliding.

1.7.5 Strictly observe the operating manual during recommissioning.

https://truckmanualshub.com/

1.8 Safety information for the contractor or the contractor's authorised personnel

1.8.1 Organizational measures

1.8.1.1 We emphasise that attachments that are not supplied by us are also not tested and approved by us. Use of such products can under certain conditions adversely affect the present constructional qualities of your loader and thus limit the active and passive driving safety. The manufacturer cannot be held responsible for damage that occurs through the use of such products.

1.8.1.2 Make known the position and operation/handling of fire extinguisher (right B-column) and first aid kit!

1.8.1.3 When travelling on public roads, a first-aid kit, a warning triangle and a warning lamp must be available on the vehicle.

1.8.2 Selection of personnel and necessary qualifications; basic responsibilities

1.8.2.1 Only reliable persons are allowed to work on/with the machine. The minimum legal age must be observed.

1.8.2.2 Employ trained or instructed personnel only. Clearly define the competencies of the personnel regarding operation, installation, maintenance and repair work.
Ensure that only authorised personnel may work on/with the machine!

1.8.2.3 Authorise the driver to refuse instructions given by third parties when these instructions are detrimental to the safety of the driver and the machine.

1.8.2.4 Personnel who are to be trained, instructed or working on/with the machine in the scope of professional training must not work on/with the machine unless they are supervised by an experienced person who has been authorised by the employer.

https://truckmanualshub.com/

Signs

https://truckmanualshub.com/

2 Signs

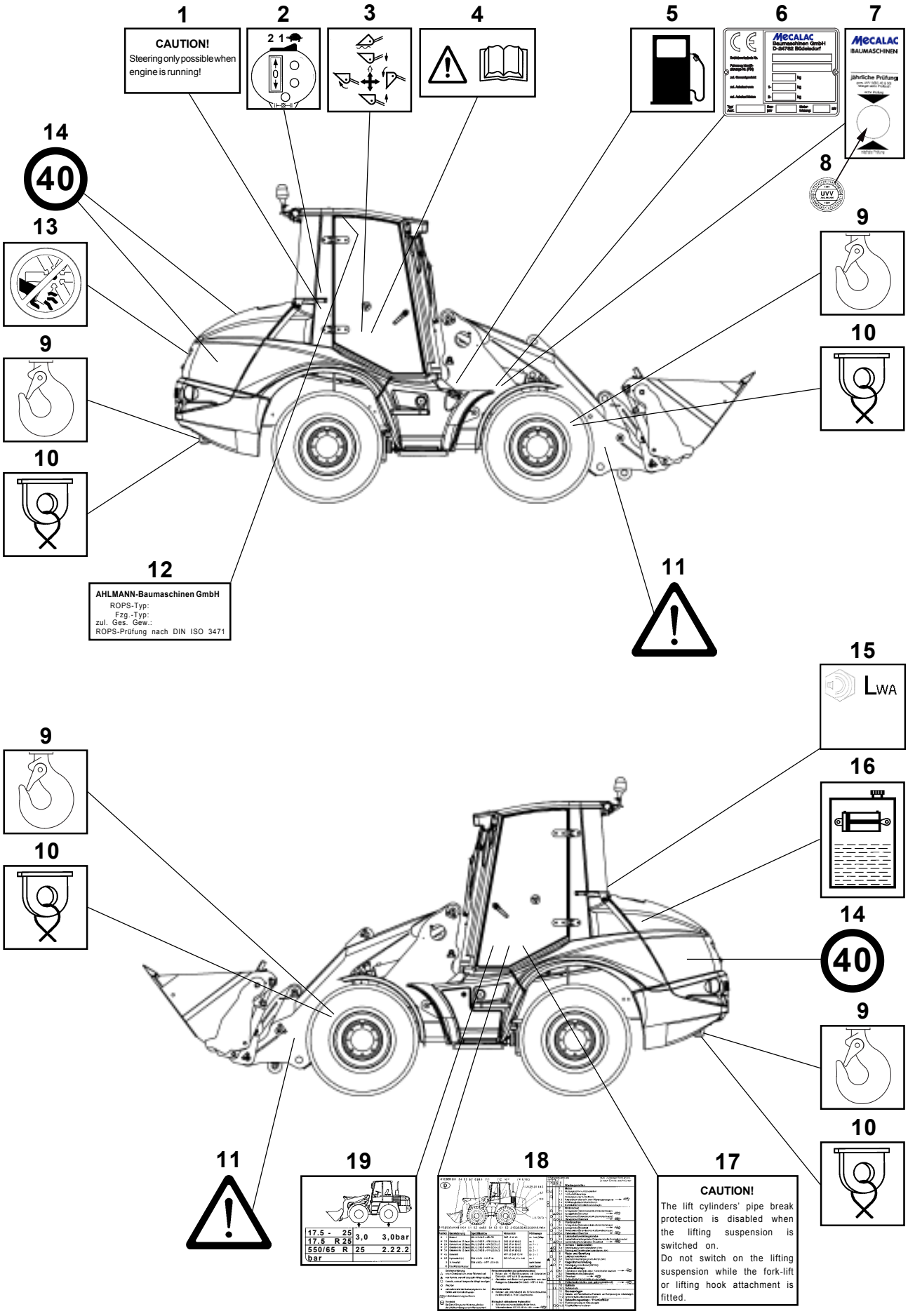

https://truckmanualshub.com/

1 Sign: **CAUTION!** - Steering only possible when engine is running!

2 Symbol: Standard joystick
- Drive switch (4-11/4)
  - Drive direction - forward
    - 0
    - reverse
- Auxiliary hydraulics (4-11/2)
  - Upper pushbutton:
    - Lock attachment
    - Close multipurpose bucket
  - Lower pushbutton:
    - Unlock attachment » in conjunction with 4-8/6 «
    - Open multipurpose bucket
- Gear shift (4-11/1) - 2nd gear
  - 1st gear
  - Alpha max. (turtle symbol)
- Pushbutton for differential lock (4-11/3)

3 Symbol: Working hydraulics
Hand lever for working and auxiliary hydraulics (4-10/1).
- To the front - Lower bucket arm
- To the rear - Lift bucket arm
- To the left - Tilt up quick-change device/attachment
- To the right - Tilt down quick-change device/attachment
- Beyond its pressure point to the front - Floating position

4 Symbol: Read and observe the operating instructions before commissioning.
Make sure that all other users have read the safety instructions!

5 Symbol: Fuel tank

6 Machine type label (includes the identification number of the vehicle)

7 Sign: Annual inspection as per UVV

8 Sign: UVV badge

9 Symbol: Lifting hook

10 Symbol: Lashing eyes

11 Symbol: Stay out of the danger zone

12 Type label: Operator's cabin

13 Symbol: Open only when the engine is not running

14 Sign: Maximum speed

15 Sign: Sound power level (chapt. 11.1.17 and 11.2.17)

16 Symbol: Hydraulic oil tank (below engine hood)

17 Sign: **» Only for loaders with pipe break protection «**
CAUTION!
The lift cylinders' pipe break protection is disabled when the lifting suspension is switched on.
Do not switch on the lifting suspension while the fork-lift or lifting hook attachment is fitted.

18 Sign: Maintenance schedule

19 Sign: Tyre pressure

https://truckmanualshub.com/

https://truckmanualshub.com/

Protection against theft

https://truckmanualshub.com/

Figure 3-1

3 Protection against theft

Instances where construction machines were stolen have considerably increased in recent years.
To make it possible for the police, customs and other authorities to find and identify machines much faster, **MECALAC** construction machines are fitted with the following identifying features:

3.1 Identifying features on the loader

(1) Loader type plate (3-1/arrow). Among other details, the loader type plate also gives the 17-digit **FIN** number (truck identification number) starting with W09.
(2) The **FIN** number is also stamped into the chassis (3-2/arrow).
(3) ROPS plate (3-3/arrow).
This plate gives the name of the manufacturer as well as details on the ROPS type, the loader type and the permissible overall weight.

Figure 3-2

3.2 Parking the loader

(1) Turn the steering wheel fully to the left or the right.

(2) Apply the parking brake (4-12/2).

(3) Tip the quick-change device until
- the tines of the bucket,
- the tines of the fork-lift attachment or
- the boom of the lifting hook, etc.

can be placed on the ground.

(4) Secure the hand lever(s) for the working and auxiliary hydraulics (4-10/1) (actuate toggle switch 1-2/arrow).

(5) Set the drive switch (4-11/4) to “forward” or “reverse”.

(6) Set hydraulic drive stage “I” (4-11/1).

(7) Remove the ignition key.

(8) Remove the main battery switch (8-24/arrow).

(9) Switch working lights (4-9/3) to “2”. *

(10) Switch on the warning beacon (opt.) (4-9/2) *

(11) Switch on the hazard flasher (4-9/4). *

(12) Switch the steering column switch (4-8/2) to the “High beam” position. *

(13) Lock both doors.

(14) Lock the engine hood.

(15) Lock the tank lid.

* In case of short-circuiting, persons in the vicinity should be made aware of the unusually lit machine.

Figure 3-3

https://truckmanualshub.com/

3.3 Drive-away interlocks

3.3.1 Drive-away interlock transponder

(option)
The “transponder for drive-away interlock” is an electronic drive-away interlock that deactivates vital loader functions. If the transponder (e.g. a tag at the ignition key) is taken away from the receiver unit (in the immediate vicinity of the ignition lock), these vital functions are interrupted.

Advantages in case of an insured event:

The transponder for drive-away interlock meets the new, stricter requirements of the insurance companies.

Ask your insurance company for the appropriate details.

3.3.2 Encodable drive-away interlock

(option)
The “encodable drive-away interlock” is an electronic drive-away interlock that deactivates vital loader functions.
A digital code lock releasing these loader functions is activated when the correct code has been entered.
This code number can be changed as often as desired.

Advantages in case of an insured event:

Ask your insurance company for the appropriate details.

https://truckmanualshub.com/

https://truckmanualshub.com/

Description

https://truckmanualshub.com/

4 Description

4.1 Overview

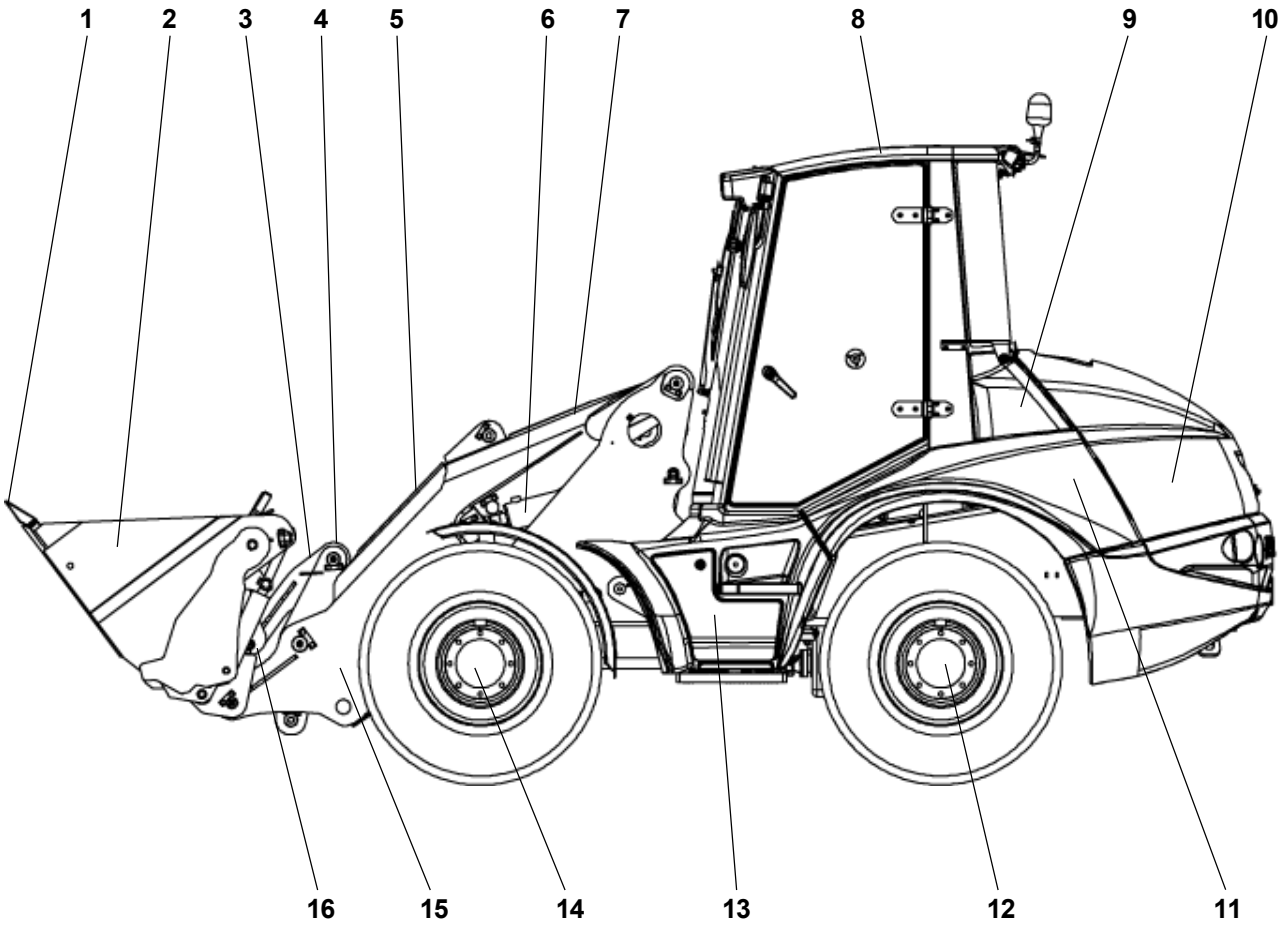

Figure 4-1

1 - Bucket protection
2 - Bucket/attachment
3 - Tip lever
4 - Deflection lever
5 - Tip cylinder
6 - Lift cylinder
7 - Compensation cylinder
8 - Driver's cab
9 - Battery (right truck side – behind maintenance flap)
10 - Drive motor
11 - Hydraulic oil tank/filler neck (underneath the engine hood)
12 - Rear axle
13 - Tool box
14 - Front axle
15 - Bucket arm
16 - Quick-change device
17 - Fuel tank, steps at right loader side (not shown)

https://truckmanualshub.com/

4.2 Loader

Undercarriage

The axial piston pump for the hydraulic drive is driven by the diesel engine. Pressure hoses for extremely high pressure connect the axial piston pump with the axial piston engine. The axial piston engine is directly flanged to the distribution gear of the rear axle (with planetary gear). The distribution gear transmits the torque of the axial piston engine directly to the rear axle and to the front axle (with planetary gear) with a cardan shaft.

CAUTION

The maximum speed of the axial piston engine is governed by settings made at the factory. Any adjustment will render the warranty invalid.

The front and rear axles are equipped with a self-locking differential (locking value 35%).
A self-locking differential (locking value 100%) is special equipment.

Tyres

The following tyres are permitted:

AF 1050	AF 1200
16/70 R 20	16/70 R 20
405/70 R 20	405/70 R 20
420/75 R20	420/75 R20
500/45-22.5	500/45-22.5
550/45 R 22.5	550/45 R 22.5
14.5-R 20	

All four tyres are of equal size. For the running direction, if applicable, see Fig. 4-2.

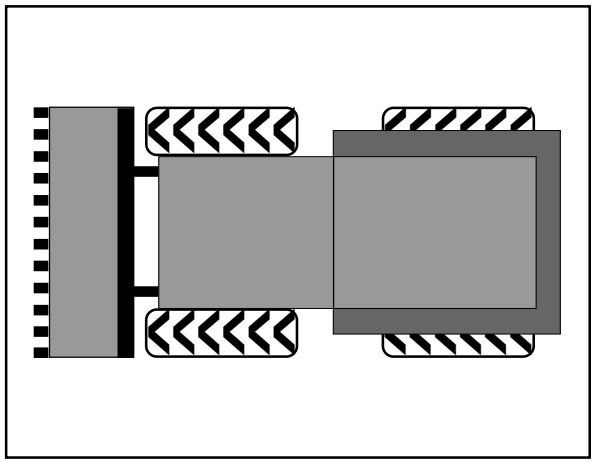

Figure 4-2

Steering system

The power for the hydrostatic steering system is supplied via a priority valve from a gear-type pump. With a minimum of effort on the steering wheel, the oil flow is directed by a steering unit into the steering cylinder.
Four-wheel and rear-wheel steering and crab steering can be selected by way of a toggle valve.

Emergency steering

The hydrostatic steering system can also be used in a limited way if the diesel engine fails. The loader can be steered using a considerable amount of manual effort.

NOTE

See chapter 7, “Towing the loader”.

Air filter device

Dry air filter device with safety cartridge and dust discharge valve.

https://truckmanualshub.com/

Figure 4-3

Battery

The motor compartment on the right side of the loader contains a maintenance-free battery (4-3/arrow) according to DIN with an increased cold start performance. The battery is to be kept clean and dry. Lightly grease the terminals with acid-free and acid-resistant grease.

CAUTION

Electric welding operations may only be performed if the battery main switch (8-24/arrow) has been pulled out.

Fuel supply system

The fuel tank is located on the right frame side bar. An electrical fuel gauge (4-14/23) in the operator's cabin monitors the fuel level in the tank. The filler neck (4-4/arrow) is located on the right side in the cabin access area.

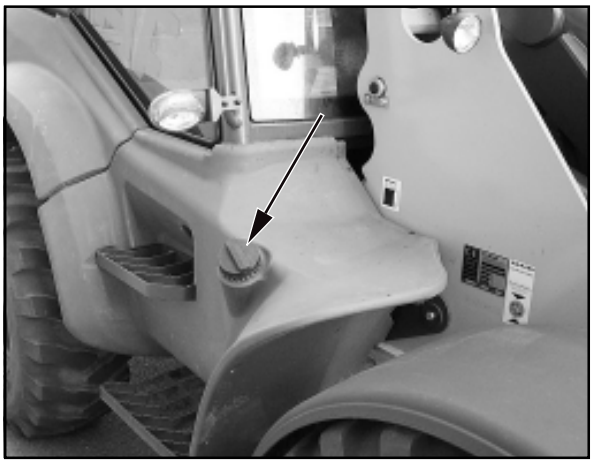

Figure 4-4

Lift and tip devices

Via a servo valve a double-acting gear-type pump drives
- two lifting cylinders
- one tip cylinder
- one compensation cylinder

All movements of the bucket arm, the bucket, the attachments and the quick-change device are controlled from the driver's seat by (one) pilot valve. With this pilot valve/these pilot valves, you can continuously control movements from very low to very high speed.

Bucket position indicator

In the dashboard there is an indicator lamp (4-5/arrow) indicating when the bucket floor is parallel to the ground.

NOTE

With the indicator lamp lit permanently, the bucket floor is parallel to the ground.

Figure 4-5

Floating position

The loader features a floating position. It is activated by moving the hand lever for working and auxiliary hydraulics (4-10/1) beyond its pressure point to the frontmost position. The hand lever remains engaged in this position until it is pulled back.

DANGER

The floating position may only be activated when the bucket is in the lowermost position.

https://truckmanualshub.com/

Lifting device suspension (option)

When the loader must be driven over larger distances, especially with a loaded bucket, the lifting device suspension (4-6/arrow) should be activated to avoid resonant motion. This becomes even more important with increasing unevenness of the terrain and increasing speed of the loader.

Figure 4-6

Pipe break protection

(option)
A pipe break safety valve is installed underneath each lift and tip cylinder. In the event of a pipe or hose break in the lift and/or tip system, the movements of the bucket arm and the tipping rod are blocked until the damage is repaired.

Equipment

Operator's cabin

Spacious ROPS panorama cabin with two lockable side doors for fully fledged entry and exit on both sides. The spacious doors opening up to 180° can be locked within the vehicle contour in two positions (gap or 180°). Tinted windows, parallel operating front wipers for maximum field of view, rear screen wiper, front and rear screen washers, entirely heatable rear screen, 2 large hinged, engaging external rear-view mirrors, tinted rooflight, height and inclination adjustable steering column, ergonomic adjustable joystick controls, sunshade, heater and fresh air system with external air filter and recirculating air function, coat hook and numerous oddment trays.

Driver's seat

Multi-position driver's seat [longitudinal adjustment of seat, longitudinal adjustment of seating area, seating area inclination, backrest inclination, armrest(s)] with weight-controlled, mechanic suspension and safety belt.

Dump interlock (option)

The loader is equipped with an automatic dump interlock as series feature. This is to prevent tipping over in the upper lifting range when operating, for example, a bucket or fork-lift attachment.
In certain situations, it is feasible to further tilt up the attachment (e.g. lifting hook or front-end excavator) to extend the range of motion of the attachment, for example. This will also increase the payload and last but not least the lifting height.
Actuating toggle switch 4-10/3 disables the automatic dump interlock.

STOP

DANGER

Set the toggle switch „Dump interlock" (4-10/3) back to its original position when work is finished. The automatic dump interlock is enabled again.

https://truckmanualshub.com/

Figure 4-7

4.3 Wheel change

(1) Park the loader on a hard surface.

(2) Set the drive switch (4-11/4) to “0”.

(3) Apply the parking brake (4-12/2).

(4) When changing a wheel on the front axle:
Lift and mechanically prop up the bucket arm [e.g. by inserting the bucket arm support (option) (1-1/arrow)] and lower the bucket arm until it rests on the bucket arm support.
(4) When changing a wheel on the rear axle:
Lower the attachment to the ground.

(5) Turn the ignition key (4-10/7) to the left to position “0”.

(6) Secure the ball hand lever for the working and auxiliary hydraulics (4-10/2).
(7) Ensure that the loader does not roll away by securing it on one of the wheels of the axis in both driving directions. The wheel that does **not** have to be changed is to be secured.
(8) Loosen the wheel nuts of the wheel to be changed so that they can be turned manually.
(9) Fit a suitable jack (minimum capacity 2.0 tons) from the side under the axle bridge in the vicinity of the axle fixture so that it is centred and cannot slip (4-7). Lift the front/rear axle until the wheel does not have any contact to the ground.

DANGER
- Secure the jack by a suitable support to prevent it from sinking into the ground.
- Make sure that the jack is fitted correctly.

(10) Loosen the wheel nuts completely and remove them.

(11) Lower the loader slightly with the jack until the wheel bolts are free.
(12) Push the wheel from the wheel hub by moving it back and forth. Remove the wheel and roll it aside.

(13) Mount the new wheel onto the planetary axle.

NOTE
- Pay attention to the profile position.
- If the profile position of the spare tyre does not fit, the spare tyre may only be used temporarily until a suitable tyre can be fitted.

(14) Tighten the wheel nuts by hand.

(15) Lower the front/rear axle using the jack.

(16) Tighten the wheel nuts to 500 Nm with a torque wrench.

CAUTION
Retighten the wheel nuts after the first 8-10 operating hours.

https://truckmanualshub.com/

4.4 Controls

1 - Service brake pedal
2 - Steering column switch
- To the front: Turn signal, right
- To the rear: Turn signal, left
- Down - Dipped beam
- Centre - High beam
- Up - Headlamp flasher
- Push button - Signal horn
- Turn, step 1: Windshield wiper, front
- Turn, step 2: Front windshield wiper fast
- Turn, step 3: Interval windshield wiper, front
- Push upper ring in axial direction: Windshield washer, front

3 - Steering type switching
- To the left - Four-wheel steering
- Centre position - Rear-axle steering
- To the right - Crab steering

NOTE
For close-to-edge working.

4 - Toggle switch for rear wiper/washer
5 - Toggle switch for rear window heater
6 - Button for release of quick-change device
7 - Bucket position indicator

NOTE
With the indicator lamp lit permanently, the bucket floor is parallel to the ground.

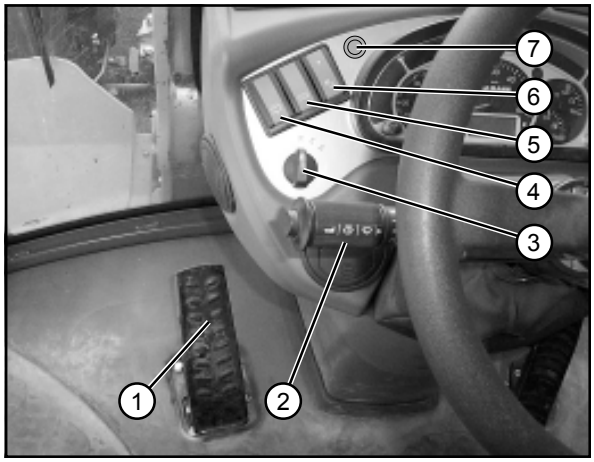

Figure 4-8

1 - Multifunction panel
(see chapter 4.4.1 Fig. 4-14)
2 - Toggle switch for warning beacon (option)
3 - Toggle switch for work lights
- Position 1: front
- Position 2: front and rear

4 - Toggle switch for hazard flasher system
5 - Lock lever for steering column adjustment
- to the front/rear
- in axial steering column direction

6 - Accelerator

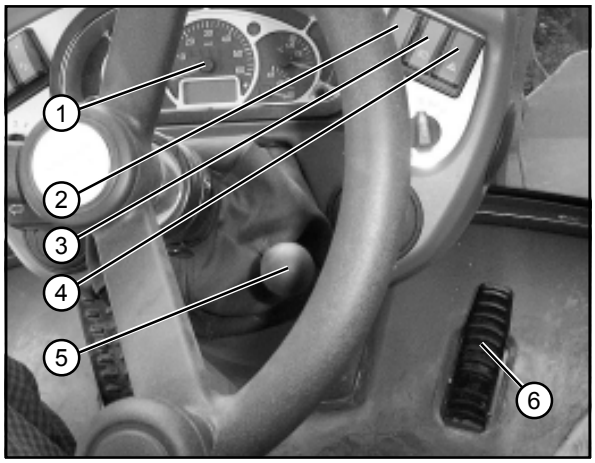

Figure 4-9

1 - Pilot valve for working and auxiliary hydraulics
2 - Toggle switch for switching off pilot control
NOTE
set toggle switch to **"up"**
3 - Toggle switch for dump interlock (option)
4 - Toggle switch for permanent auxiliary hydraulics (option)
5 - 2-pole socket
6 - Air-conditioning system (option)/heater
7 - Starter switch
8 - Button for fan reversal unit (option)
9 - Toggle switch for switching rear axle support (option)
10 - Toggle switch for lifting device suspension (option)

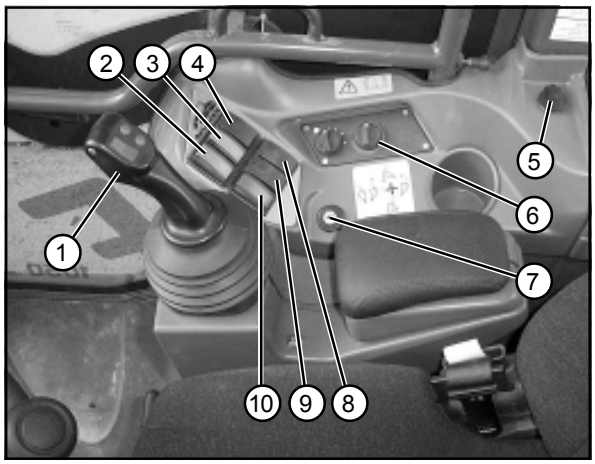

Figure 4-10

https://truckmanualshub.com/

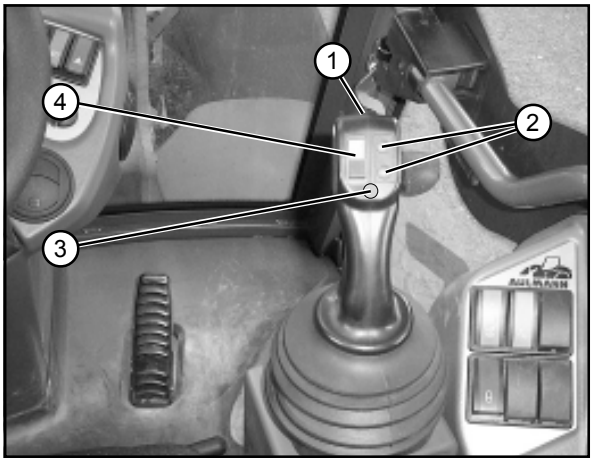

Figure 4-11

1 - Gear shift
  - 2nd gear
  - 1st gear
  - Alpha max. (turtle symbol)
2 - Actuator for auxiliary hydraulics:
  - Upper pushbutton:
    - Lock attachment
    - Close multipurpose bucket
  - Lower pushbutton:
    - Unlock attachment
      » in conjunction with 4-8/6 «
    - Open multipurpose bucket
3 - Actuator for differential lock (option)
4 - Drive switch: forward/0/reverse

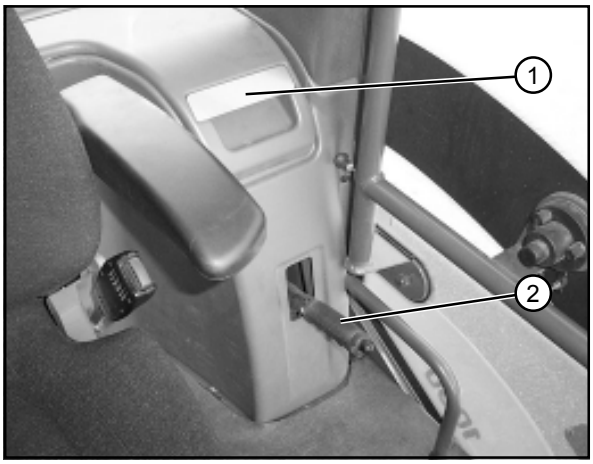

Figure 4-12

1 - Storage compartment
2 - Hand lever for parking brake

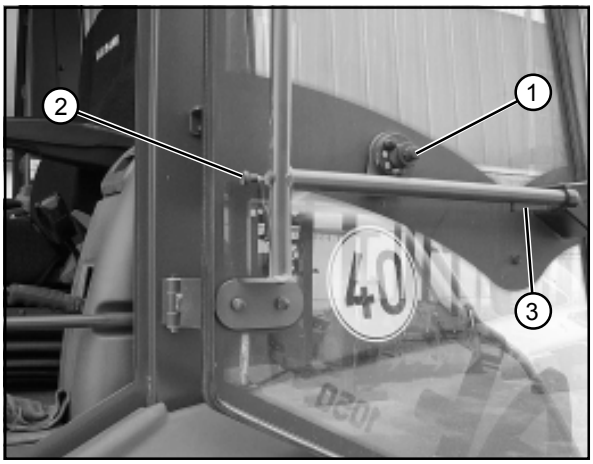

Figure 4-13

1 - Door stay device
  (press door stay device = unlock stay device)
2 - Bowden cable for door
  (pull Bowden cable = unlock stay device)
3 - Door opener (close door)

https://truckmanualshub.com/

4.4.1 Multifunction panel (4-9/1)

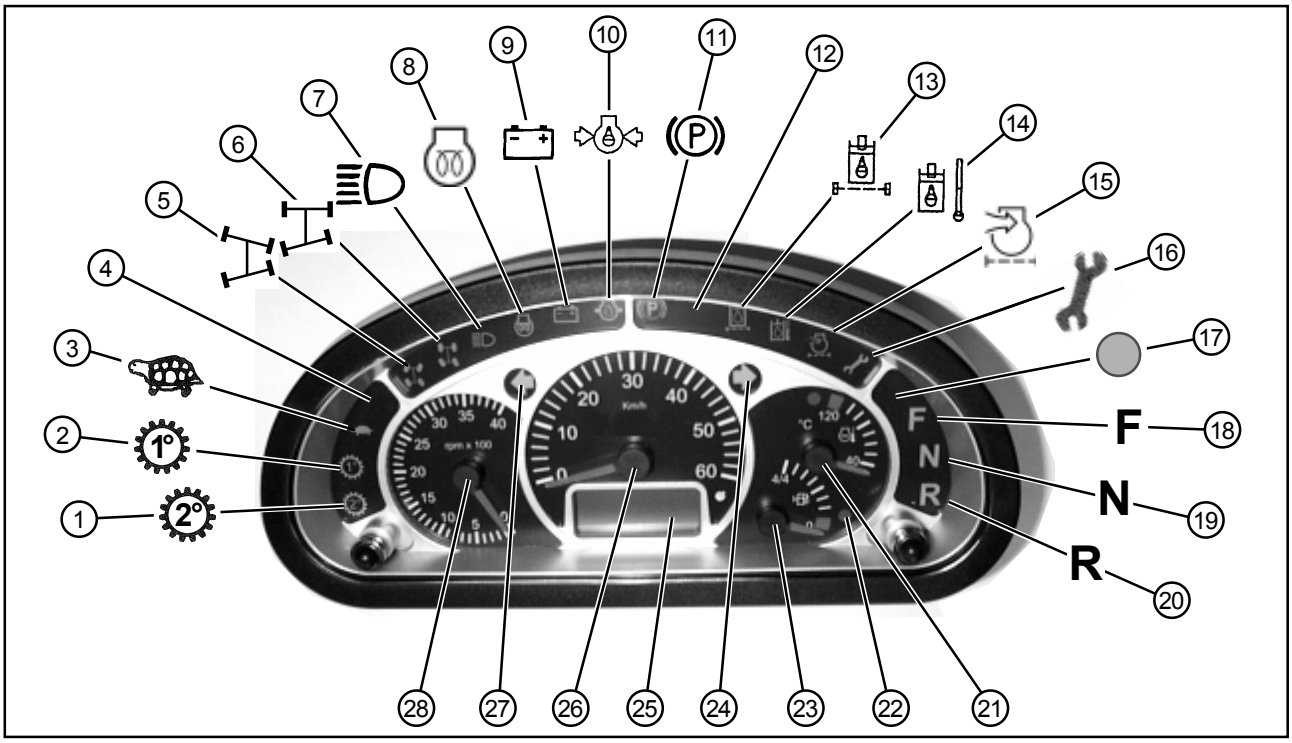

Figure 4-14

1 - Indicator lamp: 2nd gear
2 - Indicator lamp: 1st gear
3 - Indicator lamp: „Alpha max.“ gear
4 - free
5 - Indicator lamp: four-wheel steering
6 - Indicator lamp: rear-axle steering
7 - Indicator lamp: High beam
8 - Indicator lamp: Preheating
9 - Battery charge indicator lamp
10 - Indicator lamp: engine oil pressure
11 - Indicator lamp: Parking brake
12 - free
13 - Hydraulic oil filter clogging indicator
14 - Warning lamp: hydraulic oil temperature
15 - Air filter clogging indicator
16 - free
17 - Indicator lamp: Differential lock
18 - Indicator lamp: Travel direction “forward”
19 - Indicator lamp: Travel direction „0-position“
20 - Indicator lamp: Travel direction „reverse“
21 - Coolant temperature gauge
22 - Indicator lamp: Fuel on reserve
23 - Fuel gauge
24 - Indicator lamp: Turn signal „right“
25 - Operating hours counter and digital clock
26 - Tachometer (fast loader)
27 - Indicator lamp: Turn signal „left“
28 - RPM meter

https://truckmanualshub.com/

Figure 4-15

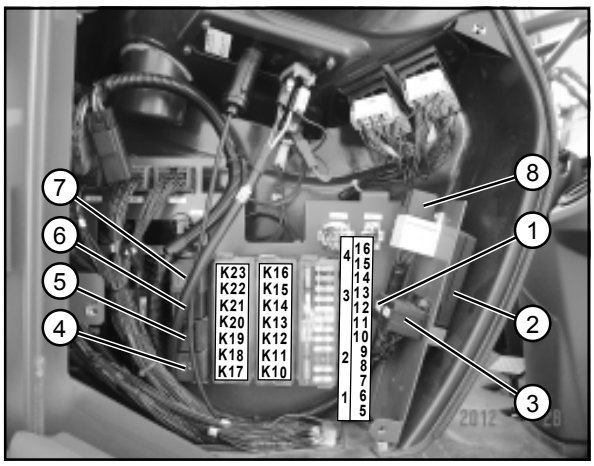

Figure 4-16

4.4.2 Fuses/relays

NOTE

Fuses, relays, turn signal relay, interval relay etc. (4-16) are located behind the maintenance flap on the right side of the loader (4-15/arrow).

Type 1:

1 - Interval timer (K1)
2 - ECU steering switch
3 - Relay for gear shift (K5) (fast loaders)
4 - Turn signal relay
5 - Acoustic buzzer/hydraulic oil temperature
6 - Relay for front working lights (K4)
7 - Timer relay for dump interlock (K24)
8 - Maxi relay (K25) (power supply)

Fuses:

1 -	Hazard flasher	15.0 A
2 -	Warning beacon (opt.), 2-pole socket	10.0 A
3 -	Working lights, front	20.0 A
4 -	Working lights, rear	15.0 A
5 -	Traction drive, steering	20.0 A
6 -	Hydraulics	20.0 A
7 -	Turn indicator	7.5 A
8 -	Windshield wiper/washer front/rear	20.0 A
9 -	Rear window heater	20.0 A
10 -	Heater fan motor	20.0 A
11 -	Brake lights	5.0 A
12 -	Engine shut-off	5.0 A
13 -	Parking light, left; tail light, left	5.0 A
14 -	Parking light, right; tail light, right	5.0 A
15 -	Dipped beam	15.0 A
16 -	High beam	15.0 A

Relays:

K10 - Traction drive cut-out
K11 - Differential lock
K12 - Alpha max.
K13 - Power adjustment, forward
K14 - Power adjustment, reverse
K15 - Start-up interlock
K16 - Fan control
K17 - Dump interlock
K18 - Dump interlock
K19 - free
K20 - 2. auxiliary hydraulics circuit (opt.)
K21 - 2. auxiliary hydraulics circuit (opt.)
K22 - 1. auxiliary hydraulics circuit
K23 - 1. auxiliary hydraulics circuit

https://truckmanualshub.com/

Type 2:

1 - Interval timer (K1)
2 - ECU steering switch
3 - Relay for gear shift (K5) (fast loaders)
4 - Turn signal relay
5 - Acoustic buzzer/hydraulic oil temperature
6 - Relay for front working lights (K4)
7 - Timer relay for dump interlock (K24)
8 - Maxi relay (K25) (power supply)

Fuses:

1 -	4	free
5 -	Traction drive	15,0 A
6 -	Steering	20,0 A
7 -	Hydraulics	20,0 A
8 -	Windshield wiper/washer front/rear	20,0 A
9 -	Rear window heater	20,0 A
10 -	Heater fan motor	20,0 A
11 -	Engine shut-off	10,0 A
12 -	18	free
19 -	Working lights, front	20,0 A
20 -	Working lights, rear	15,0 A
21 -		free
22 -	Drive-away interlock	5,0 A
23 -	2-pole socket	15,0 A
24 -	Radio, Interior lighting	5,0 A
25 -	Warning beacon (opt.)	10,0 A
26 -	Hazard flasher	15,0 A
27 -	Turn indicator	7,5 A
28 -	Brake lights	5,0 A
29 -	Parking light, left; tail light, left	5,0 A
30 -	Parking light, right; tail light, right	5,0 A
31 -	Dipped beam	15,0 A
32 -	High beam	15,0 A

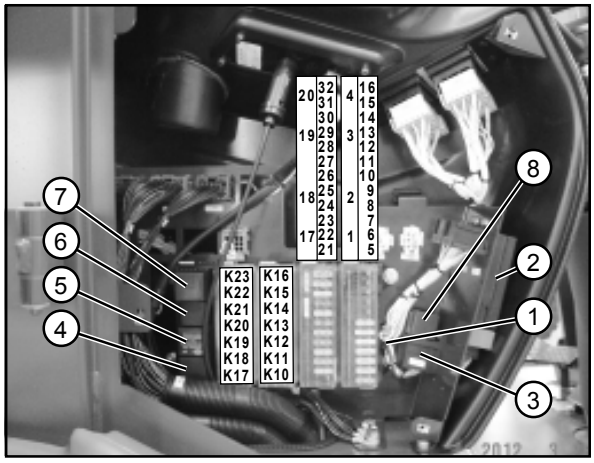

Figure 4-16

Relays:

K10 - Traction drive cut-out
K11 - Differential lock
K12 - Alpha max.
K13 - Power adjustment, forward
K14 - Power adjustment, reverse
K15 - Start-up interlock
K16 - Fan control
K17 - Dump interlock
K18 - Dump interlock
K19 - free
K20 - 2. auxiliary hydraulics circuit (opt.)
K21 - 2. auxiliary hydraulics circuit (opt.)
K22 - 1. auxiliary hydraulics circuit
K23 - 1. auxiliary hydraulics circuit

https://truckmanualshub.com/

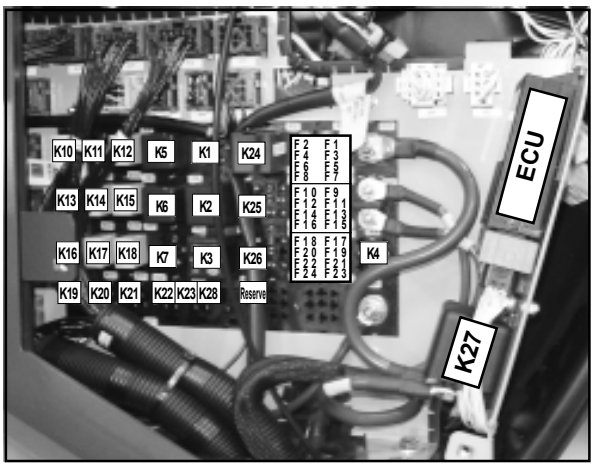

Figure 4-16

Type 3:

Relays:

K1 - Windshield wiper/washer/interval timer
K2 - Turn signal relay
K3 - Buzzer
K4 - Timer (option)
K5 - Working lights, front
K6 - Working lights, rear (option)
K7 - Interrupt telescoping
K10 - Traction drive
K11 - Differential lock (option)
K12 - Alpha max.
K13 - Power control: forward
K14 - Power control: reverse
K15 - Start-up interlock
K16 - Fan control
K17 - Dump interlock (option)
K18 - Dump interlock (option)
K19 - Air-conditioning system (option)
K20 - 2nd auxiliary hydraulics circuit – CLOSED - (option)
K21 - 2nd auxiliary hydraulics circuit – OPEN - (option)
K22 - 1st auxiliary hydraulics circuit – CLOSED - (option)
K23 - 1st auxiliary hydraulics circuit – OPEN - (option)
K24 - Transmission controller PLC (fast loader only)
K25 - Telescoping PLC
K26 - free
K27 - High current relay (12 V/120 A)
K28 - Working platform preparation (option)
ECU - Steering system controller

Fuses:

F1 - Traction drive	10.0	A
F2 - Steering	7.5	A
F3 - Hydraulics	20.0	A
F4 - Windshield wiper/washer	20.0	A
F5 - Rear window heater	20.0	A
F6 - Heating/air condition	20.0	A
F7 - Engine shut-off, fuel pump	10.0	A
F8 - Working lights, front	15.0	A
F9 - Working lights, rear	15.0	A
F10 - Drive-away interlock	5.0	A
F11 - Socket	15.0	A
F12 - Radio/interior lighting	5.0	A
F13 - warning beacon (opt.)	15.0	A
F14 - Hazard flasher	15.0	A
F15 - Turn indicator	7.5	A
F16 - Brake lights	5.0	A
F17 - Parking light, left	5.0	A
F18 - Parking light, right	5.0	A
F19 - Dipped beam	15.0	A
F20 - High beam	15.0	A
F21 - F24 - Spare		

https://truckmanualshub.com/

1 - Maxi fuse (100 A): Glow start system
Maxi fuse (250 A): Glow start system 63 kW engine
2 - Main fuse (100 A): Loader electrics
3 - Main fuse (30 A): Loader electrics
4 - Main fuse (50 A): Loader electrics

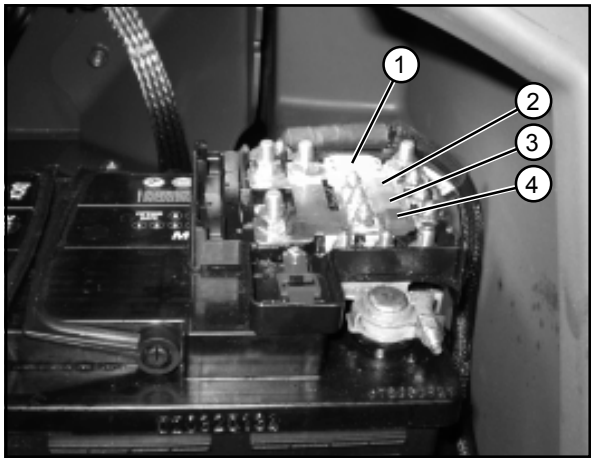

Figure 4-17

1 - Glow start controller
2 - Glow start system relay

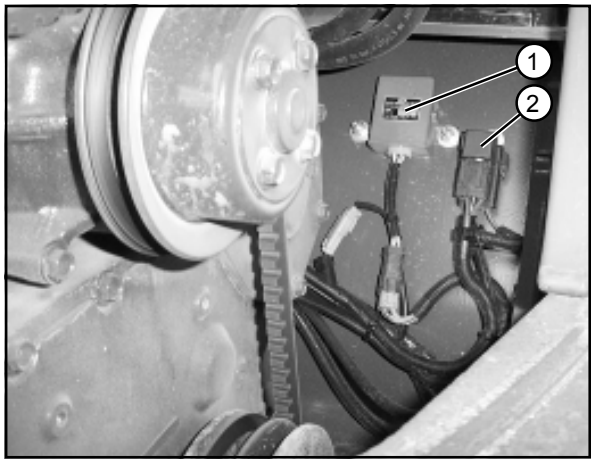

Figure 4-18

4.6 Gear shift

4.6.1 Slow loader » 20 km/h «

For the slow loader, you can choose between the hydraulic drive stages “I” (Alpha max.) and “II” (4-13/1).

Speed range in			
drive stage “I” (Alpha max.)	0	up to	5 km/h
drive stage “II”	0	up to	20 km/h

In the multifunction panel (4-16), the indicator lamp of gear stage “I” (4-16/2) lights up with both gear stages, and with gear stage “I”, the indicator lamp “Alpha max” (4-16/3) lights up additionally.

4.6.2 Fast loader » 40 km/h «

For the fast loader, you can choose between gear stages “1” and “2”, and in both gear stages between the hydraulic drive stages “I” (Alpha max.) and “II” (4-13/1).

Speed range in			
Gear stage “1”, drive stage “I”	0	up to	5 km/h
Gear stage “1”, drive stage “II”	0	up to	17 km/h
Gear stage “2”, drive stage “I”	0	up to	11 km/h
Gear stage “2”, drive stage “II”	0	up to	40 km/h

In the multifunction panel (4-16), the indicator lamp of gear stage “I” (4-16/2) lights up with gear stage “1” selected, and the indicator lamp of gear stage “2” (4-16/1) lights up with gear stage “2” selected. With drive stage “I” selected, the indicator lamp “Alpha max” (4-16/3) lights up additionally with any of the two gear stages selected.

https://truckmanualshub.com/

To change the gear stage, set the drive switch (4-13/3) to “0” and the gear switch (4-13/1) to “2” or “1” (depending on the gear stage the gear switch was in before changing).

NOTE

- The gear stage engages approx. 5 seconds after the loader has come to a standstill.
- When the engine is restarted, the gear stage selected at engine shut-down will be selected again.

To change the hydraulic drive stage, set the drive direction switch to “Forward” or “Reverse” before actuating the gear switch (4-13/1).

https://truckmanualshub.com/

Operation

https://truckmanualshub.com/

5 Operation

5.1 Checks before start-up

- Engine oil level (see the operating instructions for the engine)
- Hydraulic oil level
- Tyre pressure
- Profile depth
- Battery fluid level
- Lighting system
- Seat position
- Bucket arm prop [(e.g. bucket arm support (option) (1-2/arrow)]; remove if necessary
- Actuate the toggle switch for switching off pilot control (4-10/2) if applicable **»** only if work is about to begin **«**
- Actuate the toggle switch for automatic dump interlock (4-10/3) if applicable
  » the automatic dump interlock must be enabled «
- General state of the loader, e.g. check for leaks
- The presence of
  - a fist aid kit
  - a warning triangle
  - a signal lamp

  must be verified.

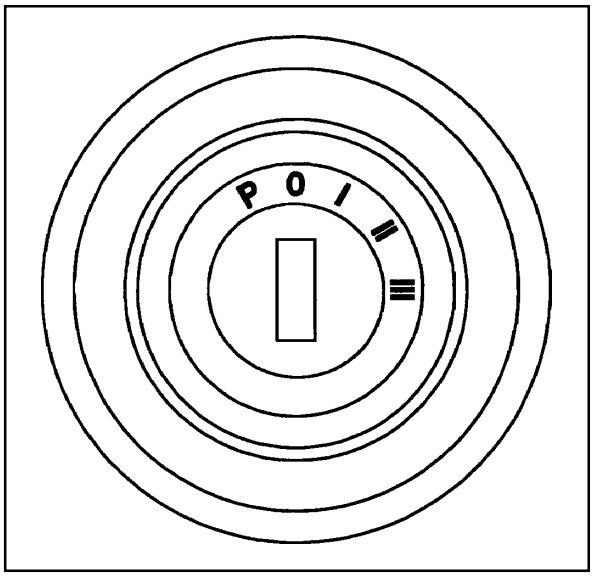

Figure 5-1

5.2 Commissioning

5.2.1 Start the diesel engine

(1) Engage the parking brake lever (4-12/2).
(2) Set the drive switch (4-11/4) to “0” (starter interlock!).
(3) Insert the ignition key into the starter switch (4-10/7) and turn the key clockwise to position „I“ (5-1).

NOTE

- The indicator lamps for battery charge, parking brake and engine oil pressure light up. The instruments for fuel level, engine coolant temperature and operating hours deflect.
- Start the engine in the neutral position.

(4) Turn the ignition key clockwise to position „III“. As soon as the engine starts, release the ignition key.

NOTE

- If the engine has not started after two attempts, determine the cause using the malfunction table in the operating instructions for the engine (chapt. 7.1).
- For operation at extremely low temperatures, see the operating instructions for the engine.
- The clogging indicator (4-14/13) may light up prematurely after a cold start. It will go out when the hydraulic oil warms up. Operate the loader at a **low** speed until the indicator lamp (4-14/13) goes out. Never subject the loader to full loads in this state.

https://truckmanualshub.com/

5.2.2 Winter operation

CAUTION

If the outside temperature is below 0 °C, the machine must be properly „warmed up“ to avoid damage to certain assemblies. To do so, actuate all cylinders (lifting, tipping and compensation cylinders) for some time (depending on the ambient temperature) with the engine idling.

Proper operation of the machine, even for subzero temperatures, can only be guaranteed if the following measures have been taken:

5.2.2.1 Fuel

At low temperatures, paraffin precipitating from the fuel can cause the fuel system to clog up. For this reason, always use winter diesel fuel (suitable for temperatures down to -15 °C) when the outside temperature is below 0 °C.

NOTE

The fuelling stations normally start offering winter diesel fuel in good time before the cold season starts. Often, they offer diesel fuel that can be used down to temperatures of 20 °C (super-grade diesel fuel).
If the temperature is below -15 °C or -20 °C, paraffin oil must be added to the diesel fuel. For the mixture ratio, refer to the diagram (5-2).

I = Summer diesel fuel
II = Winter diesel fuel
III = Super-grade diesel fuel

CAUTION

Only mix the ingredients in the tank! First, fill in the required amount of paraffin oil, then top up with diesel fuel.

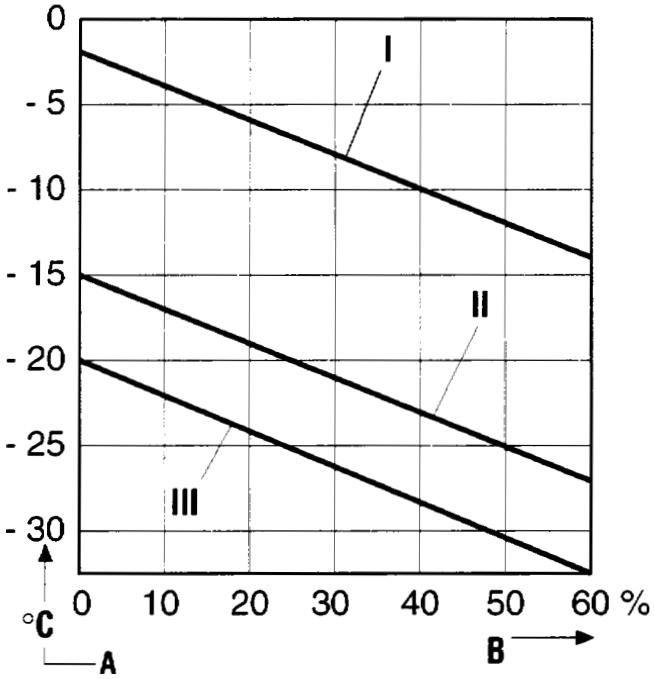

Figure 5-2

5.2.2.2 Engine oil change

See the operating instructions for the engine and the operating instructions for the machine (section 8.2.4).

5.2.2.3 Oil change, hydraulic system

CAUTION

The viscosity of the hydraulic oil changes according to the temperature; therefore, the ambient temperature in the location where the machine will be used determines what viscosity class (SAE class) must be chosen. If the hydraulic oil used matches the expected ambient temperature, optimum operating conditions can be attained. Therefore, use higher grade hydraulic oil if required. See section 8.2.6 for the oil change procedure required for the hydraulic system.

https://truckmanualshub.com/

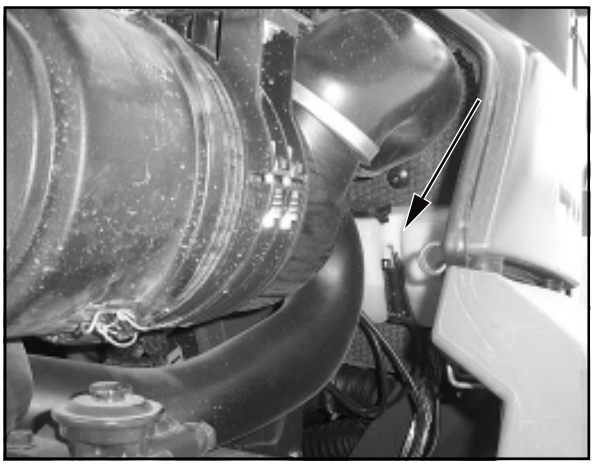

Figure 5-3

Figure 5-4

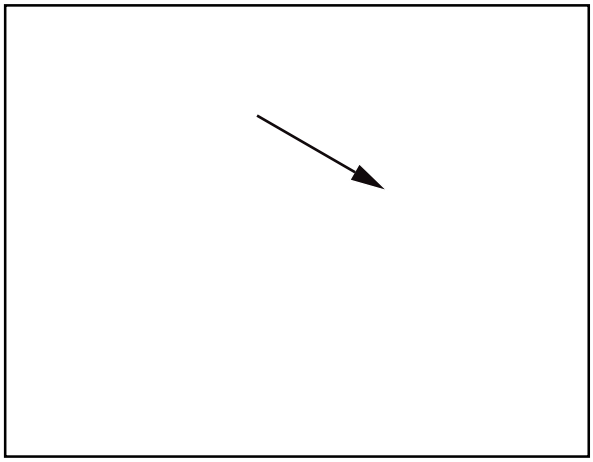

Figure 5-5

5.2.2.4 Anti-freeze for windshield washer system

CAUTION

If the temperature is expected to drop below 0° C, add a sufficient amount of anti-freezing agent to the water in the windshield washer system (5-3/ arrow) to prevent it from icing up in due time. Heed the instructions provided by the manufacturer for the mixture ratio.

5.2.3 Driving the loader on public roads

CAUTION

- Driving on public roads is **only** permitted with an **empty** standard or multi-purpose bucket and **only** with the bucket protection in place.
- To travel on public roads, you must obtain an appropriate permission (Germany: as per § 29 StVO) prior to starting when the distance between front edge of the steering wheel and the front edge of the bucket exceeds 3,500 mm. The German regulations stipulate that a guide (assisting person) give appropriate signs and instructions to the driver of the loader for safely negotiating crossings and intersections.
- When the road lights (which are used solely to light up the road) are switched on, the highest permissible speed is 30 km/h.
- According to § 52 (4) No. 1 of the German Motor Vehicle Construction and Use Regulations, the warning beacon (optional equipment) may be switched on only if the loader is marked by red and white warning stripes.

The driver of the loader must possess an appropriate, valid driver's license. This translates to:
- German class V (old) for slow loaders
  » 20 km/h variant «
- German class III (old) for fast loaders
  » 30 km/h and 40 km/h variants «

The driver must carry his driver's license (original) and the operating permit (original) with him.
Before driving on public roads, the following road safety measures must be taken:

(1) Lower the bucket arm until the lowest point of the bucket arm or the bucket is at least 30 cm above the road (5-4).

(2) Set the toggle switch for switching off pilot control (4-10/2) to **"up"**.

CAUTION

The pilot valve(s) for the auxiliary hydraulics is (are) now disabled. This prevents the bucket arm from being lowered and the bucket from tipping while driving.

(3) Cover the bucket cutting edge and teeth with the bucket protector (5-4/arrow).

https://truckmanualshub.com/

(4) Insert the plug of the bucket protector into the socket (5-5/arrow, option).

(5) Perform a function check.

(6) Lock both doors.

DANGER
- When the steering type selector lever is set to “rear wheel steering”, the respective indicator lamp (4-14/6) lights up.
- Driving on public roads with the bucket filled is forbidden.
- The working lights must be switched off (4-9/3).

(7) Release the parking brake (4-12/2).
(8) Switch to 2nd gear (4-11/1).
(9) Select the travel direction (4-11/4).

(10) Press the accelerator pedal (4-9/6).

NOTE
The loader starts. The travel speed is determined by the position of the accelerator pedal.

CAUTION
- The service brake is activated by depressing the brake pedal (4-8/1).
- Changing the travel direction during driving is **not** allowed to avoid putting other road users at risk.

5.2.4 Working with the loader

DANGER
Always fasten seat belts when working with the swivel shovel loader.

Generally, all work is carried out in gear stage “2” (4-11/1). For special tasks which ask for a more sensitive control of the speed or a higher engine speed at reduced travel speed, gear stage “1” can be selected. This allows the maximum travel speed to be limited.

(1) Lock both doors.

(2) Release the parking brake (4-12/2).

(3) Select the gear stage (4-11/1).

(4) Select the travel direction (4-11/4).

(5) Press the accelerator pedal (4-9/6).

NOTE
- The thrust forces and travel speeds are the same in the forward and the reverse direction.

https://truckmanualshub.com/

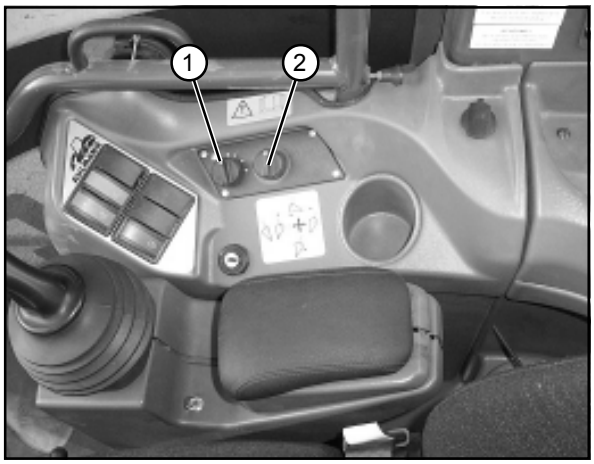

Figure 5-6

NOTE

- To attain full performance, the combined action of propulsion and of the working hydraulics is necessary. It is up to the operator to control the available power using the accelerator, the inching function and the hand lever for the working hydraulics.
- The travel speed and the thrust force are altered exclusively by depressing the accelerator pedal.
- When driving up gradients, the travel speed decreases in spite of full throttle in favour of the thrust force.

CAUTION

- The hydraulic quick-change device must only be actuated if an attachment has been mounted.
- If the hydraulic oil temperature indicator lamp (4-14/13) lights up during operation, the loader must be switched off immediately, the cause must be determined by a hydraulics expert and the malfunction must be eliminated.

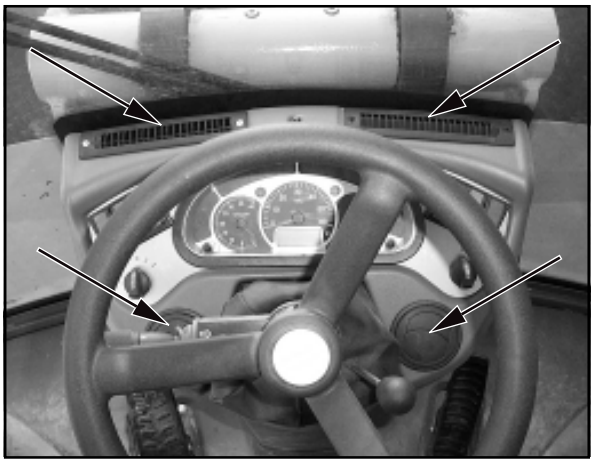

Figure 5-7

5.2.5 Heater and ventilation system

5.2.5.1 Setting the air flow

(1) Turn the rotary switch (5-6/1) for the blower to position 0, 1, 2, or 3 depending on the air flow desired.

(2) Adjust the direction of the air flow by means of the lateral nozzles (5-7/arrows and 5-8/arrows).

5.2.5.2 Switching on the heater

(1) Depending on the heat required, turn the rotary switch (5-6/2) to the desired position.

NOTE

Rotary switch turned in clockwise direction
- warm.

Rotary switch turned in counter clockwise direction
- cold.

(2) Adjust the amount of air as described under 5.2.5.1.

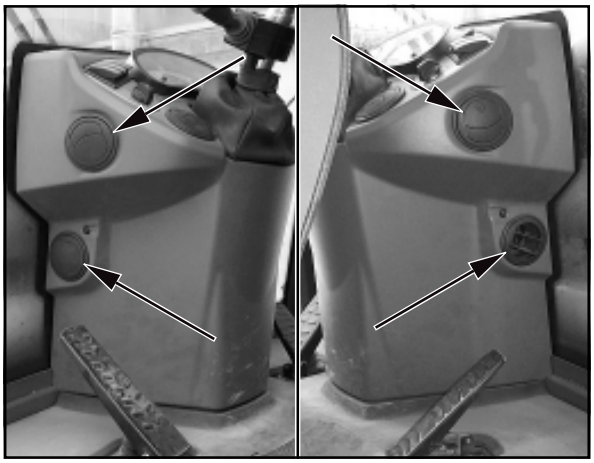

Figure 5-8

https://truckmanualshub.com/

5.3 Decommissioning the loader

5.3.1 Parking the loader

(1) Stop the loader on solid ground; if possible, not on a slope.

(2) Place the bucket or the attachment on the ground.

(3) Set the drive switch (4-11/4) to “0”.

(4) Apply the parking brake (4-12/2).

DANGER

If parking on a gradient cannot be avoided, wheel chocks must be used and placed on the sloping side in front of the front axle wheels **in addition** to applying the parking brake.

5.3.2 Switching off the diesel engine

CAUTION

If the diesel engine is very hot or has been subjected to heavy loads, let the engine idle for a short time before switching it off.

Turn the ignition key to the left to position “0“ (5-1) and remove the key.

NOTE

In position “P“, the parking light and the dashboard illumination remain switched on.

5.3.3 Switch off the heater and ventilation system

(1) Shut off the hot air supply (5-6/2).

(2) Turn the rotary switch (5-6/1) for the blower to position “0“.

5.3.4 Leaving the loader

(1) Secure the hand lever for the working and auxiliary hydraulics (set toggle switch 1-2/arrow to **“up”**).

(2) Remove the ignition key and lock the doors.

https://truckmanualshub.com/

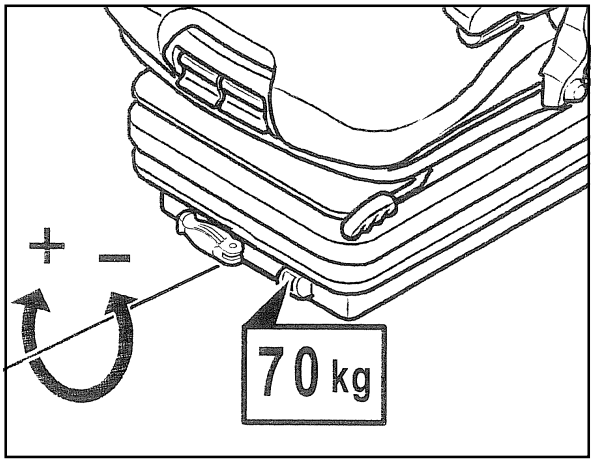

Figure 5-9

5.4 Adjusting the driver's seat

CAUTION

- Adjust the seat only when the loader is not moving.
- Check fastening and locking parts from time to time.

5.4.1 Grammer seat

(1) **Weight adjustment:**
Adjust the seat to the driver's weight by actuating the weight adjustment lever. The set driver's weight is visible in the inspection window (5-9).

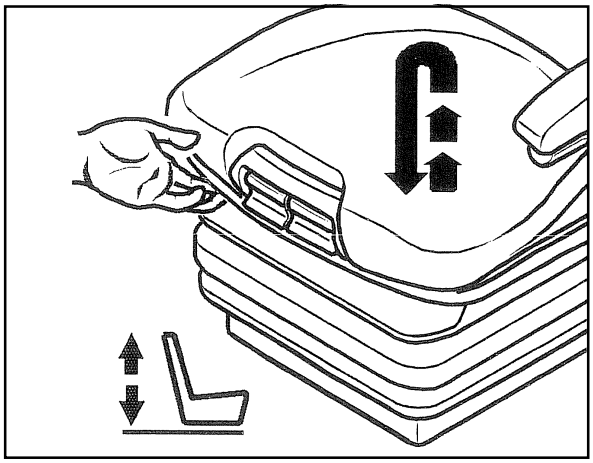

Figure 5-10

(2) **Height adjustment:**
The height can be adjusted in several steps.
Lift the driver's seat to the desired height until it can be heard to engage. The seat returns to the lowest position when it is lifted over the topmost position (stop) (5-10).

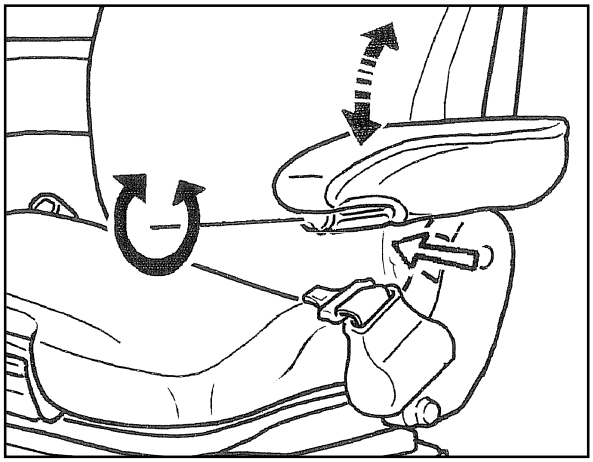

Figure 5-11

(3) **Armrest inclination:**
Turn the handwheel (5-11/arrow) to adjust the armrest in longitudinal direction.

https://truckmanualshub.com/

(4) **Arm rests:**
If desired, you can swing the armrests to the rear and adjust their height.

To adjust the armrest height, remove the round cap (5-12/arrow) in the covering.

Loosen the hex nut (wrench size 13 mm), set the armrest as desired and tighten the nut again. Push the removed cap onto the nut again.

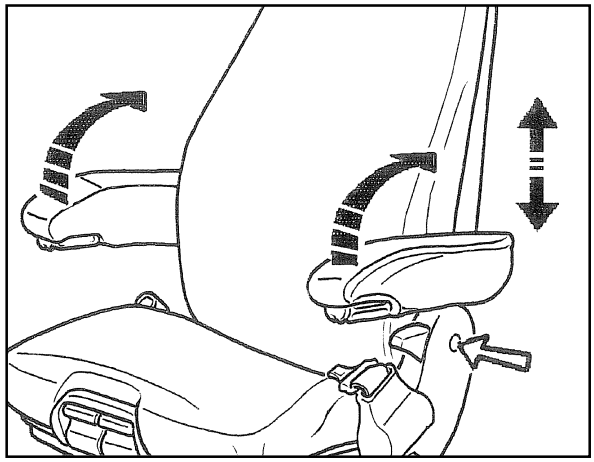

Figure 5-12

(5) **Adjusting the backrest:**
Use the locking lever (5-13/arrow) to adjust the backrest.

NOTE
The locking lever must engage in the desired position. It must be impossible to move the backrest to another position when the lever has engaged.

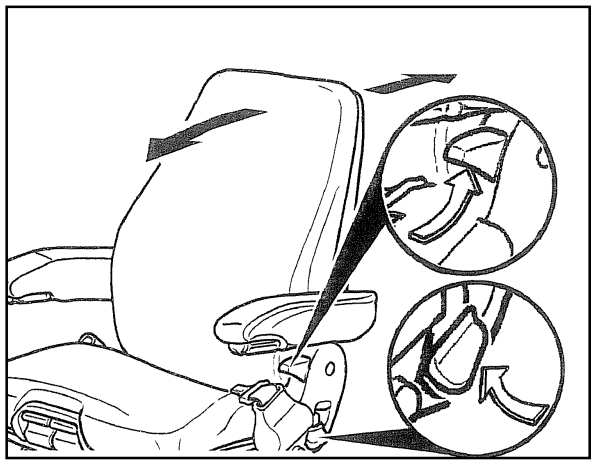

Figure 5-13

(6) **Longitudinal adjustment:**
You can adjust the seat in longitudinal direction when you pull the lever (5-14) upwards.

NOTE
The locking lever must engage in the desired position. It must be impossible to move the backrest to another position when the lever has engaged.

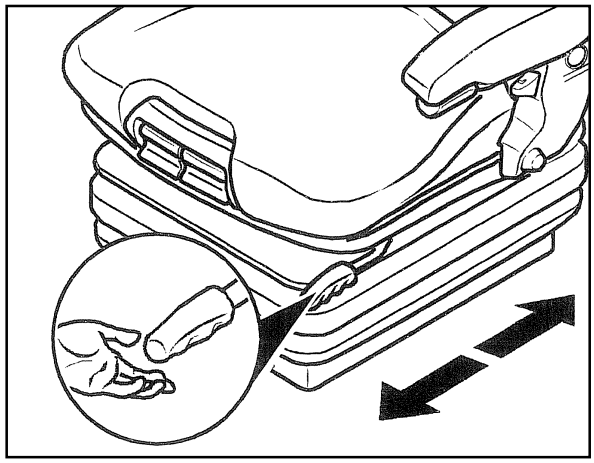

Figure 5-14

https://truckmanualshub.com/

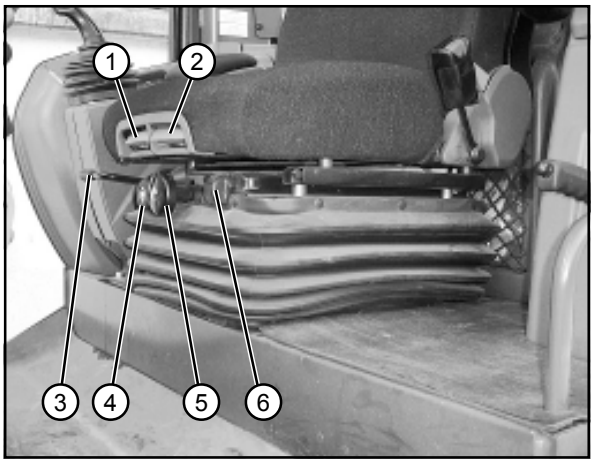

Figure 5-15

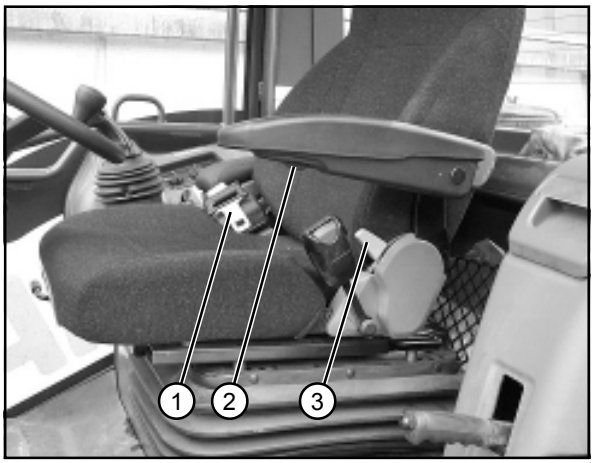

Figure 5-16

Figure 5-17

5.4.2 KAB seat

(1) **Seat inclination adjustment** (5-15/1):
You can adjust the seat inclination to your wishes.
To adjust the seat inclination, lift the right button (5-15/1). Exert pressure on the seat or relieve the pressure while keeping the button lifted to set the desired inclination.

(2) **Seat depth adjustment** (5-15/2):
You can adjust the seat depth to your wishes.
To adjust the seat depth, lift the left button (5-15/2). Push the set to the front or rear to obtain the correct position while keeping the button lifted.

(3) **Longitudinal adjustment** (5-15/3):
You can adjust the seat in longitudinal direction when you pull the lever (5-15/3) upwards.

NOTE

The locking lever must engage in the desired position. It must be impossible to move the driver's seat to another position when the lever has engaged.

(4) **Suspension travel adjustment** (5-15/4):
You can increase or reduce the suspension travel by turning the adjusting knob (5-15/4).

(5) **Weight adjustment** (5-15/5):
To adjust to the driver's weight, turn the weight adjustment lever (5-15/5).

(6) **Controll indicator** (5-15/6):
The control indicator shows a **"green"** background if driver's weight and suspension travel are adjusted correctly. Increase the suspension travel if the indicator shows **"red"**.

(7) **Lap belt** (5-16/1)

(8) **Armrests/armrest inclination** (5-16/2):
Turn the hand wheel (5-16/2) to adjust the armrest in longitudinal direction.
If needed, you can fold the armrests to the rear.

(9) **Backrest adjustment** (5-16/3):
Use the locking lever (5-16/3) to adjust the backrest.

CAUTION

The locking lever must engage in the desired position. It must be impossible to move the driver's seat to another position when the lever has engaged.

(10) **Lumbar support** (5-17/arrow):
Turn the knob to adjust the curvature of the back cushion to suit your needs.
This will increase the seating comfort and also the driver's performance.

https://truckmanualshub.com/

5.5 Switching the steering type

CAUTION
Switch the steering type (5-18/arrow) when the loader is at a standstill only. The drive direction switch (4-11/4) must be in “0” position.

You can choose from the following steering types:
- to the left
- centre position
- to the right
- four-wheel steering
- rear-axle steering
- Crab steering

NOTE
Crab steering:
For close-to-edge working.

Figure 5-18

5.5.1 Overview of switching options

1.) Switching from »all wheel steering« to »rear wheel steering«:

NOTE:
»Rear wheel steering« will function only when wheels of the front axle are in straight ahead position.

2.) Switching from »rear wheel steering« to »all wheel steering«:

NOTE:
»All wheel steering« will function only when wheels of the rear axle are in straight ahead position.

3.) Switching from »rear wheel steering« to »crab steering«:

- Steer rear axle wheels to the desired position before switching over.
- The »all wheel steering« indicator is lit permanently.

NOTE:
»Crab steering« (»all wheel steering« with offset axles) is active.

4.) Switching from »crab steering« to »rear wheel steering«:

- The »all wheel steering« indicator lights up, the »rear wheel steering« indicator flashes.
- Turn the steering wheel until the front axle is in straight ahead position.
- The indicator for »all wheel steering« goes dark when the front axle is in straight ahead position. The »rear wheel steering« indicator is lit permanently.

5.) Switching from »all wheel steering« to »crab steering«:

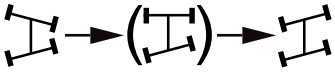

NOTE:
You may not directly switch from »rear wheel steering« to »crab steering« but must execute an intermediate step: »rear wheel steering«

a) Switch from »all wheel steering« to »rear wheel steering«:

NOTE:
»Rear wheel steering« will function only when wheels of the front axle are in straight ahead position.

b) Switching from »rear wheel steering« to »crab steering«:

- Steer rear axle wheels to the desired position before switching over.
- The »all wheel steering« indicator is lit permanently.

NOTE:
»Crab steering« (»all wheel steering« with offset axles) is active.

https://truckmanualshub.com/

6.) Switching from »crab steering« to »all wheel steering«:

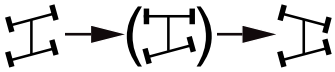

NOTE:

You may not directly switch from »crab steering« to »all wheel steering« but must execute an intermediate step: »rear wheel steering«

a) Switching from »crab steering« to »rear wheel steering«:

- The »all wheel steering« indicator lights up, the »rear wheel steering« indicator flashes.
- Turn the steering wheel until the front axle is in straight ahead position.
- The indicator for »all wheel steering« goes dark when the front axle is in straight ahead position. The »rear wheel steering« indicator is lit permanently.

b) Switching from »rear wheel steering« to »all wheel steering«:

NOTE:

»All wheel steering« will function only when wheels of the rear axle are in straight ahead position.

https://truckmanualshub.com/

Attachments

https://truckmanualshub.com/

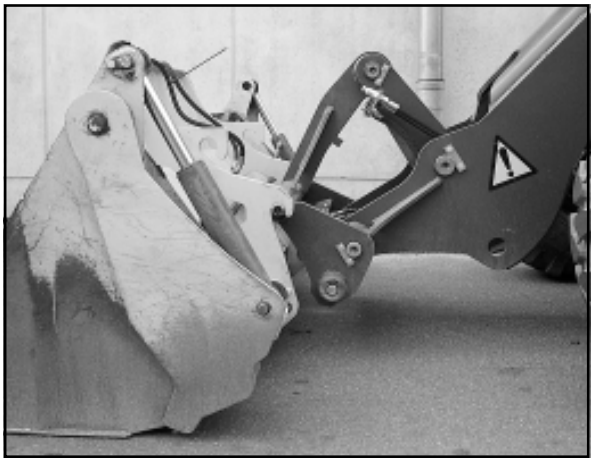

Figure 6-1

6.2 Mounting and dismounting attachments with hydraulic connections

6.2.1 Multi-purpose bucket

Mounting

(1) Bring the bucket arm to its lowest position and tip the quick-change device.

(2) Drive the loader up to the bucket (6-1).

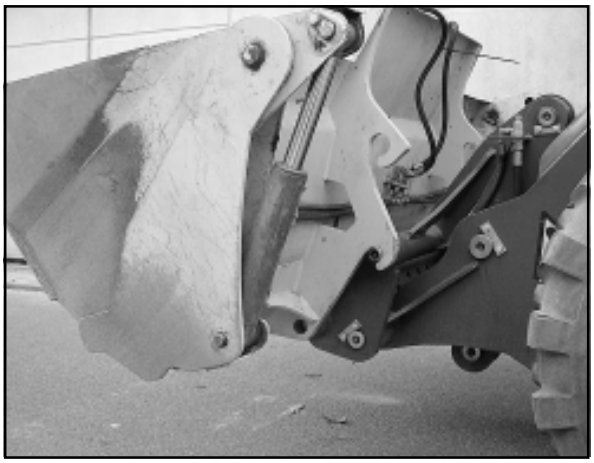

Figure 6-2

(3) Pick up the bucket using the quick-change device and, by simultaneously tilting the quick-change device, raise the bucket until the quick-change device is next to it (6-2).

Figure 6-3

(4) Lock the bucket (6-3) with the upper pushbutton for the auxiliary hydraulics (4-11/2).

(5) Check that the device is mounted and locked correctly on both sides.

STOP

DANGER

The two bolts of the quick-change device must be in the bore holes of the bucket carrier and must clearly protrude (6-3/arrow).

https://truckmanualshub.com/

(6) Shut down the engine.

(7) Depressurise the hydraulic lines by alternately pressing both buttons (4-11/2) at the pilot valve for working and auxiliary hydraulics (4-10/1) several times.

(8) Pull off the protective caps from the hoses of the quick-change device (6-4/1).

(9) Swing up the protective flaps of the quick-change couplings on the multi-purpose bucket (6-4/3) and connect them with the hoses of the quick-change device (6-4) by tightly pushing them in.

CAUTION

When making connections, make sure that the hydraulic connections are clean and completely connected.

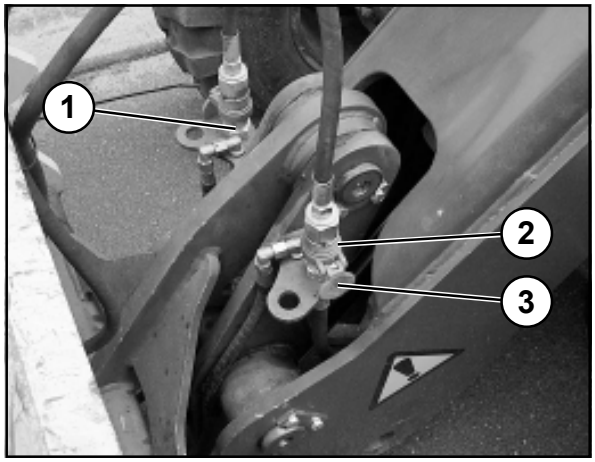

Figure 6-4

Dismounting

NOTE

When the uncoupled attachment remains in the sun for a longer period of time, the hydraulic oil in the cylinders will heat up. This will build up a pressure in the hydraulic cylinder that makes it much more difficult to connect the hydraulic lines to the hydraulic connectors later.
To avoid this issue, we recommend the following procedure of depositing the multipurpose bucket on the ground:

(1) Completely lower the bucket arm.

(2) Fully tilt up the multipurpose bucket.

(3) Close multipurpose bucket to approx. 20 cm.

(4) Shut down the engine.

(5) Depressurise the hydraulic lines by alternately pressing both buttons (4-11/2) at the pilot valve for working and auxiliary hydraulics (4-10/1) several times.

NOTE

The multipurpose bucket closes unpressurised.

(6) Open the protectors of the quick-change couplings on the multi-purpose bucket (6-4/3) and separate them from the hoses of the quick-change coupling by strongly pulling the knurled rings on the hoses of the multi-purpose bucket (6-4/2).

(7) Fit the protective caps on the hoses of the quick-change device (6-4/1).

(8) Start the engine and set the bucket safely to the ground.

https://truckmanualshub.com/

(9) Press the release button for the quick-change device (4-8/6) and, while keeping the button depressed, unlock the bucket by pressing the bottom pushbuttons for the auxiliary hydraulics (4-11/2).

(10) Tilt the quick-change device and reverse out.

NOTE
The type plate is on the rear of the bucket, on the right-hand side beneath the cross arm.

6.3 Mounting and dismounting rear attachments

6.3.1 Rear mounting plate

NOTE
You can use the rear mounting plate to attach, for example, a sand or salt distributor.

CAUTION
- Park the loader on solid and level ground.
- Perform mounting and dismounting with the loader standing horizontally and the bucket arm in the lowest position.
- The engine must be turned off.
- Immobilise the loader with the parking brake (4-12/2).

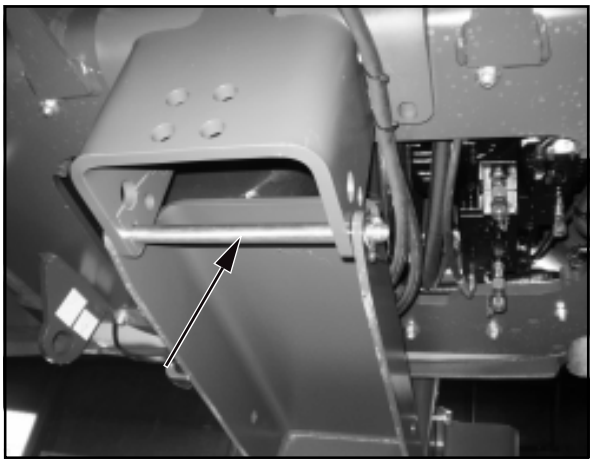

Figure 6-5

Mounting

(1) Remove the shunting and towing coupling.
To do so, loosen the four fastening screws of the shunting and towing coupling and remove them together with the shunting and towing coupling.

NOTE
Give directions to the driver of the assisting loader with regard to travelling, steering and working movements (tilting/dumping, lifting/lowering).

(2) Dismount the counterweight underneath the engine.
To do so, approach the assisting loader with mounted fork-lift attachment to the counterweight from the rear so that the forks lightly touch the counterweight and can safely pick up the counterweight.
Loosen the three fastening screws, lower the fork-lift attachment with the counterweight and back out.

(3) Place the rear mounting plate on the fork-lift attachment and move it underneath the chassis so that the rear mounting plate can be connected to the receptacle at the chassis by pushing in the bolt (6-5/arrow). Secure the bolt with a linchpin.

(4) Swing control lever (6-6/2) to the rear as shown in picture 6-6.

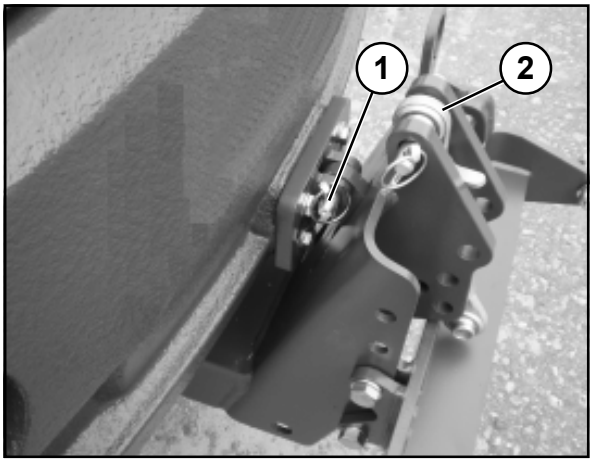

Figure 6-6

https://truckmanualshub.com/

(5) Position the rear mounting plate by tilting/dumping or lifting/lowering the fork-lift attachment until the bolt can be pushed into the location hole of the rear mounting plate (6-6/1). Secure the bolt with a linchpin.

NOTE

Hydraulic and/or electric ports (6-7/1 und 6-7/2) are located at the loader rear for attachments requiring a hydraulic or electric connection.

Dismounting

To dismount, proceed in the reverse order of steps.

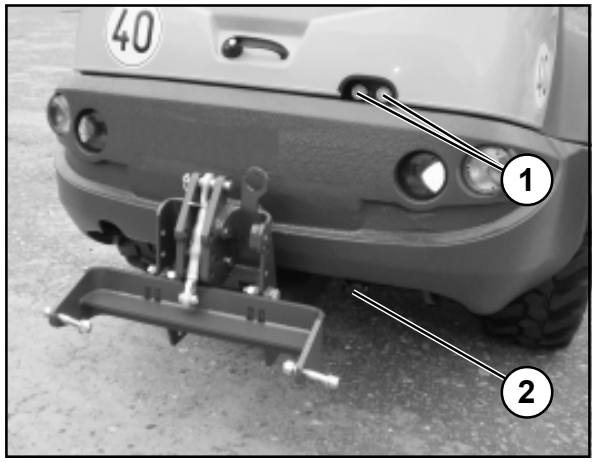

Figure 6-7

6.4 Use of additional attachments

DANGER

1. Only those attachments described in these operating instructions may be used.

2. We emphasise that attachments that are not supplied by us are also not tested and approved by us. Use of such products can under certain conditions adversely affect the present constructional qualities of your loader and thus limit the active and passive driving safety. The manufacturer cannot be held responsible for damage that occurs through the use of such products.

https://truckmanualshub.com/

https://truckmanualshub.com/

Rescue, towing, lashing, lifting by crane

https://truckmanualshub.com/

7 Rescue, towing, lashing, lifting by crane

7.1 Rescue, towing, lashing

7.1.1 Rescue/towing of the front loader if the engine or drive has failed

CAUTION
The front loader must not be tow-started. Any attempt to tow-start leads to damage.

DANGER
Secure the rescue location if it is on a public road.

NOTE
- Towing is only permitted to clear the site or a street.
- Preparation for towing depends on whether the engine has failed, thus causing a failure of the entire hydraulic system, or if only the drive has failed and the engine can drive the rest of the hydraulic system.

7.1.1.1 Towing the front loader if the engine has failed

(1) Actuate the toggle switch for the hazard flasher (4-9/4).

(2) » 20 km/h variant «
Apply the parking brake (4-12/2).

CAUTION
If the rescue location is on a slope, wheel chocks must be placed on the sloping side of both front axle wheels in addition to applying the parking brake.

(2) » 40 km/h variant «
Release the parking brake (4-12/2).

CAUTION
Secure both wheels of the front axle against rolling away in both directions (if necessary).

(3) Set the drive switch (4-11/4) to “0”.

NOTE
The preparations described in steps (5), (6) and (11) are only to be carried out if the rescue location is **not** on a public road:

https://truckmanualshub.com/

(4) Switch the switching lever for the steering to the „rear-wheel steering“ position (chapter 5.5).

(5) Cover the bucket cutting edge and teeth with the bucket protector (5-4/arrow).

(6) Insert the plug of the bucket protector into the socket (5-5/arrow, option).

(7) Push the valve lever for the working hydraulics (4-10/1) beyond its pressure point into the forward position (float position).

(8) Turn on the ignition (4-10/7).

(9) Using a suitable lifting device, e.g. a second front loader with an attached bucket, lift the bucket arm of the front loader to be towed until the mechanical bucket arm support can be inserted at the front loader to be towed (7-1).

Figure 7-1

NOTE

- If the loader has been out of operation for a longer period of time, the hydraulic hoses must be disconnected from the lifting cylinders before attaching the lifting gear. Collect the escaping hydraulic oil in a sufficiently large oil pan.
- After towing has been completed, fill the lifting cylinders with hydraulic oil and deaerate them by raising and lowering the bucket arm several times.

(10) Mechanically prop up the bucket arm [e.g. by inserting the bucket arm support (option) (1-1/arrow)] and lower the bucket arm until it rests on the bucket arm support.

(11) Set the toggle switch for switching off pilot control (4-10/2) to **„up“**.

(12) Set the pilot valve for the working hydraulics (4-10/1) to its starting position.

(13) Connect the tow rod to the loader to be towed (7-2/arrow) and to the towing vehicle.

Figure 7-2

CAUTION

The loader does not have a shunting and towing coupling at the front and for this reason may only be towed rearwards.

(14) Switch the hydrostatic drive motor to free oil flow before towing. To do so, turn out the two-way valve (7-3/1) with an Allen key (size 8) all the way to the left (7-3/2).

NOTE

- Turn the two-way valve (7-3/1) back in when towing is finished.
- The traction drive is located in the engine compartment on the left side.

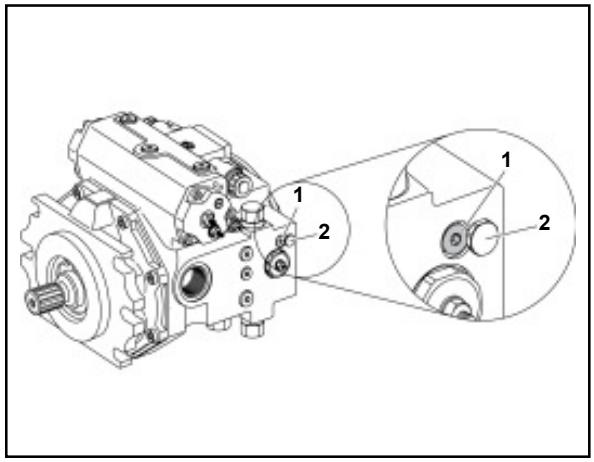

Figure 7-3

https://truckmanualshub.com/

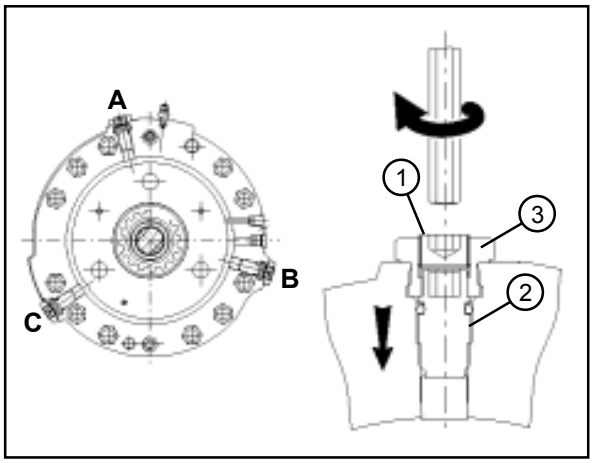

Figure 7-4

(15) Loosen the spring.

» 40 km/h variant only «

- Undo the fastening screws (7-4/1) on both sides of the axle.
- To release the brake, turn the adjusting screws (7-4/2) by half a turn each in the given sequence (A, B, C) until the resisting torque can be distinctly felt to decrease (a total of 4 to 5 turns is required).
- Tighten the fastening screws (7-4/1) on both sides of the axle again.

CAUTION

- Make sure not to move the stop screw (7-4/3) while adjusting the other screws.
- Subsequent loosening of the adjusting screws (7-4/2) must be performed in the same way as tightening them. In other words: you must synchronously repeat loosening all three screws after each 1/2 turn to prevent seizing or canting.
- Loosen the springs at the left and right of the axle body separately.

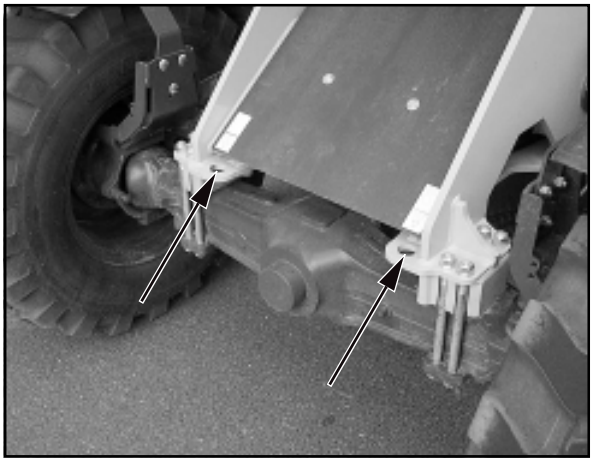

Figure 7-5

(16) Turn off the ignition (4-10/7).

(17) Remove the chocks.

DANGER

- Much more power is required to steer if the engine has failed.
- Tow the loader at walking speed (2 km/h).
- The towing distance should not exceed 1 km.
- For a longer distance, the defective loader must be loaded onto a truck (for the lashing points, see 7-5/arrows, 7-6/1 and 7-6/2).
- The max. permissible load of the rear shunting and towing coupling (7-6/1) is 5.0 t horizontally in the longitudinal direction.
- The max. permissible load of the lashing points/ load-bearing points (7-5/arrows and 7-6/2) is 2.5 t at an assumed bracing angle of 45°.

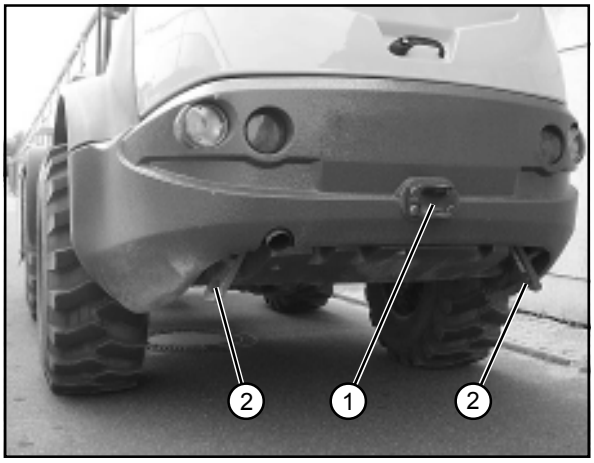

Figure 7-6

https://truckmanualshub.com/

7.1.1.2 Towing the front loader if the propulsion drive has failed

(1) Actuate the toggle switch for the hazard flasher (4-9/4).

(2) Apply the parking brake (4-12/2).

CAUTION
If the rescue location is on a slope, wheel chocks must be placed on the sloping side of both front axle wheels in addition to applying the parking brake.

(3) Set the drive switch (4-11/4) to “0”.

NOTE
The preparations described in steps (5), (6) and (8) are only to be carried out if the rescue location is **not** on a public road:

(4) Switch the switching lever for the steering to the „rear-wheel steering“ position (chapter 5.5).

(5) Cover the bucket cutting edge and teeth with the bucket protector (5-4/arrow).

(6) Insert the plug of the bucket protector into the socket (5-5/arrow, option).

(7) Lift and mechanically prop up the bucket arm [e.g. by inserting the bucket arm support (option) (1-1/arrow)] and lower the bucket arm until it rests on the bucket arm support.

(8) Set the toggle switch for switching off pilot control (4-10/2) to **„up“**.

(9) Connect the tow rod to the loader to be towed (7-2/arrow) and to the towing vehicle.

CAUTION
The loader does not have a shunting and towing coupling at the front and for this reason may only be towed rearwards.

(10) Switch the hydrostatic drive motor to free oil flow before towing. To do so, turn out the two-way valve (7-3/1) with an Allen key (size 8) all the way to the left (7-3/2).

NOTE
- Turn the two-way valve (7-3/1) back in when towing is finished.
- The traction drive is located in the engine compartment on the left side.

(11) Remove the chocks (if applicable).

https://truckmanualshub.com/

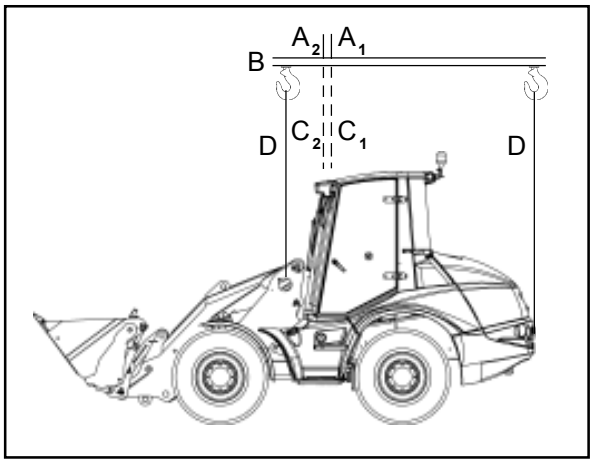

Figure 7-7

(12) Release the parking brake (4-12/2).

DANGER

- With the engine running, tow the loader at walking speed (2 km/h).
- The towing distance should not exceed 1 km.
- For a longer distance, the defective loader must be loaded onto a truck (for the lashing points, see 7-5/arrows, and 7-6/2).

NOTE

Refer to page 7-4 for maximum permissible load capacity of lashing/load-bearing points.

7.2 Lifting by crane

The loader to be lifted must be prepared as follows:

(1) Set the drive switch (4-11/4) to “0”.

(2) Switch to gear stage „Alpha max.“ (4-11/1).

(3) Apply the parking brake (4-12/2).

(4) Lift or lower the bucket arm until the lowest point of the bucket arm or of the bucket is at least 30 cm above the road (5-4).

(5) Set the toggle switch for switching off pilot control (4-10/2) to **„up“**.

(6) Lock both doors.

(7) Fold the outside mirror inwards.

Figure 7-8

CAUTION

The following items must be observed when lifting the loader by crane (Figure 7-7):

- The lifting point (A_1 - loader without standard bucket or A_2 - loader with standard bucket) of the lifting device (B) must be precisely vertically over the centre of gravity (C_1 or C_2) of the loader so that the lifting device is **horizontally** above the longitudinal centre axis of the loader.
- The lifting gear (D) must lead vertically upwards from the lifting points of the loader (7-8/arrows and 7-9/arrows).

DANGER

The lifting gear must have a lifting capacity of at least 3.0 t.

Figure 7-9

https://truckmanualshub.com/

Maintenance

8 Maintenance Plan

23124906

GB

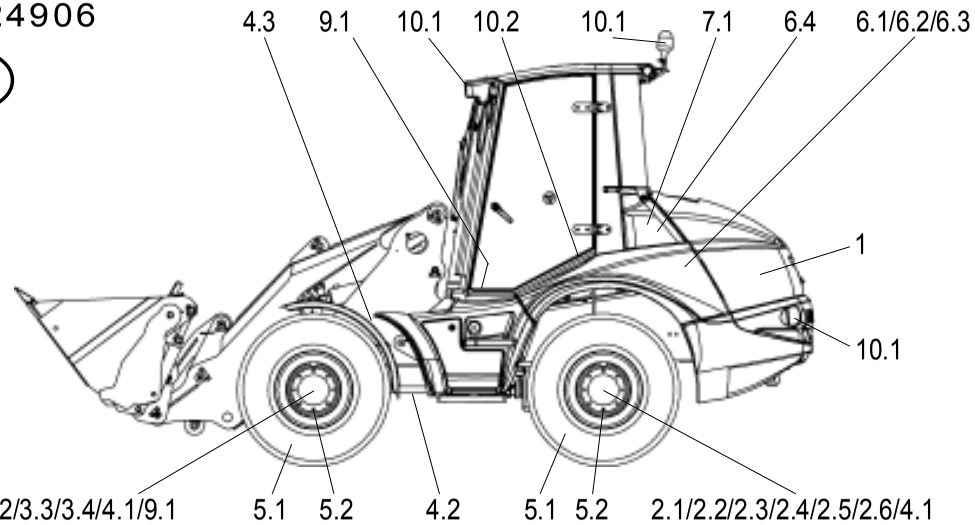

	Item	Designation	Specification	Viscosity	Filling amount
*	1	Motor oil	GlobalDHD-1=API-CH-4	SAE 15 W 40	approx. 7.5 l (suction engine) approx. 8.0 l (turbo engine)
*	2.2	Transmission oil	MIL-L-2105 D = API-GL5-6-LS	SAE 85 W 90-LS	approx. 5.5 l
*	2.4	Transmission oil	MIL-L-2105 D = API-GL5-6-LS	SAE 85 W 90-LS	approx. 2 x 0.8 l
*	2.6	Transmission oil	MIL-L-2105 D = API-GL5-6-LS	SAE 85 W 90-LS	ca. 1.25 l (20 km/h) ca. 4.0 l (30 km/h)
*	3.2	Transmission oil	MIL-L-2105 D = API-GL5-6-LS	SAE 85 W 90-LS	approx. 5.5 l
*	3.4	Transmission oil	MIL-L-2105 D = API-GL5-6-LS	SAE 85 W 90-LS	approx. 2 x 0.8 l
*	6.3	Hydraulic oil (4.)	DIN 51524 - HVLP 46	ISO VG 46, VI > 180	approx. 134 l
	7	Distilled water			as required
	8	Grease	DIN 51825 - KPF 1/2 N-20		as required
*	9	Hydraulic oil (4.)	DIN 51524 - HVLP 46	ISO VG 46, VI > 180	

Key to symbols

- △ First oil change, first filter replacement
- ▲ First ceck; eliminate any determined problems
- ○ Check; eliminate any determined problems
- ◇ Change
- * The markings, filling and check plugs are binding
- Refer to operating instructions

Caution

When carrying out maintenance work, heed accident prevention regulations!

Grease points (indicated in red)

1. Lubricate bolts every 10 operating hours/once a week with grease (DIN 51825 - KPF 1/2 N-20).
2. Lubricate glide points as required and always after cleaning using grease DIN 51825 - KPF 1/2 N-20.

Oil lubrication points

3. Use MIL-L-2104 C engine oil to lubricate the joints and deflection levers every 50 operating hours.

Optional equipment: biodegradable hydraulic oil

4. Ester-based synthetic hydraulic oil
   Viscosity class ISO VG 46 VI > 180 →

Every x operating hours: 10	50	500	1500	Item	Maintenance points	Max. permissible intervals or shorter (depending on use)
				1	**Engine**	
○	△	◇		1.1	Inspections (chapter 8.2.1) →	
	△	500		1.2	Suction engine (48 kW) oil change	
	△	250			Turbo engine (55 and 63 kW) oil change	
				1.3	Fuel filter (chapter 8.2.4) →	
○				1.4	Check air filter clogging indicator (4-14/15)	
				1.5	Maintain/replace filter element / safety cartridge →	
	○			1.6	Activate dust removal valve	
○				1.7	Check cooler and clean if necessary	
		○	◇	1.8	Check coolant level, top off if necessary	
	○			1.9	Check anti-freeze, top off if necessary	
				2	**Rear axle with distribution valve**	
	○			2.1	Check axis transmission oil level (check plug)	
		△	◇	2.2	Change axis transmission oil →	
	○			2.3	Check planetary gear transmission oil level (check plug)	
		△	◇	2.4	Change planetary gear oil →	
	○			2.5	Check distribution gear oil level (check plug)	
		△	◇	2.6	Change distribution gear oil →	
				3	**Front axle**	
	○			3.1	Check axis transmission oil level (check plug)	
		△	◇	3.2	Change axis transmission oil →	
	○			3.3	Check planetary gear transmission oil level (check plug)	
		△	◇	3.4	Change planetary gear oil →	
				4	**Axles/cardan shaft**	
	▲	○		4.1	Check fastening of axles (425 Nm)	
	▲	○		4.2	Check fastening of cardan shaft (32 Nm)	
				5	**Wheels and tyres**	
	○			5.1	Check air pressure	
▲		○		5.2	Check fastening of wheel nuts (500 Nm)	
				6	**Hydraulic system**	
	△	◇		6.1	Replace filter inserts, observe electr. indicator →	
○				6.2	Oil level check (view glass)	
			◇	6.3	Oil change →	
○				6.4	Check and clean hydraulic oil cooler	
				7	**Battery**	
		○		7.1	Visual inspection	
				8	**Grease points (indicated in red)** →	
				9	**Brake systems**	
				9.1	Function and visual test of service and parking brake before starting work	
		○		9.2	Parking brake: Check brake play, adjust if necessary	
				10	**Lighting system / fresh air filter**	
				10.1	Function test before starting work	
		○	◇	10.2	Maintaining/replacing the fresh air filter →	

https://truckmanualshub.com/

https://truckmanualshub.com/

https://truckmanualshub.com/

8 Maintenance

8.1 Notes regarding maintenance

DANGER

- The engine must be turned off.
- For work to be carried out under the bucket arm:
  - the bucket must be emptied or the attachment must be relieved,
  - the bucket arm must be mechanically propped up [e.g. by inserting the bucket arm support (option) (1-1/arrow)],
  - secure the hand lever(s) for the working and auxiliary hydraulics (actuate toggle switch 1-2/arrow “top“).
- The loader must be secured against rolling by applying the parking brake (4-12/2) and by setting the drive direction switch (4-11/4) to position „0“. In addition, wheel chocks (8-1/arrow) must be placed on both sides of one of the two wheels of the front axle.

Figure 8-1

CAUTION

- Change the oil when the units are lukewarm.
- Perform maintenance work when the loader is on level ground and the bucket arm is in its lowest position.
- Replace damaged filter inserts and gaskets immediately.
- Clean force-feed lubrication nipples before lubricating.

NOTE

- For any necessary maintenance work refer to the maintenance plan.
- Damage which is traceable to non-observance of the maintenance plan is not covered by the warranty.
- The lubricants listed in the maintenance plan can be used at ambient temperatures ranging from -15°C to +40°C.

CAUTION

For ambient temperatures below 15 °C, refer to the description given in section 5.2.2, “Winter operation”.

NOTE

In the event of a pipe or hose break in the hydraulic system, shut off the engine immediately (chapter 5.3.1). Seal the defective spot with a cleaning cloth or plug if possible to prevent the escape of greater hydraulic oil volumes.
Have the defective pipe or tube repaired immediately by an expert in hydraulics.

https://truckmanualshub.com/

8.2 Maintenance work

8.2.1 Engine inspections

8.2.1.1 Engine oil level check

CAUTION
Check the engine oil level **every 10 operating hours**.

(1) Park the loader in a level position and shut down the engine.

(2) Wait some minutes. Open the engine hood and pull out the oil dipstick (8-2/arrow).

(3) Check the oil level.

NOTE
- The filling level must be between the two markings "**L**" (low, min.) and "**H**" (high, max.).
- If necessary, top up oil via the filler neck (8-3/arrow).

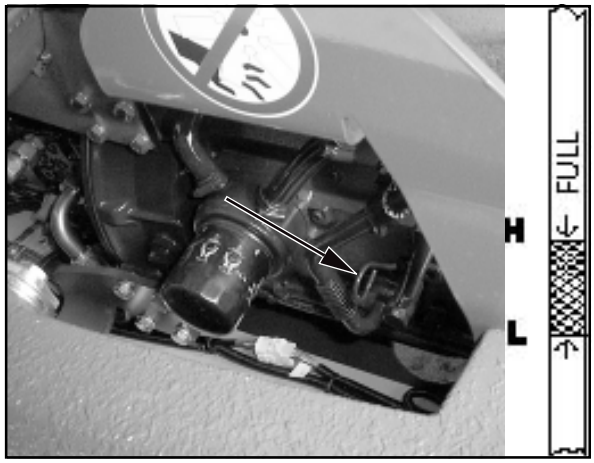

Figure 8-2

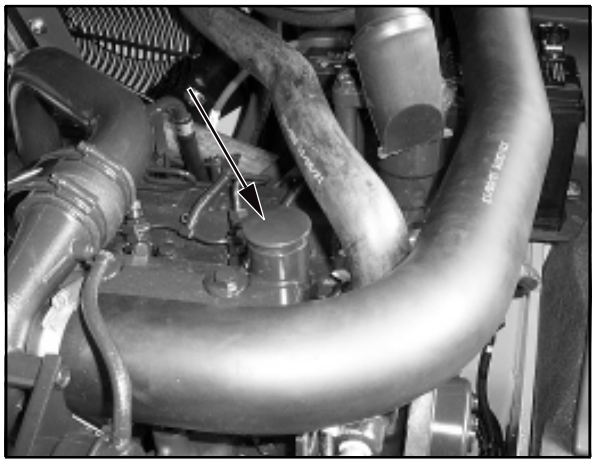
Figure 8-3

8.2.1.2 Cooling water check

CAUTION
Check the cooling water level **every 10 operating hours**.

(1) Open the lid (8-4/2) of the cooling water compensation tank (8-4/1) to relieve the system pressure.

(2) Check the filling level in the compensation tank.

NOTE
The filling level of the cooling water compensation tank (8-4/1) must lie between the two markings "**MIN**" (low) and "**MAX**" (high). If necessary, top up cooling water via the filler neck (8-4/2).

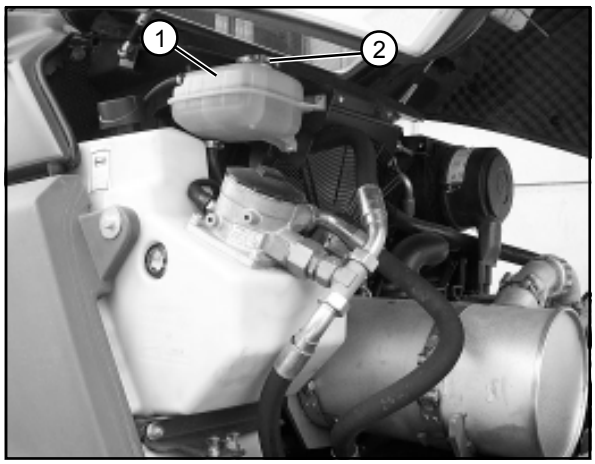

Figure 8-4

https://truckmanualshub.com/

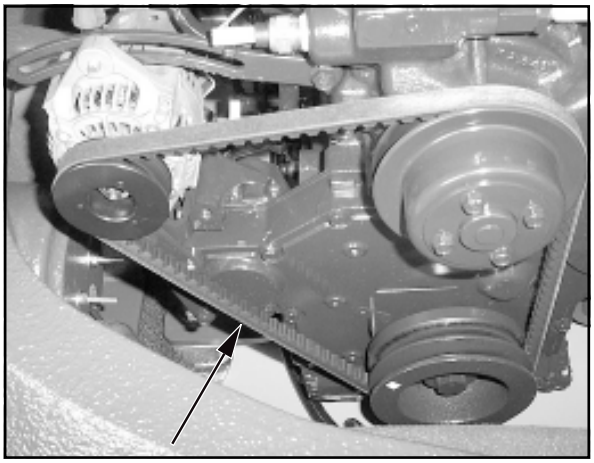

Figure 8-5

8.2.1.3 V-belt check

NOTE

Check the condition of the V-belt (8-5/arrow) **every 10 operating hours** for damages, cracks, etc. If necessary, replace the V-belt.

8.2.1.4 V-belt tension check

NOTE

Check the V-belt tension **every 1000 operating hours**. When tightened correctly, the belt may sag **no more than 5-8 mm** on its longest leg (8-5/arrow).
Correct the belt tension if necessary.

8.2.1.5 Other important engine checks

(1) Check the fastening of intake and exhaust manifolds **every 1000 operating hours**.
(2) Check the condition and function of starter and alternator **every 1500 operating hours**.
(3) Check the adjustment of the tip levers first time after **250 operating hours** then **every 2000 operating hours**.
- inlet valve 0,35 mm
- outlet valve 0,50 mm

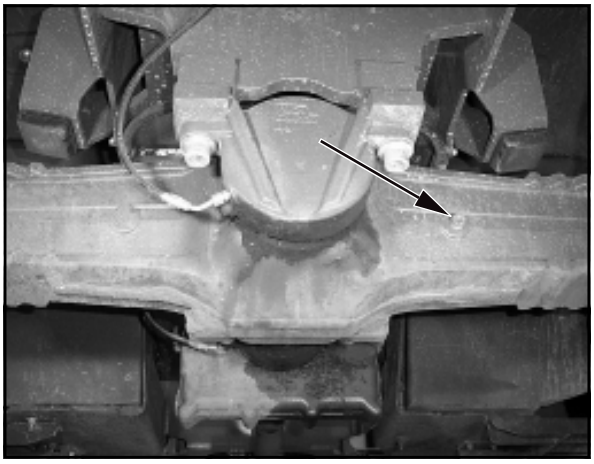

Figure 8-6

8.2.2 Oil level check for axles

8.2.2.1 Rear axle

(1) Unscrew the plug (8-6/arrow) from the axle arch.

NOTE

- The axle arch and the distribution gear do not have a common oil reservoir.
- The oil level must reach the plug bore.
- Collect any oil that escapes.

(2) Screw in the plugs again.

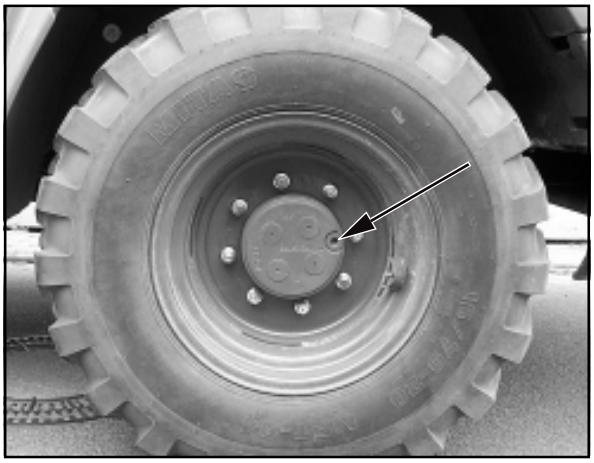

Figure 8-7

8.2.2.2 Planetary gear

(1) Move the loader until the marking line "OIL LEVEL" is horizontal and the plug is located above the top right of the marking line (8-7/arrow).

(2) Unscrew the plug.

NOTE

- The oil level must reach the plug bore.
- Collect any oil that escapes.

(3) Fit a new gasket and screw the plug back in.

https://truckmanualshub.com/

8.2.2.3 Front axle

(1) Unscrew the plug (8-8/arrow) from the axle arch.

NOTE
- The oil level must reach the plug bore.
- Collect any oil that escapes.

(2) Screw in the plugs again.

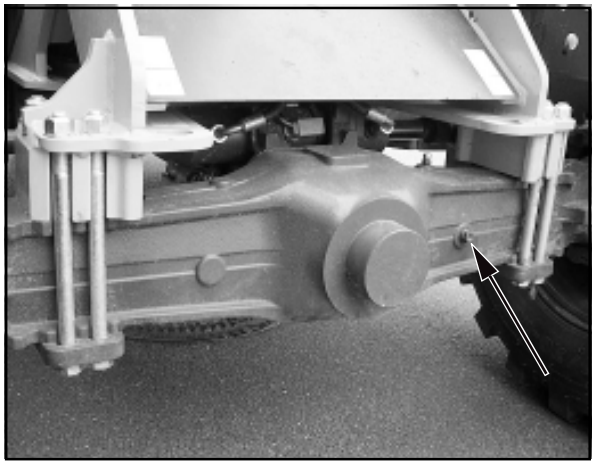

Figure 8-8

8.2.2.4 Oil level check (ancillary/distribution gear)

(1) Unscrew the plug from the gear case (8-9/arrow).

NOTE
- Collect any oil that escapes.
- The oil level must reach the plug bore.
- If necessary, fill oil into the plug bore (8-9/arrow) until the oil reaches the required level.

(2) Fit a new gasket and screw the plug back in.

Figure 8-9

8.2.3 Oil level check Hydraulic oil reservoir

(1) Park the loader in a level position.

(2) Move the bucket to its lowest position.

(3) Tilt the quick-change device and move out the locking bolts using the pilot valve for the auxiliary hydraulics (4-10/1).

(4) Open the motor hood.

(5) Check the oil level in the sight glass.

NOTE
The oil level must be visible in the upper quarter of the sight glass (8-10/2). If necessary, fill oil into the filler neck (8-10/1).

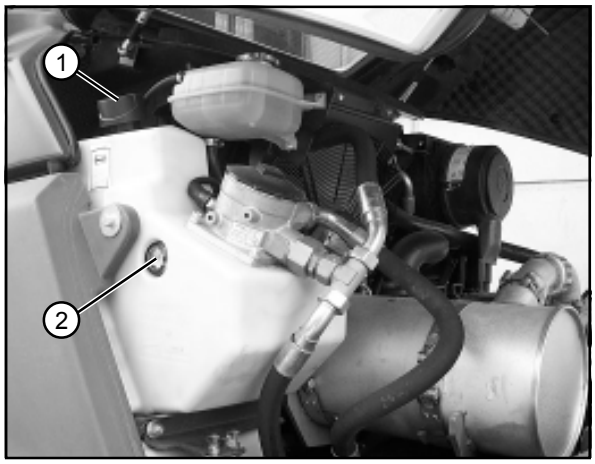

Figure 8-10

https://truckmanualshub.com/

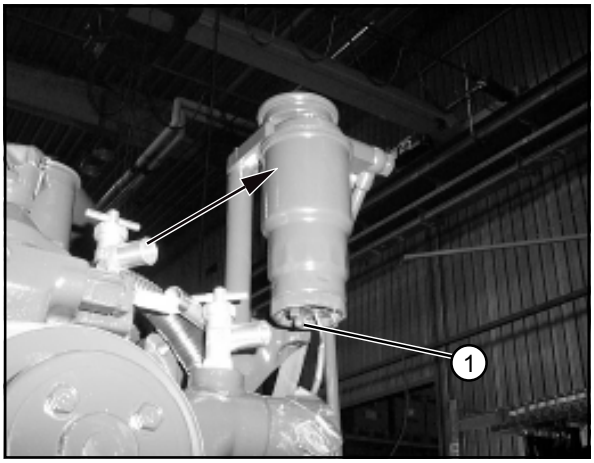

Figure 8-11

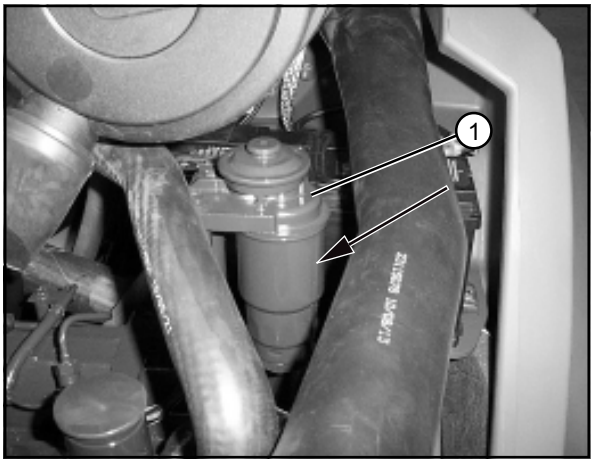

Figure 8-12

8.2.4 Fuel filter

8.2.4.1 Draining the water trap of the fuel filter

CAUTION
Flush the water trap of the fuel filter **every 10 operating hours**.

(1) Place a sufficiently large drain pan underneath.

(2) Open the drain screw (8-11/1) of the water separation valve at the fuel filter (8-11/arrow) until a sufficient volume of fluid can drain off.

CAUTION
Dispose of the collected water/fuel mixture in such a way that it will not cause pollution!

NOTE
The water separator valve is sufficiently flushed when only clear fuel escapes from the drain screw.

(3) Close the drain screw (8-11/1).

CAUTION
Tighten the drain plug by hand only to prevent damage to the thread.

8.2.4.2 Replacing the fuel filter

CAUTION
Replace the fuel filter **every 500 operating hours** or **every 6 months**.

DANGER
Fuel is flammable!
Smoking, open flames or other ignition sources are not permitted when work is performed on the fuel system.
Ensure sufficient ventilation to prevent the risk of damage to the respiratory system or to your health.

(1) Place a sufficiently large drain pan underneath.
(2) Open the motor hood.
(3) Clean the environment of filter body (8-12/1) and filter cartridge (8-12/arrow).
(4) Open the drain screw of the water separator valve and drain the filter (section 8.2.4).

CAUTION
Dispose of the collected water/fuel mixture and the filter cartridge in such a way that it will not cause pollution!

https://truckmanualshub.com/

(5) Loosen the filter cartridge (8-12/arrow) with a spanner (57 mm) or with a strap filter wrench and unscrew it with your hand.

(6) Clean the sealing surfaces at the filter body.

(7) Remove the O-ring seal (8-13/arrow) and check its condition. Replace the O-ring if necessary.

(8) Fill new filter cartridge with clean fuel.

(9) Fit the O-ring seal.

(10) Screw on and tighten fuel filter with your hand (heed the notes provided by the filter manufacturer).
(11) Start the engine and check it for leaks.

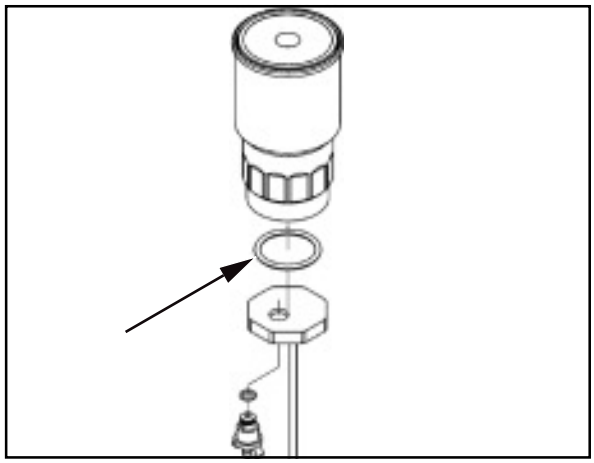

Figure 8-13

8.2.4.3 Kraftstoffvorfilter reinigen/wechseln

ACHTUNG

Der Kraftstoffvorfilter ist nach Bedarf zu reinigen. Spätestens **alle 500 Betriebsstunden** bzw. **alle 6 Monate** ist dieser zusammen mit dem Kraftstofffilter zu wechseln.

GEFAHR

Kraftstoff ist entzündlich!
Bei Arbeiten an der Kraftstoffanlage sind keine Zigaretten, offene Flammen oder sonstige entflammbare Verursacher zulässig.
Auf ausreichende Belüftung ist zu achten, um mögliche Atemwegs- bzw. Gesundheitsschäden auszuschließen.

(1) Hohlschraube (8-14/1) (SW 19) aus Kraftstofffilter schrauben.
(2) Den in der Hohlschraube befindlichen Kraftstoffvorfilter mit einem großen Schraubendreher herausschrauben.
(3) Kraftstoffvorfilter mit Druckluft reinigen.
(4) Der Einbau erfolgt in umgekehrter Reihenfolge zum Ausbau.

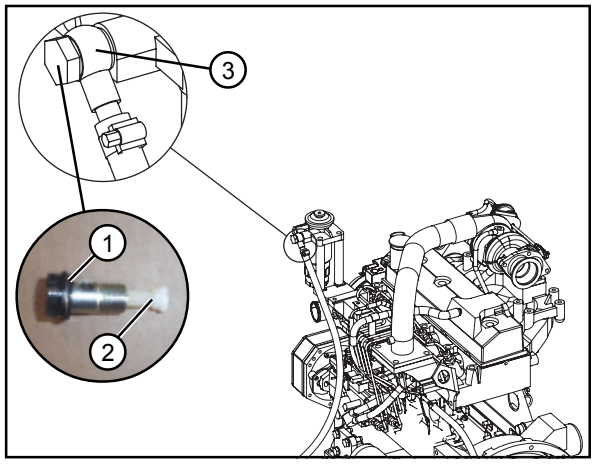

Figure 8-14

HINWEIS

Dichtringe auf beiden Seiten des Anschlussstutzens (8-14/3) ggf. erneuern.

8.2.5 Oil change, engine

(1) Place a sufficiently large oil drain pan underneath.
(2) Open the motor hood.
(3) Unscrew the cap of the oil drain valve (Rölex safety oil drain valve) on the engine (8-15/arrow).

CAUTION

The oil will flow out of the hydraulic oil tank immediately when you open the oil drain screw if there is no safety oil drain valve with cap.

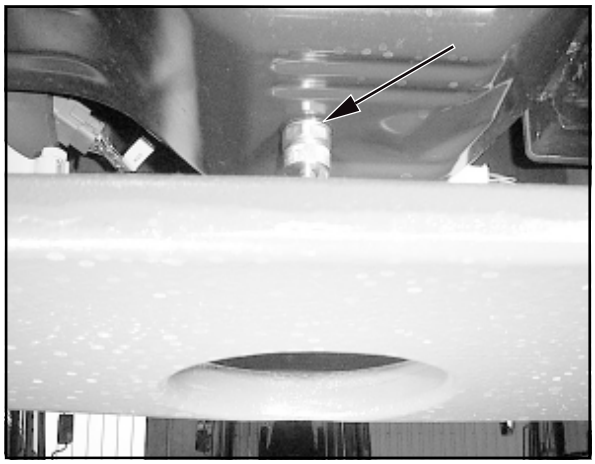

Figure 8-15

https://truckmanualshub.com/

(4) Screw the drainage nozzle with hose from the tool box (4-1/12) to the oil drain valve.

(5) Remove the cover cap from the hose.

(6) Let the entire oil flow out.

CAUTION

Caution: risk of burns as long as the engine oil is hot.

(7) Close the drain hose with the cover cap and unscrew the hose.

NOTE

Screw the oil drain plug in again if there is no safety oil drain valve.

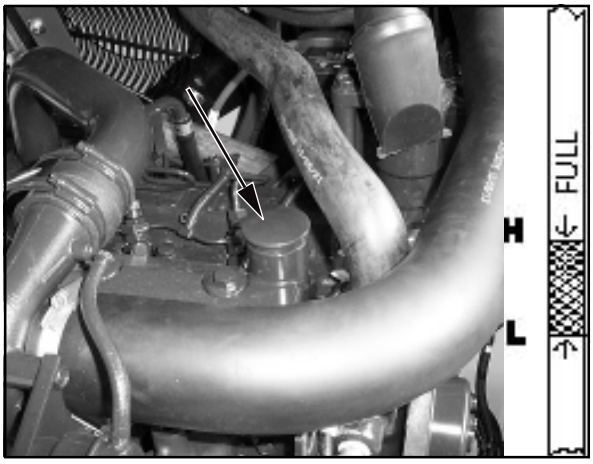

Figure 8-16

CAUTION

check the waste oil. Black, low viscosity oil indicates thinning with fuel. Milky oil indicates blending with coolant.
Heed the stipulated oil change intervals in order to maintain the oil quality.

CAUTION

Waste oil must be disposed of in such a way that it will not cause pollution!

(8) Screw the cap onto the oil drain plug.

(9) Fill engine oil into the engine via the filler neck (8-16/arrow). The filling level must reach the upper marking "**H**".

NOTE

Information about the quantity and designation of oil as well as the change intervals is given in the maintenance plan (chapter 8.4).

(10) Close the filler neck (8-16/arrow) and start the engine.

(11) Idle the engine briefly and check for leaks at the screw plug etc.

(12) Check the engine oil level (section 8.2.1.1) and top up if applicable.

https://truckmanualshub.com/

8.2.6 Changing the engine oil filter insert

(1) Clean the filter body and its environment (8-17/1).

(2) Place a sufficiently large oil drain pan underneath.

(3) Loosen the filter cartridge (8-17/arrow) with a spanner (74 mm) or with a strap filter wrench and unscrew it with your hand. Make sure the seal is not stuck in place.

CAUTION
Caution: risk of burns as long as the engine oil is hot.

(4) Clean the sealing seat of the new cartridge.

(5) Lubricate the seal of the new engine oil filter cartridge with clean engine oil.

(6) Screw the new filter cartridge in place and give it half a turn to tighten it (heed the manufacturer's notes).

CAUTION
Take care not to tighten the filter too much to prevent deformation of the thread and damage to the seal!

(7) Idle the engine briefly to fill the filter with engine oil.

CAUTION
Check the engine oil pressure: After the engine has started, the indicator for engine oil pressure must go dark within 15 seconds. When the indicator remains lit, shut off the engine immediately!

(8) Check the engine oil level as described in section 8.2.1.1 and top up if necessary.

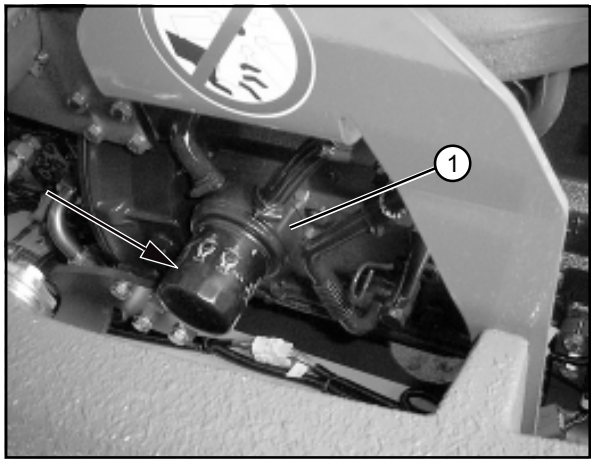

Figure 8-17

https://truckmanualshub.com/

8.2.7 Oil change, axles

8.2.7.1 Rear axle

(1) Place a sufficiently large oil drain pan underneath.

(2) Unscrew the plugs from the axle arch (8-18/2 and 8-19/2) and drain the oil.

CAUTION
Waste oil must be disposed of in such a way that it will not cause pollution!

(3) Screw in the plug (8-19/arrow) again.

(4) Fill in oil via the plug bore (8-18/2) until the oil level reaches the opening.

NOTE
- Information about the quantity of oil is given in the maintenance plan (chapter 8.4).
- After a few minutes, when the oil level has lowered, top up the oil until the oil reaches the marked level and remains stable.
- The vent valve of the axle (8-18/1) must be free from dirt.

(5) Screw in the plug (8-18/2) again.

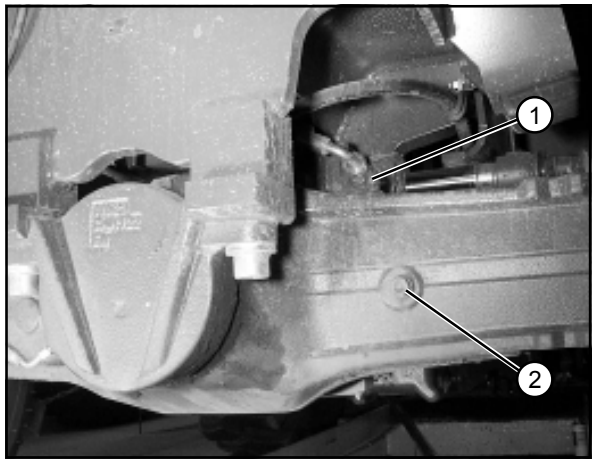

Figure 8-18

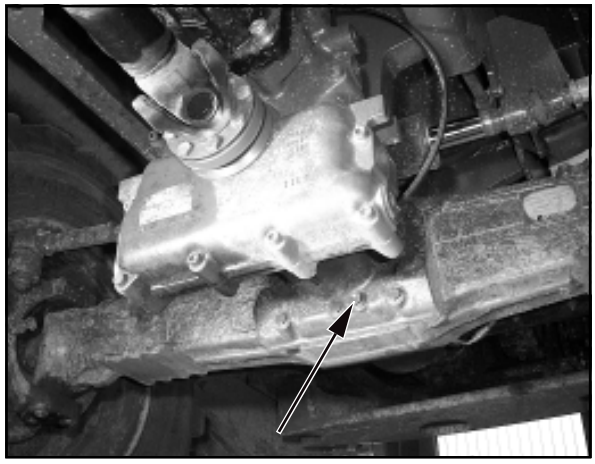
Figure 8-19

8.2.7.2 Planetary gear

(1) Move the loader so that the plug (8-20/arrow) is positioned at 6 o'clock.

(2) Place an oil drain vessel with a drain channel underneath the gear.

(3) Unscrew the drain plug and let the oil drain out.

CAUTION
Waste oil must be disposed of in such a way that it will not cause pollution!

Figure 8-20

https://truckmanualshub.com/

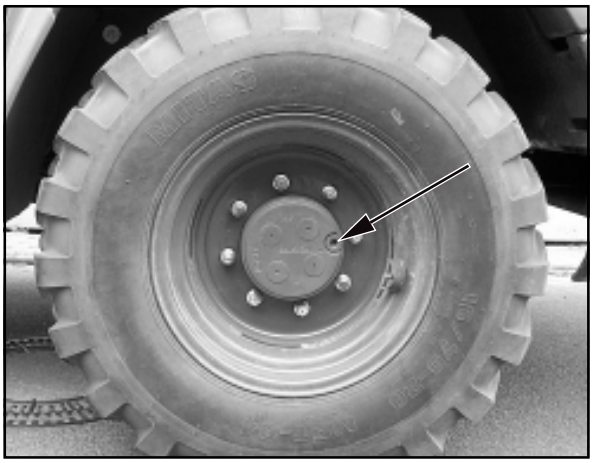

Figure 8-21

(4) Move the loader until the marking line "OIL LEVEL" is horizontal and the plug is located above the top left of the marking line (8-21/arrow).

(5) Fill in oil via the plug bore until the oil level reaches the opening.

(6) Use a new gasket when screwing the plug back in.

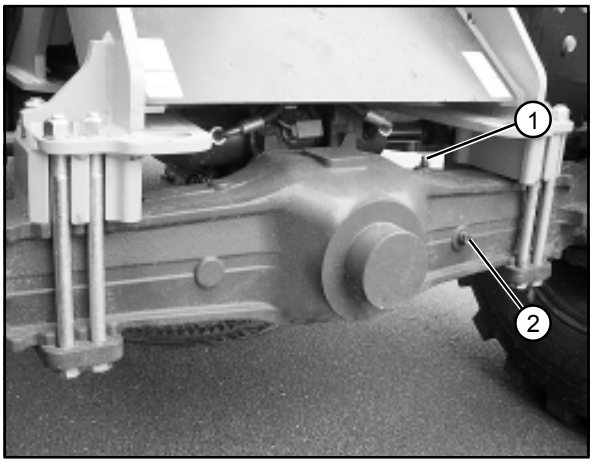

Figure 8-22

8.2.7.3 Front axle

(1) Place a sufficiently large oil drain pan underneath.

(2) Unscrew the plugs from the axle arch (8-22/arrows and 8-23/arrow) and drain the oil.

CAUTION

Waste oil must be disposed of in such a way that it will not cause pollution!

(3) Screw in the plug (8-23/arrow) again.

(4) Fill in oil via the plug bore (8-22/2) until the oil level reaches the opening.

NOTE

- Information about the quantity of oil is given in the maintenance plan (chapter 8.4).
- After a few minutes, when the oil level has lowered, top up the oil until the oil reaches the marked level and remains stable.
- The vent valve of the axle (8-22/1) must be free from dirt.

(5) Screw in the plug (8-22/2) again.

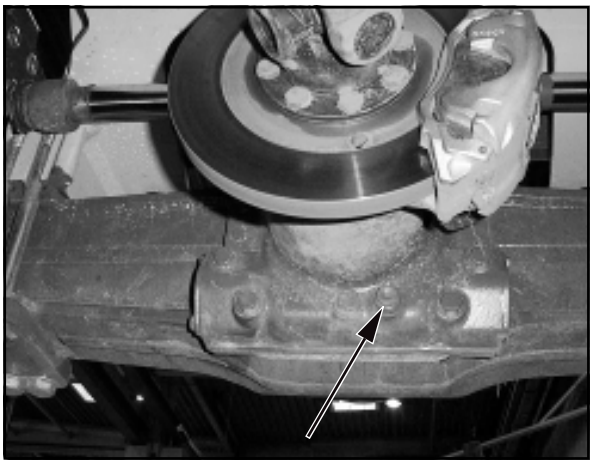

Figure 8-23

https://truckmanualshub.com/

8.2.7.4 Oil change, ancillary/distribution gear

(1) Place a sufficiently large oil drain pan underneath.

(2) Unscrew the plugs from the gear case (8-24/1 and 8-24/2) and drain the oil.

CAUTION
Waste oil must be disposed of in such a way that it will not cause pollution!

(3) Screw in the plug (8-24/2) again with a new gasket.

(4) Fill in oil via the plug bore (8-24/1) until the oil level reaches the opening.

NOTE
- Information about the quantity of oil is given in the maintenance plan (chapter 8.4).
- After a few minutes, when the oil level has lowered, top up the oil until the oil reaches the marked level and remains stable.
- The vent valve of the axle (8-25/arrow) must be free from dirt.

(5) Screw in the plug (8-24/1) again with a new gasket.

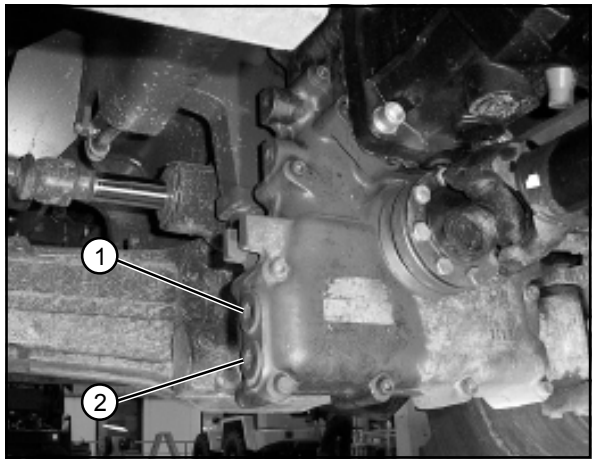

Figure 8-24

8.2.8 Oil change, hydraulic system

(1) Have an oil drain pan ready (for the minimum size, refer to section 11.1.11 or 11.2.11).

(2) Unscrew the covering flap of the oil drain plug (8-26/arrow).

CAUTION
The oil will flow out of the hydraulic oil tank immediately when you open the oil drain screw if there is no safety oil drain screw with cap.

(3) Screw the drainage nozzle with hose from the tool box (4-1/13) to the oil drain plug.

(4) Remove the cover cap from the hose.

(5) Drain the oil into the oil vessel.

CAUTION
Waste oil must be disposed of in such a way that it will not cause pollution!

(6) Remove the nozzle with the hose and replace the cover cap on the hose.

(7) Screw the covering plate onto the oil drain plug.

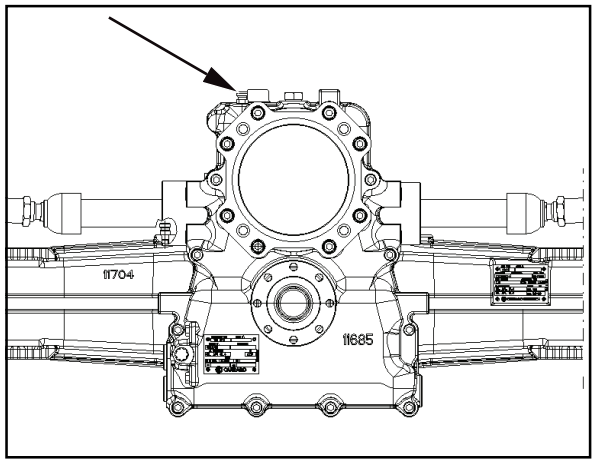

Figure 8-25

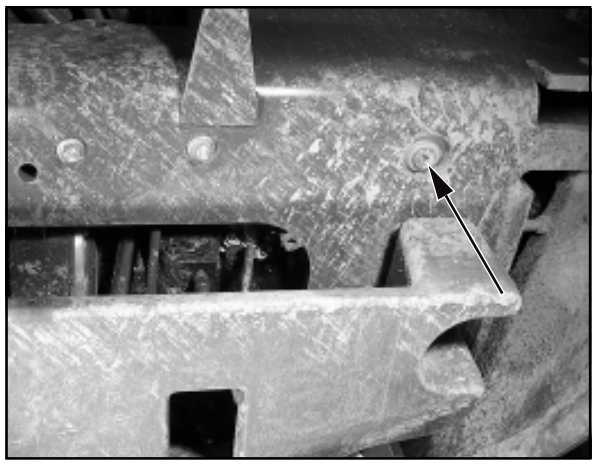
Figure 8-26

https://truckmanualshub.com/

Figure 8-27

(8) Change the hydraulic oil filter cartridge (section 8.2.9).
(9) Fill oil into the filler neck (8-27/1).

CAUTION

For loaders which are fitted to run with biodegradable hydraulic oil (ester-based synthetic hydraulic oil of viscosity class ISO VG 46 VI > 180) - (designation can be found on the hydraulic oil reservoir and on the dashboard), only this type of oil may be used for oil changes.
Mineral and biodegradable hydraulic oils must **never** be mixed!
Biodegradable hydraulic oil must be changed every **1000 operating hours**.
Changing the oil type from mineral oil to biodegradable oil must be performed according to the VDMA 24 569 conversion guidelines.

(10) Check the oil level at the sight glass (8-27/2).

(11) Close the filling nozzle.

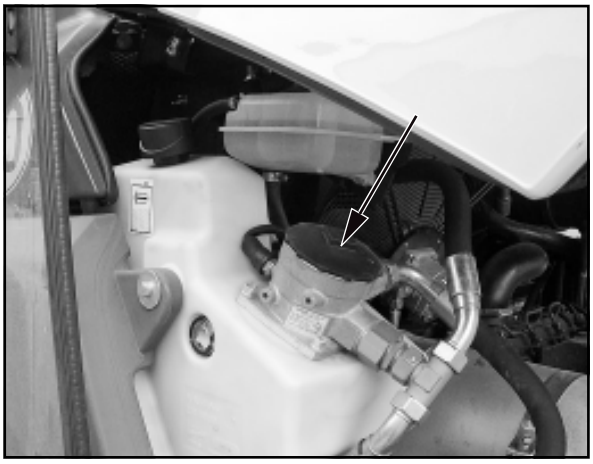

Figure 8-28

8.2.9 Changing the hydraulic oil filter insert

CAUTION

Replace the filter insert according to the maintenance plan or when the clogging indicator lamp (4-14/13) lights up.

NOTE

The clogging indicator may light up prematurely after a cold start. It will go out when the hydraulic oil warms up.

(1) Open the motor hood.

(2) Unscrew the lid of the hydraulic oil filter (8-28/arrow or 8-29/1).

(3) Pull out filter separator disc (8-29/3) with attached filter cartridge (8-29/5) and filter bowl (8-29/6) by carefully turning back and forth.

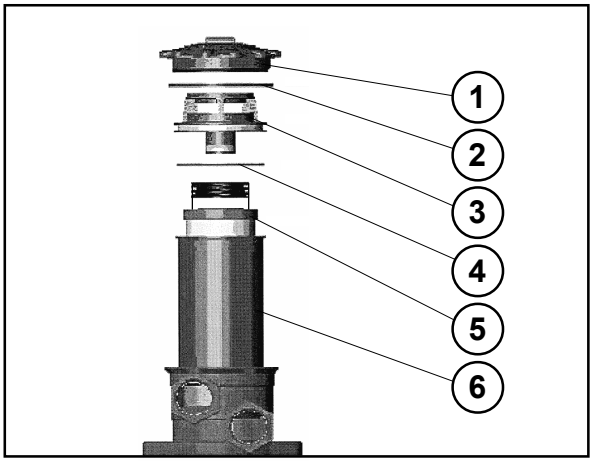

Figure 8-29

CAUTION

- Collect any hydraulic oil that drains or drips off when you lift out the separator disc and the filter cartridge.
- The used hydraulic oil filter cartridge and the O-rings must be disposed of in an environmentally compatible manner.

(4) Disassemble removed unit into filter separator disc, filter cartridge and filter bowl.

(5) Clean housing, filter cover, filter separator disc and strainer basket (if present).

https://truckmanualshub.com/

(6) Check filter for mechanical damage, in particular sealing surfaces and threads.

(7) Apply a thin coat of clean operating fluid on sealing surfaces, threads and O-rings if necessary.

(8) Check whether the designation of the new filter matches that of the old one before installing the filter.

(9) Assemble filter separator disc, filter cartridge and filter bowl to form one unit. Replace the O-ring (8-29/4) with a new one.

(10) Install filter separator disc with filter cartridge and filter bowl by slightly turning it back and forth.

(11) Screw on the hydraulic filter lid with a new O-ring (8-19/2).

(12) Close the motor hood.

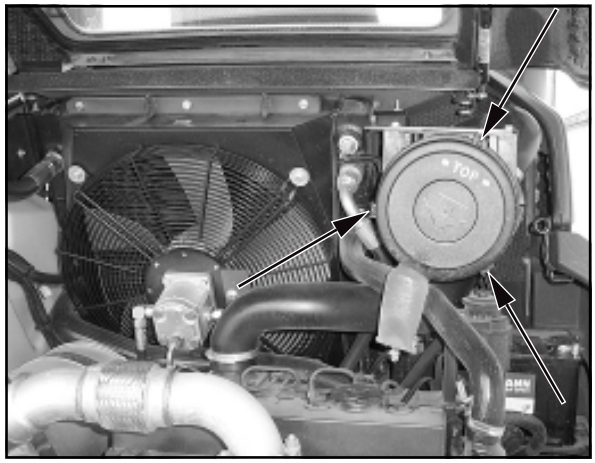

Figure 8-30

8.2.10 Maintaining/replacing the air filter

NOTE

The filter cartridge needs to be maintained when the “air filter clogging indicator” (4-14/15) lights up, but at the latest after 12 months.

(1) Open the motor hood.

(2) Loosen the three spring-loaded catches on the air filter lid (8-30/arrows) and remove the air filter lid.

(3) Pull out the filter cartridge (8-31/arrow) by carefully turning it back and forth.

(4) Clean the filter cartridge.

CAUTION

- For cleaning, use a compressed air gun to which a pipe (angled at 90°) has been attached. The pipe must be sufficiently long to reach the bottom of the cartridge. Use dry compressed air of no more than 5 bar to blow out the cartridge by moving the pipe back and forth in the interior of the cartridge. Cleaning can be stopped when dust formation ceases.
- Do not use petrol or hot liquids for cleaning.

(5) Use a hand-held lamp to check the cartridge paper and the rubber gasket of the filter cartridge for damage.
If the cartridge or the gasket is damaged, replace the cartridge.

(6) Carefully insert the filter cartridge.

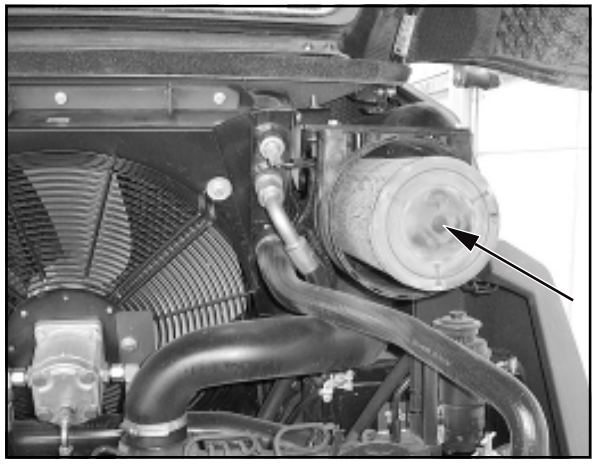

Figure 8-31

https://truckmanualshub.com/

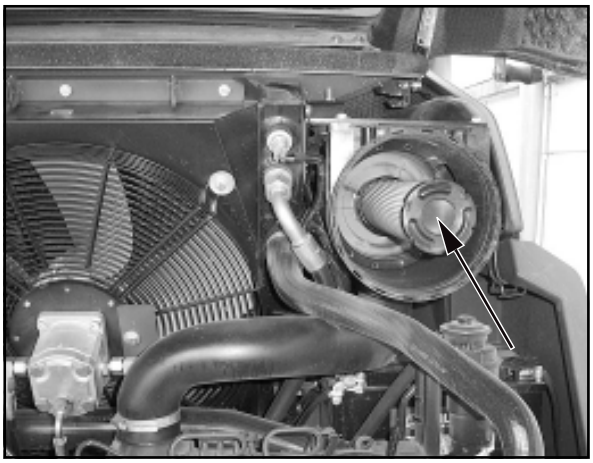

Figure 8-32

(7) Install the air filter lid on the filter housing in such a way that the direction arrow in the marking „**OBEN-TOP**“ roughly points to half past one.

NOTE
The dust removal valve must be checked from time to time and cleaned if necessary.

CAUTION
Check all connection pipes and hoses of the air filter system for damage before starting the engine.

8.2.11 Replacing the safety cartridge

CAUTION
- The safety cartridge must not be cleaned.
- The safety cartridge must be replaced after the filter cartridge has been maintained/ cleaned 5 times, but no later than after two years.
- Make sure that no dirt or dust can enter the filter housing during replacement of the safety cartridge.

Figure 8-33

(1) Remove the filter cartridge (section 8.2.10).

(2) Pierce the seal of the safety cartridge (8-32/arrow) from the inside by using a screwdriver or similar tool and pull up both strips.

(3) Hold the safety cartridge by both strips and pull it out by carefully turning it back and forth. Replace the safety cartridge and the filter cartridge by new ones.

(4) The remaining assembly is performed as described in section 8.2.10 (6) and (7).

8.2.12 Replacing the starter battery

NOTE
The starter battery is a maintenance-free part according to DIN 72311, section 7. It is located to the right in the motor compartment.

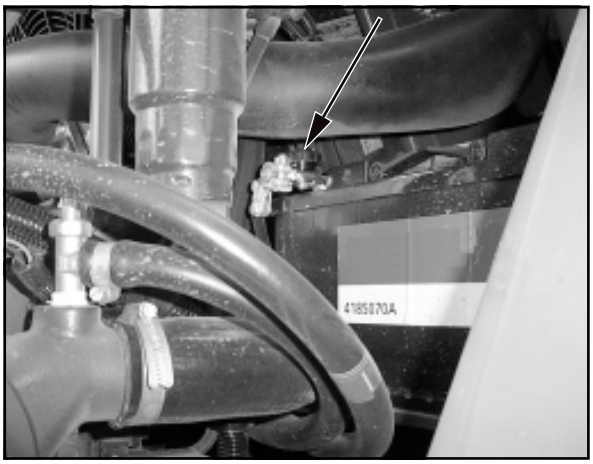

Figure 8-34

(1) Open the motor hood.

(2) Remove the main battery switch (8-34/arrow).

(3) Loosen and remove the fastening screw (size 17) (8-33/arrow) of the battery holder.

(4) Loosen and remove the battery clamps (size 13).

DANGER
Always remove the negative terminal first and then the positive terminal. Installation is in reverse order.

https://truckmanualshub.com/

(5) Remove the battery and replace it.

(6) Apply grease to the terminals before fastening them.

(7) Installation is in reverse order.

DANGER
Make sure the fastenings are secure.

(8) Close the motor hood.

8.2.13 Checking/topping up the brake fluid level

CAUTION
- The fluid level of the brake hydraulic oil must reach the “maximum line” (8-35/arrow) of the compensation tank.
- When topping up brake hydraulic oil, use only hydraulic oil acc. to „**DIN 51524 HVLP 46**“ of viscosity class “**ISO VG 46, VI > 180**”.

NOTE
The compensation tank for the brake hydraulic oil (8-35/arrow) is located in the engine compartment on the left side of the vehicle.

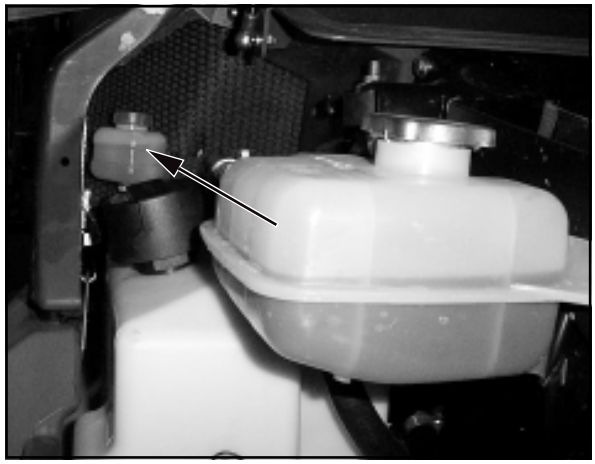

Figure 8-35

8.3 Grease lubrication points

8.3.1 bucket assembly

CAUTION
The bearing bolts/grease nipples of the bucket assembly (8-36 thru 8-41) must be greased **every 10 operating hours**.

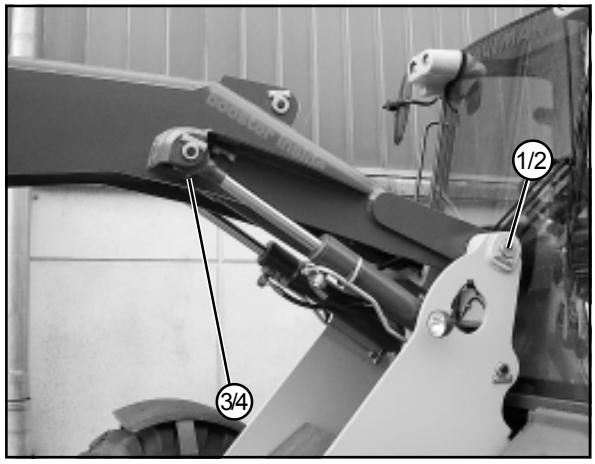

Figure 8-36

Items 1 + 2 Chassis/bucket assembly
Item 3 + 4 Piston side of lift cylinder

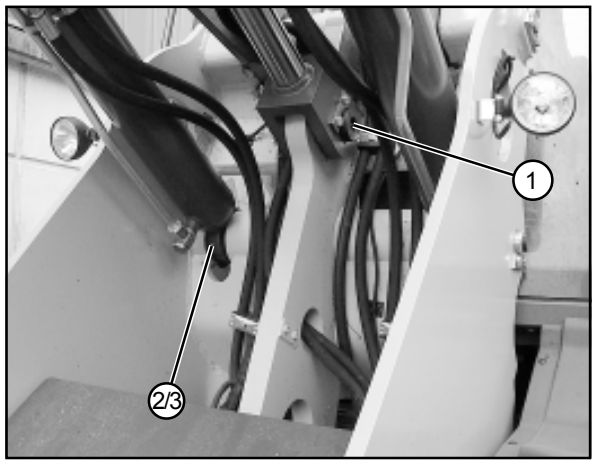

Figure 8-37

Item 1 Piston side of compensation cylinder
Item 2 + 3 Bottom of lift cylinder

https://truckmanualshub.com/

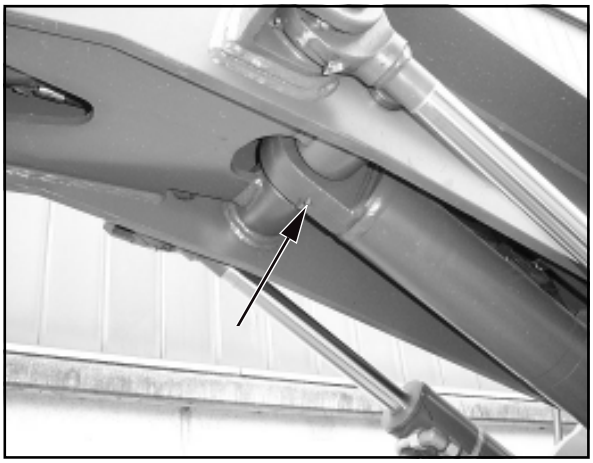

Figure 8-38

Bottom of compensation cylinder

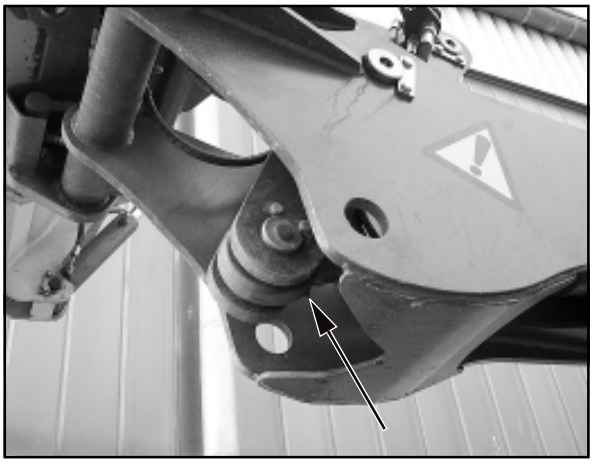

Figure 8-39

Piston side of tip cylinder

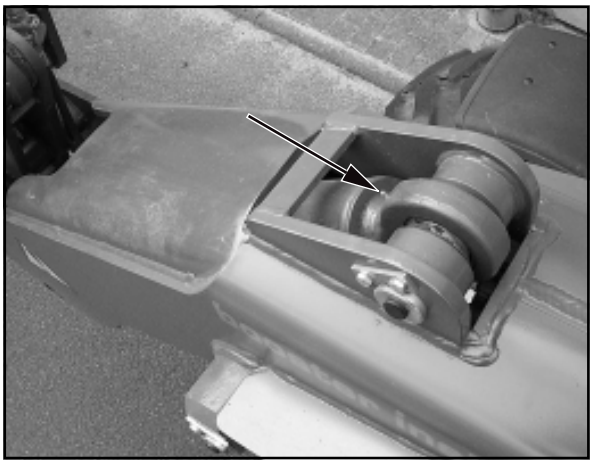

Figure 8-40

Bottom of tip cylinder

https://truckmanualshub.com/

Item 1 + 2 Tip lever / quick-change device
Item 3 + 4 Quick-change device/bucket assembly
Item 5 Bucket assembly/deflection lever
Item 6 Pivot arm/tip lever

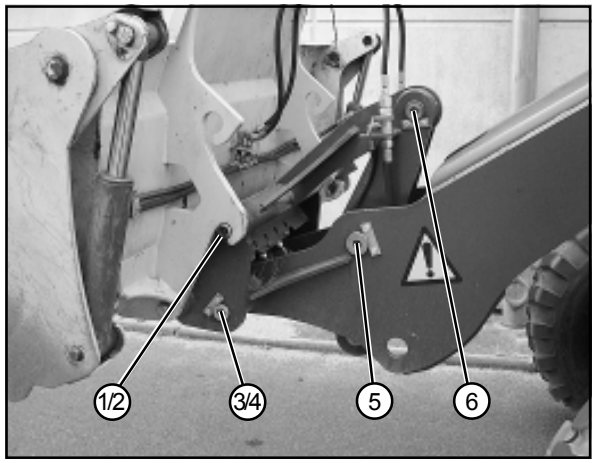

Figure 8-41

8.3.2 Rear axle

CAUTION

The spindle bolts must be lubricated every **10 operating hours**.

NOTE

Lubricate the top and the bottom of the axle spindle bolts on both sides of the axle (8-42/ arrows).

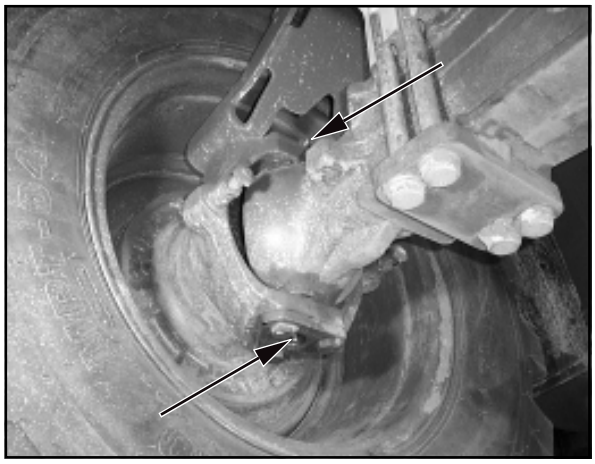

Figure 8-42

8.3.3 Rear axle pivot bolts

CAUTION

- The rear axle pivot bolt (8-43/arrows) must be lubricated **every 10 operating hours or every week**.
- Release the rear axle from load before lubricating the rear axle pivot bolts.

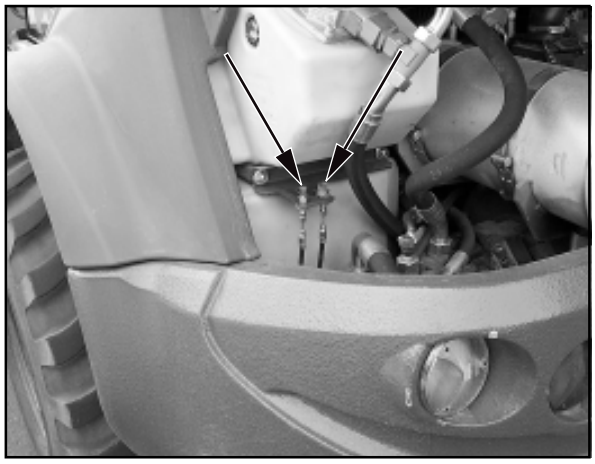

Figure 8-43

https://truckmanualshub.com/

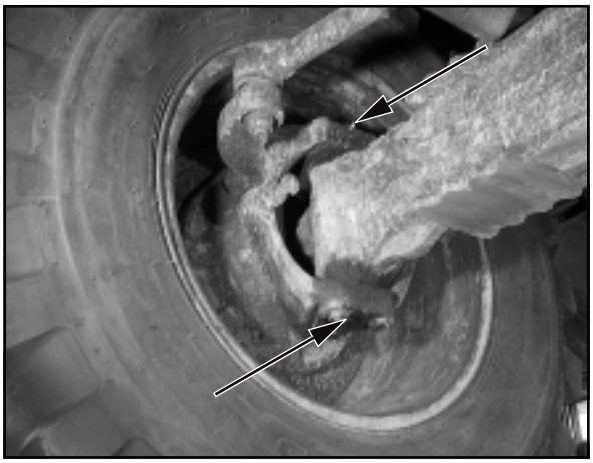

Figure 8-44

8.3.4 Front axle

CAUTION

The spindle bolts must be lubricated every **10 operating hours**.

NOTE

Lubricate the top and the bottom of the axle spindle bolts on both sides of the axle.

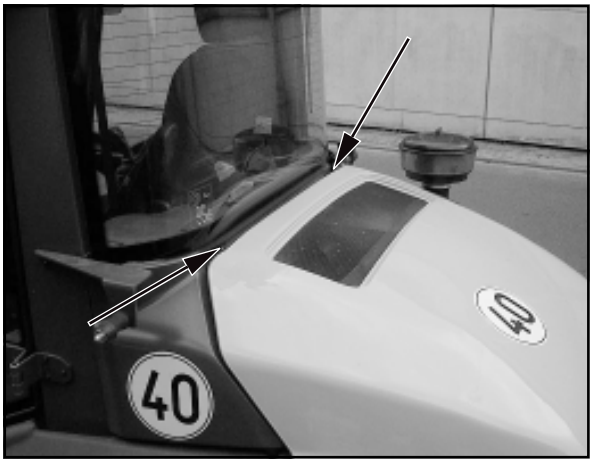

Figure 8-45

8.3.5 Engine hood

CAUTION

The hinges of the engine hood must be lubricated **every 50 operating hours.**

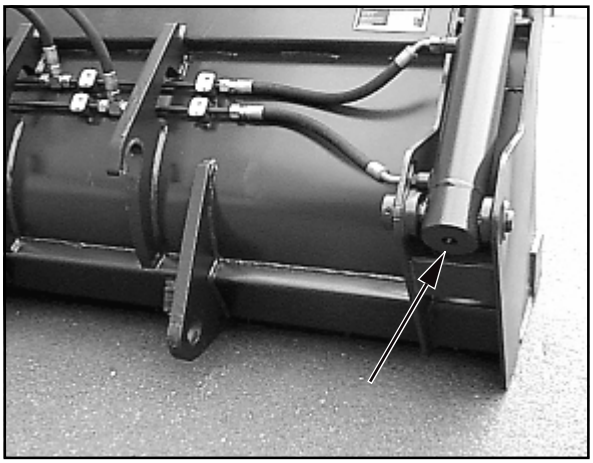

Figure 8-46

8.3.6 Multi-purpose bucket

CAUTION

The bearing bolts of the multi-purpose bucket must be lubricated every 10 operating hours.

NOTE

- The bolt (8-46/arrow) must be lubricated on both sides of the multi-purpose bucket.
- The bolts (8-47/arrows) must be lubricated on both sides of the multi-purpose bucket.

https://truckmanualshub.com/

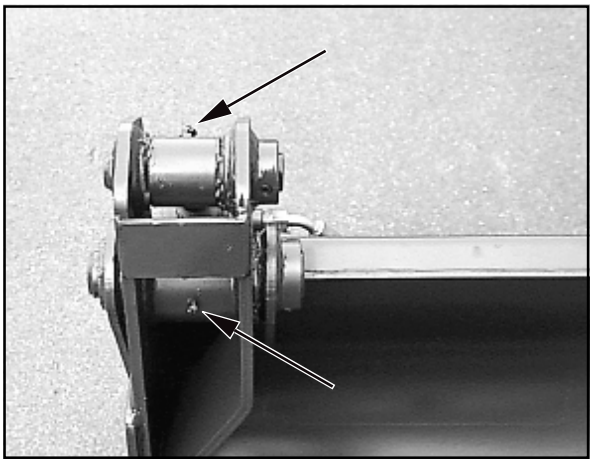

Figure 8-47

https://truckmanualshub.com/

Circuit diagrams

https://truckmanualshub.com/

10.1 - 06.2010 Elektrik-Schaltplan/Schéma électrique/Wiring diagramm/Elektrisch schakelschema/Sähkökytkentäkaavio/
Variante 1 Kopplingsschema-elektrik/Schemat instalacji elektrycznej/Schéma elektrického zapojení/El-diagram

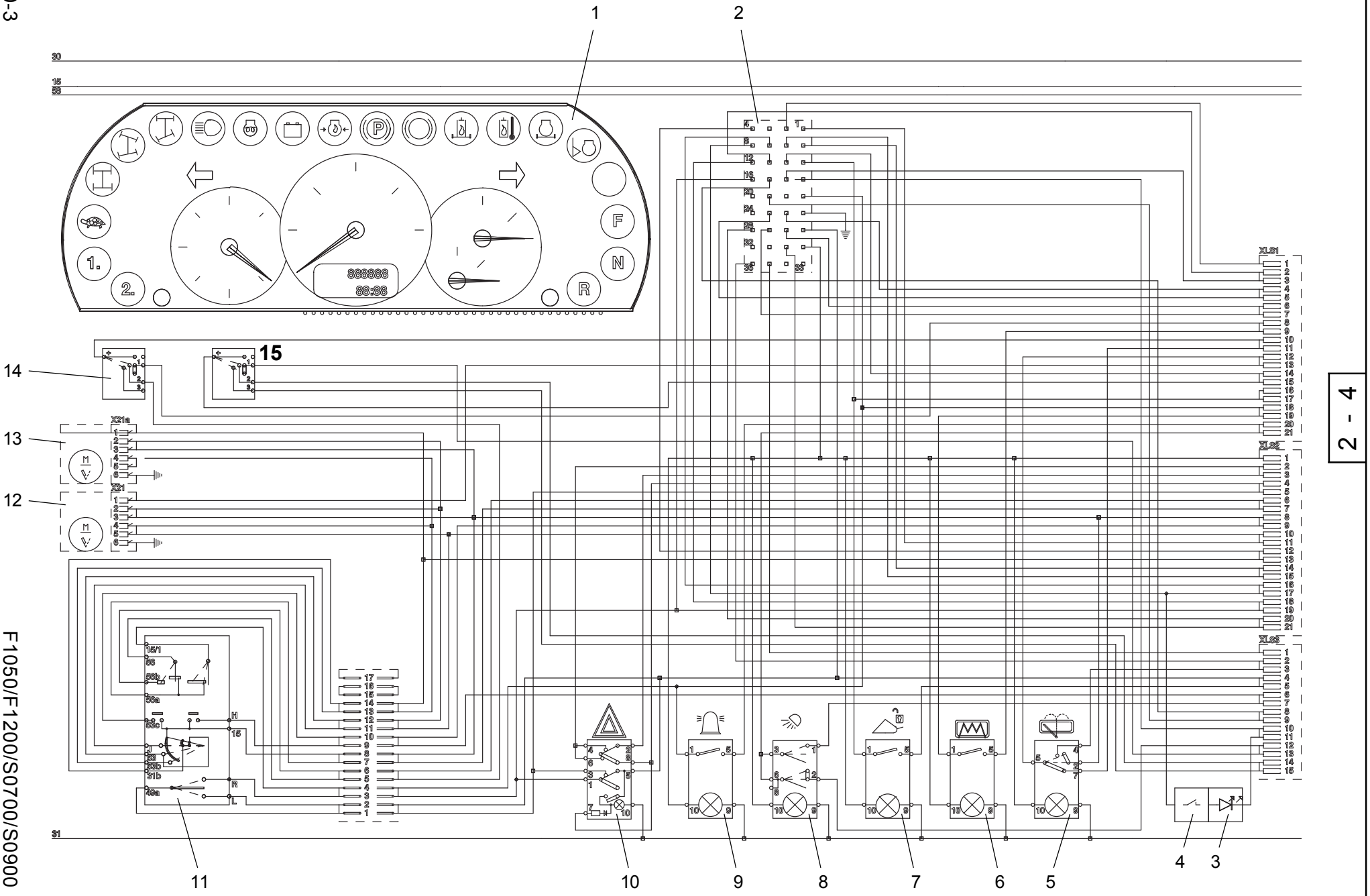

https://truckmanualshub.com/

10.1 Electric wiring diagram (Type 1)

Sheet/item	Designation
1-4/1	Multifunction panel
1-4/2	Connector multifunction panel
1-4/3	LED bucket position indicator
1-4/4	Switch bucket position indicator
1-4/5	Actuator: rear window wiper/washer
1-4/6	Actuator: Rear window heater
1-4/7	Actuator: release of quick-change device
1-4/8	Actuator: working lights
1-4/9	Actuator: warning beacon (opt.)
1-4/10	Actuator: Hazard flasher
1-4/11	Steering column switch
1-4/12	Motor windshield wiper front/interval timer (AF 1050 / AF 1200 / AS 900)
1-4/13	Motor windshield wiper front (AS 700)
1-4/14	Actuator: road lights
1-4/15	Actuator: Steering type switching

https://truckmanualshub.com/

Sheet/item	Designation
2-4/1	Fuse (F11) Brake lights (5.0 A)
2-4/2	Fuse (F5) Traction drive, steering (20.0 A)
2-4/3	Relay (K10): Traction drive cut-out
2-4/4	Relay (K12): Alpha max.
2-4/5	Relay (K13): Power control: forward
2-4/6	Relay (K14): Power control: reverse
2-4/7	Relay (K11): Differential lock
2-4/8	Relay (K15): Start-up interlock
2-4/9	Relay (K20): 2nd auxiliary hydraulics circuit
2-4/10	Relay (K12): 2nd auxiliary hydraulics circuit
2-4/11	Relay (K22): 1st auxiliary hydraulics circuit
2-4/12	Relay (K23): 1st auxiliary hydraulics circuit
2-4/13	Relay (K16): Fan control
2-4/14	Relay (K4): Working lights, front
2-4/15	Relay (K17): Dump interlock
2-4/16	Relay (K18): Dump interlock
2-4/17	Relay (K24): Dump interlock timer
2-4/18	Turn signal relay
2-4/19	Interval timer
2-4/20	Fuse (F16) High beam (15.0 A)
2-4/21	Fuse (F13) Parking light, left; tail light, left (5.0 A)
2-4/22	Fuse (F14) Parking light, right; tail light, right (5.0 A)
2-4/23	Fuse (F9) Rear window heater (20.0 A)
2-4/24	Fuse (F6) Hydraulics (20.0 A)
2-4/25	Fuse (F2) Warning beacon, 2-pole socket (10.0 A)
2-4/26	Fuse (F1) Hazard flasher (15.0 A)
2-4/27	Fuse (F7) Turn indicator (7.5 A)
2-4/28	Fuse (F15) Low beam (15.0 A)
2-4/29	Fuse (F8) Windshield wiper/washer front/rear (20.0 A)
2-4/30	Fuse (F4) Working lights, rear (15.0 A)
2-4/31	Fuse (F3) Working lights, front (20.0 A)
2-4/32	Fuse (F10) Heater fan motor (20.0 A)
2-4/33	Fuse (F12) Engine shut-off (5.0 A)
2-4/34	Acoustic buzzer, hydraulic oil temperature
2-4/35	Gear shift (fast loader)
2-4/36	ECU steering switch

https://truckmanualshub.com/

10.1 - 06.2010 Elektrik-Schaltplan/Schéma électrique/Wiring diagramm/Elektrisch schakelschema/Sähkökytkentäkaavio/
Variante 1 Kopplingsschema-elektrik/Schemat instalacji elektrycznej/Schéma elektrického zapojení/El-diagram

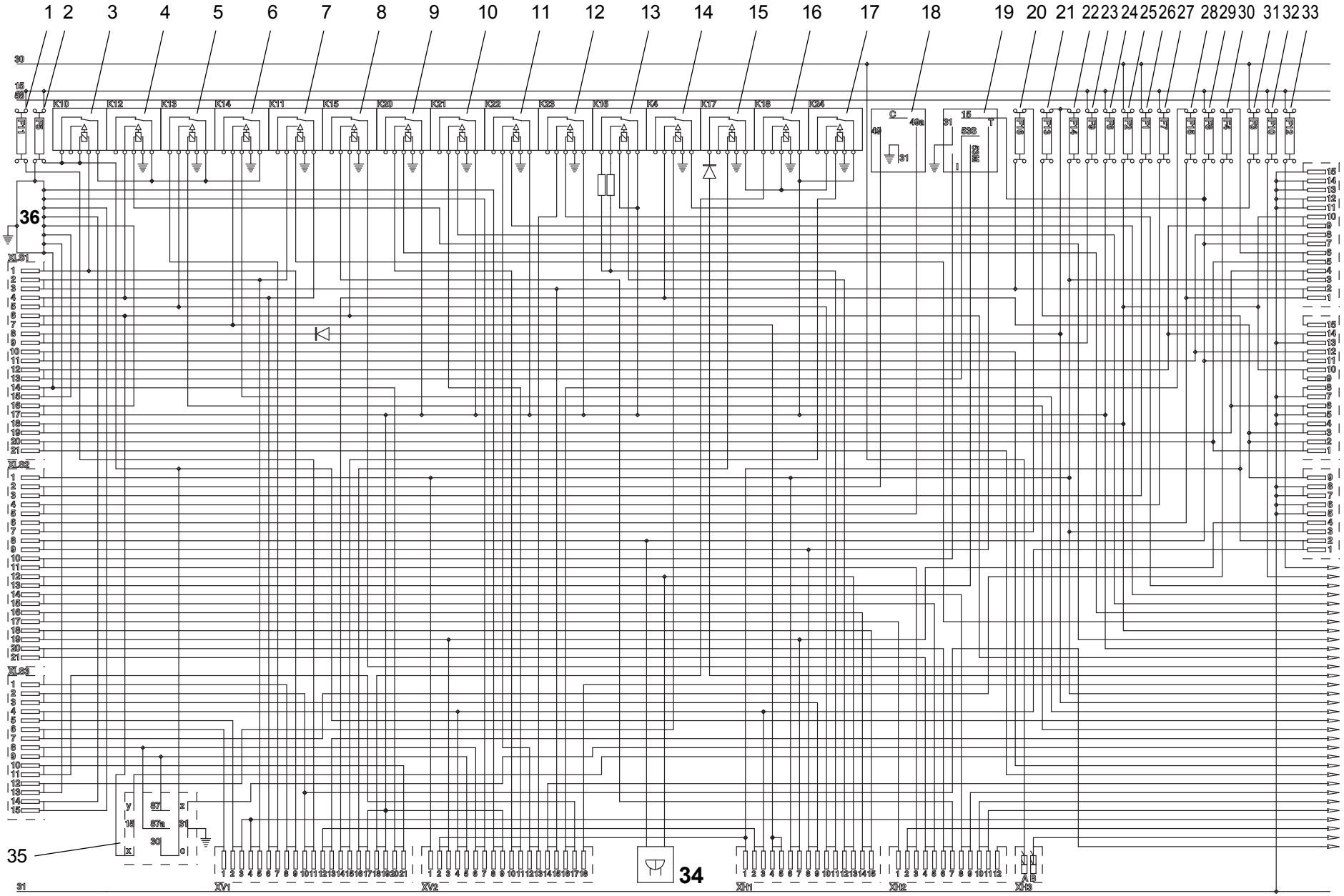

https://truckmanualshub.com/

10.1 - 06.2010 Elektrik-Schaltplan/Schéma électrique/Wiring diagramm/Elektrisch schakelschema/Sähkökytkentäkaavio/
Variante 1 Kopplingsschema-elektrik/Schemat instalacji elektrycznej/Schéma elektrického zapojení/El-diagram

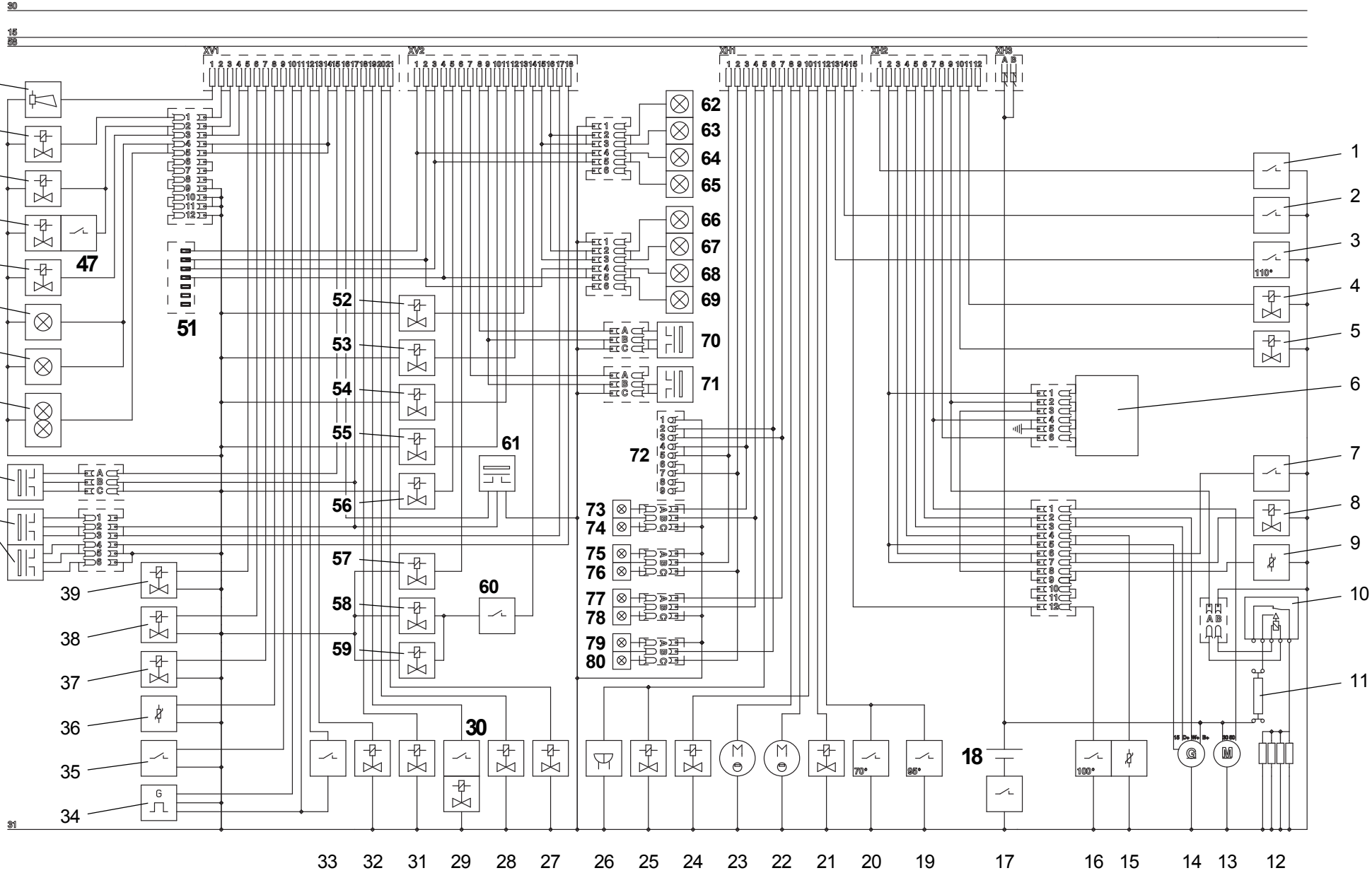

https://truckmanualshub.com/

Sheet/item	Designation
3-4/1	Switch: Air filter
3-4/2	Switch: hydraulic oil filter
3-4/3	Switch: hydraulic oil temperature
3-4/4	Valve: fan reversal
3-4/5	Valve: pilot control switch-off
3-4/6	Glow start controller
3-4/7	Switch: engine oil pressure
3-4/8	Valve: Engine shut-off
3-4/9	Coolant temperature sensor (glow start system)
3-4/10	Relay: glow start system
3-4/11	Maxi fuse (80 A): glow start system
3-4/12	Glow plugs
3-4/13	Starter
3-4/14	Alternator
3-4/15	Coolant temperature sensor
3-4/16	Switch: Coolant temperature (100°)
3-4/17	Battery main switch (option)
3-4/18	Battery
3-4/19	Switch: Coolant temperature (95°)
3-4/20	Switch: Engine oil temperature (70°)
3-4/21	Valve: Fan speed
3-4/22	Window washer motor, rear
3-4/23	Window washer motor, front
3-4/24	Valve: Travel direction forward
3-4/25	Valve: Travel direction reverse
3-4/26	Reversing warning buzzer
3-4/27	Valve: four-wheel steering
3-4/28	Valve: rear-axle steering
3-4/29	Valve: Parking brake
3-4/30	Pressure switch, inching
3-4/31	Valve: Dump interlock
3-4/32	Valve: Permanent auxiliary hydraulics
3-4/33	Switch: Brake lights
3-4/34	Tacho sensor
3-4/35	Switch: Parking brake
3-4/36	Dip pipe sensor
3-4/37	Valve: Direction detection
3-4/38	Valve: Alpha max.
3-4/39	Valve: Differential lock
3-4/40	Inclination switch
3-4/41	Proximity switch: Boost
3-4/42	Working lights, centre support
3-4/43	Working lights, lifting arm
3-4/44	Working lights, lifting arm
3-4/45	Combination valve: pipe break protection / lifting device suspension (option)
3-4/46	Memory valve, lifting device suspension (option)
3-4/47	Switch: Memory valve, lifting device suspension (option)
3-4/48	Reservoir valve, lifting device suspension (option)
3-4/49	Valve: release of quick-change device
3-4/50	Signal horn
3-4/51	7-pole socket (option)
3-4/52	Valve: Open 1st auxiliary hydraulics circuit
3-4/53	Valve: Close 1st auxiliary hydraulics circuit
3-4/54	Valve: Open 2nd auxiliary hydraulics circuit
3-4/55	Valve: Close 2nd auxiliary hydraulics circuit
3-4/56	Valve: 1st gear
3-4/57	Valve: 2nd gear
3-4/58	Valve: Rear axle support right
3-4/59	Valve: Rear axle support left
3-4/60	Pressure switch: Rear axle support
3-4/61	Proximity switch: Lifting arm
	For AS 700 only:
	Driving light, right:
3-4/62	Low beam, right
3-4/63	High beam, right
3-4/64	Parking light, right
3-4/65	Turn signal, right
	Driving light, left:
3-4/66	Low beam, left
3-4/67	High beam, left
3-4/68	Parking light, left
3-4/69	Turn signal, left
3-4/70	Proximity switch: Rear axle
3-4/71	Proximity switch: Front axle
3-4/72	Adapter, 7-pole socket
3-4/73	Turn signal, rear left
3-4/74	Reversing light, left
3-4/75	Tail light, left
3-4/76	Brake light, left
3-4/77	Turn signal, rear right
3-4/78	Reversing light, right
3-4/79	Tail light, right
3-4/80	Brake light, right

https://truckmanualshub.com/

Sheet/item	Designation
	Not for AS 700:
4-4/1	Interior lighting
4-4/2	Switch: Interior lighting
4-4/3	Windshield wiper motor, rear
4-4/4	Working lights, rear
4-4/5	warning beacon (opt.)
4-4/6	Rear window heater (opt.)
4-4/7	Mirror heater (opt.)
4-4/8	License plate illumination (fast loader)
4-4/9	High beam, left
4-4/10	Low beam, left
4-4/11	High beam, right
4-4/12	Low beam, right
	Not for AS 700:
4-4/13	Turn signal, right
4-4/14	Parking light, right
4-4/15	Parking light, left
4-4/16	Turn signal, left
	For AS 700 only:
4-4/17	Windshield wiper motor, rear
4-4/18	Interior lighting
4-4/19	Switch: Interior lighting
4-4/20	Rear window heater (opt.)
4-4/21	Working lights, rear
4-4/22	Working lights, front
4-4/23	Warning beacon (opt.)
	For AZ 95 only:
4-4/24	Working lights
4-4/25	Actuator: Rear axle support switch-off
4-4/26	Actuator: lifting device suspension (option)
4-4/27	Actuator: Permanent auxiliary hydraulics (opt.)
4-4/28	Actuator: Dump interlock switch-off
4-4/29	Actuator: pilot control switch-off
4-4/30	Actuator: fan reversal
4-4/31	Start switch
4-4/32	Actuator: fan/blower
4-4/33	Heater fan motor
4-4/34	2-pole socket
4-4/35	Multifunction handle right

https://truckmanualshub.com/

10.1 - 06.2010 Elektrik-Schaltplan/Schéma électrique/Wiring diagramm/Elektrisch schakelschema/Sähkökytkentäkaavio/
Variante 1 Kopplingsschema-elektrik/Schemat instalacji elektrycznej/Schéma elektrického zapojení/El-diagram

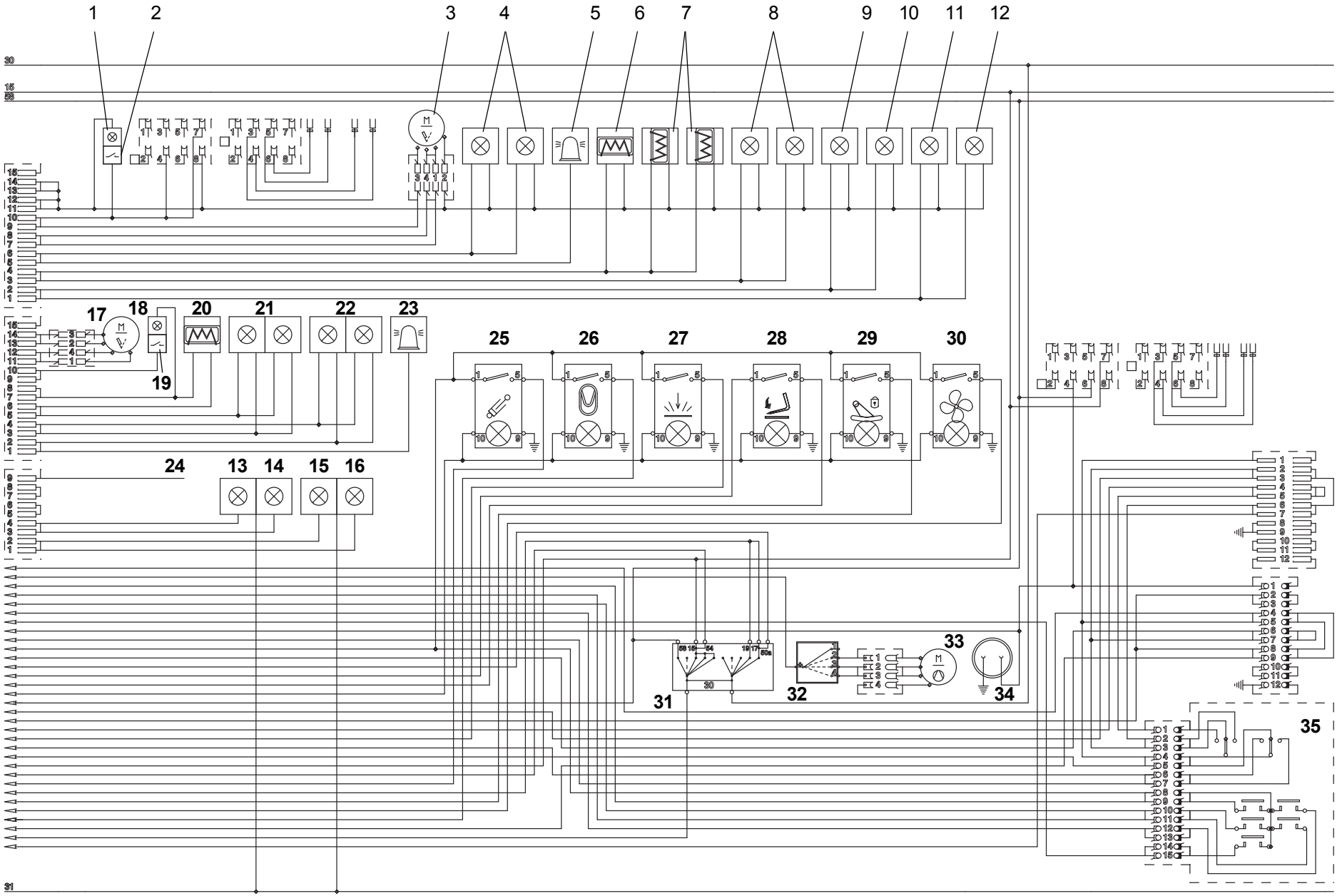

https://truckmanualshub.com/

10.1 - 02.2013 Elektrik-Schaltplan/Schéma électrique/Wiring diagramm/Elektrisch schakelschema/Sähkökytkentäkaavio/
Variante 3 Kopplingsschema-elektrik/Schemat instalacji elektrycznej/Schéma elektrického zapojení/El-diagram

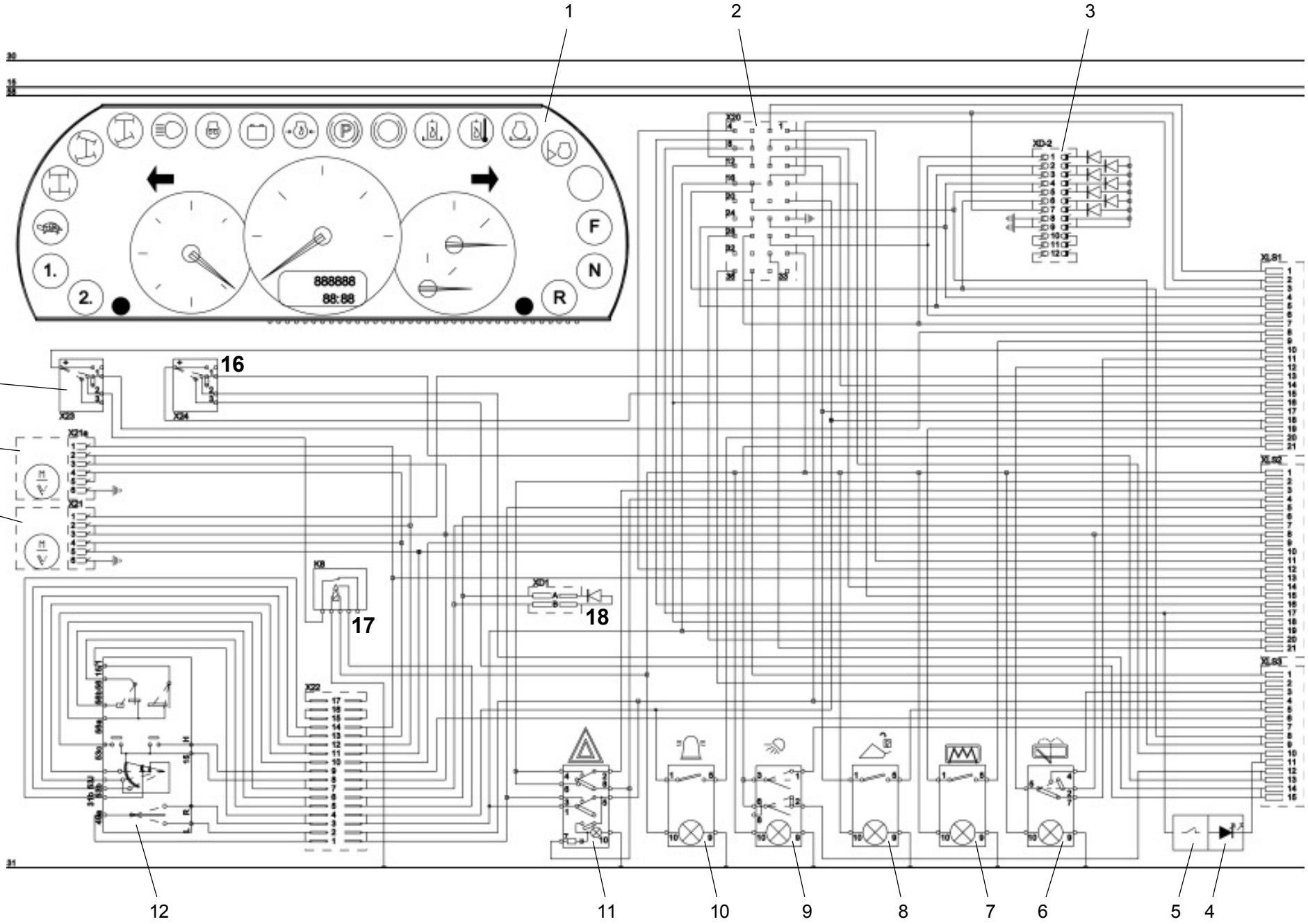

https://truckmanualshub.com/

10.1 Electric wiring diagram (Type 3)

Sheet/ item	Designation
1-6/1	Multifunction panel
1-6/2	Connector multifunction panel
1-6/3	Diode assembly
1-6/4	LED bucket position indicator
1-6/5	Switch bucket position indicator
1-6/6	Actuator: rear window wiper/washer
1-6/7	Actuator: Rear window heater
1-6/8	Actuator: release of quick-change device
1-6/9	Actuator: working lights
1-6/10	Actuator: warning beacon (opt.)
1-6/11	Actuator: Hazard flasher
1-6/12	Steering column switch
1-6/13	Motor front windshield wiper (only AS 700 / AZ 75)
1-6/14	Windshield wiper motor, front/interval timer
1-6/15	Actuator: road lights
1-6/16	Actuator: Steering type switching
1-6/17	Relay (K8): Parking/road light control
1-6/18	Power diode 20 A

https://truckmanualshub.com/

Sheet/ item	Designation
2-6/1	ECU steering
2-6/2	Relay (K6): Working lights, rear
2-6/3	Relay (K27): High current relay (12 V/120 A)
2-6/4	Acoustic buzzer, hydraulic oil temperature
2-6/5	Fuse (F1): Traction drive (10,0 A)
2-6/6	Fuse (F2): Steering (7,5 A)
2-6/7	Fuse (F3): Hydraulics (20.0 A)
2-6/8	Fuse (F4): Windshield wiper/washer front/rear (20.0 A)
2-6/9	Fuse (F5): Rear window heater (20.0 A)
2-6/10	Fuse (F6): Heater, air-conditioning system (20.0 A)
2-6/11	Fuse (F7): Engine shut-off, fuel pump (10.0 A)
2-6/12	Fuse (F8): Working lights, front (15,0 A)
2-6/13	Fuse (F9): Working lights, rear (15.0 A)
2-6/14	Fuse (F10): Drive-away interlock (5.0 A)
2-6/15	Fuse (F11): 2-pole socket (15,0 A)
2-6/16	Fuse (F12): Radio, interior lighting (5.0 A)
2-6/17	Fuse (F13): Warning beacon (opt.) (15,0 A)
2-6/18	Fuse (F14): Hazard flasher (15.0 A)
2-6/19	Fuse (F15): Turn indicator left/right (7.5 A)
2-6/20	Fuse (F16): Brake lights (5.0 A)
2-6/21	Fuse (F17): Parking light, left (5.0 A)
2-6/22	Fuse (F18): Parking light, right (5.0 A)
2-6/23	Fuse (F19): Low beam (15.0 A)
2-6/24	Fuse (F20): High beam (15.0 A)
2-6/25	Fuse (F21): Spare
2-6/26	Fuse (F22): Spare
2-6/27	Fuse (F23): Spare
2-6/28	Fuse (F24): Spare
2-6/29	Diode assembly
2-6/30	Turn signal relay
2-6/31	Interval timer

https://truckmanualshub.com/

10.1 - 02.2013 Elektrik-Schaltplan/Schéma électrique/Wiring diagramm/Elektrisch schakelschema/Sähkökytkentäkaavio/
Variante 3 Kopplingsschema-elektrik/Schemat instalacji elektrycznej/Schéma elektrického zapojení/El-diagram

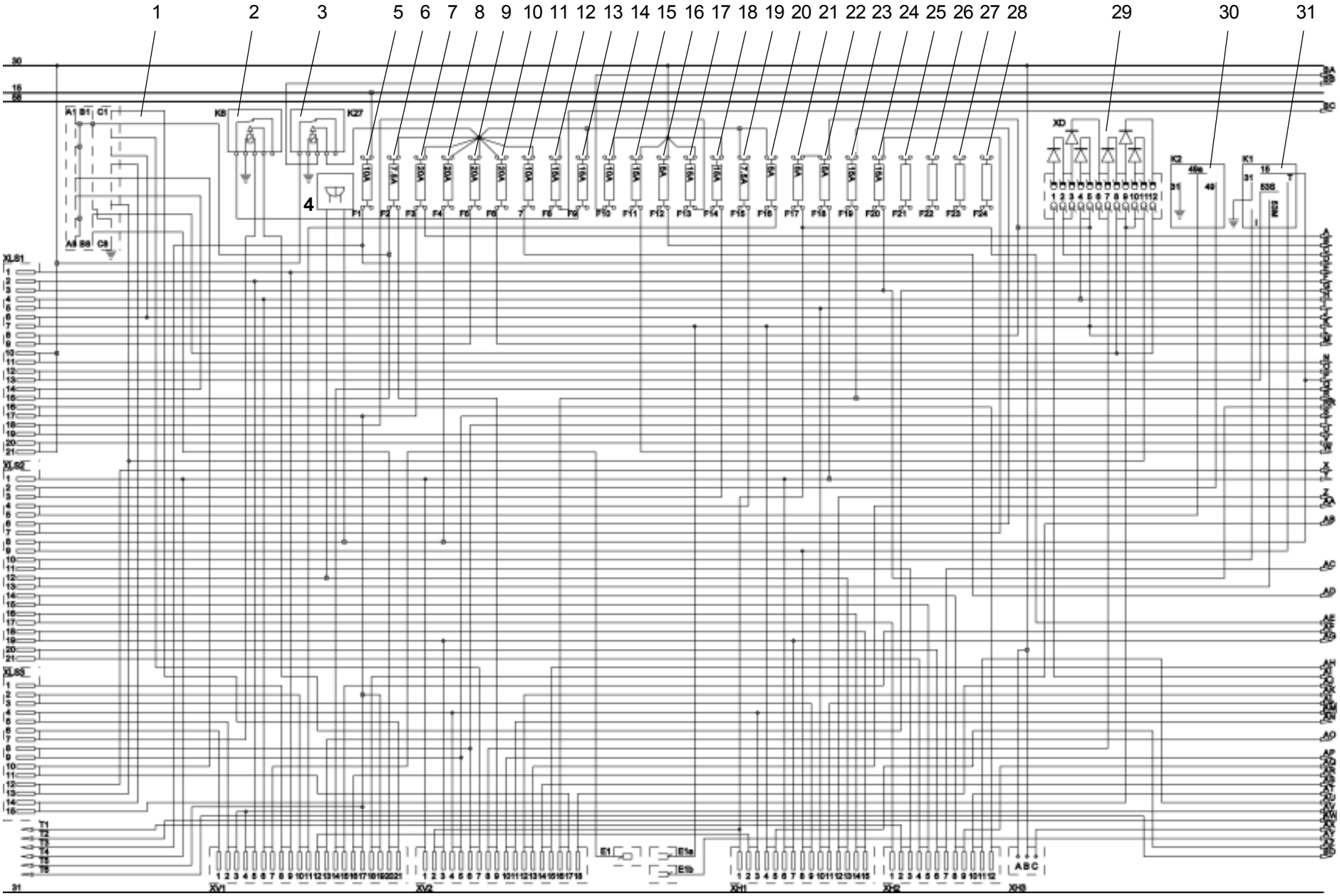

https://truckmanualshub.com/

10.1 - 02.2013 Elektrik-Schaltplan/Schéma électrique/Wiring diagramm/Elektrisch schakelschema/Sähkökytkentäkaavio/
Variante 3 Kopplingsschema-elektrik/Schemat instalacji elektrycznej/Schéma elektrického zapojení/El-diagram

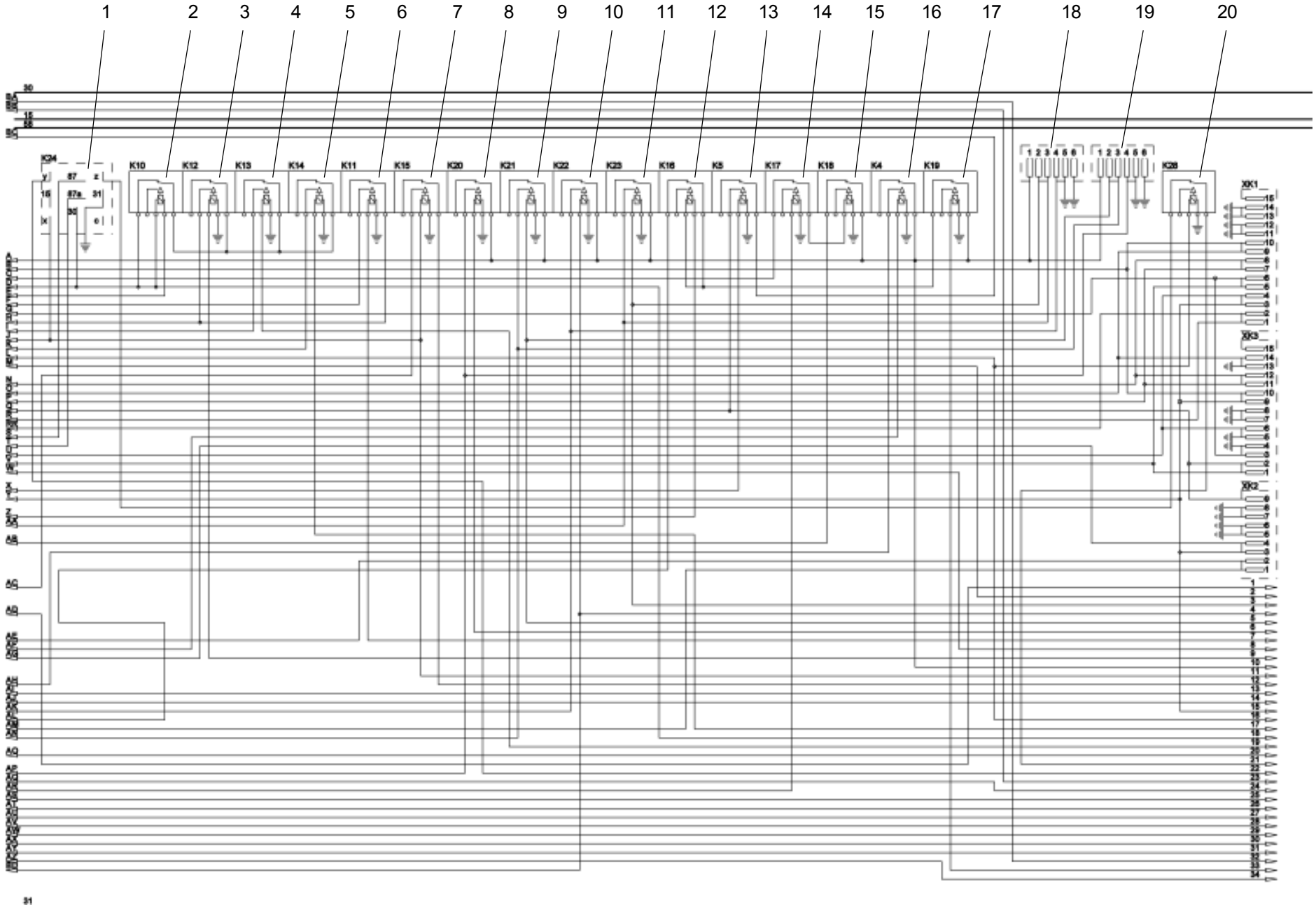

https://truckmanualshub.com/

Sheet/ item	Designation
3-6/1	Relay (K24): Transmission controller PLC (fast loader)
3-6/2	Relay (K10): Traction drive
3-6/3	Relay (K12): Alpha max.
3-6/4	Relay (K13): Power control: forward
3-6/5	Relay (K14): Power control: reverse
3-6/6	Relay (K11): Differential lock (option)
3-6/7	Relay (K15): Start-up interlock
3-6/8	Relay (K20): 2nd auxiliary hydraulics circuit: closed (option)
3-6/9	Relay (K12): 2nd auxiliary hydraulics circuit: open (option)
3-6/10	Relay (K22): 1st auxiliary hydraulics circuit: closed (option)
3-6/11	Relay (K23): 1st auxiliary hydraulics circuit: open (option)
3-6/12	Relay (K16): Fan control
3-6/13	Relay (K5): Working lights, front
3-6/14	Relay (K17): Dump interlock (option)
3-6/15	Relay (K18): Dump interlock (option)
3-6/16	Relay (K4): Dump interlock timer (option)
3-6/17	Relay (K19): Air-conditioning system (option)
3-6/18	Connector: auxiliary hydraulics, 1st circuit (proportional)
3-6/19	Connector: auxiliary hydraulics, 2nd circuit (proportional)
3-6/20	Relay (K28): Working platform preparation (option)

https://truckmanualshub.com/

Sheet/ item	Designation
4-6/1	Interior lighting
4-6/2	Switch: Interior lighting
4-6/3	Windshield wiper motor, rear
4-6/4	Working lights, rear
4-6/5	warning beacon (opt.)
4-6/6	Rear window heater (opt.)
4-6/7	Mirror heater (opt.)
4-6/8	License plate illumination (fast loader)
4-6/9	High beam, left
4-6/10	Low beam, left
4-6/11	High beam, right
4-6/12	Low beam, right
4-6/13	Air-conditioning system (option)
4-6/14	Actuator: Air-conditioning system (option)
4-6/15	Actuator: Rear axle support switch-off
4-6/16	Actuator: lifting device suspension (option)
4-6/17	Actuator: Permanent auxiliary hydraulics (opt.)
4-6/18	Actuator: Dump interlock switch-off
4-6/19	Actuator: pilot control switch-off
4-6/20	Actuator: fan reversal
4-6/21	Start switch
4-6/22	Actuator: fan/blower
4-6/23	Heater fan motor
4-6/24	2-pole socket
4-6/25	Multifunction handle right
	For AS 700 only:
4-6/26	Windshield wiper motor, rear
4-6/27	Interior lighting
4-6/28	Switch: Interior lighting
4-6/29	Rear window heater (opt.)
4-6/30	Working lights, rear
4-6/31	Working lights, front
4-6/32	warning beacon (opt.)
	Not for AS 700:
4-6/33	Turn indicator, right
4-6/34	Parking light, right
4-6/35	Parking light, left
4-6/36	Turn indicator, left
	For AZ 95 only:
4-6/37	Working lights

https://truckmanualshub.com/

10.1 - 02.2013 Elektrik-Schaltplan/Schéma électrique/Wiring diagramm/Elektrisch schakelschema/Sähkökytkentäkaavio/
Variante 3 Kopplingsschema-elektrik/Schemat instalacji elektrycznej/Schéma elektrického zapojení/El-diagram

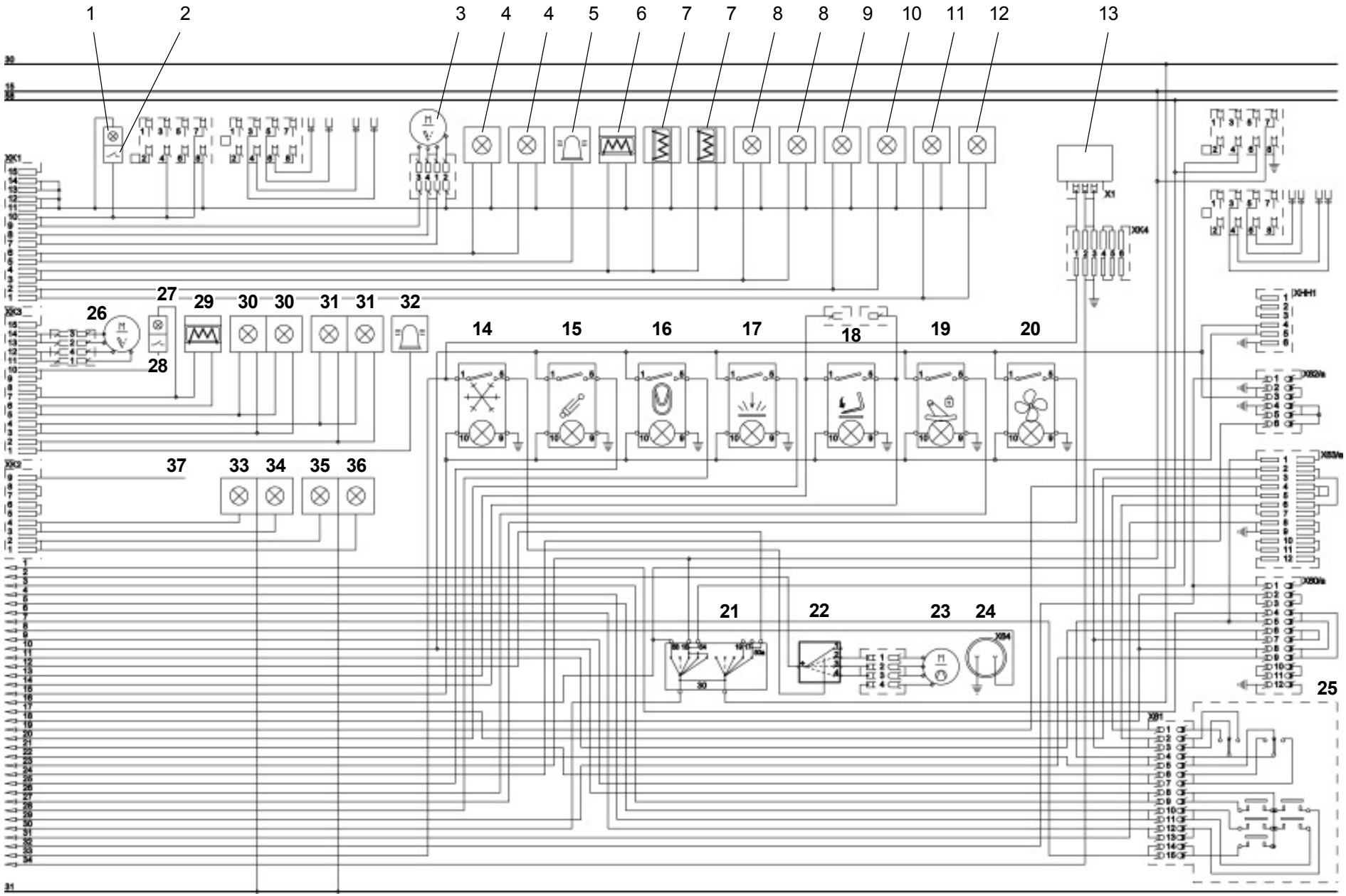

https://truckmanualshub.com/

10.1 - 02.2013 Elektrik-Schaltplan/Schéma électrique/Wiring diagramm/Elektrisch schakelschema/
Variante 3 Sähkökytkentäkaavio/Kopplingsschema-elektrik/Schemat instalacji elektrycznej/Schéma elektrického zapojení/
El-diagram/Schemat elektryczny

Front loader and swivel loader

Front loader and swivel loader and telescopic loader

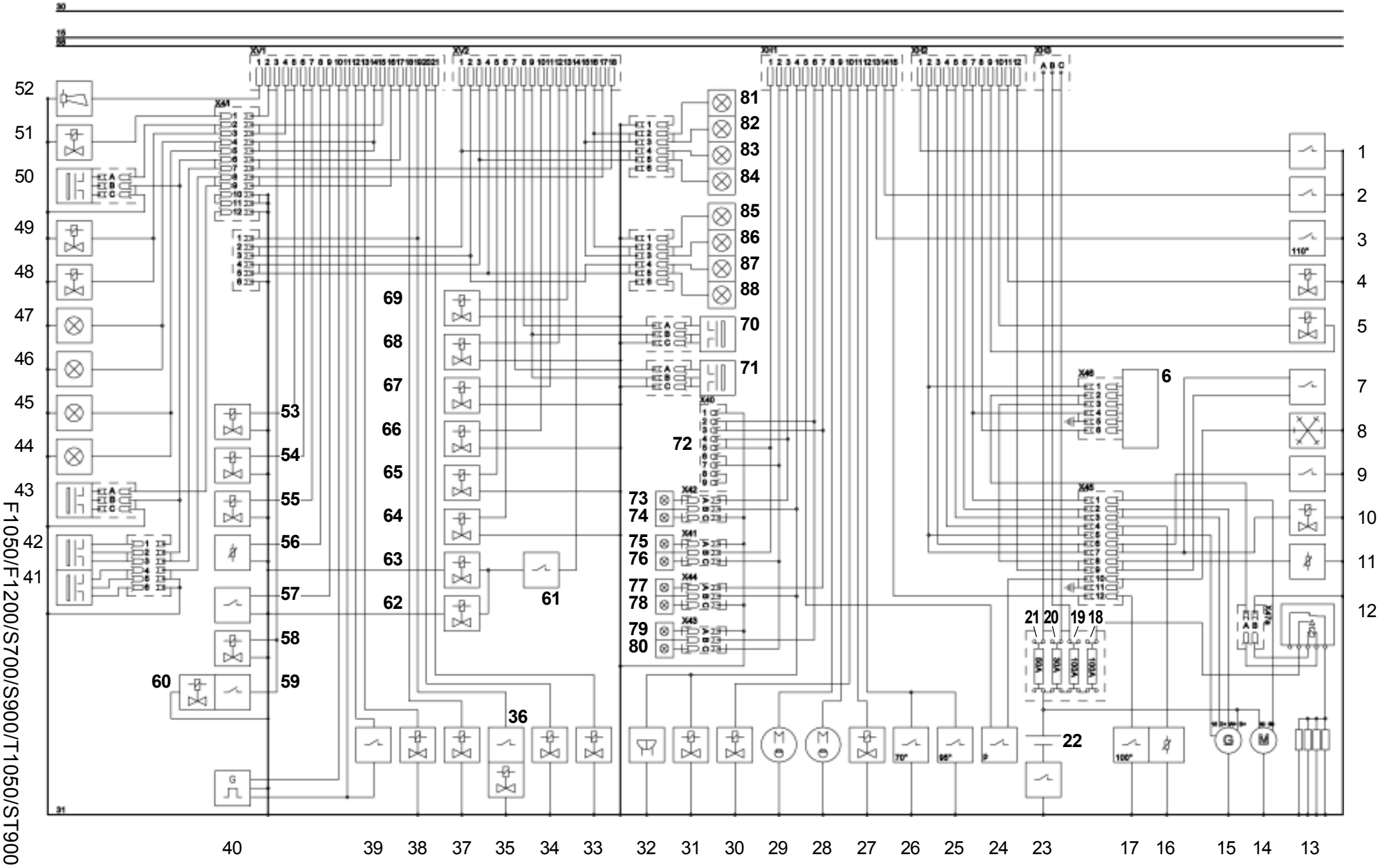

https://truckmanualshub.com/

Sheet/ item	Designation
5-6/1	Switch: Air filter
5-6/2	Switch: hydraulic oil filter
5-6/3	Switch: hydraulic oil temperature
5-6/4	Valve: fan reversal
5-6/5	Valve: pilot control switch-off
5-6/6	Glow start controller
5-6/7	Switch: Fuel filter water level
5-6/8	air-conditioning compressor
5-6/9	Switch: engine oil pressure
5-6/10	Valve: Engine shut-off
5-6/11	Coolant temperature sensor (glow start system)
5-6/12	Relay: glow start system
5-6/13	Glow plugs
5-6/14	Starter
5-6/15	Alternator
5-6/16	Coolant temperature sensor
5-6/17	Switch: Coolant temperature (100°)
5-6/18	Maxi fuse (100 A): glow start system Maxi fuse (250 A): Glow start system 63 kW engine
5-6/19	Main fuse (100 A): Loader electrics
5-6/20	Main fuse (30 A): Loader electrics
5-6/21	Main fuse (50 A): Loader electrics
5-6/22	Battery
5-6/23	Battery main switch (option)
5-6/24	Switch: Air-conditioning system
5-6/25	Switch: Coolant temperature (95°)
5-6/26	Switch: Engine oil temperature (70°)
5-6/27	Valve: Fan speed
5-6/28	Window washer motor, rear
5-6/29	Window washer motor, front
5-6/30	Valve: Travel direction forward
5-6/31	Valve: Travel direction reverse
5-6/32	Reversing warning buzzer
5-6/33	Valve: four-wheel steering
5-6/34	Valve: rear-axle steering
5-6/35	Valve: Parking brake
5-6/36	Pressure switch, inching
5-6/37	Valve: Dump interlock
5-6/38	Valve: Permanent auxiliary hydraulics
5-6/39	Switch: Brake lights
5-6/40	Tacho sensor
5-6/41	PAD sensor: Bucket position indicator
5-6/42	PAD sensor: Dump interlock
5-6/43	Proximity switch: Dump interlock, raise
5-6/44	Working lights, front end (front loader)
5-6/45	Working lights, front end (front loader)
5-6/46	Working lights, lifting arm (swivel loader)
5-6/47	Working lights, lifting arm (swivel loader)
5-6/48	Valve: Pipe break protection (option)
5-6/49	Combination valve: pipe break protection/ lifting device suspension (option)
5-6/50	Proximity switch: BOOST
5-6/51	Valve: Quick-change device

Sheet/ item	Designation
5-6/52	Signal horn
5-6/53	Valve: Differential lock
5-6/54	Valve: Alpha max.
5-6/55	Valve: Direction detection
5-6/56	Dip pipe sensor
5-6/57	Switch: Parking brake
5-6/58	Reservoir valve, lifting device suspension (option)
5-6/59	Switch: Memory valve, lifting device suspension (option)
5-6/60	Memory valve, lifting device suspension (option)
5-6/61	Pressure switch: Rear axle support
5-6/62	Valve: Rear axle support left
5-6/63	Valve: Rear axle support right
5-6/64	Valve: 2nd gear
5-6/65	Valve: 1st gear
5-6/66	Valve: Close 2nd auxiliary hydraulics circuit
5-6/67	Valve: Open 2nd auxiliary hydraulics circuit
5-6/68	Valve: Close 2nd auxiliary hydraulics circuit
5-6/69	Valve: Open 2nd auxiliary hydraulics circuit
5-6/70	Proximity switch: Rear axle
5-6/71	Proximity switch: Front axle
5-6/72	Adapter, 7-pole socket
5-6/73	Turn indicator, rear left
5-6/74	Reversing light, left
5-6/75	Tail light, left
5-6/76	Brake light, left
5-6/77	Turn indicator, rear right
5-6/78	Reversing light, right
5-6/79	Tail light, right
5-6/80	Brake light, right
	For AS 700 only: Driving light, right
5-6/81	Dipped beam
5-6/82	High beam
5-6/83	Parking light
5-6/84	Turn indicator Driving light, left
5-6/85	Dipped beam
5-6/86	High beam
5-6/87	Parking light
5-6/88	Turn indicator

https://truckmanualshub.com/

Front telescopic loader

Sheet/ item	Designation
6-6/1	Actuator: Swivel restriction bypass (more than 30°)
6-6/2	Relay (K25): Micro PLC: Telescoping
6-6/3	Relay (K26): Micro PLC: Swivelling
6-6/4	Relay (K7): Interrupt telescoping
6-6/5	Connector: auxiliary hydraulics, 3rd circuit (proportional)
6-6/6	Controller: Telescoping
6-6/7	Valve: Quick-change device
6-6/8	PAD sensor
6-6/9	7-pole socket
6-6/10	Working lights, telescope arm
6-6/11	Working lights, telescope arm
6-6/12	Valve: Open 1st auxiliary hydraulics circuit
6-6/13	Valve: Close 1st auxiliary hydraulics circuit
6-6/14	Valve: Open 2nd auxiliary hydraulics circuit
6-6/15	Valve: Close 2nd auxiliary hydraulics circuit
6-6/16	Proximity switch: Rear axle
6-6/17	Proximity switch: Front axle
6-6/18	Valve: 2nd gear
6-6/19	Valve: 1st gear
6-6/20	Valve: four-wheel steering
6-6/21	Valve: rear-axle steering
6-6/22	Valve: Parking brake
6-6/23	Pressure switch, inching
6-6/24	Valve: Dump interlock
6-6/25	Switch: Brake lights
6-6/26	Tacho sensor
6-6/27	Switch: Parking brake
6-6/28	Dip pipe sensor
6-6/29	Valve: Direction detection
6-6/30	Valve: Alpha max.
6-6/31	Valve: Differential lock
6-6/32	Reservoir valve, lifting device suspension (option)
6-6/33	Memory valve, lifting device suspension (option)
6-6/34	Switch: Memory valve, lifting device suspension (option)
6-6/35	Combination valve: pipe break protection / lifting device suspension (option)
6-6/36	Valve: Tip lock
6-6/37	Valve: Dump lock
6-6/38	Valve: Extend telescopic arm
6-6/39	Valve: Retract telescopic arm
6-6/40	Proximity switch: Dump interlock
6-6/41	Relays (K9): Dump interlock
6-6/42	Signal horn
6-6/43	Strapping plug: preparation for working platform

https://truckmanualshub.com/

10.1 - 02.2013 **Elektrik-Schaltplan/Schéma électrique/Wiring diagramm/Elektrisch schakelschema/Sähkökytkentäkaavio/ Kopplingsschema-elektrik/Schemat instalacji elektrycznej/Schéma elektrického zapojení/El-diagram**

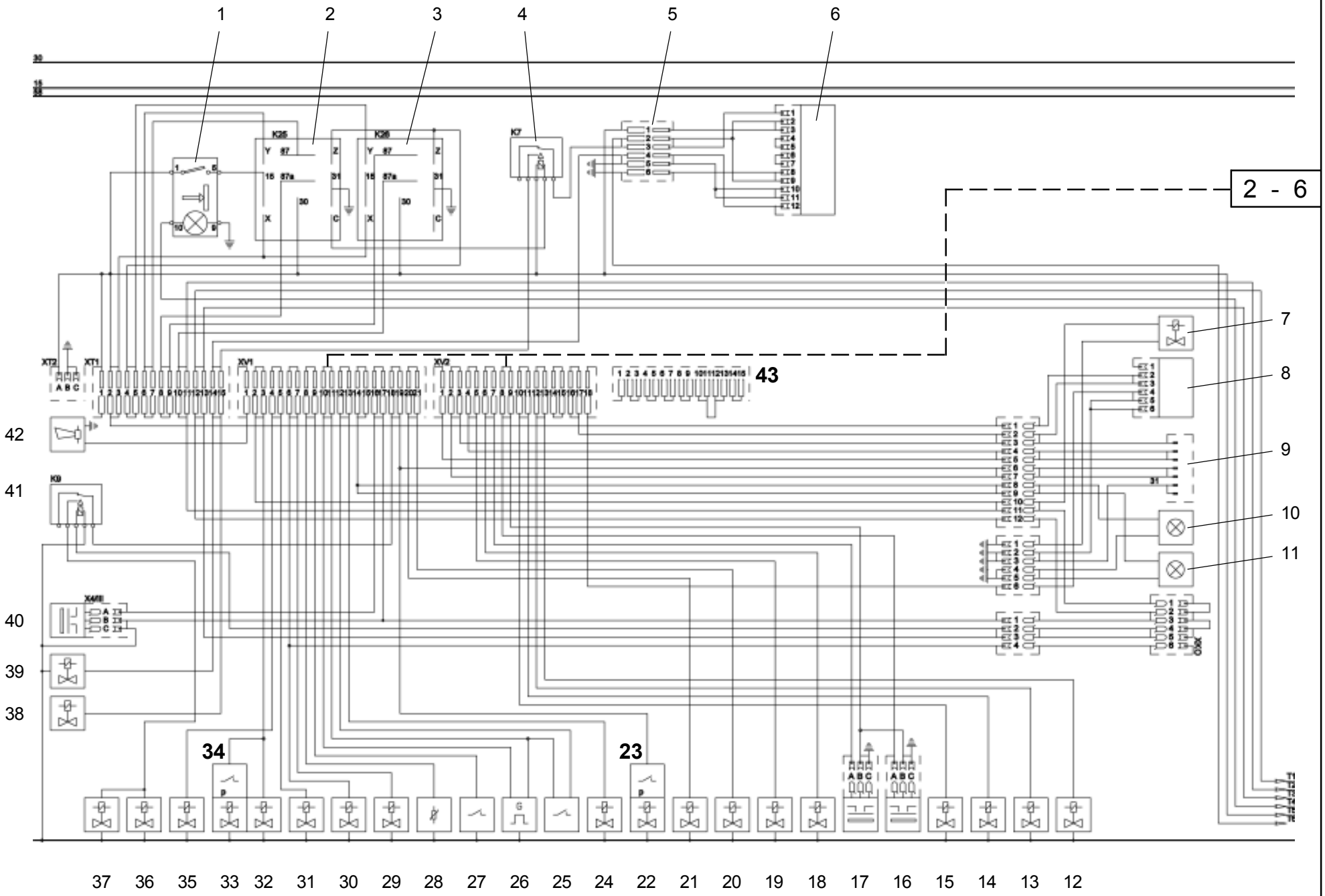

https://truckmanualshub.com/

10.1 - 02.2013 **Elektrik-Schaltplan/Schéma électrique/Wiring diagramm/Elektrisch schakelschema/Sähkökytkentäkaavio/ Kopplingsschema-elektrik/Schemat instalacji elektrycznej/Schéma elektrického zapojení/El-diagram**

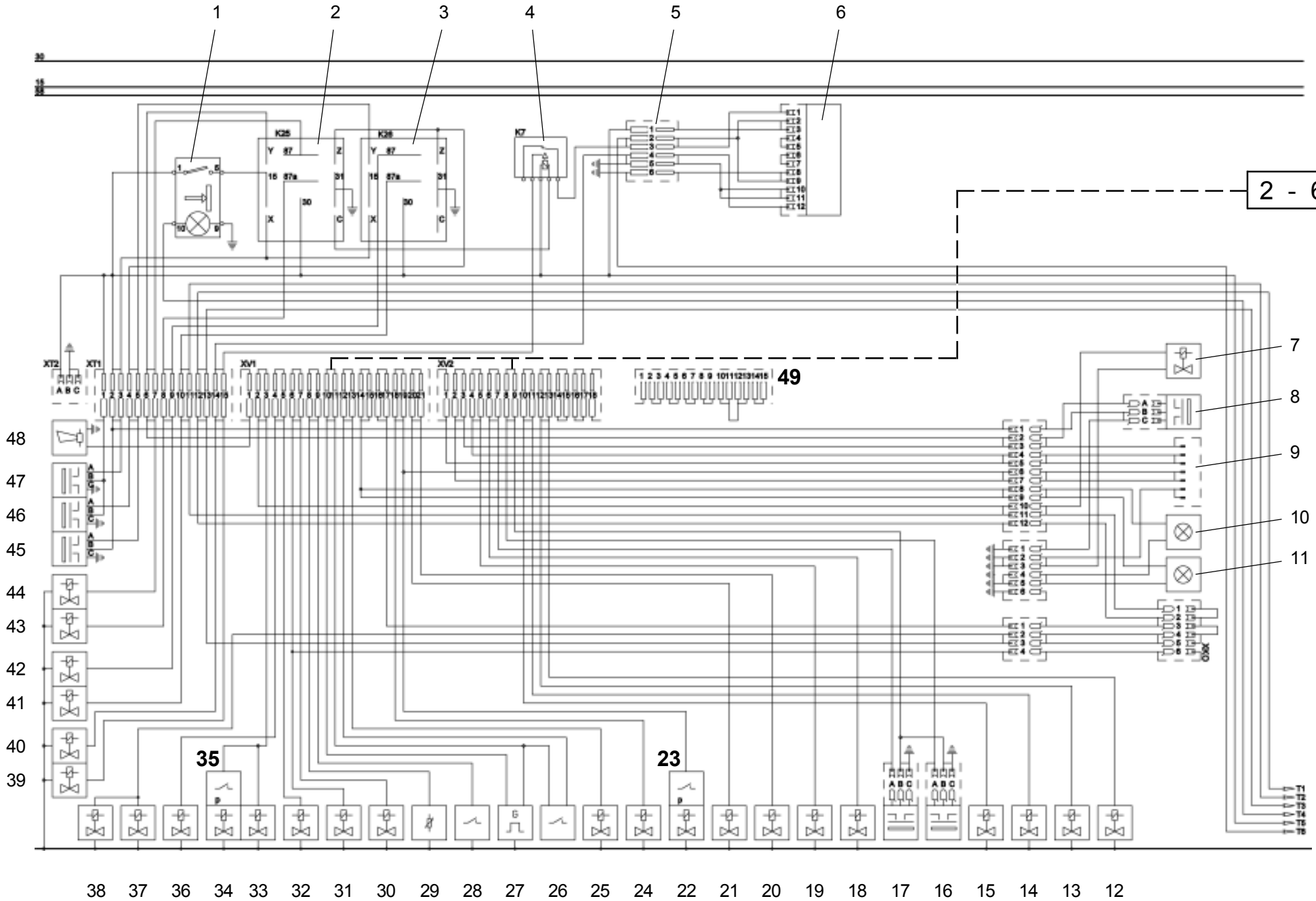

https://truckmanualshub.com/

Swivel telescopic loader

Sheet/ item	Designation
6-6/1	Actuator: Swivel restriction bypass (more than 30°)
6-6/2	Micro PLC: Telescoping (K25)
6-6/3	Micro PLC: Swivelling (K26)
6-6/4	Relay (K7): Interrupt telescoping
6-6/5	Connector: auxiliary hydraulics, 3rd circuit (proportional)
6-6/6	Controller: Telescoping
6-6/7	Valve: Quick-change device
6-6/8	Proximity switch: Telescopic arm retracted
6-6/9	7-pole socket
6-6/10	Working lights, telescope arm
6-6/11	Working lights, telescope arm
6-6/12	Valve: Open 1st auxiliary hydraulics circuit
6-6/13	Valve: Close 1st auxiliary hydraulics circuit
6-6/14	Valve: Open 2nd auxiliary hydraulics circuit
6-6/15	Valve: Close 2nd auxiliary hydraulics circuit
6-6/16	Proximity switch: Rear axle
6-6/17	Proximity switch: Front axle
6-6/18	Valve: 2nd gear
6-6/19	Valve: 1st gear
6-6/20	Valve: four-wheel steering
6-6/21	Valve: rear-axle steering
6-6/22	Valve: Parking brake
6-6/23	Pressure switch, inching
6-6/24	Valve: Dump interlock
6-6/25	Valve: Permanent auxiliary hydraulics
6-6/26	Switch: Brake lights
6-6/27	Tacho sensor
6-6/28	Switch: Parking brake
6-6/29	Dip pipe sensor
6-6/30	Valve: Direction detection
6-6/31	Valve: Alpha max.
6-6/32	Valve: Differential lock
6-6/33	Reservoir valve, lifting device suspension (option)
6-6/34	Memory valve, lifting device suspension (option)
6-6/35	Switch: Memory valve, lifting device suspension (option)
6-6/36	Combination valve: pipe break protection / lifting device suspension (option)
6-6/37	Valve: Tip lock
6-6/38	Valve: Dump lock
6-6/39	Valve: Extend telescopic arm
6-6/40	Valve: Retract telescopic arm
6-6/41	Valve: rear axle interlock right
6-6/42	Valve: rear axle interlock left
6-6/43	Valve: Release, swivelling right
6-6/44	Valve: Release, swivelling left
6-6/45	Proximity switch: Rear axle support
6-6/46	Proximity switch: Swivelling right
6-6/47	Proximity switch: Swivelling left
6-6/48	Signal horn
6-6/49	Strapping plug: preparation for working platform

https://truckmanualshub.com/

Hydraulikschaltplan/Schéma hydraulique/Hydraulisch schakelschema/Hydraulic circuit diagram/Hydraulikoversigt/Plano de conexiones hidráulicas/ Hydraulisk koblingsskjema/Hydraulik kopplingsschema/Hydrauliikkakytkentäkaavio/Schemat hydrauliczny/Hydraulic diagram AF 1050 / AF 1200

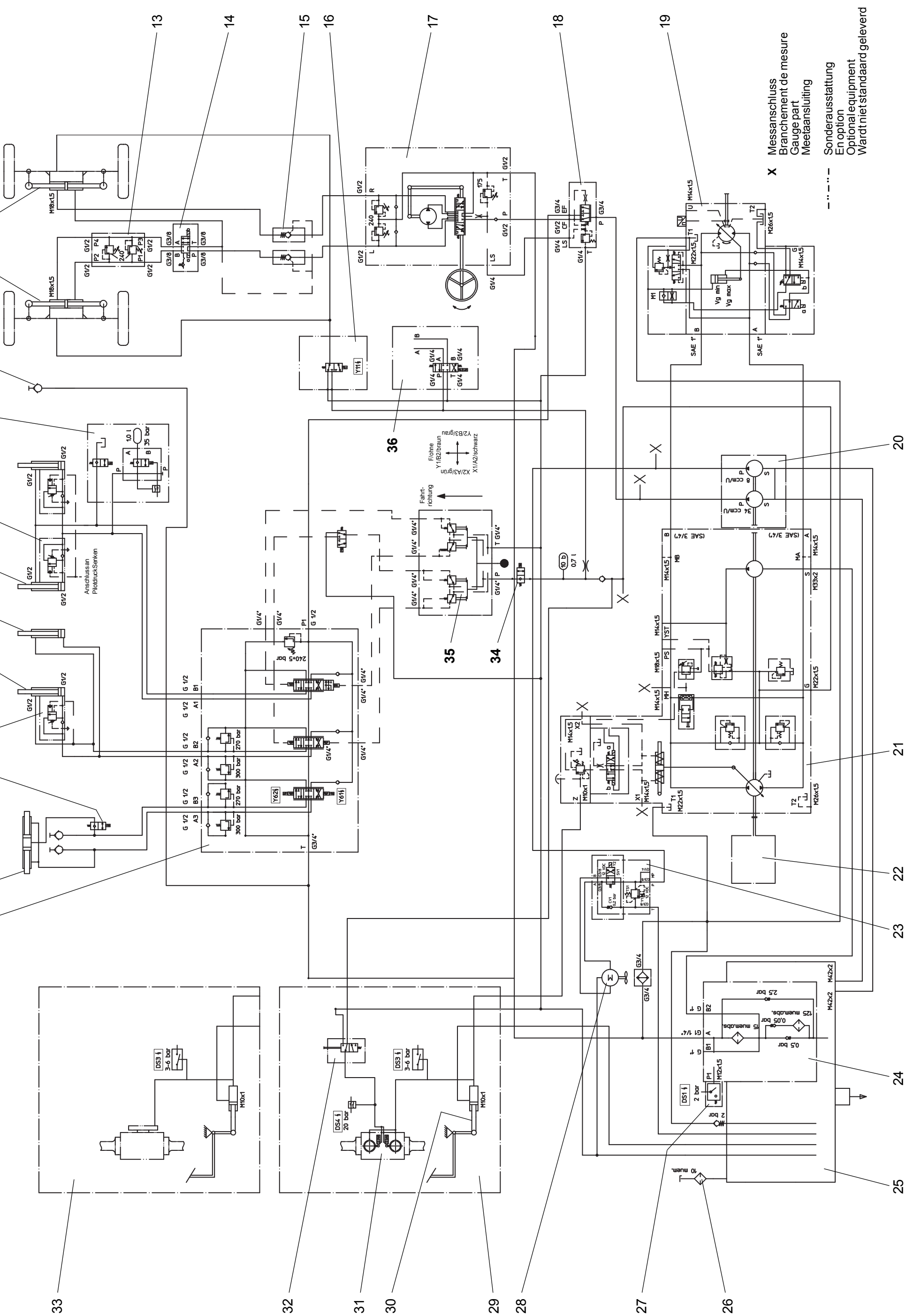

https://truckmanualshub.com/

10.2 Hydraulic circuit diagram

Item	Designation
01	3-way valve
02	Locking cylinder DW 40/25/50/157
03	Electric interlock for quick-change device
04	Pipe break protection, tip cylinder (option)
05	Tip cylinder
	AF 1050 - DW 100/50/572/998
	AF 1200 - DW 110/60/572/998
06	Compensation cylinder
	AF 1050 - DW 100/50/342/760
	AF 1200 - DW 110/60/342/760
07	Lift cylinder
	AF 1050 - DW 90/45/545/907
	AF 1200 - DW 100/50/545/907
08	Pipe break protection, lift cylinder (option)
09	Lifting device suspension
10	Pressureless return line
11	Steering cylinder, front
12	Steering cylinder, rear
13	Double shock valve
14	Steering switching valve
15	Blocking valve
16	Differential lock valve
17	Steering unit, 320/160 cm³/rev.
18	Priority valve
19	Drive motor A6VM 115 HA
20	Gear-type pump (32 + 8) cm³/rev.
21	Drive pump A4VG 045 DA
22	Drive motor
	AF 1050 - CUMMINS B3.3NA-C65 49 kW 2,600 rpm
	CUMMINS B3.3T-C74 55 kW 2,600 rpm
	AF 1200 - CUMMINS B3.3T-C74 55 kW 2,600 rpm
	CUMMINS B3.3TAA-C85 63 kW 2,600 rpm
23	Fan control valve
24	Suction/return flow filter
25	Hydraulic oil tank
26	Filling/ventilation filter
27	Electric contamination indicator
28	Hydrostatic fan drive 6 cm³
29	Brake system, fast loader
30	Stepped main brake cylinder
31	Lamella brake
32	Parking brake valve
33	Brake system, slow loader
34	Electric interlock for pilot control
35	Control pressure transmitter, working hydraulics
36	Gear shift, fast loader

https://truckmanualshub.com/

https://truckmanualshub.com/

Technical Data (Equipment)

https://truckmanualshub.com/

11 Technical data

11.1 AF 1050

NOTE
The technical data refer to 16/70 R 20 tyres.

11.1.1 Loader

- Height	2,830 mm
- Width	1,990 mm
- Wheelbase	2,085 mm
- Track width	1,660 mm
- Operating weight w/o attachment	5,650 kg
- Ground clearance	
- Cardan shaft	420 mm
- Turning radius	
- over rear	3,710 mm
- across bucket	4,060 mm
- Steering angle	+/- 35 °
- Swinging angle	+/- 10 °
- Embankment angle	°
- Climbing ability with payload	60 %
- Perm. towed load at max. drawbar load of 100 kg	
- braked - 48 kW engine	3,500 kg
- 55 kW engine	8,000 kg
- unbraked	750 kg
- Max. lifting capacity	54.0 kN
- with Boost	65.0 kN
- Max. thrust force	46.5 kN

11.1.2 Engine

11.1.2.1 49 kW engine

- Liquid-cooled diesel engine	
- 4 cylinders, 4-stroke, indirect injection	
- Displacement	3,260 cm³
- Power acc. to SAE J1995	49 kW at 2600 rpm
- Exhaust gas emission acc. to RL 97/68 EC tier IIIA + EPA	
- Cooling system	Water
- Total coolant	approx. 14 l
- Anti-freeze	7 l

11.1.2.2 55 kW engine

- Liquid-cooled diesel engine	
- 4 cylinders, 4-stroke, indirect injection	
- Displacement	3,260 cm³
- Power acc. to SAE J1995	55 kW at 2600 rpm
- Exhaust gas emission acc. to RL 97/68 EC tier IIIA + EPA	
- Cooling system	Water
- Total coolant	approx. 14 l
- Anti-freeze	7 l

11.1.3 Starter

- 2.2 kW / 12 V

11.1.4 Alternator

- 60 A, 14 V

https://truckmanualshub.com/

11.1.5 Hydrostatic drive motor

“20 km/h” variant

- Drive stage I	0.....5 km/h
- Drive stage II	0..... 20 km/h

“40 km/h” variant

1st gear

- Drive stage I	0.....5 km/h
- Drive stage II	0..... 15 km/h

2nd gear

- Drive stage I	0..... 11 km/h
- Drive stage II	0.....40 km/h

11.1.6 Axle loads

- Perm. axle loads acc. to StVZO	
- front	5,000 kg
- rear	5,000 kg
- Perm. total weight acc. to StVZO	6,900 kg

11.1.7 Tyres

The following tyres are permitted:

- Size		14.5 R 20 MPT-04
- Tyre pressure	- front	3.0 bar
	- rear	3.0 bar
- Size		16/70 R 20 MPT-04
- Tyre pressure	- front	3.0 bar
	- rear	3.0 bar
- Size		405/70 R 20 XZSL
- Tyre pressure	- front	3.75 bar
	- rear	3.75 bar
- Size		405/70 R 20 EM-01
- Tyre pressure	- front	3.75 bar
	- rear	3.75 bar
- Size		405/70 R 18 EM-01
- Tyre pressure	- front	3.75 bar
	- rear	3.75 bar
- Size		550/45-22.5 328
- Tyre pressure	- front	2.4 bar
	- rear	2.4 bar

11.1.8 Steering system

- Four-wheel (can be switched to rear-wheel steering)	
- Electric/hydrostatic via priority valve	
- Pressure	max. 175 bar

11.1.9 Brakes

“40 km/h” variant

- Service brake (front axle: wet lamella brake). Acting as inching brake in the first pedal actuation stage.
- Parking brake/auxiliary brake system: Wet lamella brake in the front axle.

11.1.10 Electrical system

- Battery	88 Ah

https://truckmanualshub.com/

11.1.11 Hydraulic system

- Contents	134 l
- Hydraulic oil reservoir	80 l
- Flow rate	85 l/min
- Operating pressure	max. 220 bar
- 2 lift cylinders	Ø 90 mm
- 1 tip cylinders	Ø 100 mm
- Times acc. to DIN ISO 7131	
Lift (with payload)	3.5 s
Lower	2.5 s
Dump (45°)	1.8 s
Tilt up	1.5 s

11.1.12 Fuel supply system

- Fuel tank contents	130 l

11.1.13 Heater and ventilation system

- Air/water heat exchanger	
- Heater performance	
- 3-stage heater	max. 14.5 kW
- Air flow	
- 3-stage blower	max. 1,000 m³/h
- Electric power	250 W

11.1.14 Suction/return flow filter

- Filter mesh	10 µm nom.
- Bypass response pressure	Δ p = 2.5 bar

11.1.15 Electric contamination indicator

- Switch-on pressure	Δ p = 2.0 bar

11.1.16 Combination cooler with temperature-controlled fan

- Performance	- Water	47 kW
	- Oil	17 kW

11.1.17 Noise emission

Sound power level (LWA) »Noise outside: «	99 dB(A)
Acoustic power level (LpA) » noise in the driver's cabin: «	74 dB(A)

11.1.18 Vibrations

Total value of oscillation (k-value)	< 2,5 m/s²

https://truckmanualshub.com/

11.2 AF 1200

NOTE
The technical data refer to 16/70 R 20 tyres.

11.2.1 Loader

- Height	2,830 mm
- Width	2,060 mm
- Wheelbase	2,085 mm
- Track width	1,660 mm
- Operating weight w/o attachment	5,790 kg
- Ground clearance	
- Cardan shaft	420 mm
- Turning radius	
- over rear	3,710 mm
- across bucket	4,270 mm
- Steering angle	+/- 35 °
- Swinging angle	+/- 10 °
- Embankment angle	°
- Climbing ability with payload	60 %
- Perm. towed load at max. drawbar load of 100 kg	
- braked	8,000 kg
- unbraked	750 kg
- Max. lifting capacity	66.0 kN
- with Boost	77.0 kN
- Max. thrust force	48.5 kN

11.2.2 Engine

11.2.2.1 55 kW engine

- Liquid-cooled diesel engine	
- 4 cylinders, 4-stroke, indirect injection	
- Displacement	3,260 cm³
- Power acc. to SAE J1995	55 kW at 2600 rpm
- Exhaust gas emission acc. to RL 97/68 EC tier IIIA + EPA	
- Cooling system	Water
- Total coolant	approx. 14 l
- Anti-freeze	7 l

11.2.2.2 63 kW engine

- Liquid-cooled diesel engine	
- 4 cylinders, 4-stroke, indirect injection	
- Displacement	3,260 cm³
- Power acc. to SAE J1995	63 kW at 2600 rpm
- Exhaust gas emission acc. to RL 97/68 EC tier IIIA + EPA	
- Cooling system	Water
- Total coolant	approx. 14 l
- Anti-freeze	7 l

11.2.3 Starter

- 2.2 kW / 12 V

11.2.4 Alternator

- 60 A, 14 V

https://truckmanualshub.com/

11.2.5 Hydrostatic drive motor

“20 km/h” variant

- Drive stage I	0.....5 km/h
- Drive stage II	0..... 20 km/h

“40 km/h” variant

1.st gear

- Drive stage I	0.....5 km/h
- Drive stage II	0..... 17 km/h

2nd gear

- Drive stage I	0..... 11 km/h
- Drive stage II	0..... 40 km/h

11.2.6 Axle loads

- Perm. axle loads acc. to StVZO	
- front	5,000 kg
- rear	5,000 kg
- Perm. total weight acc. to StVZO	7,600 kg

11.2.7 Tyres

The following tyres are permitted:

- Size		16/70 R 20 MPT-04
- Tyre pressure	- front	3.0 bar
	- rear	3.0 bar
- Size		405/70 R 20 XZSL
- Tyre pressure	- front	3.75 bar
	- rear	3.75 bar
- Size		405/70 R 20 EM-01
- Tyre pressure	- front	3.75 bar
	- rear	3.75 bar
- Size		9.00 R 20 X-MINE D2
- Tyre pressure	- front	5.0 bar
	- rear	5.0 bar
- Size		550/45-22.5 328
- Tyre pressure	- front	2.4 bar
	- rear	2.4 bar

11.2.8 Steering system

- Four-wheel (can be switched to rear-wheel steering)
- Electric/hydrostatic via priority valve
- Pressure — max. 175 bar

11.2.9 Brakes

“40 km/h” variant

- Service brake (front axle: wet lamella brake). Acting as inching brake in the first pedal actuation stage.
- Parking brake/auxiliary brake system: Wet lamella brake in the front axle.

11.2.10 Electrical system

- Battery — 88 Ah

https://truckmanualshub.com/

11.2.11 Hydraulic system

- Contents	134 l
- Hydraulic oil reservoir	80 l
- Flow rate	85 l/min
- Operating pressure	max. 220 bar
- 2 lift cylinders	Ø 100 mm
- 1 tip cylinders	Ø 110 mm
- Times acc. to DIN ISO 7131	
Lift (with payload)	4.5 s
Lower	3.5 s
Dump (45°)	2.0 s
Tilt up	1.8 s

11.2.12 Fuel supply system

- Fuel tank contents	130 l

11.2.13 Heater and ventilation system

- Air/water heat exchanger	
- Heater performance	
- 3-stage heater	max. 14.5 kW
- Air flow	
- 3-stage blower	max. 1,000 m³/h
- Electric power	250 W

11.2.14 Suction/return flow filter

- Filter mesh	10 µm nom.
- Bypass response pressure	Δ p = 2.5 bar

11.2.15 Electric contamination indicator

- Switch-on pressure	Δ p = 2.0 bar

11.2.16 Combination cooler with temperature-controlled fan

- Performance - Water	47 kW
- Oil	17 kW

11.2.17 Noise emission

Sound power level (LWA) »Noise outside: «	99 dB(A)
Acoustic power level (LpA) » noise in the driver's cabin: «	74 dB(A)

11.2.18 Vibrations

Total value of oscillation (k-value)	< 2,5 m/s²

https://truckmanualshub.com/

https://truckmanualshub.com/

Technical Data (Attachments)

https://truckmanualshub.com/

12.1 AF 1050

NOTE
The technical data refer to 16/70 R 20 tyres.

12.1.1 Buckets

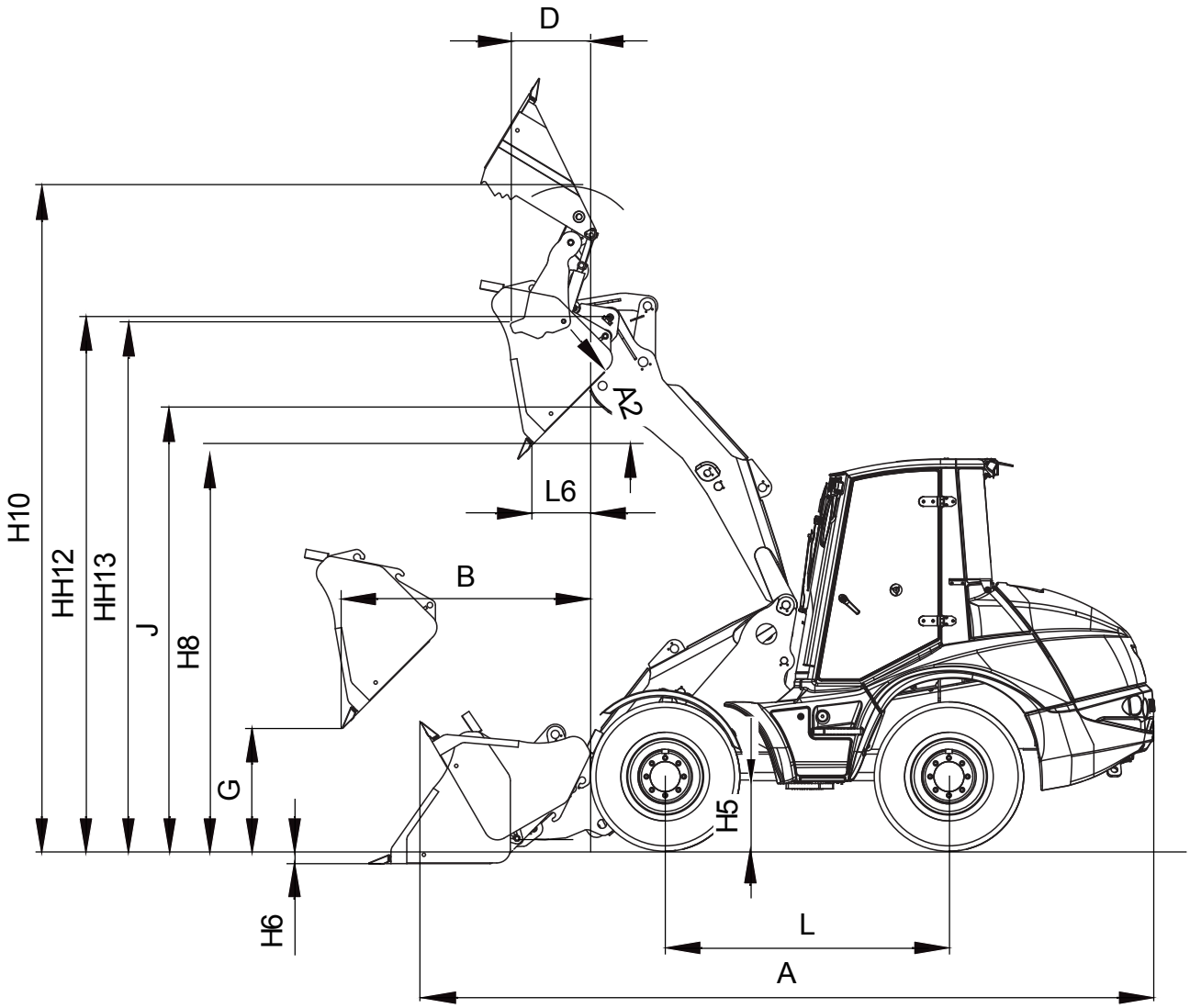

https://truckmanualshub.com/

12.1.1 Buckets

Bucket type			Standard bucket	Lightweight bucket	Multi-purpose bucket
Bucket volume acc. to DIN ISO 7546		m³	**1,05**		**1,0**
Bucket width		mm	2.100		2.100
Dead weight		kg			
Loads acc. to DIN 24094					
Bulk density		t/m³	1,8		
Dump load					
- frontal		kg			
- steered		kg			
Payload					
- frontal		kg			
- steered		kg			
Loads acc. to ISO 14397					
Bulk density		t/m³	1,8		
Dump load					
- frontal		kg			
- steered		kg	3.800		
Payload					
- frontal		kg			
- steered		kg	1.900		
Tear-out force acc. to ISO 8313		kN	49,0		
A	Total length	mm	6.030		6.070
A2	Dump angle	°	45		45
B	Max. dumping distance at dumping angle 45°	mm	1.580		1.790
G	Dumping height at max. dumping distance and dumping angle 45°	mm	890		780
H5	Ground clearance (cardan shaft)	mm	420		420
H6	Depth of feed-in	mm	100		90
H8	Dumping height at max. lifting height and dumping angle 45°	mm	2.850		2.810
H10	Max. working height	mm	4.590		4.530
J	Free lift height	mm	2.920		2.920
L	Wheelbase	mm	2.085		2.085
L6	Dumping distance at max. lifting height and dumping angle 45°	mm	720		720
Multipurpose bucket opened:					
D	Dumping distance at max. lifting height and tilted bucket	mm	-		570
HH12	Distance to centre of bolt (quick-change device)	mm	-		3.650
HH13	Max. dumping height with tilted bucket	mm	-		3.390

https://truckmanualshub.com/

12.1.2 Fork-lift attachment

12.1.3 Lifting hook

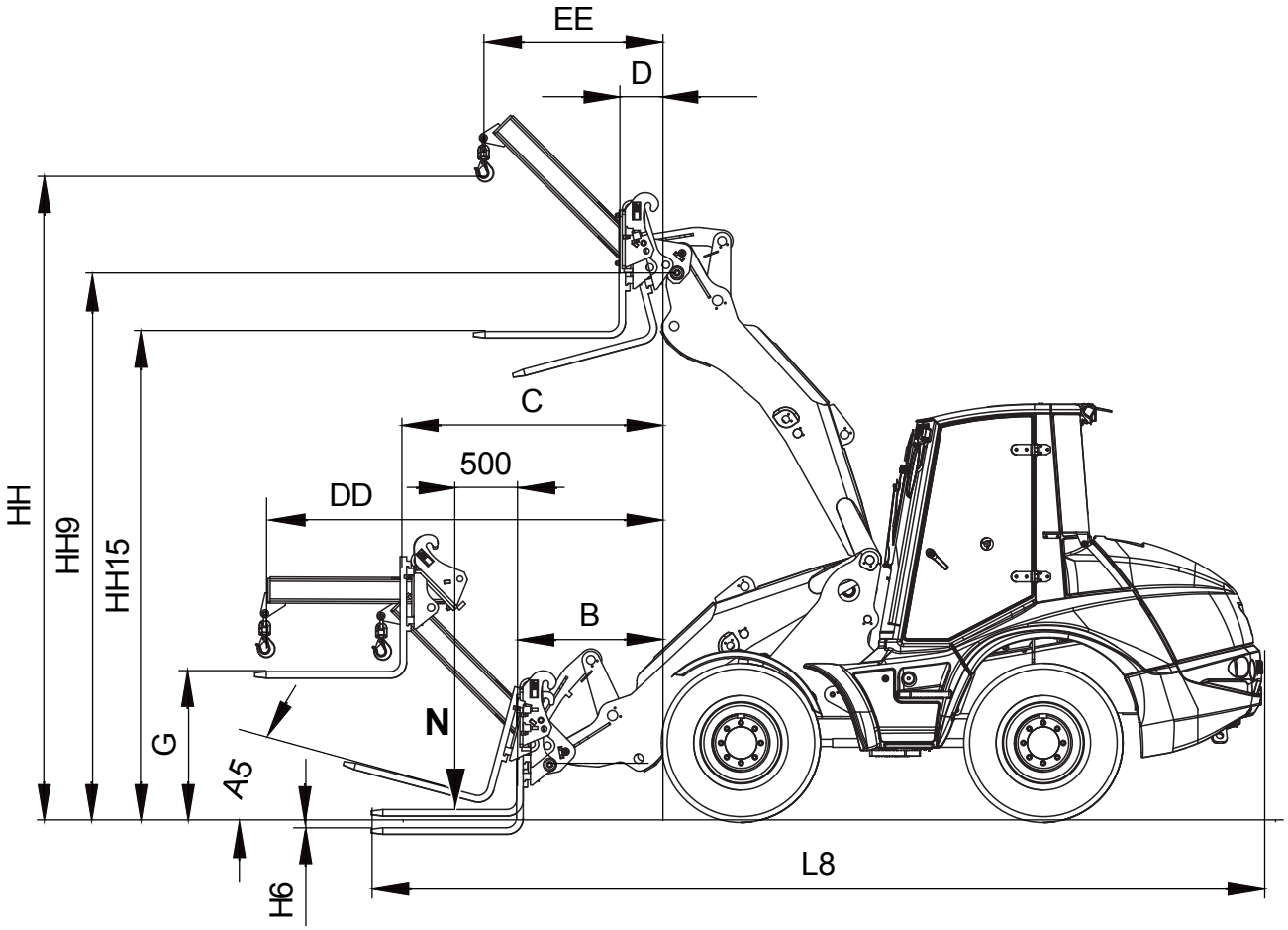

https://truckmanualshub.com/

12.1.2 Fork-lift attachment

Tine length	mm
Tine height	mm
Tine spacing (centre)	
- min.	mm
- max.	mm
Dead weight	kg
Perm. payload N acc. to EN 474-3	
frontal	
- level ground (stability factor 1.25)	kg
- uneven ground (stability factor 1.67)	kg
steered	
- level ground (stability factor 1.25)	2,500 kg
- uneven ground (stability factor 1.67)	kg
Perm. payload N acc. to ISO 8313	
frontal	
- level ground (stability factor 1.25)	kg
- uneven ground (stability factor 1.67)	kg
steered	
- level ground (stability factor 1.25)	kg
- uneven ground (stability factor 1.67)	kg
Perm. payload N acc. to EN 474-3, **fork-lift attachment 300 mm above ground**	
steered	
- level ground (stability factor 1.25)	2,870 kg
- uneven ground (stability factor 1.67)	kg

A5	Tilt angle	18 °
B	Min. reach	850 mm
C	Max. reach	1,300 mm
GB	Reach at max. lifting height	440 mm
G	Free lift height at max. reach	1,470 mm
H6	Depth of feed-in	120 mm
HH9	Distance to centre of bolt (quick change device)	3,650 mm
HH15	Free lift height at max. lifting height	3,340 mm
L8	Total length	6,050 mm

12.1.3 Lifting hook

Perm. payload acc. to DIN EN 474-3
(measurement procedure analogue toISO 8313)

- Max. outreach (stability factor 2)	
- frontal	kg
- steered	kg
Dead weight	kg

DD	Max. outreach	2,730 mm
EE	Outreach at max. lifting height	1,220 mm
HH	Max. lifting height	4,450 mm

https://truckmanualshub.com/

12.2 AF 1200

NOTE
The technical data refer to 16/70 R 20 tyres.

12.2.1 Buckets

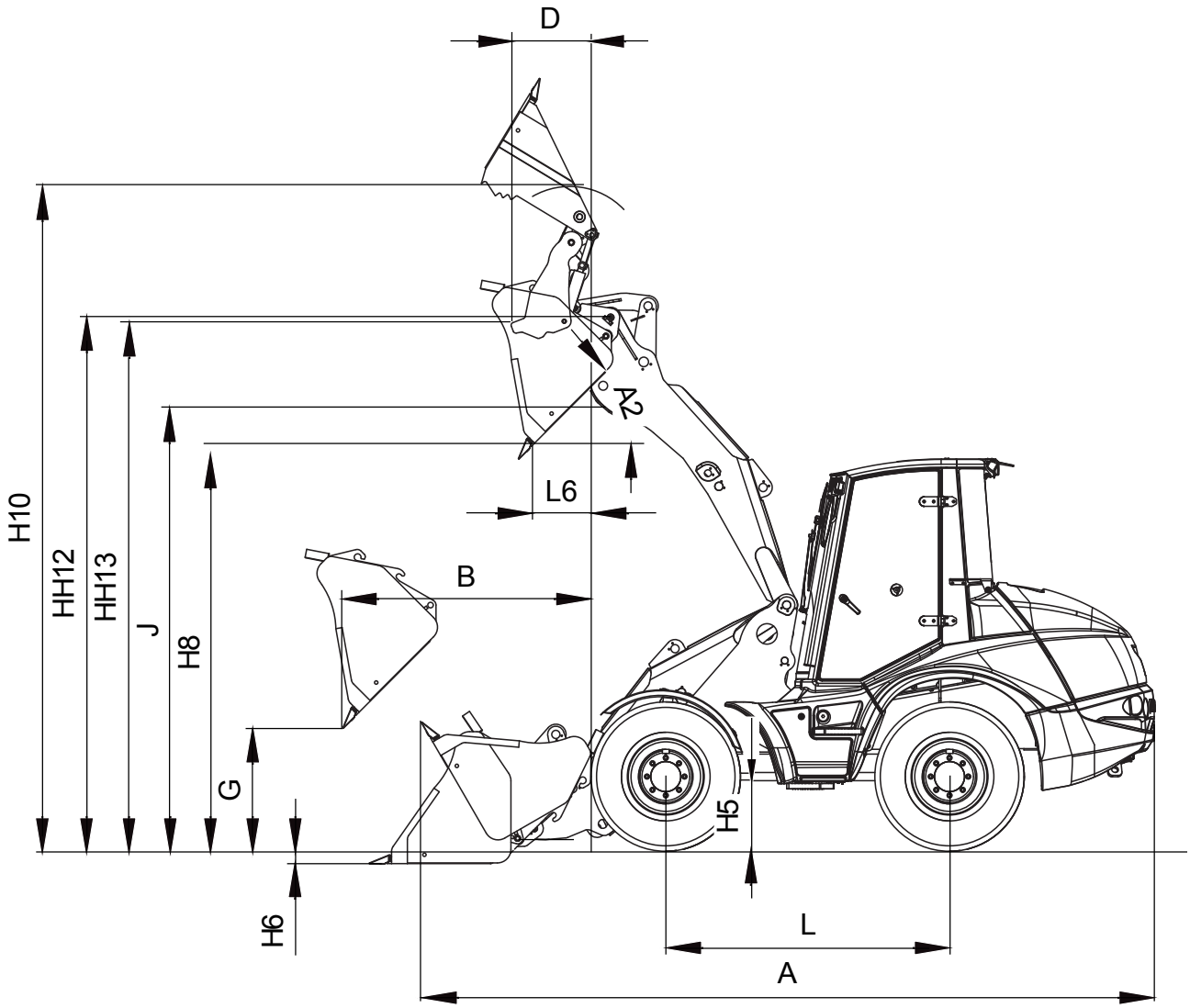

https://truckmanualshub.com/

12.2.1 Buckets

Bucket type			Standard bucket	Lightweight bucket	Multi-purpose bucket
Bucket volume acc. to DIN ISO 7546		m³	**1,2**		**1,1**
Bucket width		mm	2.100		2.100
Dead weight		kg	344		609
Loads acc. to DIN 24094					
Bulk density		t/m³	1,8		
Dump load					
- frontal		kg			
- steered		kg			
Payload					
- frontal		kg			
- steered		kg			
Loads acc. to ISO 14397					
Bulk density		t/m³	1,8		
Dump load					
- frontal		kg			
- steered		kg	4.300		
Payload					
- frontal		kg			
- steered		kg	2.150		
Tear-out force acc. to ISO 8313		kN	59,0		
A	Total length	mm	6.080		6.120
A2	Dump angle	°	45		45
B	Max. dumping distance at dumping angle 45°	mm	1.610		1.820
G	Dumping height at max. dumping distance and dumping angle 45°	mm	875		765
H5	Ground clearance (cardan shaft)	mm	420		420
H6	Depth of feed-in	mm	100		90
H8	Dumping height at max. lifting height and dumping angle 45°	mm	2.820		2.780
H10	Max. working height	mm	4.590		4.530
J	Free lift height	mm	2.920		2.920
L	Wheelbase	mm	2.085		2.085
L6	Dumping distance at max. lifting height and dumping angle 45°	mm	740		740
Multipurpose bucket opened:					
D	Dumping distance at max. lifting height and tilted bucket	mm	-		570
HH12	Distance to centre of bolt (quick-change device)	mm	-		3.650
HH13	Max. dumping height with tilted bucket	mm	-		3.390

https://truckmanualshub.com/

12.2.2 Fork-lift attachment

12.2.3 Lifting hook

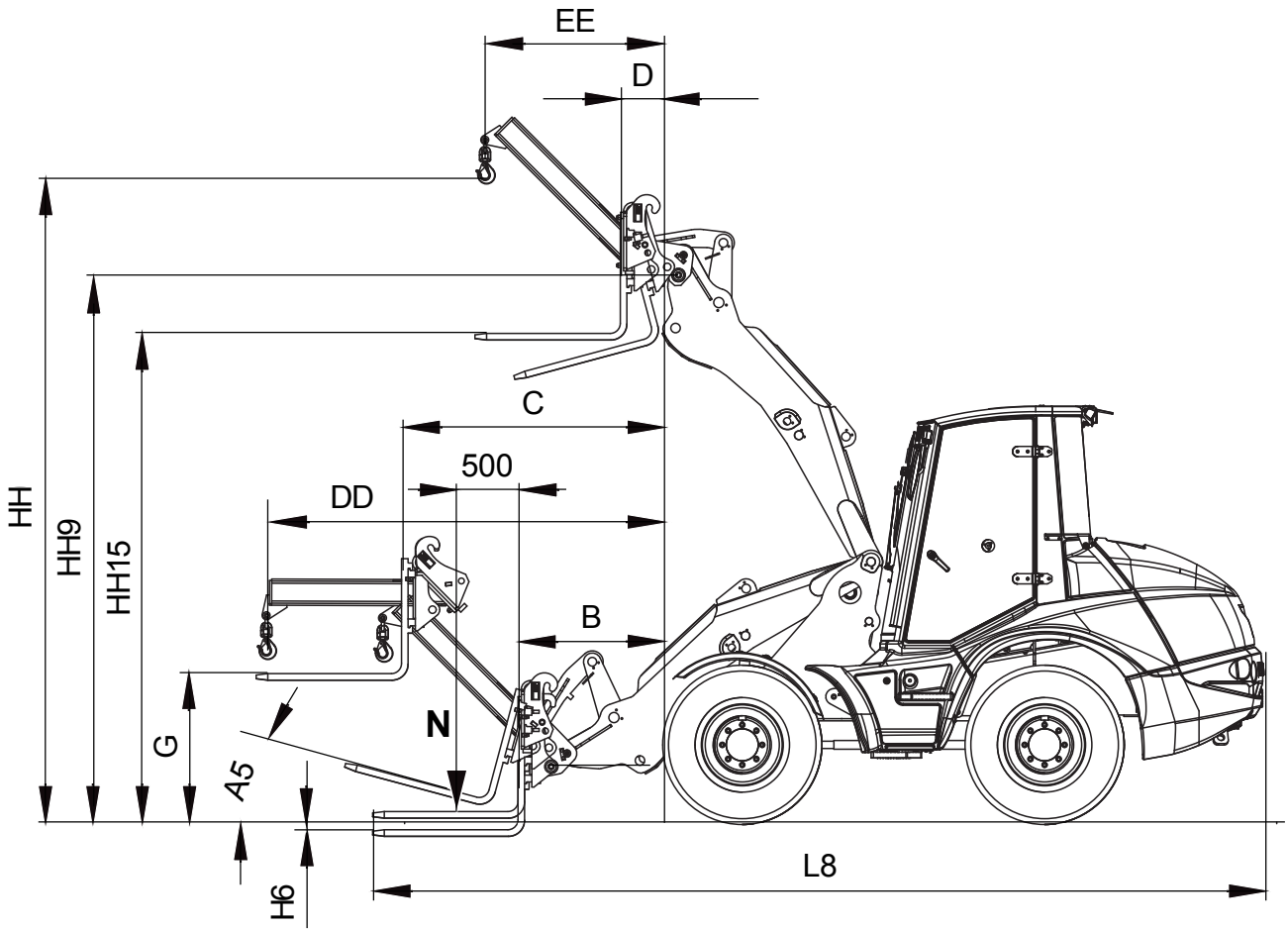

https://truckmanualshub.com/

12.2.2 Fork-lift attachment

Tine length	1,200 mm
Tine height	mm
Tine spacing (centre)	
- min.	220 mm
- max.	1,055 mm
Dead weight	214 kg

Perm. payload N acc. to EN 474-3

frontal	
- level ground (stability factor 1.25)	kg
- uneven ground (stability factor 1.67)	kg
steered	
- level ground (stability factor 1.25)	2,870 kg
- uneven ground (stability factor 1.67)	kg

Perm. payload N acc. to ISO 8313

frontal	
- level ground (stability factor 1.25)	kg
- uneven ground (stability factor 1.67)	kg
steered	
- level ground (stability factor 1.25)	kg
- uneven ground (stability factor 1.67)	kg

Perm. payload N acc. to EN 474-3, **fork-lift attachment 300 mm above ground**

steered	
- level ground (stability factor 1.25)	3,150 kg
- uneven ground (stability factor 1.67)	kg

A5	Tilt angle	18 °
B	Min. reach	850 mm
C	Max. reach	1,300 mm
GB	Reach at max. lifting height	440 mm
G	Free lift height at max. reach	1,470 mm
H6	Depth of feed-in	120 mm
HH9	Distance to centre of bolt (quick change device)	3,650 mm
HH15	Free lift height at max. lifting height	3,340 mm
L8	Total length	6,050 mm

12.2.3 Lifting hook

Perm. payload acc. to DIN EN 474-3
(measurement procedure analogue toISO 8313)

- Max. outreach (stability factor 2)	
- frontal	kg
- steered	kg
Dead weight	kg

DD	Max. outreach	2,730 mm
EE	Outreach at max. lifting height	1,220 mm
HH	Max. lifting height	4,450 mm

https://truckmanualshub.com/

https://truckmanualshub.com/

Optional Extras

https://truckmanualshub.com/

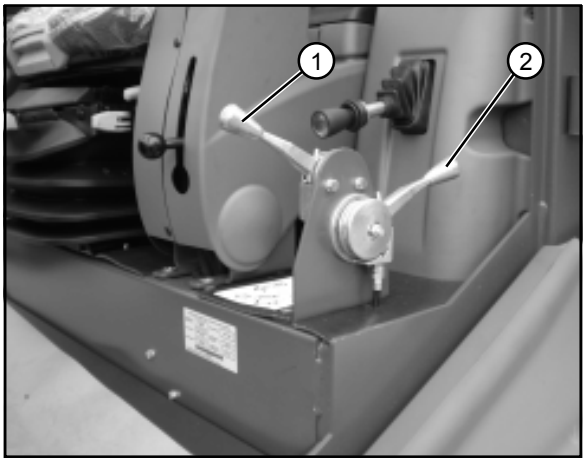

Figure 13-1

13 Additional options, modifications, notes on inspection for loaders

13.1 Additional options

13.1.1 Hand throttle

(option)
The loader is equipped with a hand throttle (13-1/2) for operations requiring a constant travel speed over a longer period of time.
The hand lever connects to the accelerator with a Bowden cable.

NOTE
- Pushing the hand throttle to the front increases the travel speed up to the maximum speed of the selected gear stage.
- To decrease the travel speed, pull the hand throttle to the rear until the loader stops.
- Pull the hand throttle all the way to the rear to the “ZERO” position after completion of work.

13.1.2 Inching speed

(option)
Generally, all work is carried out in gear stage “II”.
In special situations requiring a high engine speed at low travel speed (such as rotary brush, trench cutting machine, etc.), you may have to select gear stage “I” and inching speed.

(1) Start the engine.

(2) Pick up the attachment and move it to the required start position.

(3) Pull the inching speed control (13-1/1) all the way to the rear.

(4) Select gear stage “I” (4-11/1).

(5) Set the drive switch “forward/0/reverse” (4-11/4) to the desired travel direction.

(6) Fully depress the accelerator pedal (4-9/6).

(7) Push the inching speed control forward slowly until the desired speed has been reached.

NOTE
- With gear stage “I” selected, you can continuously adjust the travel speed from 0 to 5 km/h using the inching speed control. The farther you pull the inching speed control to the rear, the lower is the travel speed and can even be “zero”.
- Push the inching speed control all the way to the front to the maximum speed setting after completion of work.

https://truckmanualshub.com/

https://truckmanualshub.com/

https://truckmanualshub.com/

https://truckmanualshub.com/

https://truckmanualshub.com/

https://truckmanualshub.com/

https://truckmanualshub.com/

https://truckmanualshub.com/

https://truckmanualshub.com/

https://truckmanualshub.com/

https://truckmanualshub.com/

https://truckmanualshub.com/

https://truckmanualshub.com/

https://truckmanualshub.com/