https://truckmanualshub.com/

1949-50-51 FORD F-SERIES TRUCKS

SHOP MANUAL

WITH 1952 SUPPLEMENT

VIRGINIA CLASSIC MUSTANG
We've Got Your Parts.
Click Here
Buy Now

FORD D
FORD MOTO

Ford
OFFICIAL LICENSED PRODUCT
License #2011747

https://truckmanualshub.com/

Copyright © 2011, Forel Publishing Company, LLC, Woodbridge, Virginia

All Rights Reserved. No part of this book may be used or reproduced in any manner whatsoever without written permission of Forel Publishing Company, LLC. For information write to Forel Publishing Company, LLC, 3999 Peregrine Ridge Ct., Woodbridge, VA 22192

1949-52 Ford Truck Shop Manual
EAN: 978-1-60371-062-6
ISBN: 1-60371-062-0

Forel Publishing Company, LLC
3999 Peregrine Ridge Ct.
Woodbridge, VA 22192
Email address: sales@ForelPublishing.com
Website: http://www.ForelPublishing.com

This publication contains material that is reproduced and distributed under a license from Ford Motor Company. No further reproduction or distribution of the Ford Motor Company material is allowed without the express written permission of Ford Motor Company.

Note from the Publisher

This product was created from the original Ford Motor Company's publication. Every effort has been made to use the original scanned images, however, due to the condition of the material; some pages have been modified to remove imperfections.

Disclaimer

Although every effort was made to ensure the accuracy of this book, no representations or warranties of any kind are made concerning the accuracy, completeness or suitability of the information, either expressed or implied. As a result, the information contained within this book should be used as general information only. The author and Forel Publishing Company, LLC shall have neither liability nor responsibility to any person or entity with respect to any loss or damage caused, or alleged to be caused, directly or indirectly by the information contained in this book. Further, the publisher and author are not engaged in rendering legal or other professional services. If legal, mechanical, electrical, or other expert assistance is required, the services of a competent professional should be sought.

---

https://truckmanualshub.com/

1949-50-51 FORD

F-SERIES TRUCKS

SHOP MANUAL

Copyright 1951
FORD MOTOR COMPANY
DEARBORN, MICHIGAN
All rights reserved

FORD DIVISION
FORD MOTOR COMPANY

FORM 7099-A

April, 1951

https://truckmanualshub.com/

PREFACE

This manual combines under one cover complete service information for the 1949-50-51 Ford Trucks. All aspects of the servicing of the parts, assemblies, or systems involved will be found here. Repair men will find step by step procedures plus disassembled views of all of the assemblies used in these models. The diagnostician will find that working procedures for each kind of trouble he will encounter are covered. Maintenance and lubrication data is provided for those interested in this aspect of service. Service Managers and salesmen will find hints of everyday care that they can pass on to their customers. Collision men will find construction detail well illustrated to assist them in collision work. Electrical men will find simply written principles, not only of operation, but of testing as well for each of the electrical units or systems. Upholstery men will find how-to-do-it procedures for their work.

Step-by-step procedures for the disassembly, inspection, and repair are presented throughout this manual. In addition, each assembly has been illustrated disassembled, with each of the component parts arranged in the order of assembly or disassembly. In many cases, a glance at these illustrations will tell you all you need to know about how the parts go together. These illustrations carry basic part numbers for each of the parts. These basic numbers plus the model number of the truck will permit you to order parts from any Ford dealer even though you may not have a "Parts Book."

In recognition of the specialization that is currently practiced in many service establishments, this manual has been divided into five major divisions. These five parts are as follows:

Part ONE—POWER PLANT—has to do with the Ford engines and the various systems that are necessary to their operation. These include fuel system, ignition system, and the cooling system.

Part TWO—CHASSIS—starting with the clutch, covers the entire power train (clutch, transmission, drive line, rear axles, etc.) and the running gear (wheels, tires, brakes, springs, suspension, frames, steering gear, and linkages, etc.).

Part THREE—ELECTRICAL AND ACCESSORIES—covers all of the electrical systems and units (other than ignition which is covered in Part ONE) and accessories for Ford Truck models.

Part FOUR—BODIES—contains complete information on the maintenance and repair of all body components, including adjustment and alignment not only of the body proper, but also of doors, hoods, fenders, and shields.

Part FIVE—MAINTENANCE, TROUBLE SHOOTING, AND SPECIFICATIONS—has been arranged in the back of the book separately for the convenience of quick service men. In this part, all of the information ordinarily required for quick service men and service salesmen has been combined into three separate chapters.

The Table of Contents on the next page shows not only the part break-down as described above, but also the chapters that have been established in each of the five parts. Each chapter has been divided into sections which also are listed in the Table of Contents. Regardless of the aspect of service in which you are interested or the unit of the vehicle in which you may be specializing, a glance at the Table of Contents will quickly direct you to the portion of this manual in which you are interested. If you are interested in maintenance procedures, trouble shooting, or specifications, the information you desire will be found in Part FIVE. Otherwise, it will fall in one of the four other parts. A quick glance at the chapter and section listings under the part involved will direct you to the page desired.

Throughout this manual the top of each left-hand, even-numbered page gives the name of the chapter; and the top of each right-hand, odd-numbered page gives the name of the section involved. Thus, regardless of where you open the manual, a glance at the top of the two pages will tell you exactly what subject matter is discussed at that point.

No one expects even the most experienced mechanic to remember all details of servicing these trucks and you will find that you will have to occasionally refer to this manual. Keep your manual where it will be readily available for reference at all times.

FORD DIVISION
FORD MOTOR COMPANY
SERVICE DEPARTMENT

https://truckmanualshub.com/

TABLE OF CONTENTS

Page

Preface 2

Part ONE – POWER PLANT

CHAPTER I—GENERAL ENGINE REPAIR

Section 1 Engine Removal and Installation 5
2 Valves, Springs, Guides, and Valve Seat Inserts 9
3 Crankshaft, Bearings, and Piston Assemblies 11
Section 4 Connecting Rods, Pistons, Rings, and Pins 15
5 Flywheel Repair 19
6 Muffler, Inlet Pipe, Outlet Pipe, and Crossover Pipe (8 cyl. only) 20

CHAPTER II—H-SERIES 6-CYLINDER ENGINE

Section 1 Manifold Replacement 22
2 Cylinder Head Replacement 25
3 Oil Pan, Oil Pump, and Oil Pressure Relief Valve 26
4 Crankshaft Damper 29
Section 5 Cylinder Front Cover 30
6 Valves and Valve Guides 31
7 Camshaft Gear, Camshaft, and Bearings 32
8 Flywheel, Crankshaft, and Bearings 35
9 Piston and Connecting Rod Assemblies. 38

CHAPTER III—M-SERIES 6-CYLINDER ENGINE

Section 1 Manifold Replacement 40
2 Cylinder Head Replacement 42
3 Oil Pan, Oil Pump, and Oil Pressure Relief Valve 44
4 Crankshaft Damper 47
Section 5 Cylinder Front Cover 47
6 Valves and Valve Guides 48
7 Camshaft Gear, Camshaft, and Bearings 50
8 Flywheel, Crankshaft, and Bearings 54
9 Piston and Connecting Rod Assemblies. 56

CHAPTER IV—R-SERIES, 8-CYLINDER ENGINE

Section 1 Manifolds 58
2 Cylinder Heads 60
3 Oil Pan, Oil Pump, and Oil Pressure Relief Valve 61
4 Crankshaft Pulley 64
Section 5 Cylinder Front Cover 64
6 Valves and Valve Guides 65
7 Camshaft Gear, Camshaft, and Bearings 66
8 Flywheel, Crankshaft, and Bearings 69
9 Piston and Connecting Rod Assemblies. 70

CHAPTER V—E-SERIES 8-CYLINDER ENGINE

Section 1 Manifolds 74
2 Cylinder Heads 75
3 Oil Pan, Oil Pump, and Pressure Relief Valve 77
4 Crankshaft Damper 80
5 Cylinder Front Cover 80
Section 6 Valves, Valve Guides, Hydraulic Lifters, and Tappets 81
7 Camshaft Gear, Camshaft, and Bearings 84
8 Flywheel, Crankshaft, and Bearings 86
9 Piston and Connecting Rod Assemblies. 89

CHAPTER VI—IGNITION, FUEL, AND COOLING SYSTEM

Section 1 Ignition System 91
2 Distributor Minor Repair and Adjustment 95
3 Distributor Overhaul 99
4 Carburetor Construction, Operation, and Adjustments 103
5 6-Cylinder Carburetor Overhaul (Single Downdraft) 108
6 8-Cylinder Carburetor Overhaul (Dual Downdraft) 112
Section 7 8-Cylinder Carburetor Overhaul (Dual Concentric) 114
8 6-Cylinder Carburetor Overhaul (Single Updraft) 118
9 Governors 120
10 Fuel Pumps and Vacuum Booster 123
11 Fuel Tanks and Lines 127
12 Fans and Belts 128
13 Water Pumps 129
14 Radiators, Hose, and Thermostats 132

Part TWO – CHASSIS

CHAPTER I—CLUTCH AND TRANSMISSION

Section 1 Clutch 135
2 Transmission Cleaning, Inspection, and Alignment 138
3 3-Speed Transmissions 140
Section 4 4-Speed Transmission 147
5 4-Speed Synchro-Silent Transmission 149
6 5-Speed Transmissions 154
7 Gearshift Linkage 161

CHAPTER II—REAR AXLES AND DRIVE LINES

Section 1 Integral Housing Hypoid 163
2 Split Housing Hypoid 168
3 Split Housing Spiral Bevel 174
Section 4 Banjo Housing Spiral Bevel 178
5 Planetary Two-Speed 182
6 Drive Lines 193

https://truckmanualshub.com/

CHAPTER III—RUNNING GEAR

Page

Section 1 Frames ... 195
2 Front Axle ... 196
3 Springs ... 198
4 Shock Absorbers ... 199
Section 5 Steering Gear ... 201
6 Steering Connections ... 203
7 Wheels and Tires ... 204
8 Hubs and Bearings ... 209

CHAPTER IV—BRAKES

Section 1 Types, Description, Model Application ... 214
2 Adjustments ... 217
3 Hydraulic System ... 218
4 Hydraulic Brake Boosters ... 223
Section 5 Brake Assemblies ... 231
6 Brake Drums ... 236
7 Air Brake System ... 236
8 Parking Brakes ... 249

Part THREE – ELECTRICAL AND ACCESSORIES

CHAPTER I—ELECTRICAL SYSTEMS

Section 1 Generating System and Battery ... 249
2 Starting System ... 263
3 Lighting System ... 269
Section 4 Horns ... 276
5 Instruments ... 277

CHAPTER II—ACCESSORIES

Section 1 Radio ... 282
2 Heater ... 287
Section 3 Windshield Wiper ... 289

Part FOUR – BODIES

CHAPTER I—CONSTRUCTION AND MAINTENANCE

Section 1 Construction Details ... 291
2 Door Alignment ... 295
Section 3 General Body Maintenance ... 296

CHAPTER II—HARDWARE, GLASS, AND INTERIOR TRIM

Section 1 Door Locking Mechanism ... 298
2 Window Regulators ... 300
3 Door Glass and Ventilator Assembly ... 301
Section 4 Windshield and Rear Window ... 303
5 Seats and Interior Trim ... 304

CHAPTER III—FRONT END SHEET METAL AND RUNNING BOARDS

Section 1 Front End Sheet Metal Replacement ... 308
2 Radiator Grille ... 309
3 Hood and Component Parts ... 312
Section 4 Fenders and Running Board ... 316
5 Cab Replacement ... 317
6 Platform Body Replacement ... 319

Part FIVE – MAINTENANCE, TROUBLE SHOOTING, AND SPECIFICATIONS

CHAPTER I—MAINTENANCE PROCEDURES

Section 1 Engine Tune-up ... 321
2 Wheel Alignment ... 323
3 Brake Adjustment ... 328
Section 4 Lubrication ... 329
5 Preventive Maintenance ... 334

CHAPTER II—TROUBLE SHOOTING

Section 1 Power Plant ... 336
2 Suspension, Steering Gear, and Tire Wear ... 346
3 Brakes ... 348
Section 4 Electrical and Instruments ... 349
5 Accessories ... 358
6 Power Train ... 360

CHAPTER III—SPECIFICATIONS

Section 1 Wheels and Tires ... 361
2 Brakes ... 362
3 Wheel Alignment and Steering ... 365
4 Rear Axle ... 366
5 Frame and Springs ... 367
6 Engines ... 369
7 Clutch and Transmission ... 375
8 Cooling ... 376
Section 9 Fuel System ... 377
10 Generating System ... 378
11 Starting System ... 379
12 Ignition ... 379
13 Lights and Horns ... 380
14 Wiring Diagrams ... 381
15 Tools and Equipment ... 383

https://truckmanualshub.com/

Part ONE
POWER PLANT
Chapter
I
General Engine Repair

Section		Page
1	Engine Removal and Installation	5
2	Valves, Springs, Guides, and Valve Seat Inserts	9
3	Crankshaft, Bearings, and Piston Assemblies	11
4	Connecting Rods, Pistons, Rings, and Pins	15
5	Flywheel Repair	19
6	Muffler, Inlet Pipe, Outlet Pipe, and Crossover Pipe (8 cyl. only)	20

This Chapter brings together repair procedures that are common to all engines. Instructions for fitting the various engine parts are accompanied by charts that conveniently list the tolerances for all engines. This eliminates searching through the book for specifications. For added convenience, a complete list of specifications is included in the back of the book.

Engine removal and installation procedures are presented first with respect to the body style and then are subdivided according to the engine. This eliminates repetition of preliminary operation procedures and quickly guides the reader to the procedure for any combination of body style and engine.

1. ENGINE REMOVAL AND INSTALLATION

A detailed procedure for removing and installing the engine is given in this section for the various body styles. Ford trucks are classified by a series number from F-1 thru F-8 according to their wheelbase and gross weight. The possible combinations of truck series, body style, and engine that may need servicing are listed in Table 1.

Removal and installation procedures are given according to the type of truck. The operations common to the removal of any engine are covered immediately following the heading for a certain type truck. The major headings are "a. Conventional Truck" and "b. Cab-Over-Engine." Specific information for each engine is covered under headings "(1) H or M Series Engine Removal," "(2) H or M Series Engine Installation," "(3) R Series Engine Removal," "(4) R Series Engine Installation," "(5) E Series Engine Removal," and "(6) E Series Engine Installation."

Only the H series engine is used in the parcel delivery truck and it is handled separately under the heading "c. Parcel Delivery."

a. Conventional Truck.

Drain the radiator and crankcase. Remove the hood, air cleaner, and battery. Disconnect the heater hoses at the engine.

Disconnect the generator wires, temperature sending unit wire, and oil pressure sending unit wire. Disconnect the flexible fuel line, choke wire, throttle linkage, vacuum hose, and starter cable at the starter.

(1) *H OR M SERIES ENGINE REMOVAL.* Disconnect the upper radiator hose at the engine and the lower radiator hose at the radiator. Disconnect the fan shroud from the radiator and lean it against the engine. Remove the radiator, then remove the shroud. Disconnect the ignition switch to coil wire. Disconnect the muffler inlet pipe at the exhaust manifold, and the clutch release bearing spring and rod.

Install an engine lift bracket (fig. 1) and take up the load with a hoist. Remove the engine front support bolts. Remove the bolts which secure the transmission to the flywheel housing.

Pull the engine away from the transmission and lift

Table 1—Truck Models

Engine	Body Style		
	Conventional	Cab-Over-Engine	Parcel Delivery
H	F-1 to F-6	F-5 and F-6	F-3
R	F-1 to F-6	F-5 and F-6	
M	F-6	F-6	
E	F-7 and F-8		

https://truckmanualshub.com/

the engine from the chassis. Do not allow the engine to strike the grille.

(2) *H OR M SERIES ENGINE INSTALLATION.* To install the engine, lower it into the engine compartment and align it with the flywheel housing. Shift the transmission into any gear. Start the transmission main shaft into the clutch disc spline. If the spline grooves do not mesh, turn the crankshaft slowly with a box wrench on the crankshaft damper retaining bolt until the main shaft slides into the clutch disc spline.

Install the transmission to flywheel housing bolts and tighten them to 40-50 foot-pounds torque. Install the engine front support bolts. Remove the lift bracket from the engine.

Connect the clutch spring and rod, the muffler inlet pipe, and ignition switch to coil wire. Lean the fan shroud over the engine and install the radiator.

Fasten the fan shroud to the radiator. Connect the radiator hoses.

To complete the engine installation, connect the starter cable, vacuum hose, throttle linkage, choke wire, temperature and pressure sending unit wires, generator wires, and heater hoses. Install the battery, air cleaner, and hood. Fill the cooling system and crankcase according to the prevailing temperature.

(3) *R SERIES ENGINE REMOVAL.* Remove the upper radiator hoses. Remove the fan belt and fan, and the generator belt and generator. Disconnect the lower radiator hoses at the radiator and remove the radiator. Disconnect the ignition switch to coil wire, muffler inlet pipe, and the clutch pedal retracting spring. Remove the road draft tube.

Place a support under the transmission to prevent it from dropping out of line when the engine is removed.

Install the engine lift hook assembly (fig. 2) and take up the slack in the cables with a hoist. Remove the engine front support bolts. Remove the transmission to flywheel housing bolts. Pull the engine away from the transmission and lift it from the engine compartment. Do not allow the engine to strike the grille.

(4) *R SERIES ENGINE INSTALLATION.* To install the engine, lower it into the engine compartment and align it with the flywheel housing. Shift the transmission into any gear. Start the transmission main shaft into the clutch disc spline. If the spline grooves do not mesh, turn the crankshaft slowly until the main shaft slides into the clutch disc spline.

Install the transmission to flywheel housing bolts and tighten to 40-50 foot-pounds torque. Install the engine front support bolts. Remove the engine lift hook assembly.

Connect the clutch pedal retracting spring, muffler inlet pipe, ground strap, and ignition switch to coil wire. Install the radiator and connect the lower radiator hoses. Install the generator and generator belt and the fan and fan belt. Adjust belt tension. Install the radiator hoses.

To complete the engine installation, connect the starter cable, vacuum hose, throttle linkage, choke wire, temperature and oil pressure sending unit wires, and heater hoses. Install the road draft tube. Install the battery, air cleaner, and hood. Fill the cooling system and crankcase according to the prevailing temperatures.

(5) *E SERIES ENGINE REMOVAL.* Remove the upper radiator hoses. Remove the fan belt and fan and the generator belt and generator. Disconnect the lower radiator hoses at the radiator and remove the radiator. Disconnect the distributor primary wire and the coil to distributor high tension wire. Disconnect the throttle linkage. Loosen the road draft tube clamp at the elbow and remove the road draft tube. Disconnect the muffler inlet cross over pipe and muffler inlet pipe from the exhaust manifolds.

Install the engine lift hook assembly (fig. 2) and take up the slack in the cables with a hoist. Remove the engine front support bolts. Support the transmission to prevent it from dropping out of line when the engine is removed. Remove the bolts that secure the flywheel housing to the engine block. Move the engine far enough forward to clear the transmission main shaft, then lift the engine from the chassis.

(6) *E SERIES ENGINE INSTALLATION.* To install the engine, lower it into the engine compartment and align it with the flywheel housing. Shift the trans-

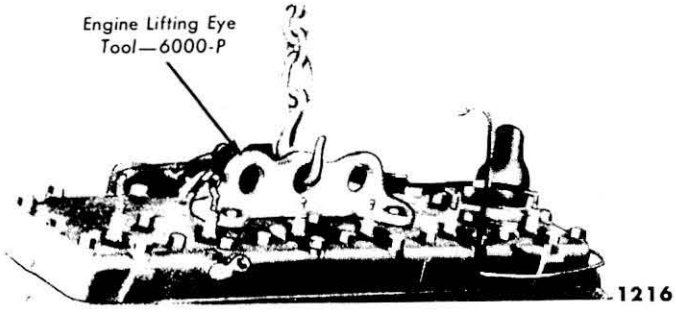

Fig. 1—Engine Lift Bracket for H or M Series Engines

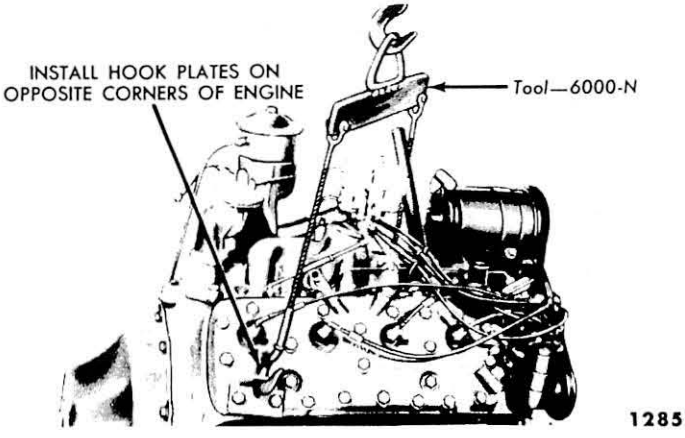

Fig. 2—Engine Lift Hook Assembly for 8-Cylinder Engines

https://truckmanualshub.com/

mission into any gear. This will keep the main shaft from turning. Move the engine toward the transmission until the main shaft enters the clutch disc spline. If the spline gooves do not mesh, turn the crankshaft slowly until the main shaft slides into the clutch disc spline.

Install the flywheel housing to engine bolts and torque them to 40-50 foot-pounds. Install the engine front support bolts. Remove the engine lift hook assembly.

Connect the muffler inlet pipe and muffler inlet cross over pipe to the exhaust manifolds. Install the road draft tube. Connect the distributor primary wire and the coil to distributor high tension wire. Install the radiator and connect the lower radiator hoses. Install the generator and generator belt and the fan and fan belt. Adjust the belt tension. Install the upper radiator hoses.

To complete the engine installation, connect the starter cable, vacuum hose, throttle linkage, choke wire, temperature and pressure sending unit wires, and heater hoses. Install the battery, air cleaner, and hood. Fill the cooling system and crankcase according to the prevailing temperatures.

b. Cab-Over-Engine.

Begin the engine removal operation by draining the crankcase and cooling system. Remove the hood, air cleaner and flexible tube, floor pan over the engine, and dash panel. Remove the oil filter lines. Remove either front wheel. Remove the grille assembly (fig. 3). Disconnect the radiator hoses and remove the radiator support assembly with the radiator (fig. 4).

Disconnect the generator wires, ignition switch to coil wire, temperature sending unit wire, oil pressure sending unit wire, vacuum hose at the intake manifold, starter motor cable at the starter, throttle linkage, choke wire, and heater hoses. Disconnect the flexible fuel line, muffler inlet pipe, and clutch release bearing spring. Remove the engine front support bolts.

Fig. 3—C.O.E. Grille Assembly

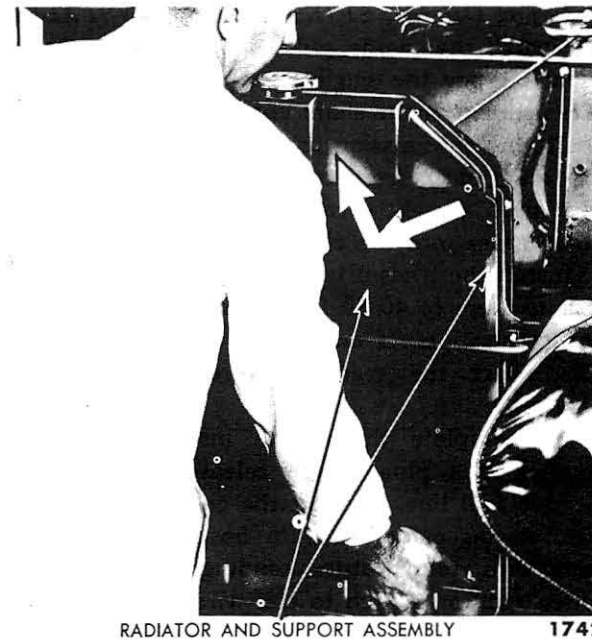

Fig. 4—Removing Radiator (H or M Series Engines)

(1) *H OR M SERIES ENGINE REMOVAL.* Install the engine lift bracket on the cylinder head. Connect a portable floor crane to the lift bracket and take up the engine load (fig. 5). Remove the bolts which secure the transmission to the flywheel housing. Move the engine away from the transmission, lift it high enough to clear the chassis, and carefully maneuver the engine out of the engine compartment.

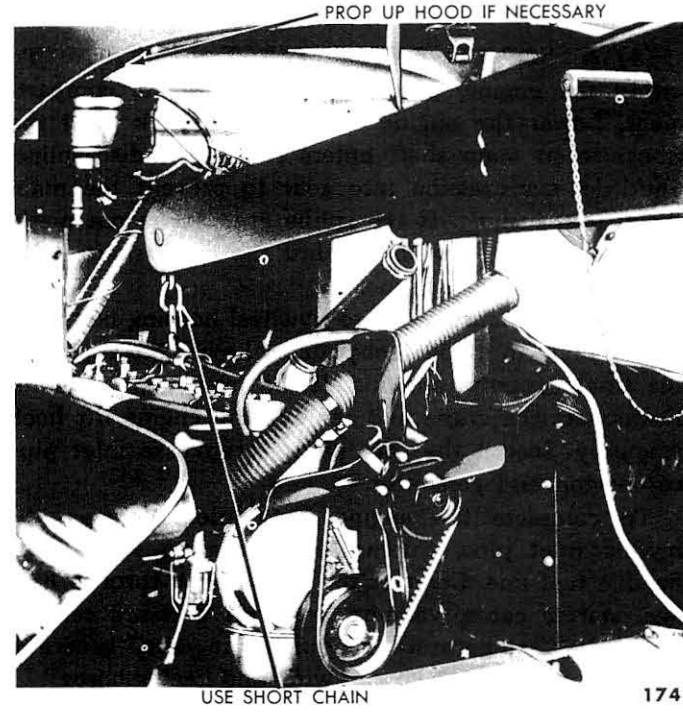

Fig. 5—Lifting the 6-Cylinder Engine

https://truckmanualshub.com/

(2) *H OR M SERIES ENGINE INSTALLATION.* To install the engine, guide it into the engine compartment. Lower the engine and move it back until the transmission main shaft enters the clutch disc spline. Shift the transmission into any gear. This will prevent the main shaft from turning. If the spline grooves do not mesh, slowly turn the crankshaft until the main shaft slides into the clutch disc spline.

Install the transmission to flywheel housing bolts and torque them to 40-50 foot-pounds. Lower the engine to the front supports and install the front support bolts. Disconnect the crane and remove the engine lift bracket.

To complete the engine installation, connect the muffler inlet pipe, clutch release bearing spring, and flexible fuel line. Connect the choke wire, throttle linkage, starter cable, vacuum hose, oil pressure sending unit wire, temperature sending unit wire, generator wires, ignition switch to coil wire, and heater hoses.

Install the radiator and connect the radiator hoses. Install and secure the grille assembly. Install the front wheel. Install the dash panel, floor pan, air cleaner and flexible tube, and hood. Fill the crankcase and cooling system according to the prevailing temperatures.

(3) *R SERIES ENGINE REMOVAL.* Remove the generator, carburetor, crankcase inlet pipe and fuel pump. Install the engine lift hook assembly and take up the slack in the cables with a portable floor crane. Remove the bolts which secure the transmission to the flywheel housing. Move the engine away from the transmission. Lift it high enough to clear the chassis and carefully maneuver the engine from the engine compartment.

(4) *R SERIES ENGINE INSTALLATION.* To install the engine, guide it into the engine compartment. Lower the engine and move it back until the transmission main shaft enters the clutch disc spline. Shift the transmission into gear to prevent the main shaft from turning. If the spline grooves do not mesh, slowly turn the crankshaft until the main shaft slides into the clutch disc spline.

Install the transmission to flywheel housing bolts and torque them to 40-50 foot-pounds. Lower the engine to the front supports and install the front support bolts. Disconnect the crane and remove the engine lift hook assembly. Install the fuel pump, crankcase inlet pipe carburetor, and generator.

To complete the engine installation, connect the muffler inlet pipe, clutch release bearing spring, and flexible fuel line. Connect the choke wire, throttle linkage, starter cable, vacuum hose, oil pressure sending unit wire, temperature sending unit wire, generator wires, ignition switch to coil wire, and heater hoses.

Install the radiator and connect the radiator hoses. Install and secure the grille assembly. Install the front wheel, dash panel, floor pan, air cleaner and flexible tube, and hood. Fill the crankcase and cooling system according to the prevailing temperature.

c. Parcel Delivery.

Drain the crankcase and cooling system. Remove the hood and radiator support bar. Disconnect the upper radiator hose. Remove the fan shroud from the radiator and lean the shroud against the engine. Disconnect the lower radiator hose, remove the radiator support assembly with the radiator, and remove the fan shroud.

Remove the engine compartment rear cover. Open the engine compartment front cover and attach the hook at the left corner near the hinge to keep it open. Remove the weatherstrip retaining panel at the rear edge of the engine compartment rear cover.

Remove the air cleaner and flexible tube. Disconnect the generator wires, ignition switch to coil wire, temperature sending unit wire, oil pressure sending unit wire, vacuum hose at the intake manifold, starting motor cable at the starter, throttle linkage, choke wire, and heater hoses. Disconnect the flexible fuel line, muffler inlet pipe, clutch release bearing spring, and hand brake cable where it is clipped to the transmission.

Fasten the engine lift bracket to the cylinder head. Project the portable floor crane through the right-hand door. Connect the crane chain to the lift bracket and take up the engine weight. Remove the engine front support bolts. Remove the bolts that secure the transmission to the flywheel housing.

Move the engine far enough forward to clear the transmission main shaft. Lift the engine and carefully maneuver it through the door (fig. 6).

To install the engine, guide it through the right-hand

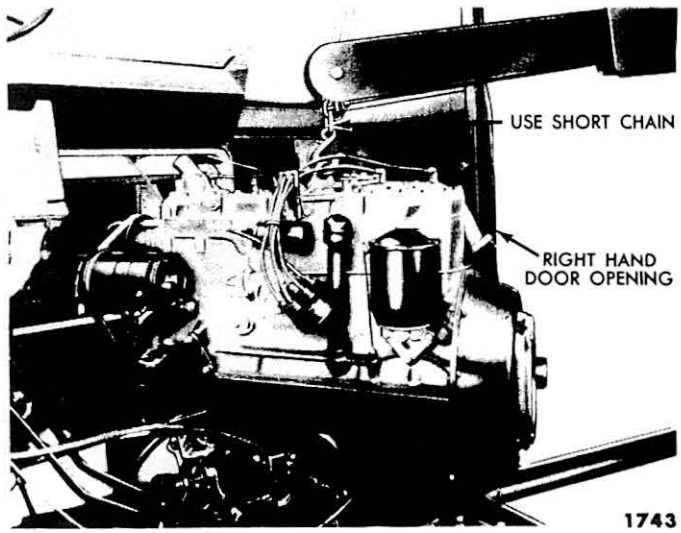

Fig. 6—Removing Parcel Delivery Engine

https://truckmanualshub.com/

door and lower it into the engine compartment. Do not allow the engine to strike any part of the body or chassis. Shift the transmission into any gear. This will prevent the main shaft from turning. Align the engine with the transmission and move it back until the transmission main shaft starts into the clutch disc spline. If the spline grooves do not mesh, slowly turn the crankshaft with a box wrench on the crankshaft damper bolt until the main shaft slides into the clutch disc spline.

Install the transmission to flywheel housing bolts and torque them to 40-50 foot-pounds. Lower the engine to the front supports and install the front support bolts. Disconnect the crane and remove the engine lift bracket.

Connect the hand brake cable to the transmission. Connect the clutch release bearing spring, muffler inlet pipe, fuel line, starter cable, and heater hoses. Connect the generator wires, ignition switch to coil wire, temperature sending unit wire, oil pressure sending unit wire, vacuum hose, throttle linkage, and choke wire. Install the air cleaner and flexible tube.

Install the weatherstrip retaining panel, lower the engine front compartment cover, and install the engine rear compartment cover. Lay the fan shroud over the engine. Install the radiator support assembly with the radiator and connect the lower radiator hose. Fasten the fan shroud to the radiator. Connect the upper radiator hose. Install the radiator support bar and hood. Fill the crankcase and cooling system according to the prevailing temperature.

2. VALVES, SPRINGS, GUIDES, AND VALVE SEAT INSERTS

Removal and disassembly procedures for valves and guides in a specific engine are covered in the chapter on that particular engine. Cleaning, testing, inspection, and repair operations common to all valves, guides, and seats, are given in this section under headings which are descriptive of the parts covered.

a. Valves, Springs, and Valve Guides.

The procedure given below constitutes the essential steps for a valve grinding operation when the valves have been removed from the engine. This procedure includes cleaning, inspection, spring testing, and refacing valves and valve seats. Valve clearances are set at the time of valve installation and are discussed for each engine in the chapter on that particular engine.

Valve operation is dependent on the clearance between the valve stem and valve guide. Excessive clearance or bellmouthed valve guide ends cause noisy valve operation. Insufficient clearance may cause the valve to stick open resulting in rough engine operation and valve failure.

(1) *CLEANING.* Wash all parts of the valve assembly in solvent. Scrape carbon and lead deposits from head and stem of valve. Remove varnish from the stem with lacquer thinner. On rotating type valves clean the valve caps thoroughly.

NOTE: ***Foreign particles between the valve stem and cap may prevent the valve from rotating and cause the valve to fail.***

(2) *INSPECTION.* Check the valves for burned or warped heads. Measure the stem diameter and replace the valve if the diameter is less than 0.341 inch. Measure the valve guide inside diameter to determine valve to guide clearance. Figure 7 illustrates the method of measuring the valve guide with the telescope gauge and micrometer. Replace the guide if the clearance is greater than the tolerance shown in Table 2 for each engine. Tight guides can be relieved by burnishing (fig. 8). Replace the guide if either end is bellmouthed. Replace warped, burned, pitted, or worn valves.

(3) *SPRING TESTING.* Test the Valve Springs (fig. 9) for compression. Replace springs if they are not within the limits given in Table 3.

Table 2—Valve Stem Clearance Specifications

Engine	Valve Stem to Guide Clearance (Inches)
R	0.0015-0.0035
H or M	0.0010-0.0031
E	0.0022-0.0037

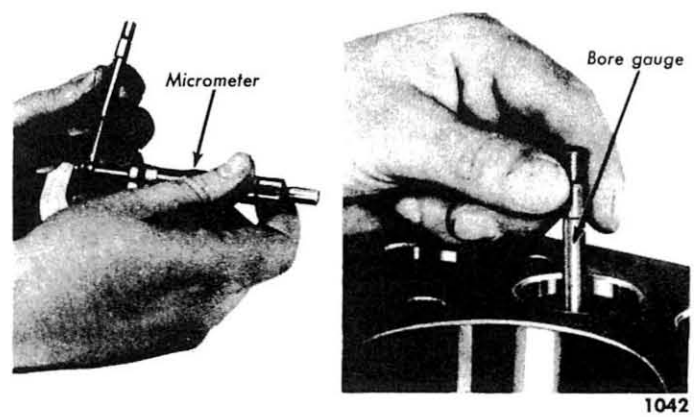

Fig. 7—Checking Valve Guide Wear

https://truckmanualshub.com/

Table 3—Spring Test Specifications

Engine	Year	Test Length	Compression (Pounds)
R	1949-1950	2.13	37-40
R	1951	1.89	40-43
H and M	1949-1951	2.11	47-50
E	1949-1951	1.68	63-69

(4) *REFACING VALVES.* Remove all carbon from the valve head and stem. Grind the face of the valve at 45° angle as shown in fig. 10. If the valve head is less than 1/32 inch thick at the outer edge replace the valve.

(5) *REFACING VALVE SEATS.* Clean seats thoroughly with a wire brush to prevent carbon from becoming embedded in the grinding wheel during the refacing operation. Keep grinding dust from entering the engine. Remove only enough stock to clean up pits and other depressions.

NOTE: ***Worn valve guides must be replaced before refacing valve seats.***

After regrinding the valve seats, the width of the seat must not exceed 1/16 inch measured across the face of the seat as shown in fig. 11.

If the valve seat is too wide, remove just enough stock from the top or bottom of the valve seat to reduce the width to approximately 1/16 inch. This can be done by using a 30 degree angle grinder to remove stock from the bottom of the valve seat, and a 60 degree angle grinder to remove stock from the top of the valve seat. The valve seat should not exceed 0.005 inch run out. Check the valve seat run out with a dial indicator (fig. 12). Lap the seat and valve together with a fine lapping compound to finish the operation.

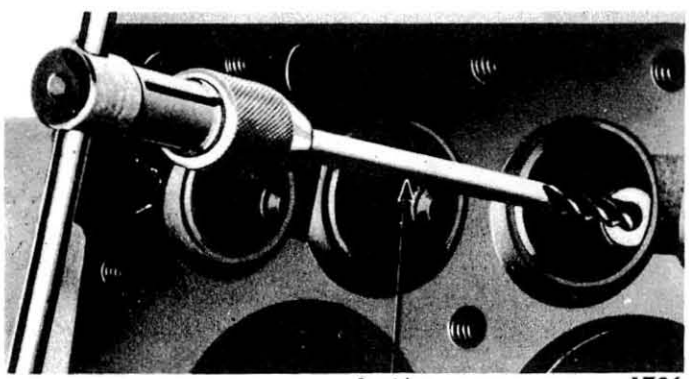

Burnisher 1736

Fig. 8—Burnishing Valve Guide

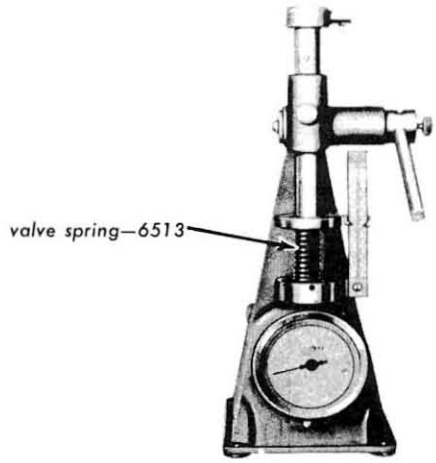

1037

Fig. 9—Checking Valve Spring

b. Valve Seat Inserts.

Some R series engines are equipped with valve seat inserts for both intake and exhaust valves, others use inserts in the exhaust valve ports only, and some have no inserts at all. The H, M, and E series engines have inserts in the exhaust valve port only.

Valve seat inserts are pressed into the counterbore in the cylinder block valve port (fig. 13).

(1) *REMOVAL.* Remove the insert by driving a wedge under the insert and prying it out.

(2) *INSTALLATION.* Chill the inserts with dry ice before inserting them in the cylinder block. Tap them with a soft faced hammer until they seat firmly in the recess. After installing the valve seat inserts, grind them concentric to the valve guides.

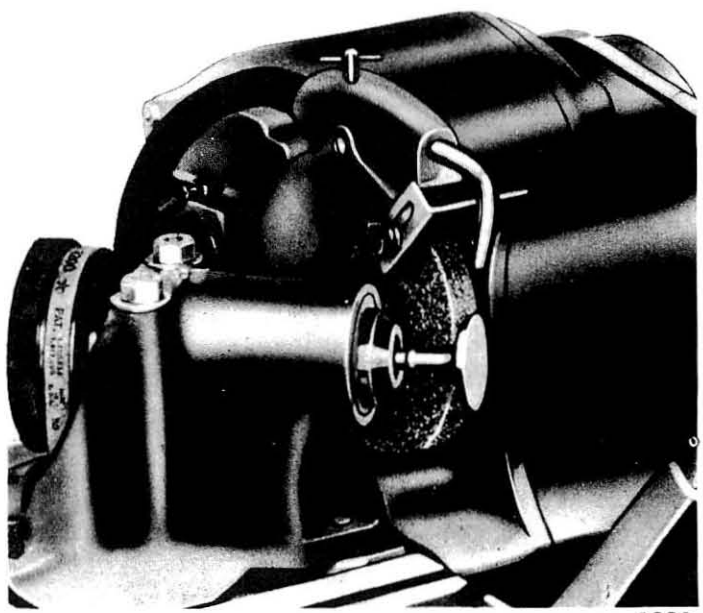

1086

Fig. 10—Grinding Valve Face

https://truckmanualshub.com/

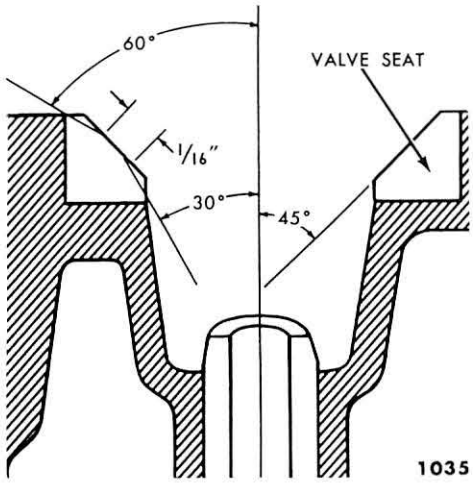

Fig. 11—Correct Valve Seat Width

Fig. 13—Valve Seat Insert

3. CRANKSHAFT, BEARINGS, AND PISTON ASSEMBLIES

The crankshaft is supported in three main bearings in the 8-cylinder engines and four main bearings in the 6-cylinder engines. The center bearings are placed so that two crankshaft throws are located between any two main bearings. This arrangement provides a rigid support for the crankshaft and allows the bearing load to be distributed.

a. Camshaft.

The crankshaft is made of cast alloy steel with integral counterweights and is dynamically and statically balanced. Oil distribution holes are drilled through the shaft for main bearing and connecting rod lubrication. Figure 14 shows these oil passages in a cutaway view of the R series engine crankshaft.

(1) *CLEANING AND INSPECTION.* Wash the crankshaft in solvent. Blow out the oil passages with compressed air. Remove the sludge trap plugs and clean out the traps. Press in new plugs. Examine the shaft for evidence of cracks. Check the dowel pins in the flange for looseness. Remove any nicks on the ends of the pins with a file.

Fig. 12—Checking Valve Seat Runout

CAUTION: ***Do not file the body diameter of the dowel pins.***

(2) *CRANKSHAFT JOURNAL MEASUREMENT.* Measure each crankshaft journal diameter at a minimum of four places to determine the size, whether or not it is out of round, and whether or not it has taper. If any of the journals are out of round more than 0.0015 inch or if taper of more than 0.001 inch exists, they should be machined. Journals that are worn evenly and have less than 0.001 inch taper or a 0.0015 inch out of round condition will not require machining if the available bearings will provide not more than 0.002 inch clearance for the main bearing, or not more than 0.003 inch clearance for the crankpin bearings.

Manufacturer's crankshaft journal diameters for each engine are given in Table 4.

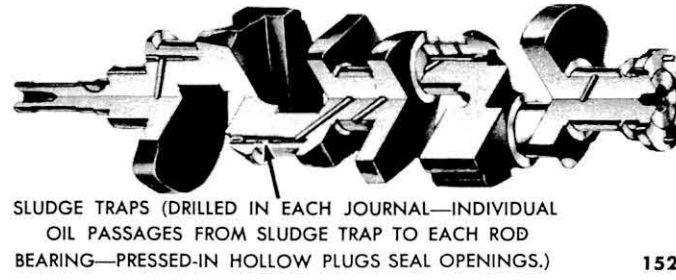

Fig. 14—Crankshaft Oil Passages (R Series Engines)

https://truckmanualshub.com/

(3) *GRINDING CRANKSHAFT JOURNALS.* Calculate the correct undersize from the crankshaft dimension given above.

EXAMPLE: ***If the main bearing journal on an E Series Engine crankshaft will "clean up" before it is ground to 2.499 —0.010 = 2.489 inches diameter, finish it to that diameter and install 0.010 undersize bearings.***

Undersize bearings are available in 0.002, 0.010, 0.020, and 0.030 inch sizes for H and M series engines and 0.002, 0.010, 0.020, 0.030, and 0.040 inch sizes for R and E series engines.

NOTE: ***On late model E series engines a series of selective fit bearings are used instead of the 0.002 inch undersize bearing.***

Always reproduce the same radii that existed originally in the corners of the pin or journal. Too small a radius may result in crankshaft failure, while too large a radius will result in bearing failure.

After grinding, polish the pin or journal with No. 320 grit emery cloth and engine oil. Crocus cloth may also be used.

b. Main and Connecting Rod Bearings.

Steel backed copper-lead insert bearings are used in the main bearing supports and connecting rods. These bearings are held in place with indentations on the end of the insert which locate in machined notches in the cylinder block and connecting rod caps when installed.

Table 4—Crankshaft Journal Specifications

Engine	Diameter (Inches)		
	Main Journal Front and Center	Rear	Crankpin
E	2.8735-2.8740	2.8730-2.8735	2.3995-2.4000
R	2.4982-2.4990	2.4982-2.4990	2.1382-2.1390
H or M	2.8732-2.8740	2.8732-2.8740	2.2980-2.2988

Care should be used in fitting bearings since the crankshaft carries the entire engine load. Lubrication must be maintained or the bearings will wear out rapidly with possible damage to the crankshaft journals. Be sure the oil holes in the bearing line up with those in the bearing bore.

Crankshaft end thrust is controlled by the rear main bearing flange.

Bearing inserts are precision manufactured and are ordered by size to re-establish the manufacturer's tolerance when the engine is overhauled.

Main bearing inserts that are scratched, show fatigue pockets, or have the overlay wiped out, should be replaced.

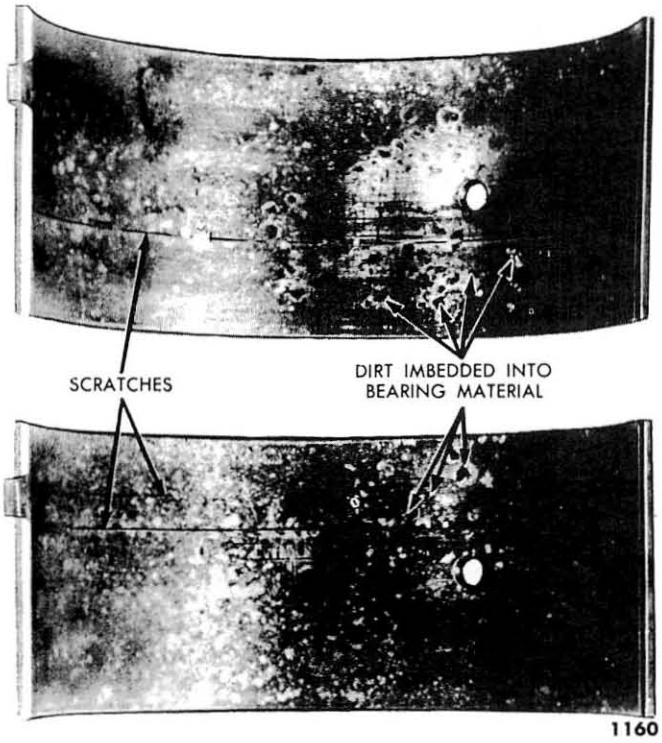

Fig. 15—Bearing Scratched by Dirt

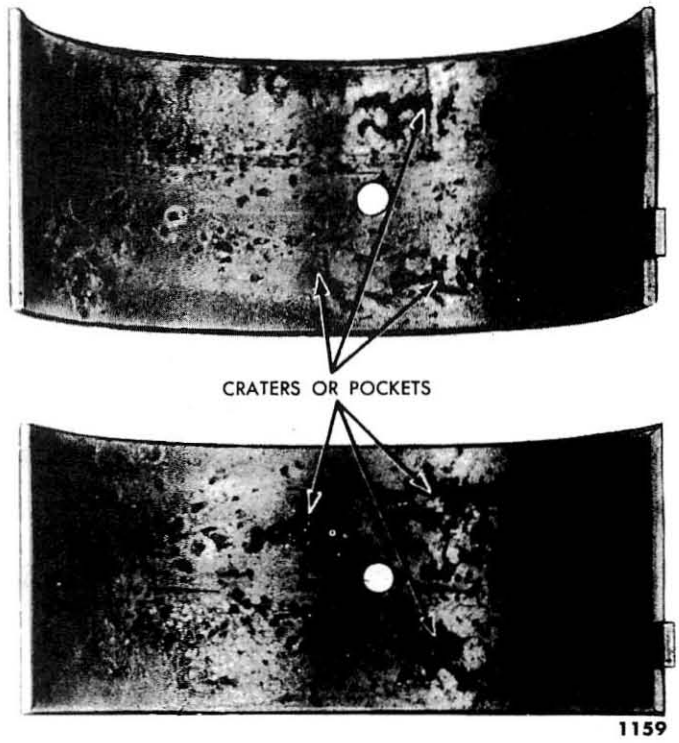

Fig. 16—Fatigue Failure of Bearing

https://truckmanualshub.com/

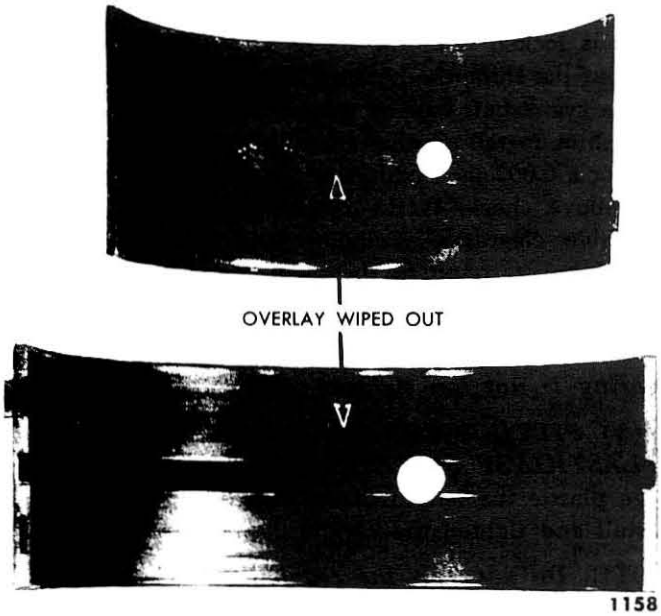

Fig. 17—Bearing Failure Due to Lack of Oil

A bearing that has only light scratches may be reused providing the clearances are satisfactory. Scratched bearings are shown in fig. 15. Fatigue failure can be recognized by the breaking away of the bearing overlay material (fig. 16). Figure 17 shows two bearings with the overlay wiped out.

Excessive wear on one side of the bearing half (fig. 18) indicates a tapered bearing journal. The journal should be reground to the next undersize to remove the taper and undersize bearings should then be installed. Similarly excessive wear at the center or end of the bearing around the circumference (fig. 19) indicates high spots on the bearing journal which should be corrected before the engine is rebuilt.

Bright sections across the back of the bearing (fig. 20) indicate the bearings have been loose in the bore either because of an undersize outside diameter, because of the bearing bore being too large, or by the bearing not having sufficient "crush."

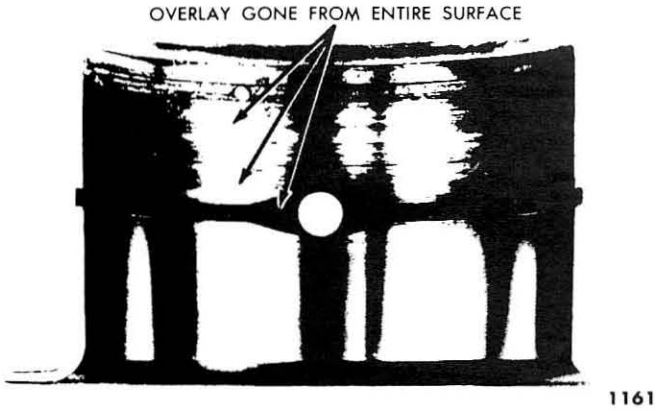

Fig. 18—Bearing Failure Due to Tapered Journal

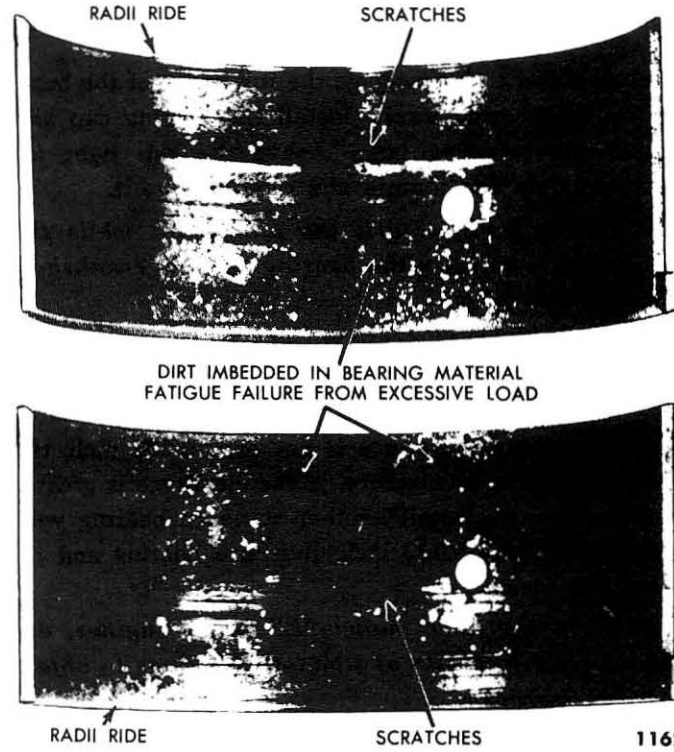

Fig. 19—Bearing Showing Radii Ride

Grooved or scored main bearing or crank pin journals will cause bearing failure and should be machined if possible; otherwise the crankshaft should be replaced. Light scores or scratches can be removed with a hone, then polished with No. 320 grit polishing paper.

(1) *FITTING MAIN BEARINGS (PLASTIGAGE METHOD).* Remove the bearing cap and wipe the oil from the bearing and journal.

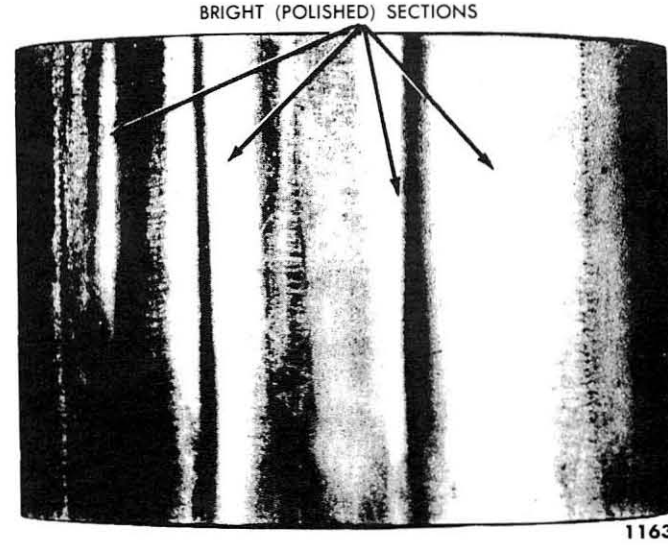

Fig. 20—Bearing Showing Bright Spots Because of Improper Seating

https://truckmanualshub.com/

NOTE: ***Keep the other bearing caps tight while checking the fit of a bearing.***

Place a piece of Plastigage the full width of the bearing on the bearing insert. Install the bearing cap and torque the retaining bolts. Leave the cap tight for approximately one minute and then remove it.

CAUTION: ***Do not turn the crankshaft while the Plastigage is between the bearing and the crankshaft journal.***

Remove the bearing cap. Without moving the plastic, check its width (at the widest point) with the graduations on the Plastigage container as shown in fig. 21.

If the bearing clearance is not over 0.002 inch, the bearing insert is satisfactory. If the clearance is greater than 0.002 inch, install another standard bearing with thicker wall or a 0.002 inch undersize bearing and recheck the clearance.

NOTE: ***In the later model "E" series engines, use the selective fit series of standard bearings to obtain correct clearance.***

When the 0.002 inch undersize bearing is used and the clearance is excessive, grind the crankshaft main bearing journals for use with the next undersize bearing insert.

(2) *FITTING MAIN BEARINGS (SHIM METHOD).* Place a 0.002 inch *brass* shim ½ inch wide by 1 inch long between the bearing insert in the cap and the crankshaft journal. Coat the shim lightly with engine oil. Tighten the main bearing cap bolts. Turn the crankshaft one inch in either direction. If the crankshaft is locked with the 0.002 inch shim, and is free without the shim, the bearing insert used is satisfactory. If the crankshaft can be moved freely with the 0.002 inch shim, install another standard bearing with thicker wall or a 0.002 inch undersize bearing insert and repeat the above check. If the crankshaft still turns easily, excessive clearance is indicated and the crankshaft should be reground to the next undersize bearing insert size.

NOTE: ***Rotate the crankshaft to be sure that the bearing is not too tight.***

(3) *FITTING CONNECTING ROD BEARINGS (PLASTIGAGE METHOD).* Place a piece of Plastigage plastic the length of the cap in the bearing cap. Install and tighten the cap.

NOTE: ***Do not turn the crankshaft with the Plastigage in place.***

Remove the bearing cap and use the Plastigage scale to measure the width of the flattened piece of plastic at the widest point. If the reading is not over 0.003 inch, standard size connecting rod bearings should be used; if it is over 0.003 inch, install a 0.002 inch undersize bearing and recheck the clearance. When use of the 0.002 inch undersize bearing results in excessive clearance, grind the crankshaft and install undersize bearing inserts.

(4) *FITTING CONNECTING ROD BEARINGS (SHIM METHOD).* Place a 0.003 inch brass shim ½

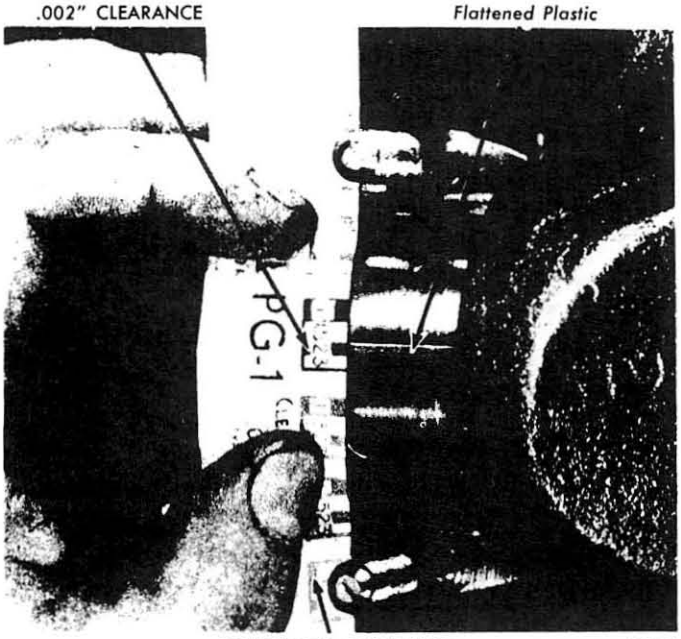

Fig. 21—Measuring Flattened Plastigage

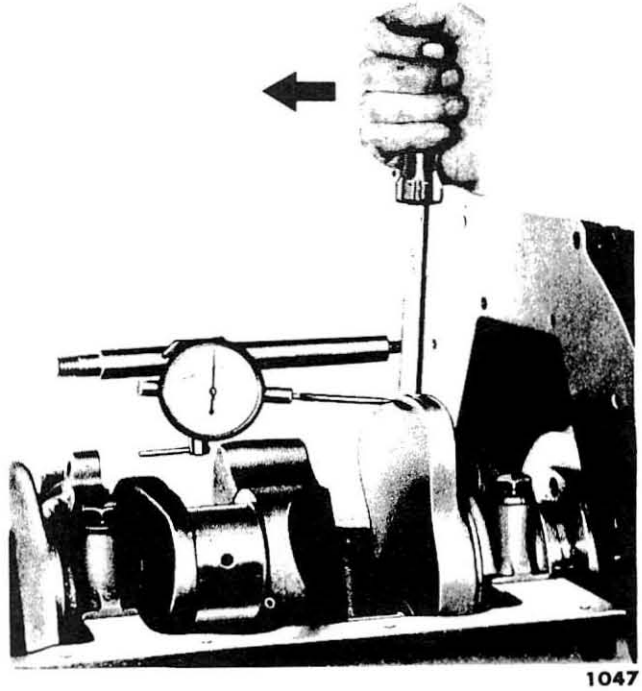

Fig. 22—Checking Crankshaft End Clearance

https://truckmanualshub.com/

inch wide by 1 inch long in the bearing cap with a new standard insert and install the cap. Tighten the nuts.

Attempt to move the connecting rod endwise on the crank pin by hand and then by a light tap of a hammer.

Remove the shim and repeat the above test. If connecting rod did not move by hand, but moved by tap of hammer in the previous test and moved freely with shim removed, the standard bearing as installed should be used. If rod could be moved by hand when used with the shim, install the 0.002 inch undersize bearing and repeat the above test.

After determining that the correct bearing insert has been fitted, tighten connecting rod bearing cap nuts. Then rotate the shaft to be sure the bearing is not too tight.

(5) *CHECKING CRANKSHAFT END CLEARANCE.* Before you install new rear main bearing inserts the crankshaft end play should be checked. To check the crankshaft end play, pry the crankshaft toward the rear of the engine. Place a dial indicator against the forward side of the rear counterweight. Set the dial to zero and then pry the shaft forward (fig. 22).

If the dial indicator shows excessive end play (Table 5), the rear main bearing insert should be replaced with a new insert to take up the end clearance.

Table 5—Crankshaft End Play Specifications

Engine	Crankshaft End Play (Inches)
H.M. or E	0.004-0.006
R	0.002-0.006

4. CONNECTING RODS, PISTONS, RINGS, AND PINS

Procedures in this section cover all operations necessary to fit an engine with new piston rings. Piston cleaning and inspection, cylinder bore inspection and reboring, fitting pistons, and fitting piston rings are discussed under the heading "a. Piston and Rings." Inspection and fitting of piston pins is covered under

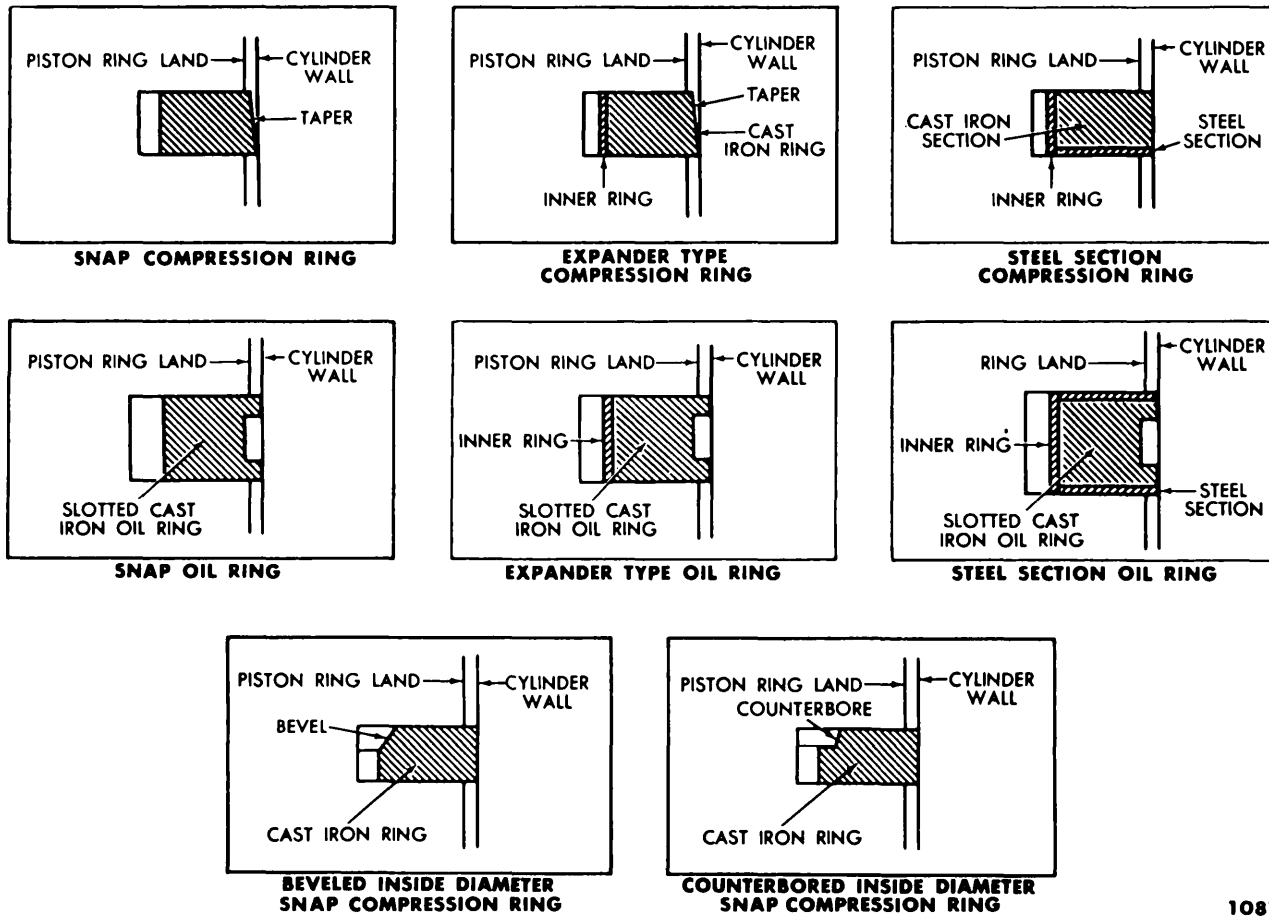

Fig. 23—Piston Ring Types

https://truckmanualshub.com/

the heading "b. Piston Pins." Connecting rod inspection is covered under the heading "c. Connecting Rods."

a. Pistons and Rings.

Pistons and rings seal the combustion gases from the crankcase and control the amount of oil left on the cylinder wall for lubrication. Worn or improperly installed rings will cause engine oil contamination, excessive oil consumption, fouled spark plugs, and poor engine performance.

Three types of piston rings sets are used in servicing Ford engines. They are: a "snap" type or standard ring set; an "expander" type ring set; and a "steel section" type ring set. Figure 23 shows the various compression and oil control rings included in these ring sets.

The standard or snap type ring is designed for use in a new engine block or whenever a block is rebored and new pistons installed. Under these conditions the block would neither be out-of-round nor have a taper. A light honing with a No. 280 grit hone is recommended in either case.

Under a tapered condition the standard type oil rings are not flexible enough to provide sufficient wiping action on the cylinder wall. Oil is then allowed past the rings and oil consumption increases. To remedy this situation the expander type ring is used in cylinder bores where the taper does not exceed 0.006 inch or whenever an oil consumption condition is encountered. Ring pressure is maintained by an expander under the oil ring. Hone the cylinder bores before installing the expander type ring.

When the cylinder bore taper is greater than 0.006 inch but less than 0.015 inch, the expander type ring is not adequate to seal the combustion chamber from the crankcase. Under this condition the steel section type ring is used. The oil ring is installed with a steel ring on both top and bottom in addition to the expander under the ring. Honing is not necessary when the steel section type ring is used.

(1) *CLEANING AND INSPECTION.* Remove all carbon from the piston with a scraper or carbon brush. Clean the piston ring grooves with a ring groove cleaner (fig. 24). Clean the carbon from the oil return holes in the oil ring grooves by running a drill through the holes. Be sure the drill is the same size as the hole.

Inspect pistons for fractures at the ring lands, skirt, and pin bosses. Replace pistons showing signs of wavy ring lands, fractures, or damage from detonation. Spongy eroded areas around the top edge of the piston, usually on the side opposite the valves, are caused by detonation. In some instances holes are also burned through the top of the piston.

(2) *INSPECT CYLINDER BLOCK.* Make a thorough check for cracks. Minute cracks can be located simply and quickly with the following procedure: Coat the cylinder wall with a mixture of 25 percent kerosene and 75 percent light engine oil. Wipe the wall dry, then apply a light coat of zinc oxide powder dissolved in wood alcohol. The cracks will show as discolored lines on the zinc oxide coating.

Inspect the cylinder bore for scratches or scuffing. Check for bulging at the top of the cylinder bore. Replace any leaking expansion plugs (indicated by rust around the plug). Use a sealing compound under the new plug.

Check the cylinder bore using a telescope gauge and outside micrometers, cylinder gauge, or inside micrometers. Measure and record as "A," "B," "C," and "D" the dimensions shown in fig. 25.

Compare "A" with "B" and "C" with "D" to determine the amount of taper in the bore. If the taper is greater than 0.015 inch, the cylinder must be rebored.

Compare "A" with "C" and "B" with "D" to determine how much the cylinder is out of round. If the bore is more than 0.003 inch out of round it must be rebored.

(3) *BORING CYLINDER BLOCK.* To assure maximum performance and balance of the reciprocating parts of the engine, all cylinders must be bored to the same size even though only one cylinder requires reboring and the others are within tolerance. Manufacturers recommendations on how to use boring equipment should be followed and the work performed only by experienced personnel.

Bore the most badly worn cylinder first to determine the proper oversize. If the cylinders will not clean up at 0.060 inch oversize, the block must be replaced.

When reboring the cylinders allow 0.0015 inch stock for honing when fitting pistons. Use a number 220 to 280 grit hone for this operation.

CAUTION: ***Thoroughly clean the block to remove all particles of abrasive after the honing operation.***

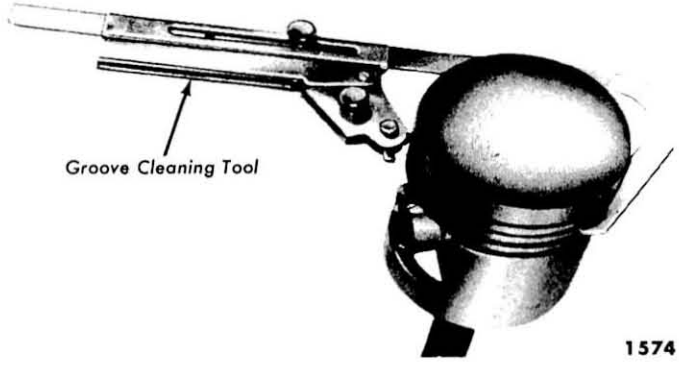

Fig. 24—Cleaning Piston Ring Grooves

https://truckmanualshub.com/

Table 6—Piston Fitting Specifications

	Engine				
	H		R		M and E
	Piston Type		Piston Type		
	7HA	0HA	49T	8BA	
New Piston in New Bore					
Gauge Thickness (Inches)	0.003	0.002	0.003	0.0015	0.0015
Pounds Pull	6-12	3-12	6-12	3-12	5-10
New Piston in Used Bore					
Gauge Thickness (Inches)	0.003	0.002	0.003	0.0015	0.0020
Pounds Pull	6-12	3-12	6-12	3-12	5-10
Used Piston in Used Bore					
Gauge Thickness (Inches)	0.003	0.003	0.004	0.003	0.003
Pounds Pull	6-12	3-12	6-12	3-12	5-10

(4) *FITTING PISTONS.* Proper assembly tolerances of pistons are required if satisfactory engine operation is to be obtained. Cylinder bores must be checked for taper and out-of-round condition before fitting a piston.

To install a piston with new rings in a used bore, the high polish on the cylinder bore must be removed to allow the new rings to seat without scuffing. This is done by running a hone through the cylinder bore. Clean the cylinder thoroughly to remove the hone dust.

To fit a new piston in a new bore, attach a tension scale to the end of a feeler ribbon ½ inch wide and having the correct feeler ribbon thickness as given in Table 6. Position the feeler ribbon on the thrust side of the cylinder (right-hand side of cylinder bore as viewed from the driver's seat). Invert the piston, then push the piston into the cylinder bore until the skirt is about ½ inch below the top of the block. Keep the piston pin bore parallel with the camshaft. Pull out the feeler gauge and at the same time note the reading (fig. 26).

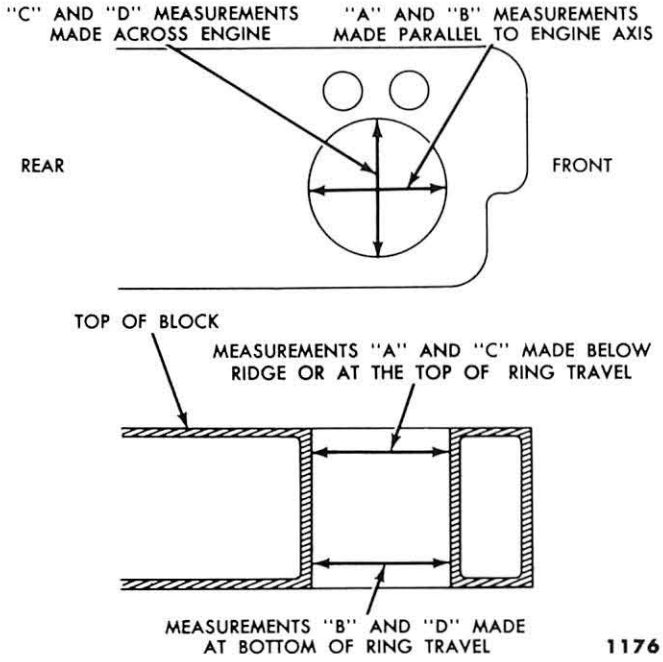

Fig. 25—Cylinder Bore Measurements

The pull limits for new pistons and used pistons in new or used bores is given in Table 6.

(5) *FITTING PISTON RINGS.* Insert the ring in the cylinder bore. Invert a piston and use it to push the ring about half way down into the bore. This will also square the ring with the bore. Measure the ring gap. It should be 0.007 to 0.047 inch in a worn cylinder. If the gap is smaller than 0.007 inch, file the ends of the ring until the correct clearance is obtained.

If the ring gap exceeds 0.047 inch install the next oversize ring. Be sure to identify the rings so they will be installed in the same cylinder in which they were fitted.

Check the ring groove clearance on the proper piston for the cylinder as shown in fig. 27.

The rings should have the clearance shown in Table 7.

To relieve rings with less than the minimum allow-

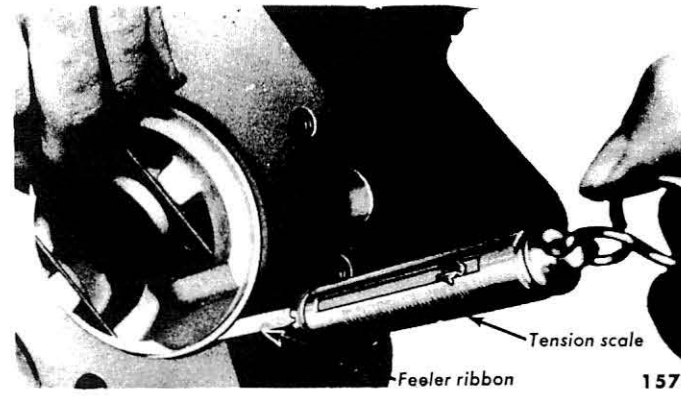

Fig. 26—Fitting Piston to Cylinder Bore

https://truckmanualshub.com/

Table 7—Ring Groove Clearance Specifications

Rings	Engine				
	H	M	R	E	
				8MTH Piston	8EQ Piston
Upper Compression	0.0015-0.0030	0.0015-0.0030	0.0015-0.0030	0.0015-0.0030	0.0020-0.0040
Lower Compression	0.0010-0.0025	0.0010-0.0025	0.0010-0.0025	0.0010-0.0025	0.0015-0.0030
Oil Rings	0.0010-0.0025	0.0010-0.0030	0.0010-0.0030	0.0010-0.0025	0.0015-0.0030

able clearance, place a piece of emery cloth on a flat surface and rub the ring on the emery cloth in a circular motion. Rotate the ring while rubbing to maintain uniform ring thickness.

If several rings are found to have greater than the maximum allowable clearance, the piston should be replaced.

NOTE: ***When the steel section OHA ring sets are not available for H series engines, the steel section 7HA rings may be used on the OHA piston by installing the oil ring expander in the third groove rather than in the fourth groove as specified on the 7HA pistons.***

b. Piston Pins.

Ford engines use hollow piston pins held in the piston by wire retainers at both ends of the pin. Piston pins are available in 0.001 and 0.002 inch oversizes for use when a standard pin fits too loosely.

(1) *INSPECTION.* Replace piston pins showing signs of fractures or etching. Worn piston pins or pins that fit loosely in the piston or rod bushing should be replaced. Replace all piston pin retainers.

(2) *FITTING PISTON PINS.* Check the piston pin fit in the piston pin bore at normal room temperature (70°F.). Table 8 gives the proper piston pin fit for each engine.

If oversize piston pins are used, or if the piston pins are too tight, use an expansion type piston pin reamer. Place the reamer in a vise and revolve the piston around the reamer (fig. 28).

Set the reamer to the size of the piston pin bore, then expand the reamer slightly and trial ream the bore ⅛ inch deep in the piston. Use a pilot sleeve of the nearest size to maintain alignment of the piston pin bores.

Check the reamed hole size using a new piston pin as a gauge. If the bore is too small, finish reaming the hole, then turn the piston around and ream the other hole.

Expand the reamer slightly and make another trial cut, then repeat the procedure outlined until the desired pin fit is obtained.

Table 8—Piston Pin Fit Specifications

Engine	Clearance in Piston (Inches)	Clearance in Connecting Rod Bushing (Inches)
H	0.0001-0.0003	0.0001-0.0003
R	0.0001-0.0003	0.0001-0.0003
E	0.0001-0.0005	0.0001-0.0002
M	0.0001-0.0002	0.0001-0.0003

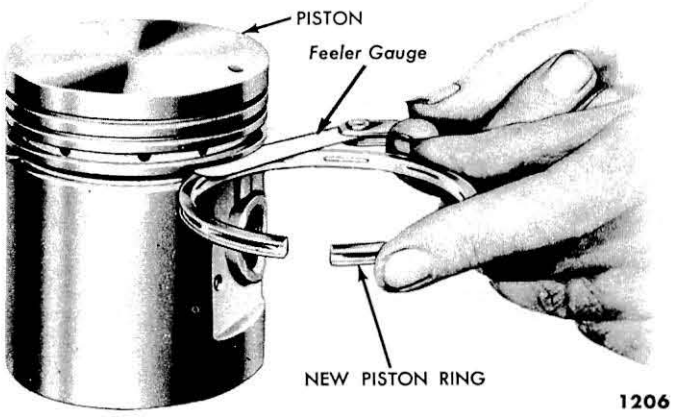

Fig. 27—Checking Ring Groove Clearance

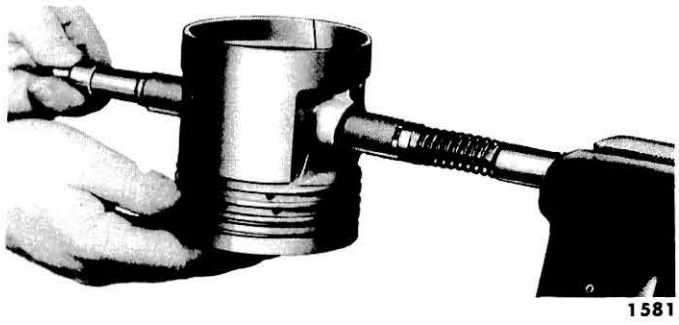

Fig. 28—Reaming Piston Pin Holes

https://truckmanualshub.com/

Check each piston pin bore which has been reamed with the pin to be used in that particular bore.

Use a new piston pin to check the piston pin bushing in the connecting rod for wear. If the new pin falls through the bore by its own weight, ream the bore for the next oversize pin (fig. 29), or replace the bushing.

c. Connecting Rods.

Connecting rods with damaged threads, nicked studs, deep nicks, signs of fractures, scored bore, or with the bore out of round more than 0.0002 inch should be replaced.

Connecting rods with twists or bends should be replaced. Check every connecting rod for alignment on a fixture after fitting the piston pins (fig. 30).

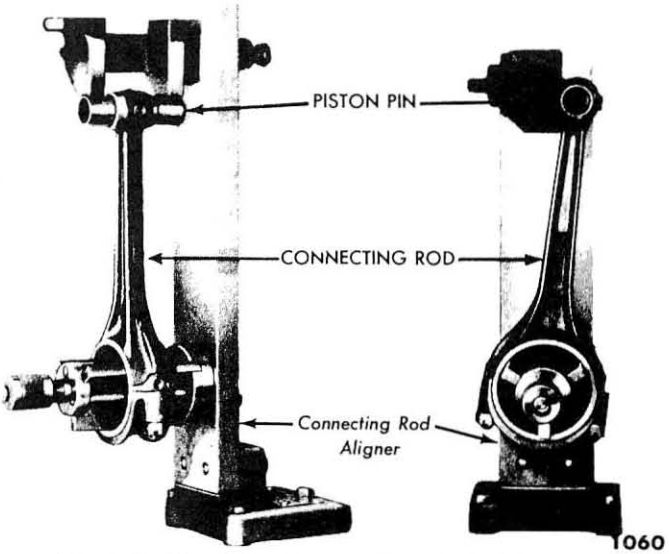

Fig. 30—Checking Connecting Rod Alignment

5. FLYWHEEL REPAIR

Flywheel repair consists of refacing the clutch friction surface or replacing the starter ring gear.

a. Inspection.

Flywheels that have a burned or scored friction face surface should be replaced or machined. Check the flywheel runout by positioning a dial indicator on the outer edge of the surface contacted by the clutch plate (fig. 31).

If the runout exceeds 0.005 inch total indicator reading, remove the flywheel and turn it 180°, then replace it and again check the runout. If the runout is still in excess of 0.005 inch, machine or replace the flywheel.

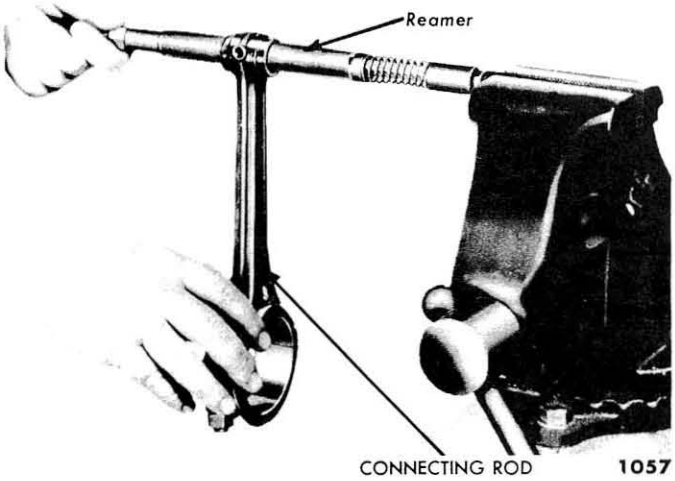

Fig. 29—Reaming Connecting Rod Bushing

b. Refacing.

If it is necessary to remove more than 0.045 inch from the original thickness of the flywheel to obtain a smooth surface, it should be replaced.

c. Ring Gear Replacement.

To replace a ring gear, drill a $^{17}/_{32}$ inch hole nearly through the ring gear on the engine side of the gear, and cut the remaining portion with a chisel. Heat the new ring evenly to 360°F., and place it in position on the flywheel and allow it to cool. Check the ring gear runout. The runout must not exceed 0.010 inch.

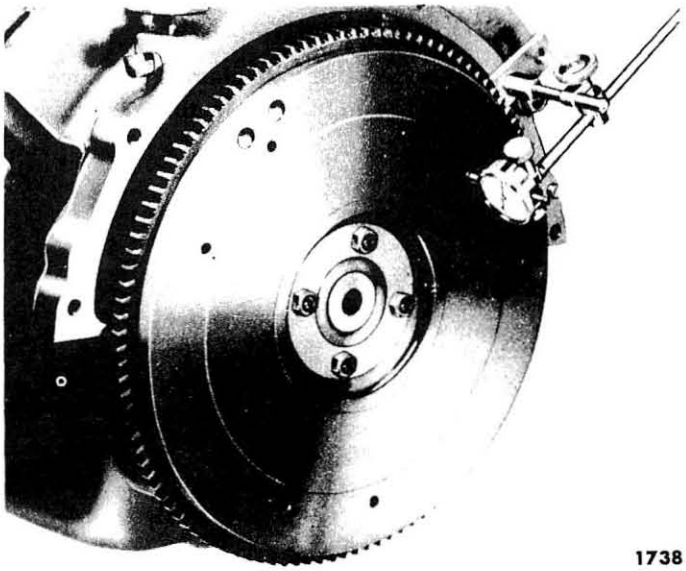

Fig. 31—Checking Flywheel Runout

https://truckmanualshub.com/

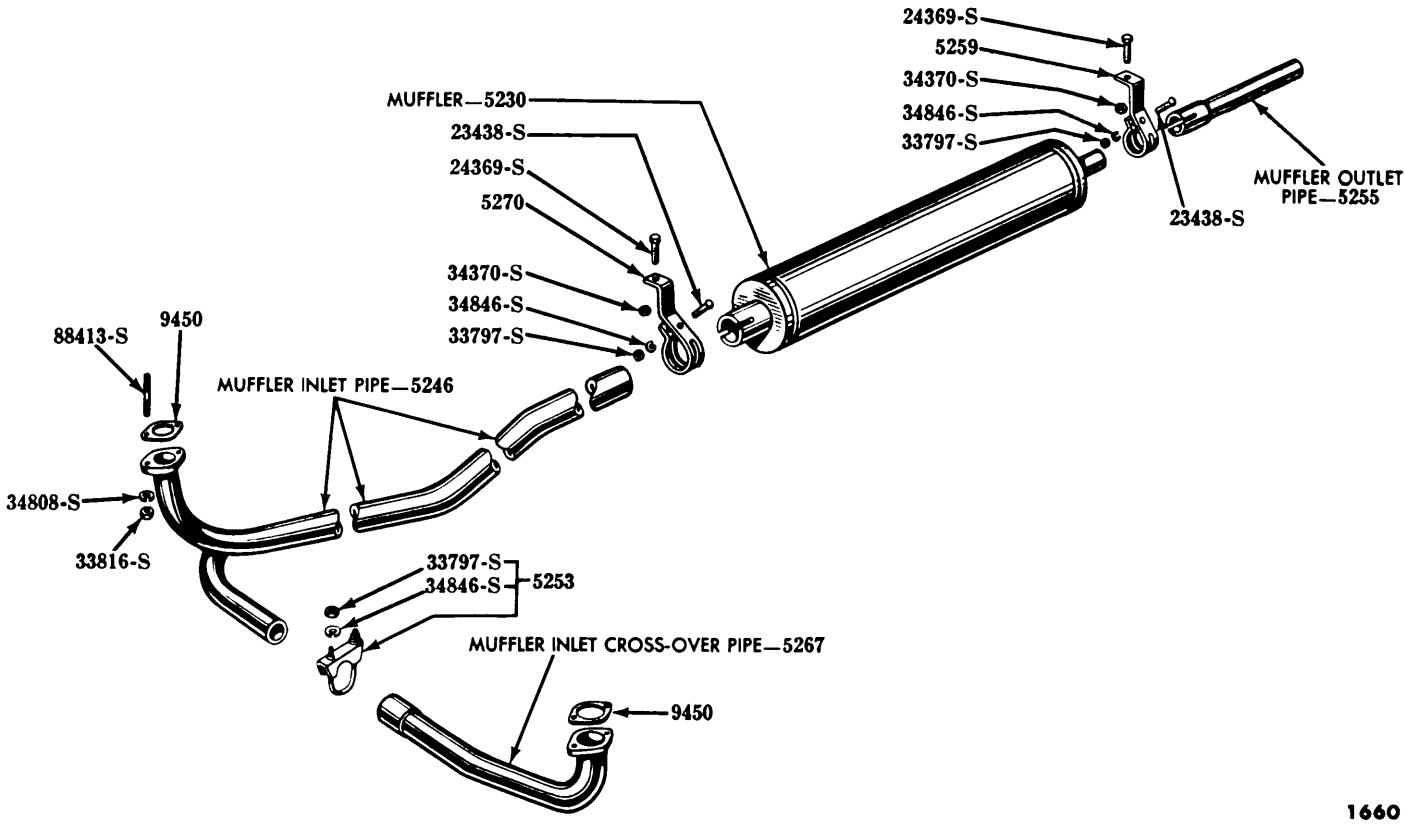

Fig. 32—8-Cylinder Exhaust System

6. MUFFLER, INLET PIPE, OUTLET PIPE, AND CROSSOVER PIPE (8-CYLINDER ONLY)

The procedures given here cover the removal and installation of each part in the exhaust system.

Figure 32 shows the 8-cylinder exhaust system. The 6-cylinder parcel delivery exhaust system shown in fig. 33 is typical of all 6-cylinder trucks.

a. Muffler Replacement.

Loosen the inlet and outlet pipe clamps. Remove the outlet pipe. Remove the muffler from the inlet pipe.

To install, connect the muffler to the inlet pipe. Connect the outlet pipe to the muffler and tighten both clamps.

b. Muffler Outlet Pipe Replacement.

Loosen the muffler outlet pipe clamp and remove the outlet pipe from the muffler.

To install, connect the outlet pipe to the muffler and tighten the outlet pipe clamp.

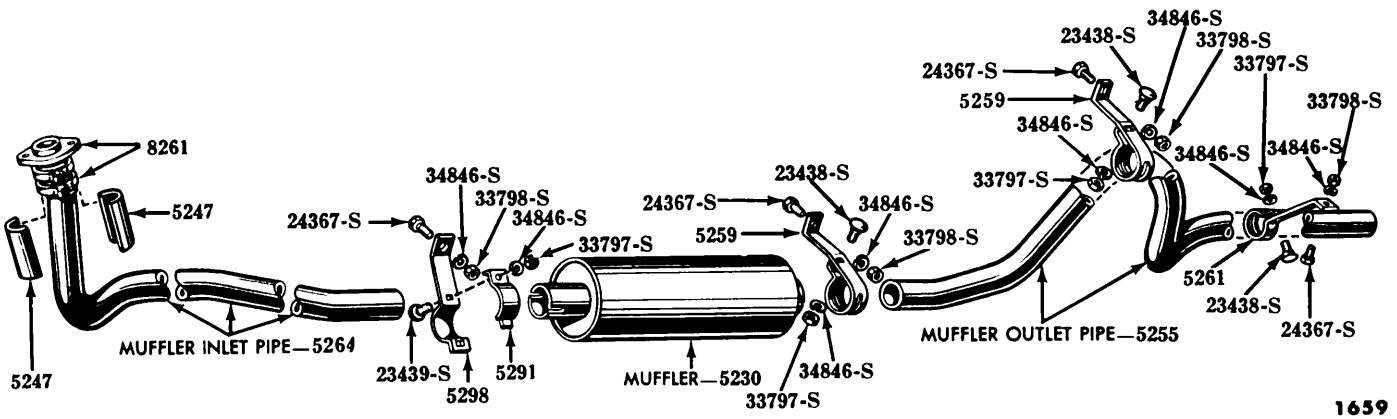

Fig. 33—6-Cylinder Exhaust System

https://truckmanualshub.com/

c. Muffler Inlet Pipe Replacement.

Loosen the crossover pipe clamp and muffler inlet pipe clamp. Disconnect the inlet pipe from the right hand exhaust manifold. Remove the inlet pipe from the muffler.

To install, connect the inlet pipe to the muffler. Connect the inlet pipe to the right hand exhaust manifold. Tighten the cross-over pipe clamp and muffler inlet pipe clamp.

d. Crossover Pipe Replacement (8-Cylinder Only).

Loosen the crossover pipe clamp. Disconnect the crossover pipe from the left hand exhaust manifold. Remove the cross-over pipe from the inlet pipe.

To install, connect the cross-over pipe to the inlet pipe. Connect the cross-over pipe to the left hand exhaust manifold. Tighten the cross-over pipe clamp.

SERVICE LETTER REFERENCE

Letter No.	Date	Subject	Changes Information on Page No.

https://truckmanualshub.com/

Part ONE
POWER PLANT

Chapter
II
H-Series—6-Cylinder Engine

Section		Page
1	Manifold Replacement	22
2	Cylinder Head Replacement	25
3	Oil Pan, Oil Pump, and Oil Pressure Relief Valve	26
4	Crankshaft Damper	29
5	Cylinder Front Cover	30
6	Valves and Valve Guides	31
7	Camshaft Gear, Camshaft, and Bearings	32
8	Flywheel, Crankshaft, and Bearings	35
9	Piston and Connecting Rod Assemblies	38

The material presented in this chapter covers the H-Series 6-cylinder engine illustrated in figs. 1 and 2. This engine is a 95-horsepower L-head engine with a 3.3 inch cylinder bore and a 4.4 inch piston stroke. The piston displacement is 226 cubic inches.

Complete removal and installation information covering all of the component parts of the engine are included in this chapter. Procedures for disassembly, cleaning, inspection, repair, and assembly of the different units of this engine are also given here. General overhaul procedures for the H-Series engine are given in the chapter on general engine repair. The procedures and operations described and illustrated in this chapter can only be used for working on this engine.

Always install new gaskets when any installation is made where gaskets have been previously removed. A complete engine overhaul gasket kit illustrated in fig. 3 is available for engine overhaul.

1. MANIFOLD REPLACEMENT

A chamber is built into the intake manifold center section where the carburetor and exhaust manifold are attached. An exhaust control valve, located in the exhaust manifold, directs exhaust gases into this chamber when the engine is cold to provide faster engine warm-up.

NOTE: ***Do not remove manifolds when hot. They may warp and make reassembly difficult.***

Replace manifolds that are warped or have developed cracks. The exhaust control valve (fig. 4) may stick and need replacement.

Manifold replacement procedures are covered under the headings "**a.** Conventional Truck," "**b.** Cab-Over Engine," and "**c.** Parcel Delivery."

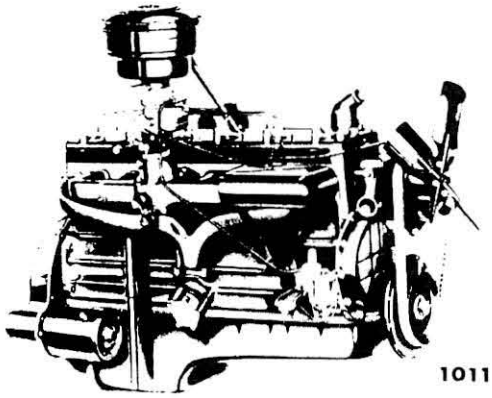

Fig. 1—H-Series 6-Cylinder Engine (¾ Front View)

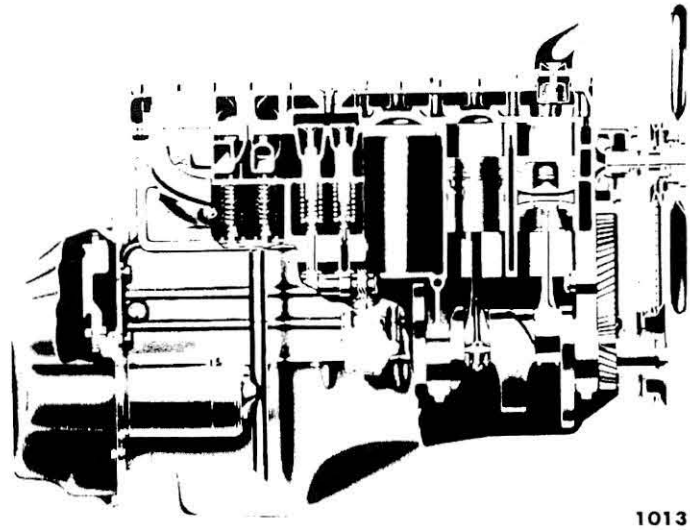

Fig. 2—H-Series 6-Cylinder Engine (Sectional View)

https://truckmanualshub.com/

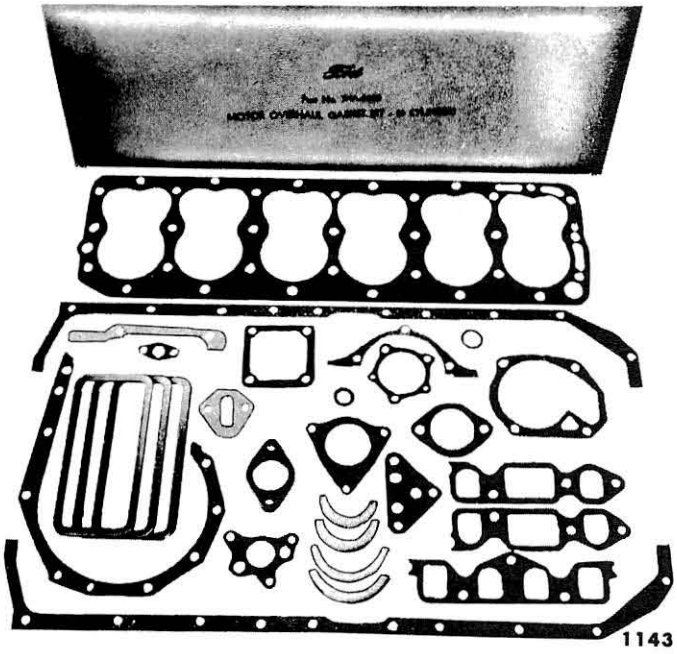

Fig. 3—Engine Overhaul Gasket Kit

a. Conventional Truck.

Remove the air cleaner. Disconnect the distributor vacuum line, choke wire, and fuel line at the carburetor. Disconnect the governor lines. Disconnect the accelerator linkage at both sides of the bell crank and at the carburetor. Remove the carburetor and governor. Disconnect the windshield wiper hose. Remove the screw holding the manifold air baffle assembly to the cylinder head. Remove the top nut from the engine right front support bracket and remove the intake manifold baffle assembly. Disconnect the muffler inlet pipe from the exhaust manifold. Remove the manifold hold down nuts and lift both the intake and exhaust manifolds and gaskets from the block. Remove the nuts holding manifolds together and separate the manifolds.

Disassembled views of the intake and exhaust manifolds used on H-Series engines are shown in figs. 5 and 6 respectively. Before reassembling and installing the manifolds, make sure all gasket surfaces are free from old gasket material and projections that may affect sealing.

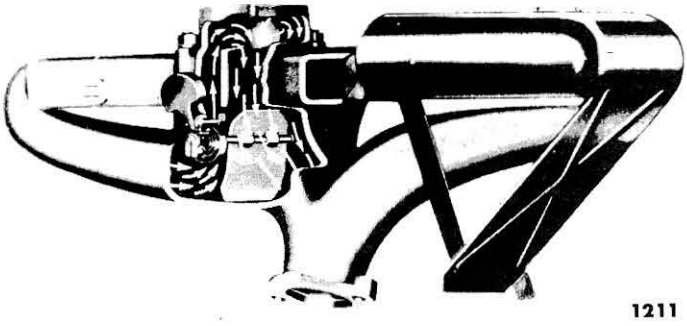

Fig. 4—Manifolds Showing Exhaust Control Valve

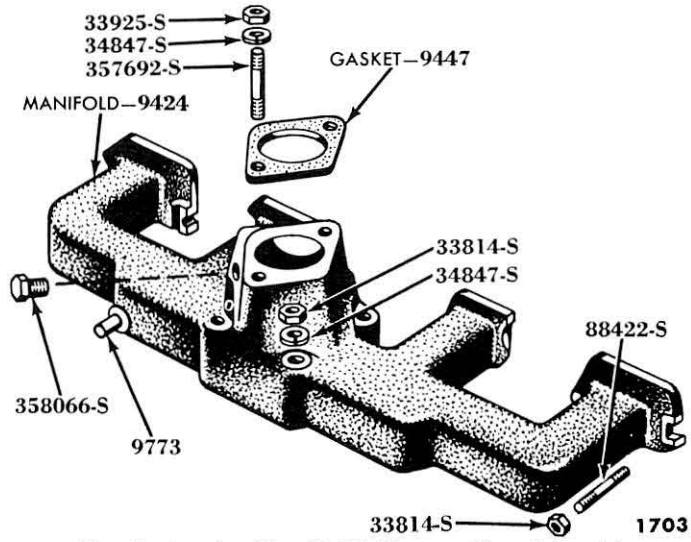

Fig. 5—Intake Manifold (Conventional Truck)

To install the manifolds, fasten them together and tighten the nuts to 30-35 foot-pounds torque. Place the manifolds on the engine block with new manifold gaskets (fig. 7). Tighten the nuts to 25-30 foot-pounds torque. Start at the center and work toward the ends to avoid manifold distortion. Install the carburetor and governor. Connect the windshield wiper hose. Connect the accelerator. Connect the choke wire, fuel line, and distributor vacuum line to the carburetor. Connect the governor lines. Fasten the manifold air baffle assembly to the cylinder head. Install the top nut on the engine front support bracket. Connect the muffler inlet pipe to the exhaust manifold. Connect the heater hose and install the air cleaner.

b. Cab-Over-Engine.

Remove the engine cover and dash panel to gain access to the engine from inside the cab. Disconnect the air cleaner flexible tube at the carburetor. Disconnect the distributor vacuum line, choke wire, and fuel line

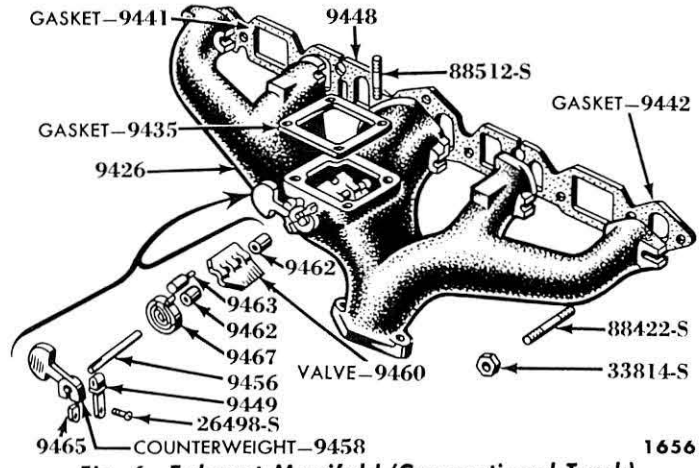

Fig. 6—Exhaust Manifold (Conventional Truck)

https://truckmanualshub.com/

at the carburetor. Disconnect the windshield wiper hose and governor lines. Remove the carburetor and governor. Remove the screw that secures the manifold air baffle assembly to the cylinder head. Remove the top nut from the engine right-hand front support bracket and remove the manifold air baffle assembly. Disconnect the muffler inlet pipe from the exhaust manifold. Remove the manfold hold down nuts and washers. Remove the bolt securing the right-hand front support bracket to the frame. Tilt the engine toward the left-hand side of the engine compartment to allow sufficient clearance for removing the manifolds. Lift both the intake and exhaust manifolds and gaskets from the block. Remove the nuts that hold the manifolds together and separate the manifolds.

The exhaust manifold used in cab-over-engine trucks is shown in fig. 8 with the exhaust control valve removed and disassembled. Figure 9 illustrates the intake manifold.

Before reassembling and installing the manifolds, make sure all gasket surfaces are free from old gasket material and projections that may affect sealing.

To install the manifolds, fasten them together and tighten the nuts to 30-35 foot-pounds torque. With the engine tilted toward the left-hand side of the engine compartment, place new manifold gaskets (fig. 7) on the studs and install the manifolds on the block. Tighten the manifold retaining nuts to 25-30 foot-pounds torque. Start at the center and work toward the ends to avoid manifold distortion when tightening the nuts. Return the engine to its proper position and install the engine support to frame bolt.

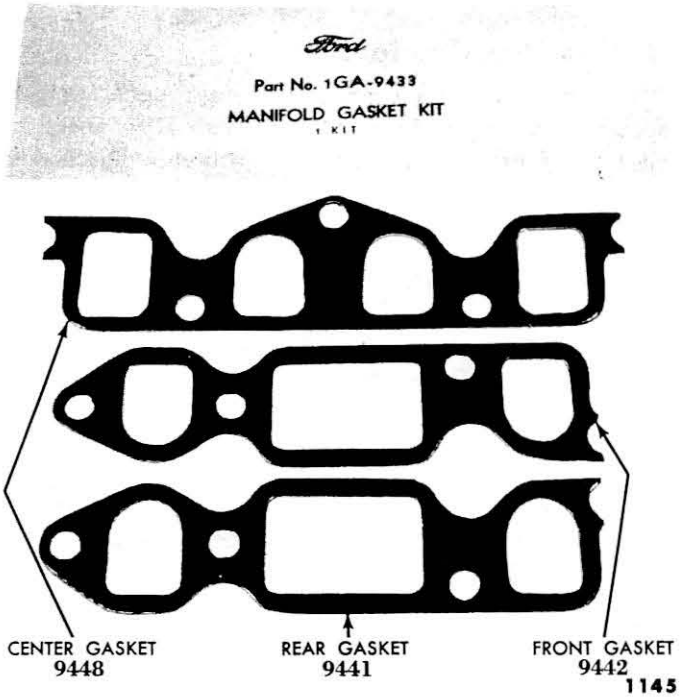

Fig. 7—Manifold Gasket Set

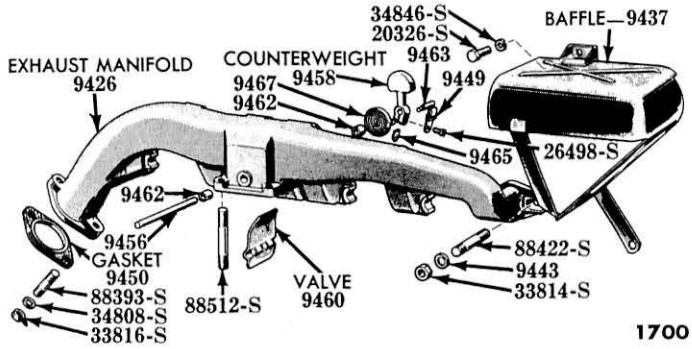

Fig. 8—Exhaust Manifold (Cab-Over-Engine)

Connect the muffler inlet pipe. Install the manifold air baffle assembly and secure it to the cylinder head and engine support bracket. Install the governor and carburetor. Connect the windshield wiper hose, governor lines, fuel line, choke wire, distributor vacuum line, and air cleaner flexible tube. Install the dash panel and engine cover.

c. Parcel Delivery.

Remove the engine compartment rear cover. Lift the engine compartment front cover and fasten it open with the hook provided at the left-hand corner near the hinge. Disconnect the air cleaner flexible tube, distributor vacuum line, choke wire, and fuel line at the carburetor. Disconnect the windshield wiper hose. Remove the carburetor. Remove the screw that secures the manifold air baffle assembly to the cylinder head. Remove the top nut from the engine right-hand front support bracket and remove the air baffle assembly. Disconnect the muffler inlet pipe from the exhaust manifold. Remove the manifold retaining nuts and washers and lift the manifolds from the block. Remove the nuts that hold the manifolds together and separate the manifolds.

The parcel delivery truck is equipped with the same type intake and exhaust manifolds as used on cab-over-engine trucks (figs. 8 and 9).

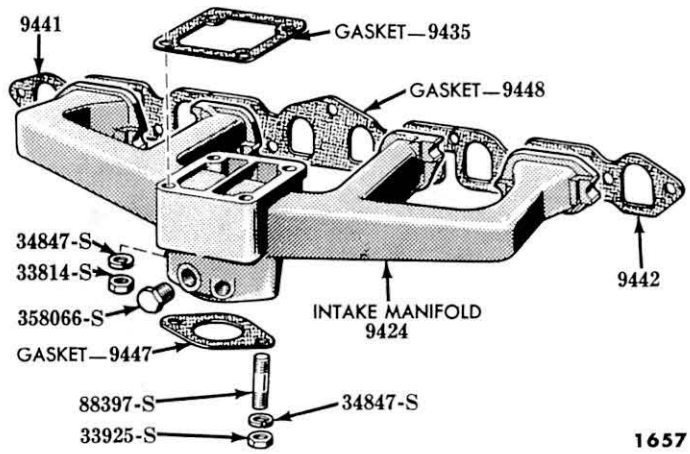

Fig. 9—Intake Manifold (Cab-Over-Engine)

https://truckmanualshub.com/

Before reassembling and installing the manifolds, make sure all gasket surfaces are free from old gasket material and projections that may affect sealing.

To install the manifolds, fasten them together and tighten the nuts to 30-35 foot-pounds torque. Place new manifold gaskets (fig. 7) on the block and install the manifolds. Tighten the manifold retaining nuts to 25-30 foot-pounds torque. Start at the center and work toward the ends to avoid manifold distortion when tightening the nuts.

Connect the muffler inlet pipe. Install the manifold air baffle assembly and secure it to the cylinder head and engine support bracket. Install the carburetor. Connect the windshield wiper hose, fuel line, choke wire, distributor vacuum line, and air cleaner flexible tube. Lower the engine compartment front cover and install the engine compartment rear cover.

2. CYLINDER HEAD REPLACEMENT

Cylinder heads are cast from the same high grade iron as is used for the cylinder block. Expansion and contraction due to temperature variations is the same for both head and block lessening the possibility of cylinder head distortion.

NOTE: ***The 1HA-6050 cylinder head is interchangeable with either the 7HA-6050 or the 0HA-6050 cylinder head.***

Cylinder heads must be replaced when cracks develop or distortion prevents adequate sealing at the gasket surface.

Replacement procedures are covered under headings "**a.** Conventional Truck," "**b.** Cab-Over-Engine," and "**c.** Parcel Delivery."

a. Conventional Truck.

Drain the cooling system. Remove the air cleaner. Disconnect the upper radiator hose at the cylinder head. Disconnect the cylinder head temperature unit sending wire. Remove the screw from the distributor vacuum line clamp on the forward left corner of the cylinder head. Disconnect the ignition wires from the spark plugs and remove the plugs. Remove the two screws from the coil bracket and let the bracket hang from the distributor. Disconnect the heater hose. Remove the screw from the manifold air baffle assembly on the right-hand side of the cylinder head. Remove the cylinder head bolts, then remove the cylinder head.

Before installing a cylinder head, clean the carbon deposits from the combustion chambers and check to see that all water passages are open. Gasket surfaces must be free of old gasket material and projections at bolt holes that may affect sealing.

Install a new cylinder head gasket (fig. 10) with the cut off corner at the left front corner of the block.

NOTE: ***If the gasket is installed improperly, water will leak externally at the left rear corner of the engine between cylinder head and block. Do not enlarge any gasket holes or overheating of the rear cylinders may result.***

Place the cylinder head in position on the block, being careful not to damage the gasket. Before installing the cylinder head bolts, coat the bolt threads with a light coat of water resistant sealer. Insert the cylinder head bolts and tighten them to 65-70 foot-pounds torque in the sequence shown in fig. 11. Fasten the manifold air baffle assembly to the cylinder head. Connect the heater hose. Fasten the distributor vacuum line clamp to the cylinder head. Connect the temperature unit sending wire. Install the spark plugs. Torque the plugs to 24-30 foot-pounds. Position the coil bracket and install the two holding screws. Connect the ignition secondary wires to the spark plugs. Connect the radiator hose. Fill the cooling system according to the prevailing temperature. Operate the engine for five minutes, stop the engine, and check the coolant level in the radiator.

b. Cab-Over-Engine.

Drain the cooling system. Disconnect the upper radiator hose at the cylinder head. Remove the engine compartment cover. Disconnect the cylinder head temperature sending unit wire. Remove the screw from

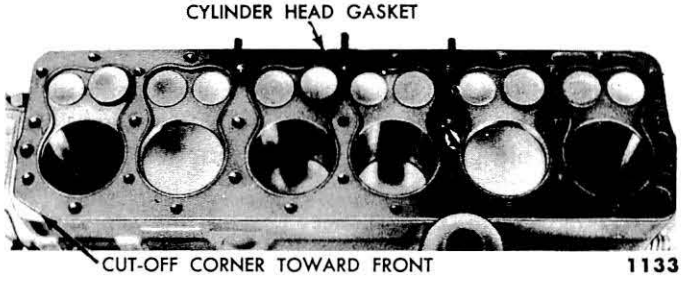

Fig. 10—Cylinder Head Gasket Installation

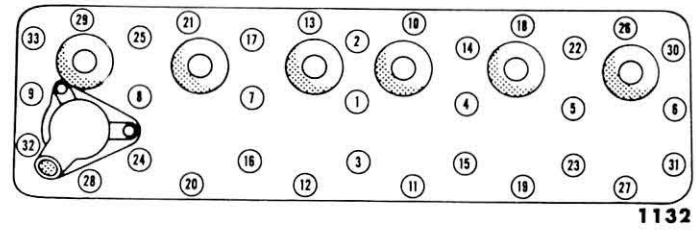

Fig. 11—Cylinder Head Bolt Tightening Sequence

https://truckmanualshub.com/

the manifold air baffle assembly on the right-hand side of the cylinder head. Disconnect the ignition wires from the spark plugs and remove the plugs. Remove the two screws from the coil bracket and let the bracket hang from the distributor. Disconnect the heater hose. Remove the cylinder head bolts, then remove the cylinder head.

Before installing a cylinder head, clean the carbon deposits from the combustion chambers and check to see that all water passages are open. Gasket surfaces must be free of old gasket material and projections at bolt holes that may affect sealing.

Install a new cylinder head gasket (fig. 10) with the cut off corner at the left front corner of the block.

NOTE: ***If the gasket is installed improperly, water will leak externally at the left rear corner of the engine between the cylinder head and block. Do not enlarge any gasket holes or overheating of the rear cylinders may result.***

Place the cylinder head in position on the block, being careful not to damage the gasket. Before installing the cylinder head bolts, coat the bolt threads with a light coat of water resistant sealer. Insert the cylinder head bolts and tighten them to 65-70 foot-pounds torque in the sequence shown in fig. 11. Connect the heater hose. Fasten the coil bracket and manifold air baffle assembly to the cylinder head. Install the spark plugs and tighten them to 24-30 foot-pounds torque. Connect the ignition wires to the spark plugs. Connect the temperature sending unit wire. Connect the radiator hose. Install the engine compartment cover. Fill the cooling system according to the prevailing temperature. Operate the engine for five minutes, stop the engine, and check the coolant level in the radiator.

c. Parcel Delivery.

Drain the cooling system. Open the engine compartment rear cover. Open the engine compartment front cover and fasten it open with the hook provided at the left-hand corner near the hinge. Disconnect the upper radiator hose at the cylinder head. Disconnect the temperature sending unit wire. Remove the screw from the manifold air baffle assembly on the right-hand side of the cylinder head. Disconnect the ignition wires from the spark plugs and remove the plugs. Remove the two screws from the coil bracket and let the bracket hang from the distributor. Disconnect the heater hose. Remove the cylinder head bolts, then remove the cylinder head.

Before installing a cylinder head, clean the carbon deposits from the combustion chambers and check to see that all water passages are open. Gasket surfaces must be free of old gasket material and projections at bolt holes that may affect sealing.

Install a new cylinder head gasket (fig. 10) with the cut-off corner at the left front corner of the block.

NOTE: ***If the gasket is installed improperly, water will leak externally at the left rear corner of the engine between the cylinder head and block. Do not enlarge any gasket holes or overheating of the rear cylinders may result.***

Place the cylinder head in position on the block, being careful not to damage the gasket. Before installing the cylinder head bolts, coat the bolt threads with a light coat of water resistant sealer. Insert the cylinder head bolts and tighten them to 65-70 foot-pounds torque in the sequence shown in fig. 11. Connect the heater hose. Fasten the coil bracket and manifold air baffle assembly to the cylinder head. Install the spark plugs and tighten them to 24-30 foot-pounds torque. Connect the ignition wires to the spark plugs. Connect the radiator hose. Close the engine compartment covers. Fill the cooling system according to the prevailing temperature. Operate the engine for five minutes, stop the engine, and check the coolant level in the radiator.

3. OIL PAN, OIL PUMP, AND PRESSURE RELIEF VALVE

Procedures in this section cover removal, cleaning, inspection, installation of the oil pan, reconditioning the oil pump, and replacement of oil seals and oil pressure relief valve.

a. Oil Pan.

An oil pan cleanout plate is provided on the bottom of the oil pan. The oil pump screen assembly can be cleaned when the cleanout plate is removed. Figure 12 illustrates the pan, cleanout plate, gaskets, oil seals, and screen assembly.

(1) *REMOVAL.* Raise the front end of the truck and set it on safety jacks. Drain the crankcase. Remove the splash pan. Disconnect the starter cable and remove the starter. Disconnect the ventilation pipe bracket. Remove the screws that hold the oil pan to the engine rear plate. Remove the screws that hold the oil pan to the engine block and the front cover plate. Remove the oil pan from the engine.

(2) *CLEANING.* Use a solvent to remove the sludge and dirt from both the inside and outside of the oil pan. Scrape the old gasket flange. Clean the oil pump inlet screen.

(3) *INSPECTION.* Inspect the oil pan for any external damage such as cracks or warped gasket surfaces. Inspect the drain plug threads for damage that may cause leakage. Check the oil pump screen and inlet tube

https://truckmanualshub.com/

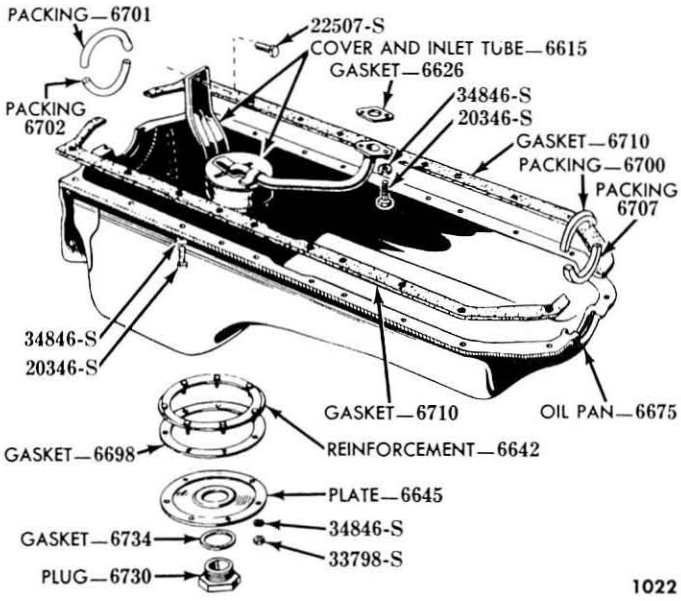

Fig. 12—Oil Pan and Related Parts

assembly for restrictions in the passages. Repair any damage or replace the pan if repairs cannot be made.

(4) *OIL SEAL REPLACEMENT*. Remove the oil packing and thoroughly clean the packing retainer grooves. Soak the packing (fig. 13) in SAE 20 oil for two hours before installation. Install the short packing in the front retainer groove and the long packing in the rear retainer groove. "Roll-in" the packing with a round bar (fig. 14) to make sure the packing meets the gasket evenly.

(5) *INSTALLATION*. Spread a thin film of grease on the oil pan gasket surface to hold the gasket in place during installation. Install a new gasket (fig. 13) on the pan. Lift the pan into place and install the screws that hold the oil pan to the block and front cover plate. Torque the screws to 15-18 foot-pounds torque.

NOTE: ***Alignment of the oil pan can be simplified by temporarily installing two studs in opposite corners of the block to guide the pan into place.***

Install the screws that hold the oil pan to the engine

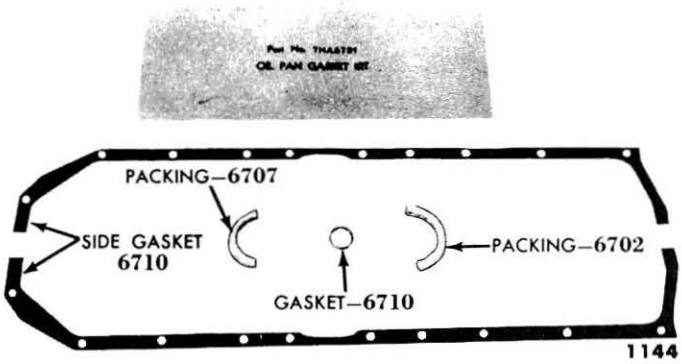

Fig. 13—Engine Oil Pan Gasket Set

Fig. 14—Installing Oil Seal Packing

rear plate. Torque screws to 10-15 foot-pounds torque. Install the drain plug. Connect the ventilation pipe bracket. Install the starter and connect the starter cable. Install the splash pan. Remove the jacks from under the front end. Fill the crankcase with proper quantity and grade of oil according to the prevailing temperature.

b. Oil Pump.

The rotor type oil pump is used on the H-Series engine and is externally mounted. In order to remove the oil pump with the engine in the chassis, it is necessary to raise the front of the engine so that the pump will clear the frame side rail when it is pulled out.

NOTE: ***The oil pump and camshaft gear back lash should be 0.0003-0.005 inch.***

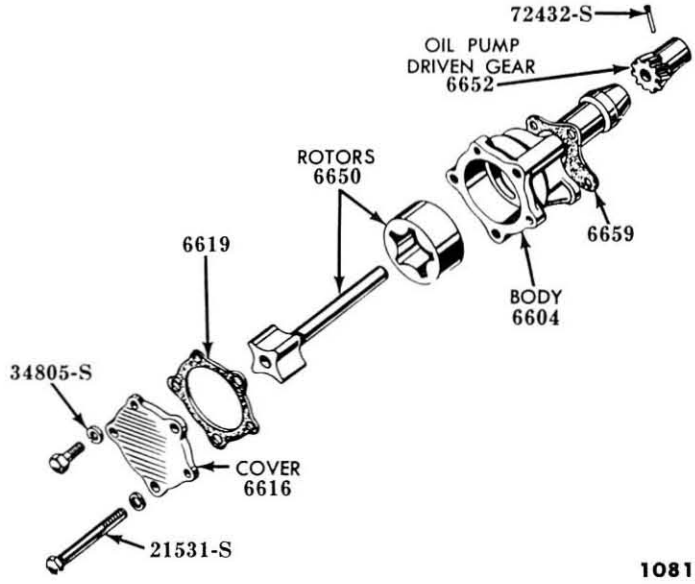

Fig. 15—Rotor Type Oil Pump

https://truckmanualshub.com/

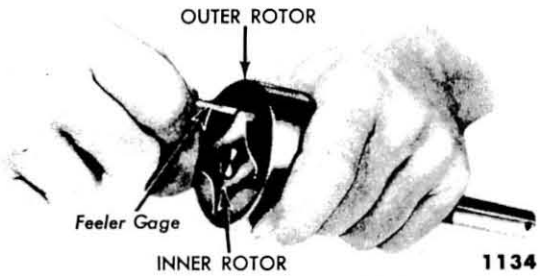

Fig. 16—Measuring Clearance Between Oil Pump Rotors

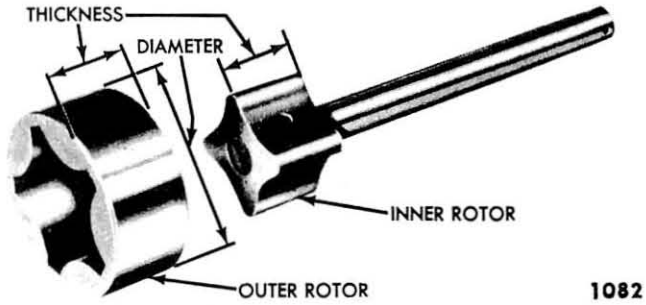

Fig. 18—Oil Pump Rotors

Before removing the oil pump, check the back lash between the oil pump driven gear and the camshaft gear. This can be done by moving the distributor rotor and checking the distributor shaft free play. The rotor free play should be less than ¼ inch at the tip of the rotor.

(1) *REMOVAL.* Disconnect the right hand engine front support. Disconect the radiator hose. Raise the engine so the pump will clear the frame when removed.

Remove the screws that hold the pump to the block and remove the pump.

(2) *DISASSEMBLY.* A disassembled rotor type pump is illustrated in fig. 15. Remove the cover plate. Remove the outer rotor. Remove the pin from the oil pump driven gear. Remove the gear. Remove the inner rotor and shaft.

(3) *CLEANING.* Remove any dirt and sludge formation from the pump parts. Clean all parts with a suitable solvent.

(4) *INSPECTION.* Visually check all parts for breakage. Measure the clearance between the rotors as shown in fig. 16. Clearance should be 0.006-0.010 inch between the rotors.

Measure the outer rotor to body clearance as shown in fig. 17. Clearance should be 0.005-0.010 inch.

Make rotor measurements as illustrated in fig. 18. Rotor thickness should not be less than 0.998 inch. Outer rotor outside diameter should not be less than 2.246 inches.

NOTE: ***If rotors are worn beyond the specified limits, replace them with Oil Pump Rotor and Shaft Kit number 7HA-6650 (fig. 19).***

Check the cover plate for wear as shown in fig. 20. If the clearance exceeds 0.001 inch, replace the plate.

With the rotors assembled in the housing, place a straight edge over the rotors and pump body. Measure the clearance between the pump body and the straight edge. Replace the pump body if clearance is less than 0.001 to 0.003 inch.

Measure the pump shaft end play as shown in fig. 21. End play should be 0.008-0.012 inch.

(5) *ASSEMBLY.* Install the inner rotor and the shaft in the housing. Press the oil pump driven gear on the shaft until there is a shaft end play of 0.008-0.012 inch.

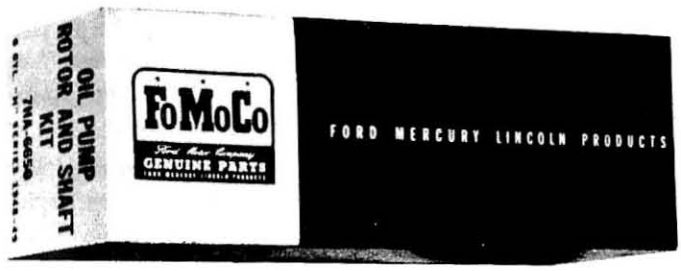

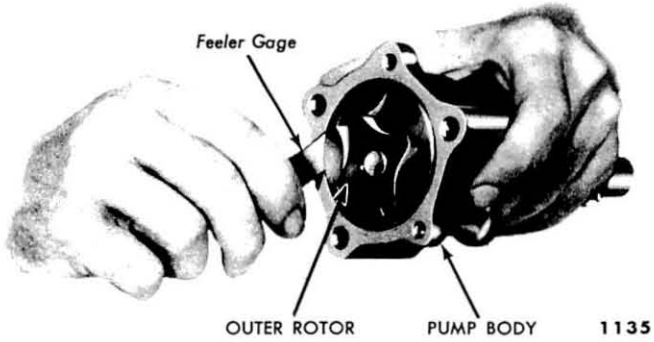

Fig. 17—Measuring Clearance Between Outer Rotor and Pump Body

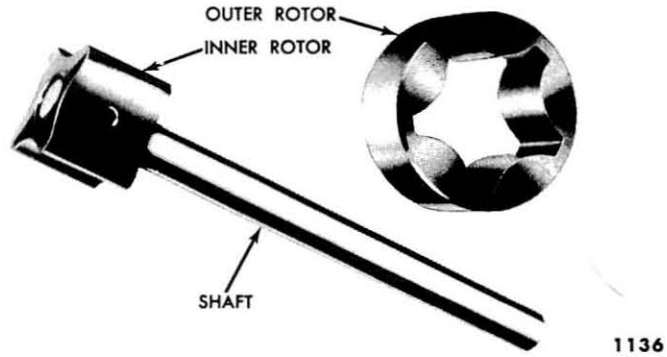

Fig. 19—Oil Pump Rotor and Shaft Kit