https://truckmanualshub.com/

SERVICE MANUAL

MITSUBISHI DIESEL ENGINE

4DQ5

MITSUBISHI HEAVY INDUSTRIES, LTD.

https://truckmanualshub.com/

https://truckmanualshub.com/

INDEX

GENERAL 1

MAJOR DATA AND SPECIFICATIONS 5

DISASSEMBLY 8

INSPECTION AND REPAIR 16

REASSEMBLY 37

LUBRICATING SYSTEM 49

COOLING SYSTEM 52

FUEL SYSTEM 56

ELECTRICAL SYSTEM 71

BENCH TEST 87

MAINTENANCE STANDARDS 89

SEALANT APPLICATION DATA 102

TIGHTENING TORQUE 103

SPECIAL SERVICE TOOLS 105

TROUBLESHOOTING CHART 110

https://truckmanualshub.com/

https://truckmanualshub.com/

GENERAL

1. Major component parts

1-1 Left-hand side view

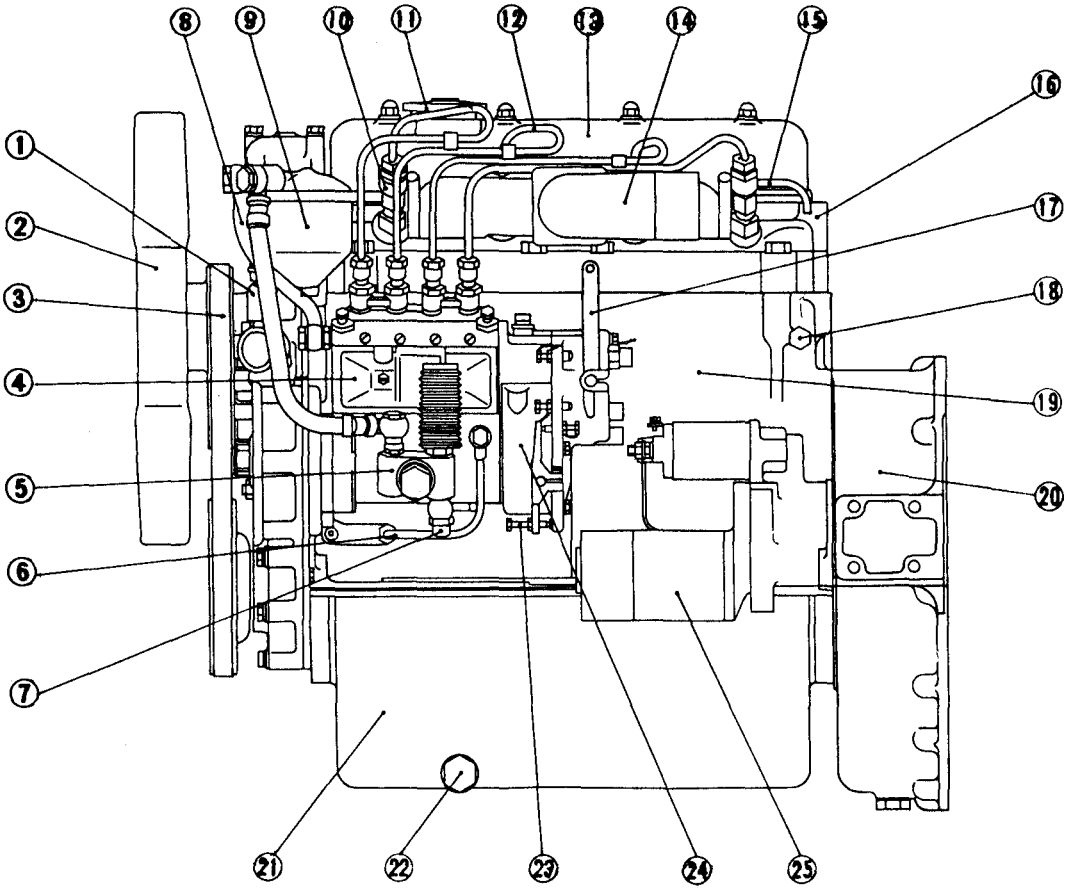

402500

1-Water pump
2-Fan
3-Fan belt
4-Fuel injection pump
5-Fuel feed pump
6-Oil pipe
7-Fuel inlet connector
8-Fuel feed pipe
9-Fuel filter
10-Fuel injection nozzle
11-Oil filler cap
12-Fuel injection pipe
13-Rocker cover
14-Intake manifold
15-Fuel leak-off pipe
16-Cylinder head
17-Adjusting lever
18-Hanger
19-Crankcase
20-Flywheel housing
21-Oil pan
22-Drain plug
23-Control rack stopper
24-Governor
25-Starter

https://truckmanualshub.com/

1-2 Right-hand side view

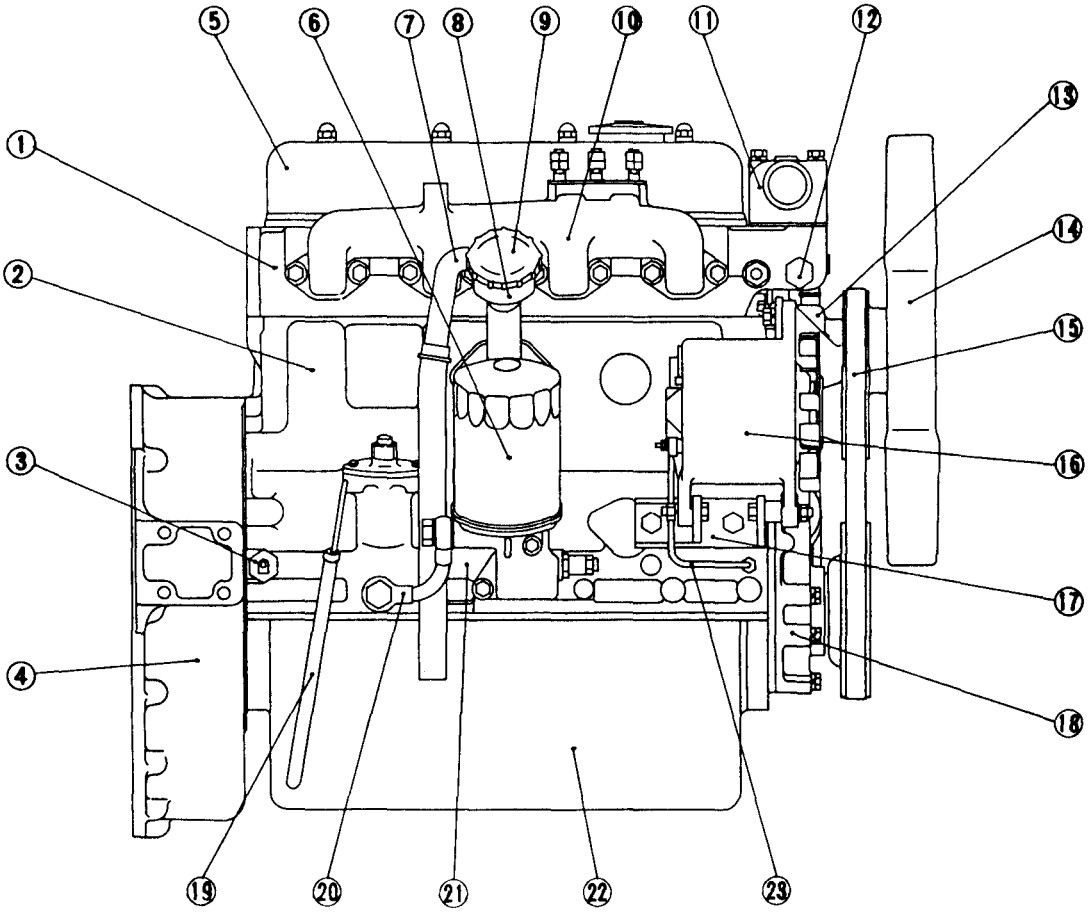

402501

1-Cylinder head
2-Crankcase
3-Indicator switch
4-Flywheel housing
5-Rocker cover
6-Oil filter
7-Breather
8-Oil filler
9-Oil filler cap
10-Exhaust manifold
11-Elbow
12-Screw plug
13-Water pump
14-Fan
15-Fan belt
16-Alternator
17-Alternator bracket
18-Timing gear case
19-Oil level gauge
20-Oil pipe
21-Oil bypass alarm switch
22-Oil pan
23-Oil pipe

https://truckmanualshub.com/

1-3 Longitudinal sectional view

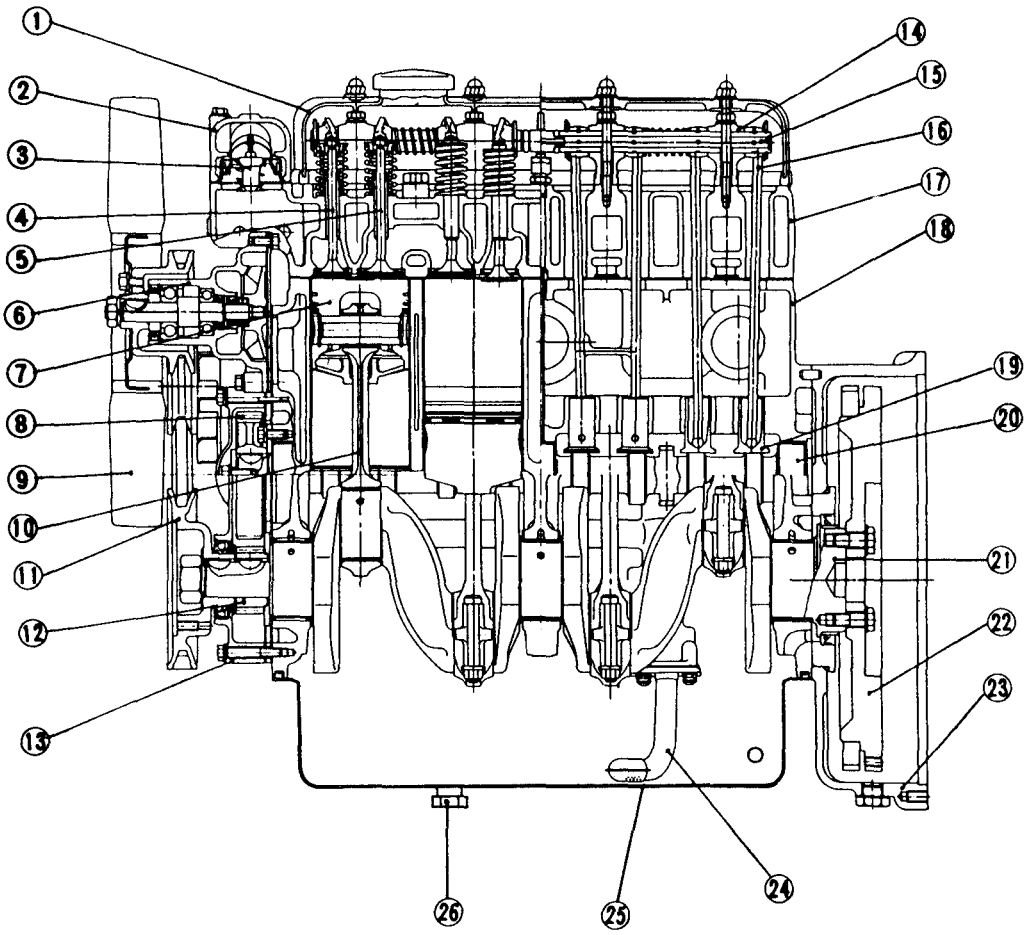

402502

1-Rocker cover
2-Thermostat case
3-Thermostat
4-Exhaust valve
5-Intake valve
6-Water pump
7-Piston
8-Camshaft gear
9-Fan
10-Connecting rod
11-Crankshaft pulley
12-Crankshaft gear
13-Timing gear case
14-Rocker shaft bracket
15-Rocker shaft
16-Valve push rod
17-Cylinder head
18-Crankcase
19-Tappet
20-Camshaft
21-Crankshaft
22-Flywheel
23-Flywheel housing
24-Oil strainer
25-Oil pan
26-Drain plug

https://truckmanualshub.com/

1-4 Transverse sectional view

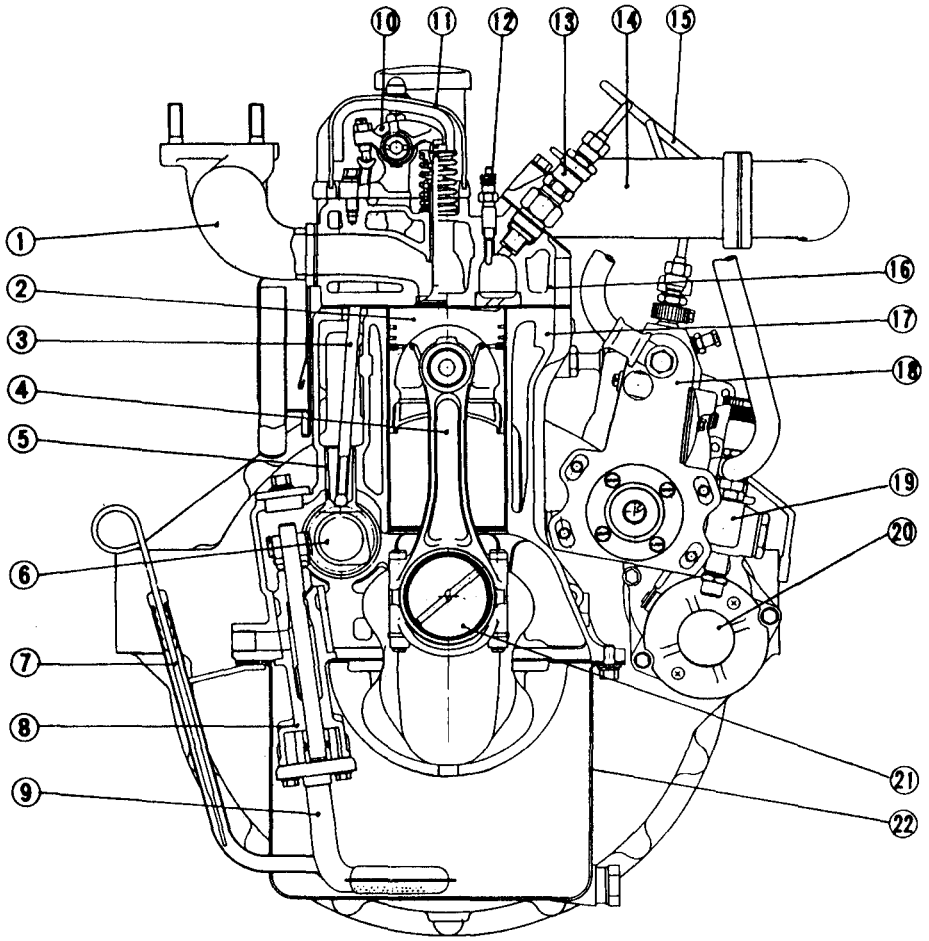

402503

1-Exhaust manifold
2-Piston
3-Valve push rod
4-Connecting rod
5-Tappet
6-Camshaft
7-Oil level gauge
8-Oil pump
9-Oil strainer
10-Rocker arm
11-Rocker cover
12-Glow plug
13-Fuel injection nozzle
14-Intake manifold
15-Fuel injection pipe
16-Cylinder head
17-Crankcase
18-Fuel injection pump
19-Fuel feed pump
20-Starter
21-Crankshaft
22-Oil pan

https://truckmanualshub.com/

MAJOR DATA AND SPECIFICATIONS

Engine model				4DQ5
	Type			Water-cooled, 4-stroke, swirl-combustion chamber type diesel
	No. of cylinders-arrangement			4-in line
	Bore x stroke		mm (in.)	84 x 94 (3.307 x 3.701)
General	Piston displacement		cc (cu in.)	2084 (127.1)
	Compression ratio			21 : 1
	Compression pressure		kg/cm² (psi)	26 (369.7), min (at 150 ~ 200 rpm)
	Firing order			1 – 3 – 4 – 2
	Direction of rotation			Counterclockwise as viewed from flywheel side
	Burns (fuel)			Grade No. 2D diesel fuel (ASTM specification)
	Engine oil			Class-CC or better (API service classification)
	Dimensions	Overall length	mm (in.)	717.5 (28-1/4)
		Overall width		562 (22-1/8)
		Overall height		629.5 (24-3/4)
	Weight, dry		kg (lb)	200 (441)
	Cylinder sleeves			Dry type made of special cast iron or integral water-jacket type
	No. of piston rings	Compression rings		2
		Oil ring		1 (w/spring expander)
	Valve arrangement			Overhead
	Valve timing	Intake valves	Open at:	30° BTDC
			Close at:	50° ABDC
		Exhaust valves	Open at:	74° BBDC
			Close at:	30° ATDC
	Valve clearance (both intake and exhaust valves) (cold)		mm (in.)	0.25 (0.0098)
	Starter			Electric
Fuel system	Fuel feed pump	Model		ND-EP/KS22A
		Cam lift	mm (in.)	6 (0.24)
	Fuel injection pump	Model		PES4A65B
		Plunger diam	mm (in.)	6.5 (0.256)
		Plunger lead		Right
		Cam lift	mm (in.)	8 (0.31)
	Governor	Model		RUV (for prime power)
		Type		Centrifugal flyweight, all-speed
	Fuel injection nozzles	Type		Throttle
		Type of nozzle holders		Bosch CA17SD

https://truckmanualshub.com/

Engine model				4DQ5
Fuel system	Fuel injection nozzles	Type of nozzle tips		Bosch ND-DN0SD21
		Spray hole diam	mm (in.)	1 (0.04)
		Spray angle		0°
		Injection pressure	kg/cm² (psi)	120^{+10}_{0} (1706^{+142}_{0})
	Fuel filter			Paper-element type
Lubrication system	Oil pump	Type		Trochoid
		Speed ratio to crankshaft		1/2
		Capacity at oil temp. 50 ± 5°C (122 ± 9°F); pressure 3 kg/cm² (42.7 psi)	liter (cu in.)/ min/rpm	8.37 (510.8), min/1000 (pump rpm)
	Oil pressure	At duty run	kg/cm² (psi)	3 ~ 4 (42.7 ~ 56.9)
		At idling		1 ~ 2 (14.2 ~ 28.4)
	Oil filter			Paper-element type
	Relief valve	Type		Piston-valve
		Valve opening pressure	kg/cm² (psi)	3 ± 0.2 (42.7 ± 2.8)
	Refill capacity	Oil pan	liter (U.S. gal)	6.5 (1.7)
		Oil filter		0.7 (0.18)
	Oil bypass valve	Type		Piston-valve
		Valve opening pressure	kg/cm² (psi)	0.8 ~ 1.2 (11.4 ~ 17.1)
Cooling system	Water pump	Type		Centrifugal type
		Speed ratio to crankshaft		1.3
		Capacity	liter (cu in.)/ min/rpm	105 (6408)/3900 (pump rpm)
	Thermostat	Type		Wax
		Valve opening temperature		76.5 ± 2°C (169.7 ± 3.6°F)
		Valve lift temperature		90 ± 2°C (194 ± 3.6°F)
	Fan	Type		Circular-arc pusher type
		No. of blades		6
		Outside diameter	mm (in.)	380 (15)
		Ratio to crankshaft speed		1.3
	Drive belt	Type		Low-edge cog B
		No. of belts		1
	Refill capacity (engine water jacket)		liter (U.S. gal)	4.5 (1.2)

https://truckmanualshub.com/

Engine model				4DQ5
Electrical equipment	Working voltage		volt	12
	Polarity			Negative (–) ground
	Glow plugs	Type		Sheathed
		Rated voltage – current	volt – ampere	10.5 – 8.3
		Resistance at normal temperature	ohm	1.26
	Starter	Model		M002T54172
		Type		Totally enclosed, drip-proof, pinion-shift type with overrunning clutch
		Manufacturer		Mitsubishi-Electric
		Voltage-output	volt – kilowatt	12 – 2
		No. of pinion teeth/ No. of ring gear teeth		11/121
	Alternator	Model		A001T25070
		Type		3-phase AC type
		Voltage-output	volt – ampere	12 – 35
		Manufacturer		Mitsubishi-Electric
		Rated speed	rpm	5000
		Working speed		1000 ~ 13500
		Speed ratio to crankshaft		1.68
	Regulator	Type		IC type built in alternator
		Regulated voltage	volt	14.4 ± 0.3

https://truckmanualshub.com/

DISASSEMBLY

(1) Drain the oil.

(2) Remove the fan belt and alternator as follows:

(a) Loosen bolt (1) securing fan belt adjusting plate and alternator, and remove fan belt (2).

(b) Remove bolts (1) and (3) and remove alternator.

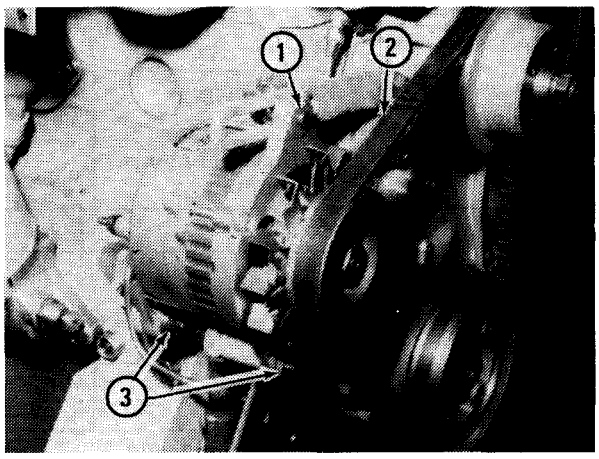

(3) Remove the starter as follows:

(a) Loosen attaching nuts (1).

(b) Remove starter from rear plate.

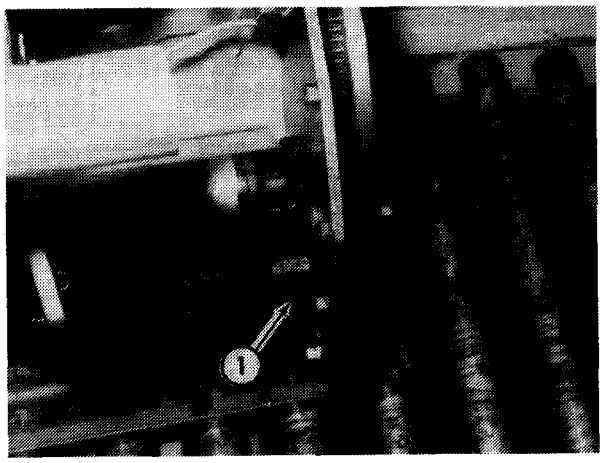

(4) Remove the fuel filter as follows:

(a) Disconnect fuel feed pipes (1) (2).

(b) Loosen attaching bolts (3) and remove fuel filter (4).

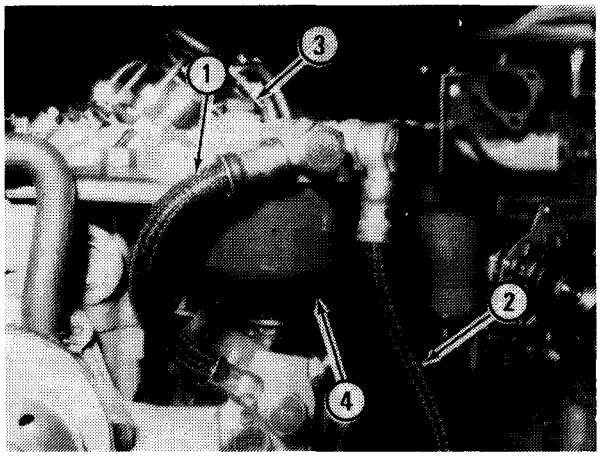

https://truckmanualshub.com/

(5) Remove the injection pipes and injection nozzles as follows:

(a) Loosen connectors (1) and disconnect injection pipes (2).

(b) Remove fuel return pipe (3) by loosening union nut.

(c) Loosen nuts (4) and remove fuel leak-off pipe (5).

(d) Remove nozzle assemblies.

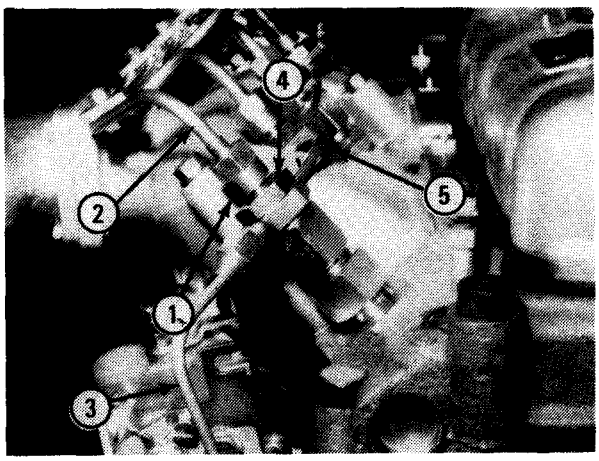

(6) Remove the lube oil pipe from injection pump.

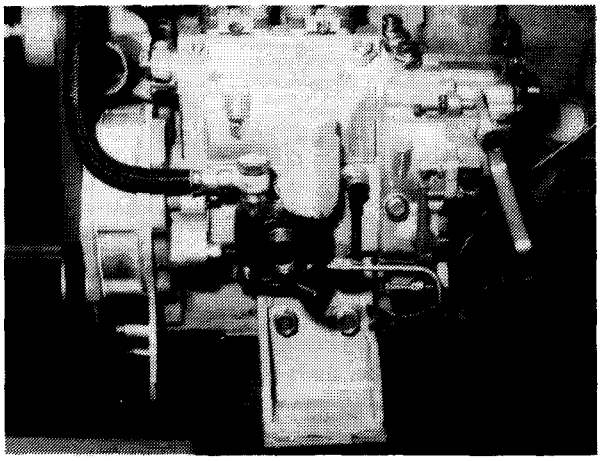

(7) Remove the water pump pulley and crankshaft pulley as follows:

(a) Loosen water pump shaft nut (1) and remove water pump pulley (2).

(b) Loosen crankshaft nut (3) and remove crankshaft pulley (4).

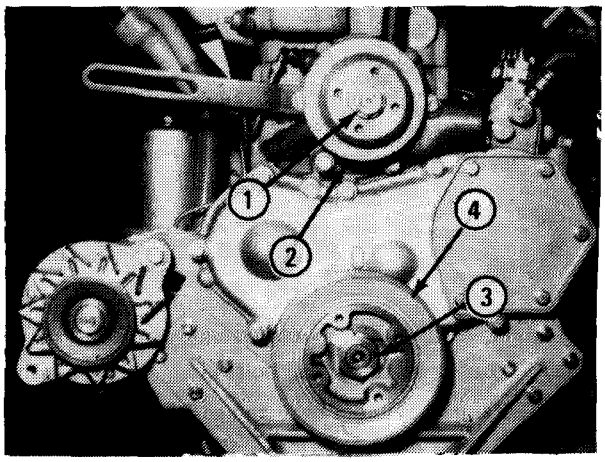

(8) Remove the timing gear case.

(9) Remove the rocker cover.

https://truckmanualshub.com/

(10) Disconnect the water pump bypass hose and oil pipe. To disconnect bypass hose, displace thermostat elbow and water pump clamp.

(11) Remove the water pump as follows:
- (a) Loosen attaching bolts (1).
- (b) Remove water pump assembly (2).

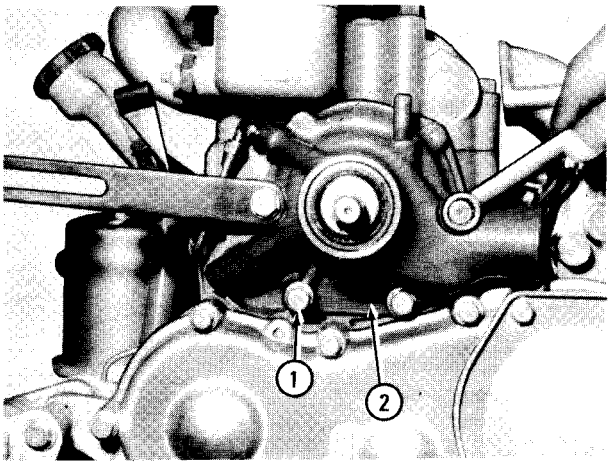

(12) Remove the rocker shaft assembly as follows:
- (a) Loosen union nut (1).
- (b) Loosen short bolts (2) and long bolts (3).
- (c) Remove rocker shaft assembly (4).
- (d) Remove oil pipe (5) and "O" rings (2 pcs – to be replaced with new ones).
- (e) Remove valve push rods and valve caps.
- (f) Remove intake manifold.

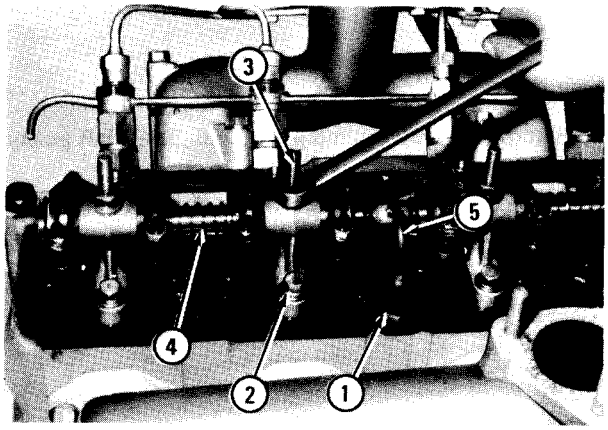

(13) Remove the cylinder head assembly as follows:
- (a) Loosen cylinder head bolts (1).
- (b) Remove cylinder head and gasket.

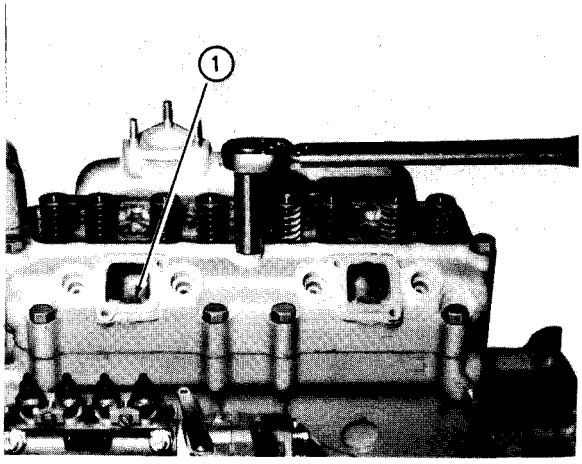

https://truckmanualshub.com/

(14) Remove the oil pan and oil pump assembly as follows:

(a) Loosen attaching bolts and remove oil pan (1) and gasket.

(b) Loosen attaching bolts and remove oil pump (2) assembly.

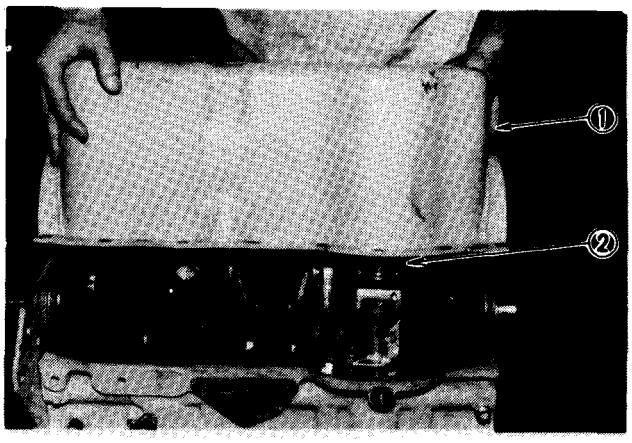

(15) Remove the timing gear train as follows:

(a) Loosen idler gear bolt (1).

(b) Remove thrust plate (2) and idler gear (3). (Draw idler gear while twisting it in the direction of its helix.)

(c) Loosen injection pump drive gear nut (4).

(d) Remove injection pump drive gear (5).

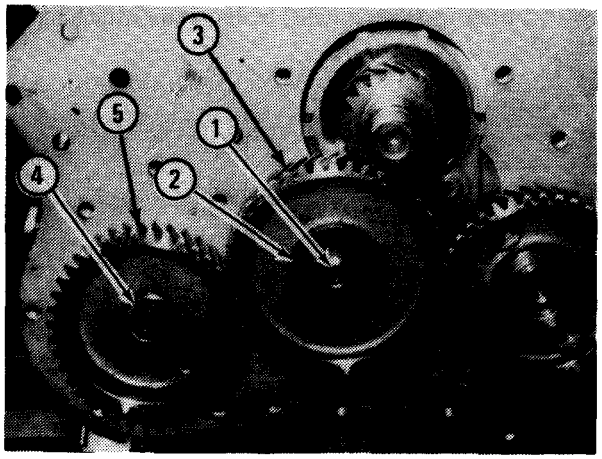

(16) Remove the camshaft assembly as follows:

Take out camshaft assembly (1) from crankcase.

NOTE

There are tappets in crankcase; this makes it necessary to turn crankcase upside down when removing camshaft assembly.

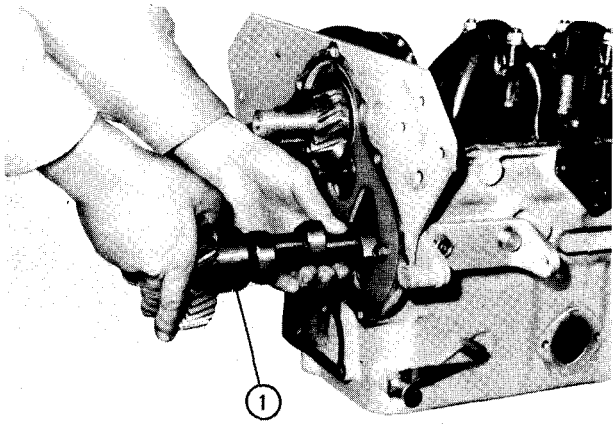

(17) Remove the front plate and injection pump assembly as follows:

(a) Loosen attaching bolts (1).

(b) Remove front plate and injection pump assembly.

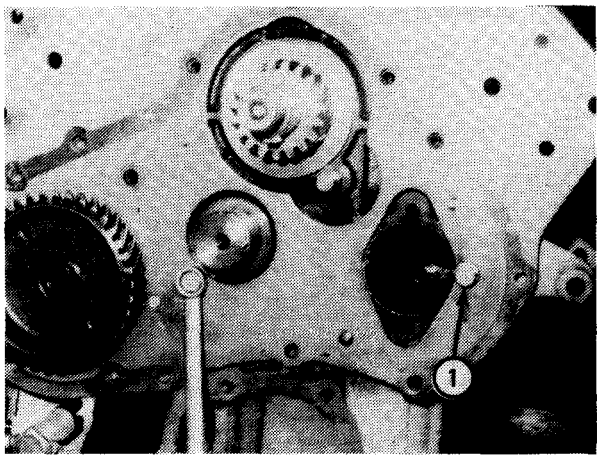

https://truckmanualshub.com/

(18) Remove the flywheel and rear plate.

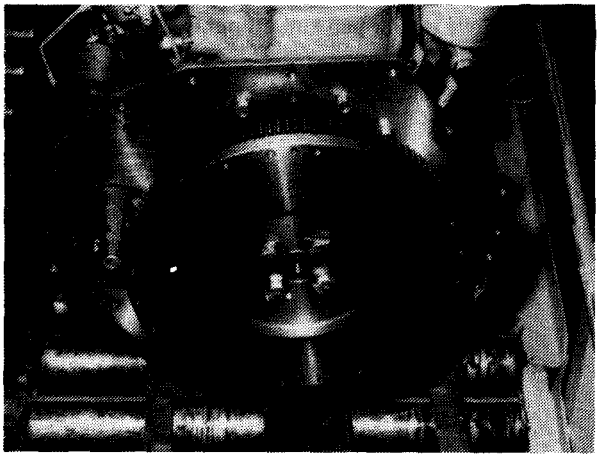

(19) Remove the connecting rod bearing caps and bearings (lower shells) by loosening attaching bolts.

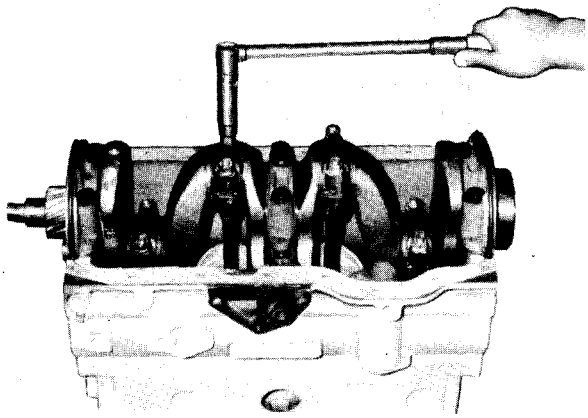

(20) Remove the connecting rods and pistons.

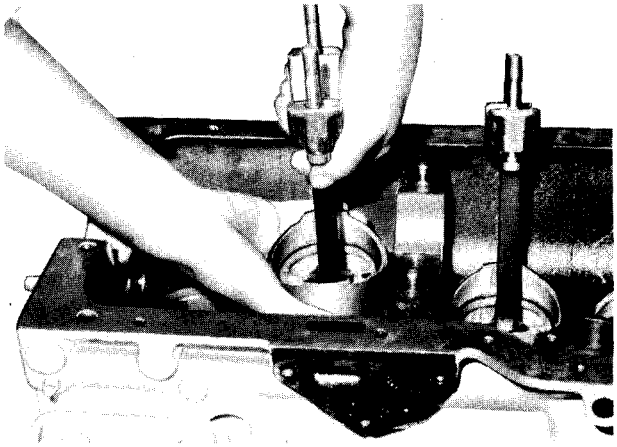

(21) Remove the main bearing caps by loosening attaching bolts.

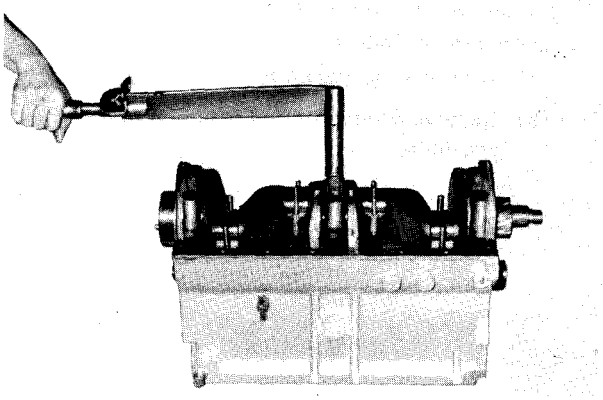

https://truckmanualshub.com/

(22) Remove the crankshaft.

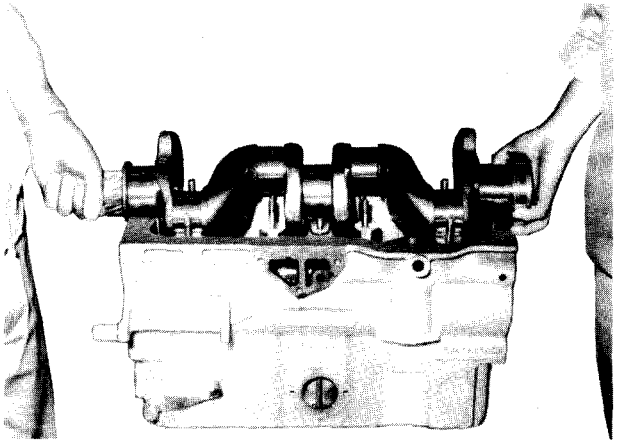

(23) Remove the main bearing shells.

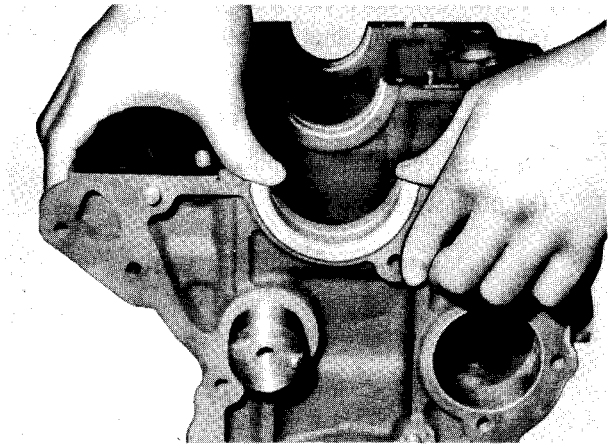

(24) Disassemble piston and connecting rod as follows:

(a) Remove compression rings (1) and oil ring (2) by using piston ring tool (A).

(b) Remove oil ring spring.

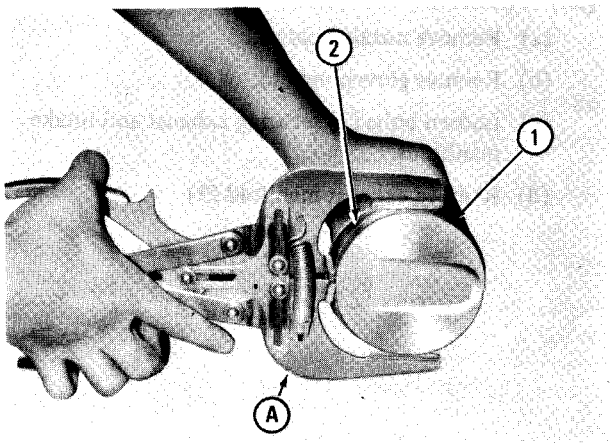

(c) Remove snap rings (3) by using snap ring tool (B).

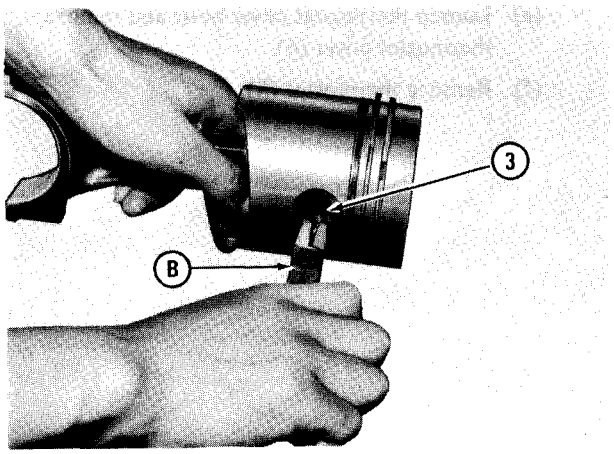

https://truckmanualshub.com/

(d) Remove piston pin (4) by using drift (C).

(e) Remove piston pin bushing and connecting rod bearing (upper).

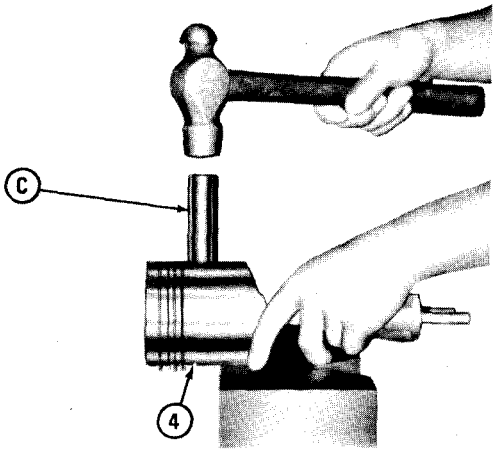

(25) Disassemble the rocker shaft assembly as follows:

(a) Remove snap rings on both ends (1).

(b) Remove rocker assembly (2).

(c) Remove rocker bracket (3).

(d) Remove rocker assembly (4).

(e) Remove spring (5).

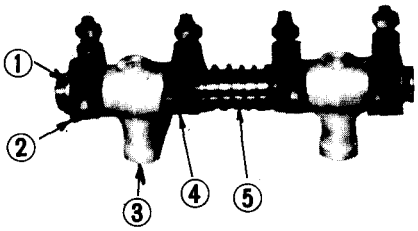

(26) Disassembly the cylinder head as follows:

(a) Remove nozzle holders.

(b) Remove glow plugs (1).

(c) Loosen bolts (2) securing exhaust and intake manifolds.

(d) Remove exhaust manifold (3).

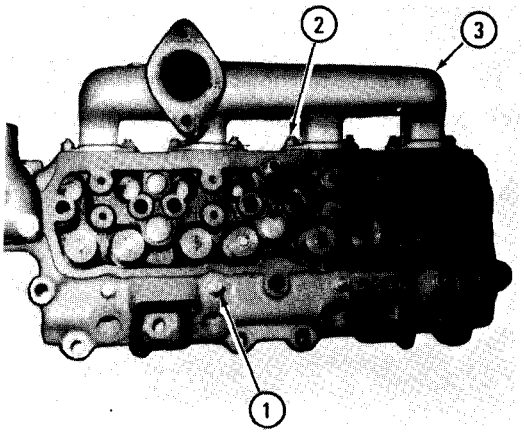

(e) Loosen thermostat cover bolts and remove thermostat cover (4).

(f) Remove thermostat (5).

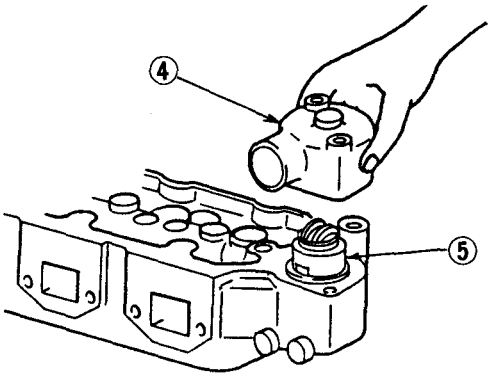

https://truckmanualshub.com/

(g) Remove valve cotters (6).
(Depress valve spring by valve lifter.)

(h) Remove retainer (7).

(i) Remove valve spring (8).

(j) Take out valve (9).

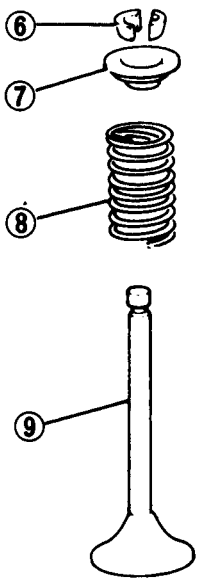

(k) Remove valve guide by using valve guide remover (A).

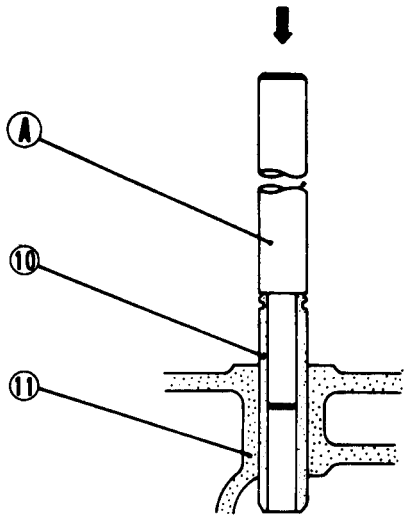

10-Valve guide
11-Cylinder head

A-Valve guide remover

https://truckmanualshub.com/

INSPECTION AND REPAIR

Cylinder head

(1) Inspection

Check the gasketed surface of the cylinder head for flatness by using a straightedge and thickness gauge as in the case of checking the crankcase surfaces. This check is to be made with the precombustion chamber jets removed.

Use a surface grinder to reface the cylinder head, as necessary, to the specified flatness.

Specifications Unit: mm (in.)

Item	Standard	Repair limit
Warpage of gasketed surface of cylinder head	0.05, max (0.0020)	0.20 (0.0079)

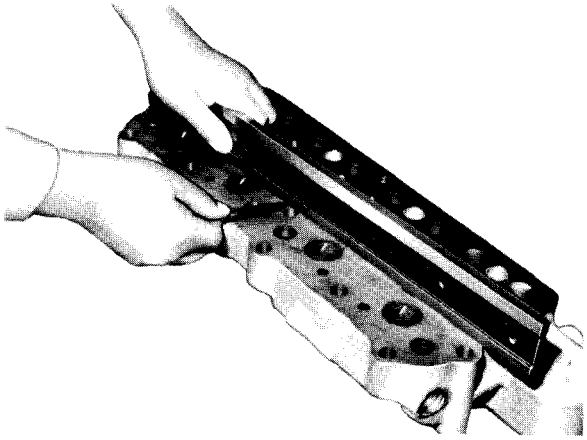

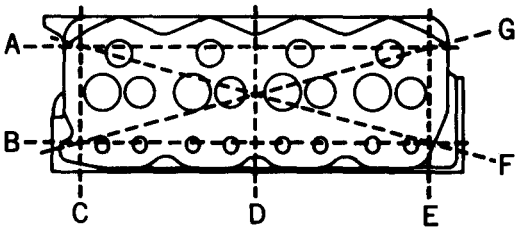

Checking cylinder head gasketed surface for flatness

(2) Precombustion chamber jet replacement

Do not remove the jets unless they have to be replaced. To remove the jet as when cracks are noted in it, drive it out with a drift pin of about 6 mm (1/4 in.) diameter inserted through glow plug hole, as shown.

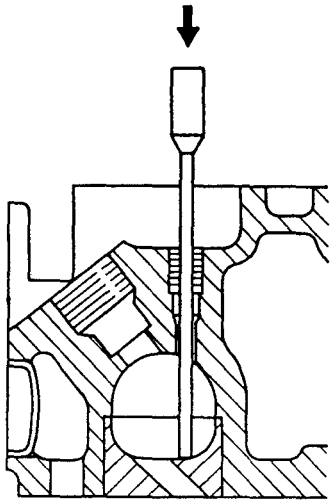

Removing precombustion chamber jet

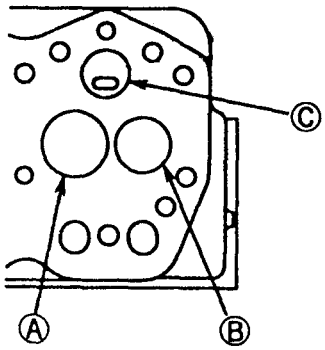

A-Intake port C-Jet
B-Exhaust port

Direction of precombustion chamber jet orifice in installed state

https://truckmanualshub.com/

Valve guides and valve seats

(1) Check each valve for carboning, burning, wear or other defect on head; also check cap end and stem for cracks. Replace the valve if damaged.

(2) Check each valve guide for wear. Remember, the guide wears down more rapidly at its both ends than at any other parts. Measure the inside diameter of the guide at its ends and at its middle part in two directions. Measure the outside diameter of each valve stem. If the measurement exceeds the repair limit in Table below, replace the valve guide.

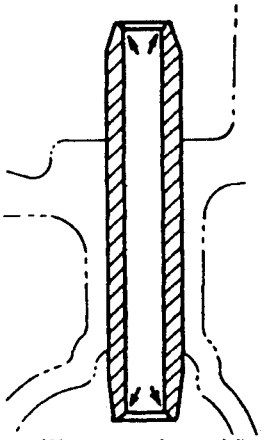

Wear on valve guide

(3) Valve face and valve seat
Check valve face and valve seat for wear and contact. If valve face is found excessively worn, reface it by using a valve refacer. To reface the valve, proceed as follows:

Specifications

Unit: mm (in.)

Item		Standard	Repair limit
Clearance of valve stem in valve guide	Intake	0.055 ~ 0.085 (0.00217 ~ 0.00335)	0.15 (0.0059)
	Exhaust	0.070 ~ 0.105 (0.00276 ~ 0.00413)	0.20 (0.0079)
Valve guide length outside hole		18 ± 0.3 (0.709 ± 0.012)	
Valve stem diameter	Intake	$8^{-0.045}_{-0.060}$ ($0.315^{-0.00177}_{-0.00236}$)	−0.10 (−0.0039)
	Exhaust	$8^{-0.060}_{-0.080}$ ($0.315^{-0.00236}_{-0.00315}$)	−0.15 (−0.0059)

Specifications

Unit: mm (in.)

Item		Nominal value	Standard	Repair limit	Service limit
Valve seat	Angle	30°			
	Sinkage	0.8 (0.031)	±0.2 (±0.008)	1.3 (0.051)	
	Width	1.4 (0.055)	±0.14 (±0.0055)	1.6 (0.063)	
Valve margin		1.7 (0.067)		Reface up to 1.2 (0.047)	

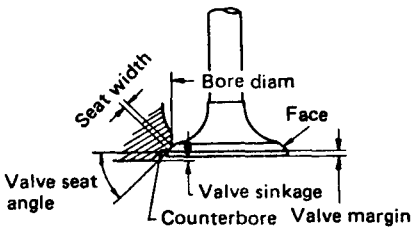

https://truckmanualshub.com/

Valve refacer

(a) Set a valve refacer to an angle of 45 degrees.

(b) Grind the valve stock to a minimum and, if the margin is less than 1.2 mm (0.047 in.), replace the valve.

Valve seat cutter

Repair an excessively worn valve seat by using a valve seat grinder or valve seat cutter.

(c) When using a valve seat cutter, exercise care so as to apply a uniform pressure to valve seat to prevent uneven cutting. After cutting, reface the seat by rotating the cutter with No. 400 sandpaper put between the cutter and seat.

(d) If valve seat width is overcut, repair it using a 30-degree cutter. If valve seat width exceeds 1.6 mm (0.063 in.) due to wear, replace the seat. Also replace the seat when valve sinkage exceeds 1.3 mm (0.051 in.).

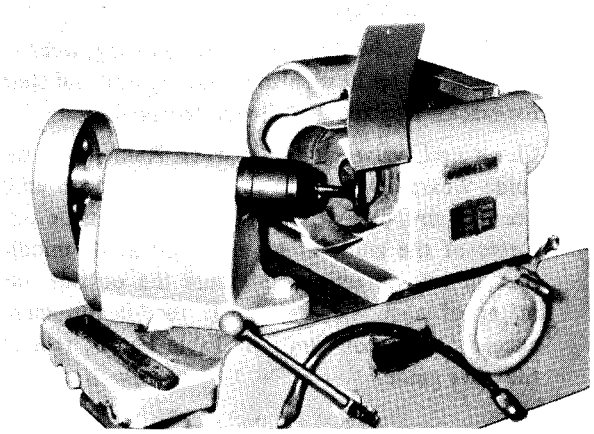

Valve seat installation

Chill the valve seat inserts in ether or alcohol containing dry ice. Heat the cylinder head to a temperature of 80°C to 100°C (176°F to 212°F). Press the inserts in the cylinder head by using the insert calking tools (30691-02700 for intake valve, 30691-02800 for exhaust valve). Leave the cylinder head and the inserts in the air until shrinkage-expansion fit is obtained between the two. Calk around the inserts with the insert calking tool to machine the seat width.

NOTE

The insert calking tool may be used both for pressing and calking the valve seat inserts by reversing the calking ring.

https://truckmanualshub.com/

Valve springs

Inspect each spring for cracks, and check it for squareness, free length and as-installed length against these specifications:

Specifications

Unit: mm (in.)

Item	Standard	Repair limit
Valve spring free length	48.85 (1.9232)	47.6 (1.874)
Valve spring squareness	1.5°, max	
Load compress spring to initial working length [43 mm (1.69 in.)] kg(lb)	19 ± 1 (41.9 ± 2.21)	15 (33.08)

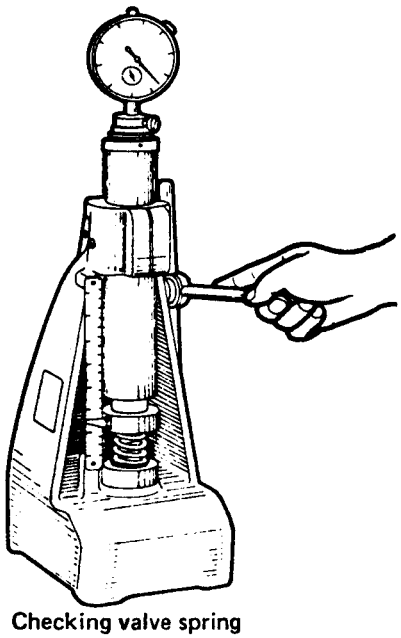

Checking valve spring

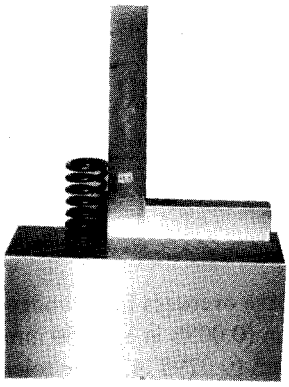

Checking valve spring for squareness

Exhaust manifold

If the flange faces are warped by more than 0.2 mm (0.0079 in.) when checked as shown, grind them smooth and flat. If any flange is found cracked, replace the manifold.

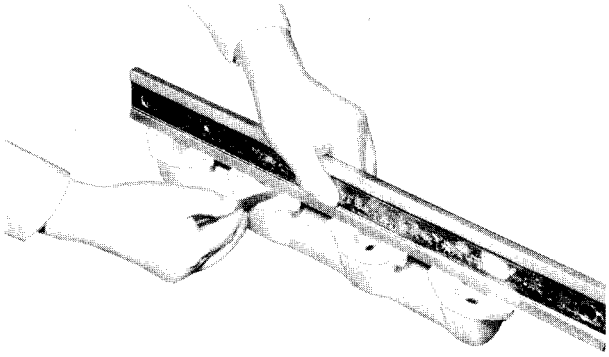

Checking exhaust manifold flange surface for flatness

https://truckmanualshub.com/

Cylinder sleeves

(1) Using a cylinder gauge, take ID measurements in two directions (parallel and transverse to crankshaft axis) on each cylinder sleeve, at three places indicated below.

If wear reaches the repair limit, rebore the sleeve to the next specified oversize.

Specifications

Unit: mm (in.)

Item	Standard	Repair limit	Service limit
Cylinder sleeve ID	$84^{+0.035}_{0}$ ($3.307^{+0.00138}_{0}$)	+0.20 (+0.008)	0.70 (0.0276)
Out of roundness	0.1 (0.004), max		
Taper	0.015 (0.0006), max		

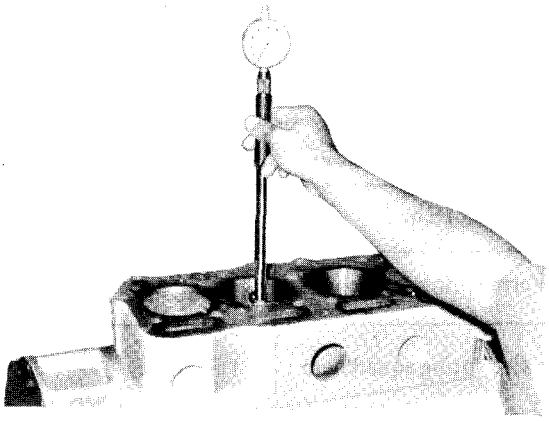

Taking ID measurements on cylinder sleeves

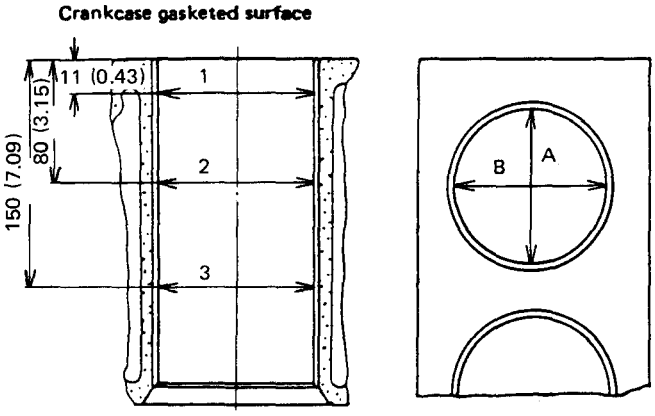

Positions for checking sleeve bore diameter

(2) There are three oversizes for cylinder sleeves, namely, +0.25 mm (0.0098 in.), +0.50 mm (0.0197 in.) and +0.75 mm (0.0295 in.). The tolerance to which the sleeves should be refinished by boring is 0 – 0.035 mm (0.0014 in.). When the sleeves are rebored, oversize pistons and piston rings should be used.

(3) An oversize to which any sleeve worn taper and/or out of round is to be rebored should be determined by relying on the most worn part of the sleeve. A cylinder sleeve whose abnormal wear is 0.4 mm (0.0157 in.) should be rebored to 1 mm (0.0394 in.) oversize, for example.

NOTE

a) All cylinders should be rebored to one and the same oversize.

b) When the sleeves are not worn beyond the repair limit, but the piston rings have to be renewed, correct stepped wear on the top part of the sleeve by using a ridge reamer and, if necessary, refinish the sleeves by honing.

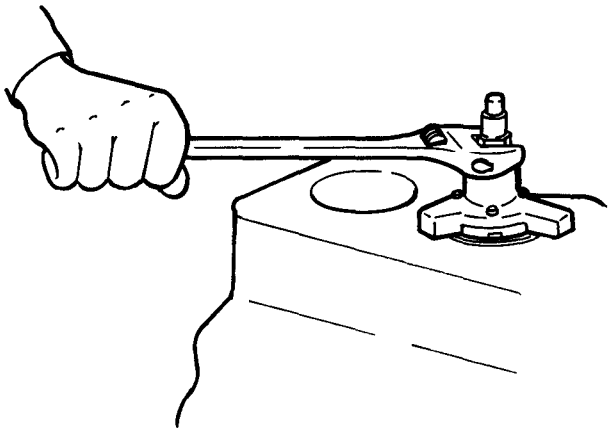

Removing ridge with ridge reamer

https://truckmanualshub.com/

(4) When the sleeves are worn beyond the service limit, or when any cylinder bore is found to be defective, the sleeve should be replaced with a new one.

When the inside surfaces of one of more cylinder bores in the crankcase are found to be defective, it is necessary to refinish the bores by boring. In this case, too, the liners should be replaced with new ones. To replace, proceed as follows:

(a) Removal

- **Fix a boring machine to the crankcase in alignment** with the cylinder bore from which a sleeve is to be **removed. Aligning should be made at the bottom part of the liner where less abnormal wear has occurred.**
- Bore the sleeve until it reaches 0.5 mm (0.0197 in.) **in stock thickness.**
- Break the sleeve, exercising care not to damage the **inside surface of the cylinder bore.**

(b) Installation

- **Visually check the inside surfaces of the cylinder bores for condition. It is necessary to rebore the bores if they are damaged.**
- **When it is unnecessary to rebore the cylinder bores, proceed as in steps below.**
- **Measure the diameter of cylinder bore and the** outside diameter of sleeve. Select oversize sleeve so that the clearance between the sleeve and the bore is 0.08 mm (0.0031 in.) to 0.145 mm (0.0057 in.).

  Heat the crankcase to about 300°C (572°F). Press the sleeve into the bores in the crankcase by using a hydraulic press in such a manner to make the top of sleeve protrude by 0.3 to 0.5 mm (0.012 to 0.020 in.) from the crankcase. Then, finish them to be flush with the crankcase.

  After pressing the sleeves, rebore and hone them to **them to** $84^{+0.035}_{0}$ **mm** ($3.307^{+0.0014}_{0}$ **in.).**

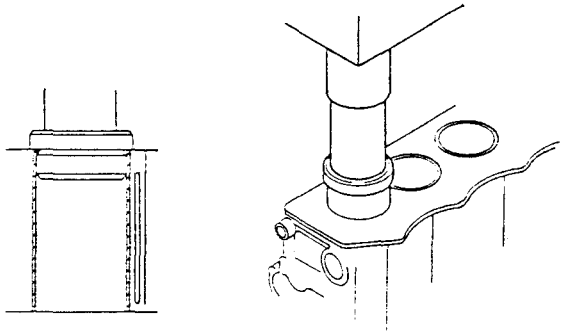

Pressing sleeve

- **When it is necessary to rebore the cylinder bores,** press the sleeves into position as in b above, and proceed as follows:

  Prepare 0.5 mm (0.0197 in.) oversize cylinder sleeves.

  Rebore the cylinder bores so that the clearance between the sleeve and the bore is 0.08 mm (0.0031 in.) to 0.145 mm (0.0057 in.).

  After pressing the sleeves, rebore and hone them to **them to** $84^{+0.035}_{0}$ **mm** ($3.307^{+0.0014}_{0}$ **in.).**

Specifications Unit: mm (in.)

Cylinder sleeve	Sleeve boring dimension
Standard	$87^{-0.010}_{-0.045}$ ($3.425^{-0.0004}_{-0.0018}$)
0.5-oversize	$87.5^{-0.010}_{-0.045}$ ($3.445^{-0.0004}_{-0.0018}$)

When replacing the sleeves, use the sleeves of the following part numbers.

Specifications Unit: mm (in.)

Part No.	O.D.	I.D.	Remarks
30607-50301	$87^{+0.10}_{+0.07}$ ($3.425^{+0.0004}_{+0.0028}$)	$83.5^{0}_{-0.2}$ ($3.287^{0}_{-0.008}$)	Standard
30607-50401	$87.5^{+0.10}_{+0.07}$ ($3.445^{+0.0004}_{+0.0028}$)	$83.5^{0}_{-0.2}$ ($3.287^{0}_{-0.008}$)	Oversize

https://truckmanualshub.com/

Pistons and piston rings

(1) Pistons

Inspect each piston for any abnormal wear of its sliding surface, for cracks at the crown and for evidence of melting or fusion. Examine the ring grooves for stepped wear and sloped wear. Replace pistons found in bad condition.

(2) Measure the outside diameter of piston in two directions perpendicular to each other. If the diameter exceeds the service limit, replace the piston.

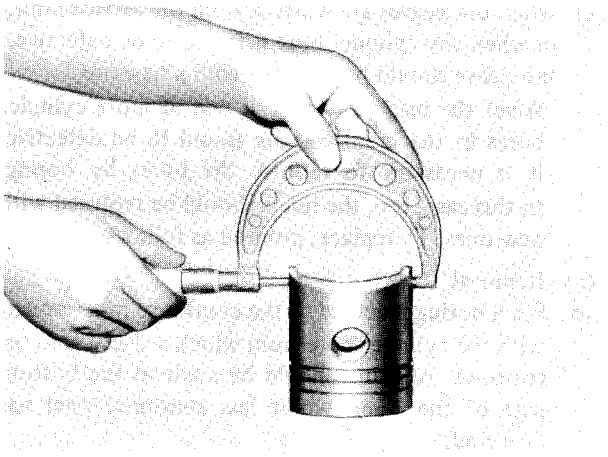

Specifications

Unit: mm (in.)

Item		Standard	Service limit
Diameter (at skirt)	Standard	83.90 (3.3031)	–0.2 (–0.008)
	0.25 (0.0098) oversize	84.15 (3.3130)	
	0.50 (0.0197) oversize	84.40 (3.3228)	
	0.75 (0.0295) oversize	84.65 (3.3327)	

https://truckmanualshub.com/

(3) Replacing pistons

Replace the piston with a new one if the measurement exceeds the service limit. Where any pistons have to be replaced, the variance in weight among the pistons must not exceed the limit. It is recommended that cylinder number be stamped on a piston selected to be used in a particular cylinder for convenience.

When the cylinder sleeves are bored to the oversize, pistons and piston rings of the same oversize should be used. There are three oversizes for pistons and piston rings, namely, +0.25 mm (0.00984 in.), +0.50 mm (0.01969 in.) and 0.75 mm (0.0295 in.). The variance in weight among the pistons per engine should be ±5 grams (±0.18 oz), max.

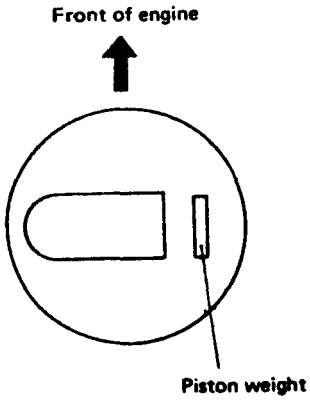

Piston weight marking

(4) Piston ring gaps

Check the ring gap with a thickness gauge by placing the ring in a new cylinder sleeve, and pushing the piston true and square in the bore.

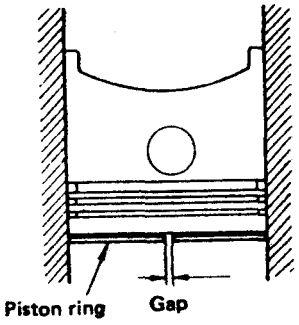

Checking piston ring gap

Specifications

Unit: mm (in.)

Item	Standard	Service limit
Piston ring gap	0.30 ~ 0.50 (0.0118 ~ 0.0197)	1.5 (0.059)

(5) Piston ring grooves

Insert the compression and oil rings of known thicknesses into the grooves, and measure the side clearance with a straightedge and thickness gauge Ⓐ.

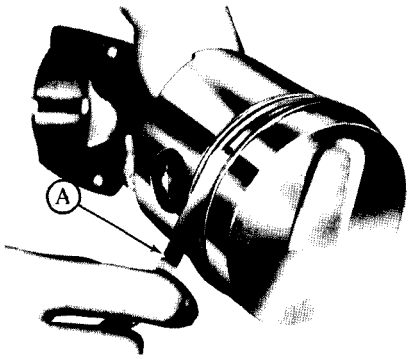

Measuring piston ring groove

Specifications

Unit: mm (in.)

Item		Standard	Repair limit
Fit in ring grooves	No. 1 compression ring	0.050 ~ 0.085 (0.00197 ~ 0.00335	0.20 (0.0079)
	No. 2 compression ring	0.025 ~ 0.060 (0.00098 ~ 0.00236)	0.15 (0.0059)
	Oil ring		

https://truckmanualshub.com/

(6) Replacing piston rings

If the rings are replaced, the gap width will exceed the standard value, but this is not a matter of concern, provided that the service limit is not exceeded.

(7) Piston pin bosses

Check the piston pin bosses by referring to the topic, Piston pins, piston pin bosses and piston pin bushings, which follows.

Piston pins, piston pin bosses and piston pin bushings

(1) Check the pin clearance in the pin boss of the piston by computing the difference between the two diameter readings, one taken on the pin and the other in the boss. If the computed difference (clearance) exceeds the repair limit, replace the piston pin with a new one.

Specifications

Unit: mm (in.)

Item	Standard	Repair limit
Piston pin diameter	$25^{0}_{-0.006}$ ($0.984^{0}_{-0.00024}$)	

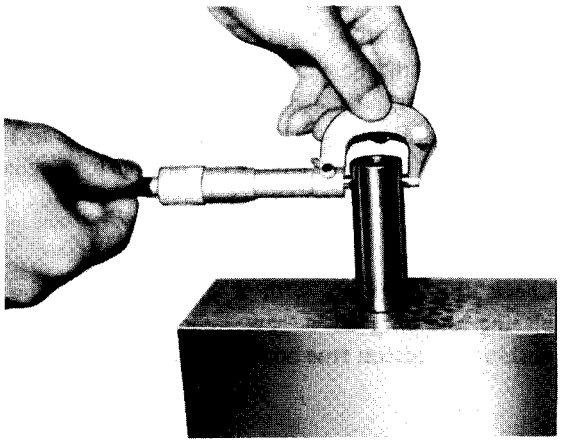

Miking piston pin bushing and piston pin

(2) Check the clearance of the pin in the bushing fitted to the small end of the connecting rod by computing the difference between the two diameter readings. If the computed difference (clearance) exceeds the repair limit, replace the pin or the bushing whichever is badly worn.

Specifications

Unit: mm (in.)

Item	Standard	Repair limit
Piston pin boss ID	$25^{0}_{-0.006}$ ($0.984^{0}_{-0.00024}$)	
Piston pin clearance in piston pin boss	0 ~ 0.016 (0 ~ 0.00063)	0.05 (0.0020)
Piston pin bushing ID	$25^{+0.020}_{+0.045}$ ($0.984^{+0.00079}_{+0.00177}$)	
Piston pin clearance in piston pin bushing	0.020 ~ 0.051 (0.00079 ~ 0.00201)	0.08 (0.0031)

https://truckmanualshub.com/

Connecting rod alignment and bearings

(1) Check the connecting rod for evidence of cracks, especially cracks in the fillets of its small and big ends. Replace the rod if any crack is noted in the fillets.

(2) Mount each connecting rod in the connecting rod aligner and check for bend and twist as shown below. In a twisted connecting rod, the bearing is not trued to the small end bushing. Such a rod must be corrected with the use of a press.

(3) If the connecting rod aligner is not available, the rod may be checked as follows:

(a) To check the rod for bend, measure "C" and "ℓ" as shown in the figure "a." If the measurement at "C" is larger than 0.05 mm per 100 mm (0.00197 in. per 3.937 in.) of "ℓ," straighten the rod with the use of a press.

(b) To check the rod for twist, measure "C" as shown in the figure "b." If the measurement at "C" is larger than 0.05 mm per 100 mm (0.00197 in. per 3.937 in.) of "ℓ," correct the rod.

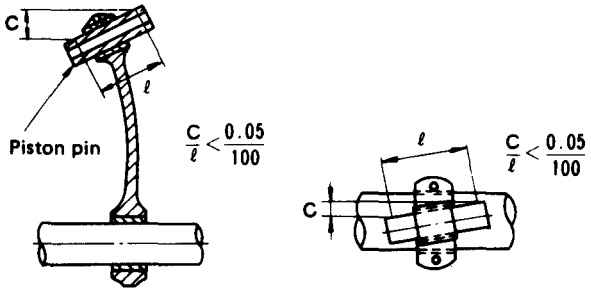

a. Checking the connecting rod for bend

b. Checking the connecting rod for twist

Checking connecting rod

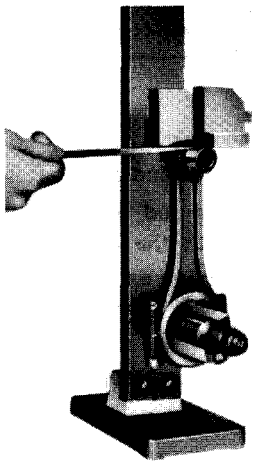

Checking connecting rod for bend

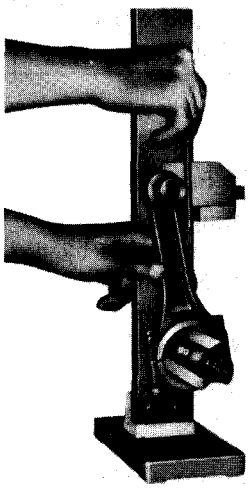

Checking connecting rod for twist

https://truckmanualshub.com/

(4) To check the rod with a piston, place the rod on the surface plate as shown below, insert a round bar of the crankpin diameter into and through its big end bore, and take measurement at "A" and "B." The difference between the two measurements tells the straighteness of the rod.

When one or more, or all connecting rods are to be replaced, select new rods so that the variance in weight among the rods is within the value given in the specification.

Specification

Unit: gram (oz)

Variance in weight among connecting rods	±25 (±0.83)

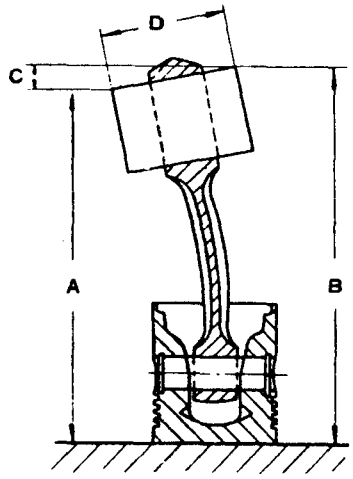

Checking connecting rod on surface plate

(5) Check the connecting rod end play as follows:
Check each connecting rod for end play in the manner illustrated, with the cap bolts tightened to 5.5 kg-m (39.8 lb-ft). Use a thickness gauge to measure the end play (which is the clearance between big end and crank arm). If the clearance measured exceeds the service limit, replace the connecting rod or bearing.

Specifications

Unit: mm (in.)

Item	Standard	Service limit
Connecting rod end play	0.15 ~ 0.35 (0.0059 ~ 0.0138)	0.50 (0.0197)

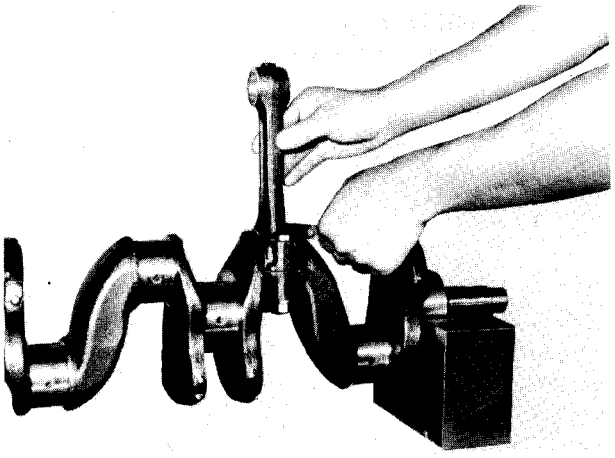
Checking end play of connecting rod

(6) Check the bearings as follows:

(a) Inspect each bearing for evidence of wiping or fatigue failure, for scratches by dirt particles imbedded in and for improper seating on the bore. Determine whether the bearing should be re-used or replaced on the basis of findings.

(b) Check the radial clearance between crankpin and bearing; if the repair limit specified below is exceeded by the checked clearance, replace the bearing. Where the crankpin is to be ground to the next undersize, use a replacement bearing of that undersize.

The two bearing undersizes are 0.25 mm (0.00984 in.) and 0.50 mm (0.01969 in.).

https://truckmanualshub.com/

Specifications

Unit: mm (in.)

Item	Standard	Repair limit
Crankpin diameter	$58^{-0.035}_{-0.055}$ ($2.283^{-0.00138}_{-0.00217}$)	
Radial clearance between bearing and crankpin	0.035 ~ 0.100 (0.00138 ~ 0.00394)	0.20 (0.0079)

To measure the inside diameter of the bearing, the bearing fitted to each connecting rod must be secured by tightening the cap bolts to 5.5 kg-m (39.8 lb-ft). Measure the diameter in two positions, 1 and 2, and in two directions D_1 and D_2, as shown below. Obtain the average by the following formula:

$$D = \frac{D_1 + D_2}{2}$$

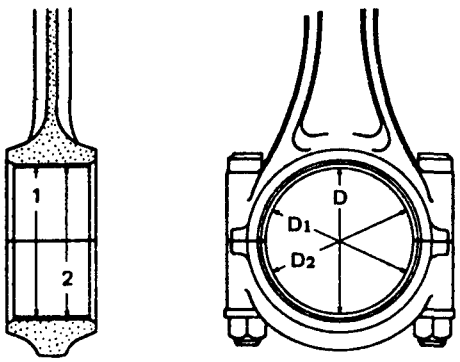

Positions for miking connecting rod bearing

(c) Check the contact pattern of bearing on crankpin by fitting the big end in the normal manner to the crankpin, with the crankshaft laid out on the bench, and by using a paste of red lead or Prussian blue to visualize the contact. Be sure to tighten the cap bolts to the specified torque, that is, 5.5 kg-m (39.8 lb-ft). The contact should occur over at least 75% of the entire surface; if not, replace the bearing.

NOTE

The above job of checking the contact pattern may be eliminated where the crankpin is ground to the specified tolerance and the bearing has been replaced. This is because a replacement bearing is precision-finished to ensure the specified extent of contact.

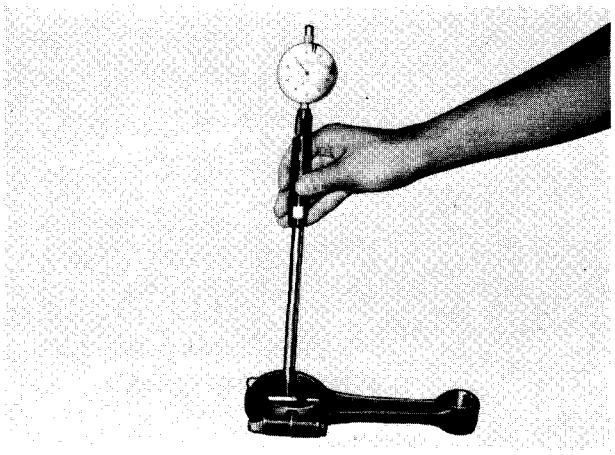

Miking connecting rod bearing

https://truckmanualshub.com/

Crankcase

(1) Inspect the outside and inside surfaces for evidence of cracking. Visually examine the cylinder bores for scuffing, rusting, erosion or any abnormal wear. Using a straightedge, check the top face (for mating with cylinder head), front face (for mating with front plate) and rear face (for mating with rear plate) for flatness.

(2) Make sure that the top face of the crankcase is flat within the standard specified below. If the standard is found to be exceeded, reface the top by using a surface grinder to make it flat within the specified standard.

Specifications

Unit: mm (in.)

Item	Standard	Repair limit
Warpage of crankcase gasketed surface	0.05, max. (0.0020)	0.20 (0.0079)

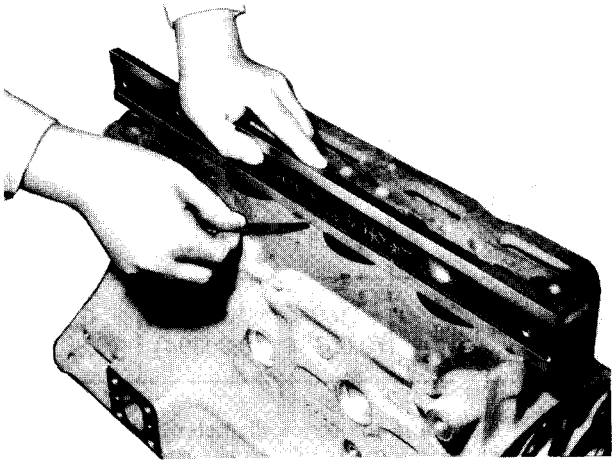

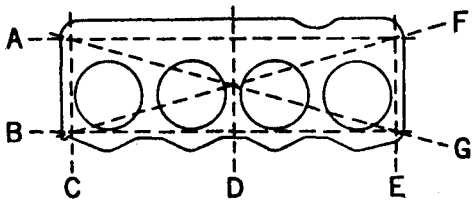

Checking crankcase top for flatness

Crankshaft

(1) Journals

(a) Inspect each journal for surface flaws such as roughing, scratches, pitting and burns, and, as necessary, repair the journals by grinding to the next undersize or replace the crankshaft.

(b) Mike each journal to take a total of four readings to determine the wear, out-of-round and taper (cylindricity). If any of the limits is exceeded, repair by grinding to the next undersize or replace the crankshaft.

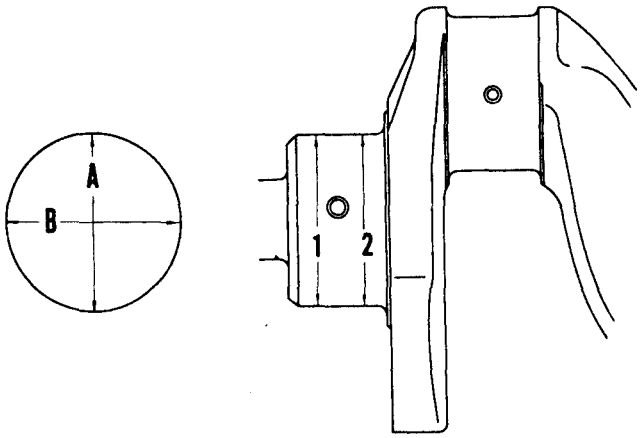

Positions for miking journal

https://truckmanualshub.com/

(2) Crankpins

(a) Inspect each crankpin for surface flaws such as roughing, scratches, pitting and burns, and, as necessary, repair the crankpins by grinding to the next undersize or replace the crankshaft.

(b) Mike each crankpin to take a total of four readings to determine the wear, out-of-round and taper. If any of the limits is exceeded, repair by grinding to the next undersize or replace the crankshaft.

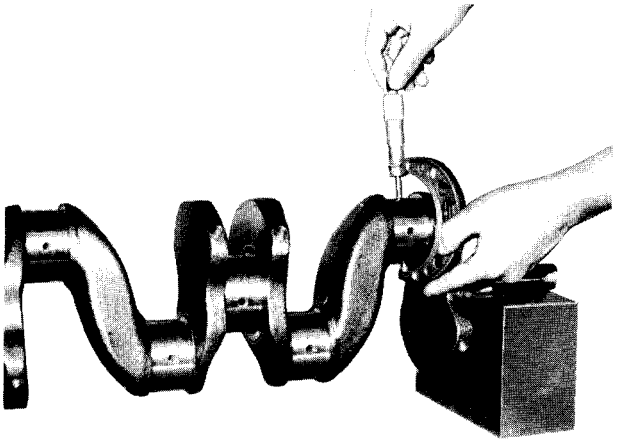

Miking crankshaft crankpins

Specifications

Unit: mm (in.)

Item	Standard	Repair limit	Service limit
Diameter of journals	$65^{-0.015}_{-0.035}$ ($2.559^{-0.00059}_{-0.00138}$)	−0.15 (−0.0059)	−0.9 (−0.035)
Out of roundness of crankpins and journals	0.01 (0.0004), max	0.03 (0.0012)	
Taper of crankpins and journals			
Diameter of crankpins	$58^{-0.035}_{-0.055}$ ($2.283^{-0.00138}_{-0.00217}$)	−0.20 (−0.008)	
Fit of journals in main bearings	0.03 ~ 0.089 (0.0012 ~ 0.00350)	0.2 (0.0079) Uneven wear: 0.03 (0.0012)	

https://truckmanualshub.com/

(c) Grinding the crankshaft

The crankshaft journals and crankpins must be refinished to a dimension smaller by 0.100 to 0.120 mm (0.00394 to 0.00472 in.) than the undersize of bearings to be used.

Example: If 0.50-mm (0.01969-in.) undersize bearings are to be used:

The journals must be refinished to
65 – 0.5 – (0.100 ~ 0.120)
[2.55905 – 0.01969 – (0.00394 ~ 0.00472 in.)]

The crankpins must be refinished to
58 – 0.5 – (0.100 ~ 0.120)
[2.28346 – 0.01969 – (0.00394 ~ 0.00472 in.)]

When grinding the crankpins and journals, be sure to produce the same filler radius (shoulder radius) as the original one. Too small a radius of fillet will result in fatigue failure of crankshaft while too large a fillet radius is sure to cause the bearing to ride on the radius and thereby to result in a bearing failure. Be extremely careful not to grind off the radius part beyond the desired dimension. An over-ground radius part can be corrected only by grinding off the shoulder face and this, if effected, will present problems in obtaining a proper end clearance.

Also check the crankpins and journals for hardness. They should have a hardness of 620 or more in terms of Vickers Hardness Number. If necessary, re-harden the crankpins and journals, and check them for cracks by conducting a magnaflux (magnetic particle) test.

Specifications Unit: mm (in.)

Undersize	Journals to be refinished to
0.25 (0.0098)	$64.75^{-0.015}_{-0.035}$ ($2.54921^{-0.00059}_{-0.00138}$)
0.50 (0.0197)	$64.50^{-0.015}_{-0.035}$ ($2.53937^{-0.00059}_{-0.00138}$)
0.75 (0.0295)	$64.25^{-0.015}_{-0.035}$ ($2.52952^{-0.00059}_{-0.00138}$)

https://truckmanualshub.com/

(3) End play

Check the crankshaft for end play, as shown, by using a thickness gauge at the thrust bearing. If the limit is reached replace the thrust plate.

Specifications Unit: mm (in.)

Item	Standard	Repair limit
Journal width for thrust bearing	0.100~0.189 (0.00394~0.00744)	0.3 (0.012)

The end play is due to the difference between the width of thrust bearing and the dimension (A) indicated below:

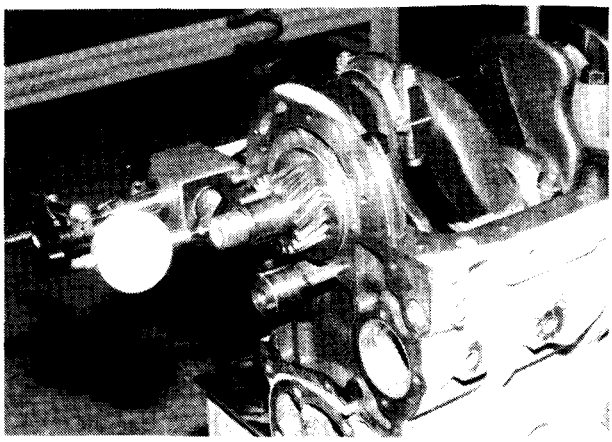

Checking crankshaft end play

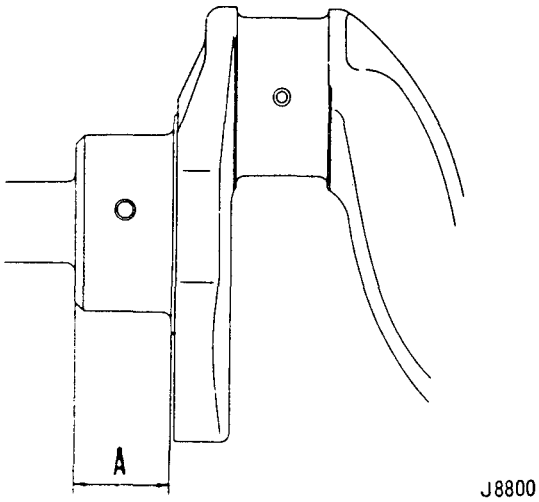

Journal width for thrust bearing

(4) Runout

Support the crankshaft as shown and roll it to measure its deflection with a dial gauge. "Distortion" is one-half of the deflection (dial gauge reading); if it exceeds the standard, reduce it by bending the crankshaft in a press.

Specifications Unit: mm (in.)

Item	Standard	Repair limit
Crankshaft runout	0.02 (0.0008), max	0.05 (0.0020)

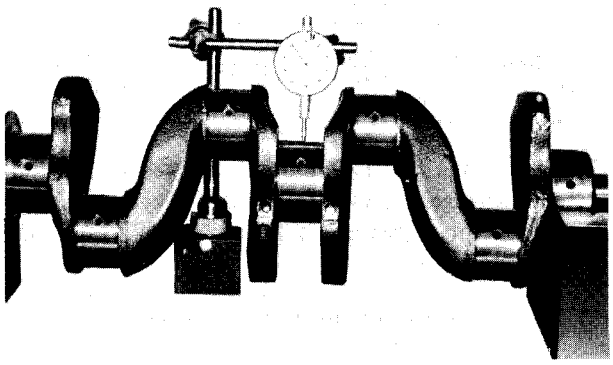

Checking crankshaft for runout

https://truckmanualshub.com/

(5) Main bearings

Inspect each main bearing for evidence of wiping or fatigue failure, for scratches by dirt particles imbedded and for improper seating on the bore (bearing cap). On the basis of findings, determine whether the bearing should be replaced or not.

Check each main bearing to be used in engine reassembly to see whether it will provide the specified radial clearance. This can be accomplished in this manner.

Install the main bearings on the crankcase, less the crankshaft, securing each bearing cap by tightening its bolts to 8.5 kg-m (61.5 lb-ft) and read the diameter in the two directions (A) (B), in indicated below. Mike the journal and, from these readings, compute the radial clearance.

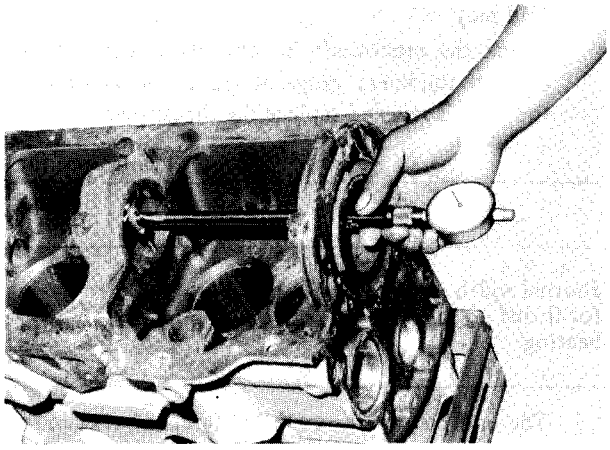

Measuring main bearing ID

Specifications Unit: mm (in.)

Item	Standard	Repair limit
Fit of main bearings on journals	0.03 ~ 0.089 ((0.0012 ~ 0.00350)	0.200 (0.00787)

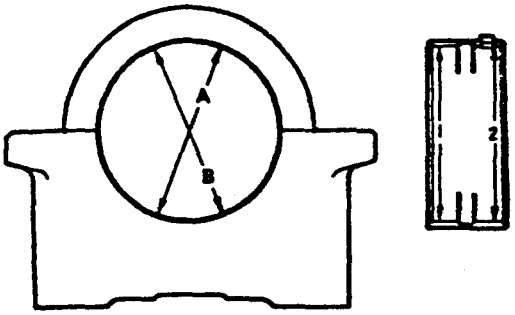

Positions for miking main bearing

Camshaft

(1) Check the camshaft end play as outlined for the timing gears. Where the end play exceeds the repair limit, replace the thrust plate with a new one.

Specifications Unit: mm (in.)

Item	Nominal value	Standard	Repair limit
Camshaft end play	5.0 (0.197)	0.05 ~ 0.112 (0.00197 ~ 0.00441)	0.3 (0.012)

(2) Inspect the camshaft journals for abnormal wear and damage; the camshaft must be replaced if any of its three journals is found in bad condition beyond repair.

(3) Mike each cam of the camshaft to read D_1 (cam height) and D_2 (diameter), and compute the difference between D_1 and D_2. If this difference is less than the service limit, replace the camshaft.

https://truckmanualshub.com/

Specifications

Unit: mm (in.)

Item		Standard	Service limit
Intake cam profile	$(D_1 - D_2)$ 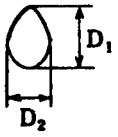	D_1: $46.916^{+0.1}_{-0.3}$ ($1.84708^{+0.00394}_{-0.01181}$) $D_1 - D_2 = 6.684$ (0.26315)	$D_1 - D_2 = 6.184$ (0.24346)
Exhaust cam profile		D_1: $45.944^{+0.1}_{-0.3}$ ($1.80882^{+0.00394}_{-0.01181}$) $D_1 - D_2 = 7.344$ (0.28913)	$D_1 - D_2 = 6.844$ (0.26945)

(4) Check the camshaft for runout. Straighten the camshaft in a press or replace it, as necessary.

Specifications

Unit: mm (in.)

Item	Standard	Repair limit
Camshaft runout	0.02 (0.0008), max.	0.05 (0.0020)

(5) Measure the diameter of each journal in two directions to compute the fit or clearance in the camshaft hole.

(6) Measure the ID of camshaft holes (bushings) and compute the fit on each journal. If the fit exceeds the repair limit, machine the holes and install bushings.

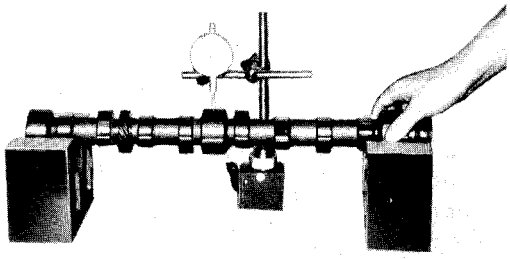

Checking camshaft runout

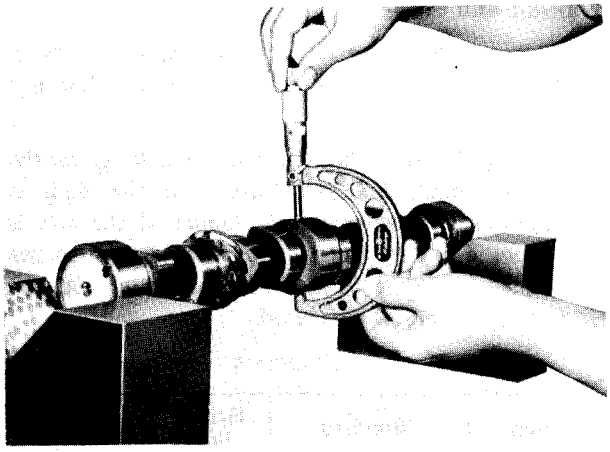

Miking camshaft journals

https://truckmanualshub.com/

Specifications Unit: mm (in.)

Item	Standard	Repair limit
Fit of camshaft journals in holes (bushings)	0.040 ~ 0.090 (0.00157 ~ 0.00354)	0.15 (0.0059)

Specifications Unit: mm (in.)

Item		Standard	Service limit
Camshaft bushing inside diameter	No.1, 2	$54H7\ ^{+0.030}_{0}$ ($2.126H7\ ^{+0.00118}_{0}$)	
	No.3	$53H7\ ^{+0.030}_{0}$ ($2.087H7\ ^{+0.00118}_{0}$)	
Camshaft journal outside diameter	No.1, 2	$54\ ^{-0.040}_{-0.060}$ ($2.126\ ^{-0.00157}_{-0.00236}$)	-0.1 (-0.004)
	No.3	$53\ ^{-0.040}_{-0.060}$ ($2.087\ ^{-0.00157}_{-0.00236}$)	

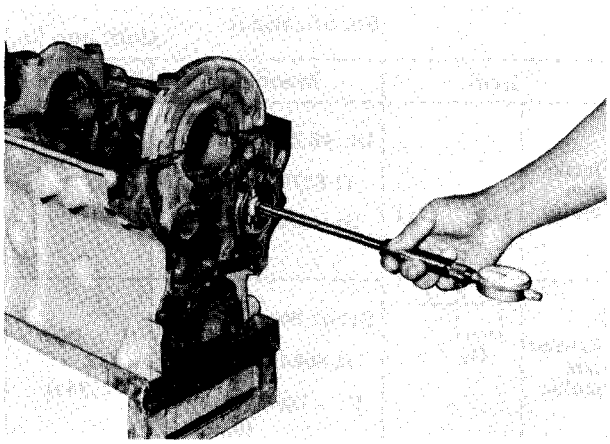

Miking camshaft hole ID

Tappets and tappet holes

(1) Inspect the riding face of each tappet for wear, contact pattern and crack. Replace defective tappets.

(2) Check the fit of the tappet in the hole against the repair limit, indicated below. If the limit is exceeded, then replace the tappet. If the hole is worn down so much as to provide an excessive radial clearance even with a new tappet, the crankcase must be replaced.

Specifications Unit: mm (in.)

Item	Standard	Repair limit	Service limit
Fit of holes on tappets	0.035 ~ 0.098 (0.00138 ~ 0.00386)	0.12 (0.0047)	+0.10 (hole) (+0.0039)
Tappet hole diameter	22 (0.87)		+0.10 (+0.0039)

https://truckmanualshub.com/

Flywheel

(1) Check the flywheel for scoring or a sign of overheating of the friction surface, cracks, or any other damage. When any of these damages are presented, repair or replace the flywheel.

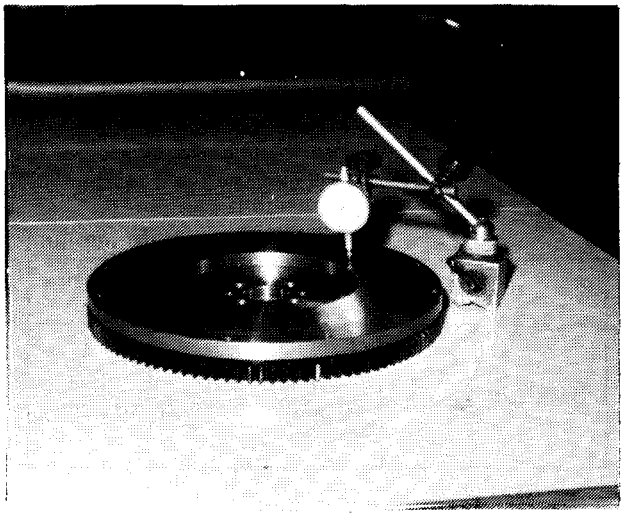

Checking flywheel friction surface for warpage

(2) Check the friction surface for warpage and/or face runout. When warpage or face runout exceeds the repair limit, repair or replace the flywheel. The face runout may be measured by means of a dial gauge with the flywheel installed on the crankshaft.

Specifications Unit: mm (in.)

Item	Standard	Repair limit
Warpage	0.15(0.0059), max.	0.5 (0.020)
Face runout	0.15(0.0059), max.	0.5 (0.020)

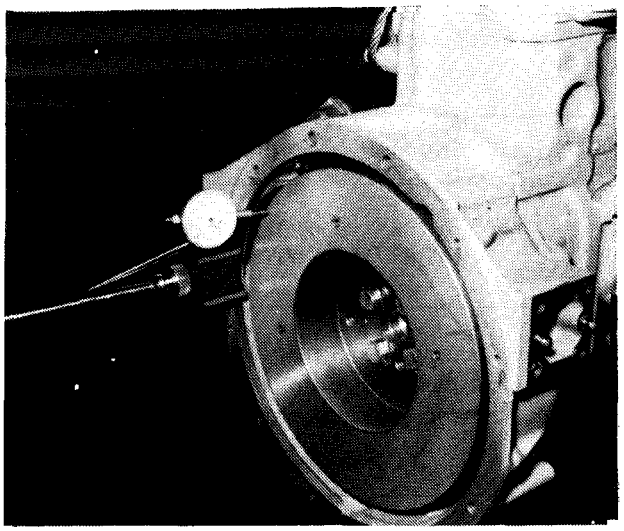

Checking flywheel friction surface for face runout

(3) Check the flywheel attaching bolt threads for condition and replace a damaged bolt, if any.

(4) Check the ring gear for condition and replace it if damaged.

(5) Clean the pilot bushing which is fitted into the center bore in the flywheel, and check it for condition. Replace the bushing if damaged.

Timing gear case and oil seal

(1) Check the timing gear case for any signs of cracks; also check the dowel pin holes for condition.

(2) Check the oil seal for wear, and replace it if it is excessively worn or otherwise defective. Check it more carefully if oil leakage from the crankshaft end is excessive.

https://truckmanualshub.com/

Timing gears

(1) Be sure that the backlash in each mesh is within the repair limit. If the limit is exceeded, reduce the backlash by replacing the worn gear. To measure backlash, use a thickness gauge: put the gauge squarely into between two gear teeth.

Specifications Unit: mm (in.)

Item	Standard	Repair limit
Backlash	0.05 ~ 0.20 (0.0020 ~ 0.0079)	0.25 (0.0098)

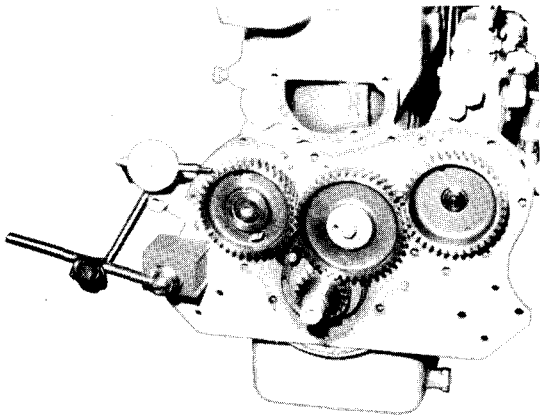

(2) Check the radial clearance between idler bushing and shaft by miking. Compute the clearance from the readings taken and, if the repair limit is exceeded, replace the bushing.

Specifications Unit: mm (in.)

Item	Nominal	Standard	Repair limit
Fit of shaft in idler bushing	36 (1.417)	0.025 ~ 0.075 (0.00098 ~ 0.00295)	0.1 (0.004)

(3) Check the idler end play with a thickness gauge. Replace the thrust plate to reduce the play if the thickness gauge reading exceeds the repair limit.

Specifications Unit: mm (in.)

Item	Standard	Repair limit
Idler end play	0.05 ~ 0.15 (0.0020 ~ 0.0059)	0.35 (0.0138)

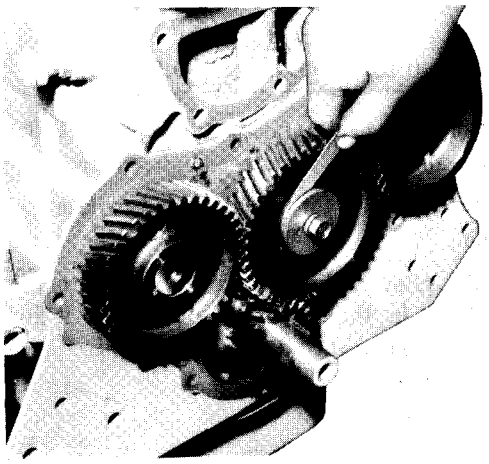

Checking idler end play

(4) If the idler shaft has to be replaced, use the idler shaft puller to remove it, as shown. When installing the replacement shaft, check to be sure that the oil holes are aligned.

(5) Inspect the timing gears as follows:

(a) Camshaft gear
Replace the gear if its teeth show evidence of flaking or excessive wear, or if its keyway is galled, worn or otherwise disfigured. Make sure that the camshaft gear as mounted on the camshaft has no more end play than 0.4 mm (0.0157 in.): to check the end play, use a dial gauge. If the reading exceeds the repair limit, replace the thrust plate. (Remember, this gear is shrink-fitted to the camshaft.)

https://truckmanualshub.com/

Specifications

Unit: mm (in.)

Item	Standard	Repair limit
Camshaft end play	0.05 ~ 0.112 (0.00197 ~ 0.00441)	0.3 (0.012)

(b) Injection pump drive gear
Inspect the gear teeth for damage and also the mounting bolt holes for malcondition. Replace the gear if found in badly damaged condition.

(c) Crankshaft gear
Replace the gear if its teeth show signs of defective tooth contact, or are excessively worn or otherwise defective.

(d) Idler gear
Inspect the idler gear teeth and, as necessary, replace the gear.

(6) Inspect the gear case for cracks, and for evidence of oil leakage at the part ahead of the crankshaft. A cracked case must be replaced. Inspect the crankshaft pulley, too, examining condition of surface in contact with the oil seal and checking the keyway and key for wear. Replace the pulley if found in defective condition.

REASSEMBLY

(1) Reassemble the connecting rod and piston as follows:

(a) Drive in bushing into connecting rod small end. The oil holes in bushing and rod must be aligned.

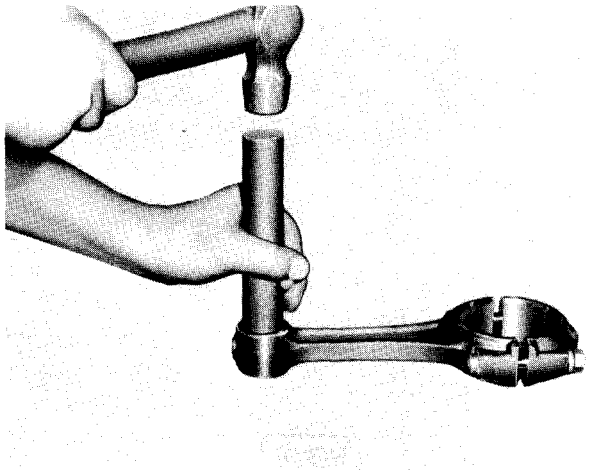

https://truckmanualshub.com/

(b) Heat piston with piston heater up to 100°C to 120°C (212°F to 248°F). Install small end of connecting rod into boss and connect piston and piston pin by slowly inserting piston pin into piston. Insert snap ring in one end in advance. Install connecting rod to piston so that the marking side of the connecting rod big end comes to the camshaft side.

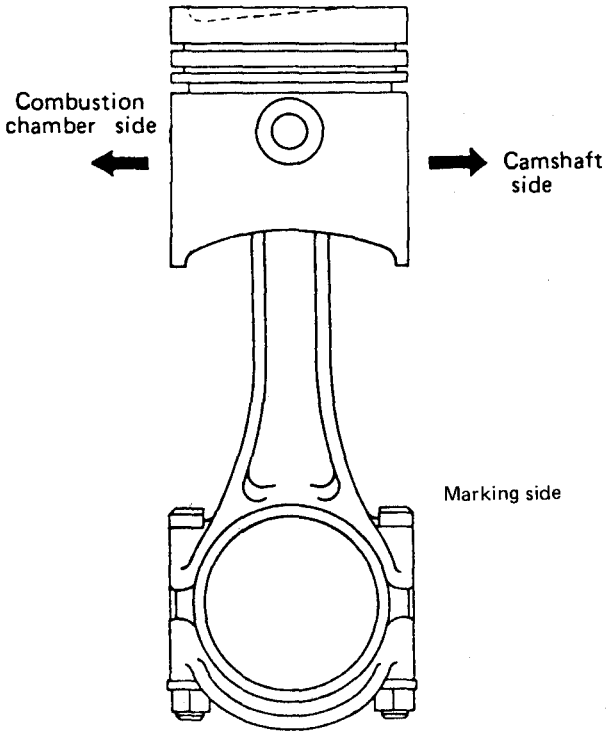

PISTON AND CONNECTING ROD ASSEMBLY

(c) Install compression rings and oil control ring as shown by using piston ring tool.

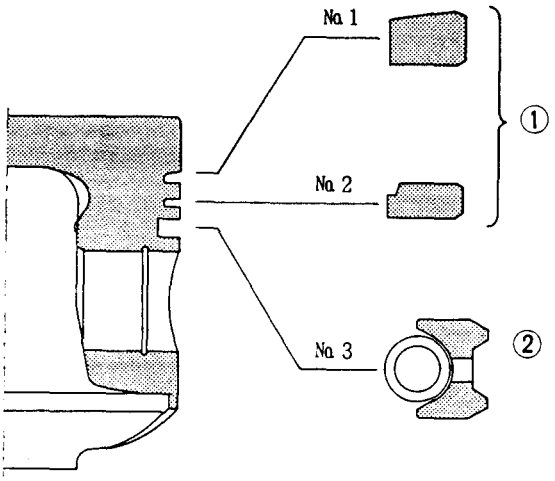

PISTON RINGS INSTALLED

1—Compression rings 2—Oil control ring

NOTE

No. 2 ring has "R" or "RN" mark on its top side. Be sure that this side is on top when the ring is in the groove.

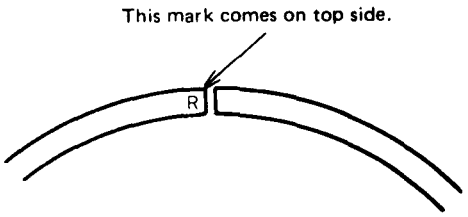

https://truckmanualshub.com/

(d) Install No. 3 oil control ring (1) and expander (2) as shown below.

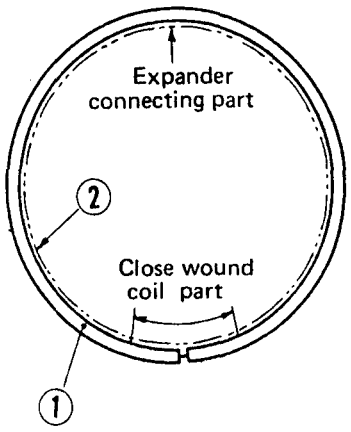

OIL CONTROL RING AND EXPANDER INSTALLED

(2) Reassemble the crankcase as follows:

(a) Drive three camshaft bushings (1) into camshaft holes in crankcase by using adapter (A).
(If the fit exceeds the repair limit, machine the holes and install bushings.)

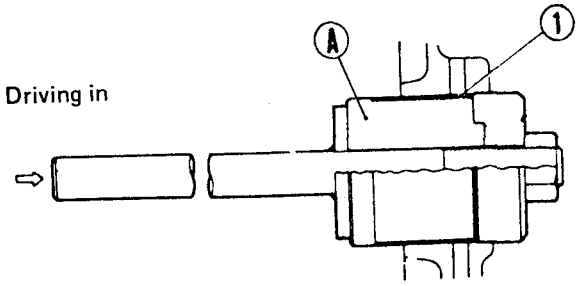

DRIVING IN CAMSHAFT BUSHING

(b) Drive idler shaft (2) into crankcase by using installer (B).

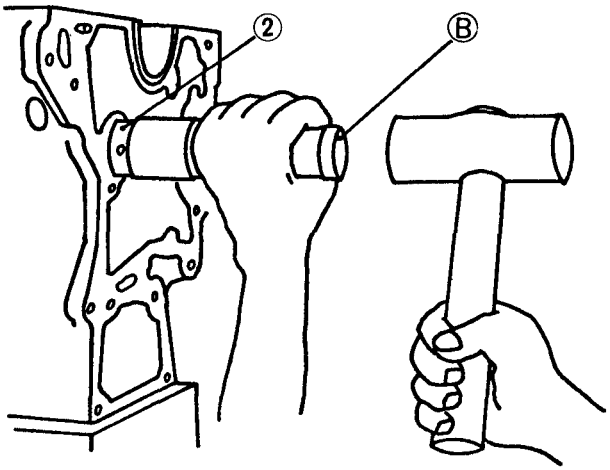

https://truckmanualshub.com/

(c) Lightly apply engine oil to the crankpins and install main bearings (upper). Securely engage the bearings with the crankpins.

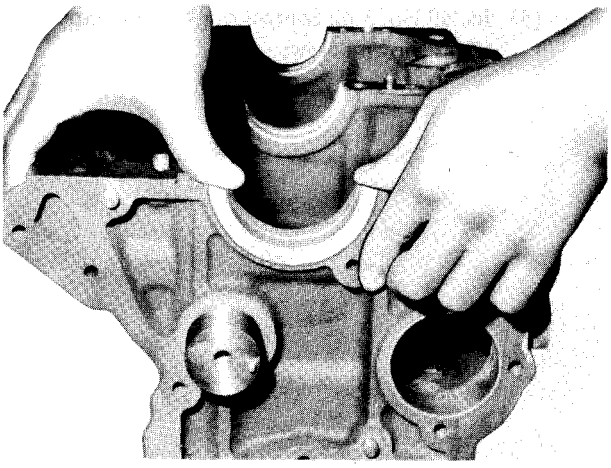

(3) Install the piston assembly as follows:

Install connecting rod bearing (upper) (1) into the big end of connecting rod. Apply engine oil in the internal surface of bearing and on the external periphery of piston. Position piston rings so that ring gaps are located 90°in respect with each other as shown, and then insert piston assembly (2) into crankcase. Alignment marks on the connecting rod must face the camshaft side. Put cap attaching bolts (3) into rod in advance. Insert piston assembly into crankcase by using piston guide (A).

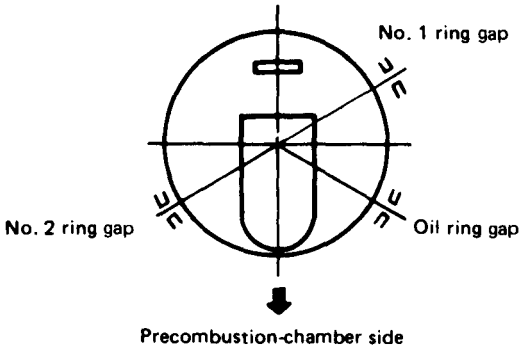

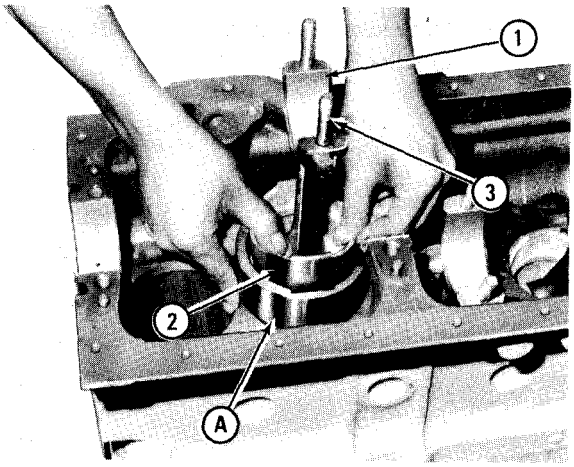

https://truckmanualshub.com/

(4) Install the crankshaft as follows:

(a) Install thrust plate (1) and two woodruff keys (2) to the crankshaft and drive in crankshaft gear (3) by using installer (A).

(b) Install crankshaft to the crankcase.

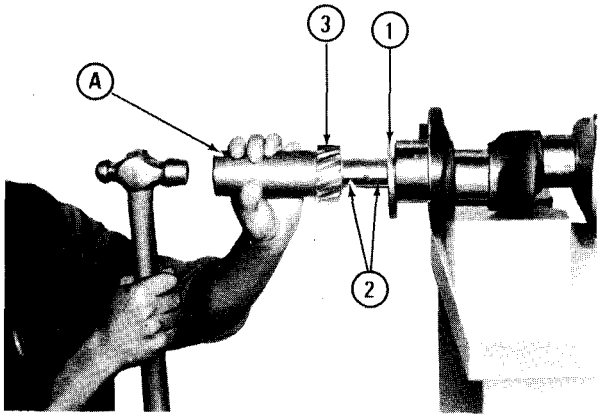

(5) Install the main bearing caps as follows:

(a) Apply engine oil to the crankshaft journals and pins, and install the crankshaft in the crankcase securely. Attach main bearing (lower) (1) to main bearing cap (2) (front, center and rear) and install the cap in place aligning it with dowel pin (A) of crankcase.

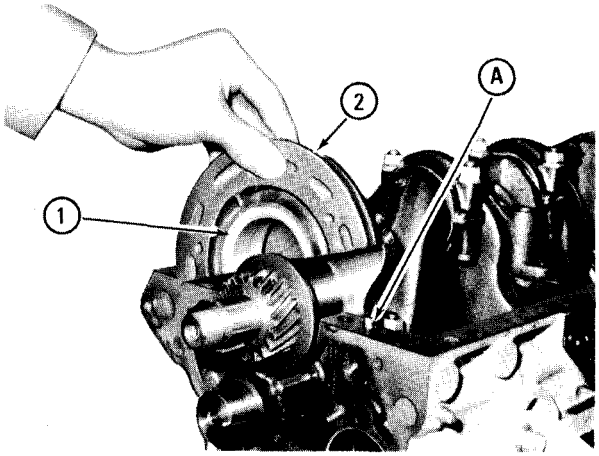

(b) Measure the crankshaft end play with a thickness gauge. Replace No.1 main bearing if the end play is out of specification. Tighten main bearing cap bolts (3) to a torque of 8.5 kgm (61.463 lb.ft).

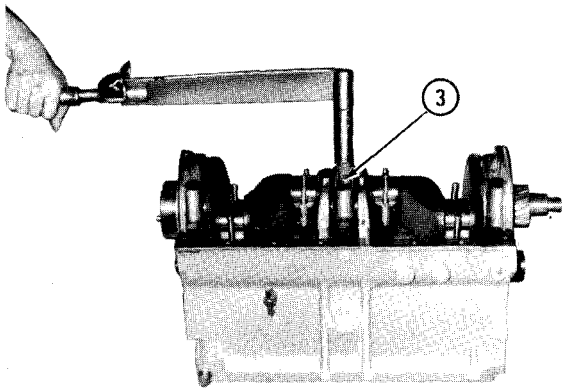

(6) Install the connecting rod bearing caps as follows:

(a) Install connecting rod bearing (lower) (2) into cap (1) and apply engine oil to the internal surface of the bearing, and then install the cap with the matching mark on the cap aligned with the mark (A) on the rod.

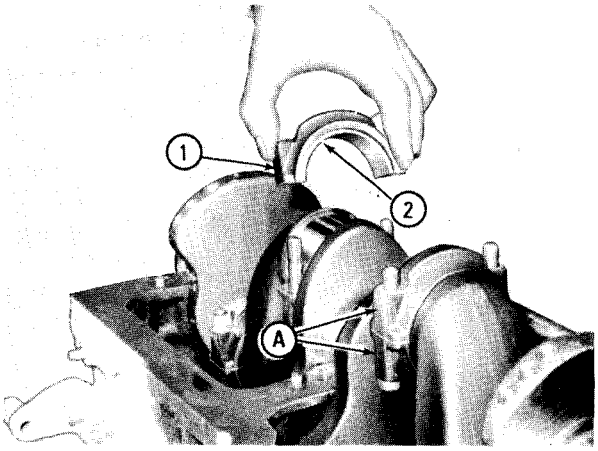

https://truckmanualshub.com/

(b) Tighten connecting rod clamping nuts to a torque of 5.5 kgm (39.771 lb.ft).

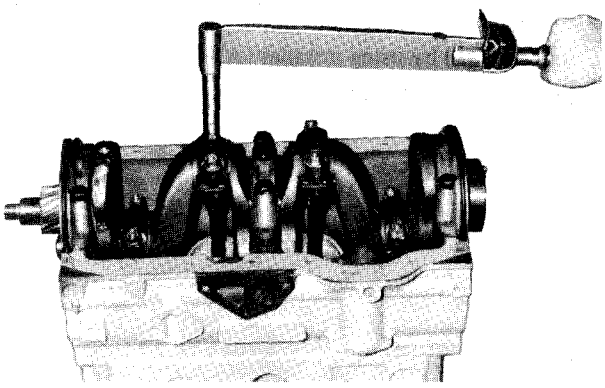

(7) Install the retainers and gaskets as follows:

(a) Install retainers (1) to the external peripheries of main bearing caps No. 1 and No. 3 with the flange facing the case inside.

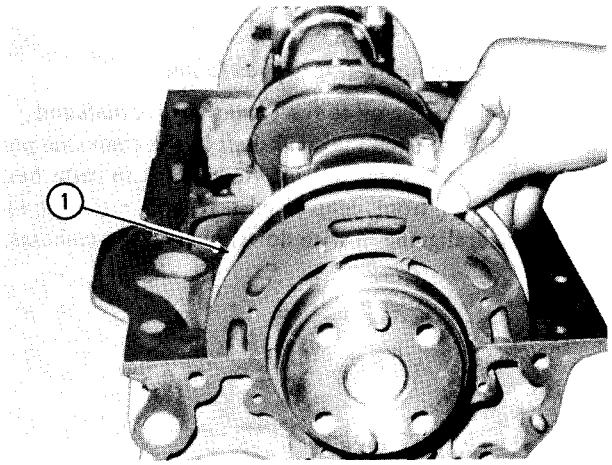

(b) Apply ThreeBond 1102 (adhesive) on both sides of oil pan gasket (2) and attach it to crankcase. Make sure that the gasket is completely attached in the grooves (A) in the caps.

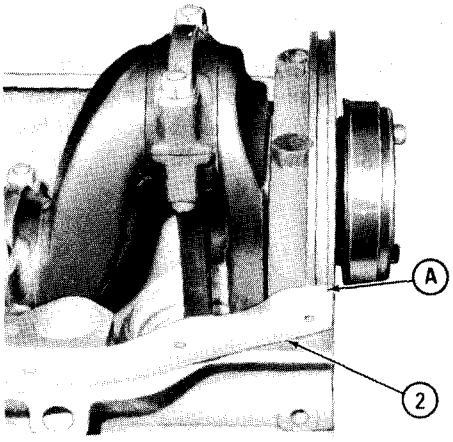

(c) Apply Atomjet on the both ends of rubber packing (3) and insert the packing into cap.

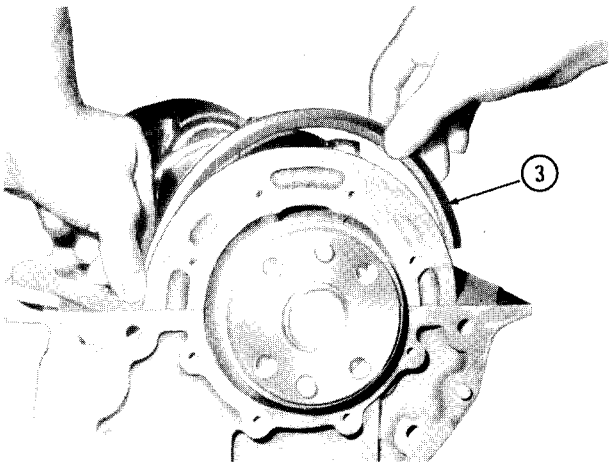

https://truckmanualshub.com/

(d) Install sleeve onto the rear end of crankshaft.
Apply clean engine oil to the internal surface of oil seal (1) and secure it with bolts (2) by using oil seal aligner.

(e) Apply Atomjet at the tip of bolts (3) as they fit into four through-bolt holes in the bearing cap. Tighten the bolts to a torque of 0.4 kgm (2.9 lb.ft).

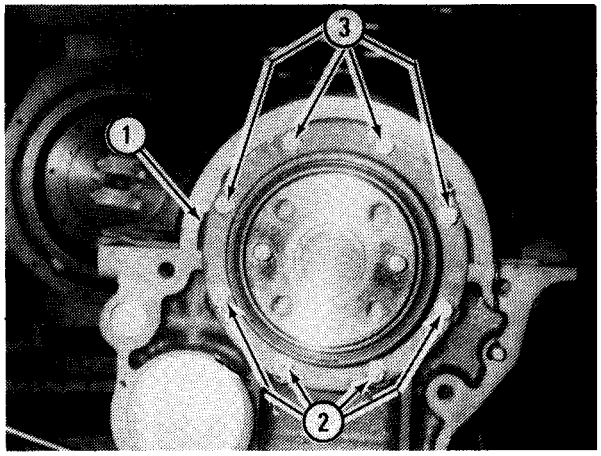

(8) Install the front plate as follows:

(a) Apply ThreeBond 1102 to the both sides of front plate packing and attach the packing to the front face of crankcase. Secure front plate (1) with injection pump installed with two bolts (2). The tightening torque of the bolts is 2.1 kgm (15.2 lb.ft).

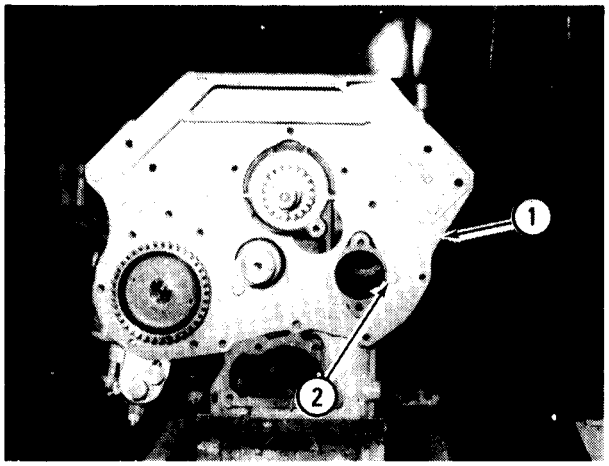

(b) Heat camshaft gear to 150°C to 180°C and fit it to shaft.

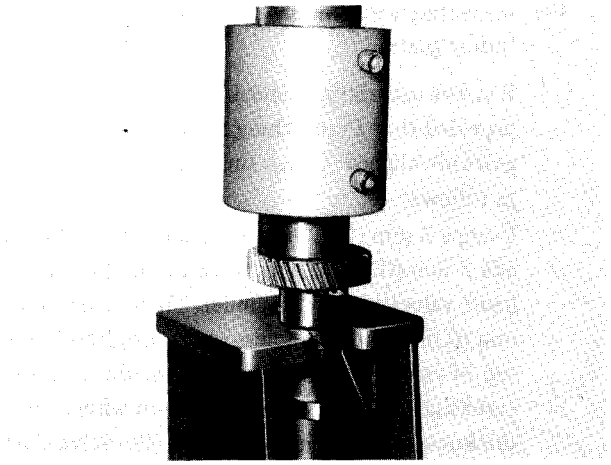

(c) Slowly insert camshaft into crankcase.

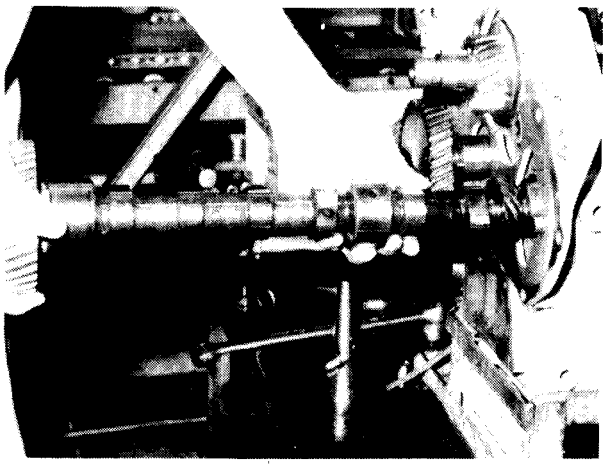

https://truckmanualshub.com/

(d) Tighten camshaft thrust plate to crankcase by using machining holes in camshaft gear.

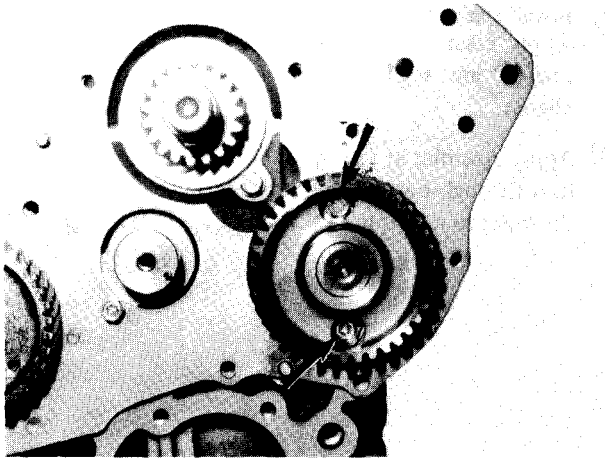

(9) Install the idler gear as follows:

(a) Install idler gear by matching the timing mark on each gear.

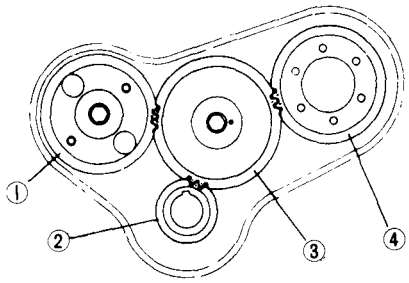

Timing gear match marks meeting each other

1-Camshaft gear
2-Crankshaft gear
3-Idler gear
4-Injection pump gear

(b) Inspecting valve timing after installation of timing gears

It is not necessary to check the valve timing, provided that all matching marks on the timing gears are aligned. Check the timing for verification as follows:

Using a 3 mm (0.12 in.) thick smooth steel plate, add 3 mm (0.12 in.) clearance to intake and exhaust valves of No. 1 cylinder. Then, insert a 0.05 mm (0.0020 in.) thickness gauge into between the top of valve cap and rocker, and slowly turn the crankshaft, trying to find a position where the thickness gauge is firmly gripped (the valve starts opening) and a position where the gauge is just ungripped (the valve starts closing). Check to make sure that these positions coincide with the angular positions shown in the valve timing diagram with 3 mm (0.12 in.) clearance added to the valves.

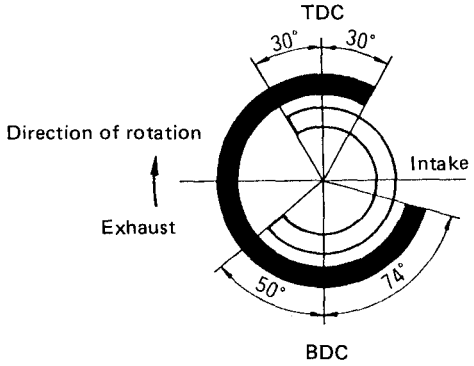

Valve timing diagram

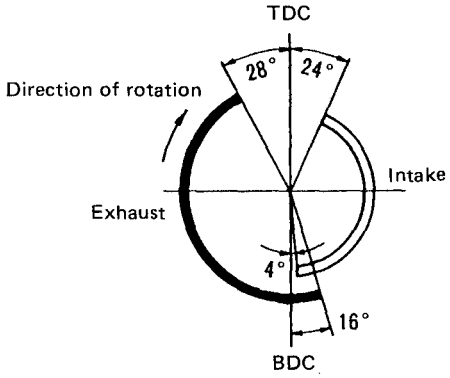

Valve timing diagram with 3 mm (0.12 in.) clearance added to valves

https://truckmanualshub.com/

(10) Install the oil pump assembly as follows:

(a) Install oil pump into the oil pump installation hole in the crankcase and mesh the pump drive gear with camshaft pump drive gear.

(b) Tighten bolt and secure the oil pump.

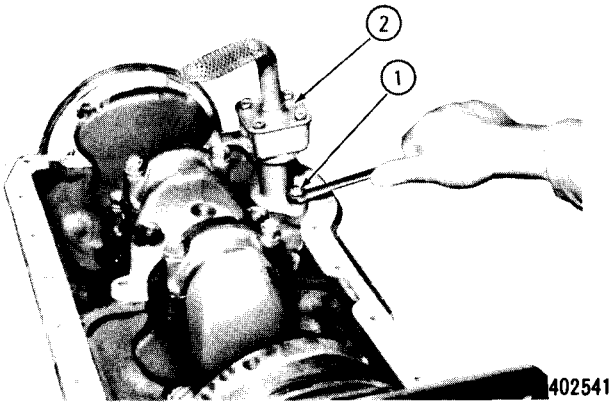

(11) Install the oil pan.

(12) Install the rear plate and flywheel as follows:

(a) Drive in dowel pin (1), and secure flywheel (2) complete with pilot bearing in place with bolts (4) and lock washers (3).

(b) Bend lock washers properly to lock bolts.

Unit: kg-m (lb-ft)

Flywheel bolt tightening torque	8.5 ± 0.5 (61.5 ± 3.6)

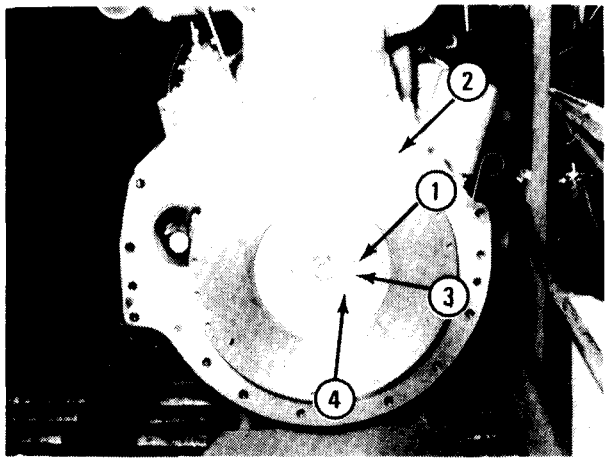

(13) Reassemble the cylinder head as follows:

(a) Drive valve guide (2) into cylinder head (1) as shown.

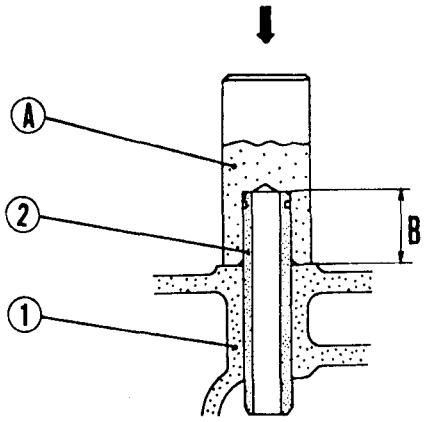

1—Cylinder head 2—Valve guide A—Valve guide installer B—As-installed length: 18mm(0.709 in)

https://truckmanualshub.com/

Install stem seal (3) to the valve guide. Completely fit the breast of the seal in the guide groove.

(b) Install valve (4), valve spring (5) and retainer (6) in this order. Compress the spring with a valve lifter to install valve cotter (7) securely. Install caps (8) when installing rocker shaft assembly.

(c) Install thermostat, nozzle holders, glow plugs and exhaust manifold in the cylinder head.

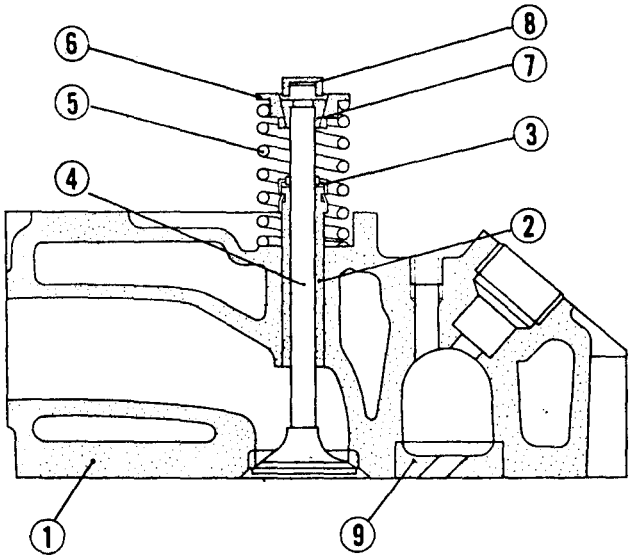

CYLINDER HEAD ASSEMBLY

1—Cylinder head 2—Valve guide 3—Stem seal 4—Valve 5—Valve spring 6—Retainer 7—Valve cotter 8—Valve cap 9—Combustion chamber jet

(14) Install the cylinder head assembly as follows:

(a) Place the gasket (1) to crankcase (2) and install cylinder head (3). Use two guide bolts (4) to prevent the gasket from moving when placing cylinder head to the crankcase.

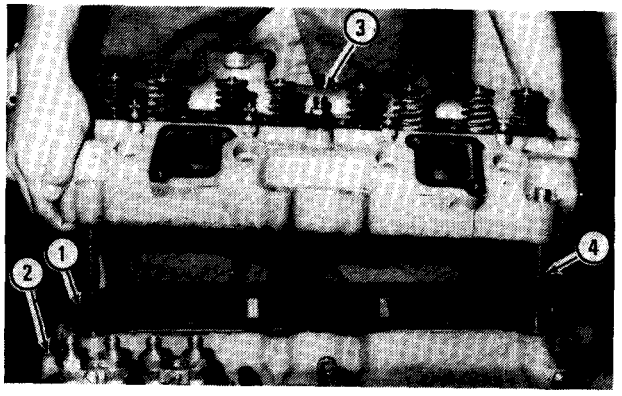

CAUTION

Do not apply any sealant to the gasket.

(b) Tighten the cylinder head bolts to a torque of 12 kg-m (86.8 lb·ft) at exhaust side and at intake side in the sequence shown below.

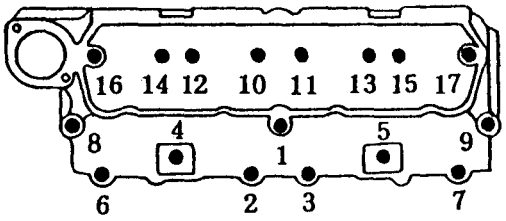

402507

https://truckmanualshub.com/

(15) Install the push rods and rocker shafts as follows:

(a) Insert the push rods (1) into the tappets.

(b) Install rocker shaft assembly as follows:

(c) Insert "O" rings (3) into oil pipe (2) and connect the oil pipe to the front and rear rocker shafts. Then temporarily install each bracket to the cylinder head.

(d) Temporarily tighten two or three threads on the oil pipe union nut and connector.

(e) Secure the preinstalled brackets by tightening four bolts at the front and rear sides uniformly to a torque of 1.5 kg-m (10.85 lb-ft). Tighten the long bolts (4) first.

(f) Connect oil pipe to connector securely. Then adjust the valve clearance to 0.25 mm (0.01 in.) for both intake and exhaust valves in cold setting.

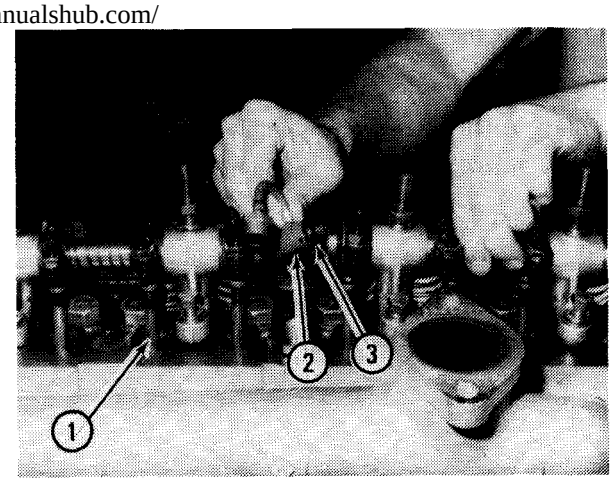

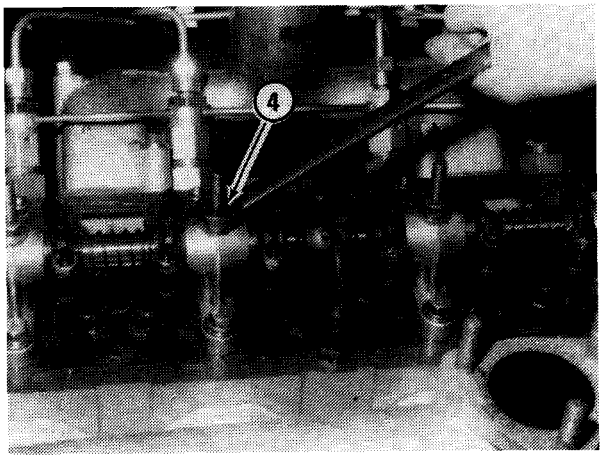

(16) Adjust valve clearance as follows:

The valve clearance specification for this engine is 0.25 mm (0.0098 in.) for both intake and exhaust valves. This value assumes that the engine is at normal temperature, there being no temperature difference throughout the body of the engine. The checking and adjusting procedure is as follows:

(a) Rotate the crankshaft slowly to bring the piston in No. 1 cylinder to Top Dead Center (TDC). This can be accomplished by observing rocker arms of No. 4 cylinder. As you turn the crankshaft, exhaust-valve rocker arm of this cylinder rises: stop turning the crankshaft just when intake-valve rocker arm begins to go down after exhaust valve rocker arm has come up all the way. Under this condition, adjust valve clearance in the usual manner on intake and exhaust valves of No. 1 cylinder, intake valve of No. 2 cylinder, and exhaust valve of No. 3 cylinder.

(b) Turn the crankshaft one complete rotation (360°), and hold it there. Adjust the clearance on intake and exhaust valves of No. 4 cylinder, exhaust valve of No. 2 cylinder, and intake valve of No. 3 cylinder.

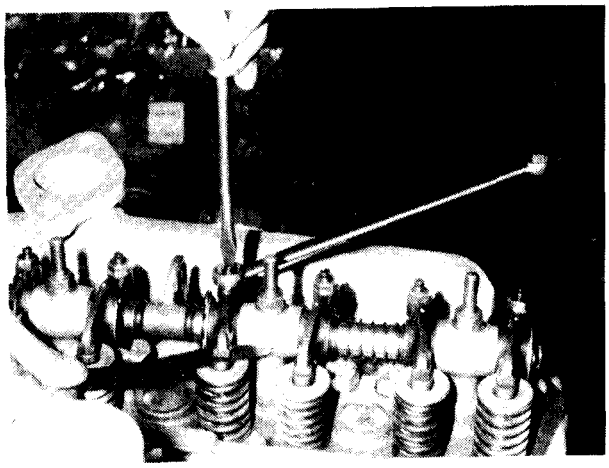

https://truckmanualshub.com/

(17) Install the rocker case.

(18) Install the water pump assembly as follows:

(a) Install water pump assembly.

(b) Install bypass hose and oil pipe.

(19) Install the timing gear case (1) to the front plate properly. Use copper packing for bolts (2) to prevent oil leakage.

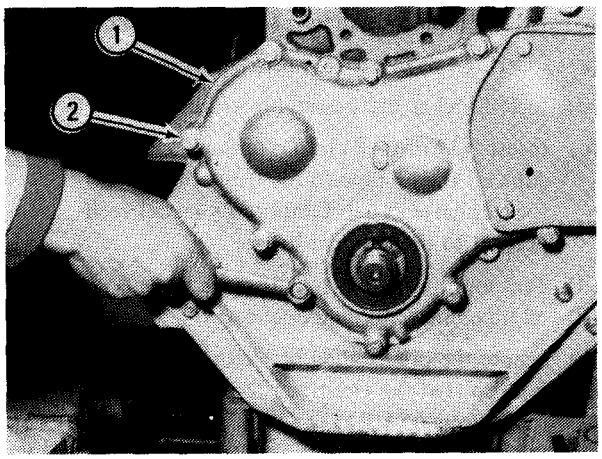

(20) Install the water pump pulley and crankshaft as follows:

(a) Drive in water pump pulley (1) and crankshaft pulley (2) by using installers (A) and (B).

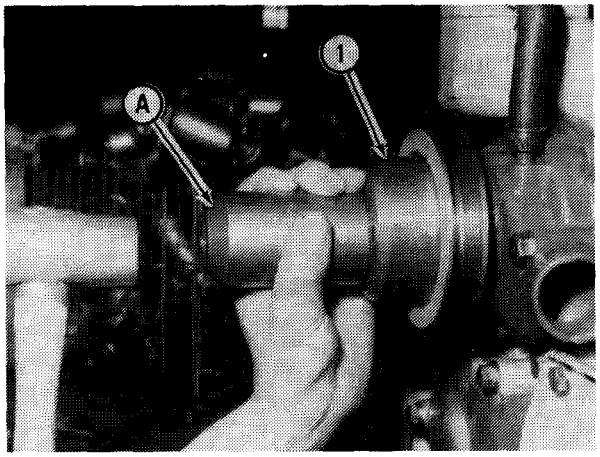

(b) After driving in the crankshaft pulley, install washer and tighten nut. Then bend the lock washer to lock the nut.

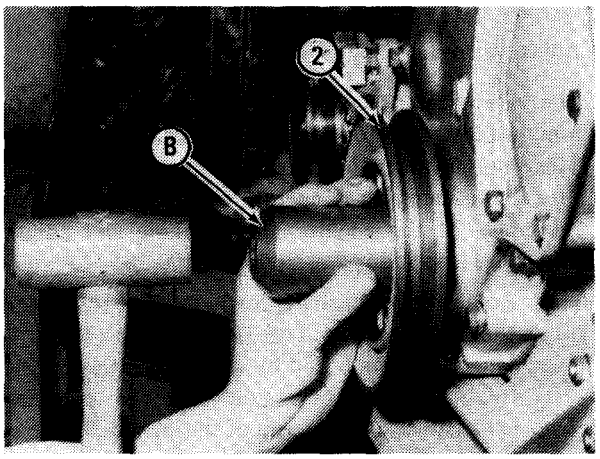

(21) Install the alternator.

(22) Install the fan belt as follows:

(a) Attach fan belt to the pulley.

(b) Adjust the fan belt tension in such a way to have a slack of 12 mm (1/2 in.)

(23) Install the starting motor.

(24) Install the oil filter.

https://truckmanualshub.com/

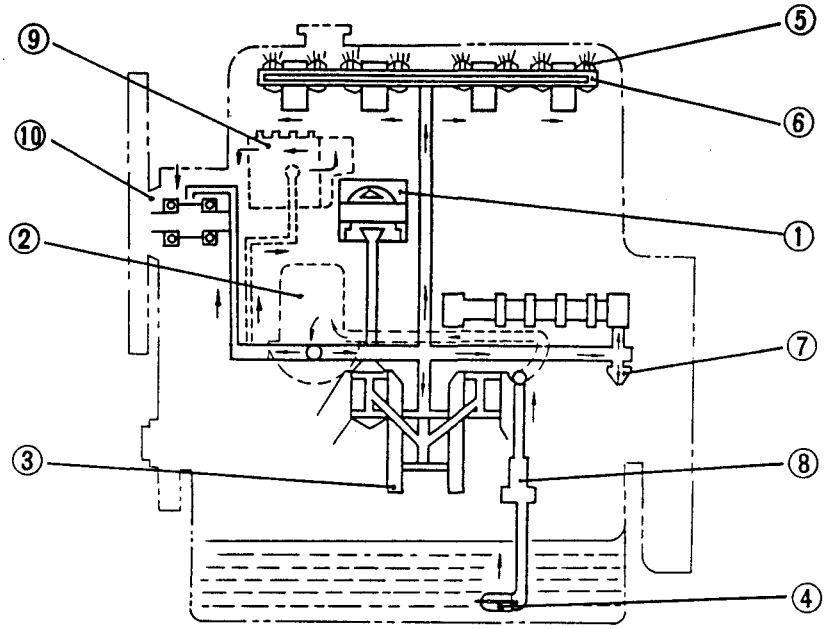

1-Piston
2-Oil filter
3-Crankshaft
4-Oil strainer
5-Rocker arm
6-Rocker shaft
7-Oil pressure alarm switch
8-Oil pump
9-Fuel injection pump
10-Water pump

Lubrication oil circuit

1. Lube oil circulation

A trochoid rotary pump draws oil in the oil pan and delivers it under pressure to a full-flow oil filter, from which the cleaned oil is forwarded into the oil gallery inside the crankcase. From the gallery, the oil is distributed to the various parts of the engine. The pump is driven from the camshaft.

The oil filter is of a cartridge type containing a replaceable element through which the oil is forced.

2. Oil pump

The pump is located inside the crankcase at its right-hand rear portion. Its main shaft is driven from the skew gear formed of the camshaft.

2-1 Disassembly

(1) Loosen bolts securing oil strainer (2) and separate the strainer from oil pump case.

(2) Loosen bolts (3) securing oil pump cover (4) and separate the cover from oil pump case.

(3) To facilitate removal of outer rotor (5), turn the pump case upside down

(4) Drive out pump drive gear taper pin (6) and remove drive gear (7) from main shaft (8). Pull out the main shaft from pump case.

(5) Drive out inner rotor pin (9) and separate inner rotoro (10) from main shaft.

https://truckmanualshub.com/

2-2 Inspection

(1) Running clearance between outer rotor and inner rotor

Using a thickness gauge, check the clearance at various positions. If the reading exceeds the service limit, replace both rotors.

Specifications Unit: mm (in.)

Item	Standard	Service limit
Clearance between inner rotor and outer rotor	0.013 ~ 0.15 (0.00051 ~ 0.0059)	0.25 (0.0098)

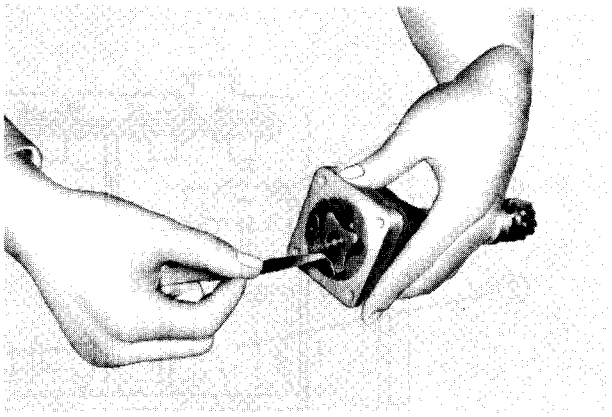

Checking rotor-to-rotor clearance

(2) Sliding clearance between rotors and cover

This clearance is required to be not greater than 0.15 mm (0.00591 in.). If this limit is exceeded, grind off the mating face of the body to reduce the clearance.

Specifications Unit: mm (in.)

Item	Standard	Repair limit
Clearance between rotors and cover	0.04 ~ 0.09 (0.0016 ~ 0.0035)	0.15 (0.0059)

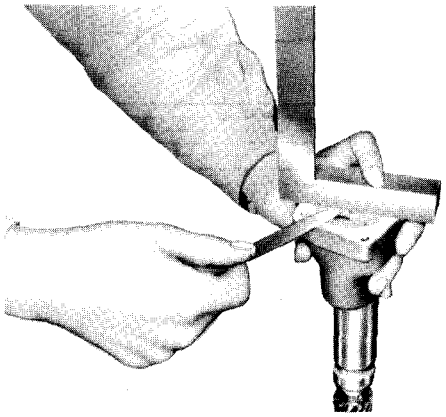

Checking rotor-to-cover clearance

(3) Radial clearance between outer rotor and pump body

Insert a thickness gauge into between outer rotor and body. If the clearance checked is greater than the limit, replace the worn part.

Specifications Unit: mm (in.)

Item	Standard	Repair limit
Clearance of outer rotor in body	0.2 ~ 0.275 (0.0079 ~ 0.01083	0.50 (0.020)

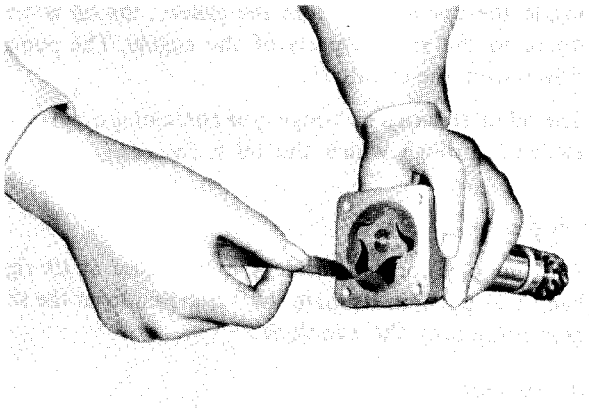

Checking rotor-to-body clearance

(4) Rotor shaft diameter

Inspect the shaft for damage, and check it for wear by miking. Determine the available clearance of the shaft in the pump body from the mike readings; if the service limit in terms of clearance value is exceeded or if the shaft is in badly damaged condition, replacement is necessary.

Specifications Unit: mm (in.)

Item	Standard	Service limit
Rotor shaft diameter	$13^{0}_{-0.015}$ ($0.5118^{0}_{-0.00059}$)	
Shaft to body clearance	0.032 ~ 0.074 (0.00126 ~ 0.00291)	0.15 (0.0059)

https://truckmanualshub.com/

2-3 Reassembly

(1) Install inner rotor to pump shaft with pin.

(2) Place pump shaft in pump case. Install pump drive gear to the shaft with pin.

(3) Place outer rotor in pump case, and install pump case cover complete with gasket and oil strainer.

NOTES

a) If pump shaft or drive gear has been replaced, a new pin hole must be made by drilling through the gear mounted on the shaft.

b) After putting on the cover, check to be sure that the match marks are correctly indexed. If the cover is in a wrong position relative to the case, the pump will not draw in oil. Tighten the bolts after checking to be sure that the marks are correctly matched.

c) After reassembling the pump complete with its strainer, immerse the strainer in a pool of oil and run the drive gear by hand to make sure that the pump is capable of sucking oil in.

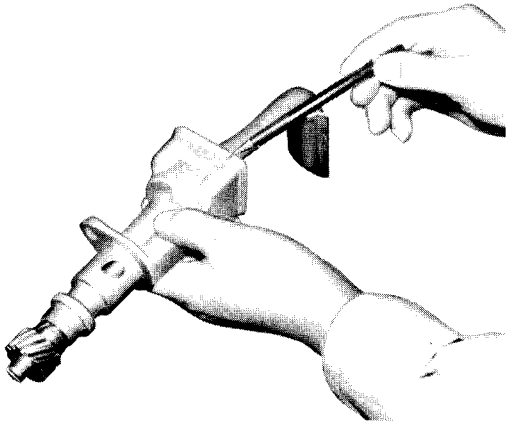

Fitting cover to case by matching marks

3. Oil filter

The filter is mounted on the right-hand side of crankcase at its center part. The oil bypss valve for letting the oil bypass the element is actually a relief valve located in the center portion of the element. This valve is set to open when the differential pressure across the element rises to 1.0 ± 0.2 kg/cm² (14.2 ± 2.8 psi); when the valve opens, the oil flows directly from inlet side to outlet side. The filter element must be serviced regularly or before the element becomes so dirty as to actuate this bypass valve.

The oil filter has a built-in relief valve operating in response to the oil pump discharge pressure. This valve starts relieving when the pressure rises to 3 ± 0.2 kg/cm² (43 ± 2.8 psi), thereby bleeding the excess oil to the oil pan and limiting the pressure of oil reaching the engine oil gallery to a constant level.

3-1 Disassembly

(1) Remove filter (1) and relief valve (2) from filter bracket (3).

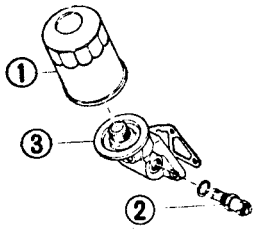

3-2 Inspection

The filtering element is prescribed to be replaced after each 300 hours of operation or whenever its filtering performance is noted to have deteriorated. Inspect the element to see if it has any signs of rupture or fissure; and if so, replace it by a new one. Visually examine the filter bracket for distortion and cracks.

https://truckmanualshub.com/

COOLING SYSTEM

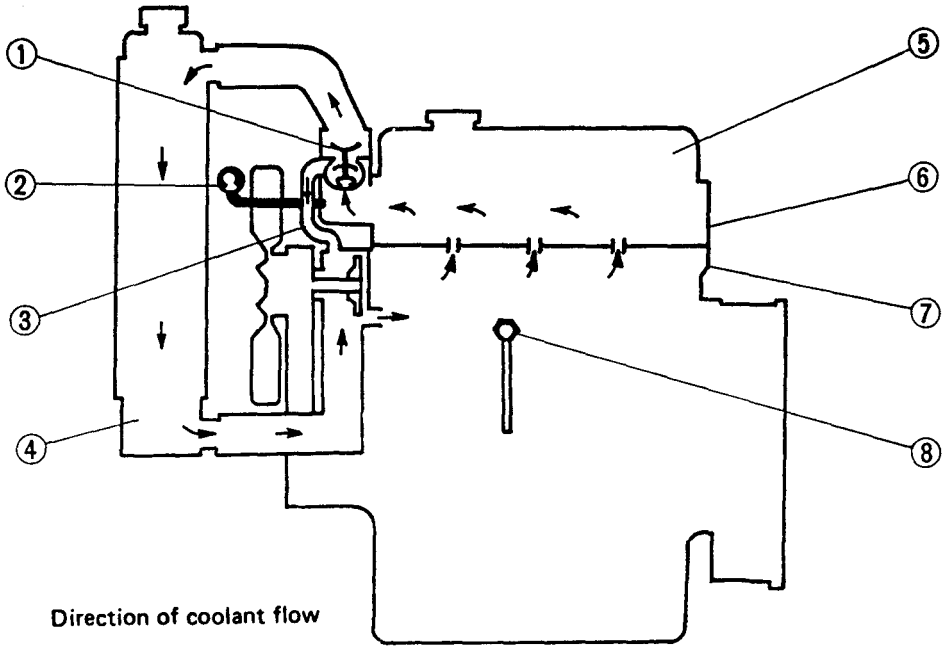

1-Thermostat
2-Water temperature
3-Bypass hose
4-Radiator
5-Water jacket
6-Cylinder head
7-Crankcase
8-Drain plug

1. Coolant circuit

Referring to the diagram, above, the coolant is set in forced recirculation by the water pump, which is a centrifugal pump driven by cooling-fan belt. The pump draws coolant from the lower tank section of radiator ④ and forwards it to the water inlet of crankcase ⑦.

As the rising coolant temperature reaches 76.5°C (169.7°F), the thermostat valve begins to open increasingly wide and the coolant begins to flow to radiator ④ at a rising rate of flow, with a corresponding decreases in the amount of coolant being bypassed. As the temperature reaches 90°C (194°F), the valve becomes full open, shutting off the bypass passage.

2. Thermostat

The thermostat is of wax type, designed to start opening its valve at 76.5 ± 2°C (169.7 ± 3.6°F) of rising temperature and opens it fully at 90°C (194°F), lifting it off the seat by 9 mm (0.35 in.).

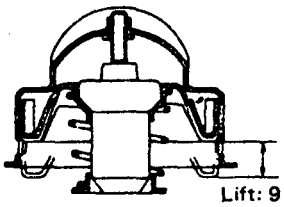

Lift: 9 mm (0.35 in.)

2-1 Disassembly

(1) Remove thermostat cover (2) by loosening bolts (1).

(2) Take out thermostat (3).

https://truckmanualshub.com/

2-2 Inspection

Clean the thermostat, place it in a hot-water tub, and test it for thermostatic action by heating the tub to raise the water temperature. The valve should start opening at 76.5 ± 2°C (169.7 ± 3.6°F) and be fully open at 90 ± 2°C (194 ± 3.6°F) with a valve lift of not less than 9 mm (0.35 in.). A thermostat whose valve fails to operate in this manner in the test must be replaced with a new one.

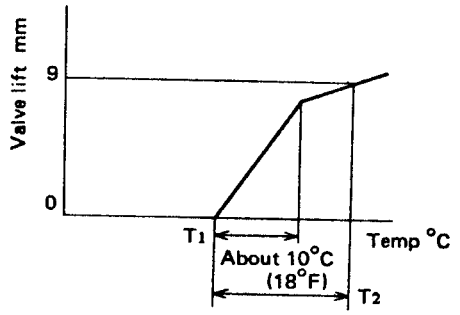

T1 : Temperature [76.5° ± 2°C (169.7° ± 3.6°F)] that makes valve start opening

T2 : Temperature [90° ± 2°C (194° ± 3.6°F)] that makes valve fully open with a lift of not less than 9 mm (0.35 in.)

Thermostat performance curve

3. Water pump

The water pump is of centrifugal type. Its bearings are lubricated by engine oil fed from the main gallery within the crankcase. The impeller is threadedly mounted on the pump shaft.

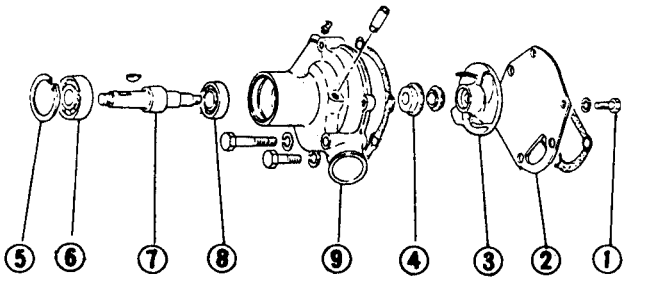

1-Bolt
2-Cover
3-Impeller
4-Unit seal
5-Snap ring
6-Bearing
7-Shaft
8-Bearing
9-Pump case

3-1 Disassembly

(1) Remove pump cover (2) by loosening cover attaching bolts (1).

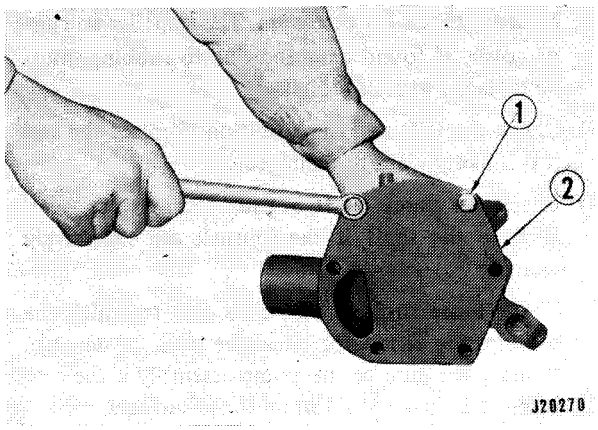

(2) Support the shaft with a stand to remove impeller (3).

NOTE

Impeller is threadedly mounted on shaft. The thread is of right-hand screw.

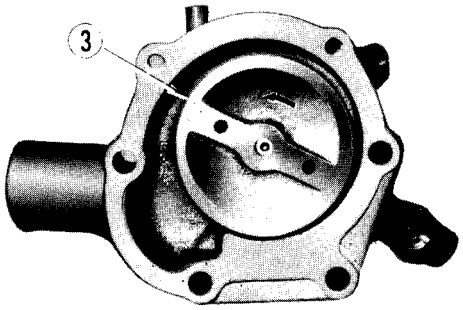

https://truckmanualshub.com/

(3) Remove snap ring (6) from the water pump shaft.

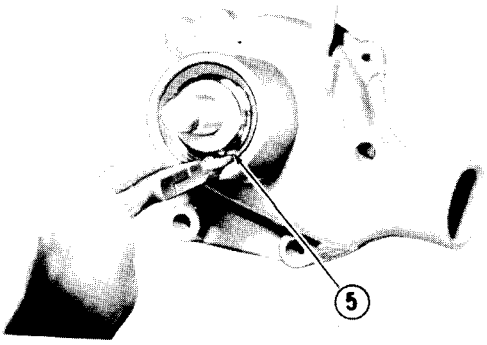

(4) Pull shaft (8) off the pulley side on pump case and remove bearings (7) and (9) from the shaft.

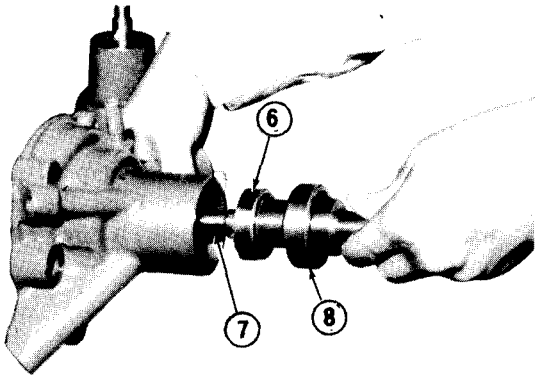

3-2 Inspection

(1) Examine the pump operation by slowly rotating it. If the pump is erratic in rotation, replace the bearings with new ones.

(2) Visually check the impeller for corrosion or breakage. Replace a defective impeller. Also check the impeller for signs of rubbing. If such rubbing is evident, check for the cause. The impeller and case or cover, if found damaged due to rubbing, must be replaced with new ones.

(3) Check the unit seal for condition. Replace the seal if it is badly worn or damaged.

(4) Check the pump shaft bearing journals for wear. Replace the shaft if the journals are excessively worn.

(5) Check those surfaces of pump case to which the bearings are fitted for excessive wear or damage. Replace the case or the pump assembly if the case is found in bad condition on those surfaces.

NOTE

Upon assembling the water pump, turn it by means of the pulley, making sure that the pump rotation is smooth without signs of binding.

https://truckmanualshub.com/

3-3 Reassembly

(1) Install bearings (2) on pump shaft (1) and install the shaft in pump case (3).

(2) Install snap ring (4) in case on pulley side.

(3) Install unit seal (5) in impeller (6) and secure the impeller to the shaft.

(4) Install cover (7).

(5) Rotate the shaft to check to see that the impeller does not interfere with cover.

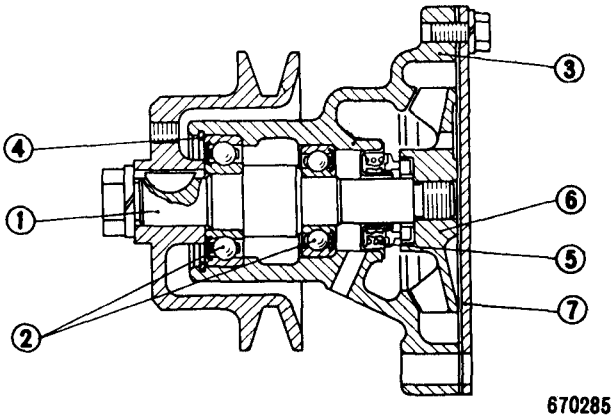

https://truckmanualshub.com/

FUEL SYSTEM

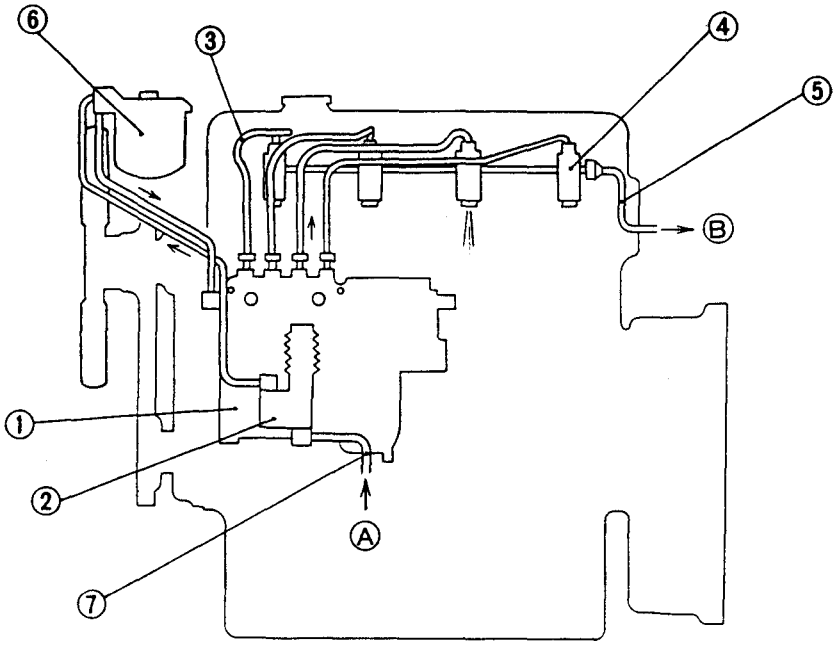

1-Air vent plug
2-Fuel filter
3-Air vent plug
4-Air vent plug
5-Fuel injection pump
6-Fuel feed pump
7-Fuel injection pipe
8-Fuel injection nozzle
9-Fuel leak-off pipe
10-Fuel pipe

Fuel circuit

1. Fuel circuit

The fuel feed pump, mounted on the fuel injection pump body and forming a part of the injection pump unit, draws fuel from the fuel tank and delivers it through the fuel filter to the gallery inside the injection pump.

The injection pump is of individual plunger type, consisting of four plunger pump elements which are driven from a common camshaft. Each pump element delivers, intermittently, a shot of high-pressure fuel oil to its injection nozzle through its own injection pipe. These shots are synchronized to the diesel cycle in each cylinder and timed by the setting of the timing mechanism.

"Injection quantity," or the amount of fuel delivered uniformly by the four pump elements to the engine through their injection nozzles, is controlled from the accelerator through a linkage and automatically adjusted by the injection pump governor on the basis of engine speed and load requirements.

The governor built in the injection pump body is a mechanical all-speed governor, which limits the maximum and minimum engine speeds and actuates the control rack of the injection pump to maintain a constant engine speed under varying load condition at a speed level proportional to the position of the accelerator.

https://truckmanualshub.com/

2. Priming the fuel system

(1) Unlock the priming pump by turning its knob counterclockwise.

(2) Loosen the air vent plugs, and operate the pump until overflowing fuel no longer carries air bubbles.

(3) Tighten the air vent plugs while pressing the pump knob downward.

(4) Lock the pump by turning the knob clockwise while pressing it downward.

3. Adjusting the injection timing

The engine with RUV governor

(1) Alignment marks (line marks) are provided on the pump body and flange plate. Make sure that these marks are lined up. With the pump gear and idler properly positioned in their meshed condition inside the timing gear case, that is, the match marks on these gears indexed to each other, mount the injection pump unit on the engine front plate and secure it by tightening the mounting bolts.

(2) Install fuel feed pipes and lube oil pipe, and reconnect all but No. 1 fuel injection pipe.

(3) Crank the engine slowly until the plunger in No. 1 pumping element comes to the position for "beginning of injection." Check to be sure that the timing mark on crank pulley is matched to the pointer on the timing gear case; if not, adjust the mounted position of the pump in the following manner:

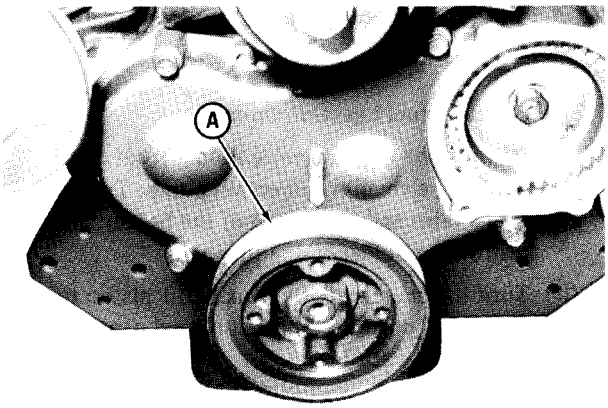

A-Timing mark on crankshaft pulley (TDC)

NOTE

Tilting the pump toward the engine advances the timing, and vice versa. Refer to the graduation marks provided on the edge face of the mounting flange: one division is equivalent to 6 deg. of crank angle.

(4) Having made sure that all timing marks are matched as prescribed and that the beginning of injection is correctly timed (in reference to No. 1 cylinder), reconnect the injection pipe (No. 1). Prime the fuel circuit in the manner previously described: make sure that no air remains trapped in any part of the circuit.

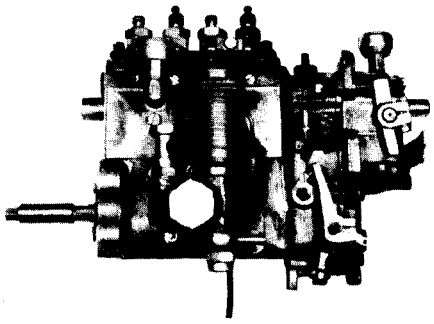

https://truckmanualshub.com/

The engine with RSV governor

The injection timing for each model of the engine varies according to its output, speed and specification. Be sure to verify the timing by referring to the specifications of each model.

(1) Bringing No. 1 piston to top dead center on compression stroke

(a) Using turning bar (30691-11800) at the crankshaft pulley, turn the crankshaft in normal direction (clockwise as viewed from the front side of the engine).

(b) Stop cranking the engine when the timing mark "0" on the crankshaft pulley is aligned with the pointer.

(c) Move the intake and exhaust valve rocker arms for the No. 1 cylinder up and down to make sure that they are not being pushed up by their push-rods.

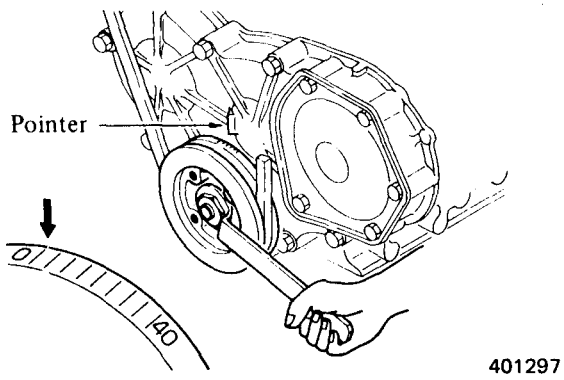

(2) Inspecting fuel injection timing

(a) Remove the delivery valve holder from No. 1 pumping element of injection pump. Take delivery valve and spring out of the holder, and restore the holder to the pump.

(b) Turn the crankshaft to bring No. 1 piston to about 60° position before top dead center on compression stroke.

(c) While operating the priming pump to allow fuel to flow from the delivery valve holder, crank the engine in normal direction. Reduce cranking speed when the fuel just starts to stop flowing. Stop cranking when the fuel stops flowing.

(d) Make sure that the timing mark on the crankshaft pulley is aligned with the pointer.

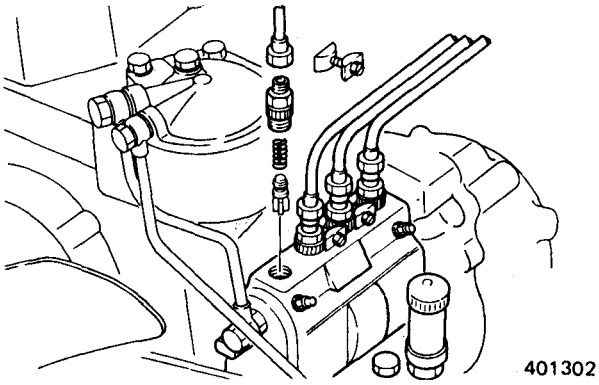

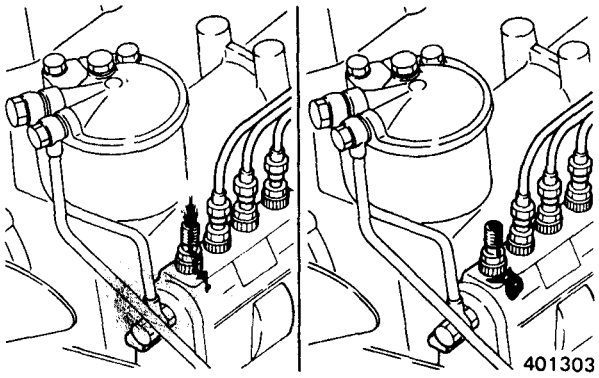

(3) Adjusting fuel injection timing

(a) If the timing is retarded, tilt the injection pump toward the crankcase. If it is advanced, tilt the pump away from the crankcase.

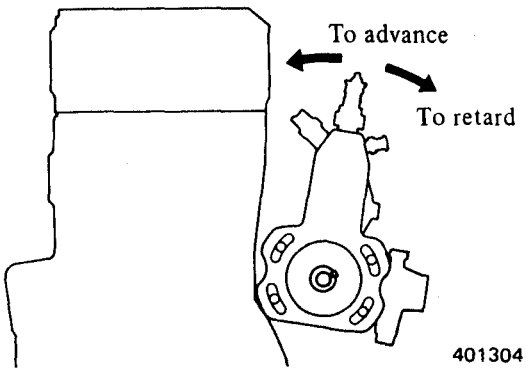

https://truckmanualshub.com/

(b) One graduation of the scale on the injection pump coupling changes the timing by 6° in terms of crank angle.

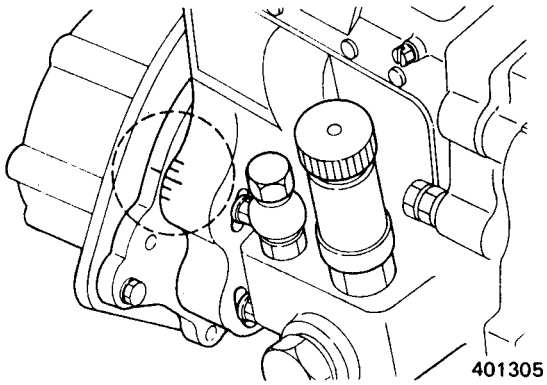

4. Fuel filter

The fuel filter uses a special paper element having high filtering performance and large capacity.

4-1 Inspection

(1) Filter case and cover
Check for cracks, distortion or other damage and also for stripped threads. Replace the case and cover if found in defective condition.

(2) Connector bolts and plug
Check for defective threads, replacing them if damaged.

(3) Gaskets
Discard gaskets removed in disassembly. Be sure to use new gaskets in each reassembly.

NOTE

Do not wash the element for re-use.

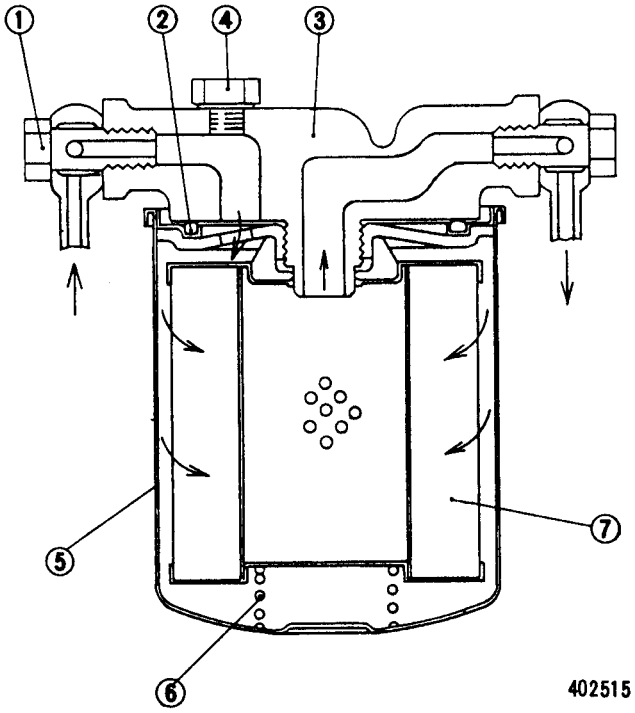

1-Bolt
2-Gasket
3-Cover
4-Air vent plug
5-Case
6-Drain plug
7-Spring
8-Bolt
9-Spring seat
10-Element

https://truckmanualshub.com/

5. Injection nozzles

The injection nozzle provides a means of spraying into the precombustion chamber the fuel oil delivered under pressure from the injection pump. It sprays oil out in a conical pattern consisting of finely atomized droplets of oil. The mating surfaces of the nozzle holder body, distance piece and nozzle are precision-finished to form an oil-tightness.

The injection pressure adjustment may be made by means of adjusting washer. Increasing the thickness of the washer will increase the spring tension and, hence, the injection pressure, and vice versa.

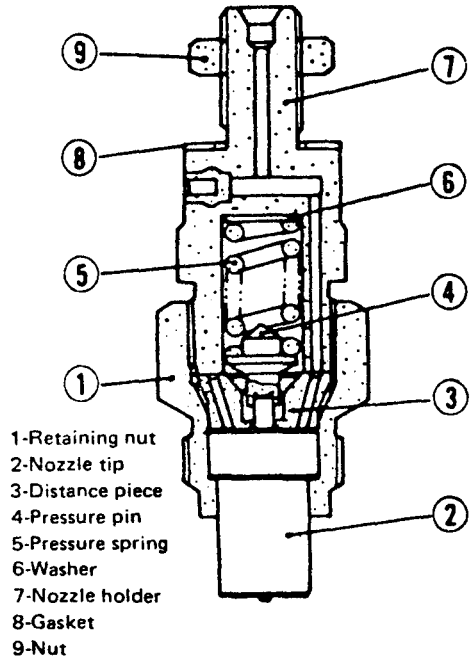

5-1 Removal

(1) Remove injection pipe connectors (1) to disconnect injection pipes (2).

(2) Disconnect leak-off pipe (3) (4) connecting nozzles by loosening nuts (5).

(3) Using a wrench, remove nozzles from cylinder head as shown. Also remove nozzle packings with a wire or screw driver. Replace a defective packing, if any.

(4) Install injection nozzles in the reverse order of removal. Tighten nozzle holders to a torque of 5 kg-m (36.2 lb-ft).

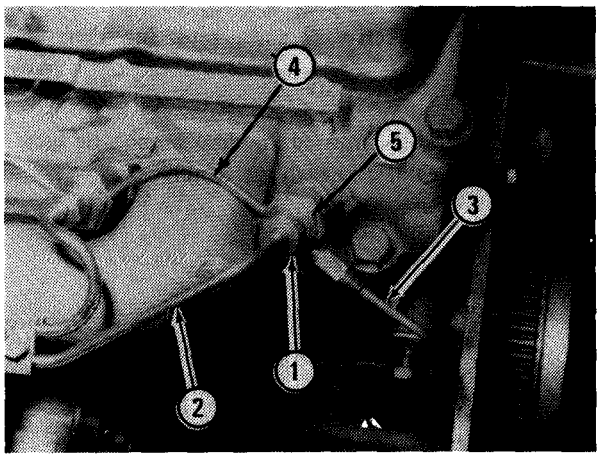

NOTE

Cover the injection pipe and cylinder head openings to prevent entry of dust or foreign matter after removing the nozzles.

5-2 Disassembly

(1) Before disassembling injection nozzles, check the nozzle injection beginning pressure, the spray pattern and adjust if necessary. Carry out oil-tightness test and repair if necessary.
Exercise care not to damage the points of needle valves during disassembly, washing and assembly of nozzles.

(2) Hold retaining nut (1) in a vice and loosen nozzle holder (2) with a wrench.

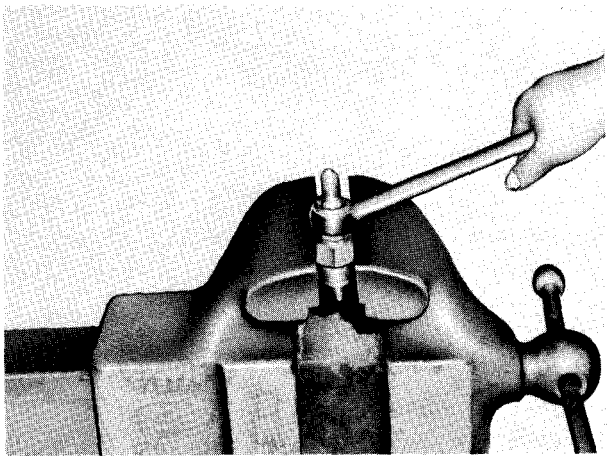

https://truckmanualshub.com/

(3) Remove nozzle tip (3), distance piece (4), pressure pin (5), spring (6) and washer (7) from nozzle holder.

(4) All the parts disassembled should be washed in clean kerosene and dried with compressed air. Decarbon the nozzles removed with a wooden scraper and clean them thoroughly in gasoline.

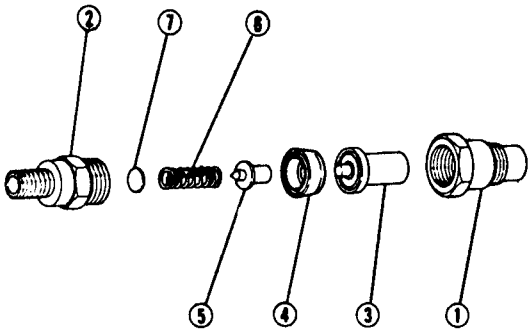

5-3 Inspection

(1) Needle valve and nozzle body

(a) Immerse needle valve and nozzle body in a pool of clean kerosene, insert the valve into the body, and move the valve back and forth to be sure that the sliding contact is smooth without evidencing any excessive clearance. The injection nozzle as a whole must be replaced if the fit is found defective.

(b) Visually examine the nozzle body with a magnifying glass having a power of 4 or 5.

(c) Inspect the needle valve for distortion or damage at its seating part and for wear of its end face in contact with the pressure pin.

(d) Poor seating contact may be corrected, if the defective condition is not advanced too far, by lapping the valve against the seat with a coat of clean lube oil applied to the seating faces. If this does not help, the injection nozzle must be replaced.

(2) Nozzle holder and distance piece

Check the fit between nozzle holder and distance piece. Determine the quality of the fit from contact patterns obtained with the use of red lead paste: defective fit will be evidenced by an abnormally high rate of return oil (leak-off) flow.

(3) Pressure spring and pressure pin

(a) Replace any pressure spring broken, cracked or otherwise defective, or out of square. Inspect each spring for these defects.

(b) Inspect each pressure pin for wear at its end faces, one for pressure spring and the other for needle valve.

(4) Leak-off pipe packing

If the packing is found in deteriorated condition, replace it.

https://truckmanualshub.com/

5-4 Testing and adjustment

(1) Injection pressure

The pressure at which the needle valve unseats itself against the force of the pressure spring is referred to as "valve opening pressure" or "beginning-of-injection pressure," but will be called here "injection pressure' for short. The value of this pressure is specified; it is checked and adjusted as follows:

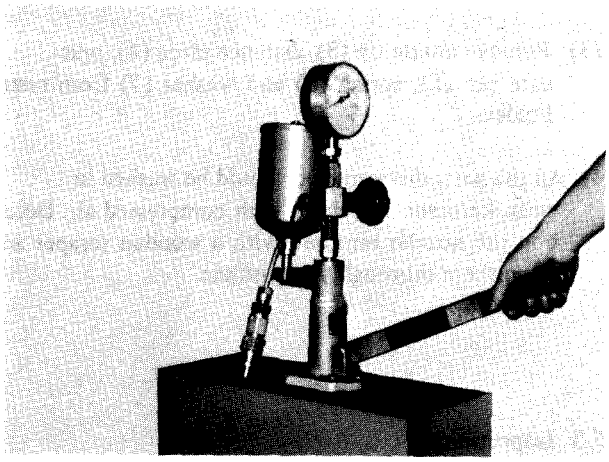

(a) Install the injection nozzle in the nozzle tester, and operate the manual pumping handle of the tester several strokes to prime the nozzle.

(b) Move the lever up and down slowly, completing each up-and-down cycle in about a second, to pressurize the injection nozzle, while observing the indication of the test pressure gauge. As the nozzle begins to spray, the indicating pointer of the gauge being deflected will start perceptively oscillating: read the pressure right then as the injection pressure.

Specifications Unit: kg/cm² (psi)

Item	Standard	Repair limit
Injection pressure	120^{+10}_{0} ($1706.4^{+142.2}_{0}$)	110 (1564.2), minimum

(c) If the reading taken is below the limit, increase the thickness of the shim used on the pressure spring. Increasing the shim thickness by 1 mm (0.04 in.) raises the injection pressure by about 10 kg/cm² (142 psi). Adjusting shim stock for this purpose is available in 20 sizes, from 1.0 mm (0.0394 in.) up to 1.95 mm (0.0768 in.) in increments of 0.05 mm (0.0020 in.) each.

(2) Spray pattern

The injection nozzles used in the present engine are of throttle type. Some throttling action takes place when the needle valve begins to unseat, thereby limiting the amount of fuel being sprayed out during the initial stage of each fuel injection. Thus, each slug of fuel sprayed out may be regarded as consisting of two parts: initial throttled spray and terminating main spray.

When tested on the nozzle tester, the injection nozzle can be made to produce these two kinds of spray for visual inspection. Initial throttled spray comes about when the tester lever is operated at a rate of 60 cycles per minute (up and down in one second); terminating main spray occurs when the lever is operated rapidly at a rate of, say, 4 to 6 cycles per second.

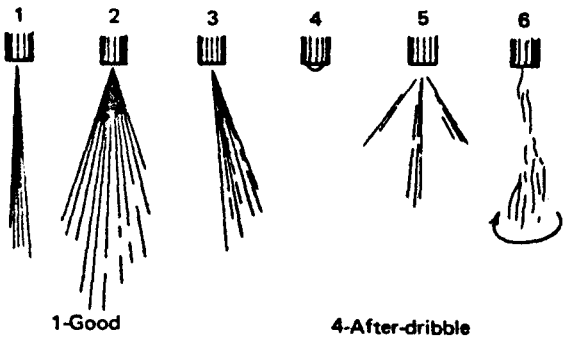

1-Good
2-Spray cone too large
3-Off-center spray
4-After-dribble
5-Fissured spray
6-Whirling spray

Possible patterns of spray

https://truckmanualshub.com/

(a) Initial throttled spray

When the nozzle is producing only this spray, atomization is generally poor and the pattern is rather straight than conical, there being more or less after-dribble, that is, fuel dribbling after injection. All these are due to the fact that the fuel being injected is being throttled by the pintle protruding from the valve.

While the nozzle is making this spray, see if the needle valve chatters in synchronism with the cyclic motion of the lever; if so, then the needle valve is free from any sticking or hitching tendency and, if not, the nozzle and needle valve must be cleaned by washing and re-tested.

Off-center spray or directionally erratic spray, if noted, should be taken to mean that the injection nozzle needs thorough cleaning.

(b) Terminating main spray

With the tester lever operated at a rate of 4 to 6 cycles per second, the initial throttle spray is hardly visible. The spray under this condition may be regarded as main spray.

The main spray should be a good straight cone, consisting of finely atomized fuel particles without any large droplets, and should terminate with no dribble at the tip, not to mention of any fuel dripping.

(3) Seating tightness

An injection nozzle tested and adjusted as above, and found to produce a good spray pattern may be re-used in the engine provided that it passes this final test – seating tightness test.

With the injection nozzle mounted on the nozzle tester, raise the pressure slowly to 100 or 110 kg/cm^2 (1422 or 1564 psi) (without exceeding the set pressure of 120 kg/cm^2 (1706 psi), so that the needle valve will not unseat). Hold the pressure and observe the nozzle tip: there should be no evidence of fuel oozing out to form a dribble. If such evidence is noted, then the contacting faces of the needle valve and seat must be repaired by lapping in the manner already suggested or the injection nozzle as a whole must be replaced.

https://truckmanualshub.com/

5-5 Reassembly

Assemble injection nozzles in the reverse order of disassembly. Be sure to assemble nozzle assembly in kerosene.

When using new needle vavles, remove sealing cover (synthetic resin) from the valves and wash them in kerosene to remove rust and corrosion inhibitor sprayed over them by sliding the valves in the nozzles immersed in kerosene.

NOTE

If the needle valve and nozzle proper have to be replaced, be sure to wash the replacement parts in the pool of kerosine after removing their protective film of plastic: wash off the rust-preventive oil from the nozzle proper by stroking the needle valve back and forth in the needle valve stem bore.

6. Fuel feed pump

The camshaft in the bottom section of the injection pump has an eccentric cam besides the cams for actuating the individual pump elements. By this eccentric cam, the pumping plunger of the feed pump is actuated to draw fuel through the inlet strainer and forward it to the injection pump.

A means of manually priming the fuel circuit is provided in this pump. It consists of a plunger and a knob. Pushing the knob in rapid repetition sends the fuel forward. The fuel circuit from the feed pump through the fuel filter to the injection pump can be primed in this manner. This feature is utilized also in bleeding air out of the fuel circuit.

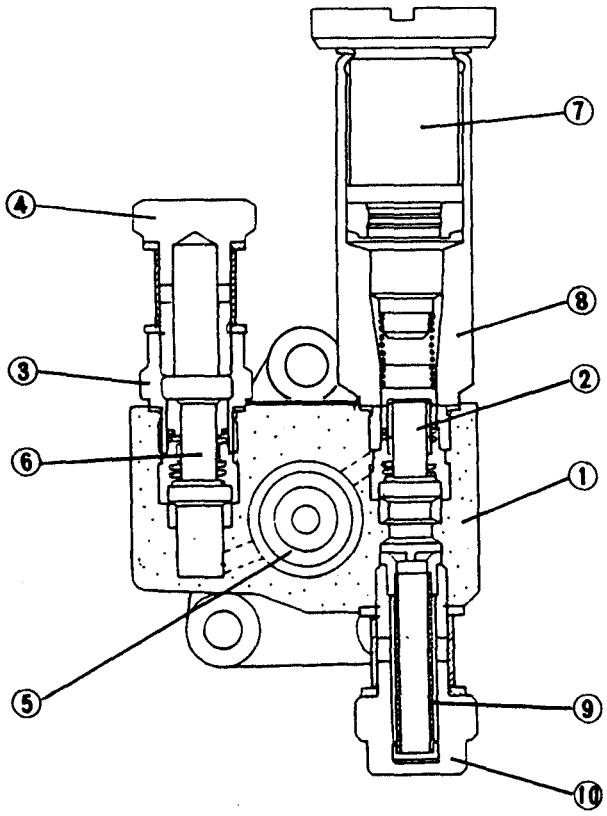

402657

1-Feed pump housing
2-Check valve
3-Valve support
4-Hollow screw
5-Piston and tappet
6-Check valve
7-Priming pump
8-Valve holder
9-Gauze filter
10-Hollow screw

https://truckmanualshub.com/

6-1 Disassembly

(1) Remove valve holder (1) and priming pump (2) and take out check valve (3). Priming pump cannot be disassembled as the cylinder and valve holder are adhered with adhesives.

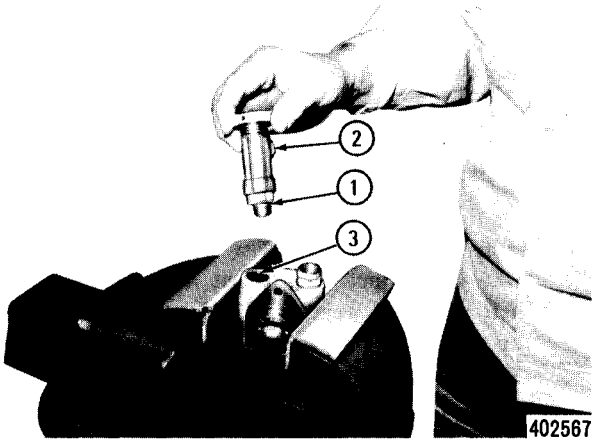

(2) Loosen piston chamber plug (4) and pull out piston spring (5) and piston (6).

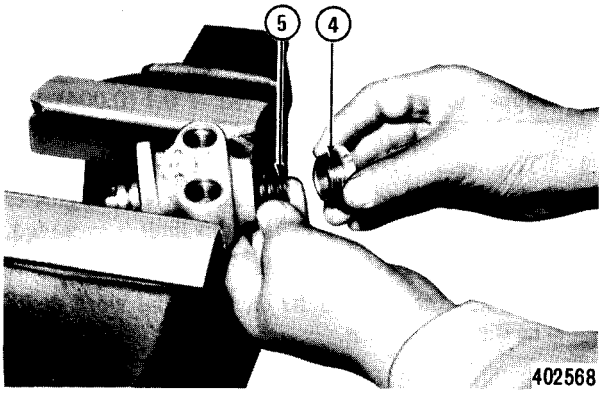

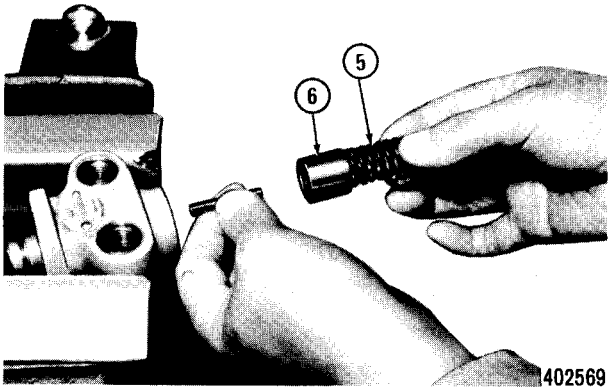

(3) Remove ring (7) and take out tappet (8) and push rod.

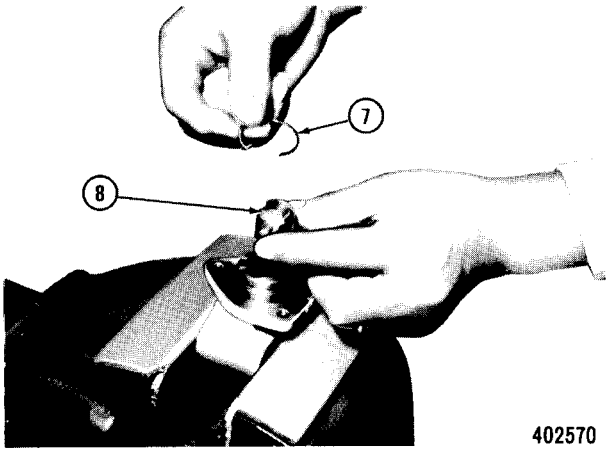

https://truckmanualshub.com/

6-2 Inspection

(1) Check valve

Inspect the seating faces of the check valve for wear, and replace parts found in abnormally or excessively worn condition.

(2) Tappet wear

Mike the tappet and tappet hole to determine their diametral wear. Replacement is necessary if the amount of wear noted in comparison with the standard diameter is 0.1 mm (0.004 in.) or more.

Specifications Unit: mm (in.)

Item	Standard	Service limit
Tappet OD	20 (0.78)	0.1 (0.004)
Tappet hole ID	20 (0.78)	0.1 (0.004)

The overall play of tappet roller pin, involving the pin hole and roller, is prescribed to be not greater than 0.3 mm (0.012 in.). If this limit is exceeded, the whole tappet sub-assembly must be replaced.

Replace the roller if its diameter has worn down to the service limit.

Specifications Unit: mm (in.)

Item	Standard	Service limit
Tappet roller OD	$15^{+0}_{-0.027}$ ($0.591^{+0}_{-0.00106}$)	−0.075 (−0.00295)

(3) Pump housing damage

Inspect the housing for cracks, broken screw threads and other types of damage and repair or replace it as necessary.

(4) Priming pump wear

Inspect the piston and cylinder for scratch marks, wear and rusting. Check the seating faces of its valve for wear. An excessively worn or damaged seating face must be corrected by replacement.

https://truckmanualshub.com/

6-3 Testing

The feed pump is in satisfactory condition when it meets all of the test requirements hereunder enumerated:

(1) Suction performance

The pump should be capable of starting to deliver fuel in 45 seconds of its starting at 150 rpm.

(2) Delivery pressure

Run the feed pump at 600 injection-pump rpm, with the discharge side of the feed pump fully closed. Under this condition, the delivery pressure should be anywhere between 1.8 kg/cm² (25.6 psi) and 2.2 kg/cm² (31.3 psi).

Specification

Unit: kg/cm² (psi)

Item	Standard
Feed pump delivery pressure	1.8 ~ 2.2 (25.6 ~ 31.3) at 600 rpm

(3) Capacity test

Run the pump at the speed specified below and open the discharge side more or less to hold the discharge pressure at 1.5 kg/cm² (21.3 psi) (as read on the test gauge), with a measuring glass cylinder set up to receive the discharged fuel. Under this condition, the pump should deliver at least 900 cc (54.9 cu in.)/minute.

Specifications

Item	Standard	Repair limit
Feed pump capacity	900 cc (55 cu in.)/minute, minimum at 1000 rpm	600 cc (37 cu in.)/minute, at 1000 rpm

(4) Air-tightness

Immerse the feed pump in a pool of fuel, with its discharge side plugged up. Apply an air pressure of 2 kg/cm² (28 psi) to its suction to see if any bubbles come out of the pump. Some air, however, will leak out through the clearance between its pushrod and housing. The pump is sufficiently air-tight if the amount of this leakage (with no leakage from any other part of the pump) is not greater than the value specified.

Specification

Item	Standard
Feed pump air-tightness	Not greater than 50 cc (3.1 cu in.)/minute (with bubbles not larger than 2 mm (0.08 in.) in size)

If the air-tightness is poor, replace the pump housing sub-assembly (including housing, push rod and oil seal).

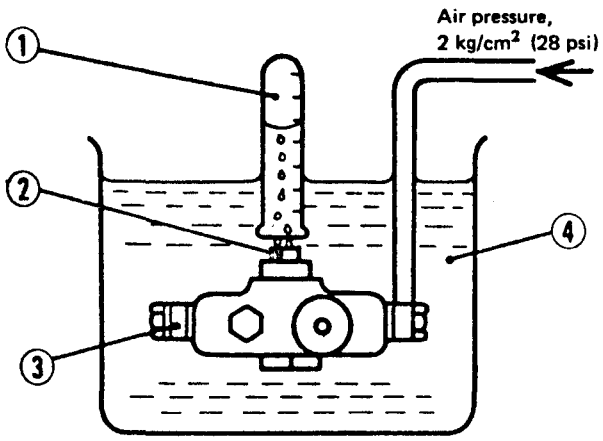

1-Measuring cylinder
2-Tappet
3-Plug
4-Diesel fuel oil

https://truckmanualshub.com/

7. Fuel injection pump

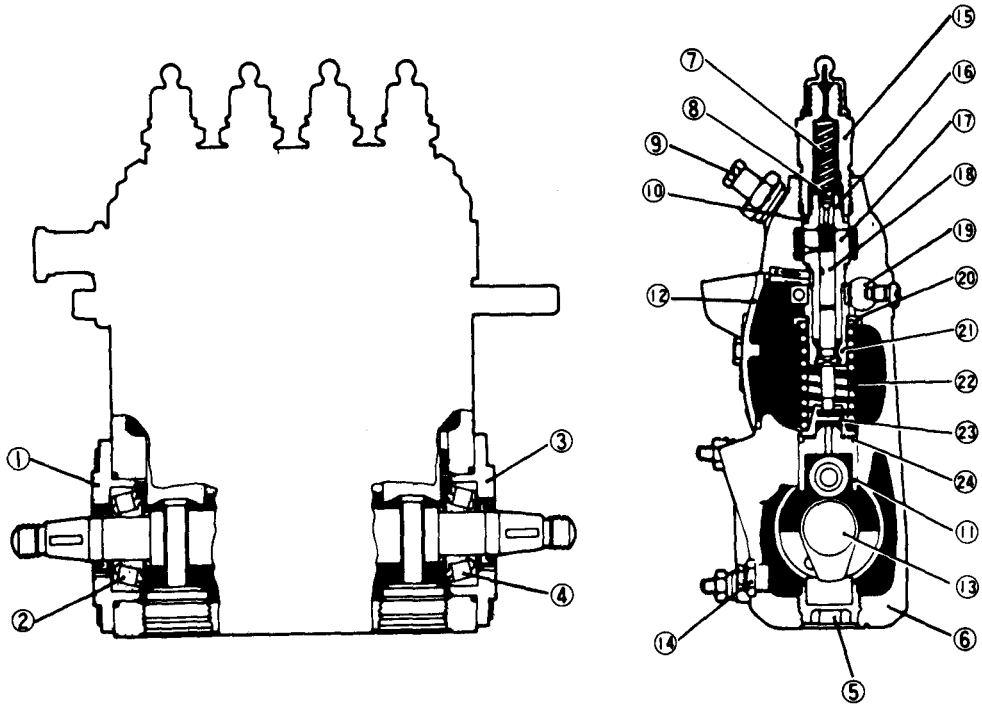

1-Bearing cover
2-Tapered roller bearing
3-Governor housing
4-Tapered roller bearing
5-Screw plug
6-Pump housing
7-Delivery valve spring
8-Delivery valve
9-Air vent screw
10-Delivery valve seat gasket
11-Tappet
12-Cover
13-Camshaft
14-Drain plug
15-Delivery valve holder
16-Delivery valve seat
17-Cylinder
18-Plunger
19-Control rack
20-Upper spring seat
21-Control sleeve
22-Spring
23-Lower spring seat
24-Shim

The pump body is an aluminum alloy casting and houses all the moving parts of pump elements and the camshaft. The governor housing is attached to one end of the pump body.

The camshaft is supported by two tapered roller bearings. Like the engine camshaft, it has four cams, one for each pump element, and is driven from the crankshaft through a train of gears arranged for a gear ratio of 2 to 1. For each two rotations of crankshaft, the injection pump camshaft rotates once.

The pump element consists of a plunger, barrel (cylinder), tappet, plunger spring, control pinion and spring-loaded delivery valve. The tappet rides on the cam and pushes the plunger upward for each rotation of camshaft. As the plunger rises, the fuel in the barrel becomes compressed and is forced out through the delivery valve into the injection pipe. The upward plunger stroke, effective in compressing or pressurizing the fuel, is variable, and is varied by means of the control rack and pinion in the manner to be explained later.

https://truckmanualshub.com/

The delivery valve, through which a shot of fuel is forced out into the injection pipe by each upward motion of the plunger, is essentially a check valve having a special function of quickly reducing the line pressure the moment the plunger begins to descend. This quick relief of line pressure is necessary to prevent the injection nozzle from dribbling at the end of each injection. How this is accomplished will become clear.

Tabulated data

Cam lift	8 mm (0.315 in.)
Plunger diameter	6.5 mm (0.256 in.)
Delivery valve dia.	6 mm (0.236 in.); retraction volume 51 mm^3 (0.003 cu in.)/stroke
Injection order	1 – 3 – 4 – 2
Injection interval	90° ± 30′

8. Governor

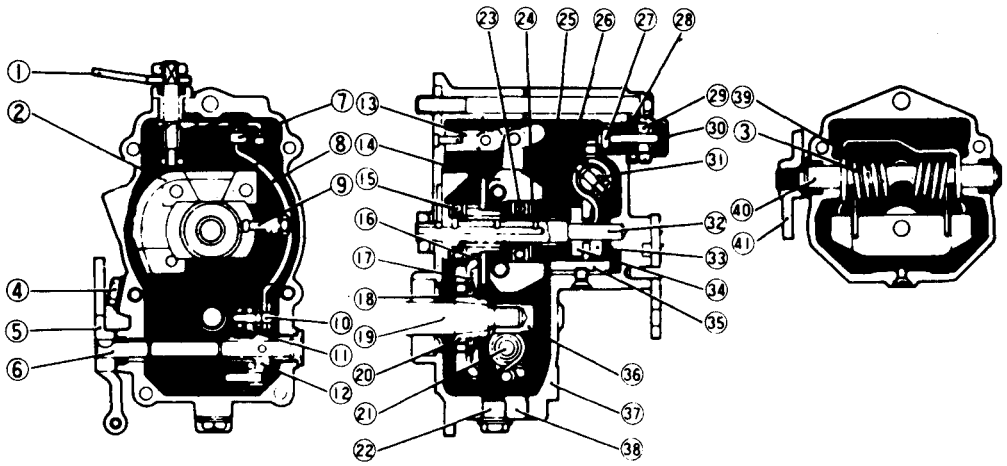

1-Stopper lever
2-Oil inlet
3-Control spring
4-Screw plug
5-Stopper
6-Control lever shaft
7-Shackle pin
8-Floating lever
9-Connecting pin
10-Connecting bolt
11-Supporting lever
12-Arm
13-Shackle
14-Flyweights
15-Bearing
16-Governor gear
17-Slip disc
18-Shim plate
19-Camshaft
20-Camshaft bushing
21-Control lever shaft
22-Drain plug
23-Bearing
24-Shim plate
25-Governor sleeve
26-Adaptor spring
27-Adaptor
28-Torque spring
29-Adjusting nut
30-Cap nut
31-Shaft
32-Governor shaft
33-Spring seat
34-Spring seat
35-Torque control lever
36-Round nut
37-Governor cover
38-Governor housing
39-Torque control lever
40-Shaft
41-Adjusting lever

https://truckmanualshub.com/

The governor is an all-speed governor operating in response to changes in engine speed to actuate the control rack in order to maintain engine speed at a constant level proportional to the set position of the accelerator. This governor function is in sharp contrast to that of a minimum-speed maximum-speed governor, whose control action is to limit the lowest and highest speeds of the engine, leaving the control of intermediate speeds to the operator.

The construction of the governor is as illustrated in the figure above:

The governor consists essentially of governor gear ⑯, flyweights ⑭, governor sleeve ㉕ and speed control spring ③.

The governor gear is mounted on camshaft bushing ⑳ attached to the rear end of the injection pump camshaft with round nut ㊱ and is pressed by slip disc ⑰, so that it is not damaged even when the engine output torque varies.

The flyweights are mounted on governor shaft. The radial movement of the flyweights due to centrifugal force is transmitted to arm ⑫ to push governor sleeve ㉕ through thrust bearing. To this sleeve is attached adaptor spring ㉖. This spring opposes the force of control spring ③ through spring seat so as to compensate for a decrease in torque when the engine is running at low speeds. Floating lever ⑧ is hinged at its lower end to supporting lever ⑪ mounted on control lever shaft ⑥ and is connected at its upper end to control rack through shackle ⑬. To the mid-part of this floating lever is fitted connecting pin ⑨ through which the movement of the flyweights is transmitted to the control rack. Damper spring, which is mounted on the end of control rod, serves to prevent engine hunting as when the engine speed is suddenly decreased. Stopper lever ① is provided to move the control rack to "stop" position.

Engine stalling, which may often occur when the load is suddenly increased, is prevented by torque spring. The timing mark provided on the camshaft bushing and the timing pointer on the governor housing are conveniently utilized in determining the beginning of injection in the No. 1 cylinder during assembly job.

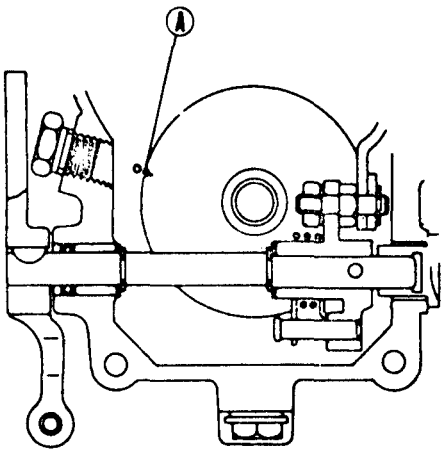

A-Timing mark

Timing mark on injection pump

https://truckmanualshub.com/

ELECTRICAL SYSTEM

1. General

	Model	Manufacturer
Starter	M002T54172	Mitsubishi Electric
Alternator	A001T25070	Mitsubishi Electric
Glow plugs	Sheathed type	Hiyoshi Electric

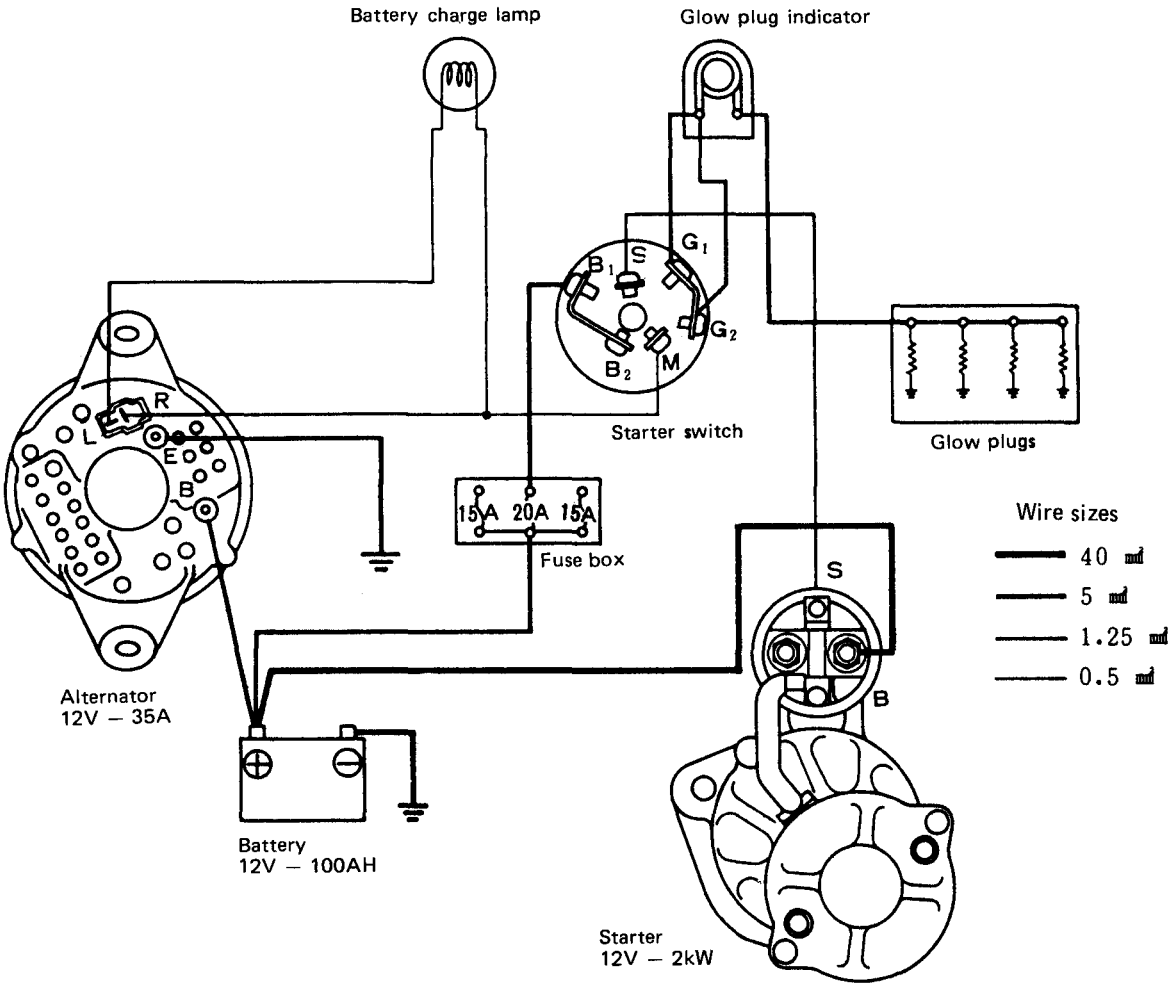

Wiring diagram

https://truckmanualshub.com/

1-1 Starter

(1) Tabulated data

Model	M002T54172
Type	Pinion-shift type with overrunning clutch
Voltage	12V
Output	2 kW
Armature winding	Series
Yoke diameter	80 mm (3.15 in.)
Rating	30 seconds
Rotation	Clockwise as viewed from pinion side
Weight	5.8 kg (12.8 lb), approx.

Performance item	Condition	Specification	
No-load characteristics	Voltage: 11 V	Current Speed	130 A, max. 4000 rpm, min.
Locked characteristics	Voltage: 3 V	Current Torque	1000 A, max. 2.8 kg·m (20.3 lb·ft), min.
Switch-in voltage		8 V, max.	

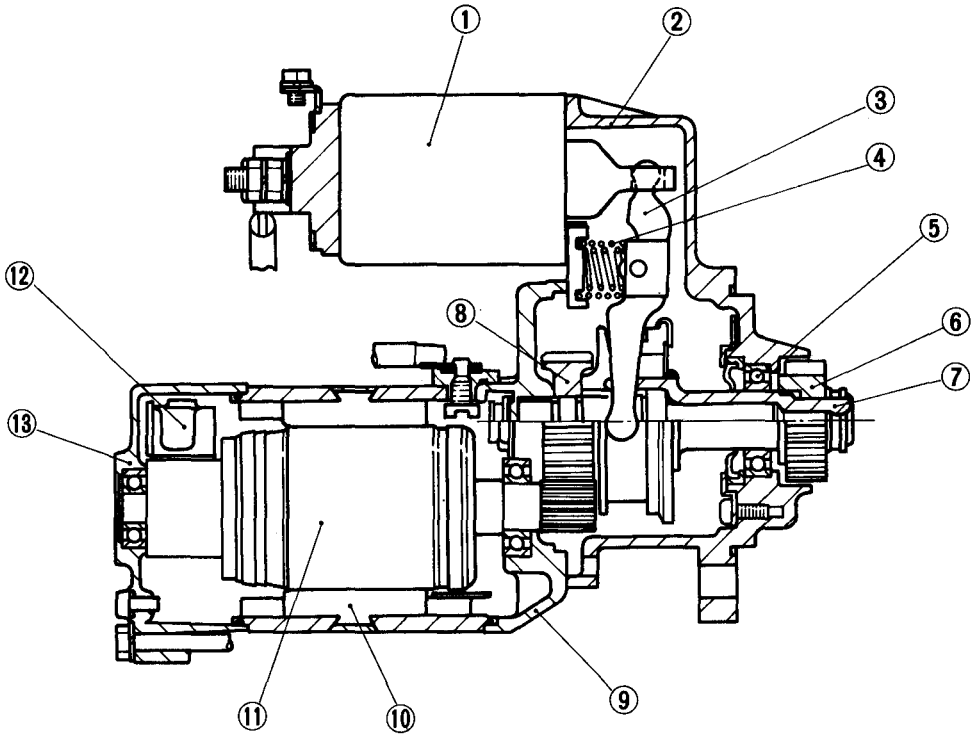

1-Switch assembly
2-Front bracket
3-Lever assembly
4-Spring set
5-Bearing
6-Pinion
7-Pinion shaft
8-Gear
9-Center bracket
10-Yoke
11-Armature
12-Brush holder
13-Rear bracket

https://truckmanualshub.com/

(2) Reduction gear train and overrunning clutch

The inner end of armature shaft carries a drive gear which is in mesh with a driven gear splined to the pinion shaft to provide speed reduction. The pinion shaft is fitted loosely to the outer race of overrunning clutch through helical spline engagement. The pinion is fitted to the sleeve – the inner race of the clutch – and held in place by a snap ring.

Five clutch rollers are fitted between the outer race (thrust splines) and inner race (sleeve) of overrunning clutch, each being pressed against the cam face internally formed of the outer race by a spring.

Thus the drive or torque is transmitted from the armature shaft through the reduction gears, pinion shaft, thrust splines (clutch outer race), rollers and sleeve (clutch inner race) to the pinion.

(3) Overrunning clutch operation

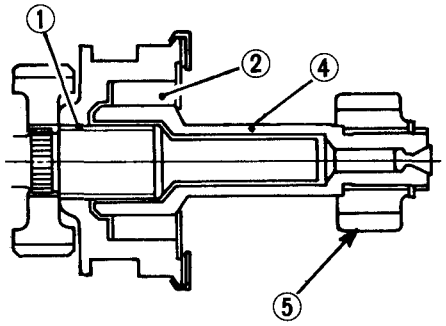

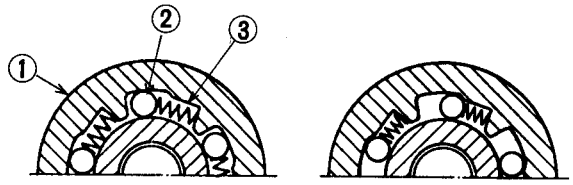

Pinion meshed in flywheel

Engine starts

1-Outer race
2-Roller
3-Spring

4-Inner race
5-Pinion

(a) Pinion meshed in flywheel

As the outer race rotates, the rollers are jammed tight between the inner and outer races to lock these races. Now the torque from the armature is transmitted from the outer race to the inner race and then to the pinion.

(b) After the engine starts, it spins the pinion (inner race) faster than outer race. The rollers are rotated into the free state by the springs to unlock the inner and outer races. This allows the pinion to spin independently of, or overrun, the remainder of the clutch.

(4) Starter operation

(a) Starter switch (SW) in OFF position

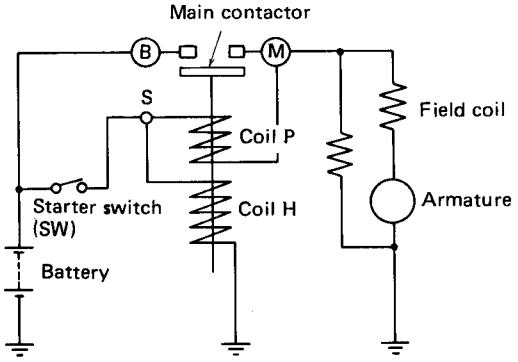

(b) Starter switch (SW) turned to ON position

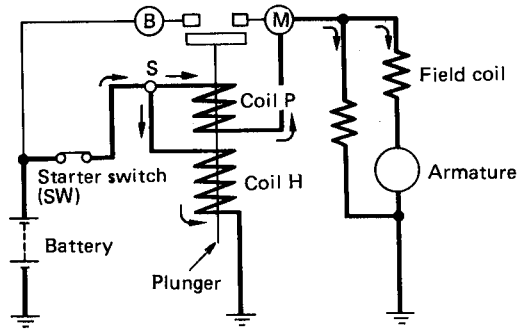

The plunger is pulled. This allows the lever to push the pinion into mesh with the flywheel ring gear. Now the starter begins to crank the engine.

(c) Starter switch (SW) in ON position (with contactor closed)

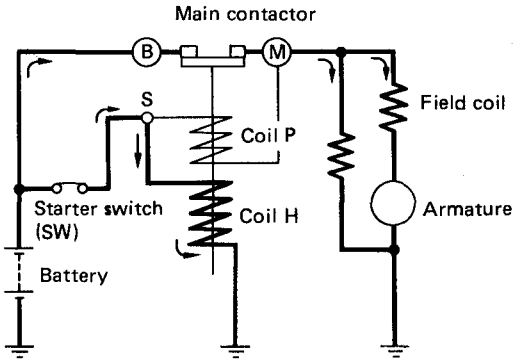

A large current flows into the motor. The starter now cranks the engine with full force while picking up speed at the same time.

https://truckmanualshub.com/

1-2 Alternator

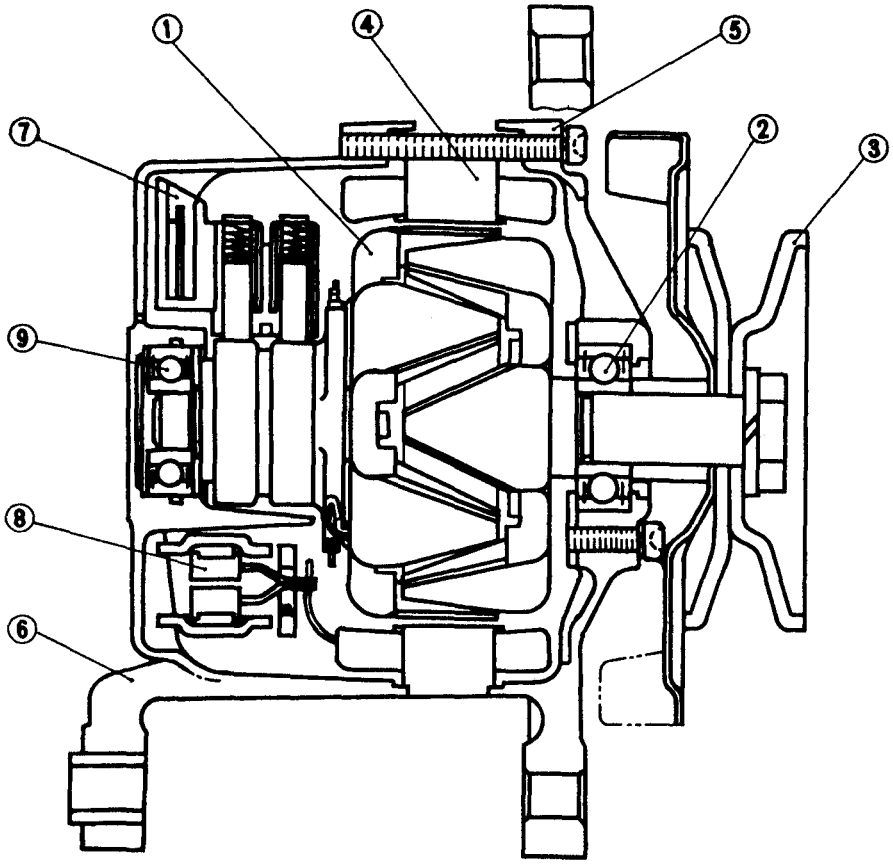

1-Rotor
2-Bearing
3-Pulley
4-Stator
5-Front bracket
6-Rear bracket
7-IC regulator
8-Rectifier
9-Bearing

(1) Tabulated data of alternator

Model designation	A001T25070
Nominal output	12 V – 35 A
Polarity of ground	Negative
Outside diameter	114 mm (4.48 in.)
Direction of rotation	Clockwise as viewed from pulley side
Weight	3.4 kg (7.5 lb)
Regulator	IC type
Voltage regulation	14.4 ± 0.3 V

(2) Construction of alternator

This alternator has a built-in IC regulator. The rotary parts are: rotor, ball bearings, fan and pulley. The stationary parts are: stator, front bracket and rear bracket.

The rectifier consists of a total of six diodes: three diodes on the positive side are mounted on the heat sink and the other three on the negative side are mounted on the rear bracket.

https://truckmanualshub.com/

(3) Alternator operation

(a) Starter switch in M position

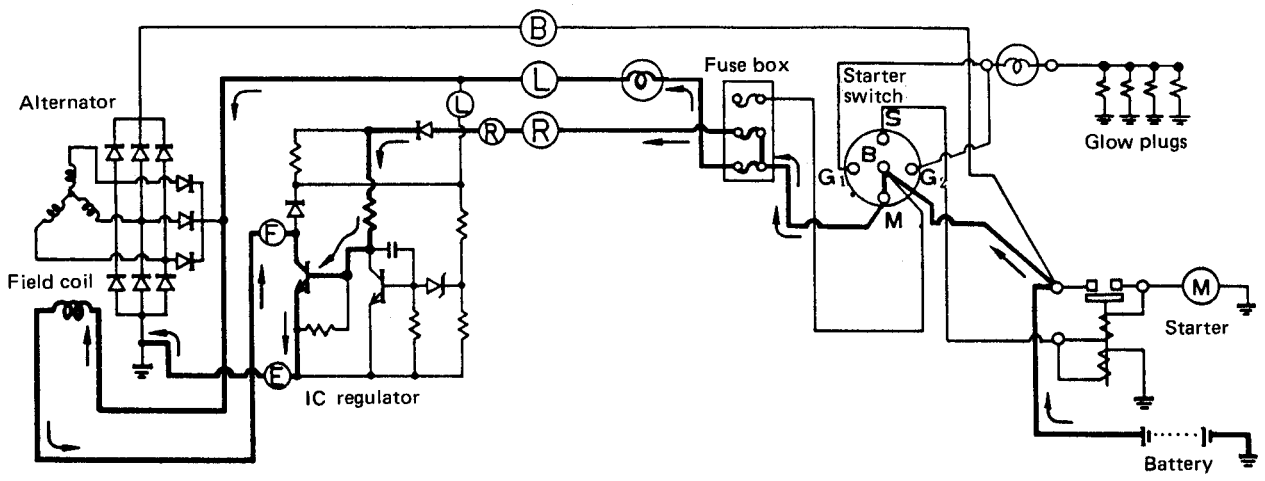

(b) Starter switch in S position and starter operates

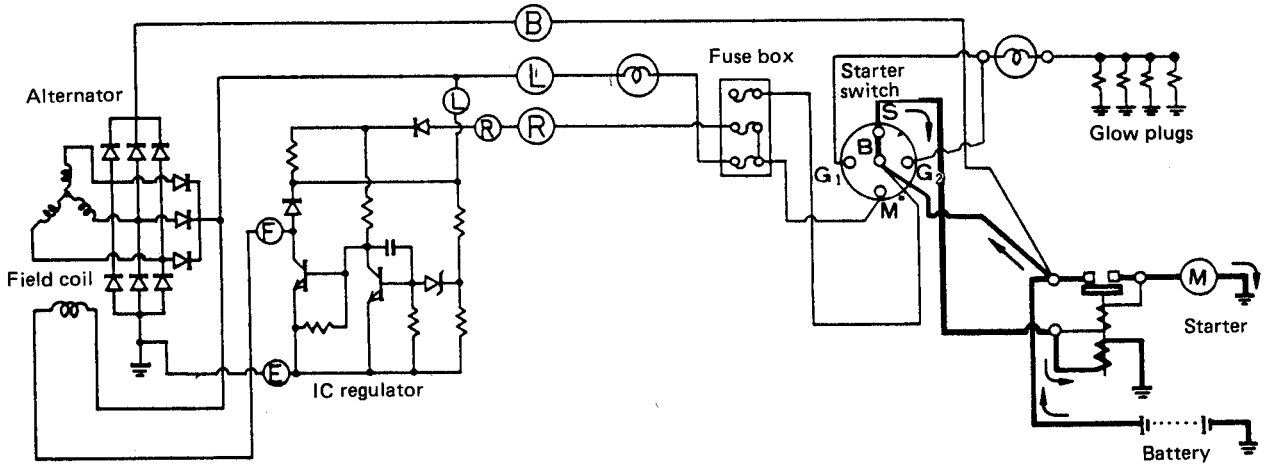

https://truckmanualshub.com/

(c) Engine starts and alternator charges battery

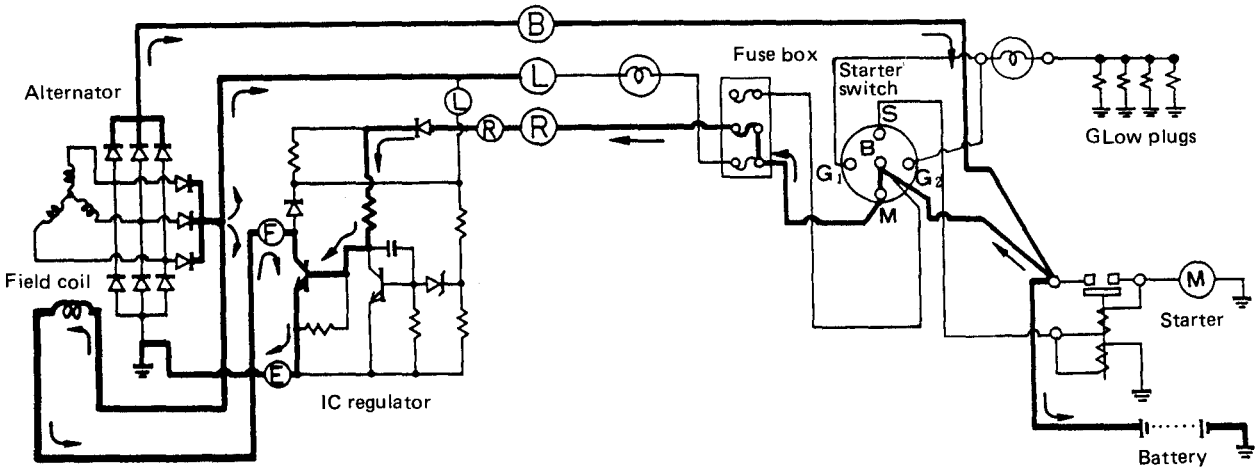

(d) Alternator charges battery excessively

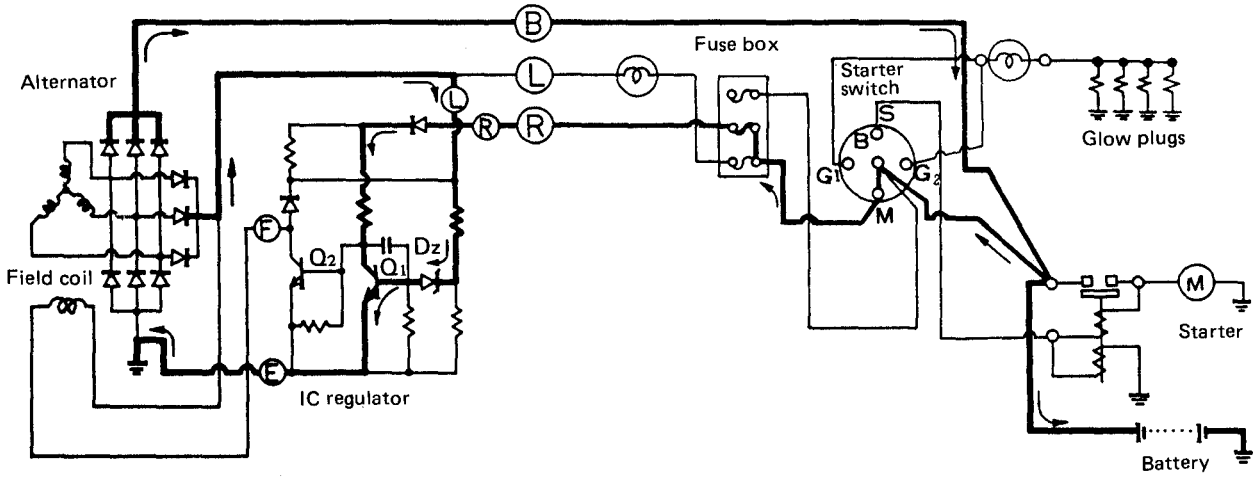

As alternator output voltage rises higher than the regulated voltage, zener diode DZ permits the current to flow to the base of transistor Q_1.
As transistor Q_1 turns on, the current flows from the three diodes to transistor Q_1, causing transistor Q_2 to turn off. Under this condition, the field current is reduced to weaken excitation of the rotor and, consequently, output voltage begins to fall.

When output voltage has sufficiently dropped, zener diode DZ permits no current to flow. Now transistor Q_1 turns off and transistor Q_2 turns on and, consequently, the field current increases and output voltage rises again. This process is endlessly repeated to keep output voltage at a virtually constant level.

https://truckmanualshub.com/

2. Starter removal and installation

(1) Disconnect wire (1) between the battery and starter and wire (2) between the starter and starter switch.

(2) Unscrew mounting nuts (1), and remove starter assembly (2) from the engine. To install, follow the reverse of removal procedure.

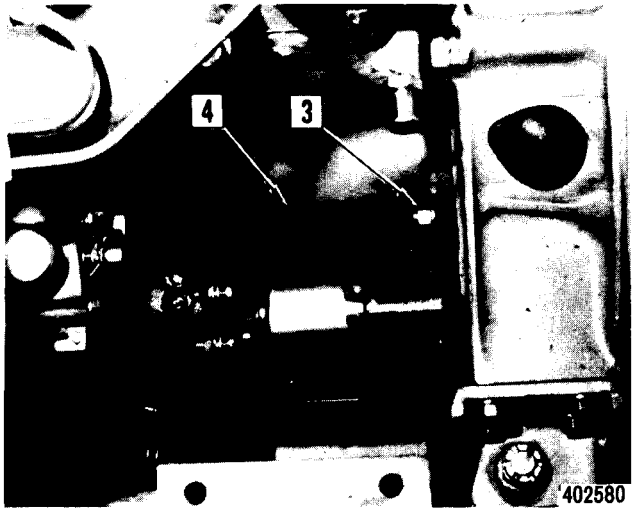

1-Nut and washer (2 pcs each)
2-Starter assembly

https://truckmanualshub.com/

3. Starter disassembly and reassembly

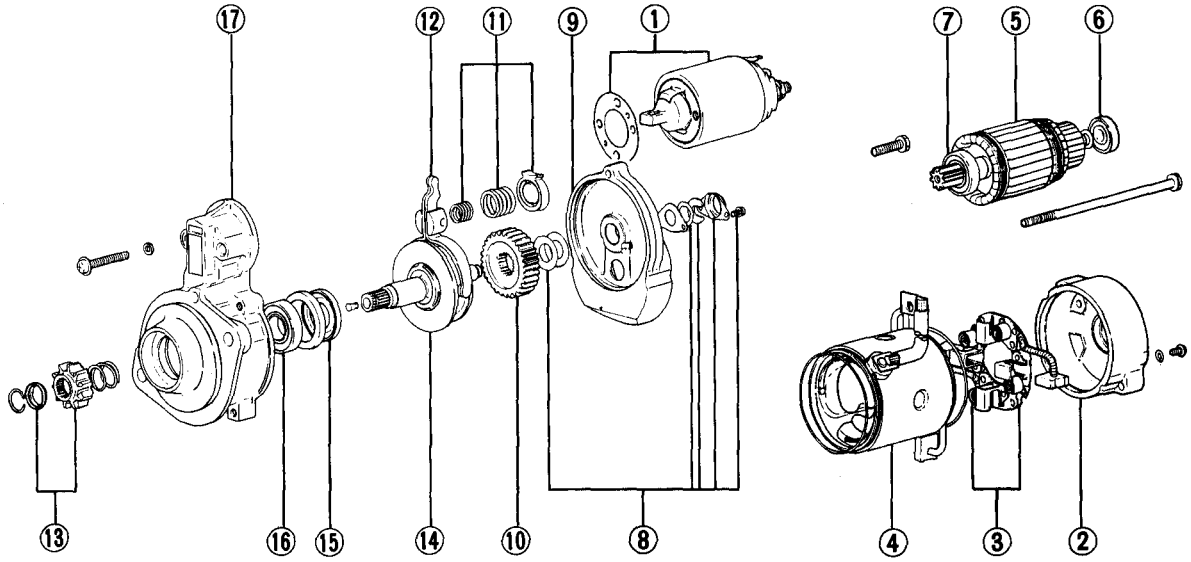

1-Switch
2-Rear bracket
3-Brush holder
4-Yoke
5-Armature
6-Ball bearing
7-Ball bearing
8-Cover set
9-Center bracket
10-Gear
11-Spring set
12-Lever
13-Pinion set
14-Pinion shaft
15-Oil seal
16-Ball bearing
17-Front bracket

(The parts are numbered in the sequence of removal for disassembly.
To reassemble, follow the reverse of disassembly procedure.)

(1) Loosen the nut on the switch terminal (M), and remove the connector. Remove the switch by pulling the screws (2 pcs).

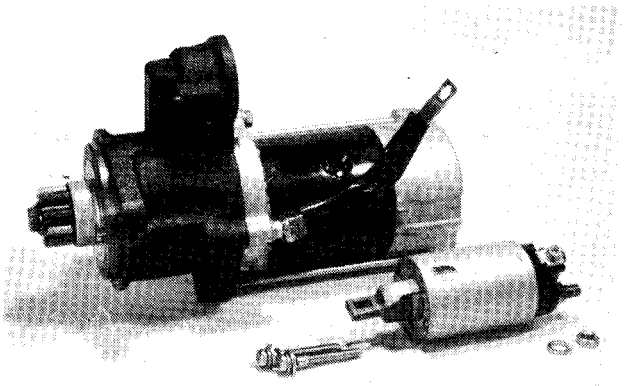

(2) Pull the through bolts (2 pcs), remove the brush holder screws (2 pcs) and remove the rear bracket.

NOTE

Take care not to drop the washers which are used in the rear bracket.

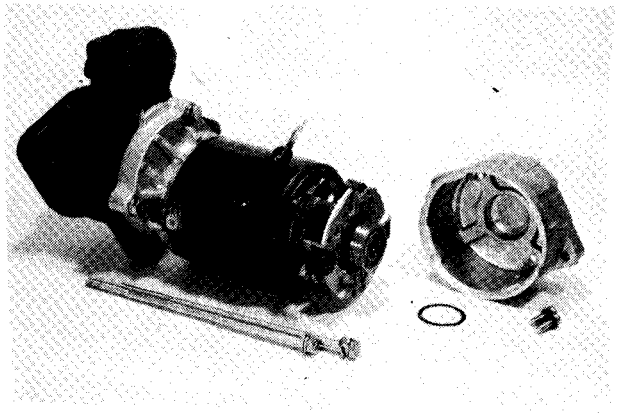

https://truckmanualshub.com/

(3) Remove two brushes on the positive side, and take off the brush holder.

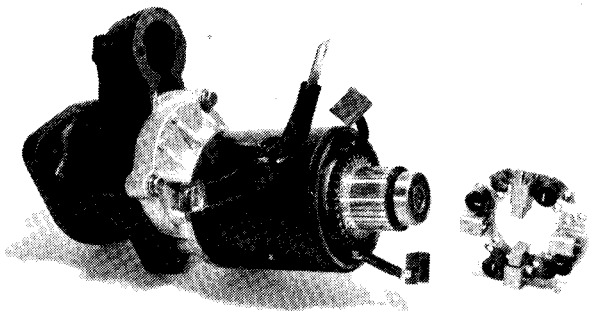

(4) Remove the yoke, and pull off the armature.

NOTE

Replace rubber packings fitted to the ends of yoke with new ones. Check and record the position of locating notch for the yoke.

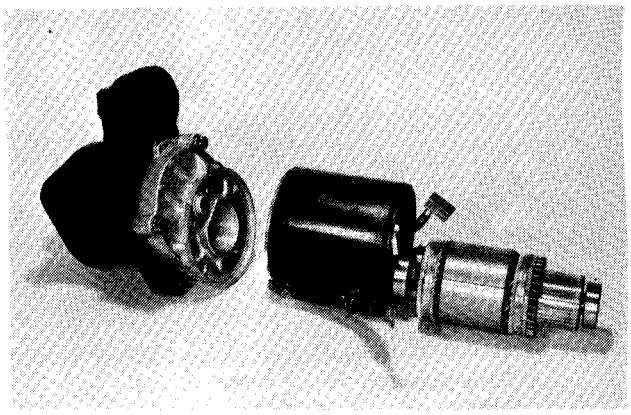

(5) Remove the cover, and take off the washer and snap ring.

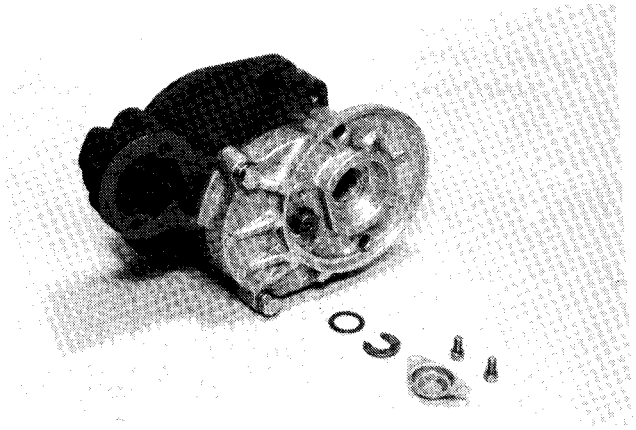

(6) Remove the center bracket by unscrewing two bolts. Remove washers (several pieces) for adjusting the pinion shaft axial play.

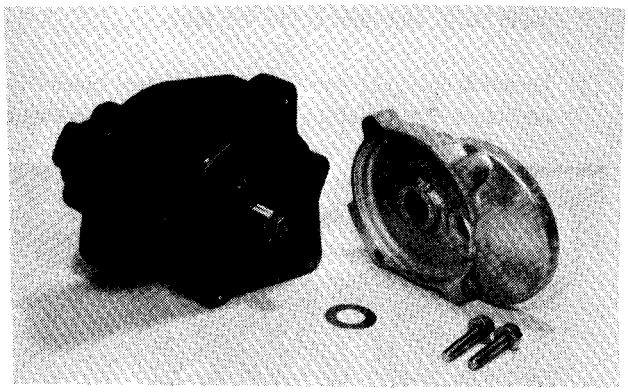

(7) Remove the snap ring holding the pinion, and remove the pinion.

(8) Remove the lever springs (large and small), lever, reduction gears, pinion shaft, etc.

NOTE

Lay the lever and springs in the order removed so that they can be restored to their original positions.

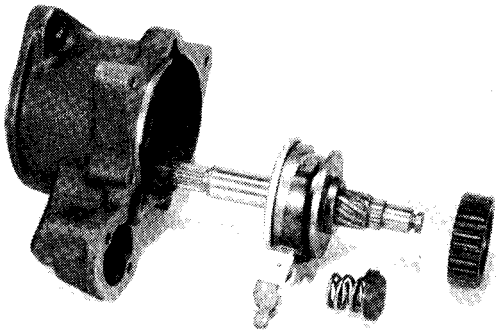

(9) Replace the ball bearings. The ball bearings fitted to the ends of armature can be removed with a bearing puller. The front bracket bearing and sleeve bearing (fitted to the inner race of ball bearing) cannot be removed for replacement. These bearings are to be replaced as an assembly including the front bracket.

https://truckmanualshub.com/

4. Alternator removal and installation

(1) Disconnect wire (1) between the alternator and relay and ground harness, unscrew the adjusting plate bolts, and remove the fan belt.

(2) Unscrew bolts (2) securing the alternator bracket, and remove alternator assembly (3) from the engine.

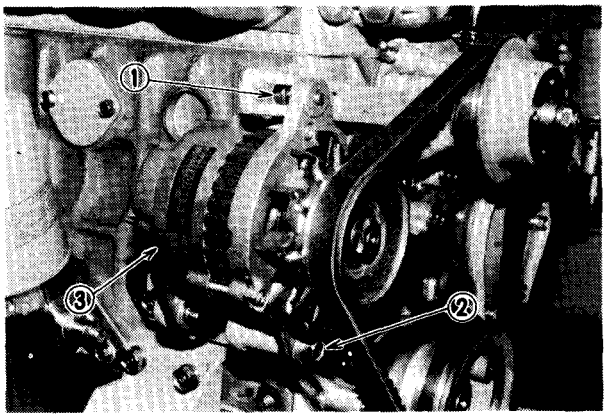

1-Bolt and washer
2-Bolt, nut and washer (2 pcs each)
3-Alternator assembly

5. Alternator disassembly and reassembly

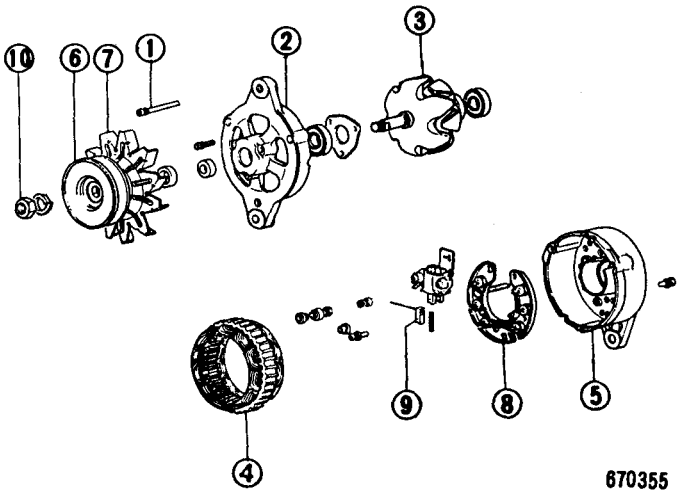

1-Bolt (3 pcs)	6-Pulley
2-Front bracket	7-Fan
3-Rotor	8-Diode
4-Stator coil	9-Brush
5-Rear bracket	10-Nut

(1) Pull the three through bolts, and break the alternator into the rotor (complete with front bracket and pulley) and stator (complete with rear bracket).

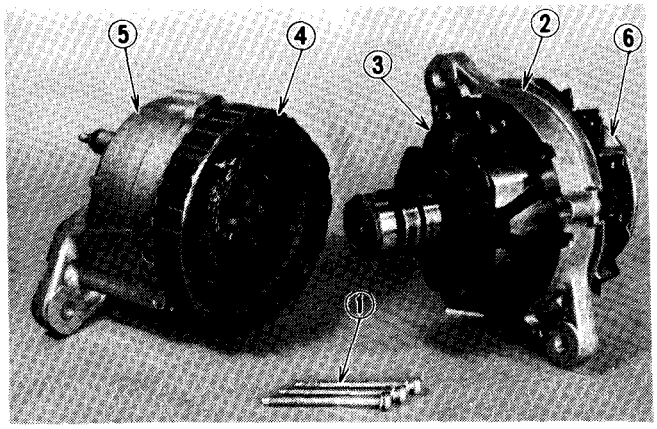

1-Bolt (3 pcs)	4-Stator coil
2-Front bracket	5-Rear bracket
3-Rotor	6-Pulley

(2) Hold the rotor in a vise. Unscrew the pulley nut, and remove the pulley.

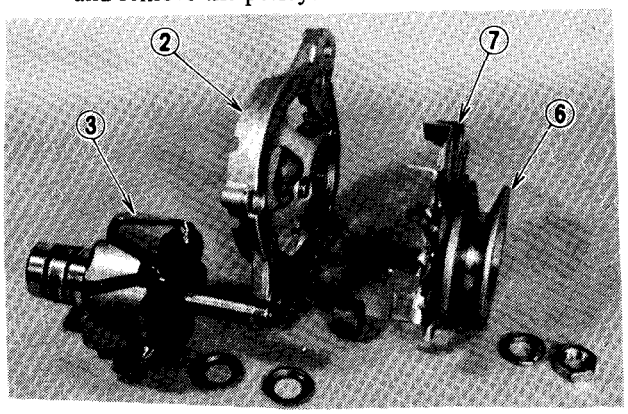

2-Front bracket	6-Pulley
3-Rotor	7-Fan

(3) To reassemble, follow the reverse of disassembly procedure. Lift two brushes up into the brush box and pass a pin through the screw holes in the box and brushes to keep the brushes depressed. After reassembling the alternator, be sure to remove the pin.

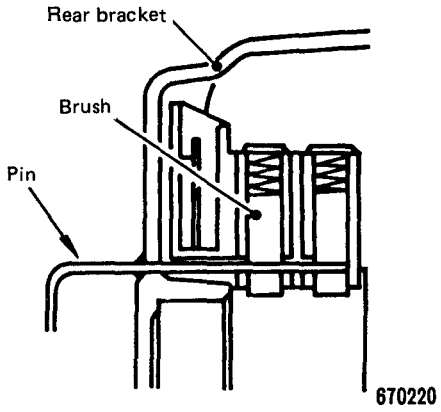

https://truckmanualshub.com/

6. Preheating system

Removal and installation of glow plugs

(1) Before removing glow plugs from the engine, be sure to disconnect battery terminals.

(2) Disconnect cable (1) from No. 4 cylinder glow plug. Loosen glow plug connection plate attaching nut (2) and remove connection plate (3).

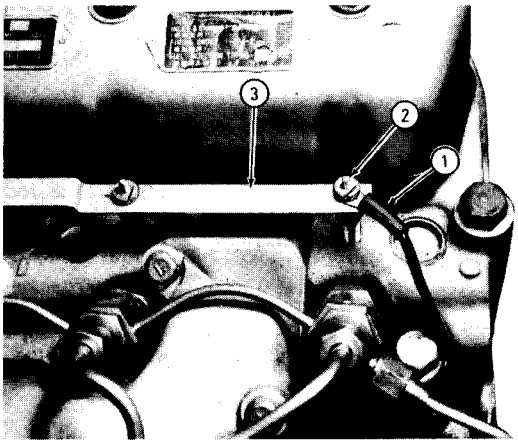

402591

1-Cable
2-Nut
3-Connection plate

(3) Remove all glow plugs from the cylinder head. Take out packings from glow plug installation holes.

(4) To install, follow the reverse of removal procedure.

7. Inspection and adjustment

7-1 Starter

(1) Inspection before disassembly

(a) Checking the starting circuit for operation

With the starter in place, check to be sure that –

1) The battery is in good condition, with its cell plates showing no evidence of "sulfation" or any other faulty condition, and is in fully charged state.

2) The battery terminal connections are clean and tight.

3) The starter terminal connections are tight.

4) The wires are securely connected to terminals, and are free of any insulation stripping due to fraying, there being no signs of grounding or breaking.

5) The starter switch closes and opens the circuit positively at each position.

Do not jump into a conclusion that the starter is in trouble when the engine refuses to fire up upon cranking: the engine could be in trouble.

(b) No-load test

If the starter is suspected of trouble, take it down from the engine and run a no-load test on it to find out if it is really in trouble.

When removing the starter, be sure to have the battery switch turned off.

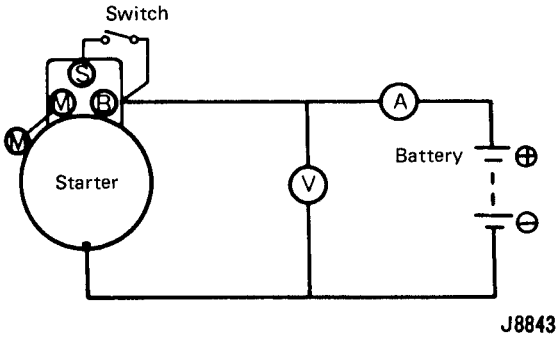

No-load test circuit

Here's how to carry out the no-load test: Form a test circuit with a voltmeter and an ammeter, as shown, using a fully charged 24-volt battery; close the switch to run the starter until its speed rises to and above 4000 rpm; and then read the voltmeter and ammeter when the starter is spinning. The ammeter should show that the starter is drawing not more than 130 amperes, with the voltmeter indicating at least 11 volts (at the speed of at least 4000 rpm); if not, estimate the cause of the trouble by consulting the troubleshooting guide, which follows:

https://truckmanualshub.com/

Starter troubleshooting guide

Symptom	Possible cause
Large current and low speed	1) Bearings are dirty, or need lubrication. 2) Rotor (armature core) is rubbing the pole pieces. 3) Grounded coil in the armature or in the field. 4) Short-circuit in the armature coils.
Large current but no speed	1) Magnetic switch is grounded and is not working. 2) Grounded coil in the armature or in the field. 3) Seized bearing.
No current and no speed	1) Open-circuited coil in the armature or in the field. 2) Broken brush pigtail. 3) No conduction between brushes and commutator because of "high mica" condition or dirty commutator surface.
Small current and low speed and torque	Loose coil connection in the field.
Very large current, very high speed and low torque	Short-circuited field coil.

The best way of testing the starter is to run it under loaded condition, but that requires special testing equipment. For ordinary servicing purposes, the no-load test and troubleshooting guide will do.

(2) Inspection after disassembly

(a) Using a ground tester or megger, check armature coil and commutator for short circuit. If there is any continuity between commutator and armature shaft, armature coil and commutator are short circuited.

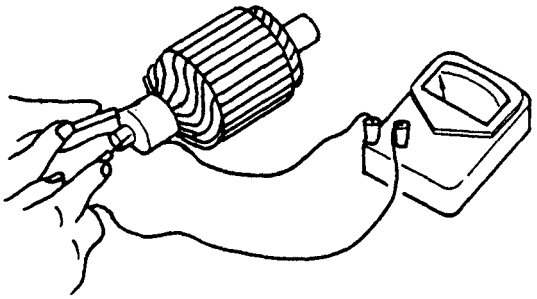

670202

(b) A growler is generally used to test armature for short circuit in its winding. Place armature on a growler, and rotate it slowly while holding a steel strip over armature. If there is any short circuit between cores, the strip will vibrate and be attracted to armature. If so, replace armature.

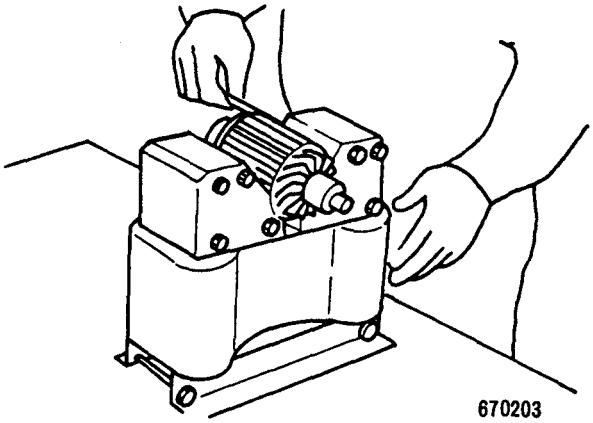

670203

(c) Measure commutator runout with a dial gauge. Repair commutator if the runout exceeds the limit.

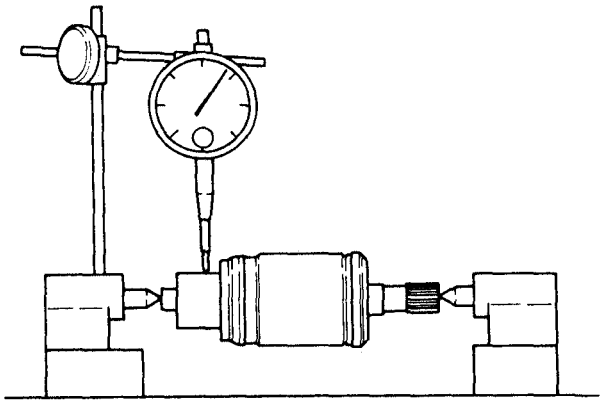

Specifications Unit: mm (in.)

Item	Assembly standard	Repair limit	Grinding limit
Commutator runout	0.05 (0.0020)	0.3 (0.012)	31 (1.22)

https://truckmanualshub.com/

(d) Brushes and brush springs

1) Measure brush length. Replace brush if the length exceeds the service limit.

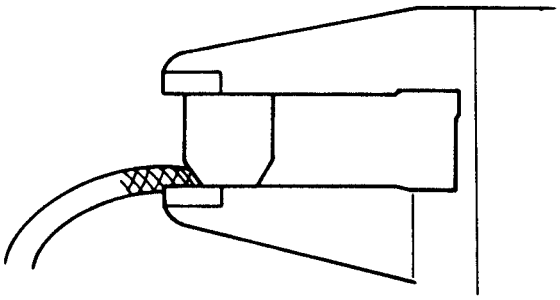

670208

Specifications Unit: mm (in.)

Item	Assembly standard	Service limit
Brush length	18 (0.71)	11 (0.43)

2) Using a spring balance and new brush, check spring pressure. Replace spring if the pressure is below the service limit.

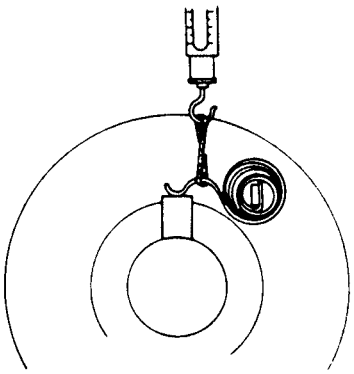

Specifications Unit: kg (lb)

Item	Assembly standard	Service limit
Spring pressure	3.5 (7.7)	2 (4.4)

(e) Pinion gap adjustment

Connect starter and battery as shown to allow pinion to shift against stopper. Under this condition, push pinion back, and measure gap.

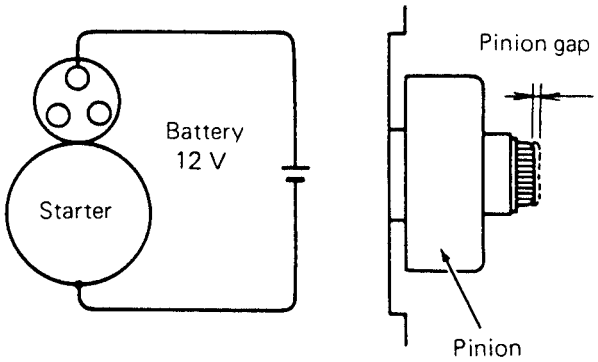

Specifications Unit: mm (in.)

Item	Assembly standard
Pinion gap	0.5 ~ 2.0 (0.020 ~ 0.079)

NOTE

To adjust pinion gap, increase or decrease thickness of washers used between mating faces of magnetic switch and front bracket.

(f) No-load test

After adjusting pinion gap, connect starter and battery with an ammeter and voltmeter as shown, and test starter for performance.

NOTE

Use thick wires and tighten terminal securely.

If current and speed meet the following specifications when battery voltage is 11 volts, starter is satisfactory:

Specifications

Current	Speed
130 (A), max.	4000 rpm, min.

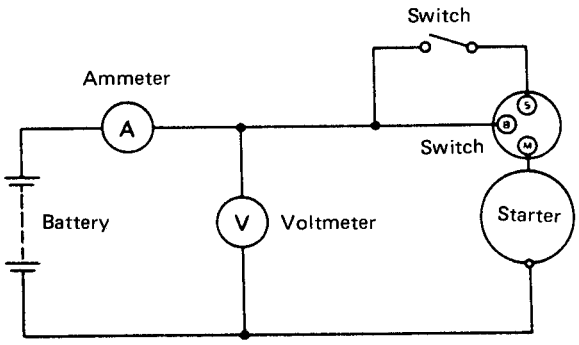

https://truckmanualshub.com/

(2) Regulator voltage test

(a) Test on a test bench

Use a fully charged battery. Close the switch, and gradually increase the alternator speed. Make sure that the current is below 5 amperes and the voltage is 14.1 to 14.7 volts when the alternator speed reaches 5000 rpm. If this requirement is nor met, replace the regulator assembly. It is impossible to reset the regulator voltage.

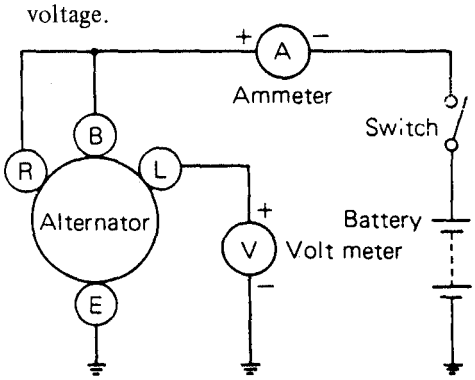

(b) Test on a machine

Connect a voltmeter in the circuit between the terminal L and ground. Turn on the battery switch to make sure that the voltage is 0 (zero). If the voltmeter needle defects, the alternator is defective, or the circuit is misconnected. With the ammeter terminals short-circuited to prevent the starter current from flowing to the ammeter, start the engine.

If the charging current is below 5 amperes when the engine is running at about 2000rpm, read the voltmeter.

If it exceeds 5 amperes, charge the battery for a while, or replace the battery with a fully charged one. Another method is to connect a 1/4 ohm (25 W) resistor in series with the battery to limit the charging current.

The regulated voltage should be 14.1 to 14.7 volts; if not, replace the regulator assembly.

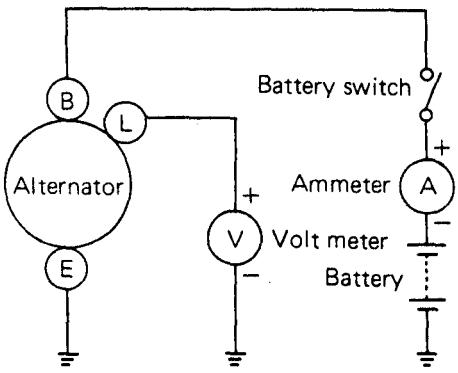

(3) Alternator inspection after disassembly

(a) Inspection of each diode

Check for continuity between the wire lead and the heat sink. Any continuity, if noted, means that the diode is shorted; no continuity means an open diode.

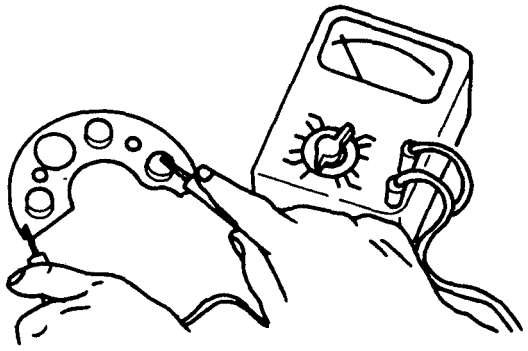

Checking diodes

(b) Field coil inspection

The field coil is in good condition if the resistance between the slip rings is approximately 14.3 ohms at a temperature of 20°C (68°F).

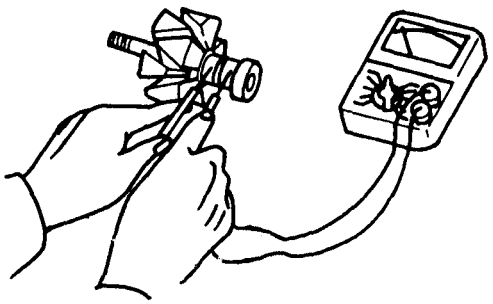

Checking field coil

https://truckmanualshub.com/

(3) Inspection of brushes and commutator

(a) Check the brushes for wear. A brush worn down excessively should be replaced by a new one. When the brush is replaced, grind the brush against the commutator surface by using #250 sandpaper so that it makes a full-face contact with the commutator.

(b) Check the mica insulation for condition. It should be "undercut," that is, the segment between two adjacent mica should be slightly proud of the mica surface, as viewed in the cross section. Since the commutator surface is subject to gradual wear, a point will be reached in the course of service, where the segments become flush with the mica. If the commutator in such a condition is kept in service, the mica will tend to interfere with the satisfactory commutation. Before this point is reached, it is necessary to recondition the commutator surface by regrinding or sanding with #400 sandpaper and to undercut the mica properly, as shown below:

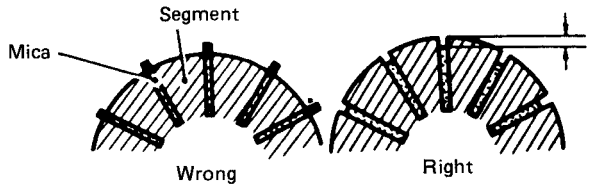

Checking mica insulation

7-2 Alternator

(1) Alternator and regulator inspection before disassembly

(a) If charging system is found defective, check for items below before making adjustment or repair:

- Fan belt tension
- Loose connections, open short circuit in charging system wiring
- Trouble of charging system due to defective battery

(b) Output test on a test bench

Remove the alternator from the engine. Connect it in a test circuit as shown at upper right, and operate it by a motor for testing.

Close the switches K_1 and K_2 under the state where very little load current flows in the test circuit by varying load resistance to the maximum. Gradually increase alternator speed while keeping the terminal voltage at constant 13.5 volts, and read the ammeter at 2500 rpm. The alternator is satisfactory if the ammeter registers at least 30 amperes.

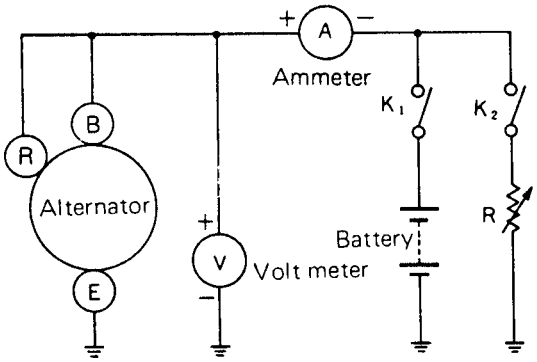

(c) Output test on a machine

Place a switch in the circuit between the battery and alternator. With the switch kept open, connect an ammeter (60-ampere class) and a voltmeter to the circuit.

Make sure that the voltmeter registers the battery voltage when the switch is closed.

Start the engine, and turn on the lamp switch. Increase the engine (alternator) speed, and read the ammeter when the alternator speed is 5000 rpm. The alternator is satisfactory if the ammeter registers at least 70% of the nominal output.

NOTE

This test is a first-aid test. It is recommended that the alternator be tested on a test bench for close inspection.

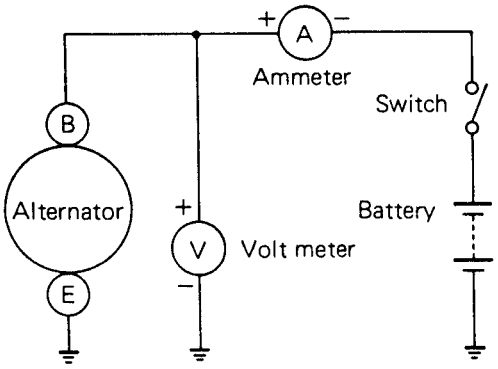

https://truckmanualshub.com/

(c) Armature inspection

Alternatively check four wire leads of the armature coil for continuity with a tester as shown:

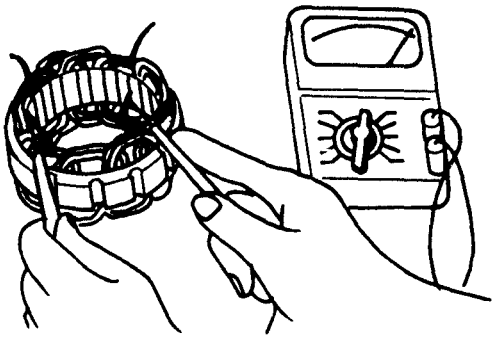

Checking armature

If there is no continuity between the wire leads, it is an indication that the armature has open circuit. Replace the armature with a new one. Then, check the armature for continuity between the wire lead and core. If there is continuity, it is an indication that there is a grounded circuit between the wire and core. In this case, too, the armature should be replaced.

(d) Brushes

Any brush which is worn beyond the service limit should be replaced with a new one.

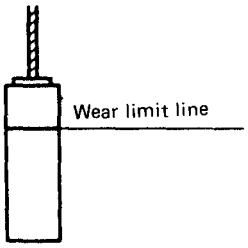

J20198

7-3 Battery

Check the electrolyte level in the battery cells, making sure that it is 10 mm (5/16 in.) above cell plates. Check the specific gravity of electrolyte. If it is below 1.260 at 20°C (68°F), prepare an electrolyte of 1.260 specific gravity and add it to the battery. A specific gravity below 1.190 means that the battery is half discharged; in such a case recharge the battery.

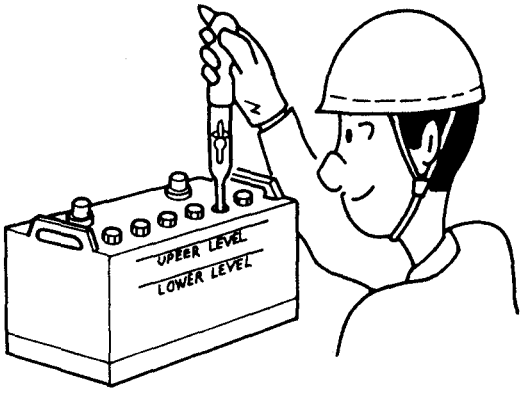

Checking electrolyte specific gravity

7-4 Glow plugs

Connect the positive (+) lead to the portion A of the plug with the portion B grounded to see if the plug glows red. The plug is in good condition if it glows red.

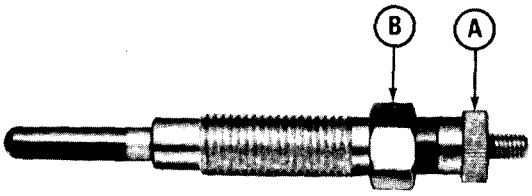

Checking glow plug

https://truckmanualshub.com/

BENCH TEST

When the engine is overhauled, it is advisable to conduct the bench tests for checking the engine performance. The purpose of bench tests is to make sure that each major component has been properly serviced.

1. Visual inspection

Couple the engine to the dynamometer and inspect as follows:

(1) Starting the engine

(a) Check the amounts of cooling water, lubricating oil and fuel oil. Bleed air out of the fuel system.

(b) Place the starter switch in PREHEAT position to preheat the combustion chambers. The glow plug indicator lamp will glow red within 20 seconds. If not, check the preheating system for condition.

(c) Place the starter switch in START position to start the engine. Do not move the governor control lever to INCREASE position.

(d) After starting the engine, manipulate the governor control lever to run the engine at idling speed.

(2) After starting the engine

Check the following items and repair if necessary.

(a) Abnormal oil pressure and oil leakage.

(b) Abnormal noise.

If knocking is heard while water temperature is low and the noise dies away as water temperature rises, the engine is in good condition.

(c) Color of exhaust gases.

(d) Leakage of cooling water.

(e) Leakage of fuel oil.

(f) Fuel injection.

(3) Running-in the engine

While running-in the engine, check the following items and repair if necessary.

(a) Oil pressure (3 ~ 4 kg/cm^2 or 42.7 ~ 56.9 psi).

(b) Temperature of cooling water (75 ~ 85°C or 167 ~ 185°F).

(c) Temperature of lubricating oil (60 ~ 70°C or 140 ~ 158°F in oil pan).

(d) Abnormal noise.

(e) Excessive blow-by, water leakage and oil leakage.

(f) The relationship between the load and running-in period is as follows:

After running-in the engine, check the valve clearance.

Engine speed rpm	Load PS	Time min
1000	0	30
1500	7.5	30
2000	15	60
2500	20	60

2. Performance tests

(1) Test condition

The engine must be equipped with the air cleaner and alternator.

(2) Test items

- No-load maximum speed test (governor set)
- Fuel injection quantity test (control rack set)
- No-load minimum speed test (idling speed set)

(3) Test procedures (with dynamometer pointer in OFF position)

(a) No-load maximum speed test (governor set)

While the temperatures of cooling water and oil are still high after engine running-in, set the no-load maximum speed.

(b) Fuel injection quantity test (control rack set)

The fuel injection quantity can be set by means of the governor fuel set lever. Loosening the set screw at the top of the fuel set lever will increase the fuel injection quantity, and vice versa.

(c) Move the control lever toward LOW SPEED position and adjust the stop screw to set the idling rpm to 650 to 700.

(d) Tune-up of engine output

The diesel engine output is based on the atmospheric pressure and temperature. Therefore, the output must be tuned up under standard conditions. Multiply the output measured by the factor. This factor can be computed by the following equation.

https://truckmanualshub.com/

$$K = \frac{760 - 11.4}{H - Hw} \sqrt{\frac{273 + t}{293}}$$

Where: H = atmospheric pressure in mmHg

Hw = partial pressure of vapor in atmosphere in mmHg

t = room temperature in °C (°F)

https://truckmanualshub.com/

MAINTENANCE STANDARDS

Unit: mm. (in.)

Group	Item			Nominal dimension	Assembly standard [Standard clearance]	Repair limit [Clearance]	Service limit [Clearance]	Remedy	Remarks
General	Maximum rpm (no-load)			Varies according to customers' specifications.				Asjust governor.	
	Minimum rpm (no-load)			650 ~ 700					
	Compression pressure			26 kg/cm² (370 psi), min (at 150 ~ 200 rpm)		20 kg/cm² (284 psi)			Oil and water temperatures: 20 ~ 30°C (68 ~ 86°F)
	Engine oil pressure			3 ~ 4 kg/cm² (43 ~ 57 psi) (at 1500 rpm)		2 kg/cm² (28.4 psi)			Oil temperature: 70°C (158°F)
				1 ~ 2 kg/cm² (14.2 ~ 28.4 psi), min (at idle speed)		0.5 kg/cm² (7.1 psi)			
	Valve timing [3 mm (0.12 in.) added to valve side]	Intake valves	Open	24° ATDC	±3°				These values are to be referred to in measuring timing and differ from actual timing.
			Close	4° BBDC					
		Exhaust valves	Open	16° BBDC					
			Close	28° BTDC					
	Fuel injection timing			Engine specifications (rpm): 1500, 1800, 2000, 2200, 2500, 3000, 3600 BTDC (°): 23, 24, 25, 26, 28, 30, 33					Standard values are shown. Check timing on caution plate.
Crankcase and main moving parts	Warpage of gasketed surface				0.05 (0.0020), max	0.20 (0.008)		Regrind if warpage is minor.	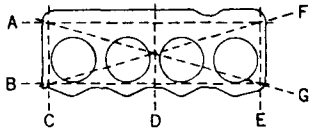
	Cylinder sleeve	Inside diameter		84 (3.307)	$^{+0.035}_{0}$ ($^{+0.00138}_{0}$)	+0.20 (+0.008)	0.70 (0.0276)	Hone sleeve to 0.25 (0.0098), 0.50 (0.00197) or 0.75 (0.0295) oversize with prescribed tolerance. Oversize pistons and piston rings should be used.	All sleeves should be finished to the same oversize. Hone cylinder bore to $87^{-0.010}_{-0.045}$ ($3.425^{-0.00039}_{-0.00177}$) and heat the crankcase. Press sleeves into crankcase and machine each sleeve ID to assembly standard. 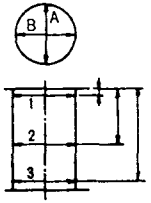
		Out of roundness			0.01 (0.0004), max				
		Taper			0.015 (0.0006), max				

https://truckmanualshub.com/

Unit: mm (in.)

Group		Item		Nominal dimension	Assembly standard [Standard clearance]	Repair limit [Clearance]	Service limit [Clearance]	Remedy	Remarks
Crankcase and main moving parts	Main bearings	Clearance on crankshaft journal (in two directions at right angles to each other with bearing in place)		65 (2.559)	0.035~0.100 [(0.00138~0.00394)]	0.20 [(0.0079)]	−0.9 (−0.035) (at crankshaft journal OD)	Replace bearing if repair limit is reached. Regrind crankshaft journals and use undersize bearings 0.25 (0.0098), 0.50 (0.0197) or 0.75 (0.0295) if service limit is reached.	1) Replace crankcase and bearing cap as an assembly. 2) Upper bearing shells have oil groove. 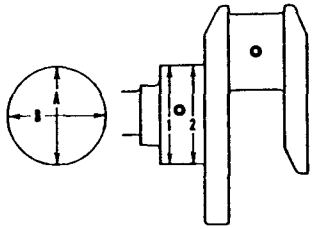
		Thrust clearance		3.7 (0.1457)	0.1 ~0.189 [(0.004 ~0.00744)]	0.30 [(0.0118)]		Replace thrust bearing.	
	Tappet holes	Inside diameter		22 (0.87)	$^{+0.033}_{0}$ ($^{+0.00130}_{0}$)		+0.10 (+0.0039)		
		Fit on tappets			0.035 ~0.098 [(0.00138 ~0.00386)]	0.12 [(0.0047)]	+0.10 (0.0039) (at tappet hole dia.)	Replace tappet if repair limit is reached.	
	Camshaft bushing holes	Fit on camshaft journals	No. 1	54 (2.126)	With bushings 0.040 ~0.090 [(0.00157 ~0.00354)] Without bushings 0.06 ~0.11 [(0.0024 ~0.0043)]	0.15 [(0.0059)]		Rebore holes and insert bushings if repair limit is reached.	
			No. 2						
			No. 3	53 (2.087)					

https://truckmanualshub.com/

Unit: mm (in.)

Cylinder head	Cylinder head	Warpage of gasketed surface			0.05 (0.0020), max	0.20 (0.0079)		Regrind if warpage is minor.	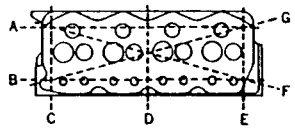
		As-installed thickness of gasket		1.35 (0.0531)	±0.05 (±0.0020)				
	Valves	Diameter of valve stem	Intake	8 (0.315)	−0.045 (−0.00177) −0.060 (−0.00236)	−0.10 (−0.004)			
			Exhaust		−0.060 (−0.00236) −0.080 (−0.00315)	−0.15 (−0.0059)			
		Clearance of valve stem in guide	Intake	8 (0.315)	0.055 ~ 0.085 [(0.00217 ~ 0.00335)]	0.15 [(0.0059)]		Replace valve guide if repair limit is reached.	
			Exhaust		0.070 ~ 0.105 [(0.00276 ~ 0.00413)]	0.20 [(0.0079)]			
		Valve sinkage		0.8 (0.031)	±0.2 (±0.008)	1.3 (0.051)			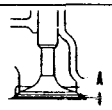
		Margin (valve head thickness)		1.7 (0.067)			*1.2 (0.047)		* Refacing limit
		Face runout of stem			0.03 (0.0012), max (prependicularity to valve face)				
	Valve guide length outside hole			18 (0.709)	±0.3 (±0.012)				
	Valve seat angle			30°					
	Valve seat width			1.4 (0.055)	±0.14 (±0.0055)	1.6 (0.063)			
	Valve springs	Free length		48.85 (1.9232)			47.6 (1.8740)		
		As-installed length		43 (1.69)		44 (1.73)		Adjust by means of shim(s) if repair limit is reached.	
		Load compress spring to initial working length [43 mm (1.69 in.)] kg (lb)			19 ± 1 (41.9 ± 2.21)	15 (33.08)			
		Squareness			1.5°, max				Squareness of each end with respect to center line

https://truckmanualshub.com/

Unit: mm (in.)

Group	Item		Nominal dimension	Assembly standard [Standard clearance]	Repair limit [Clearance]	Service limit [Clearance]	Remedy	Remarks
Cylinder head	Valve clearance		0.25 (0.0098) (cold setting)					0.25 (0.0098) clearance may also be obtained by warm setting if intake and exhaust valves are at the same temperature.
Cylinder head	Rockers	Inside diameter	18 (0.709)	$^{+0.061}_{0}$ ($^{+0.00240}_{0}$)				
Cylinder head	Rockers	Diameter of rocker shaft	18 (0.709)	$^{-0.016}_{-0.034}$ ($^{-0.00063}_{-0.00134}$)				
Cylinder head	Rockers	Fit on shaft	18 (0.709)	0.016 ~ 0.095 [(0.00063 ~ 0.00374)]	0.10 [(0.0039)]		Replace bushings if repair limit is reached. Replace shaft if the limit is exceeded.	
Cylinder head	Push rods	Runout		0.4 (0.016), max				With both ball ends supported.
Cylinder head	Exhaust manifold	Warpage on gasketed surface			0.2 (0.008)			
Main moving parts	Crankshaft	Runout (measured with end journals held in "V" blocks)		0.02 (0.0008), max	0.05 (0.0020)		Straighten or replace crankshaft.	
Main moving parts	Crankshaft	Diameter of journals	65 (2.559)	$^{-0.015}_{-0.035}$ ($^{-0.00059}_{-0.00138}$)	−0.15 (−0.0059)	−0.9 (−0.035)		
Main moving parts	Crankshaft	Out of roundness of crankpins and journals		0.01 (0.0004), max	0.03 (0.0012)			
Main moving parts	Crankshaft	Taper of crankpins and journals						
Main moving parts	Crankshaft	Diameter of crankpins	58 (2.283)	$^{-0.035}_{-0.055}$ ($^{-0.00138}_{-0.00217}$)	−0.20 (−0.008)			
Main moving parts	Crankshaft	Fillet radius	3 (0.12)	±0.2 (0.008)				
Main moving parts	Crankshaft	Variance in angle among crankpins		±20′				

https://truckmanualshub.com/

Unit: mm (in.)

	Crankshaft	Center-to-center dimension between journals and crankpins		47 (1.850)	± 0.05 (± 0.0020)				
		Parallelism between crankpins and journals			0.01 (0.0004), max as runout				
	Pistons	Diameter (at skirt)	Standard	83.90(3.3031)	± 0.015 (± 0.00059)		−0.2 (−0.008)		Measure in the direction transverse to piston pin.
			0.25 (0.0098) oversize	84.15(3.3130)					
			0.50 (0.0197) oversize	84.40(3.3228)					
			0.75 (0.0295) oversize	84.65 (3.3328)					
		Protrusion above crankcase			0.35 ~ 0.75 (0.0138 ~ 0.0295)			Check bearing clearance.	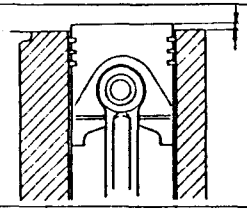
		Difference in weight among pistons per engine			± 5 g (± 0.18 oz)				

https://truckmanualshub.com/

Unit: mm (in.)

Group	Item			Nominal dimension	Assembly standard [Standard clearance]	Repair limit [Clearance]	Service limit [Clearance]	Remedy	Remarks
Main moving parts	Piston rings	Gap			0.30 ~ 0.50 [(0.0118 ~ 0.0197)]	[1.5 (0.059)]			Compress rings to 84 (3.31) dia. to measure. 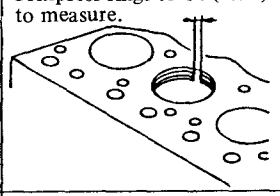
		Fit in ring grooves	No. 1 compression ring	2.5 (0.098)	0.050 ~ 0.085 [(0.00197 ~ 0.00335)]	[0.20 (0.0079)]		Replace rings if service limit is reached. Replace pistons if the limit is exceeded.	1) Ring side clearance Measure side clearance with ring kept flush with second land. 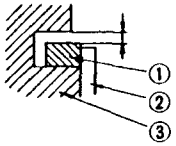 1-Compression ring 2-Straightedge 3-Piston 2) When replace oil ring, replace it together with expander.
			No. 2 compression ring	2.0 (0.079)	0.025 ~ 0.060 [(0.00098 ~ 0.00236)]	[0.15 (0.0059)]			
			Oil ring	4.0 (0.157)					
	Piston pins	Diameter		25 (0.984)	0 / −0.006 (0 / −0.00024)				
		Clearance in pistons			0 ~ 0.016 [(0 ~ 0.00063)]	[0.05 (0.0020)]		Replace piston pin if repair limit is reached. Replace piston if the limit is exceeded.	
		Fit in piston pin bushings			0.020 ~ 0.051 [(0.00079 ~ 0.00201)]	[0.08 (0.0031)]		Replace piston pin or bushing. (Ream if necessary.)	
	Connecting rods	Inside diameter of piston pin bushing		25 (0.984)	+0.020 / +0.045 (+0.00079 / +0.00177)				
		Bend, twist			0.05/100 (0.002/4),max	0.15/100 (0.0059/4)			
		Crankpin diameter and fit in connecting rod bearing		58 (2.283)	0.035 ~ 0.100 [(0.00138 ~ 0.00394)]	[0.20 (0.0079)]		Replace bearings if repair limit is reached. Regrind crankpins and use undersize bearings if repair limit is exceeded.	Cap must be installed with marks on cap and rod on the same side.

https://truckmanualshub.com/

Unit: mm (in.)

Main moving parts	Connecting rods	End play			0.15 ~ 0.35 [(0.0059 ~ 0.0138)]	0.50 [(0.0197)]		Replace connecting rods.	
		Difference in weight among rods per engine			±25g (±0.88 oz)				
	Flywheel	Flatness			0.15 (0.0059), max	0.5 (0.020)		Grind or replace.	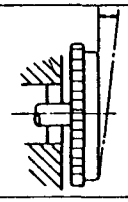
		Runout						Replace flywheel.	
Timing gear train	Camshaft	Cam height	Intake	D_1 $46.916^{+0.1}_{-0.3}$ $(1.84708^{+0.00394}_{-0.01181})$	$D_1 - D_2 = 6.684$ (0.26315)		$D_1 - D_2$ = 6.184 (0.24346)	Replace camshaft.	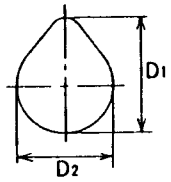
			Exhaust	D_1 $45.944^{+0.1}_{-0.3}$ $(1.80882^{+0.00394}_{-0.01181})$	$D_1 - D_2 = 7.344$ (0.28913)		$D_1 - D_2$ = 6.844 (0.26945)		
		Diameter of journal	No. 1, 2	54 (2.126)	-0.04 (-0.0016) -0.06 (-0.0024)				
			No. 3	53 (2.087)					
		Runout			0.02 (0.0008), max	0.05 (0.0020)		Straighten or replace.	
		End play		5 (0.197)	0.05 ~ 0.112 [(0.00197 ~ 0.00441)]	0.3 [(0.012)]		Replace thrust plate.	
	Idler	Inside diameter of bushings		36 (1.417)	$^{+0.025}_{0}$ $(^{+0.00098}_{0})$				
		Diameter of shaft			-0.025 (-0.00098) -0.050 (-0.00197)				
		Fit of shaft in bushing			0.025 ~ 0.075 [(0.00098 ~ 0.00295)]	0.1 [(0.004)]		Replace bushing.	
		End play		26 (1.02)	0.05 ~ 0.15 [(0.0020 ~ 0.0059)]	0.35 [(0.0138)]		Replace thrust plate.	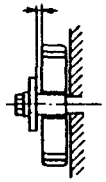

https://truckmanualshub.com/

Unit: mm (in.)

Group		Item	Nominal dimension	Assembly standard [Standard clearance]	Repair limit [Clearance]	Service limit [Clearance]	Remedy	Remarks
Timing gear train	Idler	Thrust journal width in boss	26 (1.024)	0.05 ~ 0.15 [(0.0020 ~ 0.0059)]	0.35 [(0.0138)]		Replace thrust plate.	
		Fit of shaft in holes in crankcase	30 (1.181)	0.09T ~ 0.045T [(0.0035T ~ 0.0018T)]				
	Gear backlash			0.05 ~ 0.20 (0.0020 ~ 0.0079)	0.25 (0.0098)		Replace gear.	
Lubrication system	Oil pump	Running clearance between inner and outer rotors		0.013 ~ 0.015 [(0.00051 ~ 0.00059)]		0.25 [(0.0098)]		
		Sliding clearance between outer rotor and cover	24 (0.9449)	0.04 ~ 0.09 [(0.0016 ~ 0.0035)]	0.15 [(0.0059)]		Reface case cover or case.	
		Clearance between outer rotor and body	40.5 (1.5945)	0.20 ~ 0.275 [(0.0079 ~ 0.01083)]		0.50 [(0.020)]		
		Outside diameter of rotor shaft	13 (0.5118)	$^{0}_{-0.15}$ ($^{0}_{-0.0059}$)				
		Fit of rotor shaft in body		0.032 ~ 0.074 [(0.00126 ~ 0.00291)]		0.15 [(0.0059)]	Replace pump case.	
	Pressure that makes relief valve open		3.0 kg/cm² (42.7 psi)	±0.2 kg/cm² (± 2.84 psi)				Oil pressure varies 0.15 kg/cm² (2.13 psi) per 1 mm (0.04 in.) shim
Fuel system	Fuel feed pump	Outside diameter of tappets	20 (0.78)			0.1 (0.004)		
		Inside diameter of tappet holes						
		Outside diameter of roller	15 (0.591)	$^{0}_{-0.027}$ ($^{0}_{-0.00106}$)		−0.075 (−0.00295)		
		Fit of tappet roller pin in pin hole	7 (0.276)	0.013 ~ 0.071 [(0.00051 ~ 0.00280)]		[Total play: 0.3 (0.012), max]		
		Fit of tappet roller on roller pin	7 (0.276)	0.033 ~ 0.085 [(0.00130 ~ 0.00335)]				
		Delivery pressure	1.8 ~ 2.2 kg/cm² (25.6 ~ 31.3 psi)					Injection pump rpm: 600

https://truckmanualshub.com/

Unit: mm (in.)

Fuel system	Fuel feed pump	Delivery capacity		900 cc (55 cu in.)/min, min	600 cc (37 cu in.)/min, min			Check displacement with injection pump operated at 1000 rpm with a discharge pressure of 1.5 kg/cm² (21 psi).
		Air-tightness	Not greater than 50 cc (3.1 cu in.)/min (with bubbles not larger than 2 mm (0.08 in.) in size.)					Close pump discharge port with a plug. Apply an air pressure of 2 kg/cm² (28 psi) to the pump, and keep the pump immersed in diesel fuel longer than 1 minute.
		Pumping performance		40 seconds, max	50 seconds			Operate injection pump at 150 rpm to check the length of time required for the feed pump to start discharging.
		Number of strokes for pumping (priming pump)		25, max	30			Operate priming pump handle at a speed of 60 strokes/minute. Check the number of strokes required for making the pump start discharging at a head of 1 meter (39-3/8 in.).
	Fuel injection pump	Plunger oil-tightness	150 ~ 200 kg/cm² (2133 ~ 2844 psi), min		150 kg/cm² (2133 psi), max			Pump rpm: 200
		Delivery valve seating tightness				See Remarks.		10 kg/cm² (142 psi) pressure drop should not exceed 5 seconds.
		Backlash between pinion and rack		[0.15 (0.0059)]		[0.25 (0.0098)]		
		Rack sliding resistance	150 g (5.3 oz), max with pump at stand-still; 50 g (1.8 oz), max with pump running at 1000 rpm					
		Fit of tappets in pump housing		0.02 ~ 0.062 [(0.00079 ~ 0.00244)]		[0.25 (0.0098)]		
		Outside diameter of tappet rollers	15 (0.591)	$^{0}_{-0.027}$ ($^{0}_{-0.00106}$)		$^{-0.075}_{(-0.00295)}$		
		Plunger springs — Free length	49.4 (1.945)	$^{+1}_{0}$ ($^{+0.039}_{0}$)		$^{-0.5}_{(-0.020)}$		
		Plunger springs — As-installed length	44 (1.732)					
		Free length of delivery valve spring	32 (1.260)	±0.5 (±0.020)		$^{-1}_{(-0.039)}$		
		Cam height (major diam)	32 (1.260)	0 ~ 0.1 (0 ~ 0.004)		$^{-0.2}_{(-0.0078)}$	Replace camshaft.	Check cam surface for condition.

https://truckmanualshub.com/

Unit: mm (in.)

Group		Item	Nominal odimension	Assembly standard [Standard clearance]	Repair limit [Clearance]	Service limit [Clearance]	Remedy	Remarks
Fuel system	Fuel injection pump	Inside diameter of tappet holes in pump housing	24 (0.945)			−0.15 (−0.0059)		
		Axial play of camshaft bearing		0.03 ~ 0.05 [(0.0012 ~ 0.0020)]	[0.1 (0.004)]		Adjust by means of shim.	
		Fit of tappet pin in tappet (hole)	7 (0.276)	0.013 ~ 0.050 [(0.00051 ~ 0.00197)]				
		Fit of tappet floating bushing on tappet pin		0.033 ~ 0.078 [(0.00130 ~ 0.00307)]		[Total play: 0.3 (0.012), max]	Replace tappet complete.	
		Fit of tappet roller on floating bushing	11 (0.433)	0.050 ~ 0.097 [(0.00197 ~ 0.00382)]				
		Pre-stroke	1.95 (0.0768)	± 0.05 (± 0.0020)				
		Intervals of beginning of injection	90°	± 30'				
		Tappet clearance		0.2 ~ 0.3 [(0.008 ~ 0.012)]				
		Injection quantity adjustment	Test conditions Nozzle tip: ND-DN40SDN32 Injection pipe: 6 x 1.6 x 600 mm (1/4 x 1/16 x 23-5/8 in) Injection pressure: 120 kg/cm² (1706 psi) Delivery pressure: 2.0 kg/cm² (28.44 psi) Test oil: ASTM Diesel fuel No. 2D					Mount injection pump on pump tester and allow pump to inject into the air.
	Governor	Fit of flyweight bushing on weight supporting shaft	7 (0.276)	0.019 ~ 0.047 [(0.00075 ~ 0.00185)]	0.025 [(0.00098)]		Replace flyweight assembly.	
		Fit of flyweight bushing on governor shaft	11 (0.433)	0.016 ~ 0.052 [(0.00063 ~ 0.00205)]	0.10 [(0.0039)]		Replace bushing.	
		Backlash of speed step-up gears		0.06 ~ 0.12 [(0.0024 ~ 0.0047)]	0.20 [(0.0079)]			

Pump speed rpm	Rack position mm	Injection quantity mm³ (cu in.)/rev./cyl.	Variance mm³ (cu in.)/rev./cyl.
2000	8.5 (0.335)	36 ~ 39 (0.0022 ~ 0.0024)	3 (0.00018), max
1000			2 (0.00012), max
1000	8.0 (0.315)	32 ~ 35 (0.0020 ~ 0.0021)	
200	6.0 (0.236)	10 ~ 16 (0.0006 ~ 0.0010)	

https://truckmanualshub.com/

Unit: mm (in.)

Fuel system	Governor	Slip torque of gear complete		0.4 ~ 0.6 kg-m (2.9 ~ 4.3 lb-ft)			Adjust by means of shim.	
		Fit of governor sleeve on governor shaft		0.006 ~ 0.059 [(0.00024 ~ 0.00232)]	0.15 [(0.0059)]			
		Fit of governor sleeve groove on sliding piece	6 (0.236)	0.03 ~ 0.13 [(0.0012 ~ 0.0051)]	0.18 [(0.0071)]		Replace sliding piece.	
		Fit of floating lever on bolt		0.01 ~ 0.052 [(0.00039 ~ 0.00205)]	0.08 [(0.0031)]		Replace floating lever or bolt.	
		Fit of floating lever on pin					Replace floating lever or pin.	
		Fit of shackle on pin					Replace shackle or shackle pin.	
		Fit of shackle on bushing	8 (0.315)	0.01 ~ 0.055 [(0.00039 ~ 0.00217)]			Replace shackle or bushing.	
		Fit of control lever shaft in bearing bushing		0.025 ~ 0.07 [(0.00098 ~ 0.00276)]	0.2 [(0.008)]		Replace shaft or bushing.	
		Fit of adaptor capsule on adaptor	5 (0.197)	0.02 ~ 0.13 [(0.0008 ~ 0.0051)]	0.18 [(0.0071)]		Adaptor should slide smoothly in axial direction.	

Mechanical governor

Adjusting sequence	Item	Adjusting lever angle	Pump rpm	Control rack position RW. mm (in.)
1	High-speed control	4° ± 5°	1150 1400 1300	8.3 ~ 8.7 (0.327 ~ 0.343) 3.3 ~ 3.9 (0.130 ~ 0.154) 5.9 ~ 6.9 (0.232 ~ 0.272)
2	Ungleich control	4° ± 5°	350 600 700	9.7 ~ 9.6 (0.382 ~ 0.378) 8.7 ~ 9.3 (0.343 ~ 0.366) 8.4 ~ 9.0 (0.331 ~ 0.354)
3	Low-speed control	−16° ± 5°	300 400 100	5.5 ~ 6.1 (0.217 ~ 0.240) 4.1 ~ 5.5 (0.161 ~ 0.217) 14.8 (0.583), max
4	Adaptation to engine	Adjusting lever angle	Pump rpm	Injection quantity mm^3 (cu in.)/rev./cyl.
		4° ± 5°	600	36.5 ± 1.5 (0.00223 ± 0.00009) (by full-load stopper)
			1150	36 ± 1.5 (0.00220 ± 0.00009) (by torque spring)
			1400	6 ± 1 (0.00037 ± 0.00006) (by lever)
5	Stop lever operation	RW shall be not more than 2 mm (0.08 in.) when stop lever is operated with adjusting lever VH placed in low-speed control position.		

https://truckmanualshub.com/

Unit: mm (in.)

Fuel system	Fuel injection nozzle	Injection pressure		120 kg/cm² (1706.4 psi)	$^{+10}_{0}$ kg/cm² ($^{+142.2}_{0}$ psi)	110 kg/cm² (1564.2 psi)		Adjust by means of shim(s).	Injection pressure varies 10 kg/cm² (142.2 psi) per 0.1 mm (0.004) of shim thickness.
		Spray angle		0°				Test by means of hand tester, using diesel fuel at, 20°C or 68°F approx. If spray pattern is improper even after nozzle is washed in clean kerosene, replace nozzle tip.	Spray of fuel oil should be uniform and consists of fine droplets. No dribbling should be observed after each injection. "Throttle injection" should occur when the tester lever is operated slowly.
		Needle valve seat oil-tightness		Seat shall show no sign of leakage under a pressure of 100 kg/cm² (1422 psi).				Wash needle valve seat or replace nozzle tip.	Replace nozzle tip when needle surface is scratched or scored.
Cooling system	Water pump bearings	Clearance of outer race in pump casing	Front	47 (1.850)	-0.018T~0.014T [(0.00071T~0.00055T)]			Replace pump case or pump assembly.	
			Rear	40 (1.575)					
		Clearance of inner race on pump shaft	Front	20 (0.787)	-0.001T~0.025T [(0.00004T~0.00098T)]				
			Rear	17 (0.669)	-0.002T~0.020T [(0.00008T~0.00079T)]				
		Radial play	Front	20 (0.787)	[0.010~0.025 (0.00039~0.00098)]		[0.045 (0.00177)]	Replace bearing.	Replace bearing if it does not rotate smoothly.
			Rear	17 (0.669)	[0.010~0.022 (0.00039~0.00087)]				
	Water pump impeller, vane-to-casing clearance (front and rear sides)			0.5 ~1 (0.020 ~0.039)				Replace impeller and bearing if vanes are binding.	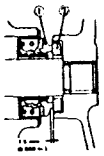 1-Floating seat (carbon) 2-Seal ring (ceramic)
	Unit seals	Carbon protrusion		1.5 (0.059)		0			
		Height (free length)		18.1 (0.713)					
	Thermostat	Temperature that makes valve start opening		76.5°C (169.7°F)	± 2°C (± 3.6°F)				
		Valve lift		9 (0.35)					
		Temperature that makes valve open fully		90°C(194°F)	± 2°C (± 3.6°F)				
	Belt, tension			Deflection: 12 (about 1/2)					

https://truckmanualshub.com/

Unit: mm (in.)

Group		Item		Nominal dimension	Assembly standard [Standard clearance]	Repair limit [Clearance]	Service limit [Clearance]	Remedy	Remarks
Electrical system	Starter	Commutator runout		0.05 (0.0020)	0.03 (0.0012)	0.1 (0.004)			
		Brush	Height		18 (0.71)		11 (0.43)		
			Spring pressure		3.5 kg (7.7 lb)		2 kg (4.4 lbf)		
		Pinion-to-stopper clearance			0.5 ~ 2.0 [(0.020 ~ 0.079)]				

No-load characteristic			Locked-rotor characteristic			Magnetic switch operating voltage	
Voltage (V)	Current (A)	Rpm	Voltage (V)	Current (A)	Torque	Switch IN	Switch OFF
12	130, max	4000, min	3	1000, max	2.8 kg-m (20.3 lb-ft), min	8V, max	When circuit is opened.

No load (battery connected)			Under load (battery resistance load 30A connected)			IC regulator
Voltage (V)	Current (A)	rpm	Voltage (V)	Current (A)	rpm	Adjusting voltage (V)
13.5	0	1050, max	13.5	30	2500, max	14.4 ± 0.3

Ball bearing		Field resistance Ω at 20°C (68°F)
	Rear side	
	Front side	
#6201		3.4
#6302		

https://truckmanualshub.com/

SEALANT APPLICATION DATA

Where to apply	Mating face or parts	Sealant	Remarks
Oil pan gasket	Crankcase	ThreeBond 1102	Apply to bottom face for oil pan.
	Front/rear attaching faces	Atmojet	Apply to both sides of cork packing.
		ThreeBond 1207C	Apply to periphery of rubber packing.
Main oil gallery plug	Crankcase	Hermeseal H-1	Apply to hole in crankcase and also to plug after installing.
Crankcase screw plug	Crankcase	Hermeseal H-1	Apply to threaded portion.
Front plate gasket	Front plate	ThreeBond 1102	Apply when reassembling temporarily.
	Crankcase		Apply to the whole surfaces at reassembling.
Timing gear case gasket	Gear case	ThreeBond 1102	Apply when reassembling temporarily.
	Front plate		Apply to the whole surfaces at reassembling.
Water pump gasket	Plate	ThreeBond 1102	Apply when reassembling temporarily.
	Water pump		Apply to the whole surfaces at reassembling.
Pump plate gasket	Plate	ThreeBond 1102	Apply when reassembling temporarily.
	Crankcase		Apply to the periphery of port.
Oil filler attaching bolts	Oil filler/crankcase	ThreeBond 1102	Apply to threaded portion in assembly.
Water bypass hose fitting	Thermostat cover/ water pump	Hermeseal H-1	Apply to threaded portion.
Gear case mounting bolts	Crankcase/gear case	Hermeseal H-1	Apply to threaded portion of one upper bolt and two lower bolts.

https://truckmanualshub.com/

TIGHTENING TORQUE

Important bolts and nuts

Unit: kg·m (lb·ft)

Item	Torque
Cylinder head bolts	12.0 ± 0.5 (86.8 ± 3.6)
Main bearing cap bolts	8.5 ± 0.5 (61.5 ± 3.6)
Connecting rod cap bolts	5.5 ± 0.5 (39.8 ± 3.6)
Rocker shaft bracket bolts	1.5 ± 0.5 (10.8 ± 3.6)
Front plate bolts	1.0 ± 0.5 ((7.2 ± 3.6)
Timing gear case bolts	1.0 ± 0.5 (7.2 ± 3.6)
Camshaft thrust plate bolts	1.8 ± 0.5 (13.0 ± 3.6)
Idler thrust plate bolt	3.5 ± 0.5 (25.3 ± 3.6)
Crankshaft pulley nut	40.0 ± 0.5 (289.3 ± 3.6)
Rear plate bolts	3.5 ± 0.5 (25.3 ± 3.6)
Rear oil seal bolts	0.4 (2.9)
Flywheel bolts	8.5 ± 0.5 (61.5 ± 3.6)
Oil pan bolts	0.7 (5.1)
Oil pan drain plug	10.0 ± 0.5 (72.3 ± 3.6)
Nozzle holder retaining nuts	5.0 ± 0.5 (36.2 ± 3.6)
Injection pump delivery valve holders	3.0 ± 0.5 (21.7 ± 3.6)
Governor round nut	2.5 ± 0.5 (18.1 ± 3.6)

https://truckmanualshub.com/

General bolts and nuts

(1) The values listed in this chart are for standard bolts. For other bolts, nuts and screws, refer to the related sections in this manual.

(2) The values listed below have a tolerance of ±10%. When an impact wrench is used, a torque up to and including 14 kg-m (101 lb-ft) has a tolerance of ±20% and a torque above 14 kg-m (101 lb-ft) has a tolerance of ±15%.

Screw thread		Tightening torque			
Diameter	Pitch	With spring washer		Without spring washer	
		kgf·m	lbf·ft	kgf·m	lbf·ft
8	1.0 1.25	1.8 1.8	13 13	2.2 2.1	16 15
10	1.25 1.5	3.6 3.4	26 25	4.2 4.0	30 29
12	1.25 1.75	6.5 6.0	47 43	7.6 7.1	55 51
14	1.5 2.0	10.4 9.8	75 71	12.2 11.5	88 83
16	1.5 2.0	15.8 15.0	114 108	18.6 17.6	135 127
18	1.5 2.5	22.9 20.7	166 150	26.9 24.4	195 176

https://truckmanualshub.com/

SPECIAL SERVICE TOOLS

Unit: mm

Tool No.	Tool name	Drawing or sketch	Qt.	Used for:
30691-10200	Valve guide installer	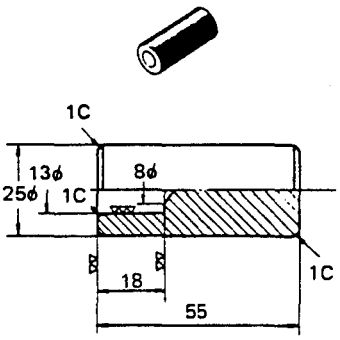 Material: S53C	1	Installing valve guides 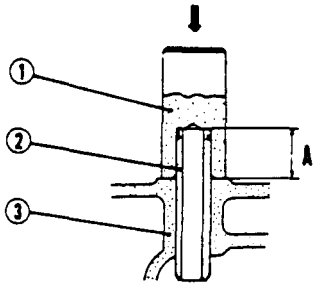 1-Valve guide installer 2-Valve guide 3-Cylinder head A-Guide length outside hole
31391-10500	Valve guide remover	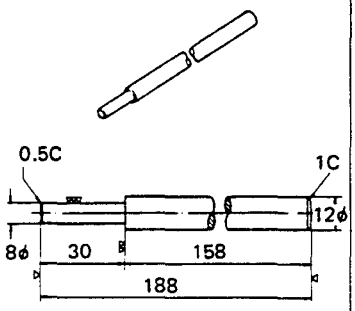 Material: S53C	1	Removing valve guides 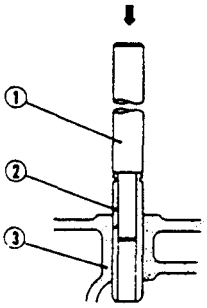 1-Valve guide remover 2-Valve guide 3-Cylinder head
30691-02700	Intake valve insert caulking tool	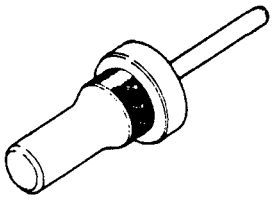	1	Installing intake valve inserts 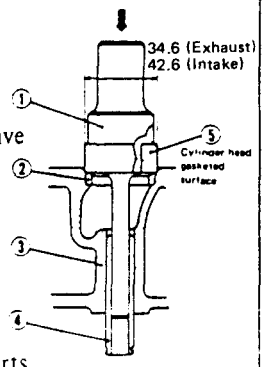
30691-02800	Exhaust valve insert caulking tool	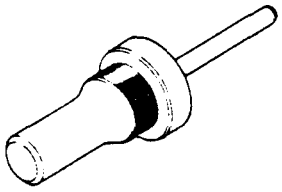	1	Installing exhaust valve inserts 1-Caulking body 2-Valve insert 3-Cylinder head 4-Valve guide 5-Caulking ring

https://truckmanualshub.com/

Unit: mm

Tool No.	Tool name	Drawing or sketch	Qt.	Used for:
30691-11100	Adaptor		1	Connecting pressure gauge to engine for compression measurement 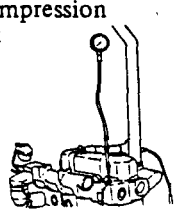
30691-52100	Piston guide	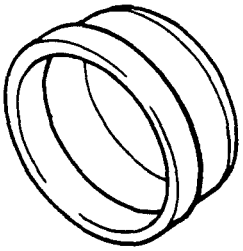	1	Placing pistons in crankcase 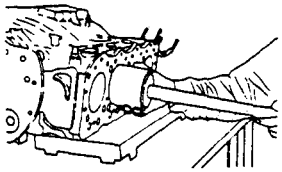
MH061077	Idler shaft puller	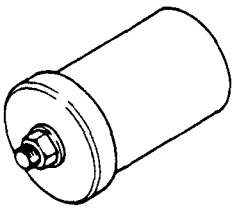	1	Removing idler shaft 1-Crankcase 2-Puller 3-Stud (M10) 4-Idler shaft 5-Nut 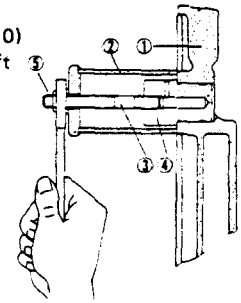
30691-21800	Cranking handle	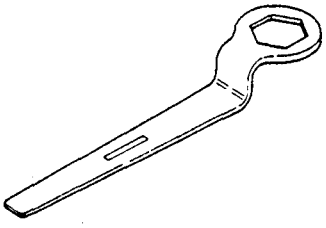	1	Rotating crank pulley for engine cranking 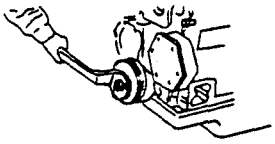
34491-00300	Socket	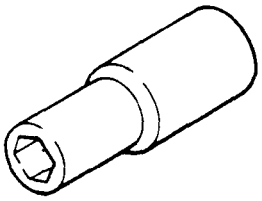	1	Installing camshaft thrust plate 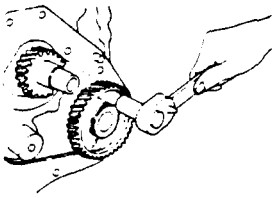

https://truckmanualshub.com/

Unit: mm

Tool No.	Tool name	Drawing or sketch	Qt.	Used for:
30691-51600	Cylinder sleeve installer	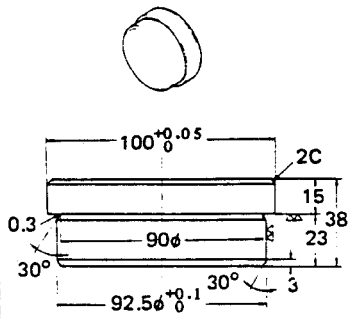 Material: S43C	1	Installing cylinder sleeves 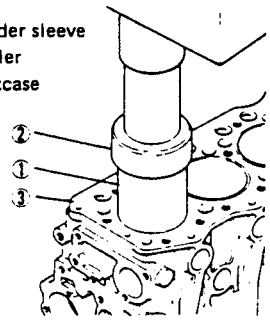
30091-01101	Universal extension	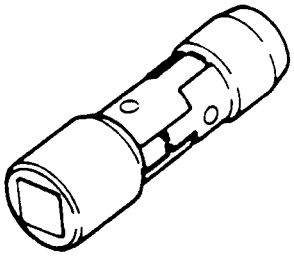	1	Tightening fuel injection pump mounting bolts 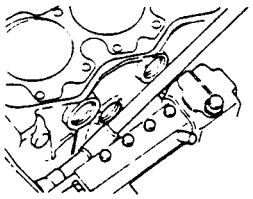
31391-12900	Piston ring tool	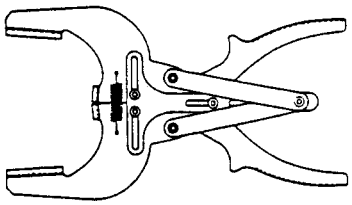	1	Removing/installing piston rings 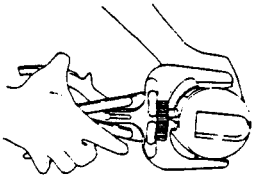
30691-51900	Idler bushing puller	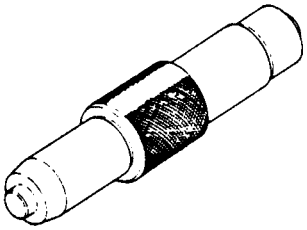	1	Removing/installing idler bushing

https://truckmanualshub.com/

Unit: mm

Tool No.	Tool name	Drawing sketch	Qt.	Used for:
30691-00010	Camshaft bushing installer set	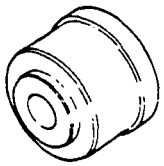 Adaptor (MH061080) 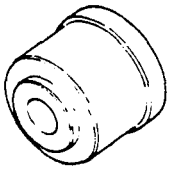 Adaptor (MH061081) 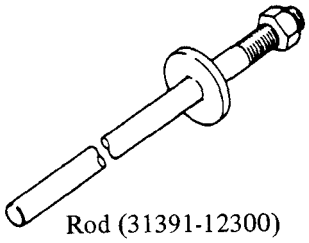 Rod (31391-12300)	1	Removing/installing camshaft bushings 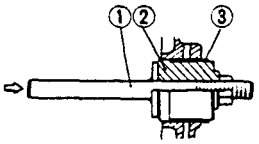 1-Rod 2-Adaptor 3-Camshaft bushing To be used together with guide piece (30891-04700) as a set
30691-13010	Sleeve installer set	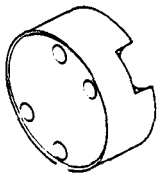 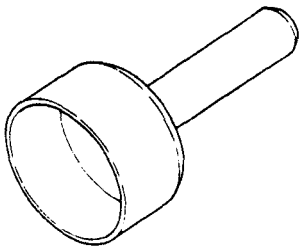	1	Installing crankshaft rear oil seal sleeve

https://truckmanualshub.com/

https://truckmanualshub.com/

TROUBLESHOOTING

Possible cause \ Complaint		Engine will not start								Engine lacks power			Abnormal exhaust smoke						Engine hunts	
		Engine turns over but does not start			Starting motor does not turn over sufficiently to crank engine	Engine does not turn		Glow plugs do not glow red	Glow plugs glow red too early					When operating		Engine knocks excessively	Engine is noisy	Engine runs rough		
		No exhaust smoke	A little exhaust smoke	Too much exhaust smoke		Engine can be cranked manually	Engine cannot be cranked manually			A little exhaust smoke	Too much whitish exhaust smoke	Too much black exhaust smoke	When idling	Whitish exhaust smoke	Black exhaust smoke				When idling	When operating
Fuel system	Insufficient fuel supply to injection pump	○	○	—	—	—	—	—	—	○	—	—	—	—	—	—	—	—	—	—
	Greater variance of injection quantity	—	—	○	—	—	—	—	—	—	—	○	○	—	○	○	—	○	○	○
	Defective injection pump seals	—	—	—	—	—	—	—	—	—	—	—	—	—	—	—	—	—	—	—
	Insufficient injection quantity	○	○	—	—	—	—	—	—	○	—	—	—	—	—	—	—	—	—	—
	Excessive injection quantity	—	—	—	—	—	—	—	—	—	—	—	—	—	○	—	—	—	—	—
	Improper fuel spray from injection nozzles	—	—	○	—	—	—	—	—	—	—	○	○	○	○	○	—	○	○	○
	Excessive fuel return from injection nozzles	—	○	—	—	—	—	—	—	○	—	—	—	—	—	—	—	○	○	—
	Injection timing too advanced	—	—	○	—	—	—	—	—	—	○	—	—	○	○	○	—	—	—	—
	Injection timing too retarded	—	—	○	—	—	—	—	—	—	—	○	○	—	—	—	—	○	○	—
	Defective governor control spring	—	—	—	—	—	—	—	—	—	—	—	—	—	—	—	—	—	—	—
	Maladjusted governor damper spring	—	—	—	—	—	—	—	—	—	—	—	—	—	—	—	—	—	○	○
	Engine speed too low	—	—	—	—	—	—	—	—	—	—	—	—	—	—	—	—	—	○	—
	Failure of engine to stop properly	—	—	—	—	—	—	—	—	—	—	—	—	—	—	—	—	—	—	—
	Poor grade of fuel oil	—	—	○	—	—	—	—	—	—	○	○	○	○	○	○	—	—	—	—
	Fuel viscosity too high	○	○	—	—	—	—	—	—	—	—	—	—	—	—	—	—	—	—	—
Lubrication system	Poor grade of oil	—	—	—	—	—	—	—	—	—	—	—	—	—	—	—	—	—	—	—
	Oil viscosity too high	—	—	—	—	○	—	—	—	—	—	—	—	—	—	—	—	—	—	—
	Oil viscosity too low	—	—	—	—	—	—	—	—	—	—	—	—	○	—	—	—	—	—	—
	Low oil pressure	—	—	—	—	—	—	—	—	—	—	—	—	—	—	—	—	—	—	—
	Excessive oil leakage	—	—	—	—	—	—	—	—	—	—	—	—	—	—	—	—	—	—	—
	Pumping up of oil	—	—	—	—	—	—	—	—	—	—	—	—	○	○	○	—	—	—	—
	Clogged oil filter	—	—	—	—	—	—	—	—	—	—	—	—	—	—	—	—	—	—	—
	Defective oil indicator switch or lamp	—	—	—	—	—	—	—	—	—	—	—	—	—	—	—	—	—	—	—
Air system	Insufficient air	—	—	○	—	—	—	—	—	—	—	○	—	—	○	—	—	—	—	—
	Poor compression	—	—	○	—	—	—	—	—	—	○	○	○	○	○	○	—	○	○	○
	Low pressure at high atomospheric temperature (or altitude)	—	—	—	—	—	—	—	—	—	—	○	—	—	○	—	—	—	—	—

https://truckmanualshub.com/

(● For detailed information refer to the separate chart.)

Engine vibrates excessively	Engine stalls	Poor response for deceleration	Engine does not pick up speed	Engine operates at high speeds but fails to stop	Engine turns in reverse direction	Excessive fuel consumption	Excessive oil consumption	Oil is diluted by fuel	Water in oil	Excessive blow-by	Defective lubrication system			Abnormal water temperature rise		Defective alternator		Remedy
											When engine stops, warning lamp does not come on	Warning lamp comes on at low-speed operation	Warning lamp comes on at high-speed operation	Water temperature too high (Engine overheats)	Water temperature too low	Indicator lamp does not come on when engine stops	Indicator lamp comes on at high-speed operation	
—	○	—	○	—	—	—	—	—	—	—	—	—	—	—	—	—	—	●
○	○	—	—	—	—	○	—	—	—	—	—	—	—	—	—	—	—	●
—	—	—	—	—	—	—	—	○	—	—	—	—	—	—	—	—	—	Check and replace if necessary.
—	○	—	○	—	—	—	—	—	—	—	—	—	—	—	—	—	—	●
—	—	—	—	—	—	○	—	○	—	—	—	—	—	○	—	—	—	●
○	○	—	—	—	—	○	—	○	—	—	—	—	—	—	—	—	—	●
—	○	—	—	—	—	○	—	—	—	—	—	—	—	—	—	—	—	Replace nozzle tips.
○	○	—	—	—	—	○	—	—	—	—	—	—	—	—	—	—	—	●
—	○	—	—	—	—	○	—	—	—	—	—	—	—	○	—	—	—	●
—	—	○	○	—	—	—	—	—	—	—	—	—	—	—	—	—	—	Check and replace spring if necessary. Then adjust governor setting on bench.
—	○	○	—	—	—	—	—	—	—	—	—	—	—	—	—	—	—	Adjust.
○	○	—	—	—	—	—	—	—	—	—	—	○	—	—	—	—	—	Adjust idling set bolt. Hold lever in STOP position.
—	—	—	—	—	○	—	—	—	—	—	—	—	—	—	—	—	—	
—	○	—	—	—	—	○	—	—	—	—	—	—	—	—	—	—	—	●
—	—	—	—	—	—	—	—	—	—	—	—	—	—	—	—	—	—	Use fuel for cold weather.
—	—	—	—	—	—	—	—	—	—	—	—	—	—	—	—	—	—	Use good quality oil.
—	—	—	—	—	—	—	—	—	—	—	—	—	○	—	—	—	—	Use proper viscosity oil.
—	—	—	—	—	—	—	○	—	—	○	—	○	—	—	—	—	—	Use proper viscosity oil.
—	—	—	—	—	—	—	—	—	—	—	—	○	—	—	—	—	—	●
—	—	—	—	—	—	—	○	—	—	—	—	—	—	—	—	—	—	Retighten and replace packing if necessary.
—	—	—	—	—	—	—	○	—	—	—	—	—	—	—	—	—	—	●
—	—	—	—	—	—	—	—	—	—	—	—	—	○	—	—	—	—	Change element and oil.
—	—	—	—	—	—	—	—	—	—	—	—	—	—	—	—	—	—	Check and replace if necessary.
—	○	—	○	—	—	○	—	—	—	—	—	—	—	—	—	—	—	●
—	○	—		—	—	○	—	—	—	—	—	—	—	—	—	—	—	●
—	—	—	—	—	—	○	—	—	—	—	—	—	—	○	—	—	—	(Adjust full-load setting of governor.)

https://truckmanualshub.com/

Possible cause \ Complaint		Engine will not start						Glow plugs do not glow red	Glow plugs glow red too early	Engine lacks power			Abnormal exhaust smoke			Engine knocks excessively	Engine is noisy	Engine runs rough	Engine hunts	
		Engine turns over but does not start			Starting motor does not turn over sufficiently to crank engine.	Engine does not turn								When operating						
		No exhaust smoke	A little exhaust smoke	Too much exhaust smoke		Engine can be cranked manually	Engine cannot be cranked manually			A little exhaust smoke	Too much whitish exhaust smoke	Too much black exhaust smoke	When idling	Whitish exhaust smoke	Black exhaust smoke				When idling	When operating
Cooling system	Engine is too cold.	—	—	○	○	—	—	—	—	—	—	—	○	—	—	○	—	—	—	—
	Radiator dissipates heat excessively	—	—	—	—	—	—	—	—	—	○	—	○	○	—	○	—	—	—	—
	Insufficient coolant	—	—	—	—	—	—	—	—	—	—	○	—	—	○	—	—	—	—	—
	Failure of radiator to dissipate heat properly	—	—	—	—	—	—	—	—	—	—	○	—	—	○	—	—	—	—	—
	Water leak through cylinder head gasket	—	—	—	—	—	—	—	—	—	○	—	○	○	—	—	—	○	—	—
	Cracks in crankcase water jacket	—	—	—	—	—	—	—	—	—	—	—	—	—	—	—	—	—	—	—
Electrical system	Defective starter switch	—	—	—	—	○	—	○	—	—	—	—	—	—	—	—	—	—	—	—
	Defective starter magnetic switch	—	—	—	—	○	—	—	—	—	—	—	—	—	—	—	—	—	—	—
	Defective starting motor	—	—	—	○	○	—	—	—	—	—	—	—	—	—	—	—	—	—	—
	Defective starting motor free wheel	—	—	—	○	○	—	—	—	—	—	—	—	—	—	—	—	—	—	—
	Defective flywheel ring gear and pinion	—	—	—	—	○	—	—	—	—	—	—	—	—	—	—	—	—	—	—
	Battery voltage drop	—	—	○	○	○	—	○	—	—	—	—	—	—	—	—	—	—	—	—
	Open circuit in heater plugs or pilot lamp	—	—	○	—	—	—	○	—	—	—	—	—	—	—	—	—	—	—	—
	Short circuit in heater plugs	—	—	○	—	—	—	—	○	—	—	—	—	—	—	—	—	—	—	—
	Defective alternator	—	—	—	—	—	—	—	—	—	—	—	—	—	—	—	—	—	—	—
	Defective alternator relay	—	—	—	—	—	—	—	—	—	—	—	—	—	—	—	—	—	—	—
	Improper wiring	—	—	○	○	○	—	—	○	—	—	—	—	—	—	—	—	—	—	—
Main moving parts	Jammed moving parts	—	—	—	○	—	○	—	—	—	—	○	—	—	○	—	○	○	—	—
	Worn cylinders, pistons or piston rings	—	—	○	—	—	—	—	—	—	○	—	○	○	—	○	○	—	—	—
	Sticking piston rings	—	—	○	—	—	—	—	—	—	○	—	○	○	—	○	—	—	—	—
	Excessive main bearing clearance	—	—	—	—	—	—	—	—	—	—	—	—	—	—	—	○	—	—	—
	Loose connecting rod cap bolts	—	—	—	—	—	—	—	—	—	—	—	—	—	—	—	○	—	—	—
	Interference between valve and piston	—	—	—	—	—	○	—	—	—	—	—	—	—	—	—	○	—	—	—
	Broken valve springs	—	—	○	—	—	—	—	—	—	○	—	○	○	—	—	○	○	○	○
	Excessive valve clearance	—	—	—	—	—	—	—	—	—	—	○	—	—	○	—	○	○	○	○
	Foreign substances in cylinders	—	—	—	—	—	○	—	—	—	—	—	—	—	—	—	○	—	—	—
	Excessive gear backlash	—	—	—	—	—	—	—	—	—	—	—	—	—	—	—	○	—	—	—

https://truckmanualshub.com/

(● For detailed information refer to the separate chart.)

Engine vibrates excessively	Engine stalls	Poor response for deceleration	Engine does not pick up speed	Engine operates at high speeds but fails to stop	Engine turns in reverse direction	Excessive fuel consumption	Excessive oil consumption	Oil is diluted by fuel	Water in oil	Excessive blow-by	Defective lubrication system			Abnormal water temperature rise		Defective alternator		Remedy
											When engine stops, warning lamp does not come on	Warning lamp comes on at low-speed operation	Warning lamp comes on at high-speed operation	Water temperature too high (Engine overheats)	Water temperature too low	Indicator lamp does not come on when engine stops	Indicator lamp comes on at high-speed operation	
—	○	—	—	—	—	—	—	—	—	—	—	—	○	—	—	—	—	Heat oil pan from bottom side at starting. After starting, warm up engine thoroughly.
—	—	—	—	—	—	○	—	—	—	—	—	—	—	—	○	—	—	●
—	—	—	—	—	—	—	○	—	—	○	—	○	—	○	—	—	—	●
—	—	—	—	—	—	—	○	—	—	○	—	○	—	○	—	—	—	●
—	—	—	—	—	—	—	—	—	○	—	—	—	—	—	—	—	—	Retighten and replace gasket if necessary.
—	—	—	—	—	—	—	—	—	○	—	—	—	—	—	—	—	—	Replace crankcase.
—	—	—	—	—	—	—	—	—	—	—	—	—	—	—	—	—	—	Check for connections and repair. Replace if necessary.
—	—	—	—	—	○	—	—	—	—	—	—	—	—	—	—	—	—	Repair or replace if necessary.
—	—	—	—	—	—	—	—	—	—	—	—	—	—	—	—	—	—	Repair or replace.
—	—	—	—	—	—	—	—	—	—	—	—	—	—	—	—	—	—	Repair or replace motor if necessary.
—	—	—	—	—	—	—	—	—	—	—	—	—	—	—	—	—	—	Repair or replace ring gear. Replace pinion.
—	—	—	—	—	○	—	—	—	—	—	○	—	—	—	—	○	—	Recharge or replace battery. If necessary heat it.
—	—	—	—	—	—	—	—	—	—	—	—	—	—	—	—	—	—	Replace.
—	—	—	—	—	—	—	—	—	—	—	—	—	—	—	—	—	—	Replace copper packings and if necessary heater plugs.
—	—	—	—	—	—	—	—	—	—	—	—	—	—	—	—	—	○	Replace alternator if necessary.
—	—	—	—	—	○	—	—	—	—	—	—	—	—	—	—	○	○	Adjust or replace.
—	—	—	—	—	—	—	—	—	—	—	○	—	—	—	—	○	—	Connect wires properly.
—	○	—	○	—	—	○	○	—	—	○	—	—	—	○	—	—	—	●
—	○	—	—	—	—	○	○	○	—	○	—	—	—	—	—	—	—	Repair or replace.
—	○	—	—	—	—	○	○	○	—	○	—	○	○	—	—	—	—	Repair or replace.
—	—	—	—	—	—	—	—	—	—	—	—	—	—	—	—	—	—	Check and replace bearing(s) with undersize one(s) if necessary.
—	—	—	—	—	—	—	—	—	—	—	—	—	—	—	—	—	—	Retighten.
—	—	—	—	—	—	—	—	—	—	—	—	—	—	—	—	—	—	Re-time timing gear train or adjust valve sinkage properly.
○	○	—	—	—	—	—	—	—	—	—	—	—	—	—	—	—	—	Replace.
○	○	—	—	—	—	—	—	—	—	—	—	—	—	—	—	—	—	Adjust valve clearance to 0.25 mm (0.0098 in.).
—	—	—	—	—	—	—	—	—	—	—	—	—	—	—	—	—	—	Repair.
—	—	—	—	—	—	—	—	—	—	—	—	—	—	—	—	—	—	Replace gears or idler bushing.

https://truckmanualshub.com/

https://truckmanualshub.com/

https://truckmanualshub.com/

Dec. '85
Printed in Japan

Pub. No. 99609-10101