https://truckmanualshub.com/

SANY®

STC900T

SANY Truck Crane
90 Tons Lifting Capacity

Max. Lifting Capacity: 90 t
Max boom length: 50 m
Max lifting height: 77.5 m

https://truckmanualshub.com/

Superior lifting capacity

- Five section, U Shaped main boom, The length of full extended main boom is 50 meters long, the longest in the industry.
- The longitudinal span is 8m with 16.1t full counterweight, the lifting capacity is leading the industry over 15%.

High bearing capacity of chassis

- Brand new chassis with 2.8m width, the frame with rectangular cross section is more higher and wider, The lifting capacity of anti-torsional and anti-bending have been achieved comprehensive enhancement.
- It adopts Dongfeng Cummins engine with 375 P, 10 MT Faster transmission with synchronizer, ABS, Front tire(axle 1,2): 385/95R25 , Rear tire(axle 3,4): 12.00R24.

Electro-hydraulic proportional hydraulic system

- Import pump and hoisting motor can be satisfied with precisely lifting; The min slewing speed is 0.1°/s, the min hoisting speed is 1.5m/min.
- Lifting energy saving capacity would be increase 15% by using electric control system than hydraulic control system, the heave load working efficiency would be increase 30%.
- The composite operation would be more coordinately and smoothly by using intelligent flow compensation and the utilization of flow would be increase 20%.

Humanized control system

- The widened operation cab can move upward from 0 to 20 degree with new inner design, the transverse space of seat increase 50mm and upward angle of seat increase 25°, 10.4 inch display with accessible and comfortable membrane keyboards , new air supply design of three-dimensional air condition provides more comfortable and more wider working enviroment.
- New humanized design with handrail and ladder make it more easy to get on.
- It is more easy for maintenance with simply superstructure cover.

https://truckmanualshub.com/

Good quality

- With multi- safety protection and high reliability.
- With newly developed electrically controlled hydraulic system, the rotary start and braking process is more stable and the micro-movement is more excellent.
- The controller, monitor, instrument, I/O module, and sensor adopt CAN bus networking, which is intelligent and efficient.
- Intelligent controller, BCM control module, and fault self-diagnosis system for more convenient operation.
- With Streamlined full-width cab, standard berth, panoramic window operating room, providing wider vision and more comfortable operation.
- The widened operation room can move upward from 0 to 20 degree, which enables enough space and better view for operating.
- The extensive application of advanced manufacturing technology ensures the excellent performance of products.

safe and reliable

- Equipped with voice alarm system to prevent misoperation and ensure the safety of operation and personnel.
- The torque limiter system is with high accuracy, stability and intelligence to provide comprehensive protection for operation.
- Sensors are widely equipped to timely feedback data, realize real-time monitoring and enable the operator to know the working status of the whole vehicle at any time.

GCP system

- The remote monitoring and management system can monitor equipment operating condition, collect operation parameter, and implement remote fault diagnosis and management.
- Customers can know the operation situation of the equipment, inquiry and ordering parts at any time.

https://truckmanualshub.com/

Overall Dimensions

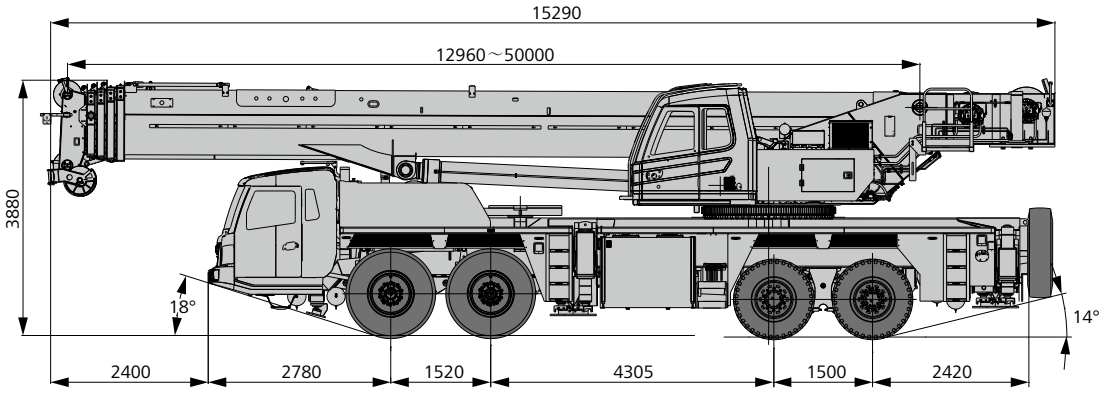

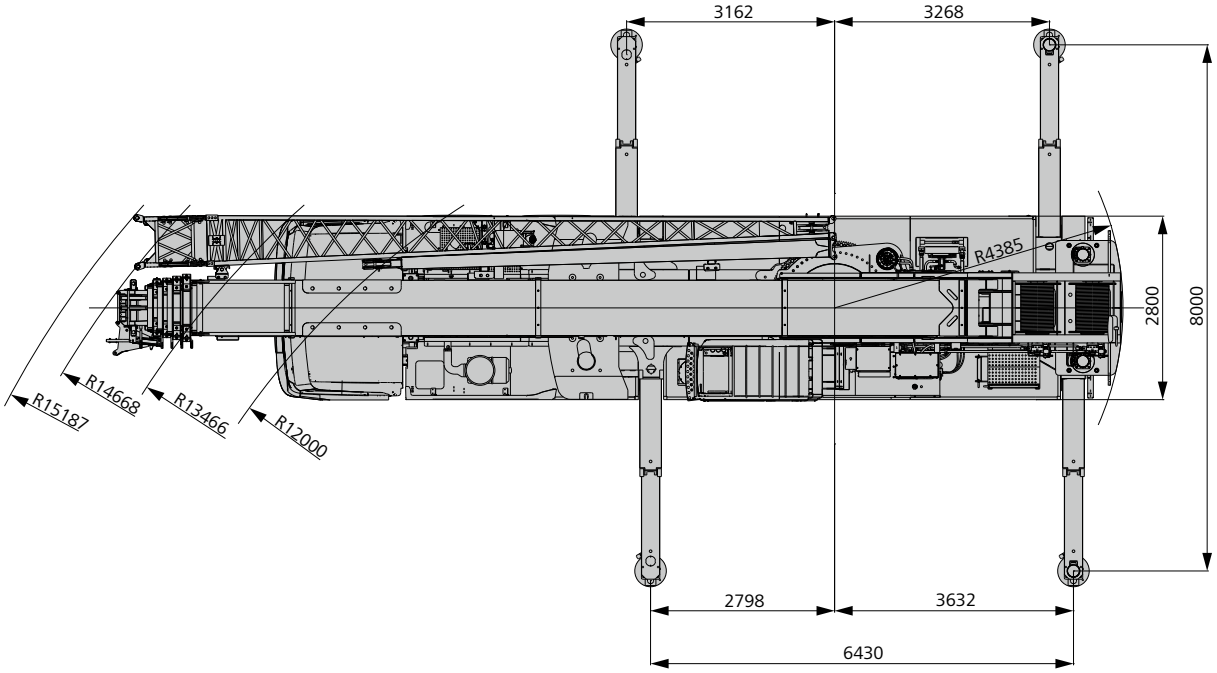

https://truckmanualshub.com/

Technical Parameters

Type	Item		Parameter
Dimensions	Total length of crane		15290 mm
	Total width of crane		2800 mm
	Total height of crane		3880 mm
Weight	Overall weight		50000 kg
	Axle load	Axle load-1,2	24000 kg
		Axle load-3,4	26000 kg
Power	Engine model (Euro Ⅲ)		Dongfeng Cummins ISLe375 30 (Euro Ⅲ)
	Max power of engine		275Kw/2100rpm
	Max torque of engine		1550N.m/1100-1400rpm
Traveling	Max traveling speed		85 Km/h
	Min turning radius		12 m
	Approach angle		≥18°
	Departure angle		≥14°
	Max grade ability		≥40%
	Fuel consumption per 100km		≤50 L
Main parameter	Max lifting capacity		90 t
	Tail slewing radius of swingtable		4.385 m
	Max lifting torque	Base boom	3293kN.m
		Max main boom	1803kN.m
		Max main boom+fixed jib	993kN.m
		Max main boom+extension jib+fixed jib	621kN.m
	Outrigger span (Longitudinal ×Transversal)		6.43×8 m
	The length of boom	Base boom	12.96 m
		Max main boom	50 m
		Max main boom+fixed jib	67.5 m
		Max main boom + extension jib+fixed jib	77 m
Working speed	The max hoisting speed of single rope of main winch (with no load)		130 m/min
	The max hoisting speed of single rope of auxiliary winch(with no load)		130 m/min
	Full extended time/Full retracted time		140s/170s
	Full lifting/descending time		70s/90s
	Slewing speed		0~1.8 r/min

https://truckmanualshub.com/

Technical Parameters

Axle load

Axle	1	2	3	4	Total
Axle load/t	12	12	13	13	50
Remarks	without main hook and auxiliary hook				

Hook

Lifting capacity (t)	Pullies	Parts of line	Hook weight (kg)
90*(optional configuration)	6	12	750
50	4	8	595
8	-	1	160

Main movement parameters

Item			Maximum speed	Diameter / Length	Max. single line pull
Main winch			0-130m/min	20mm/230m	7.5t
Auxiliary winch			0-130m/min	20mm/165m	7.5t
Luffing			70s/90s (0-80°)		
Telescoping			140s/170s		
Outrigger	Vertical outrigger	Retract	35 s		
		Extend	35 s		
	Horizontal outrigger	Retract	20 s		
		Extend	25 s		

https://truckmanualshub.com/

Crane Introduction

Superstructure

Cab

- Independently developed by Sany, the widened operation room can move upward from 0 to 20 degree. It is equipped with retractable pedal, safety glass, corrosion-resistant steel plate, fully covered softening interior, panoramic skylight, adjustable seat and other humanized designs. The air conditioning and electric wiper make operating more comfortable and easy. The 10-inch touch screen is configured to integrate the main control desk and the operation display system, so that all working condition data of hoisting operation can be clearly seen.

Hydraulic system

- Hydraulic system: load sensitive variable hydraulic system with variable piston pump and triple gear pump.

Control system

- By manipulating the indoor two electric proportional controller control on action, the accelerator pedal control motor speed, become warped on the control panel control panel switch control room pitch and pedal scaling.

Slewing structure

- It is made of high strength steel , Box frame type structure, the rigidity is increased by 30%. It use width rail slewing bearing with high capacity of anti-overturning and stability.

Luffing system

- The gravity drop system is adopted to reduce energy consumption and improve the smoothness of the drop operation.

Telescopic system

- Five section, the length of base boom is 12.96m, the fully extended boom is 50m, it is made of high strength steel, u shaped section, the length of extended jib is 9.5m, the length of jib is 17.5m.

Slewing system

- The 360 ° slewing maximum turning speed is 1.8 r/min, and it adopts electronic control proportional speed control, ensuring stable movement, and reliable system. Besides, unique rotary buffer design makes brake more stable.

Hoisting system

- Closed coil lift brake, coil lift balance valve and unique anti-slip hook technology perfect combined together to make the weight rises and falls smoothly.

Safety system

- by using analytical mechanics method, the torque limiter calculation system based on the gravity model is developed to ensure the precision of rated lifting weight is up to + / - 3% through online no-load calibration, and provide All-round protection for lifting operation. When the operation is overloaded, the system will automatically give an alarm, providing security for the operation.

Counterweight

- It is combined with fixed counterweight and movable counterweight. The total weight is 16.1t

https://truckmanualshub.com/

Crane Introduction

Driving cab

- all-steel materials and rubber seal structure for the cab, which is designed by ergonomic principle, and has excellent shock absorption and sealing performance. The cab is equipped with seat with pneumatic suspension, three-point seat belt, adjustable steering wheel, large rearview mirror, comfortable driving chair equipped with headrest, prevent mist fan, air conditioning, stereo radio, complete control instruments and meters, and standard sleeping bed, which is comfortable and safe.

Carrier frame

- Designed and manufactured by Sany, the chassis uses new high-strength structure frame, and is increased in height and width. Compared with the slotted frame, the rigidity is increased by 25%, and the bearing capacity is greatly improved.

Axles

- Axis 3 and 4 are driving shafts, while axis 1 and 2 are steering shafts. The shaft has built-in differential speed between shafts and wheels, and the shaft has differential speed between wheels. The technology of punching and welding bridge shell make it has stronger bearing capacity.

Engine

- Type: six cylinders in line, water cooling, medium cooling, diesel engine.
- Environmental: emissions meet the Euro III standards.
- Effective fuel tank capacity: 350L.

Transmission system

- Gearbox: 10 manual gearbox with synchronizer, the speed ratio range is large, which can meet the requirements of low-speed road climbing and high-speed driving.
- Transmission shaft: optimal transmission shaft layout, transmission shaft transmission is stable and reliable. The optimal force transmission adopts the end face gear connection transmission shaft, which transfers the torque greatly.

Brakes system

- All wheels are provided with air servo brakes, double circuit braking system, and engine with exhaust braking.

Electric system

- 2 × 12V maintenance free batteries equipped with mechanical power supply main switch enables the manual cut off the vehicle power supply. The bus control system can realize the information exchange between the superstructure and the chassis.

https://truckmanualshub.com/

Boom Operating Range

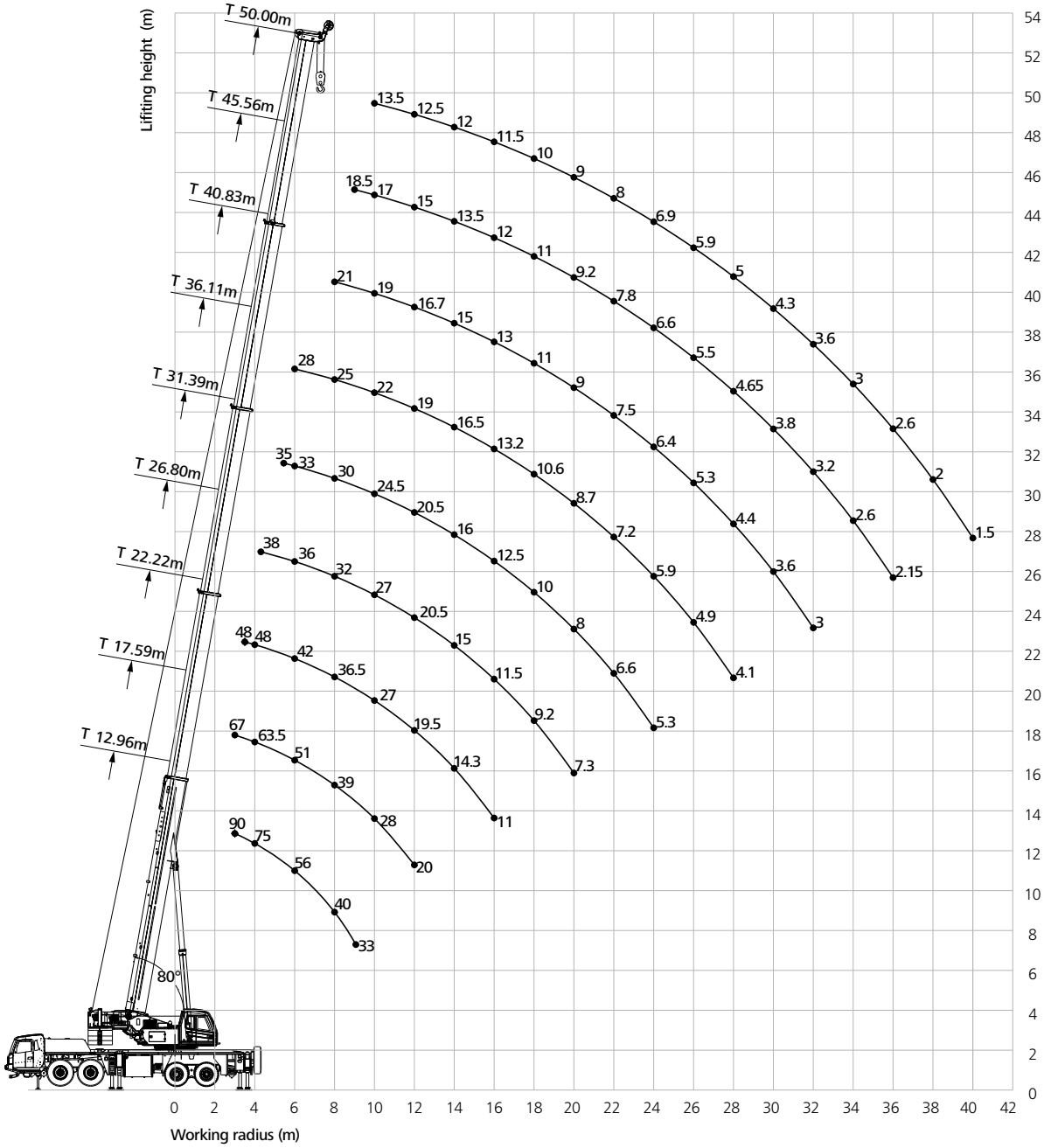

https://truckmanualshub.com/

Load Chart - Telescopic Boom

Unit: t

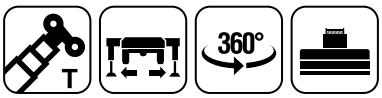

12.96-50m 8m×6.43m 16.1t

Radius (m)	12.96	17.59	22.22	26.80	31.39	36.11	40.83	45.56	50.00	Radius (m)
3	90	67								3
3.5	77	65	48							3.5
4	75	63.5	48							4
4.5	69	61	48	38						4.5
5	63	58	46	38						5
5.5	58	53	44	37	35					5.5
6	56	51	42	36	33	28				6
7	46	45	40	34	31	26				7
8	40	39	36.5	32	30	25	21			8
9	33	33	32.5	29	27	23	20	18.5		9
10		28	27	27	24.5	22	19	17	13.5	10
11		23	22.5	23.2	22	20	18	16	13	11
12		20	19.5	20.5	20.5	19	16.7	15	12.5	12
14			14.3	15	16	16.5	15	13.5	12	14
16			11	11.5	12.5	13.2	13	12	11.5	16
18				9.2	10	10.6	11	11	10	18
20				7.3	8	8.7	9	9.2	9	20
22					6.6	7.2	7.5	7.8	8	22
24					5.3	5.9	6.4	6.6	6.9	24
26						4.9	5.3	5.5	5.9	26
28						4.1	4.4	4.65	5	28
30							3.6	3.8	4.3	30
32							3	3.2	3.6	32
34								2.6	3	34
36								2.15	2.6	36
38									2	38
40									1.5	40
Number of lines	12	10	7	6	5	4	3	3	3	Number of lines
Cylinder Ⅰ	0	50	100	100	100	100	100	100	100	Cylinder Ⅰ
Cylinder Ⅱ	0	0	0	16.5	33	50	67	84	100	Cylinder Ⅱ

https://truckmanualshub.com/

Load Chart - Telescopic Boom

Unit: t

12.96-50m 8m×6.43m 3.2t

Radius (m)	12.96	17.59	22.22	26.80	31.39	36.11	40.83	45.56	50.00	Radius (m)
3	90	67								3
3.5	80	64	48							3.5
4	74	62	48							4
4.5	65	57	48	38						4.5
5	57	54	46	38						5
5.5	54	50	44	37	35					5.5
6	50	47.5	42	36	33	28				6
7	40	39	38	34	31	26				7
8	30	29	28.5	30	30	25	21			8
9	23.5	22.5	22	23.5	24.5	23	20	18.5		9
10		18	17.6	19	19.8	20.5	19	17	13.5	10
11		14.5	14.3	15.5	16.3	17	18	16	13	11
12		12.2	11.7	12.9	13.7	14.5	15	15	12.5	12
14			8	9	9.9	10.5	11	11.5	11.5	14
16			5.5	6.5	7.3	7.8	8.3	8.8	9	16
18				4.65	5.4	6	6.5	6.7	7	18
20				3.15	3.9	4.5	4.9	5.2	5.55	20
22					2.85	3.3	3.75	4	4.5	22
24					1.9	2.45	2.8	3.05	3.3	24
26						1.65	2.05	2.3	2.55	26
28						1.05	1.5	1.7	1.9	28
30							0.9	1.15	1.4	30
32									0.95	32
Number of lines	12	10	7	6	5	4	3	3	3	Number of lines
Cylinder Ⅰ	0	50	100	100	100	100	100	100	100	Cylinder Ⅰ
Cylinder Ⅱ	0	0	0	16.5	33	50	67	84	100	Cylinder Ⅱ

https://truckmanualshub.com/

Jib Operating Range

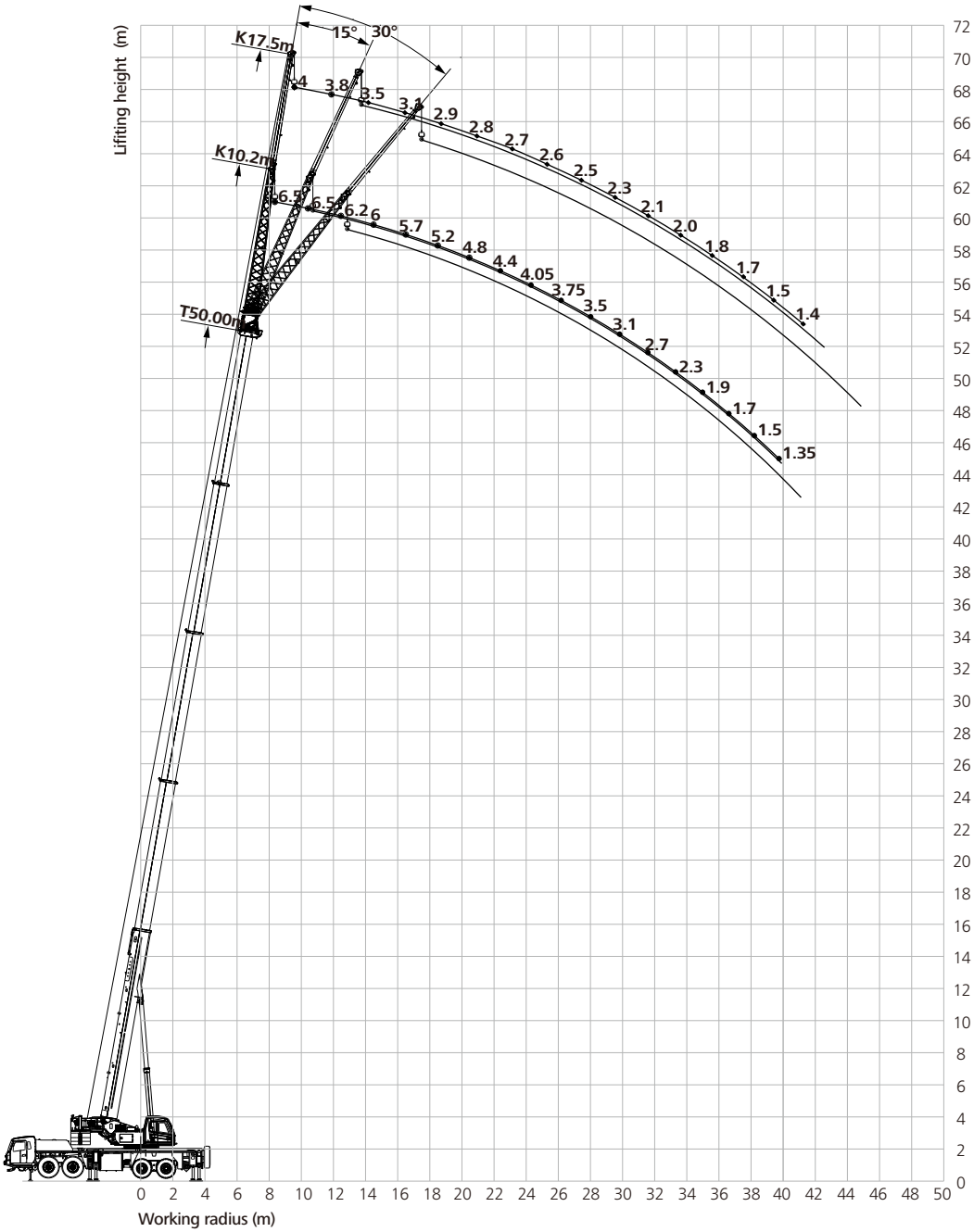

https://truckmanualshub.com/

Load Chat - Telescopic Boom+Fixed Jib

Unit: t

12.96-50m 10.2,17.5m 8m×6.43m 16.1t

Angle of elevation(°)	50+10.2			50+17.5			Angle of elevation(°)
	0°	15°	30°	0°	15°	30°	
80	6.5	5	4.5	4	2.5	1.8	80
78	6.5	5	4.5	3.8	2.2	1.7	78
76	6.2	4.8	4.1	3.5	2	1.6	76
74	6	4.5	3.9	3.1	1.9	1.6	74
72	5.7	4.2	3.7	2.9	1.8	1.5	72
70	5.2	3.9	3.6	2.8	1.8	1.5	70
68	4.8	3.7	3.3	2.7	1.8	1.4	68
66	4.4	3.5	3.1	2.6	1.7	1.3	66
64	4.05	3.3	3	2.5	1.6	1.3	64
62	3.75	3.05	2.9	2.3	1.5	1.3	62
60	3.5	2.9	2.7	2.1	1.5	1.3	60
58	3.1	2.7	2.55	2	1.5	1.2	58
56	2.7	2.4	2.25	1.8	1.4	1.2	56
54	2.3	2.1	2.05	1.7	1.4	1.2	54
52	1.9	1.8	1.75	1.5	1.3	1.2	52
50	1.7	1.6	1.55	1.4			50
48	1.5	1.4	1.3				48
46	1.35						46
Number of lines	1						Number of lines
Hook	8t						Hook

https://truckmanualshub.com/

Load Chat - Telescopic Boom+Fixed Jib

12.96-50m 10.2,17.5m 8m×6.43m 3.2t

Unit: t

Angle of elevation(°)	50+10.2			50+17.5			Angle of elevation(°)
	0°	15°	30°	0°	15°	30°	
80	6.5	5	4.5	4	2.5	1.8	80
78	6.5	5	4.5	3.8	2.2	1.7	78
76	6.2	4.8	4.1	3.5	2	1.6	76
74	6	4.5	3.9	3.1	1.9	1.6	74
72	5.7	4.2	3.7	2.8	1.8	1.5	72
70	4.9	3.9	3.6	2.6	1.7	1.5	70
68	3.7	3.4	3.2	2.3	1.6	1.4	68
66	3.1	2.8	2.7	2.1	1.5	1.3	66
64	2.6	2.4	2.2	1.95	1.4	1.25	64
62	2	1.7	1.6	1.5	1.2	1.15	62
60	1.5	1.4	1.3	1.2	1.1	1	60
58	1.2	1.1	1	0.9	0.8	0.75	58
56	0.9	0.8	0.75				56
Number of lines	1						Number of lines
Hook	8t						Hook

https://truckmanualshub.com/

Load Chart - Telescopic Boom+ extension jib+ fixed jib

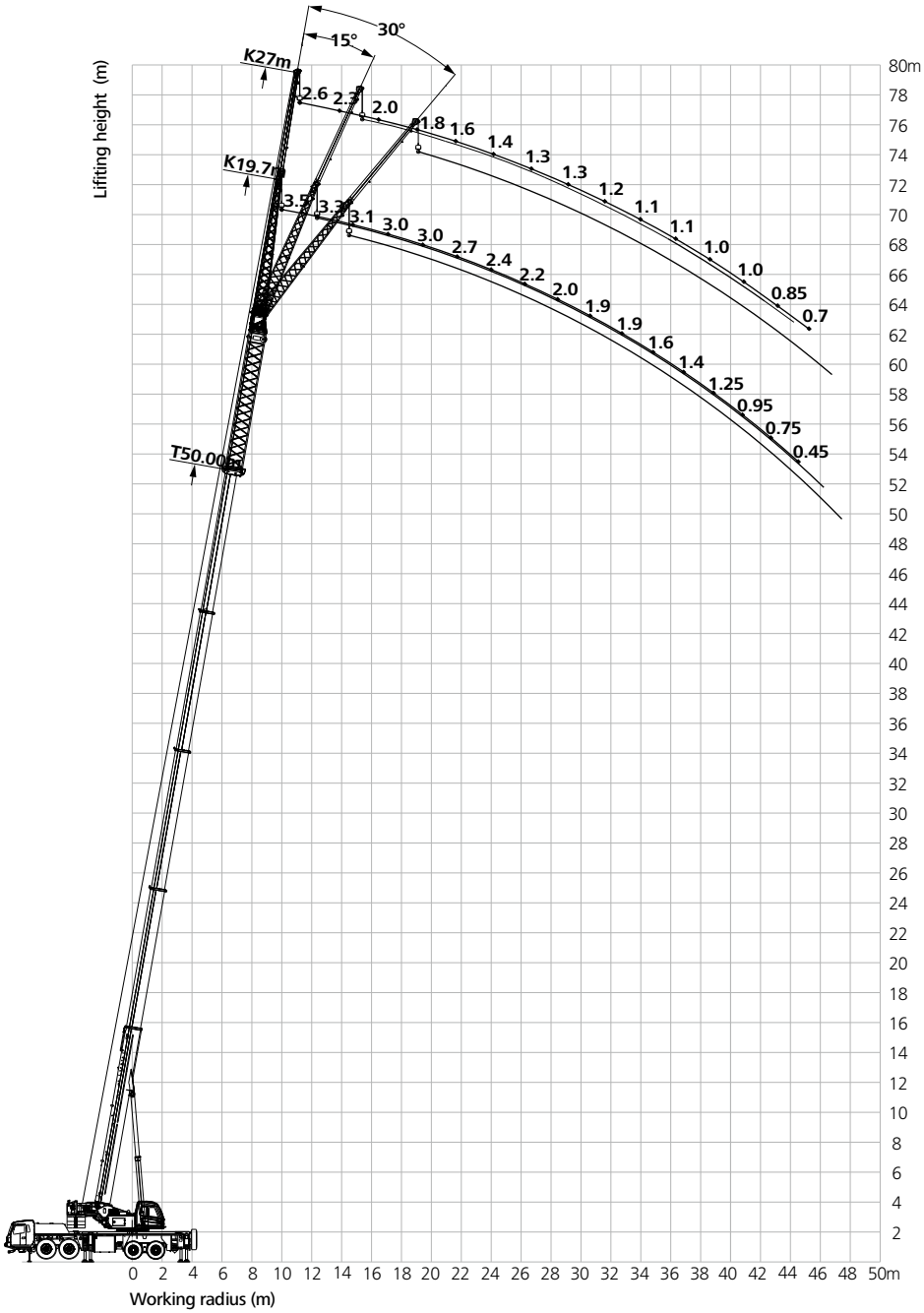

https://truckmanualshub.com/

Load Chat - Telescopic Boom+Extension Jib+Fixed Jib

12.96-67.5m 8m×6.43m 16.1t

Unit: t

Angle of elevation(°)	50+9	50+9.5+10.2			50+9.5+17.5			Angle of elevation(°)
	0°	0°	15°	30°	0°	15°	30°	
80	7.5	3.5	2.8	2.2	2.6	1.6	1.4	80
78	7.5	3.3	2.6	2.1	2.3	1.5	1.3	78
76	7	3.1	2.5	2	2	1.4	1.2	76
74	6.5	3	2.4	1.9	1.8	1.3	1.1	74
72	6	3	2.3	1.9	1.6	1.2	1.1	72
70	5.5	2.7	2.2	1.8	1.4	1.1	1.1	70
68	5.2	2.4	2	1.7	1.3	1.1	1	68
66	5	2.2	1.9	1.6	1.3	1	0.9	66
64	4.8	2	1.8	1.6	1.2	1	0.9	64
62	4.6	1.9	1.7	1.5	1.1	0.9	0.85	62
60	4	1.9	1.6	1.4	1.1	0.85	0.8	60
58	3.4	1.6	1.5	1.3	1	0.8	0.75	58
56	3	1.4	1.3	1.2	1	0.75	0.7	56
54	2.4	1.25	1.1	1	0.85			54
52	2	0.95	0.9	0.85	0.7			52
50	1.7	0.75	0.7	0.7				50
48	1.4	0.45	0.4	0.4				48
46	1.1							46
Number of lines	1							Number of lines
Hook	8t							Hook

https://truckmanualshub.com/

Notes

https://truckmanualshub.com/

Notes

https://truckmanualshub.com/

https://truckmanualshub.com/

Sany Automobile Hoisting Machinery Co., Ltd.

No.168, Jinzhou Avenue, Jinzhou Development Zone, Changsha, Hunan, China
Postcode: 410600
Service: 0086-400 6098 318 Consulting: 400 8879 318
Email: crd@sany.com.cn

—Authorised Dealer—

Reminder:
For safe and reliable operation of the diesel engines, please fill Grade IV machines with Grade IV diesel and urea solution conforming to related national standards. Please refer to the operating instructions and related standards for details.

Any change in the technical parameters and configuration due to advancement in technology may occur without prior notice. The machine in the figures may include auxiliary equipment. This brochure is for reference only, and goods in kind shall prevail.
Copyright at Sany Heavy Industry. No part of this catalogue may be copied, recorded or used for any purpose without written approval from Sany Heavy Industry.

© Printed in August 2019 in China

www.sanyglobal.com