AUDIO

TABLE OF CONTENTS

page

AUDIO
DESCRIPTION 1
OPERATION 1
DIAGNOSIS AND TESTING - AUDIO 2
AMPLIFIER
DESCRIPTION 3
OPERATION 3
REMOVAL 3
INSTALLATION 4
ANTENNA BODY & CABLE
DESCRIPTION 4
OPERATION 4
DIAGNOSIS AND TESTING - ANTENNA BODY AND CABLE 4
REMOVAL 6
INSTALLATION 6
INSTRUMENT PANEL ANTENNA CABLE
REMOVAL 6
INSTALLATION 7
RADIO
DESCRIPTION 7
OPERATION 7
REMOVAL 7
INSTALLATION 8
RADIO NOISE SUPPRESSION GROUND STRAP
DESCRIPTION 8
OPERATION 8
REMOVAL 9
INSTALLATION 10
REMOTE SWITCHES
DESCRIPTION 10
OPERATION 10
DIAGNOSIS AND TESTING - REMOTE SWITCHES 11
REMOVAL 12
INSTALLATION 12
SPEAKER
DESCRIPTION 12
OPERATION 12
DIAGNOSIS AND TESTING - SPEAKER 13
REMOVAL 13
INSTALLATION 15

AUDIO

DESCRIPTION

An audio system is standard factory-installed equipment on this model. Several combinations of radio receivers and speaker systems are offered. The audio system uses an ignition switched source of battery current so that the system will only operate when the ignition switch is in the RUN or ACCESSORY positions.

The audio system includes the following components:

- Antenna
- Power amplifier (with premium speaker system only)
- Radio noise suppression components
- Radio receiver
- Remote radio switches (if equipped)
- Speakers

Certain functions and features of the audio system rely upon resources shared with other electronic modules in the vehicle over the Programmable Communication Interface (PCI) bus network. The data bus network allows the sharing of sensor information. For diagnosis of these electronic modules or of the data bus network, the use of a DRB III® scan tool and the proper Diagnostic Procedures manual are recommended.

Refer to the appropriate wiring information for complete standard and premium audio system circuit diagrams. The wiring information includes proper wire and connector repair procedures, further details on wire harness routing and retention, as well as pin-out and location views for the various wire harness connectors, splices, and grounds.

OPERATION

The audio system components are designed to provide audio entertainment and information through the reception, tuning and amplification of locally broadcast radio signals in both the Amplitude Modulating (AM) and Frequency Modulating (FM) commercial frequency ranges.

The audio system components operate on battery current received through a fuse in the Integrated Power Module (IPM) on a fused ignition switch output (run-acc) circuit so that the system will only operate when the ignition switch is in the Run or Accessory positions.

On vehicles that are equipped with the optional remote radio switches, the Instrument Cluster receives hard wired resistor multiplexed inputs from the remote radio switches. The programming in the

AUDIO (Continued)

Instrument Cluster allows it to process those inputs and send the proper messages to the radio receiver over the Programmable Communication Interface (PCI) bus network to control the radio volume up or down, station seek up or down, preset station advance, and mode advance functions.

Refer to the owner's manual for more information on the features, use and operation of each of the available audio systems.

DIAGNOSIS AND TESTING - AUDIO

Any diagnosis of the Audio system should begin with the use of the DRB III® diagnostic tool. For information on the use of the DRB III®, refer to the appropriate Diagnostic Service Manual.

Refer to the appropriate wiring information. The wiring information includes wiring diagrams, proper wire and connector repair procedures, details of wire harness routing and retention, connector pin-out information and location views for the various wire harness connectors, splices and grounds.

WARNING: DISABLE THE AIRBAG SYSTEM BEFORE ATTEMPTING ANY STEERING WHEEL, STEERING COLUMN, SEAT BELT TENSIONER, SIDE AIRBAG, OR INSTRUMENT PANEL COMPONENT DIAGNOSIS OR SERVICE. DISCONNECT AND ISOLATE THE BATTERY NEGATIVE (GROUND) CABLE, THEN WAIT TWO MINUTES FOR THE AIRBAG SYSTEM CAPACITOR TO DISCHARGE BEFORE PERFORMING FURTHER DIAGNOSIS OR SERVICE. THIS IS THE ONLY SURE WAY TO DISABLE THE AIRBAG SYSTEM. FAILURE TO TAKE THE PROPER PRECAUTIONS COULD RESULT IN ACCIDENTAL AIRBAG DEPLOYMENT AND POSSIBLE PERSONAL INJURY.

AUDIO SYSTEM DIAGNOSIS TABLE

CONDITION	POSSIBLE CAUSES	CORRECTION
NO AUDIO	1. Fuse faulty.	1. Check radio fuse and Ignition-Off Draw (IOD) fuse in the Integrated Power Module (IPM). Replace fuses, if required.
	2. Radio/amplifier (if equipped) connector faulty.	2. Check for loose or corroded radio/amplifier connector. Repair, if required.
	3. Wiring faulty.	3. Check for shorted or open wires. Repair wiring, if required.
	4. Radio/amplifier (if equipped) ground faulty.	4. Check for continuity between radio chassis and a known good ground. There should be continuity. Repair ground, if required.
	5. Radio/amplifier (if equipped) faulty.	5. Refer to appropriate Diagnostic Service Manual.
	6. Speakers faulty.	6. Replace speaker as necessary.
NO RADIO DISPLAY	1. Fuse faulty.	1. Check radio fuse and Ignition-Off Draw (IOD) fuse in Integrated Power Module (IPM). Replace fuses, if required.
	2. Radio connector faulty.	2. Check for loose or corroded radio connector. Repair, if required.
	3. Wiring faulty.	3. Check for battery voltage at radio connector. Repair wiring, if required.
	4. Radio ground faulty.	4. Check for continuity between radio chassis and a known good ground. There should be continuity. Repair ground, if required.
	5. Radio faulty.	5. Refer to appropriate Diagnostic Service Manual.

AUDIO (Continued)

CONDITION	POSSIBLE CAUSES	CORRECTION
CLOCK WILL NOT KEEP SET TIME	1. Fuse faulty.	1. Check Ignition-Off Draw (IOD) fuse in the Integrated Power Module (IPM). Replace fuse, if required.
	2. Radio connector faulty.	2. Check for loose or corroded radio connector. Repair, if required.
	3. Wiring faulty.	3. Check for battery voltage at radio connector. Repair wiring, if required.
	4. Radio ground faulty.	4. Check for continuity between radio chassis and a known good ground. There should be continuity. Repair ground, if required.
	5. Radio faulty.	5. Refer to appropriate Diagnostic Service Manual.
POOR RADIO RECEPTION	1. Antenna faulty.	1. (Refer to 8 - ELECTRICAL/AUDIO/ANTENNA BODY & CABLE - DIAGNOSIS AND TESTING).
	2. Radio ground faulty.	2. Check for continuity between radio chassis and a known good ground. There should be continuity. Repair ground, if required.
	3. Radio noise suppression faulty.	3. Repair or replace ground strap as necessary.
	4. Radio faulty.	4. Refer to appropriate Diagnostic Service Manual.
NO/POOR TAPE OPERATION	1. Faulty tape.	1. Insert known good tape and test operation.
	2. Foreign objects behind tape door.	2. Remove foreign objects and test operation.
	3. Dirty cassette tape head.	3. Clean head with Mopar Cassette Head Cleaner.
	4. Faulty tape deck.	4. Exchange or replace radio, if required.
NO COMPACT DISC OPERATION	1. Faulty CD.	1. Insert known good CD and test operation.
	2. Foreign material on CD.	2. Clean CD and test operation.
	3. Condensation on CD or optics.	3. Allow temperature of vehicle interior to stabilize and test operation.
	4. Faulty CD player.	4. Refer to appropriate Diagnostic Service Manual.

AMPLIFIER

DESCRIPTION

The optional Infinity premium speaker system includes a separate Infinity audio power amplifier. The amplifier is a six channel unit and is rated at 240 total output watts. The amplifier is located behind the glove box.

OPERATION

The power amplifier electronically increases the frequency response of the normal audio signal output from the radio amplifier in order to improve the acoustic performance of the speakers. On vehicles equipped with an amplifier, the amplifier section of the radio becomes a pre-amplifier.

The amplifier receives audio signal inputs for speaker channels from the radio, then sends amplified audio outputs through six separate channels with dedicated feed and return circuits to the individual speakers.

REMOVAL

(1) Disconnect and isolate the battery negative cable.

(2) Remove glove box (Refer to 23 - BODY/INSTRUMENT PANEL/GLOVE BOX - REMOVAL).

AMPLIFIER (Continued)

(3) Remove instrument panel center bezel (Refer to 23 - BODY/INSTRUMENT PANEL/INSTRUMENT PANEL CENTER BEZEL - REMOVAL).

(4) Remove instrument panel lower right center bezel (Refer to 23 - BODY/INSTRUMENT PANEL/IP LOWER RIGHT CENTER BEZEL - REMOVAL).

(5) Disconnect electrical harness connector from amplifier (Fig. 1).

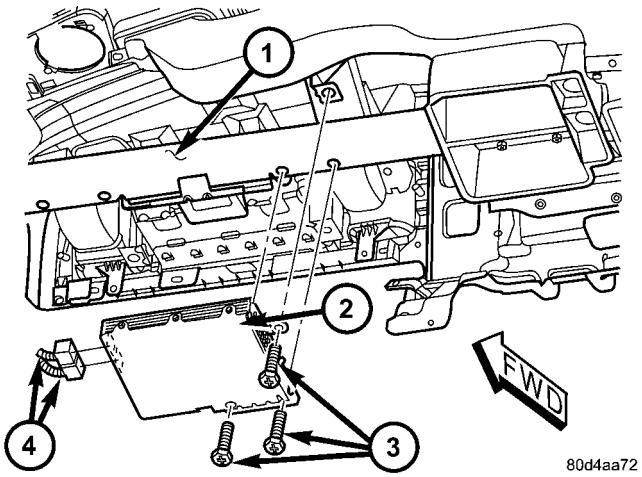

Fig. 1 AMPLIFIER MOUNTING

1 - INSTRUMENT PANEL
2 - AMPLIFIER
3 - MOUNTING BOLTS
4 - ELECTRICAL CONNECTOR

(6) Remove mounting bolts.

INSTALLATION

(1) Connect electrical harness connector and install amplifier.

(2) Install mounting bolts. Tighten to 10 N·m (90 in. lbs.).

(3) Install instrument panel lower right center bezel (Refer to 23 - BODY/INSTRUMENT PANEL/IP LOWER RIGHT CENTER BEZEL - INSTALLATION).

(4) Install instrument panel center bezel (Refer to 23 - BODY/INSTRUMENT PANEL/INSTRUMENT PANEL CENTER BEZEL - INSTALLATION).

(5) Install glove box (Refer to 23 - BODY/INSTRUMENT PANEL/GLOVE BOX - INSTALLATION).

(6) Connect battery negative cable.

ANTENNA BODY & CABLE

DESCRIPTION

The antenna body and cable is secured below the fender panel by the antenna cap nut through a mounting hole in the right front fender. The primary coaxial antenna cable is then routed beneath the fender sheet metal and through a entry hole in the right cowl side panel into the interior of the vehicle. Inside the vehicle, the primary coaxial cable is connected to a secondary instrument panel antenna coaxial cable with an in-line connector that is located behind the right kick panel. The secondary coaxial cable is then routed behind the instrument panel to the back of the radio.

OPERATION

The antenna body and cable connects the antenna mast to the radio. The radio antenna is an electromagnetic circuit component used to capture radio frequency signals that are broadcast by local commercial radio stations in both the Amplitude Modulating (AM) and Frequency Modulating (FM) frequency ranges. These electromagnetic radio frequency signals induce small electrical modulations into the antenna as they move past the mast. The antenna body transfers the weak electromagnetic radio waves induced into the rigid antenna mast into the center conductor of the flexible primary antenna coaxial cable. The braided outer shield of the antenna coaxial cable is grounded through both the antenna body and the radio chassis, effectively shielding the radio waves as they are conducted to the radio. The radio then tunes and amplifies the weak radio signals into stronger electrical signals in order to operate the audio system speakers.

DIAGNOSIS AND TESTING - ANTENNA BODY AND CABLE

The following four tests are used to diagnose the antenna with an ohmmeter:

- **Test 1** - Mast to ground test
- **Test 2** - Tip-of-mast to tip-of-conductor test
- **Test 3** - Body ground to battery ground test
- **Test 4** - Body ground to antenna coaxial cable shield test.

WARNING: DISABLE THE AIRBAG SYSTEM BEFORE ATTEMPTING ANY STEERING WHEEL, STEERING COLUMN, SEAT BELT TENSIONER, SIDE AIRBAG, OR INSTRUMENT PANEL COMPONENT DIAGNOSIS OR SERVICE. DISCONNECT AND ISOLATE THE BATTERY NEGATIVE (GROUND) CABLE, THEN WAIT TWO MINUTES FOR THE AIRBAG SYSTEM CAPACITOR TO DISCHARGE BEFORE PERFORMING FURTHER DIAGNOSIS OR SERVICE. THIS IS THE ONLY SURE WAY TO DISABLE THE AIRBAG SYSTEM. FAILURE TO TAKE THE PROPER PRECAUTIONS COULD RESULT IN ACCIDENTAL AIRBAG DEPLOYMENT AND POSSIBLE PERSONAL INJURY.

The ohmmeter test lead connections for each test are shown in the illustration (Fig. 2).

ANTENNA BODY & CABLE (Continued)

NOTE: This model has a two-piece antenna coaxial cable. Tests 2 and 4 must be conducted in two steps to isolate an antenna cable problem. First, test the primary antenna cable (integral to the antenna body and cable) from the coaxial cable connector behind the right side kick panel to the antenna body. Then, test the secondary antenna cable (instrument panel antenna cable) from the coaxial cable connector behind the right side kick panel to the coaxial cable connector at the radio.

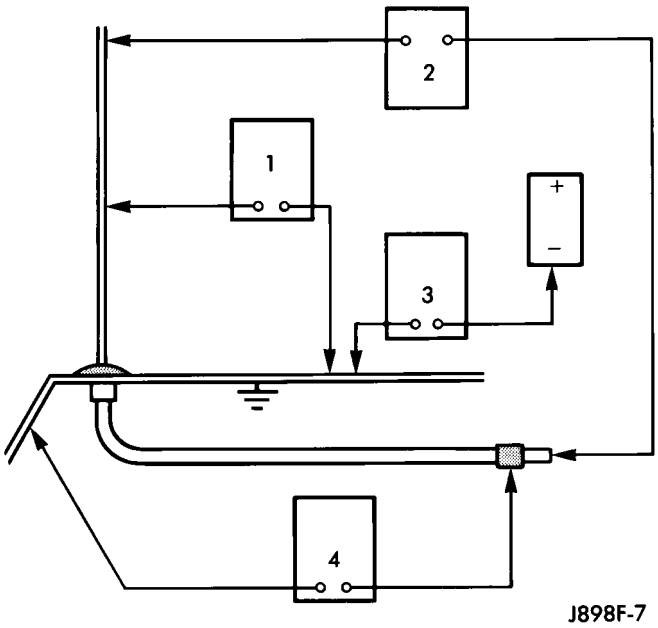

Fig. 2 Antenna Tests - Typical

TEST 1

Test 1 determines if the antenna mast is insulated from ground. Proceed as follows:

(1) Disconnect and isolate the antenna coaxial cable connector behind the right side kick panel.

(2) Touch one ohmmeter test lead to the tip of the antenna mast. Touch the other test lead to known ground. Check the ohmmeter reading for continuity.

(3) There should be no continuity. If OK, go to Test 2. If not OK, replace the faulty antenna body and cable.

TEST 2

Test 2 checks the antenna conductor components for an open circuit. This test should be performed first on the entire antenna circuit, from the antenna mast to the center conductor of the coaxial cable connector at the radio. If an open circuit is detected, each of the three antenna conductor components (antenna mast, antenna body and cable, instrument panel antenna cable) should be isolated and tested individually to locate the exact component that is the source of the open circuit. To begin this test, proceed as follows:

(1) Disconnect the instrument panel antenna cable coaxial connector from the back of the radio.

(2) Touch one ohmmeter test lead to the tip of the antenna mast. Touch the other test lead to the center conductor pin of the instrument panel antenna cable coaxial connector for the radio. Check the ohmmeter reading for continuity.

(3) There should be continuity. The ohmmeter should register only a fraction of an ohm resistance. High or infinite resistance indicates a damaged or open antenna conductor. If OK, go to Test 3. If not OK, isolate and test each of the individual antenna conductor components. Replace only the faulty antenna conductor component.

TEST 3

Test 3 checks the condition of the vehicle body ground connection. To begin this test, proceed as follows:

(1) This test must be performed with the battery positive cable disconnected from the battery. Disconnect and isolate both battery cables, negative cable first.

(2) Reconnect the battery negative cable.

(3) Touch one ohmmeter test lead to a good clean ground point on the vehicle fender. Touch the other test lead to the battery negative terminal post. Check the ohmmeter reading for continuity.

(4) There should be continuity. The ohmmeter should register less than one ohm resistance. High or infinite resistance indicates a loose, corroded, or damaged connection between the battery negative terminal and the vehicle body. If OK, go to Test 4. If not OK, check the battery negative cable connection to the vehicle body and the radio noise suppression ground strap connections to the engine and the vehicle body for being loose or corroded. Clean or tighten these connections as required.

TEST 4

Test 4 checks the condition of the connection between the antenna coaxial cable shield and the vehicle body ground as follows:

(1) Disconnect and isolate the antenna coaxial cable connector behind the right side kick panel.

(2) Touch one ohmmeter test lead to a good clean ground point on the vehicle fender. Touch the other test lead to the outer crimp on the antenna coaxial cable connector. Check the ohmmeter reading for continuity.

(3) There should be continuity. The ohmmeter should register less than one ohm resistance. High or infinite resistance indicates a loose, corroded, or damaged connection between the antenna body and the vehicle body or between the antenna body and the antenna coaxial cable shield. If not OK, clean the

ANTENNA BODY & CABLE (Continued)

antenna body to fender mating surfaces and tighten the antenna cap nut to specifications.

(4) Check the resistance again with an ohmmeter. If the resistance is still more then one ohm, replace the faulty antenna body and cable.

REMOVAL

(1) Disconnect and isolate the battery negative cable.

(2) Remove the right side kick panel.

(3) Disconnect antenna body cable from instrument panel cable.

(4) Securely tie a suitable length of cord or twine to the antenna half of the coaxial cable connector. This cord will be used to pull the cable back into position during installation.

(5) Remove the antenna mast.

(6) Remove the antenna cap nut using an antenna nut wrench (Special Tool C-4816) (Fig. 3).

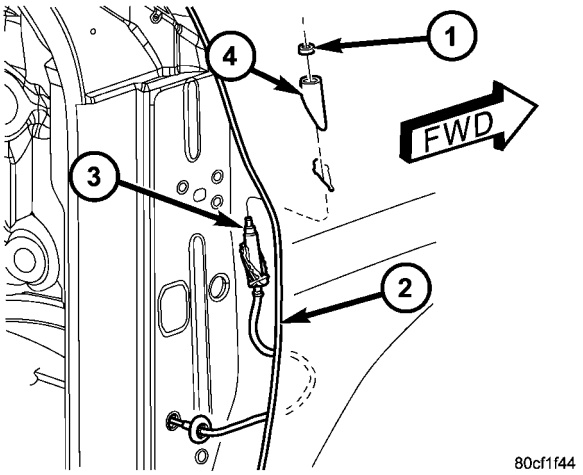

Fig. 3 ANTENNA BODY AND CABLE

1 - NUT
2 - FENDER
3 - ANTENNA BODY AND CABLE
4 - ADAPTER

(7) Remove the antenna adapter.

(8) With the right door open, pull the antenna body assembly out through the opening between the fender and body.

INSTALLATION

(1) Tie the cord that was used during the removal procedure to the cable being installed.

(2) Using the cord, pull the antenna cable through the hole in the door opening and seat grommet into place.

(3) Connect the antenna body and cable to the instrument panel cable.

(4) Install the right side kick panel.

(5) Insert the antenna body through the hole in the fender and install adapter.

(6) Install the antenna cap nut. Tighten to 7 N·m (65 in. lbs.).

(7) Install the antenna mast.

(8) Connect the battery negative cable.

INSTRUMENT PANEL ANTENNA CABLE

REMOVAL

(1) Disconnect and isolate the battery negative cable.

(2) Remove the glove box (Refer to 23 - BODY/INSTRUMENT PANEL/GLOVE BOX - REMOVAL).

(3) Remove the instrument panel center bezel (Refer to 23 - BODY/INSTRUMENT PANEL/INSTRUMENT PANEL CENTER BEZEL - REMOVAL).

(4) Remove the instrument panel lower right center bezel (Refer to 23 - BODY/INSTRUMENT PANEL/IP LOWER RIGHT CENTER BEZEL - REMOVAL).

(5) Remove the radio (Refer to 8 - ELECTRICAL/AUDIO/RADIO - REMOVAL).

CAUTION: Pulling the antenna cable straight out of the radio without pulling on the locking antenna connector could damage the cable or radio.

(6) Disconnect the antenna cable by pulling the locking antenna connector away from the radio (Fig. 4)

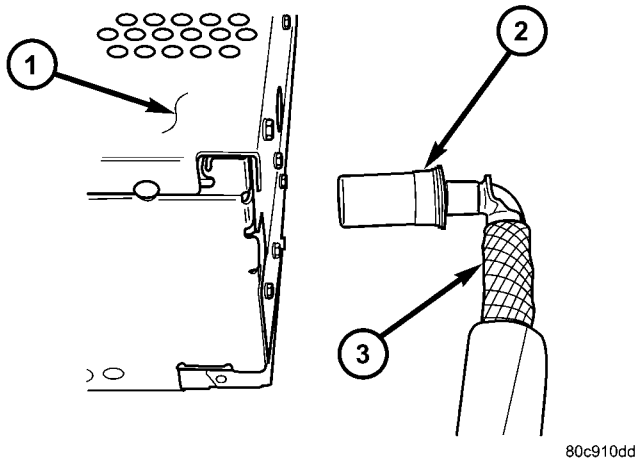

Fig. 4 ANTENNA TO RADIO

1 - RADIO
2 - LOCKING ANTENNA CONNECTOR
3 - INSTRUMENT PANEL ANTENNA CABLE

(7) Remove antenna cable from instrument panel by pulling on retaining fasteners (Fig. 5).

INSTRUMENT PANEL ANTENNA CABLE (Continued)

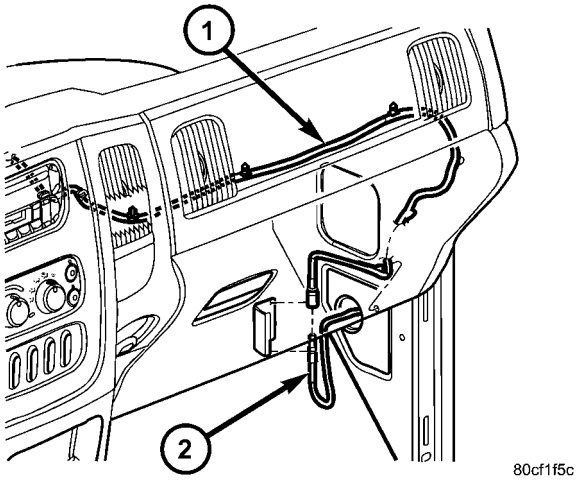

Fig. 5 INSTRUMENT PANEL ANTENNA CABLE

1 - INSTRUMENT PANEL ANTENNA CABLE
2 - ANTENNA BODY AND CABLE

INSTALLATION

(1) Install antenna cable to instrument panel by pressing retaining fasteners into position.

(2) Connect instrument panel antenna cable to antenna body and cable.

(3) Install radio (Refer to 8 - ELECTRICAL/AUDIO/RADIO - INSTALLATION).

(4) Install the instrument panel lower right center bezel (Refer to 23 - BODY/INSTRUMENT PANEL/IP LOWER RIGHT CENTER BEZEL - INSTALLATION).

(5) Install the instrument panel center bezel (Refer to 23 - BODY/INSTRUMENT PANEL/INSTRUMENT PANEL CENTER BEZEL - INSTALLATION).

(6) Install the glove box (Refer to 23 - BODY/INSTRUMENT PANEL/GLOVE BOX - INSTALLATION).

(7) Connect the battery negative cable.

RADIO

DESCRIPTION

Available factory-installed radio receivers for this model include:

- AM/FM/cassette with CD changer control feature (RBB sales code)
- AM/FM/cassette/CD/graphic equalizer with CD changer control feature (RAZ sales code)
- AM/FM/CD with CD changer control feature (RBK sales code)
- AM/FM/CD with 6 CD changer (RBQ sales code)
- AM/FM/cassette/CD (RBY sales code) - export only

All factory-installed radio receivers can communicate on the Programmable Communications Interface (PCI) data bus network. All factory-installed receivers are stereo Electronically Tuned Radios (ETR) and include an electronic digital clock function.

These radio receivers can only be serviced by an authorized radio repair station. See the latest Warranty Policies and Procedures manual for a current listing of authorized radio repair stations.

OPERATION

The radio receiver operates on ignition switched battery current that is available only when the ignition switch is in the On or Accessory positions. The electronic digital clock function of the radio operates on fused battery current supplied through the IOD fuse, regardless of the ignition switch position.

For more information on the features, setting procedures, and control functions for each of the available factory-installed radio receivers, refer to the owner's manual.

REMOVAL

(1) Disconnect and isolate the battery negative cable.

(2) Remove center instrument panel bezel (Refer to 23 - BODY/INSTRUMENT PANEL/INSTRUMENT PANEL CENTER BEZEL - REMOVAL).

(3) Remove radio mounting screws (Fig. 6).

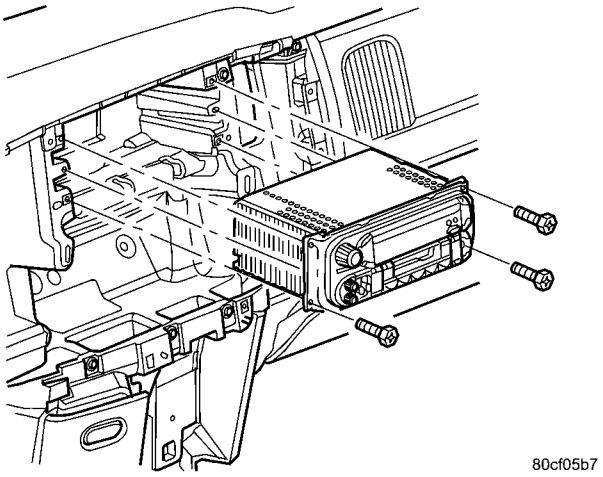

Fig. 6 RADIO

(4) Disconnect electrical harness connector.

CAUTION: Pulling the antenna cable straight out of the radio without pulling on the locking antenna connector could damage the cable or radio.

(5) Disconnect the antenna cable by pulling the locking antenna connector away from the radio (Fig. 7)

RADIO (Continued)

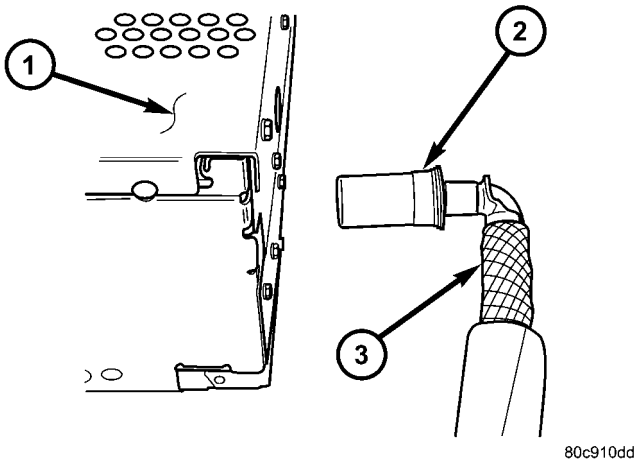

Fig. 7 ANTENNA TO RADIO

1 - RADIO
2 - LOCKING ANTENNA CONNECTOR
3 - INSTRUMENT PANEL ANTENNA CABLE

INSTALLATION

(1) Install antenna cable to radio.
(2) Connect electrical harness connector to radio.
(3) Install radio to instrument panel.
(4) Install instrument panel center bezel (Refer to 23 - BODY/INSTRUMENT PANEL/INSTRUMENT PANEL CENTER BEZEL - INSTALLATION).
(5) Connect battery negative cable.

RADIO NOISE SUPPRESSION GROUND STRAP

DESCRIPTION

Radio noise suppression devices are factory-installed standard equipment on this vehicle. Radio Frequency Interference (RFI) and ElectroMagnetic Interference (EMI) can be produced by any on-board or external source of electromagnetic energy. These electromagnetic energy sources can radiate electromagnetic signals through the air, or conduct them through the vehicle electrical system.

When the audio system converts RFI or EMI to an audible acoustic wave form, it is referred to as radio noise. This undesirable radio noise is generally manifested in the form of “buzzing,” “hissing,” “popping,” “clicking,” “crackling,” and/or “whirring” sounds. In most cases, RFI and EMI radio noise can be suppressed using a combination of vehicle and component grounding, filtering and shielding techniques. This vehicle is equipped with factory-installed radio noise suppression devices that were designed to minimize exposure to typical sources of RFI and EMI; thereby, minimizing radio noise complaints.

Factory-installed radio noise suppression is accomplished primarily through circuitry or devices that are integral to the factory-installed radios, audio power amplifiers and other on-board electrical components such as generators, wiper motors, blower motors, and fuel pumps that have been found to be potential sources of RFI or EMI. External radio noise suppression devices that are used on this vehicle to control RFI or EMI, and can be serviced, include the following:

- **Engine-to-body ground strap** - This length of braided ground strap has an eyelet terminal connector crimped to each end. One end is secured to the engine cylinder head(s). The other is secured to the plenum at the exhaust heat shield forward/outer attaching stud.
- **Resistor-type spark plugs** - This type of spark plug has an internal resistor connected in series between the spark plug terminal and the center electrode to help reduce the production of electromagnetic radiation that can result in radio noise.

OPERATION

There are two common strategies that can be used to suppress Radio Frequency Interference (RFI) and ElectroMagnetic Interference (EMI) radio noise. The first suppression strategy involves preventing the production of RFI and EMI electromagnetic signals at their sources. The second suppression strategy involves preventing the reception of RFI and EMI electromagnetic signals by the audio system components.

The use of braided ground straps in key locations is part of the RFI and EMI prevention strategy. These ground straps ensure adequate ground paths, particularly for high current components such as many of those found in the starting, charging, ignition, engine control and transmission control systems. An insufficient ground path for any of these high current components may result in radio noise caused by induced voltages created as the high current seeks alternative ground paths through components or circuits intended for use by, or in close proximity to the audio system components or circuits.

Preventing the reception of RFI and EMI is accomplished by ensuring that the audio system components are correctly installed in the vehicle. Loose, corroded or improperly soldered wire harness connections, improperly routed wiring and inadequate audio system component grounding can all contribute to the reception of RFI and EMI. A properly grounded antenna body and radio chassis, as well as a shielded antenna coaxial cable with clean and tight connections will each help reduce the potential for reception of RFI and EMI.

RADIO NOISE SUPPRESSION GROUND STRAP (Continued)

REMOVAL

BED TO CAB

(1) Disconnect and isolate the battery negative cable.

(2) Remove the attaching bolts and strap (Fig. 8).

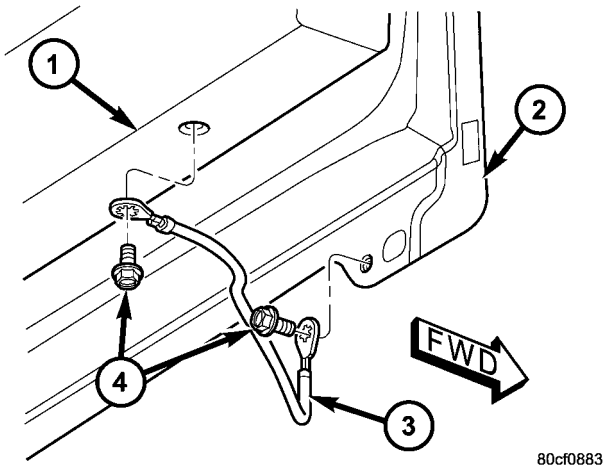

Fig. 8 BED TO CAB GROUND STRAP

1 - BED
2 - CAB
3 - GROUND STRAP
4 - MOUNTING BOLTS

ENGINE TO HEAT SHIELD - 3.7L ENGINE

(1) Disconnect and isolate the battery negative cable.

(2) Remove the attaching bolts from the cylinder heads (Fig. 9).

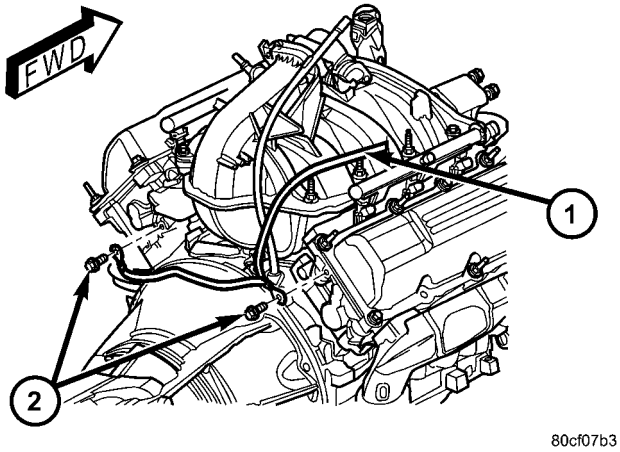

Fig. 9 ENGINE GROUND STRAP - 3.7L

1 - GROUND STRAP
2 - MOUNTING BOLTS

(3) Remove nut from heat shield and remove strap (Fig. 10).

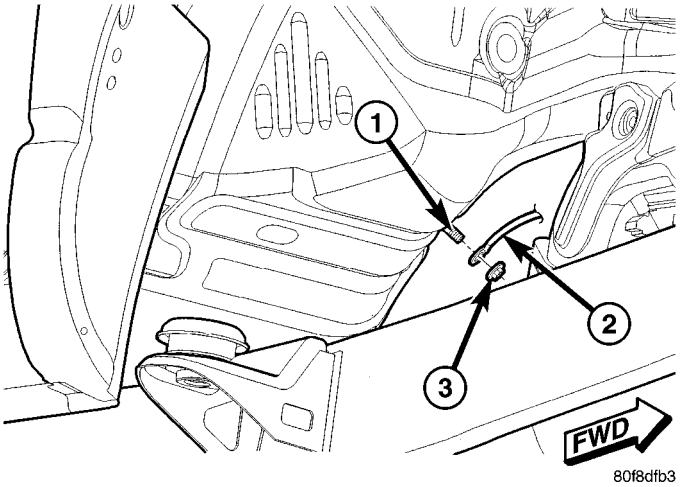

Fig. 10 GROUND STRAP TO HEAT SHIELD

1 - STUD
2 - GROUND STRAP
3 - NUT

ENGINE TO HEAT SHIELD - 4.7L AND 5.7L ENGINE

(1) Disconnect and isolate the battery negative cable.

(2) Remove the attaching bolts from the cylinder heads (Fig. 11).

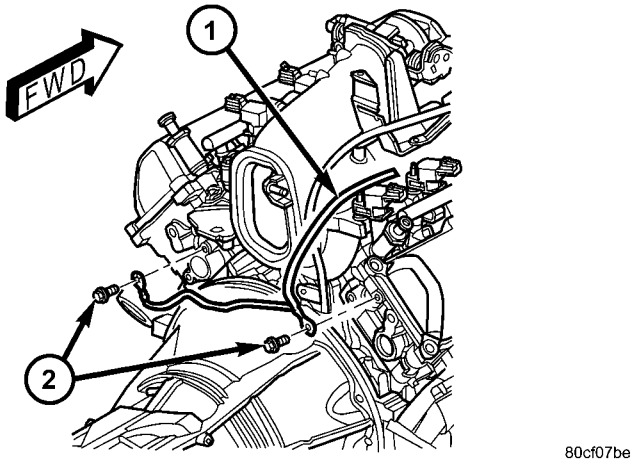

Fig. 11 ENGINE GROUND STRAP - 4.7L AND 5.7L

1 - GROUND STRAP
2 - MOUNTING BOLTS

(3) Remove nut from heat shield and remove strap (Fig. 10).

ENGINE TO HEAT SHIELD - 5.9L AND 8.0L ENGINE

(1) Disconnect and isolate the battery negative cable.

(2) Remove the attaching bolts from the cylinder heads (Fig. 12).

(3) Remove nut from heat shield and remove strap (Fig. 10).

RADIO NOISE SUPPRESSION GROUND STRAP (Continued)

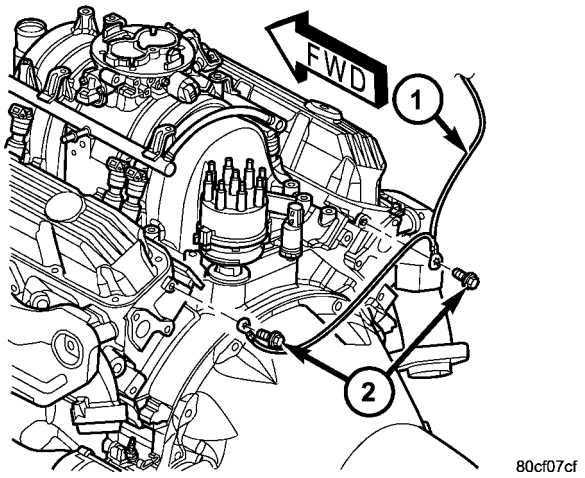

Fig. 12 ENGINE GROUND STRAP - 5.9L (8.0L SIMILAR)

1 - GROUND STRAP
2 - MOUNTING BOLTS

INSTALLATION

BED TO CAB

(1) Install the ground strap and retaining bolts. Tighten to 5 N·m (45 in. lbs.).

(2) Connect the battery negative cable.

ENGINE TO HEAT SHIELD

(1) Install the retaining nut and ground strap to the plenum. Tighten to 8 N·m (70 in. lbs.).

(2) Install the retaining bolt and ground strap to the engine cylinder heads. Tighten to 12 N·m (106 in. lbs.).

(3) Connect the battery negative cable.

REMOTE SWITCHES

DESCRIPTION

A remote radio control switch option is available on some models. Two rocker-type switches are mounted on the back (instrument panel side) of the steering wheel spokes (Fig. 13). The switch on the left spoke is the seek switch and has seek up, seek down, and preset station advance functions. The switch on the right spoke is the volume control switch and has volume up, and volume down functions. The switch on the right spoke also includes a “mode” control that allows the driver to sequentially select AM radio, FM radio, cassette player, CD player or CD changer (if equipped).

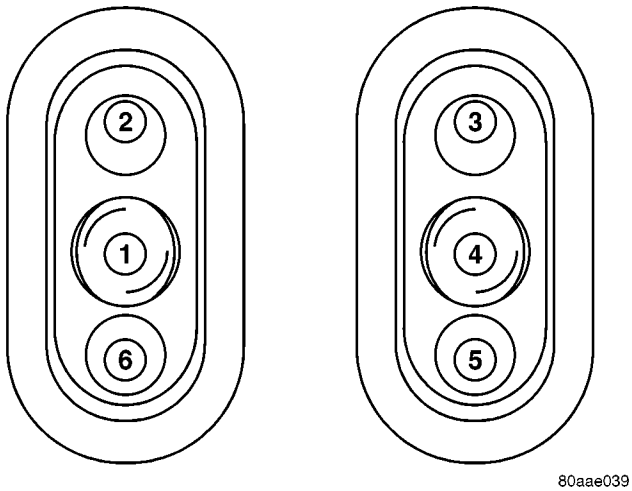

Fig. 13 Remote Radio Switch Operational View

1 - PRESET SEEK
2 - SEEK UP
3 - VOLUME UP
4 - MODE
5 - VOLUME DOWN
6 - SEEK DOWN

OPERATION

The six switches in the two remote radio switch units are normally open, resistor multiplexed momentary switches that are hard wired to the Integrated Power Module (IPM) through the clockspring. The IPM sends a five volt reference signal to both switch units on one circuit, and senses the status of all of the switches by reading the voltage drop on a second circuit.

When the IPM senses an input (voltage drop) from any one of the remote radio switches, it sends the proper switch status messages on the Programmable Communication Interface (PCI) data bus network to the radio receiver. The electronic circuitry within the radio receiver is programmed to respond to these remote radio switch status messages by adjusting the radio settings as requested. For diagnosis of the IPM or the PCI data bus, the use of a DRB III® scan tool and the proper Diagnostic Procedures manual are recommended.

For more information on the features and control functions for each of the remote radio switches, refer to the owner’s manual.

REMOTE SWITCHES (Continued)

DIAGNOSIS AND TESTING - REMOTE SWITCHES

Any diagnosis of the Audio system should begin with the use of the DRB III® diagnostic tool. For information on the use of the DRB III®, refer to the appropriate Diagnostic Service Manual.

For complete circuit diagrams, refer to the appropriate wiring information. The wiring information includes wiring diagrams, proper wire and connector repair procedures, details of wire harness routing and retention, connector pin-out information and location views for the various wire harness connectors, splices and grounds.

WARNING: DISABLE THE AIRBAG SYSTEM BEFORE ATTEMPTING ANY STEERING WHEEL, STEERING COLUMN, SEAT BELT TENSIONER, SIDE AIRBAG, OR INSTRUMENT PANEL COMPONENT DIAGNOSIS OR SERVICE. DISCONNECT AND ISOLATE THE BATTERY NEGATIVE (GROUND) CABLE, THEN WAIT TWO MINUTES FOR THE AIRBAG SYSTEM CAPACITOR TO DISCHARGE BEFORE PERFORMING FURTHER DIAGNOSIS OR SERVICE. THIS IS THE ONLY SURE WAY TO DISABLE THE AIRBAG SYSTEM. FAILURE TO TAKE THE PROPER PRECAUTIONS COULD RESULT IN ACCIDENTAL AIRBAG DEPLOYMENT AND POSSIBLE PERSONAL INJURY.

(1) Disconnect and isolate the battery negative cable. Remove the remote radio switch(es) (Fig. 14) from the steering wheel (Refer to 8 - ELECTRICAL/ AUDIO/REMOTE SWITCHES - REMOVAL).

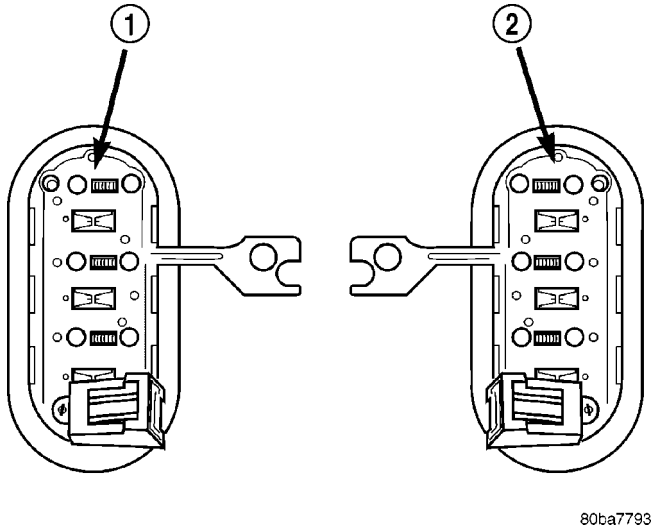

Fig. 14 Remote Radio Switches

1 - BLACK (LEFT) SWITCH
2 - WHITE (RIGHT) SWITCH

(2) Use an ohmmeter to check the switch resistances as shown in the Remote Radio Switch Test chart. If the remote radio switch resistances check OK, go to Step 3. If not OK, replace the faulty switch.

REMOTE RADIO SWITCH TEST TABLE

Switch	Switch Position	Resistance
Right (White)	Volume Up	1.210 Kilohms ± 1%
Right (White)	Volume Down	3.010 Kilohms ± 1%
Right (White)	Mode Advance	0.0511 Kilohms ± 1%
Left (Black)	Seek Up	0.261 Kilohms ± 1%
Left (Black)	Seek Down	0.681 Kilohms ± 1%
Left (Black)	Pre-Set Station Advance	0.162 Kilohms ± 1%

(3) Reconnect the battery negative cable. Turn the ignition switch to the On position. Check for 5 volts at the radio control mux circuit cavities of the steering wheel wire harness connectors for both remote radio switches. If OK, go to Step 4. If not OK, repair the open or shorted radio control mux circuit to the Integrated Power Module (IPM) as required.

(4) Disconnect and isolate the battery negative cable. Disconnect the 22-way instrument panel wire harness connector from the IPM. Check for continuity between the remote radio switch ground circuit cavities of the steering wheel wire harness connectors for both remote radio switches and a good ground. There should be no continuity. If OK, go to Step 5. If not OK, repair the shorted remote radio switch ground circuit to the IPM as required.

(5) Check for continuity between the remote radio switch ground circuit cavities of the steering wheel wire harness connectors for both remote radio switches and the 22-way instrument panel wire harness connector for the IPM. There should be continuity. If OK, refer to the proper Diagnostic Procedures manual to test the IPM and the PCI data bus. If not OK, repair the open remote radio switch ground circuit as required.

REMOTE SWITCHES (Continued)

REMOVAL

WARNING: DISABLE THE AIRBAG SYSTEM BEFORE ATTEMPTING ANY STEERING WHEEL, STEERING COLUMN, SEAT BELT TENSIONER, SIDE AIRBAG, OR INSTRUMENT PANEL COMPONENT DIAGNOSIS OR SERVICE. DISCONNECT AND ISOLATE THE BATTERY NEGATIVE (GROUND) CABLE, THEN WAIT TWO MINUTES FOR THE AIRBAG SYSTEM CAPACITOR TO DISCHARGE BEFORE PERFORMING FURTHER DIAGNOSIS OR SERVICE. THIS IS THE ONLY SURE WAY TO DISABLE THE AIRBAG SYSTEM. FAILURE TO TAKE THE PROPER PRECAUTIONS COULD RESULT IN ACCIDENTAL AIRBAG DEPLOYMENT AND POSSIBLE PERSONAL INJURY.

(1) Disconnect and isolate the battery negative cable.

(2) Remove the driver airbag from the vehicle (Refer to 8 - ELECTRICAL/RESTRAINTS/DRIVER AIRBAG - REMOVAL).

(3) Remove the speed control switches (Refer to 8 - ELECTRICAL/SPEED CONTROL/SWITCH - REMOVAL).

(4) Unplug the wire harness connector from the remote radio switch(es).

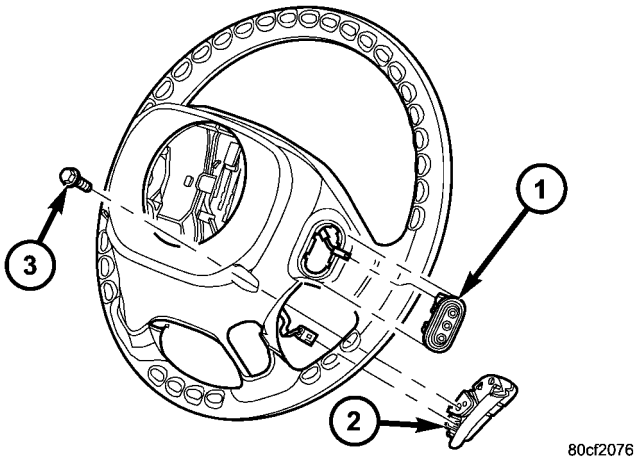

Fig. 15 REMOTE SWITCHES

1 - REMOTE SWITCH
2 - SPEED CONTROL SWITCH
3 - BOLT

(5) Depress the tabs on each side of each switch and push the switch through the rear steering wheel cover (Fig. 15).

INSTALLATION

WARNING: DISABLE THE AIRBAG SYSTEM BEFORE ATTEMPTING ANY STEERING WHEEL, STEERING COLUMN, SEAT BELT TENSIONER, SIDE AIRBAG, OR INSTRUMENT PANEL COMPONENT DIAGNOSIS OR SERVICE. DISCONNECT AND ISOLATE THE BATTERY NEGATIVE (GROUND) CABLE, THEN WAIT TWO MINUTES FOR THE AIRBAG SYSTEM CAPACITOR TO DISCHARGE BEFORE PERFORMING FURTHER DIAGNOSIS OR SERVICE. THIS IS THE ONLY SURE WAY TO DISABLE THE AIRBAG SYSTEM. FAILURE TO TAKE THE PROPER PRECAUTIONS COULD RESULT IN ACCIDENTAL AIRBAG DEPLOYMENT AND POSSIBLE PERSONAL INJURY.

(1) Install remote radio switch to the steering wheel.

(2) Connect the wire harness to the remote radio switch.

(3) Install the speed control switches (Refer to 8 - ELECTRICAL/SPEED CONTROL/SWITCH - INSTALLATION).

(4) Install the driver airbag

(5) Connect the battery negative cable.

SPEAKER

DESCRIPTION

STANDARD

The standard equipment speaker system includes speakers in four locations. One 15.2 X 22.8 centimeter (6 X 9 inch) full-range speaker is located in each front door. There is also one full-range 13.3 centimeter (5.25 inch) diameter full-range speaker located in each rear door.

PREMIUM

The optional premium speaker system features eleven Premium model speakers in seven locations. Each of the standard speakers is replaced with Premium model speakers. One 8.8 centimeter (3.50 inch) diameter speaker is located on each end of the instrument panel top pad. One 6.3 centimeter (2.50 inch) diameter speaker is located in the center of the instrument panel top pad. One 15.2 X 22.8 centimeter (6 X 9 inch) Premium speaker is located in each front door. There is also one coaxial 13.3 centimeter (5.25 inch) diameter Premium full-range speaker located in each rear door. The premium speaker system also includes a power amplifier mounted behind the glove box. The total available power of the premium speaker system is 240 watts.

OPERATION

Two wires connected to each speaker, one feed circuit (+) and one return circuit (–), allow the audio output signal electrical current to flow through the voice coil. For complete circuit diagrams, refer to the

SPEAKER (Continued)

appropriate wiring information. The wiring information includes wiring diagrams, proper wire and connector repair procedures, details of wire harness routing and retention, connector pin-out information and location views for the various wire harness connectors, splices and grounds.

DIAGNOSIS AND TESTING - SPEAKER

Any diagnosis of the Audio system should begin with the use of the DRB III® diagnostic tool. For information on the use of the DRB III®, refer to the appropriate Diagnostic Service Manual.

Refer to the appropriate wiring information. The wiring information includes wiring diagrams, proper wire and connector repair procedures, details of wire harness routing and retention, connector pin-out information and location views for the various wire harness connectors, splices and grounds.

WARNING: DISABLE THE AIRBAG SYSTEM BEFORE ATTEMPTING ANY STEERING WHEEL, STEERING COLUMN, SEAT BELT TENSIONER, SIDE AIRBAG, OR INSTRUMENT PANEL COMPONENT DIAGNOSIS OR SERVICE. DISCONNECT AND ISOLATE THE BATTERY NEGATIVE (GROUND) CABLE, THEN WAIT TWO MINUTES FOR THE AIRBAG SYSTEM CAPACITOR TO DISCHARGE BEFORE PERFORMING FURTHER DIAGNOSIS OR SERVICE. THIS IS THE ONLY SURE WAY TO DISABLE THE AIRBAG SYSTEM. FAILURE TO TAKE THE PROPER PRECAUTIONS COULD RESULT IN ACCIDENTAL AIRBAG DEPLOYMENT AND POSSIBLE PERSONAL INJURY.

CAUTION: The speaker output of the radio is a "floating ground" system. Do not allow any speaker lead to short to ground, as damage to the radio and/or amplifier may result.

(1) If all speakers are inoperative, check the fuses in the Integrated Power Module (IPM). If OK, go to Step 2. If not OK, repair the shorted circuit or component as required and replace the faulty fuse.

(2) Check the amplifier fuse (if equipped) in the IPM. If OK, go to Step 3. If not OK, repair the shorted circuit or component as required and replace the faulty fuse.

(3) Turn the ignition switch to the ON position. Turn the radio receiver ON. Adjust the balance and fader control controls to check the performance of each individual speaker. Note the speaker locations that are not performing correctly. Go to Step 4.

(4) Turn the radio receiver OFF. Turn the ignition OFF. Disconnect and isolate the battery negative cable. If vehicle is **not** equipped with a amplifier, remove the radio receiver. If vehicle is equipped with an amplifier. disconnect wire harness connector at output side of amplifier. Go to Step 5.

(5) Check both the speaker feed (+) circuit and return (-) circuit cavities for the inoperative speaker at the radio receiver wire harness connector for continuity to ground. There should be no continuity. If OK, go to Step 6. If not OK, repair the shorted speaker feed (+) and/or return (-) circuits(s) to the speaker as required.

(6) Disconnect wire harness connector at the inoperative speaker. Check for continuity between the speaker feed (+) circuit cavities of the radio receiver wire harness connector or if equipped, the amplifier wire harness connector and the speaker wire harness connector. Repeat the check between the speaker return (-) circuit cavities of the radio receiver wire harness connector and the speaker wire harness connector. In each case, there should be continuity. If OK, replace the faulty speaker. If not OK, repair the open speaker feed (+) and/or return (-) circuits(s) as required.

REMOVAL

FRONT DOOR SPEAKER

(1) Disconnect and isolate the battery negative cable.

(2) Remove front door trim panel (Refer to 23 - BODY/DOOR - FRONT/TRIM PANEL - REMOVAL).

(3) Remove speaker mounting screws (Fig. 16).

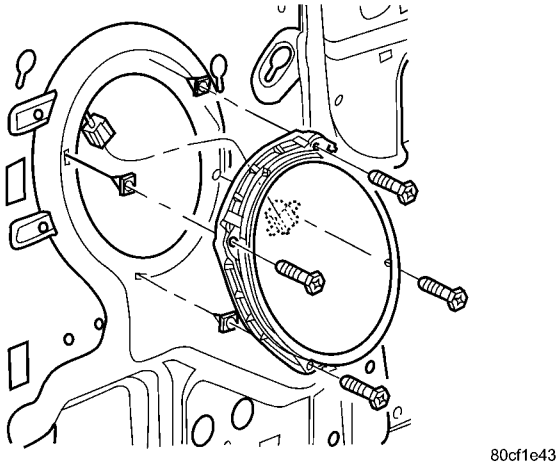

Fig. 16 FRONT DOOR SPEAKER

(4) Disconnect electrical harness connector and remove speaker.

SPEAKER (Continued)

INSTRUMENT PANEL CENTER SPEAKER

(1) Disconnect and isolate the battery negative cable.

(2) Remove instrument panel top cover (Refer to 23 - BODY/INSTRUMENT PANEL/INSTRUMENT PANEL TOP COVER - REMOVAL).

(3) Remove speaker mounting screws (Fig. 17).

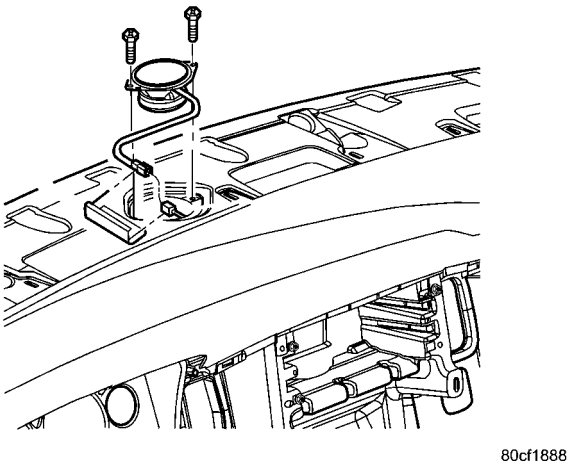

Fig. 17 INSTRUMENT PANEL CENTER SPEAKER

(4) Disconnect electrical harness connector and remove speaker.

INSTRUMENT PANEL END SPEAKER

(1) Disconnect and isolate the battery negative cable.

(2) Remove instrument panel top cover (Refer to 23 - BODY/INSTRUMENT PANEL/INSTRUMENT PANEL TOP COVER - REMOVAL).

(3) Remove speaker mounting screws (Fig. 18)

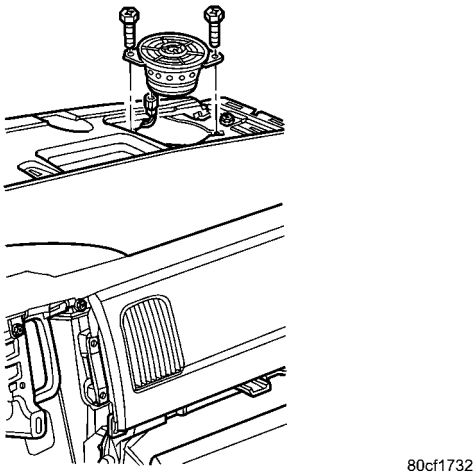

Fig. 18 INSTRUMENT PANEL END SPEAKER

(4) Disconnect electrical harness connector and remove speaker.

REAR CAB SIDE SPEAKER

(1) Disconnect and isolate the battery negative cable.

(2) Remove B-pillar lower trim (Refer to 23 - BODY/INTERIOR/B-PILLAR LOWER TRIM - REMOVAL).

(3) Remove speaker mounting screws (Fig. 19).

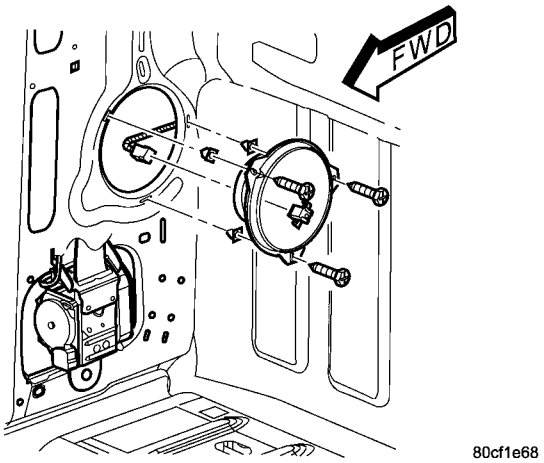

Fig. 19 REAR CAB SIDE SPEAKER

(4) Disconnect electrical harness connector and remove speaker.

REAR DOOR SPEAKER

(1) Disconnect and isolate the battery negative cable.

(2) Remove rear door trim panel (Refer to 23 - BODY/DOORS - REAR/TRIM PANEL - REMOVAL).

(3) Remove speaker mounting screws (Fig. 20).

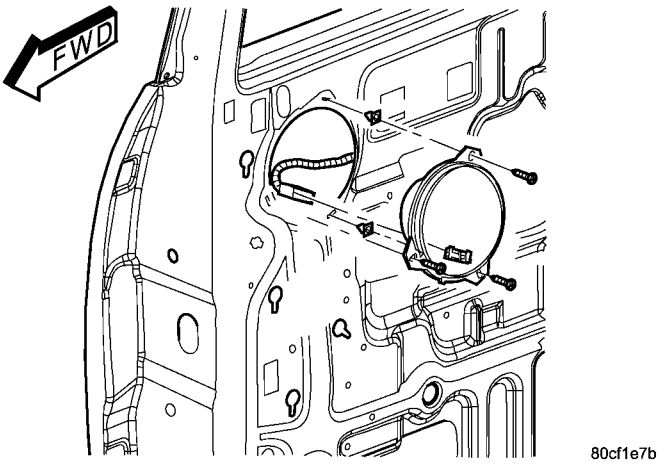

Fig. 20 REAR DOOR SPEAKER

(4) Disconnect electrical harness connector and remove speaker.

SPEAKER (Continued)

INSTALLATION

FRONT DOOR SPEAKER

(1) Connect electrical harness connector and install speaker.

(2) Install front door trim panel (Refer to 23 - BODY/DOOR - FRONT/TRIM PANEL - INSTALLATION).

(3) Connect battery negative cable.

INSTRUMENT PANEL CENTER SPEAKER

(1) Connect electrical harness connector and install speaker.

(2) Install instrument panel top cover (Refer to 23 - BODY/INSTRUMENT PANEL/INSTRUMENT PANEL TOP COVER - INSTALLATION).

(3) Connect battery negative cable.

INSTRUMENT PANEL END SPEAKER

(1) Connect electrical harness connector and install speaker.

(2) Install instrument panel top cover (Refer to 23 - BODY/INSTRUMENT PANEL/INSTRUMENT PANEL TOP COVER - INSTALLATION).

(3) Connect battery negative cable.

REAR CAB SIDE SPEAKER

(1) Connect electrical harness connector and install speaker.

(2) Install B-pillar lower trim (Refer to 23 - BODY/INTERIOR/B-PILLAR LOWER TRIM - INSTALLATION).

(3) Connect battery negative cable.

REAR DOOR SPEAKER

(1) Connect electrical harness connector and install speaker.

(2) Install rear door trim panel (Refer to 23 - BODY/DOORS - REAR/TRIM PANEL - INSTALLATION).

(3) Connect battery negative cable.