https://truckmanualshub.com/

MANITOU

ProCarManuals.com

MT6642XT
MT8044XT
MT10044XT
MT10055XT
MT12042XT

Telescopic Handler
Operator/Service Manual

Catalog 50960025 Revision C

MT6642XT beginning with S/N 27251
MT8044XT beginning with S/N 28251
MT10044XT beginning with S/N 80151
MT10055XT beginning with S/N 80151
MT12042XT beginning with S/N 38101

https://truckmanualshub.com/

Indicator and Operation Symbols

ProCarManuals.com

https://truckmanualshub.com/

MANITOU

Manitou Americas, Inc.
One Gehl Way
P.O. Box 179
West Bend, WI 53095-0179

ProCarManuals.com

MT6642XT
MT8044XT
MT10044XT
MT10055XT
MT12042XT

Telescopic Handler
Operator/Service Manual

Catalog 50960025 Revision C

MT6642XT beginning with S/N 27251
MT8044XT beginning with S/N 28251
MT10044XT beginning with S/N 80151
MT10055XT beginning with S/N 80151
MT12042XT beginning with S/N 38101

For parts orders contact your Manitou Americas Dealer or call:
Factory Parts Department (262) 334-6653.
Website: www.manitou.com / www.mnadealers.com

https://truckmanualshub.com/

WARNING

THIS OPERATOR'S MANUAL IS PROVIDED FOR OPERATOR USE

DO NOT REMOVE FROM THIS MACHINE

Do not start, operate or work on this machine until you have carefully read and thoroughly understand the contents of the operator's manual.

Failure to follow safety, operating and maintenance instructions could result in serious injury to the operator or bystanders, poor operation, and costly breakdowns.

If you have any questions on proper operation, adjustment or maintenance of this machine, contact your dealer or the service department of Manitou Americas Inc. before starting or continuing operation.

ProCarManuals.com

California Proposition 65 Warnings

Diesel engine exhaust and some of its constituents are known to the State of California to cause cancer and birth defects or other reproductive harm.

Battery posts, terminals and related accessories contain lead and lead compounds, chemicals known to the State of California to cause cancer and birth defects or other reproductive harm. **Wash hands after handling battery.**

IDENTIFICATION INFORMATION

Write your Manitou Americas Inc. Telescopic Handler model and serial numbers below.
Refer to these numbers when inquiring about parts or service from your Manitou Americas Inc. dealer.

MODEL NO.	
SERIAL NO.	

The model and serial numbers for this machine are on a decal located inside the operator's station.

https://truckmanualshub.com/

Table of Contents

Chapter	Description	Page
	Indicator and Operation Symbols	Inside Front Cover
1	Introduction	2
2	Specifications	4
3	Check Lists	6, 7
4	**SAFETY**	**9**
5	Indicators and Controls	23
6	Operation and Adjustments	35
7	Lubrication	53
8	Service and Storage	56
9	Decal Locations	74
10	Maintenance	79
	Engine Diagnostic Trouble Codes	84
	Hydraulic Schematics	87
	Electrical Schematics	91
	Load Zone Charts	94
	Standard Hardware Torque Data	105
	Index	106
	Warranty	Inside Back Cover

ProCarManuals.com

https://truckmanualshub.com/

Chapter 1

INTRODUCTION

The information in this Operator's Manual was written to give the owner/operator assistance in preparing, adjusting, maintaining and servicing of the Telescopic Handler. More important, this manual provides an operating plan for safe and proper use of the machine. Major points of safe operation are detailed in the **SAFETY** chapter of this manual.

Manitou Americas Inc. asks that you read and understand the contents of this manual COMPLETELY, and become familiar with the machine before operating it.

This Telescopic Handler is primarily intended for use as a material handler. However, it may be equipped with an optional system: the Personnel Work Platform (PWP) System, which is intended for use when lifting personnel. When there is no other practical option available, this machine, when equipped with the PWP System, is approved for use to lift personnel, but only with an approved work platform, with the PWP System activated, and in full compliance with the "Mandatory Work Platform Safety Rules" (see SAFETY chapter).

Refer to the seperate operator's/parts manual for information related to the optional Radio Remote Boom Control System.

The use of this Telescopic Handler is subject to certain hazards that cannot be eliminated by mechanical means, but only by the exercise of intelligence, care and common sense. It is therefore essential to have competent and careful operators, who are not physically or mentally impaired, and who are thoroughly trained in the safe operation of the equipment and the handling of the loads.

Throughout this manual information is provided that is set in *italic* type and introduced by the word **IMPORTANT** or **NOTE.** Be sure to read carefully and comply with the message or directive given. Following this information will improve operating and maintenance efficiency, help to avoid breakdowns and damage, and extend the machine's life. A chart of standard hardware torques is located in the back of this manual.

A storage pocket in the back of the seat is provided for storing the Operator's Manual. After using the manual, please return it to the pocket and keep it with the unit at all times! If this machine is resold, this manual should be given to the new owner.

If this machine was purchased "used," or if the owner's address has changed, please provide your Manitou Americas Inc. dealer or Manitou Americas Inc. Service Department with the owner's name and current address, along with the machine model and serial number. This will allow the registered owner information to be updated, so that the owner can be notified directly in case of an important product issue, such as a safety update program.

"Right" and "left" are determined from a position sitting on the seat and facing forward.

The wide Manitou Americas Inc. dealership network stands ready to provide any assistance that may be required, including genuine Manitou Americas Inc. service parts. All parts should be obtained from or ordered through your Manitou Americas Inc. dealer. Give complete information about the part and include the model and serial number of the machine. Record the serial number in the space provided on the previous page, as a handy record for quick reference.

Please be aware that Manitou Americas Inc. reserves the right to make changes or improvements in the design or construction of any part without incurring the obligation to install such changes on any unit previously delivered.

Manitou Americas Inc, in cooperation with the Society of Automotive Engineers, has adopted this

Safety Alert Symbol

to identify potential safety hazards, which, if not properly avoided, could result in injury. When you see this symbol in this manual or on the machine itself, you are reminded to BE ALERT! Your personal safety is involved!

ProCarManuals.com

https://truckmanualshub.com/

Identification

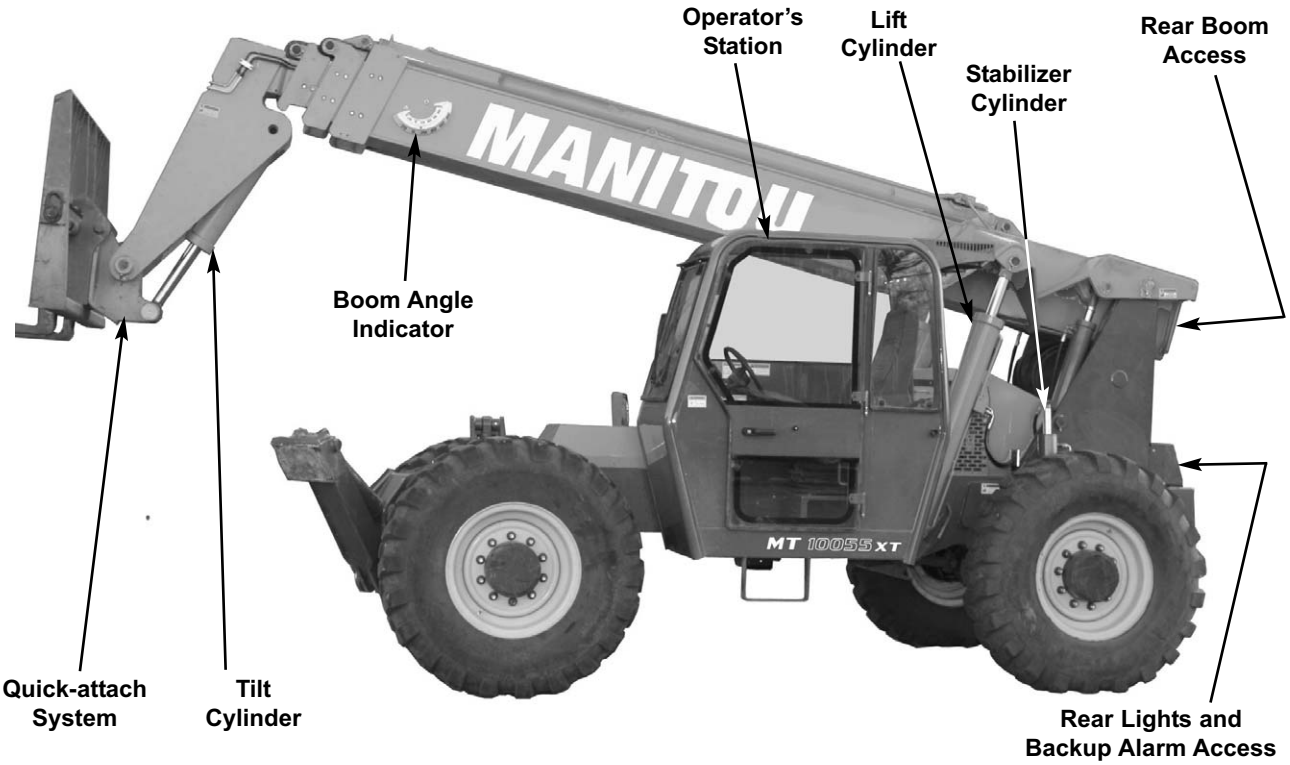

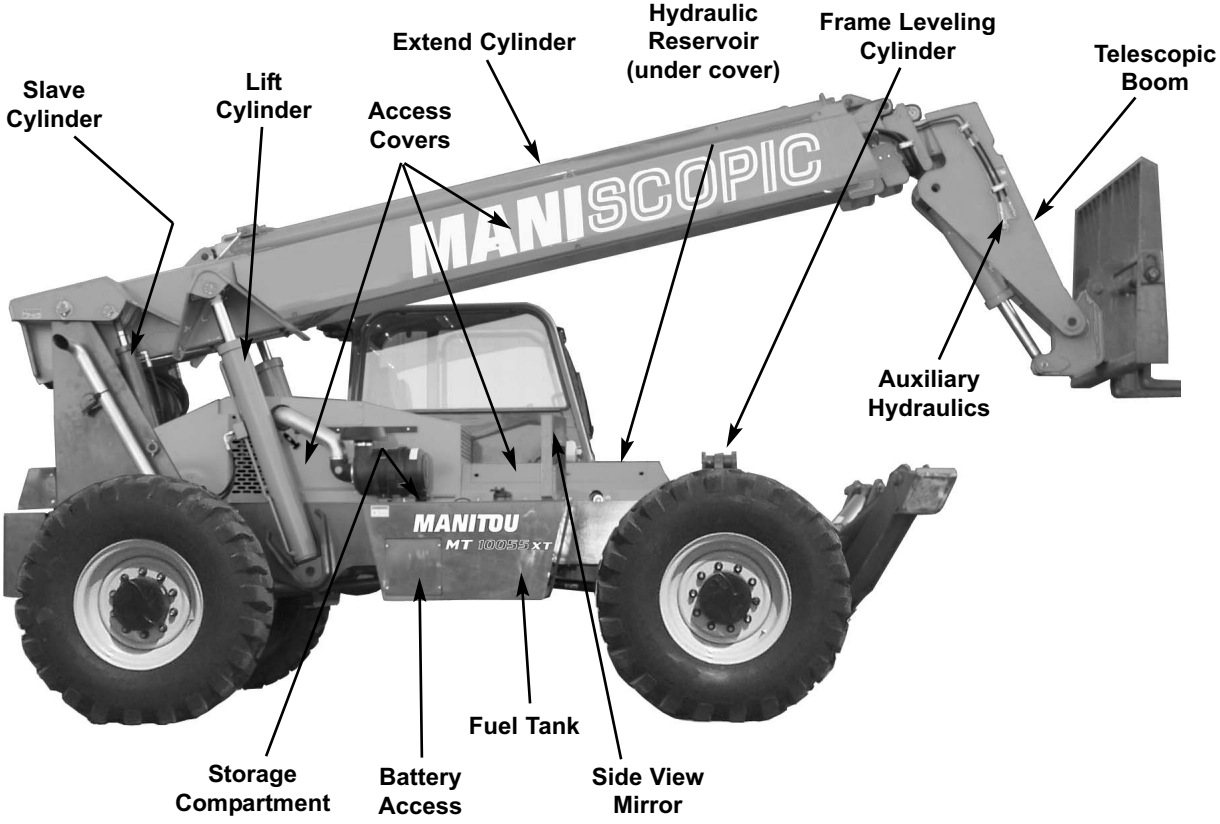

ProCarManuals.com

https://truckmanualshub.com/

Chapter 2

SPECIFICATIONS

Lifting Performance

Maximum lift capacity:

MT6642:	6600 lbs. (2994 kg)
MT8044:	8000 lbs. (3629 kg)
MT10044:	10,000 lbs. (4536 kg)
MT10055:	10,000 lbs. (4536 kg)
MT12042:	12,000 lbs. (5444 kg)

Maximum lift height:

MT6642:	42’ (12.8 m)
MT8044:	44’ (13.4 m)
MT10044:	44’ (13.4 m)
MT10055:	55’ 1” (16.8 m)
MT12042:	42’ 4” (12.9 m)

NOTE: *Use the outriggers up specification when machine is not equipped with outriggers.*

Capacity at maximum lift height:

MT6642:	
Outriggers up:	6600 lbs. (2994 kg)
Outriggers down:	6600 lbs. (2994 kg)
MT8044:	
Outriggers up:	7000 lbs. (3176 kg)
Outriggers down:	8000 lbs. (3629 kg)
MT10044:	
Outriggers up:	8,000 lbs. (3629 kg)
Outriggers down:	8,000 lbs. (3629 kg)
MT10055:	
Outriggers Up:	5,000 lbs. (2268 kg)
Outriggers down:	5,000 lbs. (2268 kg)
MT12042:	
Outriggers Up:	10,000 lbs. (4536 kg)
Outriggers down:	10,000 lbs. (4536 kg)

Max. forward reach to load center:

MT6642:	28’ 3” (8.6 m)
MT8044:	30’ 5” (9.3 m)
MT10044:	30’ 5” (9.3 m)
MT10055:	41’ 2” (12.5 m)
MT12042:	27’ 11” (8.5 m)

Capacity at maximum forward reach:

MT6642:	
Outriggers up:	1000 lbs. (454 kg)
Outriggers down:	3000 lbs. (1361 kg)
MT8044:	
Outriggers up:	1000 lbs. (454 kg)
Outriggers down:	3000 lbs. (1361 kg)
MT10044:	
Outriggers up:	1,500 lbs. (681 kg)
Outriggers down:	3,000 lbs. (1361 kg)
MT10055:	
Outriggers up:	250 lbs. (114 kg)
Outriggers down:	2,000 lbs. (908 kg)
MT12042:	
Outriggers up:	2,000 lbs. (908 kg)
Outriggers down:	4,000 lbs. (1815 kg)

Maximum below grade reach:

MT6642:	14” (355.6 mm)
MT8044:	16” (406.4 mm)
MT10044:	18” (457.2 mm)
MT10055:	29” (736.6 mm)
MT12042:	17” (431.8 mm)

Frame Leveling: 10° left/10° right

General Dimensions

Based on standard machine equipped with listed tires, 48” masonry carriage and 48” pallet forks.

Recommended tire types:

MT6642, MT8044
- 13.00 x 24 - 12 PR
  - Inflate to 65 psi (450 kPa)
- 13.00 x 24 - 12 PR Rock
  - Inflate to 65 psi (450 kPa)
- 13.00 x 24 - 12 PR, foam filled
- 13.00 x 24 Solid rubber

MT10044, MT10055, MT12042
- 14.00 x 24 - 12 PR
  - Inflate to 62 psi (430 kPa)
- 14.00 x 24 - 16PR Rock
  - Inflate to 70 psi (480 kPa)
- 14.00 x 24 - 12 PR, foam filled
- 13.00 x 24 Solid rubber tire double aperture with conventional tread pattern
- 13.00 x 24 Solid rubber tire single aperture with conventional tread pattern

Overall length, less forks:

MT6642:	19’ 1” (5.81 m)
MT8044:	19’ 10” (6.04 m)
MT10044:	20’ (6.1 m)
MT10055:	21’ (6.4 m)
MT12042:	19’ 3” (5.9 m)

Overall width:

MT6642, MT8044:	8’ (2.4 m)
MT10044/55, MT12042:	8’ 3” (2.5 m)

Overall height:

MT6642, MT8044:	7’ 8” (2.34 m)
MT10044, MT12042:	7’ 11” (2.41 m)
MT10055:	8’ 6” (2.59 m)

Ground clearance:

MT6642, MT8044:	16” (406 mm)
MT10044/55, MT12042:	18” (457 mm)

Wheel base:

MT6642, MT8044:	119.5” (3.03 m)
MT10044/55, MT12042:	124” (3.15 m)

Outside turn radius:

MT6642, MT8044:	13’8” (4.2 m)
MT10044/55, MT12042:	13’11” (4.24 m)

Machine weight:

MT6642:	22,000 lbs. (9,980 kg)
MT8044:	23,500 lbs. (10,660 kg)
MT10044:	25,300 lbs. (11,476 kg)
MT10055:	27,800 lbs. (12,610 kg)
MT12042:	25,200 lbs. (11,431 kg)

Instrumentation

Gauges:
Fuel level, hourmeter, coolant temperature, engine oil pressure and voltmeter

Monitoring lights:
Engine oil pressure, engine water temperature, alternator, transmission oil temperature, brake failure, low fuel, glow plug

Visual indicators:
Boom angle and frame level

Steering System

Steer Valve: Fixed displacement rotary

Displacement/Rev: 17.9 cu. in. (293 cc)

System pressure: 2500 psi (172 bar)

Steer cylinders: 1 per axle

Steer mode valve:
3-position, 4-way solenoid with dash-mounted switch actuation
Steer modes: 2-wheel, 4-wheel, crab

Braking System

Service brakes:
Oil-immersed inboard hydraulic wet-disc type; seperate front and rear systems; foot pedal actuation

Parking brake:
Spring-applied, hydraulic-release disc-type in front axle.
Actuation via electric switch with engine running, automatic with engine off.

Electrical System

Type: 12-volt, negative ground

Battery: 950 cold cranking amps

Circuit protection: Fuse panel

Backup alarm: 107 dB(A)

Horn: 111 dB(A)

Standard on all models:
Brake lights, rear backup light, neutral start switch

Alternator: 90-amp

ProCarManuals.com

https://truckmanualshub.com/

Service Capacities

Cooling System:
21.2 qts. (20.1 L), 50/50 mixture
Anti-freeze protection: -34°F (-31°C)
Pressure cap:18 psi (124 kPa)

Fuel tank: 47 gallons (178 L)

Hydraulic reservoir and system:
45 gallons (170 L)

Transmission and cooler: MT6642, MT8044
15.6 qts. (14.8 L)

Transmission and cooler: MT10044, MT10055, MT12042
16.4 qts. (15.5 L)

Axles: MT6642, MT8044

Differentials (2):	15.8 qts. (15 L) ea.
Hubs (4):	2.6 qts. (2.5 L) ea.

Axles: MT10044, MT10055, MT12042

Front Differential:	14.8 qts. (14.0 L)
Front Planetaries:	1.85 qts. (1.75 L) ea.
Rear Differential:	14.25 qts. (13.5 L)
Rear Planetaries:	1.85 qts. (1.75 L) ea.

Transmission

MT6642, MT8044

Type:Dana Powershift T12000
Speeds: 3 fwd / 3 rev

Torque converter:
Single-stage, dual-phase

Travel Speeds:

1st gear:	3.3 mph (5.3 km/h)
2nd gear:	7.3 mph (11.8 km/h)
3rd gear:	18.8 mph (30.3 km/h)

MT10044, MT10055, MT12042

Type: Dana Powershift T13000
Speeds: 4 forward / 3 reverse

Torque converter:
Single-stage, dual-phase

Travel speeds:

1st gear:	3.0 mph (4.8 km/h)
2nd gear:	6.5 mph (10.5 km/h)
3rd gear:	13.1 mph (21.1 km/h)
4th gear:	19.3 mph (31.1 km/h)

Axles (front and rear)

MT664242, MT8044
Type: Dana model 212HY
Drive/steer, open differential, full-time four-wheel drive, internal SAHR parking brake in front axle
Overall ratio: 22.67:1

MT10044, MT10055, MT12042

Type: Dana model 223
Front axle: Drive/steer, limited-slip differential with internal SAHR parking brake
Overall ratio: 26.21:1
Rear axle: Drive/steer, open differential
Overall ratio: 26.21:1

Engine

Turbocharged aspiration:
John Deere 4045T Interim Tier 4
276 cu. in. (4.5 L) displacement,
115 hp (86 kW) @ 2400 rpm
Oil capacity: 15.5 qts. (14.7 L)
In-line 4-cylinder, 4-cycle,
direct injection diesel fuel system,
in-line fuel filter w/water trap,
positive pressure lubrication,
liquid pressurized cooling system,
dry dual-element air cleaner,
spin-on oil filter.

Hydraulic System

Type: Open-center

Pump: Single-section gear type

Displacement / revolution:
3.72 cu. in. (61 cc)

Flow @ 2500 rpm: 40 gpm (151 L/min)

Main relief pressure: 3000 psi (207 bar)

Steer relief pressure: 2500 psi (172 bar)

Joystick and Parking Brake release Pressure:
350 psi (24 bar)

Hydraulic filter:
In-tank return type, 10-micron media, replaceable element
Rated flow: 100 gpm (379 L/min)
Rated pressure: 100 psi (690 kPa)
By-pass pressure (full flow):
25 psi (172 kPa)

Hydraulic strainer:
In-tank suction, 100-micron media, replaceable element
Rated flow: 100 gpm (379 L/min)
By-pass pressure: 3 psi (21 kPa)

ProCarManuals.com

https://truckmanualshub.com/

Chapter 3

CHECKLISTS

PRE-DELIVERY

The following Checklist is an important reminder of the inspections that MUST be made before delivering the Telescopic Handler to the customer. Check off each item after the prescribed action is taken.

√ Check that:

- ❑ NO parts of machine have been damaged in shipment. Check for such things as dents and loose or missing parts; correct or replace components as required.
- ❑ Battery is securely mounted and not cracked. Cable connections are tight. Electrolyte at proper level.
- ❑ Cylinders, hoses and fittings are not damaged, leaking or loosely secured.
- ❑ Oil, fuel and air filters are not damaged, leaking or loosely secured.
- ❑ All grease fittings have been properly lubricated and no fittings are missing; see *Lubrication* chapter of this manual.
- ❑ Wheel nuts are torqued to 450 ft.-lbs. (610 Nm).
- ❑ Tires are inflated to:
  13.00 x 24 - 12 PR: 65 psi (450 kPa) cold.
  14.00 x 24 - 12 PR: 62 psi (430 kPa) cold.
- ❑ Hydraulic system reservoir, engine crankcase, engine coolant, transmission and axles are filled to the proper operating fluid levels.
- ❑ All adjustments have been made to comply with the settings in this manual and in the separate engine manual.
- ❑ All guards, shields and decals are in place and securely attached.
- ❑ Model and serial number for this unit is recorded in space provided on this page and page 1.

Start the machine and test-run the unit while checking that proper operation is exhibited by all controls.

√ Check that:

- ❑ All indicators (lamps, switches, etc.) function properly.
- ❑ All hand and foot controls operate properly.
- ❑ The PWP System operates properly (if equipped). Refer to *Service and Storage* chapter for procedure to check the PWP System.
- ❑ Boom, Quick-attach System with attachment tool and frame level control all function properly.
- ❑ No hydraulic system leaks when under pressure.
- ❑ Listen for abnormal noises or vibrations; if detected, determine their cause and repair as necessary.

I acknowledge that the pre-delivery procedures were performed on this unit as outlined above.

_____
Dealership's Name

_____
Dealer Representative's Name

_____
Date Checklist Filled Out

_____
Machine Model No. Machine Serial No. Engine Serial No.

DELIVERY

√ Check that:

The following Checklist is a reminder of the important information that MUST be passed on to the customer at the time the unit is delivered. Check off each item as it is explained to the customer.

- ❑ Review with the customer the contents of this manual and the AEM Safety Manual and for the following:
- ❑ The Index at the back, for quickly locating topics;
- ❑ The *Safety*, *Indicators and Controls,* and *Operation and Adjustments* chapters for information regarding safe use of the machine.
- ❑ The *Lubrication* and *Service and Storage* chapters for information regarding proper maintenance of the machine. Explain that regular lubrication and maintenance are required for continued safe operation and long life.
- ❑ Give this Operator's Manual and the AEM Safety Manual to the customer and instruct them to be sure to read and completely understand their contents before operating the unit.
- ❑ Remind the customer of U.S. OSHA regulation 1910.178 (l), which specifies operator training requirements.
- ❑ Explain that the customer MUST consult the engine manual (provided) for related specifications, operating adjustments and maintenance instructions.
- ❑ Completely fill out the Owner's Registration, including customer's signature, and return it to the Company.
- ❑ Explain that a copy of the warranty is included on the inside back cover of this Operator's Manual.

_____
Customer's Signature

_____
Date Delivered

(Pages 7 and 8 have been removed at perforation)

ProCarManuals.com

https://truckmanualshub.com/

Chapter 3

CHECKLISTS

PRE-DELIVERY

The following Checklist is an important reminder of the inspections that MUST be made before delivering the Telescopic Handler to the customer. Check off each item after the prescribed action is taken.

√ Check that:

- ❑ NO parts of machine have been damaged in shipment. Check for such things as dents and loose or missing parts; correct or replace components as required.
- ❑ Battery is securely mounted and not cracked. Cable connections are tight. Electrolyte at proper level.
- ❑ Cylinders, hoses and fittings are not damaged, leaking or loosely secured.
- ❑ Oil, fuel and air filters are not damaged, leaking or loosely secured.
- ❑ All grease fittings have been properly lubricated and no fittings are missing; see *Lubrication* chapter of this manual.
- ❑ Wheel nuts are torqued to 450 ft.-lbs. (610 Nm).
- ❑ Tires are inflated to:
  13.00 x 24 - 12 PR: 65 psi (450 kPa) cold.
  14.00 x 24 - 12 PR: 62 psi (430 kPa) cold.
- ❑ Hydraulic system reservoir, engine crankcase, engine coolant, transmission and axles are filled to the proper operating fluid levels.
- ❑ All adjustments have been made to comply with the settings in this manual and in the separate engine manual.
- ❑ All guards, shields and decals are in place and securely attached.
- ❑ Model and serial number for this unit is recorded in space provided on this page and page 1.

Start the machine and test-run the unit while checking that proper operation is exhibited by all controls.

√ Check that:

- ❑ All indicators (lamps, switches, etc.) function properly.
- ❑ All hand and foot controls operate properly.
- ❑ The PWP System operates properly (if equipped). Refer to *Service and Storage* chapter for procedure to check the PWP System.
- ❑ Boom, Quick-attach System with attachment tool and frame level control all function properly.
- ❑ No hydraulic system leaks when under pressure.
- ❑ Listen for abnormal noises or vibrations; if detected, determine their cause and repair as necessary.

I acknowledge that the pre-delivery procedures were performed on this unit as outlined above.

_____
Dealership's Name

_____
Dealer Representative's Name

_____
Date Checklist Filled Out

_____
Machine Model No. Machine Serial No. Engine Serial No.

DELIVERY

√ Check that:

The following Checklist is a reminder of the important information that MUST be passed on to the customer at the time the unit is delivered. Check off each item as it is explained to the customer.

- ❑ Review with the customer the contents of this manual and the AEM Safety Manual and for the following:
- ❑ The Index at the back, for quickly locating topics;
- ❑ The *Safety*, *Indicators and Controls,* and *Operation and Adjustments* chapters for information regarding safe use of the machine.
- ❑ The *Lubrication* and *Service and Storage* chapters for information regarding proper maintenance of the machine. Explain that regular lubrication and maintenance are required for continued safe operation and long life.
- ❑ Give this Operator's Manual and the AEM Safety Manual to the customer and instruct them to be sure to read and completely understand their contents before operating the unit.
- ❑ Remind the customer of U.S. OSHA regulation 1910.178 (l), which specifies operator training requirements.
- ❑ Explain that the customer MUST consult the engine manual (provided) for related specifications, operating adjustments and maintenance instructions.
- ❑ Completely fill out the Owner's Registration, including customer's signature, and return it to the Company.
- ❑ Explain that a copy of the warranty is included on the inside back cover of this Operator's Manual.

_____
Customer's Signature

_____
Date Delivered

(Dealer's File Copy - Remove at Perforation)

ProCarManuals.com

https://truckmanualshub.com/

INTENTIONALLY BLANK

(To be removed as Dealer's file copy)

ProCarManuals.com

https://truckmanualshub.com/

Chapter 4

SAFETY

The above Safety Alert Symbol means **ATTENTION! ALWAYS BE ALERT! YOUR SAFETY IS INVOLVED!** It stresses an attitude of "safety awareness" and can be found throughout this Operator's Manual and on the machine itself.

Before operating this equipment, read and study the following safety information. In addition, be sure that everyone who operates or works with this equipment is familiar with these safety precautions.

DANGER

"DANGER" indicates an imminently hazardous situation, which, if not avoided, will result in death or serious injury.

WARNING

"WARNING" indicates a potentially hazardous situation, which, if not avoided, could result in death or serious injury.

CAUTION

"CAUTION" indicates a potentially hazardous situation, which, if not avoided, may result in minor or moderate injury. It may also alert to unsafe practices.

Manitou Americas ALWAYS takes the operator's safety into consideration when designing its machinery, and guards exposed moving parts for his/her protection. However, some areas cannot be guarded in order to assure proper operation. Further, this Operator's Manual, AEM Safety Manual and decals on the machine warn of additional hazards, and should be read and observed closely.

REMEMBER! It is the owner's responsibility for communicating information on the safe use and proper maintenance of this machine! This includes providing understandable interpretations of these instructions for operators who are not fluent in reading English.

It is the responsibility of the operator to read and understand the Operator's Manual and other information provided and use the correct operating procedure. Machines should be operated only by qualified operators.

MANDATORY SAFETY SHUTDOWN PROCEDURE

BEFORE cleaning, adjusting, lubricating or servicing the unit:

1. **Stop machine on a level surface. (Avoid parking on a slope, but if necessary, park across the slope and block the tires.)**
2. **Fully retract the boom and lower the attachment tool to the ground. Idle engine for gradual cooling.**
3. **Place controls in neutral and apply parking brake.**
4. **Shut off the engine and remove the key.**

ONLY when you have taken these precautions can you be sure it is safe to proceed. Failure to follow the above procedure could lead to death or serious bodily injury.

ProCarManuals.com

https://truckmanualshub.com/

SAFETY

WARNING

U.S. OSHA regulations require employers in general industry and the construction, shipyard and cargo-handling industries (excepting agricultural operations) to ensure that forklift operators are competent, as demonstrated by successful completion of a training course.

The training course must consist of a combination of formal instruction and practical training, including both forklift-related and workplace-related topics, and evaluation of the operator's performance in the workplace.

All operator training and evaluation is to be conducted by persons who have the knowledge, training and experience to train and evaluate operators.

ProCarManuals.com

WARNING

ALWAYS maintain a safe distance from electric power lines and avoid contact with any electrically charged conductor or gas line. It is not necessary to make direct contact with a power line for power to ground through the structure of the machine. Keep the boom and load at least 10 ft. (3 m) from all power lines. Accidental contact or rupture can result in electrocution or an explosion. Contact the "Call Before You Dig" referral system number at 8-1-1 in the U.S., or 888-258-0808 in the U.S. and Canada, to locate any underground utility lines BEFORE starting to dig.

Additional Safety Reminders

- User/operator safety practices, as established by industry standards, are included in this Operator's Manual and intended to promote safe operation of the machine. These guidelines do not, of course, preclude the use of good judgment, care and common sense as may be indicated by the particular jobsite work conditions.
- It is essential that operators be physically and mentally fit, free of mind altering drugs and chemicals and thoroughly trained in the safe operation of the machine. Such training should be presented completely to all new operators and not condensed for those claiming previous experience. Information on operator training is available from several sources, including the manufacturer.
- Some illustrations used in this manual may show doors, guards and shields open or removed for illustration purposes ONLY. BE SURE that all doors, guards and shields are in their proper operating positions BEFORE starting the engine.

Before Operation Safety Reminders

- Perform a pre-start walk-around inspection before starting the engine at the beginning of each work shift. Contact with a running engine or moving parts during the pre-start inspection could cause death or serious injury. Refer to the pre-start walk-around inspection checklist in the *"Operation and Adjustment"* chapter.
- Walk around the machine and warn all personnel who may be servicing the machine or who are in the machine path prior to starting. DO NOT start until all personnel are clearly away from the machine.
- Check brakes, steering, and hydraulic system prior to starting operation. Operate all controls to ensure proper operation. Observe all gauges and indicators for proper operation. If any malfunctions are found, correct the cause prior to using the machine.

https://truckmanualshub.com/

SAFETY

- ALWAYS wear appropriate personal protective equipment for the job and working conditions. Hard hats, goggles, protective shoes, gloves, reflector-type vests, respirators and ear protection are exampes of types of equipment that may be required. DO NOT wear loose fitting clothing, long hair, jewelry or loose personal items while operating or servicing the machine.
- ALWAYS check the job site for terrain hazards, obstructions and people. Remove all objects that do not belong in or on the machine and its equipment.

Operation Safety Reminders

- Any or all of the following elements may affect the stability of the machine: terrain, engine speed, type of load being carried and placed, improper tire inflation, weight of the attachment tool, and abrupt movement of any control lever. **IF YOU ARE NOT CAREFUL WHILE OPERATING THIS MACHINE, ANY OF THE ABOVE FACTORS COULD CAUSE THE MACHINE TO TIP AND THROW YOU OUT OF THE OPERATOR'S STATION, WHICH MAY CAUSE SERIOUS BODILY INJURY OR DEATH!**
- ALWAYS wear the seat belt provided to prevent being thrown from the machine. If you are in an overturn:

  - DO NOT jump!

  - Hold on tight and stay with the machine!

  - Lean away from the fall!
- ALWAYS keep hands, feet and arms inside of the operator's station when operating the machine!
- ALWAYS use the recommended hand holds and steps with at least three points of support when getting on and off the machine. Keep steps and platform clean. Face the machine when climbing up and down.
- DO NOT depend on the backup alarm to clear bystanders out of the path of the machine. ALWAYS look in the direction of travel. Look to the rear before backing.
- DO NOT raise or drop a loaded fork or bucket suddenly. Abrupt movements under load can cause serious instability.
- Study the load chart carefully. It shows maximum capacity to be lifted and placed at specific outward and upward distances. ALWAYS be aware of load weights prior to attempting lift and placement with this machine.
- DO NOT exceed the machine's rated operating capacity for the type of attachment tool being used.
- DO NOT use outriggers on soft or uneven surfaces. **BE SURE** the surface can support the machine and load.
- DO NOT allow minors or any unqualified personnel to operate or be near the machine unless properly supervised.
- DO NOT start the engine or operate any controls unless properly seated in the operator's seat!
- DO NOT run the engine in an enclosed area without providing proper ventilation for the exhaust. Exhaust gases contain carbon monoxide, an odorless and deadly gas. Internal combustion engines deplete the oxygen supply within enclosed spaces and may create a serious hazard unless the oxygen is replaced. This includes the atmosphere within the cab when equipped.
- DO NOT leave the operator's station with the boom and attachment tool raised. ALWAYS lower the boom and attachment tool to the ground, shut off the engine and engage the parking brake before leaving the operator's station.
- NEVER travel with the boom above the carry position (attachment tool should be at minimum ground clearance.) Boom should be fully retracted.
- DO NOT drive too close to an excavation or ditch. BE SURE that the surrounding ground has adequate strength to support the weight of the machine and the load it is carrying.

ProCarManuals.com

https://truckmanualshub.com/

SAFETY

- DO NOT turn quickly while traveling on a slope or operate the machine beyond the grade and slope limits noted in the Operation and Adjustments chapter of the Operator's Manual.
- NEVER allow any riders on this machine. This is strictly a single-seat, NO-passenger machine
- NEVER use as a lift for personnel unless the machine is equipped with the Personnel Work Platform (PWP) System.
- When road travel is required, know and use the signaling devices on the machine. Provide an escort and Slow-Moving Vehicle (SMV) emblem when required.
- If necessary to park on a slope, park across the slope and block the tires.

Suspended Load Safety Reminders

The handling of suspended loads by means of a truss boom, winch, boom mounted lift hook or other similar device can introduce dynamic forces affecting the stability of the machine that are not considered in the stability criteria of industry test standards. Grades and sudden starts, stops and turns can cause the load to swing and create a hazard. Refer to the following guidelines for handling suspended loads.

WARNING

U.S. OSHA regulations effective November 8, 2010 (29 CFR Part 1926, Subpart CC - Cranes and Derricks in Construction) include requirements for employers that use powered industrial trucks ("forklifts") configured to hoist (by means of a winch or hook) and move suspended loads horizontally. In particular, this regulation applies to any rough-terrain forklift (e.g., "telescopic handler") equipped with a jib or truss boom with a hook (with or without a winch), or a hook assembly attached to the forks. [Note: This regulation is in addition to the OSHA regulation that requires specific forklift operator training: §1910.178(l).]

When a forklift / telescopic handler is configured and used for hoisting, the employer must ensure that:

1. **Forklift, lift equipment and rigging have been inspected (each shift, month and year) and are in good, safe condition and properly installed.**
2. **An operator's manual and applicable load charts are on the forklift.**
3. **Work zone ground conditions can support the equipment and load. Any hazardous conditions in the work area have been identified, and the operator notified.**
4. **Equipment is being used within its rated capacity and in accordance with the manufacturer's instructions.**
5. **Operator and crew members have been trained in the safe use and operation of the equipment, including how to avoid electrocution.**
6. **During use, no part of the equipment, load line or load will be within the minimum clearance distance specified by OSHA [10 feet (3.0 m), and more for lines rated over 50 kV] of any energized power line, and any taglines used are non-conductive.**
7. **In addition, for lift equipment with a rated capacity greater than 2000 lbs. (907 kg), the employer must ensure that:**
   - **a.) An accessible fire extinguisher is on the forklift;**
   - **b.) Monthly and annual inspections are performed and documented, and records retained (three months for monthly, one year for annual);**
   - **c.) Before November 10, 2014, operators must have had the additional training and qualification / certification required by OSHA regulations §1926.1427 and §1926.1430.**

ProCarManuals.com

https://truckmanualshub.com/

SAFETY

Note: Refer to the full text of the OSHA crane regulation (29 CFR Part 1926, Subpart CC) for a detailed description of the regulatory requirements.

- DO NOT exceed the rated capacity of the telescopic handler as equipped for handling suspended loads. The weight of the rigging must be included as part of the load.
- During transport, the length of the rigging between the attachment and load should be as short as possible to reduce booms height and movement. DO NOT raise the load more than 12 inches (305 mm) above the ground, or raise the boom more than 45 degrees.
- Only lift the load vertically – NEVER drag it horizontally.
- Use multiple pickup points on the load when possible. Use taglines to restrain the load from swinging and rotating.
- Start, travel, turn and stop SLOWLY to prevent the load from swinging. DO NOT exceed walking speed.
- Inspect rigging before use. Rigging must be in good condition and in the U.S. comply with OSHA regulation §1910.184, "Slings," or §1926.251, "Rigging equipment for material handling."
- Rigging equipment attached to the forks must be secured such that it cannot move either sideways or fore and aft. The load center must not exceed 24 inches (610 mm).
- DO NOT lift the load with anyone on the load, rigging or lift equipment, and NEVER lift the load over personnel.
- Beware of the wind, which can cause suspended loads to swing, even with taglines.
- DO NOT attempt to use frame-leveling to compensate for load swing.

Servicing Safety Reminders

- ALWAYS be aware of and avoid pinch point areas on the machine, such as wheels-to-frame, cylinders-to-frame, boom and attachment tool-to-frame.
- NEVER attempt to by-pass the keyswitch to start the engine. ONLY use the jump-starting procedure detailed in the *Service and Storage* chapter.
- NEVER use your hands to search for hydraulic fluid leaks. Use a piece of paper or cardboard. Escaping fluid under pressure can be invisible and can penetrate the skin, causing serious injury. If any fluid is injected into your skin, see a doctor at once. Injected fluid MUST be surgically removed by a doctor familiar with this type of injury or gangrene may result.
- ALWAYS wear safety glasses with side shields when striking metal against metal. In addition, it is recommended that a softer (chip-resistant) material be used to cushion the blow. Failure to heed could lead to serious injury to the eyes or other parts of the body.
- DO NOT refill the fuel tank when the engine is hot. Allow engine to cool down before refilling to prevent hot engine parts from igniting the fuel if it should spill or splash.
- DO NOT smoke while filling the fuel tank, working on the fuel or hydraulic systems, or working around the battery.
- DO NOT fill the fuel tank completely. Allow room for expansion. Maintain control of the fuel filler nozzle when filling the tank. Use the correct fuel grade for the operating season.
- Static electricity can produce dangerous sparks at the fuel-filling nozzle. Do not wear polyester, or polyester-blend clothing while fueling. Before fueling, touch the metal surface of the machine away from the fuel fill to dissipate any built-up static electricity. Do not re-enter the machine but stay near the fuel filling point during refueling to minimize the build-up of static electricity. Do not use cell phones while fueling. Make sure the stat-

ProCarManuals.com

https://truckmanualshub.com/

ic line is connected from the machine to the fuel truck before fueling begins.

- Ultra-Low Sulfur Diesel (ULSD) poses a greater static ignition hazard than earlier diesel formulations. Avoid death or serious injury from fire or explosion; consult with your fuel or fuel system supplier to ensure the entire fuel delivery system is in compliance with fueling standards for proper grounding and bonding practices.
- NEVER use fuel for cleaning purposes.
- DO NOT remove the radiator cap after the engine has reached operating temperature or if it is overheated. At operating temperatures, the engine coolant will be extremely HOT and under pressure. ALWAYS wait for the engine to cool before attempting to relieve pressure and remove the radiator cap. Failure to heed this warning could result in severe burns.
- DO NOT loosen or disconnect any hydraulic lines, hoses or fittings without first relieving hydraulic circuit pressure. Also, be careful not to touch any hydraulic components that have been in recent operation because they can be extremely hot and can burn you!
- Avoid lubrication or mechanical adjustments with the machine in motion or the engine running. If the engine must be running to make certain adjustments, place the transmission in neutral, apply the parking brake, place the equipment in a safe position, securely block the tires and use extreme caution.
- To ensure continued safe operation, replace damaged or worn-out parts with genuine Manitou service parts before using this equipment.

Modifications, Nameplates, Markings and Capacities

- Modifications and additions that affect capacity or safe operation must never be performed without the manufacturer's prior written approval. Where such authorization is granted, any applicable markings are to be changed accordingly.
- All attachment tools MUST be marked to identify the attachment tool and the total capacity with the attachment tool at maximum elevation with the load laterally centered.
- ALWAYS be sure all nameplates, warnings and instruction markings are in place and legible. Local government regulations may require specific decals, which are the responsibility of the owner to provide.

Safety Guards and Warning Devices

- This machine is fitted with a Roll-Over Protective Structure (ROPS) and Falling Object Protective Structure (FOPS) in accordance with industry standards. It is intended to offer protection to the operator from falling objects and in case of an overturn, but it cannot protect against every possible hazard. Therefore it should not be considered a substitute for good judgment and safe practices in operating the machine. If the ROPS / FOPS structure is damaged, it must be replaced to restore the protection it provides.
- This machine is equipped with a horn and backup alarm. The user must determine if operating conditions require the machine to be equipped with additional devices (mirrors, rotating beacon, etc.) and be responsible for providing and maintaining such devices.

Personnel Work Platform (PWP) System

WARNING

The machine must not be used to lift or carry personnel, or be fitted with any form of personnel work platform unless fitted with the optional PWP System.

If fitted with the PWP System, the Mandatory Work Platform Safety Rules must be followed at all times while lifting personnel.

ProCarManuals.com

https://truckmanualshub.com/

SAFETY

The Mandatory Work Platform Safety Rules must be adhered to at all times while elevating personnel. These rules are based on ANSI/ITSDF Standard B56.6-2005, "Safety Standard for Rough Terrain Forklift Trucks." (A copy of this and related standards can be obtained from the Industrial Truck Standards Development Foundation, 1750 K Street NW, Suite 460, Washington, DC 20009; or downloaded from: www.itsdf.org.) The rules apply to the owner, operator and the personnel in the work platform.

MANDATORY WORK PLATFORM SAFETY RULES

1. The work platform must comply with ANSI/ITSDF B56.6-2005, Sec. 8.24, "Platforms for Elevating Personnel." (See page 16, "Work Platform Design Requirements.")
2. The platform must be securely attached to the carriage or forks, and the carriage securely attached to the boom. The forks must not protrude beyond the floor of the work platform.
3. The carriage and forks must be secured to prevent them from pivoting upward.
4. If the machine is equipped with a rotating or swinging carriage, the rotation or swing must be deactivated. (This occurs automatically when the PWP System is switched on.)
5. Personnel on the platform must be provided protection from any moving parts on the forklift that may present a hazard.
6. If overhead hazards exist for platform personnel, overhead protection must be provided.
7. Be sure that the lifting mechanism is operating smoothly throughout its entire range, both empty and loaded, and that any lift-limiting devices and latches are functional.
8. Be sure that the frame is level, to ensure a vertical lift.
9. Be sure the platform is horizontal before lifting.
10. Be sure that the forklift has a firm footing.
11. Be sure that any required restraining means (railings, chains, harnesses, etc.) are in place and properly used.
12. Before lifting personnel, shift the transmission into Neutral, apply the parking brake, and activate the PWP System mode switch.
13. Before lifting personnel, the area should be marked to warn others of work by elevated personnel.
14. Be sure the path of platform travel is clear of hazards, such as scaffolds, electrical wires and overhead obstructions.
15. The operator must keep hands and feet clear of controls that are not in use.
16. Personnel must be lifted and lowered smoothly and cautiously, and only at their request.
17. The platform must be lowered fully before moving the forklift. Do not drive the forklift with personnel on the platform.
18. Elevated personnel must always be alerted before raising or lowering the platform.
19. A trained operator must be in position to operate the forklift and boom controls at all times.
20. The combined weight of the platform, personnel and load must not exceed one-third of the material-handling capacity of the forklift.
21. Platform personnel must maintain firm footing on the platform floor. A harness is to be worn and a lanyard attached to the platform or boom when working from an elevated work platform, in accordance with OSHA regulations. Use of railings, planks, ladders, etc. on platform for the purpose of achieving additional reach or height is prohibited.
22. Workers on the platform must keep all parts of their bodies inside the work platform during raising and lowering.
23. Be sure that the personnel and equipment on the platform do not exceed the available space.

ProCarManuals.com

https://truckmanualshub.com/

SAFETY

24. The platform must be fully lowered for personnel to enter and exit. Personnel must not climb on any part of the forklift in attempting to enter and exit.
25. Any harness, body belt, lanyard, or deceleration device that has sustained permanent deformation or is otherwise damaged must be replaced.
26. Modifications to the platform that are detrimental to its safe use are prohibited.

WARNING

Use ONLY an approved work platform for elevating personnel.

NEVER move the machine with the work platform in a raised position or with personnel on board.

NEVER tilt the platform forward, rearward, or to the side with personnel on board.

ALWAYS engage the PWP System and follow the Mandatory Work Platform Safety Rules when elevating personnel.

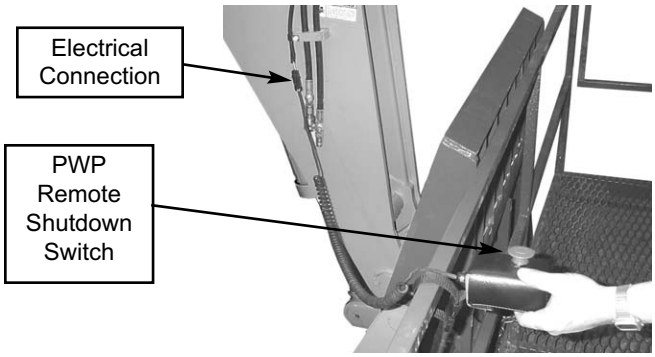

Remote Shutdown Switch with Coiled Wire Connector

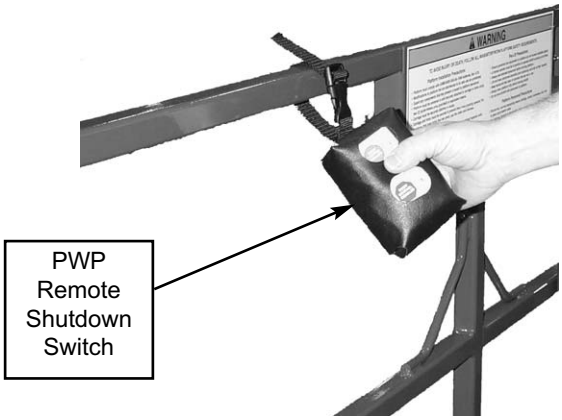

Wireless Remote Shutdown Switch on MT10055

Wireless Remote Battery Replacement

1. Remove the four screws from the cover of the wireless remote.
2. Open the cover to gain access to the batteries.
3. Remove the batteries from their holders.
4. Install the replacement batteries in the holder taking care to position the battery terminals as shown in the diagram at the bottom of the battery holder.
5. Replace the cover and install the screws to secure the cover in place.

Work Platform Design Requirements (Per ANSI/ITSDF B56.6-2005, Sec. 8.24)

1. A platform floor having a slip-resistant surface located not more than 8 inches (200 mm) above the normal load-supporting surface of the forks.

ProCarManuals.com

https://truckmanualshub.com/

SAFETY

2. Floor dimensions, which shall not exceed two times the load center distance of 24 inches (610 mm) listed on the forklift nameplate, measured parallel to the longitudinal center plane of the forklift, nor have a width greater than the overall width of the forklift (measured across the load-bearing tires) plus 10 inches (250 mm) on either side. Minimum space for each person on the platform shall not be less than 18 inches (450 mm) in either direction.
3. A 4 inch (100 mm) minimum height toe plate, which may be omitted at the access opening.
4. An overhead protective device, when requested by the user.
5. Protection for personnel in their normal working position on the platform from moving parts of the forklift that may present a hazard.
6. Information prominently indicated on the platform:
   a. maximum work load including personnel and equipment,
   b. weight of empty platform.
7. Means so that the platform can only be centered laterally on the forklift, and retained against the vertical face of the forks, carriage or lifting machanism.
8. A means to securely attach the platform to the lifting mechanism, and to prevent the platform from inadvertantly pivoting.
9. Restraining means such as a guardrail or a means for securing personnel such as a body harness and lanyard. A guardrail or similar structure shall have a nominal height to the platform floor of 42 inches (1066 mm) around its upper periphery and include a midrail. It may be hinged, removable, or of chains, and used to provide an access opening, if proper positioning is easily accomplished and a secure condition is discernable. Such restraining means shall be capable of withstanding a concentrated horizontal force of 200 lb. (890 N) applied at the point of least resistance without permanent deformation. A body harness and lanyard is to have an attachment point provided overhead for freedom of movement, and its length is to limit free-fall to 5 feet (1500 mm) measured from the point of attachment to the operator. The complete system shall be capable of withstanding three consecutive drop tests to simulate a 250 lb. (113 kg) person falling 6 feet (1800 mm) without allowing the test weight to fall free to the ground. A deceleration device may be included.

NOTE: *Fall protection should comply with applicable U.S. OSHA regulations: 1910.67 (c)(2)(v) (for General Industry) or 1926.453 (b)(2)(v) (for Construction).*

10. Lanyards, when provided, shall be arranged so as not to cause a tripping hazard.
11. Body harnesses, when provided, should have a width of at least 1.75 inches (44 mm).
12. Structural safety factor - all load-supporting structural elements of the work platform shall have a structural safety factor of not less than 2-to-1 based on the minimum yield strength of the materials used.

ProCarManuals.com

https://truckmanualshub.com/

SAFETY

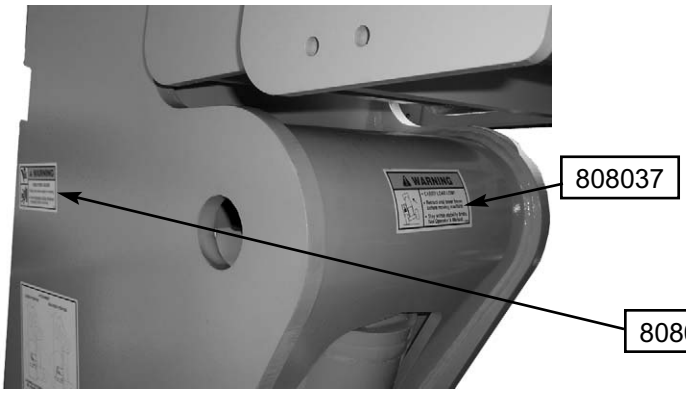

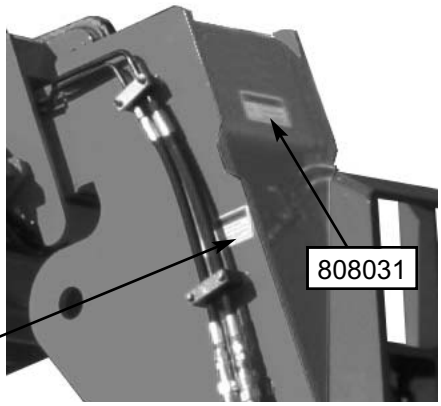

ProCarManuals.com

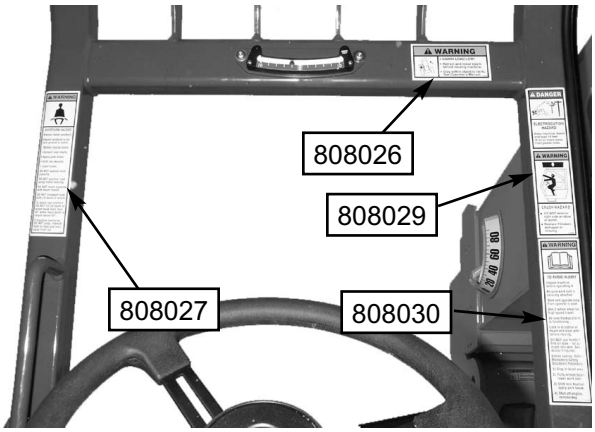

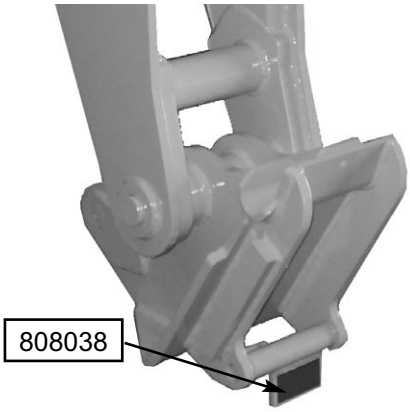

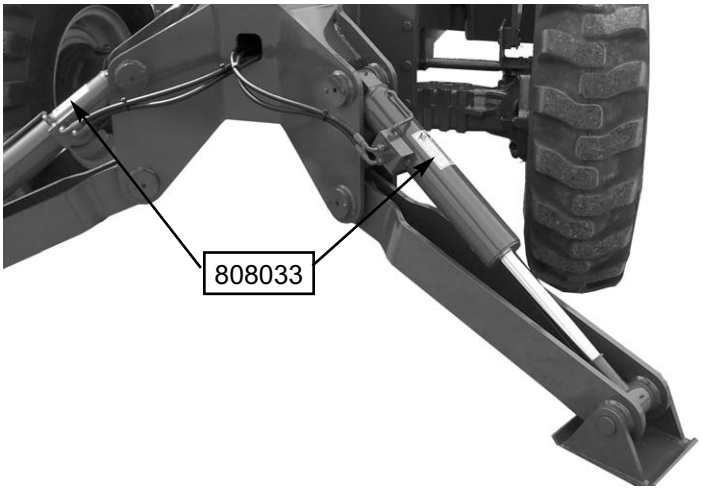

https://truckmanualshub.com/

SAFETY

808031

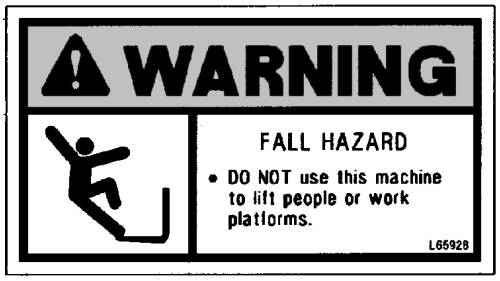

808038

RED

808037

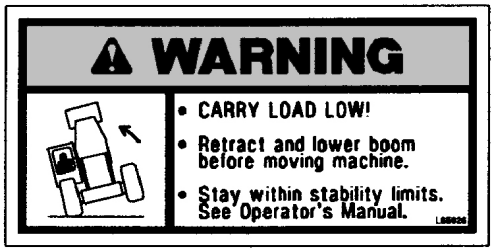

808027

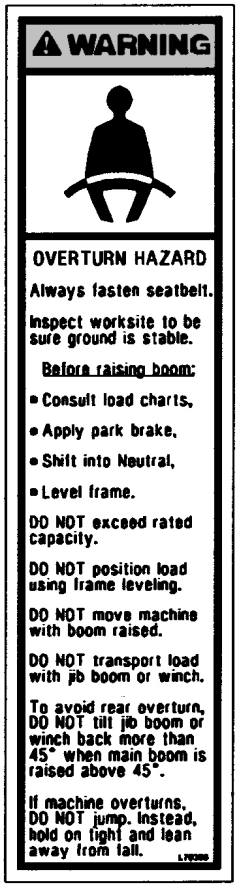

808033

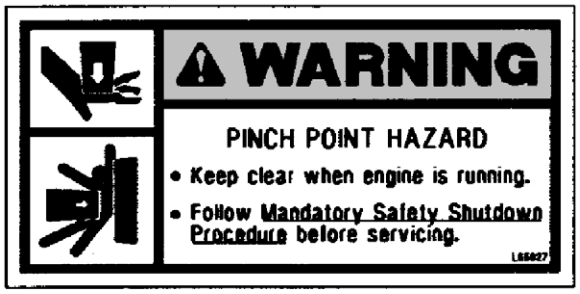

808030

808029

50380987

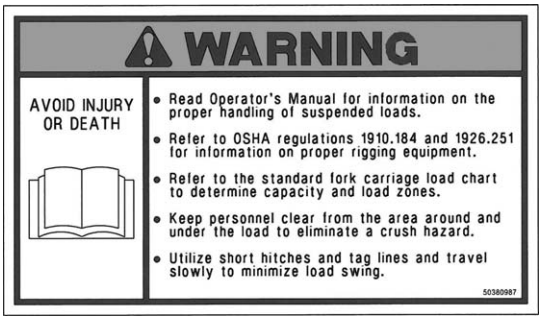

ProCarManuals.com

https://truckmanualshub.com/

SAFETY

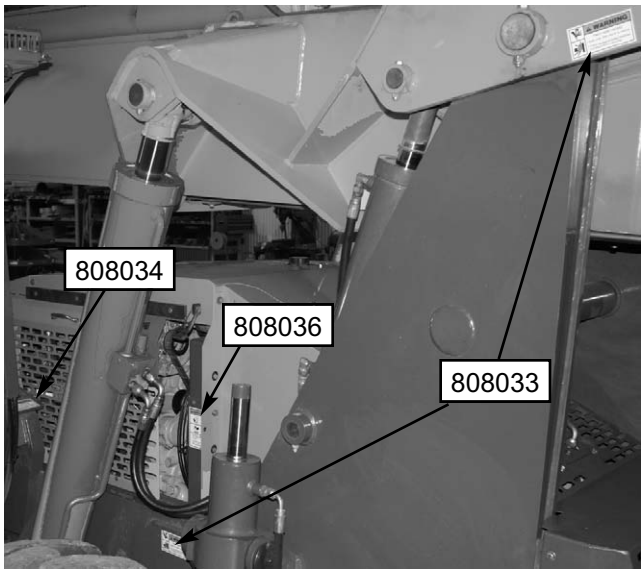

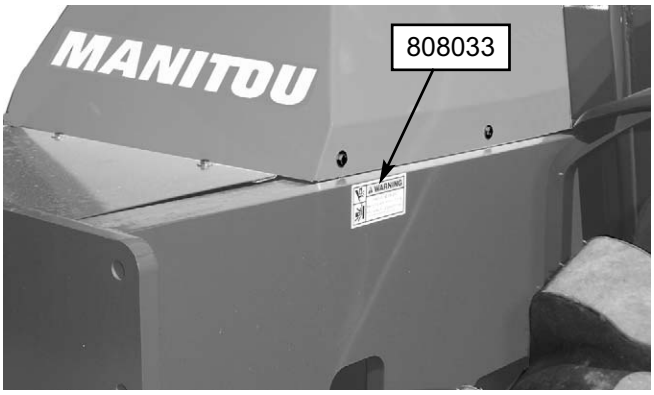

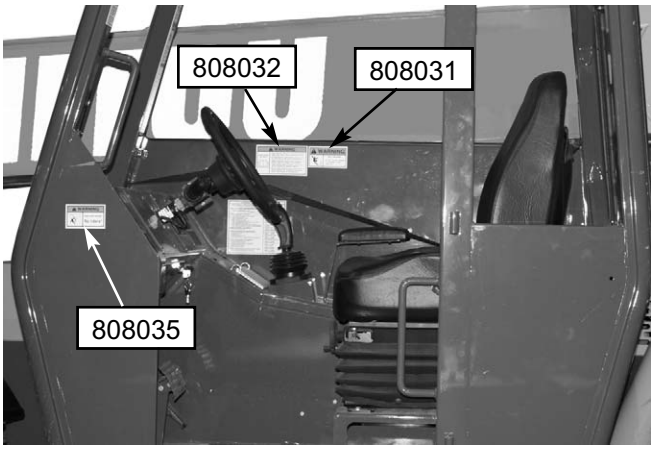

ProCarManuals.com

https://truckmanualshub.com/

SAFETY

808031

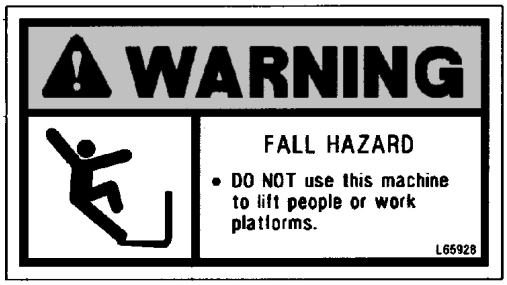

51200535

808032

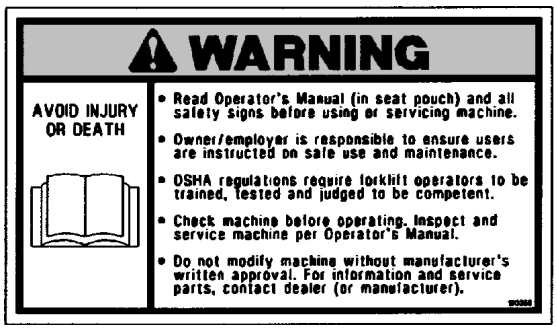

808036

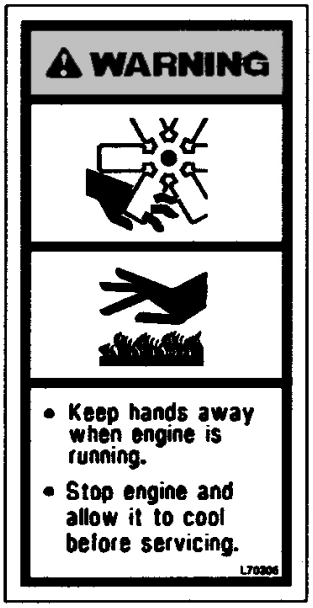

808033

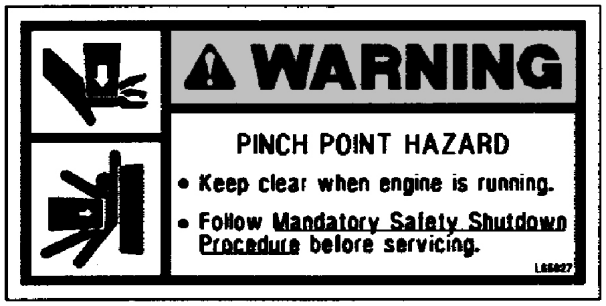

808034

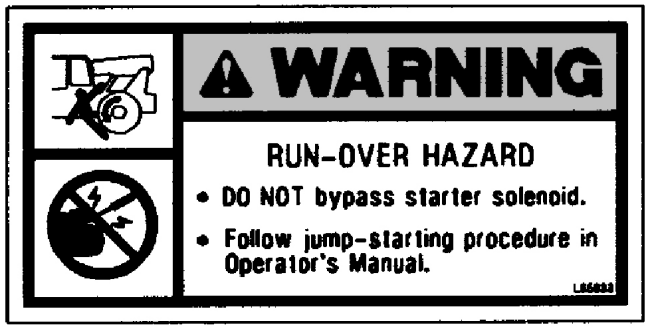

808035

ProCarManuals.com

https://truckmanualshub.com/

SAFETY

PWP Safety Decals

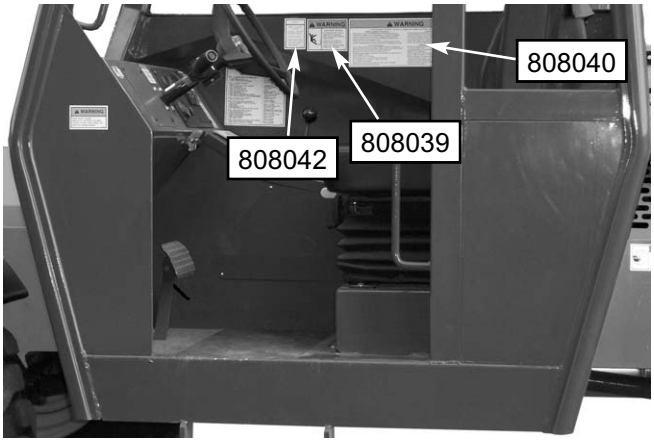

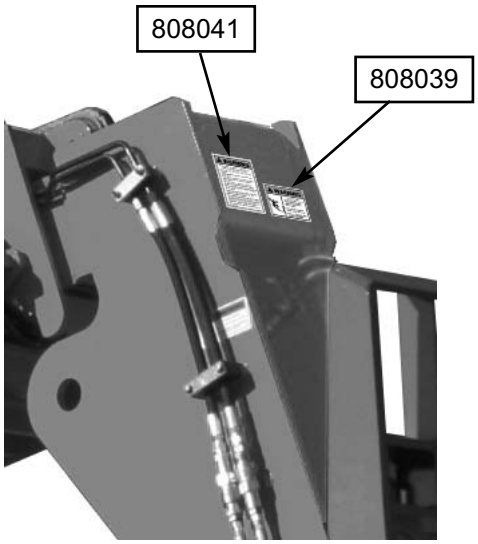

808041

WARNING

AVOID INJURY OR DEATH -- FOLLOW ALL WORK PLATFORM SAFETY RULES:

- Connect and secure "PWP System" upper control before being lifted.
- Personnel and equipment on platform must not exceed available space.
- Be sure that any required restraining means (guardrails, chains, harnesses, lanyards, etc.) are in place and properly used.
- Any harness, lanyard, or deceleration device that is damaged or permanently deformed must be replaced.
- Platform must be fully lowered for personnel to enter and exit. Do not climb on any part of forklift in attempting to enter and exit.
- Workers on platform must keep all parts of their bodies inside platform during raising and lowering. Signal operator when ready to be moved.
- Platform personnel must maintain firm footing on platform floor, unless secured by harness and lanyard. A harness and lanyard attached to platform or boom must be worn when working. Do not use railings, planks, ladders, etc. on platform to acheive additional reach or height.
- Do not ride in platform when forklift is being moved or re-positioned.

L71700

808039

WARNING

FALL HAZARD

- Lift personnel ONLY with an approved work platform, using the Work Platform Safety System.
- Check the Work Platform Safety System before use.
- Follow ALL Mandatory Work Platform Safety Rules.

L71554

808040

WARNING

TO AVOID INJURY OR DEATH, FOLLOW ALL MANDATORY WORK PLATFORM SAFETY RULES:

Platform Installation Precautions

- Platform must comply with ASME/ANSI B56.6b-1998 Addenda, Sec. 8.24.
- Modifications to platform that are detrimental to its safe use are prohibited.
- Guard any components that may present a hazard to platform personnel.
- Platform must be centered on and securely attached to carriage or forks.
- Carriage must be securely attached to boom.
- Carriage and forks must be secured to prevent them from pivoting upward.
- Provide overhead protection for platform personnel if overhead hazards exist.

Pre-Lift Precautions

- Be sure lifting mechanism is operating smoothly throughout its range, both empty and loaded, and that the "PWP System" is functioning properly.
- Any rotating or swing carriage function must be deactivated.
- Mark area to warn others of work by elevated personnel.
- Combined weight of platform, personnel, and load must not exceed one-third (1/3) of capacity of forklift.
- Be sure forklift has a firm footing.
- Shift transmission into neutral and apply parking brake.
- Be sure forklift frame is leveled, to insure a vertical lift.
- Be sure platform is horizontal.
- Be sure path of platform travel is clear of hazards, such as scaffolds, electrical wires and overhead obstructions.

Lifting Precautions

- Be sure personnel and equipment on platform do not exceed available space.
- A trained operator must be in position to operate forklift controls at all times.
- Always alert elevated personnel before moving platform.
- Lift and lower personnel smoothly and cautiously, and only at their request.
- Keep hands and feet clear of controls that are not in use.
- Always lower platform fully before moving forklift.
- Do not move forklift with personnel on platform.

Platform Personnel Precautions

- Be sure any required restraining means (railings, chains, harnesses, etc.) are in place and properly used.
- Any harness, lanyard, or deceleration device that is damaged or permanently deformed must be replaced.
- Platform must be fully lowered for personnel to enter and exit. Personnel must not climb on any part of forklift in attempting to enter and exit.
- Platform personnel must maintain firm footing on platform floor, unless secured by harness or lanyard. A harness and lanyard attached to platform or boom must be worn when working. Use of railings, planks, ladders, etc. on platform to achieve additional reach or height is prohibited.
- Workers on platform must keep all parts of their bodies inside platform during raising and lowering.

L71555

808042

NOTE

WORK PLATFORM SYSTEM

To activate / deactivate work platform system:

1) Actuate red switch

2) Apply service brakes for 3 or more seconds, until lamp in switch stops flashing.

102969

ProCarManuals.com

https://truckmanualshub.com/

Chapter 5

INDICATORS AND CONTROLS

CAUTION

Become familiar with and know how to use ALL safety devices and controls on the Telescopic Handler BEFORE operating it. Know how to stop the machine operation BEFORE operating it. This Manitou Americas machine is designed and intended to be used ONLY with a Manitou Americas attachment tool, or a Manitou Americas Company approved accessory or referral attachment tool. Manitou Americas cannot be responsible for safety if the machine is used with an unapproved accessory or attachment tool.

GUARDS AND SHIELDS

Whenever possible and without affecting machine operation, guards and shields are used to protect potentially hazardous areas. In many places, decals are also provided to warn of potential hazards and to display special operating procedures.

WARNING

Read and thoroughly understand all safety decals on the Telescopic Handler BEFORE operating it. DO NOT operate the machine unless all factory-installed guards and shields are properly secured in place.

ProCarManuals.com

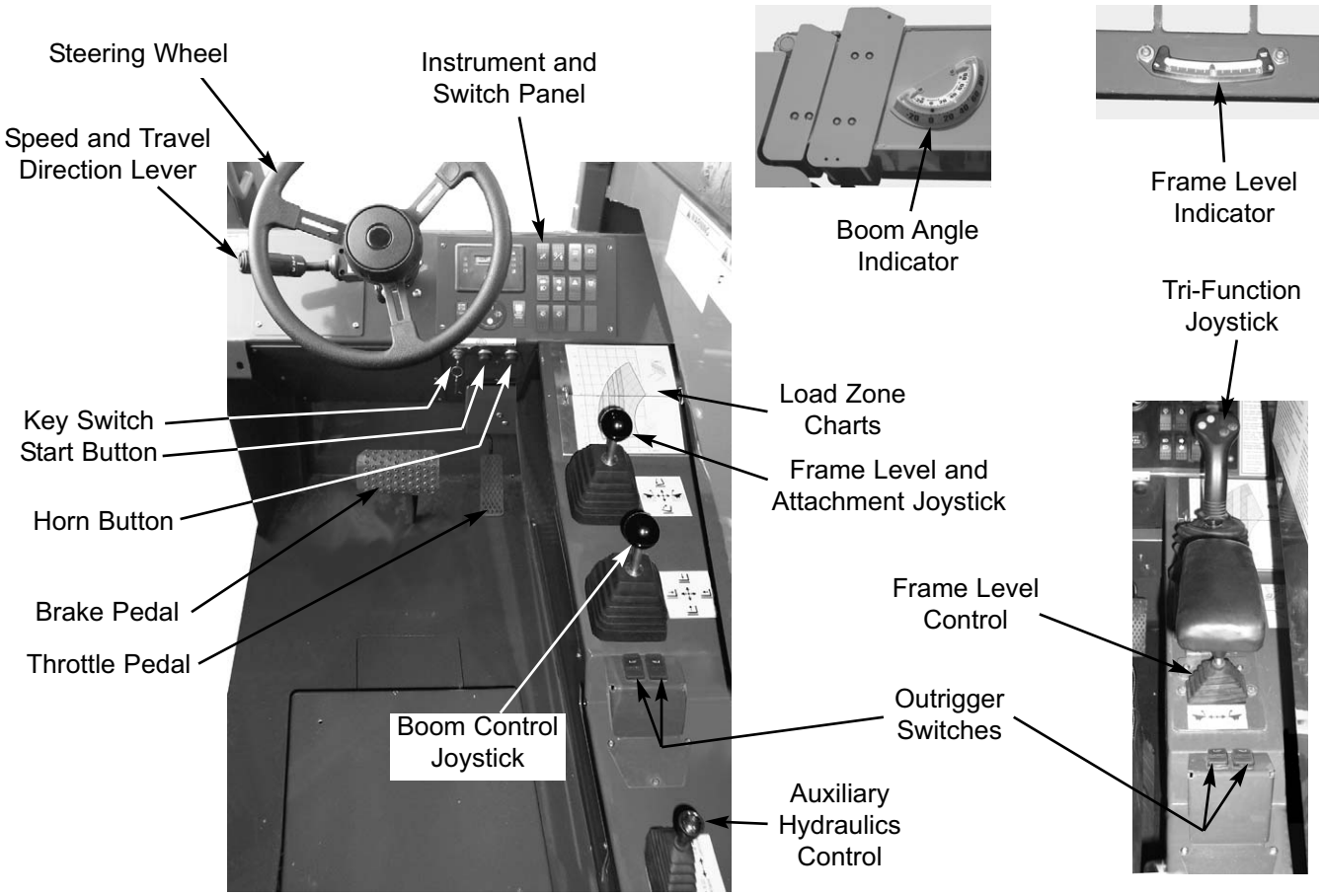

Operator's Compartment and Indicators/Controls Locations

DASH PANEL AREA

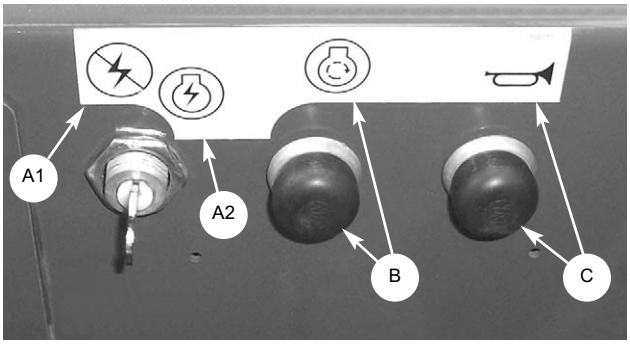

Ignition Switch, Start and Horn Button

A1 - Key Switch OFF: When the key is vertical in the keyswitch, power from the battery is disconnected to the control and instrument panel electrical circuits. Also, this is the only position in which the key can be inserted and removed.

A2 - Key Switch ON: When the key is turned one position clockwise from the vertical (OFF) position, power from the battery is supplied to all control and instrument panel electrical circuits. All indicator lamps in the instrument panel, exhaust filter gauge and switch and the engine emergency override switch will illuminate momentarily as a lamp check.

NOTE: *If the engine requires repeated attempts to start, the key MUST be returned to the OFF position between starting attempts to prevent battery run down.*

B - Start Button: With key switch in ON position, press the button to activate the starter. Release it as soon as the engine starts.

C - Horn Button: With the key switch ON, press the horn button to activate warning sound.

Load Zone Charts: A series of flip charts show lift height and reach limits relative to the load weight being handled with various attachment tools.

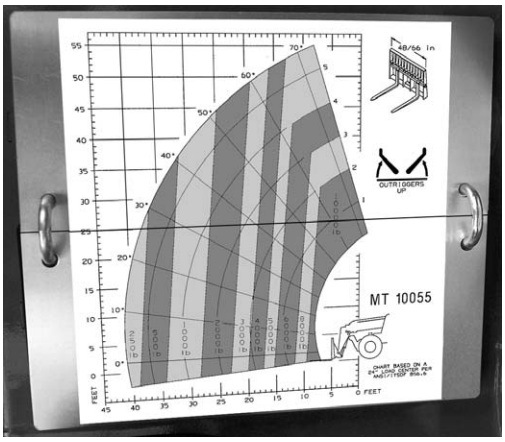

INSTRUMENT AND SWITCH PANEL

Located to the right of the steering wheel, this panel contains the instrument gauges, indicator lamps and function switches.

Instrument and Switch Panel

Instrumentation

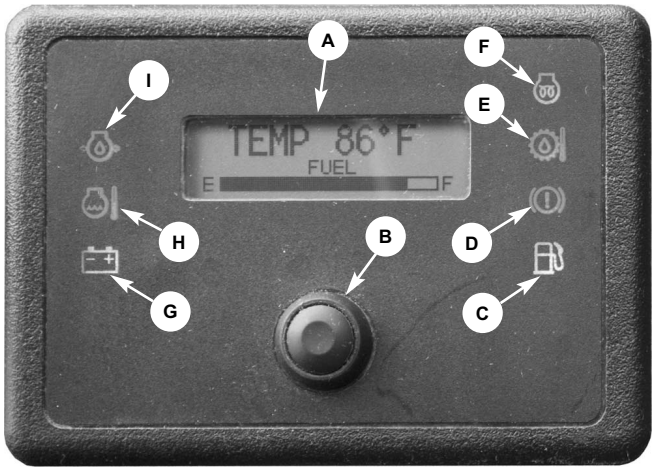

A - Multi-Function Display Screen: This screen displays the following functions:

- fuel level at all times,
- engine coolant temperature,
- engine oil pressure,
- voltmeter
- hourmeter
- 250 hour maintenance reminder
- error fault codes

B - Scroll Button: Pressing this button changes the function displayed in the gauge display panel.

A1 - Fuel Level Gauge: The fuel level is displayed at all times in the lower portion of the display. It indicates the amount of fuel remaining in the fuel tank.

ProCarManuals.com

A2 - Engine Coolant Temperature: Press button "B" until "TEMP" is displayed. It indicates the temperature of the engine coolant. Under normal conditions, this should indicate approximately 185°F (85°C).

A3 - Engine Oil Pressure: Press button "B" until "OIL" is displayed. This indicates the engine lubricating oil pressure.

A4 - Voltmeter: Press button "B" until "VOLTS" is displayed. This indicates the voltage output from the alternator.

A5 - Hourmeter: Press button "B" until "HRS" is displayed. It indicates the total operating time of the machine and should be used for keeping the maintenance log.

A6 - Maintenance Reminder: After every 250 hours a reminder will display: "ROUTINE MAINTENACE IS REQUIRED — CHECK OPERATOR'S MANUAL." Perform the required maintenance, and then clear the message by pressing and holding button "B" until the message is cleared.

NOTE: *The maintenance reminder message must display at least three minutes before it can be cleared by pressing and holding button "B".*

A7 - Error Fault Code: Error codes and a short error description are displayed in this screen. The error code will clear when the error is corrected.

Indicator Lamps

C - Low Fuel Lamp: This lamp indicates a low fuel situation. The fuel tank should be filled as soon as possible.

D - Brake Failure Lamp: This lamp indicates the condition of the service brake systems. The front and rear brakes are on independent systems. If a loss of pressure occurs in either system during normal operation with the brake pedal depressed, this lamp will come on.

Failure in one of the brake systems does not affect the operation of the other system. However, the MANDATORY SAFETY SHUTDOWN PROCEDURE (p. 8) should be followed and any necessary repairs made immediately.

E - Transmission Oil Temperature Lamp: This lamp indicates whether or not the transmission oil is at the proper temperature. During normal operation this lamp should be off, indicating that the transmission oil system is at the proper temperature.

IMPORTANT: *If this lamp comes on during normal operation, a problem may exist in the transmission oil system. Stop the machine immediately and investigate the cause of the problem!*

F - Engine Pre-heat Indicator Lamp: When lighted this lamp indicates that the cold weather starting aid is in use.

G - Alternator Lamp: This lamp indicates the condition of the electrical charging system. During normal operation, this lamp should be off. If the charge rate is too high or too low, this lamp will come on.

H - Coolant Temperature Lamp: This lamp indicates if the temperature of the engine coolant is too high.

IMPORTANT: *If this lamp comes on during normal operation with the engine running, STOP the engine as soon as possible and check the engine cooling system.*

I - Engine Oil Pressure Lamp: This lamp indicates whether the engine lubricating oil pressure is sufficient. During normal operation, with the engine running, this lamp should be off. During starting and when the ignition is on but the engine is not running, this lamp will be on.

IMPORTANT: *If this lamp comes on during normal operation, stop the engine immediately! After allowing the oil to drain down for a few minutes, check the engine oil level. Maintain oil level at the FULL mark on the dipstick.*

Exhaust Filter Gauge Indicators and Switches

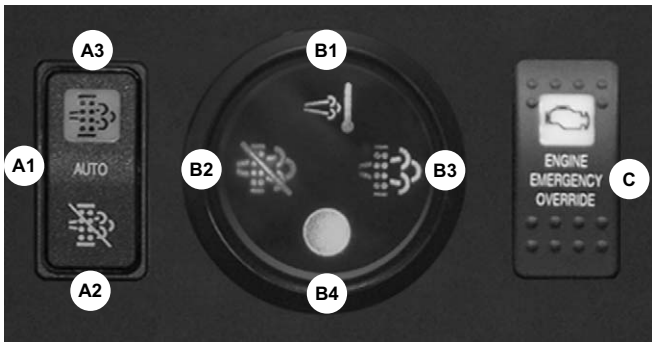

A - Exhaust Filter Cleaning Switch: This switch controls the function of the exhaust filter. It has 3 positions as follows:

A1 **Center position:** In this position the exhaust filter cleaning procedure is set to the automatic (AUTO) mode. Operating the engine in this center AUTO Mode allows the ECU to perform intelligent exhaust filter cleaning as required.

ProCarManuals.com

A2 Bottom position: In this position the auto exhaust filter cleaning is disabled.

A3 Top position: In this position the operator initiates a manual exhaust filter cleaning operation. This process allows the system to clean the exhaust filter when the operator previously disabled exhaust filter cleaning by pressing the bottom of the switch. The top of the switch will need to be pressed for at least three seconds to activate. The indicator in the switch will illuminate when activated and be off when the exhaust filter cleaning is complete.

B - Exhaust Filter Gauge: This gauge displays the four indicators you will see through the operator initiated or auto exhaust filter cleaning and disable processes.

NOTE: *The indicators in the exhaust filter gauge will all illuminate when the keyswitch is put in the "ON" position for a momentary lamp check. During normal operation all lamps will never all be illuminated at the same time. This image is only to illustrate the indicators you may see during operation.*

B1 - Exhaust Filter Cleaning Indicator: This indicator will illuminate when exhaust gas temperature is at optimal regeneration temperature, elevated idle is active, or exhaust filter cleaning is in process.

When this indicator is illuminated, the machine can be operated as normal unless the operator determines the machine is not in a safe location for high exhaust temperatures and disables auto cleaning.

B2 - Auto Cleaning Disabled Indicator: This indicator will illuminate when the operator has disabled the auto exhaust filter cleaning function from the exhaust filter cleaning switch (A). This icon will remain illuminated until the operator re-engages automatic exhaust cleaning from the exhaust filter cleaning switch (A). Disabling the auto mode is not recommended for any situation unless it is safety related or if the fuel tank lacks the recommended 1/4 tank of fuel to complete the cleaning process.

B3 - Exhaust Filter Indicator: This indicator will illuminate when the exhaust filter is in need of cleaning because the soot level of the exhaust filter is slightly high and the operator has disabled auto exhaust filter cleaning. If conditions are safe, the operator should enable the auto exhaust filter clean setting or perform manual exhaust filter cleaning.

B4 - Exhaust Filter Warning Indicator: This amber or red indicator works in combination with the Exhaust Filter Indicator (B3).

- If this indicator is illuminated amber when the Exhaust Filter Indicator (B3) is illuminated, the engine performance will be reduced by the ECU because the soot level of the exhaust filter is moderately high. If conditions are safe, the operator should enable the auto exhaust filter clean function. If conditions are not safe,the operator should move the machine to a safe location and engage the auto exhaust filter cleaning mode.
- If this indicator is illuminated red when the Exhaust Filter Indicator (B3) is illuminated, the engine performance will be further reduced by the ECU because the soot level of the exhaust filter is extremely high. This combination will lead to a "Service Only" soot condition, contact your authorized Manitou Americas dealer.

C - Engine Emergency Override Switch: The lamp in this switch will flash when there is a low oil pressure WARNING or a high coolant temperature WARNING. The lamp in the switch will light continuously at the low oil pressure SHUTDOWN set-point or the high coolant temperature SHUTDOWN set-point.

Pressing and holding the bottom of the shutdown override switch will override an engine shutdown signal caused by low engine oil pressure or high engine coolant temperature.

The switch must be pressed within 30 seconds to prevent undesired shutdown of engine. The switch can be overridden for 30 seconds at a time to move the machine to a safe location and to lower the boom to the ground. If the engine shuts down, the ignition switch must be turned off and then back on before the engine can be restarted.

NOTE: *Holding the switch continously "ON" will not reset the 30-second timer.*

Switch Panel

The switch panel contains three rows of switches for the operation of standard and optional equipment on the telescopic handler.

ProCarManuals.com

https://truckmanualshub.com/

Top Row Switches

Switches have graphic symbols to indicate function and effect. The following descriptions start with the first switch on the left.

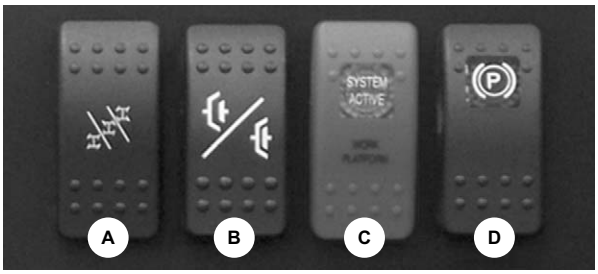

NOTE: *Some switches are optional and may not be on machine.*

A - Steering Mode: This 3-position switch is used to select among the three steering modes. The upper position engages the 4-wheel-steer mode. This mode provides all-wheel steering, used for making tighter turns, usually on a jobsite. The center position engages the 2-wheel-steer mode. This mode provides front-wheel steering only, used for higher speed travel. The lower position engages the crab-steer mode. This mode is used when a small amount of side shift is needed for picking or placing a load.

NOTE: *The rear wheels are not self-centering. Make sure all wheels are in a straight-ahead position before changing the steering mode.*

Any of the steering modes can be used in forward and reverse travel. The operator should learn to anticipate changes in machine movement if the steering mode must be changed.

B - Clutch Cutout: When activated, this switch allows faster engine acceleration and more power to the hydraulic system, without power to the drive axles, while the service brake pedal is pressed.

In the “OFF” position, the clutch mechanism of the transmission remains engaged when the brakes are applied. In the “ON” position, the clutch mechanism is disengaged when the brakes are applied.

Normal brake force will hold the machine in position while accelerating the engine to power hydraulic control functions during load placement.

C - Personnel Work Platform: This is a red switch used to activate the Personnel Work Platform (PWP) System. When activated, an amber lamp in the switch will be on.

NOTE: *This lamp will flash on and off, indicating that the system is not yet fully functional, until the brakes are held on for three or more seconds.*

D - Parking Brake: When the machine is parked, this switch should be pressed to actuate the parking brake mechanism in the front axle.

WARNING

UNATTENDED MACHINE HAZARD

Activate parking brake switch and lower attachment tool to ground before leaving machine. An unattended machine can move or roll and cause death or serious injury to operator or bystanders.

Periodically check the parking brake operation to maintain adequate holding power. Always be sure the parking brake switch is off when resuming machine operation.

Middle Row Switches

Switches have graphic symbols to indicate function and effect. The following descriptions start with the first switch on the left.

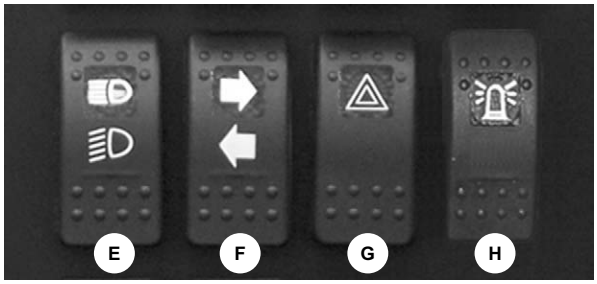

NOTE: *Some switches are optional and may not be on machine.*

E - Head Lights/Work Lights: Pressing the top of the switch will illuminate the lights mounted on the top of the operator’s station and the red tail lights, for use in forward travel operations. Pressing the bottom of the switch will illuminate the lights at the end of the boom in addition to the lights on the operator’s station, for additional lighting in working operations.

F - Turn Signal: This switch is used to indicate the direction of a turn with the tail lights. Depress the right arrow for a right turn; depress the left arrow for a left turn. Return the switch to the center position after the turn is completed.

ProCarManuals.com

G - Hazard: This switch can be activated to make the tail lights flash on and off in case the machine is stalled or temporarily stopped in a traffic area on the road or jobsite.

H - Strobe Light: When a stobe light is installed on the machine, activating this switch will produce a strobe light on and off flashing, for working in conditions that may obscure view of the machine.

Bottom Row Switches

Switches have graphic symbols to indicate function and effect. The following descriptions start with the first switch on the left.

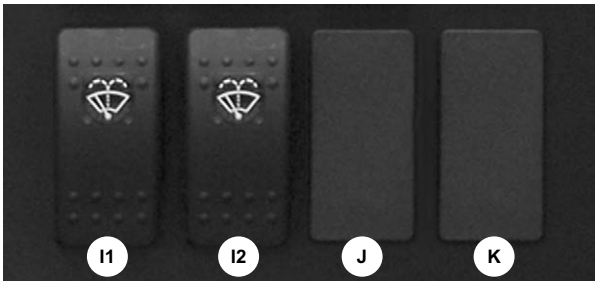

NOTE: *Some switches are optional and may not be on machine.*

I1 and I2 - Wiper/Washer: The windshield and top window of the operator's station are each equipped with a wiper and washer mechanism. Switch "I1"operates the wiper and washer on the windshield; switch "I2" operates the wiper and washer on the top window.

J- K - Blank:

Heater Controls

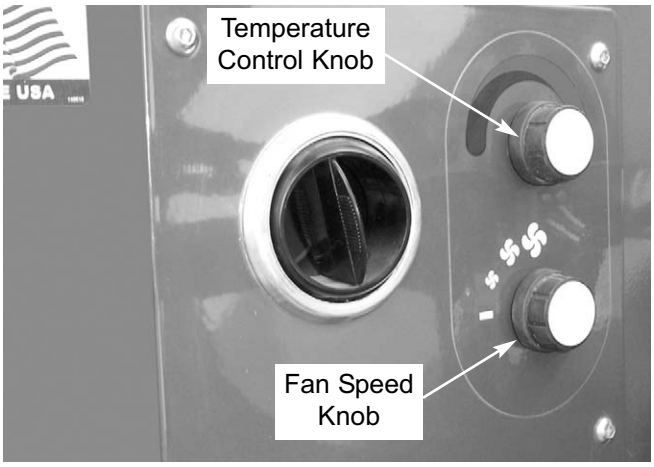

Temperature Control: This is the upper knob located to the left of the steering wheel. This knob is used to adjust the temperature output of the heater. Turning the knob clockwise will increase the temperature output of the cab heater.

Fan Speed: This knob is located below the temperature control knob. Rotating the knob clockwise will increase the fan speed for increased air circulation.

Heater A/C Controls

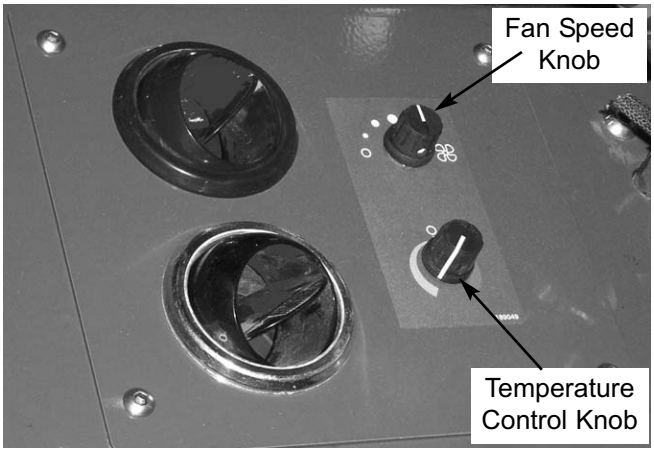

Fan Speed: This is the upper knob located to the left of the steering wheel. The fan is in the off position when the knob is rotated completely to the left. Rotating the knob clockwise will switch the fan on and increase the fan speed for increased air circulation.

Temperature Control: This knob is located below the fan speed knob. It is used to adjust the temperature output of the heater A/C unit. Turning the knob clockwise from the midpoint position will increase the temperature output of the cab heater. Turning the knob counterclockwise from the midpoint position will switch the A/C unit on and decrease the temperature output of the cab A/C.

Travel Lever

Located on the left side of the steering wheel column, this lever is used to change travel direction (forward or reverse) and speed range.

Travel Direction: The lever MUST be in "N" (Neutral) position before the starter will engage to start the engine.

NOTE: *Backup alarm automatically sounds with travel lever in "R" (Reverse).*

Position "F" (Forward)

Position "N" (Neutral)

Position "R" (Reverse)

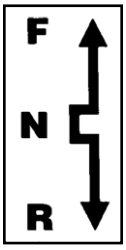

ProCarManuals.com

https://truckmanualshub.com/

Speed Range - MT6642 and MT8044: Twisting the lever end clockwise or counter-clockwise will change the transmission speed between low, medium and travel ranges.

Position “3” (Travel Range)
Position “2” (Medium Range)
Position “1” (Low Range)

Speed Range - MT10044, MT10055 and MT12042: Twisting the lever end clockwise or counter-clockwise will change the transmission speed between low and travel ranges.

Position “4” (Travel Range)
Position “3” (Upper Range)
Position “2” (Medium Range)
Position “1” (Low Range)

IMPORTANT: *Care should be taken when downshifting or changing direction, because damage to the transmission can occur if shifting is forced or attempted at too high a speed. Allow engine speed to slow before any downshift or directional change is attempted.*

Steering

Turn the steering wheel to the right or left to turn the machine in that direction. The power steering system is designed to provide low effort steering without shock reaction from the tires to the steering wheel.

FLOOR AND SEAT AREA

Throttle Pedal: This pedal, operated by the right foot, controls the engine speed to match power requirements. Pushing down on the pedal increases engine speed; letting up on the pedal decreases engine speed.

Service Brake Pedal: Pressing this pedal activates inboard hydraulic wet-disc-type brakes on all four wheels. Separate front and rear brake systems allow bringing the machine to a safe stop if either system loses pressure.

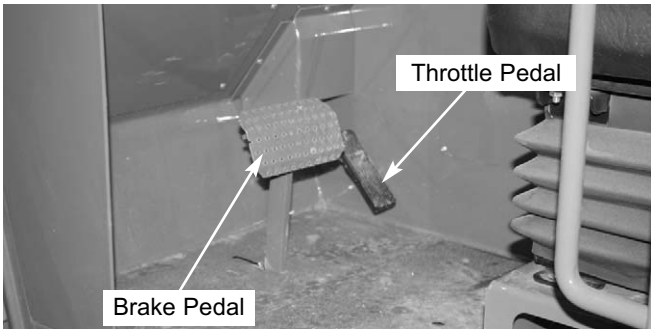

Seat Positioning: The seat is mounted on rails for forward and rearward repositioning, for comfort and to accommodate the operator’s size. A spring-loaded latch handle “A” under the front of the seat actuates the adjustment mechanism.

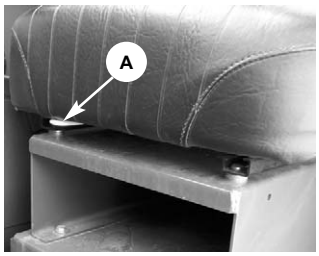

Suspension Seat Option: In addition to the “A” latch handle for forward and rearward adjustment, this seat has a knob “B” under the front of the seat to adjust the suspension. Turn the knob to the right for a softer ride, and to the left for a firmer ride.

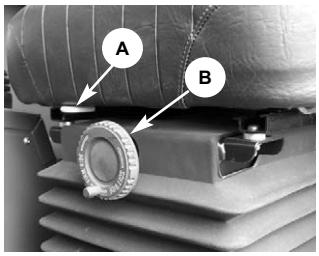

Seat Belt: This machine has a retractable seat belt. Grasp the belt on the left side of the seat, pull the belt over your lap, and insert the belt into the buckle on the right side of the seat until you hear it lock in place.

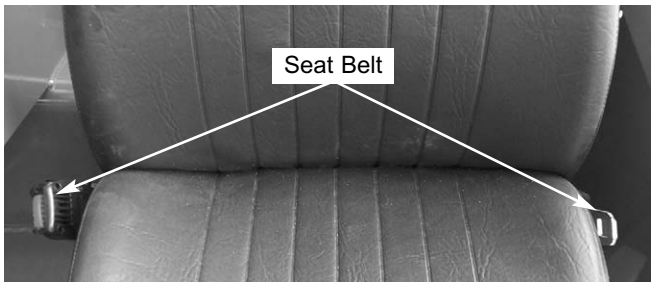

RIGHT SIDE PANEL

These controls and indicators are used to position the frame, boom, attachment and outriggers. Graphic symbols on the side panel indicate the control actions and effects.

This machine is equipped with one of two types of boom and attachment joystick control configurations, either a two-joystick configuration, or a single tri-function joystick.

ProCarManuals.com

https://truckmanualshub.com/

⚠ WARNING

Use extreme caution when raising or extending the boom. The Telescopic Handler MUST be level. Loaded or empty, this machine can tip if not level.

ALWAYS place the transmission in neutral, set the parking brake and keep the service brakes fully applied before raising or extending the boom.

NEVER exceed the specified lifting and extending capacities of this machine, or serious machine damage or personal injury may result. Refer to the load charts at the operator's station or this manual.

If a boom circuit hose fails with the boom up, with or without a load, shut down the machine following the MANDATORY SAFETY SHUTDOWN PROCEDURE (page 9). DO NOT attempt repairs. Call your Manitou Americas dealer for assistance.

The truss boom and winch attachment tools should ONLY be used to lift and place loads when the machine is in a stationary position. Transporting suspended loads must ALWAYS be done slowly and cautiously, with the boom and load as low as possible. Use taglines to restrict loads from swinging, to avoid overturn.

NEVER use winch for lifting or moving of personnel. NEVER exceed the maximum rated capacity of the winch (3000 lbs./1360 kg) or exceed the load chart rating for winch applications.

DO NOT tilt the truss boom back more than 45° from horizontal. DO NOT attempt to use the optional rotating carriage as a load leveling function. ALWAYS level the frame prior to raising a load.

Two-Joystick Configuation

Frame Level/Attachment Tilt Joystick: The machine may be tilted slowly as much as 10° to the left or right to level the frame and boom in relation to the ground. Move the joystick handle to the left to tilt to the left; move the joystick handle to the right to tilt to the right.

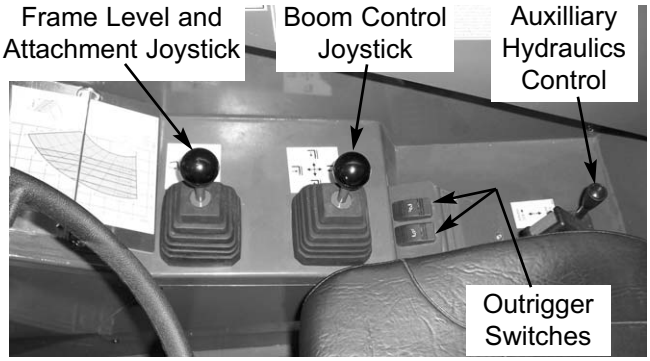

Two-Joystick Configuration

To tilt the attachment tool up, move the joystick handle rearward. To tilt the attachment tool down, move the joystick handle forward.

After the attachment tool is set to a desired angle, that angle will be maintained as the boom is raised and lowered, extended and retracted, until a new angle is set.

⚠ WARNING

DO NOT level the frame with the boom raised or extended. Only level the frame while stopped and with the boom fully retracted and the attachment raised just enough to clear the ground.

Boom Control Joystick: This machine has a hydraulic-type boom with telescopic sections. The sections extend by means of a hydraulic cylinder and a chain system inside the boom, sequenced for uniform extension of each section.

To extend the boom, move the joystick handle to the right; to retract the boom, move the joystick handle to the left. To raise the boom, move the joystick handle rearward; to lower the boom, move the joystick handle forward.

Outrigger Switches: The outriggers are used to provide greater stability in specific applications. Press the left switch forward to lower the left outrigger. Press the right switch forward to lower the right outrigger. Press both switched rearward to raise the outriggers.

Level the frame before lowering the outriggers. Lower the outriggers until the front tires just start to raise.

ProCarManuals.com

ProCarManuals.com

⚠ WARNING

For maximum machine stability, never lower the outriggers so that the tires come completely off the ground.

Do not use outriggers on soft or uneven surfaces. Be sure the surface can support the machine and load.

Be sure NO persons or equipment are where the outrigger pads will be positioned.

DO NOT travel with the outriggers extended under any circumstances.

Adequate clearance is required for the outriggers in the retracted position when traveling through doorways or narrow pathways.

DO NOT attempt to use outriggers as a hydraulic jack for maintenance or frame leveling or other similar uses.

Failure to heed could result in death or serious injury.

Auxiliary Hydraulics Control: This two-position lever is for attachment tools that require additional hydraulics.

Tri-Function Joystick Configuation

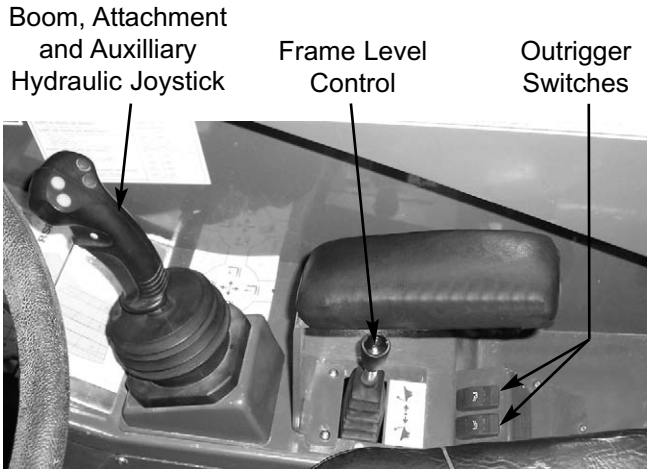

Single Tri-Function Joystick Configuration

Tri-Function Joystick: This joystick handle is equipped with two yellow buttons and two blue buttons on the upper rear of the handle, and a trigger switch on the front of the handle. The yellow buttons operate the attachment tilt. The blue buttons operate the auxiliary hydraulics. The trigger switch increases the function speed of both the attachment tilt and auxiliary hydraulics.

To extend the boom, move the joystick right; to retract the boom, move the joystick to the left. To raise the boom, move the joystick rearward; to lower the boom, move the joystick forward.

To tilt the attachment tool up, depress and hold the lower yellow button on the left side of the joystick handle. To tilt the attachment tool down, depress and hold the upper yellow button on the left side of the joystick handle.

To operate the auxiliary attachment hydraulics, depress and hold either the upper or lower blue button on the right side of the joystick handle. The upper blue button will cause the reverse effect of the lower blue button.

Depressing and holding the trigger on the front side of the joystick handle will increase the speed of the attachment tilt and auxiliary hydraulic functions.

NOTE: *The joystick handle does not need to be moved to operate the tilt or auxiliary hydraulic functions.*

Speed Control Knobs: The tri-function joystick incorporates a manually adjusted speed control. Speed adjustment is accomplished by manual adjustment of the pilot-pressure apply valves located on the top rear of the hydraulic reservoir under the access cover on the front hood section.

If the machine is equipped with auxiliary hydraulics, there will be two pilot-pressure apply valves, each having two speed-control knobs. The right pilot valve controls the auxiliary hydraulics, and the left pilot valve controls the attachment tilt function. On the attachment tilt pilot valve, the left knob controls the attachment tilt-back speed, and the right knob controls the attachment tilt-forward speed. On the auxiliary hydraulic pilot valve, the function of the knobs will depend on the type of attachment requiring auxiliary hydraulics.

Turning a knob clockwise will increase the speed of its associated function. Turning a knob counter-clockwise will decrease the speed of its associated function.

NOTE: *There is a locking knob located forward of the adjusting knob, which must be loosened before the adjusting knob can be turned. After adjustment has been made, tighten the locking knob to maintain the selected speed.*

https://truckmanualshub.com/

Attachment and Auxilliary Hydraulics Pilot-Pressure Apply Valves

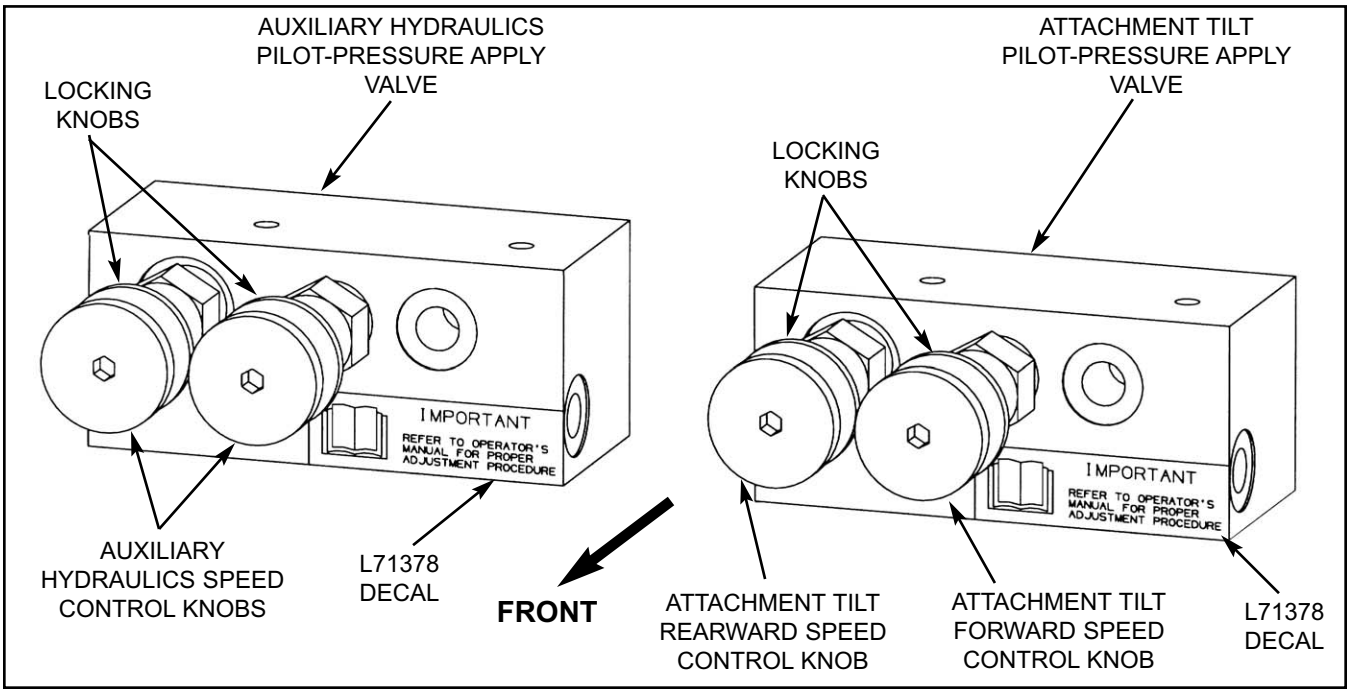

Frame Level Control: This control is located to the rear of the tri-function joystick. The machine may be tilted slowly as much as 10° to the left or right to level the frame and boom in relation to the ground.

⚠ WARNING

DO NOT level the frame with the boom raised or extended. Only level the frame while stopped and with the boom fully retracted and the attachment raised just enough to clear the ground.

Outrigger Switches: The outriggers are used to provide greater stability in specific applications. Press the left switch forward to lower the left outrigger. Press the right switch forward to lower the right outrigger. Press both switches rearward to raise the outriggers.

Level the frame before lowering the outriggers. Lower the outriggers until the front tires just start to raise.

FUNCTION INDICATORS

Frame Level Indicator: Located in front of the operator on the ROPS upper cross tube, the position of the ball indicates when the frame is level relative to a sloping ground surface.

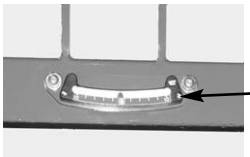

Boom Angle Indicator: Mounted on the left side of the outer boom, the movement of a ball indicates the angle of boom elevation relative to the ground.

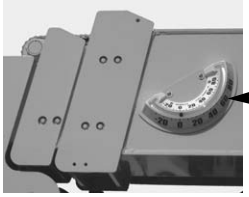

SERVICE AND SAFETY FEATURES

Transmission Oil Level: Dipstick is located below the cover on the front section of the main hood.

Hydraulic Pressure Test Ports: A gauge can be attached to these ports to check main hydraulic valve, joystick and steering pressures.

ProCarManuals.com

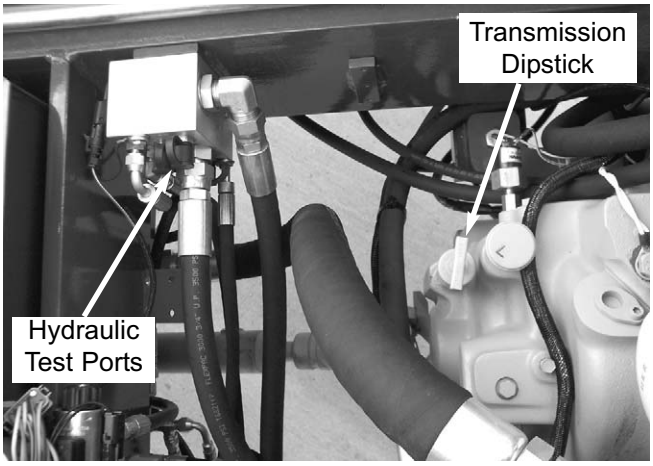

Engine Oil Level: Dipstick is located on the right side of the middle section of the main hood. The dipstick can also be used as the oill fill.

Coolant Level: Coolant can be checked and added through the radiator cap located under the top rear opening on the main hood.

Hydraulic Reservoir Oil Level and Fill Cap: The sight gauge on the side of the reservoir indicates the level of the hydraulic oil. The fill cap is accessible by removing the cover of the front hood section.

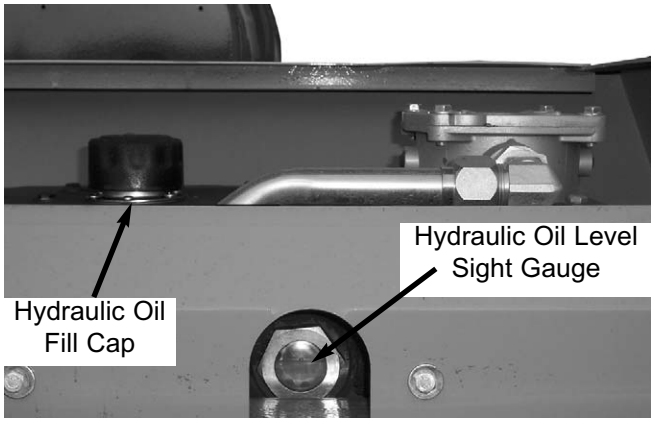

Air Cleaner Restriction Indicator: Located in the rubber elbow connector at the rear of the air cleaner, it indicates when the air cleaner needs service. If the clear portion of the indicator is red, the air cleaner should be checked for a clogged filter element.

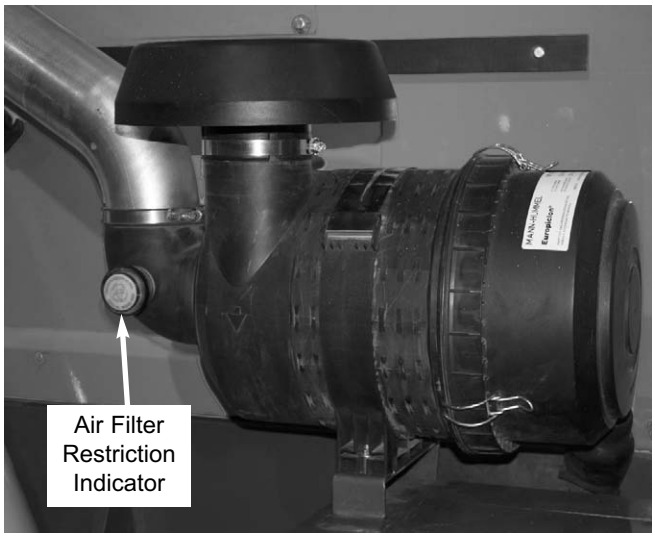

Backup Alarm: Located inside the rear frame cover, it produces a loud warning sound when the machine is in reverse.

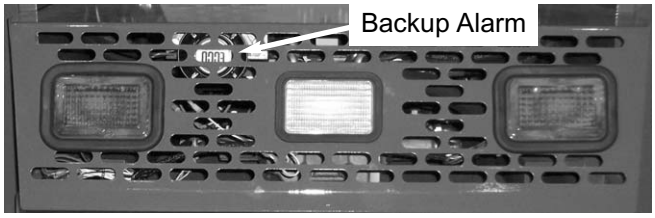

Side-View Mirror: Located on the front outside corner of the fuel tank, this mirror provides the operator with a view toward the rear of the machine.

Battery Compartment: The battery compartment is below the tool box at the rear of the fuel tank. Remove the bottom panel of the tool box to check the electrolyte level. Remove the access panel on the side of the battery compartment to remove the battery.

ProCarManuals.com

https://truckmanualshub.com/

Windshield Washer Fluid Reservoir: Located outside the right front of the operator station as shown. The fluid level is visible through the reservoir.

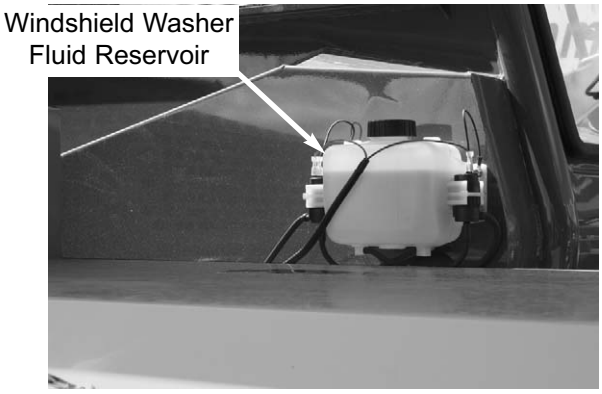

Fuse and Relay Compartment: This compartment is located under the load chart panel. Remove the four screws to gain access to the fuses and relays.

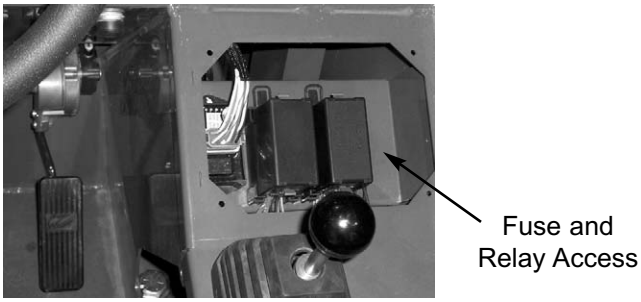

Fuses and Relays Functions: Refer to the illustration and following description for the fuse and relay functions.

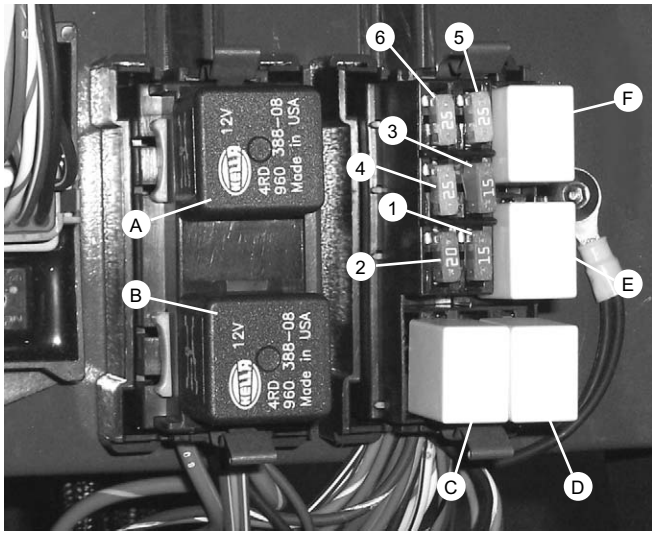

FUSES:

1. 15 AMP fuse: Ignition Switch, Horn, Brake Lights, and Clutch Cutout
2. 20 AMP fuse: Transmission, Park Brake, PWP, Steer Mode, and Backup Alarm
3. 15 AMP fuse: Lights, Ether, and Outriggers
4. 25 AMP fuse: Heater and Gauges
5. 25 AMP fuse: Top Wiper Motor
6. 25 AMP fuse: Front Wiper Motor

RELAYS:

A. 20/40 AMP change-over relay: Ignition
B. 20/40 AMP change-over relay: Ignition
C. 20 AMP relay: Front Wiper
D. 20 AMP relay: Park Brake
E. 20 AMP relay: Lights
F. 20 AMP relay: Top Wiper

ATTACHMENT TOOLS

Manitou Americas offers a versatile range of attachment tools to meet various lifting and material-handling applications. Contact your Manitou Americas dealer for specifications and ordering information.

ACCESSORIES

Manitou Americas offers a range of special accessories for this machine. Contact your Manitou Americas dealer for specifications and ordering information.

NOTE: *All accessories are field-installed unless otherwise noted. Information and parts for installing accessories will be provided by the Manitou Americas or Manitou Americas Telescopic Handler dealers.*

ProCarManuals.com

https://truckmanualshub.com/

Chapter 6

OPERATION AND ADJUSTMENTS

GENERAL INFORMATION

CAUTION

BEFORE starting the engine and operating the Telescopic Handler, review and comply with ALL safety recommendations in the SAFETY chapter of this manual. Know how to STOP the machine before starting it. Also, BE SURE to fasten and properly adjust the seatbelt.

ENGINE BREAK-IN

A new engine does not require extensive "break-in." However, for the first 100 hours of operation, follow these guidelines: Operate the engine at various conditions during the initial 100 hours with at least 15% of the time under heavy loads to achieve adequate engine break-in. Check the oil level frequently and replenish as necessary with the oil specified in the engine manual.

John Deere engines use a "break-in" oil for the first 100 hours of operation. After the first 100 hours of operation, change the oil and replace the oil filter.

If the engine has too much operating time at idle, constant speeds, or light load usage, or if make-up oil is required during the first 100 hour period, a longer break-in period may be needed without changing the break-in oil until 500 hours.

During the first 20 hours, avoid prolonged periods of engine idling or sustained maximum load operation. If engine will idle longer that 5 minutes, stop the engine.

Consult the *Lubrication* chapter for the type and grade of oil to use. Refer to the *Service and Storage* chapter for the proper service intervals.

PRE-START WALK-AROUND INSPECTION

It is the operator's responsibility to perform a pre-start inspect of the machine before the start of each workday. Every pre-start inspection must include more than simply checking the fuel and oil levels. It is a good practice to personally inspect any machine you are assigned to use, even though it has already been put into service by other personnel.

The pre-start inspection is designed to discover if the machine has incurred any damage or is in need of routine service.

Any needed repairs are to be made by a qualified service technician.

Refer to the illustration and checklist on the next two pages for the "Pre-Start Walk-Around Inspection."

ProCarManuals.com

https://truckmanualshub.com/

Pre-Start Walk-Around Inspection Illustration

PRE-START WALK-AROUND INSPECTION PROCEDURE

Refer to the following illustration and checklist to perform the inspection. Begin with item 1 at the left front of the machine and walk toward the rear of the machine on the left side and around the back and toward the front on the right side of the machine.

Any needed repairs or service noted during the inspection must be performed by a qualified service technician before operating the machine.

The illustration and checklist page can be copied for future pre-start walk-around inspections.

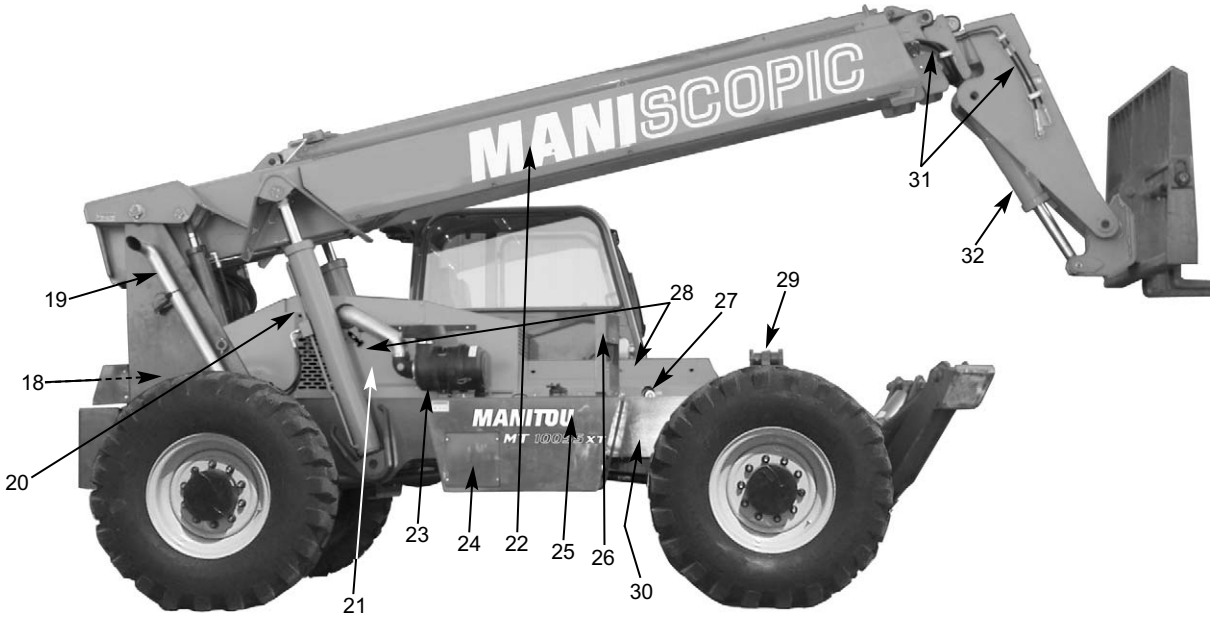

ProCarManuals.com

https://truckmanualshub.com/

Pre-Start Walk-Around Inspection Checklist

Note the condition of safety decals during the walk-around inspection. Replace missing or illegible safety decals.

☐1. **Attachment Tool:** Check for broken, missing or damaged parts. When using a personnel work platform, check to see if the platform meets ANSI/ITSDF standards and that it is secured to the forks and fork carriage. When using forks, check for welds, cracks or misalignment. Replace the forks in sets when the condition of the forks is questionable.

IMPORTANT: *DO NOT use forks that have been repaired by welding.*

☐2. **Attachment Tool Mount:** No loose or missing parts; no visible damage.

☐3. **Attachment Tool Mounting Pins:** No visible damage; pin fit is secure and properly lubricated.

☐4. **Boom Chain:** No loose or missing parts; no visible damage; sheave pin fit is secure and properly lubricated.

☐5. **Boom Sections and Wear Pads:** No loose or missing parts; no visible damage or excessive wear.

NOTE: *Wear pads that measure 3/8" (9.5 mm) thick or less need to be replaced.*

☐6. **Outriggers (when equipped):** Properly secured; pads in downward position; no visible damage; no loose or missing parts; no leaking from the cylinder.

☐7. **Boom Angle Indicator:** Properly secured; no visible damage; bubble is visible.

☐8. **Tire and Wheel Assemblies:** Properly secured; no loose or missing lug nuts; no visible tire damage (cuts or abrasions); proper inflation.

☐9. **Front and Rear Axles:** No loose or missing parts; no visible damage; tie rod end studs locked; no evidence of leaking; properly lubricated.

☐10. **Operator Compartment:**

- ☐ Seat belt undamaged; operates properly; mounting hardware secure.
- ☐ Switches and levers undamage;
- ☐ no loose or missing parts;
- ☐ load charts properly secured and legible;
- ☐ levers and switches operate properly; control markings legible;
- ☐ frame level indicator secured and undamaged, bubble is visible.

☐11. **Lift Cylinder:** Properly secured; no visible damage; no evidence of leaking from the cylinder; properly lubricated.

☐12. **Rear Axle Stabilizer Cylinder:** Properly secured; no visible damage; no evidence of leaking from the cylinder; properly lubricated.

☐13. **Slave Cylinder:** Properly secured; no visible damage; no evidence of leaking from the cylinder; properly lubricated.

☐14. **Stabilizer Switch:** Properly secured; no visible damage; no loose or disconnected wires.

☐15. **Boom Pivot Assembly:** Properly secured; no visible damage or excessive wear; properly lubricated.

☐16. **Boom Hydraulic Hoses:** No visible damage or exterior wear; no evidence of leaking.

☐17. **Rear Light Assembly:** Properly secured; no visible damage; no loose or disconnected wires; no malfunctions.

☐18. **Hydraulic Control Valve Assembly:** No loose or missing parts; no evidence of leaking; no damaged or leaking hoses.

☐19. **Exhaust System:** No loose or missing parts; no visible damage; no obstructions to the outlet.

☐20. **Hydraulic Cooler:** No loose or missing parts; no visible damage; no evidence of leaking; cleanliness;

☐21. **Engine Compartment:**

- ☐ Engine oil level, add if needed;
- ☐ Coolant level, add if needed;
- ☐ No evidence of engine oil or coolant leaks;
- ☐ Belts and hoses in good condition, properly secured and adjusted

☐22. **Boom Hose Guards:** Properly secured; no visible damage.

☐23. **Engine Air Filter:** No loose or missing parts; no visible damage; no obstructions to the evacuator; precleaner free from dirt; restriction indicator proper reading.

☐24. **Battery Compartment:** Proper electrolyte level; no loose or damaged cables; no visible damage or corrosion.

☐25. **Fuel Tank:** No visible damage; no evidence of leaking; level of fuel; breather cap secure and working.

☐26. **Mirror Assembly:** No loose or missing parts; no visible damage; properly adjusted.

☐27. **Hydraulic Oil Reservoir:** No visible damage; no evidence of leaking; recommended oil level; breather cap secure and working.

☐28. **Cowling and Latches:** All cowling, doors and latches in working condition; properly secure; no loose or missing parts; all components operate properly.

☐29. **Frame Tilt Cylinder:** Properly secured; no evidence of leaking; properly lubricated.

☐30. **Frame:** No visible damage; no cracked welds; no loose or missing parts.

☐31. **Tilt and Auxiliary Hydraulic Hoses:** No visible damage or excessive wear; no evidence of leaking.

☐32. **Attachment Tilt Cylinder:** Properly secured; no visible damage; no evidence of leaking from the cylinder; properly lubricated.

Date: _____ Initials: _____

ProCarManuals.com

https://truckmanualshub.com/

BEFORE STARTING ENGINE

Before mounting the operator's compartment, walk completely around the machine to be sure no one is under, on, or close to it. Let others in the area know you are going to start up. Wait until everyone is clear of the machine before starting it up.

Before starting the engine and running the machine, refer to the *Indicators and Controls* chapter and become familiar with the various operating controls, indicators and safety features.

STARTING THE ENGINE

WARNING

ALWAYS fasten the seat belt BEFORE starting the engine. Leave the parking brake applied until the engine is running and you are ready to operate the machine.

The following procedure is recommended for starting the engine in temperatures 32°F (0°C) and above:

1. Grasp the handholds and step up into the operator's compartment.
2. Adjust the seat and fasten the seatbelt.
3. Check that all controls are in their "neutral" positions, except the parking brake switch, which should be in the "ON" position.
4. Turn the key switch to the "ON" position and press the start button. If the button is released before the engine starts, turn the key switch to the "OFF" position, and allow the starter to stop before attempting to start again.

IMPORTANT: *Crank the starter until the engine starts. If the engine fails to start within 30 seconds, return the key to the "OFF" position, wait two minutes, and try again to start the engine. Cranking the engine for longer than 30 seconds will result in premature failure of the starter.*

5. After the engine starts, operate the engine at or below 1200 rpm with no load for 1-2 minutes to allow the engine time to warm-up properly before operating the controls.

NOTE: *When the parking brake switch is pressed into the "OFF" position, the parking brake will remain applied until the travel lever is placed into either "Forward" or "Reverse."*

6. Check that indicators are in normal condition.
7. Check that there are no fuel, oil or engine coolant leaks, and no abnormal noises or vibrations.

COLD STARTING PROCEDURES

The engine is equipped with glow plugs for starting the engine in temperatures down to 0°F (-18°C) and a block heater for starting the engine in temperatures below 0°F (-18°C).

WARNING

DO NOT use starting fluid on engines equipped with glow plugs. Ether starting fluid is highly flammable and may explode, causing serious injury.

The following procedure is recommended for starting the engine in temperatures 0°F - 32°F (-18°C - 0°C):

1. Follow steps 1 - 3 as listed in Starting The Engine.
2. Turn the key switch to the "ON" position to activate the glow plugs and wait until the Engine Preheater Indicator light turns off. Then press the start button to start the engine. If the start button is released before the engine starts, turn the key switch "OFF" and repeat the procedure.

NOTE: *The glow plugs operate automatically through the ECU. The Engine Preheater Indicator light should always illuminate when the switch is turned ON. In warm weather, the light illuminates briefly as a light check. In cold weather, the light remains on during the automatic operation of the glow plugs. Operating time depends on the temperature. Do not crank the engine until the indicator light turns off.*

3. Follow steps 5 -7 as listed in "Starting The Engine".

The following procedure is recommended for starting the engine in temperatures below 0°F (-18°C):

1. Follow steps 1 - 3 as listed in Starting The Engine.
2. Plug the engine block heater in at least one hour before attmpting to start the engine.
3. Turn the key switch to the "ON" position to activate the glow plugs and wait until the Engine Preheater Indicator light turns off. Then press the start button to start the engine. If the start button

ProCarManuals.com

https://truckmanualshub.com/

is released before the engine starts, turn the key switch “OFF” and repeat the procedure.

4. Follow steps 5 -7 as listed in “Starting The Engine”.

Refer to the engine operator manual for additional cold starting procedures.

If the battery becomes discharged and has insufficient power to start the engine, jumper cables can be used for starting assistance. Refer to the jump starting instructions in the *Service and Storage* chapter of this manual for safe jump starting procedures.

STOPPING

The following procedure is the recommended sequence for stopping the machine:

1. Bring the machine to a stop on a level surface. Avoid parking on a slope, but if necessary park across the slope and block the wheels.
2. Fully retract the boom and lower the attachment to the ground.
3. Idle the engine for at least 2 minutes for gradual cooling.

IMPORTANT: *If and Exhaust Filter Cleaning has just been performed, increase the engine idle time to 4 minutes.*

4. Place controls in neutral. Apply the parking brake.
5. Turn the ignition switch key to the “OFF” position. Remove the key.
6. Unfasten the seatbelt, and grasp the handholds while climbing out of the operator’s compartment.

FIRST TIME OPERATION

Make sure the engine is warm, and then go through the following procedures:

CAUTION

Be sure the area used for test-running is clear of spectators and obstructions. Initially, operate the machine with an empty attachment tool.

Place the travel lever in Forward or Reverse and select a speed range. Switch off the parking brake and move ahead slowly, while testing the steering and brakes. Stop and operate all boom, attachment tool functions and frame leveling controls, checking for smooth response.

Apply the service brakes, stop the machine and move the travel lever to the opposite direction.

Shifting to the next higher gear may be done at any engine speed while the machine is in motion.

DO NOT overspeed the engine when down-shifting. Allow the machine to slow down before shifting to the next lower gear.

ENGINE SHUTDOWN PROTECTION

The engine is equipped with a WARNING and SHUTDOWN feature to warn of low engine oil pressure and high engine coolant temperature. If the problem is not corrected, the engine power will be reduced automatically, or the engine will shut down.

Engine Oil Pressure

There are two low oil pressure protection features: Low Oil Pressure WARNING, and Low Oil Pressure SHUTDOWN.

At the Low Oil Pressure WARNING set-point, the warning lamp in the engine override switch and the amber lamp in the exhaust filter gauge will flash and a slow engine power derate will begin. But if the oil pressure rises above the Low Oil Pressure WARNING set-point, power will slowly increase until the engine is back to full power. The lamp in the switch and exhaust filter gauge will continue to flash until the power has returned to normal, even if the fault condition has been corrected and the recovery is in process.

At the Low Oil Pressure SHUTDOWN set-point, the lamp in the engine override switch and the amber lamp in the exhaust filter gauge will light continously, and a fast engine power derate will begin. If the oil pressure does not rise above the SHUTDOWN set-point within 30 seconds, the engine will shut down. However, if the oil pressure rises above the Low Oil Pressure SHUTDOWN set-point within 30 seconds, then the power derate speed will revert to the Low Oil Pressure WARNING speed of reaction.

ProCarManuals.com

Engine Coolant Temperature

There are two coolant temperature protection features: High Coolant Temperature WARNING, and High Coolant Temperature SHUTDOWN.

At the High Coolant Temperature WARNING set-point, the warning lamp in the engine override switch and the amber lamp in the exhaust filter gauge will flash and a slow engine power derate will begin. But if the coolant temperature drops below the High Coolant Temperature WARNING set-point, the power will increase slowly until the engine is back to full power. The lamp in the switch and exhaust filter gauge will continue to flash until the power has returned to normal even if the fault condition has been corrected and the recovery is in process.

At the High Coolant Temperature SHUTDOWN set-point, the lamp in the engine override switch and the amber lamp in the exhaust filter gauge will light continously, and a fast engine power derate will begin. If the coolant temperature does not drop below the SHUTDOWN set-point within 30 seconds, the engine will shut down. However, if the coolant temperature drops below the High Coolant Temperature SHUTDOWN set-point within 30 seconds, then the power derate speed will revert to the High Coolant Temperature WARNING speed of reaction.

EXHAUST FILTER CLEANING SYSTEM

The engine is equipped with an exhaust filter in place of a muffler. This filter is located to the front of the engine under the engine cover. This exhaust filter reduces carbon monoxide, hydrocarbons, and particulate matter from the exhaust stream. Trapped particles are eventually oxidized through a process known as regeneration or exhaust filter cleaning.

Under normal machine operation and with the system in AUTO mode, the exhaust filter requires minimal operator interaction.

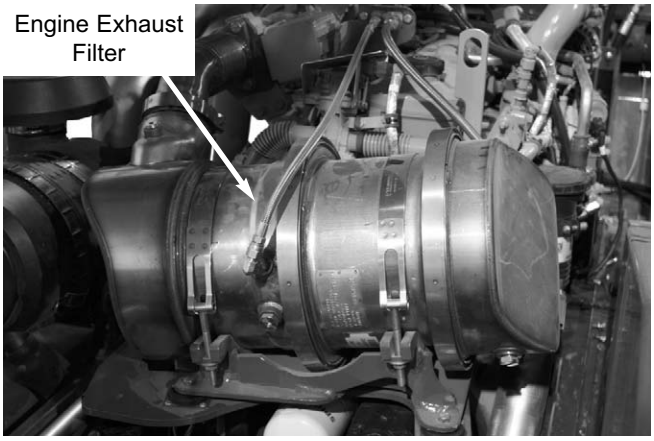

To avoid unnecessary buildup of diesel particles or soot in the exhaust filter system;

1. Utilize the Automatic (AUTO) Exhaust Filter Cleaning mode.
2. Avoid unnecessary idling.
3. Use the proper engine oil. See *Lubrication* chapter of this manual or the engine maual for proper engine oil specifications.
4. Use only ultra low sulfur diesel (ULSD) fuel. See *Lubrication* chapter of this maual or the engine manual for fuel requirements.

Even with proper maintenance, ash and soot will build up in the exhaust filter after several thousand hours of operation and require service. This service will need to be performed by a authorized Manitou Americas dealer.

Automatic (AUTO) Exhaust Filter Cleaning

Operating the engine in AUTO Mode allows the ECU to perform intelligent exhaust cleaning as required. The Exhaust Filter Cleaning Indicator will illuminate when the system is actively performing an exhaust filter cleaning. When the exhaust filter cleaning process has completed its cycle, the cleaning indicator will turn off.

The machine can be operated as normal during the auto exhaust filter cleaning process unless the operator determines the machine is not in a safe location for high exhaust temperatures and disables the auto cleaning process.

To enable the auto exhaust filter cleaning mode, the exhaust filter cleaning rocker switch should be in the center position.

IMPORTANT: *It is recommended that the exhaust filter cleaning be in the Auto mode at all times. Auto mode should only be disabled when the machine is not in a safe location during the exhaust filter cleaning process.*

If the machine is not able to be moved to a safe location, the operator should temporarily disable auto exhaust filter cleaning. If the machine is located in a safe location, the auto mode should always be enabled.

Manual/Parked Exhaust Filter Cleaning

Manual/Parked exhaust filter cleaning is initiated by the operator. This process allows the system to clean the exhaust filter when the operator previously needed to disable the auto exhaust cleaning process because of

ProCarManuals.com

https://truckmanualshub.com/

specific conditions. During this process the engine speed will be controlled by the ECU. The machine must remain parked during this process.

WARNING

During auto or manual exhaust filter cleaning operations, the engine will run at elevated idle and hot temperatures for approximately 30 minutes. Exhaust gases and exhaust filter components reach temperatures hot enough to burn people, ignite, or melt common materials.

Servicing the machine or attachments during exhaust filter cleaning can result in serious personal injury. Avoid exposure and skin contact with hot exhaust gases and components.

If the machine is note in a safe location for elevated temperatures, move the machine to a safe location and check for adequate fuel level before beginning the exhaust filter cleaning process.

NOTE: *It is not necessary to perform a manual/parked exhaust cleaning unless a previous auto cleaning process was cancelled and the indicator in the exhaust filter gauge is illuminated.*

Cleaning times will vary depending upon several specific criteria. The average standard cleaning time can range from 20 - 50 minute or longer.

To enable manual/parked exhaust filter cleaning;

1. Park the machine in a safe location and check that the machine has a recommended 1/4 tank of fuel to complete the process.
2. Reduce engine speed to low idle and apply the parking brake.
3. Press the top of the exhaust filter cleaning switch for approximately 3 seconds until the indicator in the switch illuminates. The cleaning indicator in the exhaust filter gauge will also illuminate.

The indicators will go off when the exhaust filter cleaning process is completed. If the machine is not going to be returned to service immediately after the cleaning process, allow the engine and the exhaust filter time to return to normal operating temperature before stopping the engine. The manual/parked filter cleaning process can be canceled at any time during the process.

Avoid disabling the cleaning process unless absolutely necessary. Repeated disabling or ignoring prompts to perform a manual/parked cleaning procedure will cause additional engine power limitations and can eventually lead to dealer required service.

Utilize AUTO Exhaust Filter Cleaning mode to avoid additional service.

Disable Exhaust Filter Cleaning

Disabling the exhaust filter cleaning request is not recommended. Disable the automatic exhaust filter cleaning only when necessary. Whenever possible, cleaning should be allowed and the exhaust filter cleaning switch should be left in the AUTO Mode. When left in auto mode, soot buildup in the exhaust filter system will be at a minimum.

To disable exhaust filter cleaning, press the bottom of the exhaust filter cleaning rocker switch. The Auto Cleaning Disabled Indicator located in the exhaust filter gauge will be illuminated.

Exhaust Filter Cleaning Precautions

When the AUTO Exhaust Filter Cleaning is disabled, the sytem has 3 levels of notification to advise the operator to perform the exhaust filter cleaning. The 3 levels are as follows;

1. The Exhaust Filter Indicator will illuminate, indicating the the soot level in the filter is slightly high. If conditions are safe, the operator should enable auto exhaust filter cleaning or perform a manual exhaust filter cleaning.

2. The Exhaust Filter Indicator and the Amber Alert Indicator in the exhaust filter gauge will illuminate. The engine performace will be reduced by the ECU because the soot level in the exhaust filter is moderately high. If conditions are safe, the operator should enable auto exhaust filter cleaning. If conditions are not safe, the operator should move the machine to a safe location and either enable the auto exhaust filter cleaning or perform a manual exhaust filter cleaning.

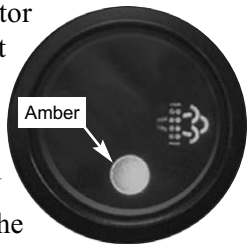

ProCarManuals.com

https://truckmanualshub.com/

3. The Exhaust Filter Indicator and the Red Alert Indicator in the exhaust filter gauge will illuminate. The ECU will further reduce engine performance. Continuing to operate the machine at this level will set a "Service Only" soot condition where the engine cannot clean the exhaust filter itself. In this condition, perform a Manual/Parked Exhaust Filter Cleaning. A "Service Only" exhaust cleaning time can range from 3 - 4 hours.

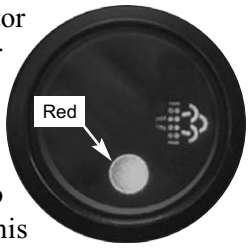

IMPORTANT: *Be sure the machine is parked in a safe place and has an adequate amount of fuel to complete a 3 - 4 hour exhaust filter cleaning.*

PARKING BRAKE

NOTE: *The parking brake mechanism within the front axle is not designed for, and not intended to be used as, the primary means of stopping movement of the machine. Hydraulic braking provided through the service brakes within the axles is the primary means for stopping movement. The axle-by-axle split brake system is the secondary means of stopping movement.*

The proper sequence for correct machine operation is to always engage the parking brake switch before shutting off the engine; and to disengage the parking brake ONLY after the engine is running. In an EMERGENCY, if it becomes necessary to STOP movement, activate the parking brake switch to "ON."

CHANGING ATTACHMENT TOOLS

The Telescopic Handler boom nose will accept Quick-attach System Manitou Americas attachment tools. The Quick-attach System has a quick-release hookup and locking mechanism for mounting framing-type or masonry-type attachment tools to the boom nose.

Attaching Procedure

To pick up the attachment tool proceed as follows:

1. Raise the boom slightly, extend it two to three feet (600 to 900 mm) for better visibility, and tilt the Quick-attach System forward.
2. Align the Quick-attach System squarely with the back of the attachment tool.
3. Slowly extend the Quick-attach System and lower the hooks under the attachment tool hookup bar.

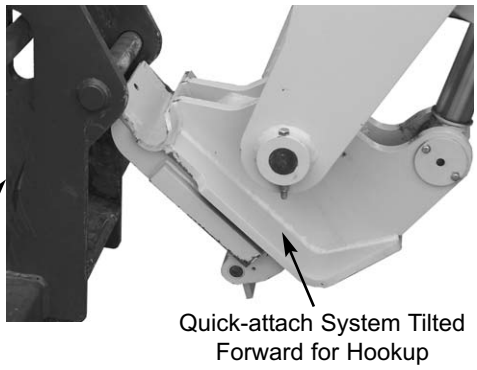

4. Tilt the Quick-attach System back so that the lock plate engages the attachment tool. This secures the attachment tool to the Quick-Attach system.

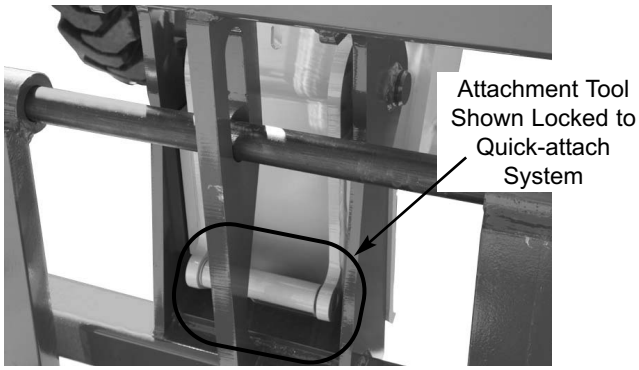

Quick-attach System Attaching Detail

5. For an attachment tool with auxiliary hydraulics, connect the hoses to the quick-disconnect connectors on the boom nose.

Detaching Procedure

To detach attachment tool, proceed as follows:

1. Raise the boom slightly and extend it two to three feet (600 to 900 mm) for better visibility. Lower the boom until the attachment tool is approximately 12" (0.3 m) off the ground.
2. Tilt the carrier rearward as far as it will go. Once the carrier is tilted back all the way, perform the Mandatory Safety Shutdown Procedure (p. 9, *Safety* chapter).
3. With the engine off, leave the operator's station. Manually raise the lock spring and flip the lock plate up and outward at least 180° so it is in position to re-lock on the next attachment tool.

ProCarManuals.com

https://truckmanualshub.com/

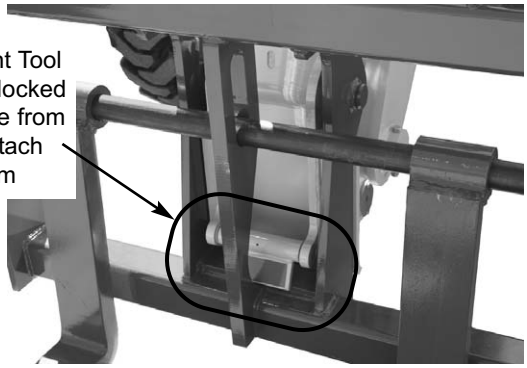

Quick-attach System Detaching Detail

4. Tilt the Quick-attach System forward to allow the attachment tool to roll out, then lower the boom so the hook ears clear the hookup bar on the attachment tool.

NOTE: *One side of the lock plate has a bright red decal to indicate the unlocked position.*

5. If the attachment tool has auxiliary hydraulics, disconnect the hoses from the quick-disconnects on the boom nose.
6. Start the engine and tilt the Quick-attach System forward, then slowly back the machine until the attachment tool is free from the boom nose.

WARNING

Modifications, alterations to, or use of attachment tools NOT authorized by Manitou Americas (or the manufacturer) in writing can void warranty and cause machine damage and/or serious personal injury or death.

SELF-LEVELING

The machine is equipped with a hydraulic self-leveling feature. This feature is designed to keep the attachment tool level while the boom is being raised.

GENERAL MACHINE OPERATION

Take time to check the Telescopic Handler to be sure all systems are in good operating condition. Perform the following steps before starting the machine for the first time each day:

1. Check the engine oil, coolant, transmission oil and hydraulic oil levels.
2. Be sure weekly lubrication has been done.
3. Visually inspect for leaks, broken or malfunctioning parts. Be sure all caps, covers and safety shields are in place.
4. Check tires for cuts, bulges, nails, correct pressure, loose wheel nuts, etc.
5. Inspect the work area. Be sure you know where you will make load pickups, placements, lifts, and turns. Look over the terrain of the jobsite for holes, obstacles, slippery surfaces, and soft or deep mud.
6. Check clearances of ramps, doorways and passageways. Check overhead clearances if you will travel and place loads near power or telephone lines.

If the machine is found to be in need of repair or in any way unsafe, or contributes to an unsafe condition, the matter must be reported immediately to the user's designated authority. The machine must NOT be operated until it has been restored to a safe operating condition.

WARNING

Exhaust fumes can kill. Ensure proper ventilation when starting indoors or in enclosed areas.

Use proper handholds, NOT the steering wheel or control levers when mounting and dismounting.

NEVER operate the machine with safety guards or covers removed.

Over-inflated tires can explode and cause injury or death. Tire repairs MUST be made only by authorized personnel using proper tools and equipment.

Operate the travel controls gradually and smoothly when starting, stopping, turning and reversing direction.

Grade and Slope Precautions

The Telescopic Handler complies with industry stability test requirements and is stable when properly operated. However, improper operation, faulty maintenance, and poor housekeeping can contribute to a condition of instability.

ProCarManuals.com

https://truckmanualshub.com/

The amount of forward and rearward tilt to be used is governed by the application. Although use of maximum rearward tilt is allowable under certain conditions, such as traveling with the load fully lowered, the stability of the machine, as determined by the industry standard tests, does not encompass consideration for excessive tilt at high elevations, or the handling of off-center loads.

Only handle loads within the capacity limits of the machine, and which are stable and safely arranged. When attachments are used, extra care should be taken in securing, manipulating, positioning and transporting the load.

Grade Limits

NOTE: *Grade limits are based on ANSI /ITSDF standard B56.6-2005.*

This telescopic handler meets or exceeds the safety standard (ANSI/ITSDF B56.6) stability limits for rough terrain forklifts. The stability tipping limits cover specific, controlled test conditions, which are extremes, and which are not intended to be achieved during normal worksite operations. The following specifications are provided only as information to the operator, and must not be used as a guideline for operating the Telescopic Handler. For safe operation, always follow the instructions and warnings provided in this manual.

ProCarManuals.com

⚠ WARNING

DO NOT level the frame with the boom raised or extended. Only level the frame while stopped, and with the boom fully retracted and the attachment tool raised just enough to clear the ground.

1. DO NOT place or retrieve loads on an up or down slope or grade that exceeds 7% or 4°.
2. DO NOT travel up or down a grade or slope that exceeds 22% or 12° while loaded.
3. DO NOT place or retrieve loads on a side hill with a slope or grade that exceeds 12% or 7°. Regardless of terrain or position of wheels, the **FRAME MUST BE LEVEL,** as indicated by the level indicator on the ROPS/FOPS cross member.
4. DO NOT travel across a side hill that exceeds 18% or 10° grade. Regardless of the terrain or position of the wheels, the **FRAME MUST BE LEVEL,** as indicated by the level indicator on the ROPS/FOPS cross member. The attachment tool MUST be maintained at the “carry” position with the boom fully retracted, and attachment tool at minimum ground clearance.

When ascending or descending grades in excess of 5% or 3°, the machine should be driven with the load upgrade. An unloaded machine should be operated on all forward grades with the load handling attachment tool downgrade, tilted back if applicable, and raised only as far as necessary to clear the road surface.

On grades, ramps and inclines, use extreme caution and avoid turning if possible. Normally travel straight up and down the slope.

Traffic Flow Patterns

Know and understand the traffic flow patterns of your jobsite. Know all Telescopic Handler hand signals for safety. Utilize signal persons and be sure you can see the signal person and acknowledge the signals given.

Safety Hand Signals

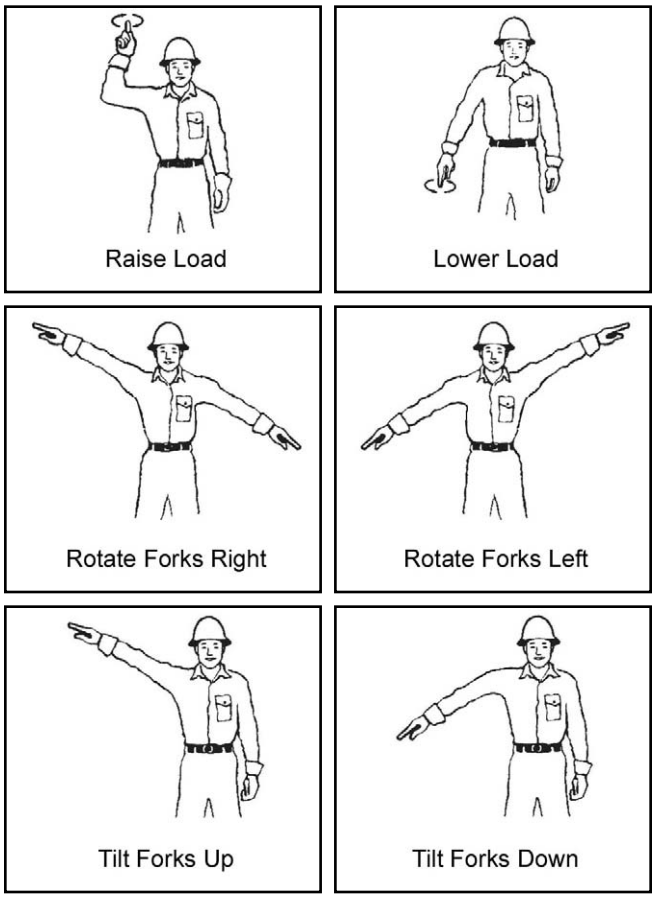

https://truckmanualshub.com/

Safety Hand Signals Continued

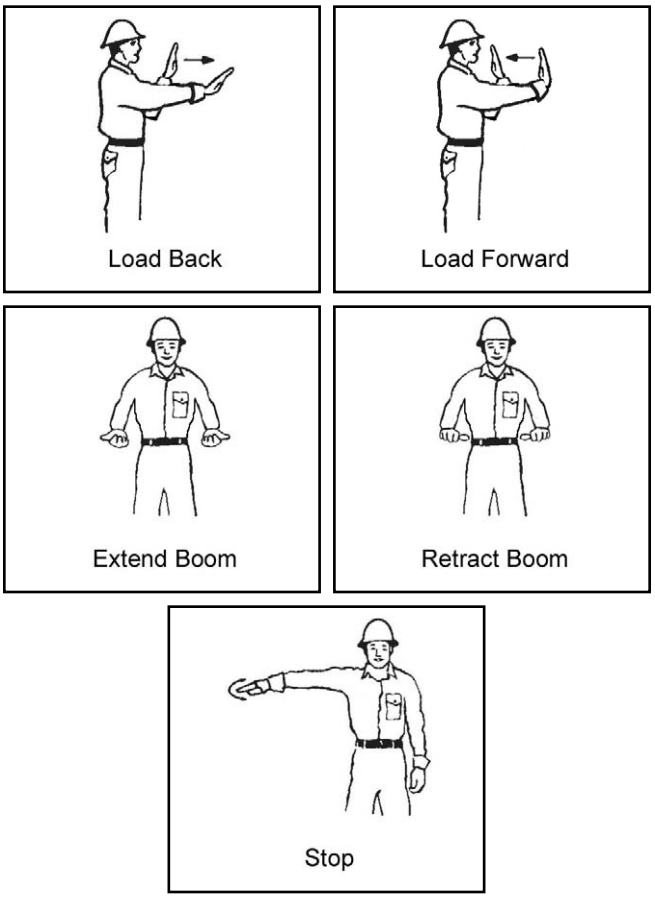

When ramps must be used in transporting loads with the machine, the following are the minimum widths for safe travel:

Compacted dirt, gravel, etc.	12 ft. (3.6 m)
Woodboard, concrete, etc.	10 ft. (3.0 m)

Permanent aisles, roadways and passageways, floors and ramps must be clearly defined or marked. Permanent or temporary protrusion of loads, equipment, material and construction facilities into the usual operating area must be guarded, clearly and distinctively marked, or clearly visible.

Maintain a safe distance from the edge of ramps, platforms and other similar working surfaces.

Controlled lighting of adequate intensity should be provided in operating areas. Where operating conditions dictate, the operator/user is responsible for having the machine equipped with lights.

Provisions must be made to prevent trucks, semi-trailers and railroad cars from being moved during loading and unloading. Wheel stops, parking brakes, or other positive holding means must be used to prevent movement during loading and unloading.

DO NOT move railroad cars and trailers with the Telescopic Handler.

DO NOT use the boom and attachment for leverage to push the machine out of mud.

IMPORTANT: *DO NOT lower boom at high engine speed when attachment tool is at maximum rearward tilt. Damage to slave cylinders may result.*

GENERAL LOAD HANDLING

NEVER operate controls except from the operator's seat. NEVER jerk or use fast movements. Avoid sudden stops, starts and changes in direction.

Operation of the hydraulic system depends on engine speed and the distance the controls are moved. When operating these controls it is important to develop a technique called "feathering." Feathering the control means starting the desired motion by moving the control a small distance away from neutral. Then after movement has started, the control can be eased to full travel. Use the same feathering technique to slow and stop the motion.

⚠ WARNING

Excessive speed can be hazardous. ALWAYS exercise caution and good judgement while operating the machine.

ALWAYS maintain a safe distance from electric power lines and avoid contact with any electrically charged conductor and gas line. It is not necessary to make direct contact with a power line for power to ground through the structure of the machine. Keep the boom and load at least 10 ft. (3 m) from all power lines. Accidental contact with a power line or rupture of a gas line can result in electrocution or an explosion. Contact the "Call Before You Dig" referral system number at 8-1-1 in the U.S., or 888-258-0808 in the U.S. and Canada, to locate any underground utility lines BEFORE starting to dig.

Keep all body parts inside the operator's station while operating the machine. BE SURE of clearance for the attachment tool when turning, working around buildings, etc.

ProCarManuals.com

Turning corners too fast can tip the machine, or cause a load to slide off the attachment. Sudden slowing or stopping of the machine may cause the load to drop off the attachment tool.

Be certain you can control both speed and direction before moving. Always place the machine in neutral and set the parking brake before raising or extending the boom. NEVER drive the machine up to someone standing in front of the load.

NEVER leave the operator's station without first lowering the attachment tool to the ground. Then set the parking brake, place controls in neutral, shut off engine and remove the key. AVOID parking the machine on a slope, but if necessary, park across the slope and block the tires.

Load Capacity and Reach

This machine has flip-charts in the operator's station that provide, at a glance, the load capacity limits at various positions of attachment tool extension and elevation. A set of the load zone charts is reproduced at the end of this manual for reference.

A typical load zone chart is shown on this page. The scale on the left indicates height in feet above the ground level. The scale on the bottom shows the distance in feet out from the front of the machine. The arc lines noted by the numbers "1" through "5" correspond with the boom extension marks on the operator side of the intermediate boom section.

The following example illustrates proper use of the load zone charts for the Telescopic Handler:

Example: The operator, using a standard carriage attachment tool without outriggers, wants to raise a 4000 lb. load 25 feet high, and can only get to within 15 feet of the load placement point. Can this be done within the capacity of the machine?

Analysis: See "Typical Load Zone Chart" above.

Projecting up from the 15-foot reach mark on the horizontal axis to intersect a line through the 25-foot height mark on the vertical axis shows that a load up to 4000 lb. can be placed in that zone.

During placement, the operator should observe when the boom extension mark number "4" on the boom is visible and stop further extension. The operator knows the maximum safe extension distance with the 4000 lb. load has been reached.

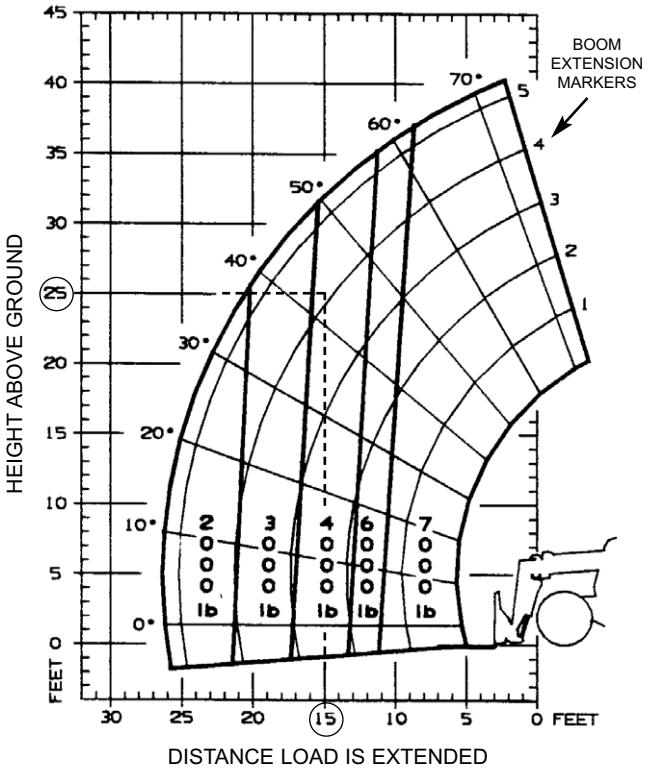

Typical Load Zone Chart

WARNING

NEVER exceed the rated operating capacity of the Telescopic Handler as shown on the load zone charts.

HANDLING NON-SUSPENDED LOADS

Picking Up the Load

Inspect the load. If it appears unstable, DO NOT attempt to move it. DO NOT attempt lifting double-tiered loads, or straddling side-by-side pallets with one on each fork. NEVER add extra unauthorized counterweights to this machine. Consider the additional weight of any attachment tool as part of the picking load capacity of the machine.

ProCarManuals.com

https://truckmanualshub.com/

WARNING

Operating conditions can reduce the machine's safe operating capacity. Exceeding the capacity when raising or extending the boom will cause the machine to tip forward.

Approach the load slowly and squarely with the machine straight and level. Adjust the space between forks, if necessary. Engage the load equally on both forks until the load touches the carriage backrest. Tilt the forks back to position the load for travel.

Carrying the Load

If the load obstructs your view, get someone to direct you. Maintain ground speeds consistent with ground conditions and that permit stopping in a safe manner.

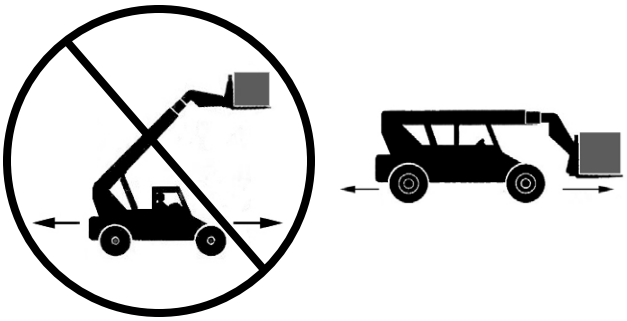

WARNING

NEVER travel with the boom above the carry position (attachment tool should be at minimum ground clearance). Boom should be fully retracted.

Use lower gear when traveling down an incline. NEVER coast with the transmission in neutral. Travel up and down grades slowly.

DO NOT operate the machine on a slope or grade that exceeds 22% or 12º.

Load Elevation and Placement

For ground level load placement, be sure the area under the load and around the machine is clear of equipment and personnel. Lower the load to the ground, tilt the forks to the horizontal position, and then carefully back away to disengage the forks from the load.

For elevated or overhead placement, bring the machine as close as possible to the landing point, and then:

1. Level the machine BEFORE raising the load. Use extreme caution for high placement. Be sure personnel are clear of the area where the load or the machine could fall or tip.
2. Set the parking brake, hold the service brake pedal fully applied and slowly raise the load, maintaining a slight rearward tilt to cradle the load.
3. As the load approaches the desired height, feather the boom control at minimum speed until the load is slightly higher than the landing point.
4. Continuing the feathering technique, lower the load into place.
5. Free the forks from the load by alternately retracting and raising the boom. If this process is not possible, very slowly and carefully reverse the telescopic handler to free the forks from the load.
6. Lower the forks to travel height.

HANDLING SUSPENDED LOADS

Determine the weight and load center of the load to be handled. Refer to the telehandler load chart to determine if the load can safely be handled.

WARNING

NEVER exceed the rated operating capacity of the telehandler as shown on the load zone charts.

WARNING

Operating conditions can reduce the telehandler's safe operating capacity. Exceeding the capacity when raising or extending the boom will cause the telehandler to tip forward.

NOTE: *Refer to the standard carriage load chart when using the boom mounted hook.*

Picking Up Suspended Load

1. Rigging should be in good condition and rated for the load being lifted.

ProCarManuals.com

2. Rigging should comply with OSHA regulation §1910.184, “Slings,” or §1926.251, “Rigging equipment for material handling.”
3. Be sure the rigging equipment is clear of any part of the machine or machine attachment before lifting the load.
4. Avoid lifting double-tiered or any unstable loads.
5. Only lift loads vertically and clear from any adjacent obstacles. Never drag the load horizontally.
6. Use multiple lift points and taglines to restrain the load from swinging or rotating.

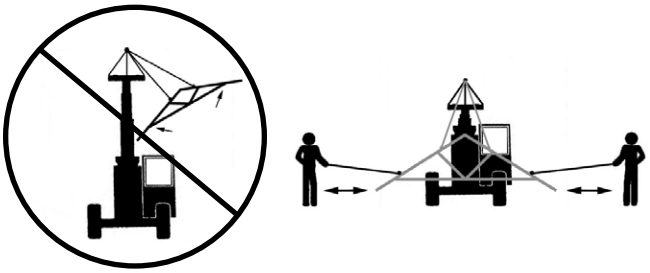

Carrying Suspended Load

1. Rigging between the load and attachment should be as short as possible to reduce boom height.
2. Do not raise the load more than 12 inches (305 mm) above the ground or raise the boom more than 45 degrees.
3. All telehandler movements should be performed slowly and cautiously to prevent load swing. Avoid abrupt movement. Do not exceed walking speed.
4. Use a signal person anytime the load restricts the operators view or assistance is required. The signal person should remain in contact (verbally or visually) with the operator at all times until the load is placed.

Ground Level Suspended Load Placement

1. Be sure the area under the load and around the telehandler is clear of equipment and personnel.
2. Lower the load to the ground till load is stationary and the rigging is loose from the load. Have signal person disconnect the rigging from the load.
3. Raise boom enough to clear the rigging from the load before backing the telehandler away from the load.

Elevated Suspended Load Placement

1. Bring the telehandler as close as possible to the landing point.
2. Level the telehandler BEFORE raising the load. Use extreme caution for high placement. Be sure personnel are clear of the load landing area.
3. Set the parking brake, shift the transmission into neutral, hold the service brake pedal fully applied and slowly raise the load.
4. As the load approaches the landing point, feather the boom control at minimum speed until the load is just above the landing point.
5. With the assistance of a signal person, continue the feathering technique to lower the load into place.

WARNING

NEVER place the signal person between the load and the telehandler or other stationary objects.

6. Once the load is stationary on the landing point and the rigging is loose from the load, have the signal person disconnect the rigging from the load.
7. Raise boom enough to clear the rigging from the load. Slowly and carefully, reverse the telehandler till the rigging is clear of the load.
8. Lower the boom to travel height.

Installation of a Personnel Work Platform (PWP)

WARNING

The machine must not be used to lift or carry personnel, or be fitted with any form of personnel work platform unless fitted with the optional PWP System.

If fitted with the PWP System, the Mandatory Work Platform Safety Rules (p. 15) must be adhered to at all times while lifting personnel.

1. Center the forks on the carriage, spaced apart to match the distance required to engage the PWP.

ProCarManuals.com

https://truckmanualshub.com/

2. After the forks are fully engaged in the PWP, secure the PWP to the forks. This can be accomplished by means of a retaining pin behind the heel of the forks, as shown.

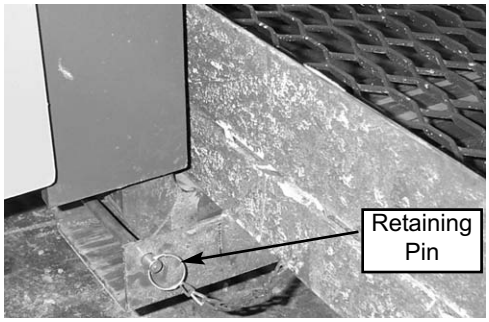

3. Secure the forks from pivoting upward in case the PWP is lowered onto an obstruction. This can be accomplished by using the chain supplied with the PWP, to secure the lower portion of the PWP to the bottom of the carriage, as shown below.

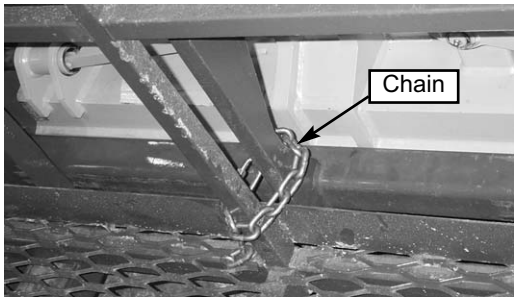

WARNING

The PWP must meet ANSI/ITSDF B56.6-2005, Section 8.24. (See page 16 in the *Safety* chapter for PWP design requirements.) If the PWP being used does not offer means to secure the PWP to the forks and to secure the forks from pivoting, as shown in steps 2 and 3, then an alternate method must be used.

4. For machines with a 42-foot or 44-foot boom: Connect the coiled wire from the remote shutdown switch to the connector on the end of the boom. Secure the remote shutdown switch to the PWP using the strap attached to the switch, as shown.

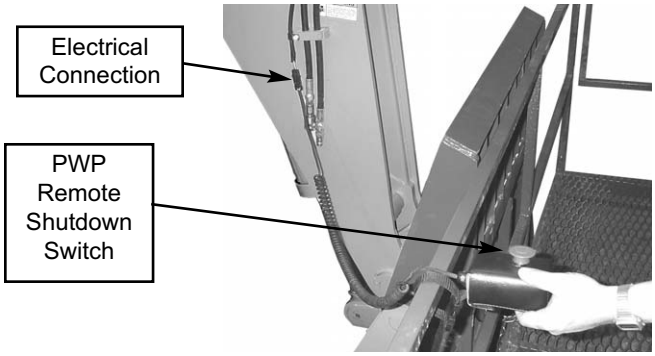

Remote Shutdown Switch
with Coiled Wire Connector

5. For machines with a 55-foot boom: The remote shutdown switch is wireless-operated. Secure the remote shutdown switch to the PWP using the strap attached to the switch, as shown.

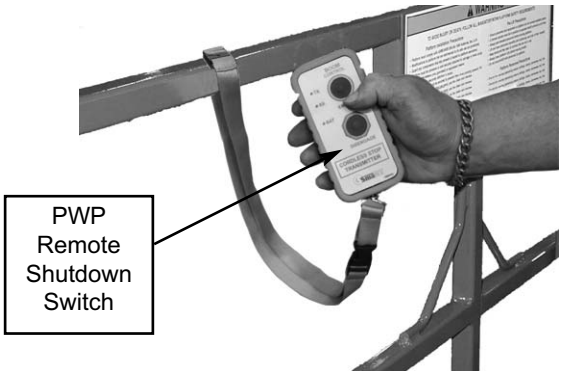

Wireless Remote Shutdown Switch
on 55' Model

6. Secure the lanyard from the body harness to the PWP or the boom. Each person in the PWP should have a body harness with a lanyard attached to the PWP.

Elevating Personnel

This Telescopic Handler is primarily intended for use as a material handler. It should only be used to elevate personnel if it is equipped with the (optional) PWP System when there is no other practical option. If this machine is to be used to elevate personnel, then use only an approved work platform, lift personnel only with the PWP System activated, and follow the "Mandatory Work Platform Safety Rules" (p. 15, Safety chapter).

If this Telescopic Handler is equipped with a PWP System and is to be used for elevating personnel, the system must be activated, by the "PWP System" mode switch, which is located in the instrument and switch panel. To activate the system, apply and hold the ser-

ProCarManuals.com

vice brakes on for three or more seconds, and press the top of the PWP rocker switch. The system is activated when the lamp in the PWP rocker switch is on continously.

NOTE: *If the light is flashing, apply the service brakes until the light stops flashing.*

WARNING

ALWAYS check the PWP System for proper operation prior to use. (See page 61 for PWP System checking procedure.)

When the PWP System is active:

- transmission is de-clutched into Neutral
- parking brake is applied
- rear axle stabilizer cylinder is locked
- auxiliary hydraulic and carriage tilt and swing functions are disabled
- machine inclination sensor is activated, with the result that the Telescopic Handler must be level laterally (side-to-side) and longitudinally (front-to-back) to within the factory preset limits before the boom control joystick will function
- For 42-foot and 44-foot models, the remote shutdown switch is activated, with the result that the switch must be connected and in the "on" position for the boom control joystick to function. Depressing the switch will disengage the boom control joystick, and stop all platform movement. The remote shutdown switch box is supplied with a coiled electrical cable that must be connected to the outlet on the front of the innermost boom section near the carriage. The switch must be accessible by the platform personnel any time the platform is to be moved.
- For 55-foot model, remote shutdown switch is activated, meaning that the switch must be "on" for the boom control joystick to function. Pressing the red button will disengage the boom control joystick and stop all platform movement. The remote shutdown switch box is a wireless remote control, so there is no direct connection to the Telescopic Handler. The switch must be accessible to the platform personnel at all times when the platform is to be moved.

To de-activate the system, apply and hold the service brakes on for three or more seconds, and press the bottom of the PWP System rocker switch. The system is de-activated when the lamp in the PWP System rocker switch is off.

NOTE: *If the lamp in the PWP system rocker switch is flashing, apply the service brakes until the lamp goes off.*

WARNING

In an emergency, if the platform worker has activated the remote shut-off switch and then is not able to re-activate the switch, such as if the worker fainted, then the Telescopic Handler operator is permitted to turn off the PWP System to regain control of the boom functions, in order to lower the work platform and come to the aid of the worker. But, understand this is <u>only</u> permitted in case of an emergency. Otherwise, the PWP System <u>must</u> be used <u>at all times</u> when there are workers on the platform. <u>This is the only exception!</u>

Stabilizer System

This is an additional safety function while elevating loads for placement. At a pre-determined angle, the stabilizer cylinder on the rear axle will lock up. When this happens, the parking brake is activated. The machine will not be able to move until the boom is lowered below the pre-determined angle.

WARNING

The machine becomes less stable as the load is raised higher.

NEVER use frame leveling to position an elevated load. Always lower the load to the ground and reposition the machine.

If a hydraulic boom circuit hose should break with the boom up, shut down the machine. DO NOT attempt to bring down the boom or make repairs. Call your Manitou Americas dealer immediately.

As lift height increases, depth perception decreases. High elevation placement may require a signal person to guide the operator.

DO NOT ram the lift cylinders to the end of the stroke. The resulting jolt could spill the load.

ProCarManuals.com

https://truckmanualshub.com/

A jib or truss boom should ONLY be used to lift and place loads when the machine is stationary and the frame is level. Transporting suspended loads must ALWAYS be done slowly and cautiously, with the boom and load as low as possible. Use taglines to restrict loads from swinging, to avoid overturn.

ROAD TRAVEL

For short distance highway travel, attach a Slow-Moving Vehicle (SMV) emblem (purchased locally) to the rear of the Telescopic Handler. For highway operation, obtain and install an amber flashing beacon.

NOTE: *ALWAYS follow ALL state and local regulations regarding the operation of equipment on or across public highways. Whenever there is an appreciable distance between jobsites, or if driving on public highway is prohibited, transport the machine using a vehicle of appropriate size and capacity.*

TRANSPORTING BETWEEN JOBSITES

ALWAYS abide by the following recommended procedures and guidelines when using ramps to load the machine onto (and unload it from) a truck or trailer. Failure to heed can result in damage to equipment and serious personal injury or death!

Tie-down eyes are provided for inserting chains through to secure the machine during transport.

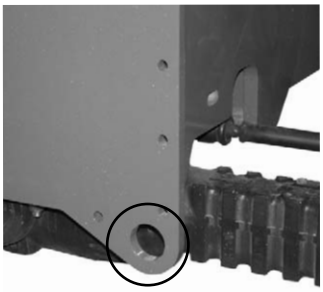

Front Tie-Down

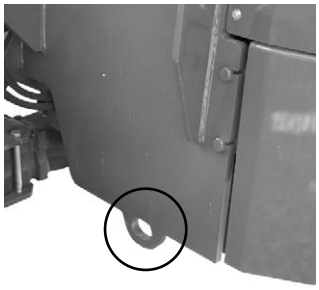

Rear Tie-Down

Loading Machine Using Ramps

NOTE: *A matched pair of ramps is required.*

1. The ramps MUST be of sufficient strength to support the machine. The use of strong steel ramps is recommended, as well as center supporting blocks.

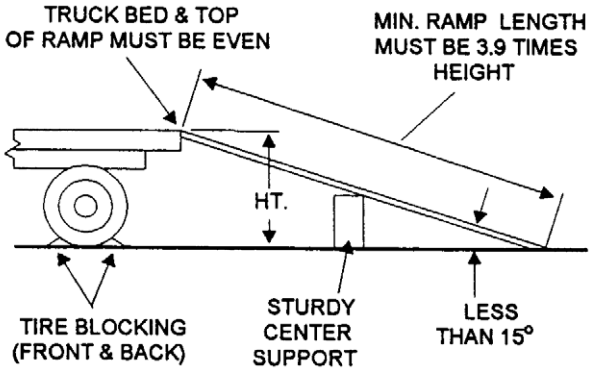

Ramp Placement

2. The ramps MUST be firmly attached to the truck or trailer bed with NO step between the bed and the ramps.
3. The incline of the ramps MUST be less than 15 degrees. For a four-foot high truck bed, ramp length must be at least 16 feet (4.9 m) long.
4. Ramp width MUST be at least 1-1/2 times the tire width.
5. Block the front and rear of the tires on the truck or trailer. Engage the parking brake.
6. Position the machine with the boom facing toward the front of the truck or trailer so that it is straight in line with the ramps.
7. Slowly (at the lowest engine speed possible) and carefully drive the machine up the ramps.
8. Secure the machine to the bed of the truck or trailer with tie-down chains/cables.

WARNING

NEVER adjust travel direction (even slightly) while on the ramps. Instead, back off the ramps, and then realign the machine with the ramps.

WARNING

NEVER transport the machine with the boom raised or extended. BE SURE to secure the machine (including boom) to the truck or trailer bed using chain and binders or steel cables, to prevent any movement while transporting.

ProCarManuals.com

https://truckmanualshub.com/

Unloading Machine Using Ramps

NOTE: *A matched pair of ramps is required.*

Repeat steps 1 through 5 and proceed as follows to unload the machine:

6. Remove the tie-down chains/cables.
7. If necessary, adjust the machine so that the wheels are in line and centered with the ramps.
8. Slowly (at the lowest engine speed possible) and carefully drive the machine down the ramps.

THEFT DETERRENTS

Manitou Americas has recorded all component part numbers and serial numbers. Users should take as many of the following actions as possible to discourage theft, to aid in the recovery of the machine in the event it is stolen, and to reduce vandalism:

1. Remove keys from unattended machines.
2. Attach, secure, and lock all anti-vandalism and anti-theft devices on the machine.
3. Lock doors of cabs when not in use.
4. Inspect the gates and fences of the equipment storage yard. If possible, keep machines in well-lighted areas. Ask the local law enforcement agency to make frequent checks around the storage and work sites, especially at night, during weekends, and on holidays.
5. Report any theft to your dealer and insurance company. Provide the model and all serial numbers. Request your dealer to forward this information to Manitou Americas.

ProCarManuals.com

https://truckmanualshub.com/

Chapter 7

LUBRICATION

GENERAL INFORMATION

WARNING

NEVER lubricate or service this unit when any part of the machine is in motion. ALWAYS exercise the MANDATORY SAFETY SHUT-DOWN PROCEDURE (p, 9, *SAFETY* chapter) before lubricating or servicing this equipment.

NOTE: *The Maintenance chapter (Chapter 10) in this manual has provisions for recording the dates and hourmeter readings after lubrication or other service has been performed; use those spaces to keep a log for maintaining a current service interval record. Proper routine lubrication is an important factor in preventing excessive part wear and early failure.*

LUBRICANTS

The chart on this page lists the locations, temperature ranges and recommended types of lubricants to be used when servicing this machine. Also refer to the separate engine manual for additional information regarding recommended engine lubricants, quantities required and grades.

NOTE: *Refer to "Operator Services" in the Service and Storage chapter of this manual for detailed information regarding periodic checking and replenishing of lubricants.*

Brake System

Uses hydraulic system oil.

Transmission Oil

Use Multi-ATF Dexron® III or equivalent

Capacity: All Models 13.75 qts. (12.9 L)

Hydraulic System Reservoir

Use Mobil DTE 15M, or an equivalent that contains anti-rust, anti-foam and anti-oxidation additives and conforms to ISO VG46/VG32.

Reservoir Capacity: 30 gallons (113.5 L)

Engine Crankcase Oil

Ambient Temperature		Grade*
-22°F - 104°F	(-30°C - 40°C)	SAE 5W-30
-40°F - 122°F	(-40°C - 50°C)	SAE 0W-40
-13°F - 104°F	(-25°C - 40°C)	SAE 10W-30
-13°F - 122°F	(-25°C - 50°C)	SAE 10W-40
5°F - 122°F	(-15°C - 50°C)	SAE 15W-40

***API Service Classification: CJ-4**
***API Service Classification for first 100 hours on new or rebuilt John Deere engines: CJ-4**

Capacity: 15.5 quarts (14.7 L)

Diesel Fuel

IMPORTANT: Use ONLY ultra low sulfur diesel (ULSD) fuel with a maximum of 15 PPM sulfur content specified to EN590 or ASTM D975.

Fuel Tank Capacity: 47 gls. (178 L)

Engine Coolant

IMPORTANT: Use a ethylene glycol based Extended Life Coolant and quality water mixture suitable for heavy duty diesel engines. Coolant should be a phosphate-free, silicate-free, nitrite-free and borate-free formula with corrosion inhibitors to provide wet sleeve liner cavitation and corrosion protection of all cooling system metals.

Factory filled with (recommended): FINAL CHARGE 50/50 PRE-DILUTED Global Extended Life Coolant/Antifreeze.

Axle Gear Oil

MobilFluid® 424 (recommended)
CHS Cenex Qwiklift HTB or equivalent

Capacity:
MT10044XT, MT10055XT and MT12042XT
Front Differential: 14.8 qts. (14.0 L)
Front Planetary: 1.85 qts. each (1.75 L)
Rear Differential: 14.25 qts. (13.5 L)
Rear Planetary: 1.90 qts. each (1.80 L)

Capacity:
MT6642XT and MT8044XT
Front and Rear Differential: 15.8 qts. (15.0 L)
Front and Rear Planetary: 2.6 qts. each (2.5 L)

All Grease Fittings

Use No. 2 lithium-based grease

ProCarManuals.com

https://truckmanualshub.com/

FILTER REFERENCE CHART	
TYPE	**PART NUMBER**
Engine Oil	808000
Engine Fuel	Primary 50220174 Secondary 50220173
Air Filter	Primary 809825 Secondary 809826
Crankcase Vent	50220168
Hydraulic Return	808005
Hydraulic Strainer	808006
Transmission Oil	808004
Cab Ventilation	51200000

ProCarManuals.com

GREASING

Refer to the illustrations and listings for fitting locations. Wipe dirt from the fittings before greasing them to prevent contamination. Replace any missing or damaged fittings. To minimize dirt build-up, avoid excessive greasing.

BASIC MACHINE GREASE FITTING LOCATIONS

Every 50 Hours (or weekly)

Refer to the illustrations on the facing page for locations.

--- BOOM AREA ---

1. Boom-to-frame upright pivot pins (2)
2. Rod end slave cylinder pivot pins (2)
3. Rod end lift cylinder pins (2)
4. Extend cylinder pin
5. Chain sheaves pins, (2)
6. Dynattach-to-boom nose pivot pin
7. Tilt cylinder pivot pins (2)
8. Boom slide pads - as required, front and rear

--- CHASSIS AREA ---

9. Brake pedal linkage
10. Wheel spindle pins (4 per axle)
11. Stabilizer cylinder pivot pins (3)
12. Axle pivot pins (2 per axle)
13. Drive shafts (3 per drive shaft)
14. Leveling cylinder pivot pins (2)
15. Base end lift cylinder pivot pins (2)
16. Base end slave cylinder pivot pins (2)

--- OUTRIGGERS ---

Refer to the illustration below.

17. Outrigger pad (2 per pad)
18. Outrigger cylinder (2 per cylinder)
19. Outrigger leg pivot (1 per leg)

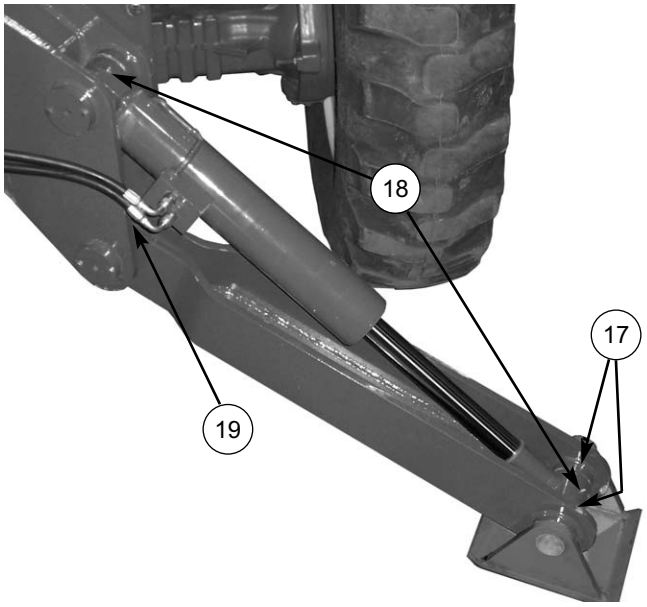

https://truckmanualshub.com/

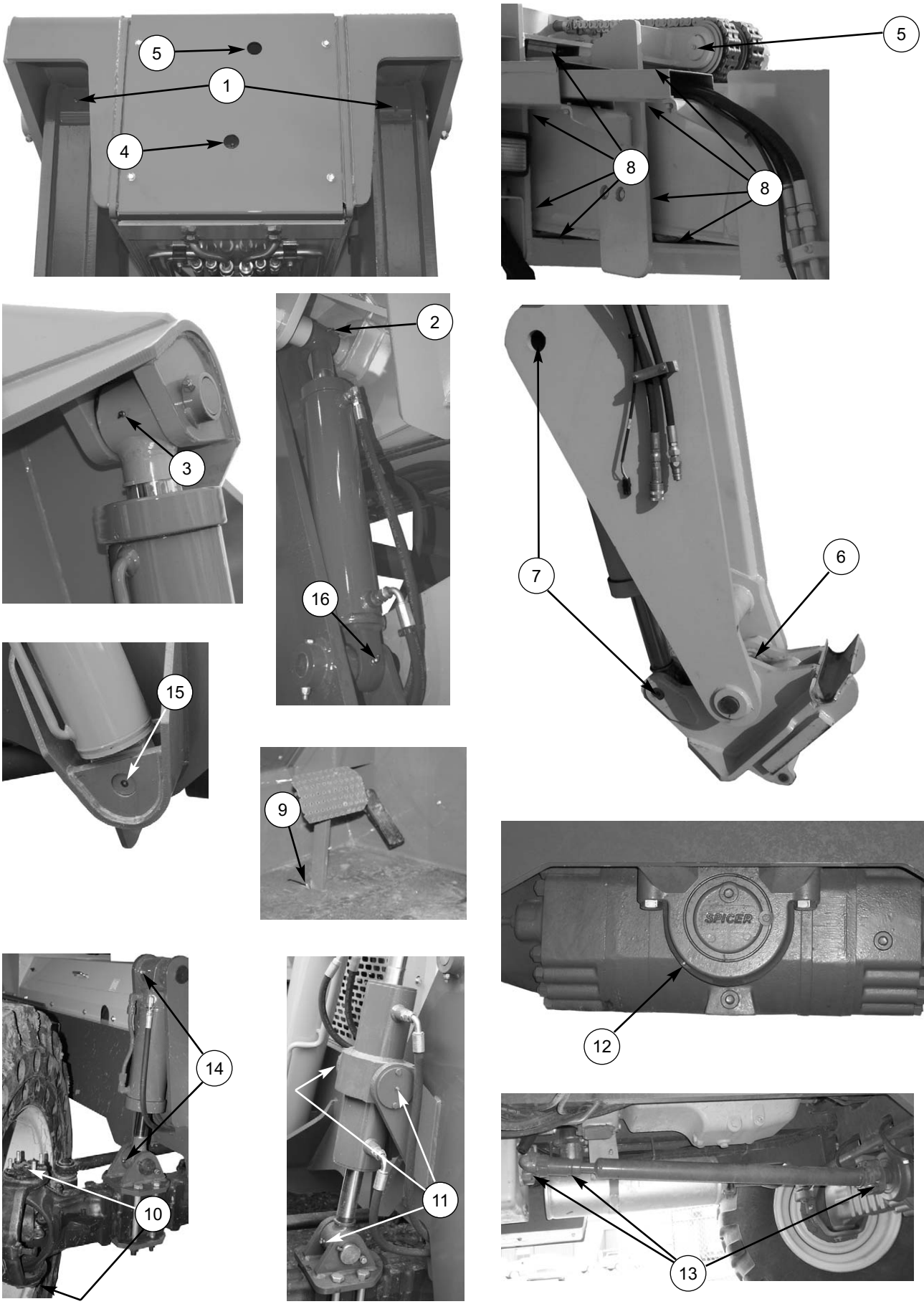

Grease Fittings Locations

ProCarManuals.com

https://truckmanualshub.com/

Chapter 8

SERVICE AND STORAGE

GENERAL INFORMATION

WARNING

BEFORE performimg any service on the Telescopic Handler, unless expressly instructed to the contrary, exercise the MANDATORY SAFETY SHUTDOWN PROCEDURE (p. 9, *Safety* chapter). After service has been performed, BE SURE to restore all guards, shields and covers to their original positions BEFORE resuming machine operation.

NOTE: *All service routines, with the exception of those described under the "Dealer Services" topic, are owner-operator responsibilities. All operator services described under the subtopics are also referred to on a decal located on the inside right side panel of the operator's station. Refer to the Lubrication chapter of this manual for lubrication information.*

NOTE: *This Service and Storage chapter describes procedures to follow for making routine maintenance checks, adjustments and replacements. Most of the procedures are also referred to in the Maintenance chapter of this manual. For engine related adjustments and servicing procedures, refer to the engine manual provided.*

PRECAUTIONS

DO NOT perform any maintenance or repair without the owner's prior authorization. Allow only trained personnel to service the machine.

Warranty repairs can only be done by an authorized Manitou Americas dealer. Dealers know what portions of the machine are covered under the terms of the Manitou Americas Warranty and what portions are covered by other vendor warranties.

When a problem occurs, do not overlook simple causes such as an empty fuel tank. Check for leaks and broken connections. Make note of any specific symptoms, noises, etc. and contact your local Manitou Americas dealer.

IMPORTANT: *Always dispose of waste lubricating oils, anti-freeze and hydraulic fluids according to local regulations or take them to a recycling center for disposal. DO NOT pour them onto the ground or into a drain.*

DEALER SERVICES

The following areas of internal components service replacement and operating adjustments should only be by (or under the direction of) an authorized Manitou Americas Telescopic Handler dealer.

IMPORTANT: *DO NOT service or repair major components, unless authorized to do so by your Manitou Americas dealer. Any unauthorized repair will void the warranty.*

POWER TRAIN COMPONENTS

The engine and transmission are coupled directly to each other. All service routines related to the internal components are precise and critical to proper power train operation. The axle differential and planetary ends are also sophisticated assemblies that require special know-how and tools for servicing.

IMPORTANT: *If any powertrain components are suspected of faulty operation, contact your Manitou Americas dealer for assistance.*

HYDRAULIC SYSTEM COMPONENTS

Valves, pumps, motors and cylinders are also sophisticated assemblies which require special know-how and tools for servicing. All cylinders are appropriately designed with particular strokes, diameters, checks and hose connection provisions unique to the machine application requirements. A schematic (Maintenance chapter) can be used as a guide for service reference, as required.

ProCarManuals.com

https://truckmanualshub.com/

WARNING

Tilt, lift, extend and leveling cylinders have counterbalance valves. These valves keep hydraulic fluid from entering and exiting the cylinders while they are not being activated, and they are under extremely high pressure. Before removing one of these valves, you ARE REQUIRED to call your Manitou Americas dealer or Manitou Americas Service Department. Failure to do so may result in serious injury or death.

Internal service on any of these components should only be performed by (or under the direction of) an authorized Manitou Americas Telescopic Handler dealer.

ELECTRICAL COMPONENTS

An electrical system schematic is provided, which includes instrumentation, electrical components and switch connections. It is located at the back of this manual and can be used as a guide for service reference, as required.

OPERATOR SERVICES

Some of the operator-related services will require access to components located inside the superstructure, under shields, hoods and covers. The chart on this page notes the components accessed in each particular area.

ACCESS TO COMPONENTS CHART

Component	Operator's Station	Frame	Front Cover	Mid-Rear Hood
Axle (underside)		●		
Engine				●
Transmission (center area)			●	
Drive Shafts (underside)		●		
Main Control Valve (rear)		●		
Exhaust Filter (front of engine)				●
Air Cleaner (right side)		●		
Battery		●		
Radiator				●
Brake Valve (underside)	●			
Travel Controls (dash area)	●			
Boom Controls (right side)	●			
Hydraulic Test Ports			●	
Hourmeter (dash)	●			
Switches/Indicators (dash)	●			
Hydraulic Pump			●	
Hydraulic Filter (Reservoir)			●	
Misc. Hydraulic Valves			●	
Heater (lower front)	●			

ProCarManuals.com

https://truckmanualshub.com/

WARNING

DO NOT smoke or allow any open flames in the area while checking or servicing hydraulic, battery or fuel systems; all contain highly flammable liquids or explosive gases, which can cause an explosion or fire if ignited.

Wear a face shield when disassembling spring-loaded components or working with battery acid. Wear a helmet or goggles with special lenses when welding or cutting with a torch.

When working beneath a raised machine, always use blocks, jack-stands or other rigid and stable supports. Wear appropriate protective clothing, gloves, and shoes. Keep feet, clothing, hands and hair away from moving parts.

Always wear safety glasses or goggles for eye protection from electric arcs from shorts, fluids under pressure, and flying debris or loose material when the engine is running or tools are used for grinding or pounding.

NEVER weld on bucket, forks, boom, support frame or ROPS/FOPS without the consent of the manufacturer. These components may be made with metals that require special welding techniques, or with designs that do not allow weld repairs. NEVER cut or weld on fuel lines or tanks.

If repair welding is ever required, BE SURE to attach the ground (-) cable from the welder as close as possible to the area to be repaired. Also, remove battery positive (+) terminal connection before welding.

Choose a clean, level work area. Make sure you have sufficient room, clearances, and adequate ventilation. Clean the walking and working surfaces. Remove oil, grease and water to eliminate slippery areas. Utilize sand or oil absorbing compound, as necessary, while servicing the Telescopic Handler.

Before starting inspection and repair, move the machine onto a level surface, shut down engine, and release all hydraulic pressure. Always block the boom securely, or lower it to full ground contact. Place all controls in neutral.

Block the wheels. Remove the ignition key. Remove only guards or covers necessary to provide needed access. Wipe away excess grease and oil.

Excessively worn or damaged parts can fail and cause injury or death. Replace any cracked or damaged parts. Use only genuine Manitou Americas parts for service.

Use care not to damage machined and polished surfaces. Clean or replace all damaged or painted-over plates and decals that cannot be read.

WARNING

NEVER leave guards off or access doors open when the machine is unattended. Keep bystanders away if access doors are open.

After servicing, check the work performed, that no parts are left over, etc. Install all guards and covers.

Service Every 10 Hours or Daily

WARNING

Static electricity can produce dangerous sparks at the fuel-filling nozzle. Do not wear polyester, or polyester-blend clothing while fueling. Before fueling, touch the metal surface of the machine away from the fuel fill to dissipate any built-up static electricity. Do not re-enter the machine but stay near the fuel filling point during refueling to minimize the build-up of static electricity. Do not use cell phones while fueling. Make sure the static line is connected from the machine to the fuel truck before fueling begins.

Ultra-Low Sulfur Diesel (ULSD) poses a greater static ignition hazard than earlier diesel formulations. Avoid death or serious injury from fire or explosion; consult with your fuel or fuel system supplier to ensure the entire fuel delivery system is in compliance with fueling standards for proper grounding and bonding practices.

ProCarManuals.com

https://truckmanualshub.com/

CHECKING FUEL TANK LEVEL

The fuel level is shown by the fuel level gauge on the instrument panel. After operation each day, the fuel tank should be filled to prevent water from condensing in the tank. To fill, remove the filler cap and add fuel. See the *Lubrication* chapter for the diesel fuel requirements.

CHECKING FUEL FILTERS

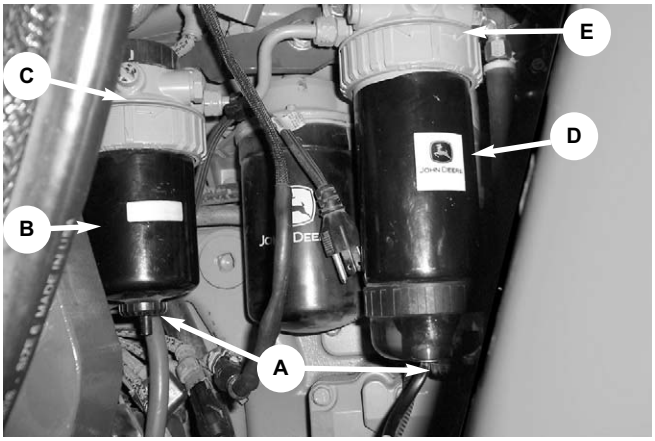

NOTE: *The engine is equipped with a water-in-fuel sensor at the primary fuel filter (D). An error code will display in the multi-function display.*

Check the fuel filters (B) and (D) for water or debris. If filter is fitted with a see-through bowl, drain as needed based on a daily visual inspection.

IMPORTANT: *Drain water into a suitable container and dispose of properly.*

a. Disconnect water sensor wire from drain plug (A) on fuel filter (D).

b. Loosen half turn to one turn drain plugs (A) at bottom of fuel filters or bowls.

c. When fuel starts to drain out, tighten drain plugs securely.

e. Reconnect water sensor wire.

After draining water from the fuel filters, the filters must be primed by bleeding all air from the fuel system. Refer to the fuel bleeding procedure on page 61.

A drain plug is also provided in the bottom of the fuel tank for removing condensation and other foreign materials. Open the plug and allow water and fuel to drain into a container until only clear fuel is flowing from the tank.

CHECKING ENGINE OIL LEVEL

With the machine on level ground, and the engine stopped for ten minutes or more, slide open the right side engine panel and remove the engine dipstick. Wipe it clean, re-insert it and remove to obtain a reading. If the oil level is below the crosshatch pattern on the dipstick, fill with the required amount of oil to bring the level to within the crosshatch pattern. Oil levels anywhere within the crosshatch are considered full. See the *Lubrication* chapter for the type of oil to use.

CHECKING COOLANT LEVEL

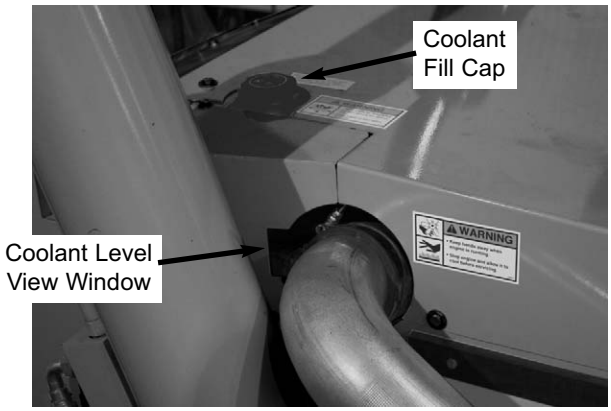

With the machine on level ground, and the engine cool, check the coolant level in the coolant surge tank located under the engine cover. Using a flashlight if needed, check the level through the viewing window as shown. The tank has a cold maximum and minimum level. The level should be between the maximum and minimum level. If the coolant level is below the minimum level, add a silicate-free, phosphate-free, borate-free and nitrite-free ethylene glycol based coolant mixed with deionized water suitable for heavy-duty diesel engines. See the engine manual for additional information. Coolant should be added by removing the cap on the top of the surge tank. Replace the cap securely.

NOTE: *If the engine is operated with a loose surge tank cap, the pressure bypass will not work and the engine will run hot.*

⚠ WARNING

DO NOT remove the surge tank cap when the engine is running hot or overheated. Coolant is extremely hot and under pressure and it can burn your skin. Allow sufficient time for the radiator to cool BEFORE relieving the pressure and removing the cap.

ProCarManuals.com

https://truckmanualshub.com/

CHECKING TRANSMISSION OIL LEVEL

The machine must be on level ground. With the engine and transmission at operating temperature, parking brake on, transmission in neutral and engine speed at low idle, remove the access cover to the transmission and hydraulic pump. Remove the dipstick and check the oil level. Add the required amount of oil to bring the level to the FULL mark. See the *Lubrication* chapter for the type of oil to use.

CHECKING HYDRAULIC OIL LEVEL

The machine must be on level ground with boom lowered and completely retracted. The fluid MUST be cool when checking the reservoir level, to reduce the possibility of overfilling the hydraulic system.

Visually check the level of the hydraulic oil through the sight gauge located on the right side of the front hood. If low, remove the access cover from the front hood to replenish the oil through the filler cap. See the *Lubrication* chapter for the type of oil to use.

IMPORTANT: *Be careful when removing the reservoir filler cap so that no dirt or other foreign matter enters the hydraulic system. DO NOT OVERFILL.*

CHECKING TIRE PRESSURES

To ensure proper operating stability and extend tire life, proper and equal tire pressure should be maintained in all four tires.

Check tire pressures "cold." Inflate as necessary per the chart below:

13.00 x 24 - 12 PR: 65 psi (450 kPa)
14.00 x 24 - 12 PR: 62 psi (430 kPa)
14.00 x 24 - 16 PR: 70 psi (480 kPa)

NOTE: *If the tires have been filled with water or calcium chloride for ballast, a calcium chloride tire pressure gauge MUST be used to check the tire pressure.*

⚠ WARNING

Inflating or servicing tires can be dangerous. Whenever possible, trained personnel should service and mount tires. To avoid possible death or serious injury, follow the safety precautions below:

1. **BE SURE the rim is clean and free of rust.**
2. **Lubricate both the tire beads and rim flanges with a soap solution. DO NOT use oil or grease.**
3. **DO NOT place fingers on the tire bead or rim during inflation. Use a clip-on tire chuck with a remote hose and gauge, which allows standing clear of the tire while inflating it.**
4. **NEVER inflate beyond 35 psi (240 kPa) to seat the beads. If the beads have NOT seated by the time the pressure reaches 35 psi (240 kPa), deflate the assembly, reposition the tire on the rim, relubricate both parts and re-inflate. Inflation pressure beyond 35 psi (240 kPa) with unseated beads may break the bead or rim with explosive force sufficient to cause death or serious injury.**
5. **After seating the beads, adjust the inflation pressure to the recommended operating pressure listed.**
6. **DO NOT weld, braze, or otherwise attempt to repair and use a damaged rim.**

To ensure proper load carrying capability, original equipment tires comply with the specifications published in the *Tire and Rim Association Yearbook*. Replacement tires MUST meet the same specifications. When replacing tires, be sure all tires are of the same type, quality and load rating, and the same size as the original equipment. When removing tires, follow industry safety practices. Deflate completely prior to removal. After assembly of the tire on the rim, use a safety cage or restraining device while inflating.

CHECKING WHEEL NUT TORQUE

On new machines, or any time a wheel has been removed, re-torque until 450 ft.-lbs. (610 Nm) is maintained.

CHECKING INSTRUMENTS OPERATION

Allow the engine to warm up for 1-2 minutes or 2-4 minutes in below freezing temperatures before beginning operation. Indicator lamps should be OFF and gauges should register normal readings. Tilt the frame from side to side with the frame leveling control and note the angle indicator movement.

ProCarManuals.com

https://truckmanualshub.com/

CHECKING GENERAL MACHINE OPERATION AND CONDITION

Are any decals missing or damaged? Are all guards, shields and covers in place? Do all controls function smoothly and properly? Are there any abnormal vibrations or noises? Are any hose or fitting connections leaking? Is the engine exhaust color normal?

CHECKING PERSONNEL WORK PLATFORM (PWP) SYSTEM (if used)

WARNING

If the PWP System fails to operate properly during any of the PWP System checks, DO NOT USE the machine until the cause has been corrected. Contact your dealer (or Manitou Americas) for service information and parts.

Machine Position

The following must be performed before begining the PWP System checking procedures:

1. Machine on level surface,
2. Boom fully lowered,
3. Frame level,
4. Transmission in “N” (Neutral),
5. Parking brake switch “OFF,”
6. PWP System switch “OFF,”
7. Remote switch plugged in and “ENGAGED.”

Activation Tests

To test the PWP System activation logic:

1. Start the engine and press the PWP rocker switch to “ON.”
   - The PWP System lamp in the switch should be flashing.
2. Apply the service brakes.
   - The PWP switch lamp should be illuminated continuously after three seconds, indicating that the PWP System has been activated.
   - The parking brake should engage, as indicated by the lamp in the parking brake switch illuminating.
   - The carriage tilt and auxiliary functions should now be disabled. The joystick control should continue to function normally for boom raise/lower and extend/retract.

Lockout Tests

To test the transmission and joystick control lockout logic:

1. Shift transmission into “F” (Forward) and increase the engine speed slightly.
   - The transmission should remain de-clutched, allowing the engine to increase speed easily.
   - Return the transmission selector to “N” (Neutral) after the check.
2. Have an assistant move the remote shutdown switch to “Dis-engaged.”
   - The joystick control should now be disabled, so that boom raise/lower and extend/retract will no longer function.
   - Have the assistant move the remote shutdown switch to “Engaged” after the check.
3. Tilt the frame to the right slightly more than two degrees.
   - The joystick control should now be disabled so that boom raise/lower and extend/retract no longer function.
   - Repeat the procedure with the frame tilted to the left.
   - Return the frame to a level position after the checks.

De-activation Tests

To test the PWP System de-activation logic:

1. Turn the key switch to “OFF” and wait for the engine to stop. Then turn the key switch back to “ON.”
   - The PWP switch lamp and the parking brake switch lamp should both be illuminated.
2. Turn the key switch to “OFF” and then turn the PWP rocker switch to “OFF.” Turn the key switch back to “ON.”
   - The PWP switch lamp should be flashing and the parking brake switch lamp should be on continuously.

ProCarManuals.com

3. Start the engine and apply the service brakes.
   - The PWP switch lamp and the parking brake switch lamp should go off after approximately three seconds of brake pedal application.

If PWP System fails to perform properly, troubleshoot using the chart on page 71. Contact your dealer for service information and parts.

Service Every 50 Hours or Weekly

LUBRICATE GREASE POINTS

Refer to the *Lubrication* chapter of this manual for grease fitting locations and other related details.

100 Hours (New Machine Only)

The following initial oil and filter changes should be made at 100 hours on a new machine. Thereafter these changes should be made at the regular maintenance schedule listed below. Refer to those schedules for the necessary procedures.

Engine Oil and Filter	(250 Hours)
Transmission Oil and Filter	(1000 Hours)
Hydraulic Return Filter Element	(1000 Hours)

Torque the boom chains after the first 100 hours of operation on new machines or anytime a chain has been replaced. Thereafter the boom chains should be inspected for wear and proper tension at the regular service interval of 250 hours. Refer to the boom chain torqueing procedure in the 250 hour service interval.

Service Every 250 Hours or Quarterly

NOTE: *Perform all other service requirements up to this point, as well as the following:*

CHECKING AXLE OIL LEVELS

Differential

NOTE: *The Telescopic Handler should be on a level surface for this procedure.*

Remove the oil check plug. See illustration below. Oil should flow from the hole. If low, remove the oil fill plug and add oil until it flows from the check hole. Replace the plug, wait 10 to 15 minutes and repeat the fill procedure. Continue this process until the differential is full. See the *Lubrication* chapter for the proper oil specification. Replace the check and fill plugs.

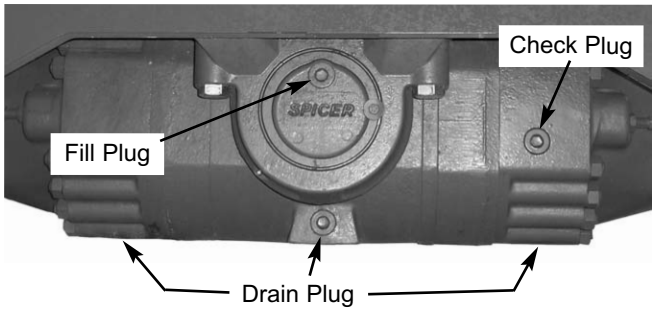

Planetary Hubs

NOTE: *The planetary hubs can be checked without jacking up the machine.*

The planetary hubs have one plug each used for filling and draining. See illustration below. For checking the level and filling, position the wheel until the oil level arrow is horizontal. Remove the plug. If oil does not run out, add oil until it overflows. Check the remaining hubs the same way. Refer to the oil specifications found in the *Lubrication* chapter of this manual.

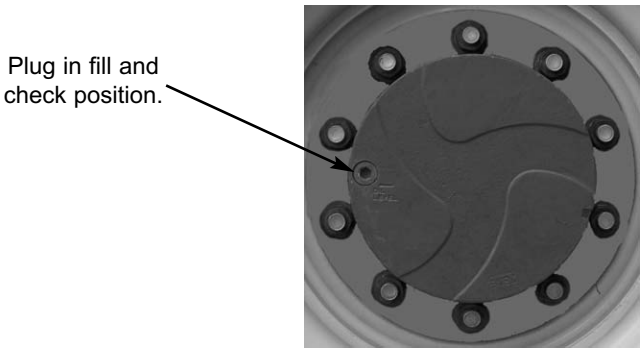

CHANGING FUEL FILTERS

The frequency of filter replacement will be determined by the cleanliness of available fuel, the care used in storing fuel supplies and the operating conditions in which the machine is used.

WARNING

NEVER service the fuel system while smoking, while near an open flame, or after the engine has been operated and is hot.

1. Thoroughly clean fuel filter assemblies and surrounding areas.
2. Disconnect water sensor wiring from the (E) filter.
3. Loosen drain plugs (C) and drain fuel into a suitable container.

ProCarManuals.com

4. Firmly grasp the retaining ring (A) and rotate it clockwise 1/4 turn (when viewed from the top). Remove the ring with filter element (B or E).

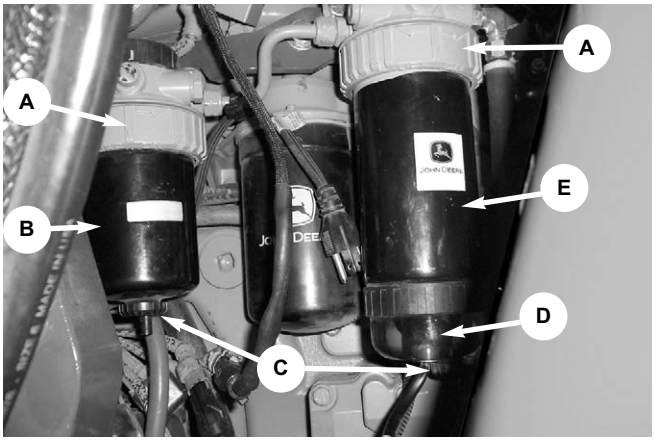

NOTE: *Lifting up on retaining ring (A) as it is rotated helps to get it past raised locators.*

5. Inspect filter mounting base for cleanliness. Clean as required.

NOTE: *Raised locators on the fuel filter canister must be indexed properly with slots in mounting base for correct installation.*

6. Install new filter elements onto mounting bases. Be sure elements are properly indexed and firmly seated on bases. It may be necessary to rotate filters for correct alignment.

   Remove filter element from seperator bowl (D). Drain and clean the separator bowl. Dry with compressed air. Install bowl onto new element. Tighten securely.

7. Align keys on filter element with slots in filter base.
8. Install retaining ring onto mounting base making certain dust seal is in place on filter base. Hand-tighten ring counter-clockwise (about 1/3 turn) until it snap into the detent. DO NOT overtighten retaining ring.

NOTE: *The proper installation is indicated when a "click" is heard and a release of the retaining ring is felt.*

9. Reconnect water sensor wiring on the filter (E).

After fuel filter replacement, bleed the air out of the fuel system by following the fuel bleeding procedure below.

Fuel Bleeding Procedure

When the fuel filter is removed and replaced, or if the engine runs out of fuel, air must be bled from the system. Refer to the following procedure for proper bleeding procedure.

1. To bleed the fuel system, turn the ignition key to the "ON" position for 60 seconds.
2. Start engine and check for leaks.

If the engine will not start, repeat step 1.

WARNING

Escaping diesel fuel under pressure can have sufficient force to penetrate the skin. Before applying pressure to the fuel system, BE SURE all connections are tight and lines and hoses are not damaged. Use a piece of wood or cardboard to search for suspected leaks. If injured by escaping fuel, see a doctor familiar with this type of injury at once or gangrene may result.

Diesel Fuel Injectors

Whenever faulty or plugged injectors are indicated, see your authorized engine dealer.

Diesel Injection Pump Timing

Whenever injection pump timing, or other pump service is indicated by abnormal engine operation, contact your authorized engine dealer.

NOTE: *Only an authorized engine dealer can perform warranty service on the engine.*

CHANGING ENGINE OIL AND FILTER

Change the engine oil and filter using the following procedure:

1. With the engine warm, remove the crankcase drain plug.

IMPORTANT: *DO NOT discharge oil onto ground. Catch and dispose of per local waste disposal regulations.*

2. The engine oil filter should be changed at every oil change interval. Using a suitable filter wrench, remove and discard the filter.

ProCarManuals.com

https://truckmanualshub.com/

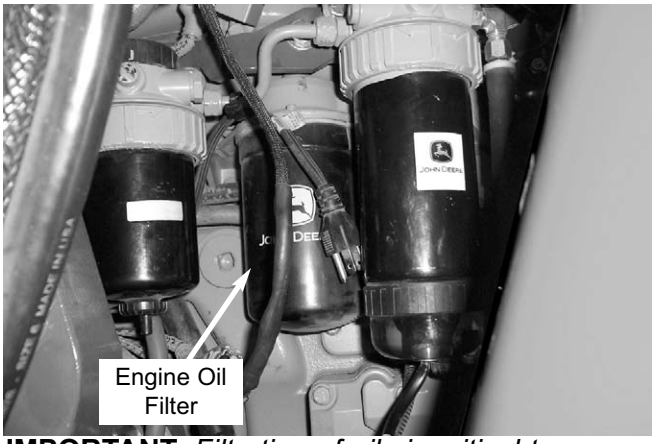

IMPORTANT: *Filtration of oils is critical to proper lubrication. Always change the filter with every oil change.*

3. Apply a thin coat of clean engine oil to the new oil filter at the inner (A) and outer (B) seals and to the filter threads.

4. Wipe both sealing surfaces of the filter header (C, D) with a clean cloth. Ensure keys in the dust seal (E) are properly installed in the slots in the housing. Replace dust seal if damaged.

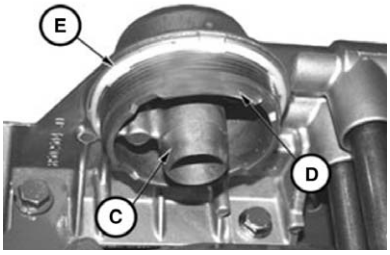

5. Install and tighten oil filter by hand until firmly against dust seal (E). DO NOT apply an extra 3/4 to 1-1/4 turn after gasket contact is made, as is done with standard filters.
6. Clean and re-install the drain plug.
7. Re-fill the crankcase with new oil. Follow specifications in the *Lubrication* chapter for type and viscosity of new oil.
8. After new oil has been added, run the engine at idle speed until the oil pressure lamp is off. Check for leaks at the filter and drain plug.

CHECK OPEN CRANKCASE VENT

Check and replace as necessary any worn, cracked, leaking, or bulging hoses. Check clamps for good tension on all hose ends.

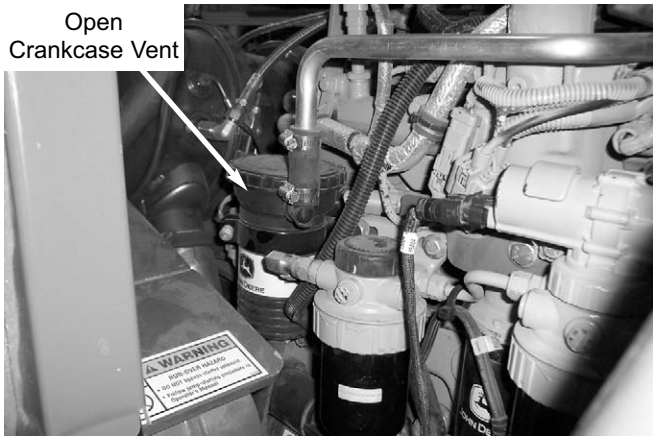

CHECKING THE BATTERY

The battery furnished in the machine is a 12-volt, wet-cell battery.

The top of the battery must always be kept clean. Clean the battery with a brush dipped in an alkaline solution (ammonia or baking soda and water). After the foaming has stopped, flush the top of the battery with clean water. If the terminals and cable connection clamps are corroded or have a buildup, disconnect the cables and clean the terminals and clamps with the same alkaline solution. Wash hands after handling the battery.

⚠ WARNING

Explosive gas is produced while a battery is in use or being charged. Keep flames or sparks away from the battery area. Make sure battery is charged in a well-ventilated area.

NEVER lay a metal object on top of a battery as a short circuit can result.

Battery acid is harmful on contact with skin or fabrics. If acid spills, follow these first aid tips:

1. **IMMEDIATELY remove any clothing on which acid spilled.**
2. **If acid contacted the skin, rinse the affected area with running water for 10 to 15 minutes.**
3. **If acid came in contact with the eyes, flood the eyes with running water for 10 to 15 minutes. See a doctor at once. NEVER use any medication or eye drops unless prescribed by the doctor.**

ProCarManuals.com

https://truckmanualshub.com/

4. **To neutralize acid spilled on the floor, use one of the following mixtures:**
   a. **1 pound (0.5 kg) of baking soda in 4 quarts (4 liters) of water.**
   b. **1 pint (0.4 liters) of household ammonia in 4 quarts (4 liters) of water.**

Whenever battery is removed from the unit, BE SURE to disconnect the negative (-) battery terminal connection first.

Jump Starting

If the battery becomes discharged or does not have enough power to start the engine, use jumper cables and the following procedure to jump-start the engine.

IMPORTANT: *BE SURE that the jumper battery is also a 12-volt D. C. battery, and the vehicle used for jump starting has a negative-ground electrical system.*

WARNING

The ONLY safe method for jump-starting a discharged battery is for TWO PEOPLE to perform the following procedure. The second person is needed for removing the jumper cables so that the operator does not have to leave the operator's compartment while the engine is running. NEVER connect the jumper cables directly to the starter solenoid of either engine. DO NOT start the engine from any position other than the operator's seat, and then ONLY after making sure all controls are in "neutral."

Closely follow the jump-start procedures, in the order listed, to avoid personal injury. In addition, wear safety glasses to protect your eyes, and avoid leaning over the batteries while jump-starting.

DO NOT attempt to jump-start the machine if the battery is frozen, because this may cause it to rupture or explode.

1. Turn the key switches on both vehicles to "OFF." Be sure that both vehicles are in "Neutral" and NOT touching.
2. Connect one end of the (red) positive (+) jumper cable to the positive (+) battery terminal on the disabled machine first. DO NOT allow the positive (+) jumper cable clamps to touch any metal other than the positive (+) battery terminals. Connect the other end of the positive jumper cable to the jumper battery positive (+) terminal.
3. Connect one end of the (black) negative (-) jumper cable to the jumper battery negative (-) terminal.
4. Make the final negative (-) jumper cable connection to the disabled machine's engine block or frame (ground) — NOT to the disabled machines negative battery post. If making the connection to the engine, keep the jumper cable clamp away from the battery, fuel lines, and moving parts.

NOTE: *Twist the jumper cable clamps on the battery terminals to ensure a good electrical connection.*

5. Start the engine. If it does not start immediately, start the jumper vehicles engine to avoid excessive drain on the booster battery.
6. After the machine has started and is running smoothly, have the second person remove the jumper cables (negative (-) jumper cable first) from the jumper vehicle battery, and then from the disabled machine, while ensuring NOT to short the two cables together.

Allow sufficient time for the alternator to build up a charge in the battery before operating the machine or shutting off the engine.

NOTE: *If the battery frequently becomes discharged, have the battery checked for possible dead cell(s), or troubleshoot the electrical system for possible short circuits or damaged wire insulation.*

CHECKING AND TORQUING BOOM LEAF CHAINS

Inspect the leaf chains for proper tension. On the three-section boom, two of the chains are on the top front of the boom. A third chain is accessible from inside the rear of the boom (see three-section boom illustration).

Torque the two chains on the front of the three-section boom to 30 ft.-lbs. (40 Nm). Lubricate with 80W-90 oil.

ProCarManuals.com

https://truckmanualshub.com/

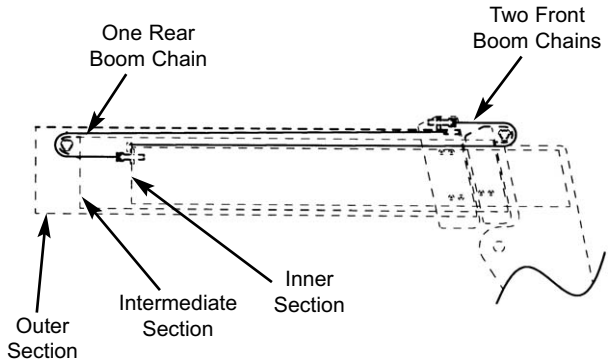

Three-Section Boom Chain Hookup Detail

IMPORTANT: *On the three-section boom, on new machines or when chains have been replaced, it is necessary to retorque the front double chain assembly after one hundred (100) hours of operation. Failure to do so may allow the chains to become slack, which can result in a chain jumping off a sheave. If this occurs, it could result in severe damage to the boom assembly.*

On the four-section boom, three chains are on the top front of the boom. A fourth and fifth chains are accessible from the rear of the boom (see four-section boom illustration).

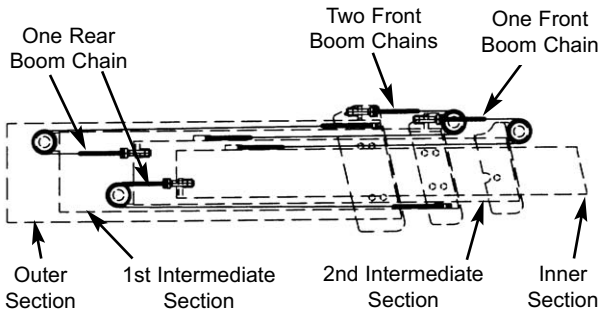

Four-Section Boom Chain Hookup Detail

Torque the three chains on the front of the four-section boom to 50 ft.-lbs. (68 Nm). Lubricate with 80W-90 oil.

IMPORTANT: *On the four-section boom, on new machines or when chains have been replaced, it is necessary to retorque the front-center single chain and the front-outer double chains after one hundred (100) hours of operation. Failure to do so may allow the chains to become slack, which can result in a chain jumping off a sheave. If this occurs, it could result in severe damage to the boom assembly.*

The retract chains on the 2nd intermediate boom and the inner boom are pre-set at the factory and do not require adjustment, unless they are replaced.

Inspect the leaf chains for wear. Run the boom out slowly to inspect. Conditions to look for include: cracked or broken plates, protruding or turned pins, and excessive wear. With a steel tape, measure 16 links of the strand that flexes over the sheaves. If the section measures 12.375” (314 mm) or more, the chain should be replaced. DO NOT repair sections of a chain. Replace the complete chain.

Chain anchors and sheaves also require inspection, for worn or broken fingers and worn flanges.

After any chain has been replaced, operate under loaded conditions and re-check the torque. Adjust the chains per the following procedure: Extend the boom to its maximum length, then retract the boom slowly until the chain slack allows the chain to rest on the top of the boom. Torque the two chains on the front of the three-section boom to 30 ft.-lbs. (40 Nm) and the three chains on the front of the four-section boom to 50 ft.-lbs. (68 Nm). Lubricate with 80W-90 oil.

CHECKING BOOM SLIDE PAD WEAR AND CLEARANCE

The boom is equipped with special nylon low-friction slide pads between the telescopic sections *(see “Typical Slide Pad Detail” illustration)*. These are pre-greased and initially worn in at the factory. Normally greasing is not required, except for maintaining a light film of grease on the pad tracking areas of the boom sections. An exception would be if a boom section has been replaced.

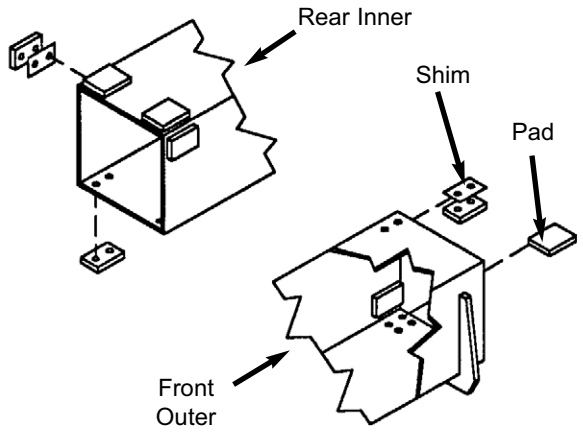

Typical Slide Pad Detail

Visually check for loose pad bolts. The bolts are torqued to 30 ft.-lbs. (40 Nm). If the bolts are re-torqued at any time, Loctite® 271 (red) thread lock or equivalent must be re-applied to the bolts.

ProCarManuals.com

https://truckmanualshub.com/

If the boom starts to chatter under load, grease the slide pads and wipe off the excess grease. Maintain a clearance of 1/16” between the top or side slide pads and the boom. Shims can be added to achieve the proper clearance. Loosen the bolts and insert shims until proper clearance is obtained.

NOTE: *When inserting shims in the side slide pads, be sure to place equal shims on both sides of the boom for even distribution of clearance.*

Re-apply Loctite® 271 (red) thread lock or equivalent to the bolts and re-torque to 30 ft.-lbs. (40 Nm). Bottom slide pads should not be shimmed and should be replaced when the thickness is worn down to 3/8” (9.5 mm).

⚠ WARNING

Failure to maintain proper slide pad clearance and thickness could cause damage to the boom, resulting in sudden boom failure.

CLEAN AIR CONDITIONING CONDENSER

NOTE: *Clean the condenser more often if there is a noticeable decrease in A/C performance.*

IMPORTANT: *Do not use a water jet or high-pressure steam, because this could damage the fins.*

1. Remove the six screws (1) from the top cover of the condenser.

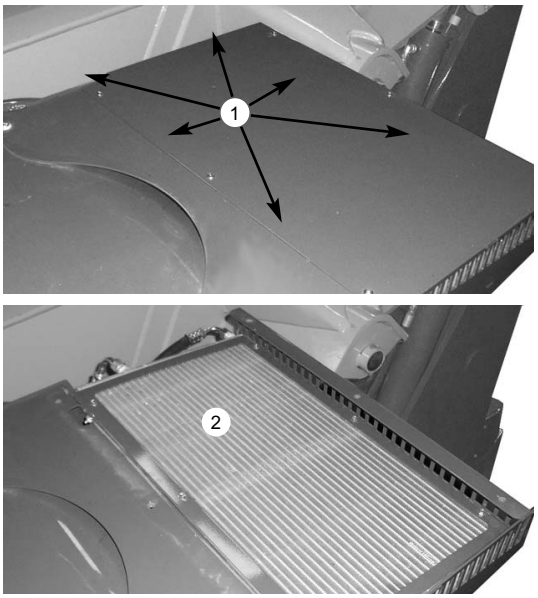

Top View of Condenser Assembly

2. Remove the cover to gain access to the condenser (2).
3. Clean any large debris that may have collect on the top side of the condenser.
4. Clean the condenser use a jet of compressed air aimed in the same direction as the air flow.

NOTE: *To aid in the cleaning process, carry out this operation with the condenser fans running.*

5. Re-install the top cover.

CLEAN/CHANGE CAB VENTILATION FILTER

NOTE: *Clean or change the filter more often if there is a noticeable decrease in air flow from the air vents.*

1. Remove the four screws (1) from the filter protective cover located on the lower portion of the dash in front of the brake pedal.

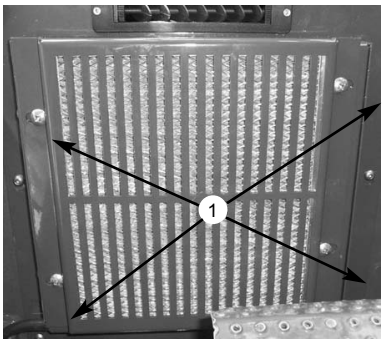

2. Remove the filter from the cover.
3. Clean the filter with a jet of compressed air.
4. Check the condition of the filter and replace it if neccessary.
5. Install the filter in the protective cover, then re-install the protective cover.

ProCarManuals.com

https://truckmanualshub.com/

Service Every 1000 Hours or Yearly

NOTE: *Perform all other service requirements up to this point, as well as the following:*

CHANGING TRANSMISSION OIL AND FILTER

Operate the machine long enough to warm the transmission oil to 150°F-200°F (65°C-93°C). Shut off the engine. Access to filter is from under the access cover on the front hood section. Access to the drain plug is from underneath the machine. Proceed as follows:

1. Remove the drain plug and drain old oil. Replace the drain plug.

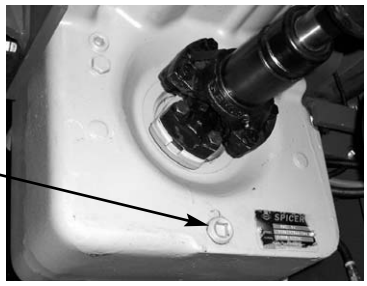

IMPORTANT: *DO NOT discharge oil onto ground. Catch and dispose of per local waste disposal regulations.*

2. Remove and discard the oil filter. Wipe the sealing surface on the transmission with a clean cloth. Apply a thin coat of clean oil to the new oil filter gasket. Hand tighten.

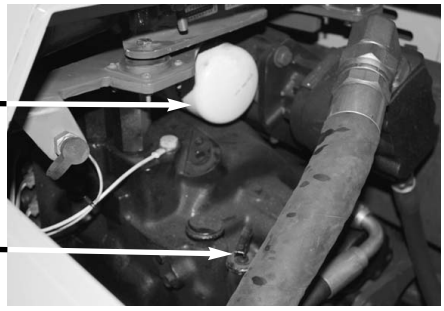

3. Refill the transmission with new oil as listed in the *Lubrication* chapter of this manual.

IMPORTANT: *DO NOT OVERFILL! If the oil level is too high, oil foaming, excessively high oil temperature and oil leakage at the seals could result.*

4. Start and run the machine long enough for the oil to circulate and warm slightly. Recheck the level with the dipstick.

CHANGING HYDRAULIC RETURN FILTER ELEMENT

WARNING

When servicing the hydraulic system, lower the boom to the ground.

This element is a cartridge-type accessible from a housing on top of the hydraulic reservoir. Initial replacement is after the first 100 hours. See illustration. Remove the top cover of the housing. Remove the element and discard. Insert the new element into the housing and replace the cover.

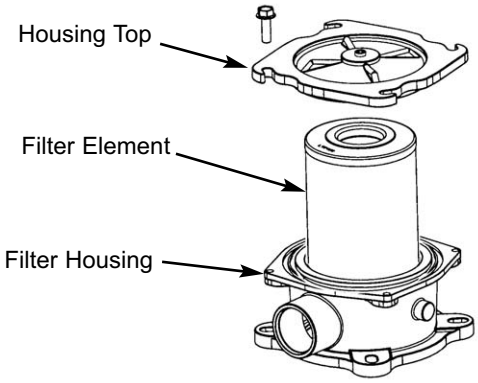

Reservoir Filter Removal

CHANGING AIR FILTER ELEMENT(S)

The air cleaner assembly consists of an outer (primary) filter element and an inner (secondary) filter element. An air filter restriction indicator for monitoring the condition of the filter elements is located on the rubber elbow on the rear of the air cleaner. If the air filter becomes restricted, this indicator turns red to warn the operator that the air cleaner requires service. Push the reset button located at the end of the restriction indicator after installing a clean element.

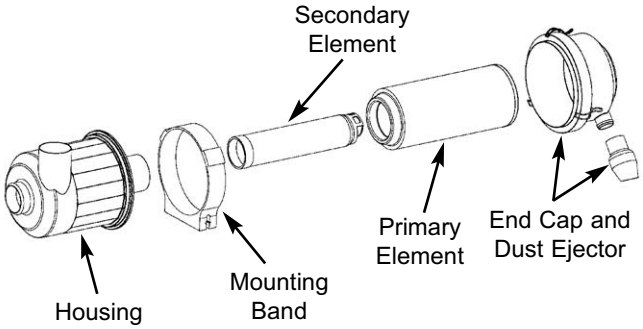

Dual-Element Air Cleaner Assembly

ProCarManuals.com

https://truckmanualshub.com/

NOTE: *Before replacing the filter element(s), push the reset button on the indicator. Start the engine and run at full throttle. If the indicator does not turn red, do not replace the element(s).*

The outer element should be replaced only when the restriction indicator turns red. The inner element should be replaced every third time the outer element is replaced, unless the outer element is damaged or the inner element is visibly dirty. Along with a daily check of the restriction indicator, check that the air cleaner intake hose and clamps, and the mounting bracket hardware are properly secure.

Unlatch the three latches on the air cleaner and remove the end cap assembly. Clean out any dirt built up in the end cap assembly.

Primary Element

1. Carefully pull the primary (outer) element out of the housing. Never remove the secondary (inner) element unless it is to be replaced.
2. Clean out any dirt built up in the housing. Leave the secondary element installed during this step to prevent debris from entering the engine intake manifold.
3. Use a trouble light inside the primary element to inspect for bad spots, pinholes and ruptures. Replace the primary element if any damage is noted. The primary element must be replaced if it is oil- or soot-laden.

NOTE: *Cleaning the primary element is not recommend.*

Secondary Element

NOTE: *Replace the secondary element only if it is visibly dirty or if the primary element has been replaced three times.*

Before removing the secondary element from the housing, clean out any dirt built up in the housing. Leave the secondary element installed during this step to prevent debris from entering the engine intake manifold. Remove the secondary element.

Reinstallation

1. Check the inside of the housing for any damage that may interfere with the elements.
2. Be sure that the element sealing surfaces are clean.
3. Insert the element(s), making sure that they are seated properly.
4. Secure the end cap to the housing with the three latches.
5. Check the hose connections and make sure they are all clamped and tightened properly.
6. Reset the restriction indicator by pressing the reset button.

CHANGING OPEN CRANKCASE FILTER ELEMENT

Located near the final fuel filter, the open crankcase filter element should be replaced by:

1. Removing the thread-on cap on the top of the canister.
2. Lift the element out of the canister and replace with a new filter. The filter is notched on the top for correct positioning.
3. Replace the thread-on cap. The cap will need to be indexed to the filter element before it can be threaded on. Hand tighten only.

CHANGING AXLE DIFFERENTIAL AND PLANETARY OIL

Differentials

1. Remove the three drain plugs and drain the used oil. Replace the drain plugs *(see illustration)*.

IMPORTANT: *DO NOT discharge oil onto ground. Catch and dispose of per local waste disposal regulations.*

ProCarManuals.com

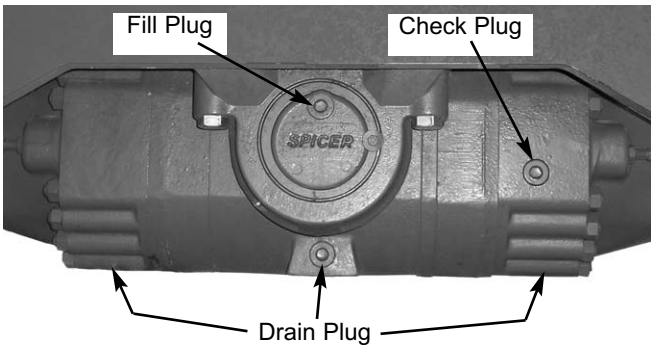

2. Remove the fill/check plug. Fill the differential with fresh oil as specified in the *Lubrication* chapter. When the oil flows from the check hole, replace the plug. Wait 10 to 15 minutes and repeat this process until the axle is full.

Repeat this procedure with the other axle.

Axle Planetary Hubs

The hubs have one plug each used for draining and filling *(see illustration)*.

1. Position the wheel until the oil level arrow points down. Remove the drain/fill plug and allow the oil to drain. Replace the plug.

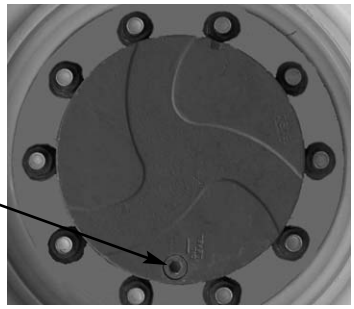

IMPORTANT: *DO NOT discharge oil onto ground. Catch and dispose of per local waste disposal regulations.*

2. Re-position the hub so the oil level arrow is horizontal. Fill with fresh oil as specified in the *Lubrication* chapter. When the oil runs out, install the drain/fill plug.

Repeat this procedure on the three remaining hubs.

CHECKING ALTERNATOR AND FAN BELT CONDITION

Refer to the engine manual for proper fan belt tension adjustment and replacement procedures. If the belt shows wear or cuts, it should be replaced. Order a replacement belt from your Manitou Americas dealer.

CHECKING EXHAUST SYSTEM

Examine the entire exhaust system for possible holes and leaks. Re-tighten any loose clamps and make sure the manifold outlet gasket is not leaking.

Service Every 2000 Hours or Two Years

NOTE: *Perform all other service requirements up to this point, as well as the following:*

CHECKING HYDRAULIC SYSTEM RELIEF PRESSURES

Pressure settings for relief valves are pre-set at the factory. Three test ports are provided under the front hood access cover.

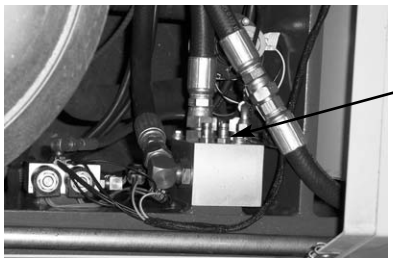

Before conducting any test port pressure checks, check the engine speed. Engine speed must be 800 rpm at low idle and 2500 to 2550 rpm at high idle.

NOTE: *Pressure checks should be made with engine at low idle.*

Steering Relief Pressure

Plug a 3000 psi (207 bar) oil-or liquid-filled gauge into the test port labeled ”SP.” Cramp the steering fully to the right or left. The gauge should read 2500 psi (172 bar).

Joystick and Parking Brake Release Pressure

Plug a 1000 psi (70 bar) gauge into the port labeled “JP.” With the engine running, the gauge should read 350 psi (24 bar).

Main Relief Pressure

Plug a 3000 psi (207 bar) oil-or liquid-filled gauge into the test port labeled “MP.” Fully retract the boom over the relief valve. The gauge should read 3000 psi (207 bar).

ProCarManuals.com

https://truckmanualshub.com/

CHANGING HYDRAULIC RESERVOIR OIL AND STRAINER

Clean all dirt and debris from around the top of the reservoir, especially around the access cover. Refer to illustration and use the following procedure:

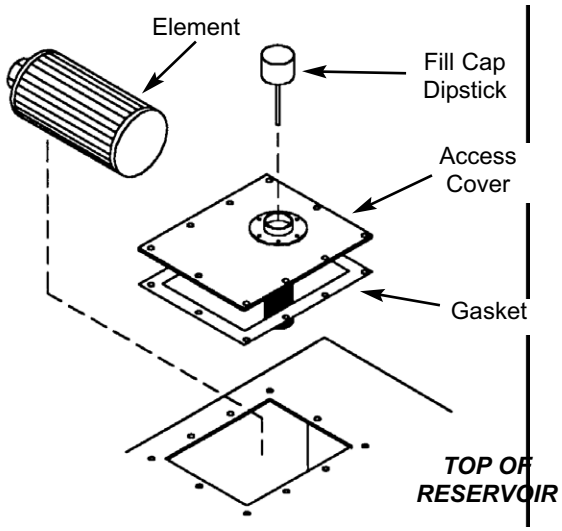

Hydraulic Reservoir Sump Strainer Removal

1. Remove the drain plug and drain used oil. Wash or blow off all particles collected on the magnetic drain plug.

IMPORTANT: *DO NOT discharge oil onto ground. Catch and dispose of per local waste disposal regulations.*

2. Remove the access cover and wash the inlet screen with clean solvent. Remove and wash the sump filter strainer from the bottom inside of the reservoir. If the strainer has any damage, holes, etc., it should be replaced.
3. Flush out the bottom of the reservoir with clean hydraulic oil. Re-install all cleaned components and install the access cover on the reservoir with a new gasket. Clean the filter/breather cap.
4. Fill the reservoir with fresh oil. Follow specifications in the *Lubrication* chapter of this manual.

IMPORTANT: *Hydraulic fluid and filters should be replaced any time contamination is present before the normally scheduled change.*

⚠ WARNING

NEVER use your hands to search for hydraulic fluid leaks. Escaping hydraulic oil under pressure can have sufficient force to penetrate the skin. Before applying pressure to the hydraulic system, be sure all connections are tight and lines and hoses are not damaged. Use a piece of wood or cardboard to search for suspected leaks. If injured by escaping hydraulic oil, see a doctor familiar with this type of injury at once or gangrene may result.

CHANGING RADIATOR COOLANT

Drain old coolant, flush the entire cooling system, test thermostats and fill with recommended coolant.

⚠ WARNING

Remove the radiator cap only when the engine is cool, or painful burns could result.

IMPORTANT: *DO NOT discharge coolant onto ground. Catch and dispose of per local waste disposal regulations.*

Refer to the John Deere engine manual for detailed coolant replacement instructions.

IMPORTANT: *Fill the cooling system with a low-silicate ethylene glycol based coolant mixed with quality water and supplemental coolant additives (SCAs) suitable for heavy-duty diesel engines. See the engine manual for additional information.*

NOTE: *Check the engine temperature gauge every minute or two after coolant has been changed. Air pockets can form and it may be necessary to refill the cooling system after a short period of use, as the air will naturally bleed out of the system.*

ProCarManuals.com

https://truckmanualshub.com/

EXHAUST FILTER SERVICE

The exhaust filter will provide several thousand hours of maintenance free operation. At some point the exhaust filter will require professional service to remove accumulated ash buildup. Adhering to the recommended engine oil and diesel fuel requirements will maximize the hours of operation before professional service is required.

A diagnostic code will display in the multi-function display screen to indicate when professional exhaust filter service is required. This professional exhaust filter service must be performed by an authorized Manitou Americas dealer.

STORAGE

If the Telescopic Handler will not be operated for a period of three months or more, prepare and store it using the following procedure:

NOTE: *If the storage area is outdoors or in a harsh environment, the storage procedure should be followed if the Telescopic Handler is to be stored for one month.*

Before Storage

Perform the following prior to placing the machine in storage:

1 Wash the entire machine.

2. Lubricate all grease fittings as described in the *Lubrication* chapter of this manual.

3. Change engine oil as outlined in the *Service and Storage* chapter of this manual.

4. Apply grease to all exposed hydraulic cylinder rod areas.

5. Disconnect the battery cable clamps and cover the battery or remove the battery from the machine and store it separately.

6. If the ambient temperature (at any time during the storage period) is expected to drop below freezing, make sure the engine coolant is either completely drained from the radiator and engine block or that the concentration of anti-freeze is adequate to keep the coolant from freezing. Refer to the separate engine manual provided for anti-freeze recommendations and quantities.

During Storage

1. About once each month, connect the battery, check all fluid levels to make sure they are proper, and start the engine.

IMPORTANT: *If it is desired to operate the hydraulic cylinders at this time, BE SURE to wipe the protective grease (and any adhering dirt) from the cylinder rods prior to starting the engine. After operating, BE SURE to recoat the cylinder rods with grease if the machine is to be returned to storage.*

2. Allow the engine to run until it warms up and then move the machine a short distance to help relubricate the internal parts. Run the engine until the battery is recharged and then shut it off.

After Storage

After removing the machine from storage and BEFORE operating it, perform the following:

1. Change engine oil and filter to remove condensation and other residues.

2. Wipe off grease from cylinder rods.

3. Lubricate ALL grease fittings.

4. Follow the start-up and warm-up procedures outlined in the *Operation and Adjustments* chapter of this manual.

ProCarManuals.com

https://truckmanualshub.com/

PWP SYSTEM OPERATIONAL TROUBLESHOOTING

Problem	Possible Cause	Remedy
PWP System mode lamp flashes when switch is turned “ON.” Parking brake does not engage when the PWP System switch is turned “ON.” Carriage tilt and auxiliary functions continue operating when the PWP System switch is turned “ON.” Transmission does not remain de-clutched when shifted into “FORWARD or REVERSE” when the PWP switch is “ON.”	PWP System is not activated.	With PWP System switch “ON,” apply service brakes for three seconds until PWP mode lamp is on continously.
Boom control functions do not operate.	Machine is not level. Remote PWP System switch is de-activated. Remote PWP System switch is not plugged into the connector at the end of the boom. PWP System angle sensor is unplugged or faulty.	Level the machine. Activate the remote PWP System switch. Plug in and engage the remote PWP System switch. Contact your Manitou Americas dealer for assistance.
PWP System mode lamp flashes when switch is turned “OFF.” Parking brake lamp stays “ON” when PWP System switch is turned “OFF.”	PWP System is not de-activated.	With engine running, apply service brakes for three seconds until PWP mode lamp goes off.

ProCarManuals.com

https://truckmanualshub.com/

Chapter 9

DECAL LOCATIONS

GENERAL INFORMATION

CAUTION

ALWAYS read and follow the safety precautions on decals. Replace decals if they are damaged, or if the unit is repainted. If repainting, BE SURE that all applicable decals are affixed in their proper locations.

Decal locations information is provided to assist in the proper selection and application of new decals, in the event the original decals become damaged or the machine is repainted.

For correct replacement of decals, compare the location illustrations to the machine before starting to refinish the unit. Check off each required decal using the illustration reference number to find the part number, description and quantity in the list. Refer to the appropriate illustrations for replacement locations.

If there is a decal on a part that is being replaced, be sure that the decal is applied to the replacement part.

NEW DECAL APPLICATION

Before applying the new decals, surfaces must be free from dirt, dust, grease and other foreign material. To apply a solid-formed decal, remove the smaller portion of the decal backing paper and apply this part of the exposed adhesive backing to the clean surface while maintaining proper position and alignment. Slowly peel off the other portion of the backing paper while applying hand pressure to smooth out decal surface. To apply a die-cut decal, first remove the backing paper. Then, properly orient and position the decal onto the clean mounting surface. After the decal is firmly applied and smoothly pressed down, remove the front covering paper.

DECAL KITS

51200582 MT6642XT Telescopic Handler with PWP
51200583 MT6642XT Telescopic Handler without PWP

51200584 MT8044XT Telescopic Handler with PWP
51200585 MT8044XT Telescopic Handler without PWP

51200586 MT10044XT Telescopic Handler with PWP
51200587 MT10044XT Telescopic Handler without PWP

51200588 MT10055XT Telescopic Handler with PWP
51200589 MT10055XT Telescopic Handler without PWP

51200590 MT12042XT Telescopic Handler with PWP
51200591 MT12042XT Telescopic Handler without PWP

NOTE: *Decals may be purchased in kits or individually.*

NOTE: *Decal kits contain decals for both control configuations. Refer to the following reference pages to determine the correct control decals for the machine.*

PAINT FINISH

Use this list to order paint for refinishing:

808020	1 Gallon Red
808021	6 (12-oz. Spray Cans) Red
808043	1 Gallon Gun-Metal Gray
808044	6 (12-oz. Spray Cans) Gun-Metal Gray

ProCarManuals.com

https://truckmanualshub.com/

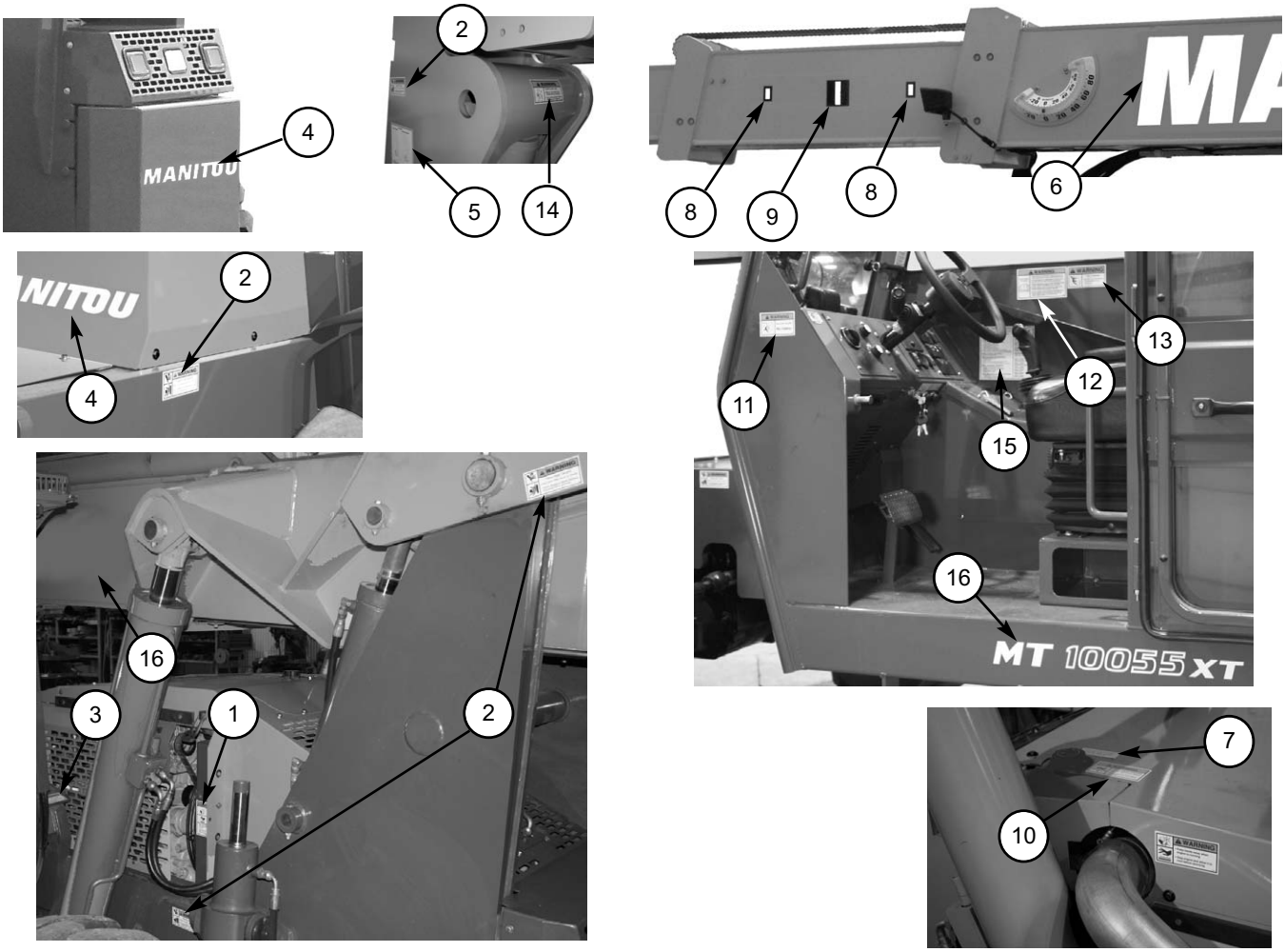

DECAL LOCATIONS - FRAME AND BOOM

REF. NO.	DESCRIPTION	MT6642	MT8044	MT10044	MT10055	MT12042
01	DANGER - HANDS OUT	808036	808036	808036	808036	808036
02	WARNING - PINCH POINT	808033	808033	808033	808033	808033
03	WARNING - JUMP START	808034	808034	808034	808034	808034
04	MANITOU LOGO, SMALL	804768	804768	804768	804768	804768
05	QUICK-ATTACH DIAGRAM	808046	808046	808046	808046	808046
06	MANITOU LOGO, LARGE	806320	806320	806320	806320	806320
07	ANTI-FREEZE	808047	808047	808047	808047	808047
08	HALF ZONE MARKER (5 ea.)	808048	808048	808048	808048	808048
09	NO. “1” EXTENSION MARKER (1 ea.)	808049	808049	808049	808049	808049
	NO. “2” EXTENSION MARKER (1 ea.)	808050	808050	808050	808050	808050
	NO. “3” EXTENSION MARKER (1 ea.)	808051	808051	808051	808051	808051
	NO. “4” EXTENSION MARKER (1 ea.)	808052	808052	808052	808052	808052
	NO. “5” EXTENSION MARKER (1 ea.)	808053	808053	808053	808053	808053
10	COOLANT UNDER PRESSURE	808054	808054	808054	808054	808054
11	WARNING - NO RIDERS	808035	808035	808035	808035	808035
12	OPERATOR MANUAL WARNING	808032	808032	808032	808032	808032
13	DANGER-PERSONNEL INJURY *(w/o PWP)*	808031	808031	808031	808031	808031
14	CARRY LOAD LOW	808037	808037	808037	808037	808037
15	LUBE CHART	50380371	50380371	50380371	50380371	50380371
16	MODEL NUMBER - LEFT SIDE	805815	805816	50380373	50380033	50380374

ProCarManuals.com

https://truckmanualshub.com/

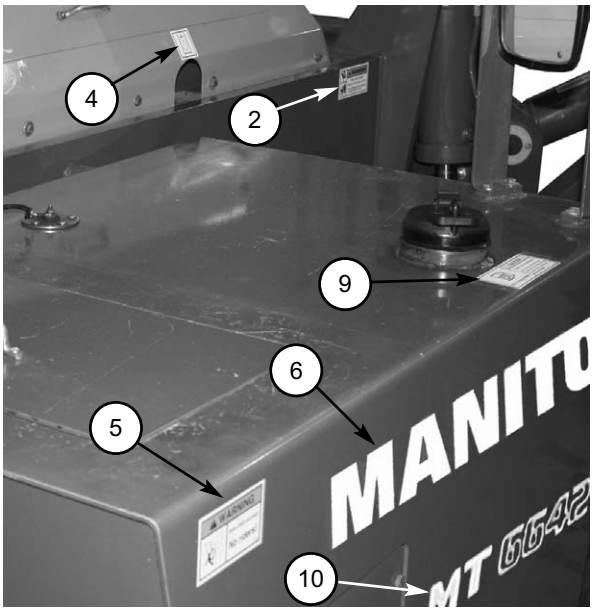

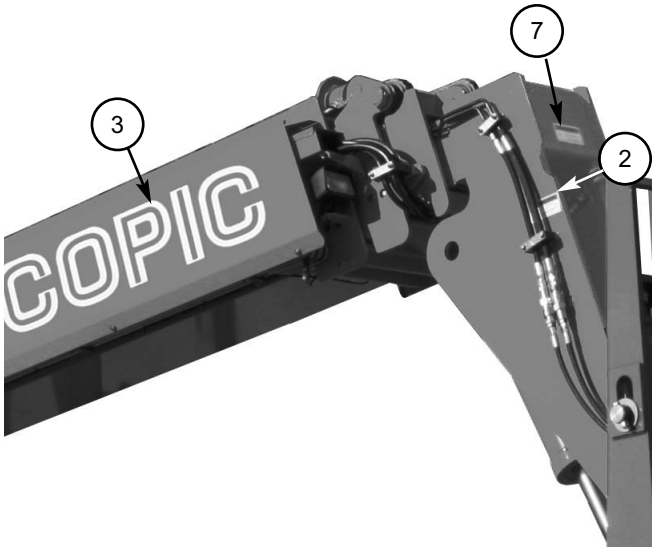

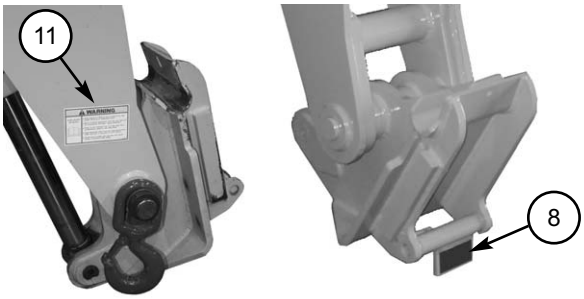

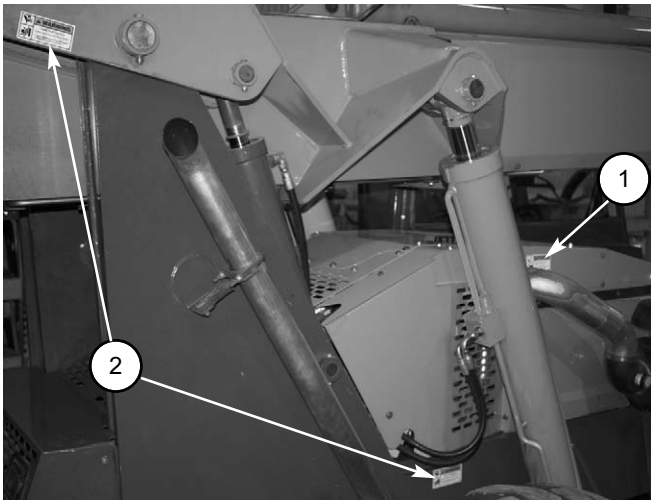

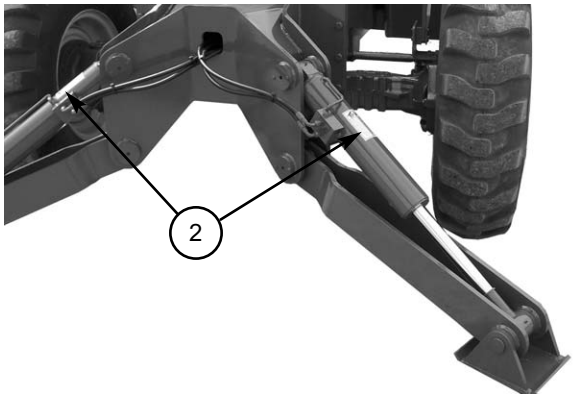

ProCarManuals.com

DECAL LOCATIONS - FRAME AND BOOM

REF. NO.	DESCRIPTION	MT6642	MT8044	MT10044	MT10055	MT12042
01	DANGER - HANDS OUT	51200535	51200535	51200535	51200535	51200535
02	WARNING - PINCH POINT	808033	808033	808033	808033	808033
03	MANISCOPIC, LARGE	806319	806319	806319	806319	806319
04	HYDRAULIC OIL FILL	808057	808057	808057	808057	808057
05	WARNING - NO RIDERS	808035	808035	808035	808035	808035
06	MANITOU LOGO, SMALL	103275	103275	103275	103275	103275
07	DANGER-PERSONNEL INJURY *(w/o PWP)*	808031	808031	808031	808031	808031
08	QUICK-ATTACH UNLOCKED	808038	808038	808038	808038	808038
09	DIESEL FUEL	50301416	50301416	50301416	50301416	50301416
10	MODEL NUMBER - RIGHT SIDE	805815	805816	50380373	50380033	50380374
11	WARNING - HOOK	50380987	50380987	50380987	50380987	50380987

https://truckmanualshub.com/

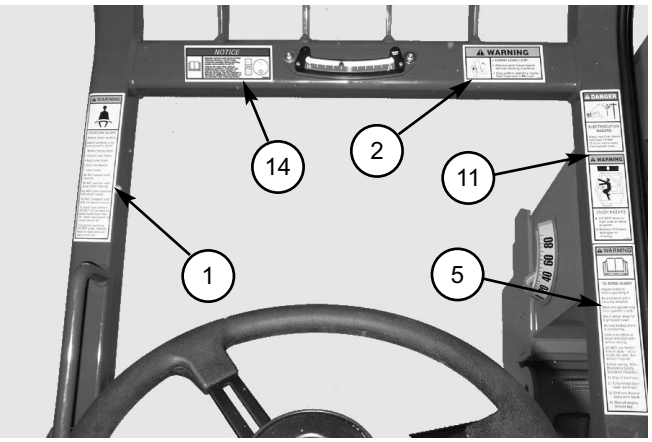

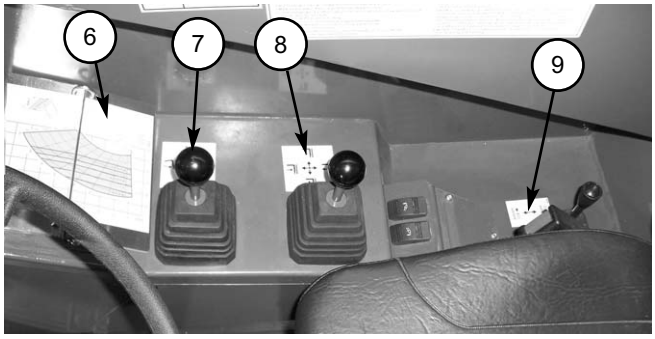

Dual Joystick Control

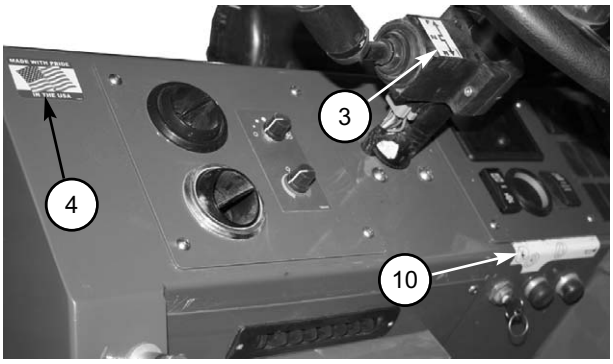

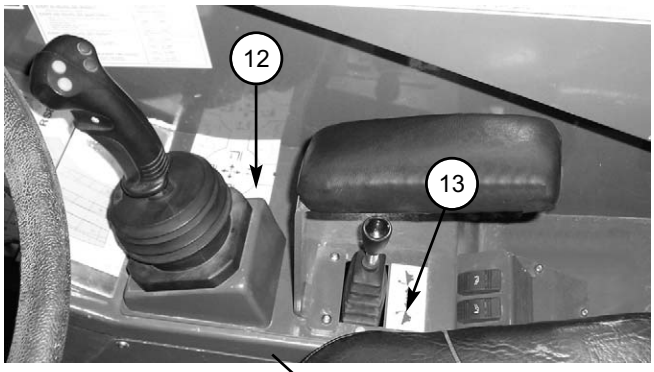

Tri-function Joystick Control

DECAL LOCATIONS - OPERATOR STATION

REF. NO.	DESCRIPTION	MT6642	MT8044	MT10044	MT10055	MT12042
01	TILT HAZZARD/GENERAL OPERATOR	808027	808027	808027	808027	808027
02	CARRY LOAD LOW	808026	808026	808026	808026	808026
03	F-N-R SHIFT	808059	808059	808059	808059	808059
04	MADE IN USA	808060	808060	808060	808060	808060
05	PARK BRAKE/SEAT BELT	808030	808030	808030	808030	808030
06[a]	LOAD ZONE CHARTS	Note a	Note a	Note a	Note a	Note a
07[b]	ATTACHMENT TILT/FRAME LEVEL	808061	808061	808061	808061	808061
08[b]	BOOM CONTROL	808062	808062	808062	808062	808062
09[b]	AUXILIARY HYDRAULIC CONTROL *(Optional)*	808064	808064	808064	808064	808064
10	IGNITION/START/HORN	808065	808065	808065	808065	808065
11	HI VOLT./MOVING PARTS	808029	808029	808029	808029	808029
12[c]	JOYSTICK CONTROL	51200536	51200536	51200536	51200536	51200536
13[c]	FRAME LEVEL	809307	809307	809307	809307	809307
14	EXHAUST FILTER NOTICE	50380943	50380943	50380943	50380943	50380943

Note a: See Load Zone Charts section of this manual for individual load zone chart part numbers.
Note b: Used on machines equipped with Dual Joystick Control setup.
Note c: Used on machines equipped with Tri-function Joystick Control setup.

ProCarManuals.com

https://truckmanualshub.com/

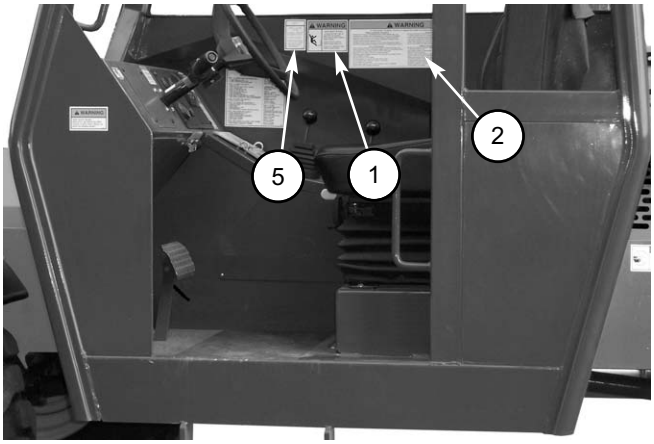

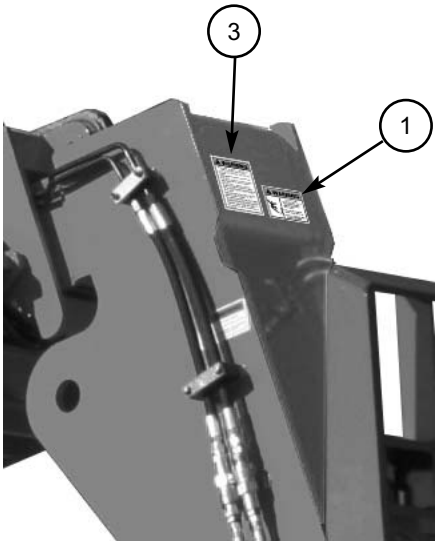

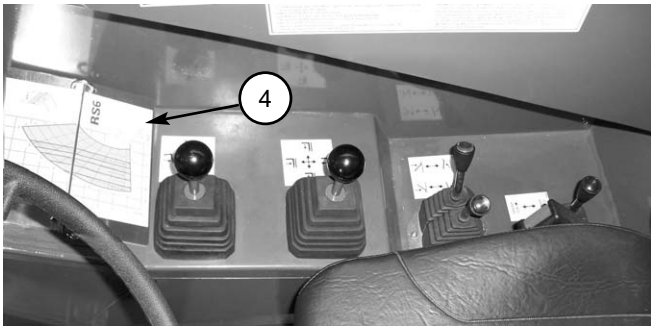

ProCarManuals.com

DECAL LOCATIONS - PWP EQUIPPED UNITS

REF. NO.	DESCRIPTION	MT6642	MT8044	MT10044	MT10055	MT12042
01	PERSONNEL LIFT	808039	808039	808039	808039	808039
02	WORK PLATFORM RULES	808040	808040	808040	808040	808040
03	PERSONNEL LIFT SAFETY RULES	808041	808041	808041	808041	808041
04	PWP LOAD CHART	808014	808007	50380399	50380043	50380406
05	PWP SWITCH	808042	808042	808042	808042	808042

https://truckmanualshub.com/

Chapter 10

MAINTENANCE

This Maintenance Interval Chart was developed to match the *Service and Storage* chapter of this manual. Detailed information on each Service Procedure is in the *Service and Storage* chapter. A Maintenance Log follows the Maintenance Interval Chart for recording the maintenance procedures performed. Recording the 10 Hour (or Daily) service intervals is impractical and is therefore not recommended.

IMPORTANT: *Under severe operating conditions, more frequent service than the recommended intervals may be required. Users must decide if the severity of their operation requires more frequent service than normal.*

MAINTENANCE INTERVAL CHART

SERVICE PROCEDURE	Every 10 Hours (or Daily)	Every 50 Hours (or Weekly)	First 100 Hours	Every 250 Hours (or Quarterly)
Checking Fuel Tank Level	●			
Checking Fuel Filter (Drain Water If Required)	●			
Checking Engine Oil Level	●			
Checking Radiator Coolant Level	●			
Checking Transmission Oil Level	●			
Checking Hydraulic Oil Level	●			
Checking Tire Pressures	●			
Checking Wheel Nut Torque	●[1,2]			
Checking Instruments Operation	●			
Checking General Machine Operation and Condition	●			
Checking Personnel Work Platform Safety System	●			
Lubricate Grease Points		●		
Changing Engine Oil and Filter			●[2]	
Changing Transmission Oil and Filter			●[2]	
Changing Hydraulic Oil Filter			●[2]	
Checking and Torquing Boom Leaf Chains			●[3]	●
Checking Axle Oil Levels				●
Changing Fuel Filter				●
Changing Engine Oil and Filter				●

1 - On new machines or when a wheel has been removed, until 450 ft.-lbs. (610 Nm) is maintained.
2 - Only new machines.
3 - On new machines or when a chain has been replaced. The two chains on the front of the three-section boom should be torqued to 30 ft.-lbs. (40 Nm), and the three chains on the front of the four-section boom should be torqued to 50 ft.-lbs. (68 Nm).

ProCarManuals.com

https://truckmanualshub.com/

MAINTENANCE INTERVAL CHART (CONT.)

SERVICE PROCEDURE	Every 250 Hours (or Quarterly)	Every 1000 Hours (or Yearly)	Every 2000 Hours (or Two Years)	Service As Required
Check Open Crankcase Vent	●			
Checking Battery	●			
Checking and Torqueing Boom Leaf Chains	●			
Checking Boom Slide Pads Wear and Clearance	●			
Clean Air Conditioning Condenser	●			
Clean/Change Cab Ventilation Filter	●			
Changing Transmission Oil and Filter		●		
Changing Hydraulic Return Filter Element		●		
Changing Air Filter Element		●		
Change Open Crankcase Filter Element		●		
Changing Axle Differential and Planetary Oil		●		
Checking Alternator and Fan Belt Condition		●		
Checking Exhaust System		●		
Checking Hydraulic System Relief Pressures			●	
Changing Hydraulic Reservoir Oil and Strainer			●	
Changing Radiator Coolant			●	
Exhaust Filter Service				●

ProCarManuals.com

MAINTENANCE LOG

Date	Hours	Service Procedure

https://truckmanualshub.com/

MAINTENANCE LOG

Date	Hours	Service Procedure

ProCarManuals.com

https://truckmanualshub.com/

MAINTENANCE LOG

Date	Hours	Service Procedure

ProCarManuals.com

https://truckmanualshub.com/

MAINTENANCE LOG

Date	Hours	Service Procedure

ProCarManuals.com

https://truckmanualshub.com/

ENGINE DIAGNOSTIC TROUBLE CODES (DTCs)

Engine diagnostic trouble codes are displayed in the instrument display panel.

Stored and active diagnostic trouble codes are displayed as a two-part code: Suspect Parameter Number (SPN) and Failure Mode Identifier (FMI), as shown on the tables on this and the following pages.

The first part is a Suspect Parameter Number (SPN) followed by a Failure Mode Identifier (FMI). To determine the exact type of failure, both parts (SPN and FMI) of the code are needed.

The SPN indentifies the system or the component that has the failure; for example, SPN 000110 indicates a failure in the engine coolant temperature circuit.

The FMI indentifies the type of failure that has occurred; for example, FMI 03 indicates a value above normal. Combining SPN 000110 with FMI 03 means the engine coolant temperature input voltage is too high.

Always contact your servicing engine dealer for help in correcting the diagnostic trouble codes that are displayed for the engine.

The fault code listing in the following tables are in ascending order.

The first table list the many SPN codes. The second table lists the FMI codes. To use the tables below, first write down the SPN and FMI codes displayed in the multi-function display. Locate the SPN code and its associated definition in the SPN table, then locate the associated FMI code and its associated definition in the FMI table.

NOTE: *Not all of these codes are used on all engine applications.*

NOTE: *If corrective actions below do not solve the engine fault, contact your servicing engine dealer.*

ProCarManuals.com

SUSPECT PARAMETER NUMBER (SPN) CODES

SPN Code	SPN Name
000027	EGR Valve Position Signal
000028	Digital Throttle Signal
000029	Secondary Analog Throttle Signal
000051	Air Throttle Poaition Signal
000054	Throttle Signal
000091	Primary Analog Throttle Signal
000094	Low Pressure Fuel Signal
000096	Fuel Level
000097	Water-in-fuel Signal
000100	Engine Oil Pressure Signal
000101	Crankcase Pressure Signal
000102	Manifold Air Pressure Signal
000103	Turbocharger Speed Signal
000105	Manifold Air Temperature Signal
000107	Air Filter Pressure Differential
000108	Barometric Pressure Signal
000109	Engine Coolant Pressure Signal
000110	Engine Coolant Temperature Signal
000111	Engine Coolant Level Alarm Switch
000127	Transmission Oil Pressure Signal
000157	Fuel Rail Pressure Signal
000158	ECU Power Down
000168	Unswitched Battery Voltage

SPN Code	SPN Name
000174	Fuel Temperature Signal
000177	Transmission Oil Temperature Signal
000189	Engine Speed Derate
000190	Engine Speed
000191	Engine/Pump Speed
000237	VIN Security Data
000412	EGR TemperatureSignal
000611	Injector Drive #1
000612	Injector Drive #2
000620	Sensor Supply Voltage
000627	All Injector Circuits
000628	ECU Programming
000629	ECU EEPROM
000632	Fuel Shutoff Valve
000636	Camshaft Position Signal
000637	Crankshaft Position Signal
000638	Rack Position
000639	CAN Bus
000640	External Engine Protection
000641	VGT Actuator
000644	Lead ECU Sync Circuit
000647	Engine Fan Drive Circuit
000651	Injector #1

https://truckmanualshub.com/

SPN Code	SPN Name
000652	Injector #2
000653	Injector #3
000654	Injector #4
000676	Cold Start Relay Output Signal
000729	Inlet Air Heater Signal
000833	Rack Position Sensor
000834	Rack Actuator
000898	Requested Engine Speed Signal
000970	External Shutdown Switch
000971	External Derate Switch
000974	Remote Throttle Signal
001075	Low Pressure Fuel Pump Data
001076	Fuel Injector Pump Control Valve
001077	Fuel Injector Pump Control Valve
001078	Fuel Injector Pump Speed/Position Sensor
001079	Sensor Supply 1 Voltage
001080	Sensor Supply Voltage
001109	Engine Protection Approaching
001110	Engine Protection
001136	ECU Temperature Signal
001172	Intake Air Temperature
001176	Intake Air Pressure
001180	Calculated VGT Turbine Inlet Temperature
001209	Exhaust Manifold Pressure Signal
001321	Engine Starter Control Circuit
001347	Suction Control Valve Circuit
001348	Fuel Pump Control Valve #2
001349	Redundant Fuel Rail Pressure Signal
001485	Pump Power Relay
001568	Torque Curve Selection
001569	Engine Power Derate
001638	Hydraulic Oil Temperature Signal
001639	Fan Speed Signal
001762	Hydraulic Oil Pressure Signal
002000	Incorrect ECU
002629	Fixed Turbo Comp Outlet Temp Signal
002630	Charge Air Cooler Outlet Temp Signal
002659	EGR Flow Signal
002790	Fixed Tubocharger Comp Outlet Temp
002791	EGR Valve Drive Circuit
002795	VGT Calibration Version
002797	Injector High Voltage Supply #1

SPN Code	SPN Name
002798	Injector High Voltage Supply #2
003246	DPF Outlet Temperature
003251	DPF Differential Pressure Signal
003464	Air Throttle Actuator Drive Circuit
003471	Fuel Dosing Control Valve Signal
003480	Fuel Dosing Inlet Pressure Signal
003482	Fuel Dosing Shutoff Valve Signal
003509	Sensor Supply #1 Voltage
003510	Sensor Supply #2 Voltage
003511	Sensor Supply #3 Voltage
003512	Sensor Supply #4 Voltage
003513	Sensor Supply #5 Voltage
003514	Sensor Supply #6 Voltage
003556	Fuel Dosing Nozzle
003587	Auto Ether Control Circuit
003597	Injector Power Supply Voltage
003598	Injector Power Supply Voltage #2
003659	Spill Valve Circuit #1
003660	Spill Valve Circuit #2
003661	Spill Valve Circuit #3
003662	Spill Valve Circuit #4
003663	Spill Valve Circuit #5
003664	Spill Valve Circuit #6
003711	DOC Inlet Temperature
003719	Calculated Soot Level
003720	Calculated Ash Level
003822	Rear EGR Valve Position Signal
003936	DPF Fault Occurrences
004077	Fuel Dosing Outlet Pressure Signal
004490	Intake Air Humidity
004765	DOC Inlet Temperature
004766	DOC Outlet Temperature
004795	DPF Missing
005018	DOC Fault Occurrences
005125	Sensor Supply #7 Voltage
005126	Sensor Supply #8 Voltage
005298	DOC Fault Occurrences
005456	Fuel Dosing Inlet Temperature Signal
522458	Fuel Dosing Pump Data
522494	Intake Air Sensor Communication
522495	Exhaust Filter Temperature Module
523379	Single Point Ground #7

ProCarManuals.com

https://truckmanualshub.com/

FAILURE MODE IDENTIFIER (FMI) CODES

FMI Code	FMI Name
00	Extremely High
01	Extremely Low
02	Invalid
03	Out Of Range High
04	Out Of Range Low
05	High Resistance
06	Low Resistance
07	Mismatch
08	Signal Missing
09	Loss Of Communication
10	Change Abnormal

FMI Code	FMI Name
11	Activated
12	Error
13	Fault
14	Incorrect Message
15	Slightly High
16	Moderately High
17	Slightly Low
18	Moderately Low
19	Communication Error
31	Condition Exists

ProCarManuals.com

https://truckmanualshub.com/

Hydraulic Schematic

for Two-Joystick Control without PWP

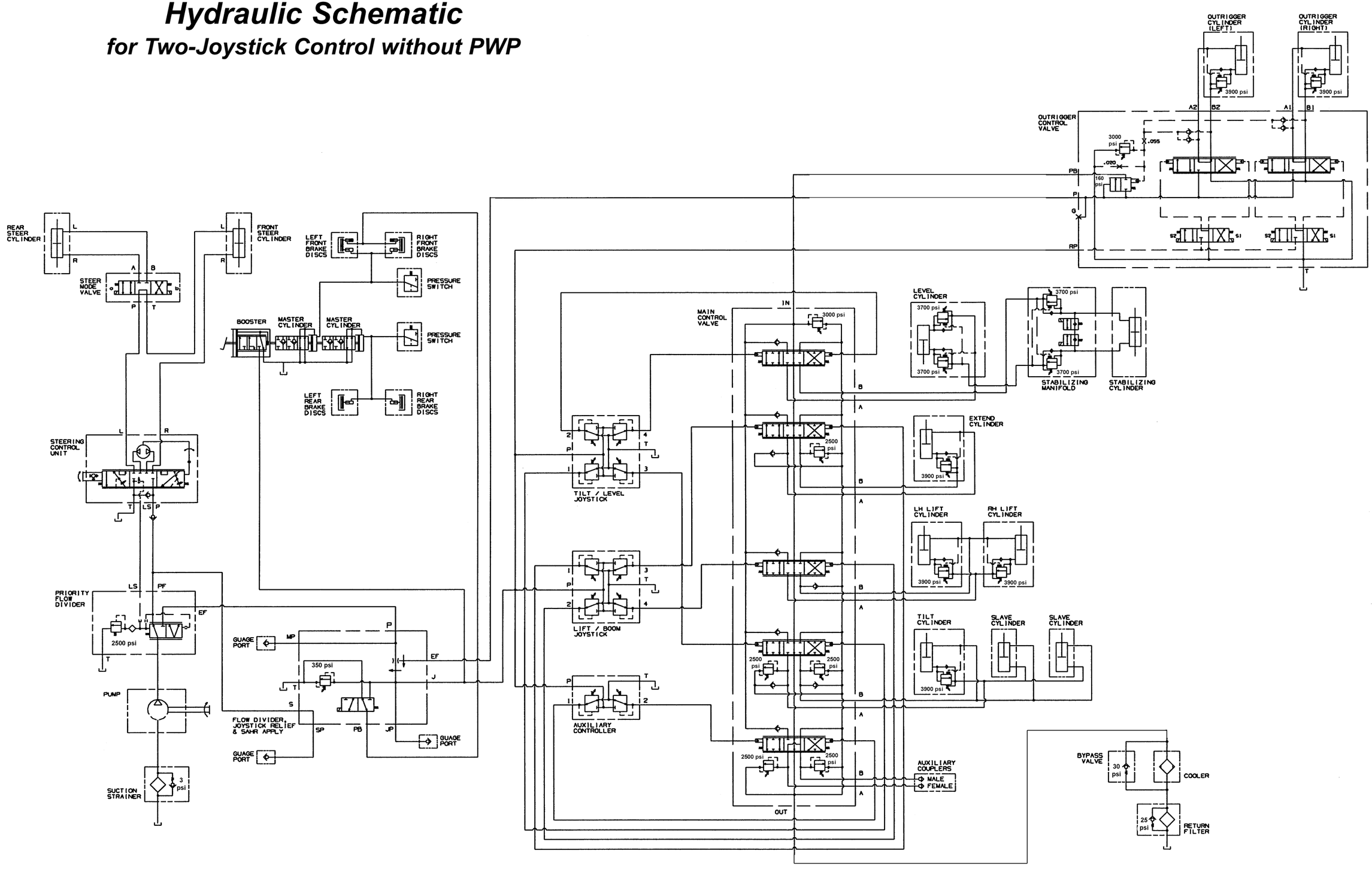

ProCarManuals.com

https://truckmanualshub.com/

Hydraulic Schematic

for Two-Joystick Control with PWP

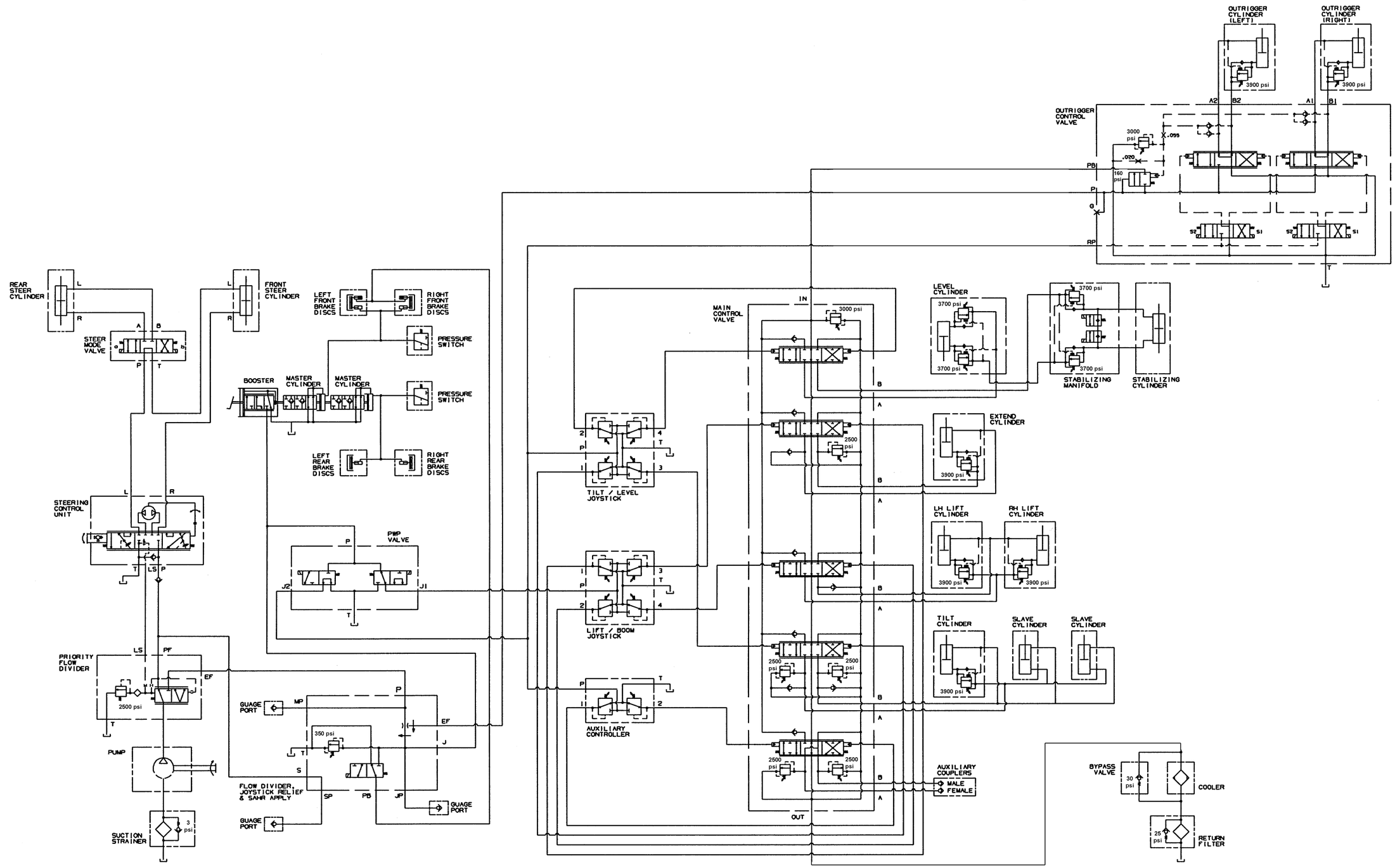

ProCarManuals.com

https://truckmanualshub.com/

Hydraulic Schematic

for Tri-Function Joystick without PWP

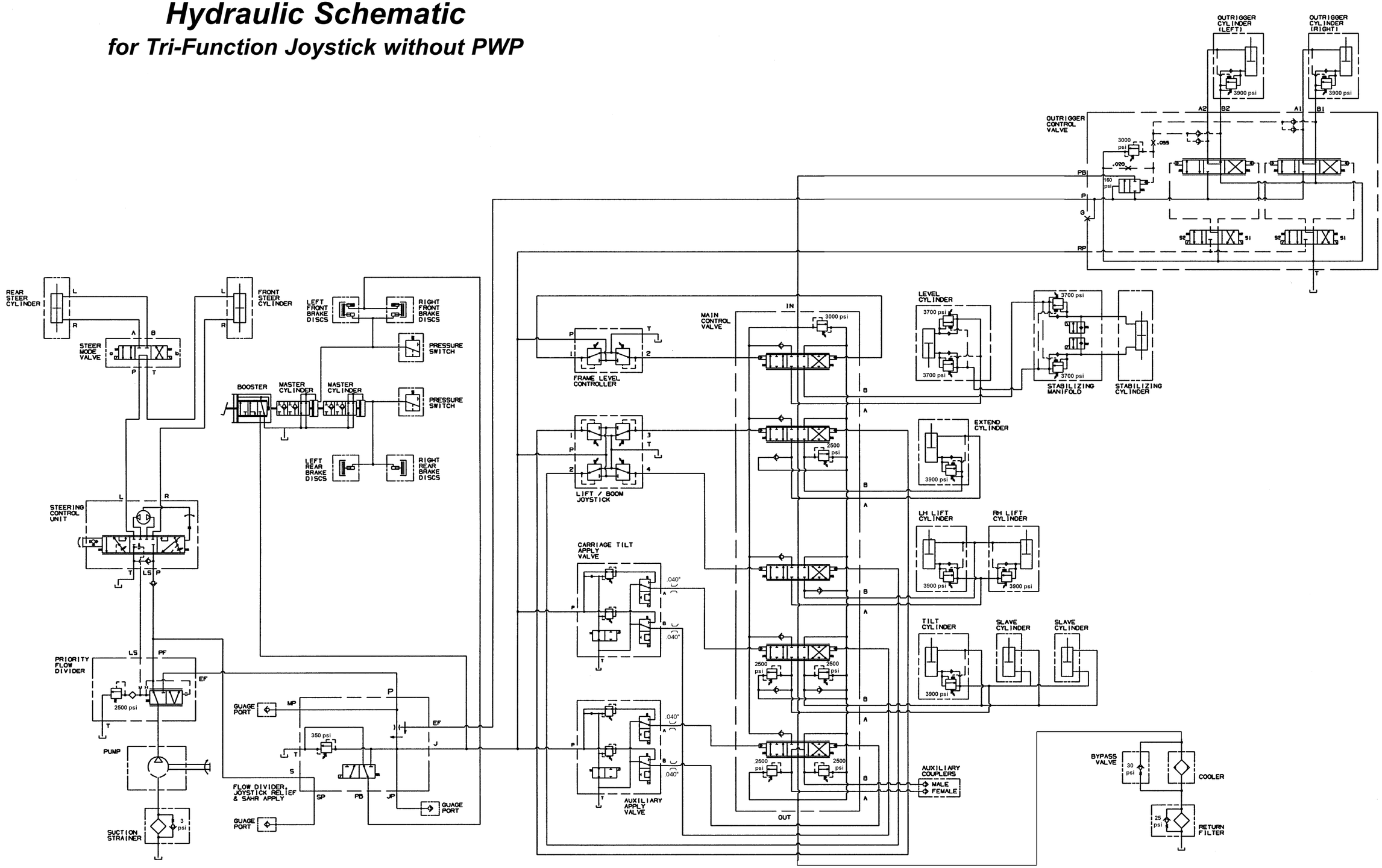

ProCarManuals.com

https://truckmanualshub.com/

Hydraulic Schematic

for Tri-Function Joystick with PWP

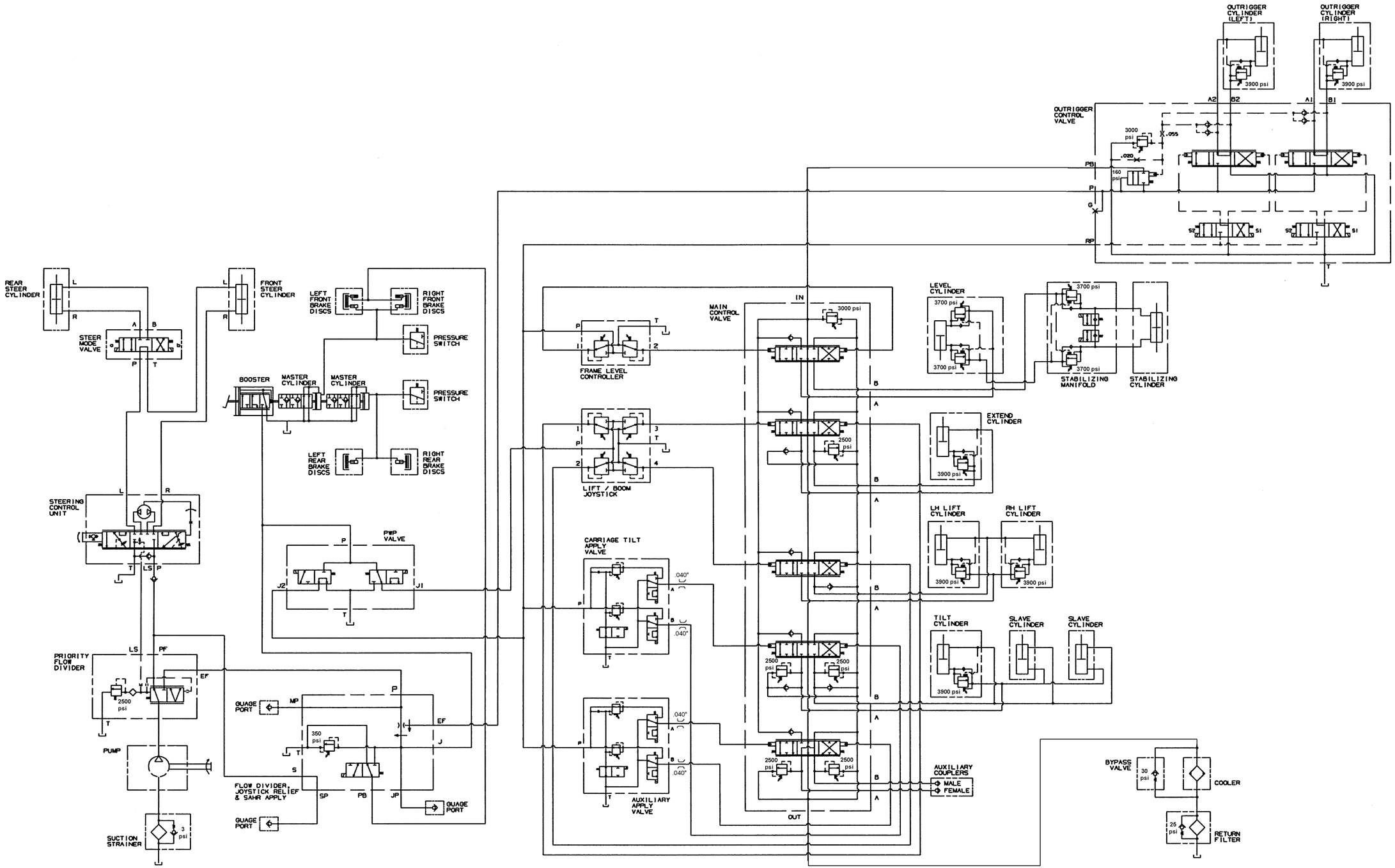

ProCarManuals.com

Electrical Schematic with Radio Remote

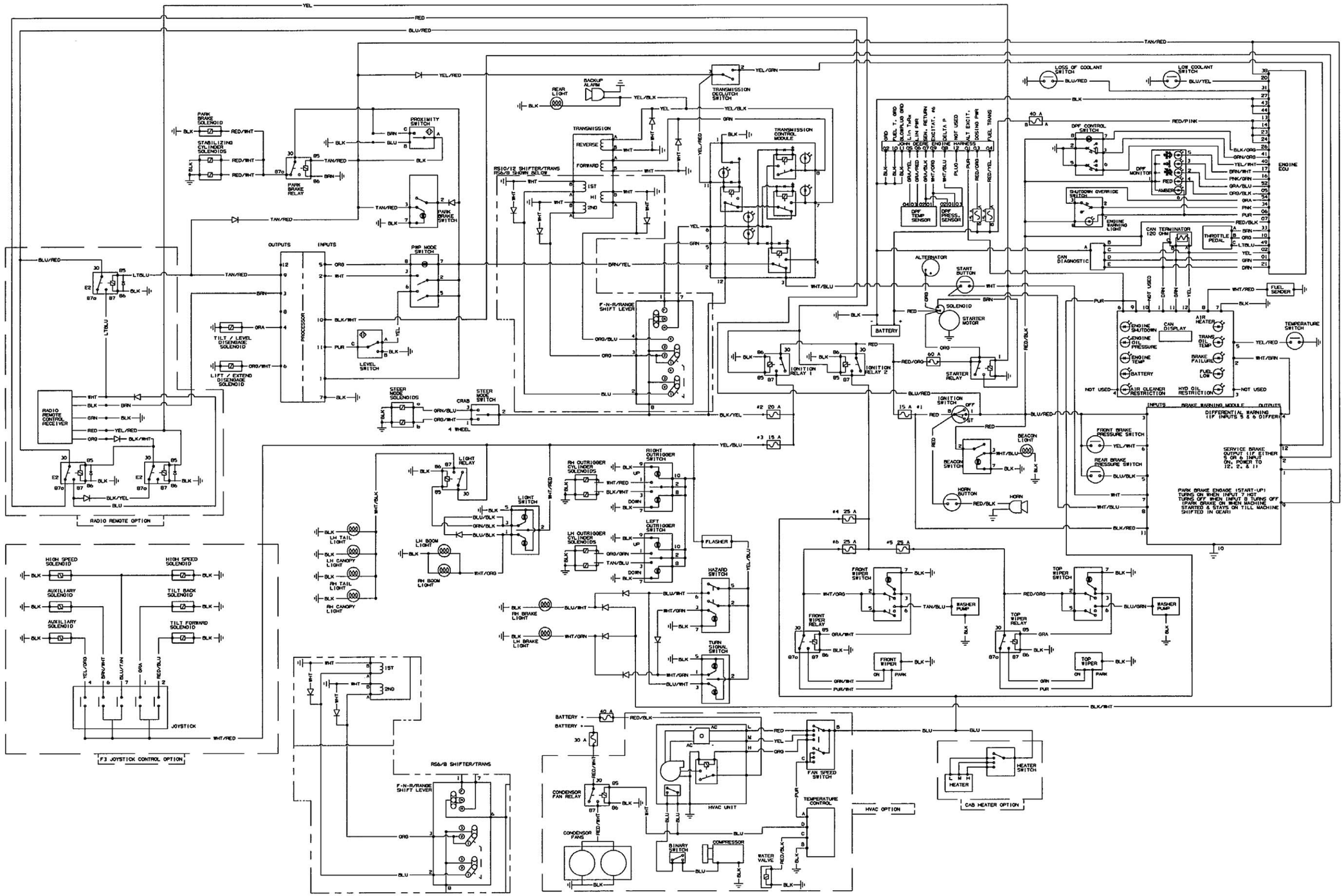

ProCarManuals.com

https://truckmanualshub.com/

Electrical Schematic without Radio Remote

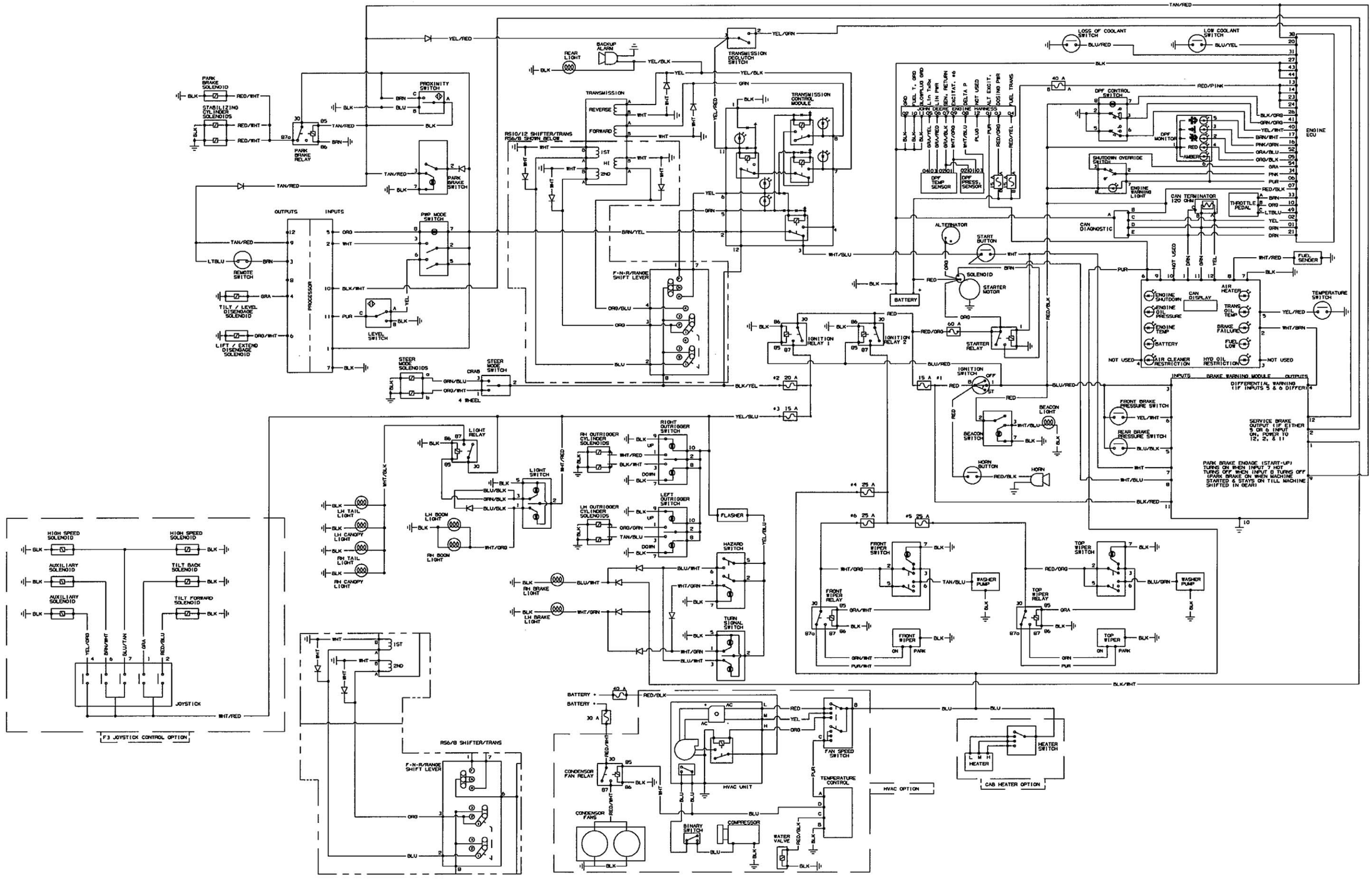

ProCarManuals.com

https://truckmanualshub.com/

INTENTIONALLY BLANK

ProCarManuals.com

https://truckmanualshub.com/

Load Zone Charts
MT6642XT

Decal 808019
Standard Carriage

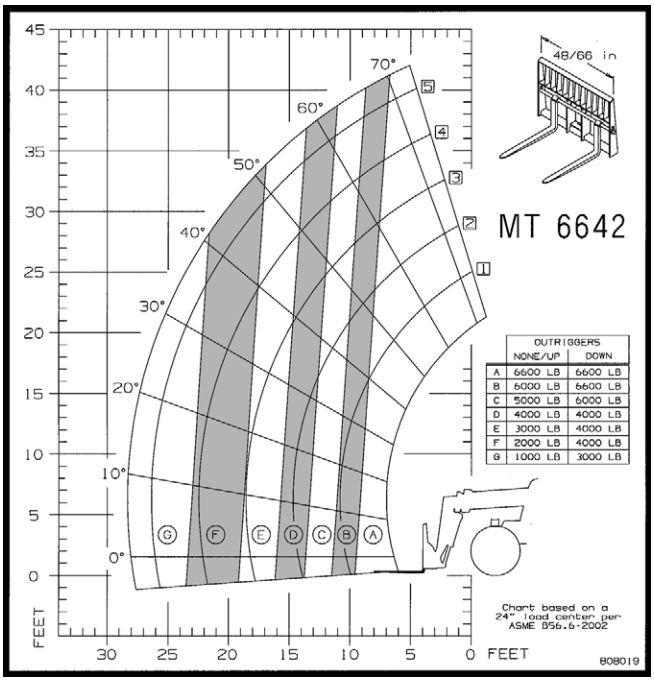

OUTRIGGERS	NONE/UP	DOWN
A	6600 LB	6600 LB
B	6000 LB	6600 LB
C	5000 LB	6000 LB
D	4000 LB	4000 LB
E	3000 LB	4000 LB
F	2000 LB	4000 LB
G	1000 LB	3000 LB

Decal 808017
1.3-Cu.-Yd. Bucket

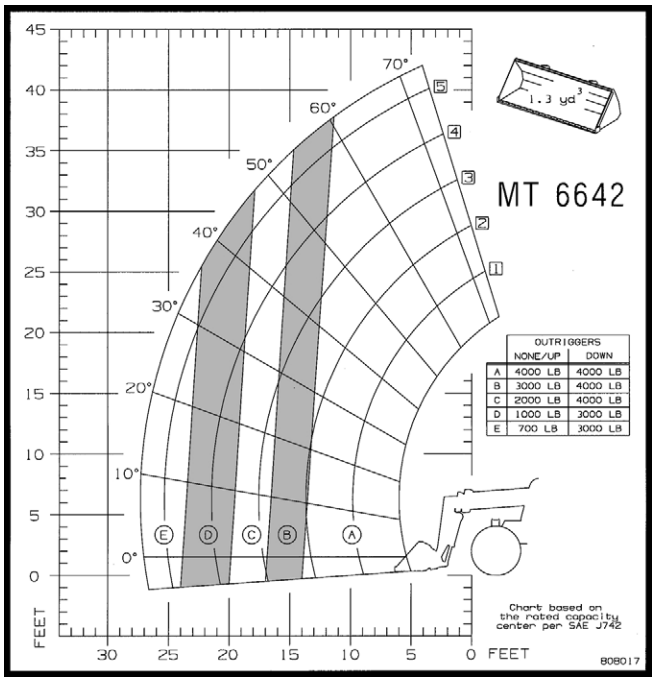

OUTRIGGERS	NONE/UP	DOWN
A	4000 LB	4000 LB
B	3000 LB	4000 LB
C	2000 LB	4000 LB
D	1000 LB	3000 LB
E	700 LB	3000 LB

Decal 808018
Rotating Carriage

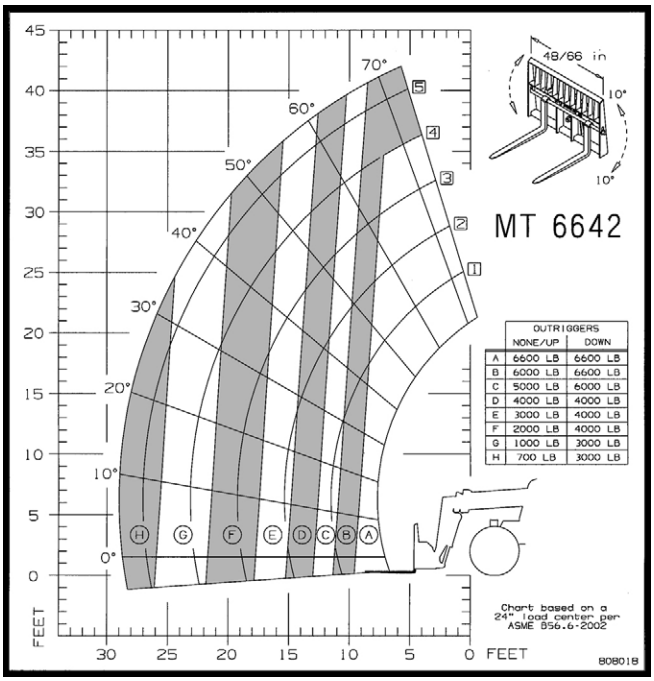

OUTRIGGERS	NONE/UP	DOWN
A	6600 LB	6600 LB
B	6000 LB	6600 LB
C	5000 LB	6000 LB
D	4000 LB	4000 LB
E	3000 LB	4000 LB
F	2000 LB	4000 LB
G	1000 LB	3000 LB
H	700 LB	3000 LB

Decal 808016
12-Ft. Truss Boom

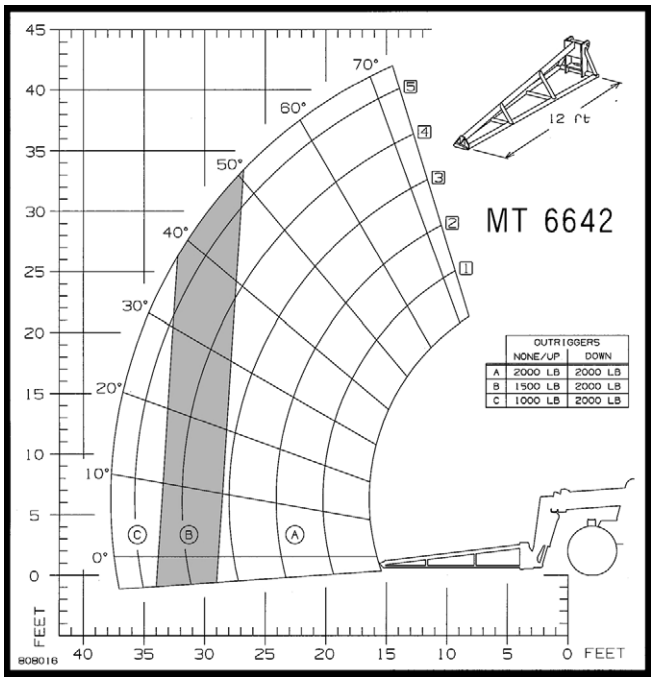

OUTRIGGERS	NONE/UP	DOWN
A	2000 LB	2000 LB
B	1500 LB	2000 LB
C	1000 LB	2000 LB

ProCarManuals.com

https://truckmanualshub.com/

Load Zone Charts
MT6642XT

Decal 808015
5-Ft. Winch Boom

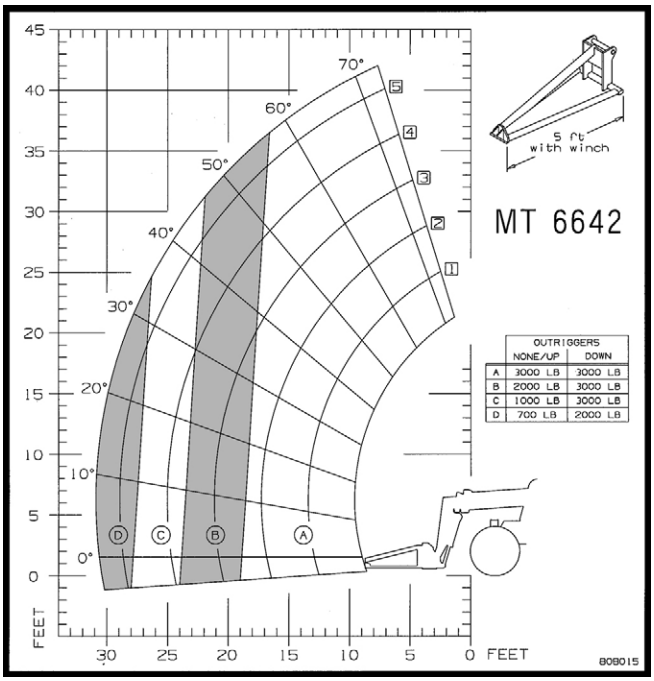

Decal 50380927
90° Swing Carriage

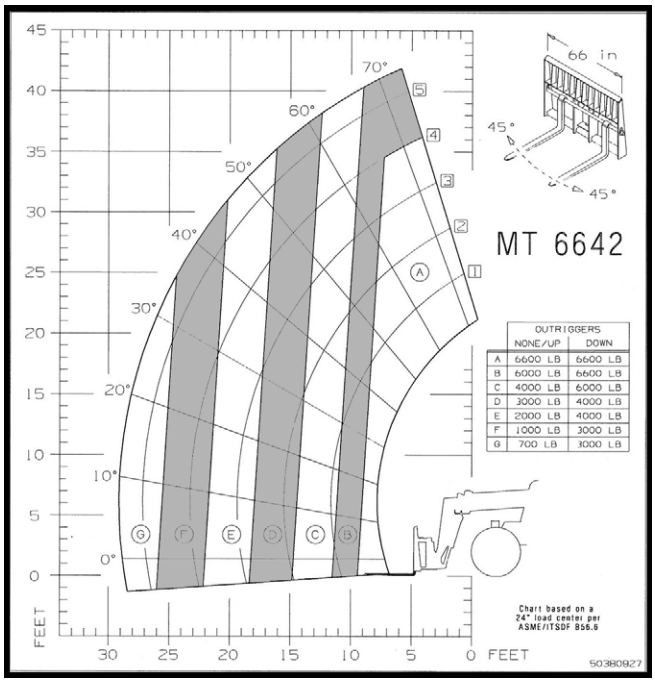

Decal 808014
PWP

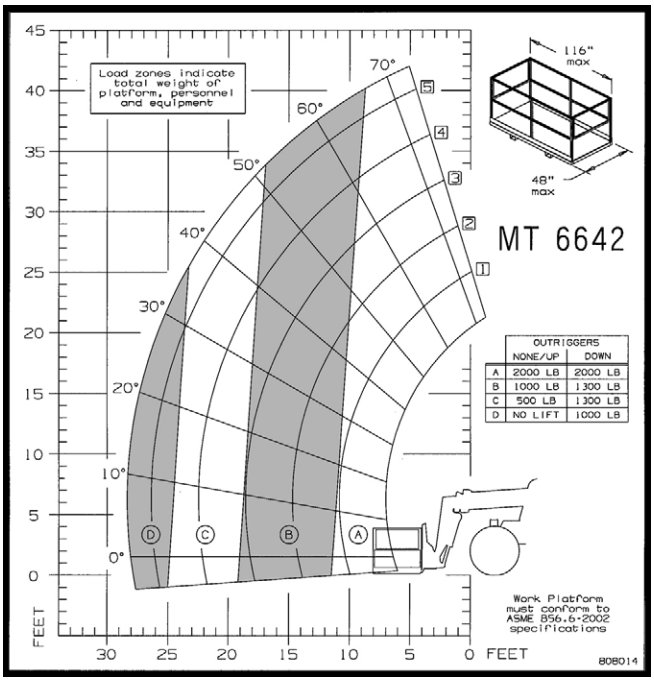

ProCarManuals.com

https://truckmanualshub.com/

Load Zone Charts
MT8044XT

Decal 808013
Standard Carriage

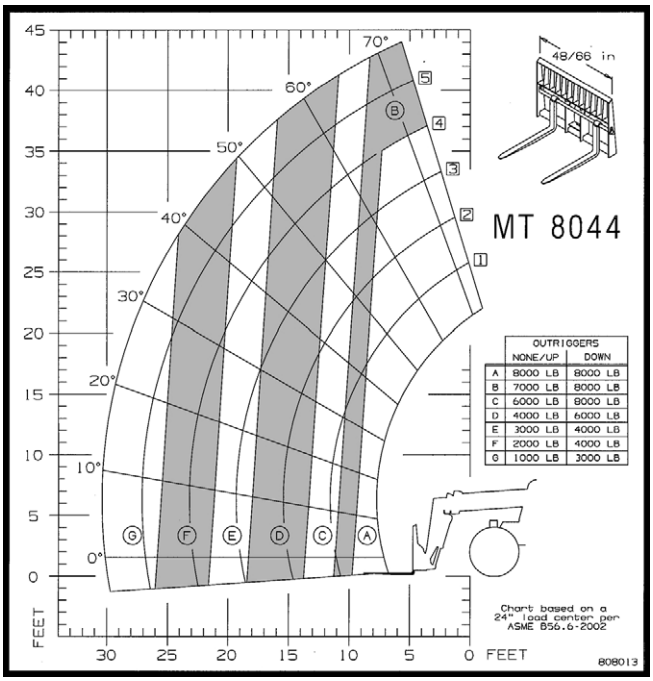

Decal 808011
1.3-Cu.-Yd. Bucket

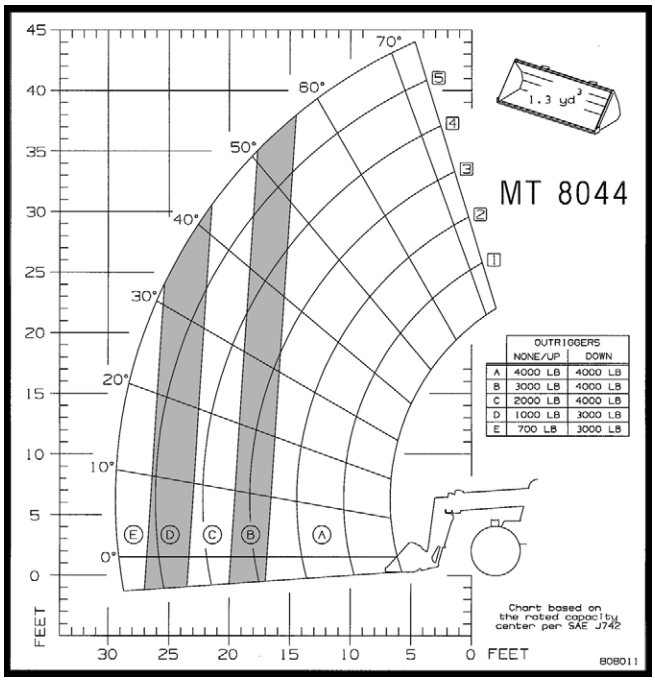

Decal 808012
Rotating Carriage

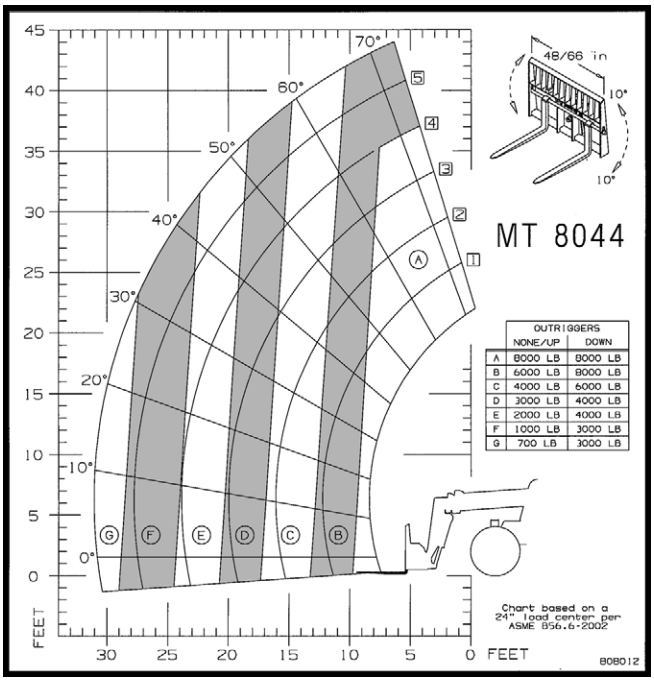

Decal 808010
15-Ft. Truss Boom

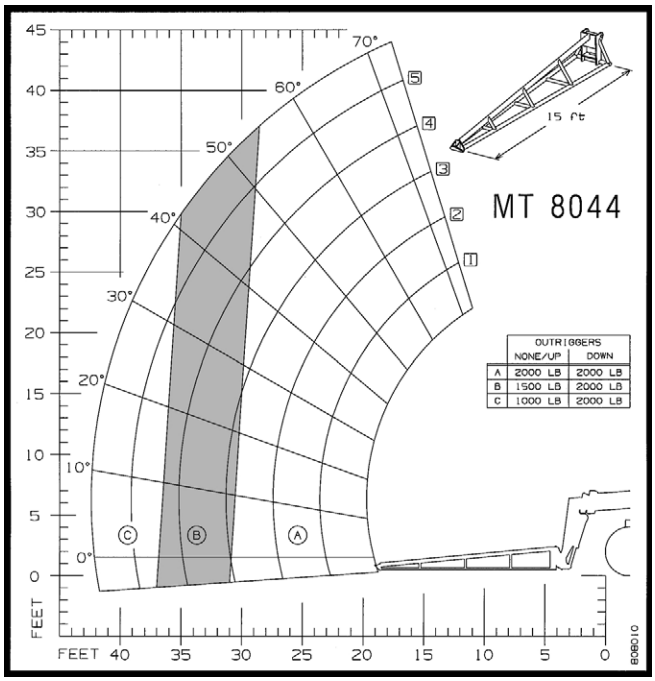

ProCarManuals.com

https://truckmanualshub.com/

Load Zone Charts
MT8044XT

Decal 808009
5-Ft. Winch Boom

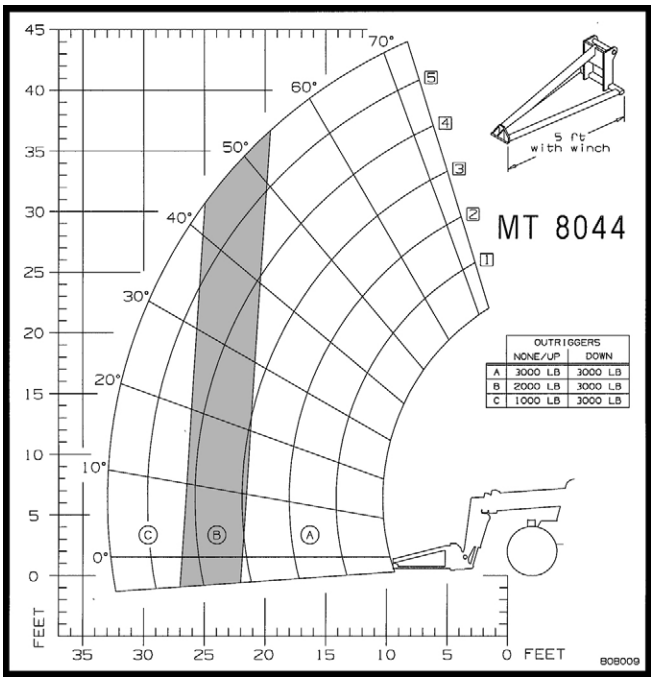

Decal 808008
90° Swing Carriage

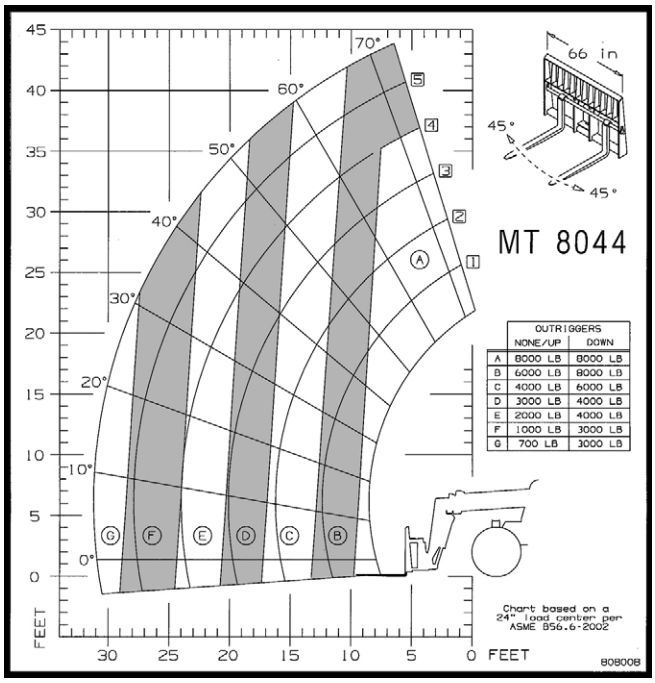

Decal 808007
PWP

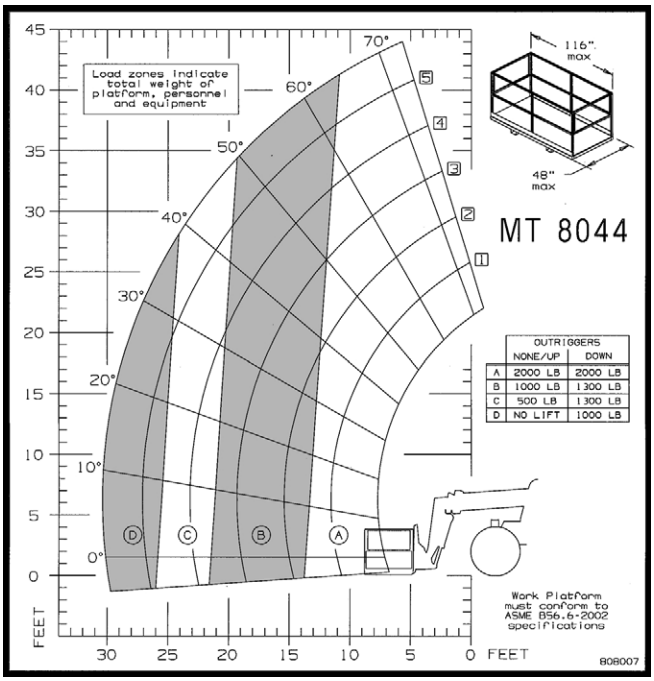

ProCarManuals.com

https://truckmanualshub.com/

Load Zone Charts
MT10044XT

Standard Carriage
Decal 50380393

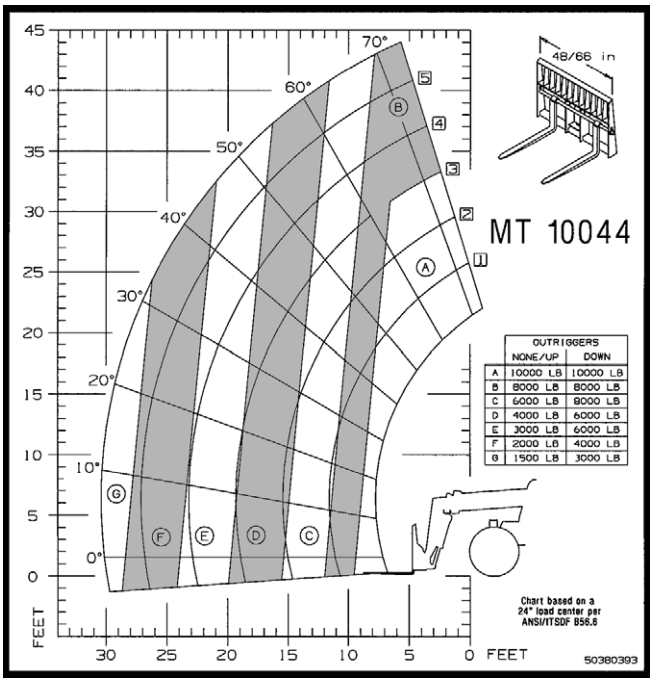

1.3-Cu.-Yd. Bucket
Decal 50380397

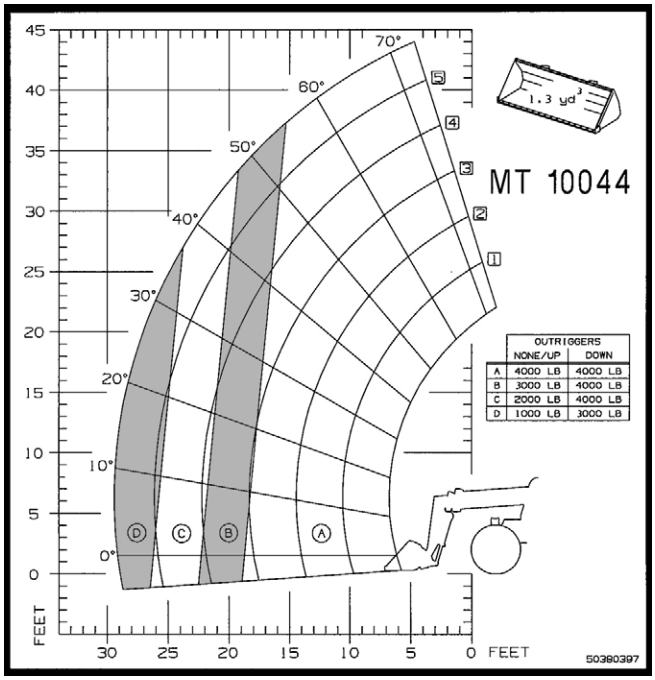

Rotating Carriage
Decal 50380398

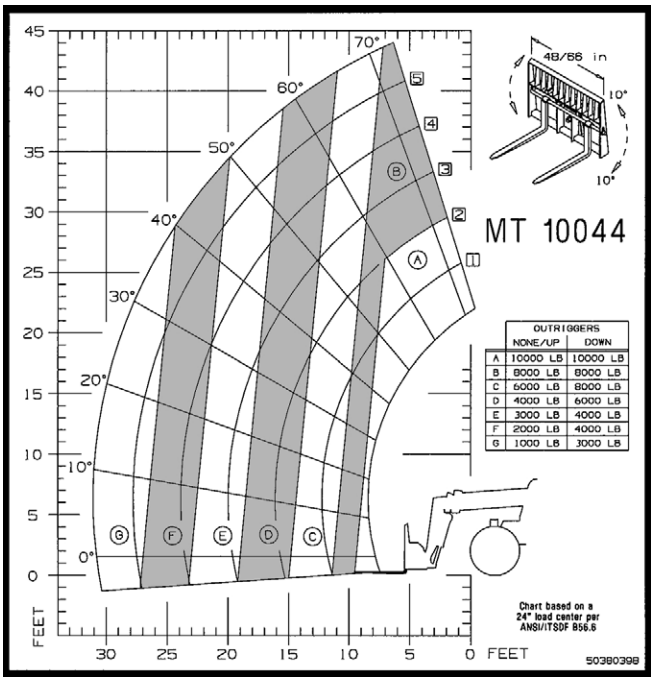

15-Ft. Truss Boom
Decal 50380400

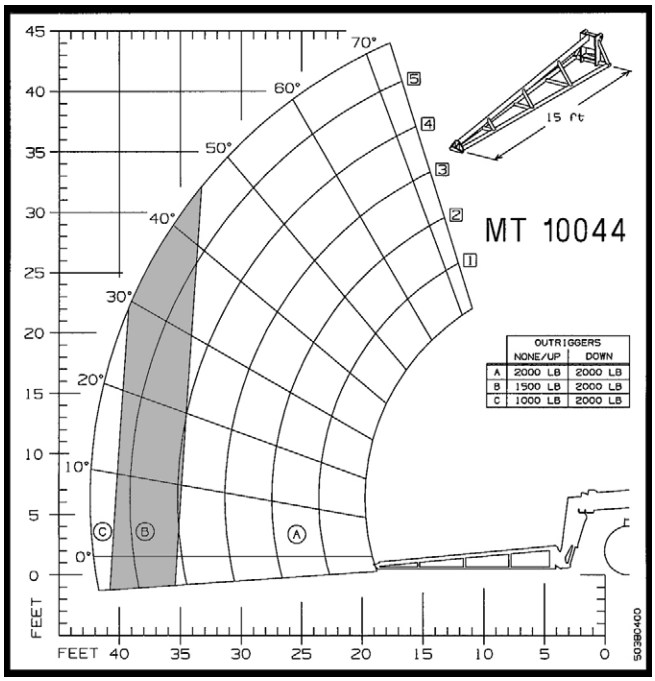

ProCarManuals.com

https://truckmanualshub.com/

Load Zone Charts
MT10044XT

Winch Boom
Decal 50380396

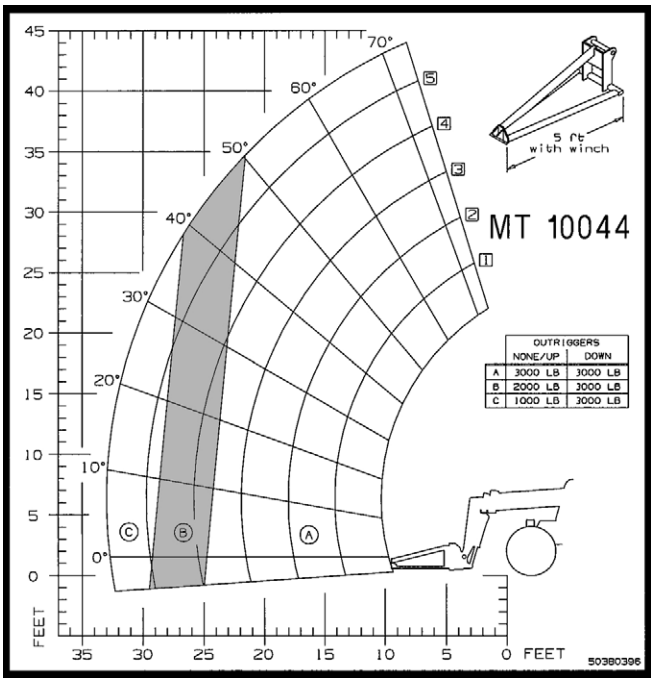

90° Swing Carriage
Decal 50380394

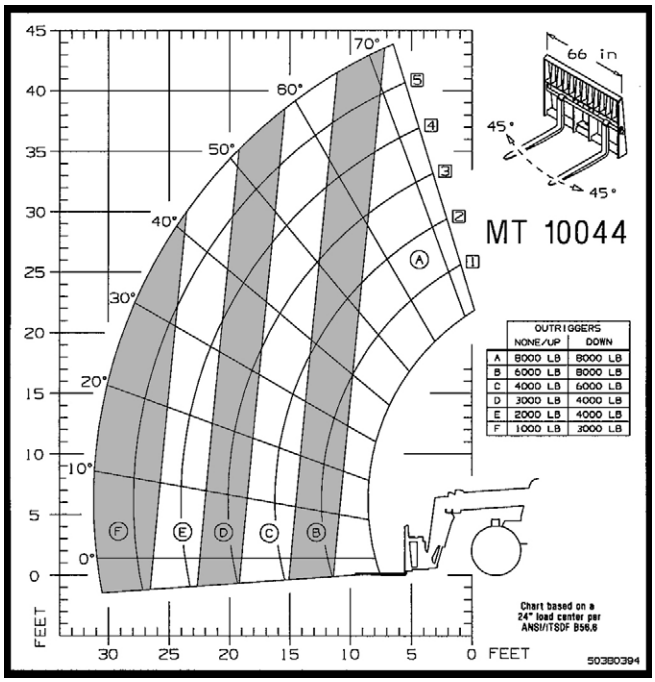

180° Swing Carriage
Decal 50380395

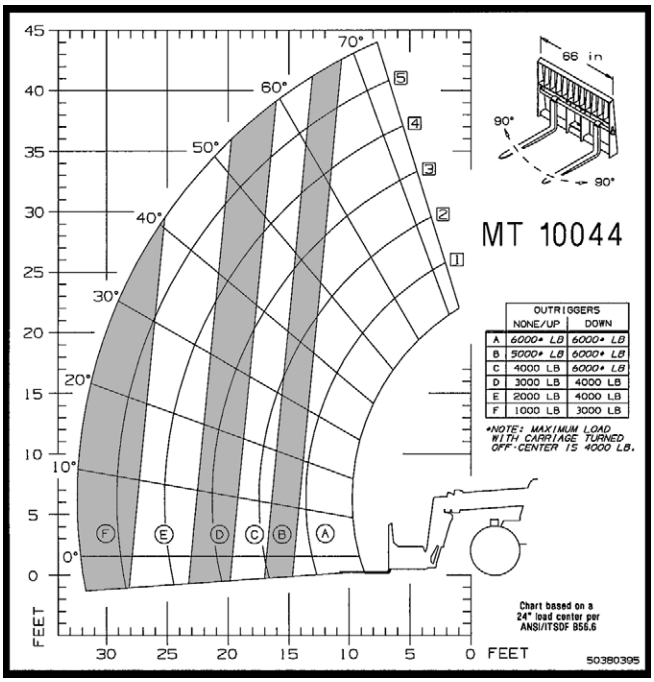

Work Platform
Decal 50380399

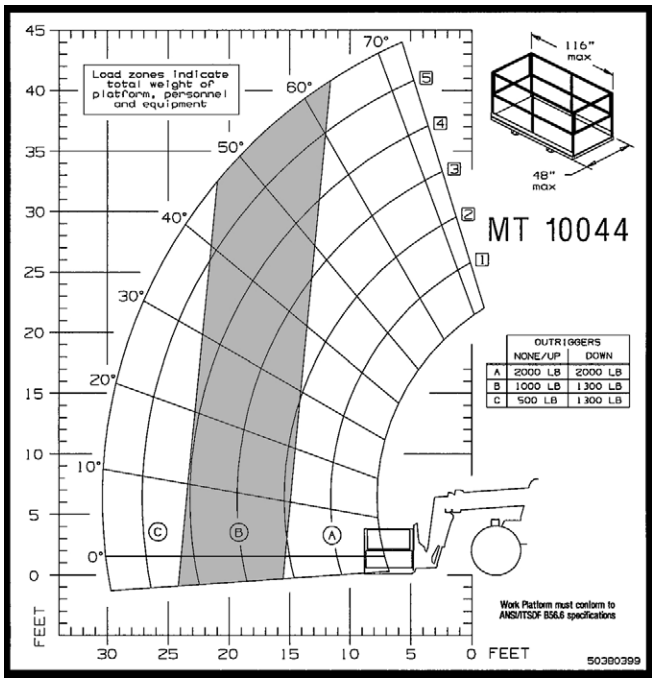

ProCarManuals.com

https://truckmanualshub.com/

Load Zone Charts
MT12042XT

Standard Carriage
Decal 50380401

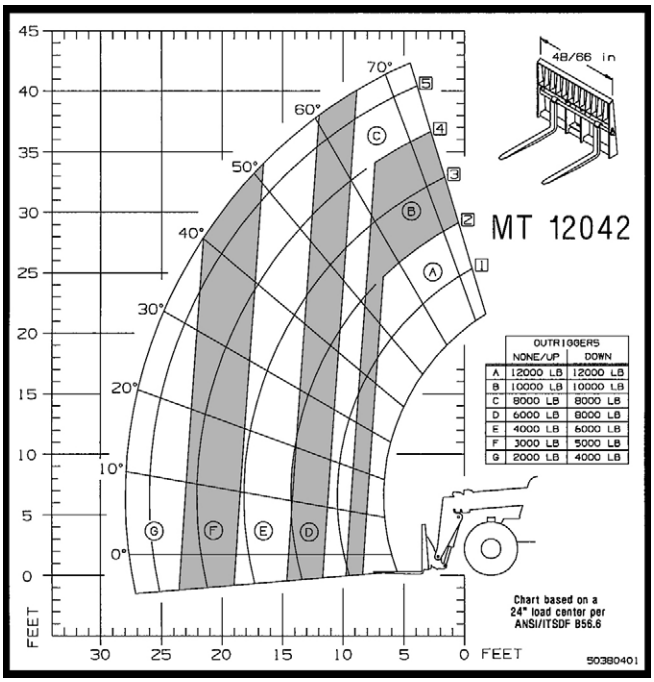

	OUTRIGGERS NONE/UP	DOWN
A	12000 LB	12000 LB
B	10000 LB	10000 LB
C	8000 LB	8000 LB
D	6000 LB	8000 LB
E	4000 LB	6000 LB
F	3000 LB	5000 LB
G	2000 LB	4000 LB

Rotate Carriage
Decal 50380403

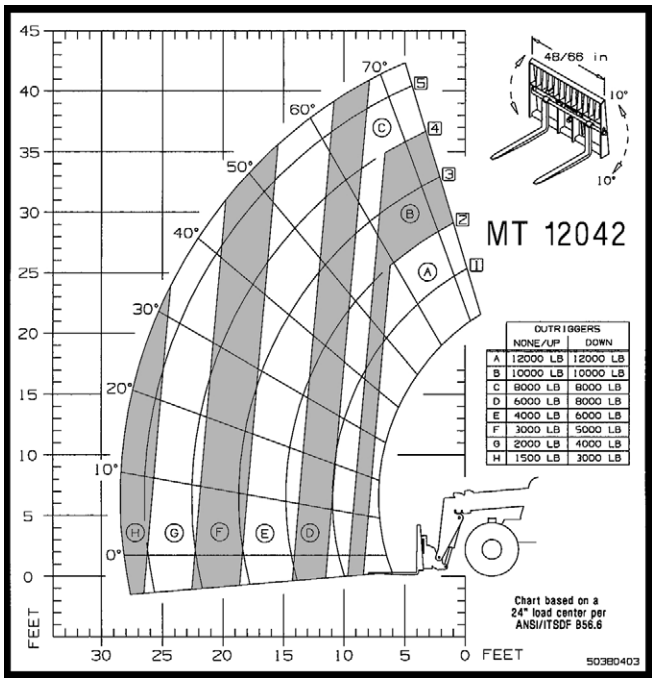

	OUTRIGGERS NONE/UP	DOWN
A	12000 LB	12000 LB
B	10000 LB	10000 LB
C	8000 LB	8000 LB
D	6000 LB	8000 LB
E	4000 LB	6000 LB
F	3000 LB	5000 LB
G	2000 LB	4000 LB
H	1500 LB	3000 LB

90° Swing Carriage
Decal 50380402

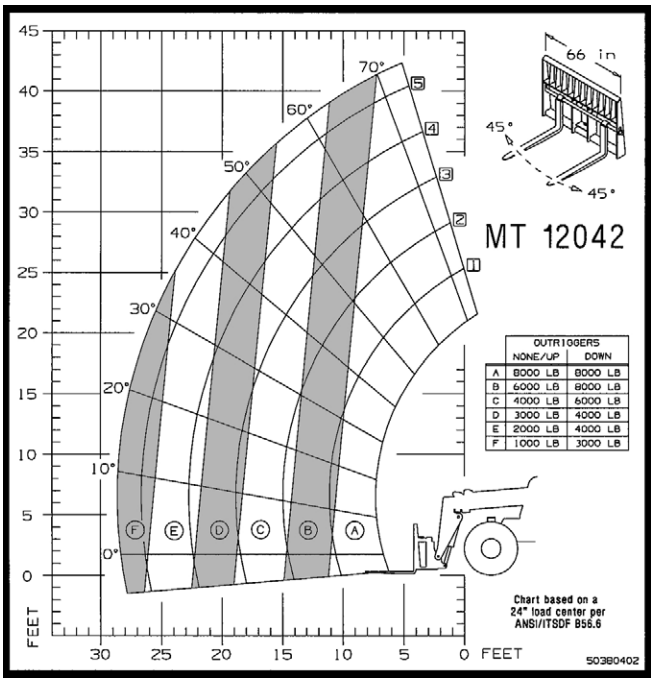

	OUTRIGGERS NONE/UP	DOWN
A	8000 LB	8000 LB
B	6000 LB	8000 LB
C	4000 LB	6000 LB
D	3000 LB	4000 LB
E	2000 LB	4000 LB
F	1000 LB	3000 LB

1.3-Cu.-Yd. Bucket
Decal 50380404

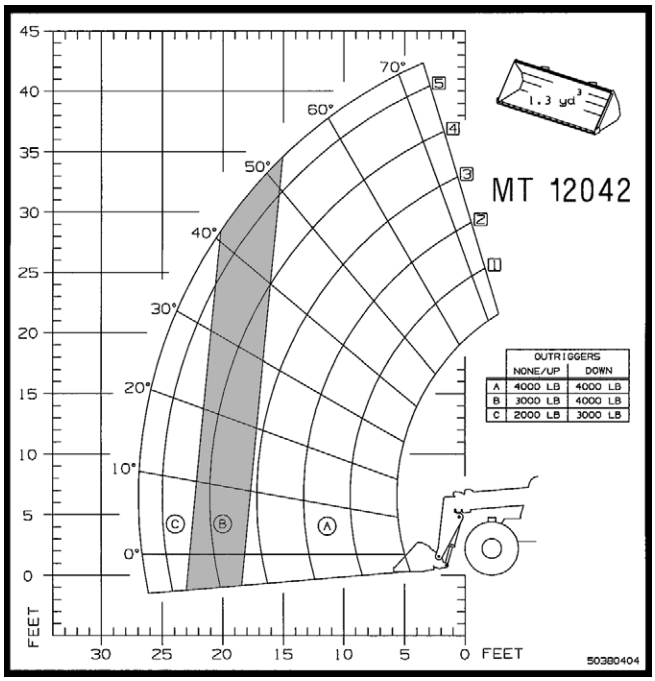

	OUTRIGGERS NONE/UP	DOWN
A	4000 LB	4000 LB
B	3000 LB	4000 LB
C	2000 LB	3000 LB

ProCarManuals.com

https://truckmanualshub.com/

Load Zone Charts
MT12042XT

Winch
Decal 50380405

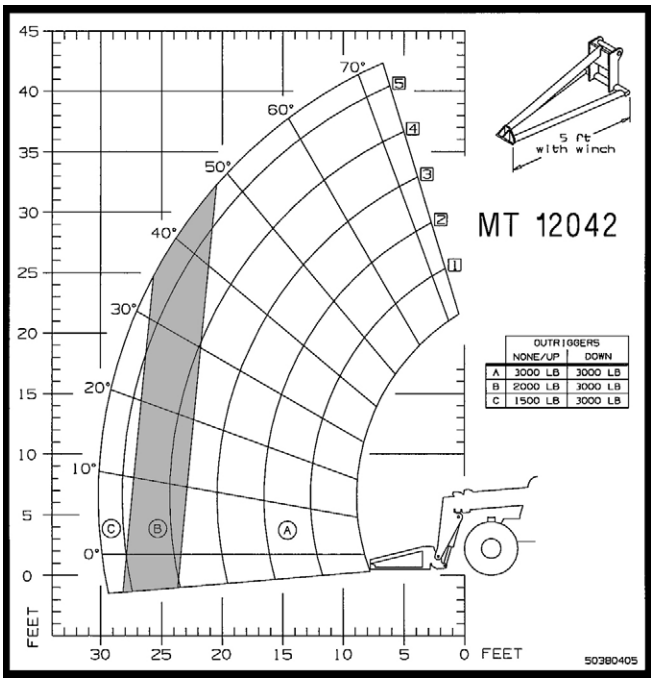

15-Ft. Truss Boom
Decal 50380407

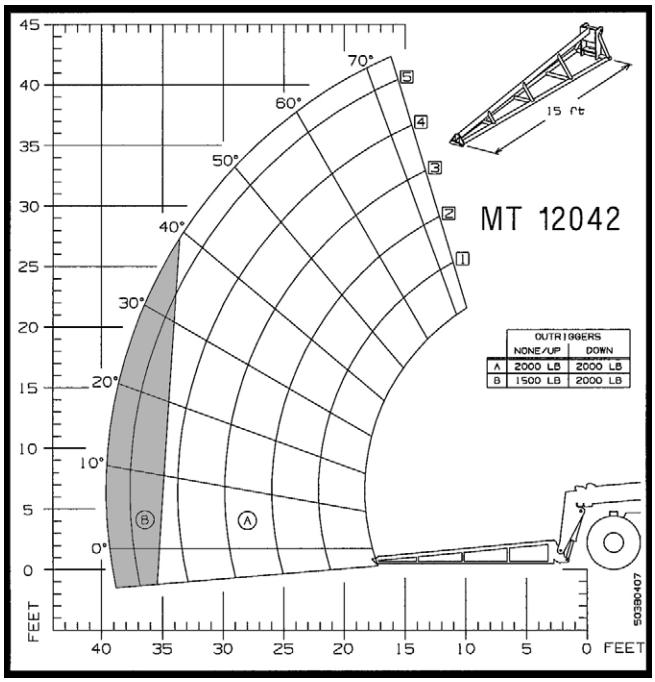

180° Swing Carriage
Decal 50380408

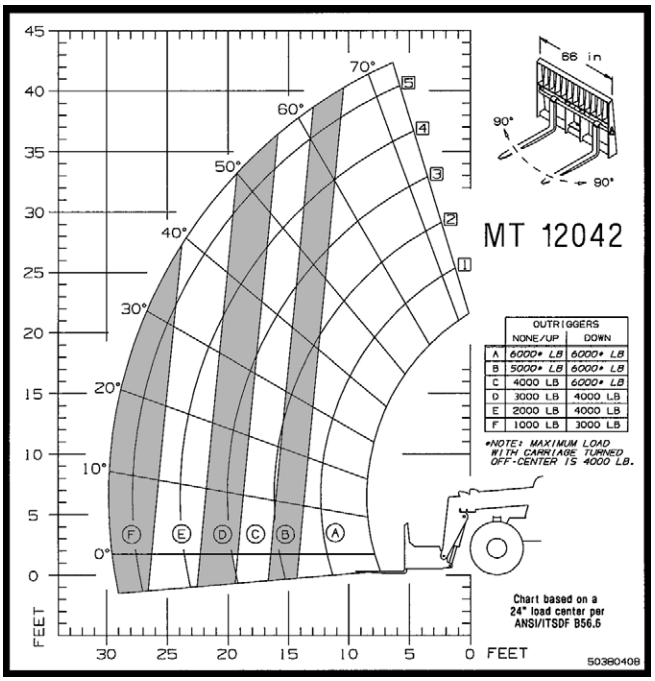

Work Platform
Decal 50380406

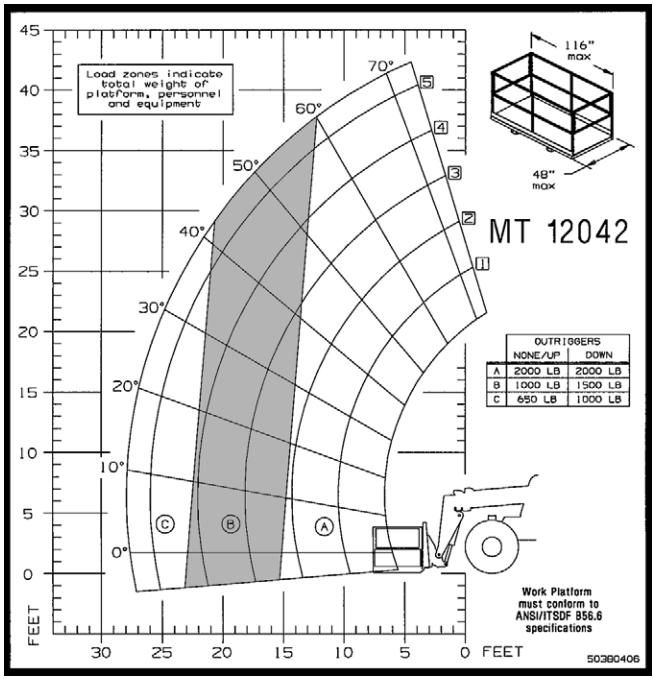

ProCarManuals.com

https://truckmanualshub.com/

Load Zone Charts
MT10055XT

Standard Carriage - Outriggers Up
Decal 50380035

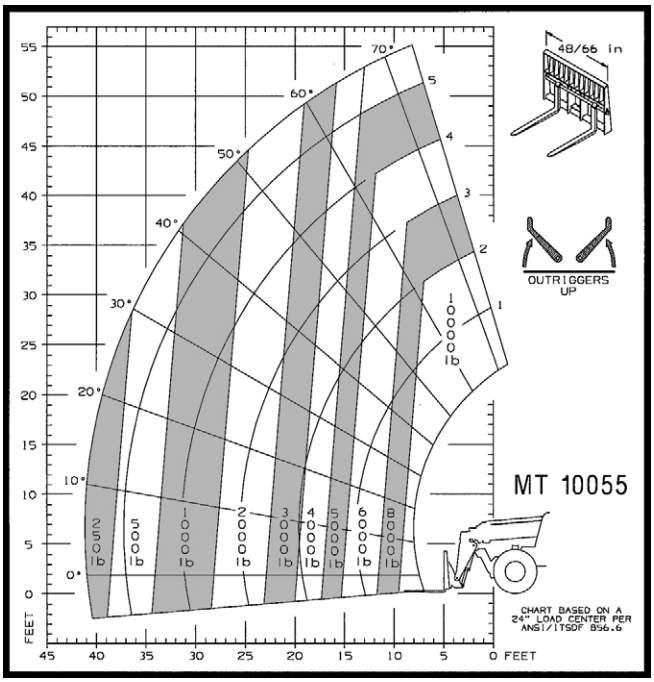

Standard Carriage - Outriggers Down
Decal 50380036

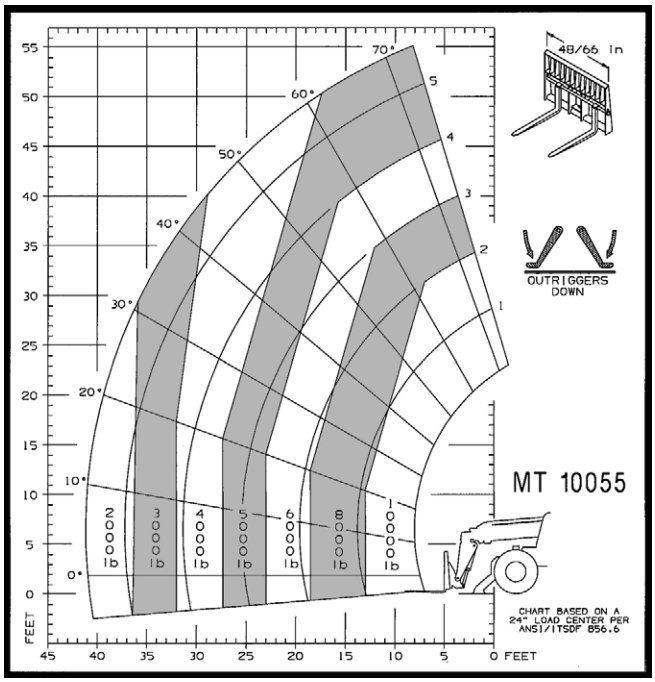

Rotate Carriage - Outriggers Up
Decal 50380037

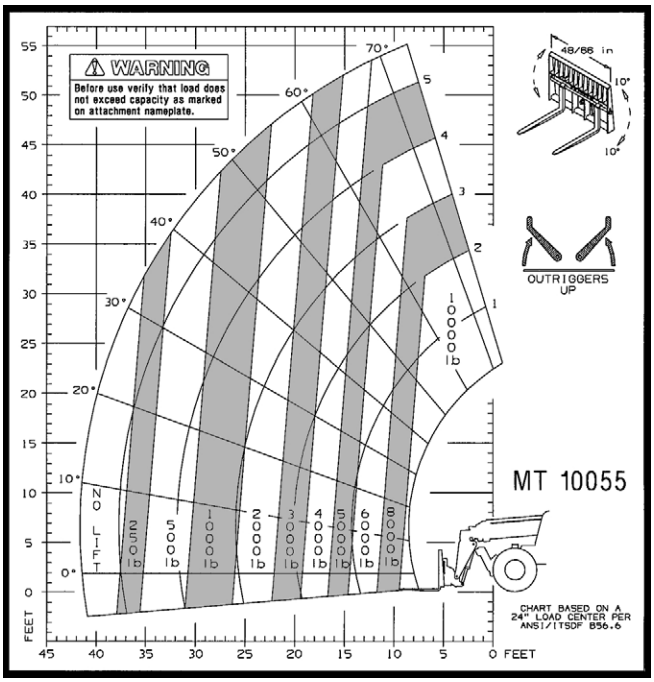

Rotate Carriage - Outriggers Down
Decal 50380038

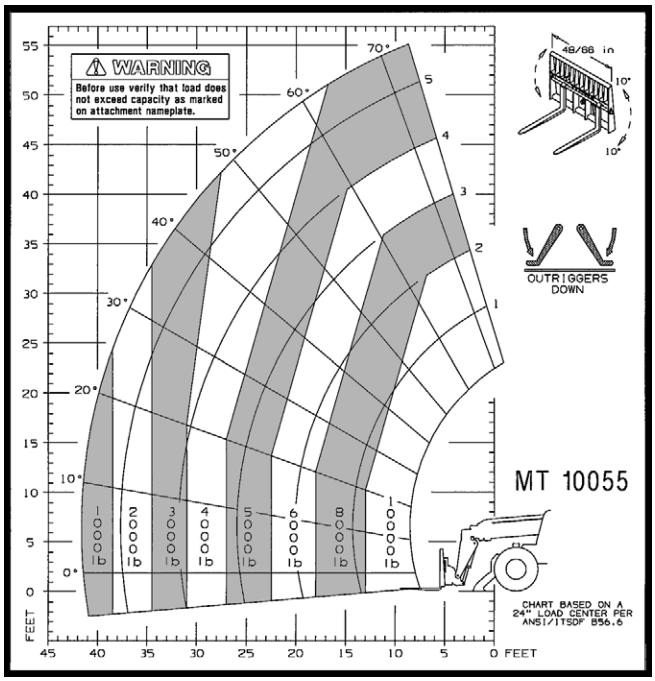

ProCarManuals.com

https://truckmanualshub.com/

Load Zone Charts
MT10055XT

Swing Carriage
Decal 50380039

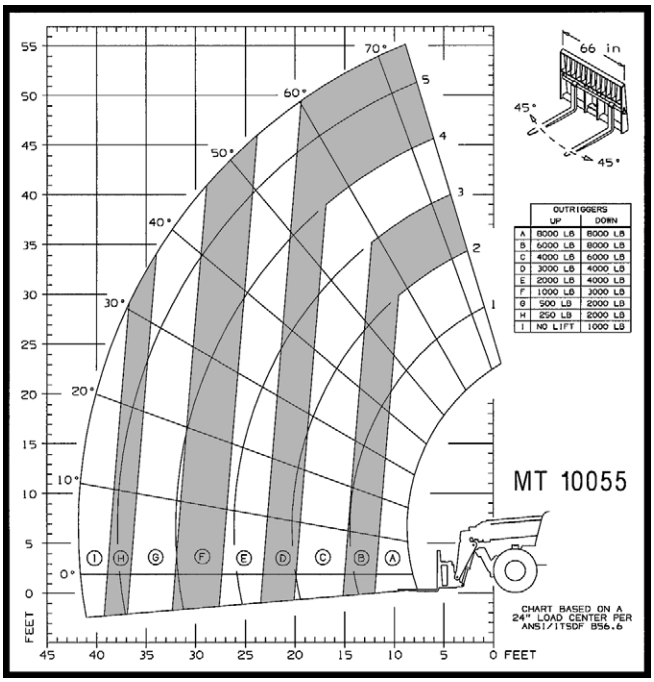

1.3-Cu.-Yd. Bucket
Decal 50380042

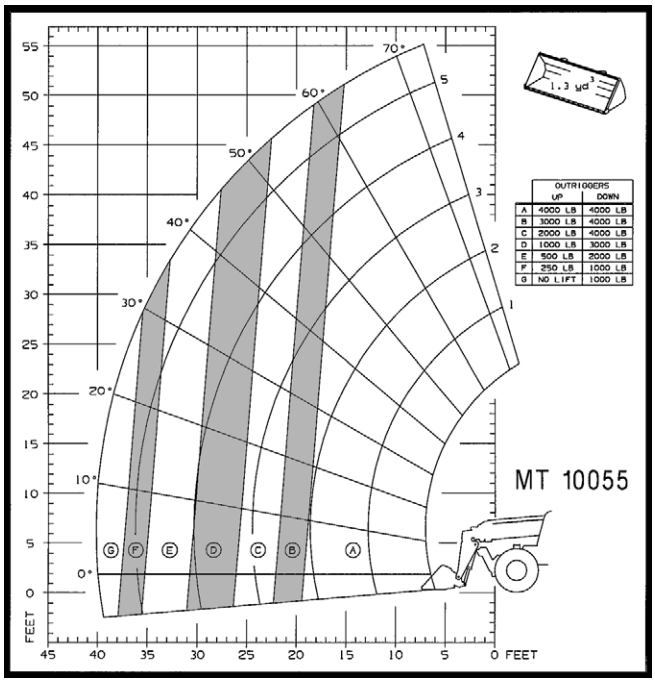

Winch
Decal 50380040

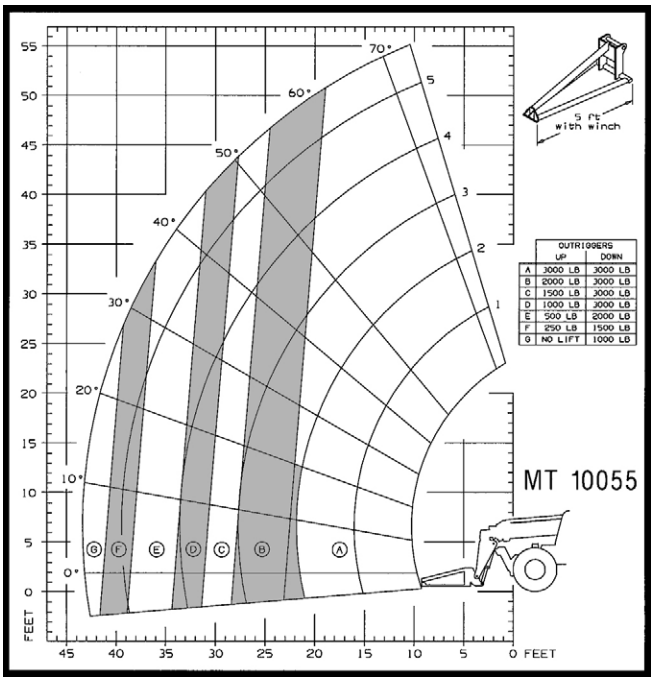

15-Ft. Truss Boom
Decal 50380041

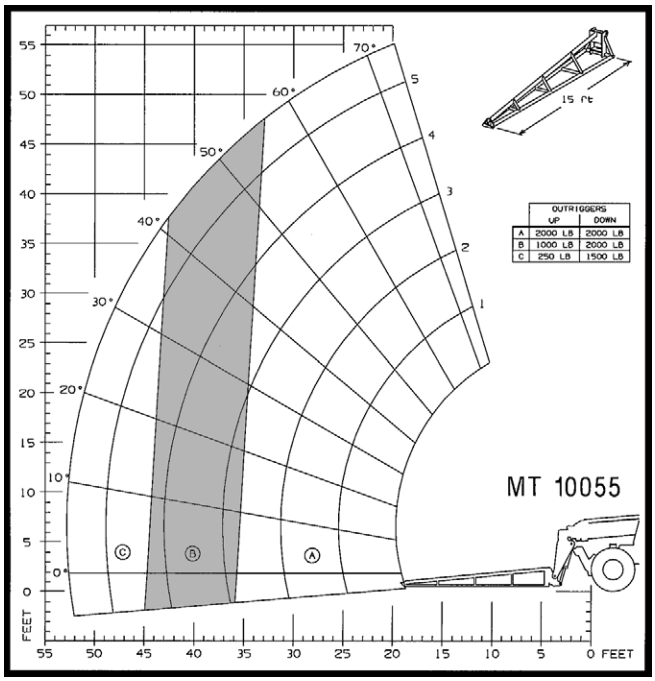

ProCarManuals.com

https://truckmanualshub.com/

Load Zone Charts
MT10055XT

Work Platform
Decal 50380043

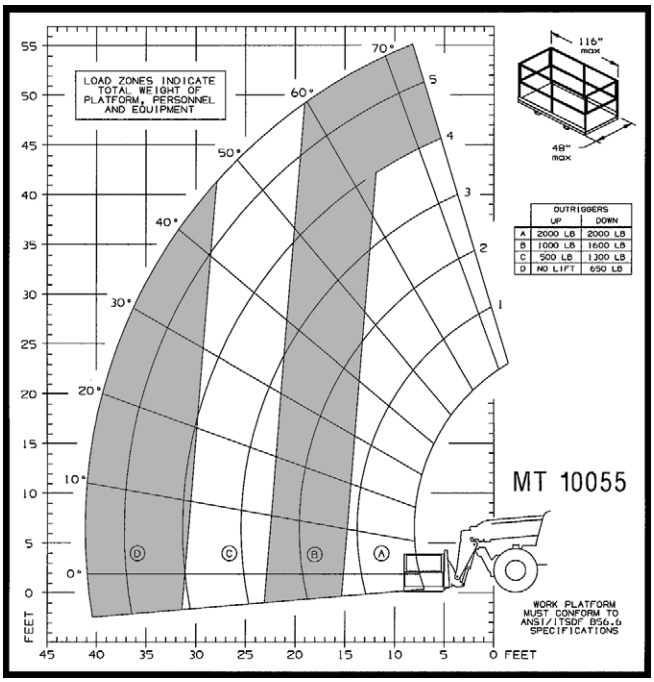

ProCarManuals.com

https://truckmanualshub.com/

Torque Specifications

Use these torque values when tightening Manitou Americas hardware (excluding: locknuts and self-tapping, thread-forming and metal screws) unless otherwise specified.

Unified National Thread	Grade 2		Grade 5		Grade 8	
	Dry	Lubed	Dry	Lubed	Dry	Lubed
8-32	19*	14*	30*	22*	41*	31*
8-36	20*	15*	31*	23*	43*	32*
10-24	27*	21*	43*	32*	60*	45*
10-32	31*	23*	49*	36*	68*	51*
1/4-20	66*	50*	9	75*	12	9
1/4-28	76*	56*	10	86*	14	10
5/16-18	11	9	17	13	25	18
5/16-24	12	9	19	14	25	20
3/8-16	20	15	30	23	45	35
3/8-24	23	17	35	25	50	35
7/16-14	32	24	50	35	70	55
7/16-20	36	27	55	40	80	60
1/2-13	35	35	75	55	110	80
1/2-20	40	40	90	65	120	90
9/16-12	55	55	110	80	150	110
9/16-18	60	60	120	90	170	130
5/8-11	75	75	150	110	220	170
5/8-18	85	85	180	130	240	180
3/4-10	130	130	260	200	380	280
3/4-16	150	150	300	220	420	320
7/8-9	125	125	430	320	600	460
7/8-14	140	140	470	360	660	500
1-8	190	190	640	480	900	680
1-14	210	210	710	530	1000	740

Metric Course Thread	Grade 8.8		Grade 10.9		Grade 12.9	
	Dry	Lubed	Dry	Lubed	Dry	Lubed
M6-1	8	6	11	7	13.5	10*
24M8-1.25	19	14	27	20	32.5	24*
M10-1.5	37.5	28	53	39	64	47
M12-1.75	65	48	91.5	67.5	111.5	82
M14-2	103.5	76.5	145.5	108	176.5	131
M16-2	158.5	117.5	223.5	165.5	271	200

* *All torque values are in lb-ft., except those marked with an *, which are in lb-in.*
For metric torque value (Nm), multiply lb-ft value x 1.355, or lb-in value x 0.113.

ProCarManuals.com

https://truckmanualshub.com/

Index

A

Access To Components Chart 57
Accessories 34
Adjustments
  Slide Pads Clearance 66
  Wheel Lug Nuts Torque 60
Air Conditioner
  Clean Condenser 67
  Clean/Change Cab Ventilation Filter 67
Air Filter
  Restriction Indicator 33
  Change Element 68
Alternator
  Belt Service 70
  Indicator Lamp 25
Anti-freeze - *See* Radiator
Attachment Tools
  Changing 42
  Operating Methods - *See* Chapter 6
Axles
  Description - *See* Chapter 2
  Greasing 54
  See Service
Axle Oil
  Change 69
  Check Levels 62
  Recommended Grades 53

B

Backup Alarm 33
Battery
  Jump Starting 65
  Service 64
Boom Travel
  Function Controls 30, 31
  Function Indicators 32
  Service 65

C

Capacities - *See* Chapter 2
Checklists, delivery and pre-delivery 6, 7
Controls
  Dash 24
  Right Side Panel 29
  Floor and Seat 29
  Function Indicators 32
Crankcase Filter
  Changing Filter Element 69
  Check Open Crankcase Vent 64
Cylinders
  Servicing 56

D

Dealer Services 56
Decal Locations 75
Decals, applying new 74
Dimensions - *See* Chapter 2

E

Electrical Components
  Characteristics - *See* Chapter 2
  Controls and Indicators - *See* Chapter 4
  Servicing 57
Engine
  Cold Start Procedures 38
  Description - *See* Chapter 2
  Diagnostic Trouble Codes 84
  Oil Pressure Lamp 25
  Starting 38
  Temperature Gauge 25
  Temperature Lamp 25
Engine Oil
  Changing 63
  Check Level 59
  Recommended Grades 53
Engine Shutdown Protection
  Engine Coolant Temperature 40
  Engine Oil Pressure 39
  Engine Emergency Override Switch 26
Engine Oil Filter, Replacing 63
Exhaust Filter Gauge Indicator and Switch 25

ProCarManuals.com

https://truckmanualshub.com/

Exhaust Filter Cleaning System 40
Automatic Exhaust Filter Cleaning 40
Manual Exhaust Filter Cleaning 40
Disable Exhaust Filter Cleaning 41
Exhaust Filter Cleaning Precautions 41
Exhaust System, Check 70

F

Fan Belt - *See* Alternator Belt
Frame Level Control 30, 32
Frame Level Indicator 32
Fuel - *See* Separate Engine Manual
Fuel Filter
Changing 62
Check and Drain Water 59
Fuel Gauge 24
Fuel Lamp 25
Fuse Access 34
Fuse Function 34

G

General Load Handling
Load Capacity and Reach 46
General Machine Operation
Grade and Slope Precautions 43
Grade Limits 44
Grease Fittings
Locations 54
Types of Grease 53
Guards 23

H

Handling Non-Suspended Loads
Picking Up the Load 46
Carrying the Load 47
Load Elevation and Placement 47
Handling Suspended Loads
Picking Up Suspended Loads 47
Carrying Suspended Loads 48
Ground Level Suspended Load Placement 48
Elevated Suspended Load Placement 48
Hand Signals 44
Hourmeter 25
Hydraulic Components, servicing 56
Hydraulic Oil
Change 71
Check Level 60
Recommended type 53
Hydraulic Maintenance
Oil Filters, replacing 68
Oil Sump Strainer, replacing 71
Pressure Checks 70
Hydraulic Pump, servicing 56
Hydraulic Valves, servicing 56

I

Identification Reference 3
Indicator Lamps 25
Indicator Symbols . . . . . .Inside Front Cover
Introduction 2

J

Joystick Pressure Setting 70

L

Light Switch 27
Load Zone Charts 94
Lubrication,
See also Service Intervals
Locations 54
Lubricants 53

M

Main Relief pressure check 70
Maintenance
Recording 80
Scheduled Intervals 79
Mandatory SAFETY Shutdown Procedure 9
Mandatory Work Platform Safety Rules 15

O

Oils - *See* Lubrication
Operation
Starting 38
Stopping 39
Symbols . . . . . .Inside Front Cover
Travel 51
Operator's Manual, storing 2
Operator Services 57
Operator's Station
Heater Controls 28
Heater - A/C Controls 28
Outrigger Switches 30, 32

ProCarManuals.com

https://truckmanualshub.com/

P

Park Brake Switch 27
Park Brake Pressure Setting 70
Paint, refinish 74
Pump, Delivery Rates - *See* Chapter 2
Personnel Work Platform Safety Decals 22
Personnel Work Platform Safety Rules 15
Personnel Work Platform Switch 27
Personnel Work Platform System 14
Personnel Work Platform Checking Procedure 61
Pre-Start Walk-Around Inspection 35
  Illustration 36
  Checklist 37

Q

Quickattach System
  Attach/Detach Mechanism 42

R

Radiator
  Change Coolant 71
  Check Coolant 59
  Flushing and Refilling 71
Relay Access 34
Relay Functions 34
Road Travel 51

S

SAFETY 9
  Decals 18
Schematics
  Electrical 91
  Hydraulic 87
Seat, operator's 29
Seat Belt 29
Service and Safety Features 32
Service Intervals
  Daily 58
  Weekly 62
  100 hours 62
  250 hours 62
  1000 hours 68
  2000 hours 70
  As required 72
Shields 23
Side View Mirror 33
Specifications 4
Stabilizer System 50
Steering - *See* Controls
Steering Relief Pressure Check 70
Storage 72
Suspended Loads
  Handling 47
  Safety Reminders 12

T

Tables
  Lubricants 53
  Paint Notice 74
  Replacement Filters 54
Theft Deterrents 52
Tire Pressures 60
Torque Specifications 105
Traffic Flow Patterns 44
Transmission
  Description - *See* Chapter 2
  Temperature Lamp 25
Transmission Oil
  Changing 68
  Check Level 60
  Recommended Grades 53
Transporting
  Loading 51
  Unloading 52
Travel Speed - *See* Controls
Troubleshooting, PWP 73

W

Warranty . . . . . Inside Rear Cover
Water Trap - *See* Fuel Filter
Windshield Washer Fluid Reservoir 34
Windshield Wiper Switch 28
Work Platform Design Requirements 16

ProCarManuals.com

MANITOU AMERICA

WARRANTY

MANITOU AMERICAS, hereinafter referred to as Manitou, warrants new Manitou equipment to the Original Retail Purchaser to be free from defects in material and workmanship for a period of twelve (12) months from the Warranty Start Date.

MANITOU WARRANTY SERVICE INCLUDES:

Genuine Manitou parts and labor costs required to repair or replace equipment at the selling dealer's business location.

MANITOU MAKES NO REPRESENTATIONS OR WARRANTIES OF ANY KIND, EXPRESS OR IMPLIED (INCLUDING THE IMPLIED WARRANTIES OF MERCHANTABILITY AND FITNESS FOR PARTICULAR PURPOSE), EXCEPT AS EXPRESSLY STATED IN THIS WARRANTY STATEMENT.

ANY OF THESE LIMITATIONS EXCLUDED BY LOCAL LAW SHALL BE DEEMED DELETED FROM THIS WARRANTY; ALL OTHER TERMS WILL CONTINUE TO APPLY.

SOME STATES DO NOT PERMIT THE EXCLUSION OR LIMITATION OF THESE WARRANTIES AND YOU MAY HAVE GREATER RIGHTS UNDER YOUR STATE LAW.

MANITOU WARRANTY DOES NOT INCLUDE:

1. Transportation to selling dealer's business location or, at the option of the Original Retail Purchaser, the cost of a service call.

2. Used equipment.

3. Components covered by their own non-Manitou warranties, such as tires, batteries, trade accessories and engines.

4. Normal maintenance service and expendable, high-wear items.

5. Repairs or adjustments caused by: improper use; failure to follow recommended maintenance procedures; use of unauthorized attachments; accident or other casualty.

6. Liability for incidental or consequential damages of any type, including, but not limited to lost profits or expenses of acquiring replacement equipment.

No agent, employee or representative of Manitou has any authority to bind Manitou to any warranty except as specifically set forth herein.

ProCarManuals.com

https://truckmanualshub.com/

ProCarManuals.com

50960025CP0514

© 2014 Manitou Americas Inc.
All Rights Reserved.

PRINTED IN U.S.A.