https://truckmanualshub.com/

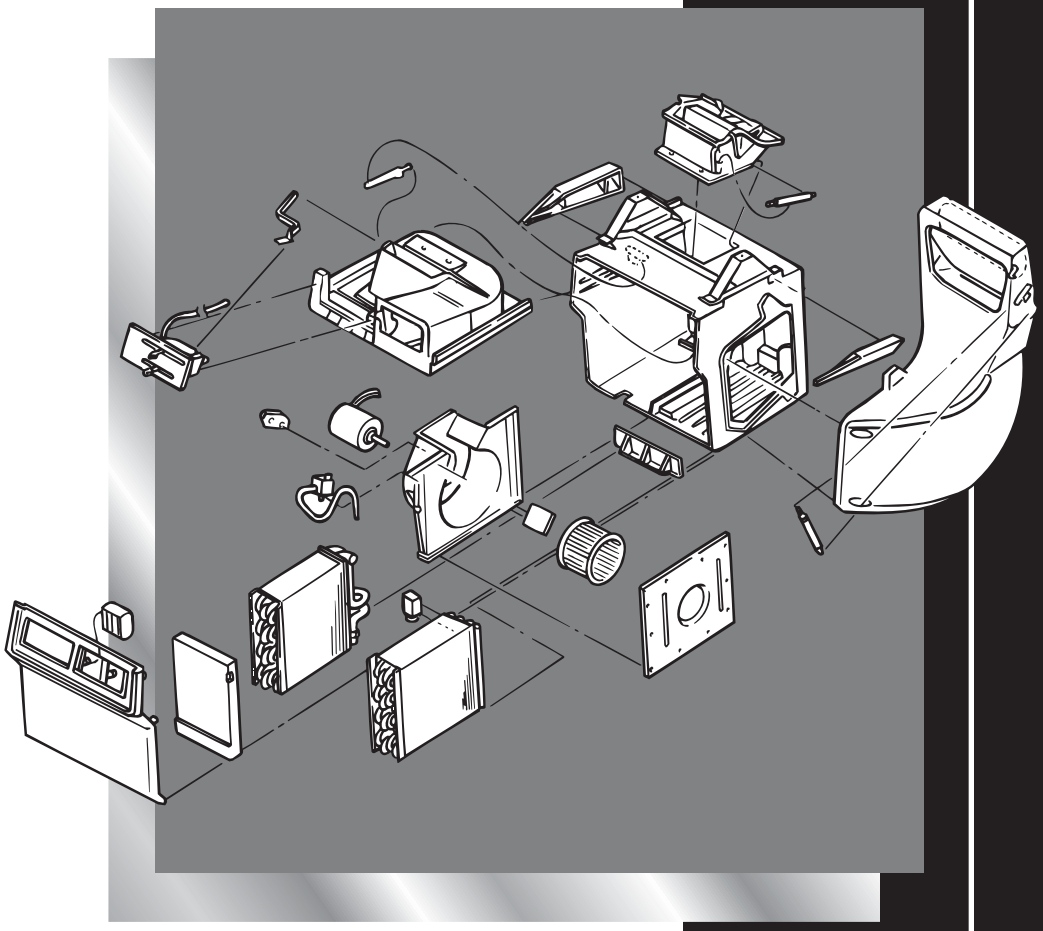

AIR CONDITIONING SYSTEM

Includes U.S. '07 MACK® Chassis
GU (Granite™ Series)
CHU and CXU (Pinnacle™ Series)
MRU and LEU (TerraPro™ Series)

SERVICE MANUAL

JULY 2007
(REVISED)
18-902

https://truckmanualshub.com/

AIR CONDITIONING SYSTEM SERVICE MANUAL

INCLUDES U.S. '07 MACK® CHASSIS:
GU (Granite™ SERIES)
CHU AND CXU (Pinnacle™ SERIES)
MRU AND LEU (TerraPro™ SERIES)

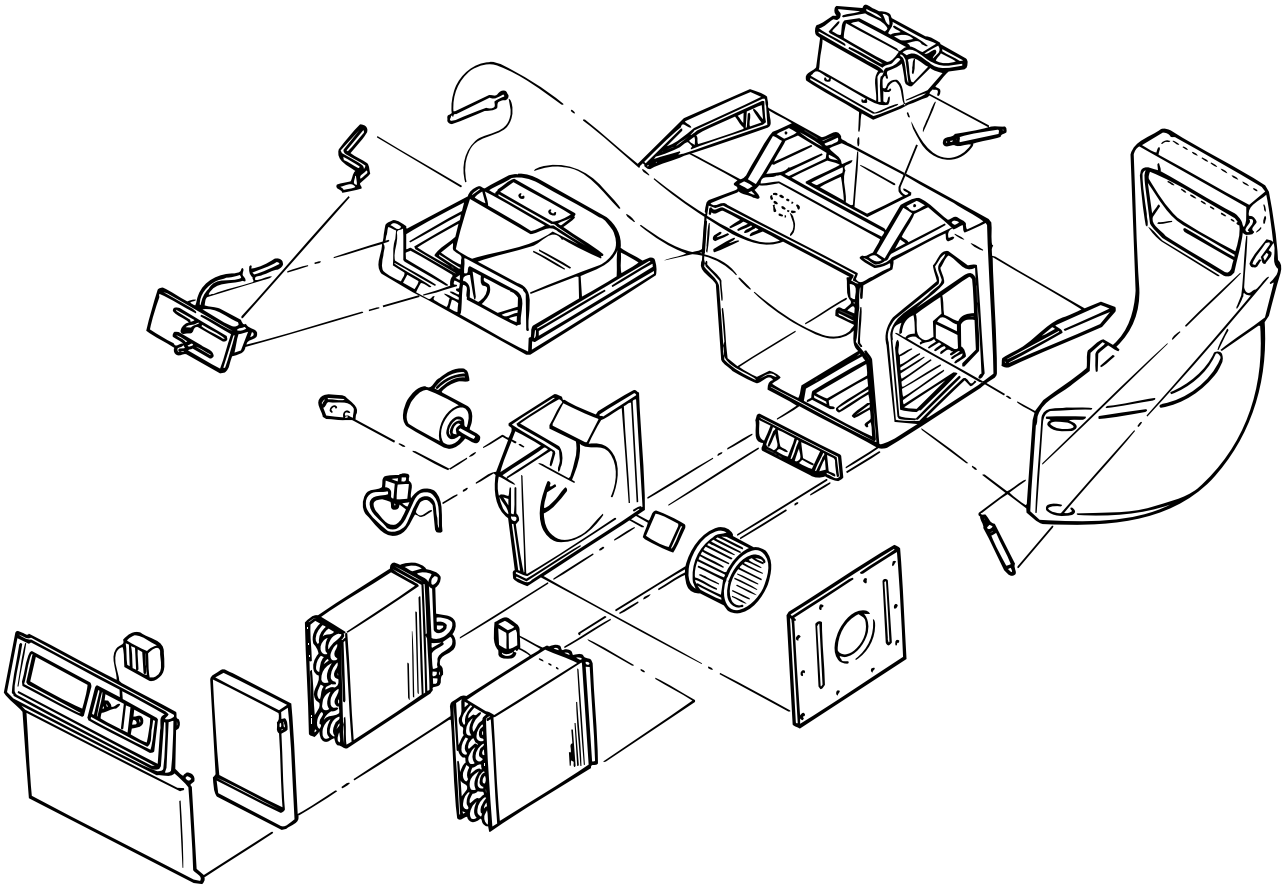

JULY 2007
(REVISED — REPLACES ISSUE DATED APRIL 2006)

© MACK TRUCKS, INC. 2007

18-902

https://truckmanualshub.com/

ATTENTION

The information in this manual is not all inclusive and cannot take into account all unique situations. Note that some illustrations are typical and may not reflect the exact arrangement of every component installed on a specific chassis.

The information, specifications, and illustrations in this publication are based on information that was current at the time of publication.

Concepts, data, and procedures described in this manual are considered applicable for use of all MACK factory-installed refrigerants, except where noted as pertaining exclusively to a specific type of refrigerant.

No part of this publication may be reproduced, stored in a retrieval system, or be transmitted in any form by any means including (but not limited to) electronic, mechanical, photocopying, recording, or otherwise without prior written permission of Mack Trucks, Inc.

https://truckmanualshub.com/

TABLE OF CONTENTS

https://truckmanualshub.com/

TABLE OF CONTENTS

INTRODUCTION 1
SAFETY INFORMATION 2
Advisory Labels 2
Service Procedures and Tool Usage 3
PERSONAL SAFETY 5
R-134a vs. R-12 System Component Differences (“Do's” and “Don'ts”) 6
Additional Service Precautions for R-134a Refrigerant 7
EXPLANATION OF NUMERICAL CODE 9
Explanation of Three-Digit Numerical Code 9
ABOUT THIS MANUAL 10

DESCRIPTION AND OPERATION 11
A/C SYSTEM FEATURES AND OPERATION — RED DOT SYSTEM [637] 12
CH, CL and CX System Description [637] 12
CH, CL and CX Cab Climate Control Panels [733] 12
CH, CHN, CL, CX and CXN Millennium Sleeper Climate Control Panels [733] 14
DM, DMM, RB, RD6 and RD8 System Description [637] 15
DM, DMM, RB, RD6 and RD8 Climate Control Panel [733] 15
FDM System Description [637] 15
FDM Climate Control Panel [733] 16
LE, LEU, MR and MRU Roof-Mounted A/C System Description [637] 16
LE and LEU Heater Control Only [733] 16
MR and MRU Cab-Mounted A/C System Description [637] 17
MR and MRU Cab-Mounted A/C System Climate Control Panel [733] 17
CS and MS System Description [637] 17
CS and MS Blower Control Switch [733] 18
A/C SYSTEM FEATURES AND OPERATION — BLEND AIR SYSTEM [637] 19
CH, CHN, CL, CT, CV, CX and CXN System Description [637] 19
CH, CHN, CL, CT, CV, CX and CXN Cab Heater/Air Conditioner Control Panels [733] 20
A/C SYSTEM FEATURES AND OPERATION — BEHR SYSTEM [637] 23
CTP, CXP, CHU, CXU and GU BEHR System Description [637] 23
CTP, CXP, CHU, CXU and GU Behr Cab Climate Control Panel [733] 24
V-MAC CONTROL OF THE ON/OFF FAN [230] 25
Smart Fan Control Parameters [230] 25
Fan Overrides [230] 25
High Refrigerant Pressure Fan On Time [230] 25
A/C SYSTEM FEATURES AND OPERATION — APADS® CM812 MACK PART NO. 228RD33 (YELLOW LABEL) AND CM813 MACK PART NO. 228RD32 (WHITE LABEL) SYSTEM [637] . . . 25
Functional Description 25
Electrical I/O Definitions 26
Control and Diagnostic Functions 27
Diagnostic Fault Descriptions 27
Blink Codes 28

COMPONENT LOCATOR 29
CH, CHN, CL, CT, CX AND CXN COMPONENT LOCATIONS [637] 30
DM, DMM, RB, RD6 AND RD8 COMPONENT LOCATIONS [637] 31
FDM COMPONENT LOCATIONS [637] 31
LE, LEU, MR AND MRU WITH ROOF-MOUNTED A/C SYSTEM COMPONENT LOCATIONS [637] 32
MR AND MRU CAB-MOUNTED A/C SYSTEM COMPONENT LOCATIONS [637] 32
CS AND MS COMPONENT LOCATIONS [637] 33

https://truckmanualshub.com/

TABLE OF CONTENTS

CH, CV, CT AND CX MODELS WITH BLEND AIR HVAC SYSTEM COMPONENT LOCATIONS [637] . . . 34
CHN, CXN, CV (ASET™) AND CT MODELS WITH BLEND AIR HVAC SYSTEM COMPONENT LOCATIONS [637] . . . 35
CXP AND CTP MODELS WITH BEHR HVAC SYSTEM COMPONENT LOCATIONS [637] . . . 36
CHU, CXU AND GU MODELS WITH BEHR HVAC SYSTEM COMPONENT LOCATIONS [637] . . . 37

TROUBLESHOOTING . . . 39
TROUBLESHOOTING MODELS WITH ROTARY CONTROL PANEL AND MILLENNIUM SLEEPER [637] . . . 40
CX Model A/C System without Constant Temperature Control (CTC) — Red Dot System [637] . . . 40
CX, CH and CL Models with Rotary Control Panel A/C System with Constant Temperature Control (CTC) — Red Dot System [637] . . . 44
Millennium Sleeper A/C Unit [637] . . . 45
CH, CHN, CL, CT, CV, CX and CXN Models (Bergstrom) with Blend Air Rotary Control Panel and HVAC Unit — without Automatic Temperature Control (ATC) [637] . . . 46
CH, CHN, CL, CT, CV, CX and CXN Models with Blend Air Rotary Control Panel and HVAC Unit — with Automatic Temperature Control (ATC) [637] . . . 49
Blend Air HVAC Unit Circuit-By-Circuit Troubleshooting Guide . . . 51
CH, CHN, CX and CXN Models with Blend Air Sleeper Systems Experiencing Evaporator Freezing and Icing . . . 52
TROUBLESHOOTING BEHR HVAC SYSTEM — CTP, CXP, CXU, CHU AND GU MODELS [637] . . . 53
Behr System . . . 53
Unit Parts — Behr System . . . 54
Behr System . . . 55
TESTING THE APADS® CM812 AND CM813 MODULE [637] . . . 57
Six-Pin Connector . . . 57
Four-Pin Connector . . . 57
TROUBLESHOOTING APADS® CM812 AND CM813 SYSTEMS . . . 58
Blink Code Identification . . . 58
Troubleshooting Charts . . . 59
Diagnostic Flow Charts . . . 62

REPAIR INSTRUCTIONS . . . 65
REPAIR INSTRUCTIONS — BERGSTROM HVAC UNIT . . . 66
Blower Motor Resistor Card Removal . . . 66
Heater/Air Conditioner Cab Control Board Fuse — CH, CHN, CL, CT, CV, CX and CXN Models . . . 68
REPAIR INSTRUCTIONS — BEHR HVAC UNIT (CTP, CXP, CXU, CHU AND GU MODELS) . . . 70
Evaporator Replacement (Start of Production 3rd Quarter 2005 to 2nd Quarter 2007) . . . 70
CORRECTIVE ACTIONS FOR KNOWN HVAC MALFUNCTIONS . . . 94
Corrective Action for Sleeper Box Air Conditioner Evaporator Freezing and Icing — CH, CHN, CV, CX and CXN Models with Blend Air-Type HVAC Systems . . . 94
Corrective Action for Sticking or Binding Blend Air-Type Mode Box — CH, CHN, CL, CT, CX and CXN Models with Blend Air-Type HVAC Systems . . . 95
A/C SERVICE RECOMMENDATIONS . . . 102
Flushing the A/C System During Compressor Replacement . . . 102
Flushing Equipment . . . 102
Safety Measures . . . 102

https://truckmanualshub.com/

TABLE OF CONTENTS

Acceptable Flushing Fluid and Solvents . . . 102
Component Flushing Recommendations . . . 103
Back Flushing . . . 103
Flushing Duration . . . 103
Residual Flushing Fluid Removal . . . 103
Rear A/C System Evaporator and Hose Flushing . . . 103
Suction Side Flushing . . . 103

SPECIFICATIONS . . . 105
AIR CONDITIONING SYSTEM SPECIFICATIONS [637] . . . 106
Refrigerant and Oil Charge Levels [637] . . . 106
APADS® CM812 AND CM813 A/C CONTROL SYSTEM [637] . . . 107
Mechanical . . . 107
Electrical . . . 107
Environmental . . . 107

SCHEMATIC & ROUTING DIAGRAMS . . . 109
A/C SYSTEM REFRIGERANT CIRCUIT SCHEMATICS [637] . . . 110
CH, CHN, CHU, CL, CT, CTP, CV, CX, CXN, CXU, GU and CXP Model A/C System . . . 110
DM, DMM, RB, RD6 and RD8 Model A/C System . . . 111
FDM Model A/C System . . . 112
LE, LEU, MR and MRU Models with Roof-Mounted A/C System . . . 113
MR and MRU Model with Cab-Mounted A/C System . . . 114
CS and MS Model A/C System . . . 115
AIR DISTRIBUTION SCHEMATICS [733] . . . 116
CH and CL Air Delivery, Air Delivery Airflow and Air Control Logic — Red Dot System . . . 116
DM, DMM, RB, RD6 and RD8 Air Delivery and Air Control Logic — Red Dot System . . . 119
CH, CHN, CL, CT, CV, CX and CXN Airflow — Blend Air A/C System . . . 121
CTP, CXP, CHU, CXU and GU Airflow — Behr A/C System . . . 125
ELECTRICAL SYSTEM DIAGRAMS [637] . . . 133
CH, CL and CX A/C System Electrical Schematics — Red Dot System . . . 133
DM, DMM, RB, RD6 and RD8 A/C System Electrical Schematics — Red Dot System . . . 139
LE, LEU, MR and MRU Roof-Mounted A/C System Electrical Schematics — Red Dot System . . . 143
MR and MRU Cab-Mounted A/C System Electrical Schematics — Red Dot System . . . 144
CS and MS A/C System Electrical Schematics — Red Dot System . . . 147
CH, CHN, CL, CT, CV, CX and CXN A/C System Electrical Schematics — Blend Air System . . . 149
CTP, CXP, CXU, CHU and GU Behr Cab A/C System Electrical Schematics . . . 151
APAds® CM812 and CM813 Electrical Schematics . . . 154

SPECIAL TOOLS & EQUIPMENT . . . 157
AIR CONDITIONING TOOLS REQUIRED FOR R-134a . . . 158
Scavenger A/C Recovery Only Unit . . . 158
R-134a Smart Cart . . . 158
R-134a Pureguard2 Refrigerant Tester . . . 158
Red Dot CTC2 Analyzer . . . 158
ACR4 (Black Shroud) Recovery and Recycling Unit . . . 159
Mode Actuator Removal and Installation Tools (BEHR Climate Unit) . . . 159

https://truckmanualshub.com/

TABLE OF CONTENTS

DISASSEMBLED VIEWS 161
ASSEMBLY VIEW AND PARTS IDENTIFICATION [637] 162
CH, CL and CX Cab Unit Parts [637] — Red Dot System 162
CH, CHN, CHU, CL, CX, CXN, CXP and CXU Millennium Sleeper Unit Parts [637] — Red Dot System 164
DM, DMM, RB, RD6 and RD8 Cab Unit Parts [637] — Red Dot System 165
FDM Cab Unit Parts [637] 166
LE, LEU, MR and MRU Roof-Mounted Unit Parts [637] 167
MR and MRU Cab-Mounted Unit Parts [637] 169
CS and MS Cab Unit Parts [637] 170
CH, CHN, CL, CT, CV, CX and CXN Cab Unit Parts [637] — Blend Air System 172
CTP, CXP, CXU, CHU and GU Unit Parts [637] — Behr Cab A/C System Kinematics 173
CTP, CXP, CXU, CHU and GU Behr A/C System [637] — Service View (Complete Unit) . . . 174

INDEX 175

https://truckmanualshub.com/

NOTES

https://truckmanualshub.com/

INTRODUCTION

https://truckmanualshub.com/

SAFETY INFORMATION

Advisory Labels

Cautionary *signal words* (Danger-Warning-Caution) may appear in various locations throughout this manual. Information accented by one of these signal words must be observed to minimize the risk of personal injury to service personnel, or the possibility of improper service methods which may damage the vehicle or cause it to be unsafe. Additional Notes and Service Hints are used to emphasize areas of procedural importance and provide suggestions for ease of repair. The following definitions indicate the use of these advisory labels as they appear throughout the manual:

⚠ DANGER

Danger *indicates an unsafe practice that could result in death or serious personal injury. Serious personal injury is considered to be permanent injury from which full recovery is NOT expected, resulting in a change in life style.*

⚠ WARNING

***Warning* indicates an unsafe practice that could result in personal injury. Personal injury means that the injury is of a temporary nature and that full recovery is expected.**

⚠ CAUTION

Caution *indicates an unsafe practice that could result in damage to the product.*

NOTE

Note indicates a procedure, practice, or condition that must be followed in order for the vehicle or component to function in the manner intended.

SERVICE HINT

A helpful suggestion that will make it quicker and/or easier to perform a procedure, while possibly reducing service cost.

https://truckmanualshub.com/

Service Procedures and Tool Usage

Anyone using a service procedure or tool not recommended in this manual must first satisfy himself thoroughly that neither his safety nor vehicle safety will be jeopardized by the service method he selects. Individuals deviating in any manner from the instructions provided assume all risks of consequential personal injury or damage to equipment involved.

Also note that particular service procedures may require the use of a special tool(s) designed for a specific purpose. These special tools must be used in the manner described, whenever specified in the instructions.

⚠ DANGER

1. ***Before starting a vehicle, always be seated in the driver's seat, place the transmission in neutral, apply the parking brakes, and push in the clutch pedal. Failure to follow these instructions could produce unexpected vehicle movement, which can result in serious personal injury or death.***
2. ***Before working on a vehicle, place the transmission in neutral, set the parking brakes, and block the wheels. Failure to follow these instructions could produce unexpected vehicle movement, which can result in serious personal injury or death.***

⚠ DANGER

Engine-driven components such as Power Take-Off (PTO) units, fans and fan belts, driveshafts and other related rotating assemblies, can be very dangerous. Do not work on or service engine-driven components unless the engine is shut down. Always keep body parts and loose clothing out of range of these powerful components to prevent serious personal injury. Be aware of PTO engagement or nonengagement status. Always disengage the PTO when not in use.

⚠ DANGER

Do not work under a vehicle that is supported only by a hydraulic jack. The hydraulic jack could fail suddenly and unexpectedly, resulting in severe personal injury or death. Always use jackstands of adequate capacity to support the weight of the vehicle.

⚠ CAUTION

Before towing the vehicle, place the transmission in neutral and lift the rear wheels off the ground, or disconnect the driveline to avoid damage to the transmission during towing.

REMEMBER,
SAFETY . . . IS NO ACCIDENT!

https://truckmanualshub.com/

Mack Trucks, Inc. cannot anticipate every possible occurrence that may involve a potential hazard. Accidents can be avoided by recognizing potentially hazardous situations and taking necessary precautions. Performing service procedures correctly is critical to technician safety and safe, reliable vehicle operation.

The following list of general shop safety practices can help technicians avoid potentially hazardous situations and reduce the risk of personal injury. DO NOT perform any services, maintenance procedures or lubrications until this manual has been read and understood.

- Perform all service work on a flat, level surface. Block wheels to prevent vehicle from rolling.
- DO NOT wear loose-fitting or torn clothing. Remove any jewelry before servicing vehicle.
- ALWAYS wear safety glasses and protective shoes. Avoid injury by being aware of sharp corners and jagged edges.
- Use hoists or jacks to lift or move heavy objects.
- NEVER run engine indoors unless exhaust fumes are adequately vented to the outside.
- Be aware of hot surfaces. Allow engine to cool sufficiently before performing any service or tests in the vicinity of the engine.
- Keep work area clean and orderly. Clean up any spilled oil, grease, fuel, hydraulic fluid, etc.
- Only use tools that are in good condition, and always use accurately calibrated torque wrenches to tighten all fasteners to specified torques. In instances where procedures require the use of special tools which are designed for a specific purpose, use only in the manner described in the instructions.
- Do not store natural gas powered vehicles indoors for an extended period of time (overnight) without first removing the fuel.
- Never smoke around a natural gas powered vehicle.

https://truckmanualshub.com/

PERSONAL SAFETY

Refrigerant is transparent and colorless as a gas or liquid. Since it boils at sea-level temperatures of –29.8°C (–21.6°F), refrigerant is a vapor at normal ambient temperatures and pressures.

Refrigerant is flammable when in contact with open flame and will form into poisonous substances when exposed to flame or high temperature.

These characteristics make it mandatory to observe special precautions when handling refrigerant during maintenance/service procedures that involve refrigerant recovery/recycling, recharging, and monitoring of refrigerant in the air conditioning (A/C) system.

⚠ WARNING

Become familiar with the following safety guidelines before attempting to perform any work on the A/C system.

- Always wear safety goggles or glasses to protect your eyes. Since refrigerant boils at extremely low temperatures (–29.8°C, –21.6°F), direct contact with skin will produce frostbite. Treat affected areas of skin as done for frostbite. In the event of accidental contact with eyes, flood eyes immediately with cool water, and then treat with mineral oil or clear petroleum jelly followed by boric acid rinse. Report to a doctor or hospital as soon as possible.
- Use care when working around hot components and pressure lines or personal injury could result.
- Discharge the system using a refrigerant recovery/recycling station before performing any repair work on the system. Use a UL/SAE-approved recovery/recycling station (i.e., Kent-Moore J 39650, J 39500-B or equivalent.)
- Do not release refrigerant into the atmosphere, especially in non-vented areas. If there are any pits in the shop, danger of suffocation is possible because refrigerant is heavier than air.
- Never perform any welding on parts of a closed air conditioning system, or in its immediate vicinity. Whether or not the system is charged with refrigerant, the heat developed causes excessive pressure that can damage the system or even cause an explosion.
- Do not drop or throw refrigerant cylinders. Do not expose refrigerant cylinders to prolonged sunlight or any other uncontrolled source of heat.
- Due to the potential for personal injury and equipment damage involved with liquid charging, Mack Trucks, Inc. recommends only low-side vapor charging.

  For system charging, Mack Trucks, Inc. recommends using a portable charging station equipped with a “dial-a-charge” heated charging cylinder (i.e., Kent-Moore J 39500-B or equivalent). This device provides control of refrigerant supply heat and pressure levels, and adjusts for volume fluctuation in refrigerant caused by temperature changes.
- Never use direct flame or electric heaters in direct contact with the refrigerant container. High temperatures can raise the pressure to a dangerous level.
- Never attempt to connect servicing equipment (e.g., manifold gauge set) while the engine is running.
- Never open the high-side hand valve of the gauge set when the manifold gauge set is connected to both the air conditioning system and refrigerant supply cylinder while the A/C system is operating. If hot, high-pressure refrigerant is forced through the gauge to the refrigerant supply cylinder, it could cause the cylinder to rupture and cause personal injury.
- Never mix DuPont SUVA® refrigerants with air for purposes of leak testing. Laboratory tests have shown these refrigerant products to be combustible when present with high concentrations of air above atmospheric pressure.

  If recharging a chassis equipped with DuPont SUVA® refrigerant product, never heat the refrigerant supply cylinder above 52°C (125°F). Doing so may increase cylinder pressure beyond the capacity of the relief devices, causing the cylinder to rupture or shatter.

https://truckmanualshub.com/

R-134a vs. R-12 System Component Differences (“Do's” and “Don'ts”)

REFRIGERANT LUBRICANT

CAUTION

If the wrong oil is installed into the A/C system being serviced, system performance will suffer and compressor life will be greatly reduced.

R-134a refrigerant is NOT a direct replacement for R-12 refrigerant because it uses PAG (polyalkylene glycol) as a lubricant instead of the mineral based oil used with R-12.

The following service guidelines apply:

1. DO NOT install R-134a refrigerant into a system containing mineral-based oil lubricant.
2. DO NOT install R-12 refrigerant into a system containing PAG lubricant.
3. DO NOT install mineral-based oil lubricant into a system charged with R-134a refrigerant.
4. DO NOT install PAG lubricant into a system charged with R-12 refrigerant.
5. During reassembly of system components and lines, always use mineral lubricant to lubricate the O-rings for R-134a charged systems.

NOTE

It is still recommended to use mineral-based oil to lubricate O-rings for R-12 charged systems.

Continue to use MOLYKOTE 1000 (Dow Corning) to lubricate male connectors (threads only) to prevent later difficulty in disassembly of hose fittings from mating components.

A/C SYSTEM HOSES

DANGER

Always install correct replacement hoses specified for the A/C system being serviced (R-134a or R-12 refrigerant charge). Use of improper hoses may cause a hose to rupture, resulting in personal injury or death.

A/C systems charged with R-134a refrigerant place increased demand on system hoses. When servicing an A/C system, be sure to use only MACK® OEM replacement hoses.

RECEIVER DRYER

A/C systems charged with R-134a refrigerant are equipped with a receiver/dryer containing different desiccant material than used in the receiver/dryer of R-12 charged systems.

NOTE

A receiver/dryer designed for use with an R-134a system can also be installed into an R-12 system.

1. DO NOT install a receiver/dryer designed for use with an R-12 system into an R-134a charged system. Otherwise, the desiccant material will break down and plug the A/C system.
2. SIGHT GLASS:
   a. Under “medium-to-high” HIGH SIDE pressures, the PAG lubricant drops out of solution from the refrigerant R-134a. Even with a fully charged system the sight glass will appear white and milky.
   b. DO NOT add more R-134a refrigerant to a system based only on the sight glass indication. The best method is to recover all refrigerant, then recharge the system using the required amount of refrigerant specified on the under-hood A/C system information label.

https://truckmanualshub.com/

EXPANSION VALVE

For an R-134a charged system, the sensing tube of the expansion valve is filled with R-134a refrigerant. The sensing tube of an R-12 system is filled with R-12 refrigerant.

1. DO NOT install an expansion valve designed for an R-12 system into an R-134a charged system.
2. DO NOT install an expansion valve designed for an R-134a system into an R-12 charged system.

Additional Service Precautions for R-134a Refrigerant

Be sure to review ALL precautions. All A/C system service must be performed by qualified, certified A/C technicians! The following guidelines are listed to emphasize ADDITIONAL precautions required for performing service on R-134a charged systems.

PERSONAL PROTECTION

Always wear safety goggles or glasses to protect your eyes. Since R-134a refrigerant boils at extremely low temperatures, direct contact with skin will produce frostbite. Treat affected areas of skin as done for frostbite. In the event of accidental contact with eyes, DO NOT rub the eyes. Proceed to flood the eyes immediately with cool water, then report to a doctor or hospital as soon as possible.

TOXIC GAS

R-134a refrigerant is not combustible. However, in the presence of heat it changes to poisonous phosgene gas which can cause serious damage to the respiratory system or death.

Never discharge refrigerant near an open flame or electrical heating element.

Never smoke in an area where refrigerant is used or stored.

PRESSURIZED A/C SYSTEM DANGER

R-134a refrigerant must be recovered from the A/C system before any system components are removed or replaced. Removing components from a pressurized system can cause serious injury or death.

SYSTEM PERFORMANCE TESTING

Some vehicles have been redesigned with a larger condenser for R-134a refrigerant. Consequently the running HIGH SIDE pressure for these vehicles may be lower than comparable readings for previous R-12 charged vehicles.

INDUSTRY-APPROVED RECOVERY/RECYCLING EQUIPMENT

Always use approved refrigerant recovery/recycling equipment when servicing an R-134a system. Rapid evaporation of escaping refrigerant can displace oxygen in the work area, creating the hazard of suffocation or brain damage, especially in small or enclosed spaces.

SERVICE HOSE FITTINGS

Fittings on service hoses intended for R-134a charged systems are standard Metric SAE quick-disconnect fittings that will work only on R-134a systems.

MANIFOLD GAUGE SET

⚠ CAUTION

Never use the same manifold gauge set for servicing BOTH R-134a and R-12 charged systems.

Be sure to use a manifold gauge set that is dedicated to R-134a charged systems only.

COMPRESSOR LUBRICANT REFILL

Each R-134a charged chassis is factory equipped with an under-hood A/C system information label. This label provides the applicable lubricant refill (volume) specification plus the recommended type of refrigerant oil (PAG, or POE for CL models with Cummins ISX engine using CCI compressor) to use in the system.

https://truckmanualshub.com/

ASSEMBLY LUBRICANT

During reassembly of system components and lines, always lubricate O-rings and other system components for R-134a charged systems, using mineral oil.

Continue to use MOLYKOTE 1000 (Dow Corning) to lubricate male connectors (threads only) to prevent later difficulty in disassembly of hose fittings from mating components.

LEAK TESTING

Never mix R-134a refrigerant with air for purposes of leak testing. Laboratory tests have shown this type of refrigerant to be combustible when present with high concentrations of air above atmospheric pressure.

SYSTEM CHARGING

If recharging an R-134a system, never heat the refrigerant supply cylinder above 52°C (125°F). Exceeding this temperature may cause cylinder pressure to increase beyond the capacity of the relief devices, resulting in a ruptured or shattered cylinder.

Since R-134a refrigerant is of lower density than R-12 refrigerant, the amount (lbs.) of R-134a required to charge a comparable air conditioning system is also reduced.

Each R-134a charged chassis is factory equipped with an under-hood A/C system information label. This label will provide the applicable R-134a system charge specification plus R-134a product recommendation.

https://truckmanualshub.com/

EXPLANATION OF NUMERICAL CODE

Explanation of Three-Digit Numerical Code

The organization of MACK service manuals has been upgraded to standardize manual content according to a reference system based on component identification. The new reference system will help link the information contained in this publication with related information included in other MACK service/warranty publications, such as associated service bulletins, warranty manuals, and MACK Service Labor Time Standards.

The system is based on a numerical code, the first **digit** of which identifies the general component grouping as listed here:

GROUP **0**00 — GENERAL DATA

GROUP **1**00 — CHASSIS

GROUP **2**00 — ENGINE

GROUP **3**00 — CLUTCH, TRANSMISSION, TRANSFER CASE AND PTO

GROUP **4**00 — STEERING, AXLES, WHEELS AND TIRES, DRIVELINE

GROUP **5**00 — BRAKES, AUXILIARY SYSTEMS

GROUP **6**00 — CAB, TRUCK BODY

GROUP **7**00 — ELECTRICAL

The second two digits of the three-digit code are used to identify the **system, assembly** or **subassembly**, as appropriate, within each of the groupings. The codes applicable to this publication are shown at SECTION HEADINGS, as necessary, to guide you to specific component information.

Additionally, a two-character alpha code (i.e., [VG] VALVE, EXPANSION) is shown with each operation. This alpha code, in combination with the three-digit Group number, identifies the specific assembly, subassembly or part, and directly relates to the first five positions of the operation code listed in MACK Service Labor Time Standards.

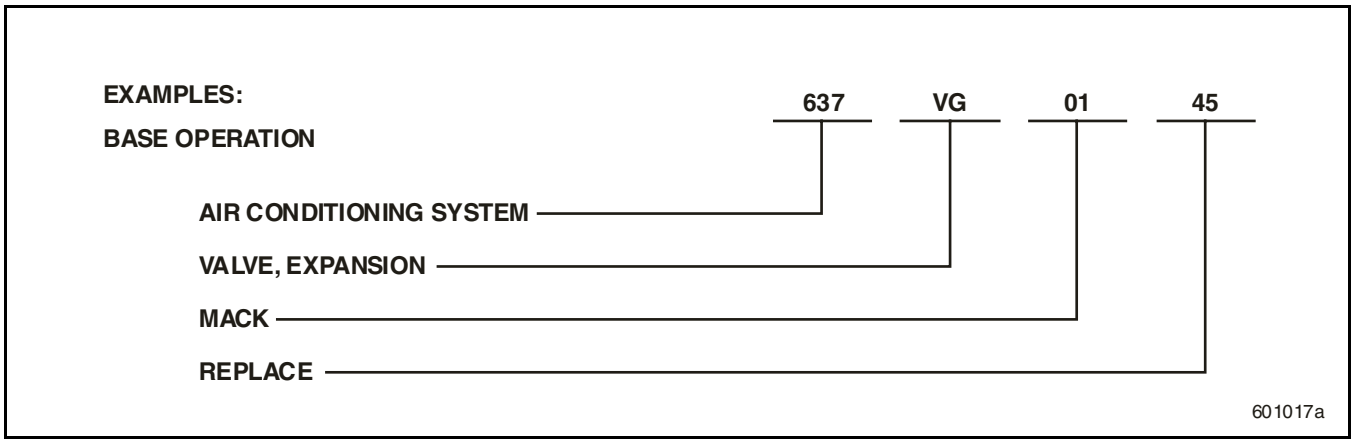

Numerical Code

https://truckmanualshub.com/

ABOUT THIS MANUAL

This publication will assist the experienced heavy-duty truck technician in diagnosis of the MACK family of air conditioning (A/C) systems. This manual is designed to be a supplement to the Red Dot, BERGSTROM and BEHR service materials.

Use only genuine MACK replacement parts for servicing these A/C systems. Genuine MACK parts are available through your nearest MACK branch, distributor, service dealer or parts dealer.

⚠ WARNING

DO NOT modify or rework parts. DO NOT use substitute parts. A modified or substitute part may result in loss of vehicle control and possible personal injury.

Proper service and repair is important for safe and reliable operation of the A/C system. The service procedures recommended by MACK and described in this technical publication are effective methods of performing maintenance. Some of these operations (e.g., removal and installation of bushings) may require the use of tools made in the shop.

⚠ CAUTION

A technician who decides to use a service procedure or tool not recommended by MACK must first satisfy himself that the selected method or tool will not jeopardize either his safety or that of the vehicle.

Throughout are various Dangers, Warnings, Cautions, Notes and Service Hints. Read these carefully to minimize the risk of personal injury and to ensure using proper methods. Improper service can damage the vehicle or cause it to be unsafe to operate. Also understand that these Dangers, Warnings, Cautions, Notes and Service Hints are not exhaustive. MACK cannot evaluate and advise the service trade of all conceivable ways in which service may be performed or of all the hazards involved.

Be sure to use refrigerant recovery, recycle or test equipment according to manufacturer's instructions.

https://truckmanualshub.com/

DESCRIPTION AND OPERATION

https://truckmanualshub.com/

A/C SYSTEM FEATURES AND OPERATION — RED DOT SYSTEM [637]

CH, CL and CX System Description [637]

CH AND CL MODEL CAB

The CH and CL model cab A/C system is a cable-operated water valve control system. The control cable to the water valve limits the amount of coolant flow through the heater core depending on the temperature control lever position.

CX MODEL CAB WITHOUT CONSTANT TEMPERATURE CONTROL (CTC)

The CX model cab A/C system is a cable-operated water valve control system. The control cable to the water valve limits the amount of coolant flow through the heater core depending on the temperature control knob position.

CX MODEL CAB AND CH AND CL MODEL CABS WITH CONSTANT TEMPERATURE CONTROL (CTC)

The CX model cab and CH and CL model cabs with Constant Temperature Control (CTC) A/C system use an electronically controlled water valve control system. The CTC maintains a pre-selected temperature by pulsating the flow of coolant through the heater core. The air output temperature is monitored by the circuit board inside the A/C unit, and any change in output temperature activates the circuit board, energizing or de-energizing the solenoid valve. The solenoid valve, located inside the A/C unit, controls the air supply that opens or closes the water valve.

MILLENNIUM SLEEPER

The CH, CL and CX model millennium sleeper A/C systems use a rotary actuator motor controlled blend air door system. The actuator motor controls the position of the blend air door depending upon the temperature control knob position.

CH, CL and CX Cab Climate Control Panels [733]

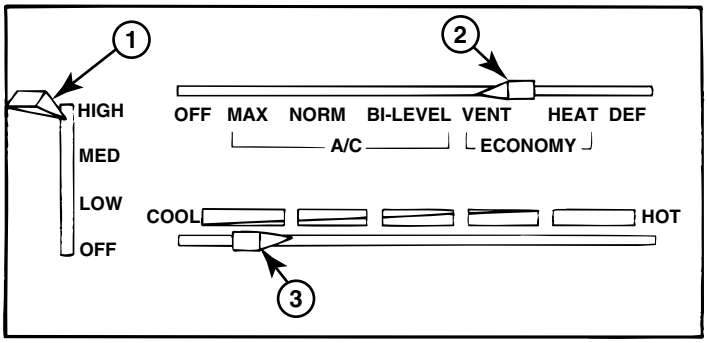

600385a

Figure 1 — CH and CL Cab Climate Control Panel with Lever Style Controls

1. Blower Control Switch 2. Mode Selection Lever	3. Temperature Control Lever

The CH and CL cab climate control panel uses the following switch and levers to control the A/C system:

1. The four-position blower control switch allows control of the amount of air delivered through the vents.
2. The mode selection lever allows the operator to choose the type of climate and air direction in the cab.
3. The temperature control lever allows the operator to adjust the temperature of the air in the cab.

https://truckmanualshub.com/

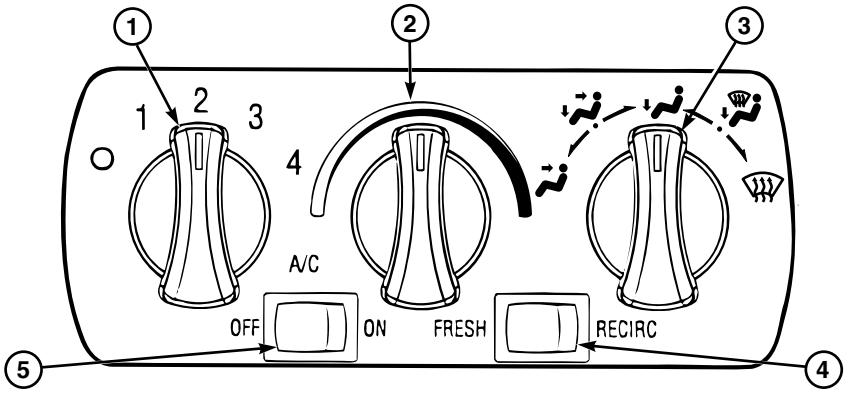

Figure 2 — CX and Current CH Cab Climate Control Panel with Rotary Style Controls

1. Blower Control Knob 2. Temperature Control Knob 3. Mode Selection Knob	4. Fresh/Recirculation Switch 5. On/Off Switch

The CX cab and current CH cab climate control panels use the following knobs and switches to control the A/C system:

1. The blower control knob is a five-position knob used to control the amount of air delivered through the vents.
2. The temperature control knob allows the operator to adjust the temperature of the air in the cab.
3. The mode selection knob allows the operator to choose the air direction in the cab. The knob may be adjusted at any position to obtain any desired blend between Panel and Floor, or between Floor and Defrost.
4. The fresh/recirculation switch allows the operator to choose fresh outside air, or to recirculate inside air. “Recirc” allows for better A/C performance.
5. The on/off switch is for controlling the A/C.

https://truckmanualshub.com/

CH, CHN, CL, CX and CXN Millennium Sleeper Climate Control Panels [733]

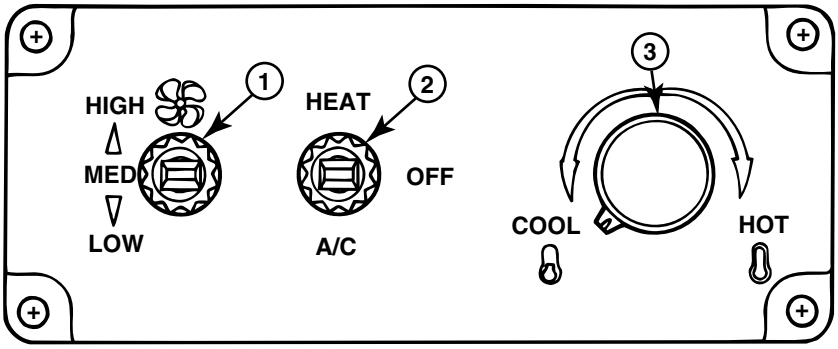

Figure 3 — CL Lever Style Climate Control Panel (Millennium Sleeper)

1. Fan Control Lever 2. Mode Selection Lever	3. Temperature Control Knob

The CL lever style Millennium Sleeper climate control panel uses the following levers and knob to control the A/C system:

1. The fan control lever is a three-position lever used to control the amount of air delivered through the sleeper box air vents.
2. The mode selection lever allows the operator to choose between OFF, HEAT or A/C.
3. The temperature control knob allows the operator to adjust the temperature of the air in the sleeper.

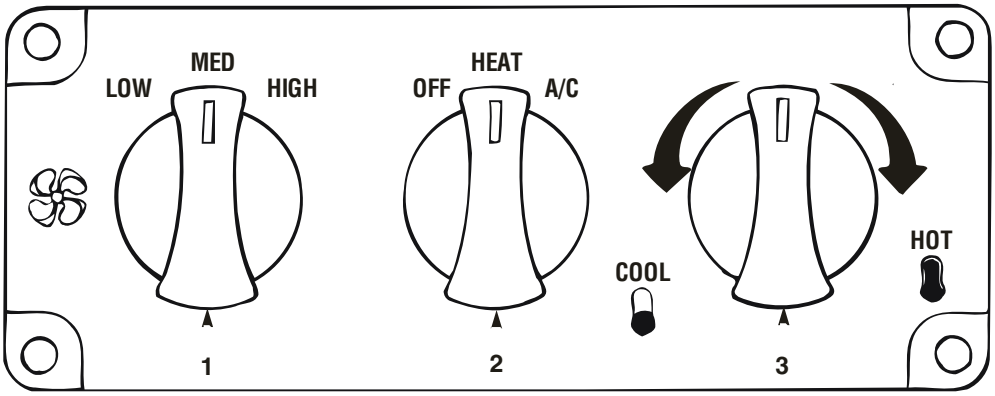

Figure 4 — CX and CH Rotary Style Climate Control Panel (Millennium Sleeper)

1. Blower Control Knob 2. Mode Selection Knob	3. Temperature Control Knob

The CX and CH rotary style Millennium Sleeper climate control panel uses the following knobs to control the A/C system:

1. The blower control knob is a three-position knob used to control the amount of air delivered through the vents.
2. The mode selection knob allows the operator to choose HEAT, A/C or OFF.
3. The temperature control knob allows the operator to adjust the temperature of the air in the cab.

https://truckmanualshub.com/

DM, DMM, RB, RD6 and RD8 System Description [637]

The DM, DMM, RB, RD6 and RD8 model A/C systems use a cable-operated water valve control system. The control cable to the water valve limits the amount of coolant flow through the heater core depending upon the temperature control knob position.

DM, DMM, RB, RD6 and RD8 Climate Control Panel [733]

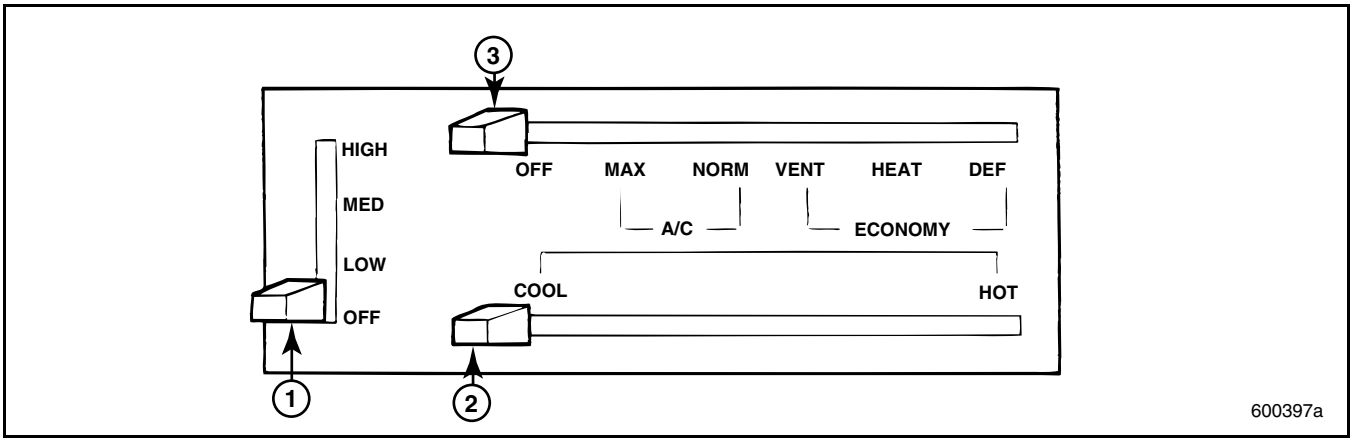

Figure 5 — Climate Control Panel

1. Blower Control Switch 2. Temperature Control Lever	3. Mode Selection Lever

The DM, DMM, RB, RD6 and RD8 model climate control panel uses the following switch and levers to control the A/C system:

1. The blower control switch is a four-position switch used to control the amount of air delivered through the vents.
2. The temperature control lever allows the operator to adjust the temperature of the air in the cab.
3. The mode selection lever allows the operator to choose the type of climate and air direction in the cab.

FDM System Description [637]

The FDM model cab A/C system uses a water valve controlled flow-through system. When the mode selection switch is placed in the A/C position, coolant flow to the water valve is shut off.

https://truckmanualshub.com/

FDM Climate Control Panel [733]

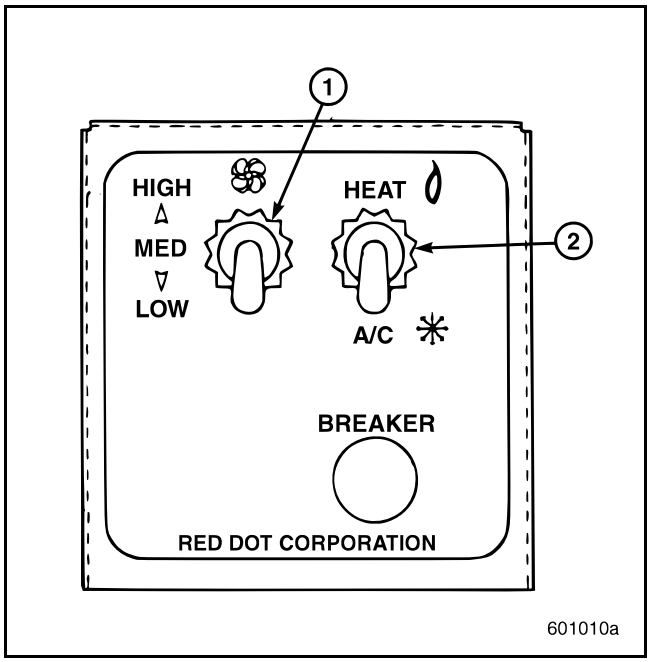

Figure 6 — Climate Control Panel

1. Blower Control Switch	2. Mode Selection Switch

The FDM model climate control panel uses the following switches to control the A/C system:

1. The blower control switch is a three-position switch used to control the amount of air delivered through the vents.
2. The mode selection switch allows the operator to choose between A/C and HEAT.

LE, LEU, MR and MRU Roof-Mounted A/C System Description [637]

The LE, LEU, MR and MRU model cab A/C systems with roof-mounted units use a flow-through system.

LE and LEU Heater Control Only [733]

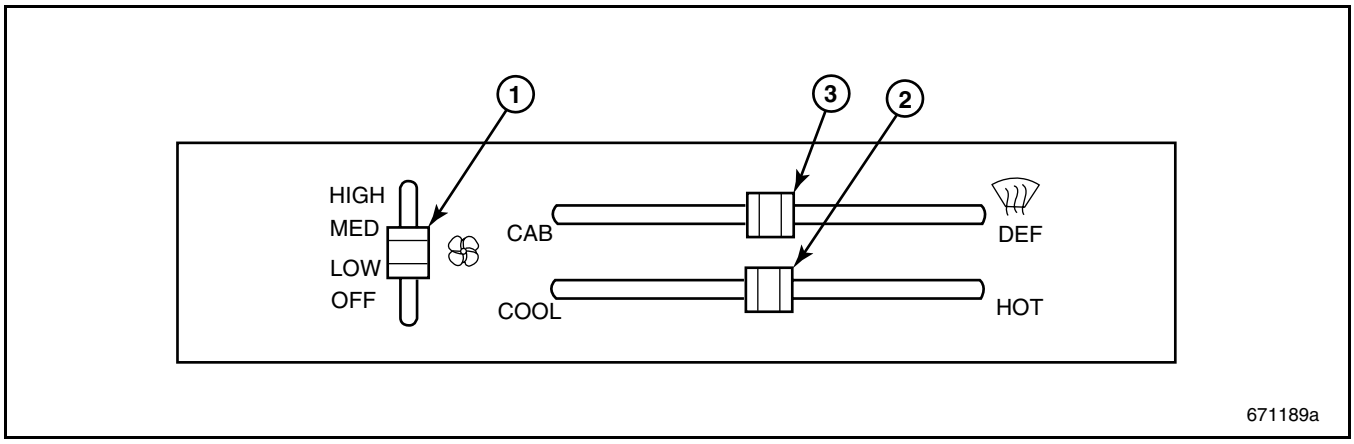

Figure 7 — LE and LEU Heater Control

1. Blower Control Switch 2. Temperature Control Lever	3. Air Direction Lever

The LE and LEU model climate control panel uses the following switch and levers to control the heater system:

1. The blower control switch is a four-position switch used to control the amount of air delivered through the vents.
2. The temperature control lever allows the operator to adjust the temperature of the air in the cab.
3. The air direction lever allows the operator to choose the air direction in the cab.

https://truckmanualshub.com/

MR and MRU Cab-Mounted A/C System Description [637]

The MR and MRU model cab with integral front-panel unit A/C systems use a cable-operated water valve control system. The control cable to the water valve limits the amount of coolant flow through the heater core depending on the temperature control lever position.

MR and MRU Cab-Mounted A/C System Climate Control Panel [733]

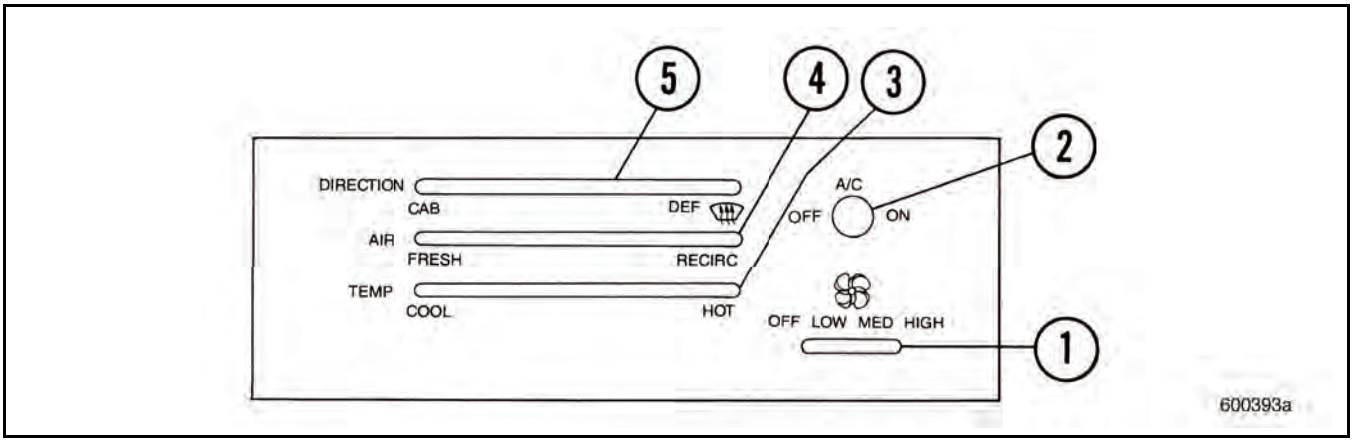

Figure 8 — Climate Control Panel

1. Blower Control Switch 2. A/C Mode (ON/OFF) Switch 3. Temperature Control Lever	4. Fresh/Recirculation Selection Lever 5. Air Direction Lever

The MR and MRU model climate control panel uses the following switches and levers to control the A/C system:

1. The blower control switch is a four-position switch used to control the amount of air delivered through the vents.
2. The A/C mode switch allows the operator to turn the A/C on or off.
3. The temperature control lever allows the operator to adjust the temperature of the air in the cab.
4. The fresh/recirculation selection lever allows the operator to choose the type of air circulating within the cab.
5. The air direction lever allows the operator to choose the air direction in the cab.

CS and MS System Description [637]

The CS and MS model cab A/C systems use a flow-through system.

https://truckmanualshub.com/

CS and MS Blower Control Switch [733]

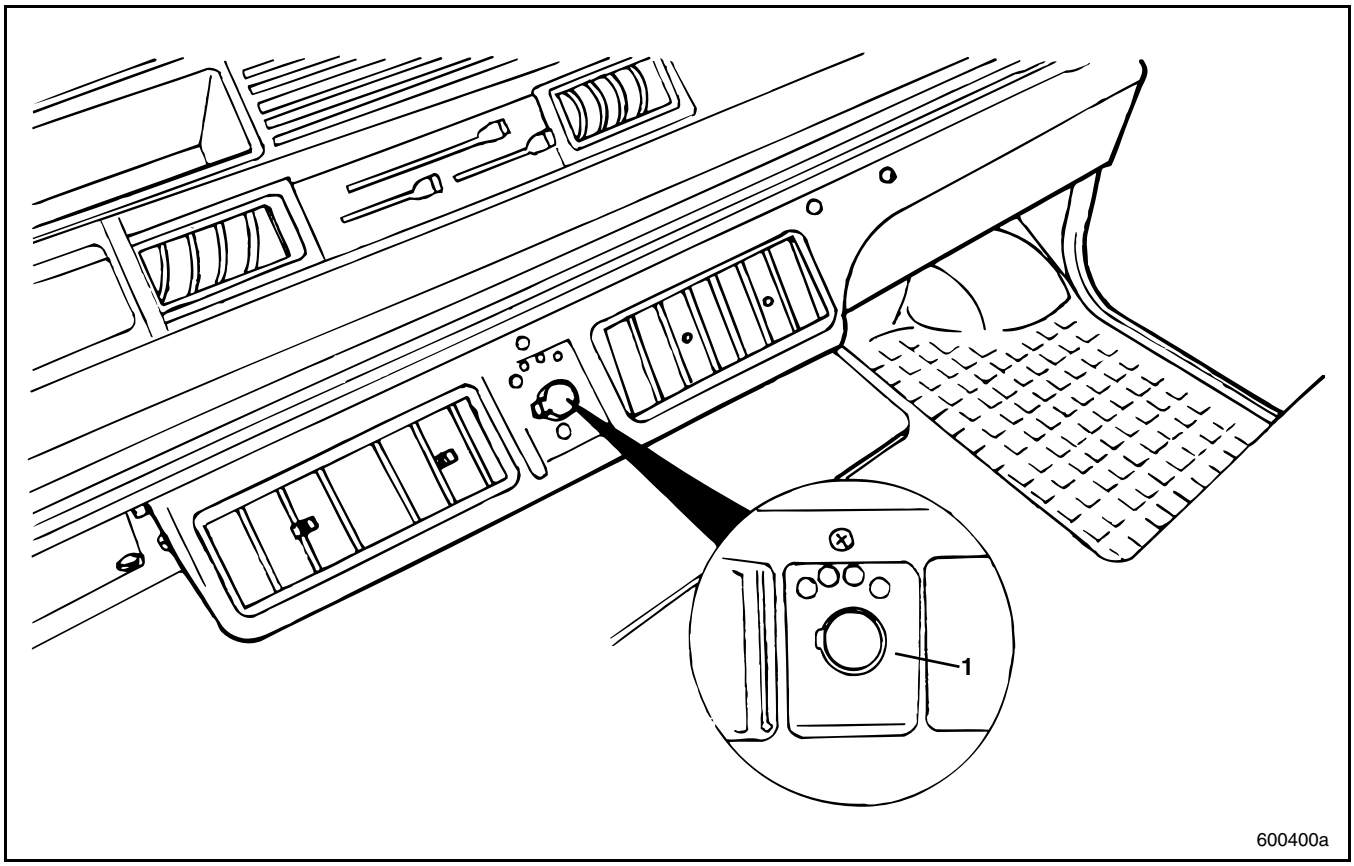

Figure 9 — Blower Control Switch

1. Blower Control Switch

The blower control switch is a four-position switch used to control the amount of air delivered through the vents.

https://truckmanualshub.com/

A/C SYSTEM FEATURES AND OPERATION — BLEND AIR SYSTEM [637]

CH, CHN, CL, CT, CV, CX and CXN System Description [637]

The blend air Heating, Ventilation and Air Conditioning (HVAC) cab unit for the CH, CHN, CL, CT, CV, CX and CXN chassis is basically a self-contained unit secured to the cab using four bolts. A snap-in fresh air duct connects the unit to the cab dash-panel opening. This unit uses blend door technology to maintain and regulate the desired temperature level within the cab. This design eliminates the use of the cable-operated heater control water valve that is used in Red Dot HVAC systems. The major components of the unit are common and consist of the following:

- Heater core
- A/C evaporator core
- Blower motor
- Fresh air, mode and blend doors
- Control panel

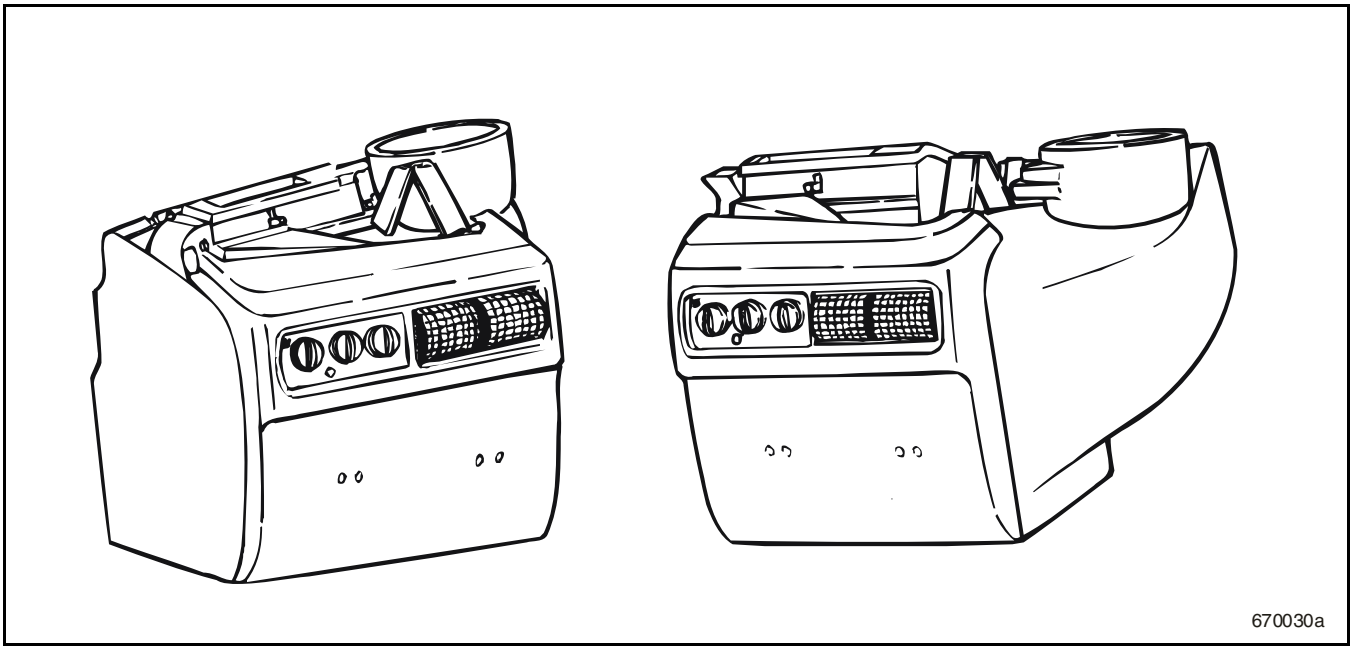

Figure 10 — Blend Air HVAC Unit

Three versions of the blend air HVAC unit are available. The regulated or Automatic Temperature Controlled (ATC) unit, the base or manual-temperature controlled unit and the heater-only unit. These units feature five primary modes of air flow with fresh air and recirculation control and a five-position fan switch ranging from 0 (Off) to 4 (High). The ATC unit uses a thermistor-type air temperature sensor to automatically maintain the desired cab temperature through the use of electronically controlled electric blend door actuators. The manually controlled base unit uses cables to manually position the blend doors for desired temperature and air flow direction.

BLEND AIR HVAC UNIT OPTIONS

Units Available	CH Chassis	CV Chassis	CX Chassis
Regulated (ATC) Unit	X	X	X
Manual Control Unit	X	X	X
Heater-Only Unit		X	

https://truckmanualshub.com/

CH, CHN, CL, CT, CV, CX and CXN Cab Heater/Air Conditioner Control Panels [733]

The control panels are integrated into the HVAC unit and consist of three rotary controls for blower (fan) speed, temperature control and air flow direction. There is either one or two push-button switches located on the control panel for the ATC and manual units. The control panel for the heater-only unit has no push button switches. A lever is used on the manual and heater-only control panels to select fresh or recirculated air into the cab.

REGULATED (ATC) CONTROL PANEL

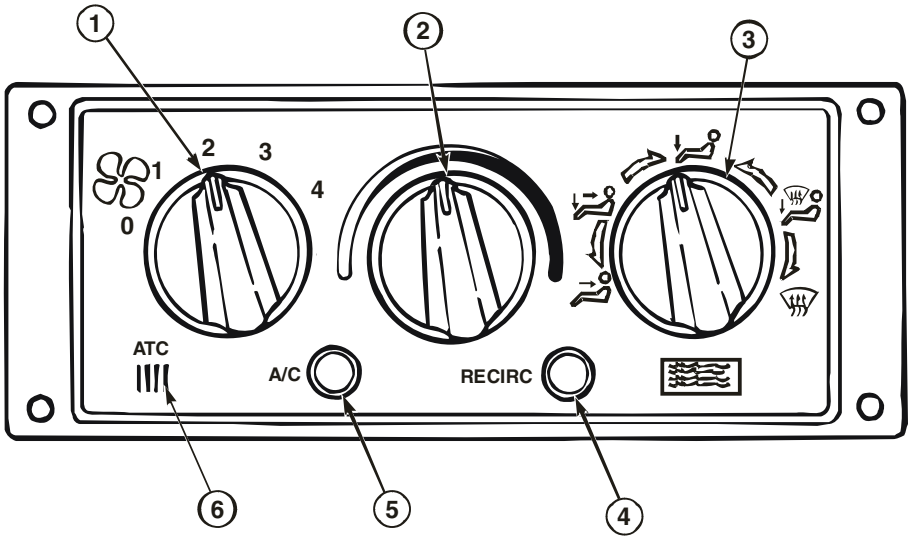

Figure 11 — Regulated (ATC) Control Panel

1. Blower Rotary Control Knob 2. Temperature Rotary Control Knob 3. Mode Rotary Control Knob	4. Recirculation Push-Button Switch 5. A/C On/Off Push-Button Switch 6. ATC Air Grid

The Regulated (ATC) control panel uses the following rotary control knobs and push-button switches to operate the A/C system:

1. The blower rotary control knob is a five-position switch used to control the amount of air delivered through the vents.
2. The temperature rotary control knob allows the operator to adjust the temperature of the air in the cab. (The temperature is regulated and maintained electronically after desired temperature position is chosen.)
3. The mode selection rotary control knob allows the operator to choose the direction of air in the cab (panel, panel/floor, floor, defrost/floor, and defrost positions).
4. The recirculation (RECIRC) push-button switch allows the operator to choose the type of air circulating within the cab (fresh or recirculated air).
5. The A/C push-button switch allows the operator to turn the A/C clutch on or off.
6. An air grid opening is located at the lower left corner of the ATC version control panel and is labeled ATC. This air grid provides cab air temperature to the air temperature sensor for automatic temperature control of the system.

https://truckmanualshub.com/

MANUAL CONTROL PANEL

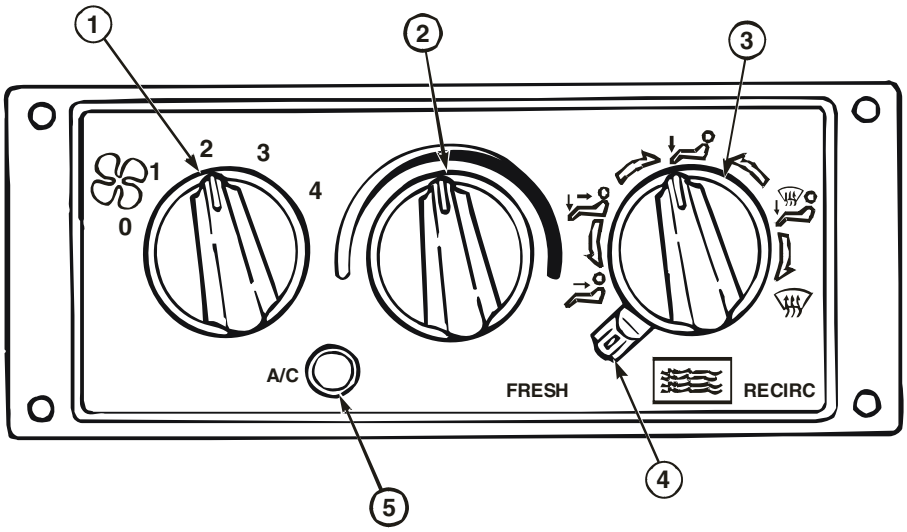

Figure 12 — Manual Control Panel

1. Blower Control Knob 2. Temperature Control Knob 3. Mode Control Knob	4. Fresh/Recirc Lever 5. A/C (On/Off) Push-Button Switch

The Manual control panel uses the following rotary control knobs, push-button switches and lever to operate the A/C system:

1. The blower rotary control knob is a five-position switch used to control the amount of air delivered through the vents.
2. The temperature rotary control knob allows the operator to adjust the temperature of the air in the cab.
3. The mode selection rotary control knob allows the operator to choose the direction of air in the cab (panel, panel/floor, floor, defrost/floor, and defrost positions).
4. The Fresh/Recirc (recirculation) lever allows the operator to choose the type of air circulating within the cab (fresh or recirculated air).
5. The A/C push-button switch allows the operator to turn the A/C clutch on or off.

https://truckmanualshub.com/

HEATER-ONLY CONTROL PANEL

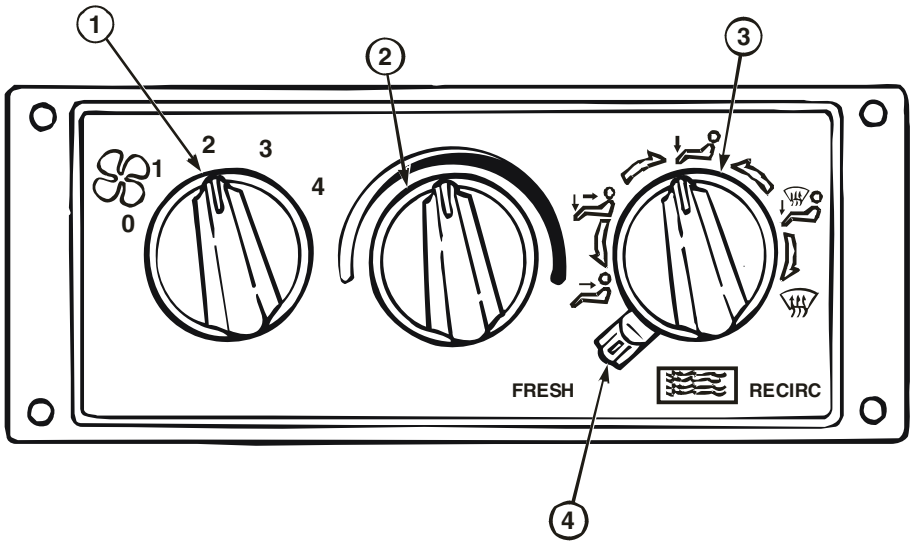

Figure 13 — Heater-Only Control Panel

1. Blower Control Knob 2. Temperature Control Knob	3. Mode Control Knob 4. Fresh/Recirc Lever

The Heater-only control panel uses the following rotary controls and lever to operate the heater-only unit:

1. The blower rotary control knob is a five-position switch used to control the amount of air delivered through the vents.
2. The temperature rotary control knob allows the operator to adjust the temperature of the air in the cab.
3. The mode selection rotary control knob allows the operator to choose the direction of air in the cab (panel, panel/floor, floor, defrost/floor, and defrost positions).
4. The Fresh/Recirc (recirculation) lever allows the operator to choose the type of air circulating within the cab (fresh or recirculated air).

A/C SYSTEM FEATURES AND OPERATION — BEHR SYSTEM [637]

CTP, CXP, CHU, CXU and GU BEHR System Description [637]

The Behr front HVAC module and control panel both install to the cab's dash; they communicate via both the module's and the cab's wire harnesses.

The A/C's temperature and mode doors are modulated by kinematics that are moved with direct current actuators. Temperature is adjusted by the unit's blend air doors. The position of the doors determines how much air is directed through the heater core and therefore the temperature of the discharge air. For cooling, the A/C switch energizes the truck's refrigerant compressor circuit. Coolant is always flowing through the heater core regardless of control settings. Discharge modes are selected when the control's manipulation of mode doors allows air to flow out of the desired combination of outlets.

The recirculation actuator can only select between full outside air and full recirculation of inside air.

Evaporator freeze protection is provided by an air sensing thermistor. The control head will only request compressor engagement when the thermistor senses the temperature is above the evaporator's freezing threshold temperature.

The control determines blower speed by selecting which leg of the resistor receives power. The control's switches are backlit by LEDs, which dim with the dash backlighting. The switch indicators light up in amber when activated. The switch indicators are illuminated when the dash lights are on. The LEDs are not individually serviceable; the entire control head must be replaced to fix a defective LED. Individual knobs are replaceable. No calibration of the control to the actuators is required or available.

MANUAL TEMPERATURE CONTROL VERSION

In the Manual version, the temperature knob setting corresponds proportionately to the blend doors' positions, so air discharge temperatures vary with engine load and air speed.

AUTOMATIC TEMPERATURE CONTROL (ATC) VERSION

In the ATC version, the control adjusts the blend doors' positions so that discharged air is held in a narrow range (once the engine coolant rises to sufficient temperature). The control reverts to Manual behavior if either the cab air or the in-duct sensor fails.

https://truckmanualshub.com/

CTP, CXP, CHU, CXU and GU Behr Cab Climate Control Panel [733]

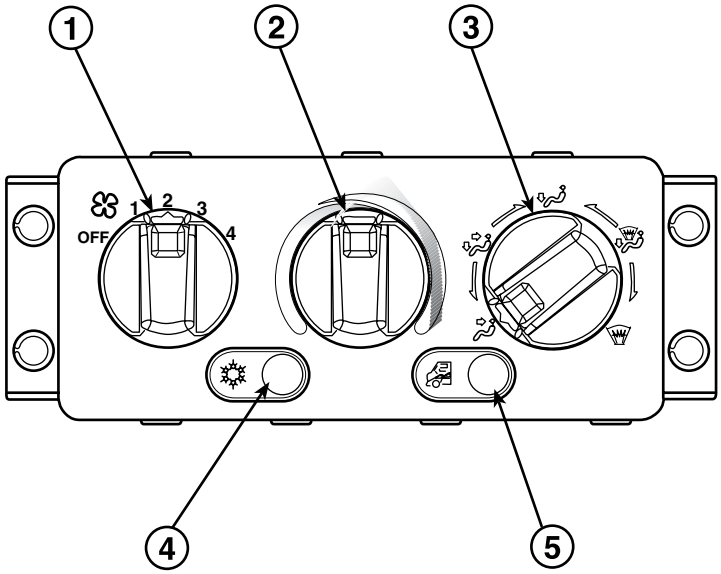

800082a

Figure 14 — Behr Cab Climate Control Panel

1. Blower Switch Knob 2. Temperature Control Knob 3. Mode Control Knob	4. Air Conditioning Switch 5. Outside Air/Recirculation Switch

The Behr climate control panel uses the following knobs and switches to control the A/C system:

1. The blower speed control knob selects either the off position or one of the four blower speeds to control the total amount of air delivered through the vents. The knob rotates a switch in the control head through which full blower power is supplied to the blower motor through the HVAC module's resistor.
2. The temperature control knob adjusts the temperature of the air delivered through the vents. Hotter air is delivered when the knob is set to the red end of the corona, cooler air at the blue end.
3. The mode selection knob selects the vents from which the air is delivered. There are five major selections: panel, bilevel, foot, mix and defrost. There are also three minor detents between each mode's major detect; these allow fine-tuning to a mixture between pure modes.
4. The A/C switch is used to select cooling and can be used in any mode.
5. The outside air/recirculation switch selects whether outside air or inside air is delivered. The control should stay on outside air during normal operation. Recirculation can be used to minimize outside odors and to maximize cooling. The control will cancel recirculation in a defrost or mix mode although the recirculation indicator light will remain lit.

https://truckmanualshub.com/

V-MAC CONTROL OF THE ON/OFF FAN [230]

Smart Fan Control Parameters [230]

MACK has further enhanced the on/off fan control logic to reduce radiator fan clutch cycling. Air conditioning pressure is monitored as part of the overall control strategy. Fan override from the dash is now programmable so that the operator can preset the override time and the conditions when an override can occur, or eliminate the override entirely.

Fan Overrides [230]

The fan override can be set by the operator so that it is possible to engage the fan clutch when the vehicle is parked or moving, or it can also be completely disabled.

For fan override when the truck is moving, the override time can be set between 0 and 25 minutes (0 to 1,500 seconds).

When the truck is parked, there is no override time limit. The operator can engage the fan so that the fan cycling will not interrupt operator sleep.

In both modes, the operator can disengage the fan by pressing the optional override switch a second time. However, the operator cannot interfere with fan operation if the fan is on because of high refrigerant pressure.

If the fan is engaged due to the override and the engine speed exceeds a threshold, then the override is cancelled. Likewise, the operator cannot engage the fan above 1,850 rpm. This feature automatically disengages above 2,100 rpm.

High Refrigerant Pressure Fan On Time [230]

The operator has the ability to program the amount of time that the fan remains on, after the air conditioning has turned the fan on, when the vehicle is parked. The range is from 0 to 300 seconds (5 minutes).

A/C SYSTEM FEATURES AND OPERATION — APADS® CM812 MACK PART NO. 228RD33 (YELLOW LABEL) AND CM813 MACK PART NO. 228RD32 (WHITE LABEL) SYSTEM [637]

Functional Description

The CM812/CM813 is an electronic, micro-controller based device that implements the functions of the APAds® (air-conditioning protection and diagnostics system) control system. It is part of a family of APAds® controller products specifically designed to reduce air conditioning maintenance costs in HVAC systems by increasing the life of system components and aiding in the diagnosis of system faults. With APAds®, air conditioning reliability is improved by actively monitoring system conditions and controlling the refrigerant compressor clutch and the on-off fan drive. When used in a functional and properly maintained system, the CM812/CM813 is transparent to the vehicle operator. The important feature of the CM812/CM813 is that it protects A/C system components from unstable and self destructive operation by placing limits on the dynamic response of the system under certain environmental and suboptimal conditions. Additionally, diagnostics aid technicians by communicating specific fault codes that warn of existing or impending problems.

The APAds® control system is composed of an electronic control module (CM812/CM813), two “semi-smart” pressure switches and a conventional evaporator thermostat. The input signals are interpreted by control and diagnostic algorithms that drive outputs such as the A/C clutch coil, fan actuator circuit and diagnostic LEDs. In the APAds® system, the CM812/CM813 controller is the only device that controls power to the A/C clutch coil. The CM813 fan output interfaces with electronics of MACK diesel engines.

The CM812/CM813 is designed for installation in the underhood environment. It is designed to withstand severe environmental conditions.

https://truckmanualshub.com/

Electrical I/O Definitions

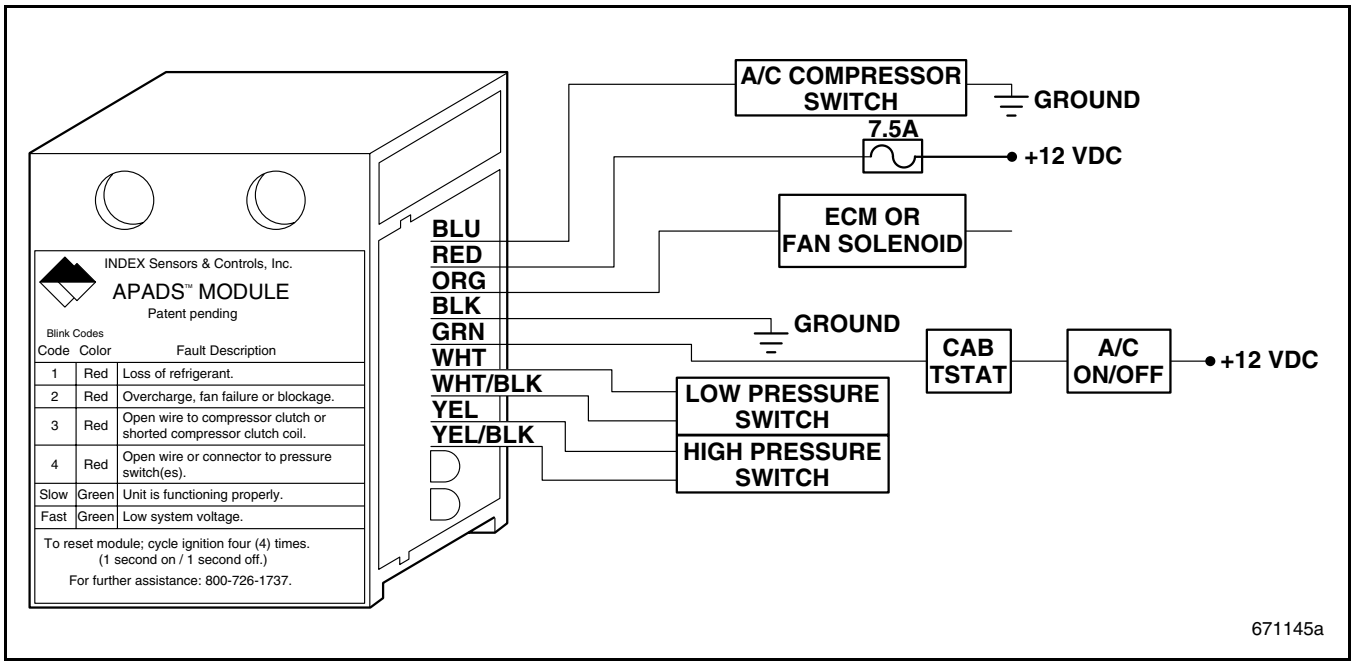

Figure 15 — APAds® CM813 I/O

Name	Function	Description
A/C Drive	Output	A/C Compressor Clutch Coil Drive
GND (3)	Power	Module Ground, Pressure Switch Returns (2)
HPx	Input	High Pressure Switch
LPx	Input	Low Pressure Switch
TSTAT	Input	Evaporator Thermostat and A/C On/Off Input
VIGN	Power	Module Supply Voltage, Ignition Switched
CM813 Only Fan	Output	Fan Actuator Circuit

INPUTS

The module receives inputs from the following sensors.

Index PM-700 Series Pressure Switches

— HPx, High pressure switch, normally closed

— LPx, Low pressure switch, normally closed

These “semi-smart’ devices have an internal resistor installed in parallel with the electrical contacts to allow diagnosing of sensor, wiring and connector faults. Both switches are configured to provide a current path to ground when they are closed.

NOTE

Actual set and reset pressures are application specific.

TStat (Evaporator Thermostat)

The evaporator thermostat is the main A/C system control. The TStat is wired in series with the A/C system on/off switch. These switches switch to battery voltage when A/C compressor operation is desired.

OUTPUTS

The module produces the following output signals.

A/C Drive (Compressor Clutch Drive)

A high side relay switch that provides battery voltage to the A/C compressor clutch coil when activated.

Diagnostic LEDs

Red and green diagnostic LEDs on the module are used to communicate fault diagnostics and indicate system status.

Fan (Fan Actuator) (CM813 Only)

A low side grounding switch is used to signal the fan actuator circuit to activate the on/off fan drive. A fan “on” state is indicated by the switch being in the open (nonconducting) condition.

Control and Diagnostic Functions

A/C COMPRESSOR CONTROL RULES

The A/C compressor is not activated for the first 15 seconds after ignition switch engagement (module powerup).

The thermostat input is ignored and the A/C compressor is turned on for 15 seconds directly after the 15 second ignition engagement timer times out. If the high or low pressure switches indicate out of bound or fault conditions, the compressor is turned off.

All three inputs (TStat, HPx, LPx) that can control the A/C compressor are governed by control logic that limits the maximum cycle rate to once every 15 seconds.

The evaporator thermostat is the primary control. The A/C compressor cycles at the frequency governed by the thermostat but is limited to a maximum of one cycle per 15 seconds.

When the high pressure switch indicates a high pressure condition, the A/C compressor is allowed to stay on for a predetermined time variable, but limited to 10 seconds. The compressor is allowed to turn on after the high pressure switch resets, but is limited to a maximum of one cycle per 15 seconds.

When the low pressure switch indicates a low pressure condition, the compressor is turned off. The compressor is allowed to turn on after the low pressure switch resets, but is limited to a maximum of one cycle per 15 seconds.

If the supply voltage drops below 11 volts, the compressor is turned off. It is allowed to turn on again after there has been sufficient rise in system voltage, but is limited to a maximum of one cycle per 15 seconds.

The A/C compressor is latched off until the next ignition cycle if an open clutch fault is detected.

FAN CONTROL ON CM813 SYSTEMS

Fan control is adaptive and is dependent upon the frequency of request for operation. Fan timing has a minimum duration of 45 seconds and a maximum duration of three minutes. When the fan is requested, the fan control output is in the “open” state.

Diagnostic Fault Descriptions

Static Low Pressure: When the system exhibits conditions that indicate complete loss of refrigerant, the Static Low Pressure fault is generated.

High Pressure: This is detected by monitoring the High Pressure switch after the fan has been engaged. This fault can be caused by fan drive failure, debris on the condenser or refrigerant overcharging. If the high pressure switch controls the system with a certain dynamic behavior, the High Pressure fault is generated.

Open Clutch: This is detected by sensing the current flow to the A/C clutch. If no current flow is sensed when the A/C DRIVE is turned on, an open connection to the clutch coil is assumed.

Low Psw open: Indicates that the wiring to the low pressure switch is defective. This can be caused by an unseated connector, a break in the wiring harness or moisture intrusion into the connectors or switch.

High Psw open: Indicates that the wiring to the high pressure switch is defective. This can be caused by an unseated connector, a break in the wiring harness or moisture intrusion into the connectors or switch.

Low Voltage: Indicates a low supply voltage condition. This can be caused by a defective alternator, discharged batteries or excessive electrical loads. This diagnostic is self clearing; the blink code is displayed only while low voltage is present.

Dynamic Low Pressure (CM813 Systems Only): Detected by rapid low pressure switch cycling, which is a symptom of a partial loss of refrigerant. If the low pressure switch dominates control and tries to cycle the compressor, displaying certain dynamic characteristics, the Dynamic Low Pressure fault is generated.

Shorted Clutch (CM813 Systems Only): This is detected by sensing excessive current flowing to the A/C clutch coil. This is caused by either a short in the clutch coil or the wiring from the module to the A/C clutch.

Blink Codes

Communication of diagnostic information is provided by a blinking red LED (Light Emitting Diode) built into the module. When a fault occurs, the corresponding fault code is stored in nonvolatile memory. The module always flashes the appropriate blink code until it is cleared.

Since only one blink code can be displayed at a time, the fault of highest priority always takes precedence. The Fault Codes table displays the order of priority, name, description and number of LED blinks associated with each fault. Only the highest priority fault is held in memory. Once the fault is cleared, a new fault must occur to initiate a new blink code. A “blink” is approximately 1/4 second in duration. The blink code is repeated every two seconds.

The blink code is cleared by two methods:

Cycle the ignition switch (One second on, one second off) for four consecutive cycles.

Self clearing based on the persistence of the fault. If a fault condition occurs once and does not repeat, the fault code is held for an extended period of time and then cleared. If the fault is repetitive, it is always retained in memory until the problem is fixed.

FAULT CODES (CM812 SYSTEM)

Priority	Fault Code Name	Fault Description	LED Blinks
1	Static Low Pressure	Full loss of charge	1
2	High Pressure	Overcharge, blocked condenser	2
3	Open Clutch	Clutch wire open	3
4	Low Psw Open	Open wire to Low Psw	4
5	High Psw Open	Open wire to High Psw	4
6	Low Voltage	Low battery voltage	Rapid Green
7	NO FAULTS	No faults, module functional	Red Off, Green Slow Blink

FAULT CODES (CM813 SYSTEM)

Priority	Fault Code Name	Fault Description	LED Blinks
1	Static Low Pressure	Full loss of charge	1
2	Dynamic Low Pressure	Partial loss of charge	1
3	High Pressure	Overcharge, blocked condenser	2
4	Open Clutch	Clutch wire open	3
5	Shorted Clutch	Shorted clutch coil	3
6	Low Psw Open	Cut wire to Low Psw	4
7	High Psw Open	Cut wire to High Psw	4
8	Low Voltage	Low battery voltage	Rapid Green
9	NO FAULTS	No faults, module functional	Red Off, Green Slow Blink

https://truckmanualshub.com/

COMPONENT LOCATOR

https://truckmanualshub.com/

CH, CHN, CL, CT, CX AND CXN COMPONENT LOCATIONS [637]

Component	Location
ENGINE COMPARTMENT: Compressor Compressor Clutch	Right Side of Engine
Condenser	Front of Radiator
Receiver/Dryer Pressure Switch Pressure Relief Valve	Right Side of Radiator
Water Valve	Top Left Side of Engine
Refrigerant Line “T” for Sleeper A/C	Above Engine
CAB: Climate Control Unit Climate Control Panel Evaporator Core Heater Core Blower Motor Blower Motor Resistor Thermostat Defrost Door and Actuator A/C Heater Door and Actuator Expansion Valve (CAB)	Below Center of Instrument Panel Center of Bulkhead
Fresh Air Door and Actuator	Behind Right Side of Instrument Panel
SLEEPER: Climate Control Unit Expansion Valve Evaporator Core Heater Core Blower Motor Blower Motor Resistor Thermistor Blend Air Door and Actuator	Left Side of Sleeper Under Bunk
Climate Control Panel	Left Rear Side of Sleeper Above Bunk

https://truckmanualshub.com/

DM, DMM, RB, RD6 AND RD8 COMPONENT LOCATIONS [637]

Component	Location
ENGINE COMPARTMENT: Compressor Compressor Clutch	Right Side of Engine
Condenser	Front of Radiator
Receiver/Dryer Pressure Switch Pressure Relief Valve	Right Side of Radiator
Water Valve	Top Left Side of Engine
CAB: Climate Control Unit Climate Control Panel Expansion Valve Evaporator Core Heater Core Blower Motor Blower Motor Resistor Thermostat Defrost Door and Actuator A/C Heater Door and Actuator	Below Center of Instrument Panel
Fresh Air Door and Actuator	Behind Right Side of Instrument Panel

FDM COMPONENT LOCATIONS [637]

Component	Location
ENGINE COMPARTMENT: Compressor Compressor Clutch	Right Side of Engine
Condenser	Front of Radiator
Receiver/Dryer Pressure Switch Pressure Relief Valve	Right Side of Radiator
Water Valve	Top Left Side of Engine
CAB: Climate Control Unit Climate Control Panel Expansion Valve Evaporator Core Heater Core Blower Motor Blower Motor Resistor Thermostat	Below Center of Instrument Panel

https://truckmanualshub.com/

LE, LEU, MR AND MRU WITH ROOF-MOUNTED A/C SYSTEM COMPONENT LOCATIONS [637]

Component	Location
ENGINE COMPARTMENT: Compressor Compressor Clutch	Right Side of Engine
TOP OF CAB: Condenser Receiver/Dryer Pressure Switch Pressure Relief Valve	In Roof-Mounted Unit
Climate Control Unit Climate Control Panel Expansion Valve Evaporator Core Blower Motor Blower Motor Resistor Thermostat	Mounted to Center of Roof

MR AND MRU CAB-MOUNTED A/C SYSTEM COMPONENT LOCATIONS [637]

Component	Location
ENGINE COMPARTMENT: Compressor Compressor Clutch	Right Side of Engine
Condenser	Front of Radiator
Receiver/Dryer Pressure Switch Pressure Relief Valve	Right Side of Radiator
CAB: Climate Control Unit	Below Right Side of Instrument Panel
Climate Control Panel	In Dash Panel
Expansion Valve Evaporator Core Heater Core Blower Motor Blower Motor Resistor Thermostat Water Valve	In Climate Control Unit
Fresh Air Door	Back of A/C Unit (Lower Right Side)
Door — Defrost Duct or Cab Duct	Top of A/C Unit

https://truckmanualshub.com/

CS AND MS COMPONENT LOCATIONS [637]

Component	Location
ENGINE COMPARTMENT: Compressor Compressor Clutch	Right Side of Engine
Condenser	Front of Radiator
Receiver/Dryer Pressure Switch Pressure Relief Valve	Right Side of Radiator
CAB: Blower Control Switch Expansion Valve Evaporator Core Heater Core Blower Motor Blower Motor Resistor Thermostat	Below Center of Instrument Panel

https://truckmanualshub.com/

CH, CV, CT AND CX MODELS WITH BLEND AIR HVAC SYSTEM COMPONENT LOCATIONS [637]

Component	Location
ENGINE COMPARTMENT: Compressor Compressor Clutch	Right Side of Engine
Condenser	Front of Radiator
Receiver/Dryer Pressure Switch Pressure Relief Valve	Right Side of Radiator
Refrigerant Line “T” for Sleeper A/C	Above Engine
CAB: HVAC Unit	Below Center of Instrument Panel
HVAC Control Panel Evaporator Core Heater Core Blower Motor and Fan Blower Motor Resistor (Credit Card) Air Temperature Sensor (ATC Unit Only) Mode Doors and Actuator Blend Door and Actuator Fresh Air Door and Actuator Expansion Valve	In HVAC Unit
SLEEPER: Climate Control Unit Expansion Valve Evaporator Core Heater Core Blower Motor Blower Motor Resistor Thermistor Blend Air Door and Actuator	Left Side of Sleeper Under Bunk
Climate Control Panel	Left Rear Side of Sleeper Above Bunk

https://truckmanualshub.com/

CHN, CXN, CV (ASET™) AND CT MODELS WITH BLEND AIR HVAC SYSTEM COMPONENT LOCATIONS [637]

Component	Location
ENGINE COMPARTMENT: Compressor Compressor Clutch	Left Side of Engine
Condenser	Front of Radiator
Receiver/Dryer Pressure Switch Pressure Relief Valve	Left Side of Radiator
Refrigerant Line “T” for Sleeper A/C	Above Engine
CAB: HVAC Unit	Below Center of Instrument Panel
HVAC Control Panel Evaporator Core Heater Core Blower Motor and Fan Blower Motor Resistor (Credit Card) Air Temperature Sensor (ATC Unit Only) Mode Doors and Actuator Blend Door and Actuator Fresh Air Door and Actuator Expansion Valve	In HVAC Unit
SLEEPER: Climate Control Unit Expansion Valve Evaporator Core Heater Core Blower Motor Blower Motor Resistor Thermistor Blend Air Door and Actuator	Left Side of Sleeper Under Bunk
Climate Control Panel	Left Rear Side of Sleeper Above Bunk

https://truckmanualshub.com/

CXP AND CTP MODELS WITH BEHR HVAC SYSTEM COMPONENT LOCATIONS [637]

Component	Location
ENGINE COMPARTMENT: Compressor Compressor Clutch	Left Side of Engine
Condenser	Front of Radiator
Receiver/Dryer Pressure Switch Pressure Relief Valve	Left Side of Radiator
Refrigerant Line “T” for Sleeper A/C	Left Side of Engine
CAB: HVAC Unit	Below Right Side of Instrument Panel
HVAC Control Panel	IP D Panel
Evaporator Core Heater Core Blower Motor and Fan Blower Motor Resistor (Credit Card) Air Temperature Sensor (ATC Unit Only) Mode Doors and Actuator Blend Door and Actuator Fresh Air Door and Actuator	In HVAC Unit
Expansion Valve	Right Side of Cab Bulkhead Behind Windshield Washer Bottle
SLEEPER: Climate Control Unit Expansion Valve Evaporator Core Heater Core Blower Motor Blower Motor Resistor Thermistor Blend Air Door and Actuator	Left Side of Sleeper Under Bunk NOTE: CTP model not included.
Climate Control Panel	Left Rear Side of Sleeper Above Bunk

https://truckmanualshub.com/

CHU, CXU AND GU MODELS WITH BEHR HVAC SYSTEM COMPONENT LOCATIONS [637]

Component	Location
ENGINE COMPARTMENT: Compressor Compressor Clutch	Left Side of Engine
Condenser	Front of Radiator
Receiver/Dryer Pressure Switch Pressure Relief Valve	Left Side of Cab Bulkhead
Refrigerant Line “T” for Sleeper A/C	Left Side of Engine
CAB: HVAC Unit	Below Right Side of Instrument Panel
HVAC Control Panel	IP D Panel
Evaporator Core Heater Core Blower Motor and Fan Blower Motor Resistor (Credit Card) Air Temperature Sensor (ATC Unit Only) Mode Doors and Actuator Blend Door and Actuator Fresh Air Door and Actuator	In HVAC Unit
Expansion Valve	Right Side of Cab Bulkhead Behind Washer Bottle
SLEEPER: Climate Control Unit Expansion Valve Evaporator Core Heater Core Blower Motor Blower Motor Resistor Thermistor Blend Air Door and Actuator	Left Side of Sleeper Under Bunk NOTE: GU model not included.
Climate Control Panel	Left Rear Side of Sleeper Above Bunk

https://truckmanualshub.com/

NOTES

https://truckmanualshub.com/

TROUBLESHOOTING

https://truckmanualshub.com/

TROUBLESHOOTING MODELS WITH ROTARY CONTROL PANEL AND MILLENNIUM SLEEPER [637]

CX Model A/C System without Constant Temperature Control (CTC) — Red Dot System [637]

CLIMATE CONTROL PANEL [733]

The MACK CX rotary controls operate the fan motor speed, the heater core water valve and the air flow path doors. It also includes switches that operate the fresh/recirc door and A/C clutch.

FAN SPEED SWITCH [733]

The four-speed fan switch operates a single-speed RFI-protected motor through a fuse-protected resistor located on the blower scroll. The loss of one or more fan speeds could be caused by a faulty switch, or a blown resistor fuse due to a faulty resistor coil. The loss of all fan speeds could be caused by a faulty motor or incorrect wire connections.

Check the fan switch by verifying the continuity between the terminals. Refer to Figure 16 and table on page 40.

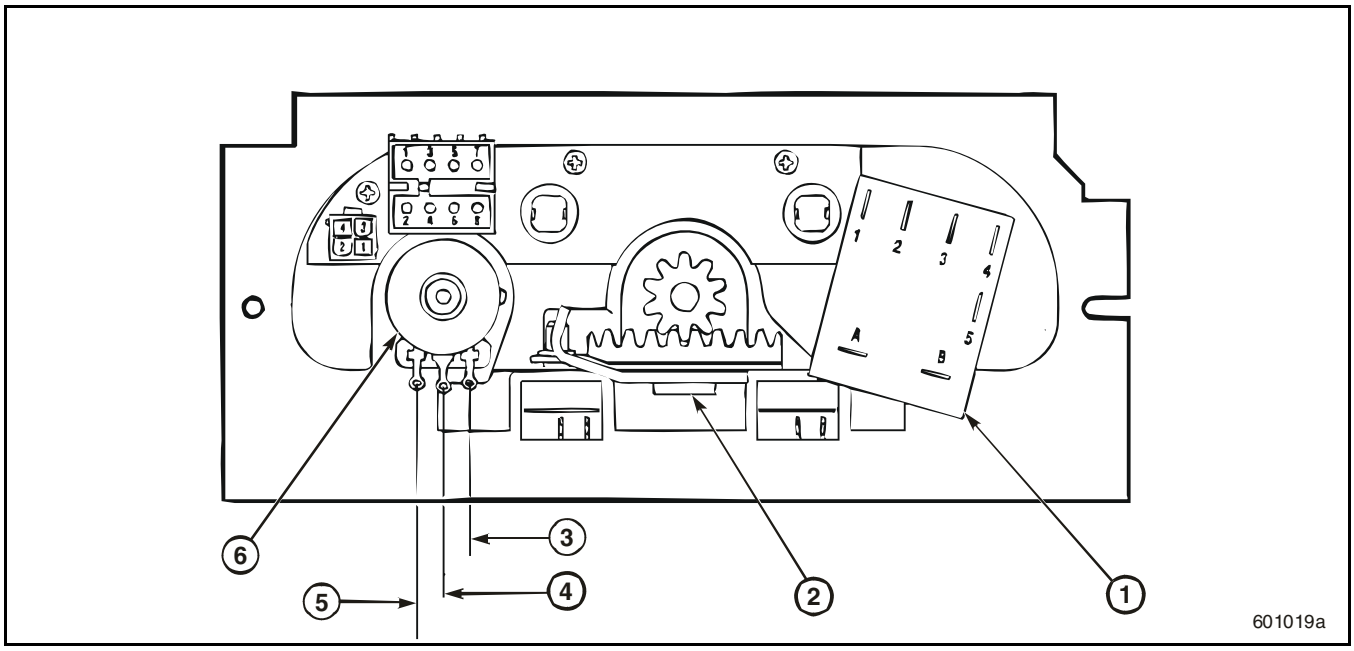

Figure 16 — Rear of CX Climate Control Panel without Constant Temperature Control (CTC)

1. Fan Speed Switch 2. Cable Converter	3. Black Wire 4. Yellow Wire	5. Red Wire 6. Mode Potentiometer

FAN SWITCH CONTINUITY

Fan Switch Position	Fan Switch Terminals
O	No Continuity
1	A, 1, and 5
2	A, 1, and 2
3	A, 1, and 3
4	A, 1, and 4

BLOWER MOTOR RESISTOR [635]

The blower motor resistor can be checked by verifying the continuity between terminal number 2 and all other terminals. Refer to Figure 16.

https://truckmanualshub.com/

BLOWER MOTOR [635]

The blower motor can be checked as follows:

1. Disconnect the blower motor wire harness.
2. Apply 12 volts to the blower motor red wire and ground the motor black wire.

WATER VALVE CABLE CONVERTER WITHOUT CTC [635]

A jammed or inoperative cable control can be caused by a loose cable screw at the cable clamp or water valve, a jammed converter gear, a kinked cable or jammed water valve.

Cab Heater Temperature Control Water Valve

NOTE

For all models (except LE/MR) with a Red Dot system without CTC, the cable-operated cab heater temperature control water valve may cause the cab heat temperature to become difficult to adjust. To eliminate this condition, an improved heater control water valve is available through the MACK Parts System. If a cab heat temperature control complaint is encountered, the existing water valve should be replaced with this improved valve.

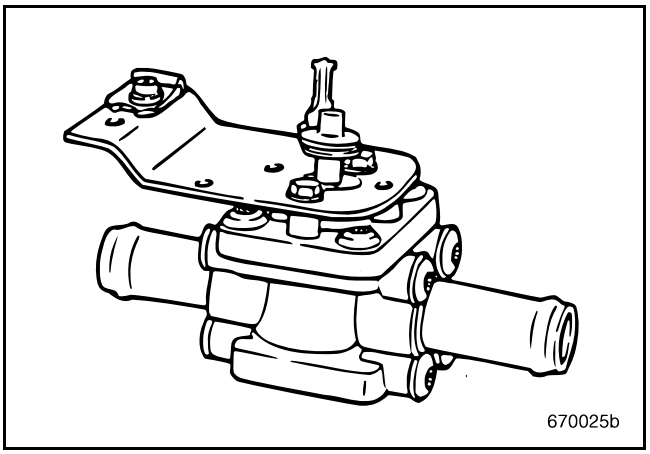

Figure 17 — Replacement Cab Heater Temperature Control Water Valve

NOTE

The heater control valve was originally available in a reverse flow version through the MACK Parts System. This valve can be also used if modified as described below:

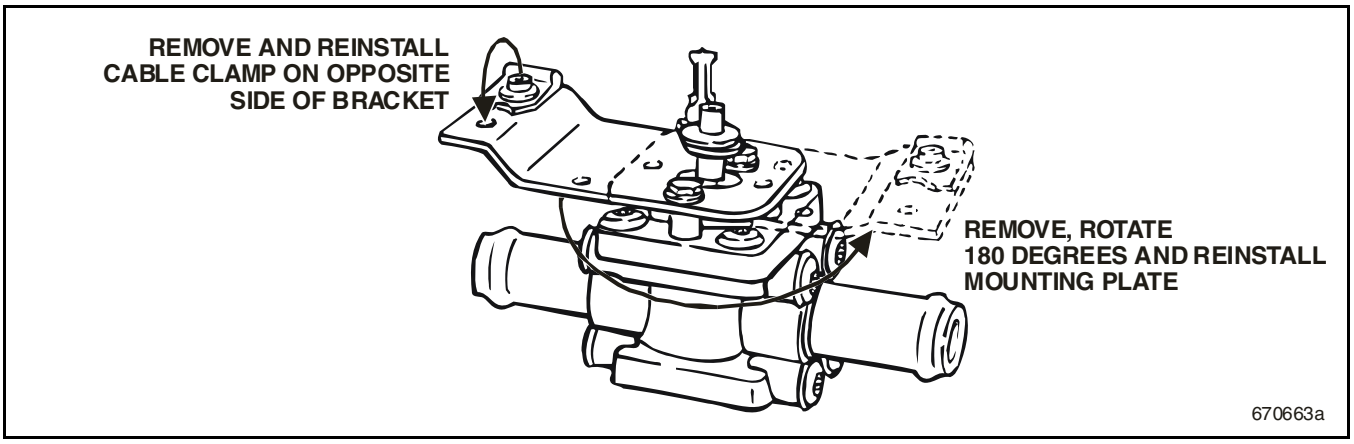

Figure 18 — Modifying Heater Control Valve

1. Remove the cable clamp and relocate it to the opposite side of the bracket.
2. Remove the mounting plate and rotate it 180 degrees.

https://truckmanualshub.com/

AIR DELIVERY MODE CONTROL [733]

The air delivery mode is controlled by a potentiometer on the climate control panel (temperature control). The potentiometer signals an electric rotary actuator for the two unit doors through a cam located on the top of the A/C assembly. It also signals a rotary actuator for the fresh/recirc door on the outboard top of the intake duct.

NOTE

The mode control does not have separate mode detents, but allows for variable control between modes.

The A/C clutch circuit is controlled by the thermostat located on the blower housing and a microswitch located at the mode door cam on the top of the A/C assembly.

NOTE

The A/C clutch circuit is protected by a 15-amp fuse located inside the A/C assembly. If the fuse is blown, **Do Not** replace it with a higher amperage fuse. Check the operation and continuity of the microswitch and thermostat, and replace as necessary. Check under-hood wiring for shorts to ground, and check for a defective A/C clutch that draws in excess of 5.0 amps.

The A/C is engaged by the separate A/C on/off switch on the climate control panel. This switch is overridden to the ON position when the mode control is in the defrost or heat/defrost mode.

The fresh/recirc switch on the climate control panel is overridden to the FRESH position when the mode control is in the defrost or heat/defrost mode.

MODE POTENTIOMETER

Check the mode potentiometer by checking the resistance between the black and yellow pins, and the red and yellow pins. Refer to Figure 16 and table on page 42.

MODE POTENTIOMETER RESISTANCE

Mode	Pins	Resistance
Face	Black and Yellow	Approximately 2 ohms
Face	Red and Yellow	Approximately 10.5 ohms
Defrost	Black and Yellow	Approximately 10.5 ohms
Defrost	Red and Yellow	Approximately 2 ohms

MODE DOOR ACTUATOR

Check the mode door actuator as follows:

1. Disconnect the electrical connector from the mode door actuator.
2. Measure the voltage between pin 7 and pin 10 on the mode door actuator. The measurement should equal supply voltage, with pin 7 being the ground connection.

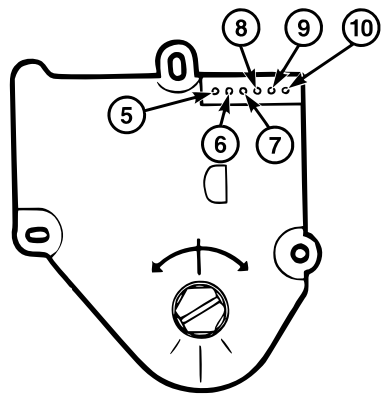

Figure 19 — Mode Door Actuator

5. Open	8. Yellow
6. Open	9. Open
7. Black	10. Red

3. Verify proper actuator operation as follows:
   a. Using a jumper wire, connect pin 8 to pin 10 and observe the actuator stem. The actuator stem should rotate counterclockwise.
   b. Using a jumper wire, connect pin 8 to pin 7 and observe the actuator stem. The actuator stem should rotate clockwise.
   c. Disconnect the jumper wire. With no signal applied to pin 8, the actuator should rotate to the middle position.

https://truckmanualshub.com/

SERVICE HINT

The above actuator check can also be made as follows:

1. Disconnect the 8-way harness connector from the climate control panel.

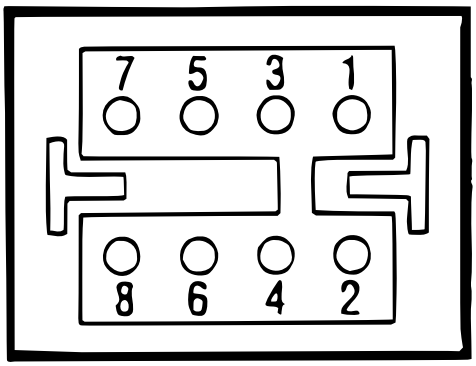

Figure 20 — Climate Control Panel 8-Way Harness Connector

1. Red	5. Green
2. Black	6. Brown
3. Yellow	7. Purple
4. Blue	8. Black/White

2. Using jumper wires, connect pin 2 in the 8-way harness connector to ground and pin 1 to supply voltage.
3. Using a jumper wire, connect pin 3 in the 8-way harness connector to pin 1 and observe the actuator stem. The actuator stem should rotate counterclockwise.
4. Using a jumper wire, connect pin 3 in the 8-way harness connector to pin 2 and observe the actuator stem. The actuator stem should rotate clockwise.
5. Disconnect the jumper wire. With no signal applied to pin 3 in the 8-way harness connector, the actuator should rotate to the middle position.

FRESH/RECIRC DOOR ACTUATOR

Check the fresh/recirc door actuator as follows:

1. Disconnect the electrical connector from the fresh/recirc door actuator.
2. Measure the voltage between pin 5 and pin 7 on the fresh/recirc door actuator. The measurement should equal supply voltage, with pin 7 being the ground connection.

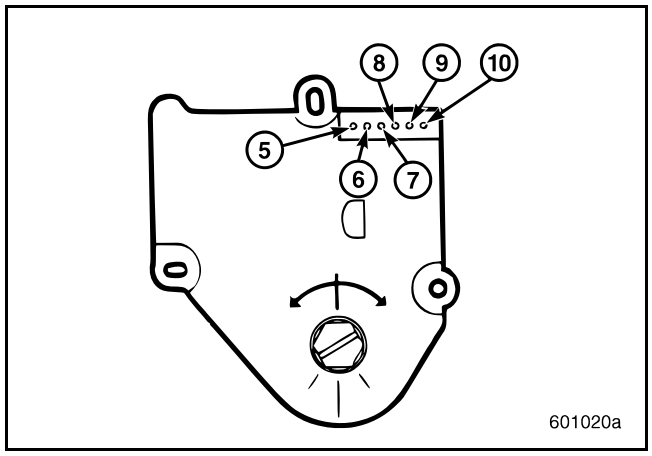

Figure 21 — Fresh/Recirc Door Actuator

5. Red	8. Open
6. Purple	9. Open
7. Open	10. Open

3. Verify proper actuator operation as follows:
   a. Using a jumper wire, connect pin 6 to pin 7 and observe the actuator stem. The actuator stem should rotate counterclockwise.
   b. Disconnect the jumper wire from pin 6. The actuator stem should rotate clockwise.

SERVICE HINT

The above actuator check can also be made as follows:

1. Disconnect the 8-way harness connector from the climate control panel. Refer to Figure 20.
2. Using jumper wires, connect pin 2 in the 8-way harness connector to ground and pin 1 to supply voltage.
3. Using a jumper wire, connect pin 7 in the 8-way harness connector to pin 2 and observe the actuator stem. The actuator stem should rotate counterclockwise.
4. Disconnect the jumper wire from pin 7 in the 8-way harness connector. The actuator stem should rotate clockwise.

https://truckmanualshub.com/

A/C ON/OFF SWITCH

Check the A/C on/off switch by placing the climate control assembly mode switch in the face position and cycling the A/C on/off switch. An audible click should be heard coming from the A/C compressor clutch.

FRESH/RECIRC SWITCH

Check the fresh/recirc switch by placing the climate control assembly mode switch in the floor position and cycling the fresh/recirc switch while observing the door at the upper end of the intake duct. The door should open and close.

CX, CH and CL Models with Rotary Control Panel A/C System with Constant Temperature Control (CTC) — Red Dot System [637]

NOTE

Refer to “CX Model A/C System without Constant Temperature Control (CTC) — Red Dot System [637]” on page 40, for fan switch, blower motor resistor, blower motor, and air delivery mode control troubleshooting.

NOTE

To properly diagnose the two possible modes of failure affecting the Constant Temperature Control (CTC) system, the vehicle must be operating at proper water temperature, air pressure and voltage output.

AIR OUTPUT IS HOT WITH TEMPERATURE CONTROL KNOB IN THE COLD POSITION [733]

Water Valve Will Not Shut Off

Check the water valve as follows:

1. Cycle the temperature control knob from hot to cold, if the solenoid valve can be heard or felt cycling, examine the water valve.
2. Disconnect the air line from the solenoid or the water valve. If the air supply turns on and off as the control knob is cycled, the water valve is defective.

NOTE

The solenoid may cycle, but not exhaust properly, causing the water valve to remain closed.

Check the solenoid as follows:

1. Place the control knob in the cold position, and with the power on, measure the voltage at the solenoid brown wire. Voltage should be 8.5 to 11 volts.
2. Place the control knob in the hot position, and with the power on, measure the voltage at the solenoid brown wire. Voltage should be 0 to 4 volts.
3. If the voltages measured in steps 1 and 2 are within specifications, check the following before replacing the solenoid:
   a. No power to the solenoid, measure the voltage at the circuit board red wire. Voltage should be 12 to 14 volts. If no voltage is measured, check the vehicle electrical system.
   b. Check the in-line fuse.
   c. Check to make sure that the solenoid is grounded.
   d. Connect an ammeter onto a direct power line and connect to the solenoid. Solenoid draw should be 0.5 amp as the control knob is cycled. Any reading over 0.75 amp requires replacement of the solenoid.
   e. Check to make sure there is air being supplied to the solenoid.

Check the CTC potentiometer (solenoid will not cycle) as follows:

1. Disconnect the electrical connector from the potentiometer and measure the voltage at the green wire in the connector going to the CTC circuit board. Voltage should be 8.5 to 12 volts. If no voltage is measured, check the connector. If the connector is OK, replace the CTC circuit board.

https://truckmanualshub.com/

2. Using a jumper wire, connect the green wire to the orange wire in the connector going to the CTC circuit board. If the solenoid cycles, replace the CTC potentiometer.
3. Connect the electrical connector to the potentiometer, and measure the voltage at the orange wire in the connector with the potentiometer in the hot and cold positions. Voltage should be 8 to 11 volts in the hot position and 0 to 4 volts in the cold position. If no voltage is measured, check for an open circuit. If the circuits are OK, replace the CTC potentiometer.

AIR OUTPUT IS COLD WITH TEMPERATURE CONTROL KNOB IN THE HOT POSITION [733]

Water Valve Will Not Open

Check the water valve as follows:

1. Make sure power to the CTC climate control panel is on, then disconnect the electrical connector from the CTC circuit board. If the solenoid cycles and air output becomes hot, there is a problem with the CTC circuit board. If the solenoid does not cycle, check the solenoid and water valve. Refer to “AIR OUTPUT IS HOT WITH TEMPERATURE CONTROL KNOB IN THE COLD POSITION [733]” on page 44.
2. Connect the electrical connector to the CTC circuit board, and measure the voltage at the orange wire in the connector with the potentiometer in the hot and cold positions. Voltage should be 8 to 11 volts in the hot position and 0 to 4 volts in the cold position. If the voltage measured is 10 to 13 volts and remains unchanged as the potentiometer is moved from hot to cold, go to step 3. If the voltage measured is 10 to 13 volts and changes only 1 or 2 volts as the potentiometer is moved from hot to cold, the CTC circuit board is not properly grounded. Remove the circuit board from the A/C unit, clean the mounting surfaces, and re-install.
3. Disconnect the orange wire from one end of the CTC potentiometer. If the solenoid cycles, replace the CTC potentiometer.

Millennium Sleeper A/C Unit [637]

To troubleshoot the Millennium Sleeper A/C unit, check the following:

1. Verify coolant flow to the heater core by checking the temperature of the heater core tubes to make sure hot coolant is flowing through the core.
2. Verify the refrigerant system by checking the temperature of the evaporator tubes to make sure they are cool.

NOTE

The most likely thermistor problems are a shorted or open thermistor circuit.

3. Verify proper thermistor operation as follows:
   a. Disconnect the thermistor electrical connector.
   b. Measure the resistance of the thermistor at room temperature. Resistance should be 2,500 to 3,500 ohms at 25°C (77°F). Resistance decreases with an increase in temperature and increases with a decrease in temperature.
   c. Connect the thermistor electrical connector and measure the voltage across the thermistor with the mode selection knob in the A/C and Heat modes. Voltage should be 4 volts in the A/C mode and 8 volts in the Heat mode.

4. Verify proper rotary actuator operation as follows:
   a. Measure the voltage between pin 7 (ground) and pin 10 of the rotary actuator. Voltage should be equal to supply voltage.
   b. Measure the voltage between pin 7 (ground) and pin 8 of the rotary actuator while the mode selection knob is switched between the A/C and the Heat mode (temperature control knob in Heat position). Voltage should vary from 2 to 11 volts, and should result in movement of the blend air door from the heater core to the evaporator core. If the voltage remains at approximately 2 volts, check for a shorted thermistor connection or climate control panel problem. If the voltage remains at 11 volts, check for an open thermistor or climate control panel problem.
5. Verify proper blower motor operation by measuring the voltage at the motor with the blower control knob in the high speed position. Voltage should be 12 volts. If 12 volts is measured but the motor is still not turning, check for a seized motor or possible intermittent connection in the wiring harness. If 12 volts is not measured, inspect the wiring harness up to and including the climate control panel.
6. Verify proper climate control panel operation as follows:
   a. Measure the voltage between red and black wires of the climate control panel circuit board. Voltage should be 12 volts.
   b. Verify the ground circuit by checking the black wire at the climate control panel circuit board to verify that it has no resistance to ground.
   c. Measure the voltage at the short black wire with the 90-degree female connector on the climate control panel circuit board with the mode selection knob in either the A/C or Heat mode. Voltage should be 12 volts.
   d. Measure the voltage between the brown and black wires of the climate control panel circuit board while the mode selection knob is switched from the A/C to the Heat mode. Voltage should vary from 2 to 11 volts. If the voltage measured is not within specification and the thermistor is operating properly, replace the climate control panel.
   e. Measure the voltage between the purple and black wires of the climate control panel circuit board while the mode selection knob is switched from the A/C to the Heat mode (temperature control knob in Heat position). Voltage should vary from 2 to 11 volts, and should result in movement of the blend air door from the heater core to the evaporator core. If the voltage measured is not within specification and the rotary actuator is operating properly, replace the climate control panel.

CH, CHN, CL, CT, CV, CX and CXN Models (Bergstrom) with Blend Air Rotary Control Panel and HVAC Unit — without Automatic Temperature Control (ATC) [637]

CLIMATE CONTROL PANEL

The rotary control panel operates the blower (fan) motor speed, heating blend air doors, air flow mode doors and the fresh/recirc door. This control panel also includes a switch that operates the A/C compressor clutch.

BLOWER (FAN) SPEED SWITCH

The 5-position, 4-speed fan switch operates a single motor through a fuse-protected credit card type resistor located inside the unit. A faulty switch or blown fuse/resistor could cause the loss of one or more fan speeds. A faulty motor, a rubbing or locked blower wheel, or incorrect wiring could cause the loss of all fan speeds.

https://truckmanualshub.com/

Check the blower (fan) switch by verifying continuity between the terminals. Refer to Figure 22 and the following table.

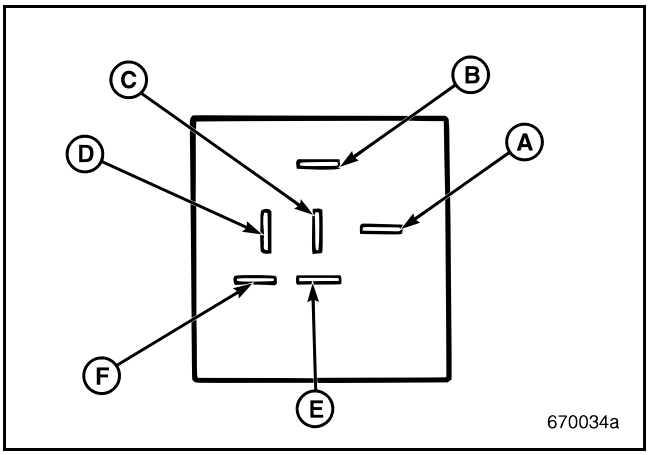

Figure 22 — Blower Switch Pinout

Switch Position	Switch Terminals
O	No Continuity
1	E, A, and F
2	E, B, and F
3	E, C, and F
4	E, D, and F

BLOWER MOTOR RESISTOR (CREDIT CARD TYPE)

The blower motor resistor can be checked by verifying the continuity between pin C and each of the other terminals. Refer to Figure 22.

BLOWER MOTOR

The blower motor can be checked as follows:

1. Disconnect the wire harness from the motor.
2. Apply 12 volts to the motor red wire and ground the black wire.

Replace the blower motor if motor speed is slow, binding, sluggish or motor is not rotating.

BLEND DOOR CONTROL

An obstruction of the blend door operating mechanism or an obstruction of the blend doors inside the HVAC unit can cause a jammed or inoperative blend door control (temperature rotary control knob).

1. Remove the front cover of the unit to gain access to the blend door operating mechanism located in the front of the unit.
2. Rotate the temperature rotary control knob on the control panel to observe any problems between the knob and the blend door linkages. Check for anything that may be in the way of the mechanism. Remove any obstructions and then rotate the temperature control knob to see if it now operates.
3. If no obstruction in the linkages is apparent, remove the clip retaining the upper blend door control rod to the blend door hub and remove the rod.

NOTE

Make sure to MARK the rod to indicate the amount of thread engaged in the clip before removing the rod from the clip.

4. With the rod removed, rotate the blend door hub by hand to feel for any binding of the blend doors. If the blend doors are not binding, replace the temperature rotary control.
5. If binding of the doors exists, remove the tie link connecting the upper and lower blend doors together. With the link removed, rotate the blend doors individually.
6. If the upper blend door is binding, remove the evaporator from the unit and remove the cause of the binding.
7. If the lower blend door is binding, remove the heater core from the unit and remove the cause of the binding.
8. If there is no obstruction in either blend door and the binding is not visibly apparent, replace the HVAC unit.

https://truckmanualshub.com/

AIR DELIVERY MODE CONTROL

The air delivery mode is controlled by a mechanism operated by the mode control knob. Incorrect operation can be caused by obstruction or binding of the mode door mechanism.

1. Remove the unit cover to observe the mode door rod.
2. Attempt to rotate the mode control knob while observing the mode door rod. The blend door control rod and mechanism should operate freely.

NOTE

Do not over torque the mode control knob. This could damage the mode control or mode control mechanism.

3. If the mode door rod is not visibly obstructed, detach the clip securing the mode rod to the mode door control.

NOTE

Make sure to MARK the rod within the clip so that it can be reassembled correctly.

4. Push and pull the rod to determine if the mode door levers and cam mechanism operate freely. If the rod will not move, replace the HVAC unit.
5. If the mode levers and cam mechanism operate freely, replace the rotary mode control.

FRESH/RECIRC DOOR CONTROL

The fresh air door is controlled by a lever located under the mode control knob on the control panel. The lever operates a cable attached to the fresh air door. Turning the mode control knob to the defrost position causes the lever to move to fresh air mode. Incorrect operation can be caused by an obstruction in the path of the fresh air door.

1. If the fresh air door does not operate, the HVAC unit must be removed to determine the cause of the binding.
2. Remove the HVAC unit and attempt to open and close the fresh air door by hand.
3. If the fresh air door will not rotate, replace the HVAC unit.

A/C OPERATION

The A/C compressor clutch is energized (12 volts at pin 12 of the control panel connector) by either the A/C push-button switch on the control panel, or by the microswitch located on the rear of the control panel assembly. The microswitch turns the compressor clutch on when the mode control knob is rotated to the Heat/Defrost or Defrost position.

NOTE

The blower rotary control must be turned on (any of the four speed positions) in order for the A/C compressor clutch to be turned on.

NOTE

The control panel has a solid state self-resetting fuse that protects the A/C compressor clutch electrical circuit. Before replacing the control panel because the A/C compressor clutch does not engage, make sure there is no electrical short to ground in the clutch circuit, or a defective A/C clutch that draws more than 5 amperes of current.

A/C ON/OFF SWITCH

Check the A/C switch by turning the mode rotary control knob to the panel (face) position and cycling the A/C On/Off switch. An audible click from the A/C compressor clutch should be heard.

https://truckmanualshub.com/

CH, CHN, CL, CT, CV, CX and CXN Models with Blend Air Rotary Control Panel and HVAC Unit — with Automatic Temperature Control (ATC) [637]

NOTE

Refer to “CH, CHN, CL, CT, CV, CX and CXN Models (Bergstrom) with Blend Air Rotary Control Panel and HVAC Unit — without Automatic Temperature Control (ATC) [637]” on page 46 for fan switch, blower motor resistor, blower motor, and air delivery mode troubleshooting.

BLEND DOOR ACTUATOR

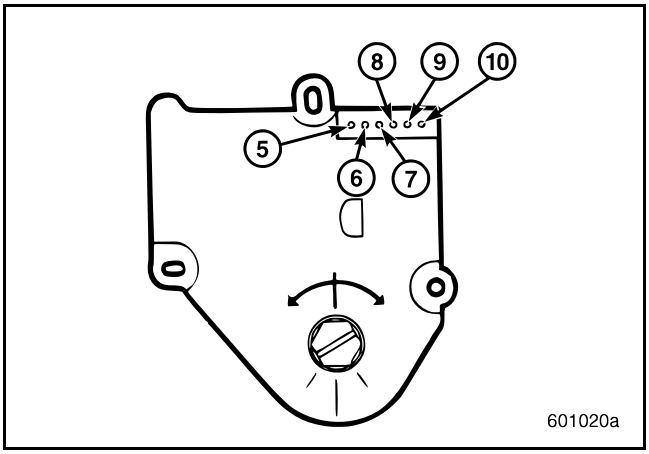

Figure 23 — Blend Door Actuator

5. No Connection	8. Tan (Control)
6. No Connection	9. No Connection
7. Black (Ground)	10. Red (Power)

Check the blend air door actuator as follows:

1. Disengage the electrical connector from the blend door actuator.
2. Measure the voltage between pin 7 and pin 10 on the blend door actuator connector. The measurement should be equal to the supply voltage, with pin 7 being the ground connection.
3. Verify proper actuator operation as follows:
   a. Connect 12 volts to pin 10 and ground to pin 7 of the actuator. Using a jumper wire, connect pin 8 to pin 10 and observe the actuator stem. The actuator stem should rotate clockwise. Disconnect the jumper wire.
   b. Using a jumper wire, connect pin 7 to pin 8 of the actuator and observe the actuator stem. The actuator stem should rotate counterclockwise.
   c. Disconnect the jumper wire. With no connection at pin 8, the actuator stem should rotate to the middle position.
4. If the actuator did not operate properly as tested, replace the actuator. If the actuator operates correctly, check the wire harness for poor connections and repair as necessary.

SERVICE HINT

The blend door actuator check can also be made as follows:

1. Disengage the 12-way harness connector from the ATC rotary control panel.
2. Using jumper wires, connect pin 11 in the 12-way harness connector to 12 volts. Connect pin 3 to ground.
3. Using a jumper wire, connect pin 8 to pin 11 and observe the actuator stem. The actuator stem should rotate clockwise. Remove the jumper wire.
4. Using a jumper wire, connect pin 7 to pin 8 and observe the actuator stem. The actuator stem should rotate counterclockwise.
5. Disconnect the jumper wire. With no connection at pin 8, the actuator should rotate to the middle position.

https://truckmanualshub.com/

FRESH/RECIRC DOOR ACTUATOR

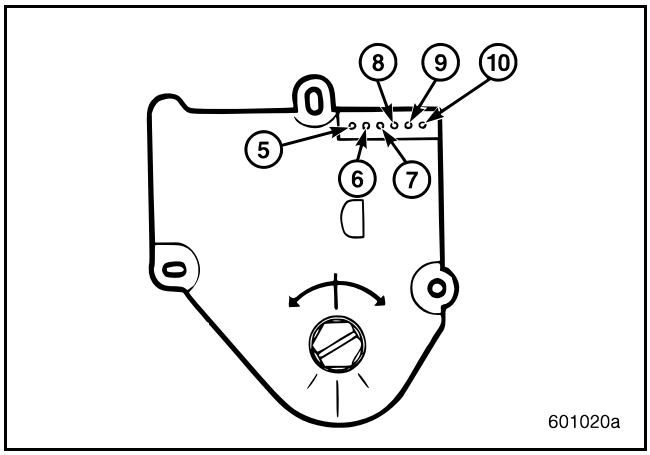

Figure 24 — Fresh/Recirc Door Actuator

5. No Connection	8. Lt. Blue (Control)
6. No Connection	9. No Connection
7. Black (Ground)	10. Red (Power)

Check the fresh/recirc door actuator as follows:

1. Disengage the electrical connector from the fresh/recirc door actuator.
2. Measure the voltage between pin 7 and pin 10 on the fresh/recirc door actuator connector. The measurement should be equal to the supply voltage, with pin 7 being the ground connection.
3. Verify proper actuator operation as follows:
   a. Connect 12 volts to pin 10 and ground to pin 7 of the actuator. Using a jumper wire, connect pin 8 to pin 10 and observe the actuator stem. The actuator stem should rotate clockwise. Disconnect the jumper wire.
   b. Using a jumper wire, connect pin 7 to pin 8 of the actuator and observe the actuator stem. The actuator stem should rotate counterclockwise.
   c. Disconnect the jumper wire. With no connection at pin 8, the actuator stem should rotate to the middle position.
4. If the actuator did not operate properly as tested, replace the actuator. If the actuator operates correctly, check the wire harness for poor connections and repair as necessary.

SERVICE HINT

The fresh/recirc door actuator check can also be made as follows:

1. Disengage the 12-way harness connector from the ATC rotary control panel.
2. Using jumper wires, connect pin 11 in the 12-way harness connector to 12 volts. Connect pin 3 to ground.
3. Using a jumper wire, connect pin 11 to pin 4 and observe the actuator stem. The actuator stem should rotate clockwise. Remove the jumper wire.
4. Using a jumper wire, connect pin 3 to pin 4 and observe the actuator stem. The actuator stem should rotate counterclockwise.
5. Disconnect the jumper wire. With no connection at pin 4, the actuator should rotate to the middle position.

NOTE

To properly diagnose the two possible modes of failure affecting the Automatic Temperature Control (ATC) system, the vehicle must be operating at proper coolant temperature and voltage output. The temperature inside the cab must be between 60°F and 85°F, or the ATC circuit output may not change when turning the temperature rotary control knob.

AIR OUTPUT HOT WITH TEMPERATURE CONTROL KNOB IN COLD POSITION

Blend Air Door Will Not Close

Check the blend air door as follows:

1. Check the blend door actuator. Refer to “BLEND DOOR ACTUATOR” on page 49.
2. If the actuator does not move, remove the actuator and retest. If the actuator operates when removed, repair the door and/or mechanism as necessary. If the actuator does not operate when removed and tested, replace the actuator and retest.

3. If the actuator moves properly, disconnect the actuator connector and test the ATC control function as follows:
   a. Make sure the 12-way connector on the control panel is connected and the blend door actuator is NOT connected.
   b. Turn the blower on and turn the temperature control knob to full cold.
   c. The voltage at pin 8 on the control panel should be between 8 and 10 volts.
   d. If the voltage is incorrect, replace the ATC control panel. If the voltage is correct, check the wire harness for poor connections and repair or replace as necessary.

AIR OUTPUT COLD WITH TEMPERATURE CONTROL KNOB IN HOT POSITION

Blend Air Door Will Not Open

Check the blend air door as follows:

1. Check the blend door actuator. Refer to “BLEND DOOR ACTUATOR” on page 49.
2. If the actuator does not move, remove the actuator and retest. If the actuator operates when removed, repair the door and/or mechanism as necessary. If the actuator does not operate when removed and tested, replace the actuator and retest.
3. If the actuator moves properly, disconnect the actuator connector and test the ATC control function as follows:
   a. Make sure the 12-way connector on the control panel is connected and the blend door actuator is NOT connected.
   b. Turn the blower on and turn the temperature control knob to full hot.
   c. The voltage at pin 8 on the control panel should be between 3 and 5 volts.
   d. If the voltage is incorrect, replace the ATC control panel. If the voltage is correct, check the wire harness for poor connections and repair or replace as necessary.

Blend Air HVAC Unit Circuit-By-Circuit Troubleshooting Guide

This troubleshooting guide provides a list of the wiring circuits (by color code), circuit descriptions and information on troubleshooting and repair.

- Red — There should be power whenever the ignition switch is on. If no voltage is present, check the main blower fuse and connections and repair or replace as necessary.
- White — Panel dimmer feed for the lights.
- Pink — Power for the A/C compressor clutch. If the red wire to the blower switch has power and the blower control switch is turned on in any speed, this circuit should be hot. If not, check the blower switch and replace if necessary.
- Blue/White — A/C compressor clutch power switched by the control panel. This circuit should have power when the blower is on and either the A/C On/Off push-button switch is turned on, or the mode control is set to Defrost or Heat/Defrost.

NOTE

The control panel has a solid state self-resetting fuse to protect the A/C compressor clutch circuit. Before replacing the control panel because the A/C compressor clutch does not engage, make sure there is not a short to ground in the A/C compressor clutch circuit.

If the pink wire is OK and there is no power in this circuit, the control panel needs to be replaced.

- Blue — Power to A/C compressor clutch. If the blue/white wire is OK and this wire does not have power, check the thermostat (switch opens at 30°F and closes at 36°F) and replace if necessary.
- Yellow — Blower speed 1. This circuit is hot when the blower control switch is on in speed position 1. If not, check the blower control switch and replace if necessary.
- Green — Blower speed 2. This circuit is hot when the blower control switch is on in speed position 2. If not, check the blower control switch and replace if necessary.

https://truckmanualshub.com/

- Light Green — Blower speed 3. This circuit is hot when the blower control switch is on in speed position 3. If not, check the blower control switch and replace if necessary.
- Orange — Blower speed 4. This circuit is hot when the blower control switch is on in speed position 4. If not, check the blower control switch and replace if necessary.
- Light Blue — Control signal for fresh/recirc door actuator (ATC only). Check this function in Heat mode. The voltage should be greater than 10 volts when recirculation is selected (indicator light should be on) and less than 1 volt when fresh air is selected (indicator off).

NOTE

When Defrost or Heat/Defrost is selected, the voltage will be less than 2 volts, even with the indicator on.

- Purple — Microswitch circuit. For the ATC control, this circuit should be ground. For the manual A/C unit, this circuit should be power whenever the blower is on.
- Tan — Control circuit for blend door actuator (ATC only). Make sure the temperature is between 60°F and 85°F when testing ATC. With the temperature setting at full cold, the output voltage should be greater than 9 volts. With the temperature setting at full hot, the output voltage should be 4–4.5 volts.
- Gray — Output circuit from microswitch (ATC only). Check this circuit with the A/C switch OFF and the blower ON. In either Defrost or Heat/Defrost modes, this circuit should be ground. In all other modes, this circuit should be power.

CH, CHN, CX and CXN Models with Blend Air Sleeper Systems Experiencing Evaporator Freezing and Icing

SLEEPER A/C EVAPORATOR FREEZING AND ICING — CH, CHN, CX AND CXN CHASSIS WITH BLEND AIR HVAC

Complaints of sleeper box A/C evaporator freezing and icing may be encountered on some CH, CHN, CX and CXN model chassis equipped with a Blend Air HVAC system.

To correct this problem, install a service replacement front (cab) expansion valve (part No. 4379-RD570151). Refer to “Corrective Action for Sleeper Box Air Conditioner Evaporator Freezing and Icing — CH, CHN, CV, CX and CXN Models with Blend Air-Type HVAC Systems” on page 94.

https://truckmanualshub.com/

TROUBLESHOOTING BEHR HVAC SYSTEM — CTP, CXP, CXU, CHU AND GU MODELS [637]

Behr System

FAN SPEED RESISTOR

The four-speed fan switch operates the blower motor through a “credit-card” type resistor located on the evaporator cover. The loss of one or more fan speeds could be caused by a faulty switch or a tripped resistor fuse.

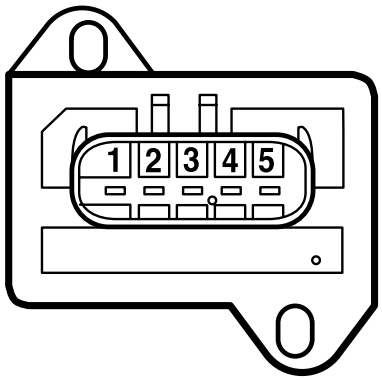

Figure 25 — Resistor Connector Terminals

The loss of all fan speeds could be caused by a faulty motor, faulty blower switch, incorrect wire connections or a blown circuit fuse.

FAN SPEED SWITCH

Check the blower speed switch by verifying system voltage at the appropriate terminals. Refer to Figure 27 for voltages per the electrical schematic in Figure 25 and the control panel’s connections in Figure 26.

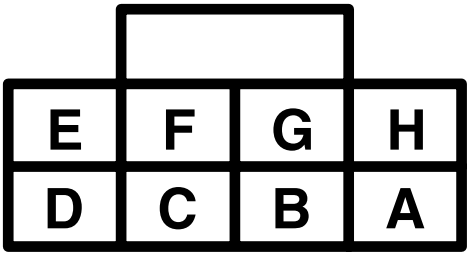

Figure 26 — Control Panel Connector Terminals

BLOWER MOTOR RESISTOR

The blower motor resistor can be checked by verifying the continuity between terminal number 2 and all other terminals. Refer to Figure 25 and Figure 27.

https://truckmanualshub.com/

BLOWER MOTOR

The blower motor can be checked as follows:

1. Disconnect the blower motor wire harness.
2. Apply 12 volts to one blower terminal and ground the other terminal. A good blower will spin.
3. If the blower doesn't spin, check the resistor and harness continuity per Figure 27.

Blower airflow by mode is detailed in Figure 31.

Fan Switch Position	Fan Switch Terminal	Resistor Path	Blower Connector Voltages
Off	none	none	0
1	G = ground	5 to 2 ~ 3.0 □ +/- 10%	B = ~4 V_{DC}
2	H = ground	4 to 2 ~ 1.2 □ +/- 10%	B = ~6 V_{DC}
3	C = ground	3 to 2 ~ 0.4 □ +/- 10%	B = ~9 V_{DC}

800071b

Figure 27 — Blower Circuit Troubleshooting Reference

Unit Parts — Behr System

ACTUATORS

The actuator indexes the doors to the proper orientations depending upon the signal from the control panel (refer to the airflow routing diagrams).

MODE AND TEMPERATURE ACTUATORS

Actuators respond to voltages in the harness. The signal will be applied to pin 8, ground to pin 7, and supply voltage to pin 10. A quick check of these actuators can be achieved without removing them from the module: after removing the harness connector from the actuator in question, supply voltages per the values in Figure 31, the actuator should index the doors accordingly.

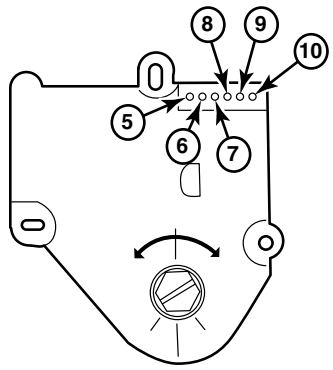

800072a

Figure 28 — Actuator Terminals

5. Pin 5	8. Pin 8
6. Pin 6	9. Pin 9
7. Pin 7	10. Pin 10

Also, the actuators can be unfastened from the module so that they remain attached to the vehicle only by the harness. Then, manipulating the appropriate control knob should result in a response at the actuator's output shaft.

https://truckmanualshub.com/

OSA/RECIRCULATION ACTUATOR

The actuator responds to voltage in the harness. When battery voltage is applied across the actuator terminals, the OSA door should operate or drive against the stop. When the polarity of the voltage is reversed, the door should move in the opposite direction or drive against the stop.

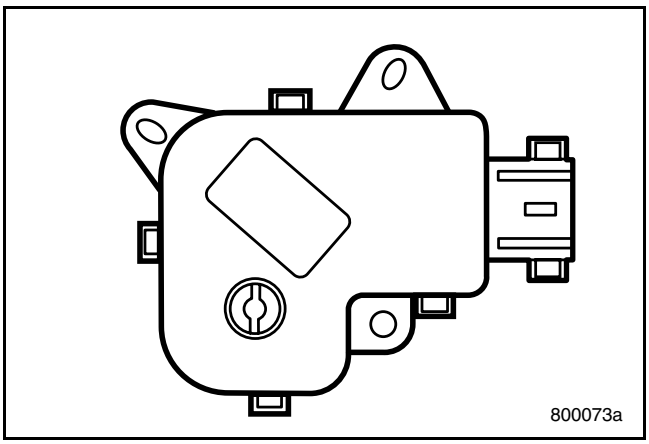

Figure 29 — OSA Actuator Terminals

SENSORS

A faulty temperature sensor will return an incorrect resistance reading to the control panel. A faulty freeze protection sensor would lead to improper compressor cycling, and a faulty discharge sensor (ATC only) could lead to improper temperature control. Both sensors can be tested in an ice bath and should read around 8.9 kΩ across the connection pins.

EVAPORATOR AND COVER

Debris can build up between the blower and evaporator. Access the evaporator by removing its cover. Rinse debris from the face of the evaporator with a light stream of water. The evaporator fins and coatings can be easily damaged, so caution should be exercised when the evaporator is exposed. There should be no brushing or other abrasion, excessive water or air pressure, or cleaning agents used on the evaporator. When replacing the evaporator cover, tighten the retaining screws only enough to hold the cover in place. Maximum torque is 1.1 N•m (10 lb-in). Careful replacement of the retaining screws will maximize the number of times the cover can be replaced using the original, molded-in screw bosses.

Behr System

AIR DELIVERY MODE CONTROL

The selection of a particular distribution mode will result in airflow from the outlets per the matrix in Figure 31. The control panel manages air distribution with the electrical signals it sends to the actuators. The signals are communicated from the control panel's terminals as shown in Figure 30.

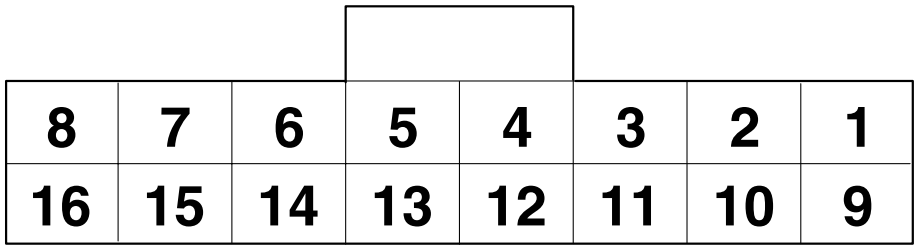

Figure 30 — Control Panel Connector Terminals

https://truckmanualshub.com/

These control panel signals can be verified by checking the terminals on the back of the control panel. The electrical output of the control panel should conform to the approximate values in Figure 31.

Actuator	Setting or Condition	Control Terminals	Component Terminals	Signal to Component	Air Flow with Blower Switch on 4		
					Foot	Panel	Defrost
Mode	Panel	signal = 6 power = 7 ground = 15	signal = 8 power = 10 ground = 7	~ 12 V	none	high	none
	Bi-level			~ 9 V	moderate	moderate	none
	Foot			~ 6 V	high	none	none
	Mix			~ 4 V	moderate	none	moderate
	Defrost			~ 1.5 V	none	none	high
Recirculation	Outside Air	3	B	~ 12 V			
	Recirculation	4	A	~ 12 V			
Temperature	Full Cold	signal = 5 power = 7 ground = 15	signal = 8 power = 10 ground = 7	~ 1 V			
	Full Hot			~ 12 V			

800068a

Figure 31 — Control Panel, Approximate Signals to Actuators

https://truckmanualshub.com/

TESTING THE APADS® CM812 AND CM813 MODULE [637]

Six-Pin Connector

Pin number one (blue): A/C compressor clutch coil drive. An open, shorted wire, or shorted compressor clutch in this circuit causes the control module to disengage the A/C clutch and activate the red LED to blink three consecutive times. The A/C compressor is latched off until the next ignition cycle, if open clutch is detected. (This diagnostic is not self clearing. You must cycle the ignition switch four times to clear the fault.)

Pin number two (red): Control module supply voltage, ignition switched. If voltage drops below 10 volts, the LED will not illuminate. Low voltage signal is also detected in this circuit. This can be caused by a defective alternator, discharged batteries or excessive electrical loads. This diagnostic is self clearing, the blink code is displayed only while low voltage is present. If the wire is disconnected or has an opened circuit, the system will not function.

Pin number three (orange): Engine fan actuator circuit. A ground signal is provided in this circuit to either an engine ECM or a fan solenoid valve to keep the engine fan off. When the high pressure switch switches to an open state (pressure rising above 300 psi), it removes the ground from the circuit causing the engine fan to engage. Depending on the control module, the fan control is adaptive, depending upon the frequency of the request for operation. Fan timing has a minimum duration of 45 seconds and a maximum of three minutes. When the fan is requested, the fan control output removes the ground going to either the ECM or the fan solenoid. If the wire is disconnected or opened, the engine fan runs continuously.

Pin number four (black): Control module ground. All voltage checks must be grounded at this pin. If the wire is disconnected or opened, the system will not function.

Pin number five (green): Evaporator thermostat and A/C on/off input. The evaporator thermostat is the main A/C system control. The evaporator thermostat is wired in series with the A/C system on/off switch. These switches are configured to switch battery voltage when A/C operation is requested. If the wire is disconnected or opened, the system will not function. Control module will not know there is a problem.

Pin number six: Not used.

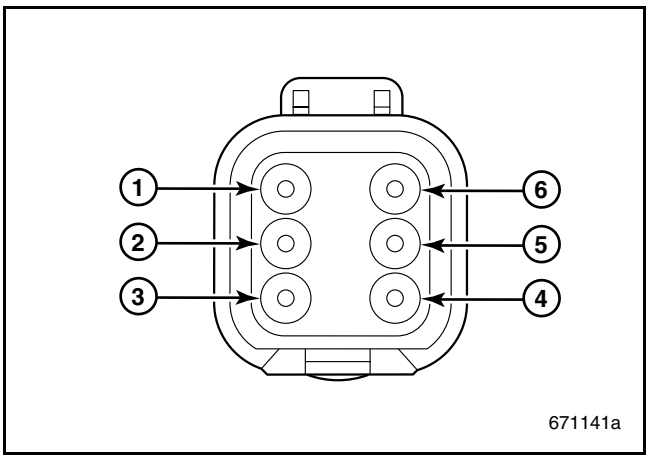

Figure 32 — Six-Pin Connector

Four-Pin Connector

Pin number one (white): Low pressure switch. The switch has a 2.49k ohm resistor built into the header. With a full charge of refrigerant, the switch is in the open position. If the pressure switch closes due to the pressure dropping below 10 psi or a loss of refrigerant, the A/C clutch disengages. If the wire is disconnected or opened, the control module disengages the A/C clutch and activates the red LED to blink four consecutive times.

Pin number two (white/black): Low pressure switch return. The switch has a 2.49k ohm resistor built into the header. With a full charge of refrigerant, the switch is in the open position. If the pressure switch closes due to the pressure dropping below 10 psi or a loss of refrigerant, the A/C clutch disengages. If the wire is disconnected or opened, the control module disengages the A/C clutch and activates the red LED to blink four consecutive times.

Pin number three (yellow): High pressure switch. The switch has a 2.49k ohm resistor built into the header. The switch is normally in the closed position. When pressure rises above 300 psi, the switch activates the engine fan. If the wire is disconnected or opened, the control module disengages the A/C clutch and activates the red LED to blink four consecutive times.

Pin number four (yellow/black): High pressure switch return. The switch has a 2.49k ohm resistor built into the header. The switch is normally in the closed position. When pressure rises above 300 psi, the switch activates the engine fan. If the wire is disconnected or opened, the control module disengages the A/C clutch and activates the red LED to blink four consecutive times.

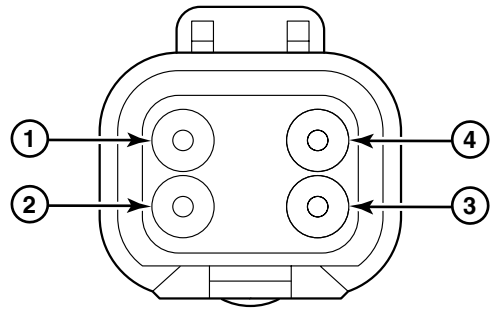

671142a

TROUBLESHOOTING APADS® CM812 AND CM813 SYSTEMS

Blink Code Identification

Condition	Indicates
Slow Green	Unit is functioning properly.
Fast Green	Low system voltage
One Red Blink	Loss of refrigerant
Two Red Blinks	Fan failure or external condenser blockage
Three Red Blinks	Voltage drop out, open or shorted wire to compressor clutch
Four Red Blinks	Open wire in pressure switch circuit

https://truckmanualshub.com/

Troubleshooting Charts

Condition	Definition	Possible Cause	Action
Slow flashing green light.	Two seconds on, 1/4 second off.	Unit is functioning properly.	No action needed.
Rapid flashing green light	Low system voltage, indicates low supply voltage condition. Voltage has dropped below 11 volts.	Possibly caused by a defective alternator, discharged batteries, poor ground or an excessive electrical load.	Check voltage at the control harness by probing pins 4 (ground) and 2 (power). If voltage is less than 11 volts, start checking for voltage drops or a poor ground.
Ignition on, LEDs not flashing on control module or no lights on module.	Control module not receiving battery voltage.	Fuse or circuit breaker blown.	Repair fuse or reset circuit breaker.
		Broken power or ground wire to control module.	Repair wiring.
		Defective control module.	Replace control module.
Red light flashing one blink in sequence.	Low pressure fault. This is detected by monitoring the ambient temperature and switching activity of the low pressure switch.	A partial or total loss of refrigerant.	Install service gauges and check system for leaks.
		A defective low pressure switch.	Disconnect the low side pressure switch connector and measure the resistance value of the switch. If the resistance shows 2.49k ohms, switch is operating properly. If resistance shows less than 5 ohms, replace the switch.
		Bad Schrader valve stem.	Verify with the gauge set. Replace if necessary. **NOTE**: This check must be done with the switch installed on the vehicle and the ignition in the off position and proper charge.
Red light flashing two blinks in sequence.	High pressure fault. The system is exhibiting abnormal high pressure activity.	Fan drive failure.	Inspect proper operation of solenoid valve/relay and/or related components.
		Blocked airflow through condenser.	Remove restriction from condenser.
Red light flashing three blinks in sequence.	Open wire to A/C clutch. Detected by inadequate current through the compressor clutch. If no current is sensed when the A/C drive is turned on, an open connection to the clutch coil is indicated.	A break in the wiring between the control module and the A/C compressor clutch or a break in the clutch coil.	With the use of an ohm meter, check the resistance of the clutch coil. If the reading is less than 2.8 ohms, replace the clutch.

https://truckmanualshub.com/

Condition	Definition	Possible Cause	Action
	Shorted wire or shorted A/C clutch. Detected by excessive current through the compressor clutch.	This is indicative of either a shorted coil or shorted wiring to the clutch.	On the truck harness side of the 6-pin connector, verify the resistance between pins one and four is either greater than 5 ohms for an open clutch condition or less than 2 ohms for a shorted clutch condition. Next, check for a bad clutch or bad clutch ground. If clutch resistance is greater than 5 ohms to ground, verify the ground connection before replacing the clutch. If clutch resistance is less than 2 ohms, replace the clutch. If the clutch is OK, locate the opened, frayed or shorted wiring and repair.
	Fluctuating battery voltage.	Fluctuation greater than one volt caused by a defective voltage regulator.	Replace the alternator/regulator unit.
Red light flashing four blinks in sequence.	Opening in wiring harness to high or low pressure switches.	Unseated connector.	Check both the module and the pressure switch connectors for loose pins.
		Break between wiring harness and pressure switch.	Check connector seals for integrity.
		Moisture intrusion into the connectors or switch.	Check pressure switch circuits for continuity. In a properly charged system: Disconnect the high pressure switch and verify the resistance between the switch's two contacts is less than 5 ohms. Disconnect the low pressure switch and verify the resistance between the switch's two contacts is between 2.4K and 2.6K ohms.
		The use of non-Index pressure switch.	Install the correct pressure switch.
A/C clutch not engaging during the first 15 seconds after ignition is turned on.		Unit is functioning properly. Regardless of A/C system state at start up, the A/C clutch is disengaged for the first 15 seconds.	
At ignition, turn on with A/C controls set to the on position, compressor is off for 15 seconds, on for 15 seconds, then remains off indefinitely.	No voltage on the A/C ON/Evaporator thermostat circuit. Six-way truck harness connector, pin 5.	Defective AC ON/Evaporator thermostat circuit.	With the ignition on and the A/C switch on and the evaporator core temperature above 50 degrees, there should be system voltage on the truck harness connector at the A/C ON/Evaporator thermostat pin. Check for bad A/C On switch. Check for break in wiring between A/C On switch and the evaporator thermostat. Check for bad evaporator thermostat. Check for break in wiring between the evaporator thermostat and the APAds® module. Check for bad A/C relay.
At start up, after 15 seconds, compressor clutch doesn't engage but engine fan engages.	Control module sensing an opening in the high pressure switch circuit.	High side pressure switch failure.	In a normally pressurized system: Disconnect the high pressure switch. A good switch should measure less than 5 ohms. If not, replace the switch.

https://truckmanualshub.com/

Condition	Definition	Possible Cause	Action
Slow flashing green, compressor on for a short period of time, off for 15 seconds in a repetitive sequence.	Indicates that the system is exhibiting abnormal high or low pressure activity.	Blockage in the high side of the system or in the condenser.	Repair restriction.
		Partial loss of refrigerant.	Check system for loss of refrigerant.
Slow flashing green light, not engaging in defrost mode or in cold weather.		Unit is more than likely functioning correctly. If the ambient temperature is too low, the compressor clutch is not allowed to engage, because of low system pressure.	
Slow flashing green light, clutch is engaged, A/C not cooling.		Inoperative blower motor.	Check for proper operation of the blower motors.
		Loose or broken compressor belts.	Tighten or replace compressor belts.
Slow flashing green light or poor A/C performance.		A/C drive belt is broken, loose or glazed.	Tighten or replace drive belt.
		Heater valve left open, valve is broken or cable is not operating properly.	Turn valve off or replace valve or cable.
		Moisture in the system.	Check moisture indicator on dryer. Replace if necessary.
		Air ducts leaking airflow.	Repair air leak problem.
		Loss of charge before detected.	Check with gauge set, repair leak if necessary.

TO CLEAR FAULT CODES

Clear the fault code by cycling the ignition switch four times (one second on/one second off) and the green light will reappear.

Diagnostic Flow Charts

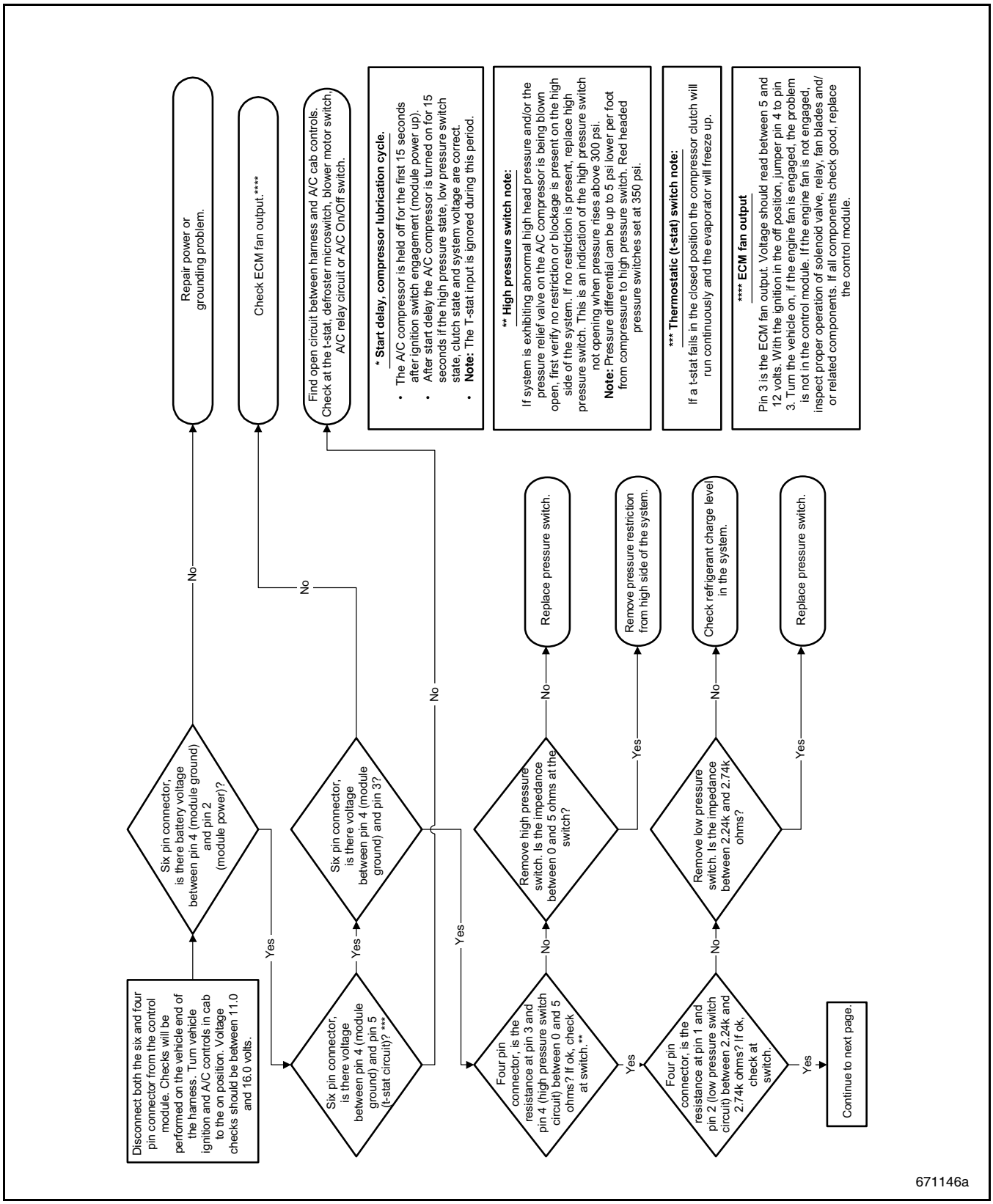

Figure 34 — APADS® CM812/CM813 Troubleshooting Flow Chart

https://truckmanualshub.com/

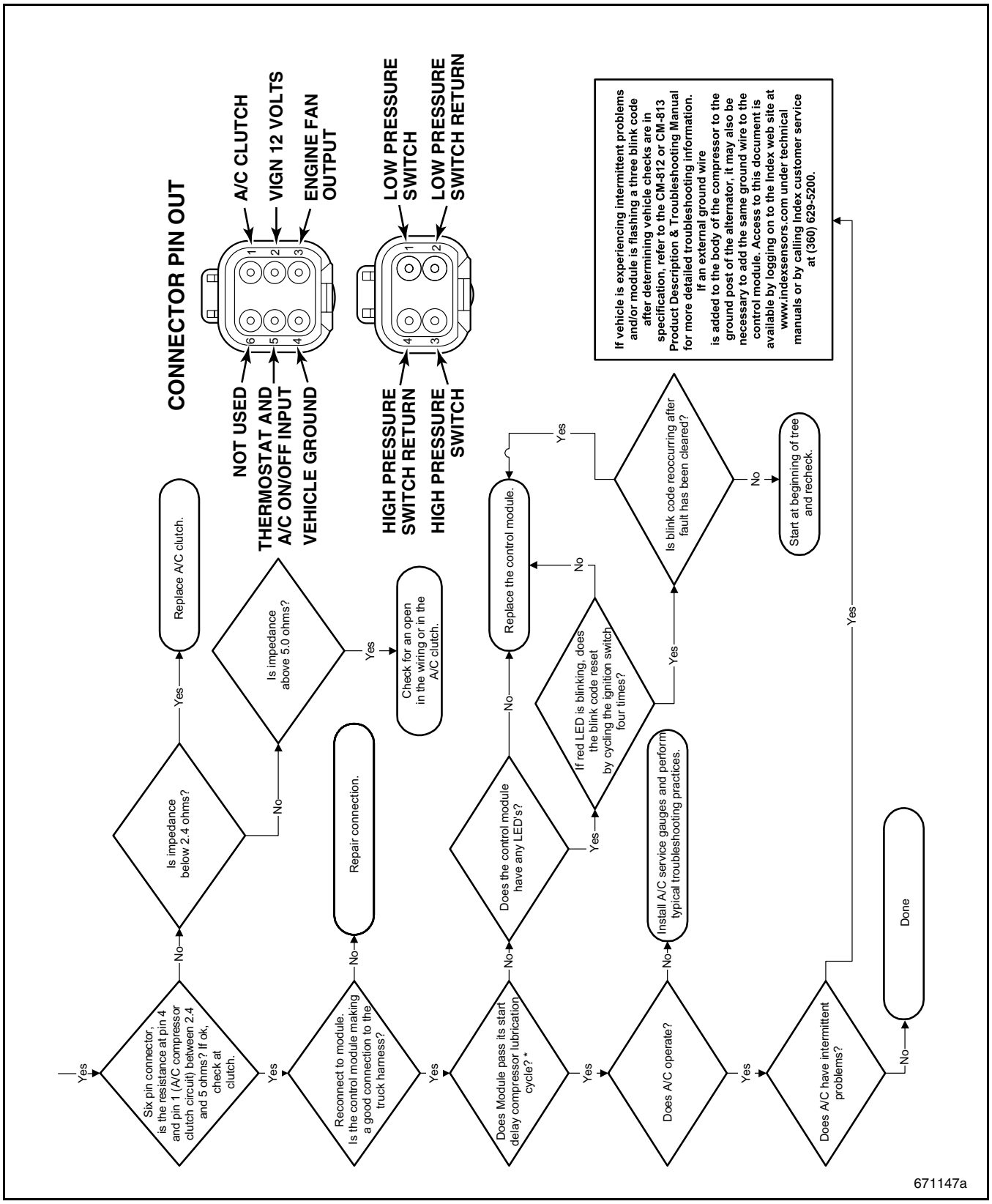

Figure 35 — APADS® CM812/CM813 Troubleshooting Flow Chart

NOTES

https://truckmanualshub.com/

REPAIR INSTRUCTIONS

https://truckmanualshub.com/

REPAIR INSTRUCTIONS — BERGSTROM HVAC UNIT

Blower Motor Resistor Card Removal

When removing the blower motor “credit card” resistor from a Bergstrom HVAC unit, the harness connector must first be disconnected. Improper disassembly could damage the card. Procedures for properly removing the resistor card are as follows:

1. Remove the front cover from the HVAC unit by removing the four screws from the front of the cover, three screws from the right-hand side and one screw from the left-hand side.

NOTE

If equipped with cup holders, the cup holder assembly must first be removed to access the front cover screws.

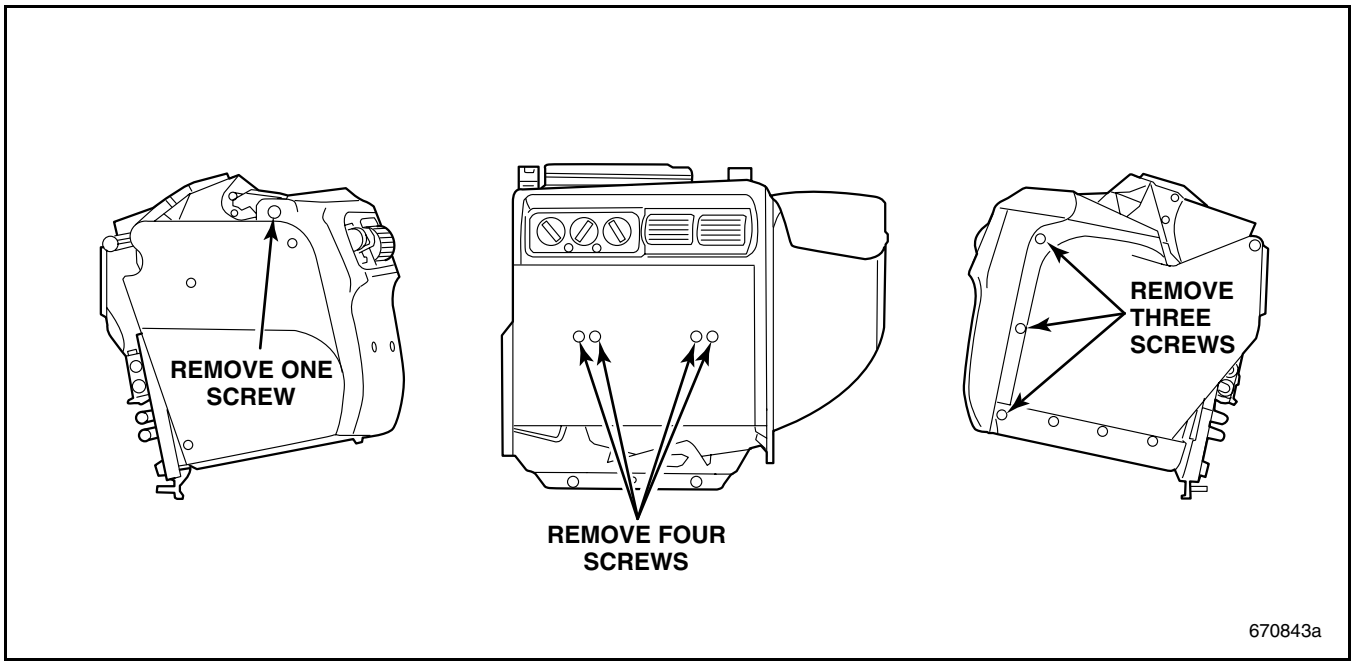

Figure 36 — Removing Front Cover

2. Remove the left side cover by removing the four screws that secure the cover to the unit.

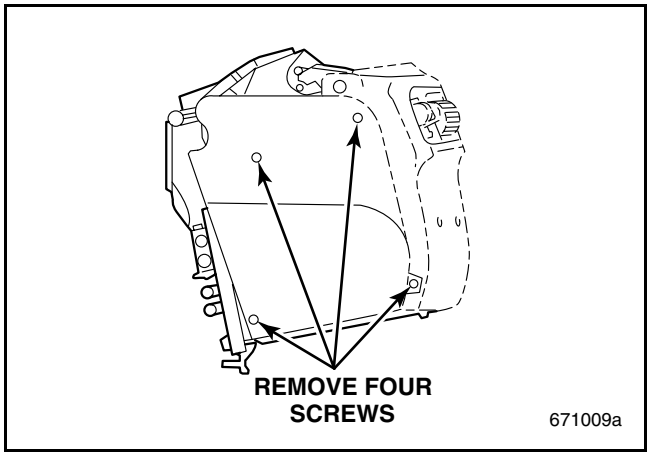

Figure 37 — Removing Left Side Cover

3. Disconnect the harness connector from the resistor card by using a screwdriver to release the locking tab and pulling the connector toward the left as shown in Figure 38.

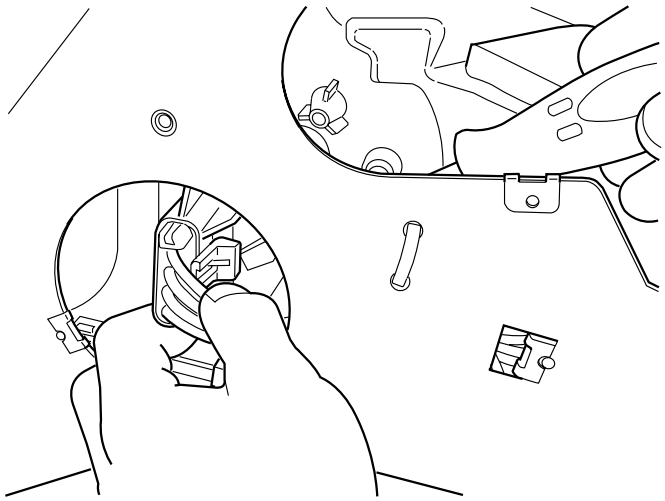

Figure 38 — Disconnecting “Credit Card” Resistor Connector

4. Remove the resistor card from the HVAC unit.
5. Reverse the removal procedure to reinstall the “credit card” resistor.

https://truckmanualshub.com/

Heater/Air Conditioner Cab Control Board Fuse — CH, CHN, CL, CT, CV, CX and CXN Models

As an added measure of protection for the control panel circuit board, a 15 amp in-line fuse was added to all Bergstrom heater/air conditioner units. This change was implemented on Bergstrom HVAC units manufactured 10/1/02 and later. The in-line fuse which is installed between the freeze switch and the compressor output wire, will also protect the control panel circuit board from damage that can result due to a short circuit in the engine harness.

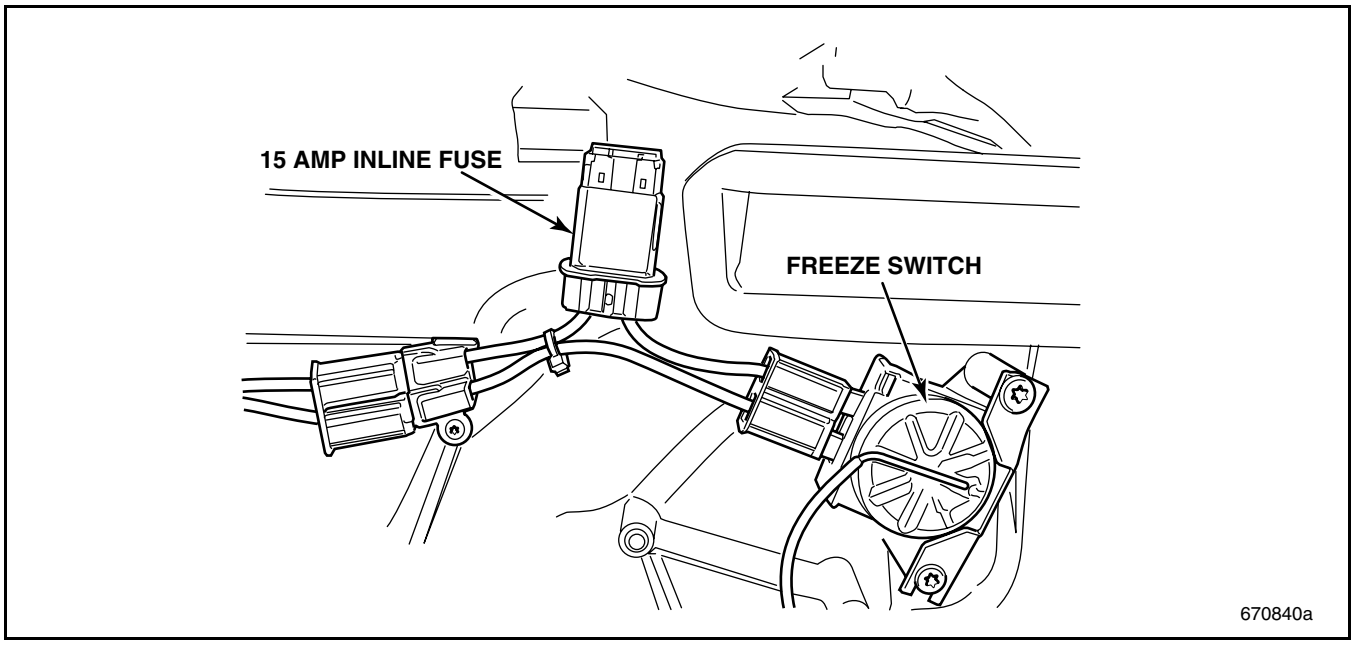

Figure 39 — 15 Amp In-Line Fuse Location

An in-line fuse harness (part No. 1916-8000014) is now available through the MACK Parts System to retrofit Bergstrom HVAC units manufactured prior to 10/1/02. Whenever a cab HVAC control panel is being replaced or a HVAC unit is being serviced, the in-line fuse should also be installed.

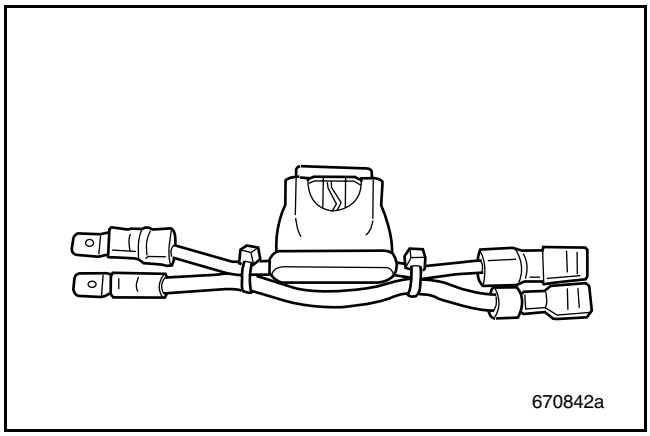

Figure 40 — In-Line Fuse Jumper Harness

The procedure for installing this fuse is as follows:

1. Remove the cup holder, if so equipped.
2. Remove the screws that secure the front cover to the unit (one screw on the left-hand side, one screw on the front and three screws on the right-hand side).
3. Allowing the cover to pivot at the bottom, pull the cover back, then pull it off.

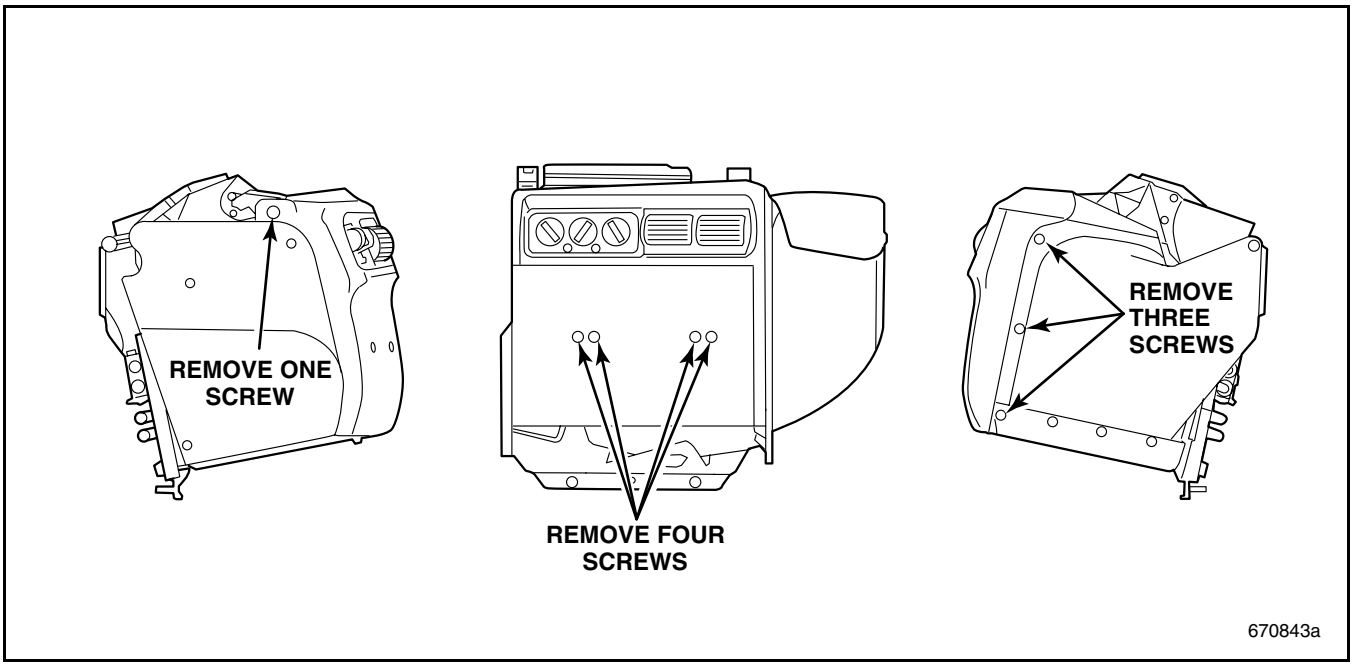

Figure 41 — Removing the HVAC Unit Front Cover

4. Disconnect the 2-wire harness connector from the freeze switch.

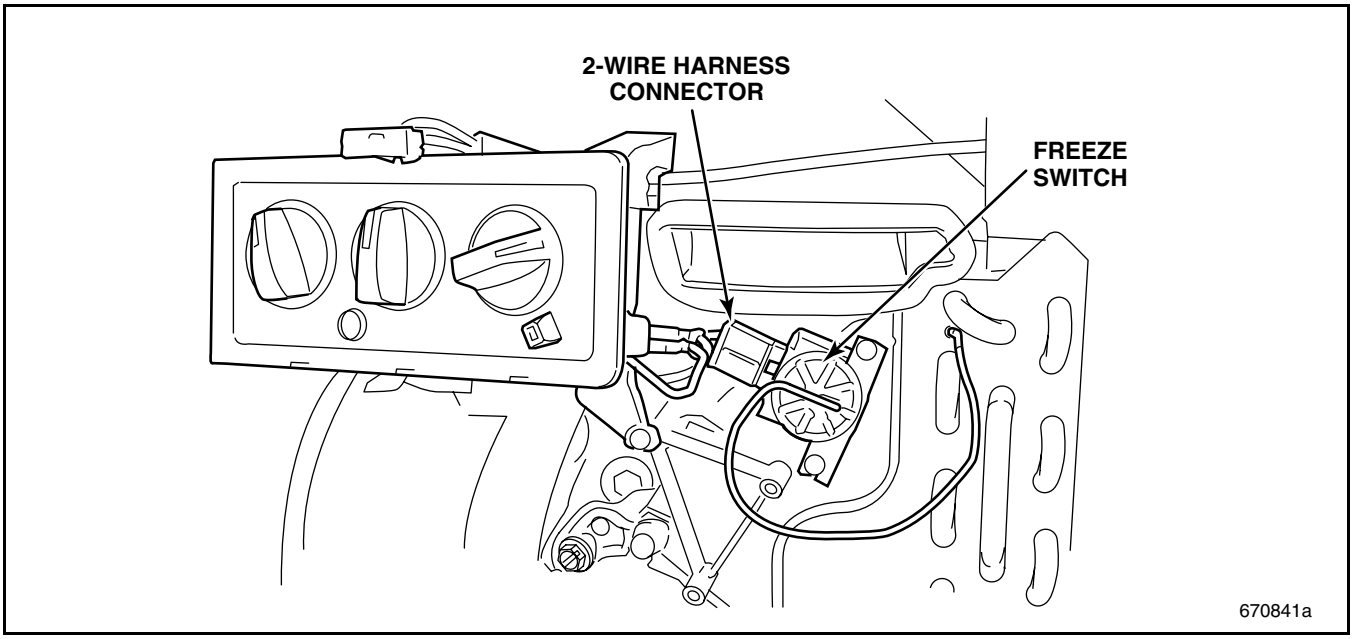

Figure 42 — Disconnecting Freeze Switch Connector

https://truckmanualshub.com/

5. Install the jumper harness (part No. 1916-8000014) connector to the freeze switch.
6. Connect the opposite end of the jumper harness (two insulated terminals) to the connector originally removed from the freeze switch.

NOTE

Be sure to observe polarity of the two jumper harness wires. The jumper harness must be connected as shown in Figure 39.

7. Test the circuit by starting the engine, then turning the air conditioning system ON to activate the air conditioning compressor.
8. Reinstall the HVAC unit front cover and the cup holder (if so equipped).

NOTE

Mack Trucks, Inc. engages in a continuous program of testing and evaluating to provide the best possible product. This program naturally results in design changes and improvements. Mack Trucks, Inc., like other manufacturers, reserves the right to make these changes in design, or to make additions or improvements in its product without any obligation to install them on products previously manufactured.

REPAIR INSTRUCTIONS — BEHR HVAC UNIT (CTP, CXP, CXU, CHU AND GU MODELS)

Evaporator Replacement (Start of Production 3rd Quarter 2005 to 2nd Quarter 2007)

From the start of production (3rd quarter 2005) until the implementation of the screw above the Thermal Expansion Valve (TXV), only the TXV is serviceable with the climate unit mounted in the cab. Climate units that require the replacement of the evaporator, that are built prior to the implementation of the screw above the TXV, must be removed and the case halves separated. Current climate units built with the screw above the TXV (2nd quarter 2007), the evaporator and the TXV are serviceable without removing the climate unit from the cab.

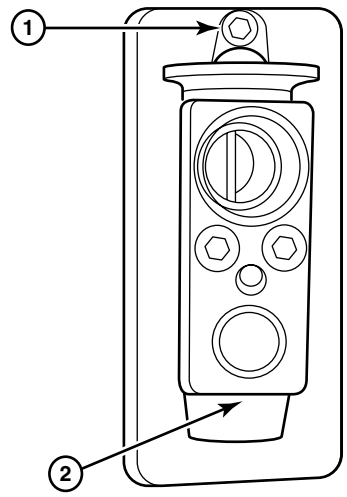

Figure 43 — TXV Screw Access

1. Lift Foam Seal for Screw Access	2. Thermal Expansion Valve

https://truckmanualshub.com/

If evaporator replacement is necessary (units built 2nd quarter 2007), remove the T20 Torx screw above the TXV from the location shown. If the screw is not present, remove the entire climate unit and separate the case halves to access the evaporator.

1. Recover the A/C system refrigerant charge using a UL/SAE-approved recovery-recycling station similar to the unit shown in Figure 44.

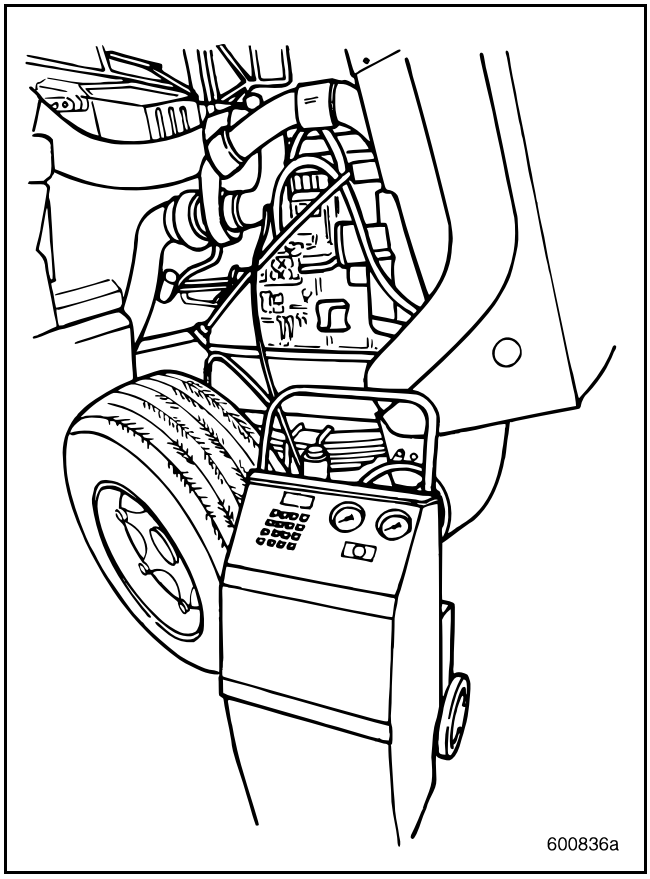

Figure 44 — Recovery-Recycling Station

2. Remove the lower panel from the passenger side to gain access to the floor ducts and lower evaporator area.

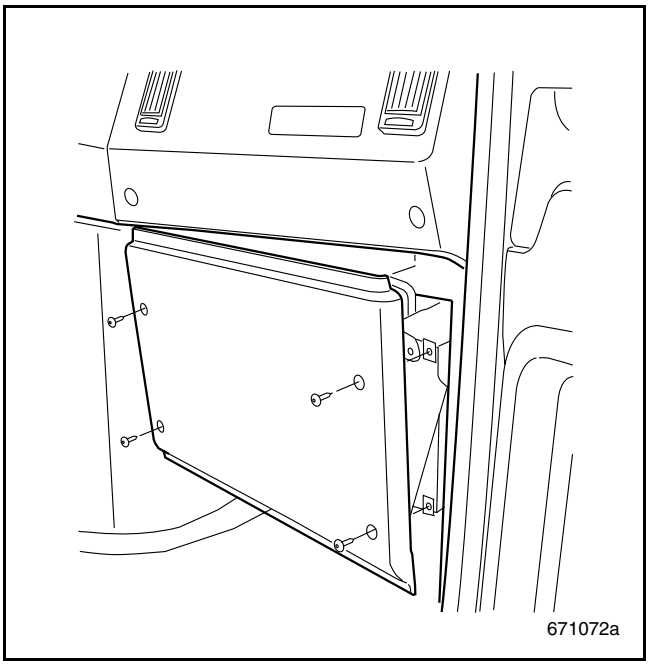

Figure 45 — Remove Panels for Access

3. Remove the heat shields and windshield washer bottle. Remove the retaining nut or bolt and A/C lines from the TXV.
4. Remove the three passenger floor duct screws.

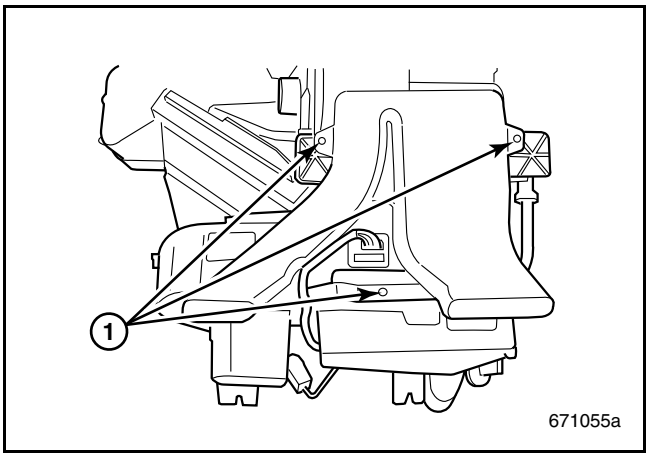

Figure 46 — Floor Duct Screw Locations

1. Passenger Floor Duct Screws

5. Remove the seven evaporator cover screws.

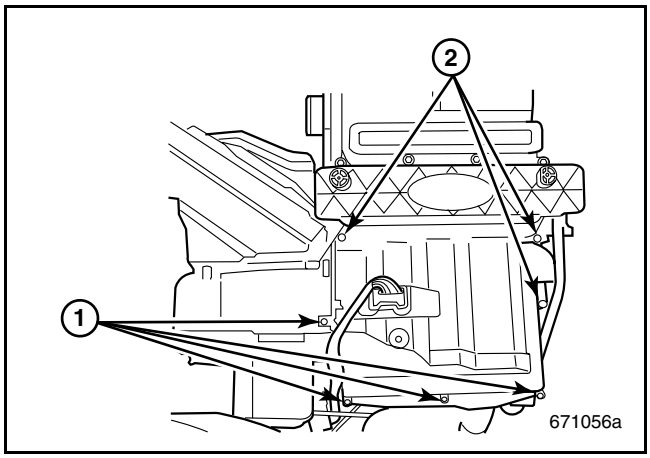

Figure 47 — Evaporator Cover

1. Evaporator Cover Lower Screws	2. Evaporator Cover Upper Screws

6. Snap out condensate dam out board of the case by breaking the thin area molded into the dam perimeter.

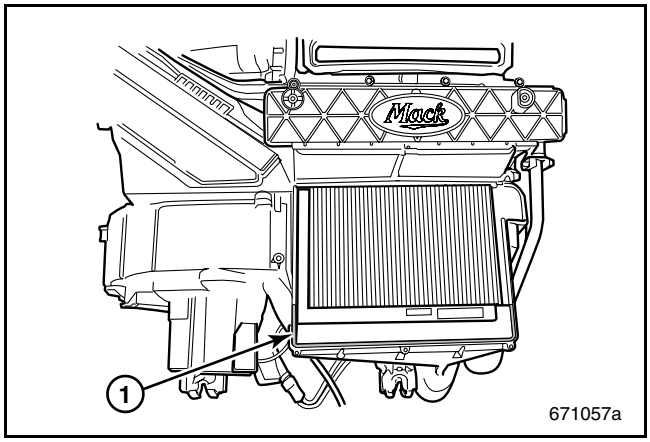

Figure 48 — Thinness Molded into Dam Perimeter

1. Condensate Dam

7. Housing must clear evaporator face when dam is removed.

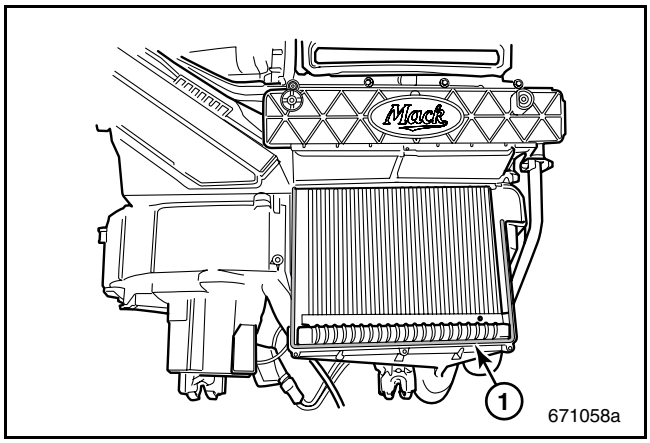

Figure 49 — Evaporator Face

1. Evaporator Face

8. Begin removing the evaporator by pulling the evaporator unit rearward.
9. Continue removing the evaporator by a slight, square push to the TXV and guidance past the housing's ribs helps to start evaporator movement rearward.

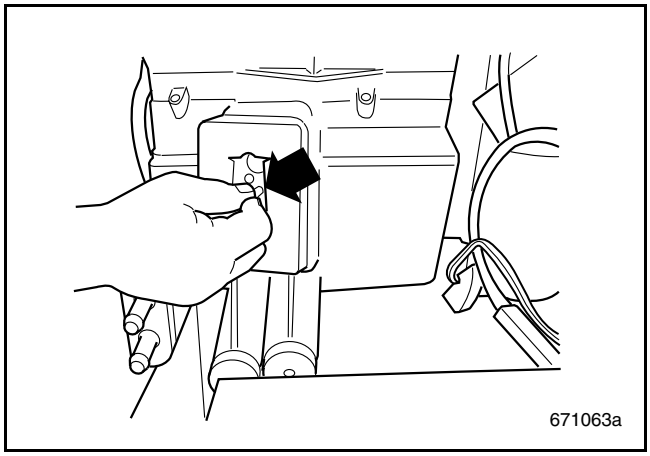

Figure 50 — Pushing Evaporator Rearward

10. Pull the evaporator free of the dash by gripping the evaporator by the sides and compressing the seals as required to allow the evaporator to pass by.

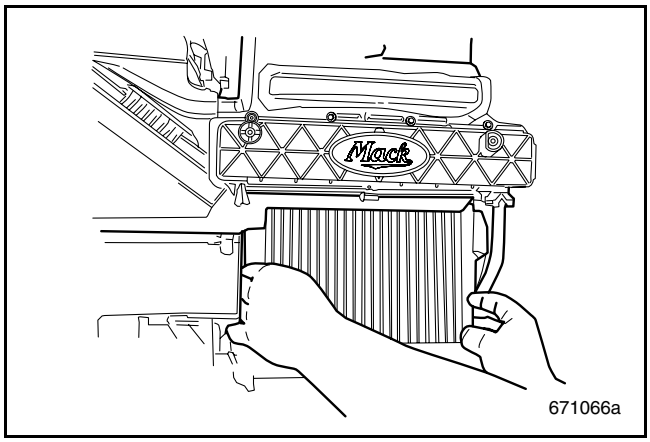

Figure 51 — Compress Evaporator Seals

11. Remove the evaporator and TXV as an assembly.

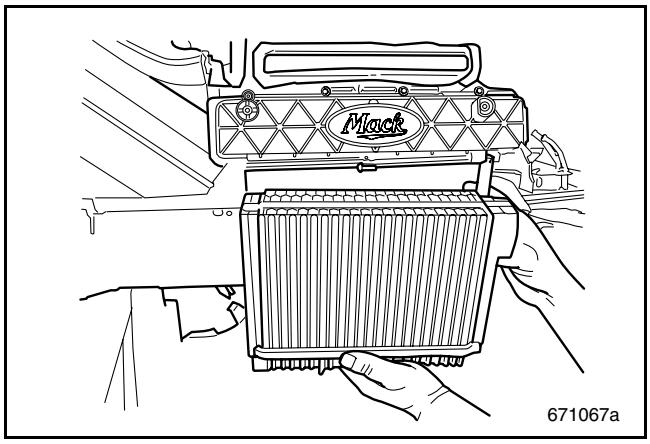

Figure 52 — Evaporator Assembly

12. With the evaporator removed, ensure that the freeze sensor is not disturbed.

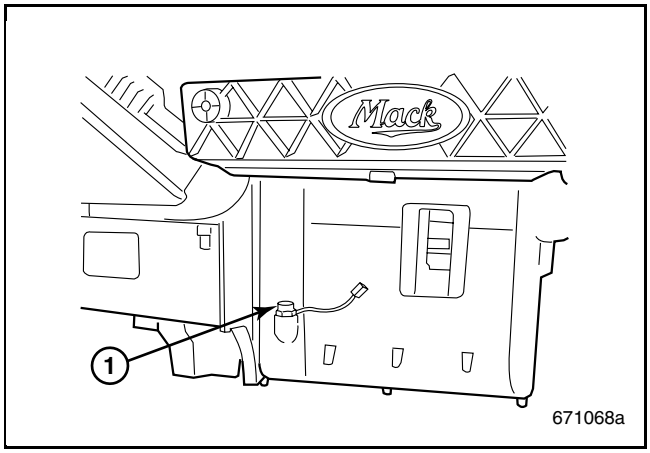

Figure 53 — Freeze Sensor

1. Freeze Sensor

13. Begin installing the evaporator and TXV as an assembly by compressing the seals and inserting into the housing.

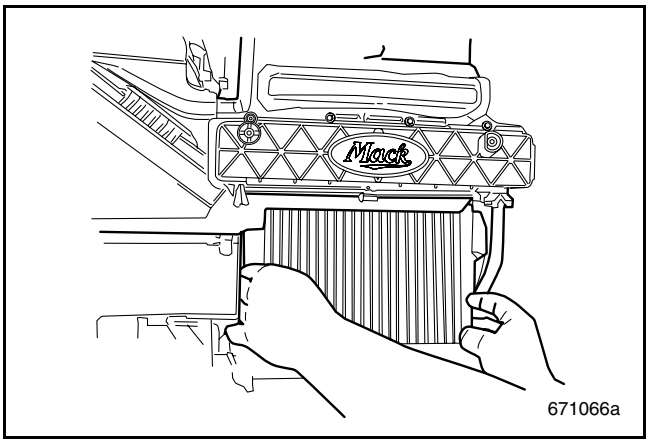

Figure 54 — Compress Evaporator Seals

14. Install the evaporator until it fits tight into the ribs of the housing.
15. Begin installing the string seal by starting at the upper corner and press into the cover's groove.

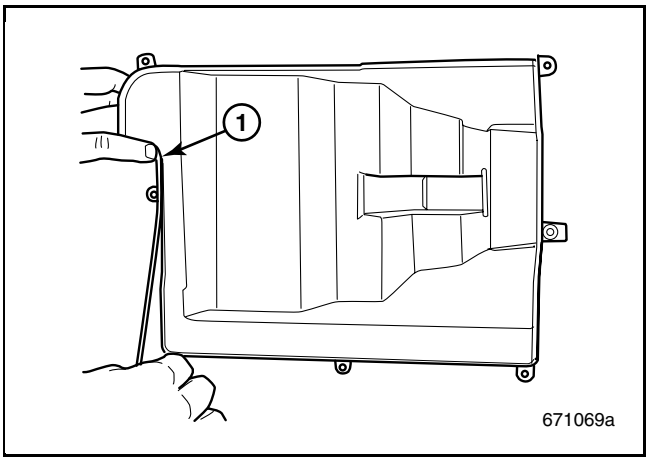

Figure 55 — Evaporator Cover Seal

1. Evaporator Cover STRING Seal

N O T E

Do not stretch the string seal during installation.

16. Start seal installation in the corner above the resistor. Finish seal installation in the opposite corner above the resistor.

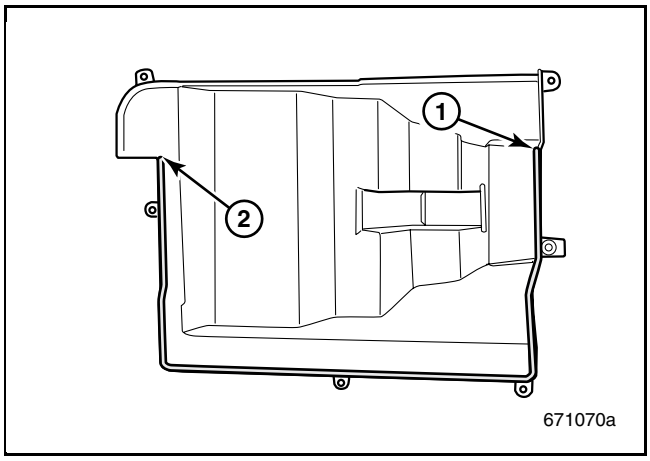

Figure 56 — Cover Seal Installation

1. Complete Seal Installation	2. Begin Seal Installation

NOTE

Take care to install a continuous seal around the bottom of the cover.

17. Reinstall the evaporator cover and hold in place with seven attaching screws. Tighten cover screws to 1.0 N•m (8.9 lb-in).

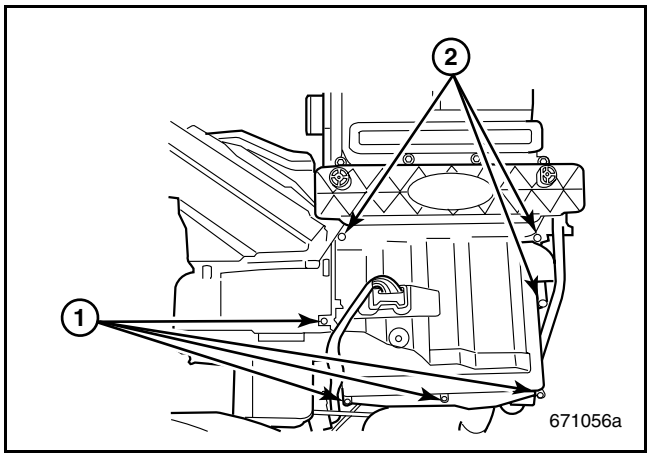

Figure 57 — Evaporator Cover

1. Evaporator Cover Lower Screws	2. Evaporator Cover Upper Screws

18. Position the passenger floor duct in place and install the three attaching screws. Tighten the screws to 1.0 N•m (8.9 lb-in).

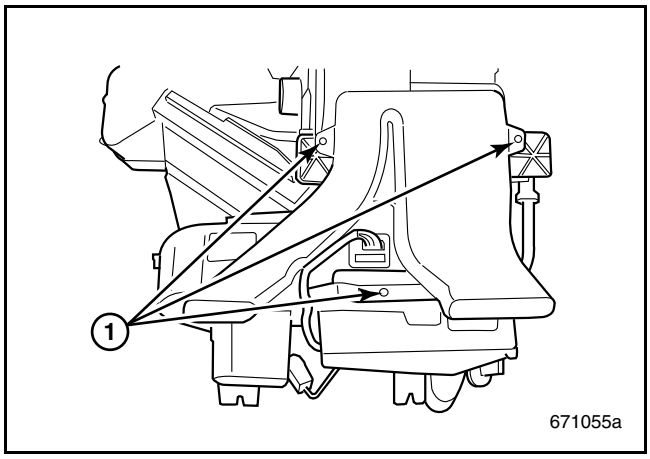

Figure 58 — Cab Floor Duct

1. Passenger Floor Duct Screws

19. Reinstall the appropriate passenger side panels that were removed to gain access.

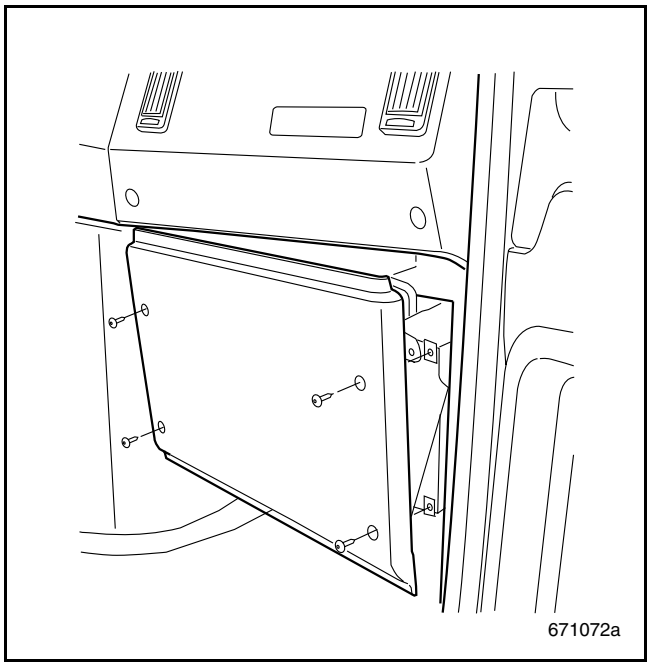

Figure 59 — Cab Passenger Trim Panel

20. Install the A/C lines to the TXV valve and reinstall the retaining nut.
21. Reinstall the windshield washer bottle and reinstall the heat shields.
22. Evacuate and recharge the A/C system using a UL/SAE-approved recovery-recycling station.

REMOVING THE CLIMATE UNIT FOR EVAPORATOR ACCESS — EVAPORATOR REPLACEMENT (2ND QUARTER 2007)

1. Remove the appropriate passenger side panels to gain access to the evaporator area.

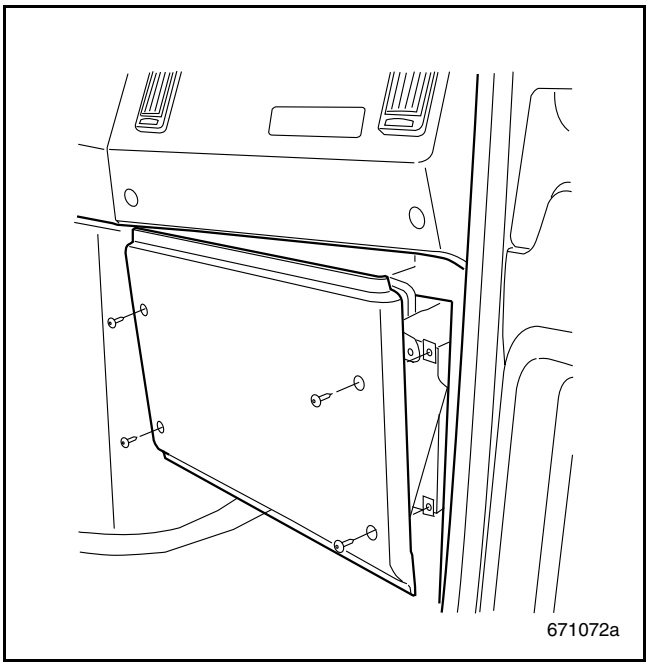

Figure 60 — Remove Panels for Access

2. Remove the two dash cover screws from the front of the passenger side dashboard.

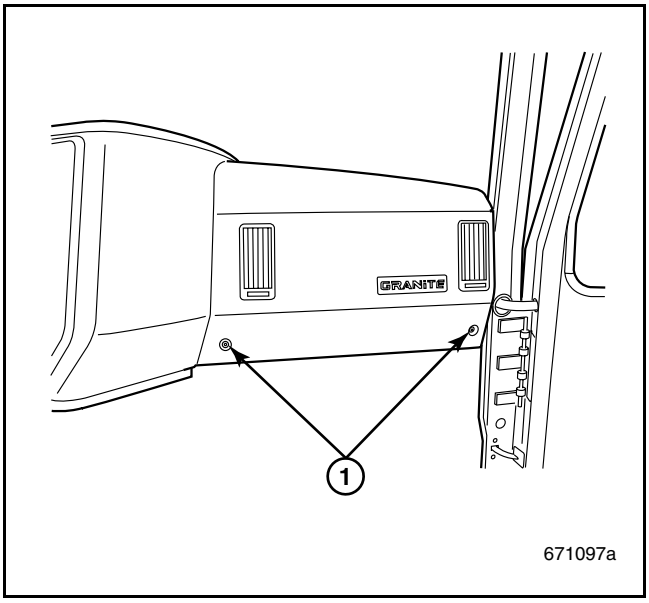

Figure 61 — Dash Cover Screw Locations (Lower)

1. Right-Hand Dash Cover Screws (Lower)

3. Remove the two dash cover screws from the upper portion of the passenger side dashboard. These are the two screws located closest to the windshield.

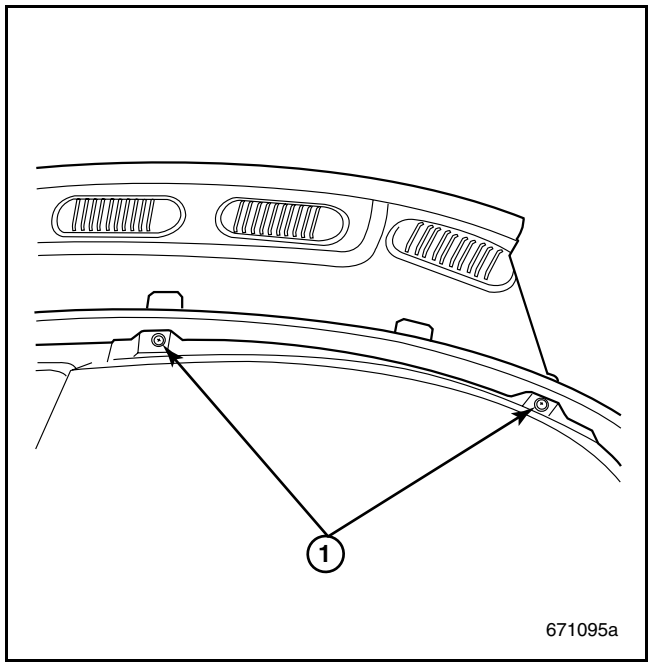

Figure 62 — Dash Cover Screw Locations (Upper)

1. Right-Hand Dash Cover Screws (Upper)

4. Remove the upper dash by tipping forward and lifting to remove.

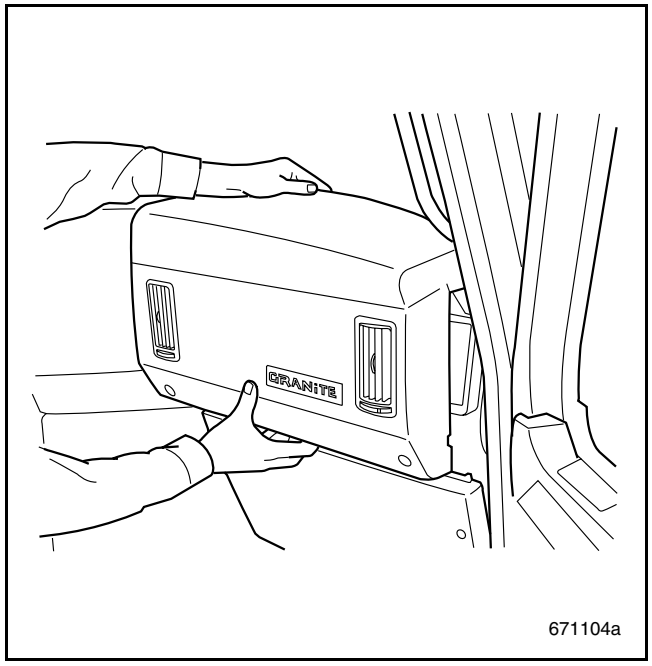

Figure 63 — Removing Upper Dash

5. Remove the three passenger side floor duct screws and remove the floor duct.

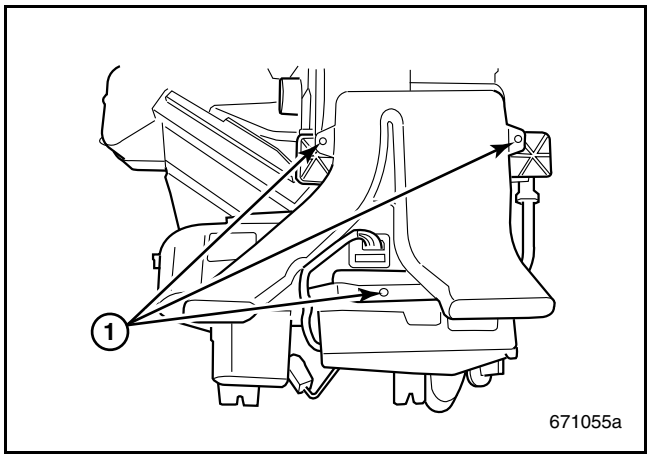

Figure 64 — Floor Duct Screw Locations

1. Passenger Floor Duct Screws

6. Remove the push fastener from the upper defroster duct.

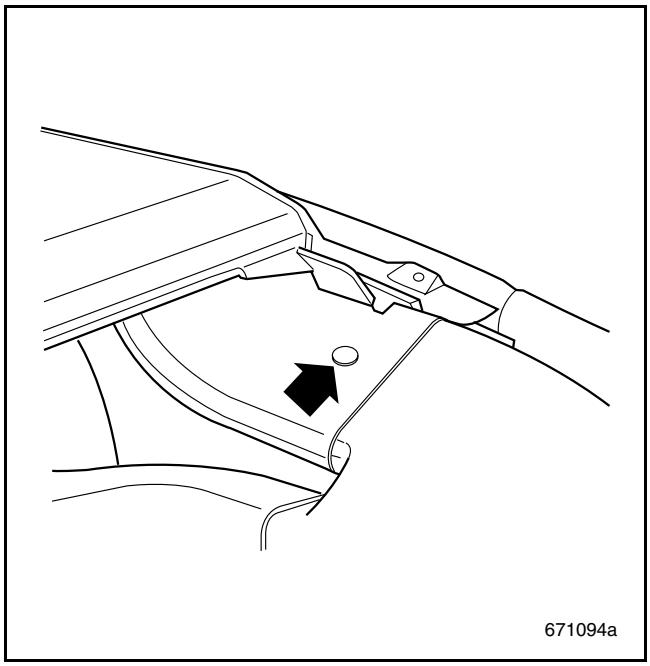

Figure 65 — Duct Push Fastener Location

7. Slide the defroster duct to the left (toward the center of the vehicle).

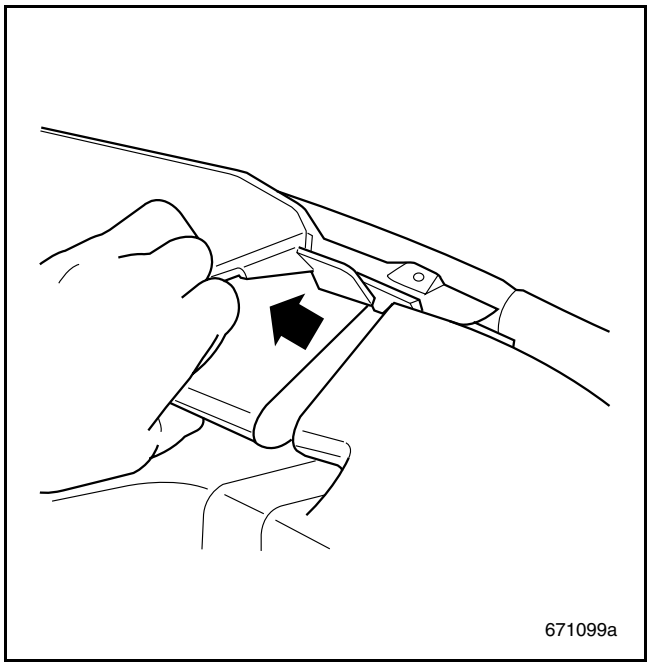

Figure 66 — Defroster Duct

8. Disconnect the wiring harness connectors that provide power for the passenger side door and other accessories.

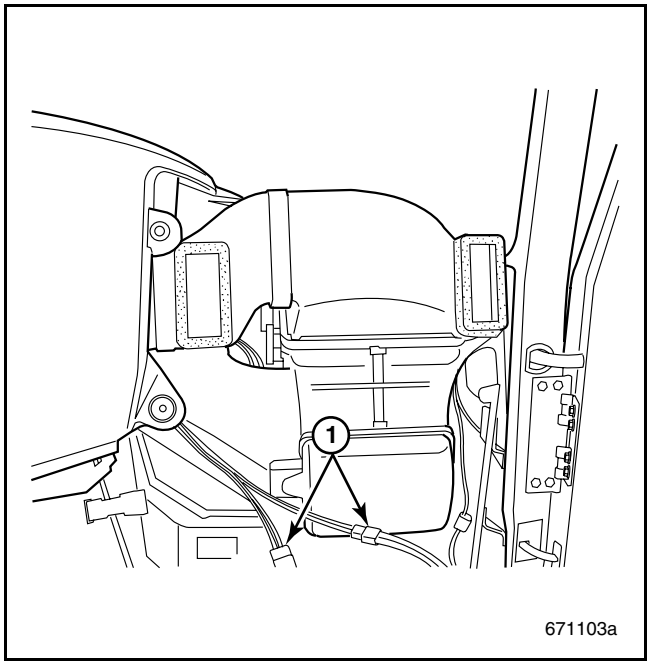

Figure 67 — Wiring Harness Connectors

1. Accessory Harness Connector Locations

9. Remove both left and right sections of the passenger side panel ducts by disengaging the release clips and then, slide both portions of the duct to the right. Lift the duct out once it is free of the center duct work.

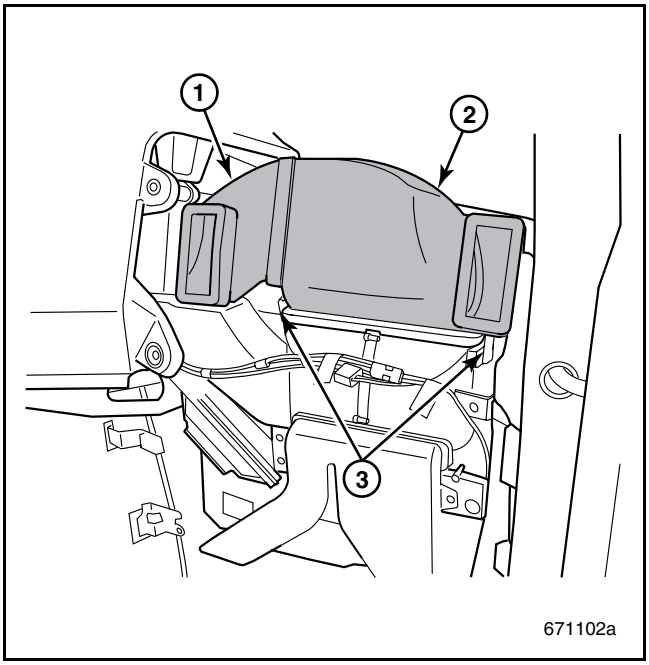

Figure 68 — Center Panel Ducts

1. Panel Duct (Left Side) 2. Panel Duct (Right Side)	3. Panel Duct Release Clips

10. Slide the center section of the defroster duct to the right to remove.

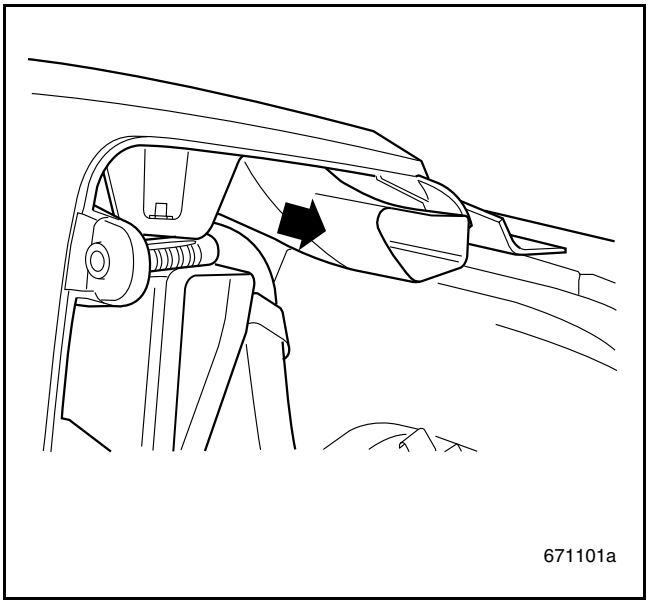

Figure 69 — Center Defroster Section

11. Remove the push fastener from the center panel distribution duct at the evaporator housing and remove the duct by sliding first to the left, then pulling out and finally, sliding to the left to remove.

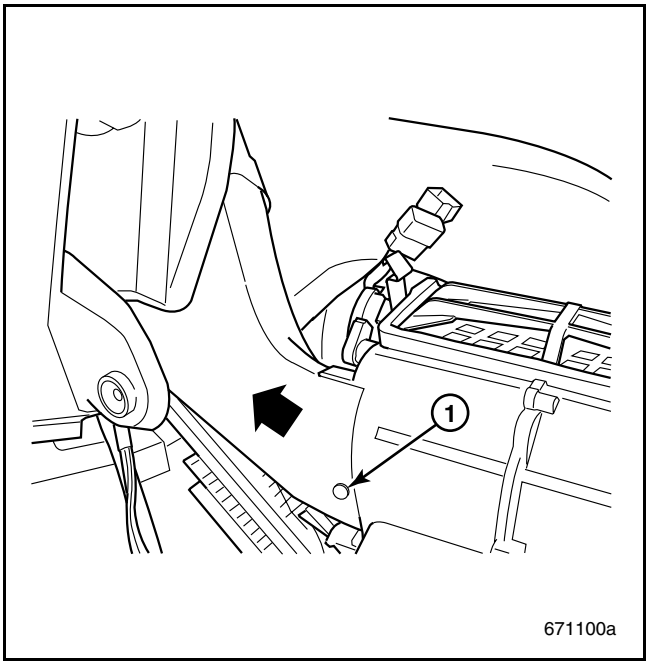

Figure 70 — Center Distribution Duct

1. Remove push fastener.

12. Release the duct lock tab from the upper duct that attaches to the top of the evaporator housing.

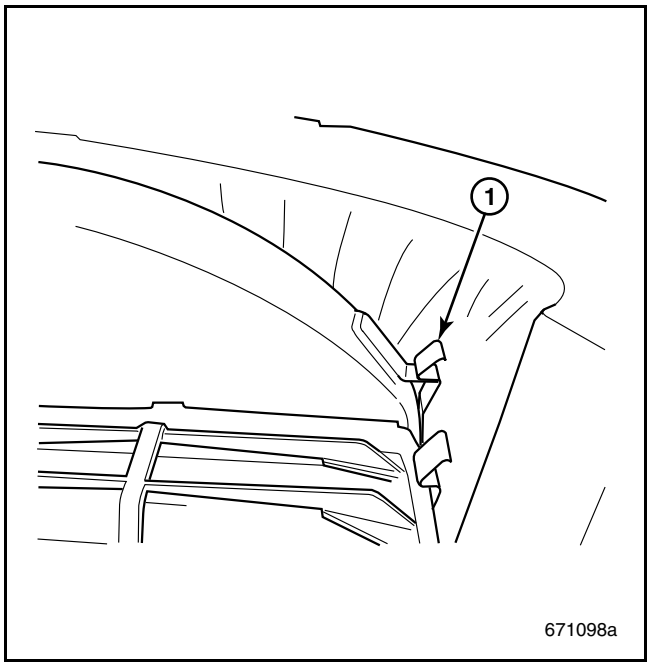

Figure 71 — Duct Lock Tab

1. Move to the right to release.

13. Remove the temperature duct from the top of the evaporator housing by lifting up and sliding to the right to remove.

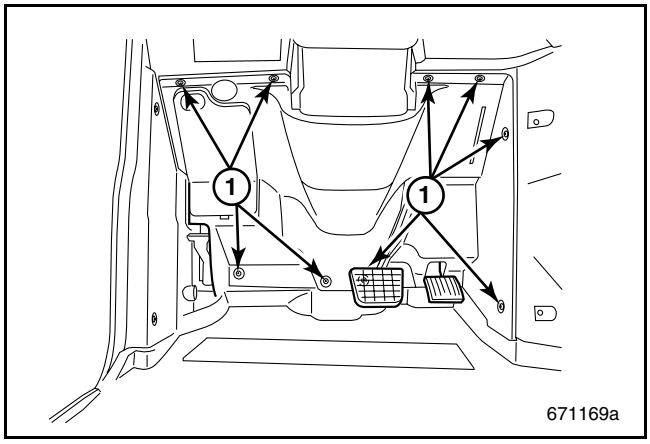

Figure 72 — Bulkhead Trim Panel Screws

1. Panel Screws

14. Remove the screws securing the left side lower Instrument Panel (IP) bulkhead trim panel and remove the panel.

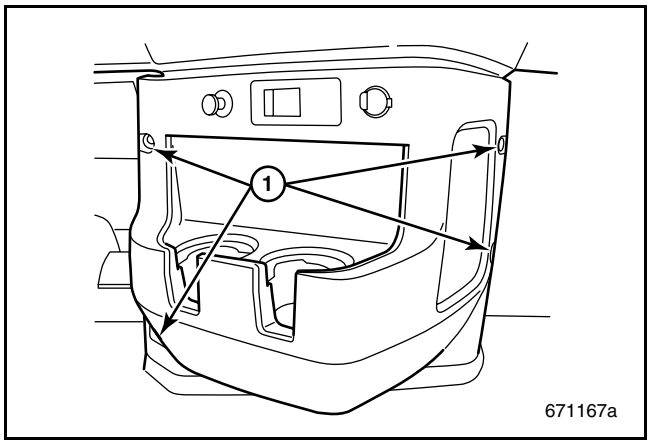

Figure 73 — Cup Holder Panel Screws

1. Center Cup Holder Panel Screws (4)

15. Remove the center cup holder panel screws and panel.

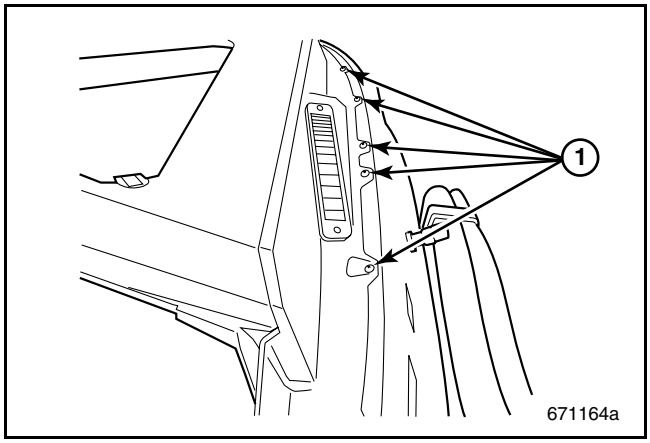

Figure 74 — Instrument Panel Upper Screws

1. Instrument Panel Upper Screws (5)

https://truckmanualshub.com/

16. Remove the instrument panel upper cowl screws.

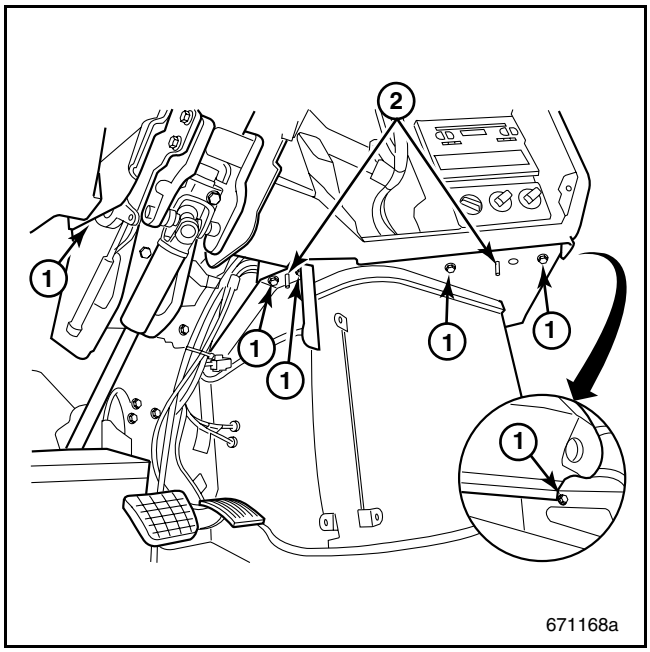

Figure 75 — Instrument Panel Lower Bolts

1. Lower Instrument Panel Bolts (6)	2. Guide Pins

17. Remove the lower instrument panel retaining bolts. Lift the IP assembly upward 1–2 inches to clear the lower alignment pins.

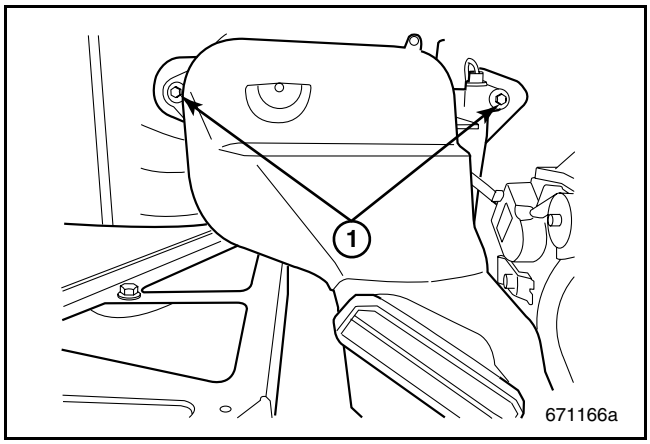

Figure 76 — Fresh Air Intake Plenum Bulkhead Bolts

1. Fresh Air Intake Plenum Bulkhead Bolts (2)

18. Pull the IP assembly rearward to gain access to the fresh air intake plenum bulkhead bolts.

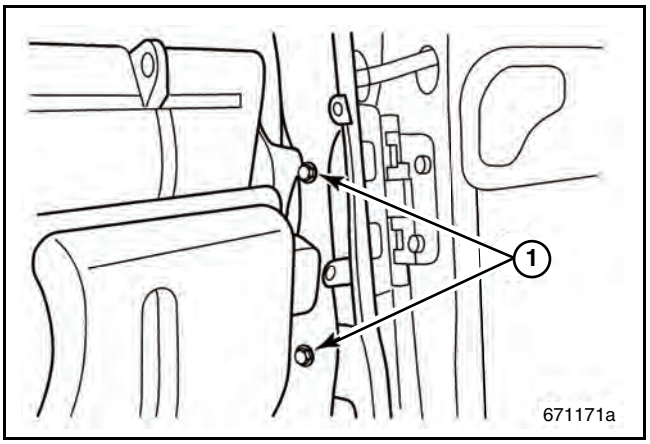

Figure 77 — Instrument Panel A-Post Bracket Bolts

1. Instrument Panel A-Post Bracket Bolts (2)

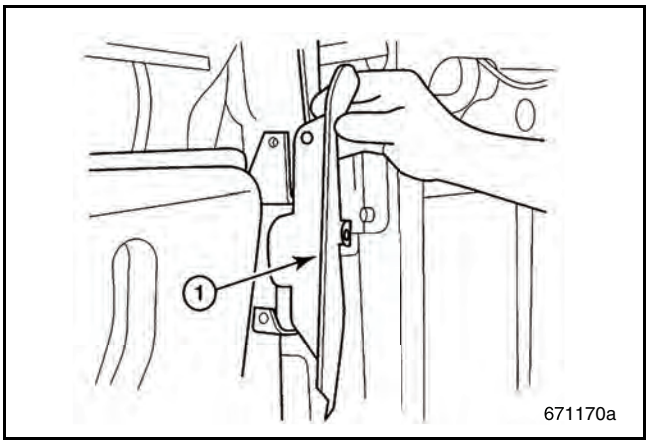

Figure 78 — Remove Instrument Panel A-Post Bracket

1. Instrument Panel A-Post Bracket

19. Remove the vertical instrument panel A-post bracket bolts and remove the bracket.

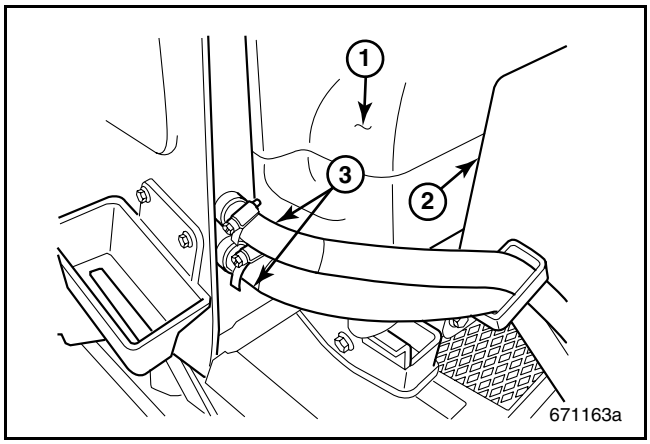

Figure 79 — Remove Heater Hoses

1. Washer Bottle 2. Heat Shield	3. Heater Hoses

20. Clamp off and remove the heater hoses from the heater tubes.
21. Unplug the climate unit wiring harness connectors.

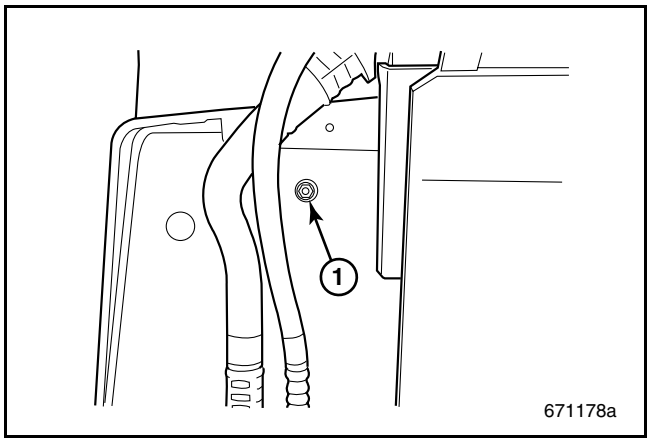

Figure 80 — Climate Unit Bulkhead Upper Retaining Nut

1. Climate Unit Retaining Nut

22. Remove the climate unit bulkhead upper retaining nut.

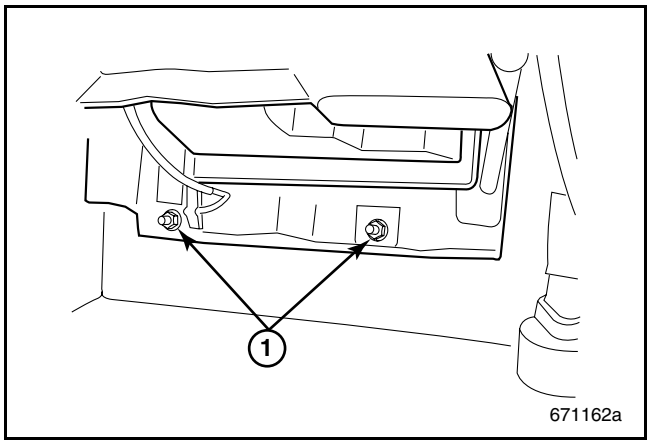

Figure 81 — Climate Unit Lower Retaining Nuts

1. Climate Unit Lower Retaining Nuts (2)

23. Remove the climate unit lower retaining nuts.
24. Working at the right side of the unit, pull the unit rearward and rotate the right side out first.
25. With the unit on a workbench, disassemble the unit by separating the case halves to gain access to the evaporator core for removal.

TEMPERATURE, MODE AND OSA ACTUATORS

The Behr HVAC system utilizes three actuators to control the OSA, Temperature and Mode functions. These repair instructions will detail how to replace all three actuators.

The OSA actuator is located on the inlet housing.

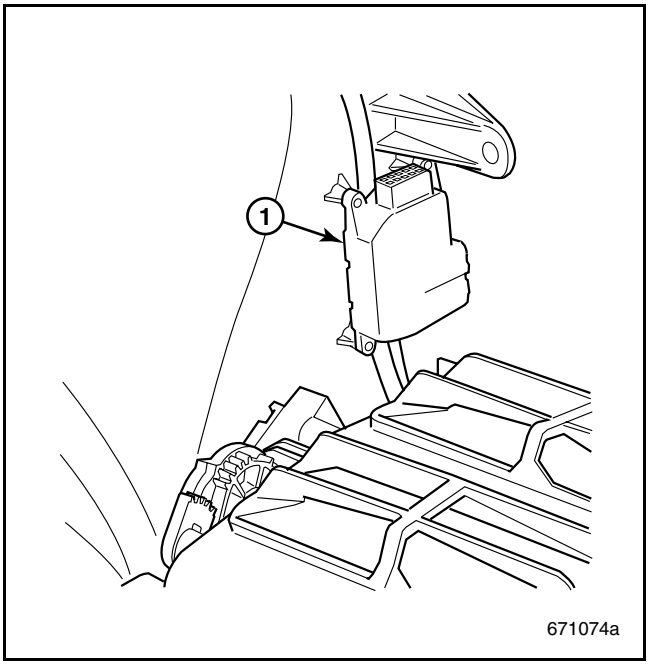

Figure 82 — OSA Actuator Location

1. OSA Actuator

The Temperature and Mode actuators are located on the distribution housing.

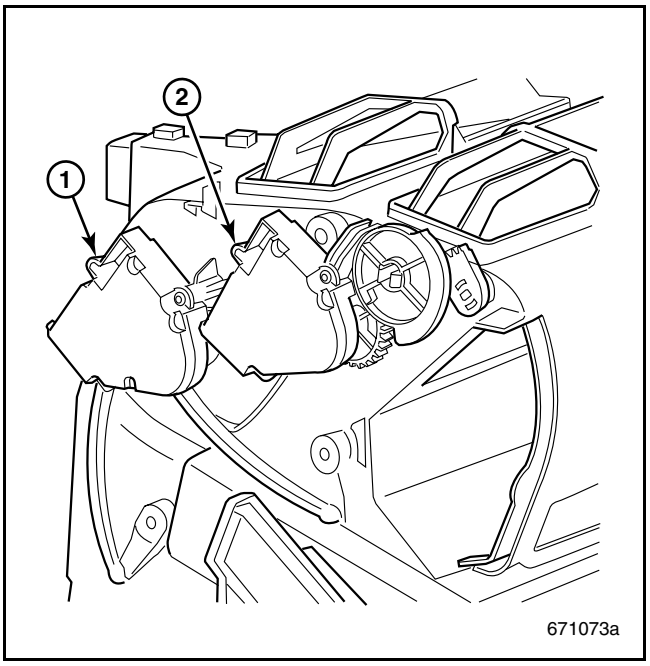

Figure 83 — Temperature and Mode Actuators

1. Temperature Actuator	2. Mode Actuator

ACTUATOR REPLACEMENT (3RD QUARTER 2005)

1. Remove the appropriate passenger side panels to gain access to the evaporator area.

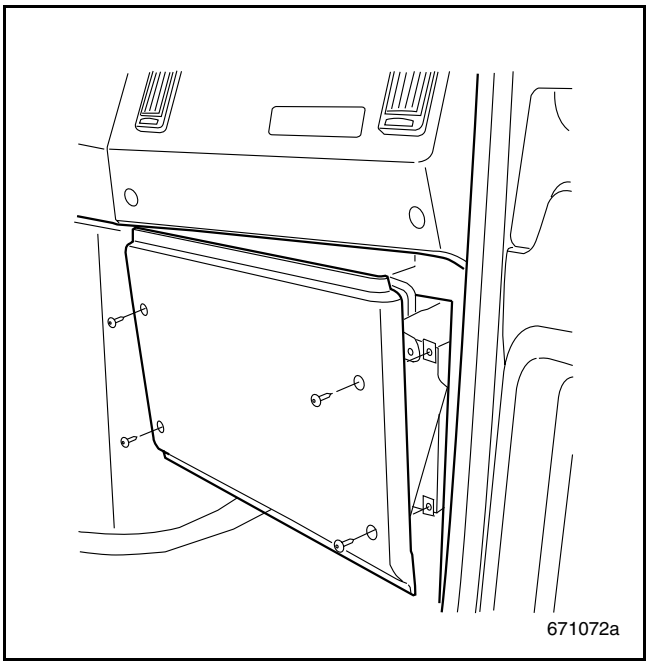

Figure 84 — Remove Panels for Access

2. Remove the two dash cover screws from the front of the passenger side dashboard.

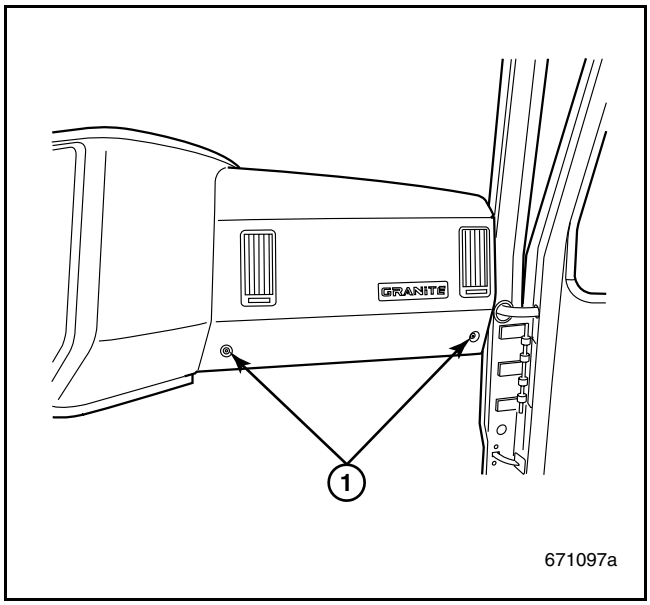

Figure 85 — Dash Cover Screw Locations (Lower)

1. Right-Hand Dash Cover Screws (Lower)

3. Remove the two dash cover screws from the upper portion of the passenger side dashboard. These are the two screws located closest to the windshield.

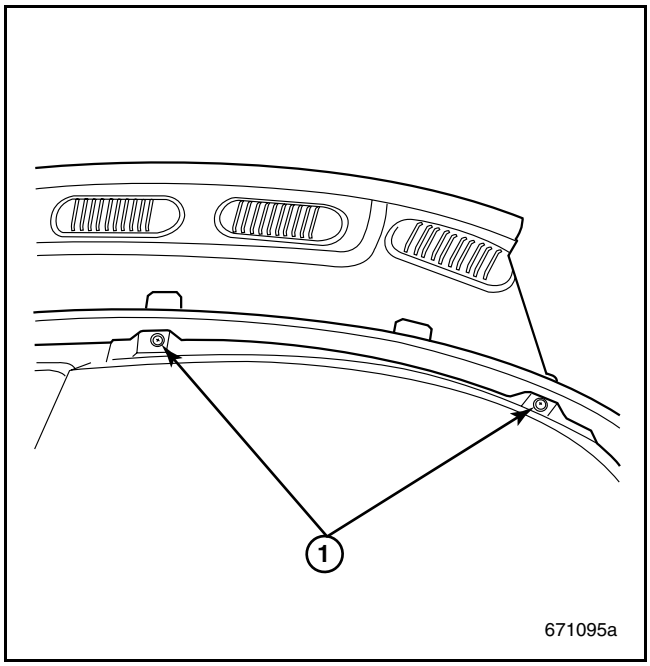

Figure 86 — Dash Cover Screw Locations (Upper)

1. Right-Hand Dash Cover Screws (Upper)

4. Remove the upper dash by tipping forward and lifting to remove.

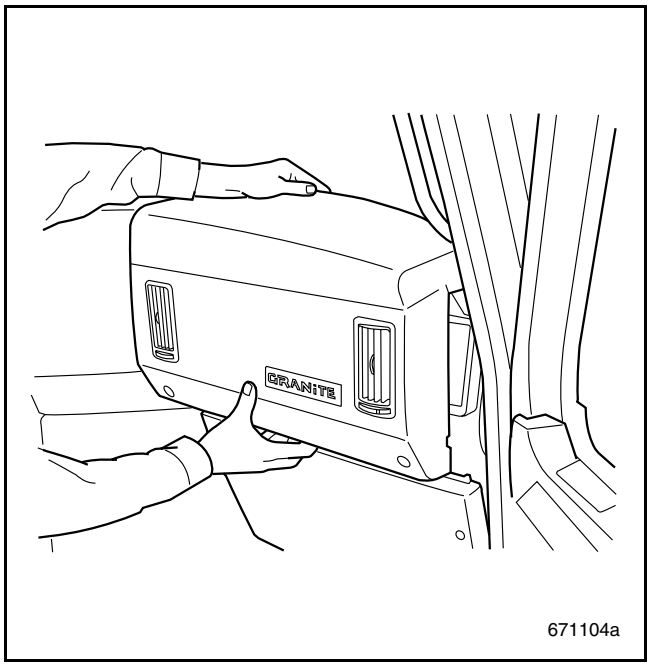

Figure 87 — Removing Upper Dash

5. Remove the three passenger side floor duct screws and remove the floor duct.

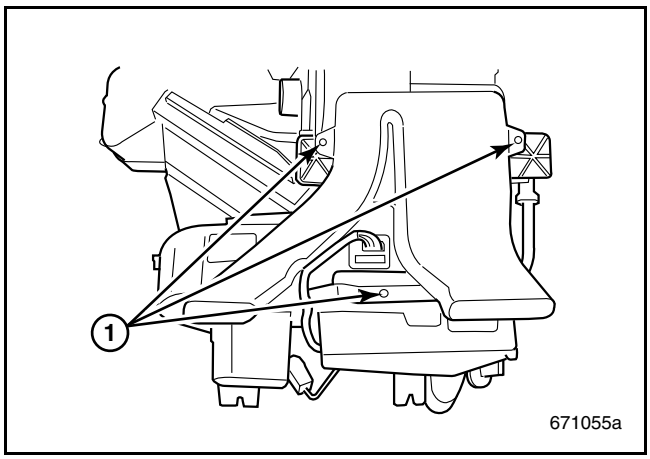

Figure 88 — Floor Duct Screw Locations

1. Passenger Floor Duct Screws

6. Remove the push fastener from the upper defroster duct.

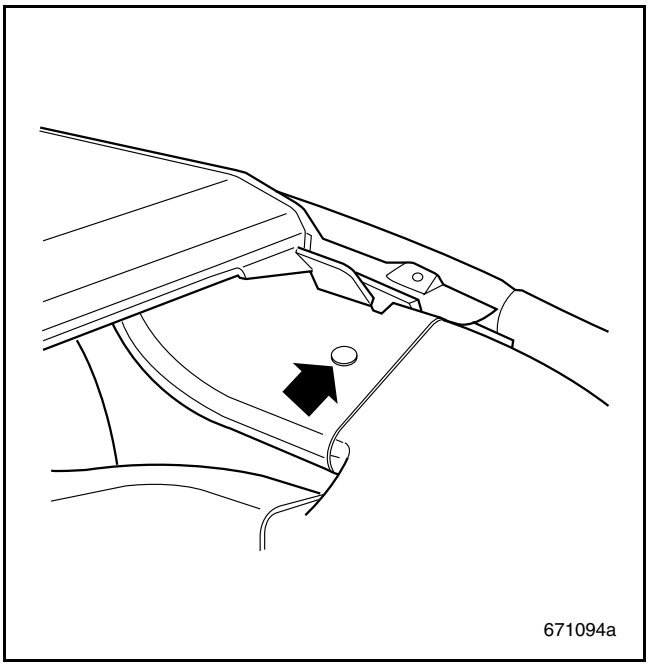

Figure 89 — Duct Push Fastener Location

7. Slide the defroster duct to the left (toward the center of the vehicle).

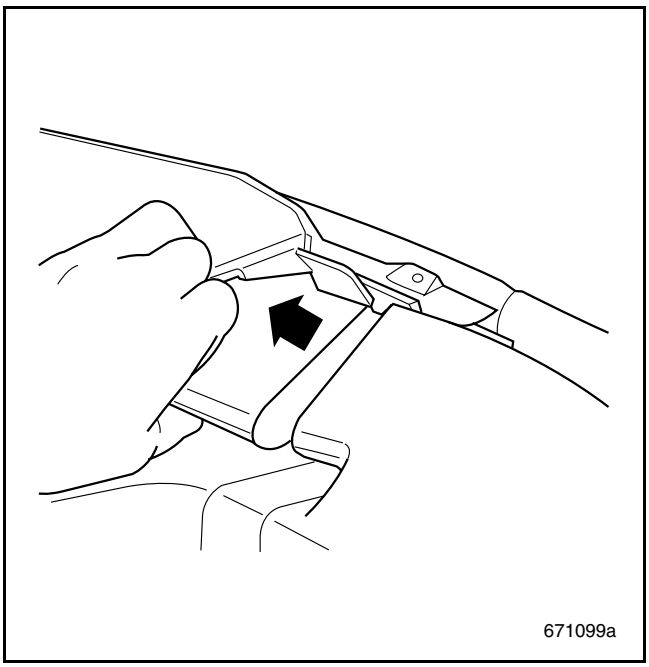

Figure 90 — Defroster Duct

8. Disconnect the wiring harness connectors that provide power for the passenger side door and other accessories.

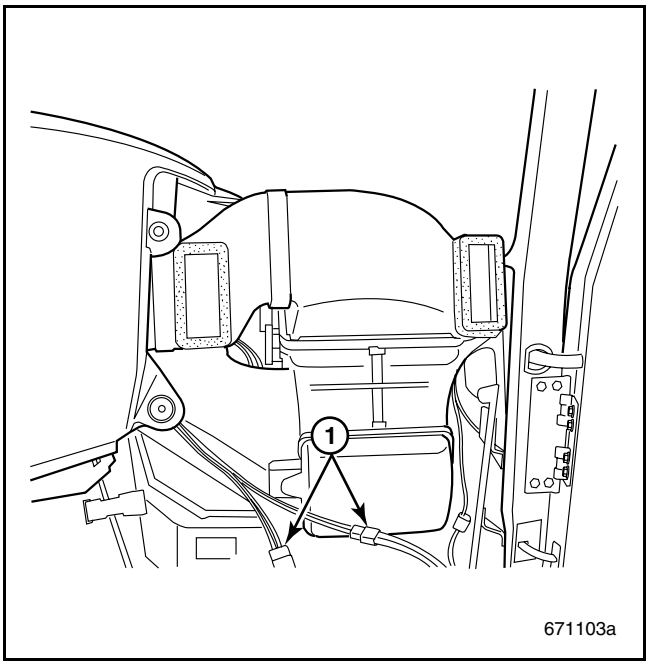

Figure 91 — Wiring Harness Connectors

1. Accessory Harness Connector Locations

9. Remove both left and right sections of the passenger side panel ducts by disengaging the release clips and then, slide both portions of the duct to the right. Lift the duct out once it is free of the center duct work.

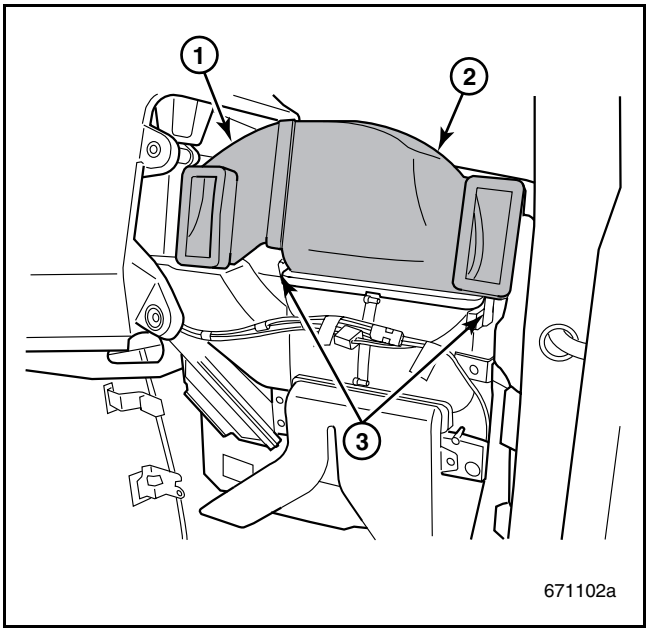

Figure 92 — Center Panel Ducts

1. Panel Duct (Left Side) 2. Panel Duct (Right Side)	3. Panel Duct Release Clips

10. Slide the center section of the defroster duct to the right to remove.

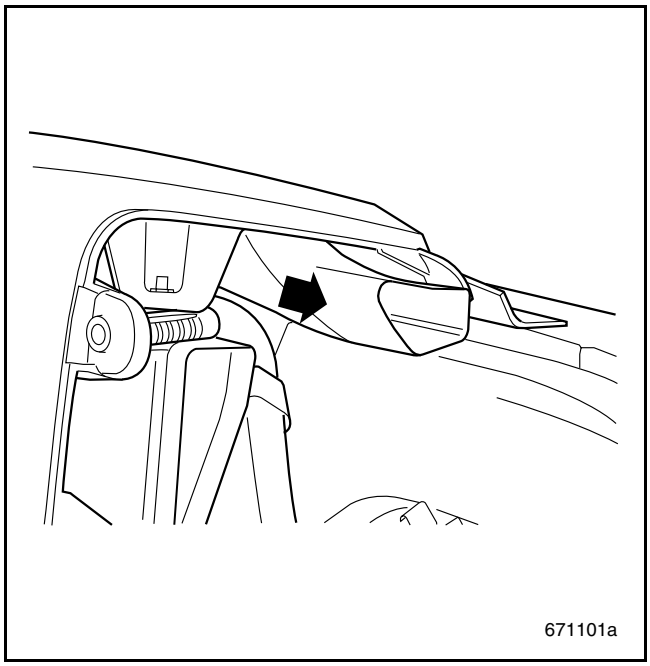

Figure 93 — Center Defroster Section

11. Remove the push fastener from the center panel distribution duct at the evaporator housing and remove the duct by sliding first to the left, then pulling out and finally, sliding to the left to remove.

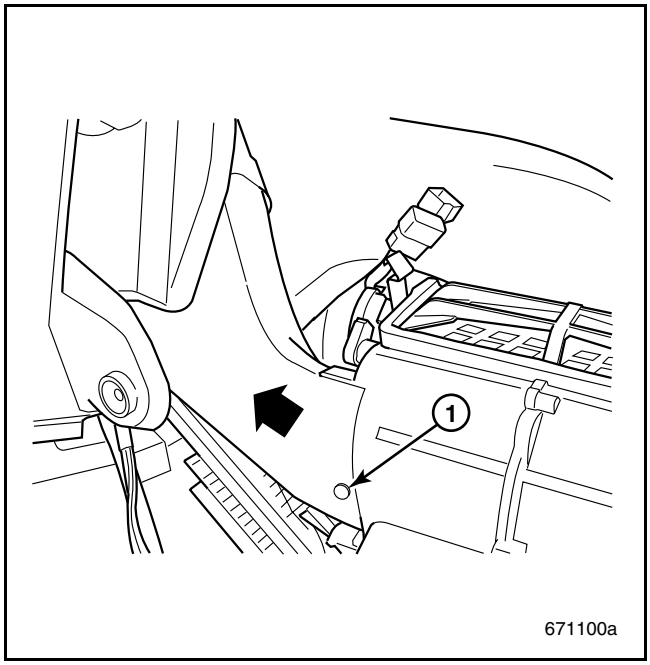

Figure 94 — Center Distribution Duct

1. Remove push fastener.

12. Release the duct lock tab from the upper duct that attaches to the top of the evaporator housing.

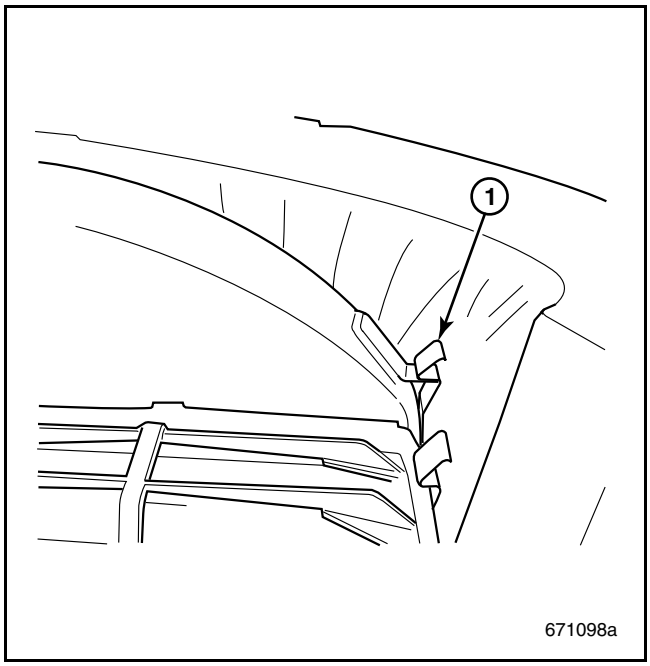

Figure 95 — Duct Lock Tab

1. Move to the right to release.

13. Remove the temperature duct from the top of the evaporator housing by lifting up and sliding to the right to remove.

Figure 96 — Temperature Duct

14. With all the ducts removed from the evaporator housing, the three actuators can now be accessed.

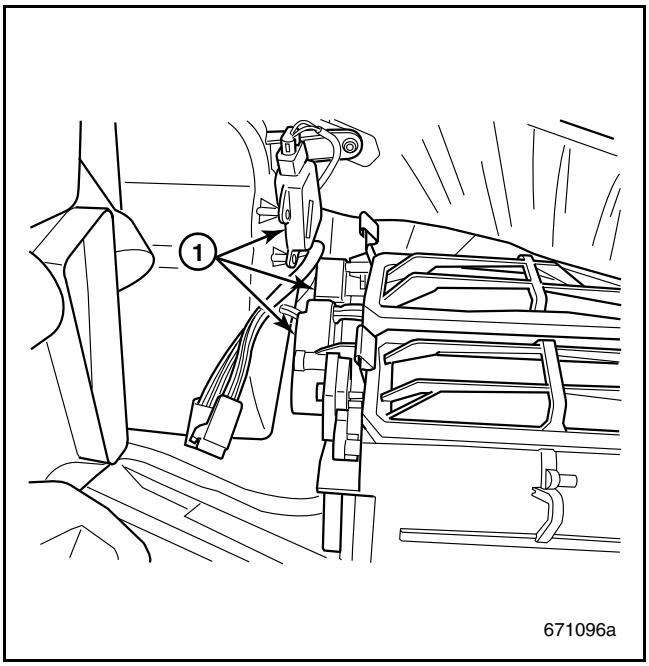

Figure 97 — Actuator Locations

1. Actuators

15. A small ratchet and either a T20 Torx bit or Phillips bit are required to remove the actuator screws. This is due to a fairly tight space constraint of 53.5 mm (2.1 inches).

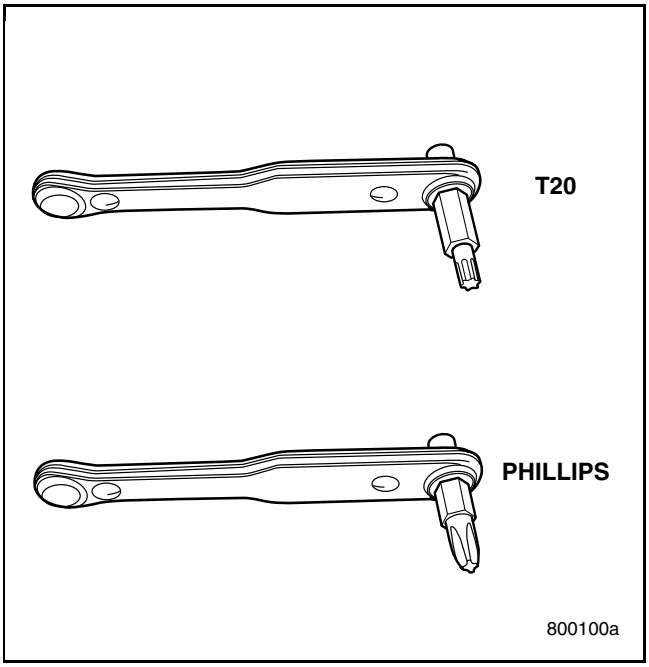

Figure 98 — T20 and Phillips Ratchet Wrenches

16. Disconnect the wire harness connector from the Mode actuator.

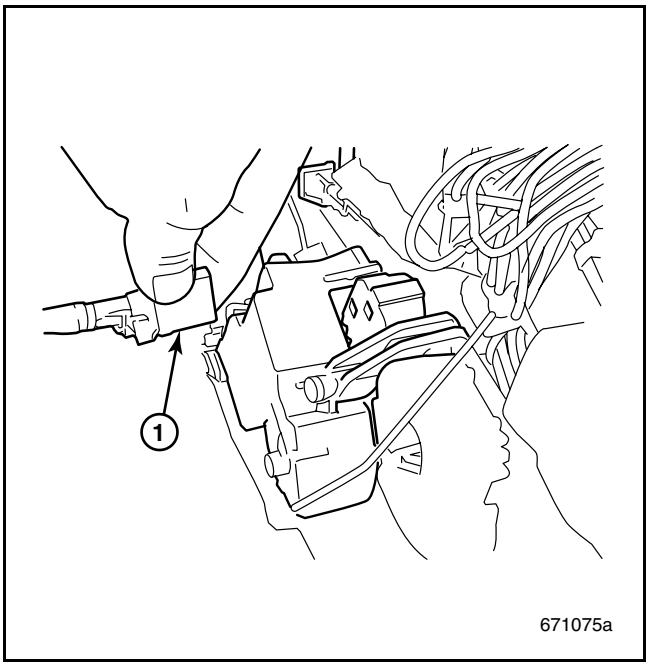

Figure 99 — Mode Actuator Harness

1. Mode Actuator Harness Location

17. Disconnect the wire harness connector from the Temperature actuator.

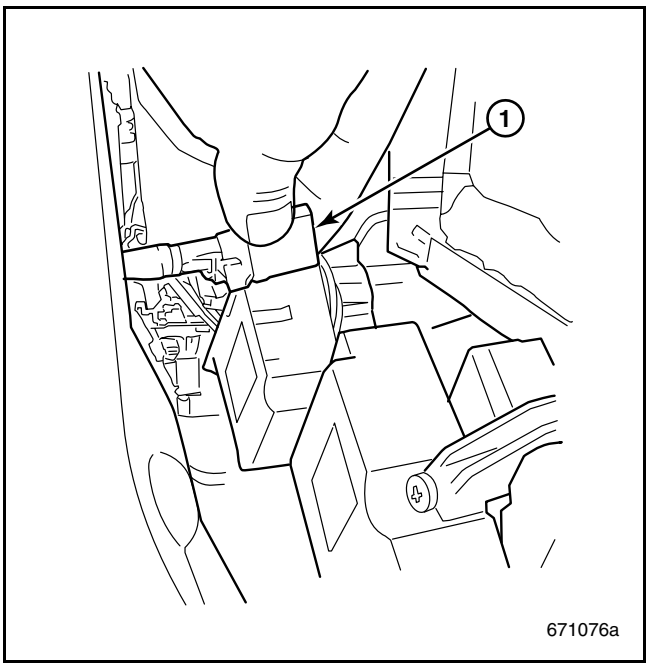

Figure 100 — Temperature Actuator Harness

1. Temperature Actuator Harness Location

18. Remove the Mode actuator mounting screws. The Mode actuator is mounted with two screws and a post. The actuator can be removed from its cam after the two mounting screws are removed.

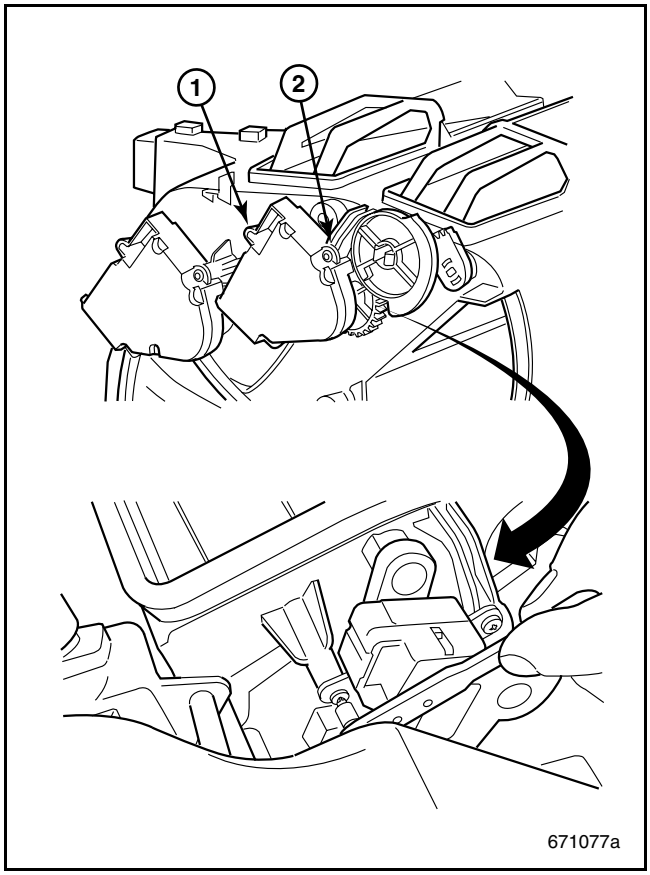

Figure 101 — Mode Actuator

1. Actuator Attaching Screw (Forward)	2. Actuator Attaching Screw (Rearward)

19. Remove the OSA actuator screws using the small ratchet and either the T20 Torx or Phillips bits. The OSA actuator can be pulled off the door after the screws are removed.

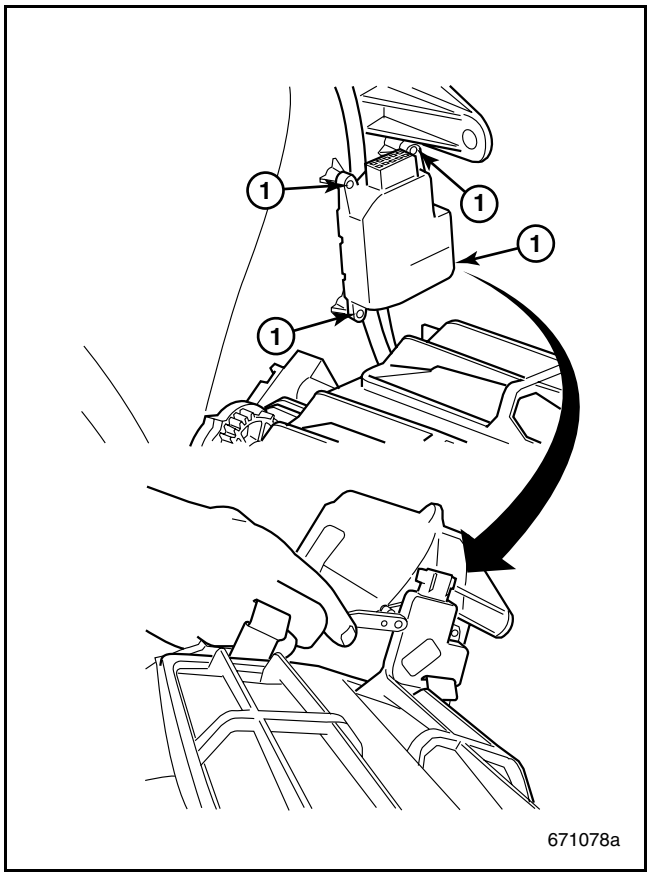

Figure 102 — OSA Actuator

1. OSA Actuator Screw Locations

20. After dismounting the OSA actuator, the wire harness connector can be removed.

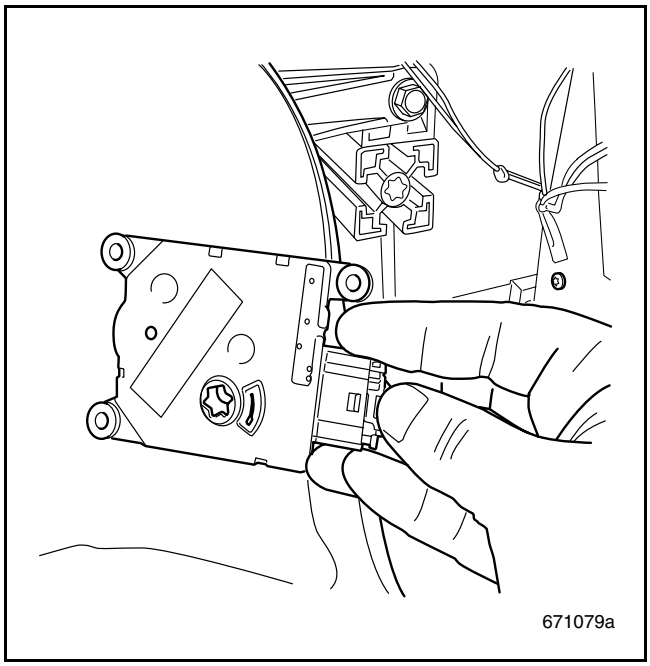

Figure 103 — OSA Actuator Harness

21. Following OSA actuator removal, the two Temperature actuator mounting screws can be removed and the actuator can be pulled off its lever.

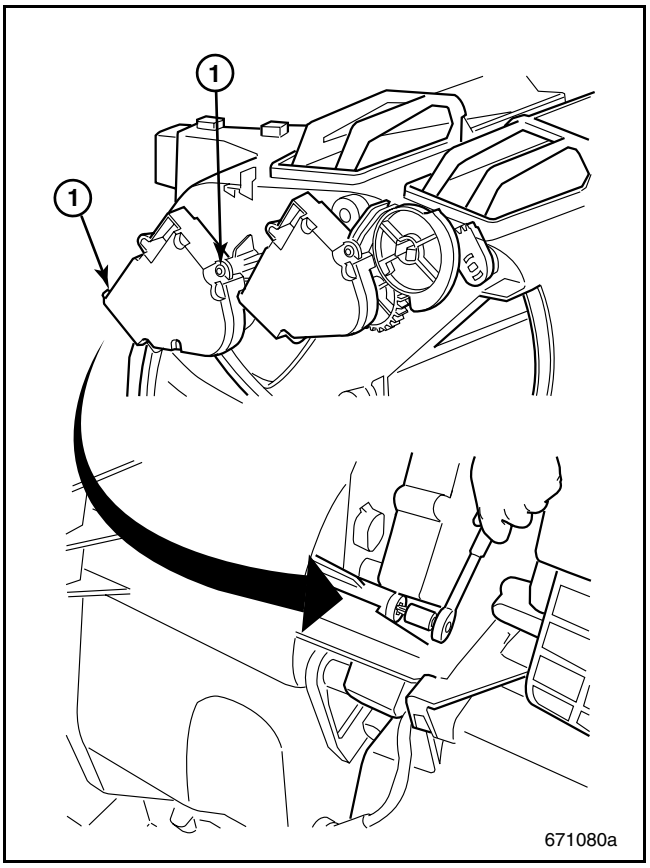

Figure 104 — Temperature Actuator

1. Temperature Actuator Screws

22. Install the **new** Temperature actuator over its lever and install the two mounting screws.

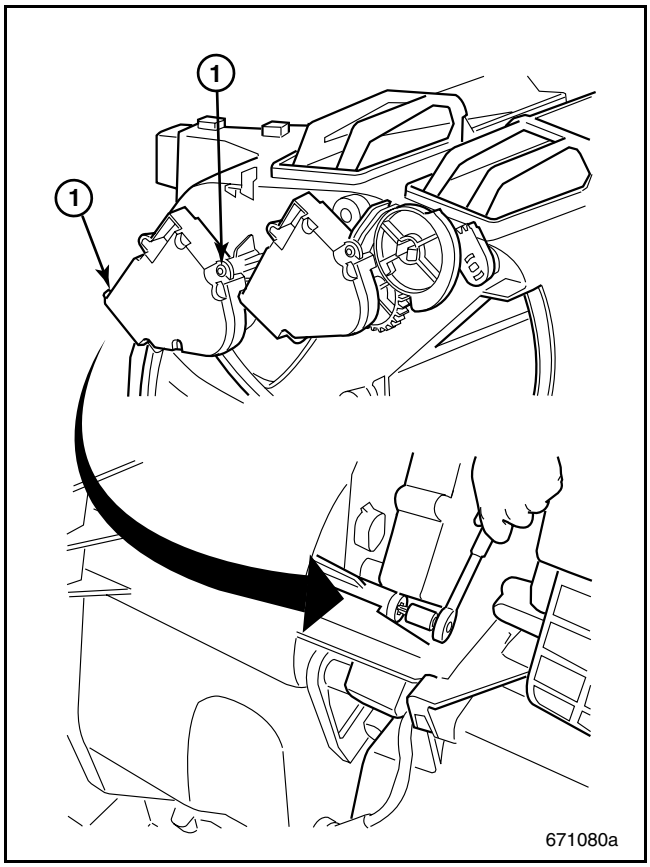

Figure 105 — Temperature Actuator

1. Temperature Actuator Screws

23. Connect the wire harness connector to the OSA actuator and install the actuator over the door lever. Install the mounting screws and tighten using the small ratchet and T20 Torx or Phillips bits.

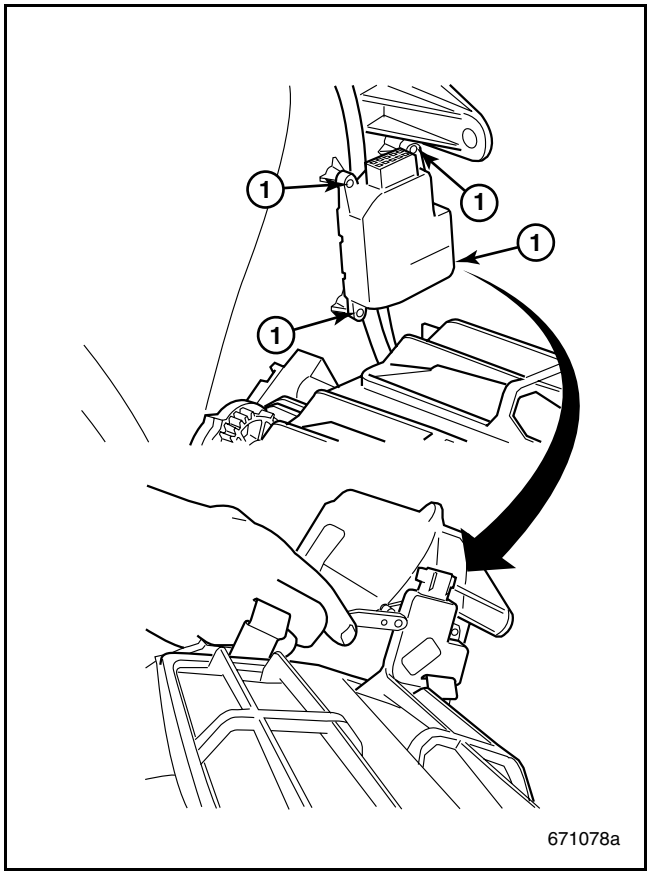

Figure 106 — OSA Actuator

1. OSA Actuator Screw Locations

24. Position the Mode actuator over the cam lever and align with the single post. Install the two mounting screws and tighten securely.

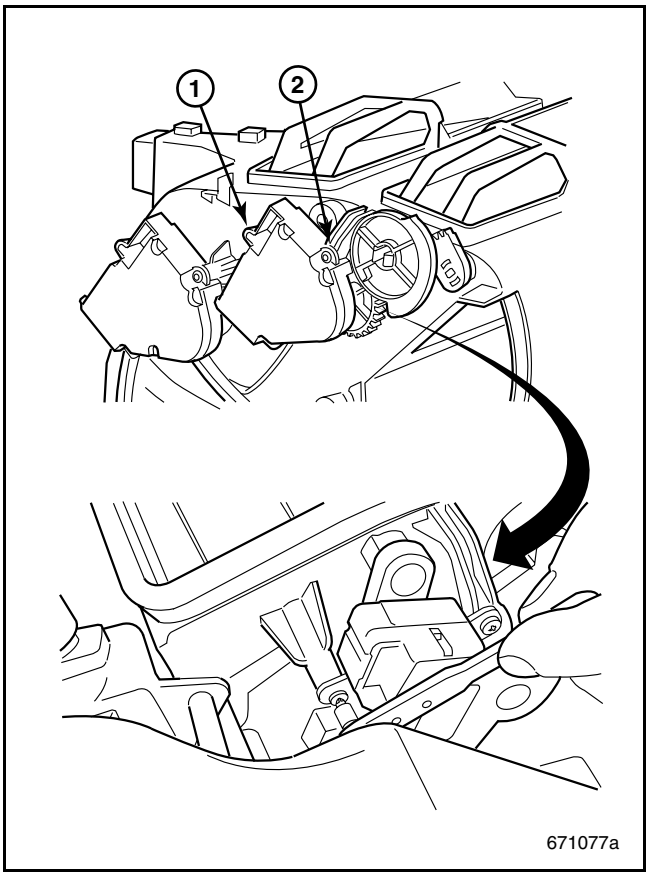

Figure 107 — Mode Actuator

1. Mode Actuator Screw (Forward)	2. Mode Actuator Screw (Rearward)

25. Reconnect the wire harness connector to the Temperature actuator.

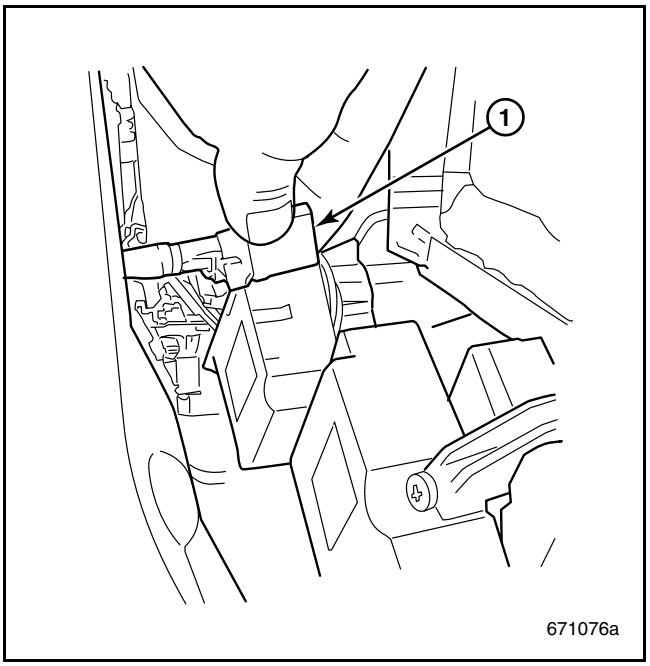

Figure 108 — Temperature Actuator

1. Temperature Actuator Harness

26. Reconnect the wire harness connector to the Mode actuator.

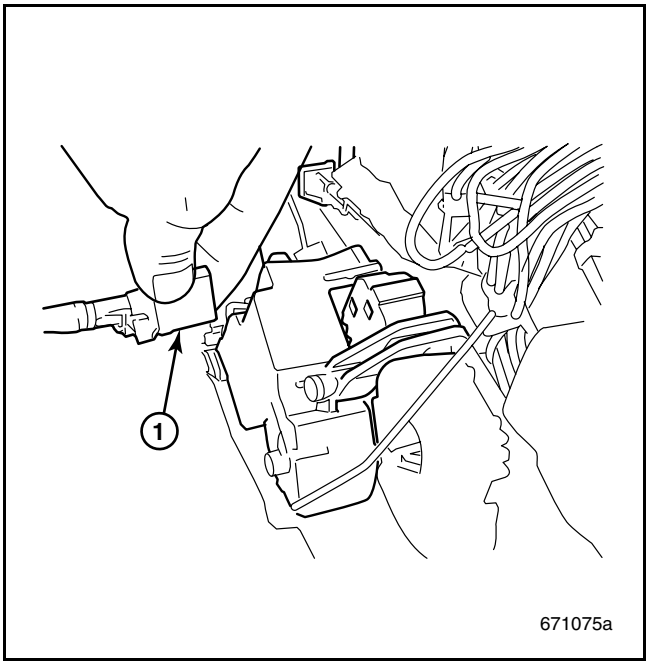

Figure 109 — Mode Actuator

1. Mode Actuator Harness

27. Install the temperature duct onto the top of the evaporator housing by sliding to the left and pushing down until the lock tab is engaged.

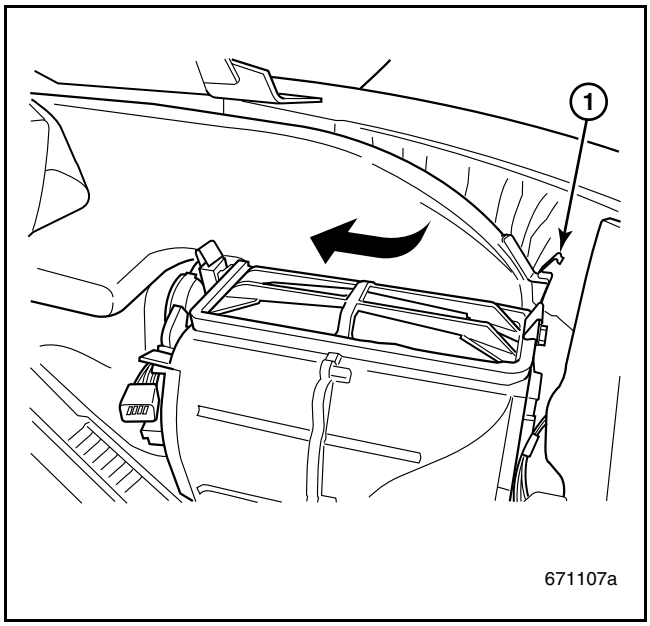

Figure 110 — Temperature Duct

1. Engage Lock Tab

28. Install the center panel distribution duct at the evaporator housing and by first sliding to the left, then pushing in and finally, sliding to the right to install. Install the push fastener to lock the duct in place.

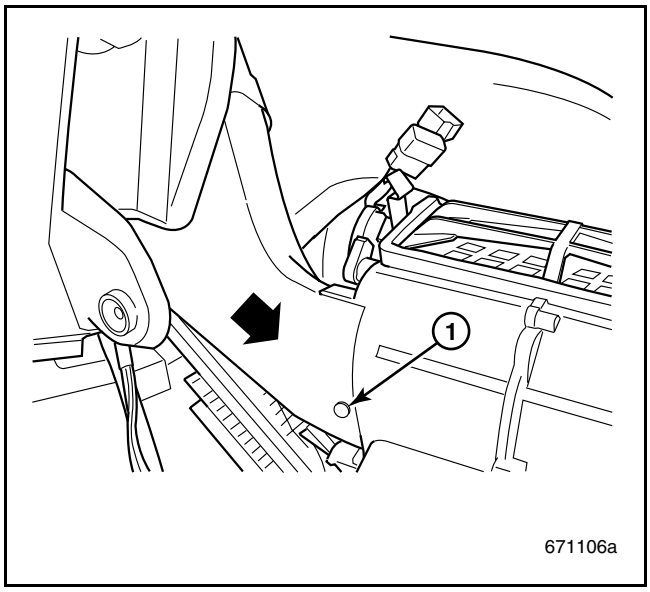

Figure 111 — Center Distribution Duct

1. Install Push Fastener

29. Install the center section of the defroster duct by sliding to the left until it connects with the corresponding duct in the dash center section.

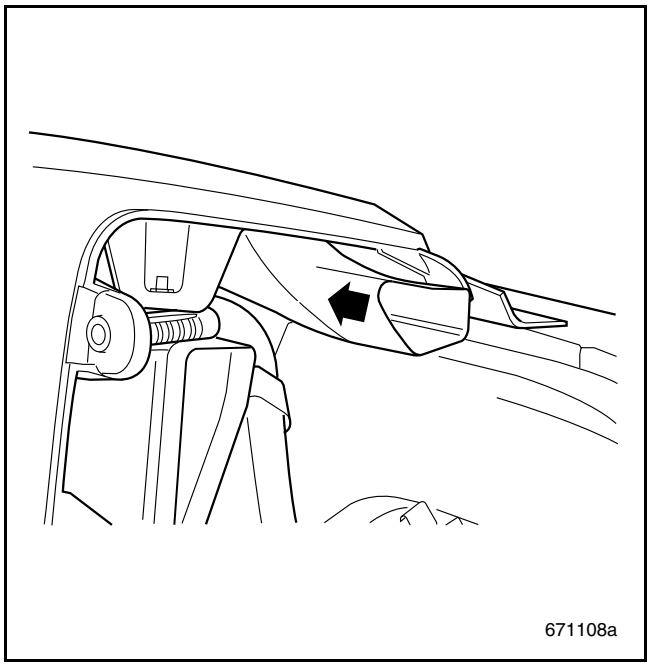

Figure 112 — Center Defroster Section

https://truckmanualshub.com/

30. Position both the left and right sections of the passenger side panel ducts over the top of the evaporator housing by sliding both portions of the duct to the left until it engages the center panel duct work. Engage the clips on both sides of the evaporator housing.

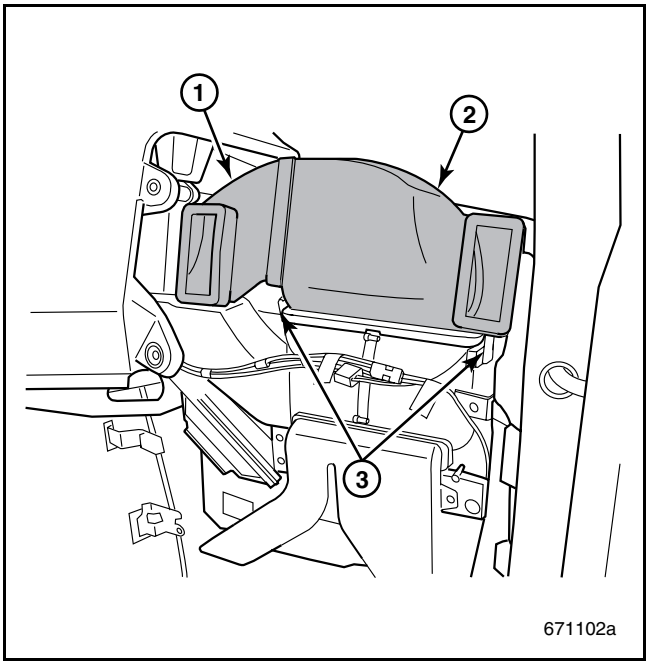

Figure 113 — Center Panel Ducts

1. Panel Duct (Left Side) 2. Panel Duct (Right Side)	3. Panel Duct Retaining Clips

31. Reconnect the wiring harness connectors that provide power for the passenger side door and other accessories.

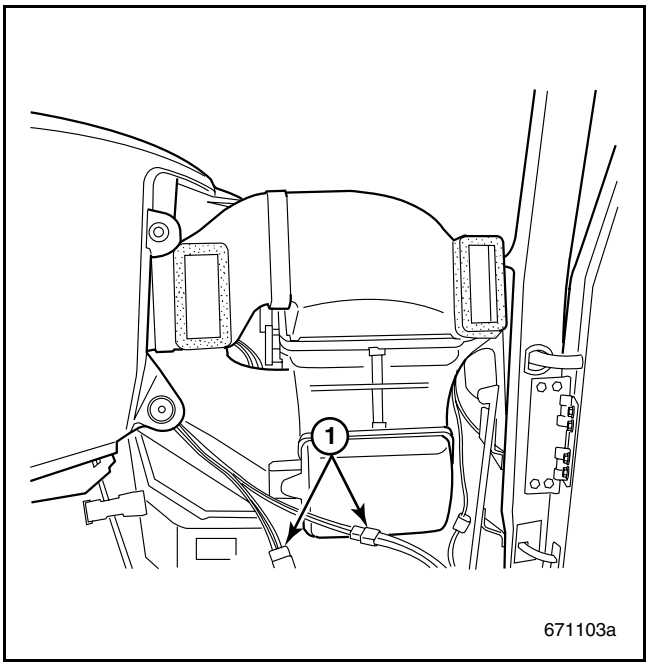

Figure 114 — Wiring Harness Connectors

1. Reconnect Accessory Harness Connectors

32. Slide the defroster duct to the right (away from the center of the vehicle). Reconnect the defroster duct to the temperature duct.

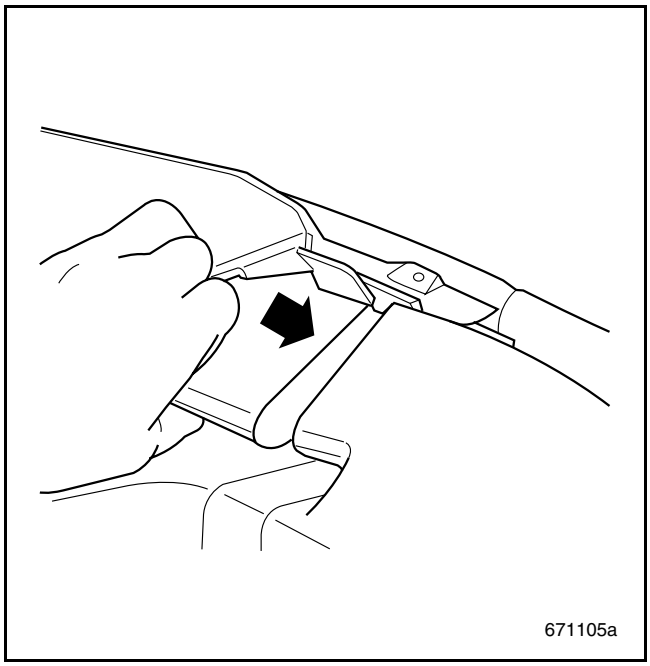

Figure 115 — Defroster Duct

33. Install the push fastener to connect the upper defroster duct to the temperature duct.

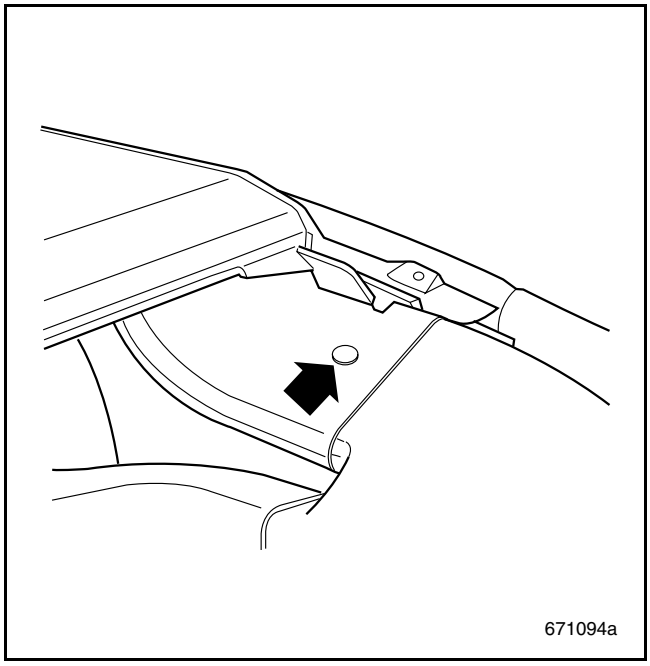

Figure 116 — Duct Push Fastener Location

34. Position the passenger side floor duct and install the three screws.

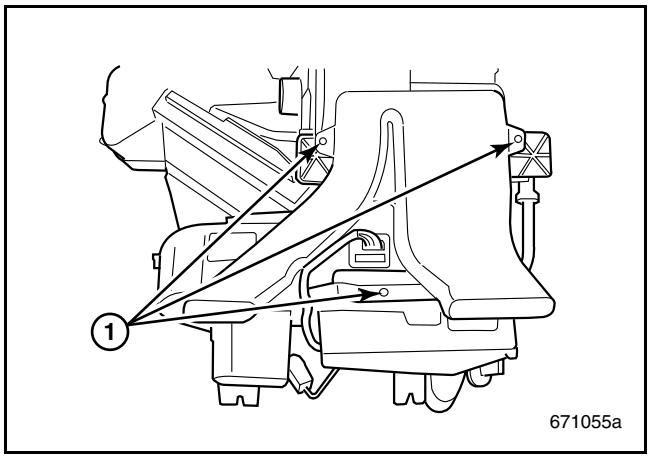

Figure 117 — Floor Duct Screw Locations

1. Passenger Floor Duct Screws

35. Install the upper dash by positioning over the evaporator housing and duct work while tipping the rear section downward to align with the windshield sill.

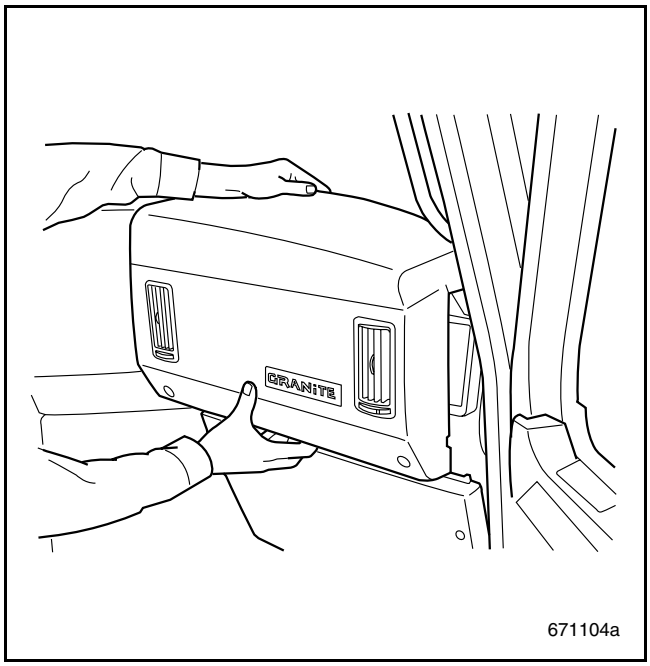

Figure 118 — Installing Upper Dash

36. Align the two fastener screw locations on the upper dash at the windshield area and install the screws.

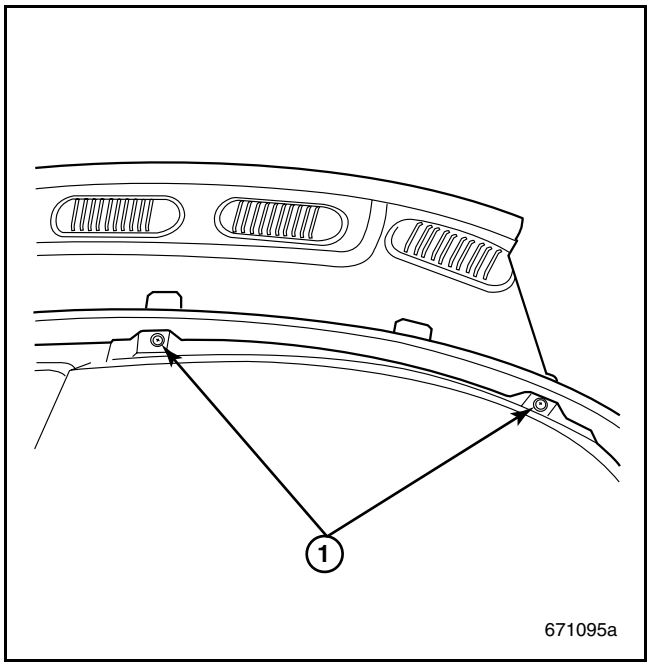

Figure 119 — Dash Cover Screw Locations (Upper)

1. Right-Hand Dash Cover Screws (Upper)

37. Install the two dash cover screws into the front of the passenger side dashboard.

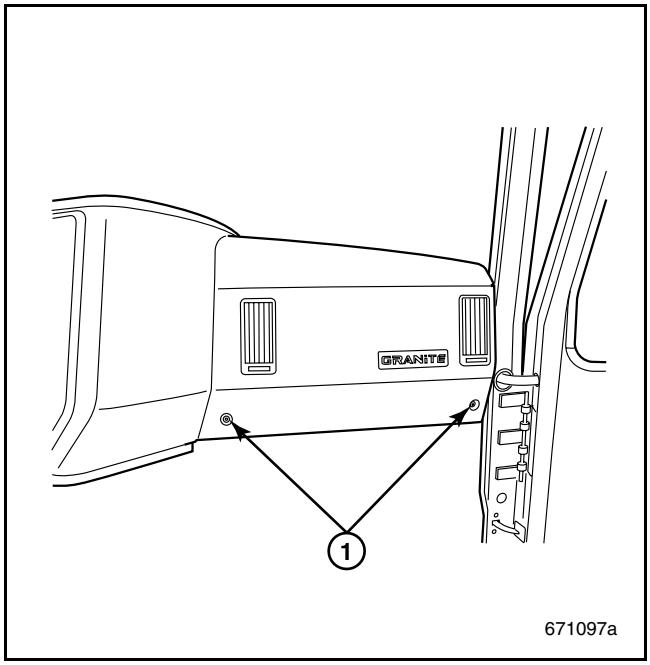

Figure 120 — Dash Cover Screw Locations (Lower)

1. Right-Hand Dash Cover Screws (Lower)

38. Install the appropriate passenger side panels that were removed for access.

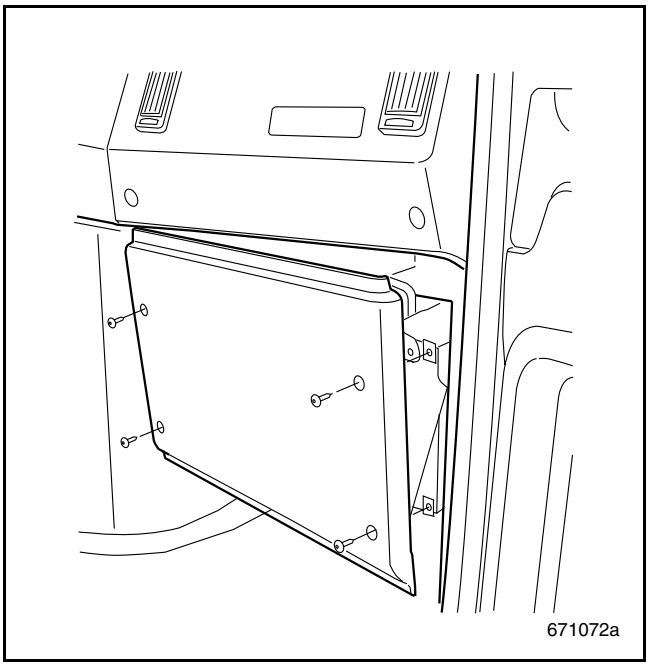

Figure 121 — Panel Removed for Access

https://truckmanualshub.com/

CORRECTIVE ACTIONS FOR KNOWN HVAC MALFUNCTIONS

Corrective Action for Sleeper Box Air Conditioner Evaporator Freezing and Icing — CH, CHN, CV, CX and CXN Models with Blend Air-Type HVAC Systems

If sleeper box air conditioner evaporator freezing and icing up complaints are encountered on CH, CHN, CV, CX and CXN model chassis equipped with blend air-type HVAC systems, replacement of the front (cab) expansion valve with a service replacement-type valve (part No. 4379-RD570151) should correct the problem. Replacing the cab expansion valve (front unit) located on the cab bulkhead will correct the ice-up condition of the rear sleeper unit.

NOTE

Expansion valve part No. 4379-RD570150 is not applicable for this repair. Be sure to use the service replacement part No. 4379-RD570151 only.

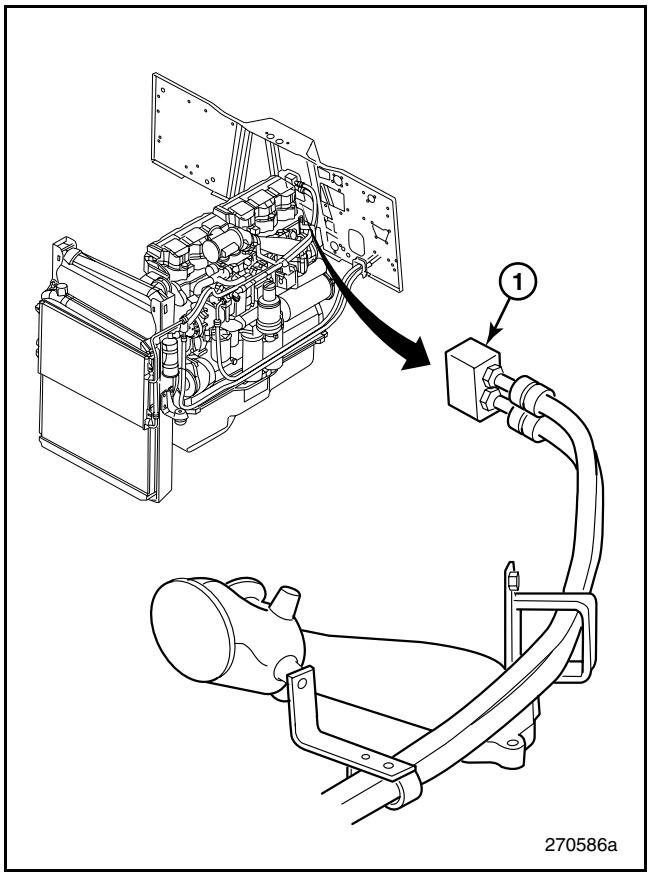

Figure 122 — Replacement Expansion Valve Location

1. Service Replacement Expansion Valve

https://truckmanualshub.com/

Corrective Action for Sticking or Binding Blend Air-Type Mode Box — CH, CHN, CL, CT, CX and CXN Models with Blend Air-Type HVAC Systems

If difficulty is experienced in selecting heater/air conditioner airflow modes (defrost, dash panel, floor, etc.), then a sticking or binding mode control box may be the cause. To eliminate this condition, a revised mode box (part No. 7787-8870517) is now available through the MACK Parts System. Should complaints arise of sticking or binding cab heater/air conditioner mode control on chassis built between January 1, 2000 and April 1, 2005, use the following procedure to replace the mode box with the revised component.

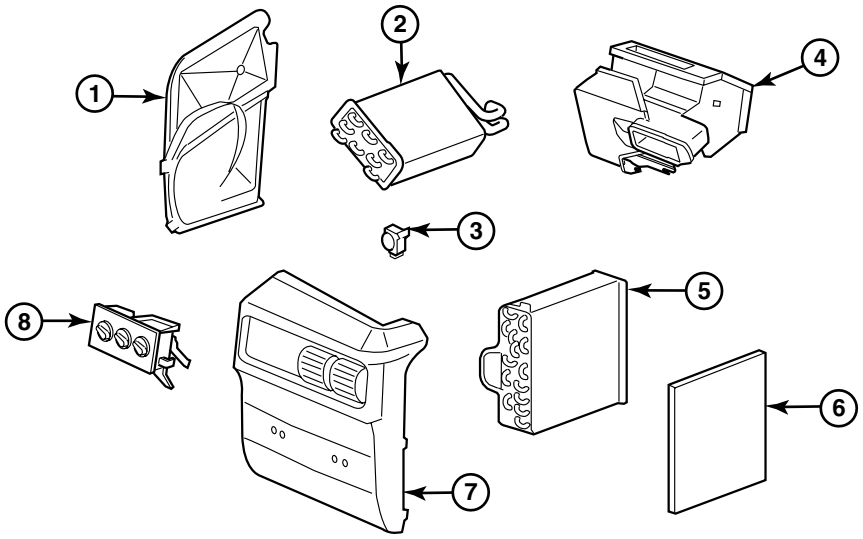

Figure 123 — Blend Air-Type HVAC System Components

1. Left Side Cover 2. Heater Core 3. Freeze Switch 4. Mode Box	5. Evaporator Core 6. Filter 7. Front Cover 8. Control Panel

NOTE

HVAC units already equipped with a revised mode box are identified with a pink dot located on the left-hand side of the unit. The dot is visible by looking at the upper portion of the unit from under the instrument panel, on the driver's side. Before proceeding, check for the pink dot.

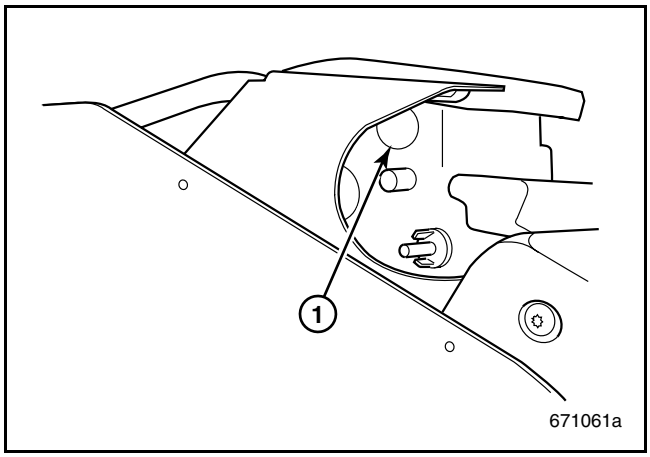

Figure 124 — Location of Pink Dot on HVAC Unit

1. Pink Dot Location

1. Secure the chassis for service, apply the parking brakes and block the wheels to prevent the vehicle from moving.
2. Disconnect the batteries by disconnecting the negative battery cable(s) first, then the positive cable(s).
3. Evacuate the refrigerant from the air conditioning system using a UL/SAE-approved recovery-recycling station similar to the unit shown in Figure 125.

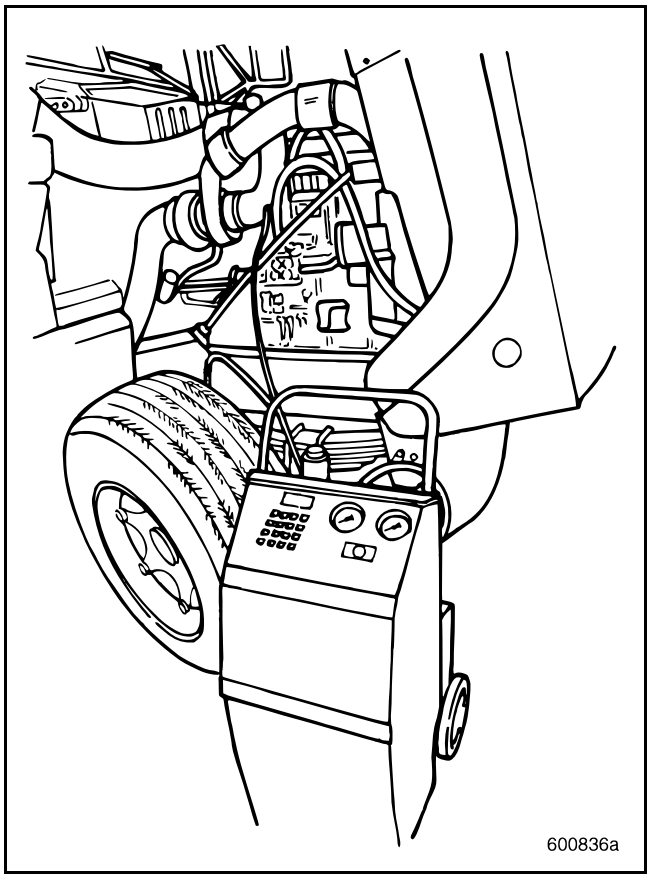

Figure 125 — Recovery-Recycling Station

4. Loosen the radiator cap to relieve pressure in the cooling system.
5. Using a suitable heater hose clamping tool, clamp the heater hoses close to the heater core so that the hoses can be disconnected without having to drain the cooling system.
6. Disconnect the air conditioner lines from the expansion valve, and then disconnect the heater hoses from the heater core.

N O T E

Place a suitable container under the heater hose-to-heater core connections to catch any coolant that may drain from the heater core and hoses.

https://truckmanualshub.com/

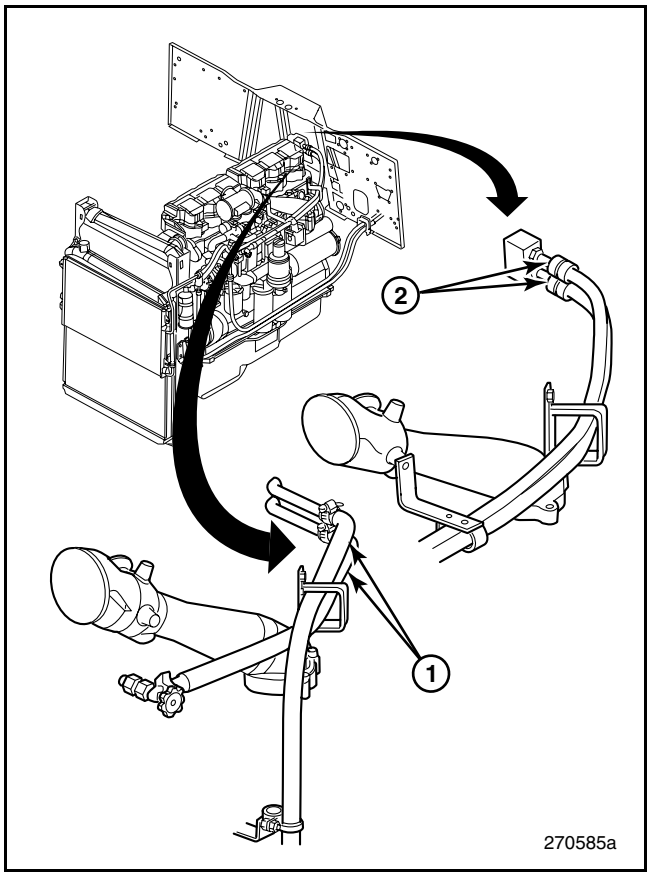

Figure 126 — Disconnect Air Conditioner Lines and Heater Hoses

1. Clamp Heater Hoses Here, Disconnect from Heater Core	2. Disconnect A/C Line from Expansion Valve

N O T E

Access to the air conditioner lines and heater hoses can be made easier if the air cleaner assembly is removed, particularly if the chassis is equipped with a J-Tech™ engine brake.

7. Remove the condenser drain tube, and then remove the two HVAC unit retaining nuts.

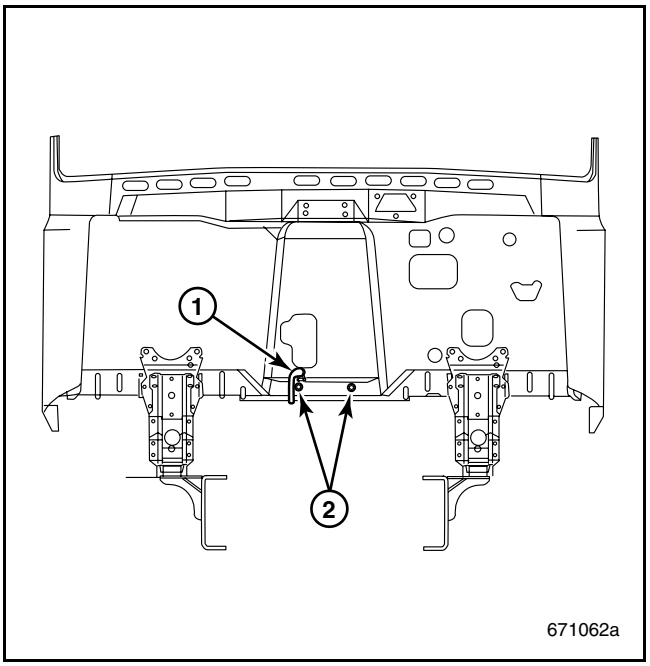

Figure 127 — Disconnect Condenser Drain Tube and Remove HVAC Unit Retaining Nuts

1. Remove Drain Tube	2. HVAC Unit Retaining Nuts

8. Remove the cup holder from the front of the HVAC unit, and then remove the remaining six screws that secure the front cover, and then remove the cover.

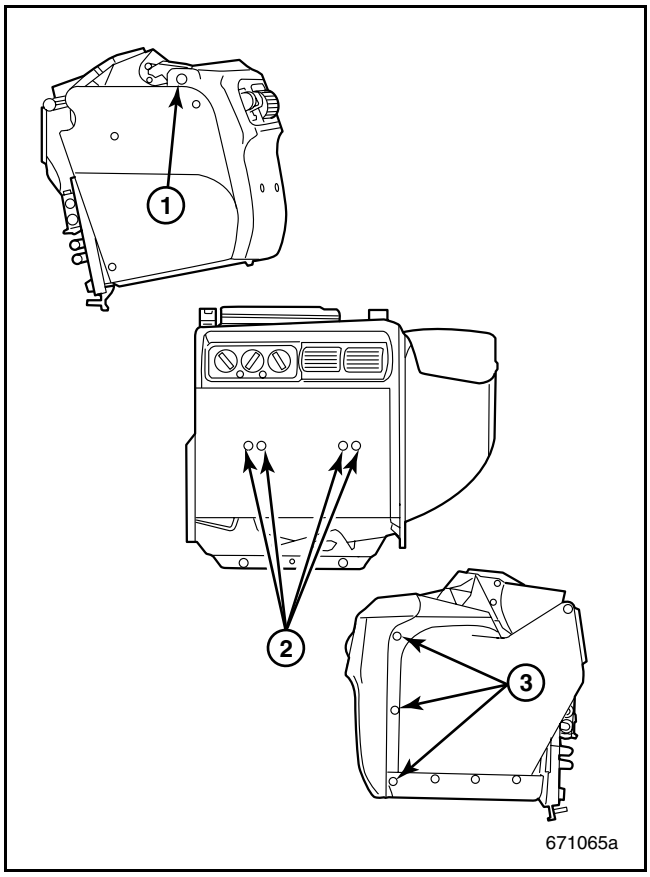

Figure 128 — Remove Front Cover from HVAC Unit

1. Remove One Screw 2. Remove Four Screws	3. Remove Three Screws

9. Remove the four screws that secure the left-side cover to the HVAC unit, and then remove the cover.

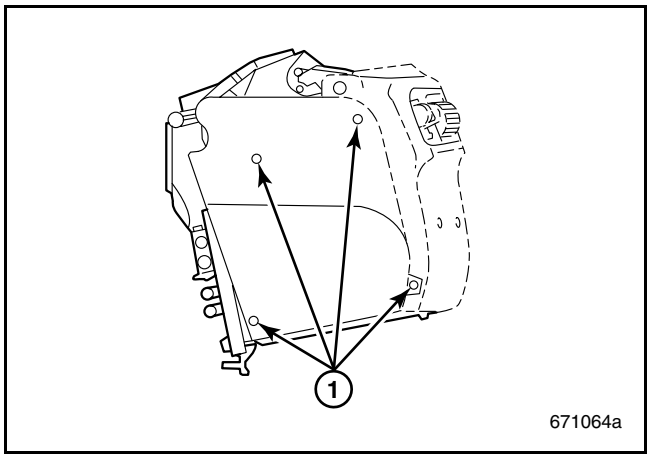

Figure 129 — Remove Left-Side Cover from HVAC Unit

1. Remove Four Screws

10. Remove the screws that secure the “D” panel to the dashboard, and then pull the panel away from the dashboard to access the two HVAC unit retaining bolts.

11. Remove the two bolts that secure the HVAC unit to the top support brackets.

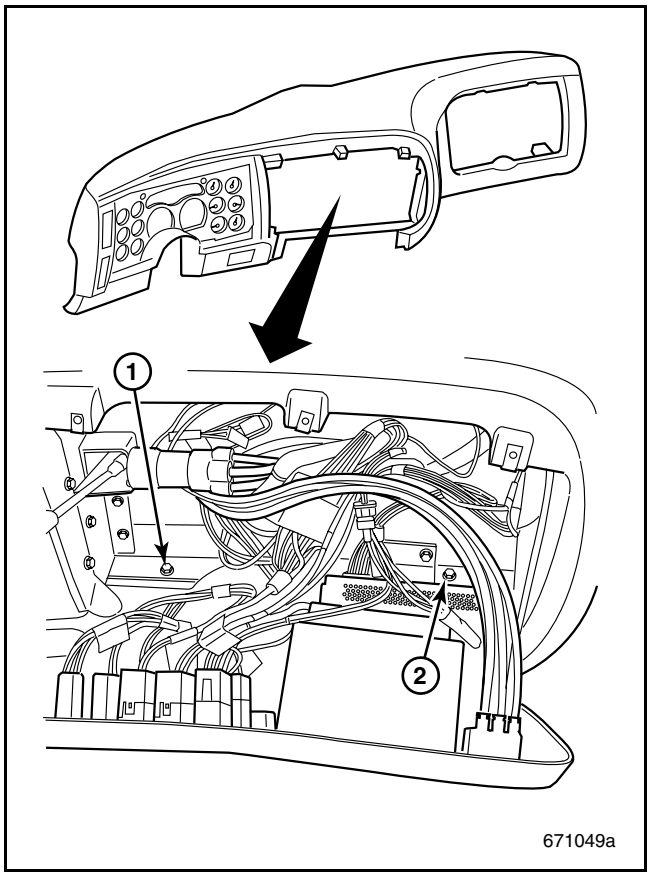

Figure 130 — Remove HVAC Unit Retaining Fasteners

1. Remove Bolt	2. Remove Bolt

12. Lift the HVAC unit, pull it rearward and then lay the unit on the cab floor. Disconnect the HVAC harness connector from the cab harness.
13. Remove the HVAC unit from the cab and place it on a suitable work surface.
14. Using a small flat-blade screwdriver, pry the mode box linkage rod retaining clip open, and then disconnect the rod from the actuator.

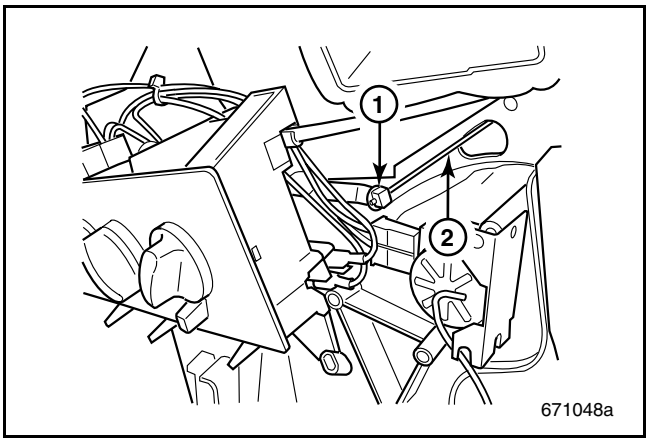

Figure 131 — Disconnect Mode Box Linkage Rod

1. Pry Clip Open	2. Linkage Rod

15. Remove the three screws that retain the control panel to the front of the HVAC unit, and then pull the panel away from the unit. Do not completely remove the control panel; allow it to hang in place by the harness wires.

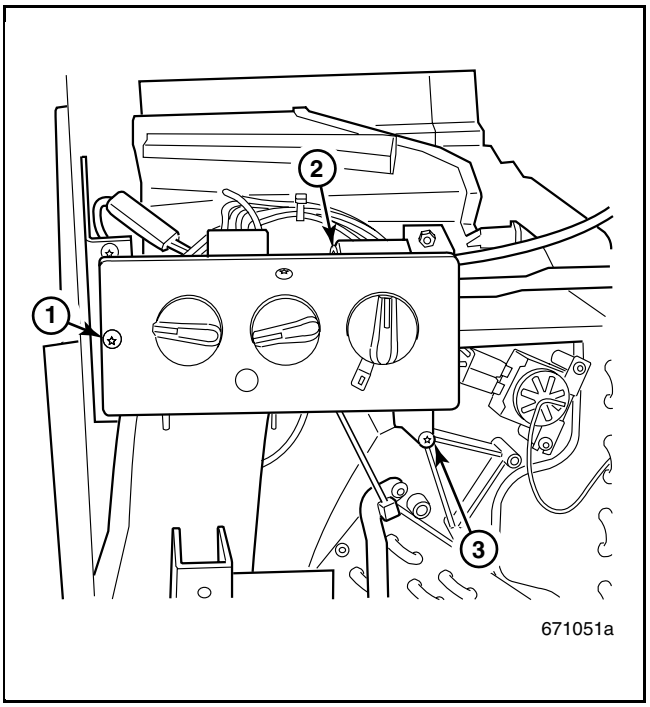

Figure 132 — Remove Control Panel

1. Remove Face Plate Screw 2. Remove Rear Panel Screw	3. Remove Lower Mounting Screw

16. Remove the two screws that secure the freeze switch to the HVAC unit, and then move the switch upward in order to gain access to the mode box retaining screws.

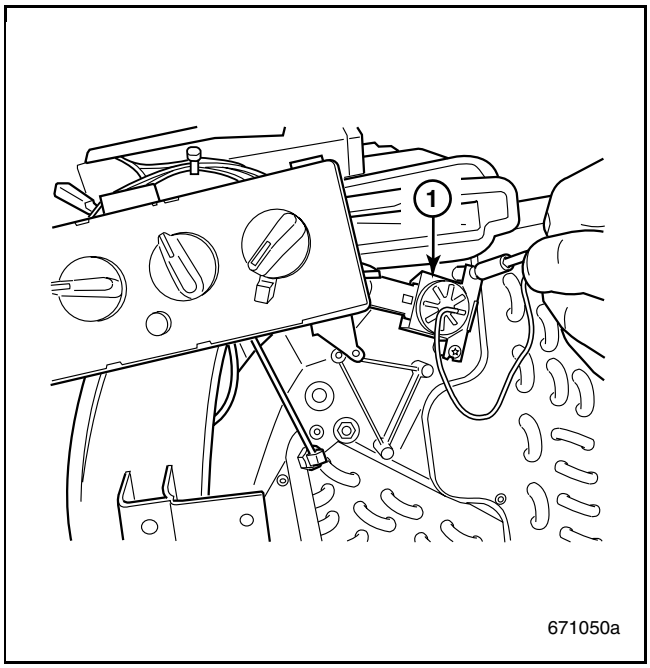

Figure 133 — Remove Freeze Switch Retaining Screws

1. Freeze Switch

17. Disconnect the “credit card” resistor connector located on the left-hand side of the HVAC unit.

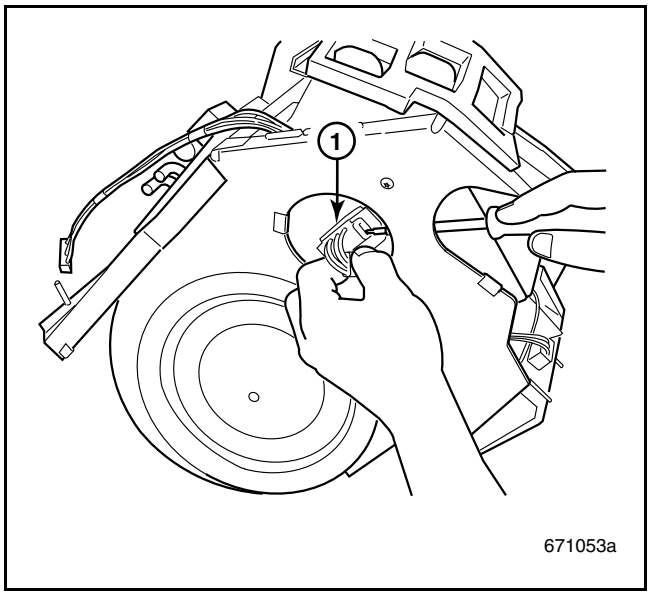

Figure 134 — Disconnecting “Credit Card” Resistor

1. Resistor Card Connector

18. Remove the four screws and three retaining clips that secure the mode box to the HVAC unit.

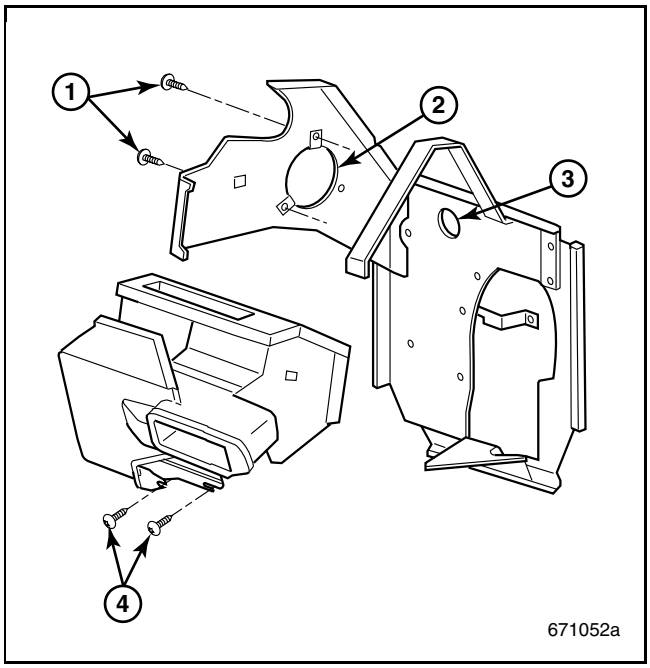

Figure 135 — Removing Mode Box Fasteners

1. Remove Screws 2. Access Two Side Clips Here	3. Access Rear Clip Here 4. Remove Screws

19. After removing the retaining screws and clips, lift the mode box up and forward away from the control panel. Carefully feed the mode box linkage rod out of the unit.

20. Remove the “credit card” resistor from the existing mode box.

21. Install the “credit card” resistor into the replacement mode box (part No. 7787-870517).

22. Install the replacement mode box to the HVAC unit, being sure to carefully feed the linkage rod through the access hole in the top of the unit. Secure the mode box with the four retaining screws and three retaining clips.

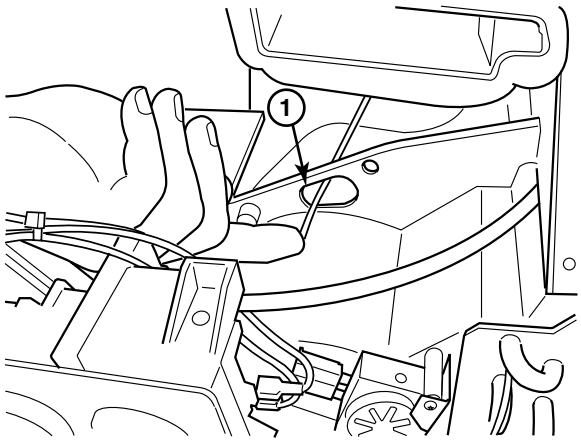

Figure 136 — Feeding Linkage Rod Through Access Hole

1. Feed Linkage Rod Through Hole in Housing

23. Reinstall the freeze switch and the control panel. When the control panel is in place, adjust and secure the mode box linkage rod as follows:
    a. Turn the mode knob fully clockwise to the defrost position.
    b. Align the end of the mode box linkage rod with the control arm, and then snap the rod into place.
    c. Snap the clip over the rod.
24. Check for proper operation of the mode box by rotating the mode knob through full travel. Check that no binding occurs and that the doors operate properly.
25. Remove the filter from the right-hand side of the HVAC unit, clean it in warm soapy water, dry it with shop air, and then reinstall.
26. Reinstall the HVAC unit in the cab.
27. Install the covers to the HVAC unit and reinstall the “D” panel to the dashboard.
28. Reconnect the condenser drain tube, and then reconnect the air conditioner lines to the expansion valve and the heater hoses to the heater core connections. Remove the clamps from the heater hoses.
29. Using a UL/SAE-approved recovery-recycling station, recharge the air conditioning system with refrigerant and replenish any coolant that may have been lost when the heater hoses were disconnected.
30. Reconnect the batteries by connecting the positive battery cable(s) first, then the negative cable(s).
31. Start the engine and check the operation of the mode box functions. Also check for proper heating and cooling.
32. Stop the engine and recheck the coolant level. Replenish as required.
33. Use the V-MAC® service tools to reset the date and time.

A/C SERVICE RECOMMENDATIONS

Flushing the A/C System During Compressor Replacement

If the compressor has seized or the shaft rotation has hard spots, it is likely that the system is contaminated. If it is not known if the system is contaminated, the orifice tube or expansion valve inlet and oil should be examined. Remove the compressor oil plug and pour the remaining oil into a container to see if the oil is dark and thick from high internal temperatures or if it contains fine metal particles. When replacing a compressor with signs of internal damage, it is necessary to flush debris and contaminated oil from the remaining A/C system components.

Flushing Equipment

Use the following equipment to clean debris and oil sludge from the A/C system.

- Closed loop refrigerant R & R machines that contain a flushing circulating pump to solvent-clean using R134a.
- A closed loop flushing machine in which the circulated flushing fluid is returned to a reservoir for filtering and continued recirculation. Robin Air and Bright Solutions are two suppliers of this type of equipment. Most of these machines provide a pulsing action to dislodge any particles stuck in small passageways.
- A pressurized flush gun with a pulsating spray can also be used. To use this technique, block one end of an A/C system component being flushed in order to build pressure inside the component, and then quickly release the blocked end to pulse the flushing solvent out.

FOR MORE INFORMATION

Refer to the following web sites for more information on flushing equipment.

- http://www.hecat-inc.com/index.htm
- http://robinair.com/product-new/detail.php?id=1113&catid=11
- http://robinair.com/product-new/detail.php?id=1114&catid=11

Safety Measures

- Do not use flammable fluids.
- Protect eyes with safety goggles.
- Wear chemical resistant gloves.
- Use approved fluids. CFCs R-11, 113 or 115 and Methyl Chloroform also known as 1,1,1 Trichloroethane are not acceptable per the Clean Air Act. Do not use brake or carburetor cleaner or degreaser because they leave residues that can cause problems.

Acceptable Flushing Fluid and Solvents

Only A/C flushing fluid certified to meet the requirements of SAE J2670 (for material compatibility, Falex wear test and viscosity designated) should be used and can be either solvent or lubricant based.

FOR MORE INFORMATION

Refer to the following web sites for more information on flushing solvents.

- http://www.honeywell.com/sites/sm/chemicals/genesolv/
- http://refrigerants.dupont.com/Suva/en_US/pdf/h96546.pdf

Component Flushing Recommendations

DO NOT flush the compressor, accumulator or receiver dryer, thermal expansion valve or orifice tube because residual flushing fluid cannot be removed from these components and they restrict the flow of flushing agent through other components. Use new parts to replace these components after the other components are flushed.

Back Flushing

“Back flushing”, or flushing in the reverse direction to normal flow, is the most effective. The plate fin evaporators used in front and rear systems have many small passages that are difficult to clean without a strong pulsating reverse flow.

Flushing Duration

For a closed loop procedure, flush until the flushing fluid leaving the A/C components is clean. For a manual pressurized gun method, flush a minimum of three times, but more if the flushing fluid is not clean.

Residual Flushing Fluid Removal

The primary vacuum pump should be protected from flushing fluid and fumes. Purging of flushing fluid is necessary before connecting the R & R machine to evacuate and charge the A/C system. The best method is to allow pressurized Nitrogen to flow through the components. If Nitrogen is not available, compressed air that has passed through a water separator can be blown through the components until the flushing fluid is evaporated.

Rear A/C System Evaporator and Hose Flushing

The rear sleeper evaporator and hoses must be flushed to eliminate debris distributed throughout the A/C system. The rear expansion valve can be gutted or drilled out and remounted so that the rear evaporator and hoses can be back flushed as an assembly. After blowing out the flushing fluid and fumes, a new thermal expansion valve should be mounted.

Suction Side Flushing

This important step is commonly skipped. When the off-cycle pressure equalizes in the backwards direction through damaged compressor valves, debris may be forced back up the suction hose. If it is not removed, this debris can travel into the replacement compressor and be circulated through the A/C system, causing subsequent failures.

https://truckmanualshub.com/

NOTES

https://truckmanualshub.com/

SPECIFICATIONS

https://truckmanualshub.com/

AIR CONDITIONING SYSTEM SPECIFICATIONS [637]

Refrigerant and Oil Charge Levels [637]

CH, CHN, CHU, CL, CT, CTP, CX, CXN, CXU, CXP AND GU

Model	R-134a Charge (lbs.)	Oil (oz.) Sanden
CH, CHN, CHU, CL, CT, CTP, CX, CXN, CXU, CXP and GU	3.0	9.1
CH, CHN, CHU, CL, CX, CXN, CXU and CXP with Sleeper	3.5	9.1

CL MODEL WITH CUMMINS ENGINE AND CCI® A/C COMPRESSOR

Model	Oil (oz.)
CL model with Cummins Engine and CCI® A/C Compressor	Use only Polyolestor (POE) Oil 14.0

DM, DMM, RB, RD6 AND RD8

Model	R-134a Charge (lbs.)	Oil (oz.) Sanden
DM and DMM	3.0	9.1
RB	3.0	9.1
RD6 and RD8	3.0	9.1

FDM

Model	R-134a Charge (lbs.)	Oil (oz.) Sanden
FDM	3.0	9.1

LE, LEU, MR AND MRU WITH ROOF-MOUNTED A/C SYSTEM

Model	R-134a Charge (lbs.)	Oil (oz.) Sanden
LE, LEU, MR and MRU	2.0	9.1

MR AND MRU WITH CAB-MOUNTED A/C SYSTEM

Model	R-134a Charge (lbs.)	Oil (oz.) Sanden
MR and MRU	2.5	9.1

CS AND MS

Model	R-134a Charge (lbs.)	Oil (oz.) Sanden
CS and MS	3.0	9.1

https://truckmanualshub.com/

APADS® CM812 AND CM813 A/C CONTROL SYSTEM [637]

Mechanical

The module is designed to be mechanically rugged for service in the underhood environment of a heavy-duty commercial vehicle. The unit is potted in an epoxy compound that provides a thorough environmental seal and enhanced heat sinking for electrical components.

TABLE 1: SPECIFICATIONS

Component	Specification
Housing	Refer to specification drawing.
Material/Finish	Refer to specification drawing.
Mounting	Dual fasteners, 0.375″ diameter mounting holes. Torque fasteners to 37 lb-ft maximum.
Encapsulation	Epoxy Resin
Wires	18 gauge, color coded, SXL insulation
Connectors	Customer specified.
Marking	Part/model number, traceable to date of manufacture
Weight	0.55 lb. (8.8 oz.)

Electrical

The CM812 module must be wired into the ignition circuit (NOT continuously powered) and must have a 10 amp fuse in series with the power lead of the module.

The CM813 module must be wired into the ignition circuit (NOT continuously powered) and must have a 7.5 amp fuse in series with the power lead of the module.

Applicable over the full operating temperature range of –40° to 100°C (–40° to 212°F).

Parameter	Min	Typ	Max	Units
Supply Voltage[1]	10	13.5	16	Volts
Supply Voltage[2]			24	Volts
Supply Current (no load)			50	mAmps
Load (AC clutch drive)	3	4		Ohms
Load (AC clutch drive)		0.1	0.20	Henries
Load energy 1/2 L I^2			1.5	Joules
Relay contact voltage drop		0.04	0.10	Volts
Input Debounce delay	0.3		1.1	Seconds
Open Clutch sense current	0.15	0.5	1.27	Amps
Shorted Clutch cut out resistance	1.7		2.4	Ohms
Voltage Cutout off threshold	10.8	11	11.2	Volts
TStat on range	5		VIGN	Volts
TStat off range	0		1	Volts
Load (Fan actuator circuit) **(CM813 only)**	13			Ohms
Load (Fan actuator circuit) **(CM813 only)**			80	mHenries

[1] Continuous operation.

[2] Absolute maximum; two minute duration.

All voltages referenced to ground lead of device.

Environmental

- Operating Temperature: –40 to 100°C (–40 to 212°F)
- Exposure Temperature: –40 to 110°C (–40 to 230°F)

https://truckmanualshub.com/

ELECTRICAL DESIGN COMPLIANCE

The CM812/CM813 will withstand, without permanent damage or subsequent degradation to performance, the following conditions:

- Reverse polarity, 16 VDC indefinitely
- Load dump, 120 V peak
- Overvoltage, 24 VDC for two minutes
- Electro Static Discharge, 15k human body model

The device will not suffer any permanent damage and will be functional during the application of the following:

- RFI, 20V/m 1MHz to 1Ghz
- RFI, 50V/m 25 to 30 Mhz
- EMI, Power supply noise, mutual coupling

MECHANICAL DESIGN COMPLIANCE

Condition	Specification
Shock	Drop test onto concrete, six feet onto each of three mutually orthogonal surfaces
Vibration	Swept sine wave, three orthogonal planes, 10 to 2,000 Hz, 1 inch peak displacement, 6G maximum
Pressure Wash Immunity	1,100 psi, temperature of 140°F, spray nozzle 6–10 inches from unit
Chemical Immersion	Unit will be resistant to external or operational damage from 24 hour immersion into the following: water, diesel fuel, engine oil, transmission fluid, degreaser, gasoline, antifreeze/water solution, brake fluid, kerosene, windshield washer fluid
Corrosion Resistance	Sprayed with the following substances: salt water, battery acid

https://truckmanualshub.com/

SCHEMATIC & ROUTING DIAGRAMS

https://truckmanualshub.com/

A/C SYSTEM REFRIGERANT CIRCUIT SCHEMATICS [637]

CH, CHN, CHU, CL, CT, CTP, CV, CX, CXN, CXU, GU and CXP Model A/C System

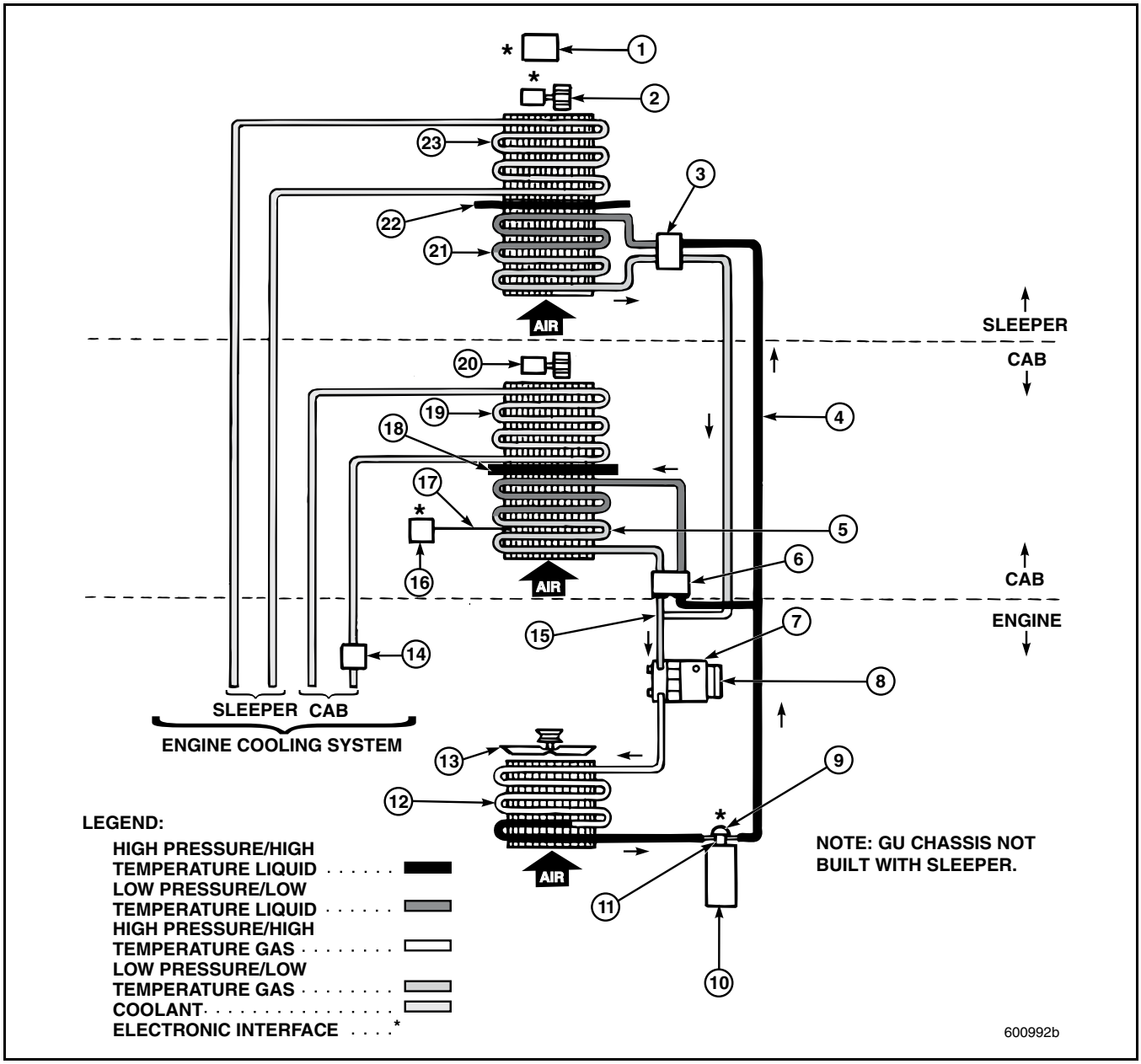

Figure 137 — CH, CHN, CHU, CL, CT, CTP, CV, CX, CXN, CXU, GU and CXP Red Dot and Blend Air A/C System Refrigerant Circuit Schematic

1. Climate Control Panel	9. Pressure Switch	17. Temperature Probe
2. Blower Motor	10. Receiver/Dryer	18. Blend Air Door (Blend Air System Only)
3. Expansion Valve	11. Pressure Relief Valve	19. Heater Core
4. High-Pressure (Liquid) Line	12. Condenser	20. Blower Motor
5. Evaporator	13. Engine Cooling Fan	21. Evaporator
6. Expansion Valve	14. Water Valve (Red Dot System Only)	22. Blend Air Door
7. Compressor	15. Low-Pressure (Suction) Line	23. Heater Core
8. Compressor Clutch	16. Thermostat/Thermal Sensor	

https://truckmanualshub.com/

DM, DMM, RB, RD6 and RD8 Model A/C System

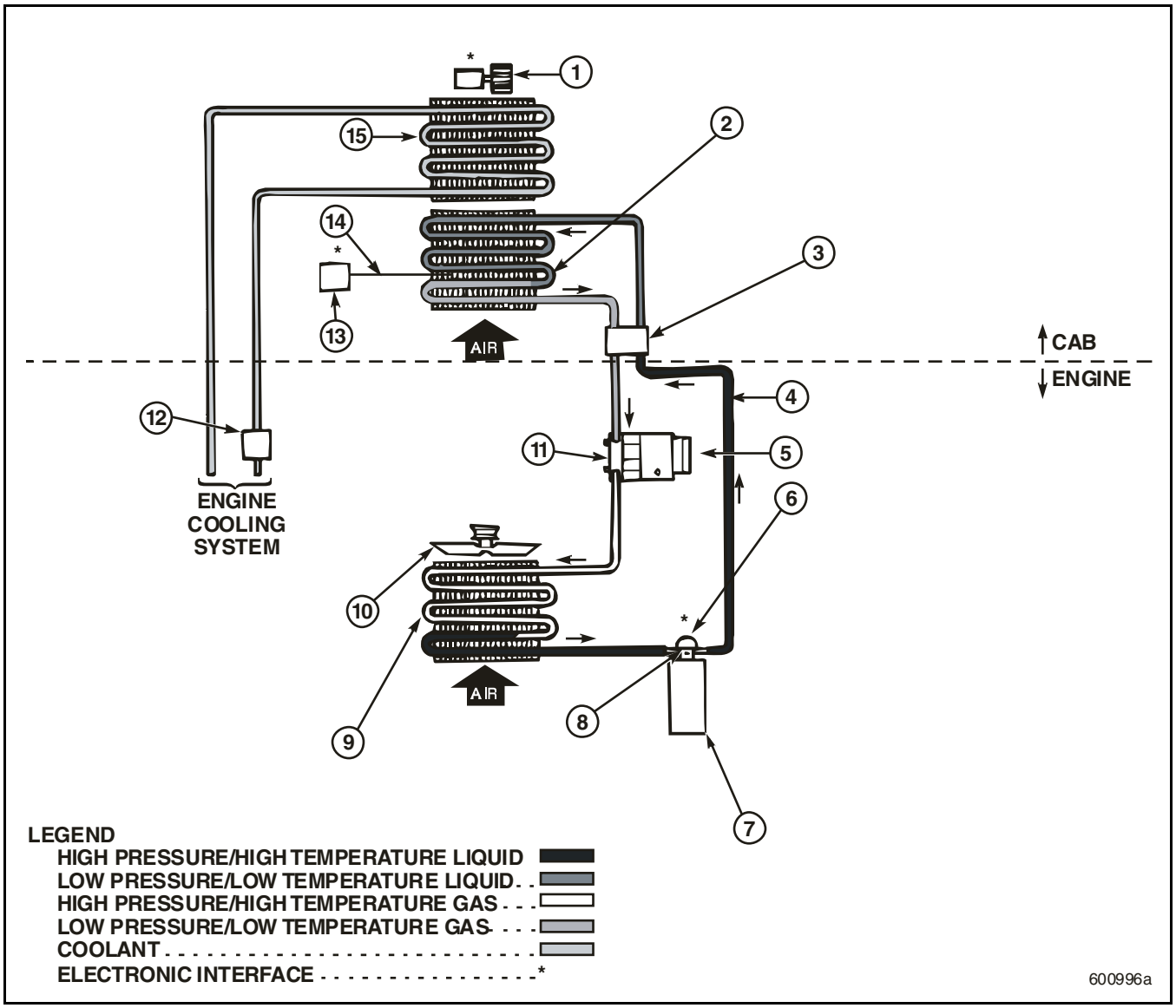

Figure 138 — DM, DMM, RB, RD6 and RD8 Model Red Dot A/C System Refrigerant Circuit Schematic

1. Blower Motor	6. Pressure Switch	11. Compressor
2. Evaporator	7. Receiver/Dryer	12. Water Valve
3. Expansion Valve	8. Pressure Relief Valve	13. Thermostat
4. High-Pressure (Liquid) Line	9. Condenser	14. Temperature Probe
5. Compressor Clutch	10. Engine Cooling Fan	15. Heater Core

https://truckmanualshub.com/

FDM Model A/C System

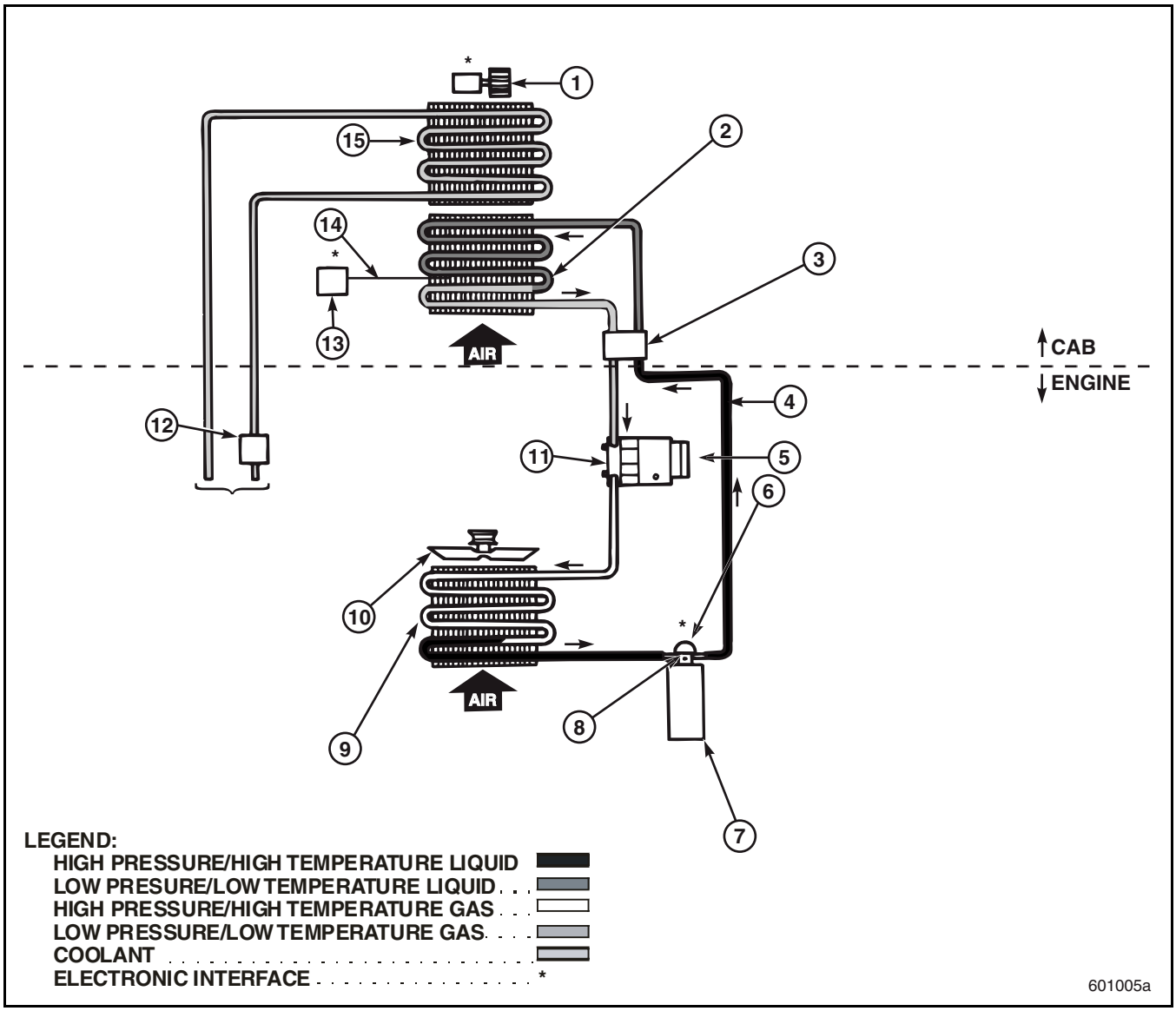

Figure 139 — FDM Model A/C System Circuit Schematic

1. Blower Motor	6. Pressure Switch	11. Compressor
2. Evaporator	7. Receiver/Dryer	12. Water Valve
3. Expansion Valve	8. Pressure Relief Valve	13. Thermostat
4. High-Pressure (Liquid) Line	9. Condenser	14. Temperature Probe
5. Compressor Clutch	10. Engine Cooling Fan	15. Heater Core

https://truckmanualshub.com/

LE, LEU, MR and MRU Models with Roof-Mounted A/C System

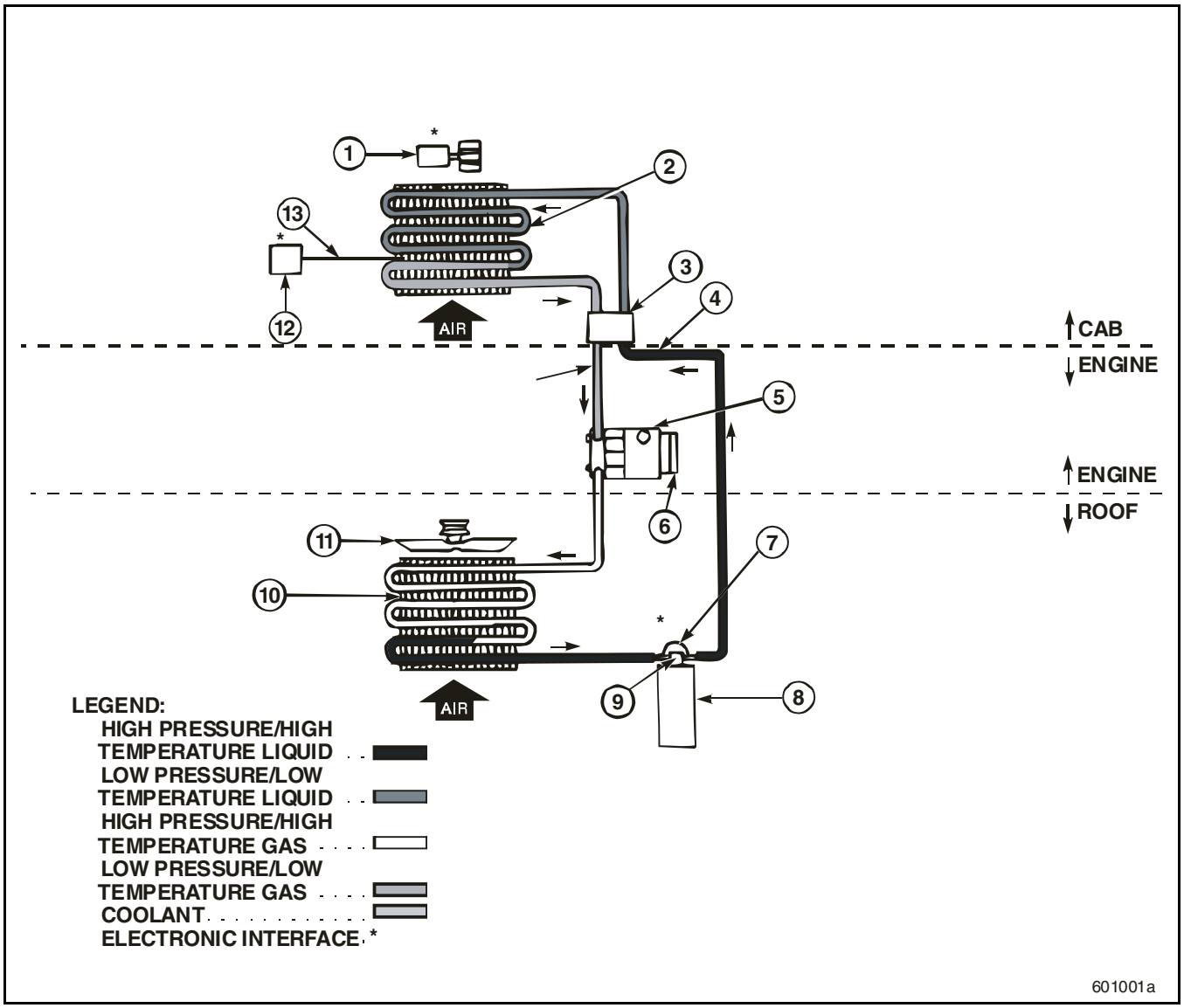

Figure 140 — LE, LEU, MR and MRU Models with Roof-Mounted A/C System Circuit Schematic

1. Blower Motor	6. Compressor Clutch	10. Condenser
2. Evaporator	7. Pressure Switch	11. Condenser Cooling Fan
3. Expansion Valve	8. Receiver/Dryer	12. Thermostat
4. High-Pressure (Liquid) Line	9. Pressure Relief Valve	13. Temperature Probe
5. Compressor		

https://truckmanualshub.com/

MR and MRU Model with Cab-Mounted A/C System

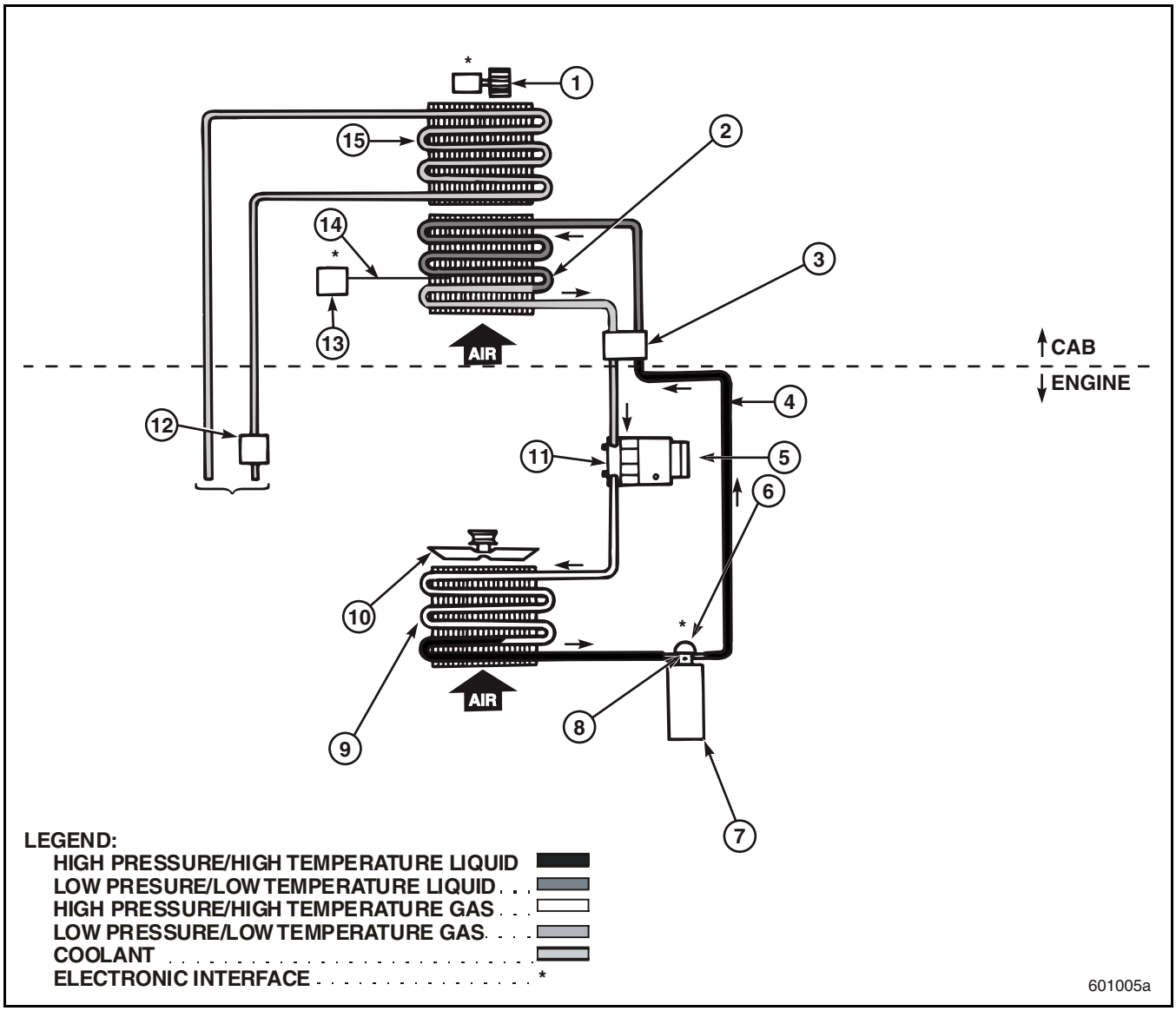

Figure 141 — MR and MRU Model with Cab-Mounted A/C System Circuit Schematic

1. Blower Motor	6. Pressure Switch	11. Compressor
2. Evaporator	7. Receiver/Dryer	12. Water Valve
3. Expansion Valve	8. Pressure Relief Valve	13. Thermostat
4. High-Pressure (Liquid) Line	9. Condenser	14. Temperature Probe
5. Compressor Clutch	10. Engine Cooling Fan	15. Heater Core

https://truckmanualshub.com/

CS and MS Model A/C System

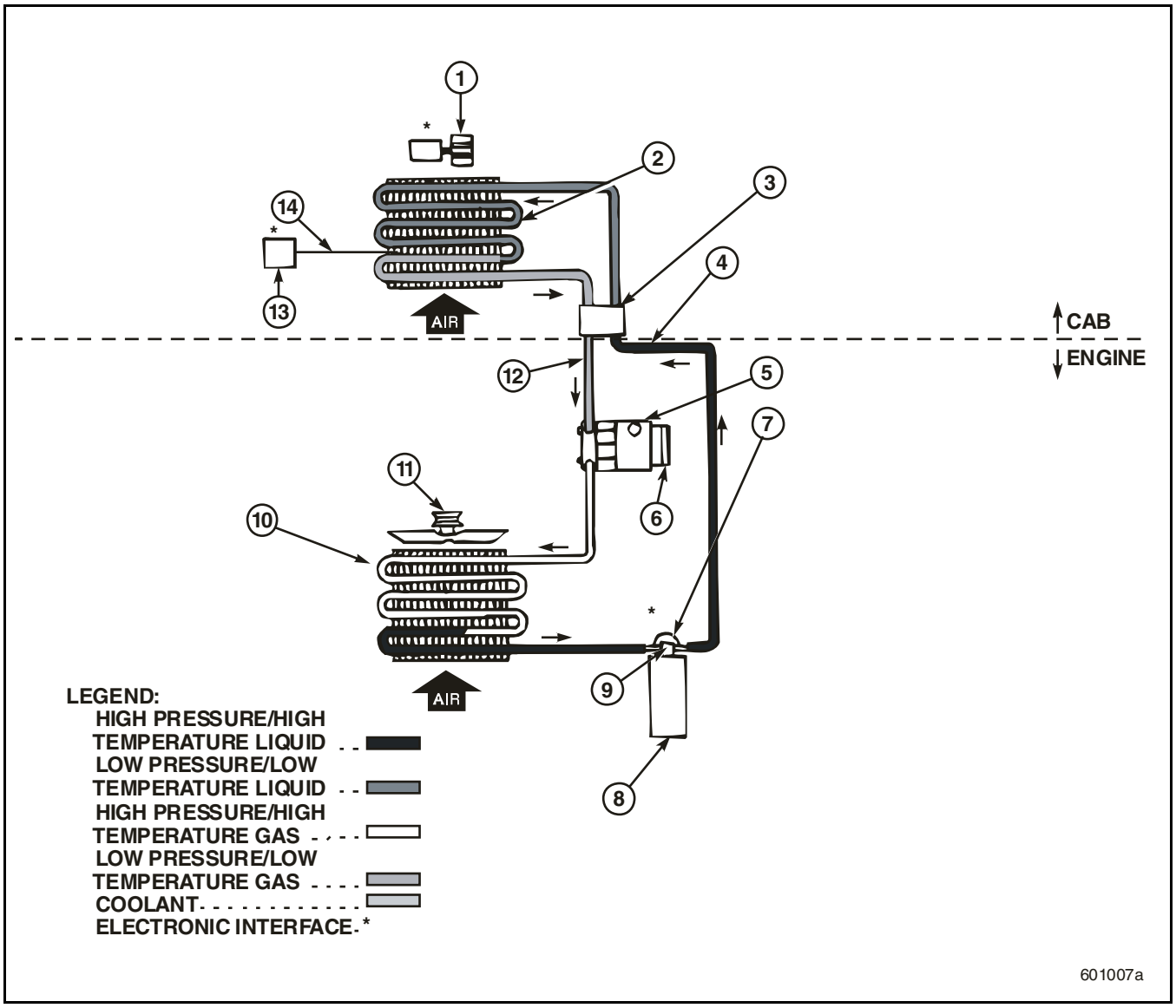

Figure 142 — CS and MS Model A/C System Circuit Schematic

1. Blower Motor	6. Compressor Clutch	11. Engine Cooling Fan
2. Evaporator	7. Pressure Switch	12. Low-Pressure (Suction) Line
3. Expansion Valve	8. Receiver/Dryer	13. Thermostat
4. High-Pressure (Liquid) Line	9. Pressure Relief Valve	14. Temperature Probe
5. Compressor	10. Condenser	

https://truckmanualshub.com/

AIR DISTRIBUTION SCHEMATICS [733]

CH and CL Air Delivery, Air Delivery Airflow and Air Control Logic — Red Dot System

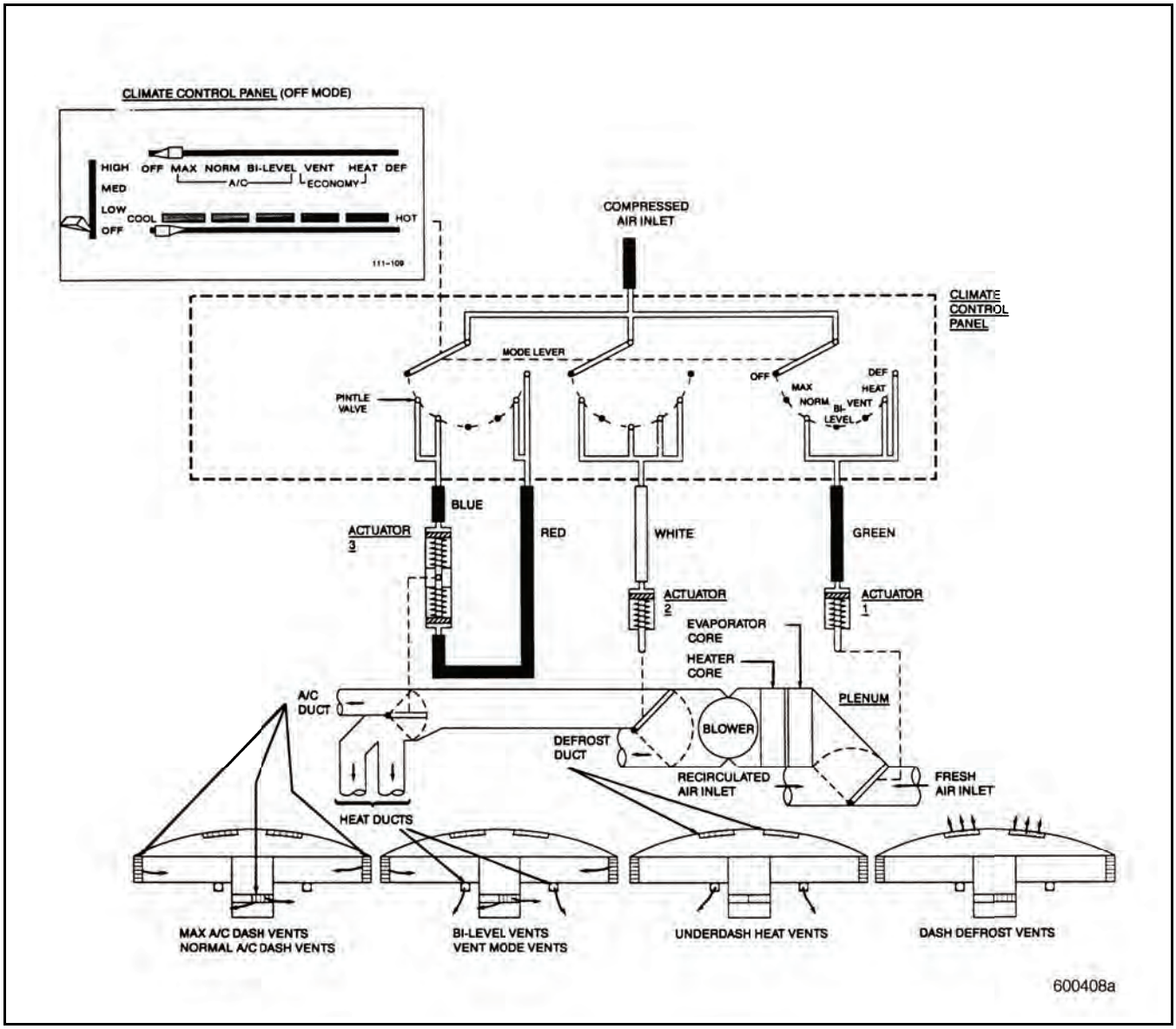

Figure 143 — CH and CL Cab with Lever Style Controls Air Delivery

NOTE

Later model CH and CL cabs are equipped with the rotary style control panel which features electronic actuation instead of air actuation. Refer to Figure 166 and Figure 167.

https://truckmanualshub.com/

	Air Flow with Blower Switch on High				
Mode	Air Intakes		Air Vents		
	Recirculate	Fresh	Floor	Panel	Windshield
OFF	High	Low	Low	Low	High
MAX A/C	High	Low	Low	High	Low
NORM A/C	Low	High	Low	Low	High
BI-LEVEL A/C	High	Low	Moderate	Moderate	Low
VENT	Low	High	Moderate	Moderate	Low
HEAT	Low	High	High	Low	Low
DEFROST	Low	High	Low	Low	High

600409a

Figure 144 — CH and CL Cab with Lever Style Controls Air Delivery Airflow

https://truckmanualshub.com/

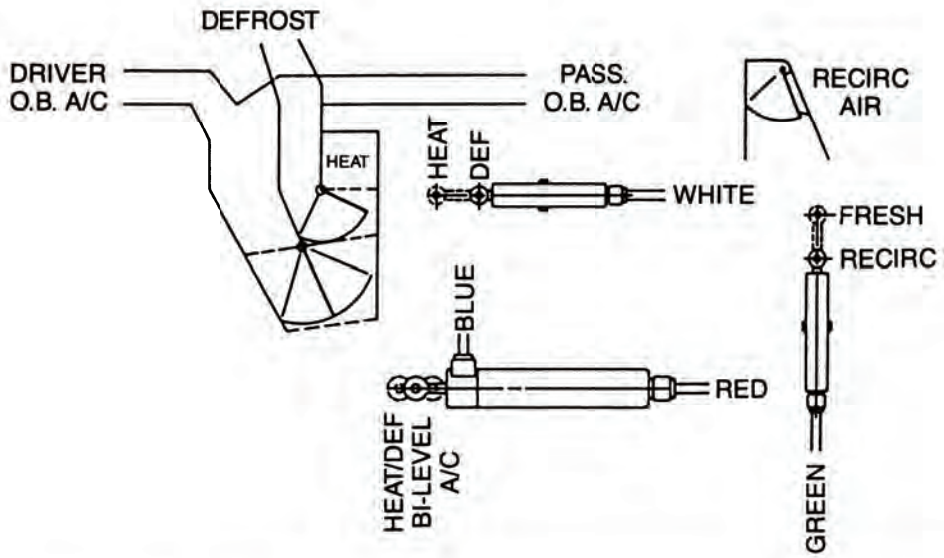

MODE	HEAT DEF (WHITE)	HEAT & DEF (RED)	A/C (BLUE)	FRESH RECIRC (GREEN)	A/C CLUTCH SWITCH
OFF	○	○	○	○	OFF
MAX A/C	●	○	●	○	ON
A/C	○	○	●	●	ON
BI-LEVEL	●	○	○	○	ON
VENT	●	○	○	●	OFF
HEAT	●	●	○	●	OFF
DEFROST	○	●	○	●	ON

○ AIR OFF ● AIR ON

600410a

Figure 145 — CH and CL Cab with Lever Style Controls Air Control Logic

https://truckmanualshub.com/

DM, DMM, RB, RD6 and RD8 Air Delivery and Air Control Logic — Red Dot System

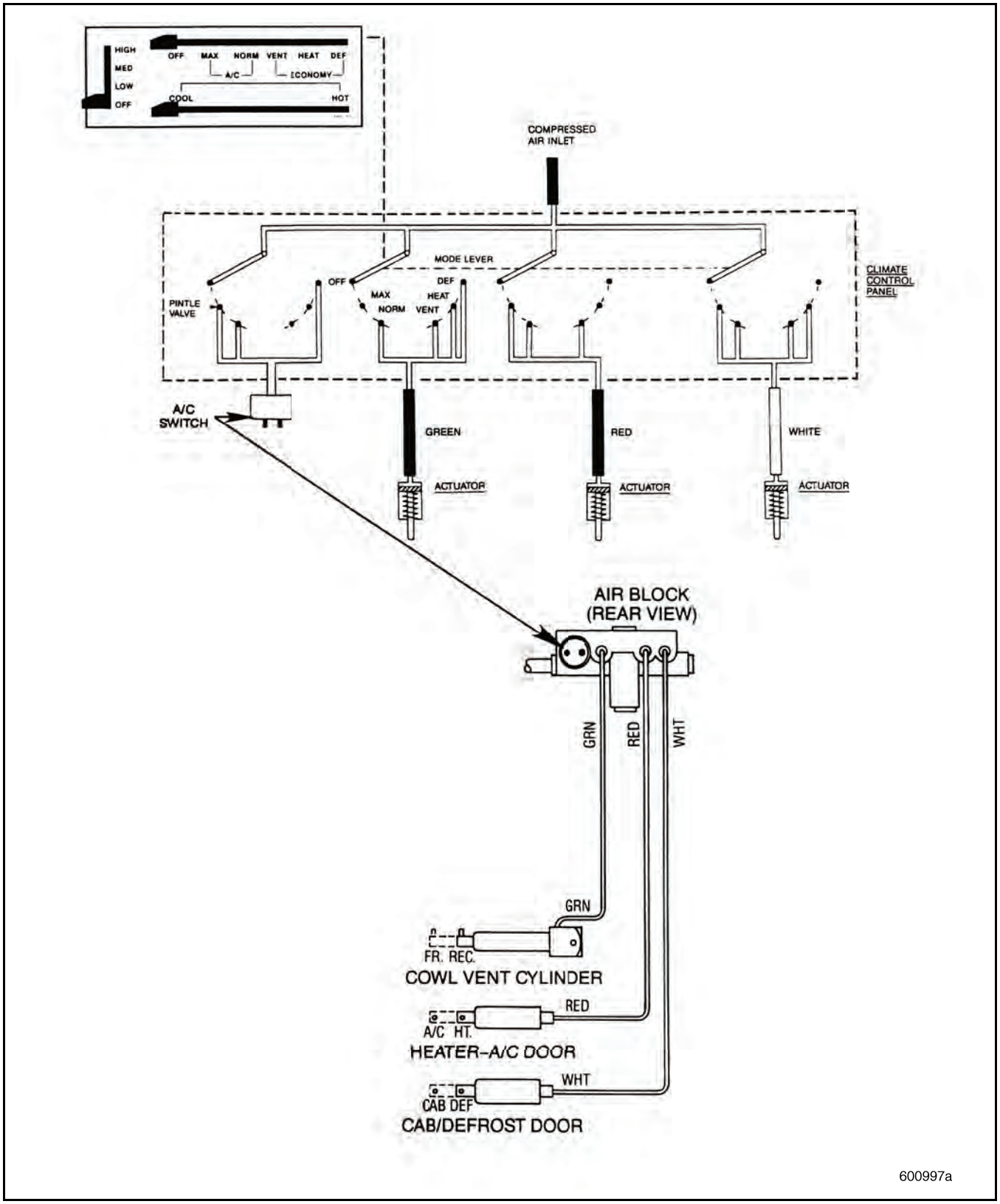

Figure 146 — DM, DMM, RB, RD6 and RD8 Air Delivery

https://truckmanualshub.com/

MODES	(WHITE) DEFROST/CAB	(RED) HEAT/A-C	(GREEN) REC./FRESH	(A/C SWITCH)
OFF	○	○	○	○
MAX A/C	●	●	○	●
NORM A/C	●	●	●	●
VENT	●	●	●	○
HEAT	●	○	●	○
DEFROST	○	○	●	●

● AIR ON

○ AIR OFF

NOTE:
Control Panel Logics
Air On = Air Actuator Device Extended
Air Off = Air Actuator Device Relaxed

600998a

Figure 147 — DM, DMM, RB, RD6 and RD8 Air Control Logic

https://truckmanualshub.com/

CH, CHN, CL, CT, CV, CX and CXN Airflow — Blend Air A/C System

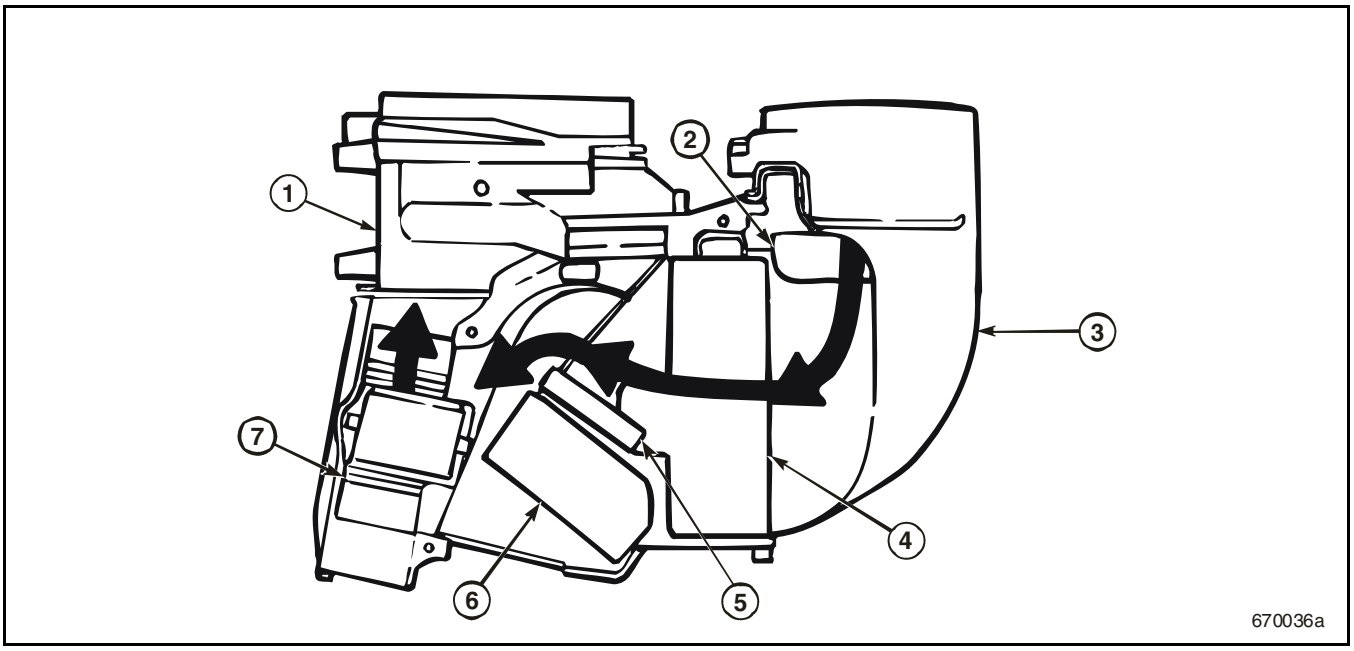

Figure 148 — Cold Air Path Airflow through the Unit, Front View Cutaway

1. Mode Box 2. Fresh/Recirc Door 3. Lower Duct	4. Evaporator Core 5. Blend Door	6. Heater Core 7. Blower Wheel

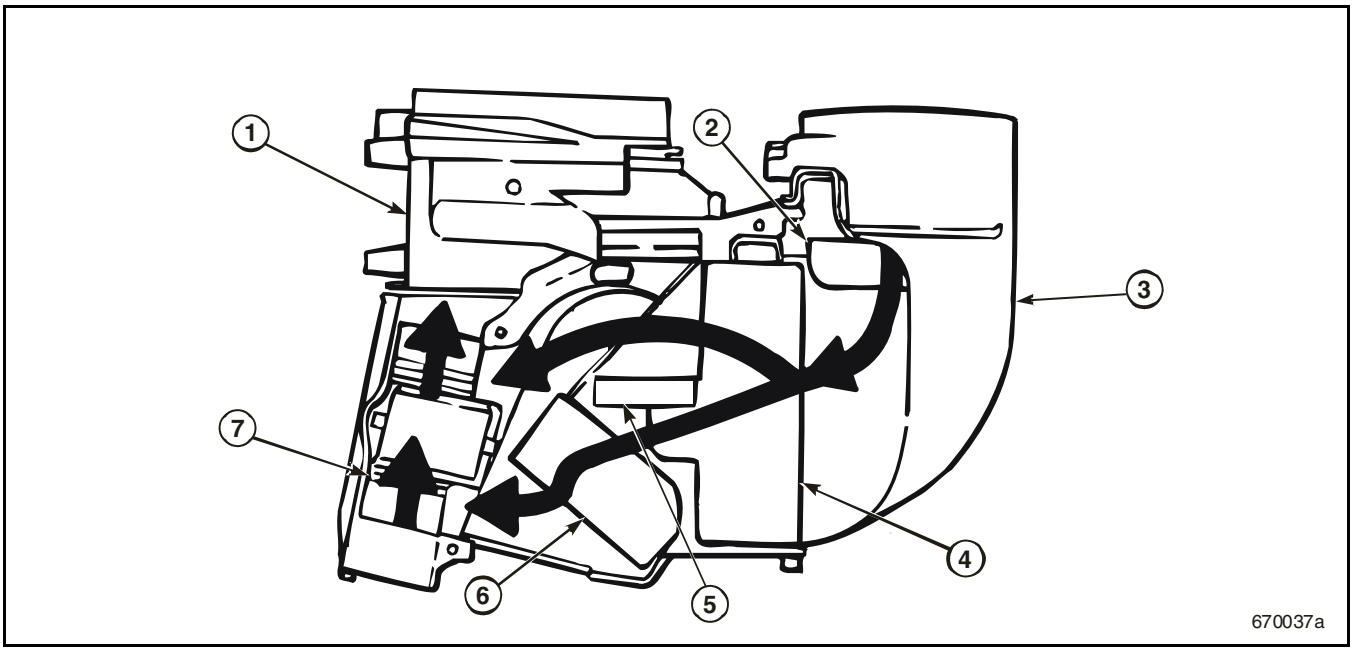

Figure 149 — Blend Air Path Airflow through the Unit, Front View Cutaway

1. Mode Box 2. Fresh/Recirc Door 3. Lower Duct	4. Evaporator Core 5. Blend Door	6. Heater Core 7. Blower Wheel

https://truckmanualshub.com/

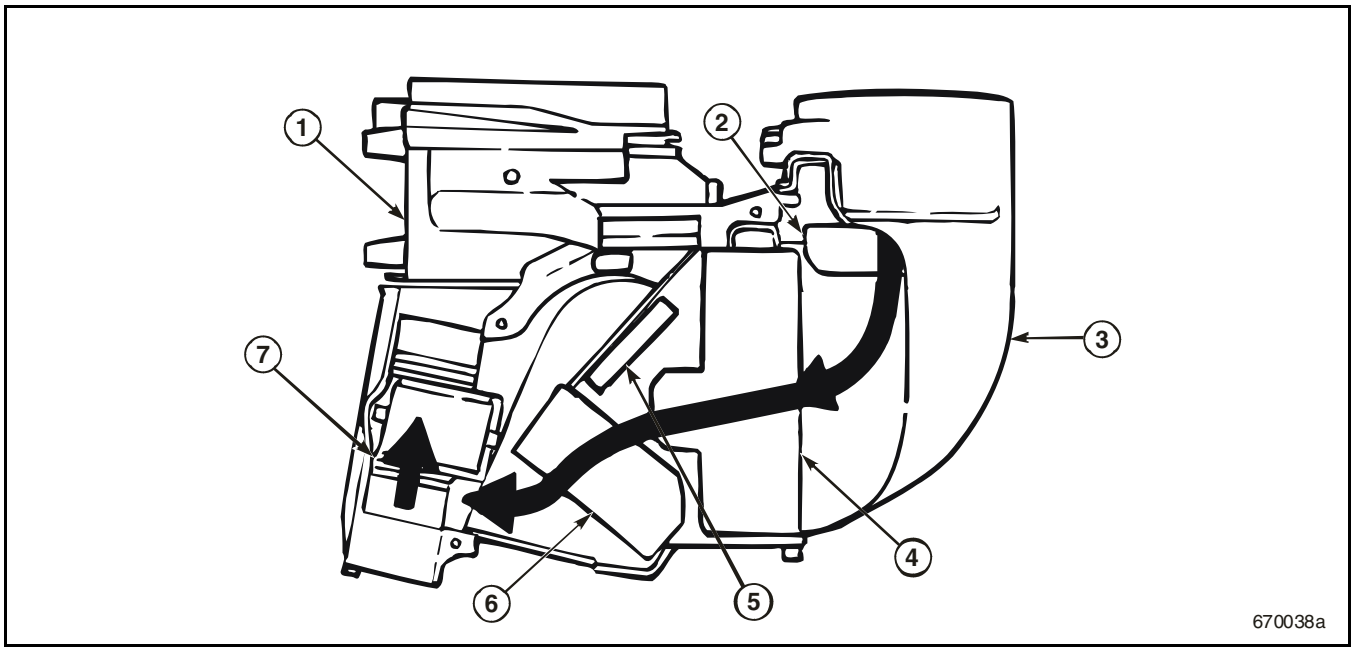

Figure 150 — Hot Air Path Airflow through the Unit, Front View Cutaway

1. Mode Box 2. Fresh/Recirc Door 3. Lower Duct	4. Evaporator Core 5. Blend Door	6. Heater Core 7. Blower Wheel

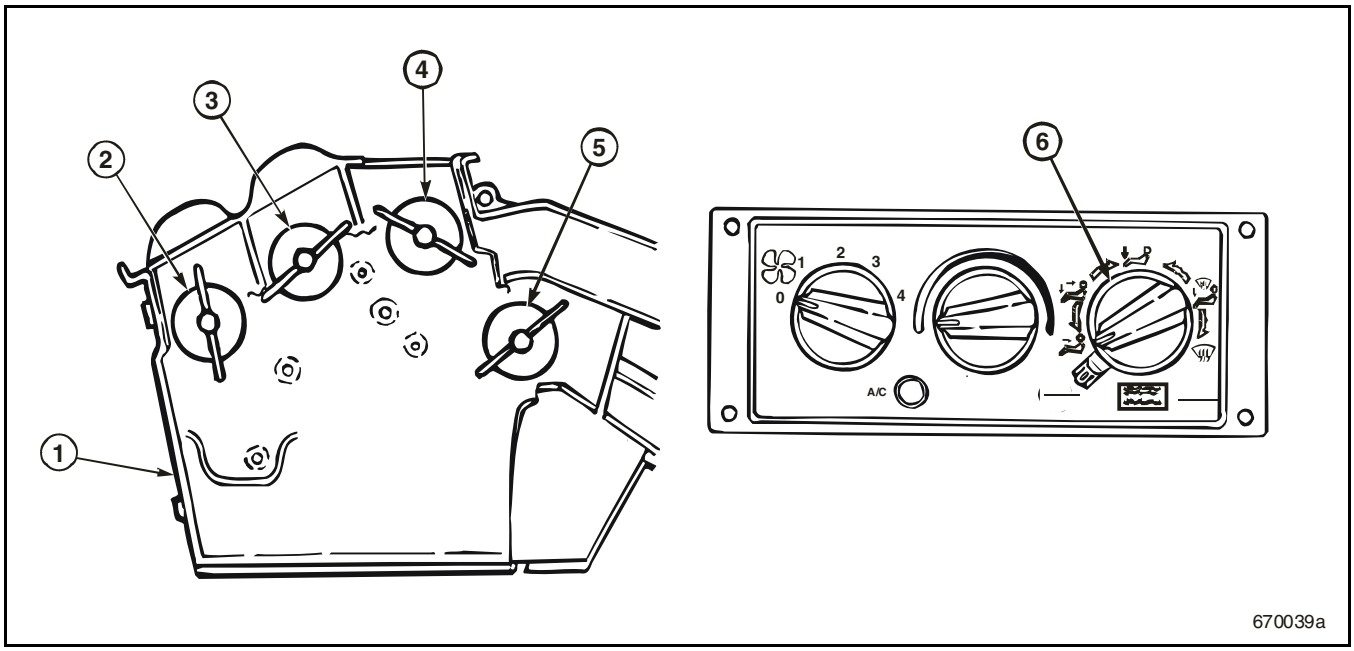

Figure 151 — Panel Airflow through Mode Distribution Box

1. Mode Distribution Box 2. Panel	3. Defrost 4. Floor	5. Panel 6. Control Panel Position

https://truckmanualshub.com/

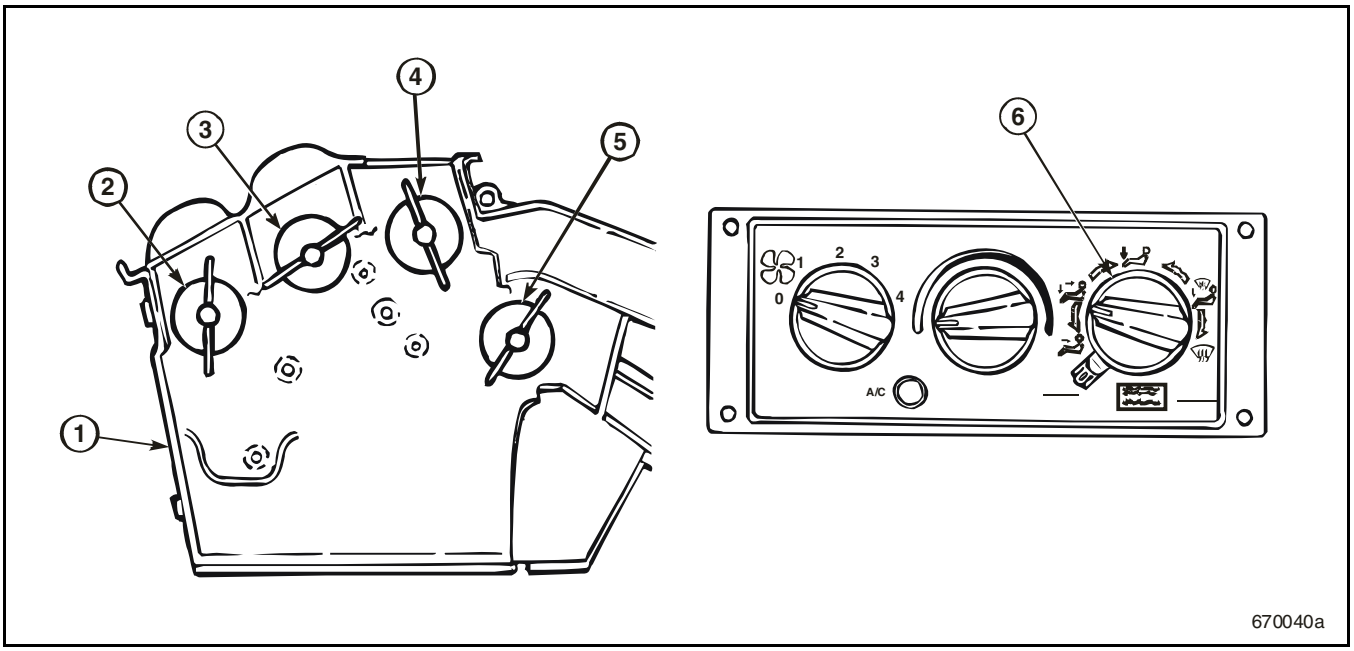

Figure 152 — Panel/Floor Airflow through Mode Distribution Box

1. Mode Distribution Box 2. Panel	3. Defrost 4. Floor	5. Panel 6. Control Panel Position

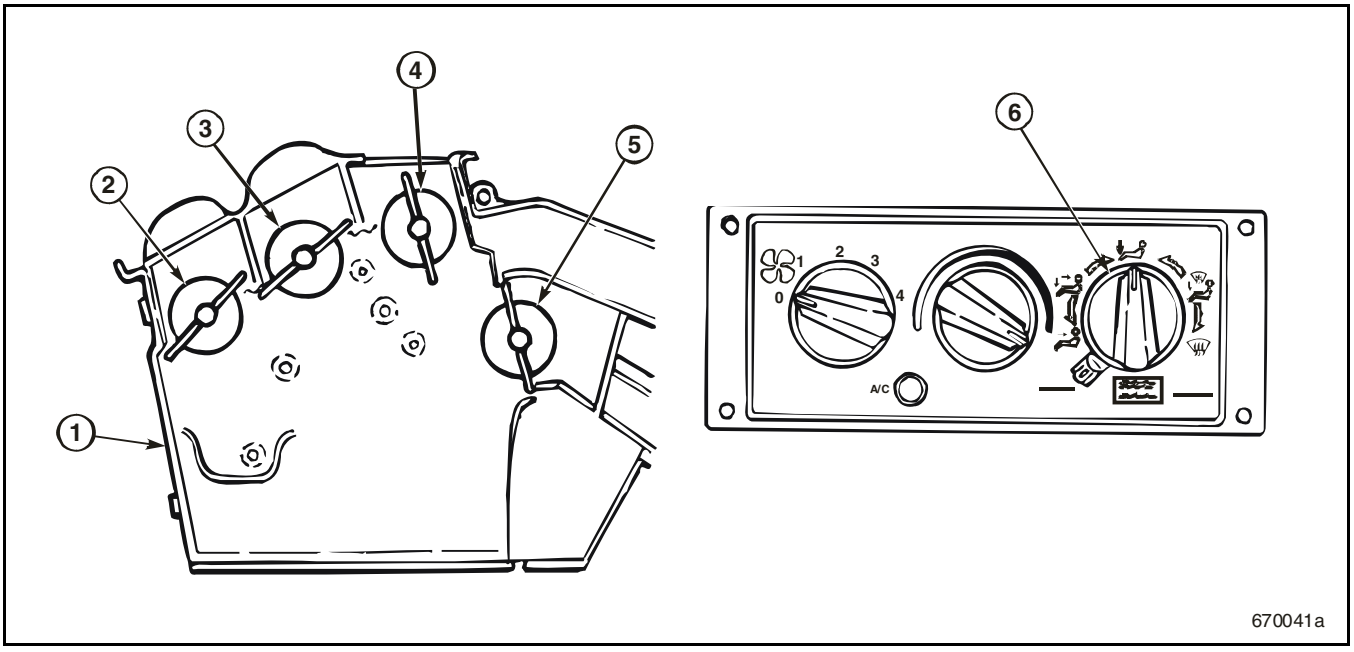

Figure 153 — Floor Airflow through Mode Distribution Box

1. Mode Distribution Box 2. Panel	3. Defrost 4. Floor	5. Panel 6. Control Panel Position

https://truckmanualshub.com/

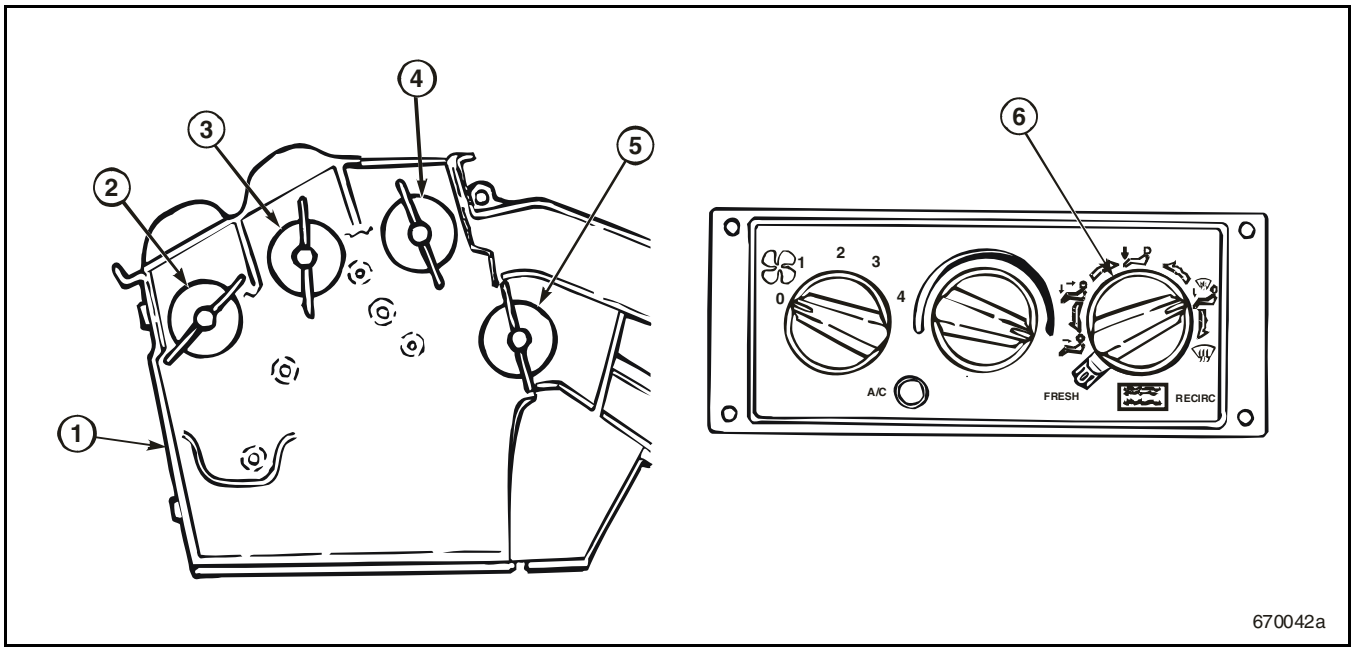

Figure 154 — Floor/Defrost Airflow through Mode Distribution Box

1. Mode Distribution Box 2. Panel	3. Defrost 4. Floor	5. Panel 6. Control Panel Position

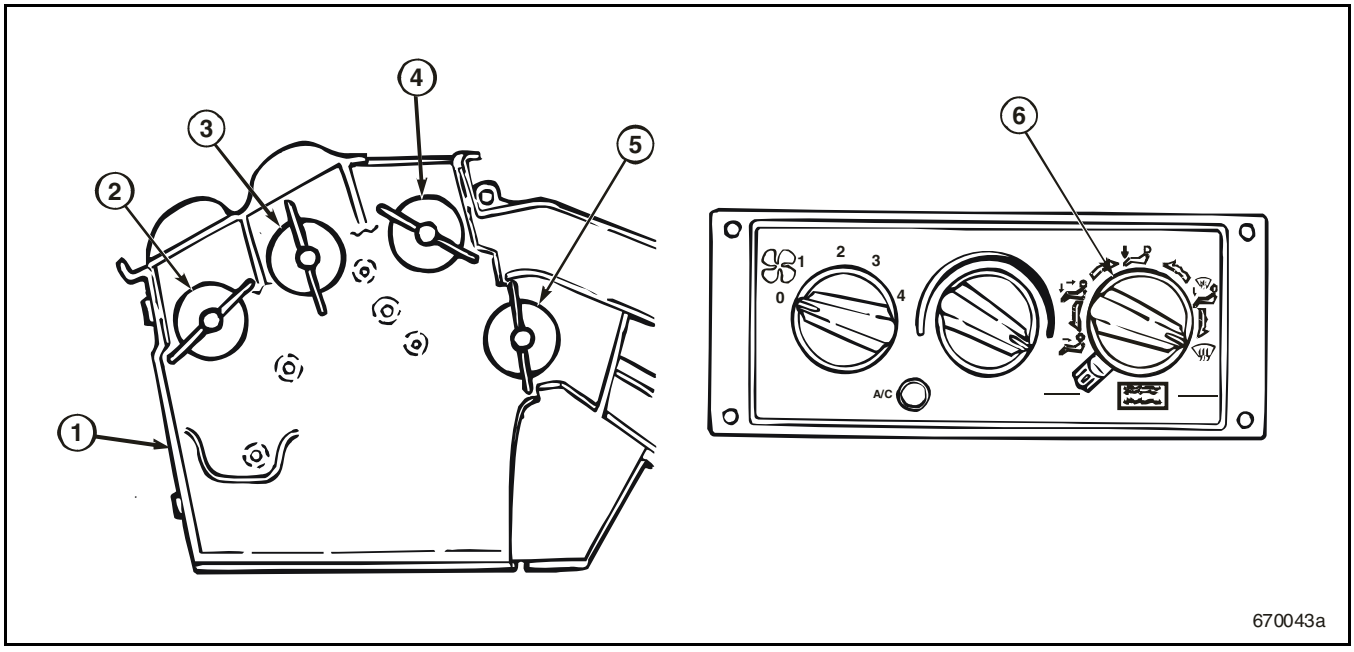

Figure 155 — Defrost Airflow through Mode Distribution Box

1. Mode Distribution Box 2. Panel	3. Defrost 4. Floor	5. Panel 6. Control Panel Position

https://truckmanualshub.com/

CTP, CXP, CHU, CXU and GU Airflow — Behr A/C System

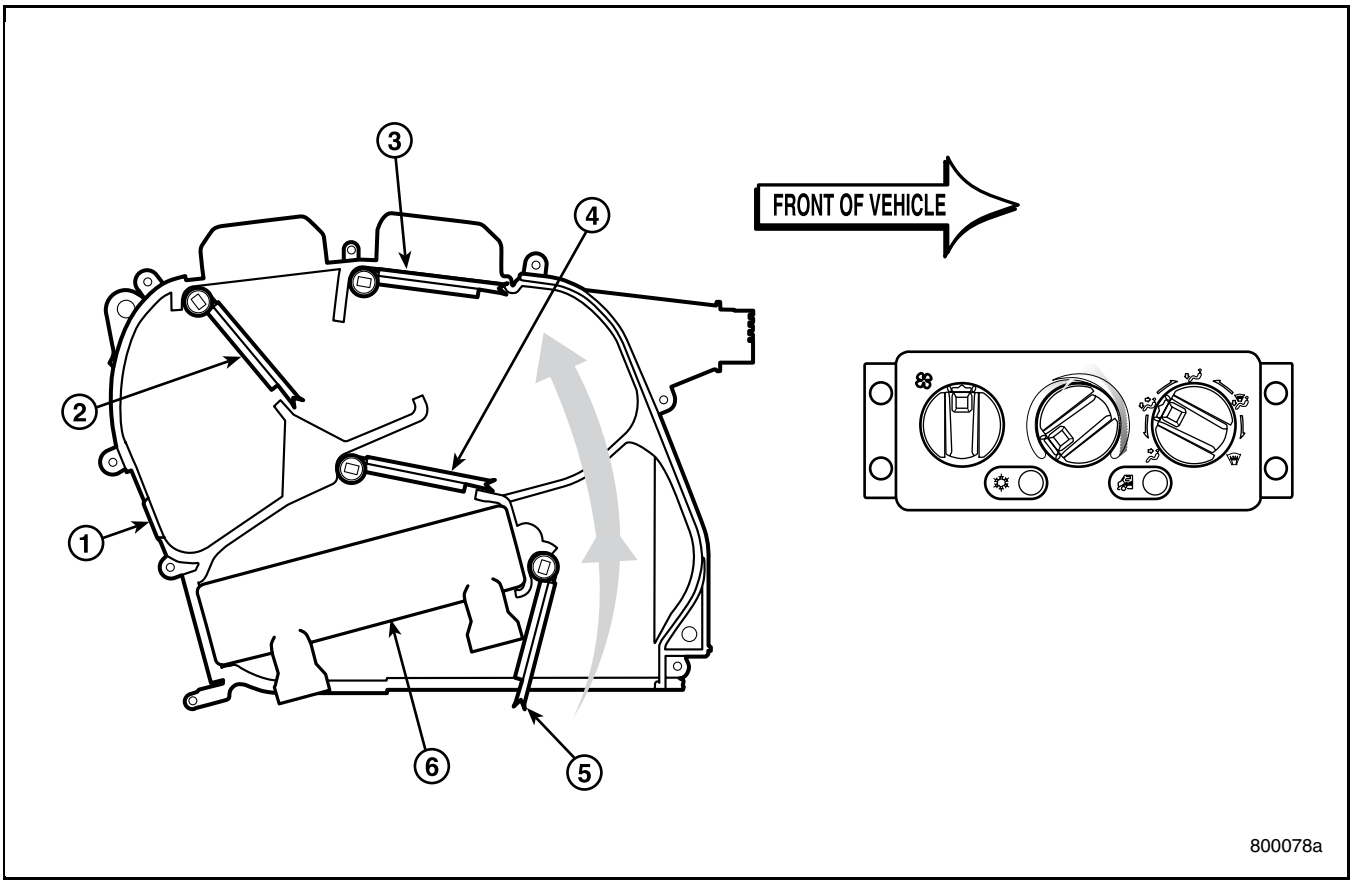

Figure 156 — Full Cold Air Path Airflow Around the Heater Core, Passenger Side View

1. Foot Opening in Distribution Housing 2. Air Door for Panel Outlet 3. Air Door for Defrost Outlet	4. Air Door for Heat Blending, Secondary 5. Air Door for Heat Blending, Primary 6. Heater Core

https://truckmanualshub.com/

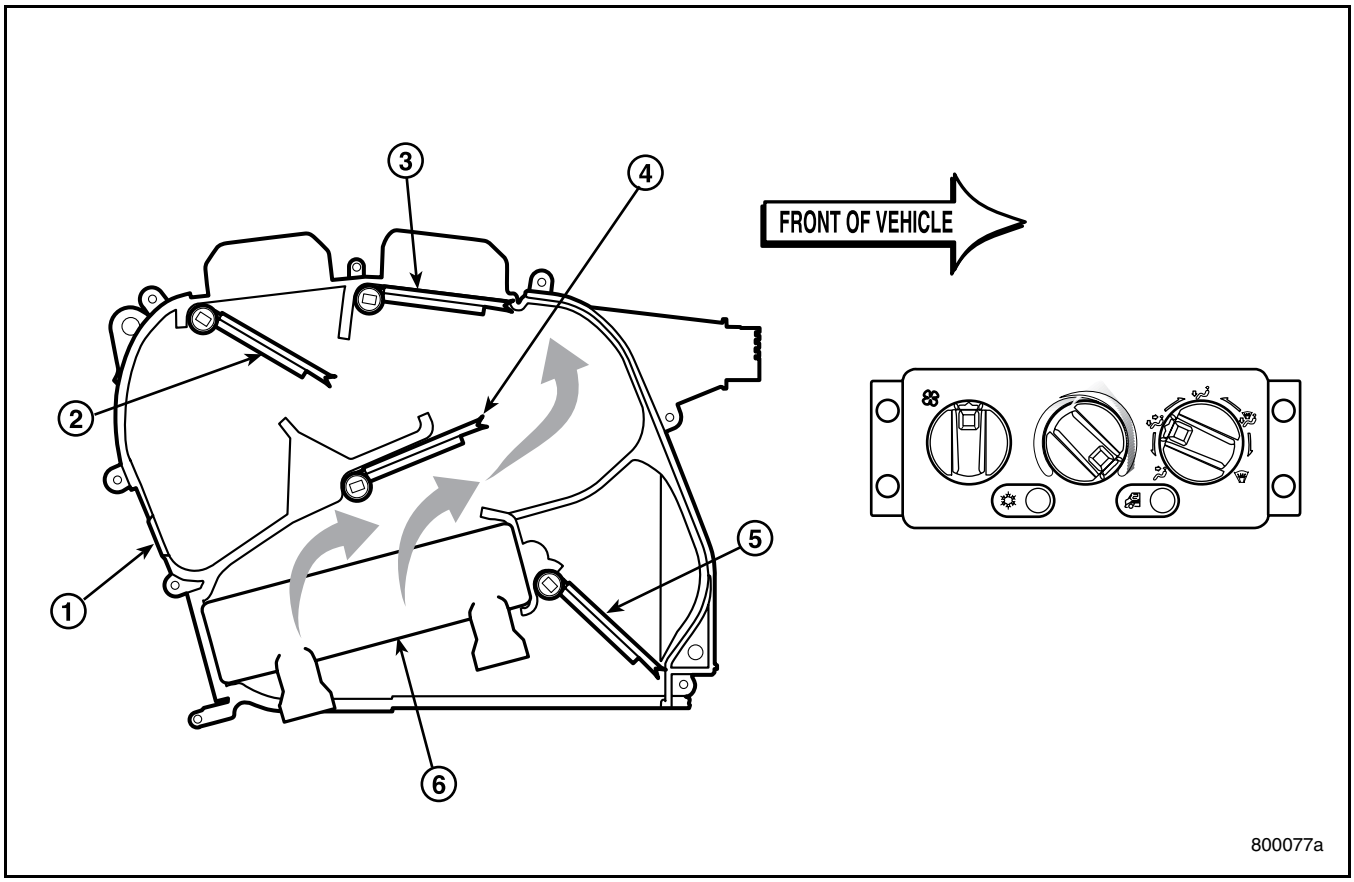

Figure 157 — Full Hot Air Path Airflow Through the Heater Core, Passenger Side View

1. Foot Opening in Distribution Housing	4. Air Door for Heat Blending, Secondary
2. Air Door for Panel Outlet	5. Air Door for Heat Blending, Primary
3. Air Door for Defrost Outlet	6. Heater Core

https://truckmanualshub.com/

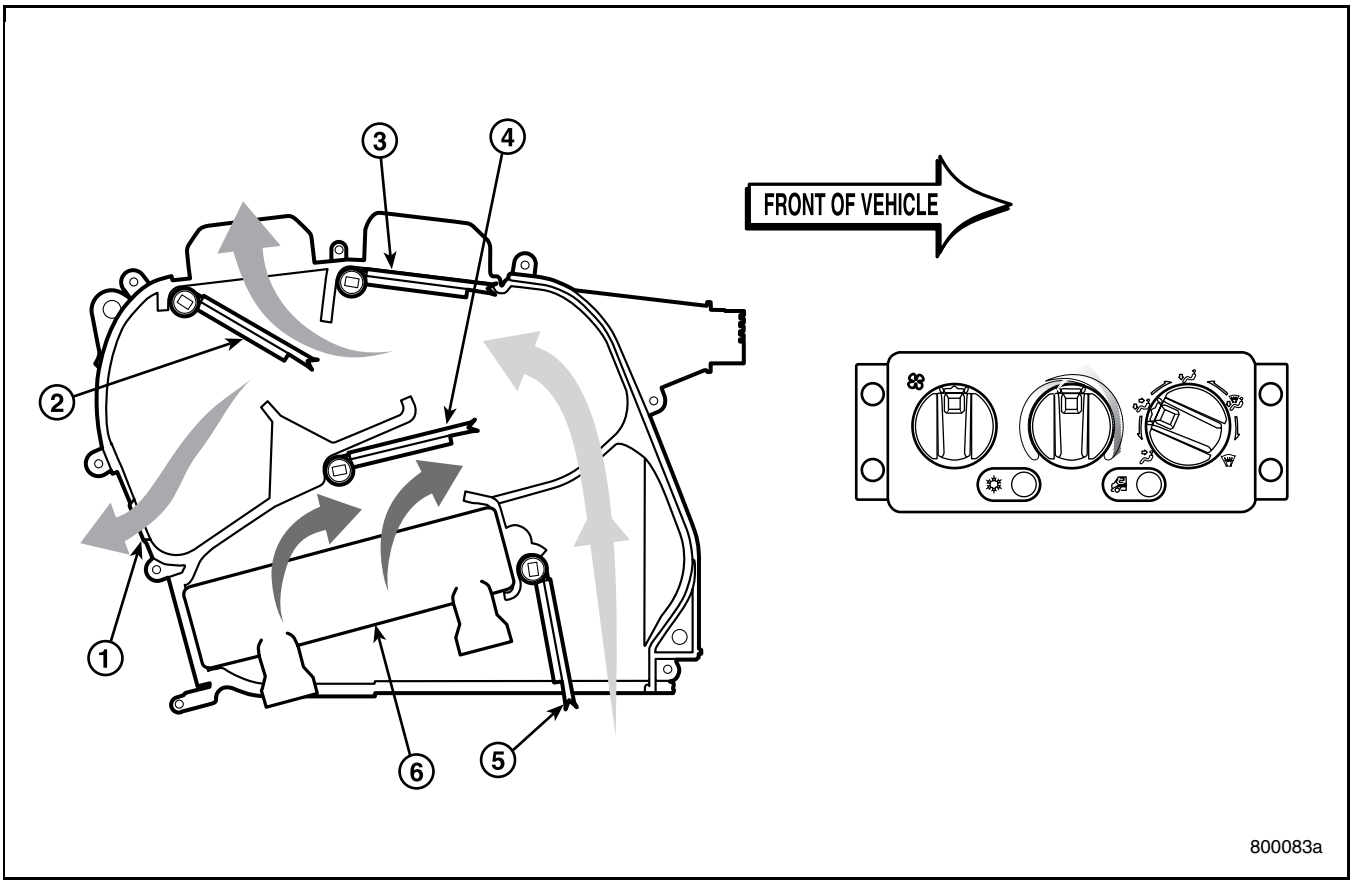

Figure 158 — Bi-level Air Path Airflow Through the Unit, Passenger Side View

1. Foot Opening in Distribution Housing 2. Air Door for Panel Outlet 3. Air Door for Defrost Outlet	4. Air Door for Heat Blending, Secondary 5. Air Door for Heat Blending, Primary 6. Heater Core

https://truckmanualshub.com/

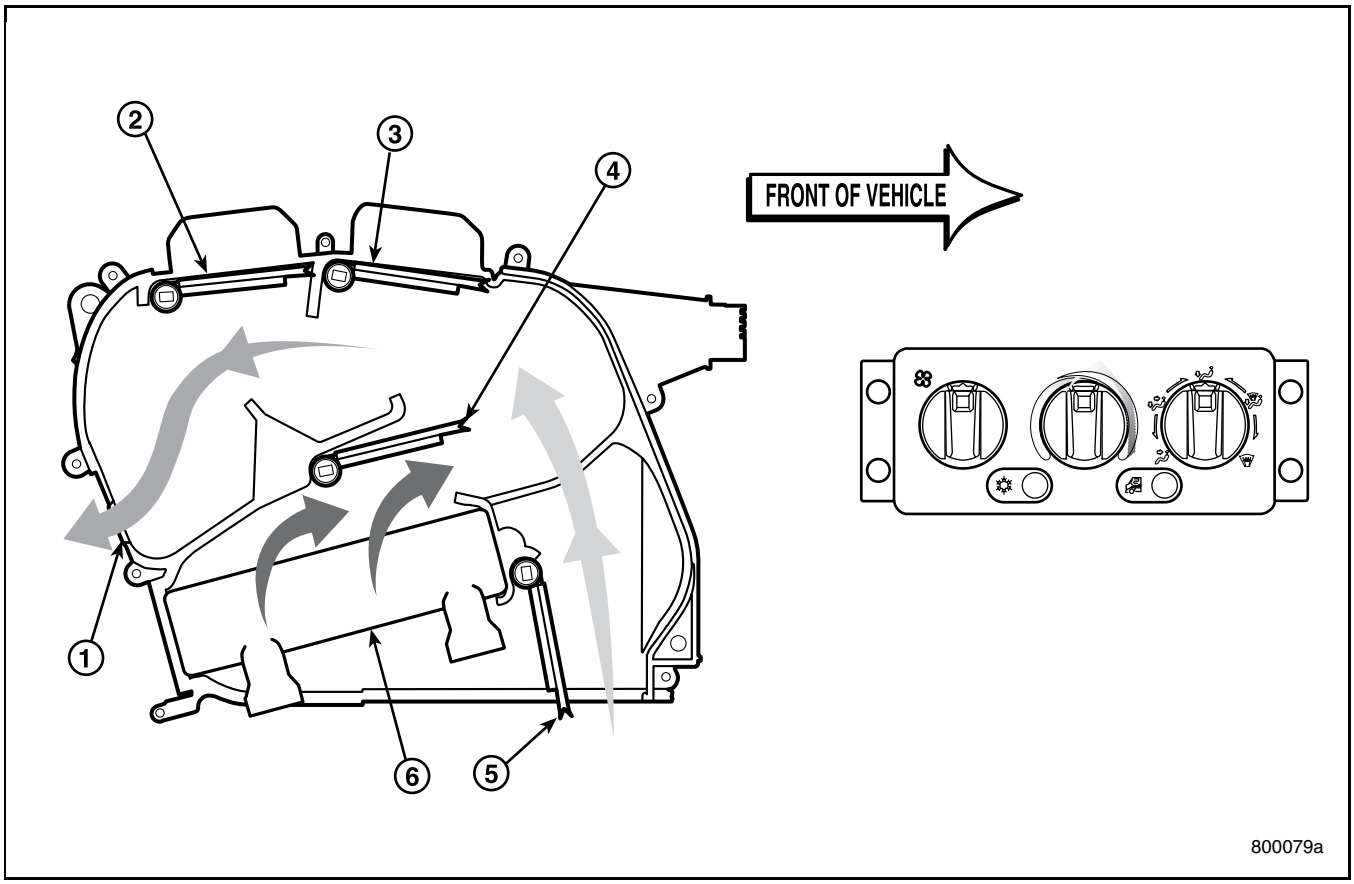

Figure 159 — Foot Air Path Airflow Through the Unit, Passenger Side View

1. Foot Opening in Distribution Housing	4. Air Door for Heat Blending, Secondary
2. Air Door for Panel Outlet	5. Air Door for Heat Blending, Primary
3. Air Door for Defrost Outlet	6. Heater Core

https://truckmanualshub.com/

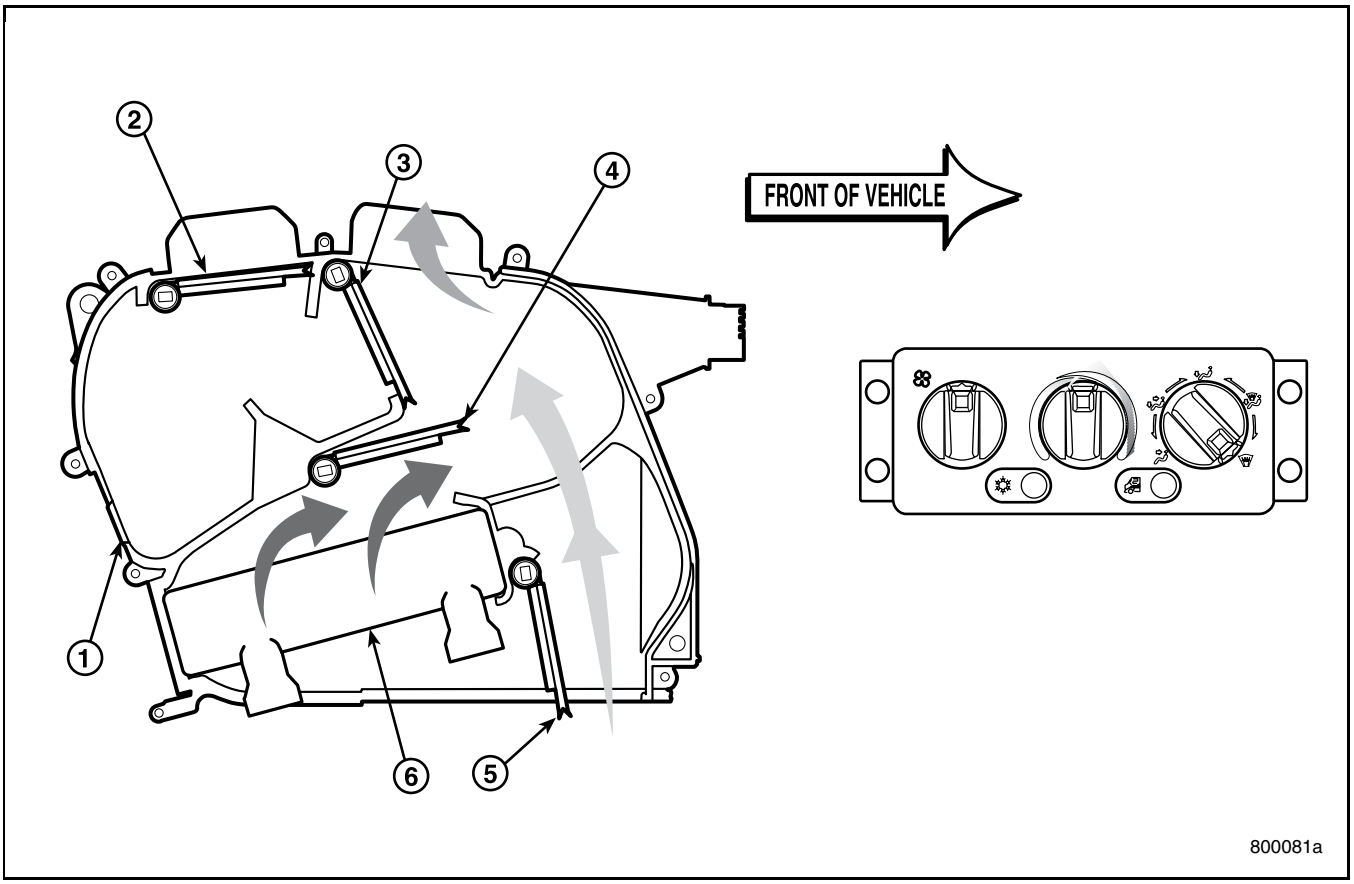

Figure 160 — Defrost Air Path Airflow Through the Unit, Passenger Side View

1. Foot Opening in Distribution Housing 2. Air Door for Panel Outlet 3. Air Door for Defrost Outlet	4. Air Door for Heat Blending, Secondary 5. Air Door for Heat Blending, Primary 6. Heater Core

https://truckmanualshub.com/

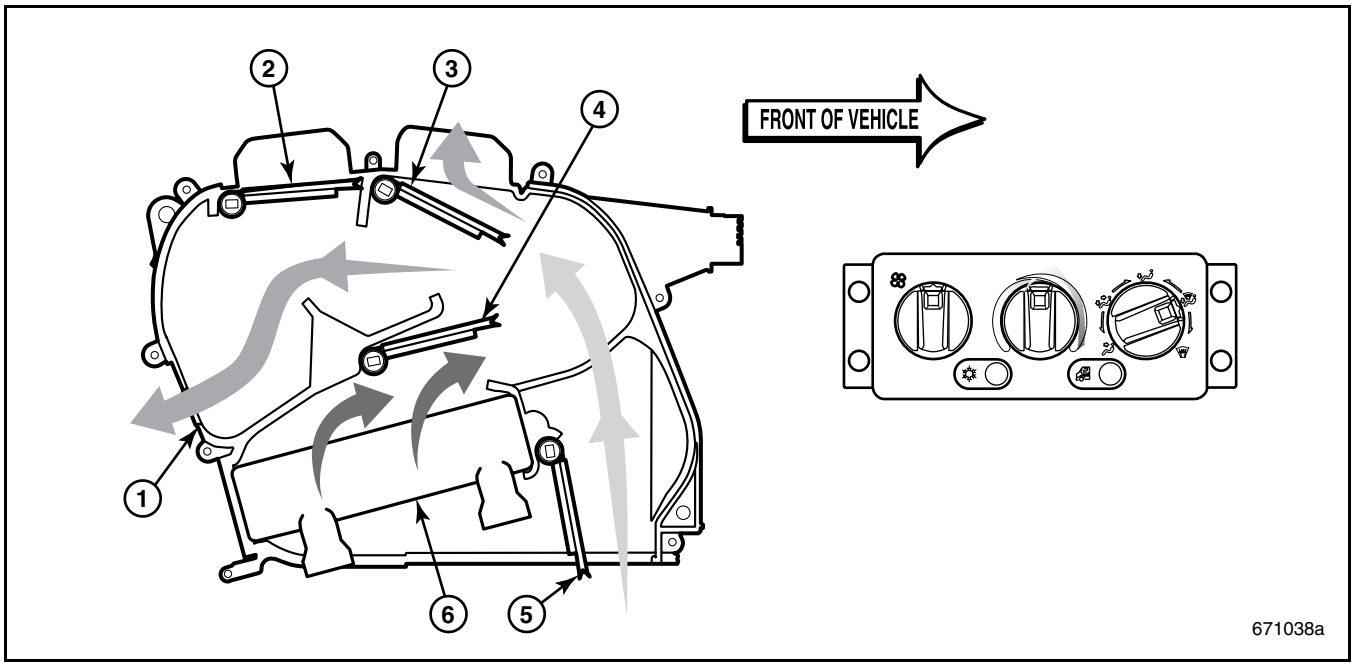

Figure 161 — Mix Air Path Airflow Through the Unit, Passenger Side View

1. Foot Opening in Distribution Housing	4. Air Door for Heat Blending, Secondary
2. Air Door for Panel Outlet	5. Air Door for Heat Blending, Primary
3. Air Door for Defrost Outlet	6. Heater Core

https://truckmanualshub.com/

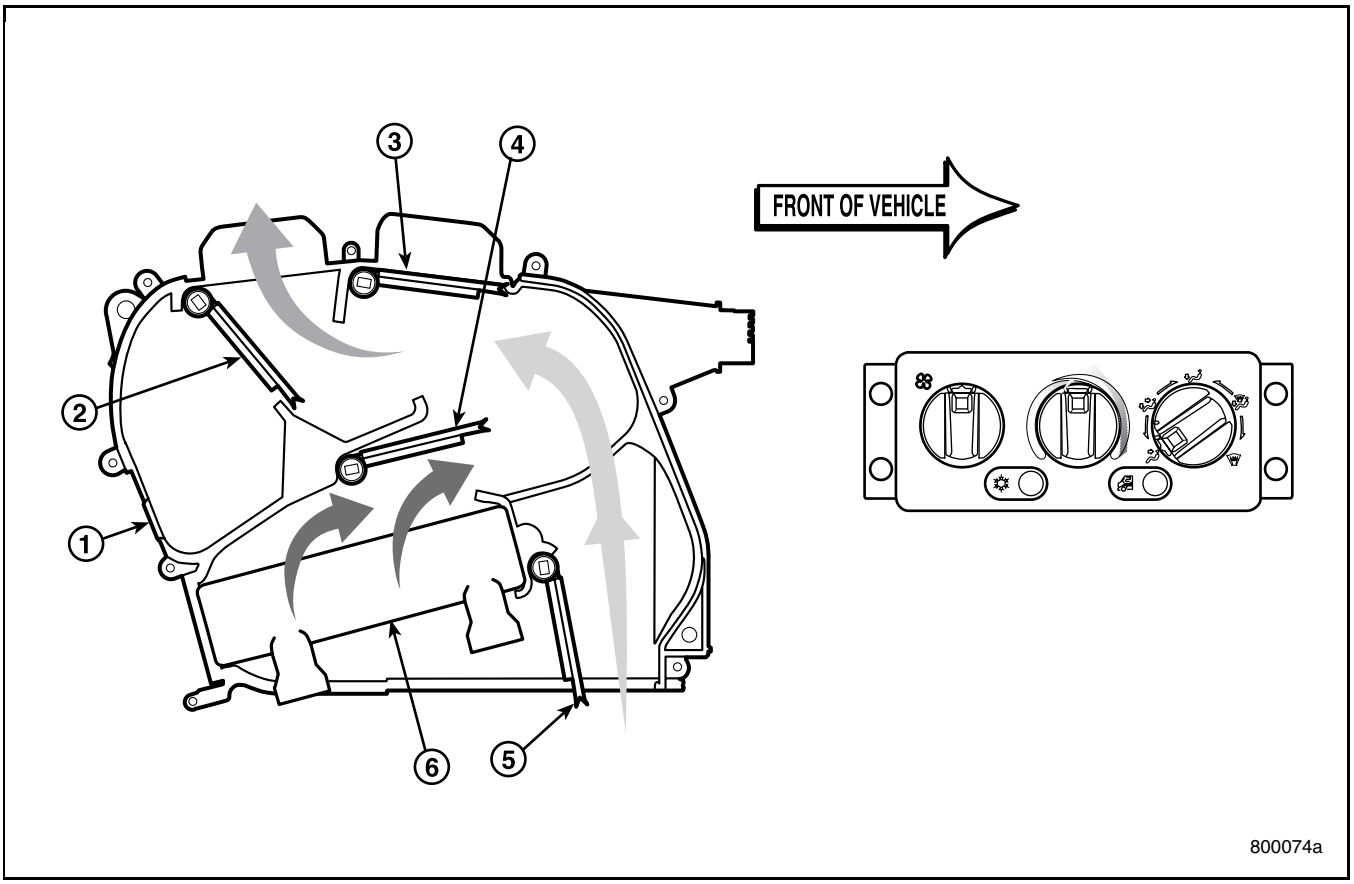

Figure 162 — Panel Air Path Airflow Through the Unit, Passenger Side View

1. Foot Opening in Distribution Housing 2. Air Door for Panel Outlet 3. Air Door for Defrost Outlet	4. Air Door for Heat Blending, Secondary 5. Air Door for Heat Blending, Primary 6. Heater Core

https://truckmanualshub.com/

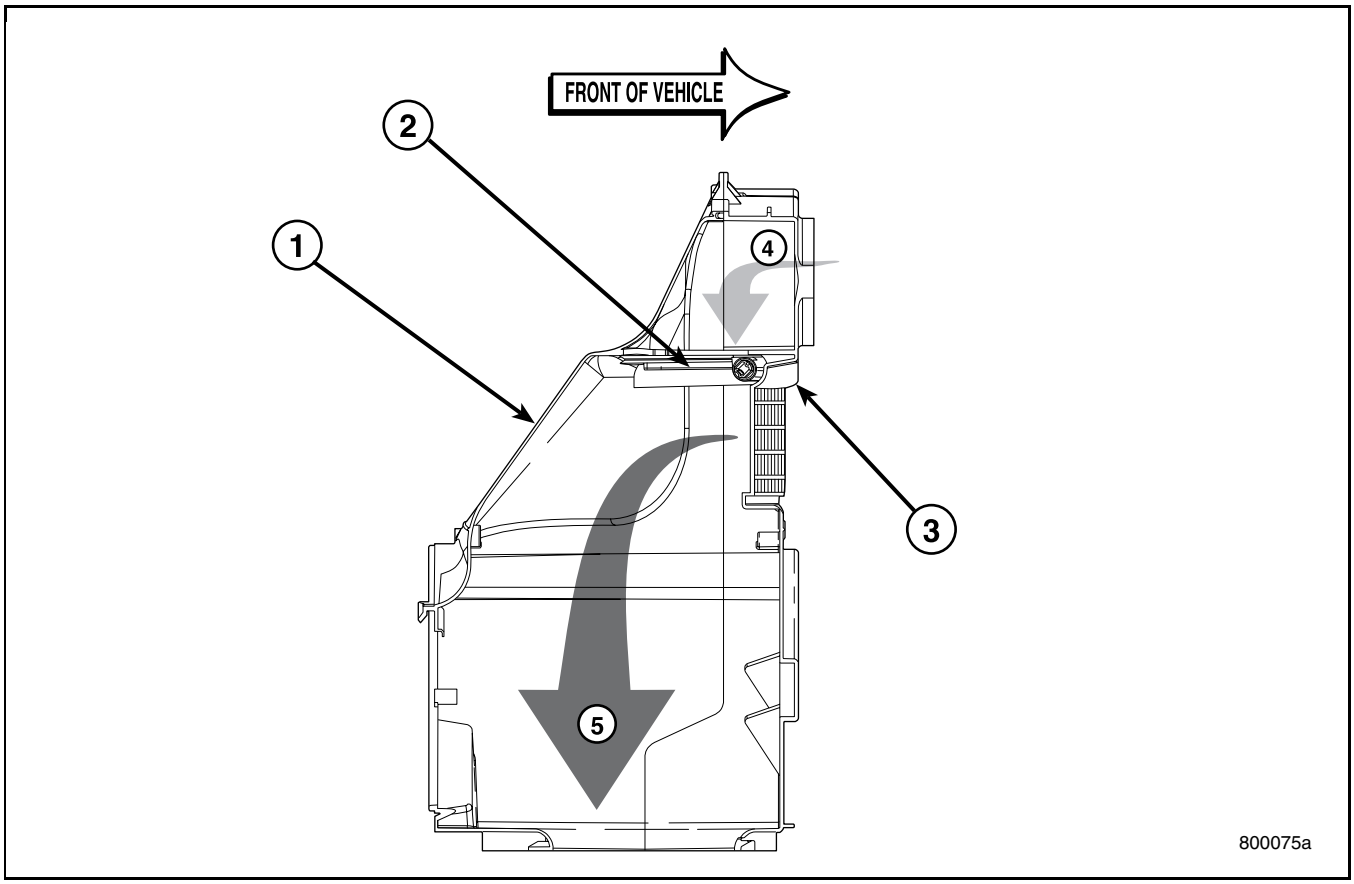

Figure 163 — Supply Air Path Airflow Through the Inlet, Passenger Side View

1. Duct, Inlet, Rear 2. Door, Air (in recirculation position) 3. Duct, Inlet, Front	4. Outside Airflow Path 5. Recirculation Airflow Path

https://truckmanualshub.com/

ELECTRICAL SYSTEM DIAGRAMS [637]

CH, CL and CX A/C System Electrical Schematics — Red Dot System

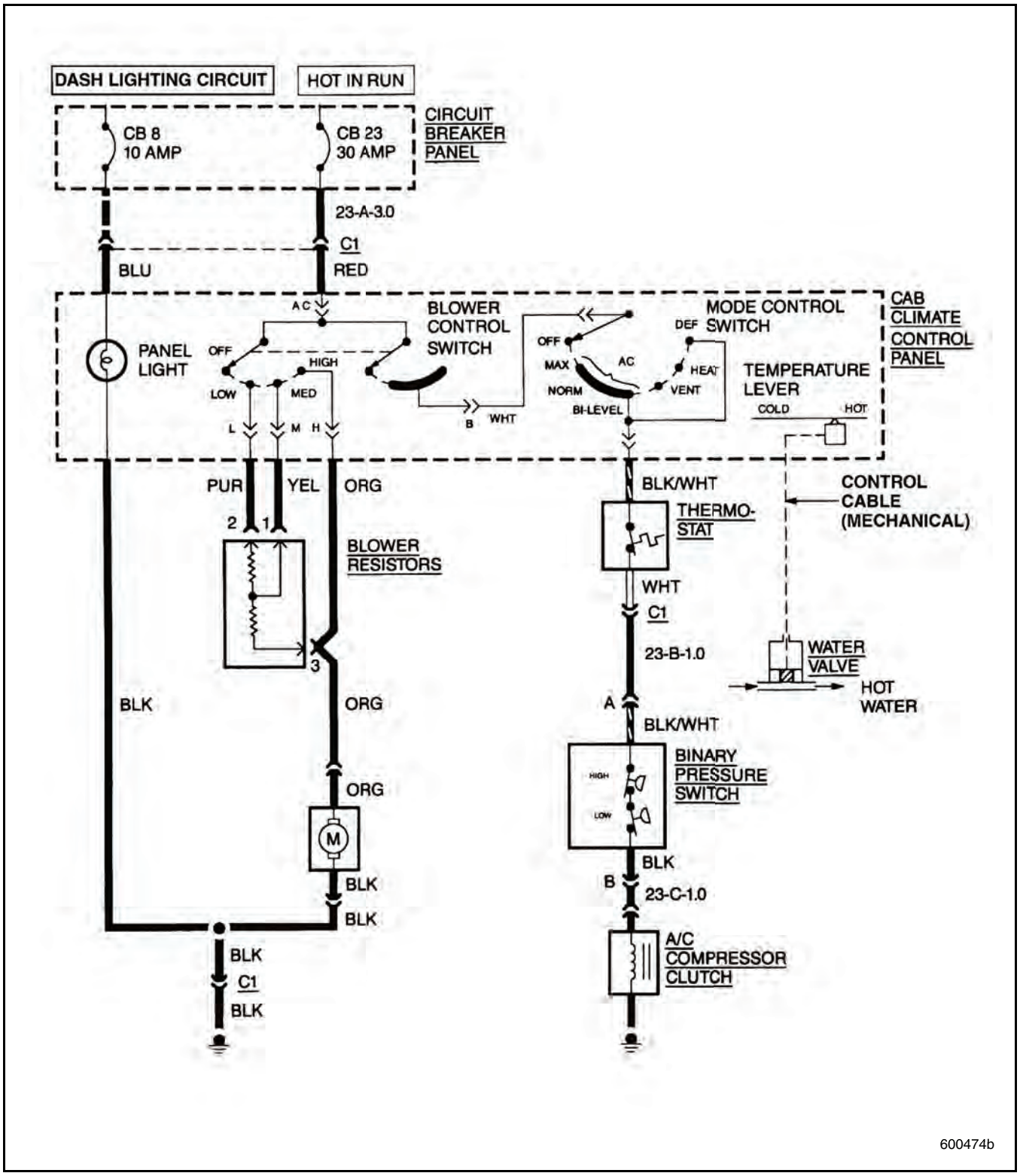

Figure 164 — CH and CL Cab A/C System with Lever Style Controls Electrical Schematic

https://truckmanualshub.com/

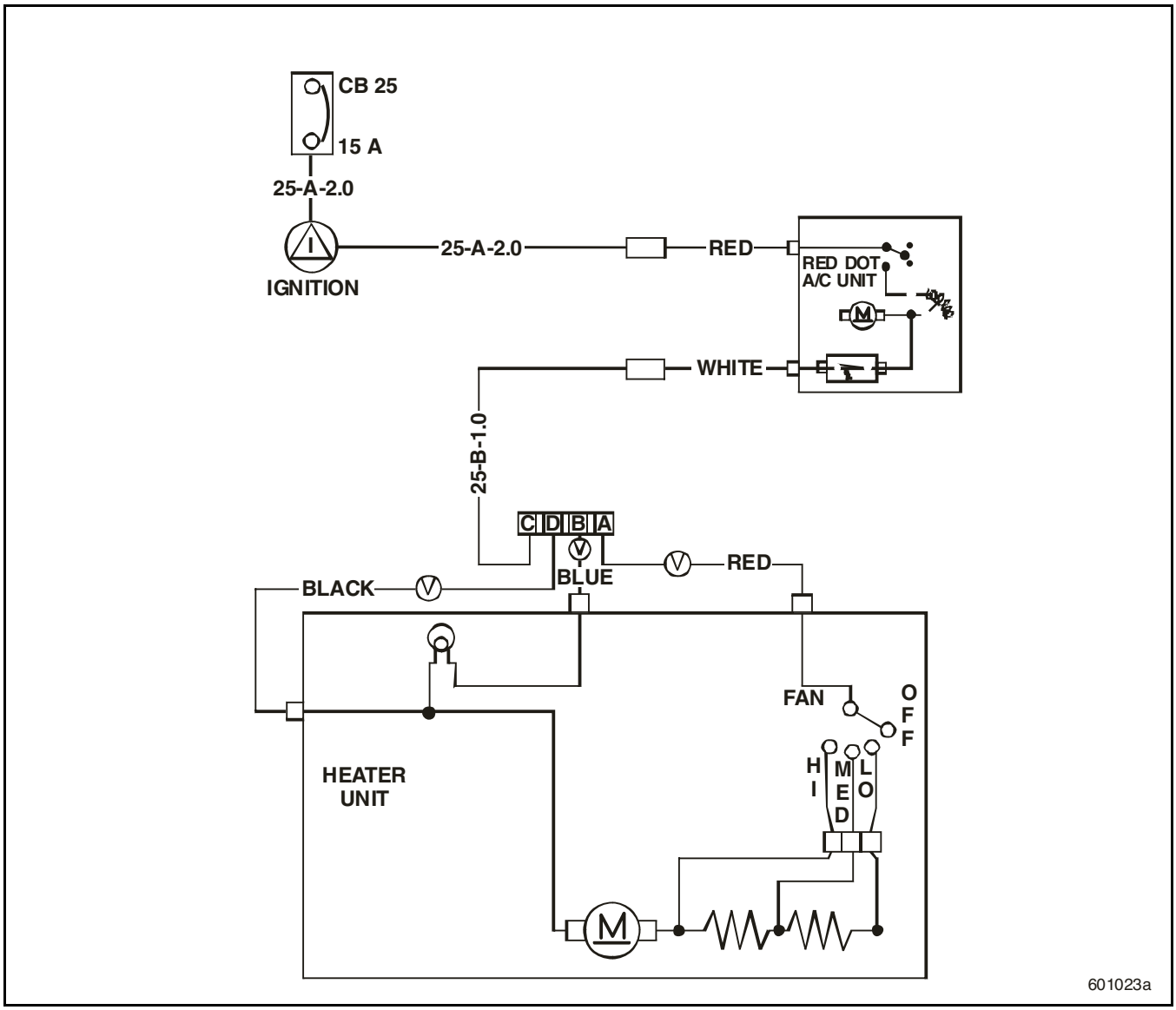

Figure 165 — CH and CL Cab A/C System with Lever Style Controls Electrical Schematic

https://truckmanualshub.com/

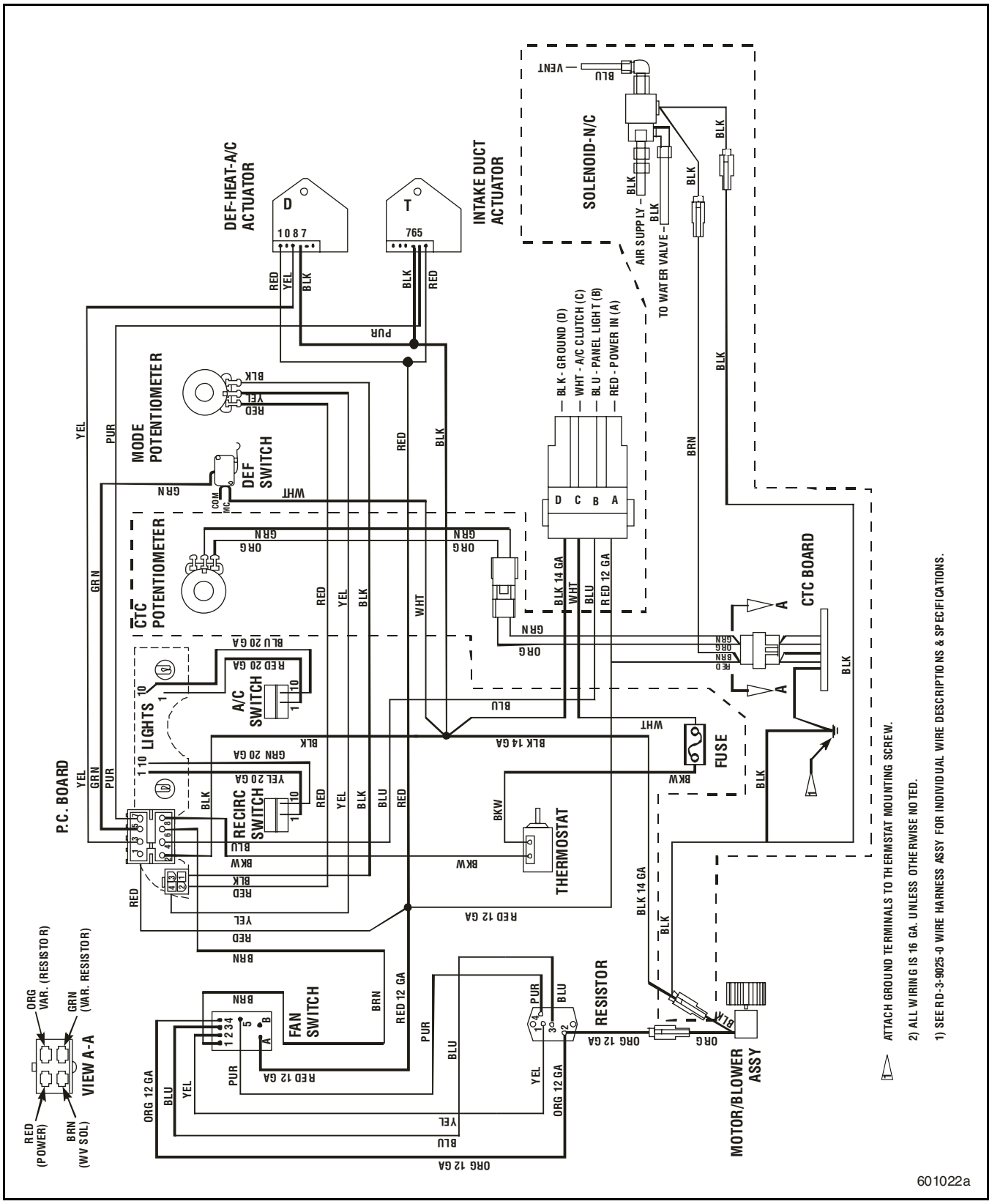

Figure 166 — CX, CH and CL Cab A/C System with Rotary Style Controls Electrical Schematic

https://truckmanualshub.com/

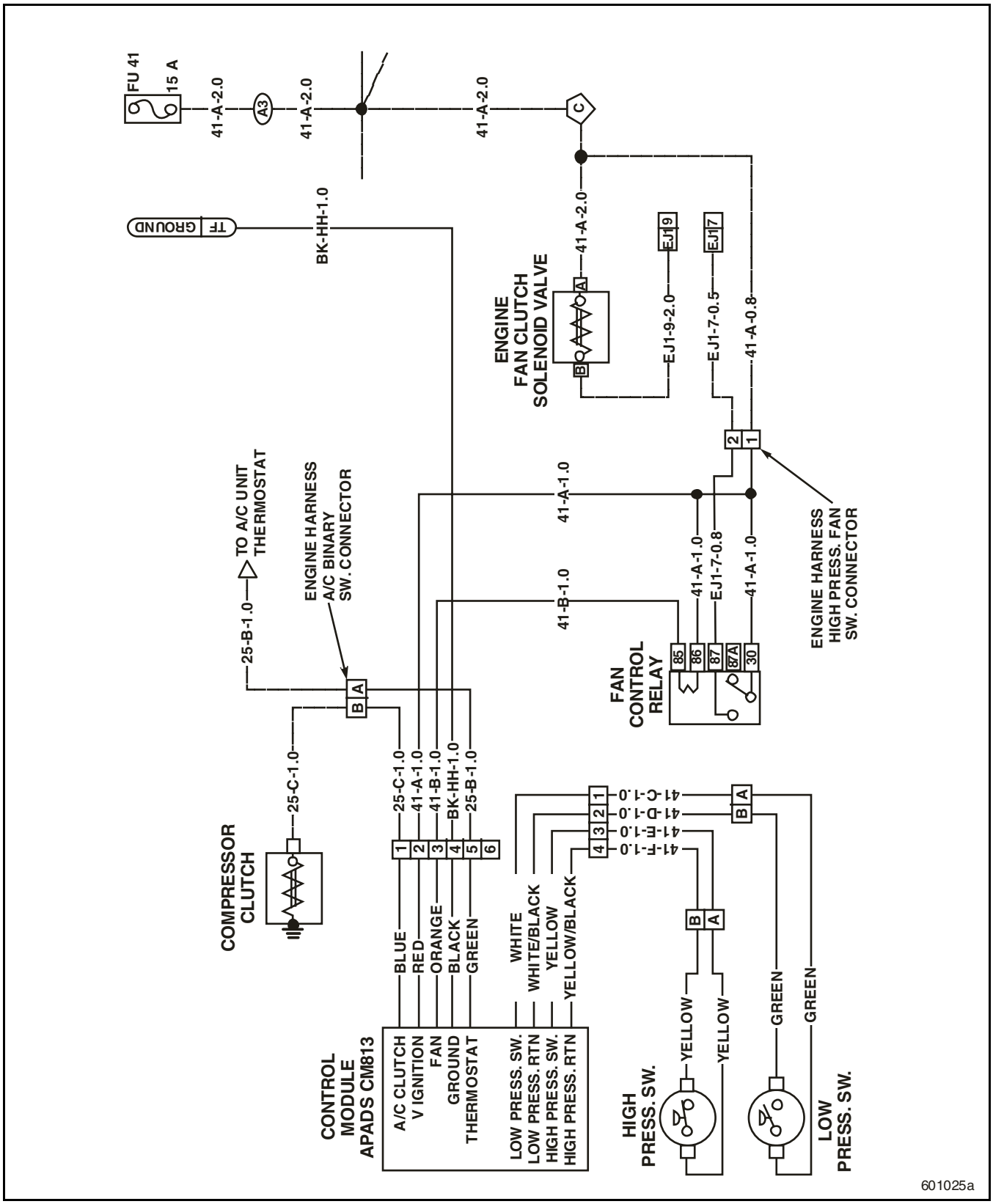

Figure 167 — CX, CH and CL Cab A/C System with Rotary Style Controls Electrical Schematic (with APAds®)

https://truckmanualshub.com/

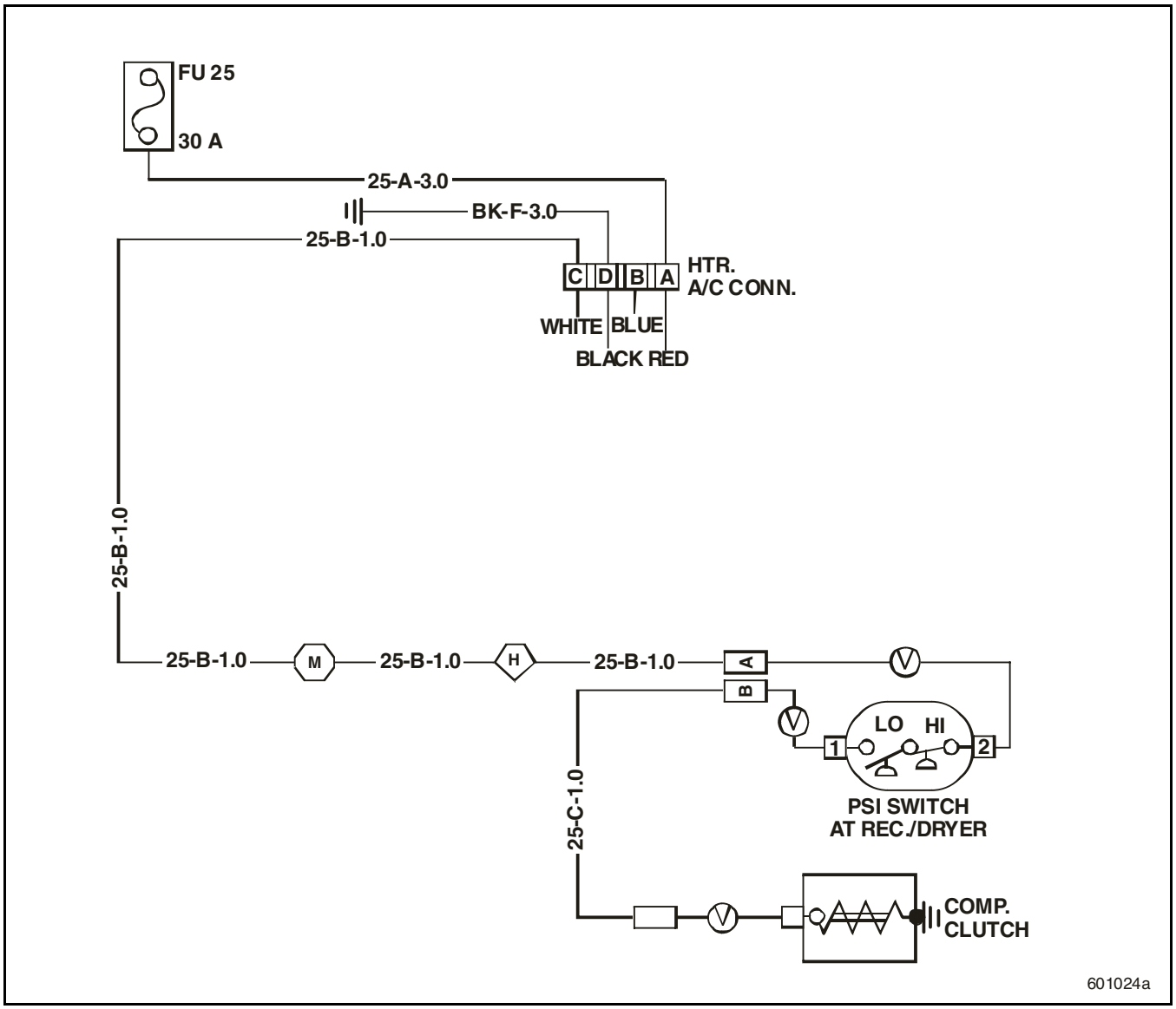

Figure 168 — CX, CH and CL Cab A/C System with Rotary Style Controls Engine Compartment Electrical Schematic (without APAds®)

https://truckmanualshub.com/

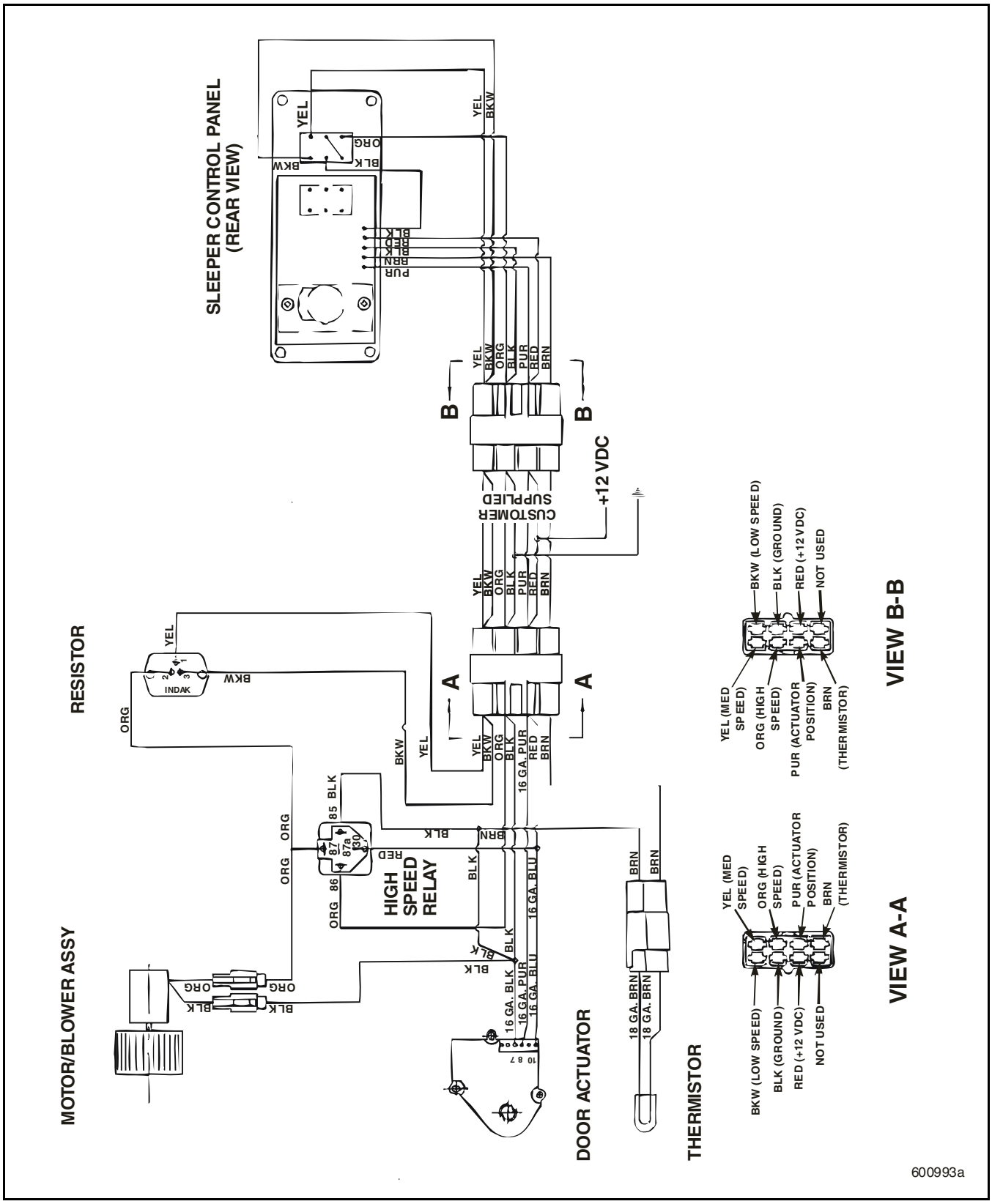

Figure 169 — CH, CHN, CHU, CL, CX, CXN, CXP and CXU Millennium Sleeper A/C System Electrical Schematic

https://truckmanualshub.com/

DM, DMM, RB, RD6 and RD8 A/C System Electrical Schematics — Red Dot System

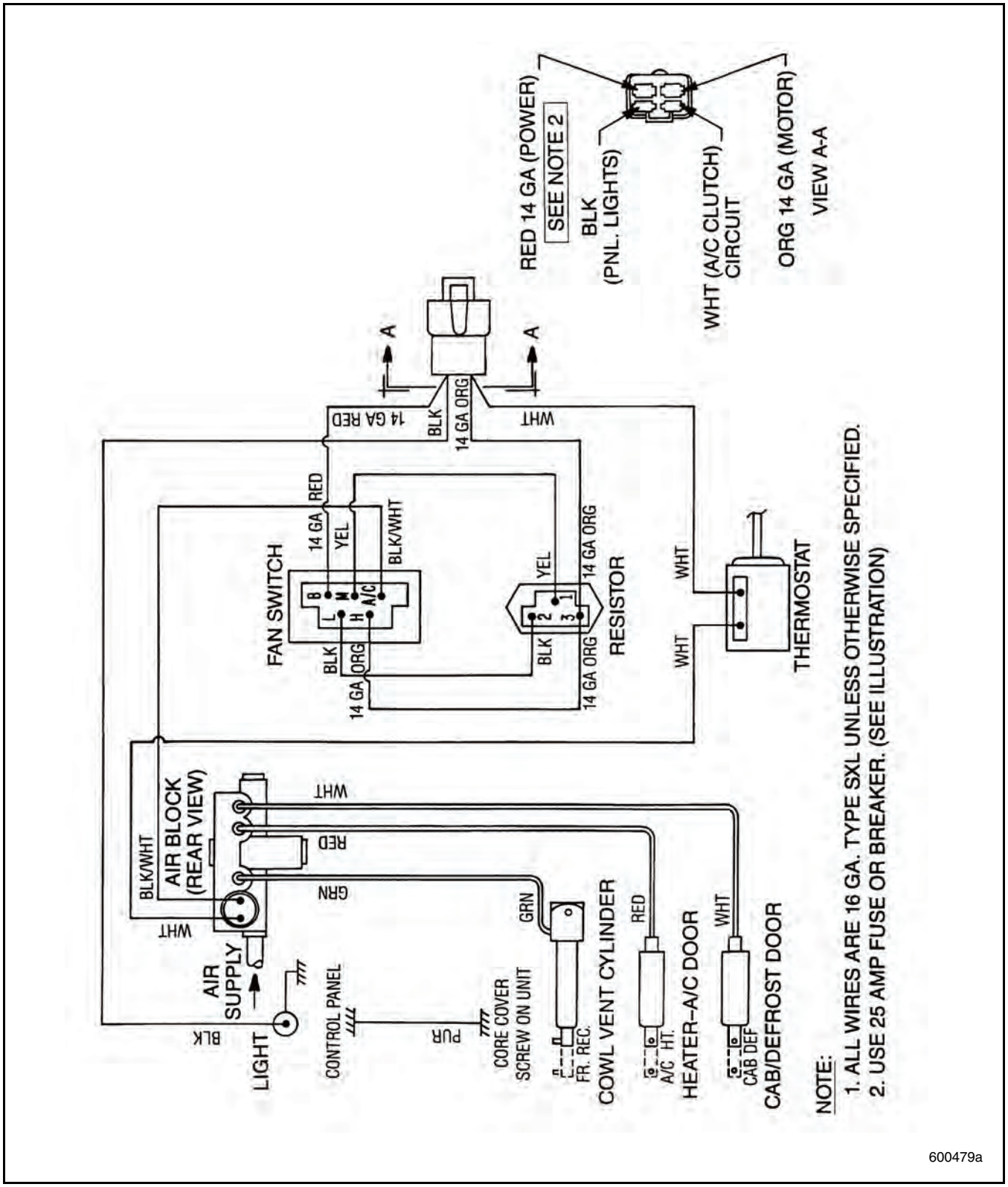

Figure 170 — DM, DMM, RB, RD6 and RD8 Cab A/C System Electrical Schematic

https://truckmanualshub.com/

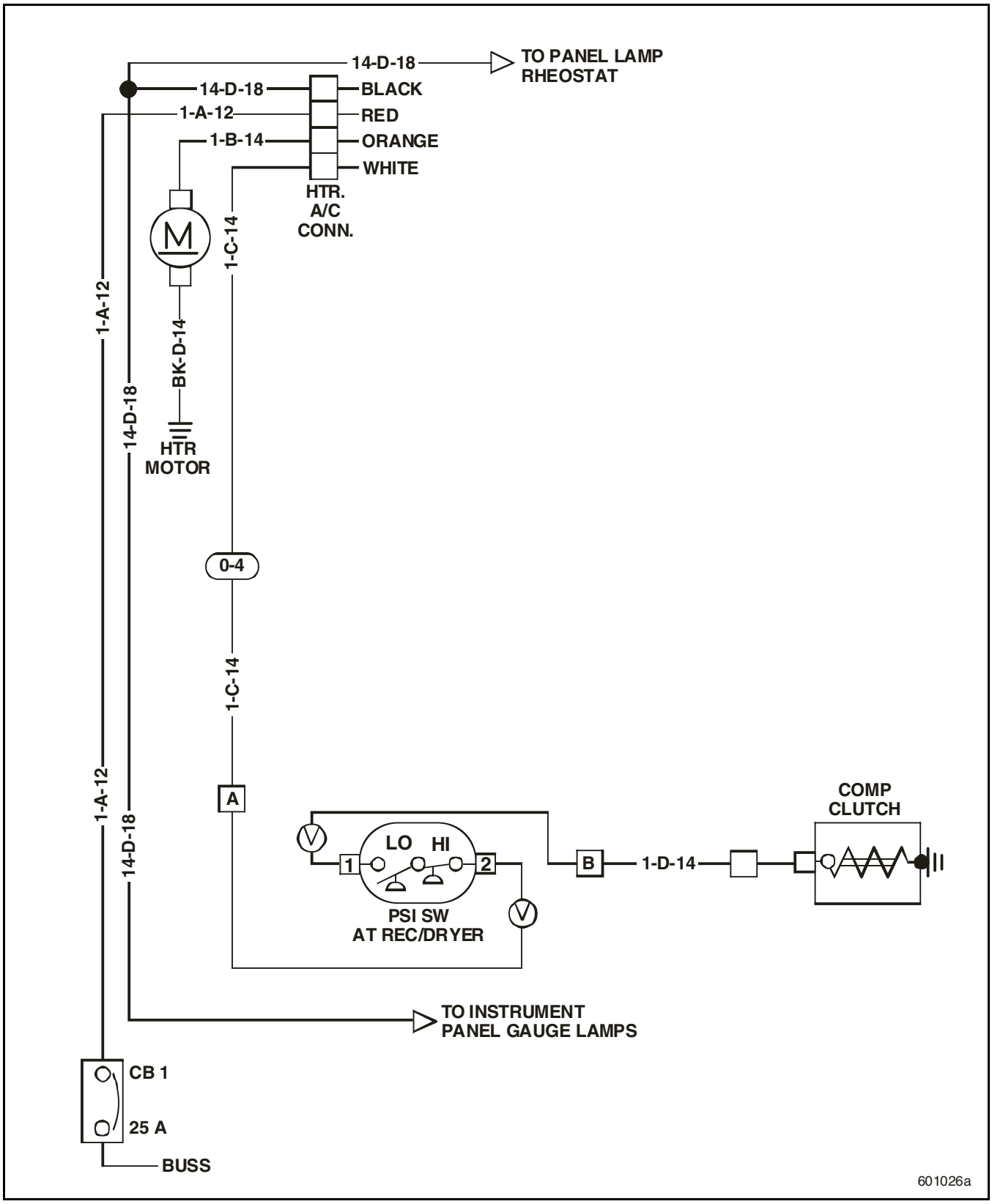

Figure 171 — DM, DMM, RB, RD and RM Cab A/C System Engine Compartment Electrical Schematic, without V-MAC

https://truckmanualshub.com/

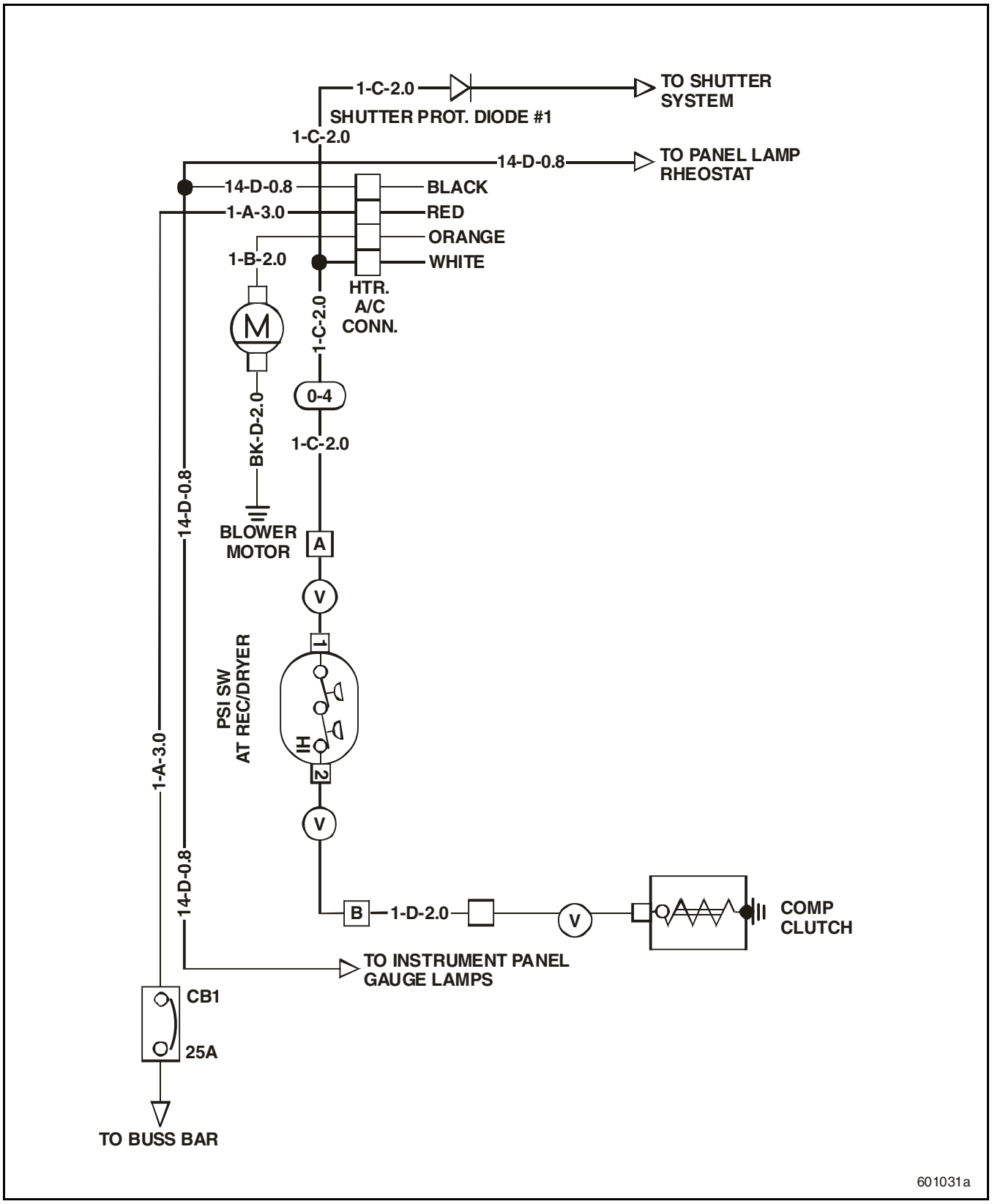

Figure 172 — RB and RD Cab A/C System Engine Compartment Electrical Schematic, with V-MAC II

https://truckmanualshub.com/

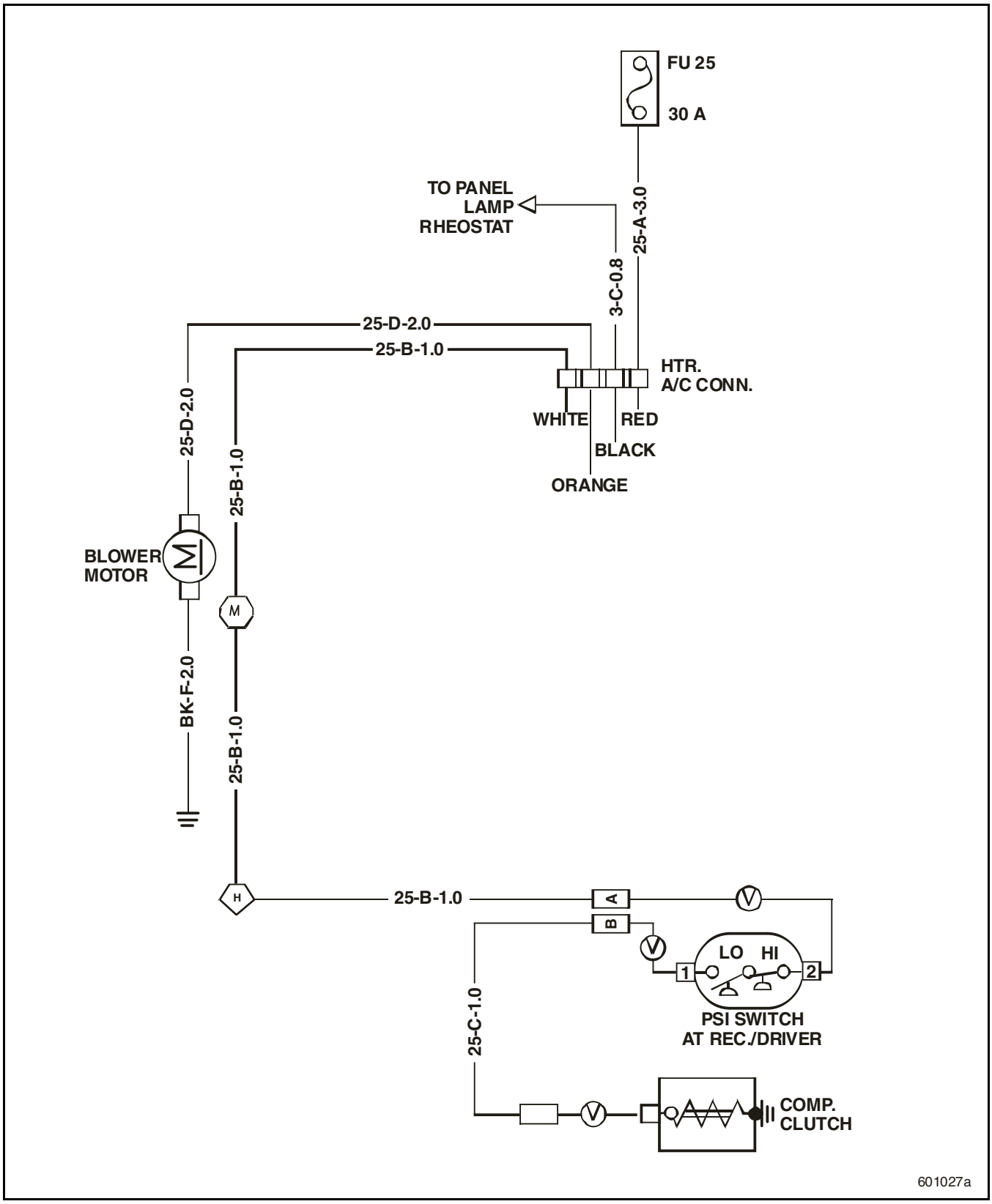

Figure 173 — DM, DMM, RB and RD Cab A/C System Engine Compartment Electrical Schematic, with V-MAC III

https://truckmanualshub.com/

LE, LEU, MR and MRU Roof-Mounted A/C System Electrical Schematics — Red Dot System

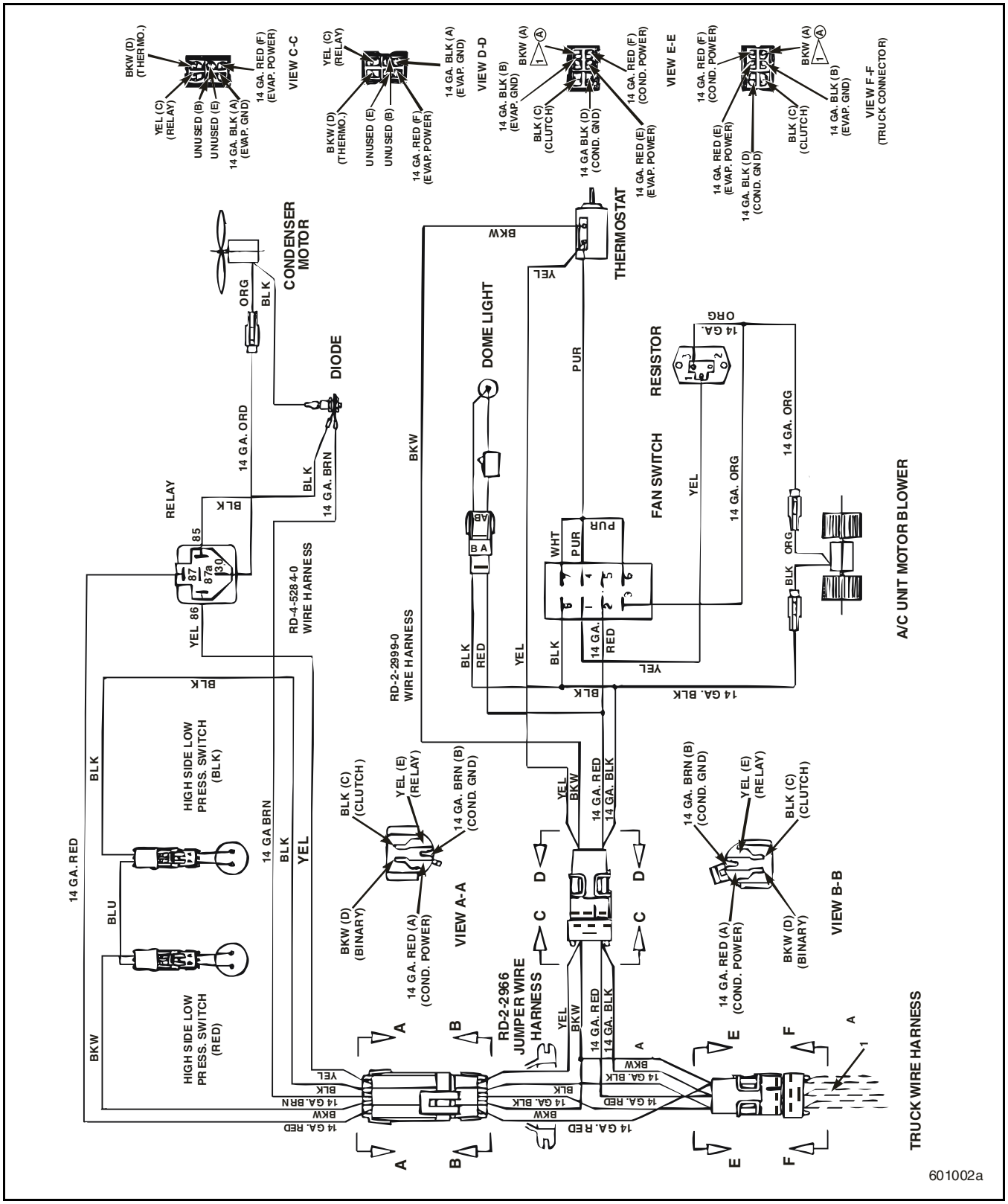

Figure 174 — LE, LEU, MR and MRU Cab Roof-Mounted A/C System Electrical Schematic

https://truckmanualshub.com/

MR and MRU Cab-Mounted A/C System Electrical Schematics — Red Dot System

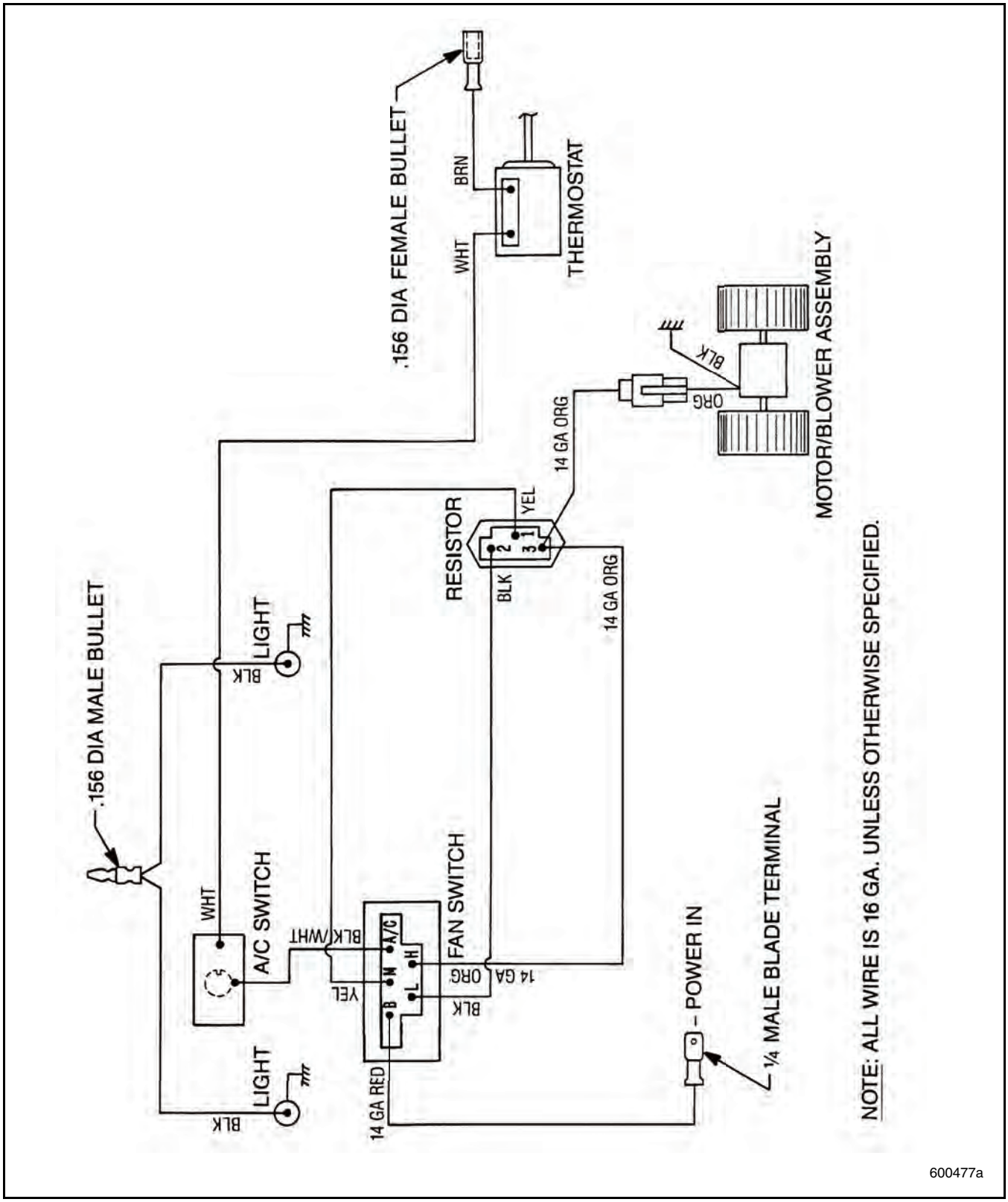

Figure 175 — MR and MRU Cab A/C System Electrical Schematic, Integral Front-Panel Unit

https://truckmanualshub.com/

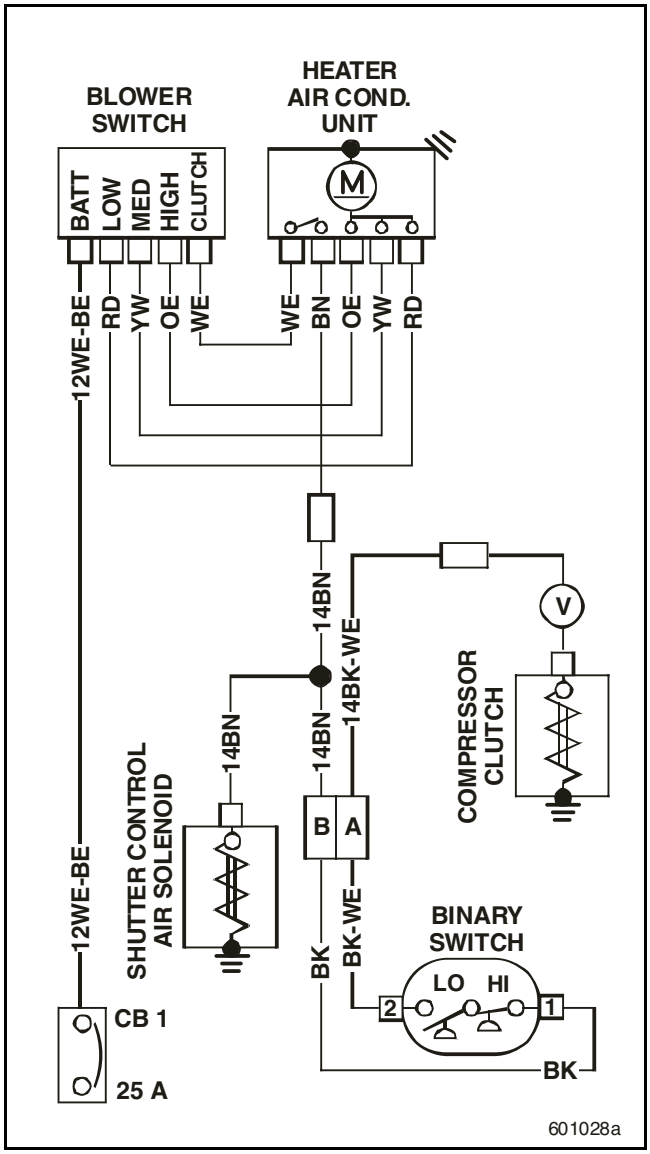

Figure 176 — MR Cab A/C System Engine Compartment Electrical Schematic, without V-MAC

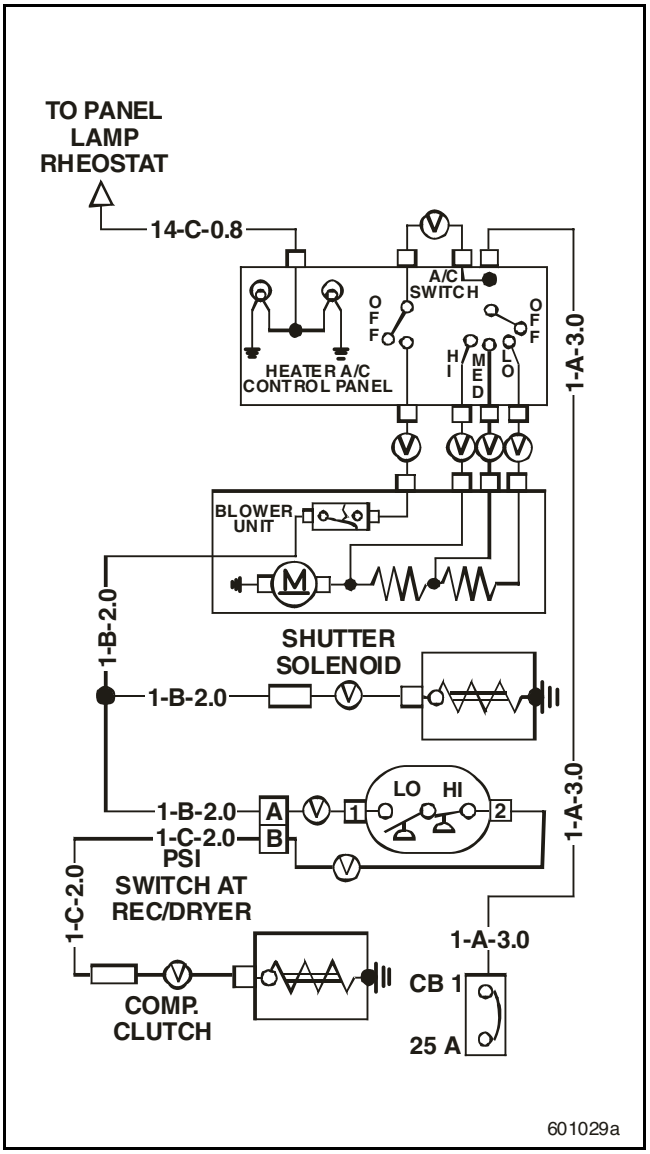

Figure 177 — MR Cab A/C System Engine Compartment Electrical Schematic, with V-MAC II

https://truckmanualshub.com/

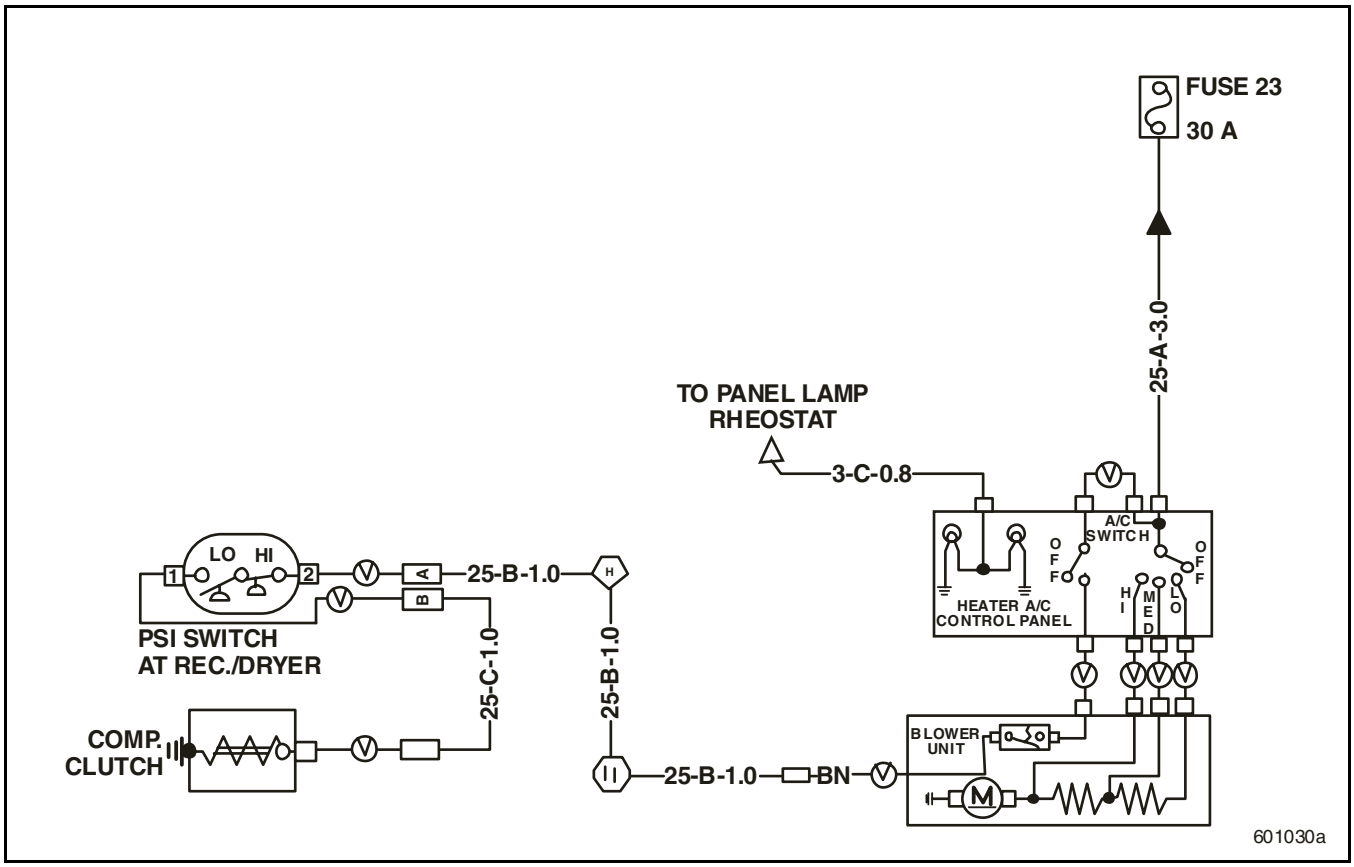

Figure 178 — MR Cab A/C System Engine Compartment Electrical Schematic, with V-MAC III

https://truckmanualshub.com/

CS and MS A/C System Electrical Schematics — Red Dot System

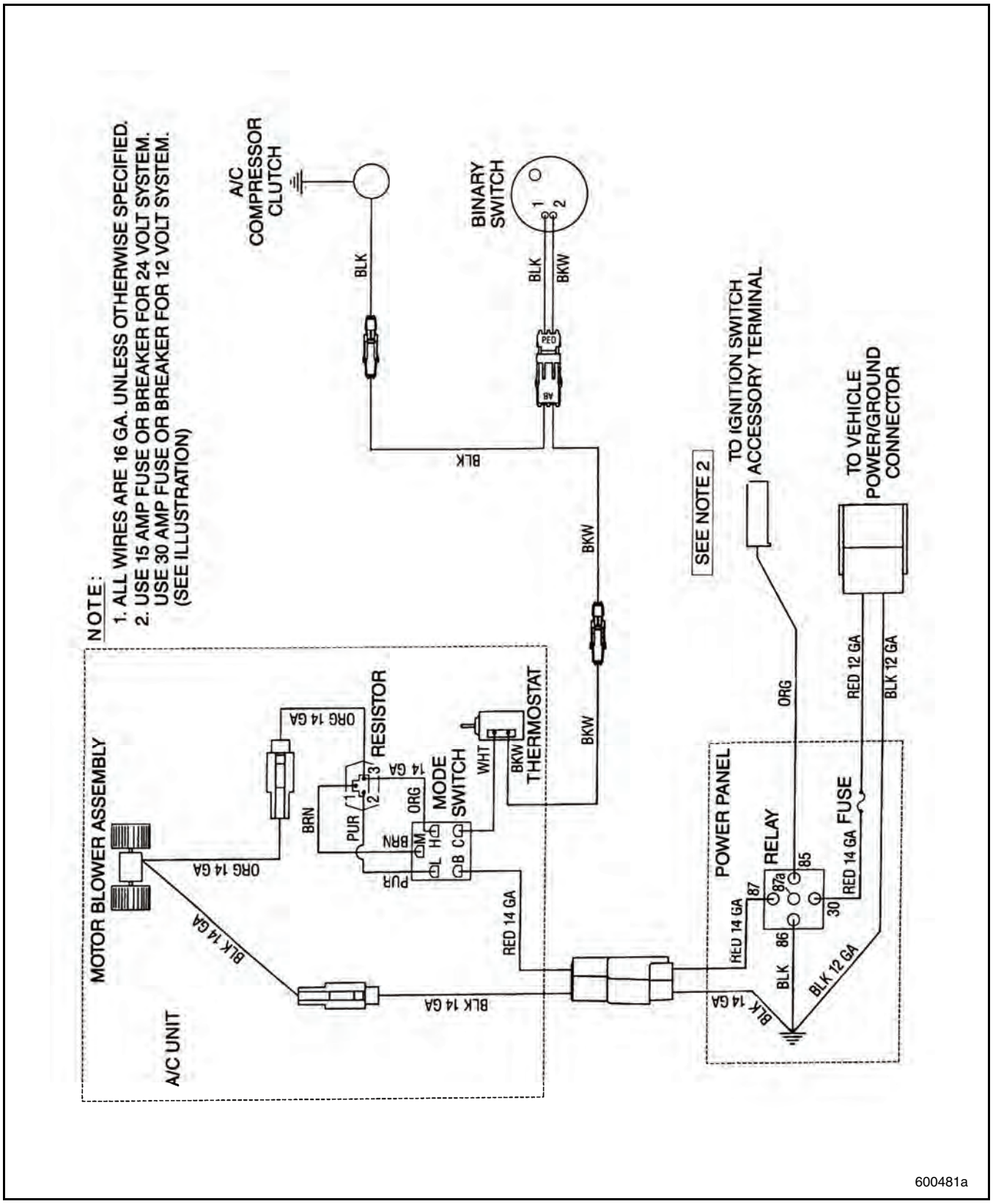

600481a

Figure 179 — CS Cab A/C System Electrical Schematic

https://truckmanualshub.com/

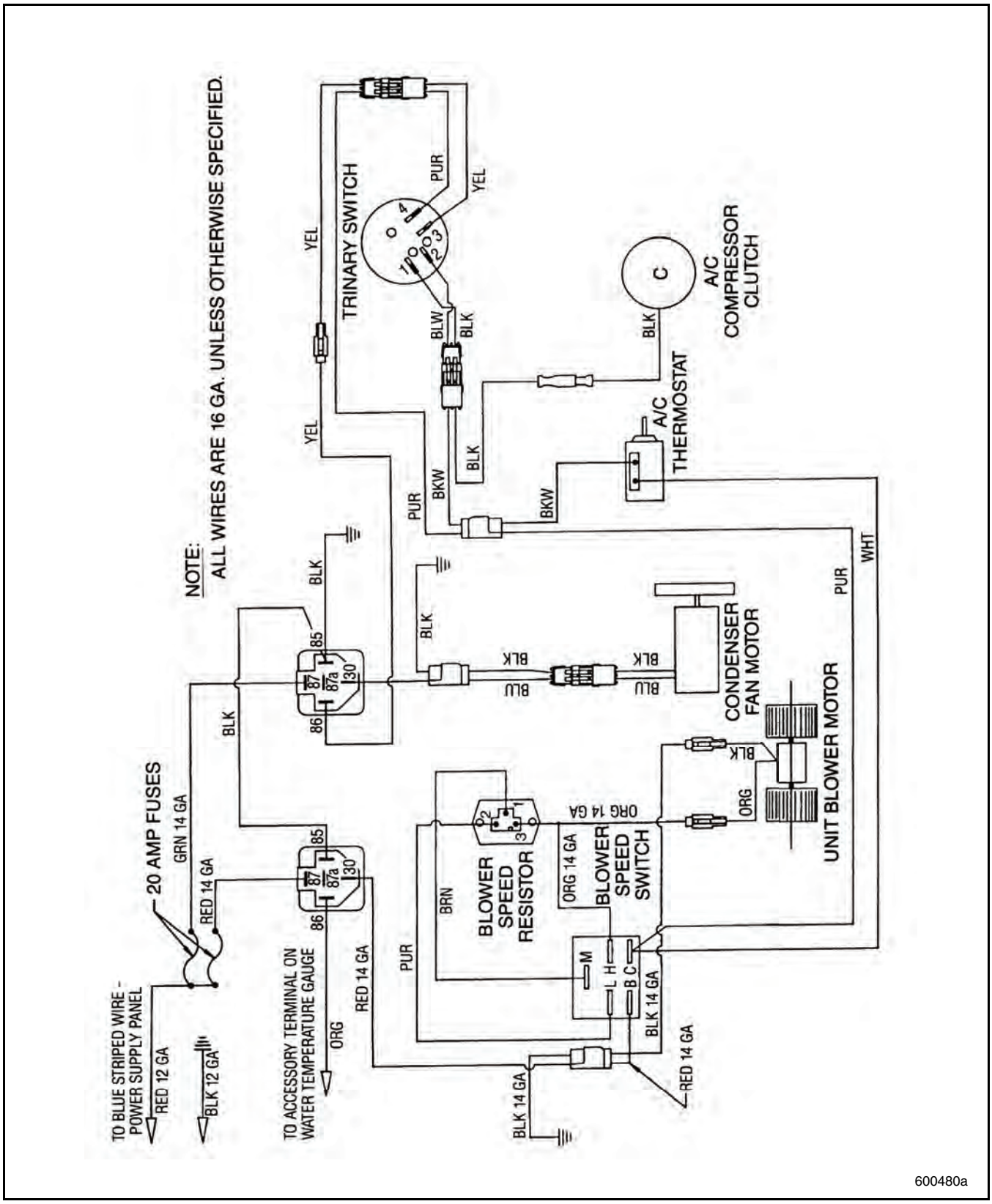

Figure 180 — MS Cab A/C System Electrical Schematic

https://truckmanualshub.com/

CH, CHN, CL, CT, CV, CX and CXN A/C System Electrical Schematics — Blend Air System

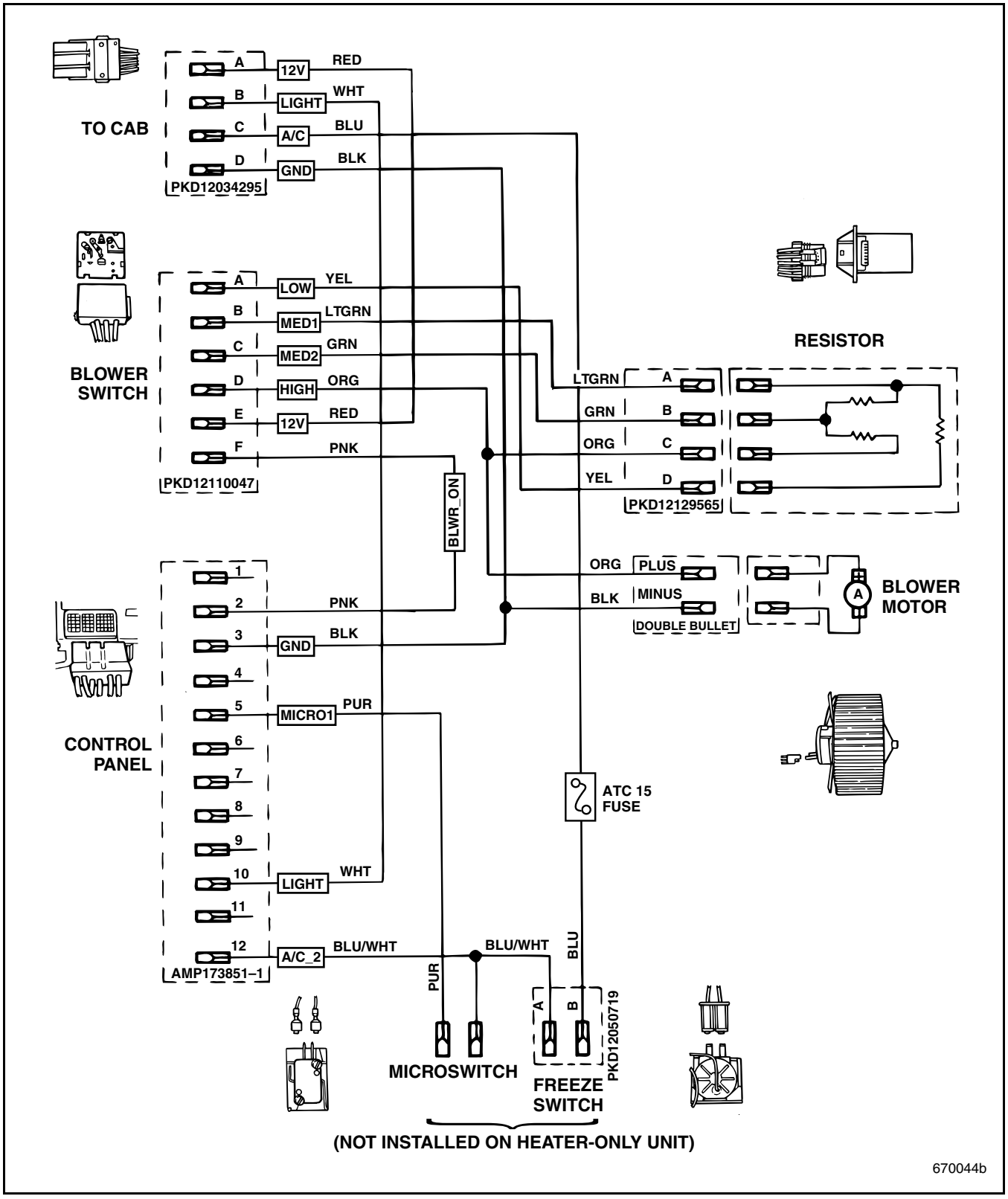

Figure 181 — CH, CHN, CL, CT, CV, CX and CXN Cab Blend Air A/C System Electrical Schematic, Manual Temperature Control and Heater-Only Units

https://truckmanualshub.com/

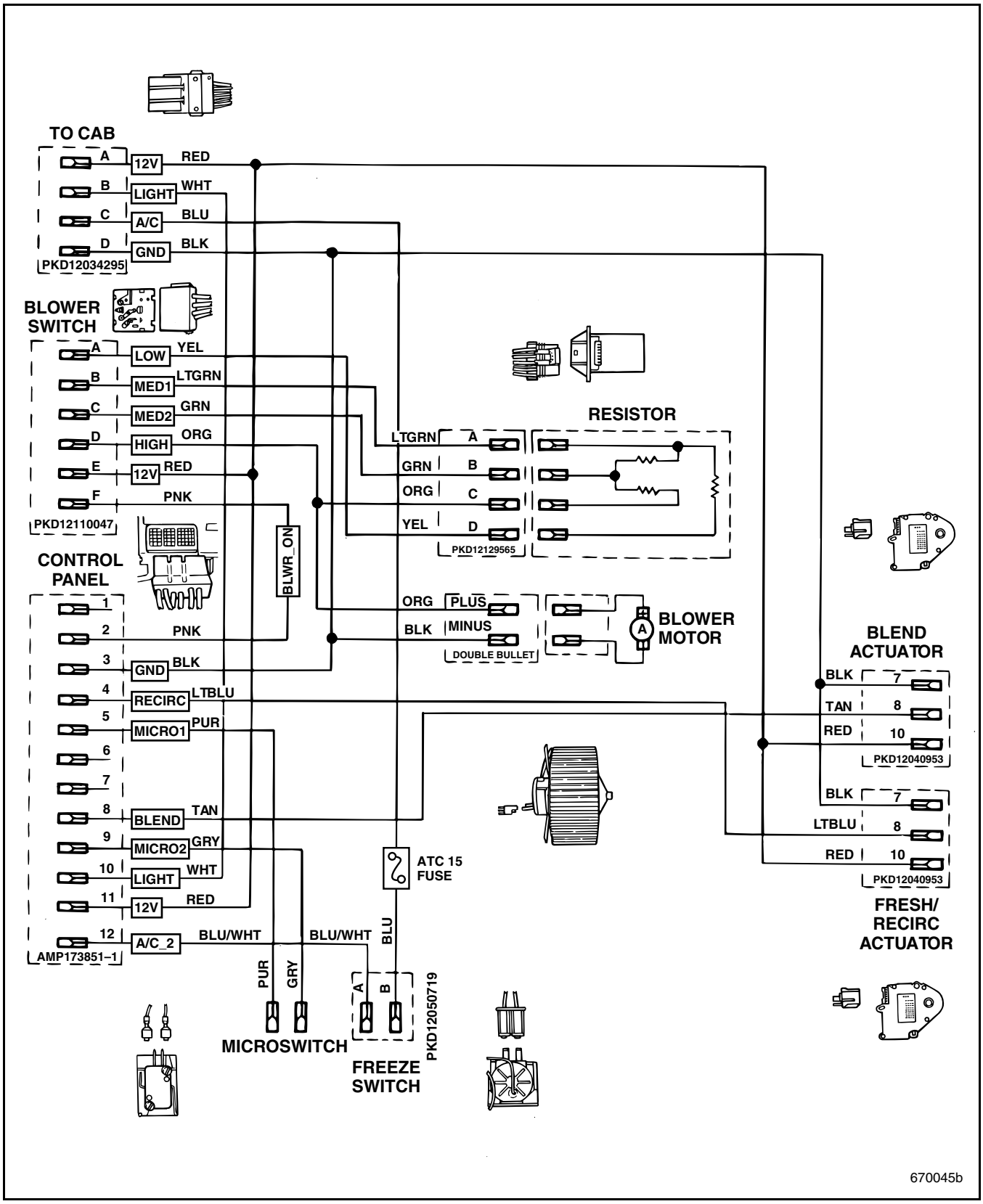

Figure 182 — CH, CHN, CL, CT, CV, CX and CXN Cab Blend Air A/C System Electrical Schematic, Automatic Temperature Control Unit

https://truckmanualshub.com/

CTP, CXP, CXU, CHU and GU Behr Cab A/C System Electrical Schematics

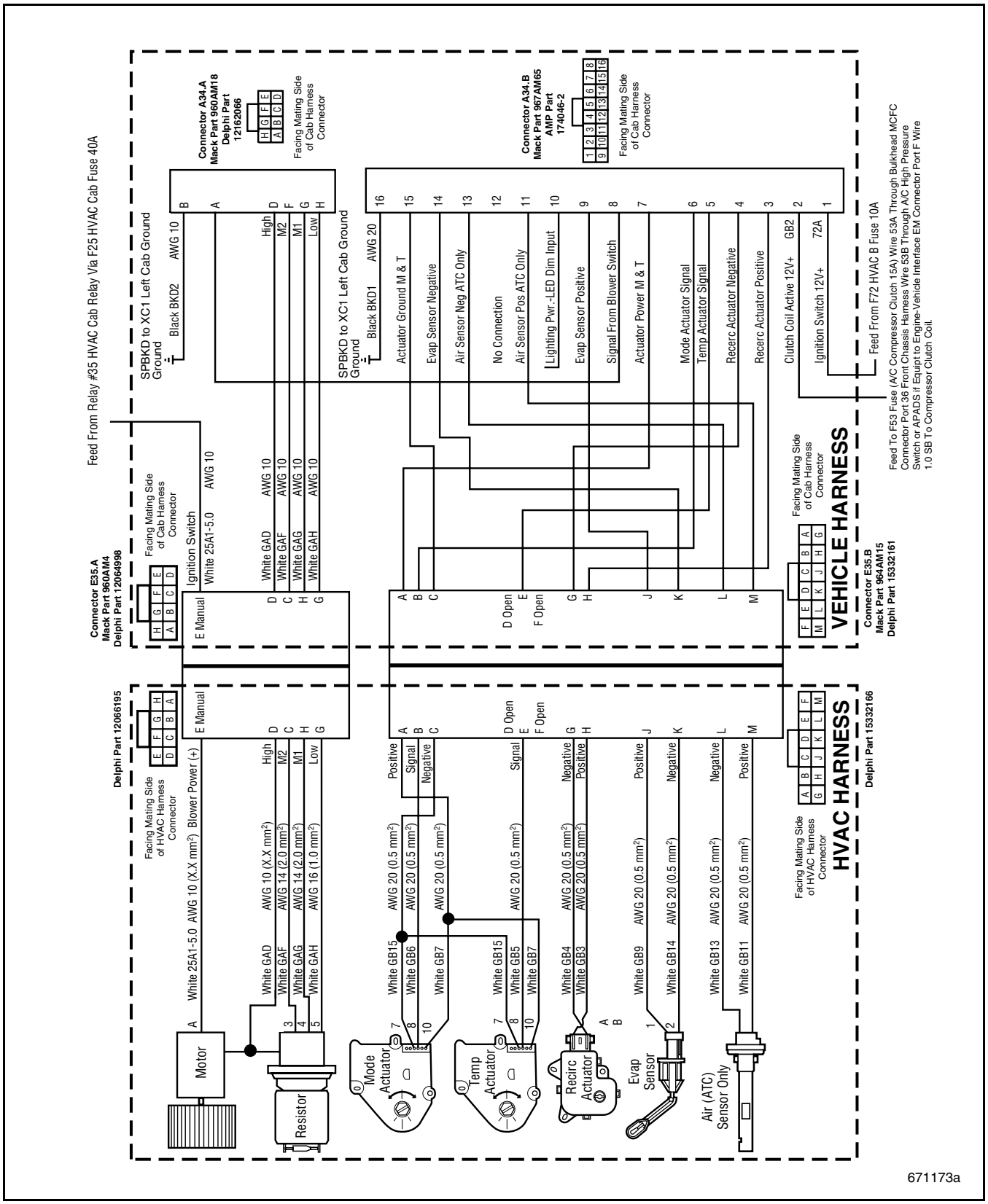

Figure 183 — CTP, CXP, CXU, CHU and GU Behr Cab A/C System Electrical Schematic for Manual and Automatic Temperature Control

https://truckmanualshub.com/

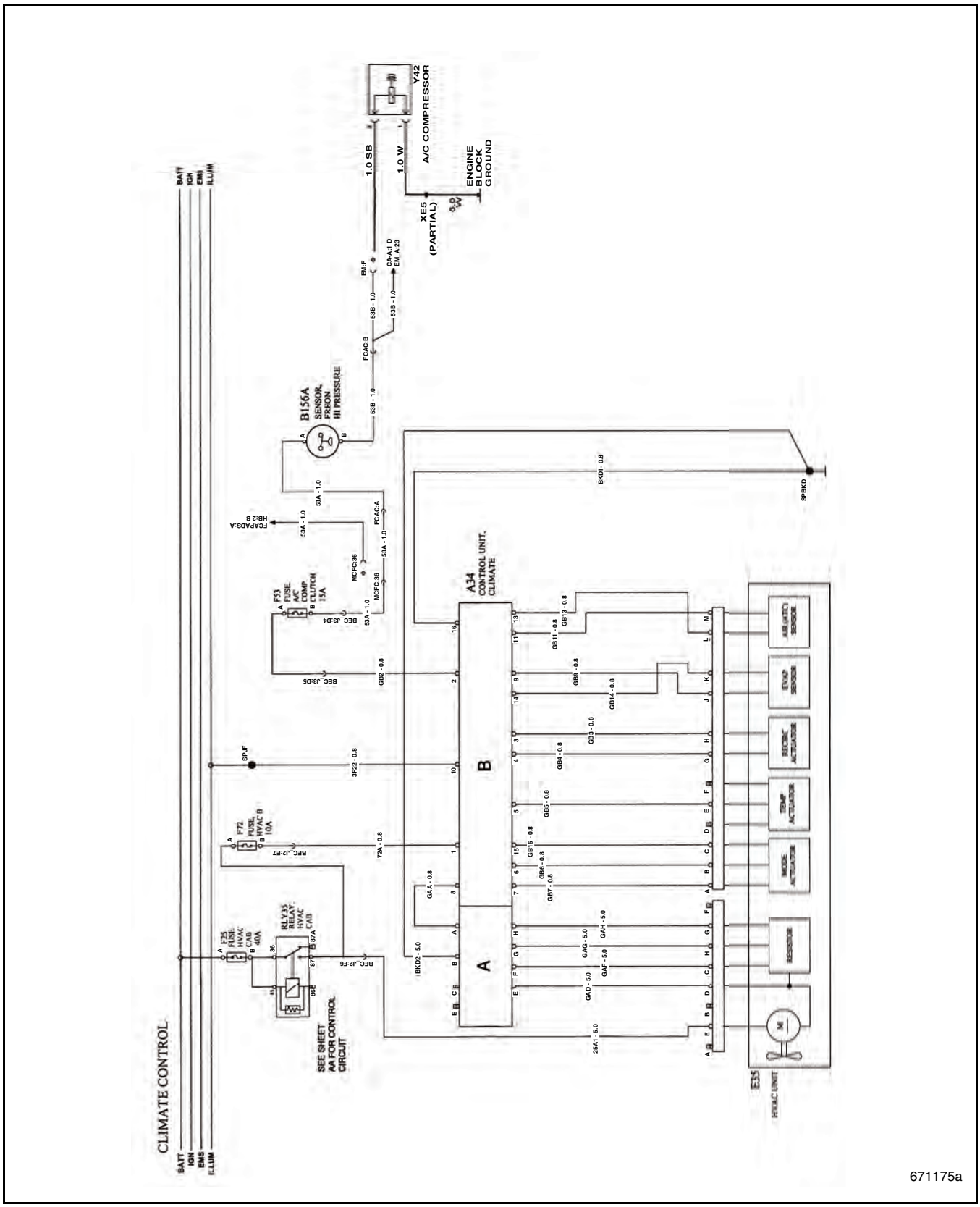

Figure 184 — Behr Climate Unit Electrical Schematic

https://truckmanualshub.com/

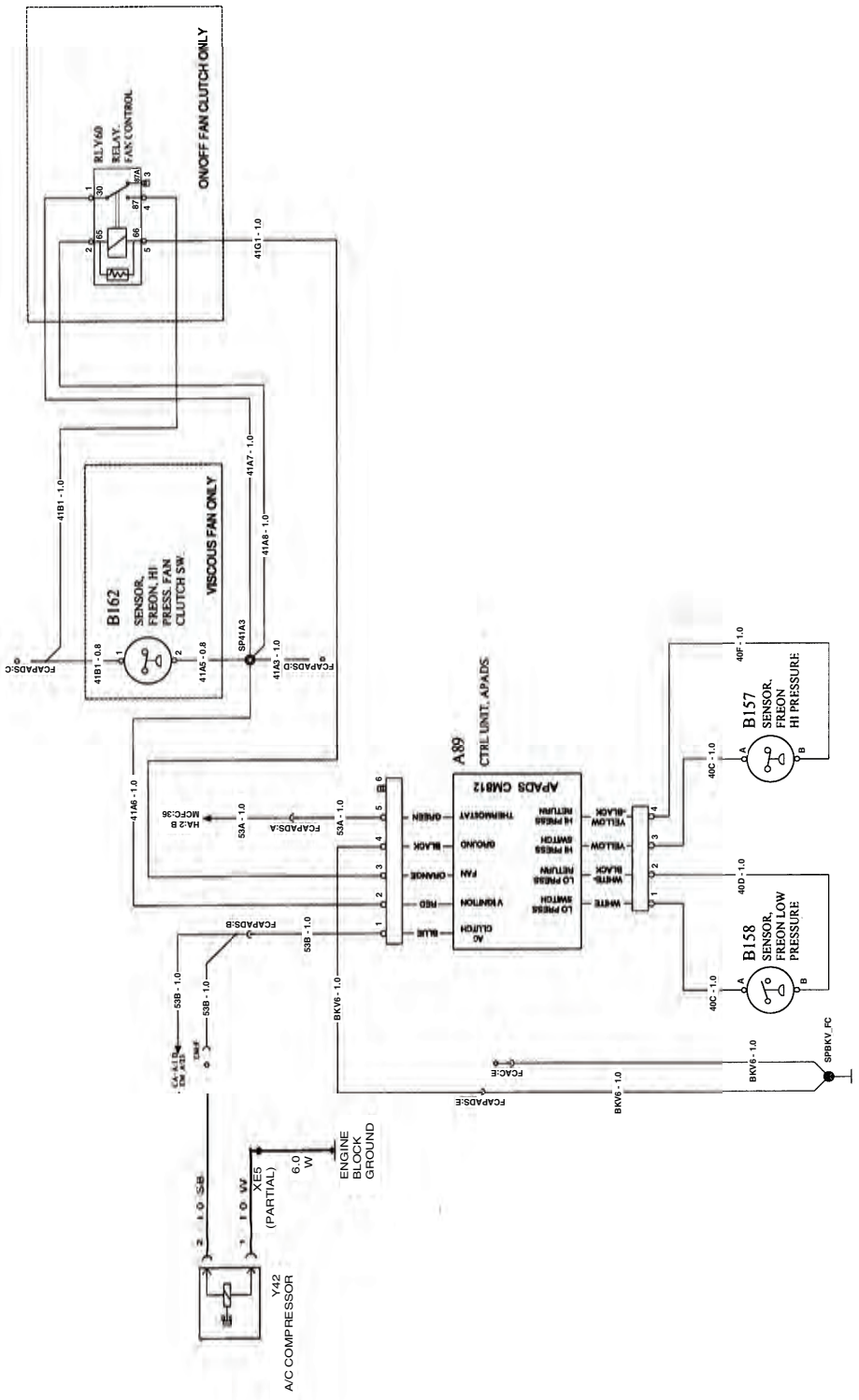

Figure 185 — APAds® Electrical Schematic

https://truckmanualshub.com/

APAds® CM812 and CM813 Electrical Schematics

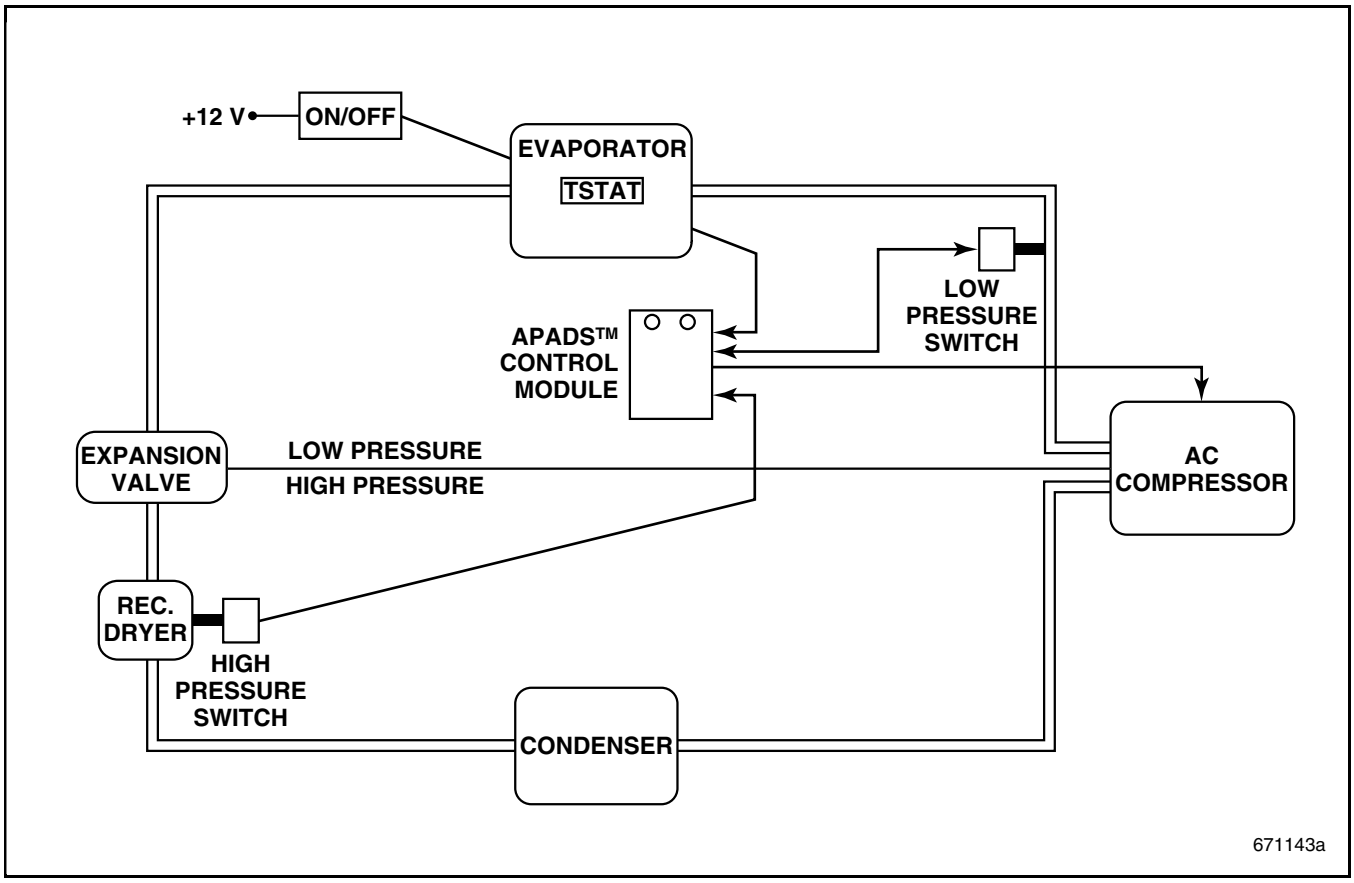

Figure 186 — APAds® CM812 I/O

https://truckmanualshub.com/

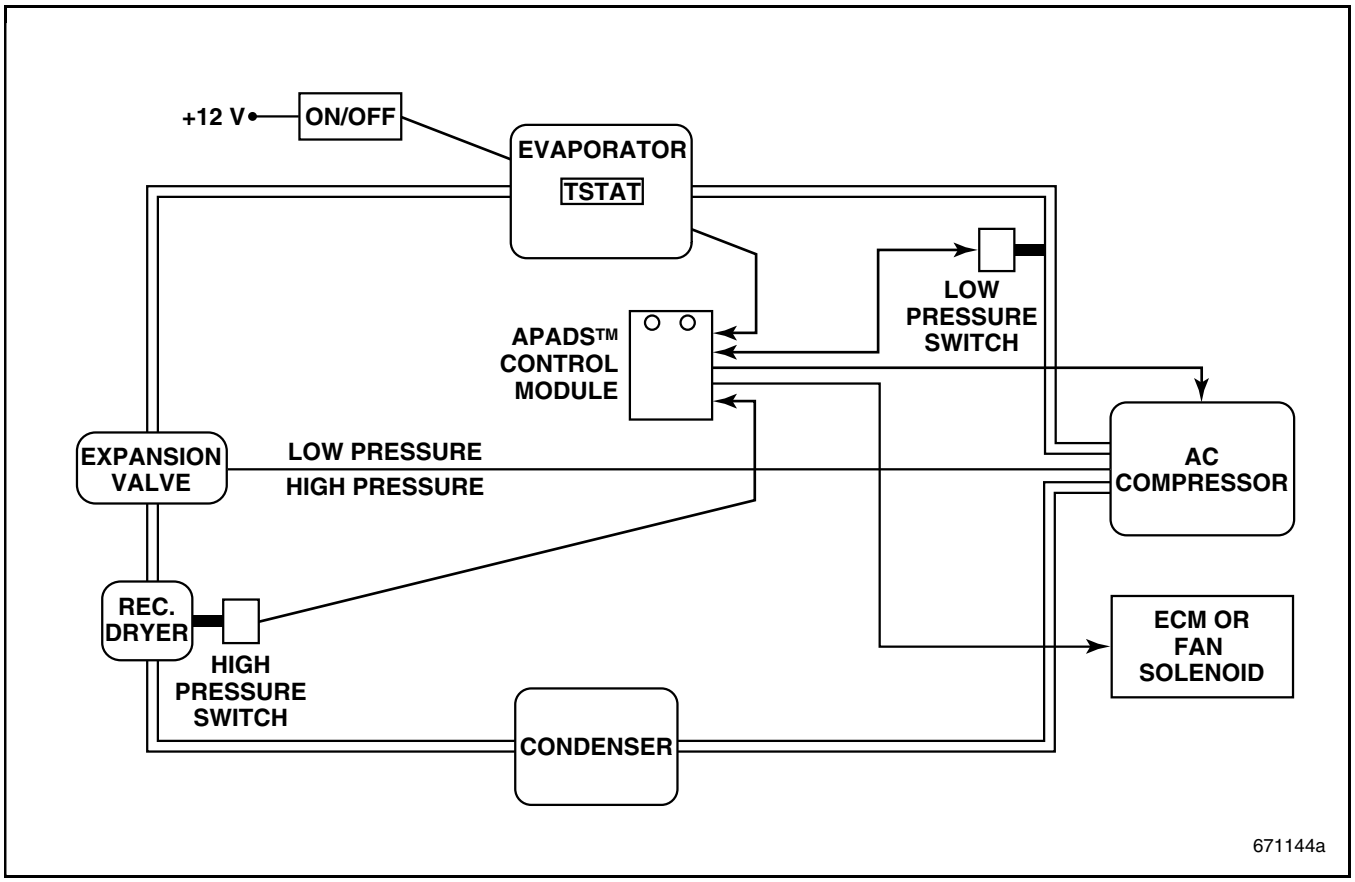

Figure 187 — APAds® CM813 I/O

https://truckmanualshub.com/

NOTES

https://truckmanualshub.com/

SPECIAL TOOLS & EQUIPMENT

https://truckmanualshub.com/

AIR CONDITIONING TOOLS REQUIRED FOR R-134a

Scavenger A/C Recovery Only Unit

Scavenger Recovery Unit, J 41428

R-134a Smart Cart

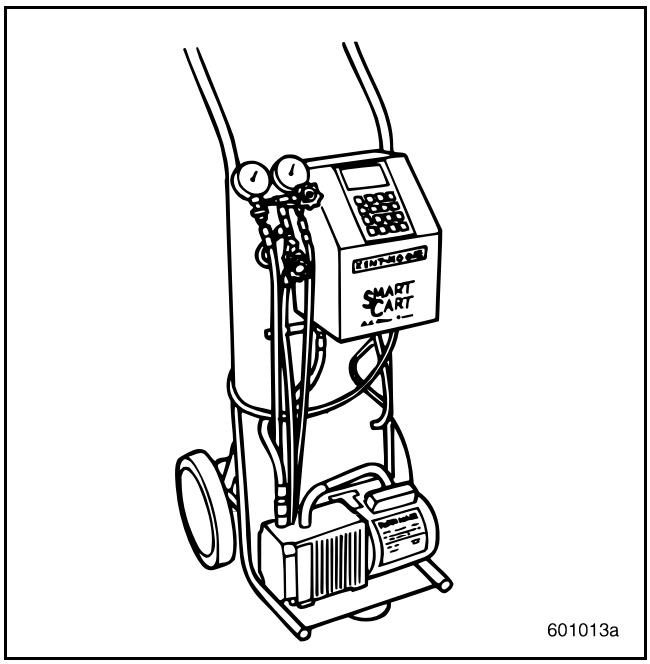

Figure 188 — Smart Cart Charging Unit, J 39650

R-134a Pureguard2 Refrigerant Tester

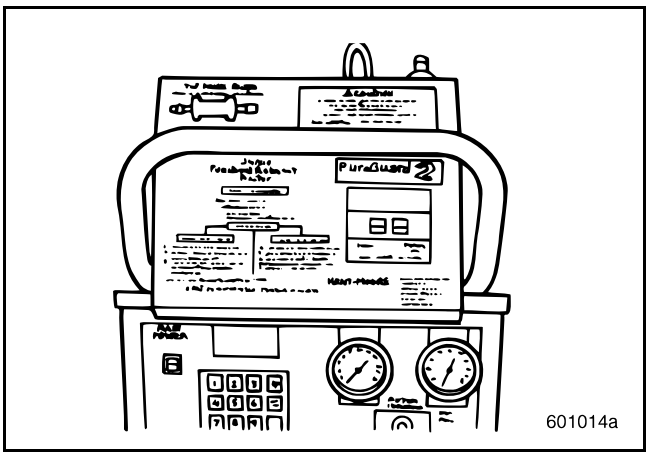

Figure 189 — Pureguard2 Refrigerant Tester, J 41810

Red Dot CTC2 Analyzer

Red Dot CTC2 Analyzer, J 39867

https://truckmanualshub.com/

ACR4 (Black Shroud) Recovery and Recycling Unit

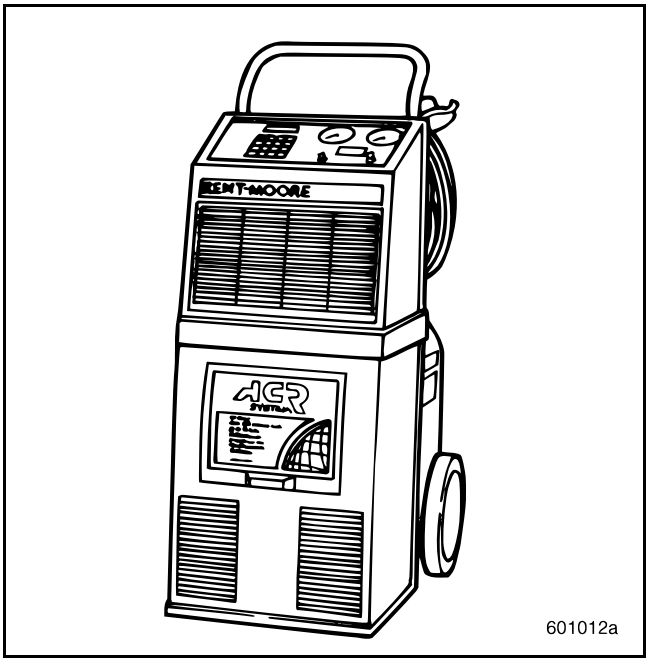

Figure 190 — ACR4 (Black Shroud) Recovery and Recycling Unit, J 39500-B

Mode Actuator Removal and Installation Tools (BEHR Climate Unit)

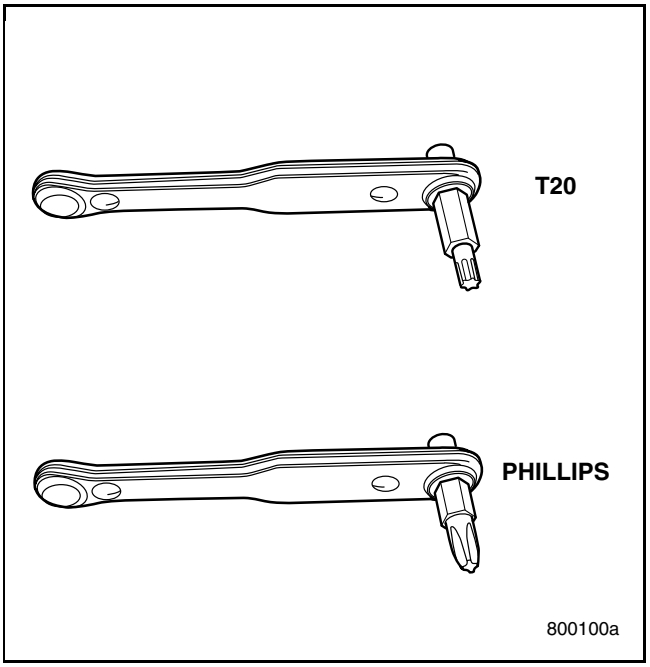

Figure 191 — T20 and Phillips Ratchet Wrench

https://truckmanualshub.com/

NOTES

https://truckmanualshub.com/

DISASSEMBLED VIEWS

https://truckmanualshub.com/

ASSEMBLY VIEW AND PARTS IDENTIFICATION [637]

CH, CL and CX Cab Unit Parts [637] — Red Dot System

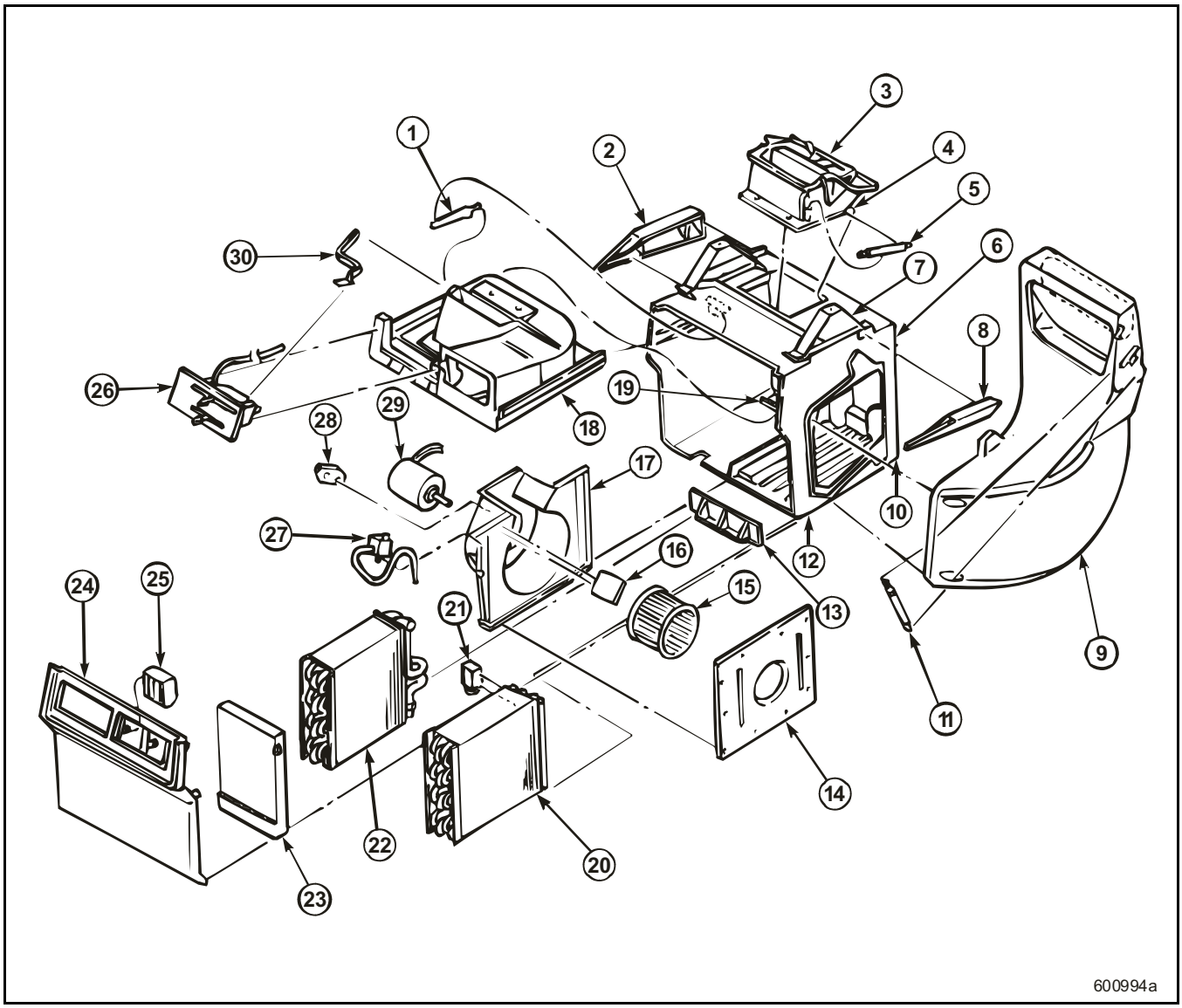

Figure 192 — CH and CL Cab A/C System Assembly View, Lever Style Control Panel

1. Air Actuator	11. Air Cylinder Assembly	21. Expansion Valve
2. LH Housing Trim	12. Duct Seal	22. Heater Core
3. Distribution Duct Assembly	13. Dam Assembly	23. Heater Core Spacer/Gasket
4. Air Actuator Bracket	14. Entry Ring	24. Cover Assembly
5. Air Actuator Assembly	15. Blower Motor Wheel	25. Louver
6. Housing Assembly	16. Resistor Guard Assembly	26. Control Panel Assembly
7. Top Support	17. Blower Bulkhead	27. Thermostat
8. RH Housing Trim	18. Bulkhead Assembly	28. Blower Motor Resistor
9. Intake Duct Assembly	19. Stud Support Channel	29. Blower Motor
10. Support Assembly	20. Evaporator	30. Door Link

https://truckmanualshub.com/

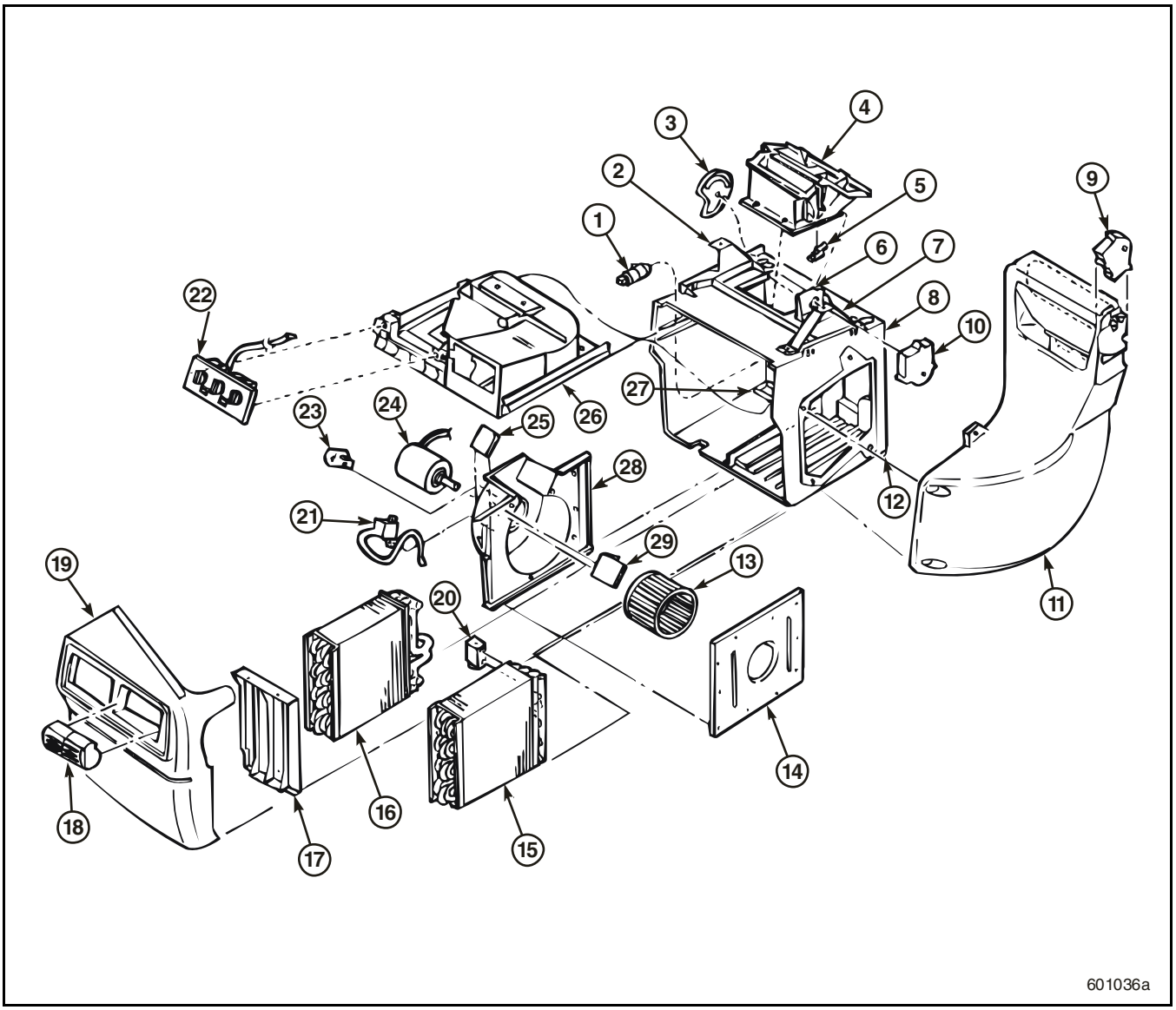

Figure 193 — CX, CH and CL Cab A/C System Assembly View, Rotary Style Control Panel

1. Constant Temperature Control Solenoid Valve	11. Intake Duct Assembly	21. Thermostat
2. LH Unit Support	12. Support Assembly	22. Control Panel Assembly
3. Door Actuator Cam	13. Blower Motor Wheel	23. Blower Motor Resistor
4. Distribution Duct Assembly	14. Entry Ring	24. Blower Motor
5. Microswitch	15. Evaporator	25. Constant Temperature Control Circuit Board
6. Door Actuator Cam Bracket	16. Heater Core	26. Bulkhead Assembly
7. RH Unit Support	17. Core Dam	27. Support Channel
8. Housing Assembly	18. Louver Assembly	28. Blower Bulkhead
9. Rotary Actuator Motor	19. Cover Assembly	29. Resistor Guard Assembly
10. Rotary Actuator Motor	20. Expansion Valve	

https://truckmanualshub.com/

CH, CHN, CHU, CL, CX, CXN, CXP and CXU Millennium Sleeper Unit Parts [637] — Red Dot System

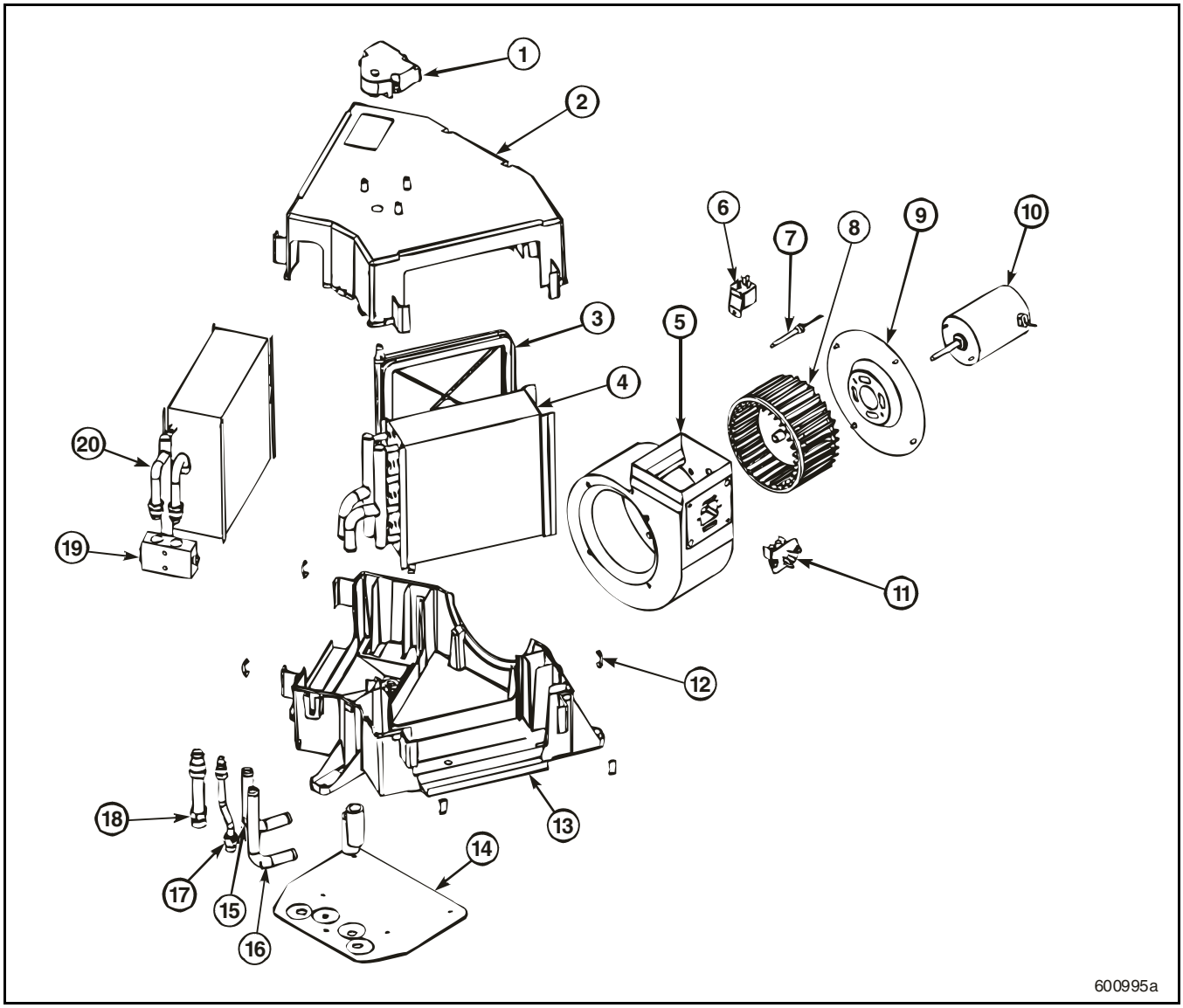

Figure 194 — CH, CHN, CHU, CL, CX, CXN, CXP and CXU Millennium Sleeper A/C System Assembly View

1. Rotary Actuator Motor	8. Blower Motor Wheel	15. Heater Core Inlet Tube
2. Top Housing	9. Blower Motor Mount Assembly	16. Heater Core Outlet Tube
3. Blend Door	10. Blower Motor	17. Evaporator Core Inlet Tube
4. Heater Core	11. Blower Motor Resistor	18. Evaporator Core Outlet Tube
5. Blower Motor Housing	12. Spring Retainer Clip	19. Expansion Valve
6. Blower Motor Relay	13. Base Housing	20. Evaporator Core
7. Thermistor Assembly	14. Floor Plate	

https://truckmanualshub.com/

DM, DMM, RB, RD6 and RD8 Cab Unit Parts [637] — Red Dot System

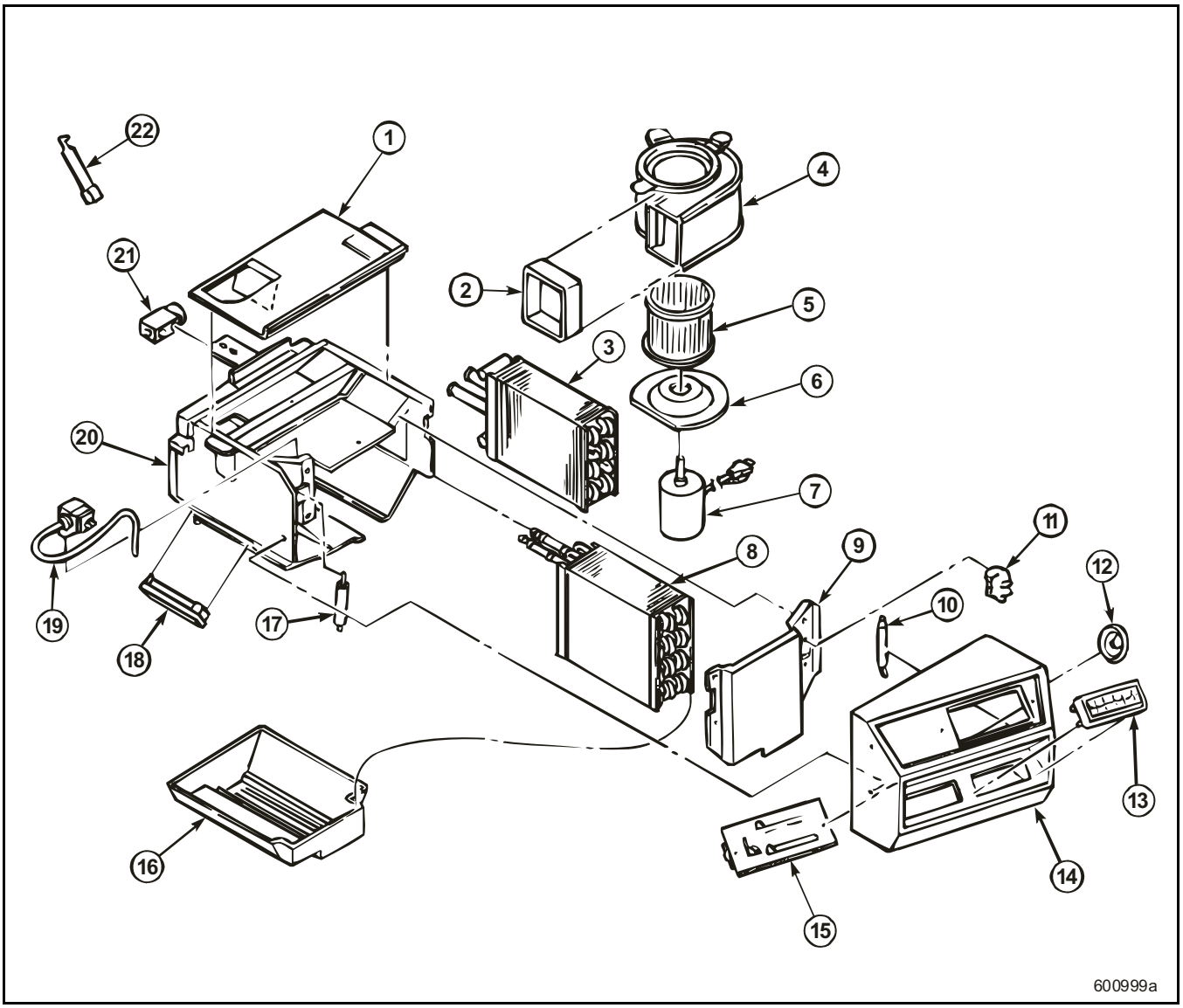

Figure 195 — DM, DMM, RB, RD6 and RD8 Cab A/C System Assembly View

1. Top Panel Assembly	9. Evaporator Core Cover	16. Drain Pan Assembly
2. Transition Boot	10. Air Actuator Assembly	17. Air Actuator Assembly
3. Heater Core	11. Blower Motor Resistor	18. Louver
4. Blower Motor Housing	12. Louver	19. Thermostat
5. Blower Motor Wheel	13. A/C Louver	20. Housing Assembly
6. Blower Motor Mount	14. Cover Assembly	21. Expansion Valve
7. Blower Motor	15. Control Panel Assembly	22. Air Actuator Assembly
8. Evaporator Core		

https://truckmanualshub.com/

FDM Cab Unit Parts [637]

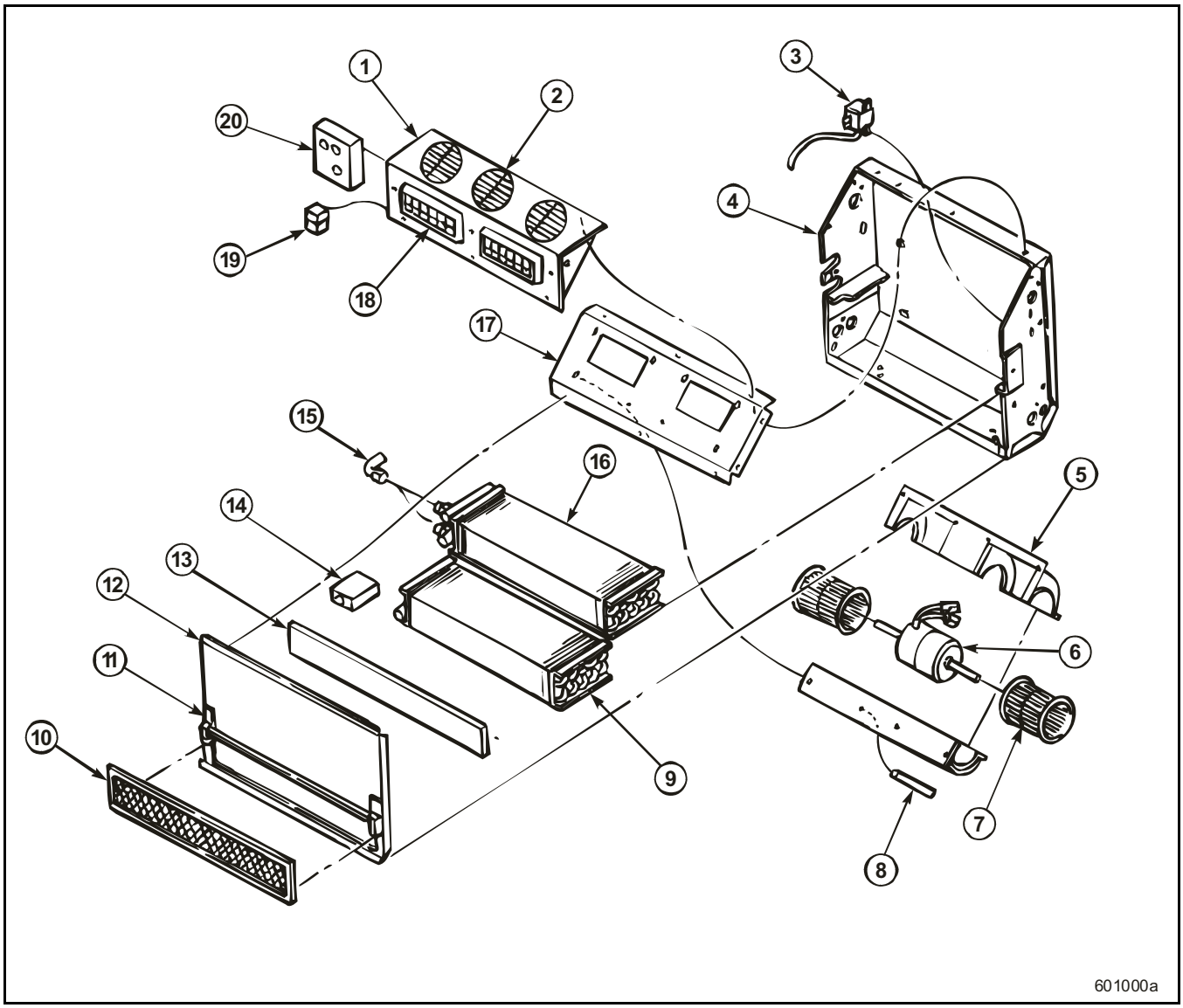

Figure 196 — FDM Cab A/C System Assembly View

1. Plenum Assembly	8. Attach Strip Assembly	15. Swivel Fitting Assembly
2. Air Diffuser Louver Assembly	9. Evaporator Core	16. Heater Core
3. Thermostat	10. Intake Filter	17. Blower Bracket Assembly
4. Housing Assembly	11. Spring Clip	18. Louver
5. Blower Housing	12. Cover Assembly	19. Relay
6. Blower Motor	13. Core Gasket	20. Control Panel Assembly
7. Blower Motor Wheel	14. Expansion Valve	

https://truckmanualshub.com/

LE, LEU, MR and MRU Roof-Mounted Unit Parts [637]

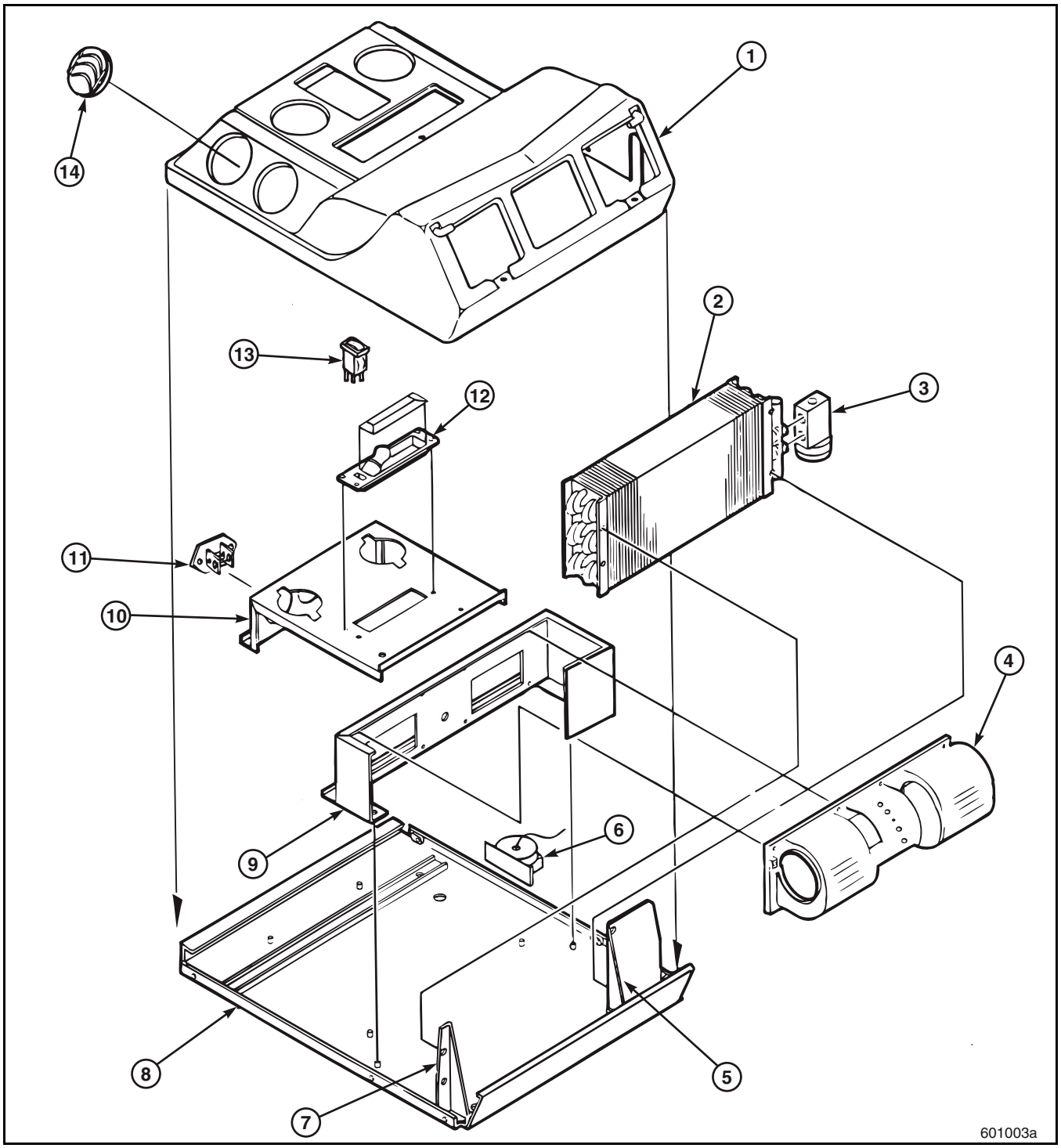

Figure 197 — LE, LEU, MR and MRU Roof-Mounted A/C System Assembly View (Interior)

1. Cover Assembly	6. Thermostat	11. Blower Motor Resistor
2. Evaporator Core	7. Bottom Header Retainer	12. Dome Light Assembly
3. Expansion Valve	8. Base Plate Assembly	13. Two-Speed Switch
4. Blower Motor Assembly	9. Blower Motor Mount Assembly	14. Louver Assembly
5. Top Header Retainer	10. Control Panel Assembly	

https://truckmanualshub.com/

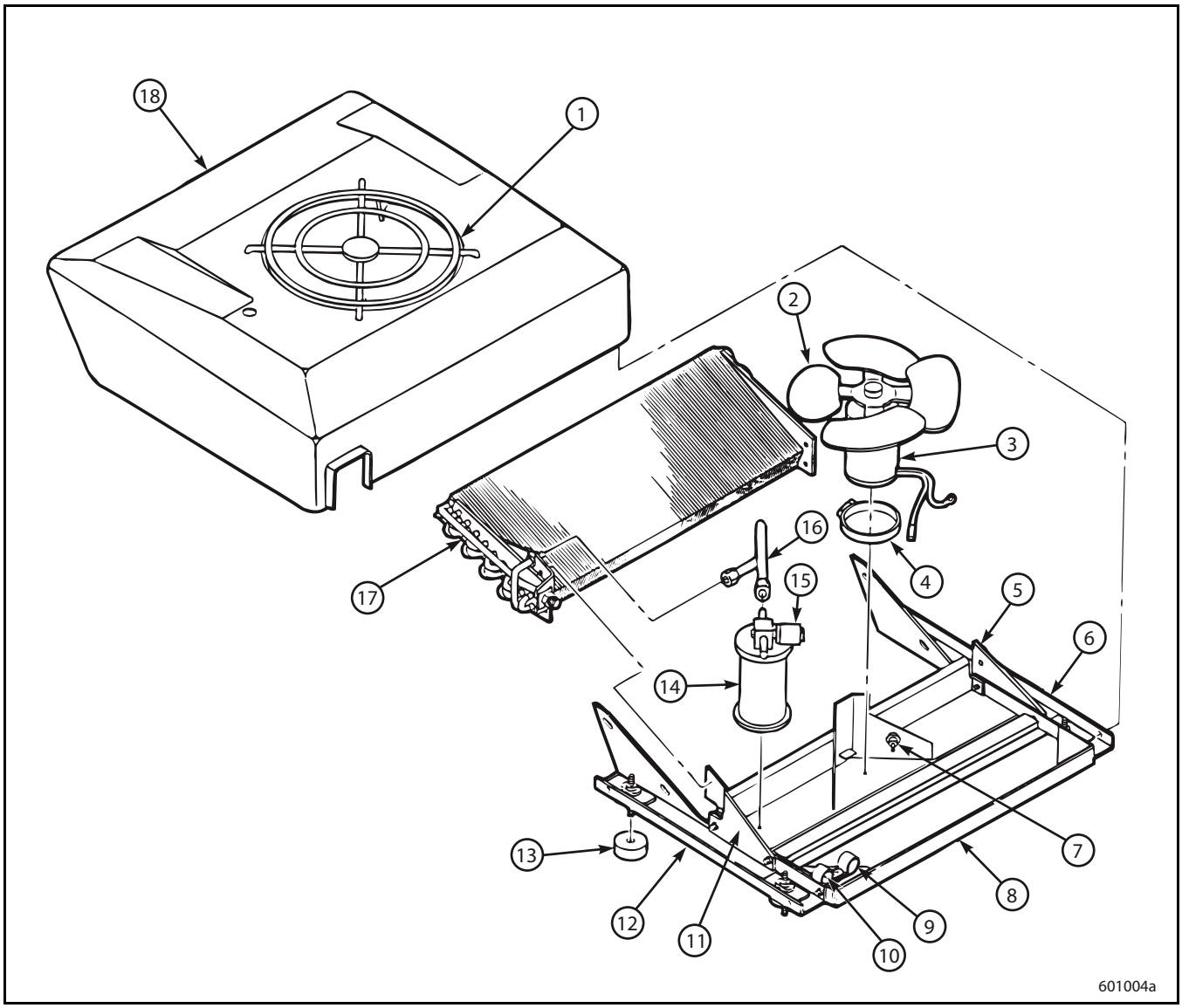

Figure 198 — LE, LEU, MR and MRU Roof-Mounted A/C System Assembly View (Exterior)

1. Fan Guard	7. Diode	13. Spacer
2. Fan	8. Pan Assembly	14. Receiver/Dryer
3. Fan Motor	9. Hose Clamp	15. Pressure Switch
4. Fan Motor Clamp	10. Hose Clamp	16. Tube Assembly
5. RH Bracket	11. LH Bracket	17. Condenser Assembly
6. RH Rail Assembly	12. LH Rail Assembly	18. Cover Assembly

https://truckmanualshub.com/

MR and MRU Cab-Mounted Unit Parts [637]

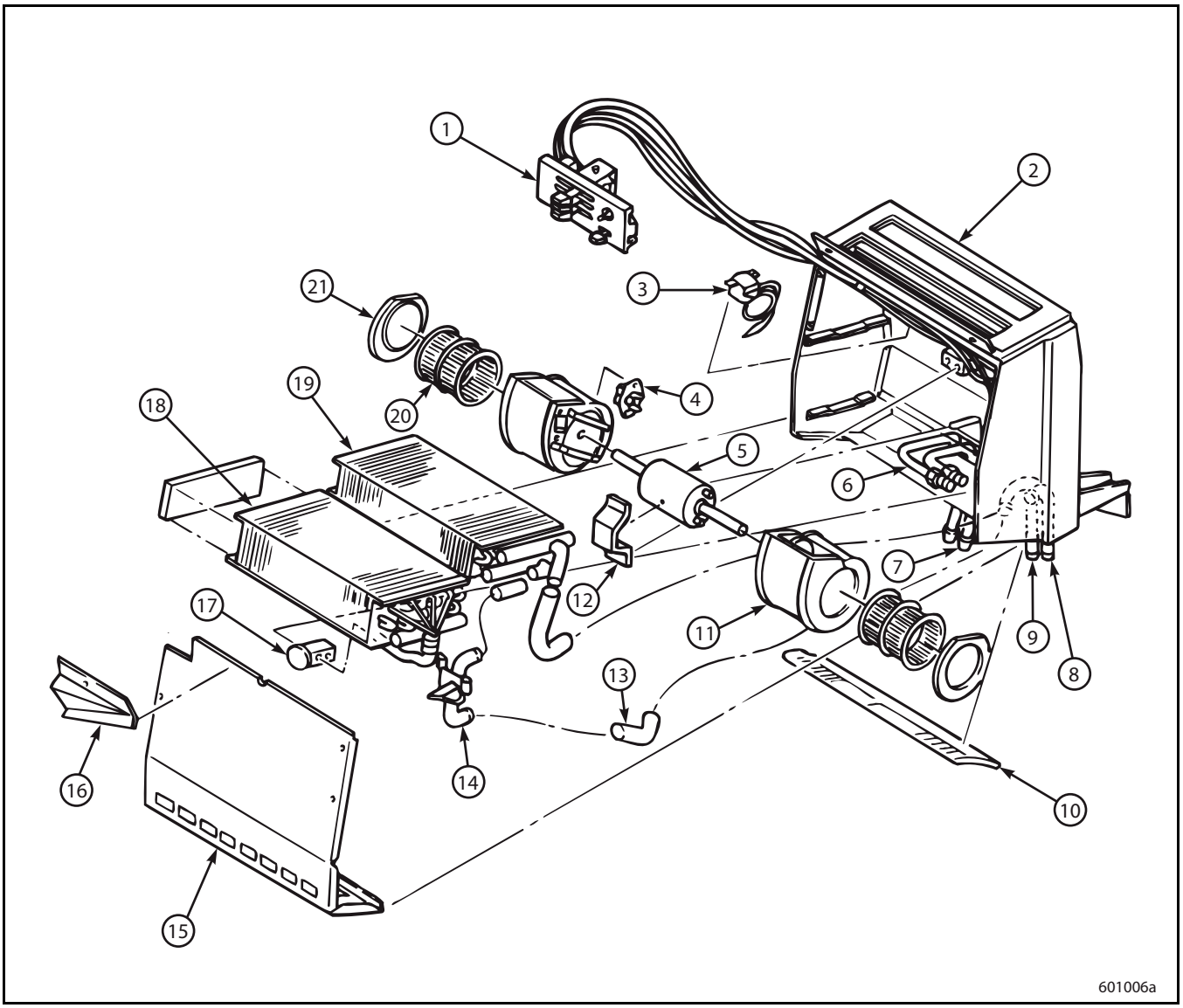

Figure 199 — MR and MRU Cab-Mounted A/C System Assembly View, Integral Front-Panel Unit

1. Control Panel Assembly	8. Heater Core Inlet Tube	15. Cover Assembly
2. Housing Assembly	9. Heater Core Outlet Tube	16. Cable Cover
3. Thermostat	10. Recirculation Screen	17. Expansion Valve
4. Blower Motor Resistor	11. Blower Motor Housing	18. Evaporator Core
5. Blower Motor	12. Blower Motor Retainer	19. Heater Core
6. A/C Line	13. Heater Core Inlet Hose	20. Blower Motor Wheel
7. A/C Line	14. Water Valve	21. Entry Ring

https://truckmanualshub.com/

CS and MS Cab Unit Parts [637]

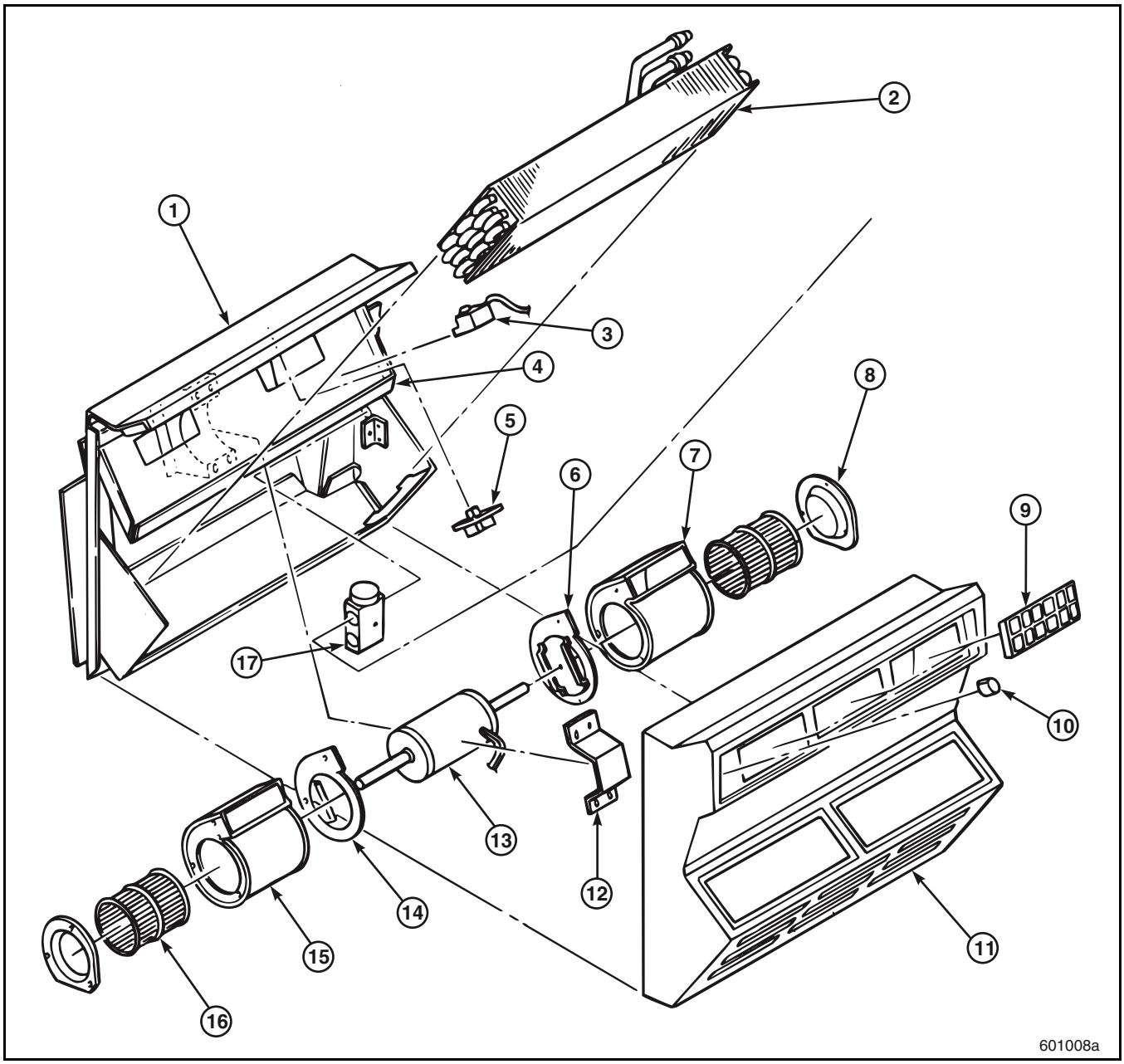

Figure 200 — CS A/C System Assembly View

1. Housing Assembly	7. RH Blower Motor Housing	13. Blower Motor
2. Evaporator Core	8. Entry Ring	14. LH Blower Assembly Retainer
3. Thermostat	9. Louver	15. LH Blower Motor Housing
4. Bulkhead Assembly	10. Control Knob	16. Blower Motor Wheel
5. Blower Motor Resistor	11. Cover Assembly	17. Expansion Valve
6. RH Blower Assembly Retainer	12. Blower Motor Retainer	

https://truckmanualshub.com/

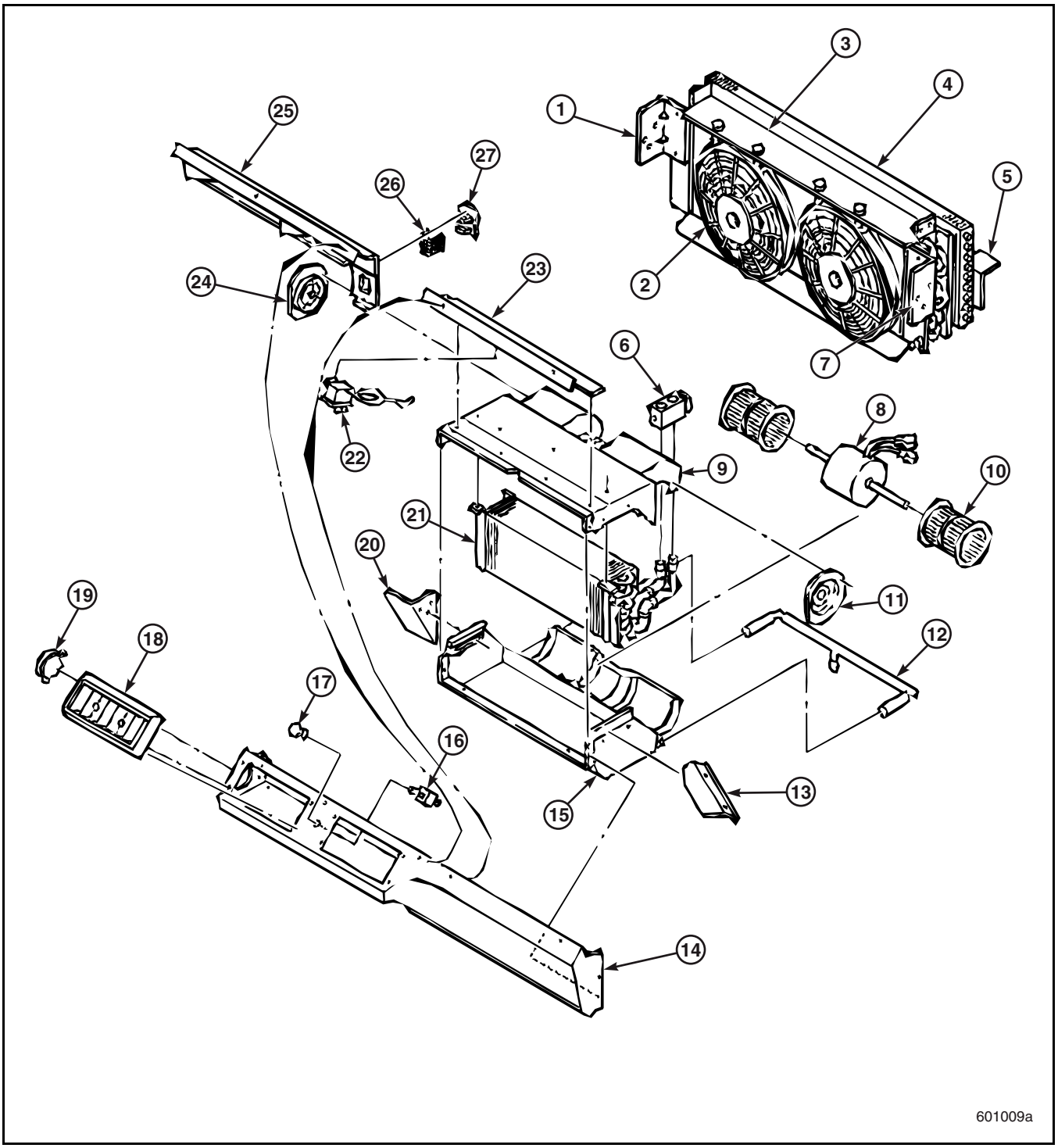

Figure 201 — MS A/C System Assembly View

1. LH Mounting Bracket Assembly	10. Blower Motor Wheel	19. Louver
2. Fan and Motor Assembly	11. RH Entry Ring	20. LH Mounting Bracket
3. Condenser Assembly	12. Drain Hose	21. Evaporator Core
4. Rock Guard	13. RH Mounting Bracket	22. Thermostat
5. Bracket Assembly	14. Cover	23. Cover Mounting Assembly
6. Expansion Valve	15. Bottom Housing	24. LH Entry Ring
7. RH Mounting Bracket Assembly	16. Blower Motor Switch	25. Differential Cover Mount Assembly
8. Blower Motor	17. Blower Motor Switch Knob	26. Blower Motor Resistor Guard
9. Top Housing	18. Louver	27. Blower Motor Resistor

https://truckmanualshub.com/

CH, CHN, CL, CT, CV, CX and CXN Cab Unit Parts [637] — Blend Air System

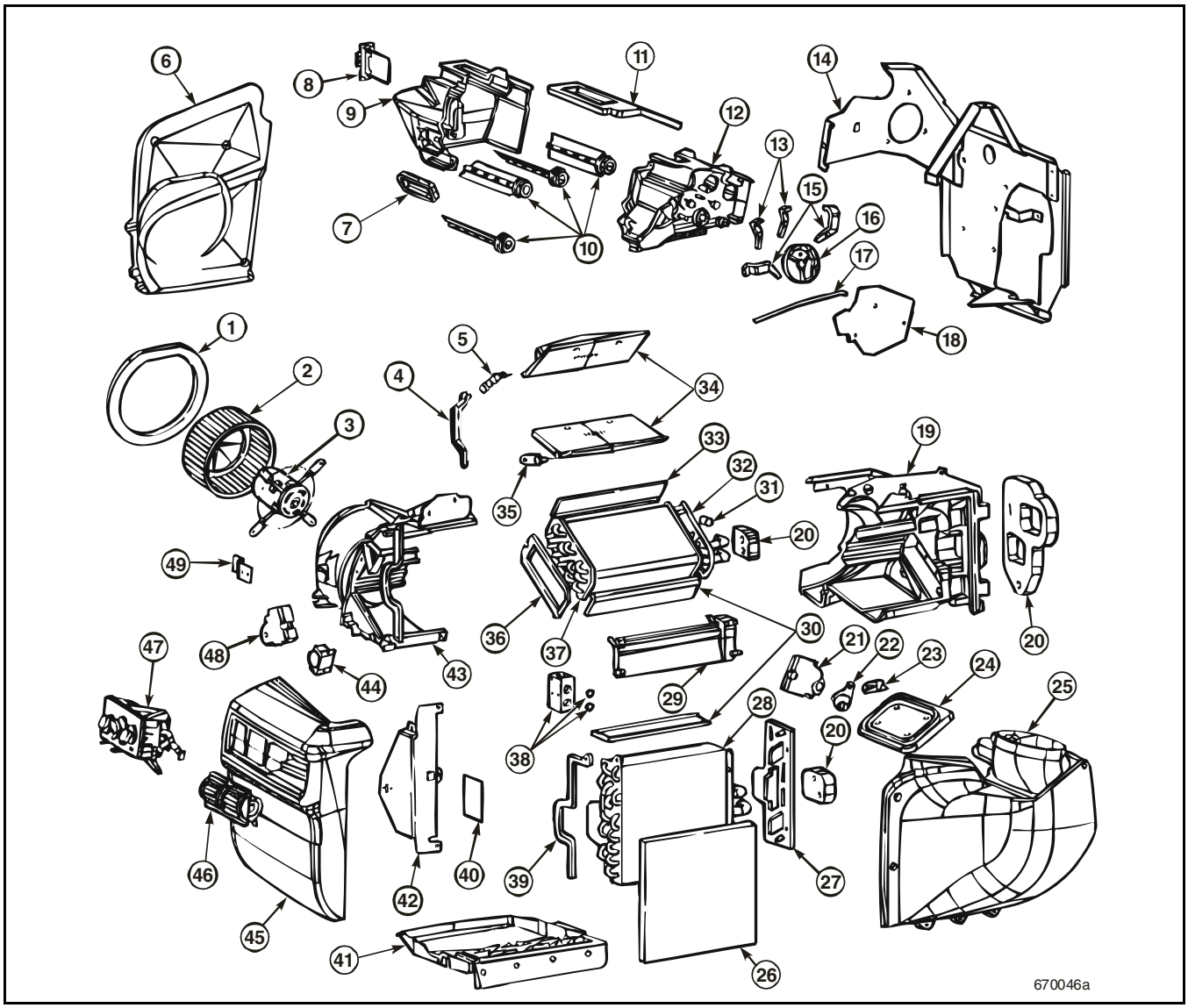

Figure 202 — CH, CHN, CL, CT, CV, CX and CXN Cab A/C System Assembly View, Automatic Temperature Control Unit

1. Blower Gasket	18. Mode Cover Bracket	34. Upper and Lower Blend Doors
2. Blower Wheel	19. Front Case	35. Lower Blend Door Link
3. Blower Motor	20. Dash Panel Gaskets	36. Heater Core Rear Gasket
4. Blend Door Tie Link	21. Fresh Air Door Actuator	37. Heater Core
5. Upper Blend Door Link	22. Fresh Air Door Cam	38. Expansion Valve and O-Rings
6. Unit Side Cover	23. Fresh Air Door Lever	39. Evaporator Gasket
7. Center Duct Gasket	24. Fresh Air Door	40. Service Label
8. Credit Card Resistor	25. Lower Duct	41. Drain Pan
9. Left Mode Case	26. Air Filter	42. Passenger-Side Weldment
10. Mode Doors	27. Evaporator Gasket	43. Rear Case
11. Upper Mode Box Gasket	28. Evaporator Core	44. Freeze Control Switch
12. Right Mode Case	29. Lower Bridge	45. Unit Front Cover
13. Defrost Mode Door Levers	30. Core Gasket	46. Louver
14. Main Cab Weldment	31. “Water In” Decal	47. Control Panel
15. Panel Mode Door Levers	32. Heater Core Front Gasket	48. Blend Door Actuator
16. Mode Cam	33. Core Gasket	49. Driver-Side Weldment
17. Mode Rod		

https://truckmanualshub.com/

CTP, CXP, CXU, CHU and GU Unit Parts [637] — Behr Cab A/C System Kinematics

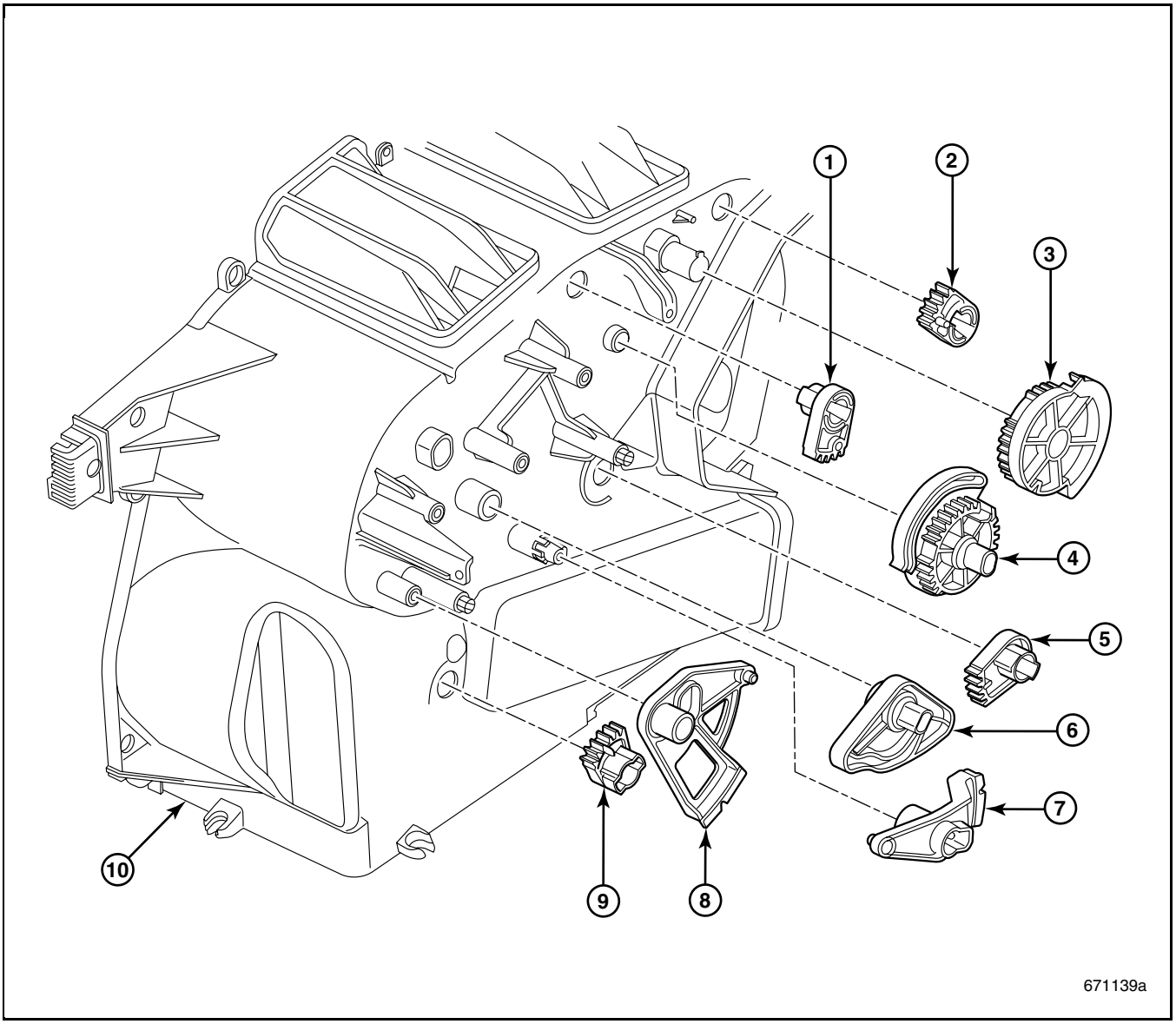

Figure 203 — CTP, CXP, CXU, CHU and GU Unit Parts, Behr Cab A/C System Kinematics

1. Lever, Gear Face 2. Lever, Gear Foot 3. Cam, Foot 4. Cam, Mode Door	5. Lever, Secondary Temp Door 6. Lever, Blend 7. Lever, Connecting Secondary Temp	8. Lever, Connecting Primary Temp 9. Lever, Primary Temp Door 10. Housing, Distributor, Air, Left

https://truckmanualshub.com/

CTP, CXP, CXU, CHU and GU Behr A/C System [637] — Service View (Complete Unit)

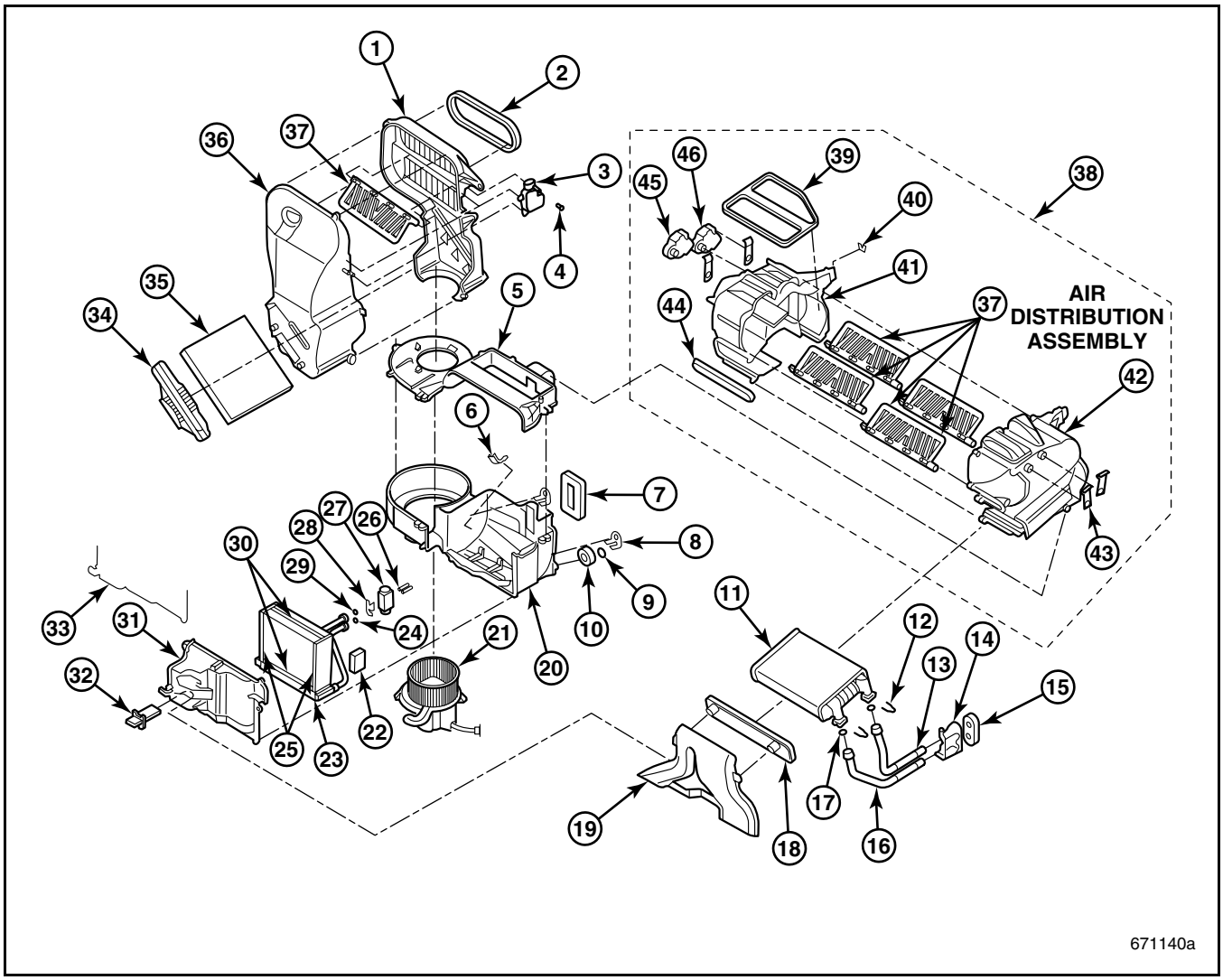

Figure 204 — CTP, CXP, CXU, CHU and GU Behr A/C System, Service View (Complete Unit)

1. Duct, Inlet, Front
2. Seal, Air Inlet 1/2″ THK Closed Cell with Adhesive
3. Actuator, OSA Door
4. Screw, M4-1.79 x 14
5. Housing, Top
6. Temperature Sensor, Evaporator
7. Seal, TXV FW 1/2″ THK Closed Cell with Adhesive
8. Washer, Insulator
9. Flap, Condensate Drain
10. Seal, Drain FW 1/2″ THK Closed Cell with Adhesive
11. Heater Core with Seals, Caps and Forks
12. Retainer Fork
13. Tube, Heater, Inlet
14. Bracket, Heater Tube
15. Seal, Heat Pipe FW 1/2″ THK Closed Cell with Adhesive
16. Tube, Heater, Outlet
17. Seal, O-Ring (18 mm ID)
18. Cover, Heater Core
19. Duct, Foot Passenger
20. Housing, Bottom
21. Assembly, Blower Motor, Balanced with Housing
22. Seal, Evaporator Outboard
23. Evaporator Core with TXV Seals and Caps
24. O-Ring, R134A
25. Seal, Evaporator Inboard
26. Screw, M5 x 0.8 x 40 SBHCS ZNII
27. Valve, TXV without Lineset Stud
28. Plate
29. O-Ring, R134A
30. Seal, 1/2″ THK Open Cell Polyester
31. Cover, Evaporator with String Seal
32. Resistor, Manual Blower Control
33. String Seal
34. Cover, Filter
35. Filter, Air Inlet
36. Duct, Inlet, Rear
37. Door, Air
38. Air Distribution Assembly
39. Seal, Outlet, Face-Def 1/2″ THK 2 lb. Open Cell Polyester
40. Clip, Stud
41. Housing, Distributor, Air, Left
42. Housing, Distributor, Air, Right
43. Clip, Duct
44. Seal, Outlet, Pass-Floor 1/2″ THK 2 lb. Open Cell Polyester
45. Actuator, Mode
46. Actuator, Temp

https://truckmanualshub.com/

INDEX

INDEX

A

A/C SERVICE RECOMMENDATIONS 102
A/C SYSTEM FEATURES AND OPERATION — APADS® CM812 MACK PART NO. 228RD33 (YELLOW LABEL) AND CM813 MACK PART NO. 228RD32 (WHITE LABEL) SYSTEM [637] 25
A/C SYSTEM FEATURES AND OPERATION — BEHR SYSTEM [637] 23
A/C SYSTEM FEATURES AND OPERATION — BLEND AIR SYSTEM [637] 19
A/C SYSTEM FEATURES AND OPERATION — RED DOT SYSTEM [637] 12
A/C SYSTEM REFRIGERANT CIRCUIT SCHEMATICS [637] 110
ABOUT THIS MANUAL 10
ACCEPTABLE FLUSHING FLUID AND SOLVENTS 102
ACR4 (BLACK SHROUD) RECOVERY AND RECYCLING UNIT 159
ADDITIONAL SERVICE PRECAUTIONS FOR R-134A REFRIGERANT 7
ADVISORY LABELS 2
AIR CONDITIONING SYSTEM SPECIFICATIONS [637] 106
AIR CONDITIONING TOOLS REQUIRED FOR R-134A 158
AIR DISTRIBUTION SCHEMATICS [733] 116
APADS® CM812 AND CM813 A/C CONTROL SYSTEM [637] 107
APADS® CM812 AND CM813 ELECTRICAL SCHEMATICS 154
ASSEMBLY VIEW AND PARTS IDENTIFICATION [637] 162

B

BACK FLUSHING 103
BLEND AIR HVAC UNIT CIRCUIT-BY-CIRCUIT TROUBLESHOOTING GUIDE 51
BLINK CODE IDENTIFICATION 58
BLINK CODES 28
BLOWER MOTOR RESISTOR CARD REMOVAL 66

C

CH AND CL AIR DELIVERY, AIR DELIVERY AIRFLOW AND AIR CONTROL LOGIC — RED DOT SYSTEM 116
CH, CHN, CHU, CL, CT, CTP, CV, CX, CXN, CXU, GU AND CXP MODEL A/C SYSTEM 110
CH, CHN, CHU, CL, CX, CXN, CXP AND CXU MILLENNIUM SLEEPER UNIT PARTS [637] — RED DOT SYSTEM 164
CH, CHN, CL, CT, CV, CX AND CXN A/C SYSTEM ELECTRICAL SCHEMATICS — BLEND AIR SYSTEM 149
CH, CHN, CL, CT, CV, CX AND CXN AIRFLOW — BLEND AIR A/C SYSTEM 121
CH, CHN, CL, CT, CV, CX AND CXN CAB HEATER/AIR CONDITIONER CONTROL PANELS [733] 20
CH, CHN, CL, CT, CV, CX AND CXN CAB UNIT PARTS [637] — BLEND AIR SYSTEM 172
CH, CHN, CL, CT, CV, CX AND CXN MODELS (BERGSTROM) WITH BLEND AIR ROTARY CONTROL PANEL AND HVAC UNIT — WITHOUT AUTOMATIC TEMPERATURE CONTROL (ATC) [637] 46
CH, CHN, CL, CT, CV, CX AND CXN MODELS WITH BLEND AIR ROTARY CONTROL PANEL AND HVAC UNIT — WITH AUTOMATIC TEMPERATURE CONTROL (ATC) [637] 49
CH, CHN, CL, CT, CV, CX AND CXN SYSTEM DESCRIPTION [637] 19
CH, CHN, CL, CT, CX AND CXN COMPONENT LOCATIONS [637] 30
CH, CHN, CL, CX AND CXN MILLENNIUM SLEEPER CLIMATE CONTROL PANELS [733] 14
CH, CHN, CX AND CXN MODELS WITH BLEND AIR SLEEPER SYSTEMS EXPERIENCING EVAPORATOR FREEZING AND ICING 52
CH, CL AND CX A/C SYSTEM ELECTRICAL SCHEMATICS — RED DOT SYSTEM 133
CH, CL AND CX CAB CLIMATE CONTROL PANELS [733] 12
CH, CL AND CX CAB UNIT PARTS [637] — RED DOT SYSTEM 162
CH, CL AND CX SYSTEM DESCRIPTION [637] . . . 12
CH, CV, CT AND CX MODELS WITH BLEND AIR HVAC SYSTEM COMPONENT LOCATIONS [637] 34
CHN, CXN, CV (ASET™) AND CT MODELS WITH BLEND AIR HVAC SYSTEM COMPONENT LOCATIONS [637] 35
CHU, CXU AND GU MODELS WITH BEHR HVAC SYSTEM COMPONENT LOCATIONS [637] 37
COMPONENT FLUSHING RECOMMENDATIONS 103
CONTROL AND DIAGNOSTIC FUNCTIONS 27
CORRECTIVE ACTION FOR SLEEPER BOX AIR CONDITIONER EVAPORATOR FREEZING AND ICING — CH, CHN, CV, CX AND CXN MODELS WITH BLEND AIR-TYPE HVAC SYSTEMS 94
CORRECTIVE ACTION FOR STICKING OR BINDING BLEND AIR-TYPE MODE BOX — CH, CHN, CL, CT, CX AND CXN MODELS WITH BLEND AIR-TYPE HVAC SYSTEMS 95

https://truckmanualshub.com/

INDEX

CORRECTIVE ACTIONS FOR KNOWN HVAC MALFUNCTIONS 94
CS AND MS A/C SYSTEM ELECTRICAL SCHEMATICS — RED DOT SYSTEM 147
CS AND MS BLOWER CONTROL SWITCH [733] 18
CS AND MS CAB UNIT PARTS [637] 170
CS AND MS COMPONENT LOCATIONS [637]. . . .33
CS AND MS MODEL A/C SYSTEM 115
CS AND MS SYSTEM DESCRIPTION [637] 17
CTP, CXP, CHU, CXU AND GU AIRFLOW — BEHR A/C SYSTEM 125
CTP, CXP, CHU, CXU AND GU BEHR CAB CLIMATE CONTROL PANEL [733] 24
CTP, CXP, CHU, CXU AND GU BEHR SYSTEM DESCRIPTION [637]. 23
CTP, CXP, CXU, CHU AND GU BEHR A/C SYSTEM [637] — SERVICE VIEW (COMPLETE UNIT). 174
CTP, CXP, CXU, CHU AND GU BEHR CAB A/C SYSTEM ELECTRICAL SCHEMATICS 151
CTP, CXP, CXU, CHU AND GU UNIT PARTS [637] — BEHR CAB A/C SYSTEM KINEMATICS 173
CX MODEL A/C SYSTEM WITHOUT CONSTANT TEMPERATURE CONTROL (CTC) — RED DOT SYSTEM [637] 40
CX, CH AND CL MODELS WITH ROTARY CONTROL PANEL A/C SYSTEM WITH CONSTANT TEMPERATURE CONTROL (CTC) — RED DOT SYSTEM [637] 44
CXP AND CTP MODELS WITH BEHR HVAC SYSTEM COMPONENT LOCATIONS [637] . . .36

D

DIAGNOSTIC FAULT DESCRIPTIONS 27
DIAGNOSTIC FLOW CHARTS 62
DM, DMM, RB, RD6 AND RD8 A/C SYSTEM ELECTRICAL SCHEMATICS — RED DOT SYSTEM 139
DM, DMM, RB, RD6 AND RD8 AIR DELIVERY AND AIR CONTROL LOGIC — RED DOT SYSTEM 119
DM, DMM, RB, RD6 AND RD8 CAB UNIT PARTS [637] — RED DOT SYSTEM. 165
DM, DMM, RB, RD6 AND RD8 CLIMATE CONTROL PANEL [733] 15
DM, DMM, RB, RD6 AND RD8 COMPONENT LOCATIONS [637] 31
DM, DMM, RB, RD6 AND RD8 MODEL A/C SYSTEM 111
DM, DMM, RB, RD6 AND RD8 SYSTEM DESCRIPTION [637]. 15

E

ELECTRICAL. 107
ELECTRICAL I/O DEFINITIONS 26
ELECTRICAL SYSTEM DIAGRAMS [637] 133
ENVIRONMENTAL 107
EVAPORATOR REPLACEMENT (START OF PRODUCTION 3RD QUARTER 2005 TO 2ND QUARTER 2007) 70
EXPLANATION OF NUMERICAL CODE 9
EXPLANATION OF THREE-DIGIT NUMERICAL CODE. 9

F

FAN OVERRIDES [230] 25
FDM CAB UNIT PARTS [637] 166
FDM CLIMATE CONTROL PANEL [733] 16
FDM COMPONENT LOCATIONS [637] 31
FDM MODEL A/C SYSTEM 112
FDM SYSTEM DESCRIPTION [637]. 15
FLUSHING DURATION. 103
FLUSHING EQUIPMENT 102
FLUSHING THE A/C SYSTEM DURING COMPRESSOR REPLACEMENT 102
FOUR-PIN CONNECTOR 57
FUNCTIONAL DESCRIPTION 25

H

HEATER/AIR CONDITIONER CAB CONTROL BOARD FUSE — CH, CHN, CL, CT, CV, CX AND CXN MODELS. 68
HIGH REFRIGERANT PRESSURE FAN ON TIME [230] 25

L

LE AND LEU HEATER CONTROL ONLY [733] . . . 16
LE, LEU, MR AND MRU MODELS WITH ROOF-MOUNTED A/C SYSTEM. 113
LE, LEU, MR AND MRU ROOF-MOUNTED A/C SYSTEM DESCRIPTION [637] 16
LE, LEU, MR AND MRU ROOF-MOUNTED A/C SYSTEM ELECTRICAL SCHEMATICS — RED DOT SYSTEM 143
LE, LEU, MR AND MRU ROOF-MOUNTED UNIT PARTS [637] 167
LE, LEU, MR AND MRU WITH ROOF-MOUNTED A/C SYSTEM COMPONENT LOCATIONS [637] 32

https://truckmanualshub.com/

INDEX

M

MECHANICAL. 107
MILLENNIUM SLEEPER A/C UNIT [637] 45
MODE ACTUATOR REMOVAL AND INSTALLATION TOOLS (BEHR CLIMATE UNIT). 159
MR AND MRU CAB-MOUNTED A/C SYSTEM CLIMATE CONTROL PANEL [733]. 17
MR AND MRU CAB-MOUNTED A/C SYSTEM COMPONENT LOCATIONS [637]. 32
MR AND MRU CAB-MOUNTED A/C SYSTEM DESCRIPTION [637] 17
MR AND MRU CAB-MOUNTED A/C SYSTEM ELECTRICAL SCHEMATICS — RED DOT SYSTEM 144
MR AND MRU CAB-MOUNTED UNIT PARTS [637] 169
MR AND MRU MODEL WITH CAB-MOUNTED A/C SYSTEM. 114

P

PERSONAL SAFETY 5

R

R-134A PUREGUARD2 REFRIGERANT TESTER 158
R-134A SMART CART 158
R-134A VS. R-12 SYSTEM COMPONENT DIFFERENCES (“DO'S” AND “DON'TS”) 6
REAR A/C SYSTEM EVAPORATOR AND HOSE FLUSHING. 103
RED DOT CTC2 ANALYZER 158
REFRIGERANT AND OIL CHARGE LEVELS [637] 106
REPAIR INSTRUCTIONS — BEHR HVAC UNIT (CTP, CXP, CXU, CHU AND GU MODELS) . . . 70
REPAIR INSTRUCTIONS — BERGSTROM HVAC UNIT 66
RESIDUAL FLUSHING FLUID REMOVAL 103

S

SAFETY INFORMATION 2
SAFETY MEASURES 102
SCAVENGER A/C RECOVERY ONLY UNIT 158
SERVICE PROCEDURES AND TOOL USAGE 3
SIX-PIN CONNECTOR 57
SMART FAN CONTROL PARAMETERS [230] 25
SUCTION SIDE FLUSHING. 103

T

TESTING THE APADS® CM812 AND CM813 MODULE [637] 57
TROUBLESHOOTING APADS® CM812 AND CM813 SYSTEMS 58
TROUBLESHOOTING BEHR HVAC SYSTEM — CTP, CXP, CXU, CHU AND GU MODELS [637] 53
TROUBLESHOOTING CHARTS 59
TROUBLESHOOTING MODELS WITH ROTARY CONTROL PANEL AND MILLENNIUM SLEEPER [637] 40

V

V-MAC CONTROL OF THE ON/OFF FAN [230] . . . 25

https://truckmanualshub.com/

AIR CONDITIONING SYSTEM

SERVICE MANUAL

PRINTED IN U.S.A.
18-902

© MACK TRUCKS, INC. 2007