https://truckmanualshub.com/

GP/GLP/GDP80VX, GP/GLP/GDP90VX, GP/GLP/GDP100VX, GP/GLP/GDP110VX, GP/GLP/GDP120VX (J813)
SERVICE MANUAL CONTENTS

SECTION	PART NUMBER	YRM NUMBER	REV DATE
FRAME	524262274	0100 YRM 1243	05/14
OPERATOR'S CAB	524306203	0100 YRM 1290	04/14
GM 4.3L V-6 ENGINES	524265337	0600 YRM 1251	05/14
KUBOTA ENGINE REPAIR	550048607	0600 YRM 1557	03/13
KUBOTA DIESEL 3.6L ENGINE	550055279	0600 YRM 1579	01/14
COOLING SYSTEM	524223757	0700 YRM 1123	03/13
LPG FUEL SYSTEM GM 4.3L ENGINE WITH PSI	550043871	0900 YRM 1556	04/14
GASOLINE FUEL SYSTEM	550048401	0900 YRM 1570	09/13
1 AND 2 SP PS TRANSMISSION REPAIR	550048681	1300 YRM 1569	08/13
DRIVE AXLE AND DIFFERENTIAL ASSEMBLY REPAIR	524262278	1400 YRM 1246	12/13
DRIVE AXLE AND DIFFERENTIAL ASSEMBLY REPAIR	550055280	1400 YRM 1582	12/13
STEERING AXLE	524223764	1600 YRM 1133	07/13
WET BRAKES - NMHG	550064329	1800 YRM 1597	12/13
HYDRAULIC GEAR PUMP	524223766	1900 YRM 1136	04/14
HYDRAULIC CLEANLINESS PROCEDURES	550073240	1900 YRM 1620	12/14
MAIN CONTROL VALVE	524223767	2000 YRM 1137	04/14
CYLINDER REPAIR (MAST S/N A551, A555, A559, A661, A662, A663, A66, B507, B508, B509, B551, B555, B559, B562, B563, B564, B661, B662, B663, C515, C551, C555, C559, D507, D508, D509, D515, D562, D563, D564, E509, AND E564)	524223768	2100 YRM 1139	02/14
HIGH VOLTAGE SWITCH (HVS) IGNITION	524208014	2200 YRM 1097	05/14
WIRE HARNESS REPAIR	524223769	2200 YRM 1128	12/14
USER INTERFACE	524223770	2200 YRM 1130	12/14
USER INTERFACE	524223771	2200 YRM 1131	12/14
ELECTRICAL SYSTEM	524223772	2200 YRM 1142	04/14
MAST REPAIRS (S/N A513, A514, A613, A614, A702, A703, A704, A705, A706, A707, A751, A752, B513, B514, B586, B587, B588, B589, B590, B591, B749, B750, B751, B752, B753, B754)	524265342	4000 YRM 1250	02/14
METRIC AND INCH (SAE) FASTENERS	524150797	8000 YRM 0231	10/13
CALIBRATION PROCEDURES	524223780	8000 YRM 1134	12/14
DIAGRAMS AND SCHEMATICS	550055283	8000 YRM 1585	04/14
PERIODIC MAINTENANCE	550068685	8000 YRM 1604	12/13
CAPACITIES AND SPECIFICATIONS	550068693	8000 YRM 1605	07/14
DIAGRAMS AND SCHEMATICS	550096331	8000 YRM 1689	04/14
DIAGNOSTIC TROUBLESHOOTING MANUAL	524221866	9000 YRM 1112	12/14

9000 YRM 1112 ON CD

PART NO. 550069027 (12/14)

https://truckmanualshub.com/

SAFETY PRECAUTIONS
MAINTENANCE AND REPAIR

- The Service Manuals are updated on a regular basis, but may not reflect recent design changes to the product. Updated technical service information may be available from your local authorized Yale® dealer. Service Manuals provide general guidelines for maintenance and service and are intended for use by trained and experienced technicians. Failure to properly maintain equipment or to follow instructions contained in the Service Manual could result in damage to the products, personal injury, property damage or death.
- When lifting parts or assemblies, make sure all slings, chains, or cables are correctly fastened, and that the load being lifted is balanced. Make sure the crane, cables, and chains have the capacity to support the weight of the load.
- Do not lift heavy parts by hand, use a lifting mechanism.
- Wear safety glasses.
- DISCONNECT THE BATTERY CONNECTOR before doing any maintenance or repair on electric lift trucks. Disconnect the battery ground cable on internal combustion lift trucks.
- Always use correct blocks to prevent the unit from rolling or falling. See HOW TO PUT THE LIFT TRUCK ON BLOCKS in the **Operating Manual** or the **Periodic Maintenance** section.
- Keep the unit clean and the working area clean and orderly.
- Use the correct tools for the job.
- Keep the tools clean and in good condition.
- Always use **YALE APPROVED** parts when making repairs. Replacement parts must meet or exceed the specifications of the original equipment manufacturer.
- Make sure all nuts, bolts, snap rings, and other fastening devices are removed before using force to remove parts.
- Always fasten a DO NOT OPERATE tag to the controls of the unit when making repairs, or if the unit needs repairs.
- Be sure to follow the **WARNING** and **CAUTION** notes in the instructions.
- Gasoline, Liquid Petroleum Gas (LPG), Compressed Natural Gas (CNG), and Diesel fuel are flammable. Be sure to follow the necessary safety precautions when handling these fuels and when working on these fuel systems.
- Batteries generate flammable gas when they are being charged. Keep fire and sparks away from the area. Make sure the area is well ventilated.

NOTE: The following symbols and words indicate safety information in this manual:

WARNING

Indicates a hazardous situation which, if not avoided, could result in death or serious injury.

CAUTION

Indicates a hazardous situation which, if not avoided, could result in minor or moderate injury and property damage.

On the lift truck, the WARNING symbol and word are on orange background. The CAUTION symbol and word are on yellow background.

https://truckmanualshub.com/

TABLE OF CONTENTS

General 1
Description 2
Hood, Seat, and Side Covers Replacement 4
Remove 4
Install 4
Steering Column 12
Description 12
Steering Column Repair 12
Remove 12
Disassemble 13
Clean 16
Inspect 16
Assemble 16
Install 16
LPG Tank and Bracket Replacement 17
Counterweight Replacement 17
Remove 17
Install 20
Tow Pin 24
Remove and Install For Lift Truck Models GLP/GDP40VX5/VX6; GLP/GDP45SVX5, GLP/GDP45VX6; GLP/GDP50-55VX (GP/GLP/GDP080, 090, 100, 110, 120VX) (F813, G813, H813) 24
Remove and Install For Lift Truck Models GLC55SVX (GC/GLC80XVBCS, GC/GLC100VXBCS; GC/GLC120SVX; and GC/GLC120VXPRS) (E818, F818) and GLP/GDP40VX5/VX6; GLP/GDP45SVX5, GLP/GDP45VX6; GLP/GDP50-55VX (GP/GLP/GDP080, 090, 100, 110, 120VX) (J813) 24
Overhead Guard Replacement 25
Remove 25
Install 25
LED Tail, Backup, and Brake Lights, Replace 26
Operator Restraint System Replacement 26
Description 26
Engine Replacement 28
Remove Engine Only 28
Install Engine only 56
Remove Engine and Transmission 60
Install Engine and Transmission 65
Electronic Throttle Replacement 69
Cummins 4.5L Diesel Engine With Electronic Throttle 69
Remove 69
Install 69
Pull Actuator Linkage Adjustment 74
Low Idle Adjustment 75
Throttle Pedal and Cable Adjustment 75
Cummins 4.5L Diesel Engine with Basic Power Shift Transmission 75
Kubota 3.6L Diesel Engine 75
Exhaust System Repair 78
GM 4.3L Engine for Lift Truck Models and GLC40, 45, 55VX; GLC55SVX; (GC/GLC080, 100, 120VX; GC/GLC080, 100VXBCS; GC/GLC120SVX; GC/GLC120VXPRS) (E818, F818) 78
Cummins 4.5L Diesel Engine for Lift Truck Models GLP/GDP40VX5/VX6; GLP/GDP45SVX5, GLP/GDP45VX6; GLP/GDP50-55VX (GP/GLP/GDP080, 090, 100, 110, 120VX) (F813) 78

©2014 Yale Materials Handling Corp.

https://truckmanualshub.com/

TABLE OF CONTENTS (Continued)

Remove 78
Inspect 78
Install 78
Cummins QSB 3.3L Engine for Lift Truck Models GLP/GDP40VX5/VX6; GLP/GDP45SVX5, GLP/GDP45VX6; GLP/GDP50-55VX (GP/GLP/GDP080, 090, 100, 110, 120VX) (G813).... 80
Remove 80
Inspect 82
Install 82
Kubota Diesel Engine for Lift Truck Models and Equipped with Kubota 3.6L Diesel Engine GLP/GDP40VX5/VX6; GLP/GDP45SVX5, GLP/GDP45VX6; GLP/GDP50-55VX (GP/GLP/GDP080, 090, 100, 110, 120VX) (H813)....82
Remove 82
Inspect 84
Install 84
Kubota Diesel Engine for Lift Truck Models GLP/GDP40VX5/VX6; GLP/GDP45SVX5, GLP/GDP45VX6; GLP/GDP50-55VX (GP/GLP/GDP080, 090, 100, 110, 120VX) (J813).... 84
Remove 84
Inspect 87
Diesel Particulate Filter 89
Disassemble 89
CLEAN AND INSPECT 90
Assembly 91
Install 91
Cooling System 92
Description 92
Hydraulic Filter Assembly Repair 93
Remove 93
Disassemble 93
Clean 94
Inspect 94
Assemble 94
Install 94
Fuel and Hydraulic Tanks Repair 94
Inspect 94
Clean 95
Steam Method of Cleaning 95
Chemical Solution Method of Cleaning 96
Additional Preparations for Repair 96
Small Leaks, Repair 96
Large Leaks, Repair 96
Preparations for Use After Repair 96
Safety Labels 97

This section is for the following models:

GLC40, 45, 55VX; GLC55SVX (GC/GLC080, 100, 120VX; GC/GLC080, 100VXBCS; GC/GLC120SVX; GC/GLC120VXPRS) [E818, F818]; GLP/GDP40VX5/VX6; GLP/GDP45SVX5, GLP/GDP45VX6; GLP/GDP50-55VX (GP/GLP/GDP080, 090, 100, 110, 120VX) [F813, G813, H813, J813]

https://truckmanualshub.com/

General

WARNING

The lift truck must be put on blocks for some types of maintenance and repairs. The removal of the following assemblies will cause large changes in the center of gravity: mast, drive axle, engine and transmission, and counterweight. When the lift truck is put on blocks, put additional blocks in the following positions to maintain stability:

- **Before removing the mast and drive axle, put blocks under the counterweight so the lift truck cannot fall backward.**
- **Before removing the counterweight, put blocks under the mast assembly so the lift truck cannot fall forward.**

The surface must be solid, even, and level when the lift truck is put on blocks. Make sure any blocks used to support the lift truck are solid, one-piece units. See the procedure How to Put Lift Truck on Blocks in the Operating Manual or the Periodic Maintenance section for your lift truck.

If additional engine repairs are necessary for lift trucks covered in this manual see:

- **GM 4.3L V-6 Engines** 0600YRM1251
- **Kubota Diesel 3.8L Engines** 0600YRM1557
- **Kubota Diesel 3.6L Engine** 0600YRM1579

If additional transmission repairs are necessary for lift trucks covered in this manual see:

- **Powershift Transmission** 1300YRM1129
- **Powershift Transmission** 1300YRM1529
- **One and Two Speed Transmissions** 1300YRM1569

This section contains the description of the frame (see Figure 1 or Figure 2) and connected parts. Procedures for removing and installing the counterweight, hood, overhead guard, engine and transmission, and exhaust system are found in this section. Checks for the operator restraint system and procedures for the repair of tanks and installation of safety labels are also included.

https://truckmanualshub.com/

Description

The frame is one weldment and includes the hydraulic tank and fuel tank for gasoline or diesel fuel. See Figure 1 or Figure 2.

There is a counterweight for each capacity of lift truck. The counterweights are similar in appearance, but are different weights. **See Table 2.**

The muffler is fastened to the frame inside the counterweight.

The overhead guard, cowl, and hood are installed on the frame. The hood is connected to the frame with hinges. Two gas-controlled springs provide assistance when raising the hood and hold the hood in the open position. The floor plate and side covers can be removed for access to the engine, transmission, and other components.

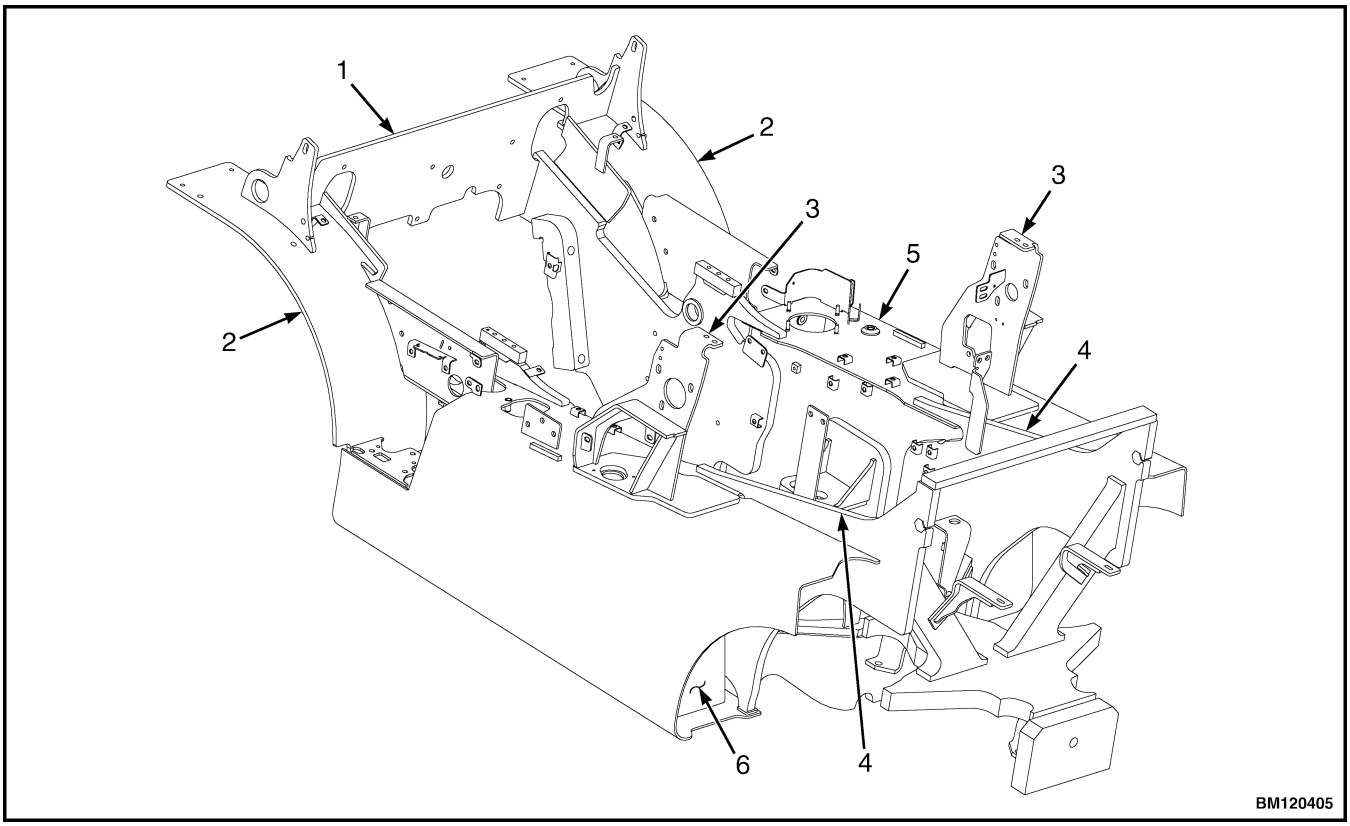

1. COWL PLATE
2. FENDERS
3. HOOD MOUNTS
4. COUNTERWEIGHT MOUNTS
5. HYDRAULIC TANK
6. FUEL TANK (GAS OR DIESEL)

Figure 1. Frame for Lift Trucks with Single Hydraulic Tank

https://truckmanualshub.com/

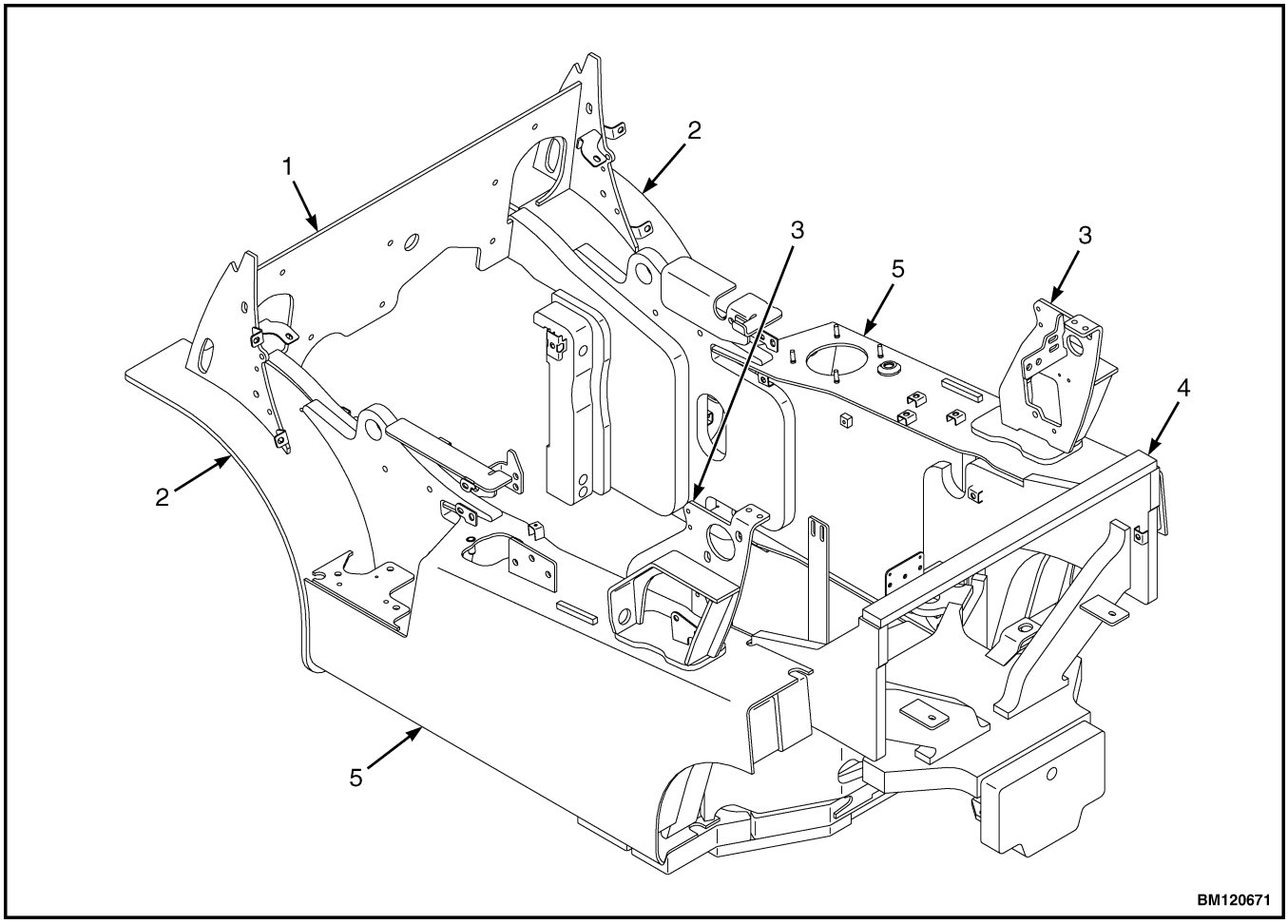

1. COWL PLATE
2. FENDERS
3. HOOD MOUNTS
4. COUNTERWEIGHT MOUNTS
5. HYDRAULIC TANKS

Figure 2. Frame for Lift Trucks with Dual Hydraulic Tanks

https://truckmanualshub.com/

Hood, Seat, and Side Covers Replacement

REMOVE

1. Slide seat to the closest position to steering column.
2. Fully tilt steering column forward.
3. If your truck is equipped with an LPG tank, swing tank off to the side.
4. Raise latch on the left, front corner of hood to unlatch and lift up hood. See Figure 3.
5. Remove floor mat and floor plate. See Figure 4.
6. Remove two capscrews holding left and right rear side covers to the frame. Remove rear side covers from frame. See Figure 4.
7. Remove two capscrews holding left and right fender covers to front overhead guard leg. Remove covers. See Figure 4.
8. Remove four capscrews holding left and right front side covers to frame. Remove covers.
9. Fully lower the steering column.
10. Remove upper steering column cover by pulling up on upper steering column cover to release latches (one on either side), and pulling cover away from steering column. See Figure 5.
11. Remove five fasteners (see Figure 5) securing dash to the top of cowl. Remove four clips, located underneath dash, that attach dash to the kick panel. Lift to remove dash.
12. Lift kick panel to remove it from truck. See Figure 4.
13. Remove three capscrews holding the seal plate. Remove seal plate. See Figure 6.
14. Disconnect seat wire harness connector. See Figure 3.

CAUTION

When removing the seat from the hood, DO NOT use an impact wrench to remove the capscrews. Damage can be caused to the threads on the screws and in the holes.

15. If seat is to be removed, and truck is equipped with a non-swivel seat, remove seat wire harness from seat wire harness brackets that are attached to the underside of hood. Remove the cable clips from the seat wire harness. If truck is equipped with a swivel seat, remove seat wire harness from seat wire harness bracket attached to underside of hood and behind the seat. See Figure 3.
16. Remove four capscrews and washers holding seat to the hood. Lift seat off the hood. Pull seat wire harness through hood. See Figure 3.
17. Remove capscrews and washers at top of the gas springs. Remove gas springs from hood.
18. Remove hinge screws, located in the rear of the hood.
19. Lift hood from the truck. See Figure 3.

INSTALL

1. Place hood onto the lift truck frame.
2. Install hinge screws, located in the rear of the hood, and tighten to 38 N•m (28 lbf ft). See Figure 3.
3. Align top holes in the gas springs with holes in hood. There are two sets of holes used to install the gas springs to hood, based on the type of seat installed on lift truck. One set is for installing the cylinder end of the gas springs and the other set is for attaching the rod end of the gas springs. Install capscrews and washers to attach gas springs to the hood. Refer to Figure 7 and Table 1 for correct holes used to connect the rod end of the cylinder, depending on the type of seat installed on the lift truck. Tighten capscrews to 19.2 N•m (170 lbf in).

https://truckmanualshub.com/

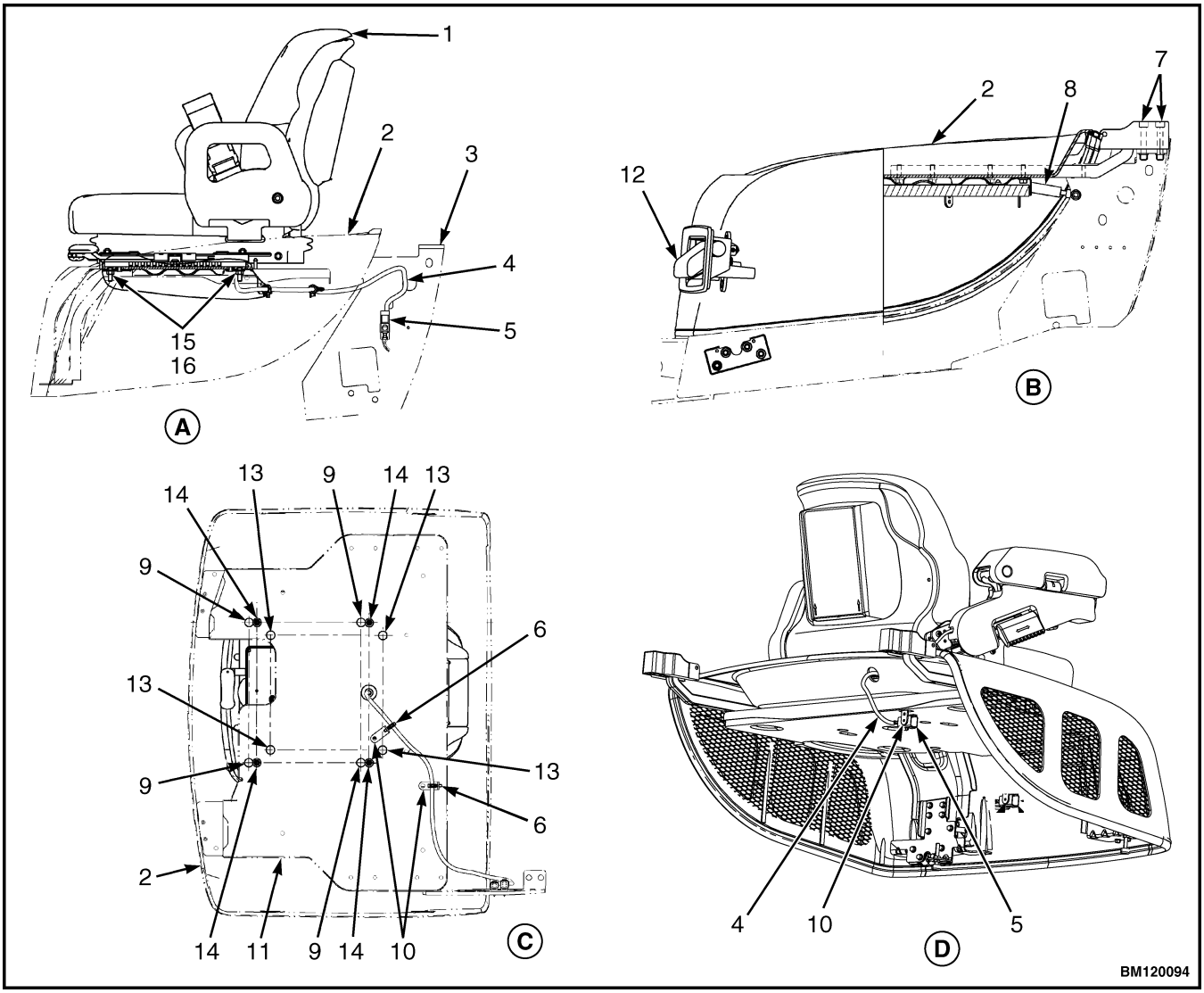

NOTE: SWIVEL SEAT AND VENTED HOOD ARE OPTIONAL FEATURES.

A. SIDE VIEW OF HOOD AND SEAT
B. SIDE VIEW OF HOOD
C. BOTTOM VIEW OF HOOD
D. SIDE VIEW OF VENTED HOOD WITH SWIVEL SEAT

1. SEAT
2. HOOD
3. FRAME
4. SEAT WIRE HARNESS
5. SEAT WIRE HARNESS CONNECTOR
6. CABLE CLIPS
7. HINGE SCREWS
8. GAS SPRING
9. ATTACHMENT HOLES ATTACHING HOOD TO SEAT (SEMI-SUSPENSION)
10. SEAT WIRE HARNESS BRACKETS
11. SEAT LINER
12. HOOD LATCH
13. ATTACHMENT HOLES ATTACHING HOOD TO SEAT (NON-SUSPENSION)
14. ATTACHMENT HOLES ATTACHING HOOD TO SEAT (FULL SUSPENSION)
15. SPACER
16. FLANGE NUT

Figure 3. Hood and Seat Arrangement

https://truckmanualshub.com/

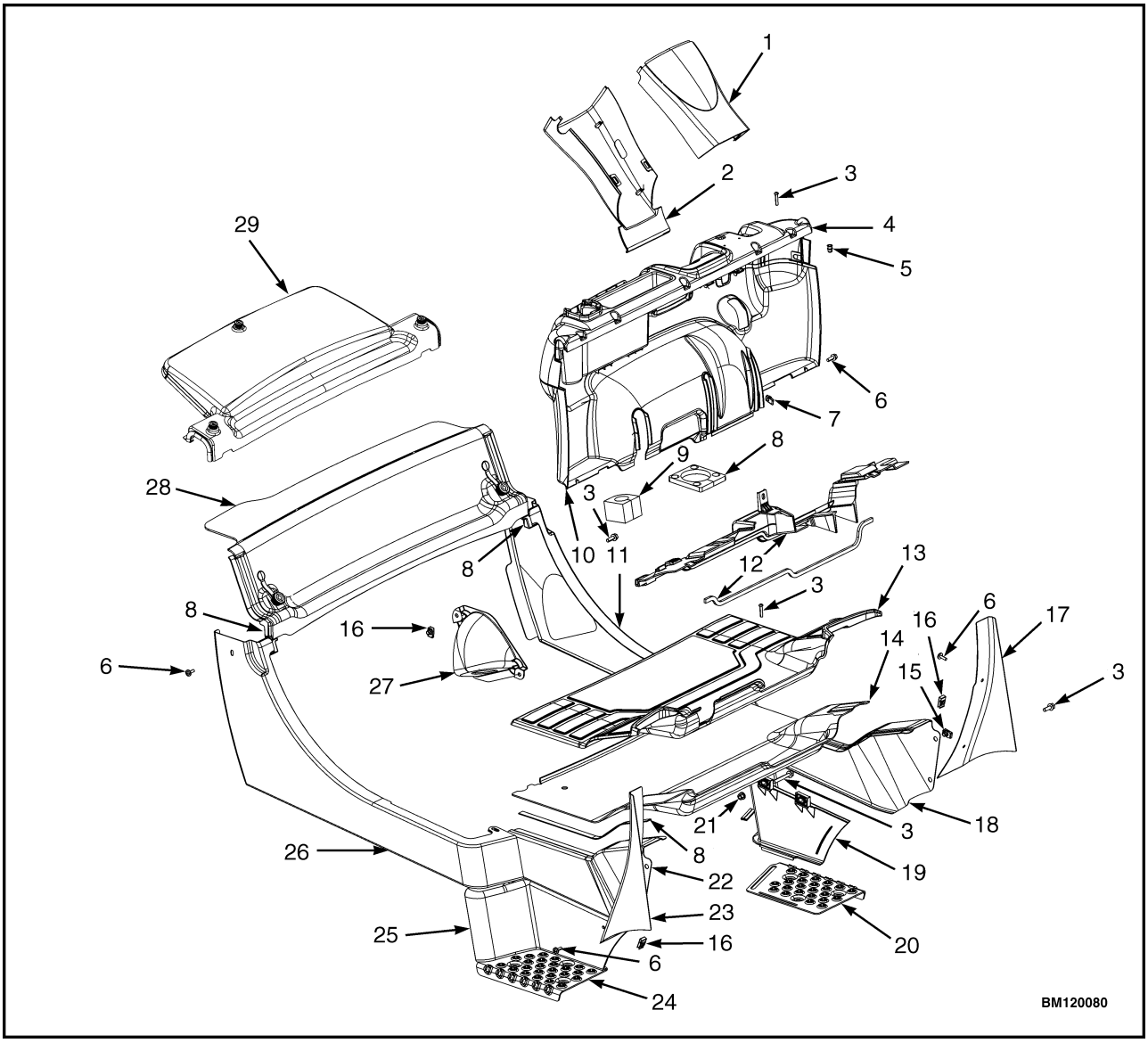

1. UPPER STEERING COLUMN COVER
2. LOWER STEERING COLUMN COVER
3. CAPSCREW
4. DASH ASSEMBLY
5. INSERT
6. SCREW
7. CLIP
8. SEAL
9. GROMMET
10. KICK PANEL
11. LEFT REAR SIDE COVER
12. SEAL PLATE ASSEMBLY
13. FLOOR MAT
14. FLOOR PLATE
15. CLIP NUT
16. FOLDOVER NUT
17. LEFT FENDER COVER
18. LEFT FRONT SIDE COVER
19. LEFT PANEL
20. LEFT STEP PLATE
21. LOCK NUT
22. RIGHT FRONT SIDE COVER
23. RIGHT FENDER COVER
24. RIGHT STEP PLATE
25. RIGHT PANEL
26. RIGHT REAR SIDE COVER
27. SPLASH SHIELD
28. RADIATOR COVER GLC40, 45, 55VX; GLC55SVX; (GC/GLC080, 100, 120VX; GC/GLC080, 100VXBCS; GC/GLC120SVX; GC/GLC120VXPRS) (E818, F818)
29. RADIATOR COVER (GLP/GDP40VX5/VX6; GLP/GDP45SVX5, GLP/GDP45VX6; GLP/GDP50-55VX (GP/GLP/GDP080, 090, 100, 110, 120VX) (F813, G813, H813, J813)

Figure 4. Side Covers, Floor Plate, and Cowl Components

https://truckmanualshub.com/

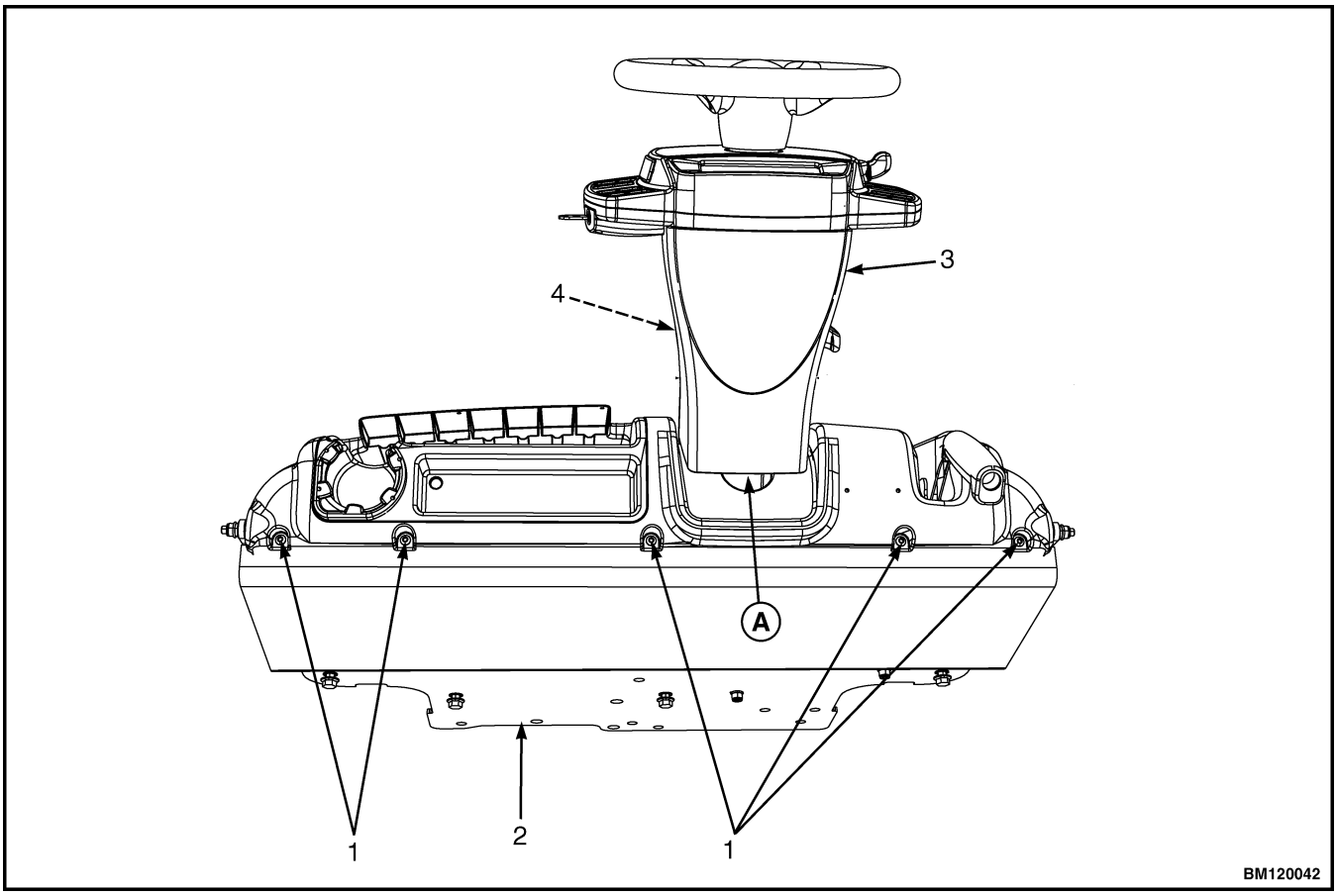

NOTE: TOP VIEW OF DASH SHOWN.

A. INDICATES TO PULL UP TO UNLATCH

1. ALLEN SCREWS
2. COWL
3. UPPER STEERING COLUMN COVER
4. LOWER STEERING COLUMN COVER

Figure 5. Remove Dash From Cowl

https://truckmanualshub.com/

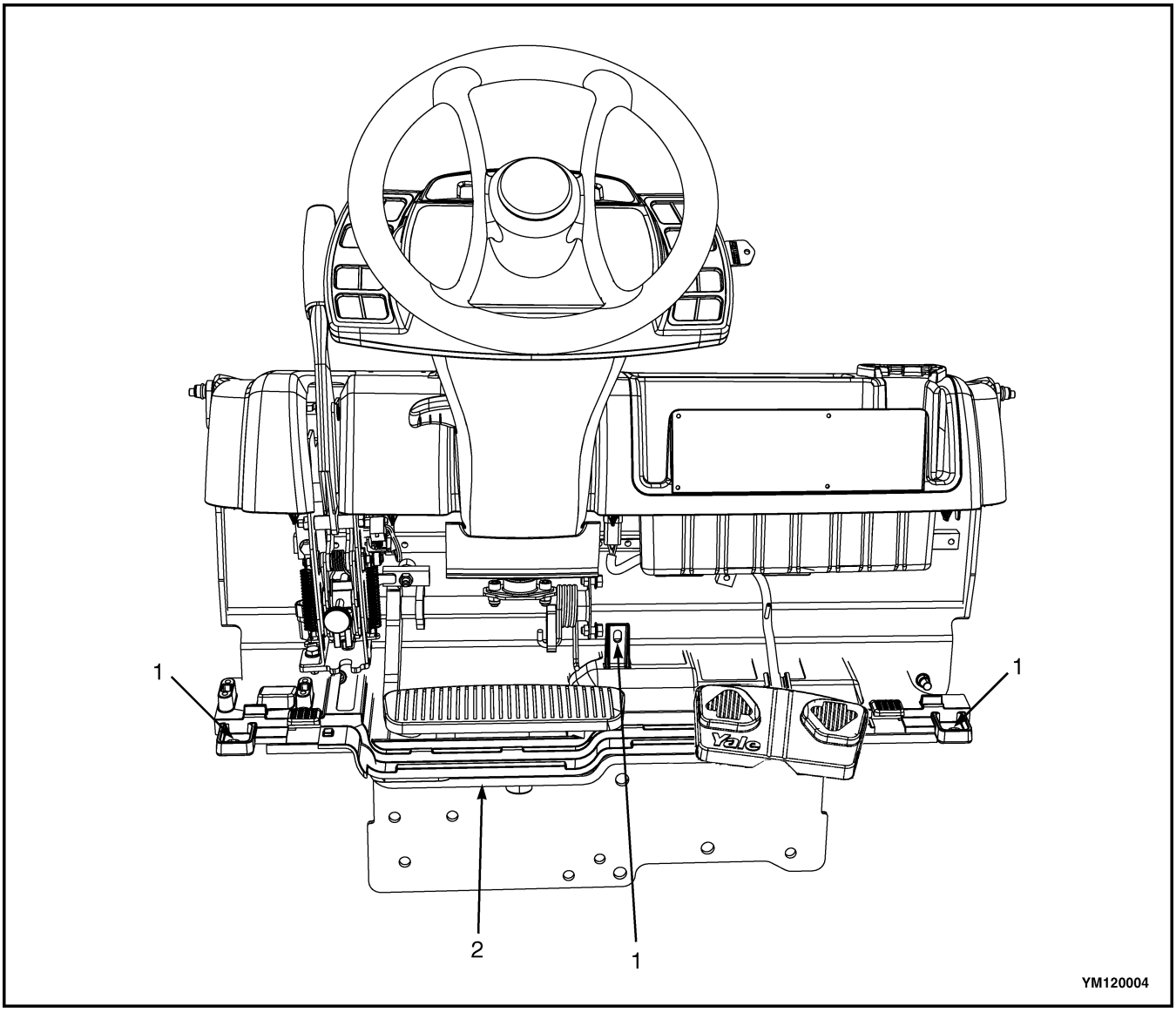

1. CAPSCREWS
2. SEAL PLATE

Figure 6. Remove Seal Plate From Dash

https://truckmanualshub.com/

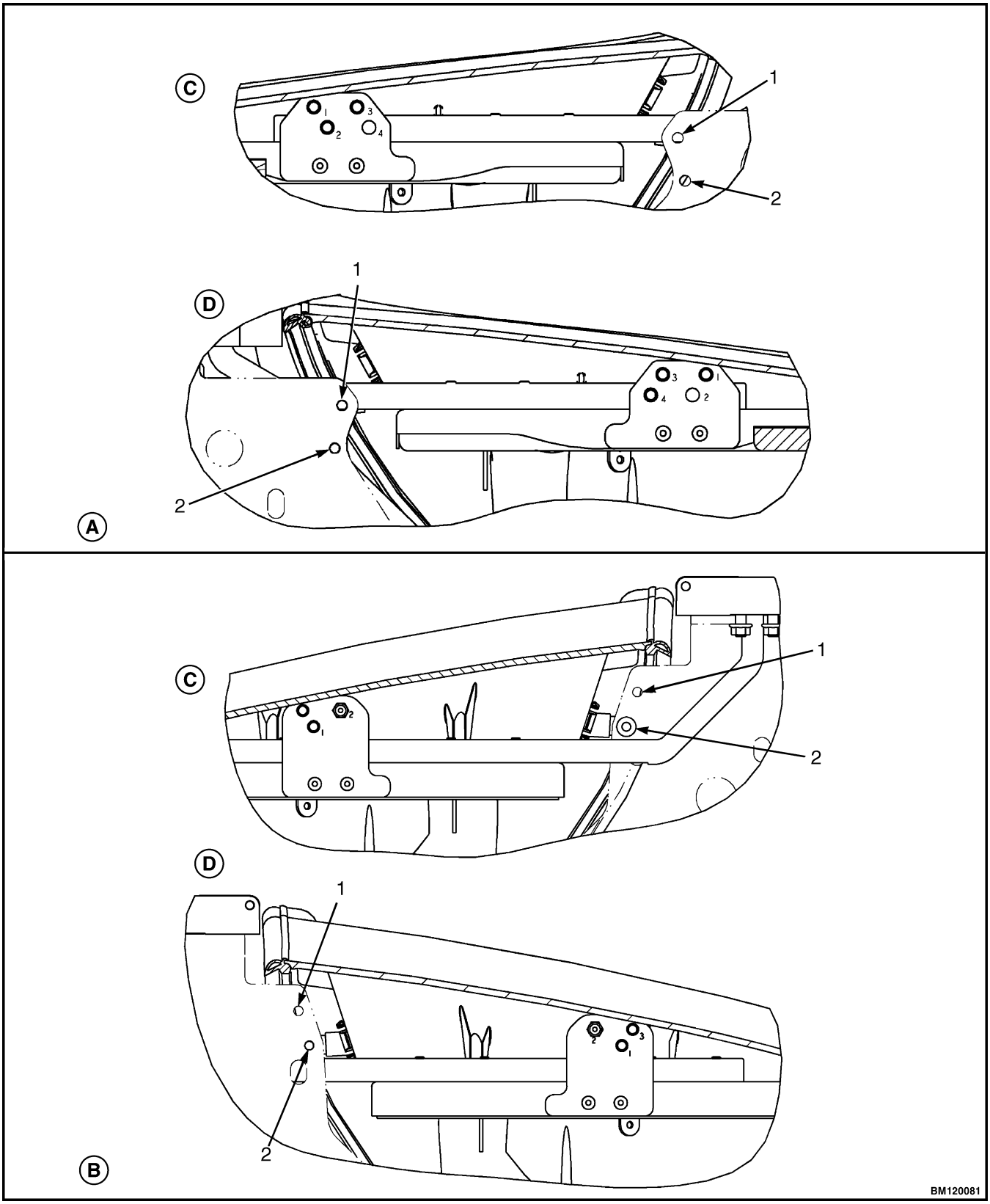

Figure 7. Gas Spring Installation

https://truckmanualshub.com/

Legend for Figure 7

NOTE: SEE TABLE 1 FOR HOLES TO USE TO ATTACH ROD END OF GAS SPRING.

A. GLC40, 45, 55VX; GLC55SVX; (GC/GLC080, 100, 120VX; GC/GLC080, 100VXBCS; GC/GLC120SVX; GC/GLC120VXPRS) (E818, F818)
B. GLP/GDP40VX5/VX6; GLP/GDP45SVX5, GLP/GDP45VX6; GLP/GDP50-55VX (GP/GLP/GDP080, 090, 100, 110, 120VX) (F813, G813, H813, J813)
C. LEFT SIDE
D. RIGHT SIDE

1. MOUNTING LOCATION FOR CYLINDER END OF GAS SPRING FOR NON-SUSPENSION SEAT
2. MOUNTING LOCATION FOR CYLINDER END OF GAS SPRING FOR SEMI OR FULL SUSPENSION SEAT

Table 1. Gas Spring Installation, Holes for Installing Rod Ends (See Figure 7)

Counterweight Type	Full or Semi Suspension Seat		Non-Suspension Seat	
	Left Side	Right Side	Left Side	Right Side
Standard Counterweight GLC40, 45, 50, 55VX (GC/GLC080, 100, 120VX) (E818, F818)	3	3	1	1
Standard Counterweight GLP/GDP40VX5/VX6; GLP/GDP45SVX5, GLP/GDP45VX6; GLP/GDP50-55VX (GP/GLP/GDP080, 090, 100, 110, 120VX) (F813, G813, H813, J813)	2	2	1	1
BCS and PRS Counterweights GLC55SVX (GC/GLC080, 100VXBCS, GC/GLC120SVX; GC/GLC120VXPRS) (E818, F818)	2	4	2	4

https://truckmanualshub.com/

4. Install latch striker in highest slot position. Check that latch striker is in center of jaws of hood latch when hood closes. Open and close hood to ensure that center pin strikes hood latch properly and that the stop screw contacts the frame. A properly closed hood MUST click twice on the hood latch. If the hood latch does not close properly, loosen capscrews on the back of center pin and adjust center pin up or down as required for correct alignment. See Figure 8.

5. Push down until hood just touches rubber bumper. Make sure latch striker is still in center of hood latch. Open hood and tighten capscrews for latch.

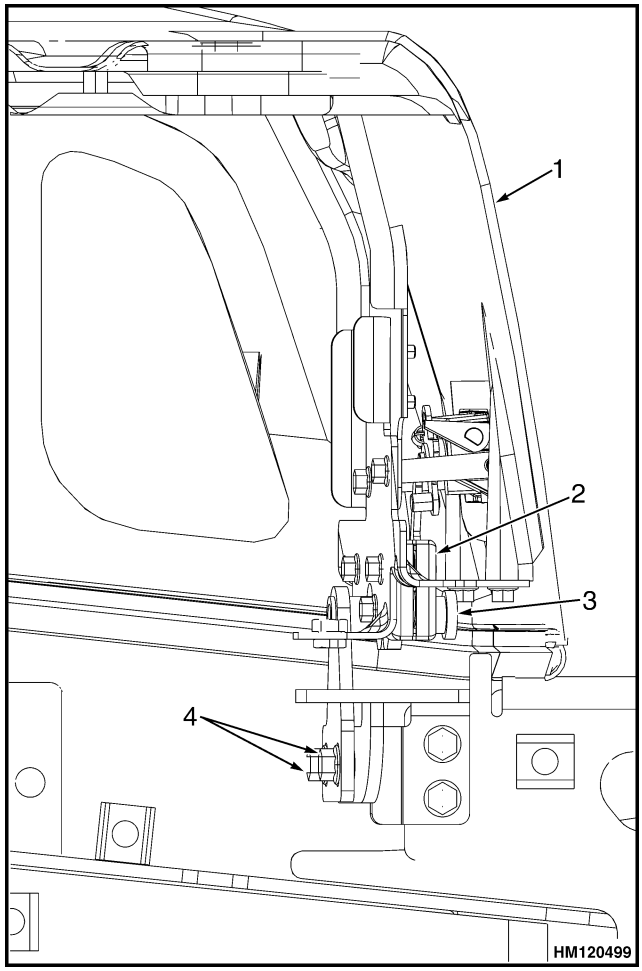

1. HOOD
2. HOOD LATCH
3. CENTER PIN
4. CAPSCREW

Figure 8. Hood Latch Adjustment

6. Check operation of hood latch. Have an operator sit in seat. Make sure hood is fully closed (two clicks). Also check that hood touches rubber bumper. If necessary, repeat Step 5.

CAUTION

When installing the seat to the hood, DO NOT use an impact wrench to install the capscrews. Damage can be caused to the threads on the screws and in the holes.

7. Place seat on the hood and thread seat wire harness through the hole in the hood. See Figure 3.

8. Align holes in the seat with the holes in hood. Insert washers and capscrews. Tighten capscrews to 18 N•m (159 lbf in).

9. If truck is equipped with a non-swivel seat, tie cable clips to seat wire harness and insert harness into seat wire harness brackets under hood. If truck is equipped with a swivel seat, secure seat harness to bracket. See Figure 3.

10. Install seal plate using three capscrews. See Figure 6.

11. Install kick panel onto truck. See Figure 4.

12. Install dash to top of cowl. See Figure 5. Install four clips to attach dash to kick panel.

13. Install upper steering column cover to dash.

14. Using four capscrews, install left and right front side covers to frame. See Figure 4.

15. Using two capscrews, install left and right fender covers to front of overhead guard legs.

16. Using two capscrews, install left and right rear side covers to frame. See Figure 4.

17. Install floor mat and floor plate.

18. If truck is equipped with an LPG tank, swing LPG tank into position on back of counterweight.

19. Adjust the steering column and seat positions.

https://truckmanualshub.com/

Steering Column

DESCRIPTION

This section describes the repair procedures for the steering column. The steering column assembly mounts to the cowl inside the operator compartment and is the mechanical connection between the steering wheel and the steering control unit. The steering column includes the steering wheel, housing, bracket and lower shaft. For lift trucks with gas and LPG engines, bolts and bushings attach the steering column to the cowl standoffs. For lift trucks with diesel engines, bolts, bushings and isolators attach the steering column to the cowl standoffs. See Figure 9.

STEERING COLUMN REPAIR

Remove

1. Put blocks on each side (front and back) of tires to prevent lift truck from moving.

WARNING

Disconnect the battery before removing any covers to avoid injury to personnel.

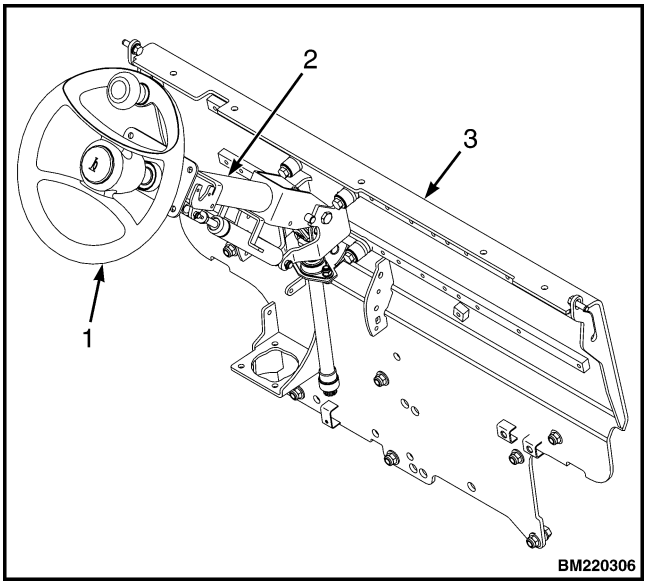

NOTE: DIESEL SHOWN, LPG AND GAS SIMILAR.

1. STEERING WHEEL
2. STEERING COLUMN
3. COWL

Figure 9. Steering Column and Cowl

2. Attach a tag on battery connector or negative battery cable stating, DO NOT CONNECT BATTERY. Move steering column to most FORWARD position.

CAUTION

If a puller tool is used to remove steering wheel from steering column, be careful not to damage horn wires.

NOTE: This procedure is for removal of all components of steering column assembly. Not all components are removed for a repair procedure. Do only those steps of procedure necessary to remove required component.

NOTE: Tag wires prior to disconnect.

3. Remove horn button assembly and disconnect electrical wires. Remove large hex nut and steering wheel from steering column. See Figure 10.

4. Remove steering column covers. Remove floor mats and floor plate. See section Hood, Seat, and Side Covers Replacement.

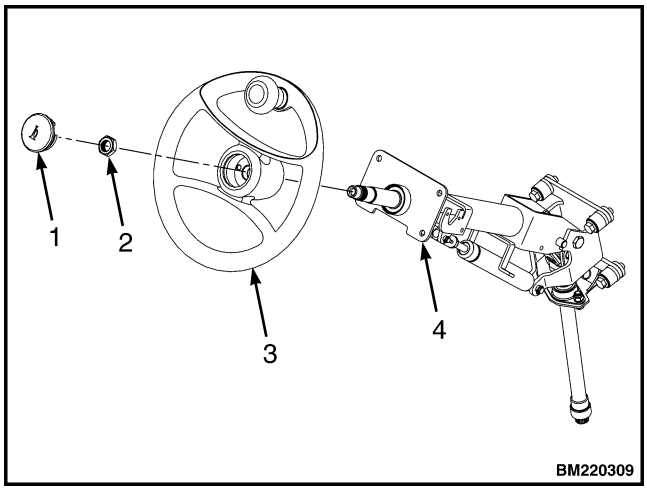

1. HORN BUTTON
2. HEX NUT
3. STEERING WHEEL
4. STEERING COLUMN

Figure 10. Steering Wheel Remove/Install

https://truckmanualshub.com/

NOTE: Perform Step 5 for lift trucks equipped with gas or LPG engines.

5. Remove four capscrews, four bushings and steering column from cowl standoffs. See Figure 11.

NOTE: Perform Step 6 for lift trucks equipped with diesel engines.

6. Remove four capscrews, four bushings, four isolators, steering column and four isolators from cowl standoffs. See Figure 11.

Disassemble

1. Remove two pins and gas spring from housing.

See Figure 12, for lift trucks manufactured before January, 2012.

See Figure 13, for lift trucks manufactured after January, 2012.

2. Remove two pivot bolts, two bushings, two nuts and bracket from housing.

See Figure 12, for lift trucks manufactured before January, 2012.

See Figure 13, for lift trucks manufactured after January, 2012.

3. Remove split pin and lower shaft from upper shaft.

See Figure 12, for lift trucks manufactured before January, 2012.

See Figure 13, for lift trucks manufactured after January, 2012.

4. Remove connector from connector bracket. Remove connector bracket, fastener, four screws and two horn contacts from housing.

See Figure 12, for lift trucks manufactured before January, 2012.

See Figure 13, for lift trucks manufactured after January, 2012.

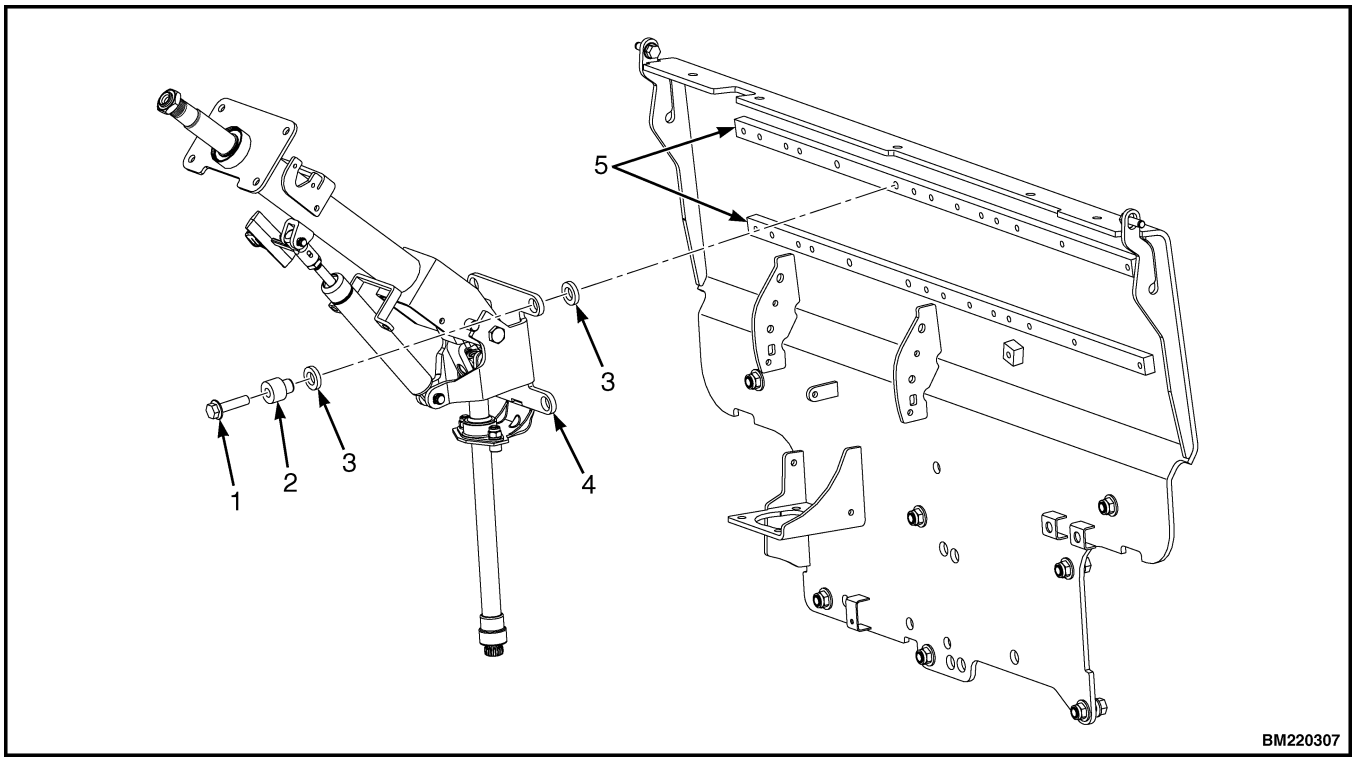

1. CAPSCREW
2. BUSHING
3. ISOLATOR
4. STEERING COLUMN
5. COWL STANDOFF

Figure 11. Steering Column Remove/Install

https://truckmanualshub.com/

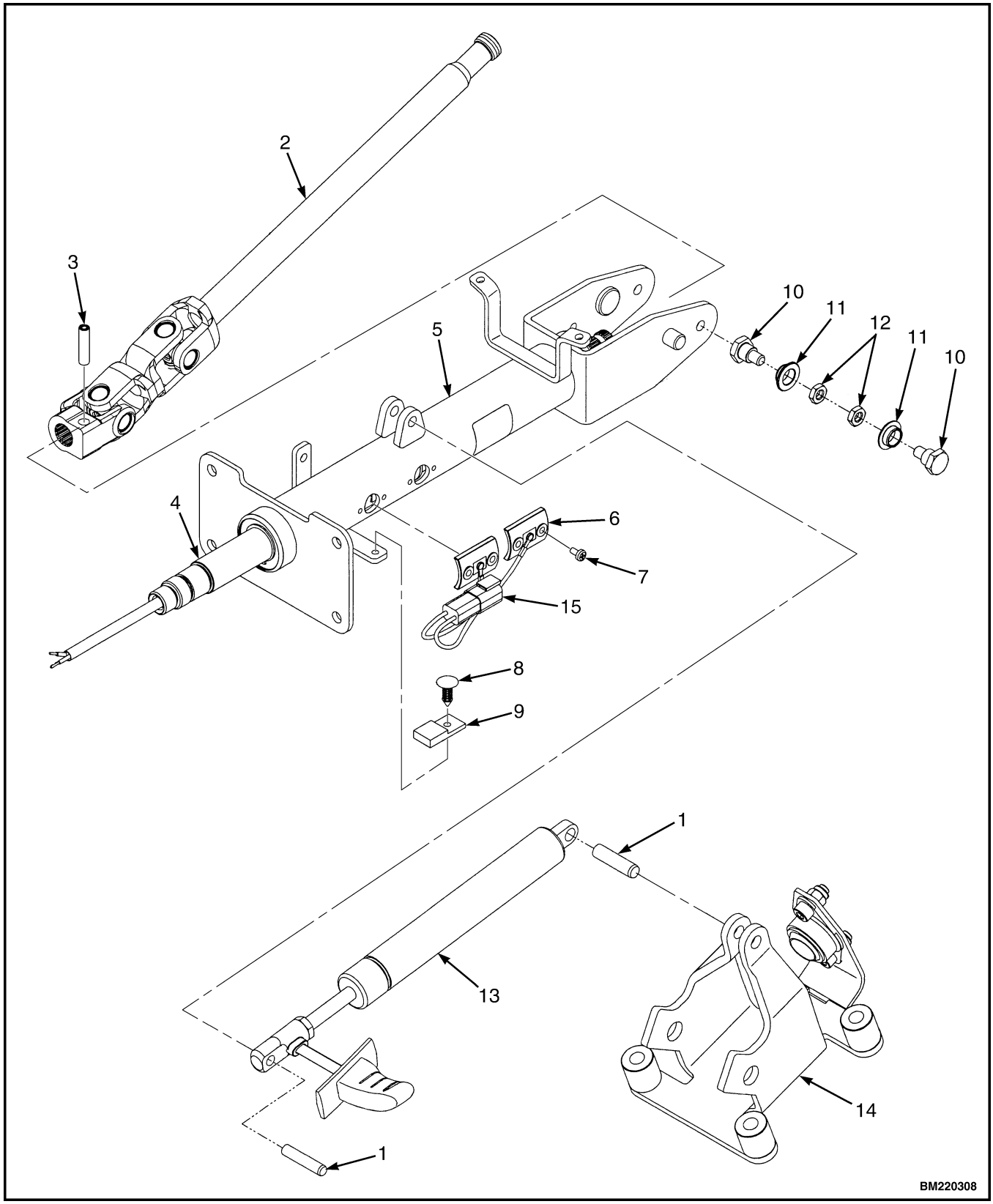

Figure 12. Steering Column Assembly, Lift Trucks Manufactured Before January, 2012

https://truckmanualshub.com/

Legend for Figure 12

1. PIN
2. LOWER SHAFT
3. SPLIT PIN
4. UPPER SHAFT
5. HOUSING
6. HORN CONTACT
7. SCREW
8. FASTENER
9. CONNECTOR BRACKET
10. PIVOT BOLT
11. BUSHING
12. NUT
13. GAS SPRING
14. BRACKET
15. CONNECTOR

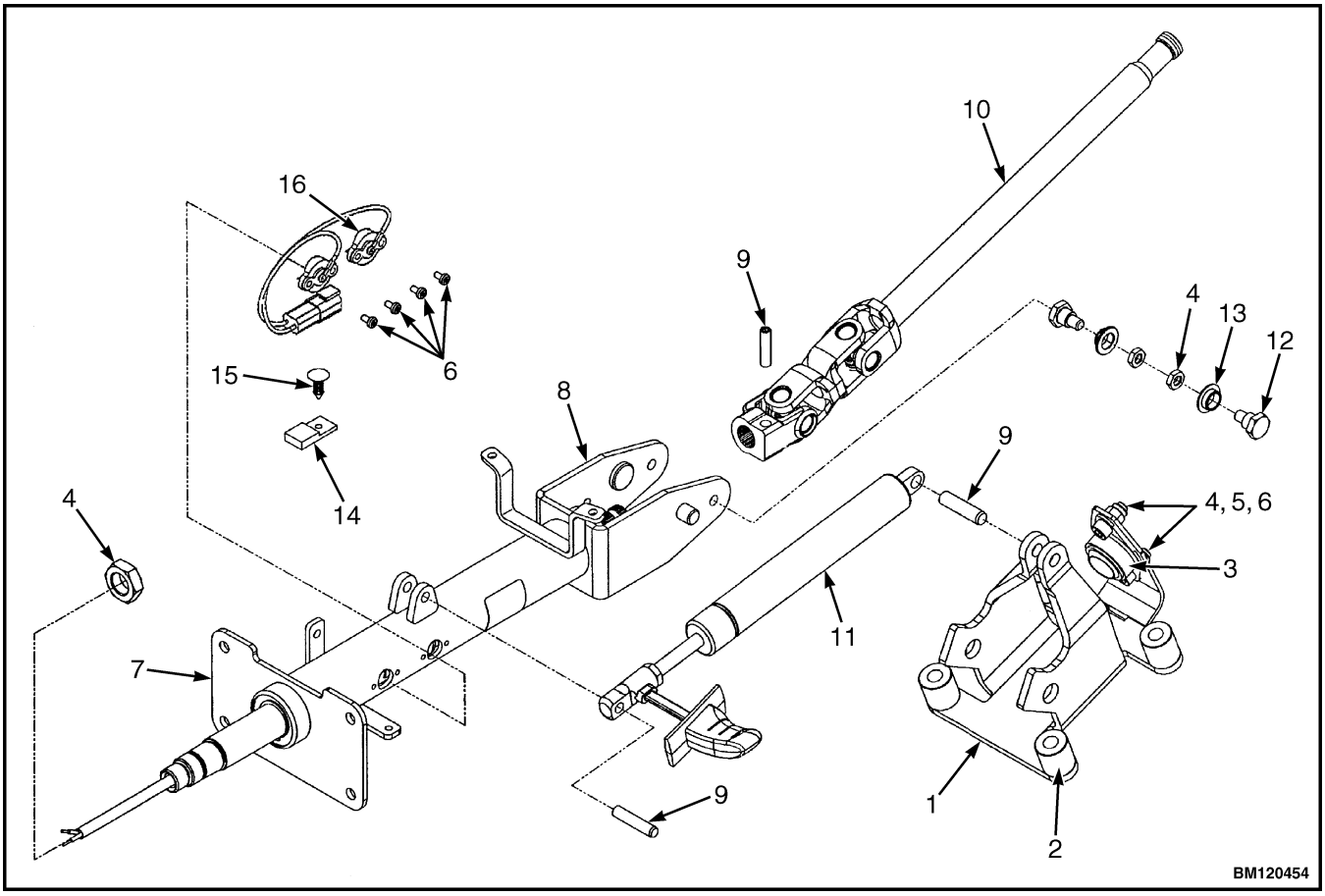

1. BRACKET
2. SPACER
3. JOINT
4. NUT
5. WASHER
6. SCREW
7. UPPER SHAFT
8. HOUSING
9. PIN
10. LOWER SHAFT
11. GAS SPRING
12. BOLT
13. BUSHING
14. CONNECTOR
15. FASTENER
16. HORN CONTACT

Figure 13. Steering Column Assembly, Lift Trucks Manufactured After January, 2012

https://truckmanualshub.com/

Clean

WARNING

Cleaning solvents can be flammable and toxic and can cause skin irritation. When using cleaning solvents, always follow the solvent manufacturer's recommended safety precautions.

WARNING

Compressed air is used for cleaning and drying purposes, or for cleaning restrictions. Wear protective clothing (goggles/shields, gloves, etc.). Make sure the path of the compressed air is away from all personnel to avoid injury.

1. Clean metal parts in solvent. Remove all traces of old lubricant and dirt. Clean nonmetal parts with warm soapy water and a lint free cloth.
2. After cleaning, dry parts with compressed air. DO NOT dry parts with a cloth.

Inspect

1. Inspect for loose, burned, missing, cracked or damaged hardware.
2. Inspect all parts for dents, holes, bends, burrs, rust, corrosion or marred finishes.
3. Replace all defective or damaged parts.

Assemble

NOTE: This procedure is for installation of all components of steering column assembly. Not all components are removed for a repair procedure. Do only those steps of procedure necessary to install required component.

NOTE: PerformStep 1 only for lift trucks manufactured before January, 2012.

1. Lubricate horn contact slip rings with a small amount of conductive grease (Yale P/N 582014302).
2. Install fastener, connector bracket and connector, two horn contacts and four screws.

   See Figure 12, for lift trucks manufactured before January 2012.

   See Figure 13, for lift trucks manufactured after January 2012.
3. Assemble lower shaft and upper shaft, secure with spit pin.

   See Figure 12, for lift trucks manufactured before January 2012.

   See Figure 13, for lift trucks manufactured after January 2012.
4. Install two pivot bolts, two bushings, two nuts and bracket onto housing.

   See Figure 12, for lift trucks manufactured before January 2012.

   See Figure 13, for lift trucks manufactured after January 2012.
5. Install gas spring and two pins on housing.

   See Figure 12, for lift trucks manufactured before January 2012.

   See Figure 13, for lift trucks manufactured after January 2012.

Install

NOTE: Lubricate spline end of lower shaft with multi purpose grease, see **Periodic Maintenance Manual** for your lift truck.

NOTE: Perform Step 1 for lift trucks equipped with gas or LPG engines.

1. Install steering column, four bushings and four bolts on cowl standoffs. Tighten bolts to 38 N•m (28 lbf ft). See Figure 11.

NOTE: Perform Step 2 for lift trucks equipped with diesel engines.

2. Install four isolators, steering column, four isolators, four bushings, and four bolts on cowl standoffs. Tighten bolts to 38 N•m (28 lbf ft). See Figure 11.
3. Install floor plate, floor mats, and steering column covers. See section Hood, Seat, and Side Covers Replacement.
4. Install steering wheel and hex nut on steering column, tighten hex nut to 40 to 54 N•m (30 to 40 lbf ft). Connect electrical wiring and install horn button. See Figure 10.

https://truckmanualshub.com/

5. Remove tag from negative battery connector and connect to battery. Adjust steering column to neutral position.
6. Remove blocks from each side of tires.

LPG Tank and Bracket Replacement

For procedures to remove and install the LPG tank, LPG tank bracket, and the LPG tank alignment pin, see one of the following **Service Manuals**.

LPG Fuel System 0900YRM1242 for lift truck models

- GLC40, 45, 55VX; GLC55SVX; (GLC080, 100, 120VX; GLC080, 100VXBCS; GLC120SVX; GLC120VXPRS) (E818)
- GLP40VX5/VX6; GLP45SVX5, GLP45VX6; GLP50-55VX (GLP080, 90, 100, 110, 120VX) (F813, G813)

LPG Fuel System 0900YRM1556 for lift truck models

- GLC40, 45, 55VX; GLC55SVX; (GLC080, 100, 120VX; GLC080, 100VXBCS; GLC120SVX; GLC120VXPRS) (E818, F818)
- GLP40VX5/VX6; GLP45SVX5, GLP45VX6; GLP50-55VX (GLP080, 90, 100, 110, 120VX) (G813, H813, J813)

Counterweight Replacement

REMOVE

WARNING

The lift truck must be put on blocks for some types of maintenance and repair. The removal of the following assemblies will cause large changes in the center of gravity: mast, drive axle, engine and transmission, and counterweight. When the lift truck is put on blocks, put additional blocks in the following positions to maintain stability:

- **Before removing the mast and drive axle, put blocks under the counterweight so the lift truck cannot fall backward.**
- **Before removing the counterweight, put blocks under the mast assembly so the lift truck cannot fall forward.**

The surface must be solid, even, and level when the lift truck is put on blocks. Make sure that any blocks used to support the lift truck are solid, onepiece units. See the procedure How to Put Lift Truck on Blocks in the Operating Manual or the Periodic Maintenance section for your lift truck.

WARNING

DO NOT operate the lift truck if the capscrew for the counterweight is not installed. When the capscrew is removed, the counterweight can fall from the lift truck.

WARNING

LPG can cause an explosion. DO NOT cause sparks or permit flammable material near the LPG system. LPG fuel systems can be disconnected indoors only if the lift truck is at least 8 m (26 ft) from any open flame, motor vehicles, electrical equipment, or ignition source.

Close the shutoff valve on the LPG tank before any part of the engine fuel systemis disconnected. Run the engine until the fuel in the system is used and the engine stops.

If the engine will not run, close the shutoff valve on the LPG tank. Loosen the fitting on the supply hose from the LPG tank where it enters the filter unit. Permit the pressure in the fuel system to decrease slowly. Fuel leaving the fitting removes heat. Use a cloth to protect your hands from the cold fitting.

NOTE: The counterweight is held in position on frame by two hooks that are part of frame. See Figure 14.

One M30 × 3.5 x 120 capscrew holds counterweight to lower part of frame on lift truck models

- GLP/GDP40VX5/VX6; GLP/GDP45SVX5, GLP/ GDP45VX6; GLP/GDP50-55VX (GP/GLP/GDP080, 090, 100, 110, 120VX) (F813, G813, H813, J813)

https://truckmanualshub.com/

One M30 X 3.5 X 140 capscrew holds counterweight to lower part of frame for lift truck models

- GLC40, 45, 55VX (GC/GLC080, 100, 120VX) (E818, F818)

One M30 x 3.5 x 160 capscrew holds counterweight to lower part of frame for lift truck models

- GLC55SVX (GC/GLC080VXBCS, 100VXBCS; GC/GLC120SVX; GC/GLC120VXPRS) (E818, F818)

NOTE: If lift truck is equipped with an overhead exhaust system, remove overhead exhaust pipe before removing counterweight. See section Exhaust System Repair for procedures.

1. If lift truck has an LPG fuel system, see one of the following **Service Manuals** to remove the LPG tank and bracket so that the counterweight can be removed.

   LPG Fuel System, GM 4.3L Engine With GFI 900 YRM 1242 for lift truck models

   - GLC40, 45, 55VX; GLC55SVX; (GLC080, 100, 120VX; GLC080, 100VXBCS; GLC120SVX; GLC120VXPRS) (E818)
   - GLP40VX5/VX6; GLP45SVX5, GLP45VX6; GLP50-55VX (GLP080, 90, 100, 110, 120VX) (F813, G813)

   LPG Fuel System, GM 4.3L Engine With PSI 900 YRM 1556 for lift truck models

   - GLC40, 45, 55VX; GLC55SVX; (GLC080, 100, 120VX; GLC080, 100VXBCS; GLC120SVX; GLC120VXPRS) (E818, F818)
   - GLP40VX5/VX6; GLP45SVX5, GLP45VX6; GLP50-55VX (GLP080, 90, 100, 110, 120VX) (G813, H813, J813)

WARNING

The counterweight is heavy. Make sure that the eyebolt and lifting devices have enough capacity to lift the weight. The approximate weights of the counterweight castings are shown in Table 2.

2. Install a lifting eye in lift hole of counterweight. See Figure 14. Connect a crane to lifting eye and raise crane until it holds part of weight of counterweight. If counterweight is equipped with a tow pin, remove tow pin and remove capscrew that holds counterweight to frame. If counterweight is not equipped with a tow pin, remove capscrew that holds counterweight to frame. See Figure 14. Use crane to lift counterweight from lift truck. Put counterweight on floor so that it has stability and will not fall over. Take care not to damage exhaust or cooling components.

https://truckmanualshub.com/

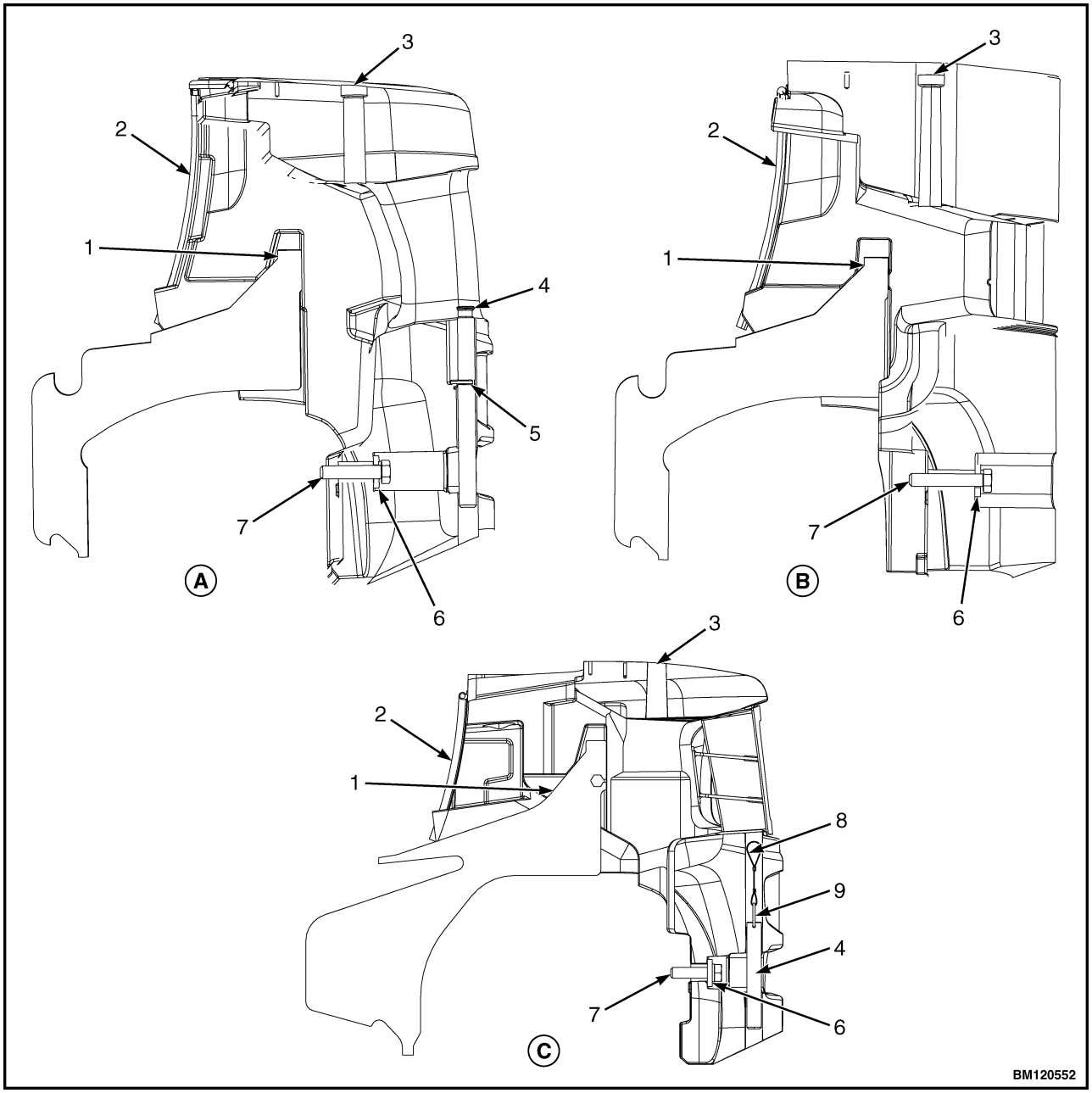

A. COUNTERWEIGHT USED ON GLC40, 45, 55VX (GC/GLC080, 100, 120VX (E818, F818) AND GLP/GDP40VX5/VX6; GLP/GDP45SVX5, GLP/GDP45VX6; GLP/GDP50-55VX (GP/GLP/GDP080, 090, 100, 110, 120VX) (F813, G813, H813) LIFT TRUCK MODELS

B. COUNTERWEIGHT USED ON GLC55SVX (GC/GLC80XVBCS, GC/GLC100VXBCS; GC/GLC120SVX; AND GC/GLC120VXPRS) (E818, F818) LIFT TRUCK MODELS

C. COUNTERWEIGHT USED ON GLC40, 45, 55VX (GC/GLC080, 100, 120VX (E818, F818) AND GLP/GDP40VX5/VX6; GLP/GDP45SVX5, GLP/GDP45VX6; GLP/GDP50-55VX (GP/GLP/GDP080, 090, 100, 110, 120VX) (J813) LIFT TRUCK MODELS

1. FRAME HOOK
2. SEAL
3. LIFT HOLE
4. TOW PIN
5. ROLL PIN
6. WASHERS
7. CAPSCREW
8. WIRE
9. O-RING

Figure 14. Counterweight Installation

https://truckmanualshub.com/

Table 2. Weight of Counterweights

Model	Weight
GLC40VX (GC/GLC080VX)	2249 kg (4958 lb)
GLC45VX (GC/GLC100VX)	2552 kg (5626 lb)
GLC/GDC55VX (GC/GLC120VX)	3170 kg (6988 lb)
GC/GLC080VXBCS	2149 kg (4738 lb)
GLC55SVX (GC/GLC100VXBCS, GC/GLC120SVX)	3205 kg (7066 lb)
(GC/GLC120VXPRS)	3773 kg (8318 lb)
GLP/GDP40VX5 (GP/GLP/GDP080VX)	2172 kg (4788 lb)
GLP/GDP40VX6	2370 kg (5225 lb)
GLP/GDP45SVX5 (GP/GLP/GDP090VX)	2504 kg (5520 lb)
GLP/GDP45VX6 (GP/GLP/GDP100VX)	2709 kg (5972 lb)
GLP/GDP50VX (GP/GLP/GDP100VX)	3009 kg (6634 lb)
GLP/GDP55VX (GP/GLP/GDP120VX)	3294 kg (7262 lb)

INSTALL

1. Make sure seals are on counterweight.

See Figure 15for lift truck models

- GLC40, 45, 55VX; GLC55SVX; (GLC080, 100, 120VX; GLC080, 100VXBCS; GLC120SVX; GLC120VXPRS) (E818, F818)
- GLP40VX5/VX6; GLP45SVX5, GLP45VX6; GLP50-55VX (GLP080, 90, 100, 110, 120VX) (F813, G813, H813)

See Figure 16 for lift truck models

- GLC55SVX (GC/GLC80XVBCS, GC/GLC100VXBCS; GC/GLC120SVX; AND GC/GLC120VXPRS) (E818, F818)

See Figure 17 for lift truck models

- GLP40VX5/VX6; GLP45SVX5, GLP45VX6; GLP50-55VX (GLP080, 90, 100, 110, 120VX) (J813)

2. Use a crane to install counterweight on lift truck. When counterweight is installed, make sure hooks on frame fully engage counterweight so it is aligned with parts of frame. Install and tighten capscrew to 1020 N•m (750 lbf ft).

3. Install tow pin and roll pin, if equipped. See section **Tow Pin** for procedures.

4. If lift truck has an LPG fuel system, see one of the following **Service Manuals** to install LPG tank and bracket, after counterweight has been installed.

LPG Fuel System, GM 4.3L Engine With GFI 900 YRM 1242 for lift truck models

- GLC40, 45, 55VX; GLC55SVX; (GLC080, 100, 120VX; GLC080, 100VXBCS; GLC120SVX; GLC120VXPRS) (E818)
- GLP40VX5/VX6; GLP45SVX5, GLP45VX6; GLP50-55VX (GLP080, 90, 100, 110, 120VX) (F813, G813)

LPG Fuel System, GM 4.3L Engine With PSI 900 YRM 1556 for lift truck models

- GLC40, 45, 55VX; GLC55SVX; (GLC080, 100, 120VX; GLC080, 100VXBCS; GLC120SVX; GLC120VXPRS) (E818, F818)
- GLP40VX5/VX6; GLP45SVX5, GLP45VX6; GLP50-55VX (GLP080, 90, 100, 110, 120VX) (G813, H813, J813)

5. If lift truck is equipped with an overhead exhaust system, install overhead exhaust pipe. See section **Exhaust System Repair** for procedures.

https://truckmanualshub.com/

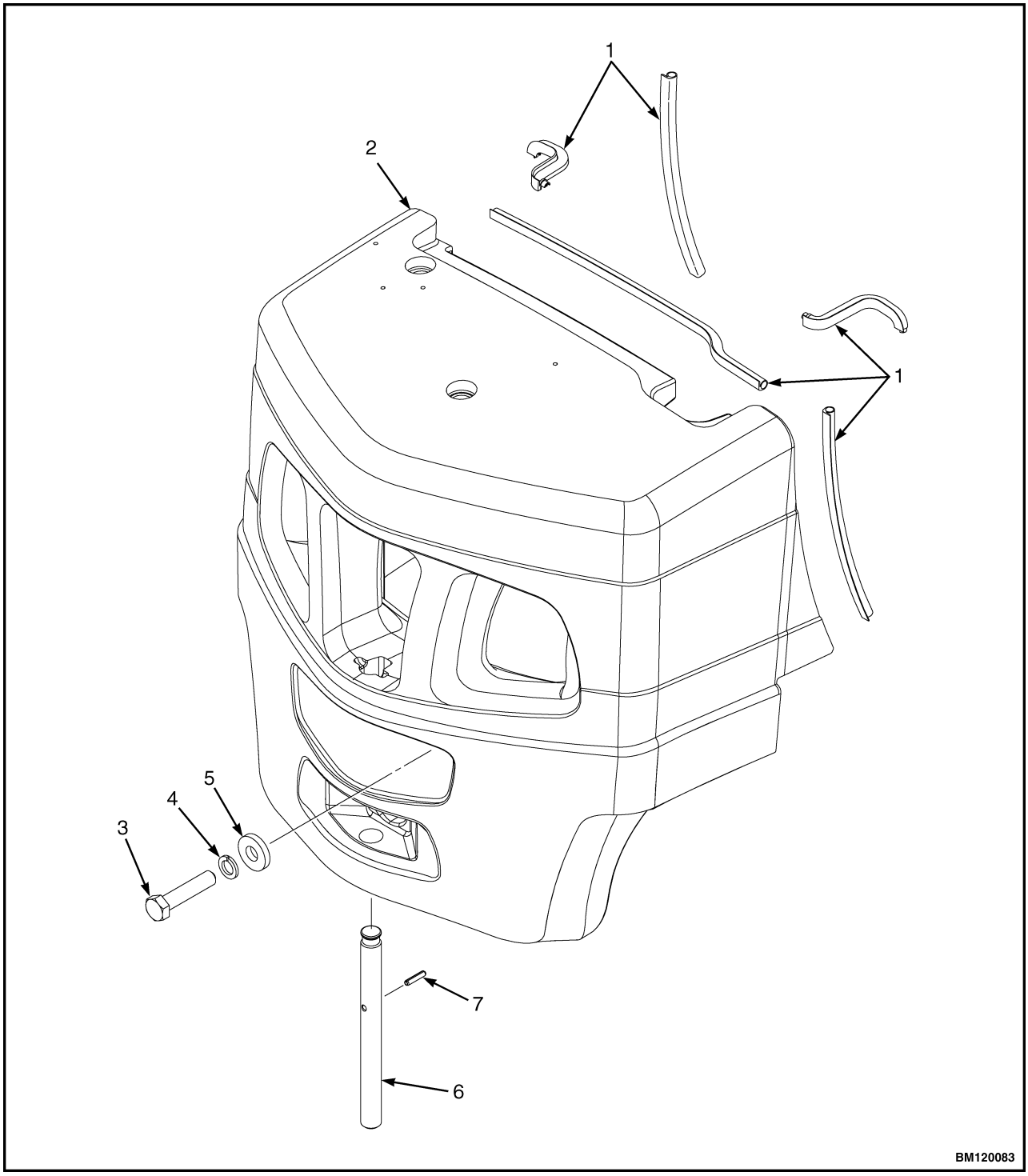

1. SEALS
2. COUNTERWEIGHT
3. CAPSCREW
4. LOCKWASHER
5. WASHER
6. TOW PIN
7. ROLL PIN

Figure 15. Counterweight Components for Lift Truck Models GLC40, 45, 55VX (GC/GLC080, 100, 120VX (E818, F818) and GLP/GDP40VX5/VX6; GLP/GDP45SVX5, GLP/GDP45VX6; GLP/GDP50-55VX (GP/GLP/GDP080, 090, 100, 110, 120VX) (F813, G813, H813)

https://truckmanualshub.com/

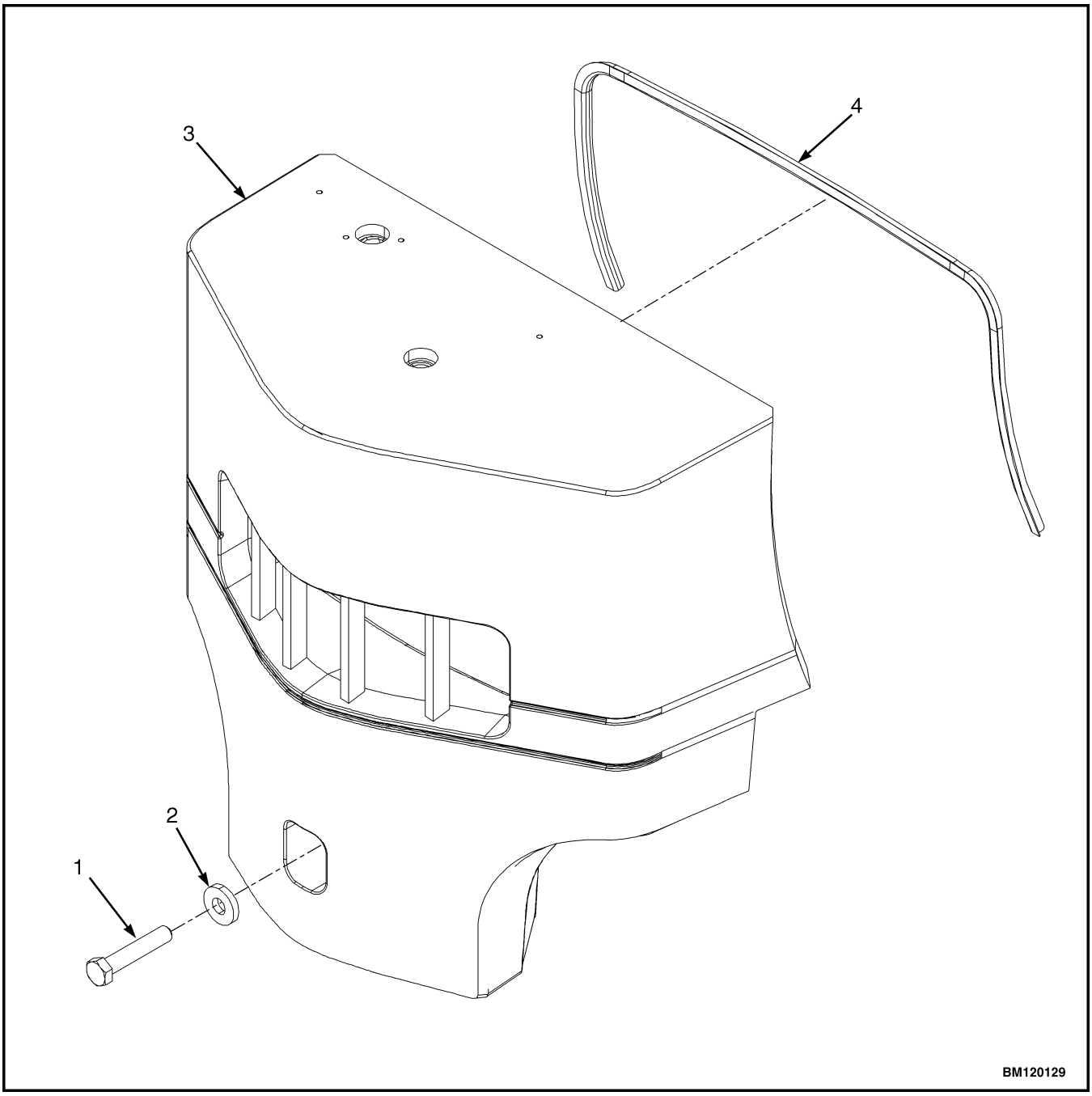

1. CAPSCREW
2. WASHER
3. COUNTERWEIGHT
4. SEAL

Figure 16. Counterweight Components for Lift Truck Models GLC55SVX (GC/GLC080, 100VXBCS; GC/GLC/GDC120SVX; GC/GLC/GDC120VXPRS (E818, F818)

https://truckmanualshub.com/

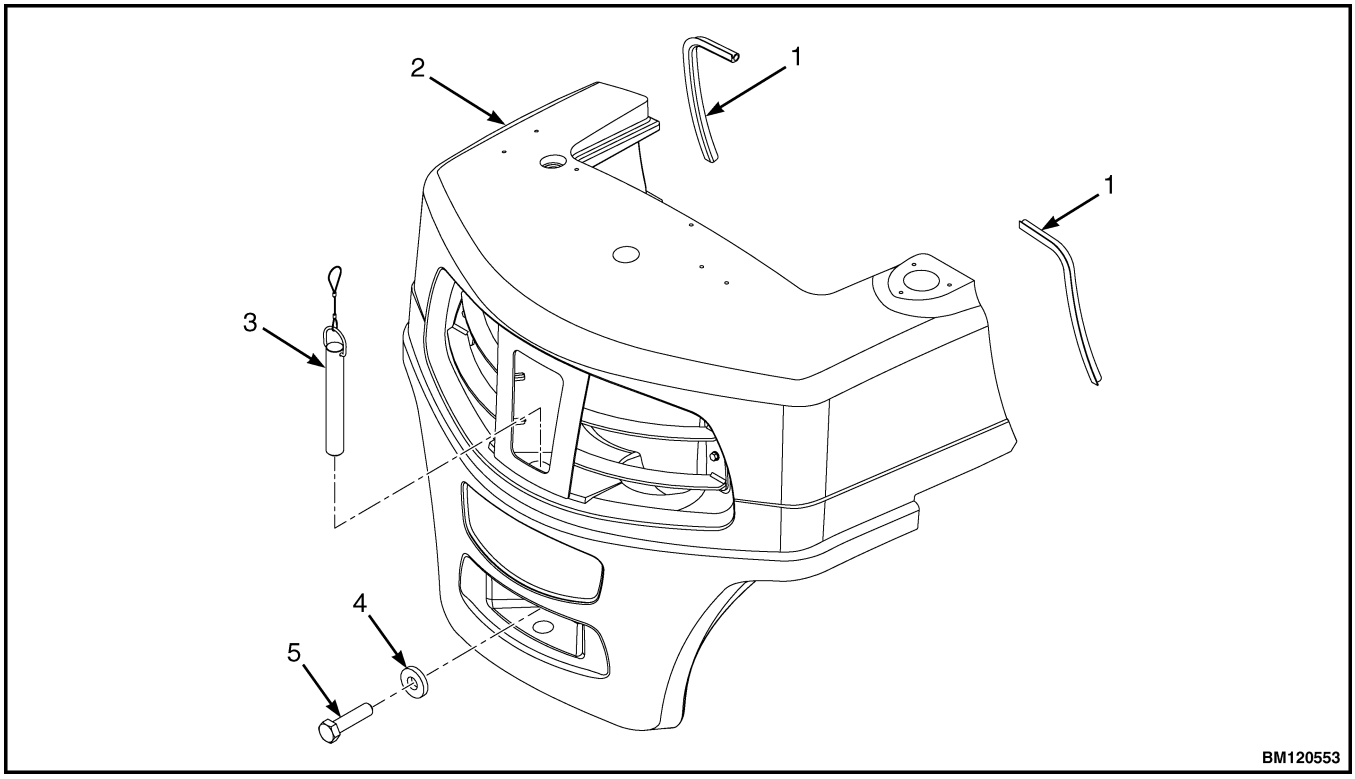

1. SEALS
2. COUNTERWEIGHT
3. TOW PIN
4. WASHER
5. CAPSCREW

Figure 17. Counterweight Components for Lift Truck Models GLP/GDP40VX5/VX6; GLP/GDP45SVX5, GLP/GDP45VX6; GLP/GDP50-55VX (GP/GLP/GDP080, 090, 100, 110, 120VX) (J813)

https://truckmanualshub.com/

TOW PIN

Remove and Install For Lift Truck Models GLP/GDP40VX5/VX6; GLP/GDP45SVX5, GLP/GDP45VX6; GLP/GDP50-55VX (GP/GLP/GDP080, 090, 100, 110, 120VX) (F813, G813, H813)

1. Remove tow pin from counterweight by driving roll pin out. See Figure 18.
2. Install tow pin into counterweight and install roll pin.

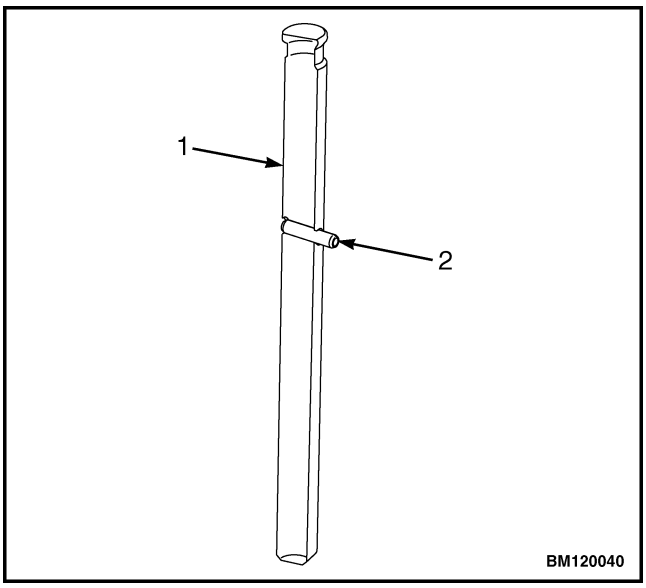

1. TOW PIN
2. ROLL PIN

Figure 18. Tow Pin

Remove and Install For Lift Truck Models GLC55SVX (GC/GLC80XVBCS, GC/GLC100VXBCS; GC/GLC120SVX; and GC/GLC120VXPRS) (E818, F818) and GLP/GDP40VX5/VX6; GLP/GDP45SVX5, GLP/GDP45VX6; GLP/GDP50-55VX (GP/GLP/GDP080, 090, 100, 110, 120VX) (J813)

1. Remove tow pin from counterweight by grasping wire and pulling tow pin from counterweight. See Figure 19.
2. Install tow pin into counterweight dropping tow pin into counterweight.

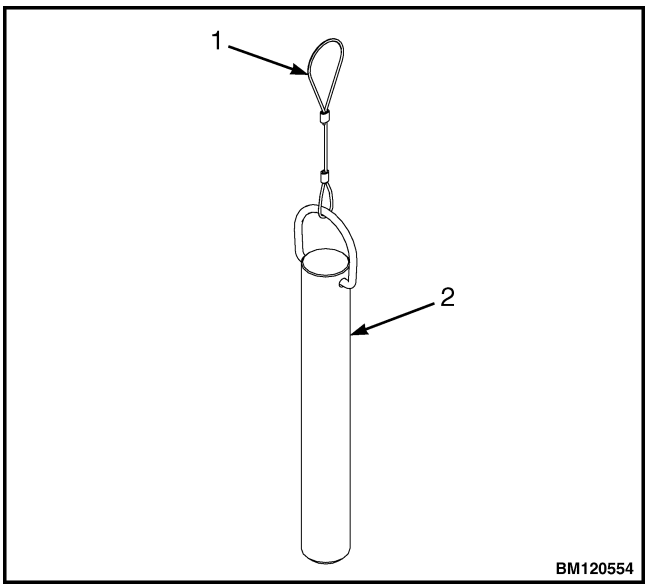

1. WIRE
2. TOW PIN

Figure 19. Tow Pin

https://truckmanualshub.com/

Overhead Guard Replacement

REMOVE

WARNING

DO NOT operate the lift truck without the overhead guard correctly fastened to the lift truck.

WARNING

DO NOT weld mounts for lights or accessories to legs of the overhead guard. Changes that are made by welding, or by drilling holes that are too big or in the wrong location, can reduce the strength of the overhead guard.

See your dealer for Yale lift trucks BEFORE performing any changes to the overhead guard.

NOTE: The lift trucks covered in this YRM are equipped with either a high or low overhead guard. The removal and installation procedures for both types of overhead guards are the same.

No welding or drilling on legs of overhead guard is permitted as per previous **WARNING**.

NOTE: The lifting device can be connected to any number of positions on overhead guard depending upon lifting device available. The ideal choices are a four point sling connected to all four corners on top of overhead guard, or a two point sling connected to two opposite corners of overhead guard. If a single point hoist is used, make sure that lift point is in center of overhead guard. If during initial start of lift, the overhead guard is off balance, lower immediately and move hoist to a more centered point.

1. Connect a lifting device to remove overhead guard. Loosen clamp and disconnect air intake hose from elbow. Remove bolts, elbow, retainer, and grommet from overhead guard rear leg. See Figure 20.

2. Disconnect wires between frame and overhead guard. When overhead guard is lifted from frame, make sure that electrical wires are moved through holes in overhead guard so that they are not damaged.

3. The rear legs of overhead guard have two capscrews that are located under hood inside engine compartment, next to radiator. Remove capscrews. See Figure 21.

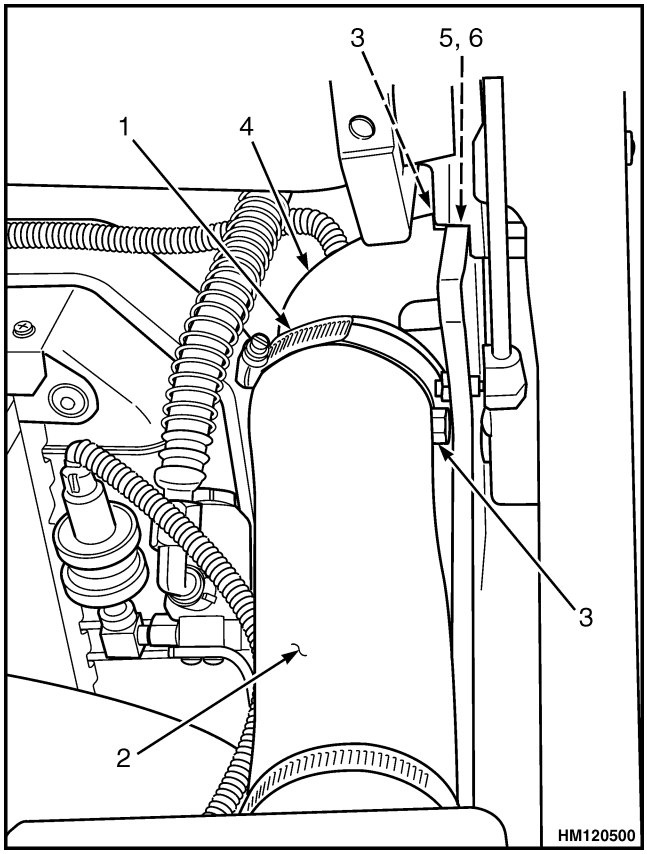

1. CLAMP
2. AIR INTAKE HOSE
3. BOLTS
4. ELBOW
5. RETAINER
6. GROMMET

Figure 20. Disconnect Air Intake Hose

4. Remove fender cover, dash, and kick panel to remove two capscrews on front legs of overhead guard. See Hood, Seat, and Side Covers Replacement for removal procedures.

5. Using a lifting device, remove overhead guard from frame and place on floor.

INSTALL

1. Connect lifting device to top of overhead guard. Install overhead guard in position on lift truck.

2. Install two capscrews on front legs of overhead guard. Tighten capscrews to 66 N•m (49 lbf ft). See Figure 21.

3. Install fender cover, dash, and kick panel. See Hood, Seat, and Side Covers Replacement for installation procedures.

https://truckmanualshub.com/

4. Install two capscrews on rear legs of overhead guard. Tighten capscrews to 66 N•m (49 lbf ft). See Figure 21.

5. Connect air intake hose by installing bolts, elbow, retainer, and grommet to overhead guard rear leg. See Figure 20.

LED TAIL, BACKUP, AND BRAKE LIGHTS, REPLACE

These light assemblies are nonrepairable and must be replaced as an assembly. See section **Electrical System** 2200YRM1142 for procedures to replace these lights.

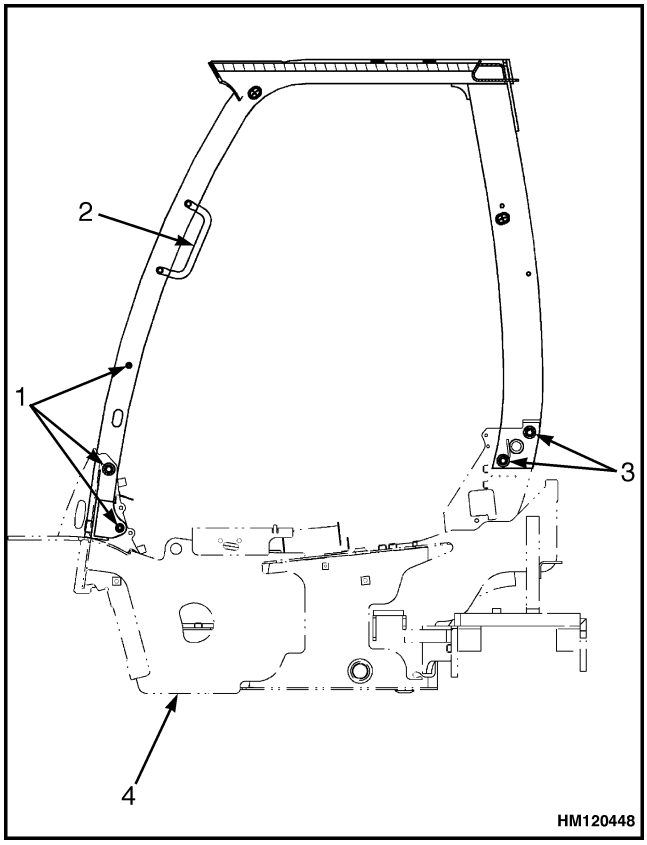

1. CAPSCREWS - FRONT LEGS
2. HANDLE
3. CAPSCREWS - REAR LEGS
4. FRAME

Figure 21. Overhead Guard

Operator Restraint System Replacement

DESCRIPTION

The seat belt, hip restraint brackets, seat and mounting, hood, and latches are all part of operator restraint system. Each item must be checked to make sure it is attached securely, functions correctly, and is in good condition. See Figure 22.

The seat belt, when properly buckled across operator, will permit slight operator repositioning without activating locking mechanism.

If truck tips, travels off a dock, or comes to a sudden stop, locking mechanism will be activated and hold the operator's lower torso in seat.

A seat belt that is damaged, worn or does not operate properly will not provide protection when it is needed. The end of belt must fasten correctly in latch. The seat belt must be in good condition. Replace seat belt if damage or wear is seen. See Figure 22.

https://truckmanualshub.com/

The following seat belt operation checks must be performed:

- With hood closed and in locked position, pull seat belt slowly from retractor assembly. Make sure seat belt pulls out and retracts smoothly. If seat belt does not pull out of retractor assembly, internal latch may be locked. Pull firmly on seat belt and hold for a moment to remove slack from belt in retractor. Release seat belt. Seat belt will retract and internal latch will unlock. If seat belt cannot be pulled from retractor assembly or belt will not retract, replace seat belt assembly.
- With hood closed and in locked position, pull seat belt with a sudden jerk. Make sure seat belt will not pull from retractor assembly. If seat belt can be pulled from retractor, when it is pulled with a sudden jerk, replace seat belt assembly.
- With hood in open position, make sure seat belt will not pull from retractor assembly. If seat belt can be pulled from retractor, with hood in open position, replace seat belt assembly.

Make sure seat rails and latch striker are not loose. The seat rails must lock tightly in position, but move freely when unlocked. The seat rails must be correctly fastened to hood and hood fastened to hinges on frame. The hood must be fully closed. Attempt to lift hood to make sure it is closed.

Adjust hood, hood latch, and latch striker when any of parts of operator restraint system are installed or replaced. See section Hood, Seat, and Side Covers Replacement in this manual for adjustment procedures for hood.

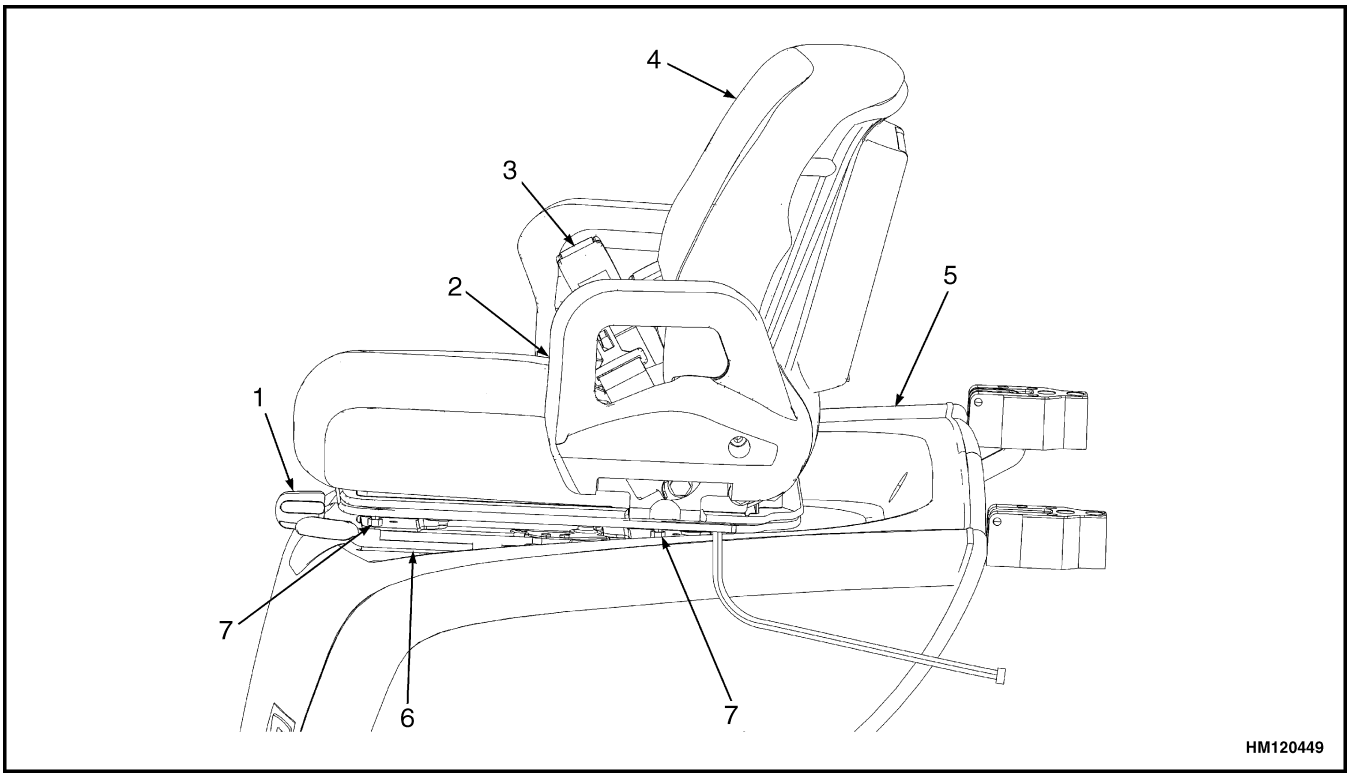

1. WEIGHT ADJUSTMENT LEVER
2. HIP RESTRAINT
3. SEAT BELT LATCH
4. SEAT
5. HOOD
6. SEAT RAIL
7. SPACER

Figure 22. Operator Restraint System

https://truckmanualshub.com/

Engine Replacement

REMOVE ENGINE ONLY

WARNING

The lift truck must be put on blocks for some types of maintenance and repairs. The removal of the following assemblies will cause large changes in the center of gravity: mast, drive axle, engine and transmission, and counterweight. When the lift truck is put on blocks, put additional blocks in the following positions to maintain stability:

- **Before removing the mast and drive axle, put blocks under the counterweight so the lift truck cannot fall backward.**
- **Before removing the counterweight, put blocks under the mast assembly so the lift truck cannot fall forward.**

The surface must be solid, even, and level when the lift truck is put on blocks. Make sure that any blocks used to support the lift truck are solid, one-piece units. See the procedure How to Put Lift Truck on Blocks in the Operating Manual or the Periodic Maintenance section for your lift truck.

The engine can be removed with or without transmission. Follow procedures below to remove engine without transmission. See Figure 23 or Figure 24.

WARNING

Always disconnect the cables at the battery before you make repairs to the engine. Disconnect the cable at the negative terminal first.

WARNING

LPG can cause an explosion. DO NOT cause sparks or permit flammable material near the LPG system. LPG fuel systems can be disconnected indoors only if the lift truck is at least 8 m (26 ft) from any open flame, motor vehicles, electrical equipments, or ignition source.

1. For lift trucks equipped with an LPG fuel system, close shutoff valve on tank and run engine until all fuel is gone and engine stops.

2. If lift truck is equipped with an LPG fuel tank, swing tank to side. See one of the following **Service Manuals:**

   LPG Fuel System 0900YRM1242 for lift truck models

   - GLC40, 45, 55VX; GLC55SVX; (GLC080, 100, 120VX; GLC080, 100VXBCS; GLC120SVX; GLC120VXPRS) (E818)
   - GLP40VX5/VX6; GLP45SVX5, GLP45VX6; GLP50-55VX (GLP080, 90, 100, 110, 120VX) (F813, G813)

   LPG Fuel System 0900YRM1556 for lift truck models

   - GLC40, 45, 55VX; GLC55SVX; (GLC080, 100, 120VX; GLC080, 100VXBCS; GLC120SVX; GLC120VXPRS) (E818, F818)
   - GLP40VX5/VX6; GLP45SVX5, GLP45VX6; GLP50-55VX (GLP080, 90, 100, 110, 120VX) (G813, H813, J813)

3. Remove floor mat and floor plate.

WARNING

DO NOT remove the radiator cap from the radiator when the engine is hot. When the radiator cap is removed, the pressure is released from the system. If the system is hot, the steam and boiling coolant can cause burns.

4. Let coolant cool to ambient temperature. Place a drain pan with a capacity greater than capacity of cooling system under radiator. Remove radiator cap.

https://truckmanualshub.com/

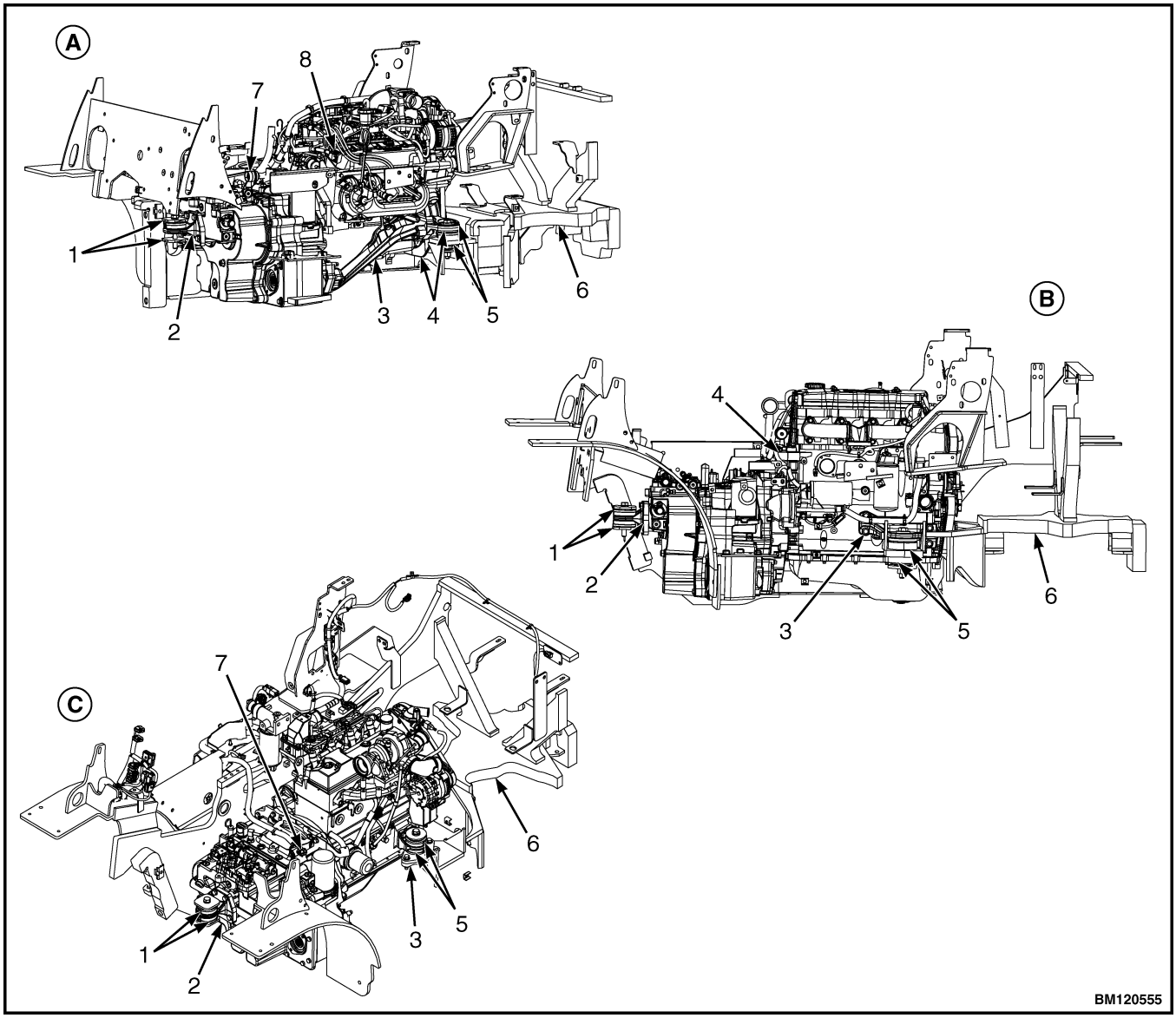

NOTE: PART OF FRAME NOT SHOWN FOR CLARITY.

A. GM 4.3L ENGINE
B. CUMMINS 4.5L DIESEL ENGINE
C. CUMMINS QSB 3.3L DIESEL ENGINE

1. TRANSMISSION ISOLATOR ASSEMBLY
2. TRANSMISSION MOUNTING BRACKET
3. ENGINE MOUNTING BRACKET
4. ENGINE CROSSMEMBER
5. ENGINE ISOLATOR ASSEMBLY
6. FRAME
7. ENGINE HARNESS CONNECTOR
8. LEFT CHASSIS WIRING HARNESS CONNECTOR

Figure 23. Engine and Transmission Mounting Arrangement for GM4.3L Engines, Cummins 4.5L Diesel Engines, and Cummins QSB 3.3L Diesel Engines

https://truckmanualshub.com/

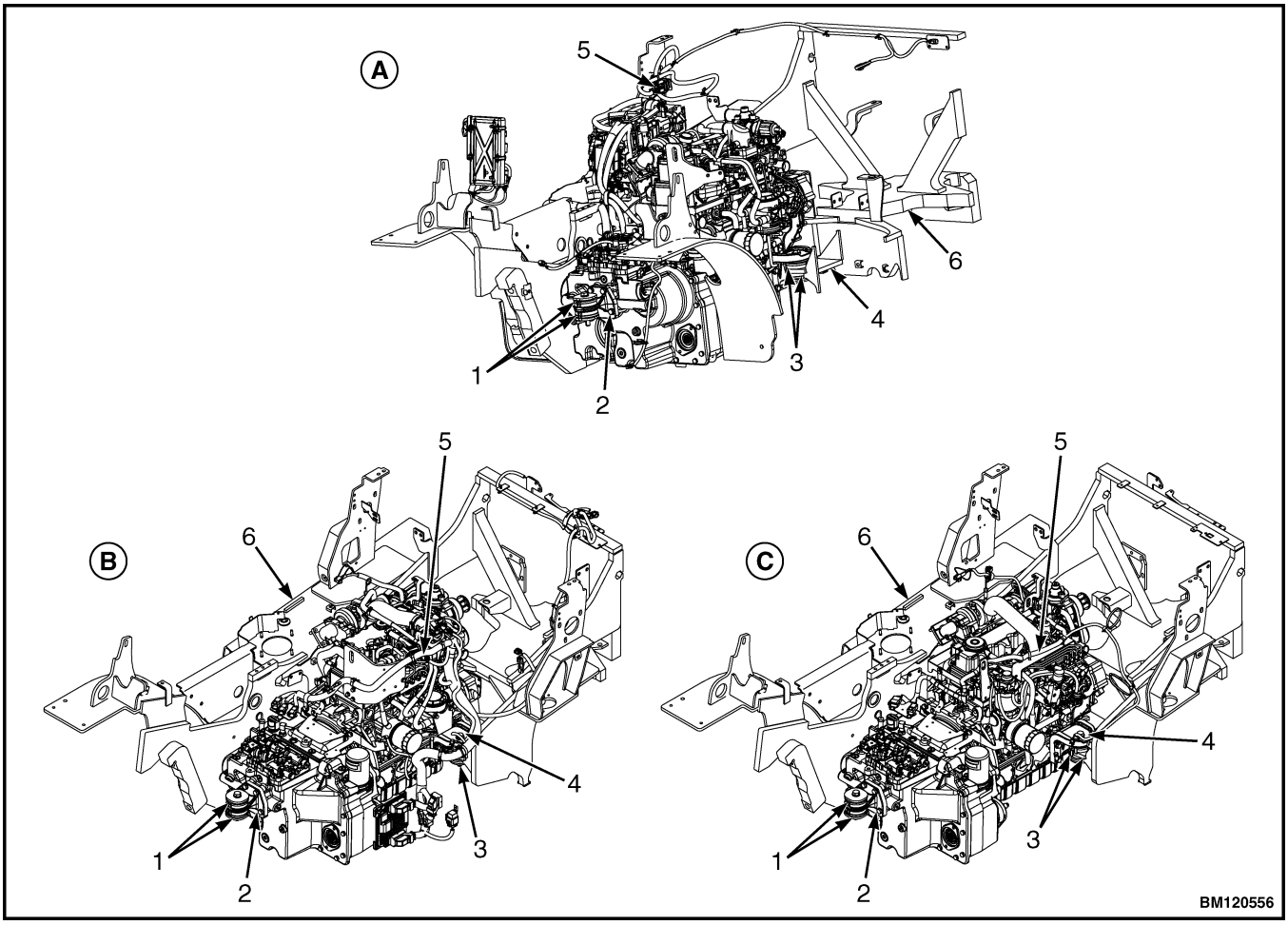

NOTE: PART OF FRAME NOT SHOWN FOR CLARITY.

A. KUBOTA 3.8L DIESEL ENGINE FOR LIFT TRUCK MODELS GLP/GDP40VX5/VX6; GLP/GDP45SVX5,GLP/GDP45VX6, GLP/GDP50-55VX (GP/GLP/GDP080, 090, 100, 110, 120VX) (H813)
B. KUBOTA 3.8L DIESEL ENGINE FOR LIFT TRUCK MODELS GLP/GDP40VX5/VX6; GLP/GDP45SVX5, GLP/GDP45VX6; GLP/GDP50-55VX (GP/GLP/GDP080, 090, 100, 110, 120VX) (J813)
C. KUBOTA 3.6L DIESEL ENGINE

1. TRANSMISSION ISOLATOR ASSEMBLY
2. TRANSMISSION MOUNTING BRACKET
3. ENGINE ISOLATOR ASSEMBLY
4. ENGINE MOUNTING BRACKET
5. ENGINE HARNESS CONNECTOR
6. FRAME

Figure 24. Engine and Transmission Mounting Arrangement for Kubota Engines

https://truckmanualshub.com/

CAUTION

Disposal of lubricants and fluids must meet local environmental regulations.

5. Open drain plug or loosen hose clamp and disconnect bottom radiator hose to drain coolant from radiator and engine.

See Figure 25 for lift trucks equipped with a GM 4.3L gas or LPG engine and single hydraulic tanks.

See Figure 26 for lift trucks equipped with a GM 4.3L LPG engine and dual hydraulic tanks.

See Figure 27 for lift trucks equipped with a Cummins QSB 3.3L diesel engine.

See Figure 28 for lift trucks models GLP/GDP40VX5/VX6; GLP/GDP45SVX5,GLP/GDP45VX6, GLP/GDP50-55VX (GP/GLP/GDP080, 090, 100, 110, 120VX) (H813) equipped with a Kubota 3.8L diesel engine, manufactured before February, 2012.

See Figure 29 for lift trucks models GLP/GDP40VX5/VX6; GLP/GDP45SVX5,GLP/GDP45VX6, GLP/GDP50-55VX (GP/GLP/GDP080, 090, 100, 110, 120VX) (H813) equipped with a Kubota 3.8L diesel engine, manufactured after February, 2012.

See Figure 30 for lift truck models GLP/GDP40VX5/VX6; GLP/GDP45SVX5, GLP/GDP45VX6; GLP/GDP50-55VX (GP/GLP/GDP080, 090, 100, 110, 120VX) (J813) equipped with a Kubota 3.8L diesel engine.

See Figure 31 for lift trucks models GLP/GDP40VX5/VX6; GLP/GDP45SVX5,GLP/GDP45VX6, GLP/GDP50-55VX (GP/GLP/GDP080, 090, 100, 110, 120VX) (H813) equipped with a Kubota 3.6L diesel engine, manufactured before February, 2012.

See Figure 32 for lift trucks models GLP/GDP40VX5/VX6; GLP/GDP45SVX5,GLP/GDP45VX6, GLP/GDP50-55VX (GP/GLP/GDP080, 090, 100, 110, 120VX) (H813), manufactured after February, 2012, equipped with a Kubota 3.6L diesel engine.

See Figure 32 for lift trucks models GLP/GDP40VX5/VX6; GLP/GDP45SVX5, GLP/GDP45VX6; GLP/GDP50-55VX (GP/GLP/GDP080, 090, 100, 110, 120VX) (J813) equipped with a Kubota 3.6L diesel engine.

See Figure 33 for lift trucks equipped with a Cummins 4.5L diesel engine.

https://truckmanualshub.com/

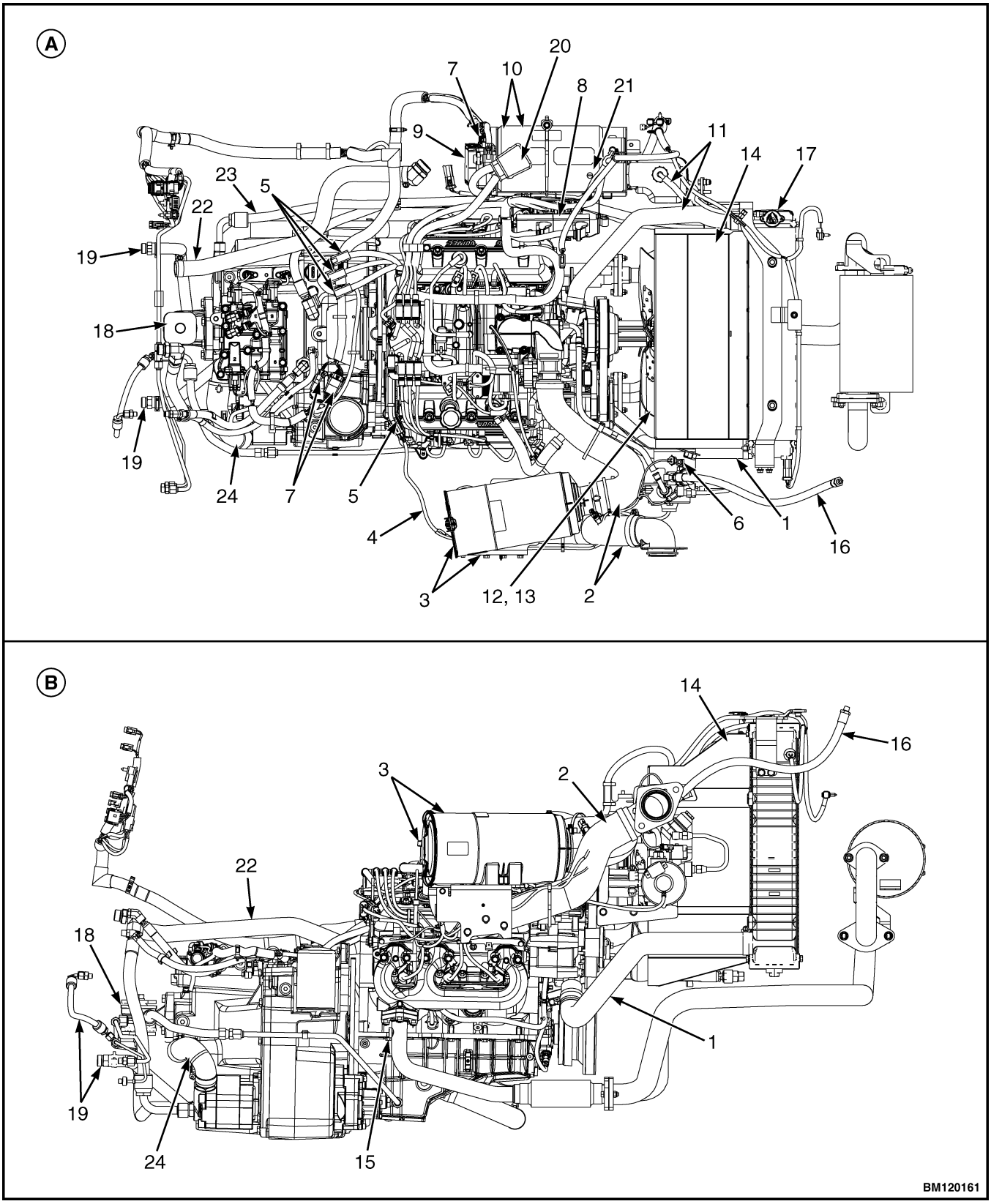

Figure 25. GM 4.3L LPG Engine and Transmission with Single Hydraulic Tank

https://truckmanualshub.com/

Legend for Figure 25

NOTE: GM 4.3L GASOLINE ENGINE IS SIMILAR.

A. TOP VIEW

1. BOTTOM RADIATOR HOSE
2. AIR FILTER HOSE
3. AIR FILTER AND BRACKET ASSEMBLY
4. LEFT HAND CHASSIS HARNESS CONNECTOR
5. ENGINE HARNESS CONNECTOR
6. LPG REGULATOR CONNECTOR
7. RIGHT HAND CHASSIS HARNESS
8. ELECTRONIC CONTROL MODULE (ECM)
9. POWER DISTRIBUTION MODULE (PDM)
10. BATTERY AND BATTERY TRAY
11. COOLANT HOSES
12. FAN PULLEY AND FAN SPACER

B. LEFT SIDE VIEW

13. FAN
14. SHROUD
15. EXHAUST PIPE TO EXHAUST MANIFOLD
16. FUEL LINES
17. RADIATOR CAP
18. TRANSMISSION MOUNT
19. BRAKE COOLING LINES
20. BATTERY CABLE (POSITIVE)
21. BATTERY CABLE (NEGATIVE)
22. HYDRAULIC RETURN HOSE
23. TRANSMISSION OIL COOLER LINES
24. HYDRAULIC SUPPLY HOSE

https://truckmanualshub.com/

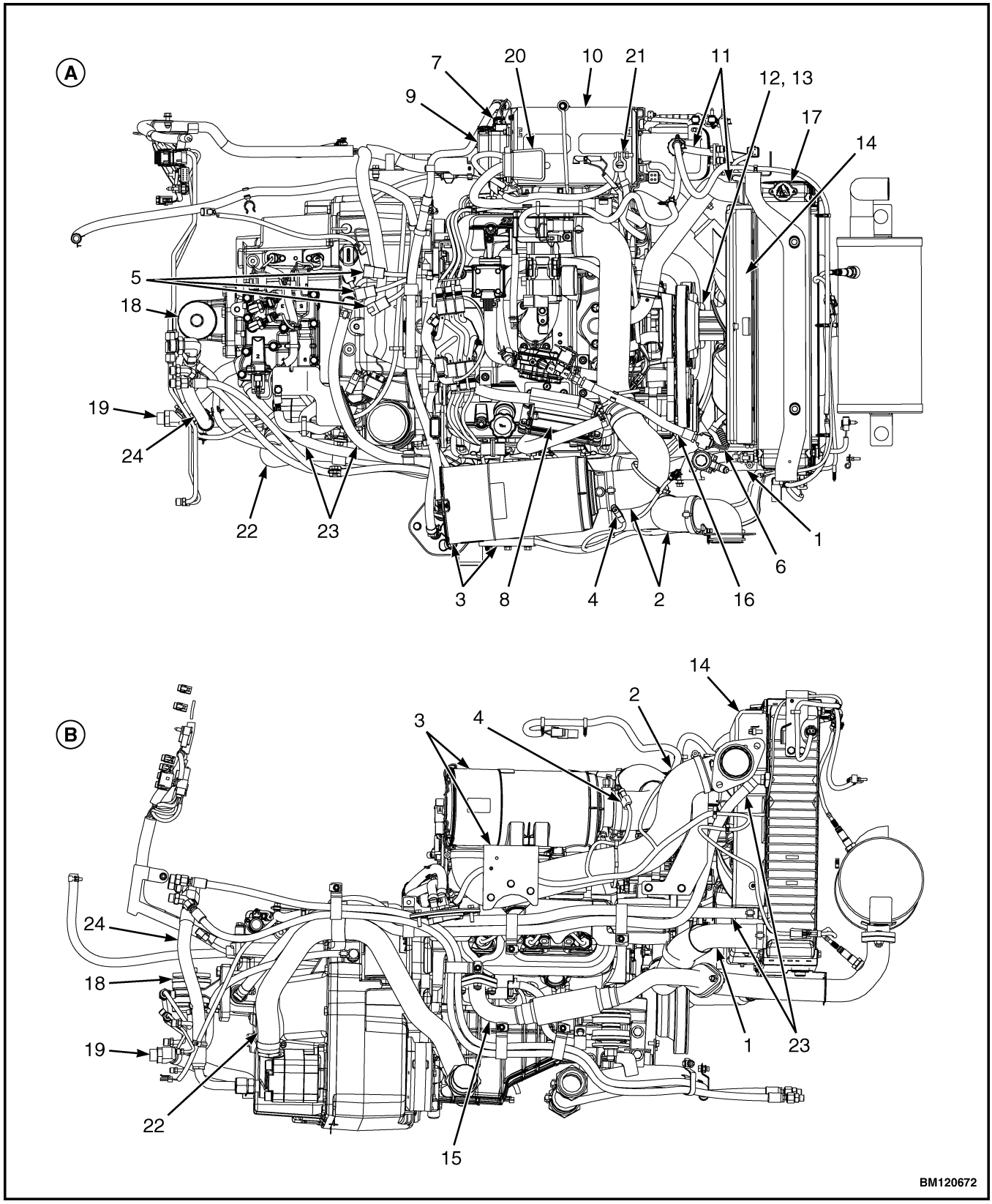

Figure 26. GM 4.3L LPG Engine and Transmission with Dual Hydraulic Tanks

https://truckmanualshub.com/

Legend for Figure 26

A. TOP VIEW

1. BOTTOM RADIATOR HOSE
2. AIR FILTER HOSE
3. AIR FILTER AND BRACKET ASSEMBLY
4. LEFT HAND CHASSIS HARNESS CONNECTOR
5. ENGINE HARNESS CONNECTOR
6. LPG REGULATOR CONNECTOR
7. RIGHT HAND CHASSIS HARNESS
8. ELECTRONIC CONTROL MODULE (ECM)
9. POWER DISTRIBUTION MODULE (PDM)
10. BATTERY AND BATTERY TRAY
11. COOLANT HOSES
12. FAN PULLEY AND FAN SPACER

B. LEFT SIDE VIEW

13. FAN
14. SHROUD
15. EXHAUST PIPE TO EXHAUST MANIFOLD
16. FUEL LINES
17. RADIATOR CAP
18. TRANSMISSION MOUNT
19. BRAKE COOLING LINES
20. BATTERY CABLE (POSITIVE)
21. BATTERY CABLE (NEGATIVE)
22. HYDRAULIC RETURN HOSE
23. TRANSMISSION OIL COOLER LINES
24. HYDRAULIC SUPPLY HOSE

https://truckmanualshub.com/

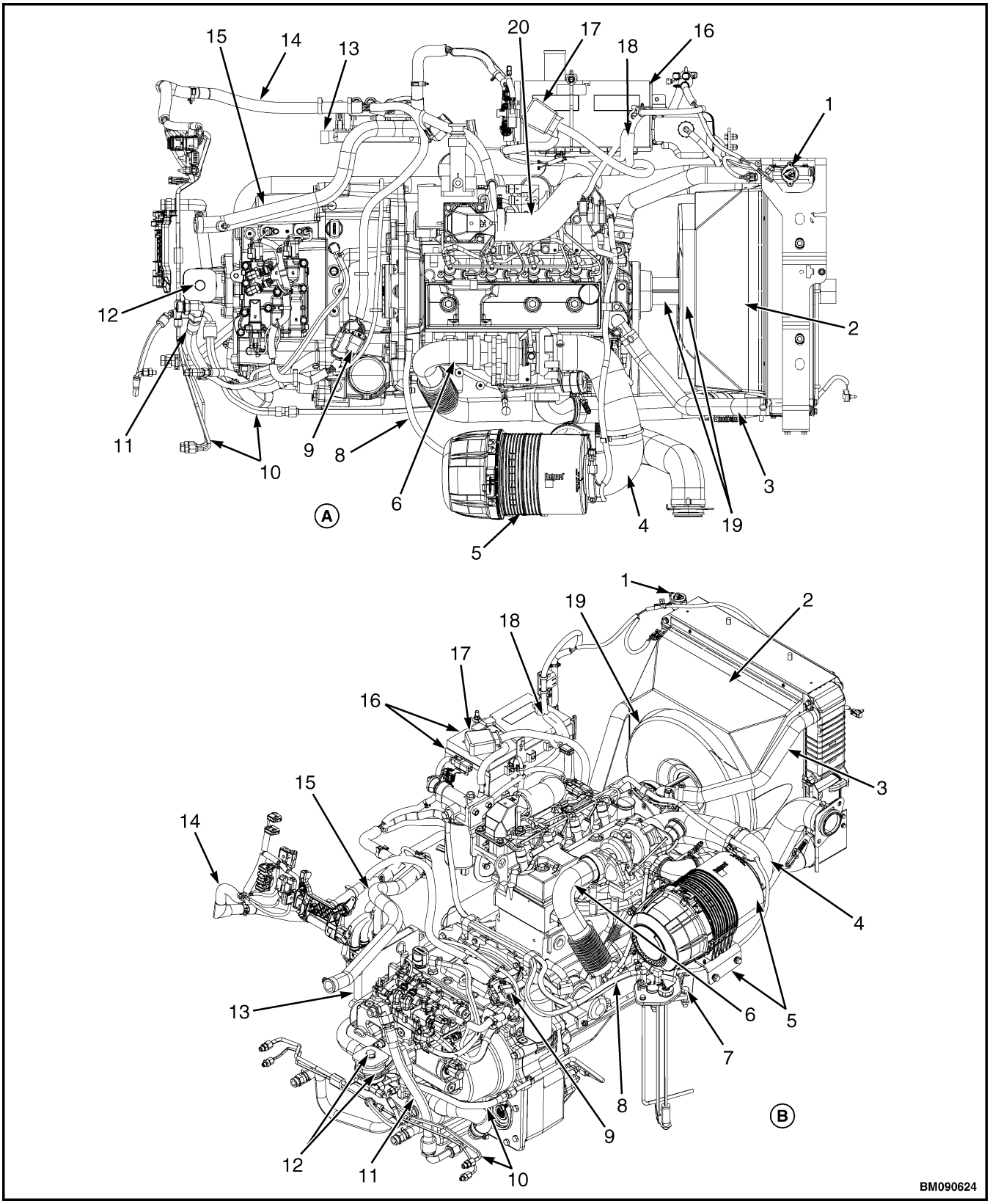

Figure 27. Cummins QSB 3.3L Diesel Engine and Transmission

https://truckmanualshub.com/

Legend for Figure 27

A. TOP VIEW

1. RADIATOR CAP
2. SHROUD
3. BOTTOM COOLANT HOSE
4. AIR FILTER HOSE
5. AIR FILTER AND BRACKET
6. EXHAUST PIPE TO EXHAUST MANIFOLD
7. ENGINE MOUNTING BRACKETS
8. FUEL LINES
9. ENGINE HARNESS CONNECTOR
10. BRAKE COOLING LINE

B. LEFT SIDE VIEW

11. HYDRAULIC SUPPLY LINE
12. TRANSMISSION MOUNTING BRACKET
13. ELECTRONIC CONTROL MODULE
14. RIGHT HAND ENGINE HARNESS
15. HYDRAULIC RETURN LINE
16. BATTERY AND BATTERY TRAY
17. BATTERY CABLE (POSITIVE)
18. BATTERY CABLE (NEGATIVE)
19. FAN SPACER AND FAN PULLEY
20. CHARGE AIR HOSE

https://truckmanualshub.com/

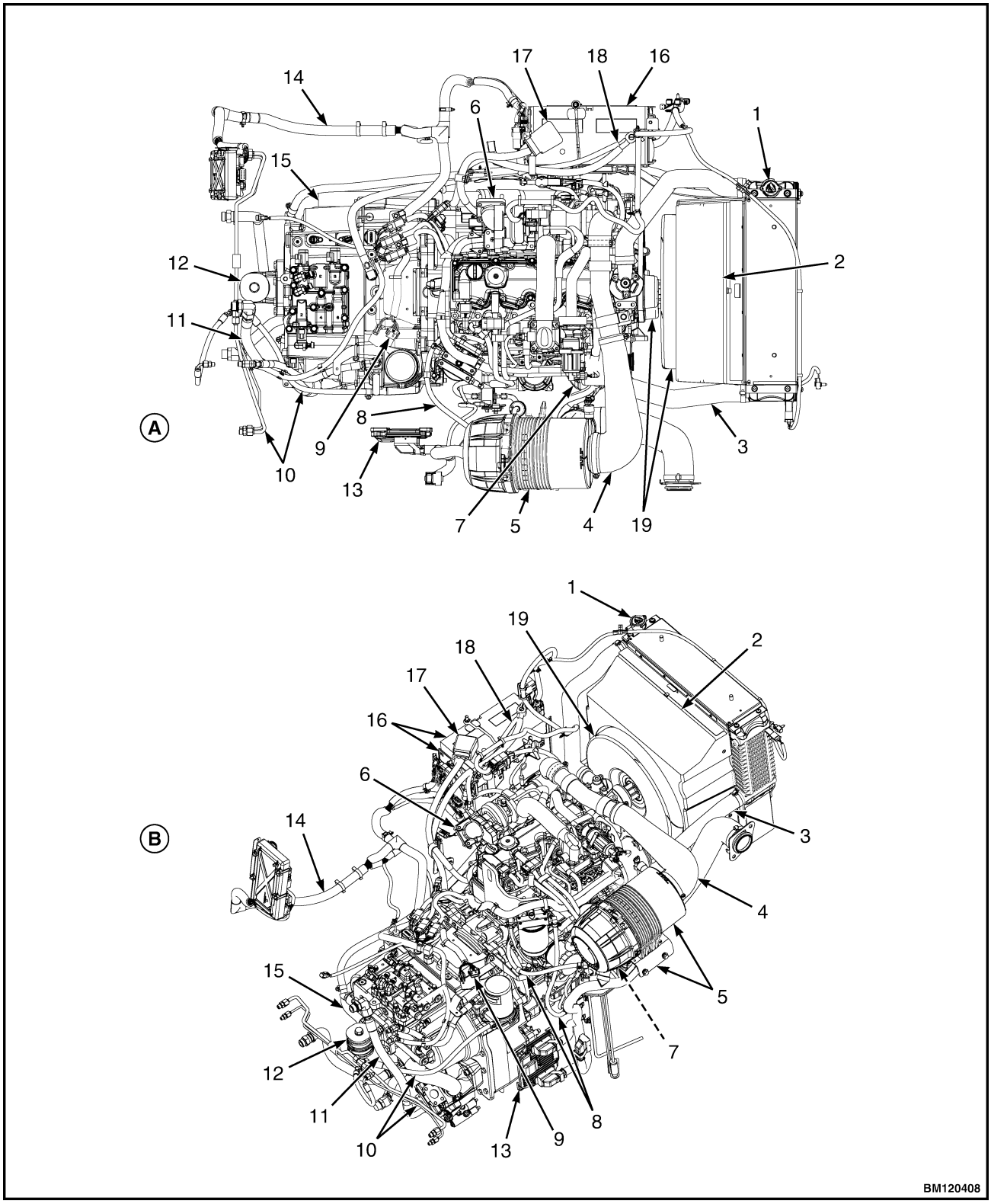

Figure 28. Kubota 3.8L Engine and Transmission for Lift Truck Models GLP/GDP40VX5/VX6; GLP/GDP45SVX5,GLP/GDP45VX6, GLP/GDP50-55VX (GP/GLP/GDP080, 090, 100, 110, 120VX) (H813) Manufactured Before February, 2012.

https://truckmanualshub.com/

Legend for Figure 28

A. TOP VIEW

1. RADIATOR CAP
2. SHROUD
3. BOTTOM COOLANT HOSE
4. AIR FILTER HOSE
5. AIR FILTER AND BRACKET
6. EXHAUST PIPE TO EXHAUST MANIFOLD
7. ENGINE MOUNTING BRACKETS
8. FUEL LINES
9. ENGINE HARNESS CONNECTOR
10. BRAKE COOLING LINE

B. LEFT SIDE VIEW

11. HYDRAULIC SUPPLY LINE
12. TRANSMISSION MOUNTING BRACKET
13. ELECTRONIC CONTROL MODULE
14. RIGHT HAND ENGINE HARNESS
15. HYDRAULIC RETURN LINE
16. BATTERY AND BATTERY TRAY
17. BATTERY CABLE (POSITIVE)
18. BATTERY CABLE (NEGATIVE)
19. FAN SPACER AND FAN PULLEY

https://truckmanualshub.com/

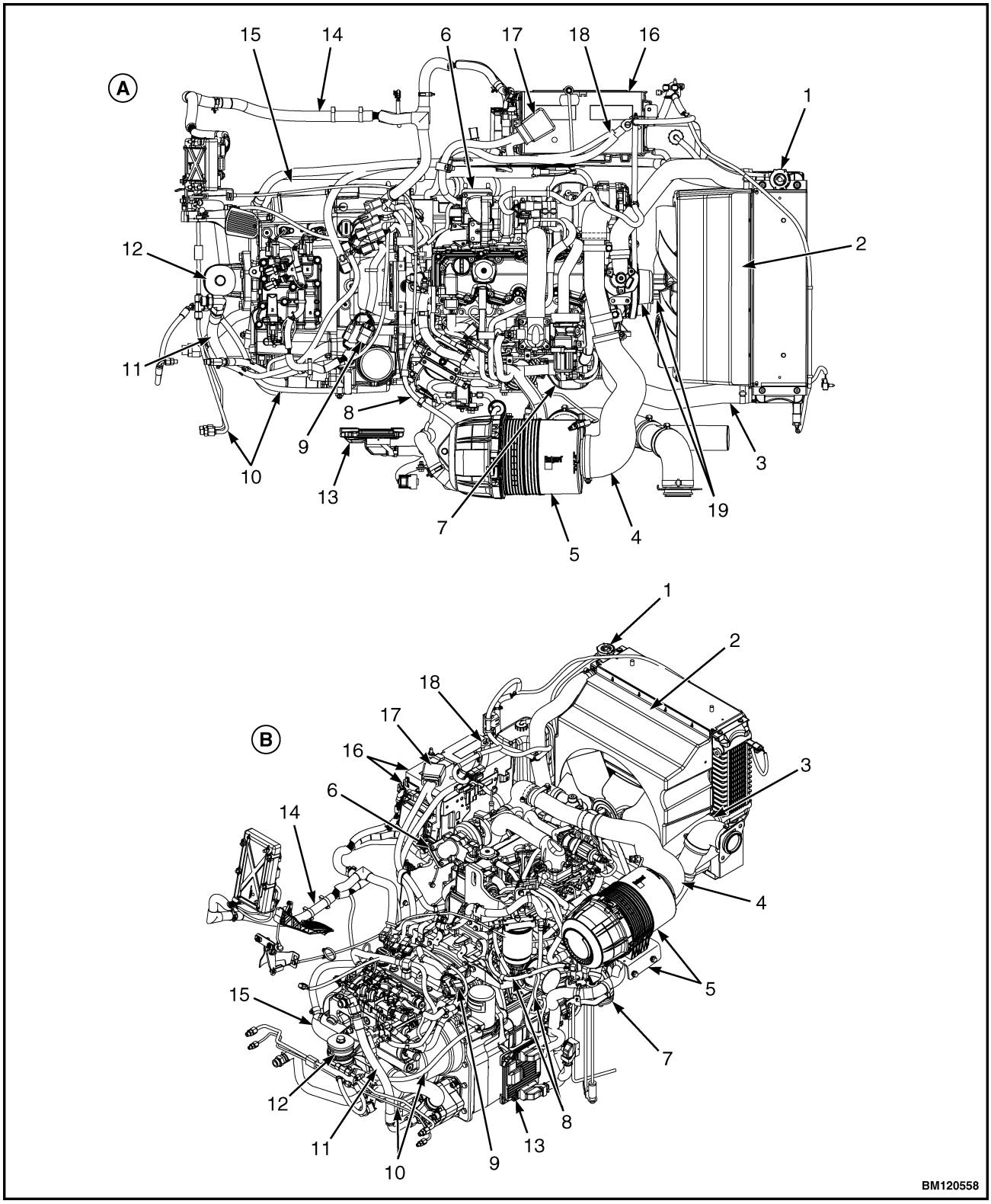

Figure 29. Kubota 3.8L Engine and Transmission for Lift Truck Models GLP/GDP40VX5/VX6; GLP/GDP45SVX5,GLP/GDP45VX6, GLP/GDP50-55VX (GP/GLP/GDP080, 090, 100, 110, 120VX) (H813) Manufactured After February, 2012.

https://truckmanualshub.com/

Legend for Figure 29

A. TOP VIEW

1. RADIATOR CAP
2. SHROUD
3. BOTTOM COOLANT HOSE
4. AIR FILTER HOSE
5. AIR FILTER AND BRACKET
6. EXHAUST PIPE TO EXHAUST MANIFOLD
7. ENGINE MOUNTING BRACKETS
8. FUEL LINES
9. ENGINE HARNESS CONNECTOR
10. BRAKE COOLING LINE

B. LEFT SIDE VIEW

11. HYDRAULIC SUPPLY LINE
12. TRANSMISSION MOUNTING BRACKET
13. ELECTRONIC CONTROL MODULE
14. RIGHT HAND ENGINE HARNESS
15. HYDRAULIC RETURN LINE
16. BATTERY AND BATTERY TRAY
17. BATTERY CABLE (POSITIVE)
18. BATTERY CABLE (NEGATIVE)
19. FAN SPACER AND FAN PULLEY

https://truckmanualshub.com/

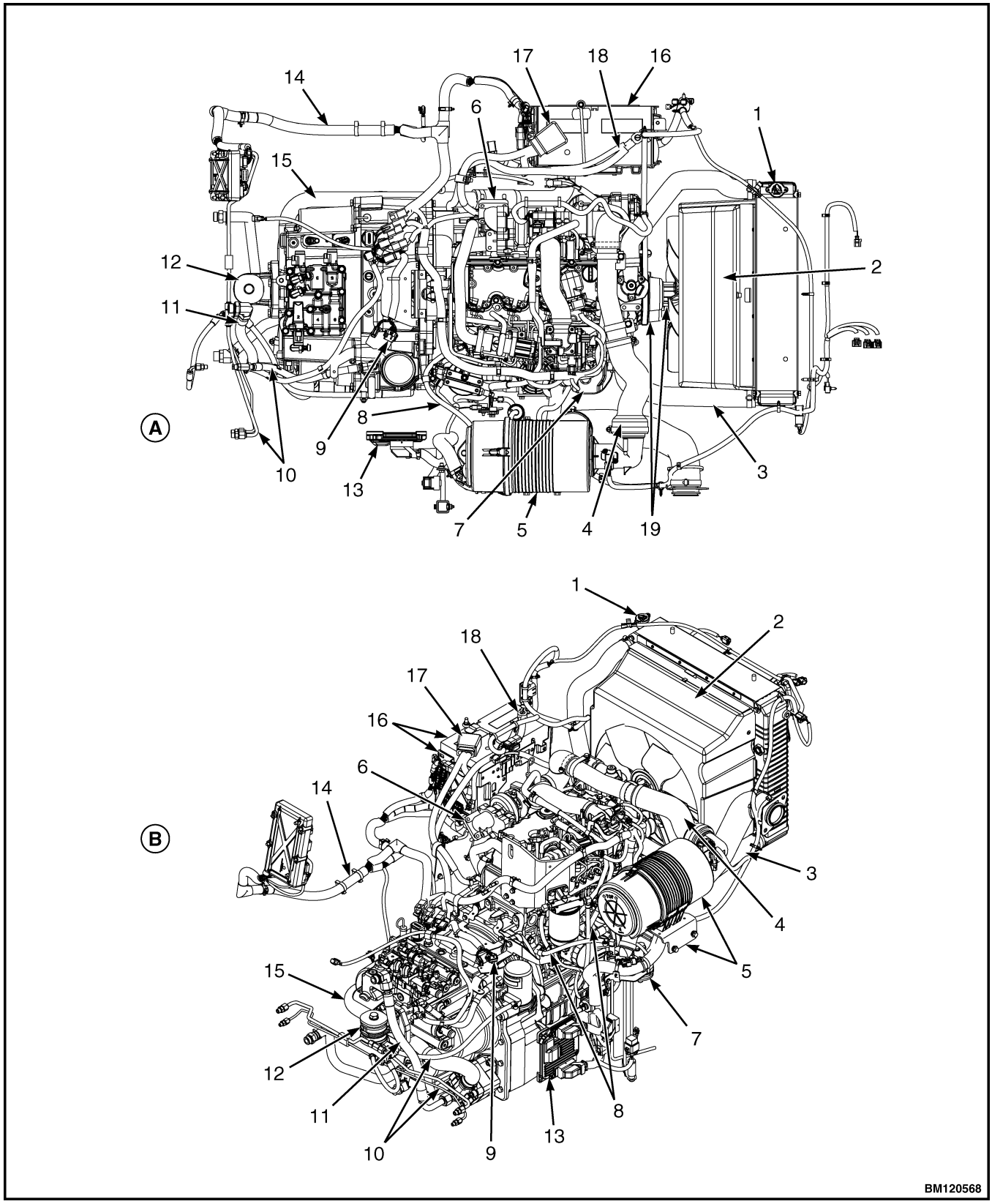

Figure 30. Kubota 3.8L Engine and Transmission for Lift Truck Models GLP/GDP40VX5/VX6; GLP/GDP45SVX5, GLP/GDP45VX6; GLP/GDP50-55VX (GP/GLP/GDP080, 090, 100, 110, 120VX) (J813)

https://truckmanualshub.com/

Legend for Figure 30

A. TOP VIEW

1. RADIATOR CAP
2. SHROUD
3. BOTTOM COOLANT HOSE
4. AIR FILTER HOSE
5. AIR FILTER AND BRACKET
6. EXHAUST PIPE TO EXHAUST MANIFOLD
7. ENGINE MOUNTING BRACKETS
8. FUEL LINES
9. ENGINE HARNESS CONNECTOR
10. BRAKE COOLING LINE

B. LEFT SIDE VIEW

11. HYDRAULIC SUPPLY LINE
12. TRANSMISSION MOUNTING BRACKET
13. ELECTRONIC CONTROL MODULE
14. RIGHT HAND ENGINE HARNESS
15. HYDRAULIC RETURN LINE
16. BATTERY AND BATTERY TRAY
17. BATTERY CABLE (POSITIVE)
18. BATTERY CABLE (NEGATIVE)
19. FAN SPACER AND FAN PULLEY

https://truckmanualshub.com/

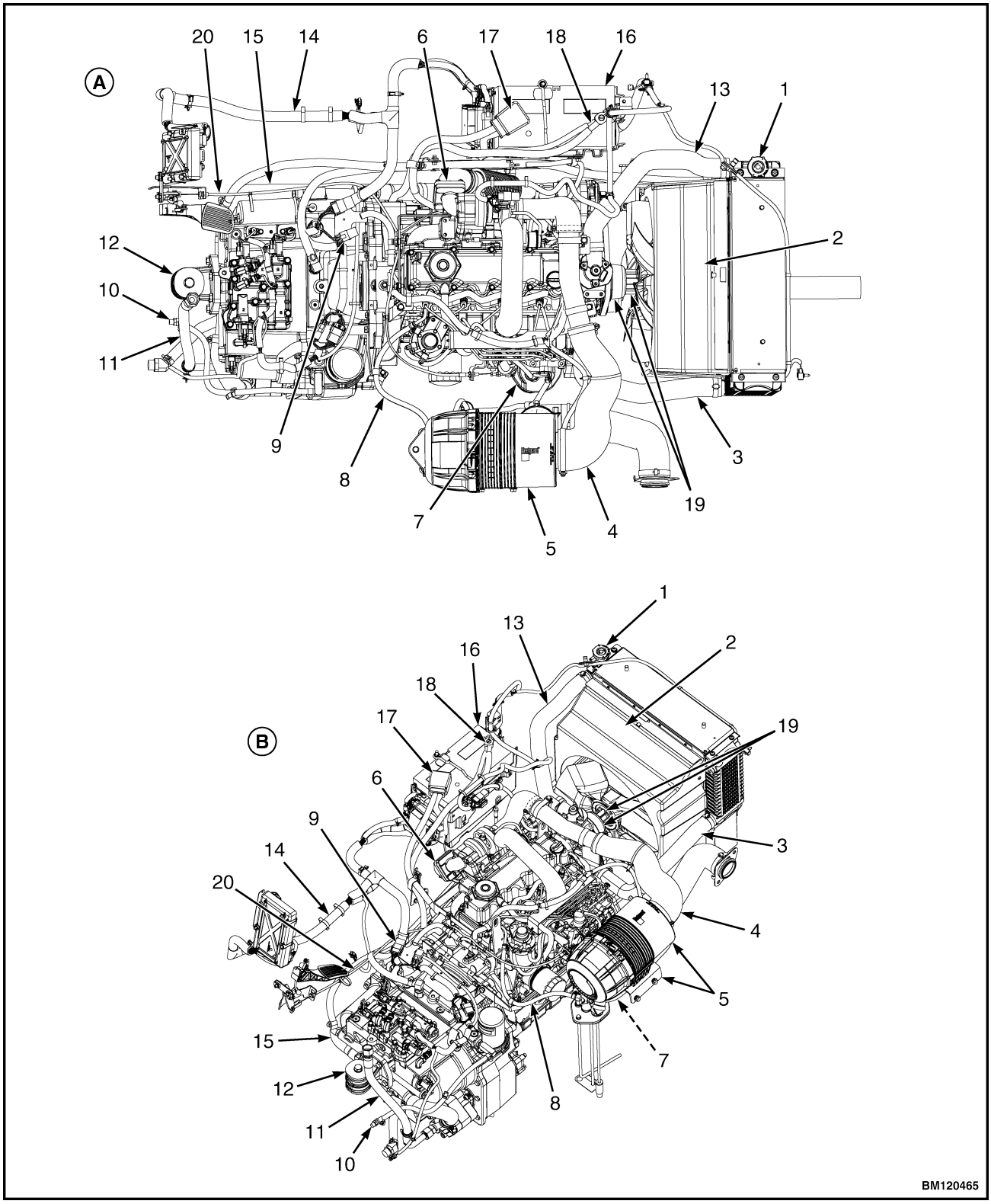

Figure 31. Kubota 3.6L Engine and Transmission for Lift Truck Models GLP/GDP40VX5/VX6; GLP/ GDP45SVX5,GLP/GDP45VX6, GLP/GDP50-55VX (GP/GLP/GDP080, 090, 100, 110, 120VX) (H813) Manufactured Before February, 2012

https://truckmanualshub.com/

Legend for Figure 31

A. TOP VIEW

1. RADIATOR CAP
2. SHROUD
3. LOWER COOLANT HOSE
4. AIR FILTER HOSE
5. AIR FILTER AND BRACKET
6. EXHAUST PIPE TO EXHAUST MANIFOLD
7. ENGINE MOUNTING BRACKETS
8. FUEL LINES
9. ENGINE HARNESS CONNECTOR
10. BRAKE COOLING LINE

B. LEFT SIDE VIEW

11. HYDRAULIC SUPPLY LINE
12. TRANSMISSION MOUNTING BRACKET
13. UPPER COOLANT HOSE
14. RIGHT HAND ENGINE HARNESS
15. HYDRAULIC RETURN LINE
16. BATTERY AND BATTERY TRAY
17. BATTERY CABLE (POSITIVE)
18. BATTERY CABLE (NEGATIVE)
19. FAN SPACER AND FAN PULLEY
20. THROTTLE CABLE

https://truckmanualshub.com/

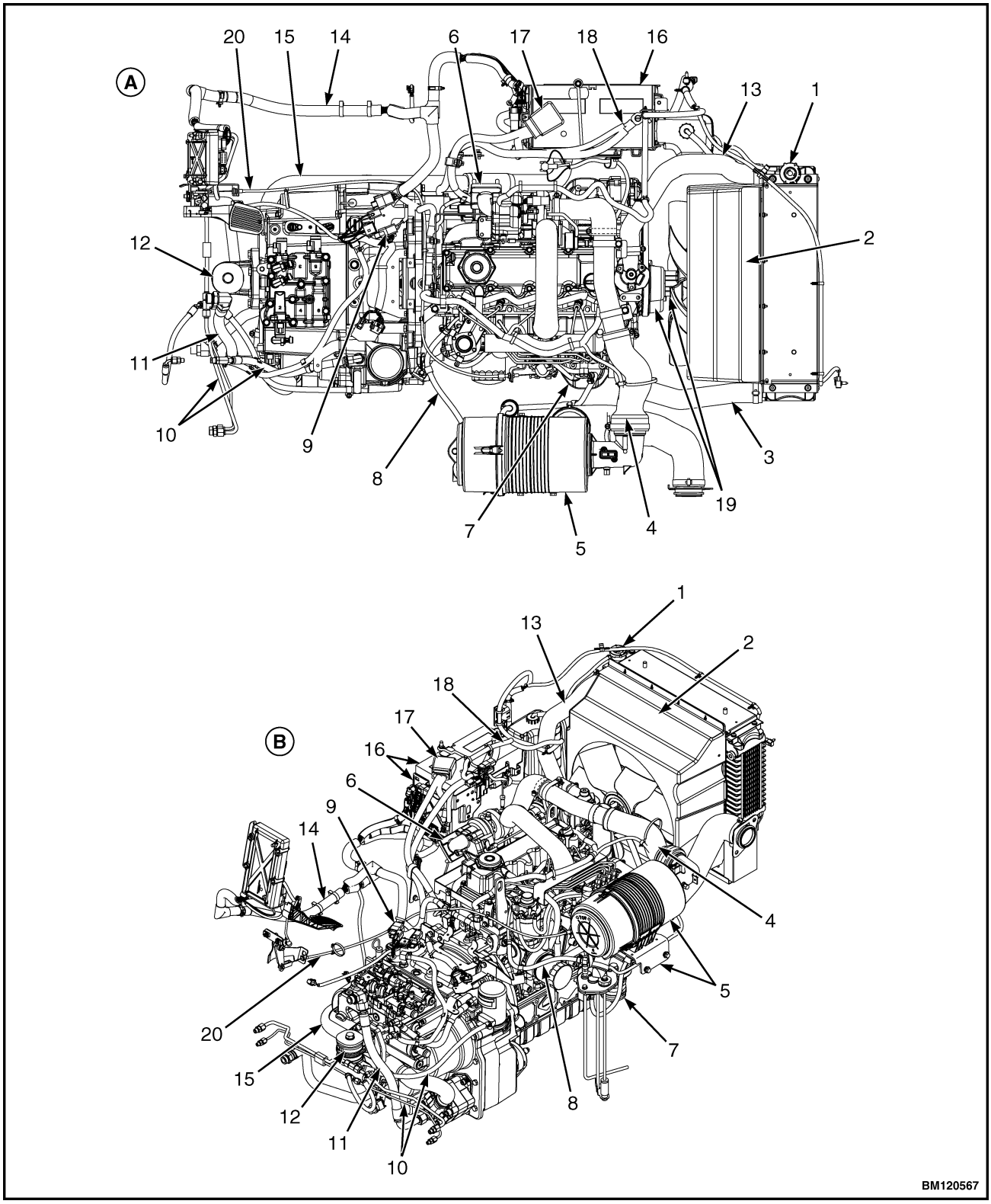

Figure 32. Kubota 3.6L Engine and Transmission for Lift Truck Models GLP/GDP40VX5/VX6; GLP/GDP45SVX5,GLP/GDP45VX6, GLP/GDP50-55VX (GP/GLP/GDP080, 090, 100, 110, 120VX) (H813) Manufactured After February, 2012 and Lift Truck Models GLP/GDP40VX5/VX6; GLP/GDP45SVX5, GLP/GDP45VX6; GLP/GDP50-55VX (GP/GLP/GDP080, 090, 100, 110, 120VX) (J813)

https://truckmanualshub.com/

Legend for Figure 32

A. TOP VIEW

1. RADIATOR CAP
2. SHROUD
3. LOWER COOLANT HOSE
4. AIR FILTER HOSE
5. AIR FILTER AND BRACKET
6. EXHAUST PIPE TO EXHAUST MANIFOLD
7. ENGINE MOUNTING BRACKETS
8. FUEL LINES
9. ENGINE HARNESS CONNECTOR
10. BRAKE COOLING LINE

B. LEFT SIDE VIEW

11. HYDRAULIC SUPPLY LINE
12. TRANSMISSION MOUNTING BRACKET
13. UPPER COOLANT HOSE
14. RIGHT HAND ENGINE HARNESS
15. HYDRAULIC RETURN LINE
16. BATTERY AND BATTERY TRAY
17. BATTERY CABLE (POSITIVE)
18. BATTERY CABLE (NEGATIVE)
19. FAN SPACER AND FAN PULLEY
20. THROTTLE CABLE

https://truckmanualshub.com/

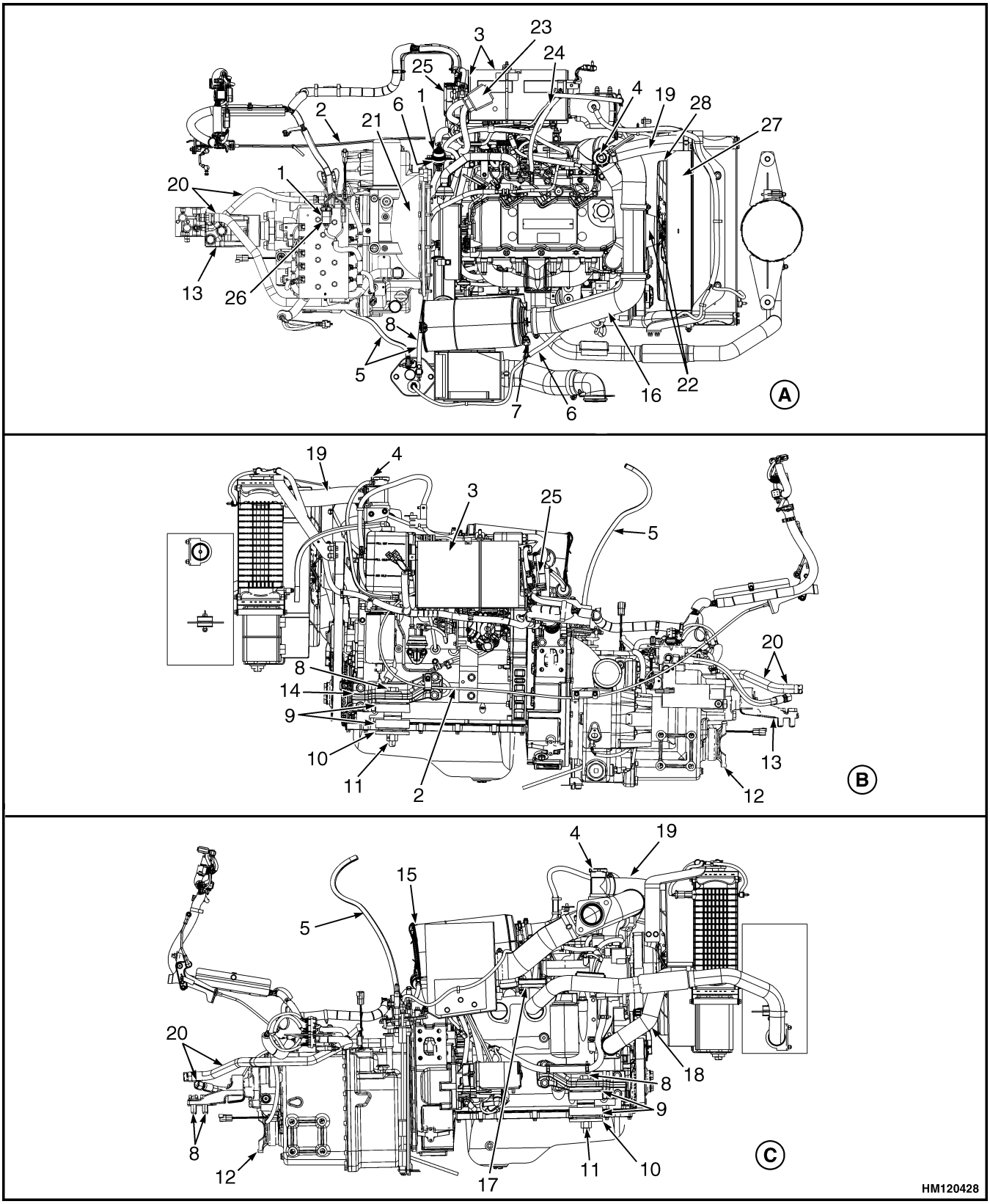

Figure 33. Cummins 4.5L Diesel Engine and Transmission

https://truckmanualshub.com/

Legend for Figure 33

A. TOP VIEW
B. RIGHT SIDE VIEW
C. LEFT SIDE VIEW

1. RIGHT HAND CHASSIS HARNESS CONNECTOR
2. THROTTLE CABLE
3. BATTERY AND BATTERY TRAY
4. RADIATOR CAP
5. FUEL LINES
6. ENGINE HARNESS CONNECTOR
7. LEFT HAND CHASSIS HARNESS CONNECTOR
8. CAPSCREW
9. ISOLATORS
10. WASHERS
11. FLANGE NUTS
12. OUTPUT YOKE
13. TRANSMISSION MOUNT
14. ENGINE MOUNTS
15. AIR FILTER AND BRACKET ASSEMBLY
16. AIR FILTER HOSE
17. EXHAUST PIPE TO EXHAUST MANIFOLD
18. BOTTOM RADIATOR HOSE
19. COOLANT HOSES
20. BRAKE COOLING LINES
21. TRANSMISSION BELL HOUSING
22. FAN PULLEY AND FAN SPACER
23. BATTERY CABLE (POSITIVE)
24. BATTERY CABLE NEGATIVE
25. POWER DISTRIBUTION MODULE (PDM)
26. TRANSMISSION HARNESS CONNECTOR
27. SHROUD
28. FAN

6. Remove hood and seat combination and rear side covers. See section Hood Repair for procedures.

7. Loosen clamp and remove air filter hose from air inlet, located on left rear overhead guard leg.

See Figure 25 for lift trucks equipped with a GM 4.3L gas or LPG engine and single hydraulic tank.

See Figure 26 for lift trucks equipped with a GM 4.3L LPG engine and dual hydraulic tank.

See Figure 27 for lift trucks equipped with a Cummins QSB 3.3L diesel engine.

See Figure 28 for lift trucks models GLP/GDP40VX5/VX6; GLP/GDP45SVX5,GLP/GDP45VX6, GLP/GDP50-55VX (GP/GLP/GDP080, 090, 100, 110, 120VX) (H813) equipped with a Kubota 3.8L diesel engine, manufactured before February, 2012.

See Figure 29 for lift trucks models GLP/GDP40VX5/VX6; GLP/GDP45SVX5,GLP/GDP45VX6, GLP/GDP50-55VX (GP/GLP/GDP080, 090, 100, 110, 120VX) (H813) equipped with a Kubota 3.8L diesel engine, manufactured after February, 2012.

See Figure 30 for lift truck models GLP/GDP40VX5/VX6; GLP/GDP45SVX5, GLP/GDP45VX6; GLP/GDP50-55VX (GP/GLP/GDP080, 090, 100, 110, 120VX) (J813) equipped with a Kubota 3.8L diesel engine.

See Figure 31 for lift trucks models GLP/GDP40VX5/VX6; GLP/GDP45SVX5,GLP/GDP45VX6, GLP/GDP50-55VX (GP/GLP/GDP080, 090, 100, 110, 120VX) (H813) equipped with a Kubota 3.6L diesel engine, manufactured before February, 2012.

See Figure 32 for lift trucks models GLP/GDP40VX5/VX6; GLP/GDP45SVX5,GLP/GDP45VX6, GLP/GDP50-55VX (GP/GLP/GDP080, 090, 100, 110, 120VX) (H813), manufactured after February, 2012, equipped with a Kubota 3.6L diesel engine.

See Figure 32 for lift trucks models GLP/GDP40VX5/VX6; GLP/GDP45SVX5, GLP/GDP45VX6; GLP/GDP50-55VX (GP/GLP/GDP080, 090, 100, 110, 120VX) (J813) equipped with a Kubota 3.6L diesel engine.

See Figure 33 for lift trucks equipped with a Cummins 4.5L diesel engine.

8. Remove air filter, and bracket assembly.

See Figure 25 for lift trucks equipped with a GM 4.3L gas or LPG engine and single hydraulic tank.

See Figure 26 for lift trucks equipped with a GM 4.3L LPG engine and dual hydraulic tanks.

See Figure 27 for lift trucks equipped with a Cummins QSB 3.3L diesel engine.

See Figure 28 for lift trucks models GLP/GDP40VX5/VX6; GLP/GDP45SVX5,GLP/GDP45VX6, GLP/GDP50-55VX (GP/GLP/GDP080, 090, 100, 110, 120VX) (H813) equipped with a Kubota 3.8L diesel engine, manufactured before February, 2012.

https://truckmanualshub.com/

See Figure 29 for lift trucks models GLP/GDP40VX5/VX6; GLP/GDP45SVX5,GLP/GDP45VX6, GLP/GDP50-55VX (GP/GLP/GDP080, 090, 100, 110, 120VX) (H813) equipped with a Kubota 3.8L diesel engine, manufactured after February, 2012.

See Figure 30 for lift truck models GLP/GDP40VX5/VX6; GLP/GDP45SVX5, GLP/GDP45VX6; GLP/GDP50-55VX (GP/GLP/GDP080, 090, 100, 110, 120VX) (J813) equipped with a Kubota 3.8L diesel engine.

See Figure 31 for lift trucks models GLP/GDP40VX5/VX6; GLP/GDP45SVX5,GLP/GDP45VX6, GLP/GDP50-55VX (GP/GLP/GDP080, 090, 100, 110, 120VX) (H813) equipped with a Kubota 3.6L diesel engine, manufactured before February, 2012.

See Figure 32 for lift trucks models GLP/GDP40VX5/VX6; GLP/GDP45SVX5,GLP/GDP45VX6, GLP/GDP50-55VX (GP/GLP/GDP080, 090, 100, 110, 120VX) (H813), manufactured after February, 2012, equipped with a Kubota 3.6L diesel engine.

See Figure 32 for lift trucks models GLP/GDP40VX5/VX6; GLP/GDP45SVX5, GLP/GDP45VX6; GLP/GDP50-55VX (GP/GLP/GDP080, 090, 100, 110, 120VX) (J813) equipped with a Kubota 3.6L diesel engine.

See Figure 33 for lift trucks equipped with a Cummins 4.5L diesel engine.

9. For lift trucks equipped with Cummins 4.5L and Kubota 3.6L diesel engine, disconnect throttle cable from fuel injection pump.

See Figure 33 for lift trucks equipped with a Cummins 4.5L diesel engine.

See Figure 31 for lift trucks models GLP/GDP40VX5/VX6; GLP/GDP45SVX5,GLP/GDP45VX6, GLP/GDP50-55VX (GP/GLP/GDP080, 090, 100, 110, 120VX) (H813) equipped with a Kubota 3.6L diesel engine, manufactured before February, 2012.

See Figure 32 for lift trucks models GLP/GDP40VX5/VX6; GLP/GDP45SVX5,GLP/GDP45VX6, GLP/GDP50-55VX (GP/GLP/GDP080, 090, 100, 110, 120VX) (H813), manufactured after February, 2012, equipped with a Kubota 3.6L diesel engine.

See Figure 32 for lift trucks models GLP/GDP40VX5/VX6; GLP/GDP45SVX5, GLP/GDP45VX6; GLP/GDP50-55VX (GP/GLP/GDP080, 090, 100, 110, 120VX) (J813) equipped with a Kubota 3.6L diesel engine.

NOTE: When disconnecting wiring harness connectors, tag each connector to aid in connecting wiring harness during installation.

10. On lift trucks equipped with either a GM 4.3L gasoline engine, a Cummins 4.5L diesel engine, or Kubota 3.6L diesel engine, disconnect left hand chassis harness connector from engine harness connector.

See Figure 25 for lift trucks equipped with a GM 4.3L gasoline engine.

See Figure 31 for lift trucks models GLP/GDP40VX5/VX6; GLP/GDP45SVX5,GLP/GDP45VX6, GLP/GDP50-55VX (GP/GLP/GDP080, 090, 100, 110, 120VX) (H813) equipped with a Kubota 3.6L diesel engine, manufactured before February, 2012.

See Figure 32 for lift trucks models GLP/GDP40VX5/VX6; GLP/GDP45SVX5,GLP/GDP45VX6, GLP/GDP50-55VX (GP/GLP/GDP080, 090, 100, 110, 120VX) (H813), manufactured after February, 2012, equipped with a Kubota 3.6L diesel engine.

See Figure 32 for lift trucks models GLP/GDP40VX5/VX6; GLP/GDP45SVX5, GLP/GDP45VX6; GLP/GDP50-55VX (GP/GLP/GDP080, 090, 100, 110, 120VX) (J813) equipped with a Kubota 3.6L diesel engine.

See Figure 33 for lift truck models equipped with Cummins 4.5L diesel engine.

NOTE: Perform Step 11 for lift truck models equipped with GFI fuel system.

11. On lift trucks equipped with GM 4.3L LPG engine, disconnect left hand chassis harness connector from LPG regulator connector and engine harness connector. See Figure 25.

12. On lift trucks equipped with GM 4.3L engine or Kubota 3.8L engine, disconnect engine harness connectors from electronic control module (ECM).

See Figure 25 for lift trucks equipped with a GM 4.3L gas or LPG engine and single hydraulic tanks.

https://truckmanualshub.com/

See Figure 26 for lift trucks equipped with a GM 4.3L LPG engine and dual hydraulic tanks.

See Figure 28 for lift trucks models GLP/GDP40VX5/VX6; GLP/GDP45SVX5,GLP/GDP45VX6, GLP/GDP50-55VX (GP/GLP/GDP080, 090, 100, 110, 120VX) (H813) equipped with a Kubota 3.8L diesel engine, manufactured before February, 2012.

See Figure 29 for lift trucks models GLP/GDP40VX5/VX6; GLP/GDP45SVX5,GLP/GDP45VX6, GLP/GDP50-55VX (GP/GLP/GDP080, 090, 100, 110, 120VX) (H813) equipped with a Kubota 3.8L diesel engine, manufactured after February, 2012.

See Figure 30 for lift truck models GLP/GDP40VX5/VX6; GLP/GDP45SVX5, GLP/GDP45VX6; GLP/GDP50-55VX (GP/GLP/GDP080, 090, 100, 110, 120VX) (J813) equipped with a Kubota 3.8L diesel engine.

13. Disconnect engine harness connector from right hand chassis harness connector.

14. Disconnect ground strap from frame and remove power distribution module (PDM) from battery tray. See Figure 34.

15. For lift trucks equipped with either a Cummins QSB 3.3L, a Cummins 4.5L, or Kubota diesel engines, remove battery from battery tray and remove three capscrews from battery tray. Remove battery tray.

16. For lift trucks equipped with GM 4.3L engine, remove three capscrews from battery tray and remove battery, battery tray, and Electronic Control Module (ECM).

17. Loosen hose clamps and disconnect remaining coolant hoses from radiator and cap them to prevent leakage.

See Figure 25 for lift trucks equipped with a GM 4.3L gas or LPG engine and single hydraulic tank.

See Figure 26 for lift trucks equipped with a GM 4.3L LPG engine and dual hydraulic tanks.

See Figure 27 for lift trucks equipped with a Cummins QSB 3.3L diesel engine.

See Figure 28 for lift trucks models GLP/GDP40VX5/VX6; GLP/GDP45SVX5,GLP/GDP45VX6, GLP/GDP50-55VX (GP/GLP/GDP080, 090, 100, 110, 120VX) (H813) equipped with a Kubota 3.8L diesel engine, manufactured before February, 2012.

See Figure 29 for lift trucks models GLP/GDP40VX5/VX6; GLP/GDP45SVX5,GLP/GDP45VX6, GLP/GDP50-55VX (GP/GLP/GDP080, 090, 100, 110, 120VX) (H813) equipped with a Kubota 3.8L diesel engine, manufactured after February, 2012.

See Figure 30 for lift truck models GLP/GDP40VX5/VX6; GLP/GDP45SVX5, GLP/GDP45VX6; GLP/GDP50-55VX (GP/GLP/GDP080, 090, 100, 110, 120VX) (J813) equipped with a Kubota 3.8L diesel engine.

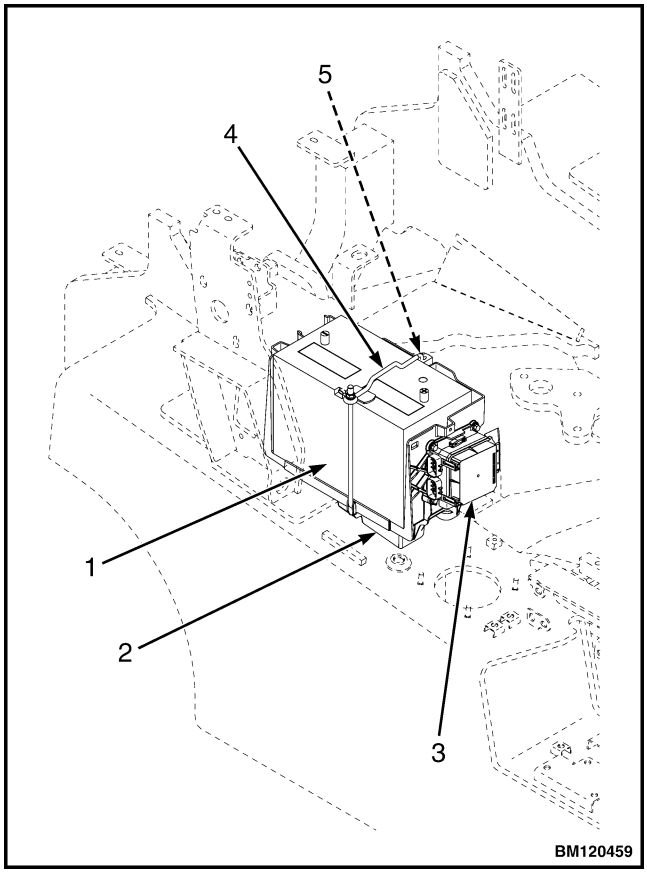

1. BATTERY
2. BATTERY TRAY
3. PDM
4. BATTERY LOCKDOWN BAR
5. GROUND STRAP

Figure 34. Power Distribution Module, Disconnection

https://truckmanualshub.com/

See Figure 31 for lift trucks models GLP/GDP40VX5/VX6; GLP/GDP45SVX5,GLP/GDP45VX6, GLP/GDP50-55VX (GP/GLP/GDP080, 090, 100, 110, 120VX) (H813) equipped with a Kubota 3.6L diesel engine, manufactured before February, 2012.

See Figure 32 for lift trucks models GLP/GDP40VX5/VX6; GLP/GDP45SVX5,GLP/GDP45VX6, GLP/GDP50-55VX (GP/GLP/GDP080, 090, 100, 110, 120VX) (H813), manufactured after February, 2012, equipped with a Kubota 3.6L diesel engine.

See Figure 32 for lift trucks models GLP/GDP40VX5/VX6; GLP/GDP45SVX5, GLP/GDP45VX6; GLP/GDP50-55VX (GP/GLP/GDP080, 090, 100, 110, 120VX) (J813) equipped with a Kubota 3.6L diesel engine.

See Figure 33 for lift trucks equipped with a Cummins 4.5L diesel engine.

18. Disconnect exhaust pipes from exhaust manifolds. See Exhaust System Repair for procedures.

19. Remove radiator fan pulley, shroud, and fan assembly. See section **Cooling System** 0700YRM1123 for removal procedures.

WARNING

All fuels are very flammable and can burn or cause an explosion. DO NOT use an open flame to check the fuel level or to check for leaks in the fuel system.

No smoking.

Breathing fuel vapor may cause nausea, unconsciousness or death. Long term exposure to gasoline vapors may cause liver or kidney damage and cancer. Avoid breathing vapor.

20. Disconnect fuel lines at engine. Put caps on fuel lines to prevent fuel leakage.

See Figure 25 for lift trucks equipped with a GM 4.3L gas or LPG engine and single hydraulic tank.

See Figure 26 for lift trucks equipped with a GM 4.3L LPG engine and dual hydraulic tanks.

See Figure 27 for lift trucks equipped with a Cummins QSB 3.3L diesel engine.

See Figure 28 for lift trucks models GLP/GDP40VX5/VX6; GLP/GDP45SVX5,GLP/GDP45VX6, GLP/GDP50-55VX (GP/GLP/GDP080, 090, 100, 110, 120VX) (H813) equipped with a Kubota 3.8L diesel engine, manufactured before February, 2012.

See Figure 29 for lift trucks models GLP/GDP40VX5/VX6; GLP/GDP45SVX5,GLP/GDP45VX6, GLP/GDP50-55VX (GP/GLP/GDP080, 090, 100, 110, 120VX) (H813) equipped with a Kubota 3.8L diesel engine, manufactured after February, 2012.

See Figure 30 for lift truck models GLP/GDP40VX5/VX6; GLP/GDP45SVX5, GLP/GDP45VX6; GLP/GDP50-55VX (GP/GLP/GDP080, 090, 100, 110, 120VX) (J813) equipped with a Kubota 3.8L diesel engine.

See Figure 31 for lift trucks models GLP/GDP40VX5/VX6; GLP/GDP45SVX5,GLP/GDP45VX6, GLP/GDP50-55VX (GP/GLP/GDP080, 090, 100, 110, 120VX) (H813) equipped with a Kubota 3.6L diesel engine, manufactured before February, 2012.

See Figure 32 for lift trucks models GLP/GDP40VX5/VX6; GLP/GDP45SVX5,GLP/GDP45VX6, GLP/GDP50-55VX (GP/GLP/GDP080, 090, 100, 110, 120VX) (H813), manufactured after February, 2012, equipped with a Kubota 3.6L diesel engine.

See Figure 32 for lift trucks models GLP/GDP40VX5/VX6; GLP/GDP45SVX5, GLP/GDP45VX6; GLP/GDP50-55VX (GP/GLP/GDP080, 090, 100, 110, 120VX) (J813) equipped with a Kubota 3.6L diesel engine.

See Figure 33 for lift trucks equipped with a Cummins 4.5L diesel engine.

21. Lift trucks equipped with GM 4.3L engine, remove left side engine mount to access starter motor. See Figure 25 or Figure 26.

22. Disconnect positive battery (B+) from starter motor.

23. Lift trucks equipped with GM 4.3L engine, remove starter motor to reach four torque converter access bolts. See Figure 25 or Figure 26.

https://truckmanualshub.com/

Thank you very much for your reading.

Please Click Here Then Get More Information.