https://truckmanualshub.com/

2010 Kenworth T440/T470 Body Builder Manual

KENWORTH®

A PACCAR COMPANY

Downloaded from www.Manualslib.com manuals search engine

https://truckmanualshub.com/

2010 Emissions Kenworth T440/T470 Body Builder Manual

Downloaded from www.Manualslib.com manuals search engine

T470/T440 Body Builder Manual Contents

https://truckmanualshub.com/

SECTION 1: INTRODUCTION **1-1**

SECTION 2: SAFETY AND COMPLIANCE **2-1**
SAFETY SIGNALS . . . 2-1
FEDERAL MOTOR VEHICLE SAFETYSTANDARDS COMPLIANCE . . . 2-2

SECTION 3: DIMENSIONS **3-1**
DIMENSIONS . . . 3-1
ABBREVIATIONS . . . 3-1
TURNING RADIUS . . . 3-1
KENWORTH AXLE TRACK/TIRE WIDTH SUMMARY . . . 3-4
OVERALL DIMENSIONS . . . 3-5
T470 FIXED GRILLE HOOD W/O EXTENDED FRONT FRAME . . . 3-6
T440 DAYCAB . . . 3-7
T470 FIXED GRILLE HOOD WITH EXTENDED FRONT FRAME . . . 3-9
38” AEROCAB . . . 3-10
RIDE HEIGHTS . . . 3-12
REAR SUSPENSION LAYOUTS . . . 3-14
REYCO 79KB SINGLE REAR AXLE . . . 3-14
REYCO 102 TANDEM REAR AXLE . . . 3-15
NEWAY AD 123 SINGLE REAR AXLE . . . 3-16
NEWAY AD 246 TANDEM SUSPENSION . . . 3-17
HENDRICKSON PRIMAAX TANDEM SUSPENSION . . . 3-18
HENDRICKSON HMX TANDEM SUSPENSION . . . 3-19
HENDRICKSON RT TANDEM SUSPENSION. . . . 3-20
KENWORTH AG 380 TANDEM SUSPENSION . . . 3-22
KENWORTH AG 400/460 TANDEM SUSPENSION. . . . 3-23
KENWORTH AG 400L TANDEM SUSPENSION . . . 3-24
KENWORTH AG 460 TANDEM SUSPENSION . . . 3-25
CHALMERS 856-46 TANDEM SUSPENSION. . . . 3-26
PUSHER AXLES . . . 3-27
PTO CLEARANCES . . . 3-32

SECTION 4: EXHAUST AND AFTERTREATMENT **4-1**
EXHAUST AND AFTER-TREATMENT INFORMATION . . . 4-1
GENERAL GUIDELINES FOR DEF SYSTEM . . . 4-3
INSTALLATION REQUIREMENTS AND DIMENSIONS FOR DEF SYSTEM . . . 4-3
MEASUREMENT REFERENCE POINTS . . . 4-4
GENERAL EXHAUST INFORMATION . . . 4-10
EXHAUST INFORMATION . . . 4-19

SECTION 5: FRAME LAYOUTS **5-1**
FRAME LAYOUTS . . . 5-1
COMMON OPTIONAL COMPONENTS . . . 5-2
FRAME LAYOUT INDEX. . . . 5-4
CHARTS . . . 5-5

SECTION 6: BODY MOUNTING **6-1**
FRONT FRAME DIMENSIONS . . . 6-1
FRAME INFORMATION . . . 6-2
BODY MOUNTING USING BRACKETS. . . . 6-3
MOUNTING HOLES . . . 6-5
BODY MOUNTING USING U–BOLTS . . . 6-6

Downloaded from www.Manualslib.com manuals search engine

https://truckmanualshub.com/

SECTION 7: FRAME MODIFICATIONS **7-1**
FRAME MODIFICATIONS . . . 7-1
MODIFYING FRAME LENGTH . . . 7-2
CHANGING WHEELBASE . . . 7-3
CROSSMEMBERS . . . 7-5
WELDING . . . 7-6
TORQUE REQUIREMENTS . . . 7-7

SECTION 8: ELECTRICAL **8-1**
ELECTRICAL . . . 8-1
MULTIPLEX INSTRUMENTATION . . . 8-1
ACCESSING GAUGES AND SWITCHES . . . 8-9
TELLTALE SYMBOLS . . . 8-17
SPARE RELAYS BODY BUILDER INSTALLED(FOR LOADS EXCEEDING 20 AMPS) . . . 8-23
ADDITIONAL SPARE CIRCUITS . . . 8-25
REMOTE PTO/THROTTLE HARNESS . . . 8-27
MULTIFUNCTION TURN SIGNAL STALK, CHASSIS NODE & CHASSIS LOAD CENTER . 8-28
CHASSIS LOAD CENTER DIMENSIONS . . . 8-30
2010 ELECTRICAL HARDWARE . . . 8-31
TRAILER CABLE CONNECTIONS . . . 8-35
FACTORY INSTALLED SNOW PLOW LIGHT WIRING . . . 8-37

SECTION 9: ROUTING **9-1**
ROUTING . . . 9-1
ROUTING REQUIREMENTS . . . 9-2

APPENDIX A: VEHICLE IDENTIFICATION **A-1**
VEHICLE IDENTIFICATION LABELS . . . A-2

Downloaded from www.Manualslib.com manuals search engine

Figures

https://truckmanualshub.com/

FIGURE 2-1: INCOMPLETE VEHICLE CERTIFICATION DOCUMENT 2-2
FIGURE 2-2: LOCATIONS OF CERTIFICATION LABELS 2-2
FIGURE 2-3: WEST COAST MIRROR OAT SENSOR, ... 2-6
FIGURE 2-4: AERODYNAMIC MIRROR OAT SENSOR LOCATION. 2-7
FIGURE 2-5: INSTRUMENT CLUSTER FOR T440/T470 USED WITH EPA2010 EMISSION COMPLIANT ENGINES. 2-7
FIGURE 3-1: PROSPECTOR TURN CIRCLE ANALYSIS 3-3
FIGURE 4-1: MEASUREMENT LOCATION OF DEF SUPPLY MODULE (PUMP). 4-4
FIGURE 4-2: MEASUREMENT LOCATION OF DEF DOSING MODULE (INJECTOR) . . 4-4
FIGURE 4-3: ORIENTATION OF DOSING MODULE 4-5
FIGURE 4-4: RH UNDER CAB EXHAUST WITH SMALL, MEDIUM, OR LARGE TANKS. 4-5
FIGURE 4-5: VERTICAL EXHAUST WITH SMALL, MEDIUM, OR LARGE TANKS. 4-6
FIGURE 4-6: RH UNDER CAB EXHAUST WITH CLEAR BACK OF CAB TANK. 4-7
FIGURE 4-7: VERTICAL WITH CLEAR BACK OF CAB TANK 4-8
FIGURE 4-8: ROUTING DEF LINES AND DEF TRAP 4-9
FIGURE 4-9: SUPPLY MODULE ALLOWED CLOCKING ANGLES 4-9
FIGURE 4-10: ISOMETRIC VIEW OF RIGHT HAND UNDER DPF AND SCR WITH SINGLE SOC TAILPIPE 4-11
FIGURE 4-11: TOP VIEW OF RIGHT HAND UNDER DPF AND SCR WITH SINGLE SOC TAILPIPE 4-11
FIGURE 4-12: RIGHT VIEW OF RIGHT HAND UNDER DPF AND SCR WITH SINGLE SOC TAILPIPE 4-12
FIGURE 4-13: BACK VIEW OF RIGHT HAND UNDER DPF AND SCR WITH SINGLE SOC TAILPIPE 4-12
FIGURE 4-14: ISOMETRIC VIEW OF RIGHT HAND UNDER DPF AND SCR WITH SINGLE BACK OF CAB TAILPIPE 4-13
FIGURE 4-15: TOP VIEW OF RIGHT HAND UNDER DPF AND SCR WITH SINGLE BACK OF CAB TAILPIPE 4-13
FIGURE 4-16: RIGHT VIEW OF RIGHT HAND UNDER DPF AND SCR WITH SINGLE BACK OF CAB TAILPIPE 4-14
FIGURE 4-17: BACK VIEW OF RIGHT HAND UNDER DPF AND SCR WITH SINGLE BACK OF CAB TAILPIPE 4-14
FIGURE 4-18: ISOMETRIC VIEW OF VERTICAL DPF AND SCR 4-15
FIGURE 4-19: TOP VIEW OF VERTICAL DPF AND SCR 4-15
FIGURE 4-20: RIGHT VIEW OF VERTICAL DPF AND SCR 4-16
FIGURE 4-21: BACK VIEW OF VERTICAL DPF AND SCR 4-16
FIGURE 4-22: ISOMETRIC VIEW OF RIGHT HAND UNDER DPF AND SCR ON AEROCAB WITH SINGLE SOC TAILPIPE. 4-17
FIGURE 4-23: TOP VIEW OF RIGHT HAND UNDER DPF AND SCR ON AEROCAB WITH SINGLE SOC TAILPIPE. 4-17
FIGURE 4-24: RIGHT VIEW OF RIGHT HAND UNDER DPF AND SCR ON AEROCAB WITH SINGLE SOC TAILPIPE. 4-17
FIGURE 4-25: BACK VIEW OF RIGHT HAND UNDER DPF AND SCR ON AEROCAB WITH SINGLE SOC TAILPIPE. 4-18
FIGURE 5-1: DEF TANK DIMENSIONS. 5-3
FIGURE 6-1: MINIMUM CLEARANCE BETWEEN TOP OF REAR TIRES AND BODY STRUCTURE OVERHANG.. 6-2
FIGURE 6-2: MINIMUM BACK OF CAB CLEARANCE 6-3
FIGURE 6-3: SPACER BETWEEN FRAME SILL AND BODY RAIL 6-4
FIGURE 6-4: HIGH COMPRESSION SPRING. 6-4
FIGURE 6-5: RUBBER SPACER BETWEEN BRACKETS BETWEEN THE MOUNTING BOLT AND UPPER BRACKET 6-4

Downloaded from www.Manualslib.com manuals search engine

https://truckmanualshub.com/

Figures

FIGURE 6-6: CROSSMEMBER-GUSSET HOLE PATTERN REQUIREMENTS.. 6-5
FIGURE 6-7: ACCEPTABLE U-BOLT MOUNTING WITH WOOD AND FABRICATED SPACERS 6-6
FIGURE 6-8: CLEARANCE SPACE FOR AIR LINES AND CABLES 6-7
FIGURE 6-9: EXAMPLE OF FISHPLATE BRACKET AT REAR END OF BODY, USED WITH U-BOLTS 6-8
FIGURE 7-1: DETAIL OF FRAME EXTENSION AND JOINT WELDING. 7-2
FIGURE 7-2: FRAME INSERT 7-3
FIGURE 7-3: COMPARISON OF ORIGINAL, SHORTENED, AND EXTENDED WHEELBASES.. 7-4
FIGURE 7-4: CROSSMEMBER ADDED WHEN DISTANCE EXCEEDS 60 INCHES (1524 MM). 7-5
FIGURE 8-1: KENWORTH T440/T470 DASH 8-2
FIGURE 8-2: DIESEL EXHAUST FLUID GAUGE 8-2
FIGURE 8-3: MULTIPLEXED INSTRUMENTATION BLOCK DIAGRAM.. 8-3
FIGURE 8-4: CECU LOCATION. 8-4
FIGURE 8-5: INSTRUMENT CLUSTER COMPONENTS 8-5
FIGURE 8-6: CVSG GAUGES 8-6
FIGURE 8-7: FIREWALL AIR JUNCTION BLOCK (VIEW FROM INSIDE OF CAB) 8-7
FIGURE 8-8: AIR FILTER RESTRICTION SENSOR ON FIREWALL AIR JUNCTION BLOCK (VIEW FROM ENGINE) 8-7
FIGURE 8-9: FUEL FILTER RESTRICTION PRESSURE GAUGE SENSOR LOCATION (TYPICAL) 8-8
FIGURE 8-10: TELLTALE SYMBOL STANDARD CARDS 8-17
FIGURE 8-11: BLANK TELLTALE CARD 8-18
FIGURE 8-12: TELLTALE ICONS 8-19
FIGURE 8-13: KENWORTH SPARE SWITCHES 8-20
FIGURE 8-14: SPARE SWITCH HARNESS 8-21
FIGURE 8-15: SPECIALTY SWITCHES 8-22
FIGURE 8-16: SPARE RELAY CONNECTORS 8-23
FIGURE 8-17: SPARE RELAY HARNESSES 8-24
FIGURE 8-18: SPARE BULLET CONNECTORS 8-25
FIGURE 8-19: SPARE PIGTAIL CONNECTOR 8-26
FIGURE 8-21: CHASSIS POWER DISTRIBUTION CENTER DIMENSIONS 8-30
FIGURE 8-22: DAYCAB HARDWARE LOCATIONS 8-31
FIGURE 8-23: AEROCAB STANDARD HARDWARE LOCATIONS 8-31
FIGURE 8-25: CHASSIS NODE DIMENSIONS 8-32
FIGURE 8-25: SAE J560 TRAILER CONNECTOR . . . . . .
FIGURE 8-26: ISO 3731 TRAILER CONNECTOR 8-35
FIGURE 8-27: JUNCTION BOX 8-36
FIGURE 8-31: SNOW PLOW ICON 8-37
FIGURE 8-32: CIRCUIT LOCATION 8-37
FIGURE 9-1: CLAMP AND BUTTERFLY CLAMP 9-1
FIGURE 9-2: BUTTERFLY TIE 9-1
FIGURE 9-3: TIE STRAP 9-1
FIGURE 9-4: HEAVY DUTY (HD) MOUNT.. 9-2
FIGURE 9-5: DEFINITION OF MEASUREMENTS. 9-4
FIGURE A-1: VEHICLE IDENTIFICATION NUMBER (VIN). A-1
FIGURE A-2: DRIVERS DOOR AND DOOR FRAME LABELS A-2
FIGURE A-4: FRONT AXLE IDENTIFICATION A-4
FIGURE A-5: REAR AXLE IDENTIFICATION A-4

Downloaded from www.Manualslib.com manuals search engine

Tables

https://truckmanualshub.com/

TABLE 3-1: ABBREVIATIONS USED 3-1
TABLE 3-2: TURNING RADIUS 3-1
TABLE 3-3: AXLE TRACK 3-4
TABLE 3-4: RIDE HEIGHTS IN INCHES 3-12
TABLE 3-5: REAR SUSPENSION OPTIONS 3-14
TABLE 3-6: REAR SUSPENSION OPTIONS 3-15
TABLE 3-7: REAR SUSPENSION OPTIONS 3-16
TABLE 3-8: REAR SUSPENSION OPTIONS 3-17
TABLE 3-9: REAR SUSPENSION OPTIONS 3-18
TABLE 3-10: REAR SUSPENSION OPTIONS 3-19
TABLE 3-11: REAR SUSPENSION OPTIONS 3-20
TABLE 3-13: REAR SUSPENSION OPTIONS 3-22
TABLE 3-14: REAR SUSPENSION OPTIONS 3-23
TABLE 3-15: REAR SUSPENSION OPTIONS 3-24
TABLE 3-16: REAR SUSPENSION OPTIONS 3-25
TABLE 3-17: REAR SUSPENSION OPTIONS 3-26
TABLE 3-18: GROUND CLEARANCE FOR FUEL TANKS 3-29
TABLE 3-19: GROUND CLEARANCE FOR BATTERY BOXES 3-30
TABLE 3-20: GROUND CLEARANCE FOR BATTERY BOXES 3-31
TABLE 5-1: ABBREVIATIONS 5-1
TABLE 5-2: FUEL TANK OVERALL LENGTH (IN) 5-2
TABLE 5-3: BATTERY BOX CENTERFRAME LENGTHS (IN) 5-2
TABLE 5-4: DEF TANKS SYSTEMS 5-3
TABLE 6-1: SINGLE STEEL RAILS 6-2
TABLE 6-2: INSERTED STEEL RAILS 6-2
TABLE 7-1: CUSTOMARY GRADE 8 UNF OR UNC. 7-7
TABLE 7-2: U.S. CUSTOMARY – GRADE 8. METRIC CLASS 10.9 7-7
TABLE 8-1: TELLTALES POSITION AND COLOR 8-18
TABLE 8-3: CHASSIS NODE GUIDELINE 8-28
TABLE 8-4: WIRE NUMBER GENERAL CATEGORIES 8-33
TABLE 8-6: SAE J560 CONNECTOR 8-34
TABLE 8-7: ISO 3731 CONNECTOR 8-35
TABLE 9-1: EXHAUST – SYSTEM CLEARANCE 9-4
TABLE A-1: MODEL YEAR (CODE) DESIGNATIONS. A-1

Downloaded from www.Manualslib.com manuals search engine

https://truckmanualshub.com/

Section 1
Introduction

This manual was created to provide body builders with appropriate information and guidelines useful in the body planning and installation process. This information will be helpful when installing bodies or other associated equipment.

This manual contains appropriate dimensional information, guidelines for mounting bodies, guidelines for modifying frames, electrical wiring information, and other information useful in the body installation process. This manual is specific to chassis with 2010 engines.

The Body Builder Manual can be very useful when specifying a vehicle, particularly when the body builder is involved in the vehicle definition and ordering process. Early in the process, professional body builders can often contribute valuable information that reduces the ultimate cost of the body installation.

In the interest of continuing product development, Kenworth reserves the right to change specifications or products at any time without prior notice. It is the responsibility of the user to ensure that he is working with the latest released information. Check Kenworth.com for the latest released version.

If you require additional information or reference materials, please contact your local Kenworth dealer.

Downloaded from www.Manualslib.com manuals search engine

https://truckmanualshub.com/

SAFETY SIGNALS

We've put a number of alerting messages in this book. Please read and follow them. They are there for your protection and information. These alerting messages can help you avoid injury to yourself or others and help prevent costly damage to the vehicle.

Key symbols and "signal words" are used to indicate what kind of message is going to follow. Pay special attention to comments prefaced by "WARNING", "CAUTION", and "NOTE." Please don't ignore any of these alerts.

Warnings, cautions, and notes

WARNING

When you see this word and symbol, the message that follows is especially vital. It signals a **potentially hazardous situation** which, if not avoided, could result in death or serious injury. This message will tell you what the hazard is, what can happen if you don't heed the warning, and how to avoid it.

Example:

WARNING! Be sure to use a circuit breaker designed to meet liftgate amperage requirements. An incorrectly specified circuit breaker could result in a electrical overload or fire situation. Follow the liftgate installation instructions and use a circuit breaker with the recommended capacity.

CAUTION

Signals a **potentially hazardous situation** which, if not avoided, could result in minor or moderate injury or damage to the vehicle.

Example:

CAUTION: Never use a torch to make a hole in the rail. Use the appropriate drill bit.

NOTE

Provides general information: for example, the note could warn you on how to avoid damaging your vehicle or how to drive the vehicle more efficiently.

Example:

Note: Be sure to provide maintenance access to the battery box and fuel tank fill neck.

Please take the time to read these messages when you see them, and remember:

WARNING
Indicates a potentially hazardous situation which, if not avoided, could result in death or serious injury.

CAUTION
Signals a potentially hazardous situation which, if not avoided, could result in minor or moderate injury or damage to the vehicle.

NOTE
Useful information that is related to the topic being discussed.

Downloaded from www.Manualslib.com manuals search engine

https://truckmanualshub.com/

FEDERAL MOTOR VEHICLE SAFETY STANDARDS COMPLIANCE

As an Original Equipment Manufacturer (OEM), Kenworth Truck Co. ensures that our products comply with all applicable U.S. or Canadian Federal Motor Vehicle Safety Standards. However, the fact that this vehicle has no fifth wheel and that a Body Builder (Intermediate or Final Stage Manufacturer) will be doing additional modifications means that the vehicle was incomplete when it left the build plant. See next section and Appendix A for additional information.

Incomplete Vehicle Certification

An Incomplete Vehicle Document is shipped with the vehicle, certifying that the vehicle is not complete. See Figure 2–1. In addition, affixed to the driver's side door frame or edge is an Incomplete Vehicle Certification label. See Figure 2–2. For further information on Vehicle Certification and Identification, see APPENDIX A "VEHICLE IDENTIFICATION."

NOTE

These documents list the U.S. or Canadian Federal Motor Vehicle Safety Standard regulations that the vehicle complied with when it left the build plant. You should be aware that if you add, modify or alter any of the components or systems covered by these regulations, it is your responsibility as the Intermediate or Final Stage Manufacturer to ensure that the complete vehicle is in compliance with the particular regulations upon completion of the modifications.

FIGURE 2-1. Incomplete Vehicle Certification Document

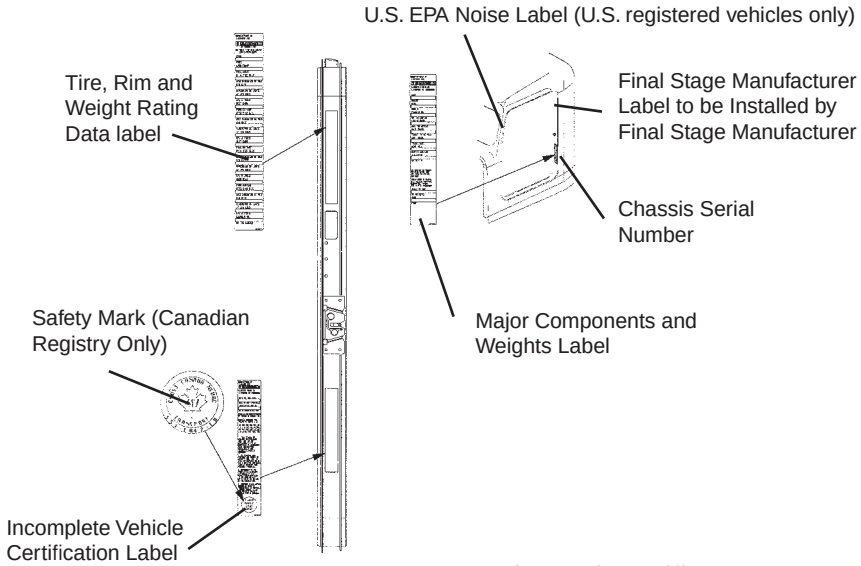

FIGURE 2-2. Locations of Certification Labels - Driver's Door and Frame

As the Intermediate or Final Stage Manufacturer, you should retain the Incomplete Vehicle Document for your records. In addition, you should record and retain the manufacturer and serial number of the tires on the vehicle. Upon completion of the vehicle (installation of the body and any other modifications), you should affix your certification label to the vehicle as required by Federal law. This tag identifies you as the "Intermediate or Final Stage Manufacturer" and certifies that the vehicle complies with Federal Motor Vehicle Safety Standards. (See Figure 2–2.) Be advised that regulations affecting the intermediate and final stage manufacturer may change without notice. Ensure you are referencing the most updated copy of the regulation during the certification and documentation processes.

In part, if the final stage manufacturer can complete and certify the vehicle within the instruction in the incomplete vehicle document (IVD) the certification label would need a statement that reads, "This vehicle has been completed in accordance with the prior manufacturers, IVD where applicable. This vehicle conforms to all applicable Federal Motor Vehicle Safety Standards [and Bumper and Theft Prevention Standards if applicable] in effect in (month, year)."

However, if the vehicle can not be completed and certified with in the guidance provided in the IVD, the final stage manufacturer must ensure the vehicle conforms to all applicable Federal Motor Vehicle Safety Standards (FMVSS). The final stage manufactures certification label would need a statement that reads, "This vehicle conforms to all applicable Federal Motor Vehicle Safety Standards [and Bumper and Theft Prevention Standards if applicable] in effect in (month, year)."

Downloaded from www.Manualslib.com manuals search engine

https://truckmanualshub.com/

These statements are just part of the changes to the new certification regulation. Please refer to the Feb 15, 2005 final rule for all of the details related to this regulation. You can contact NTEA Technical Services Department at 1-800-441-NTEA for a copy of the final rule (DocID 101760).

For Canadian final stage manufacturers see:

http://www.gazette.gc.ca/archives/p2/2002/2002-02-13/html/sor-dors55-eng.html; and http://www.tc.gc.ca/acts-regulations/regulations/crc-c1038/menu.htm for the regulations.

Or contact:

Transport Canada
Tower C, Place de Ville, 330 Sparks Street
Ottawa, Ontario K1A 0N5
(613) 990-2309
TTY: 1-888-675-6863

Noise and Emissions Requirements

NOTE

This truck may be equipped with specific emissions control components/systems* in order to meet applicable Federal and California noise and exhaust emissions requirements. Tampering with these emissions control components/systems* is against the rules that are established by the U.S Code of Federal Regulations, Environment Canada Regulations and California Air Resources Board (CARB). These emissions control components/systems* may only be replaced with original equipment parts.

Modifying (i.e. altering, substituting, relocating) any of the emissions control components/systems defined above will affect the noise and emissions performance/certification. If modifications are required, they must first be approved by the engine manufacturer. Unapproved modifications could negatively effect emissions performance/certification. There is no guarantee that proposed modifications will be approved.

Contact the engine manufacturer for any requirements and restrictions **prior** to any modifications.

- For Cummins Contact: Please call 1-800-DIESELS or contact your local Cummins Distributor Reference AEB 21.102.

It is possible to relocate the DEF tank, however the relocation requirements need to be followed. Any variance from the relocation requirements may cause the emissions control components/systems to operate improperly potentially resulting in engine de-rate. See page 4-3 for relocation requirements.

NOTE

Some 2010 engine emissions certified vehicles will be equipped with an On-Board Diagnostics (OBD) system. The OBD system is designed to detect malfunctions of any engine or vehicle component that may increase exhaust emissions or interfere with the proper performance of the OBD system itself.

The OBD system consists of computer program on one or more of the vehicle's Electronic Control Units (ECUs). This program uses information from the control system and from additional sensors to detect malfunctions. When a malfunction is detected, information is stored in the ECU(s) for diagnostic purposes. A Malfunction Indicator Light (MIL) is illuminated in the dash to alert the driver of the need for service of an emission-related component or system.

Downloaded from www.Manualslib.com manuals search engine

https://truckmanualshub.com/

To ensure compliance to emissions regulations, the final configuration of certain features of the completed vehicle must meet specific requirements. This section describes requirements relevant for only the most common or critical modifications done by body builders. For a complete description of acceptable modifications, see the application guidance available from the manufacturer of the engine installed in the chassis.

Fuel System

The following are highlights of some of the more common or critical aspects of this system.

The overall system restriction may not exceed the restriction limitations set forth by the engine manufacturer for both supply and return.

- Ensure that fuel lines are not pinched or can potentially be damaged when installed between body and frame
- Fuel lines must be routed and secured without dips or sags
- There must be easy access to filter(s) and fill cap
- The tank vent may not obstructed
- Added accessories (heaters, generators) cannot introduce air into system
- Fuel tank must be located so that the full level is not above cylinder head
- “Ultra Low Sulfur Fuel Only” labels must be present on the dash and fuel fill
- Modification of the pressure side secondary filter and plumbing is not allowed without engine manufacturer approval
- Body installation of fuel tank or routing of lines must not cause significant increase in fuel temperature
- Fuel hoses shall meet or exceed OEM supplied hose material construction specifications

Compressed Air System

The following are highlights of some of the more common or critical aspects of this system.

- Air system modification must meet applicable FMVSS regulations
- Compressed Air tank may not be modified (exception – addition or removal of fittings or relocation of the tank)
- Added devices or bodywork may not interfere with or rub air lines
- Air supply to the engine doser may not be restricted or disconnected
- Air lines should be routed, protected from heat, and properly secured to prevent damage from other components
- Care should be taken so that air lines do not rub against other components
- Care should be taken to protect the air system from heat sources.

Exhaust and Exhaust After-treatment System

The following are highlights of some of the more common or critical aspects of this system.

- The following after-treatment and exhaust system components may not be modified:
  - DPF assembly
  - SCR Catalyst assembly
  - Exhaust pipes between the engine and after-treatment devices (DPF, SCR Catalyst) and between after-treatment devices

Downloaded from www.Manualslib.com manuals search engine

https://truckmanualshub.com/

  - NO_x Sensor
- The following modifications may only be done within the guidelines of the “DEF System Relocation Guide.”
  - Modifications to Diesel Exhaust Fluid (DEF) throttle, suction, or pressure lines
  - Modification or relocation of the DEF tank
  - Modification of coolant lines to and from the DEF tank
- All DEF and coolant lines should be routed, protected, and properly secured to prevent damage during vehicle operation or other components
- If relocation of the DCU or ACM is necessary, use existing frame brackets and mount inside of frame flanges where necessary. Do not extend the harnesses
- Exhaust pipes between the engine and after-treatment devices or between after-treatment devices may not be modified or replaced
- The DPF, the SCR catalyst, or their mounting may not be modified
- The NO_x sensor may not been relocated or altered in any way
- Exhaust pipes used for tailpipes/stacks must be properly sized, and must prevent water from entering the exhaust system
- Ensure adequate clearance between the exhaust and body panels, hoses, and wire harnesses
- The body in the vicinity of the DPF must be able to withstand temperatures up to 400°C (750°F)
- Do not add thermal insulation to the external surface of the DPF
- The SCR water drain hole may not be blocked
- Allow adequate clearance (25mm (1 inch)) for servicing the DPF sensors, wiring, and clamped joints
- Drainage may not come in contact with the DPF, SCR catalyst, sensors or wiring
- Allow sufficient clearance for removing sensors from DPF. Thermistors require four inches. Other sensors require one inch
- Wiring should be routed, protected from heat, and properly secured to prevent damage from other components
- The exhaust system from an auxiliary power unit (APU) must not be connected to any part of the vehicle after-treatment system or vehicle tail pipe.

Cooling System

The following are highlights of some of the more common or critical aspects of this system.

- Modifications to the design or locations of fill or vent lines, heater or defroster core, and surge tank are not recommended
- With the exception of post-thermostat installation, additional accessories plumbed into the engine cooling system are not permitted, and may void vehicle warranty
- Coolant level sensor tampering will void warranty
- When installing auxiliary equipment in front of the vehicle, or additional heat exchangers, ensure that adequate air flow is available to the vehicle cooling system. Refer to engine manufacturer application guidelines for further detail
- When installing FEPTO drivelines, the lower radiator anti-recirculation seal must be retained with FEPTO driveline clearance modification only

Downloaded from www.Manualslib.com manuals search engine

https://truckmanualshub.com/

- Changes made to cooling fan circuit and controls are not allowed, with the exception of AC minimum fan on time parameter
- See owner's manual for appropriate winter front usage

Electrical System

The following are highlights of some of the more common or critical aspects of this system.

- Electrical harnesses providing battery power and electronic control signals to engine and emissions control/ vehicle OBD components including datalinks may not be spliced. These emissions control/vehicle OBD components include the following:
  - throttle pedal
  - vehicle speed sensor
  - after-treatment wiring
- If the alternator or battery is substituted, it must meet the requirements of the engine manufacture's guidelines. This includes alternator ground voltage drop and alternator ground cable effectiveness. See the engine manufacture's guidelines for recommended test procedure. Additionally the maximum voltage differential and the peak-peak voltage differential between the engine ECM block ground stud and battery negative terminal may not exceed 500 mV under any combination of loads or operating conditions.
- Installation of aftermarket transfer-cases must address the vehicle speed sensor position. The standard position of the speed sensor is at the transmission tail shaft. When a transfer-case is added it is best to relocate the sensor to the axle side output shaft of the transfer-case. This is typically accomplished by adding a tone wheel into the driveline yoke assembly.
- Wiring extensions for the after-treatment wiring are available for relocating the DEF tank from your dealer via Paccar Parts. For relocation of DEF tank, refer to the after-treatment section of this manual.
- The emission system requires an accurate Outside Air Temperature (OAT) reading in order to properly run its control algorithms. The OAT sensor is located in the driver's side mirror assembly on Kenworth trucks and is shown in the figures below. If the body builder needs to modify the mirror assembly in any way, it is important the OAT sensor stay positioned on the mirror assembly. Running the vehicle without the OAT sensor connected will cause the MIL lamp to illuminate. If needed, a replacement sensor can be ordered from your Kenworth dealer.

FIGURE 2-3: West Coast Mirror OAT sensor, located in overmold on mirror harness.

Downloaded from www.Manualslib.com manuals search engine

https://truckmanualshub.com/

FIGURE 2-4: Aerodynamic Mirror OAT Sensor Location

- Coolant Sensor considerations are given in the Cooling section above
- The OBD/Diagnostic connector port is located below the dash to the left of the steering wheel. This connector or its location may not be changed.
- Vehicles using EPA 2010 compliant engines must be equipped with a Malfunction Indicator Lamp (MIL) lamp. This lamp is required to be an engine outline symbol as defined by ISO (International Standards Organization). The figure below shows the instrument cluster and MIL lamp position. Note this lamp location is fixed with respect to the controls and its location may not be changed if you are updating the warning lamp cards.

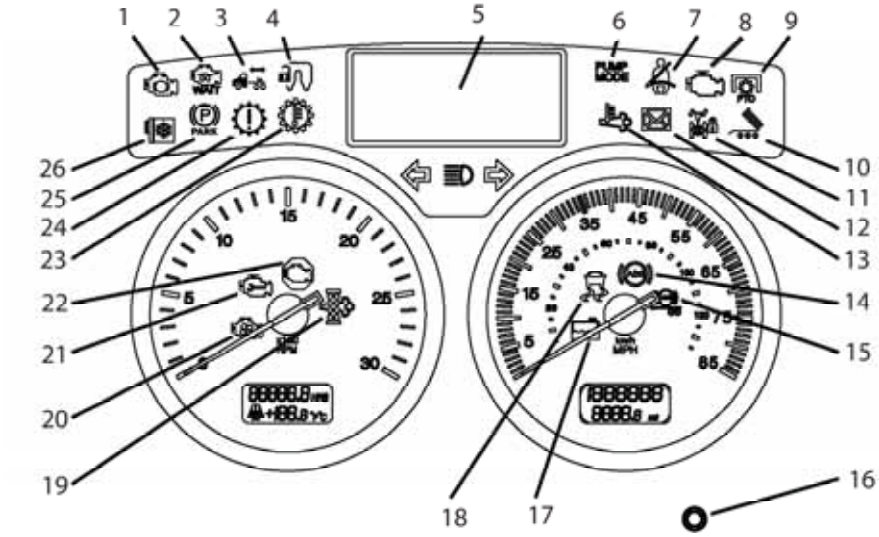

FIGURE 2-5: Instrument Cluster for T440/T470 used with EPA2010 Emission compliant engines. The Check Engine lamp is symbol 21 and the MIL is symbol 8.

- In addition to the sensors and lamps above, the emission system also depends on signals from the exhaust DPF (Diesel Particulate Filter), SCR (Selective Catalytic Reduction), and NOx sensor. Wiring between these devices, the Dosing Control Unit (DCU) and engine ECM should not be tampered with or altered in any way.

Downloaded from www.Manualslib.com manuals search engine

https://truckmanualshub.com/

Air Intake System

The following are highlights of some of the more common or critical aspects of this system.

- The air intake screen may not be blocked, either fully or partially
- Modification to the air intake system may not restrict airflow. For example, pipe diameter may not be reduced
- All sensors must be retained in existing locations
- To retain system seal, proper clamp torque must be used. Refer to service manual for proper clamp torque

Charge Air Cooler System

The following are highlights of some of the more common or critical aspects of this system.

- The Charge Air Cooler may not be modified
- The installation of engine overspeed shutdown devices must not introduce restriction in the intake system
- All plumbing associated with the charge air cooler may not be modified

Downloaded from www.Manualslib.com manuals search engine

https://truckmanualshub.com/

DIMENSIONS

This section has been designed to provide enough information to successfully layout chassis in the body planning process. Optional equipment may not be depicted. Please contact your local Kenworth dealer if more dimensional information is desired.

ABBREVIATIONS

Throughout this section, and in other sections as well, abbreviations are used to describe certain characteristics on your vehicle. The chart below lists the abbreviated terms used.

TABLE 3-1. Abbreviations Used

AF	AFTER FRAME – FRAME RAIL OVERHANG BEHIND REAR AXLE OR MEASURED FROM CENTERLINE OF TANDEM
CA	BACK OF CAB TO CENTERLINE OF REAR AXLE OR CENTERLINE OF TANDEMS ON TANDEM SUSPENSION
EOF	FRAME RAIL OVERHANG BEHIND REAR AXLE – MEASURED FROM THE CENTERLINE OF TANDEMS
FS	FRONT SUSPENSION HEIGHT
RS	REAR SUSPENSION HEIGHT
WB	WHEELBASE
SOC	SIDE OF CAB
BOC	BACK OF CAB

TURNING RADIUS

Approximate turning radius specifications are listed in the following tables as a general guide. It is important to note that optional components may alter the results.

TABLE 3-2. Turning Radius

Model	Steering Gear	Front Axle	Front Wheel	Front Tire	Rear Suspension	Wheel Base	Est Curb to Curb Turning Radius (ft)
T440/T470	Single TAS 65	Dana Spicer E-1202I 12K	Accuride 28487 22.5 X 8.25	Bridgestone R287 295/75R22.5	Tandem 52” Axle Spacing	181	28
						193	29.5
						201	30.5
						213	32
						220	33
						232	34.5
						240	35.5
						252	37
						260	38
						272	39.5
						280	40.5
						291	42
						303	43.5
						323	46
						331	47

TABLE 3-2 CONTINUES ON NEXT PAGE…

Downloaded from www.Manualslib.com manuals search engine

https://truckmanualshub.com/

TABLE 3-2 CONTINUED

Model	Steering Gear	Front Axle	Front Wheel	Front Tire	Rear Suspension	Wheel Base	Est Curb to Curb Turning Radius (ft)
T440/T470	Dual TAS 65	Dana Spicer D2000 20K Standard Track	Alcoa 82365 22.5 X 12.25	Bridgestone M844 425/65R22.5	Tandem 52” Axle Spacing	181	31.5
						193	33.5
						201	34.5
						213	36.5
						220	37.5
						232	39
						240	40
						252	42
						260	43
						272	45
						280	46
						291	47.5
						303	49.5
						323	52.5
						331	53.5

Downloaded from www.Manualslib.com manuals search engine

https://truckmanualshub.com/

Prospector Turn Circle Analysis:

Please see Figure 3-2 as an example of Kenworth's turn circle calculation made in Prospector for your specific chassis. Your local Kenworth dealer can provide this information to you.

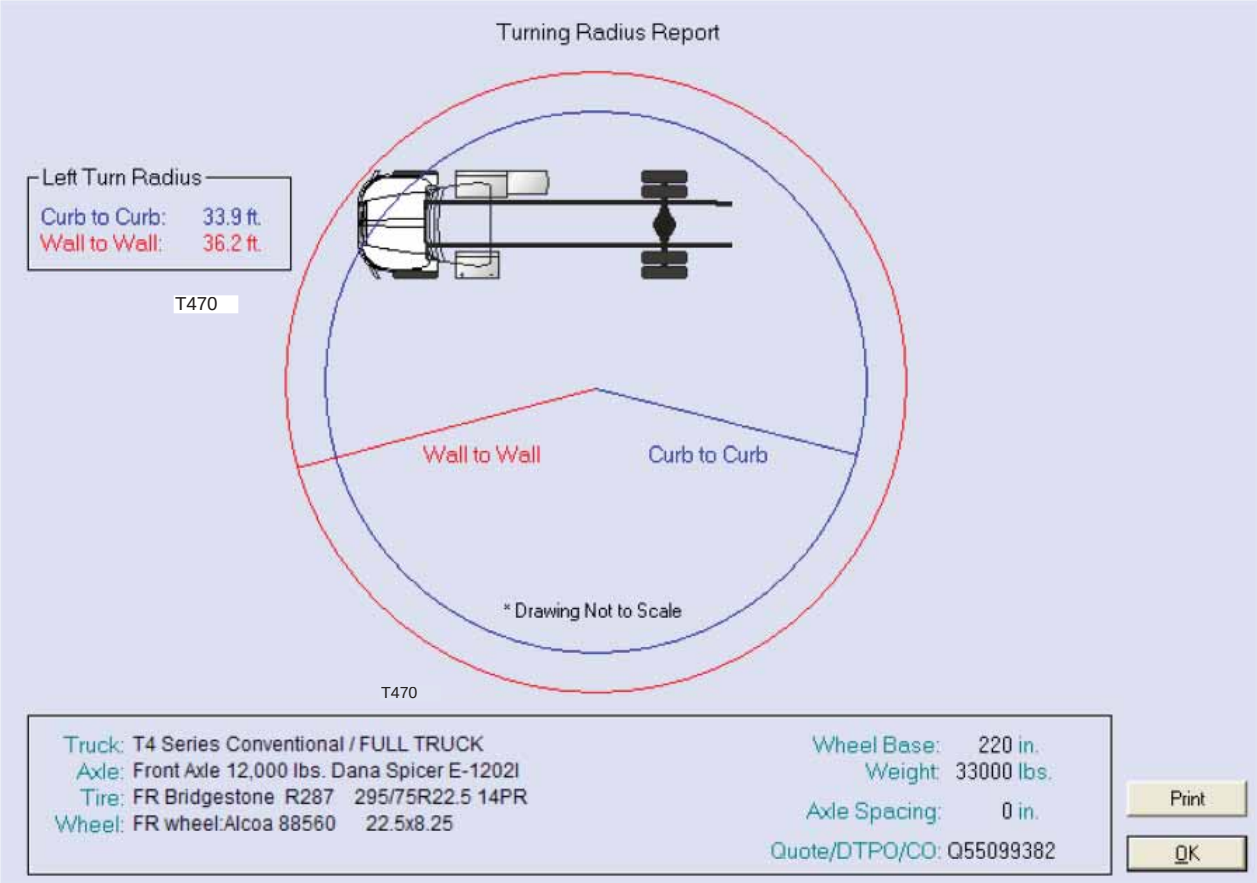

FIGURE 3-1. Prospector Turn Circle Analysis

Please consult your local Kenworth Dealer for this information, as it is chassis specific.

Downloaded from www.Manualslib.com manuals search engine

https://truckmanualshub.com/

AXLE TRACK AND TIRE WIDTH

The dimensions provided in this section are representative of some typical product combinations. The purpose of this section is to demonstrate some of the typical dimensions.

- Axle Track: The distance between the dual tire centerlines on a dual tire arrangement or the distance between the tire centerlines on a single tire arrangement.
- Width: The distance over the outermost tire sidewall to sidewall.

These dimensions may be significant to the following:

- Appearance relative to other tires and chassis mounted equipment.
- Load carrying capacity. Different wheel disc offset can have a positive or negative impact on the axle carrying capacity of the axle.

KENWORTH AXLE TRACK/TIRE WIDTH SUMMARY

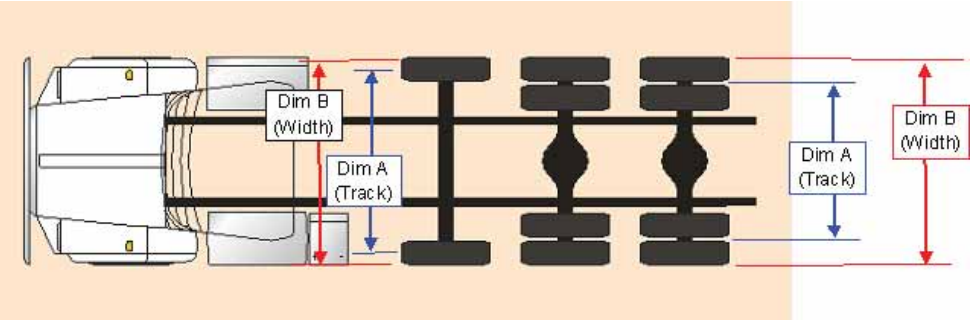

TABLE 3-3. Axle Track

Axle - Drive	Wheel	Tire	Configuration	Track Dim "A"	Overall Width Dim "B"
Dana Spicer D46-170(H)(P) 46K Dual	Alcoa 88364 22.5X8.25	BR M726EL 11R22.5	4-4	73.3"	97.8"
Dana Spicer D46-170(H)(P) 46K Dual	Alcoa 98364 24.5X8.25	BR M726EL 11R24.5	4-4	73.6"	98.0"
Dana Spicer D46-170W(H)(P) 46K Dual Wide Track	Alcoa 88364 22.5X8.25	BR M726EL 11R22.5	4-4	79.2"	103.7"
Dana Spicer D46-170W(H)(P) 46K Dual Wide Track	Alcoa 98364 24.5X8.25	BR M726EL 11R24.5	4-4	79.5"	103.9"
Dana Spicer D46-170(H)(P) 46K Dual	Alcoa 82360 22.5X12.25	BR M844F 425/65R22.5	2-4	72.7"	88.9"
Dana Spicer D46-170W(H)(P) 46K Dual Wide Track	Alcoa 82360 22.5X12.25	BR M844F 425/65R22.5	2-4	78.7"	94.9"

Axle - Steer	Wheel	Tire	Brake Drum Type	Track Dim "A"	Overall Width Dim "B"
Dana Spicer E-1322I 13.2K	Alcoa 98364 24.5X8.25	BR R250F 11R24.5	Cast	80.2"	91.0"
Dana Spicer E-1322W 13.2K	Alcoa 98364 24.5X8.25	BR R250F 11R24.5	Cast	82.2"	93.0"
Dana Spicer D2000 20K	Alcoa 82365 24.5X12.25	BR M844F 425/65R22.5	Cast	86.5"	102.7"
Dana Spicer D2000 20K	Alcoa 82364 24.5X12.25	BR M844F 425/65R22.5	Cast	82.6"	98.8"

Axle - Pusher Non-Steerable	Wheel	Tire	Wheel Orientation	"Track Dim "A"	"Overall Width Dim "B"
NS PSHR: WCAL ATLAS Std Track (72.5") 16K GAWR	Alcoa 82365 24.5X12.25	BR M844F 425/65R22.5	Default- Same as RR	79.4"	95.6"
NS PSHR: WCAL ATLAS Wide Track (77.5")	"Alcoa 82365 24.5X12.25	BR M844F 425/65R22.5	Option Same as FR	71.1"	87.3"

Downloaded from www.Manualslib.com manuals search engine

https://truckmanualshub.com/

OVERALL DIMENSIONS

This section includes drawings and charts. The Extended Day Cab is also included.

On the pages that follow, detail drawings show particular views of each vehicle, all dimensions are in inches (in). They illustrate important measurements critical to designing bodies of all types. See the “Contents” at the beginning of the manual to locate the drawing that you need.

Note: To determine overall height please locate the chart Table 3-4 on page 3-8 and 3-9 and add that value to the height. All heights are given from the bottom of the frame rail.

Kenworth also offers .dxf files and frame layouts of ordered chassis four weeks prior to build. Please speak with your salesman to request this feature when specifying your chassis.

Downloaded from www.Manualslib.com manuals search engine

https://truckmanualshub.com/

T470 FIXED GRILLE HOOD W/O EXTENDED FRONT FRAME

The following drawings are shown with standard chassis components and the T470 fixed grille hood.

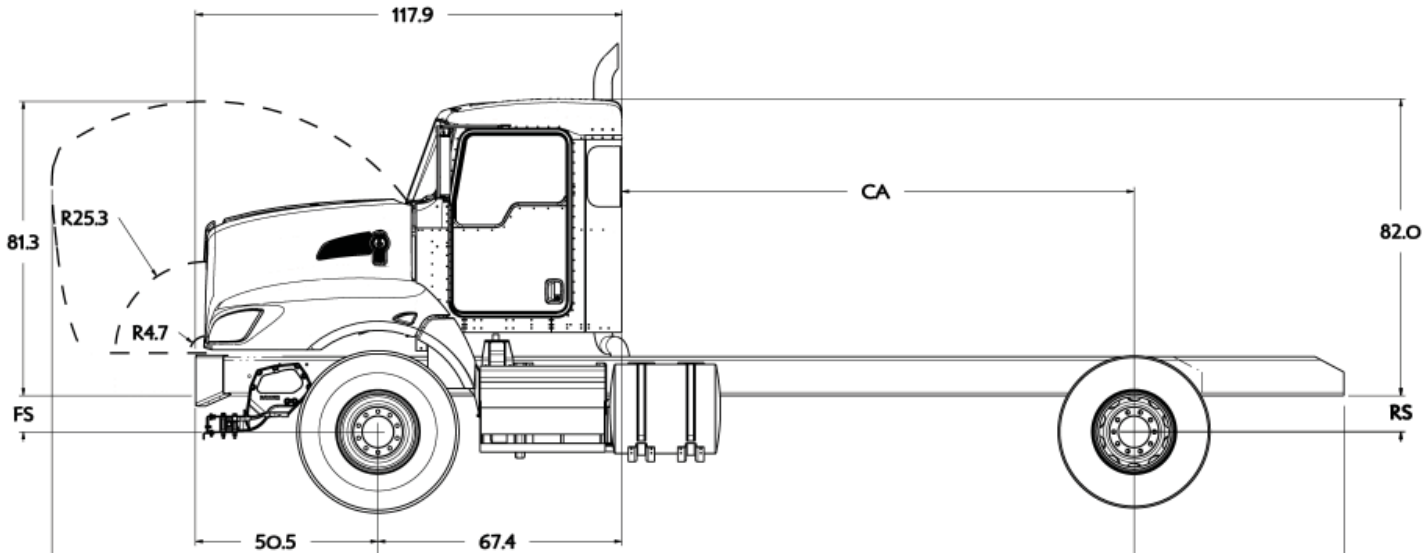

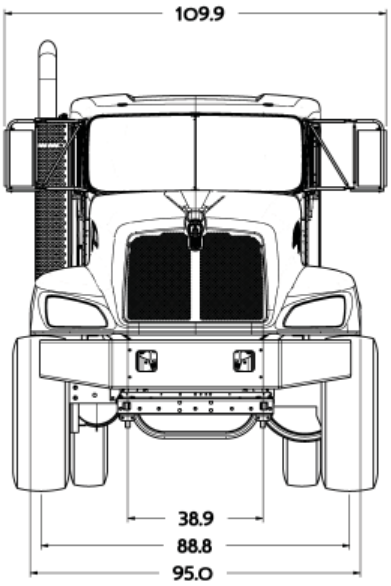

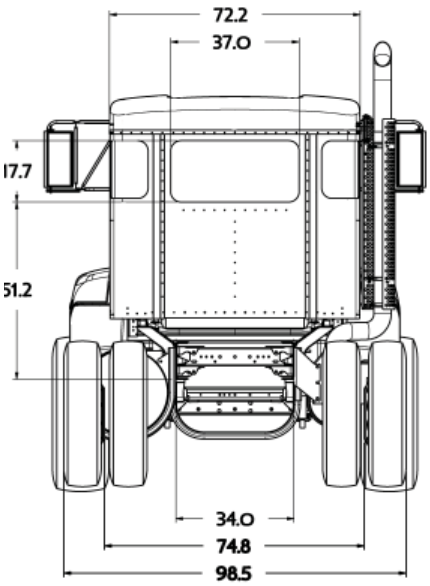

Downloaded from www.Manualslib.com manuals search engine

https://truckmanualshub.com/

T440 DAYCAB

The following drawings are shown with standard chassis components and the T440 daycab.

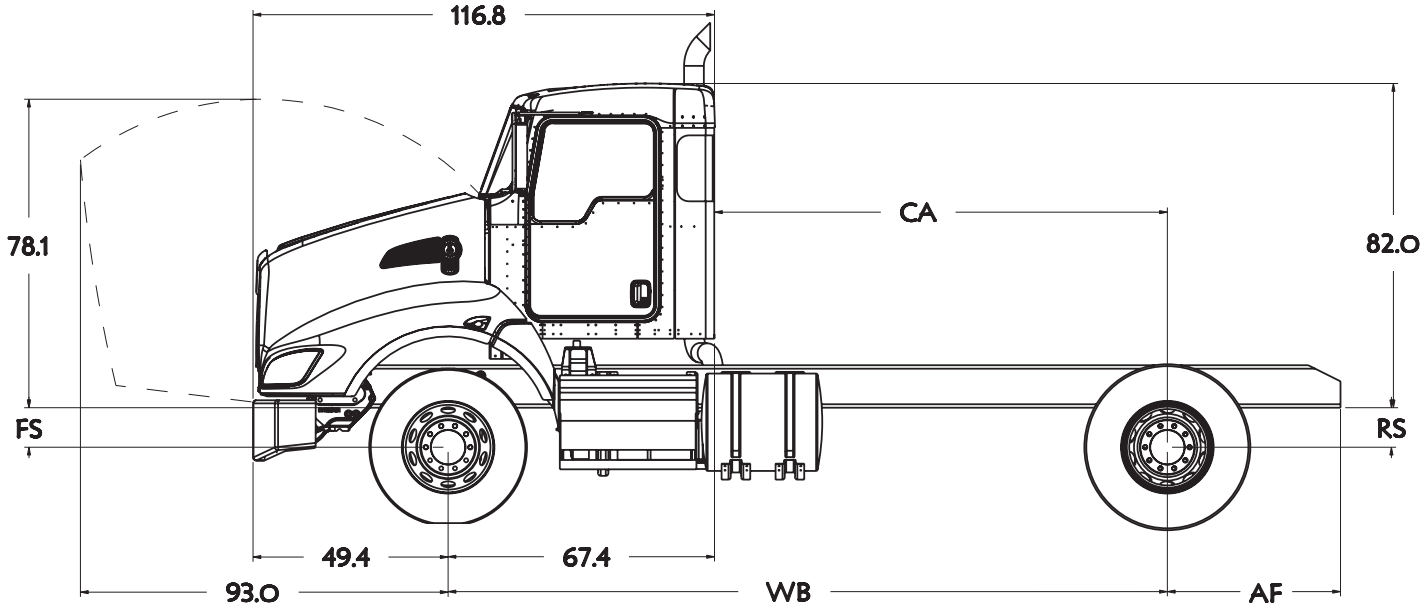

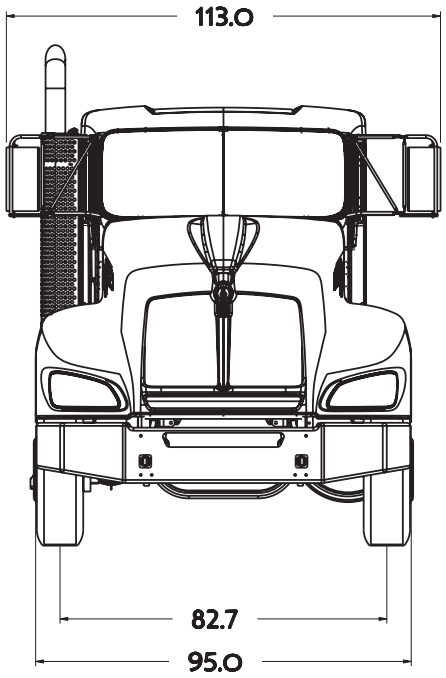

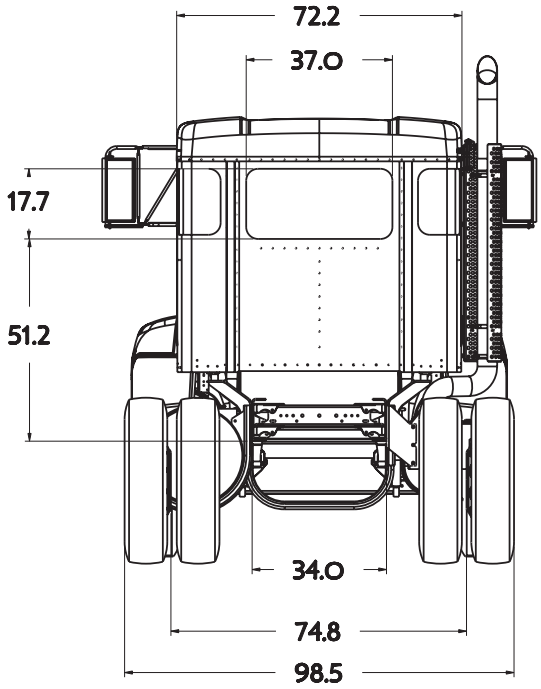

Downloaded from www.Manualslib.com manuals search engine

https://truckmanualshub.com/

T440 EXTENDED DAYCAB

The following drawings are shown with standard chassis components and the T440 extended daycab.

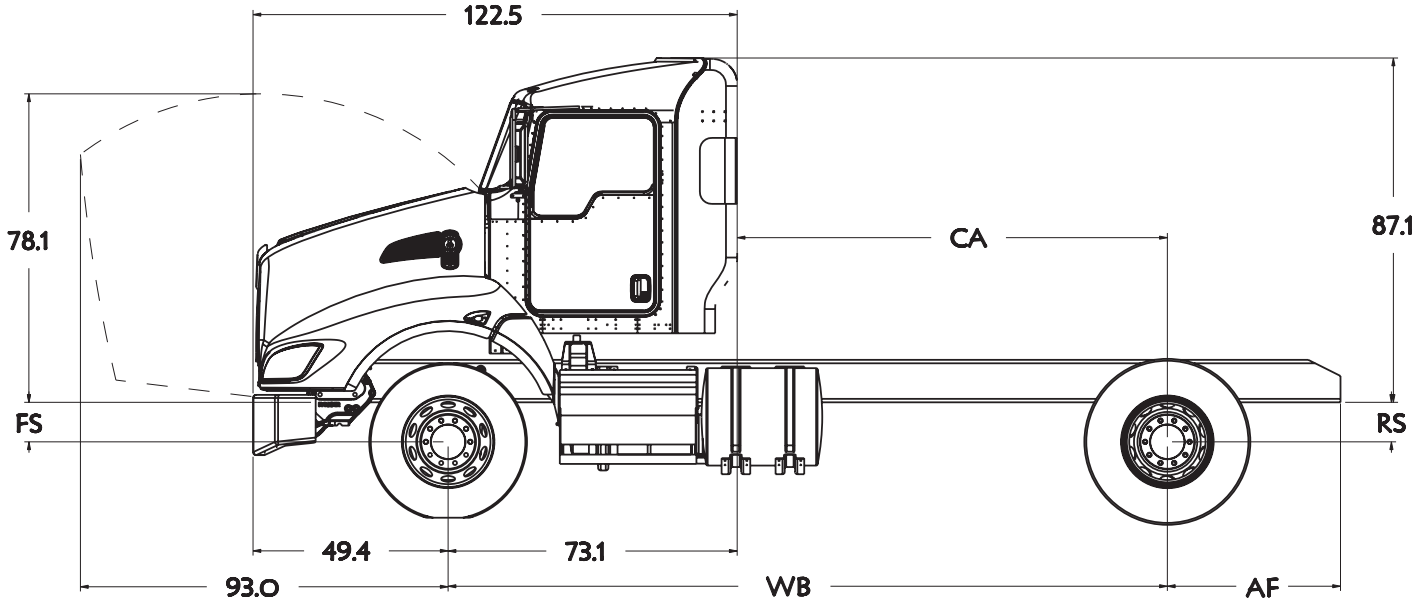

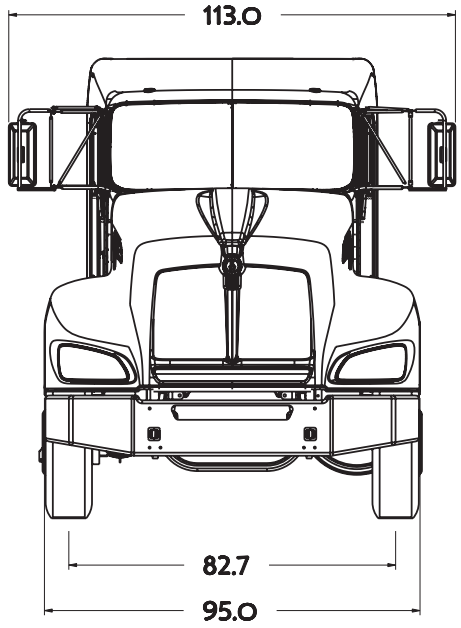

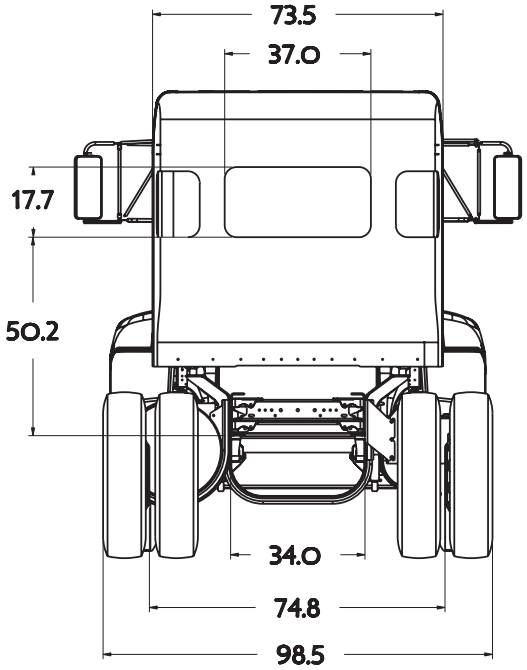

Downloaded from www.Manualslib.com manuals search engine

https://truckmanualshub.com/

T470 FIXED GRILLE HOOD WITH EXTENDED FRONT FRAME

The following drawings are of a T470 fixed grille hood with the optional extended front frame. These extended frame rails can be used with or without FEPTO adapters.

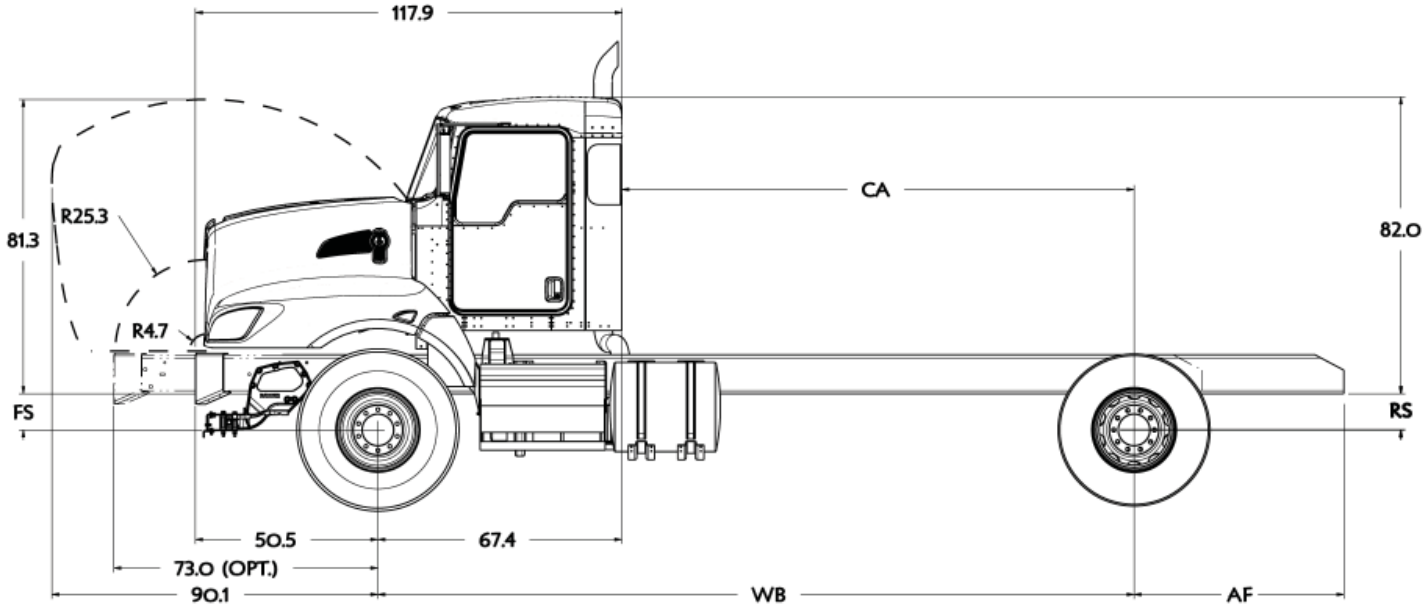

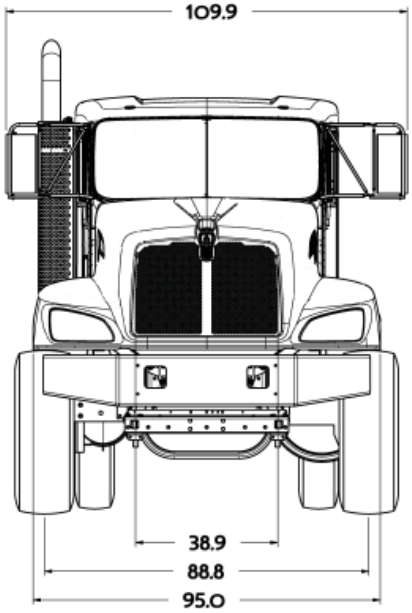

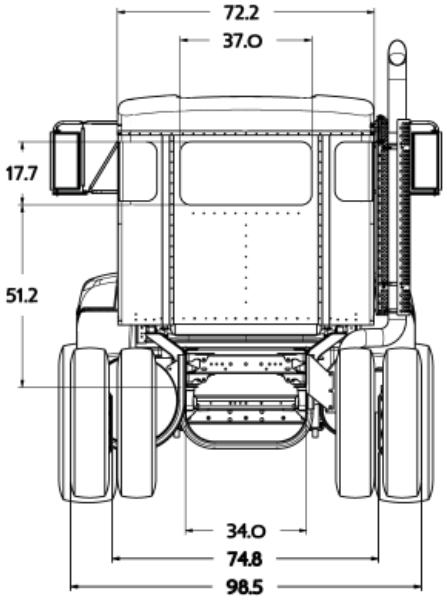

Downloaded from www.Manualslib.com manuals search engine

https://truckmanualshub.com/

38” AEROCAB

The 38” Aerocab is shown on a standard T440 chassis. It is important to note that the 38” will increase any of the models bumper to back of cab dimension and front axle to back of cab dimension by 28”. The height (from the bottom of the frame rail) will be 93.2” across the models.

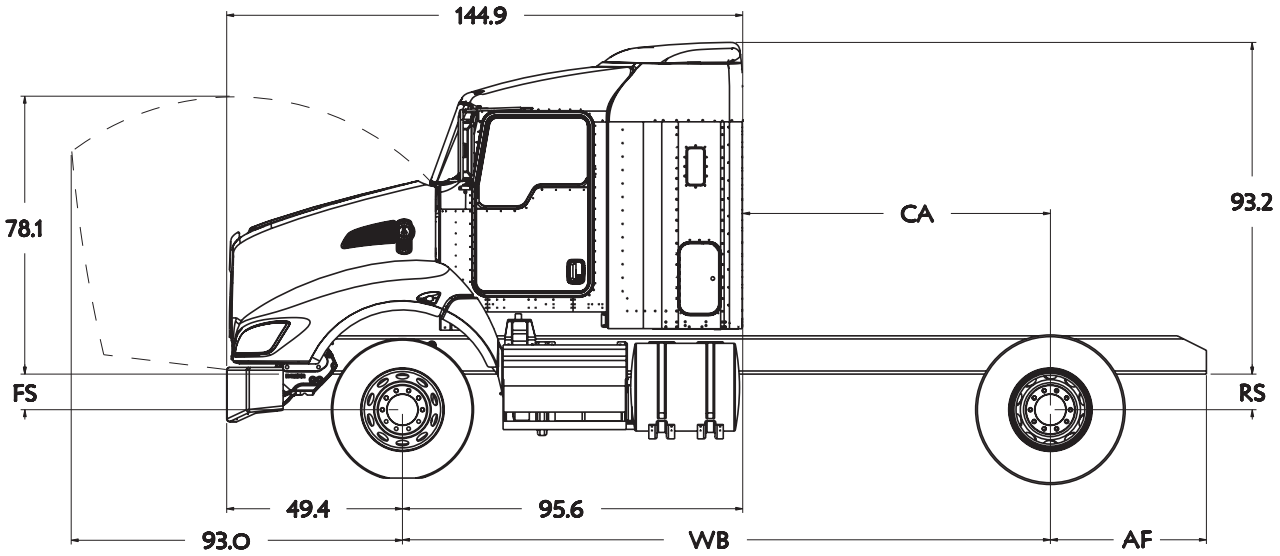

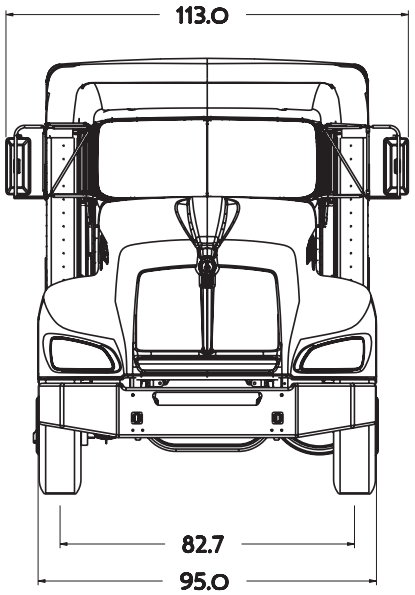

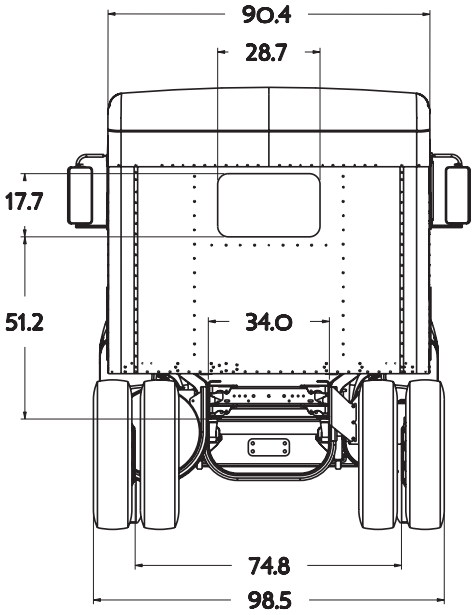

Downloaded from www.Manualslib.com manuals search engine

https://truckmanualshub.com/

EXTENDED DAY CAB

It is important to note that the Extended Day Cab will increase any of the models bumper to back of cab dimension and front axle to back of cab dimension by 5.7”. The height (from the bottom of the frame rail) will be 86.9”. Below drawings shown with T470 fixed grille hood.

Suspension heights are measured from the centerlines of the axle spindle to the bottom of the frame rail. Add the tire radius dimension to determine overall height to the bottom of the frame rail. Note: The frame rail height itself will not affect the overall cab height as all components are located from the bottom of the frame rail.

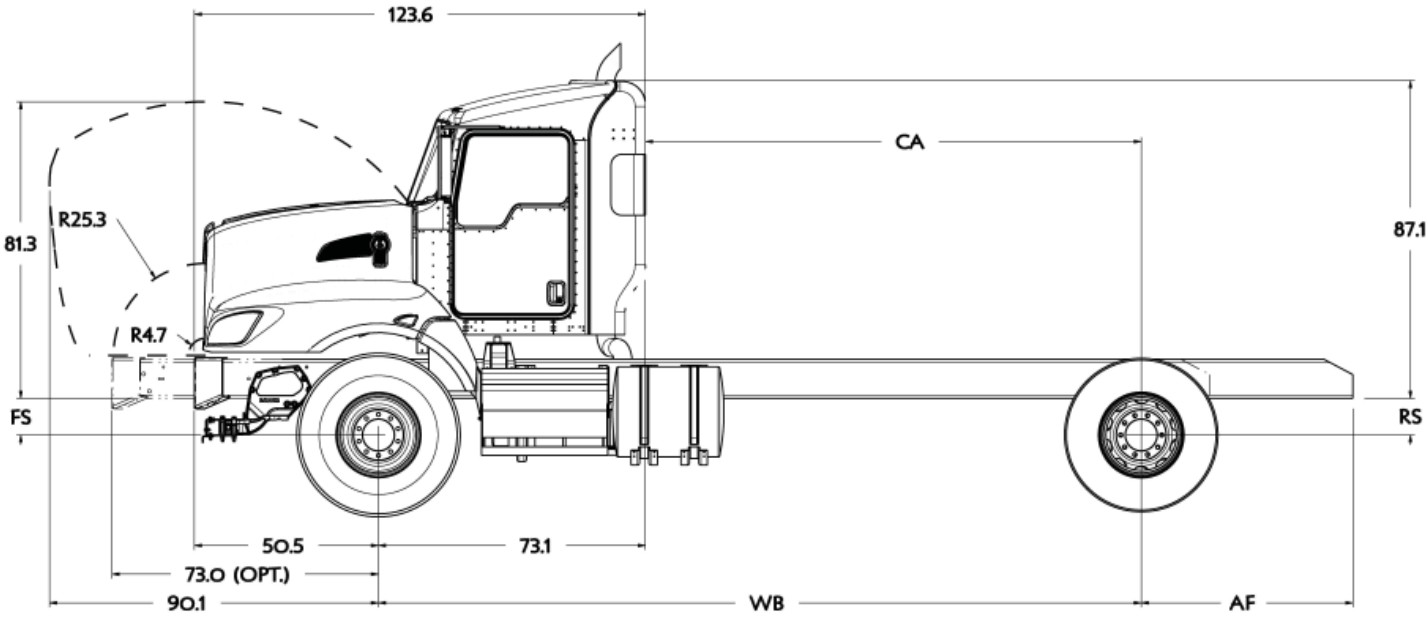

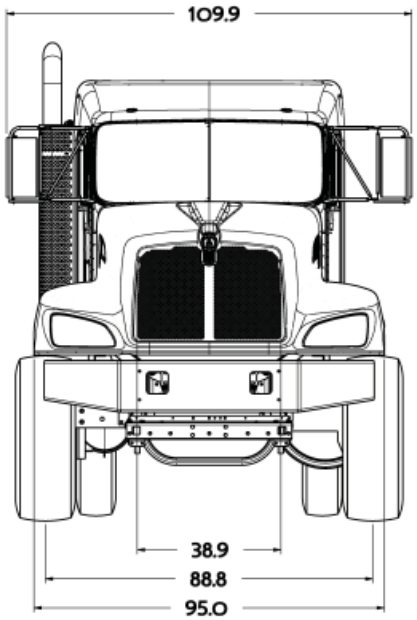

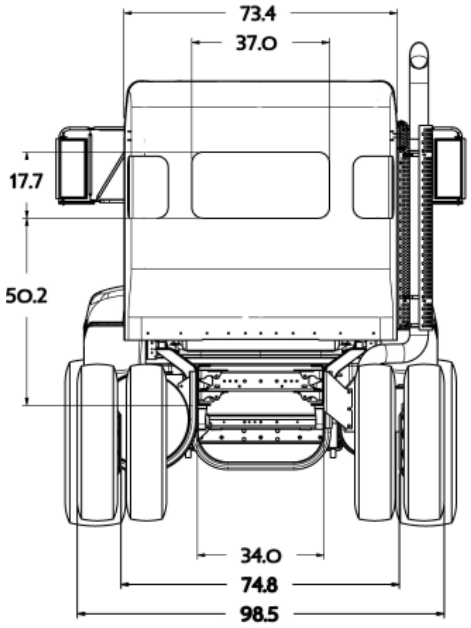

Downloaded from www.Manualslib.com manuals search engine

https://truckmanualshub.com/

RIDE HEIGHTS

The front (FS) and rear (RS) suspension ride heights are provided as a basic tool to determine the overall height of the cab, height of exhaust components, and frame heights. The heights are all calculated from the centerlines of the axles, please be sure to include the tire radius dimension to determine overall height. Note: the frame rail height itself will not affect the overall height as all components are located from the bottom of the frame rail. Ride height information is also available in Prospector.

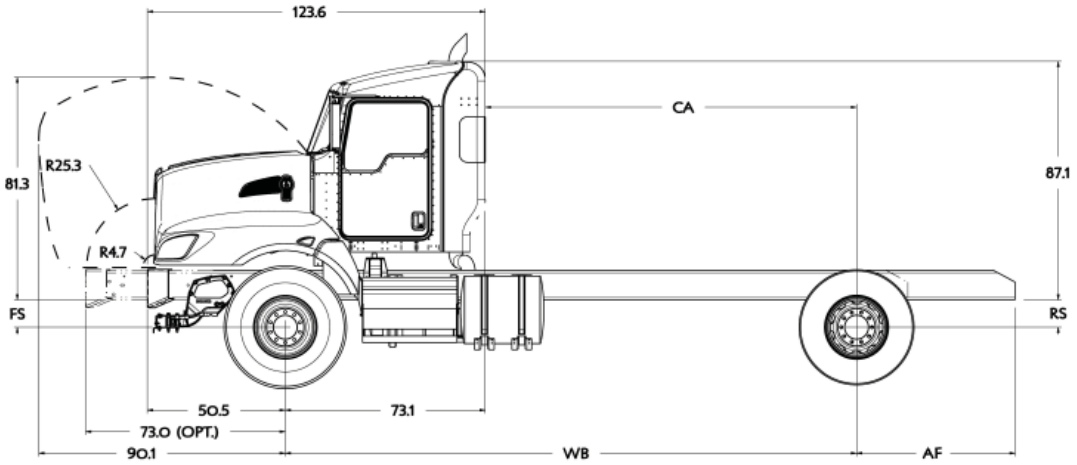

TABLE 3-4. Ride Heights In Inches

To calculate Frame Heights use the following formula:

Front Frame Height = FS + 1/2 Front Tire Diameter
Rear Frame Height = RS + 1/2 Rear Tire Diameter

Front Suspension	**Laden**	**Unladen**
12K Taperleaf	10.3”	11.5”
13.2K Taperleaf	10.3”	11.5”
14.6K Taperleaf	10.3”	11.7”
16K Taperleaf	10.6”	12.3”
20K Taperleaf	10.4”	11.9”
22K Multi-stage Taperleaf	10.7”	12.7”
Rear Suspensions		
Kenworth AG380 38K Rating	8.5”	8.5”
Kenworth AG400L 40K Rating	8.5”	8.5”
Kenworth AG400 40K Rating	9.0”	9.0”
Kenworth AG460 46K Rating	10.5”	10.5”
Reyco 79KB 21K Rating	6.6”	9.0”
Reyco 79KB 23K Rating	8.3”	10.8”

Downloaded from www.Manualslib.com manuals search engine

https://truckmanualshub.com/

Reyco 79KB 26K Rating	8.2”	11.3”
Reyco 102 38K Rating	9.2”	10.8”
Reyco 102 40 K Rating	9.2”	10.8”
Chalmers 854-40-L-HS 40K Rating	9.6”	11.0”
Chalmers 854-40-H-HS 40K Rating	10.9”	12.4”
Chalmers 854-46-L 46K Rating	8.9”	11.3”
Chalmers 854-46-L-HS 46K Rating	9.6”	11.3”
Chalmers 854-46-H 46K Rating	10.1”	12.4”
Chalmers 854-46-H-HS 46K Rating	10.9”	12.5”
Chalmers 860-46-H-HS 46K Rating	10.9”	12.5”
Chalmers 872-46-H-HS 46K Rating	11.0”	12.5”
Hendrickson HAS 230 23K Rating	10.0”	10.0”
Hend HMX460 16.5” Saddle 46K Rating	9.5”	10.6”
Hend HMX460 17.5” Saddle 46K Rating	10.5”	11.6”
Hend HMX460 18.5” Saddle 46K Rating	11.5”	12.6”
Hendrickson Primaax 46K Rating	10.0”	10.0”
Hendrickson RT403 40K Rating	9.7”	10.7”
Hendrickson RT463 6.0” Saddle 46K Rating	10.0”	11.1”
Hendrickson RT463 7.19 Saddle 46K Rating	11.2”	12.5”
Hendrickson RT463 7.94 Saddle 46K Rating	11.9”	13.3”
Neway AD123 23K Rating	10.0”	10.0”
Neway AD126 26K Rating	10.0”	10.0”
Neway AD246 46K Rating	10.0”	10.0”

Downloaded from www.Manualslib.com manuals search engine

https://truckmanualshub.com/

REAR SUSPENSION LAYOUTS

The rear suspension layouts are provided as a tool to help layout bodies prior to arrival. Be sure to check the axle spacing that is shown, as alternate spacings may exist and could change some of the dimensions. The dimensions shown below are the most typical installations, in special cases some hole locations will move. If you are planning on using the holes shown for your body installation, please confirm with your local KW dealer that the drawing below will be the installation used on your specific truck. Ensure that proper torque is used to reinstall any suspension components. See Tables 5-1 and 5-2 on page 5-7.

It would be a good idea in this case to order the frame layout of your chassis along with your truck order. This can be done on any Kenworth truck, and will be provided 4 weeks ahead of the build schedule.

If there are hole locations that are not detailed please work with your local Kenworth Dealer to request that information.

Additionally optional axle spacings are shown in the charts, if you would like details on the frame drilling with optional spacings, please contact your local Kenworth dealer.

Downloaded from www.Manualslib.com manuals search engine

https://truckmanualshub.com/

KENWORTH AG 380 TANDEM SUSPENSION

Shown with a 52” Axle Spacing

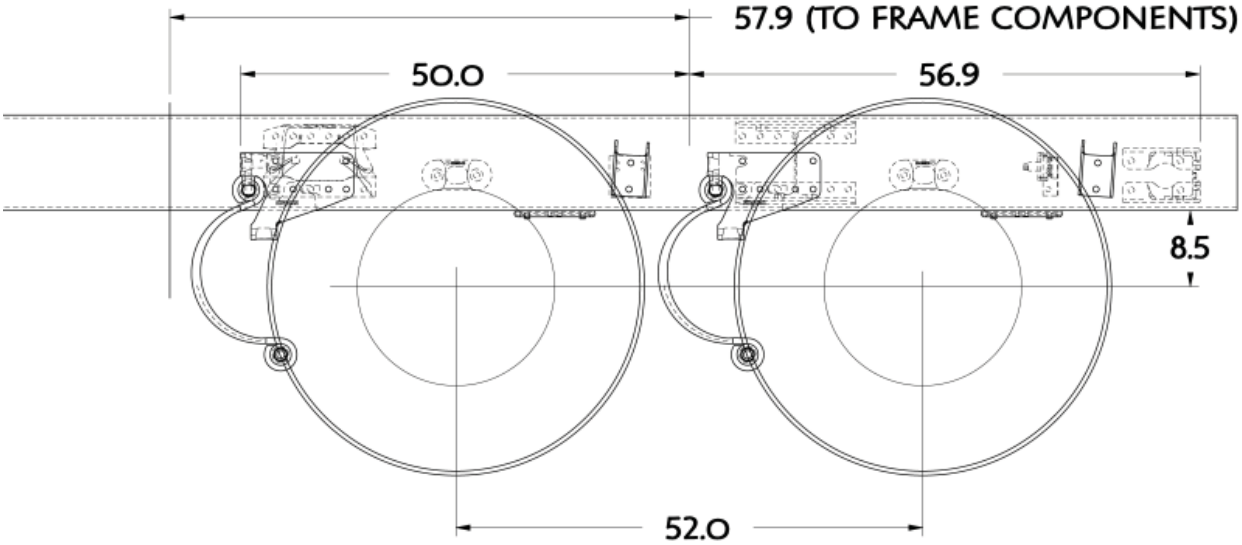

Kenworth AG 380 Suspension Data

TABLE 3-5. Rear Suspension Options

Suspension Type	Rating	Axle Spacing	Laden Ride Height	Unladen Ride Height
AG 380	38K	52”	8.5”	8.5”

Downloaded from www.Manualslib.com manuals search engine

https://truckmanualshub.com/

KENWORTH AG 400/460 TANDEM SUSPENSION

Shown with a 52” Axle Spacing

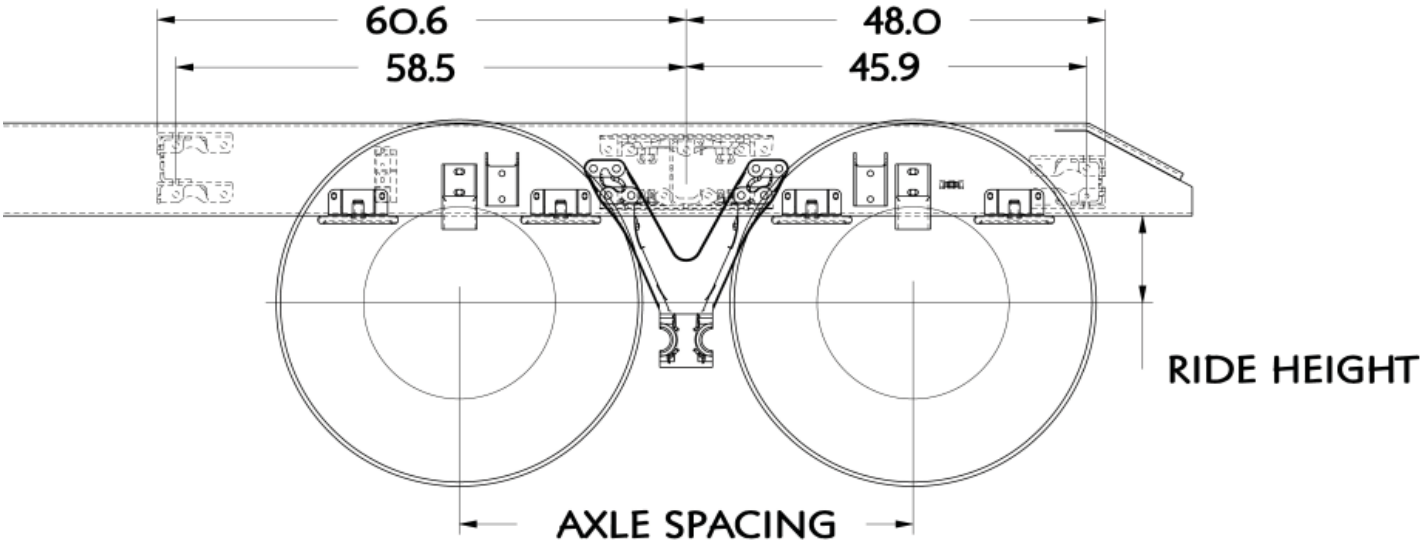

Optional Kenworth Tandem Suspensions

TABLE 3-6. Rear Suspension Options

Suspension Type	Rating	Axle Spacing	Laden Ride Height	Unladen Ride Height
Kenworth AG 400	40K	52”	9”	9”
Kenworth AG 400	40K	54”	9”	9’
Kenworth AG 460	46K	54”	10.5”	10.5”

Downloaded from www.Manualslib.com manuals search engine

https://truckmanualshub.com/

KENWORTH AG 400L TANDEM SUSPENSION

Shown with a 52” Axle Spacing

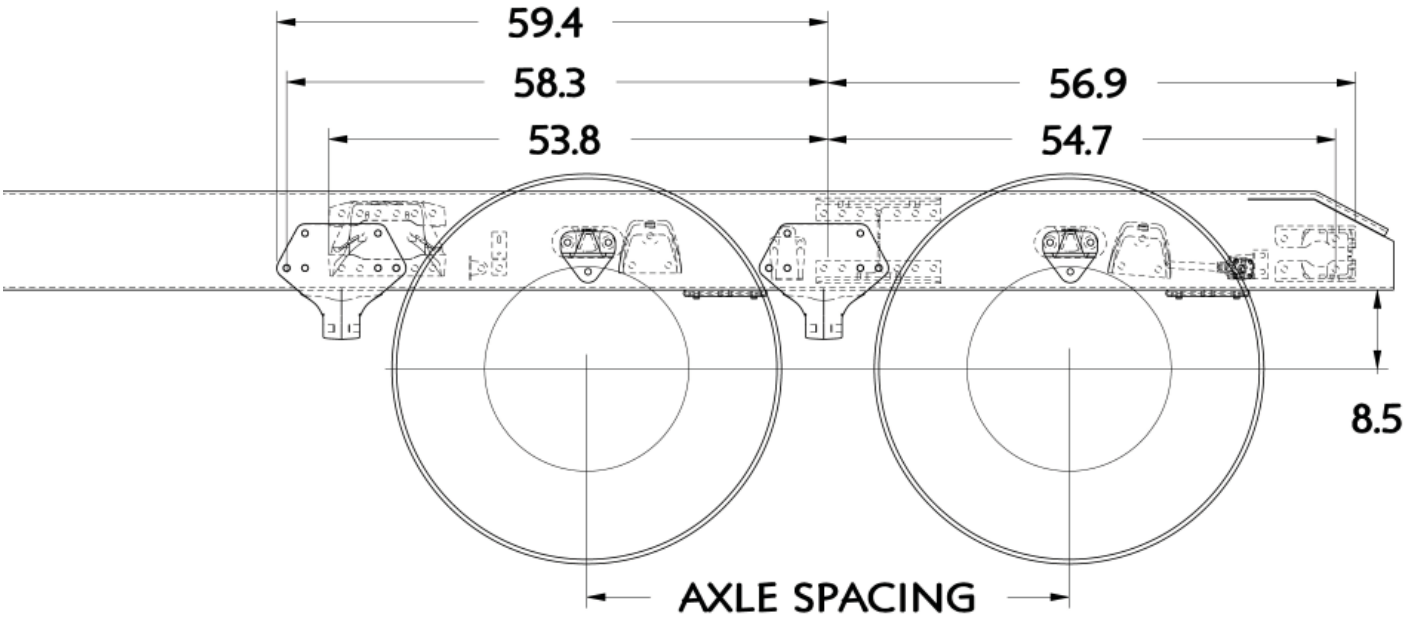

Optional Kenworth Tandem Suspensions

TABLE 3-7. Rear Suspension Options

Suspension Type	Rating	Axle Spacing	Laden Ride Height	Unladen Ride Height
Kenworth AG 400L	40K	52”	8.5”	8.5”
Kenworth AG 400L	40K	54”	8.5”	8.5”

Downloaded from www.Manualslib.com manuals search engine

https://truckmanualshub.com/

KENWORTH AG 460 TANDEM SUSPENSION

Shown with a 60” Axle Spacing

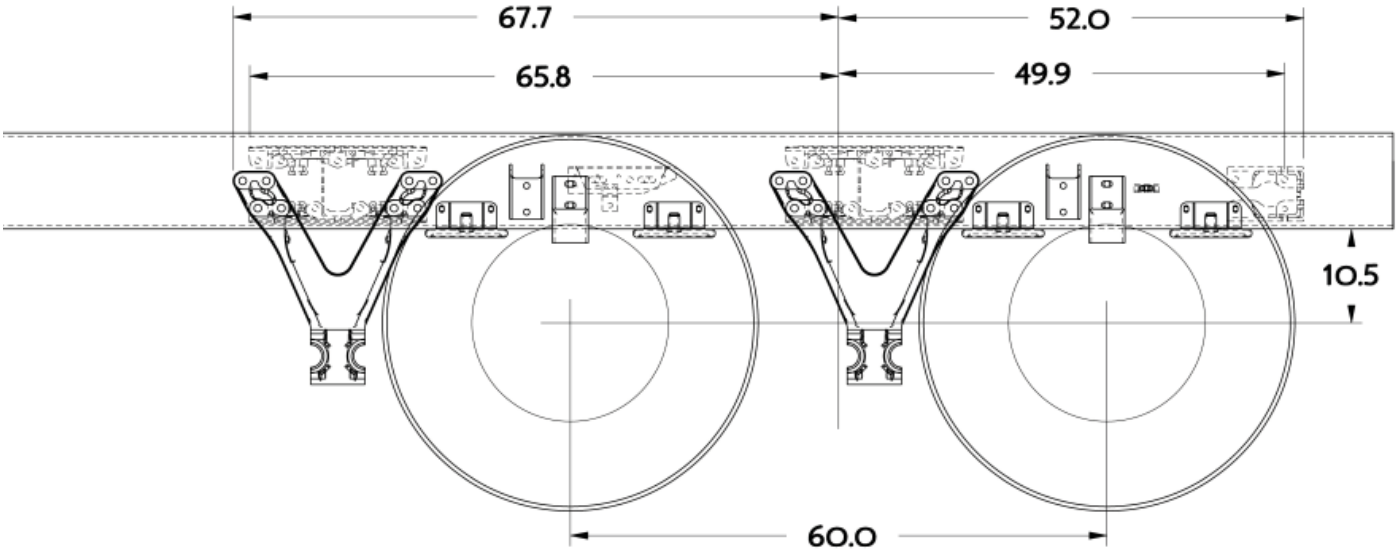

Optional Kenworth Tandem Suspensions

TABLE 3-8. Rear Suspension Options

Suspension Type	Rating	Axle Spacing	Laden Ride Height	Unladen Ride Height
Kenworth AG 460	46K	60”	10.5”	10.5”

Downloaded from www.Manualslib.com manuals search engine

https://truckmanualshub.com/

REYCO 79KB SINGLE REAR AXLE

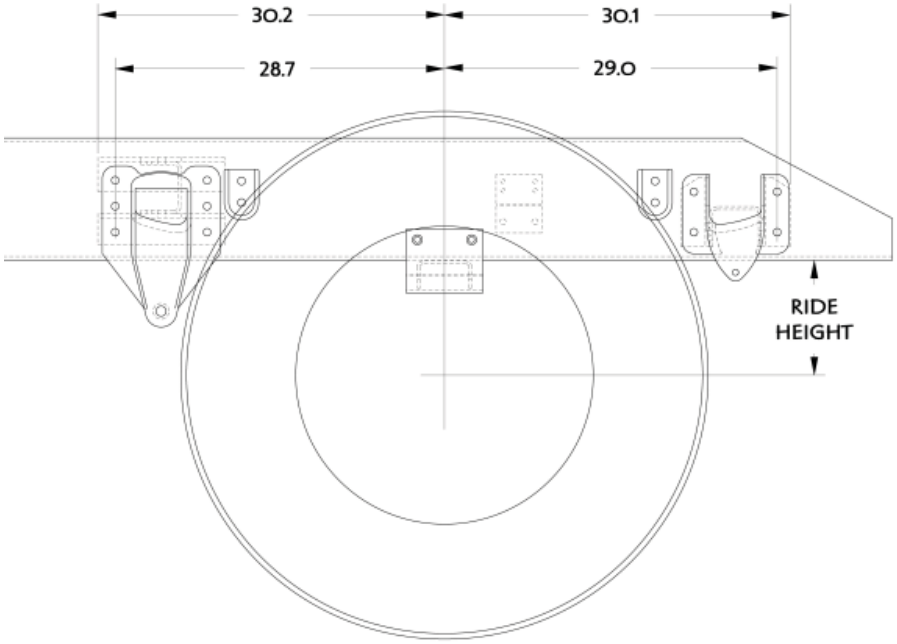

Optional Reyco 79KB Suspensions

TABLE 3-9. Rear Suspension Options

Suspension Type	Rating	Axle Spacing	Laden Ride Height	Unladen Ride Height
Reyco 79KB single	21K	-	8.3”	10.8”
Reyco 79KB single	23K	-	8.3”	10.8”
Reyco 79KB single	26K	-	8.2”	11.3”
Reyco 79KB single	30K	-	8.9”	11.7”

Downloaded from www.Manualslib.com manuals search engine

https://truckmanualshub.com/

REYCO 102 TANDEM REAR AXLE

Shown with a 52” Axle Spacing

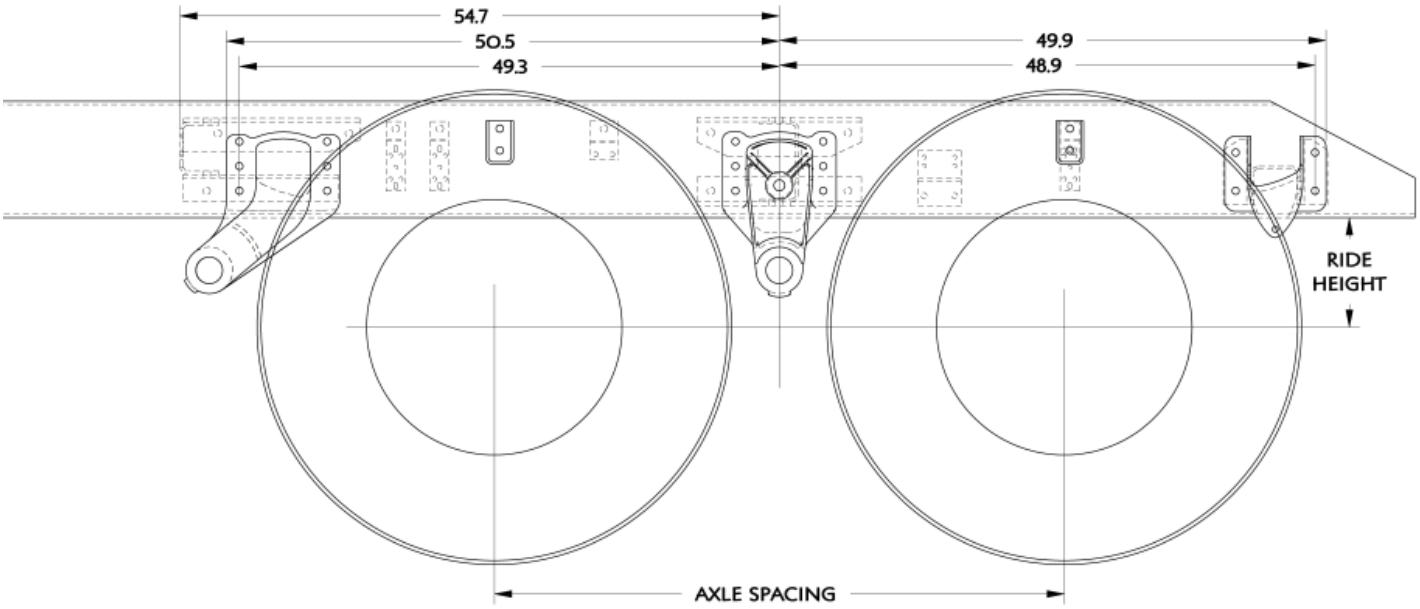

Reyco 102 Suspension Data

TABLE 3-10. Rear Suspension Options

Suspension Type	Rating	Axle Spacing	Laden Ride Height	Unladen Ride Height
Reyco 102 Tandem	38K	52”	9.2”	10.8”
Reyco 102 Tandem	40K	52”	9.2”	10.8”

Downloaded from www.Manualslib.com manuals search engine

https://truckmanualshub.com/

NEWAY AD 123 SINGLE REAR AXLE

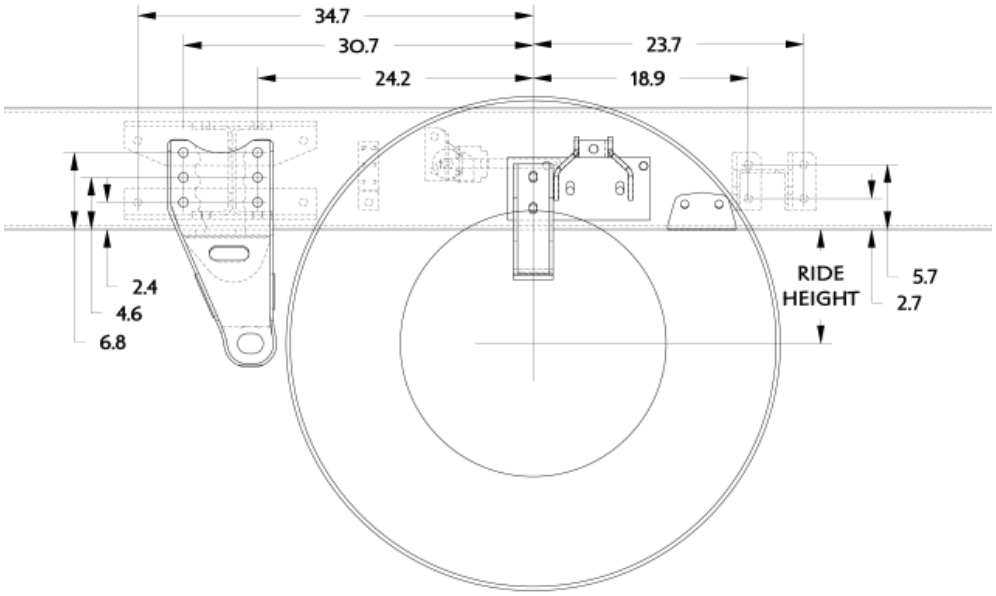

Optional Neway AD Single Suspensions

TABLE 3-11. Rear Suspension Options

Suspension Type	Rating	Axle Spacing	Laden Ride Height	Unladen Ride Height
Neway AD123 single	23K	-	10”	10”
Neway AD126 single	26K	-	10”	10”

Downloaded from www.Manualslib.com manuals search engine

https://truckmanualshub.com/

NEWAY AD 246 TANDEM SUSPENSION

Shown with a 54” Axle Spacing

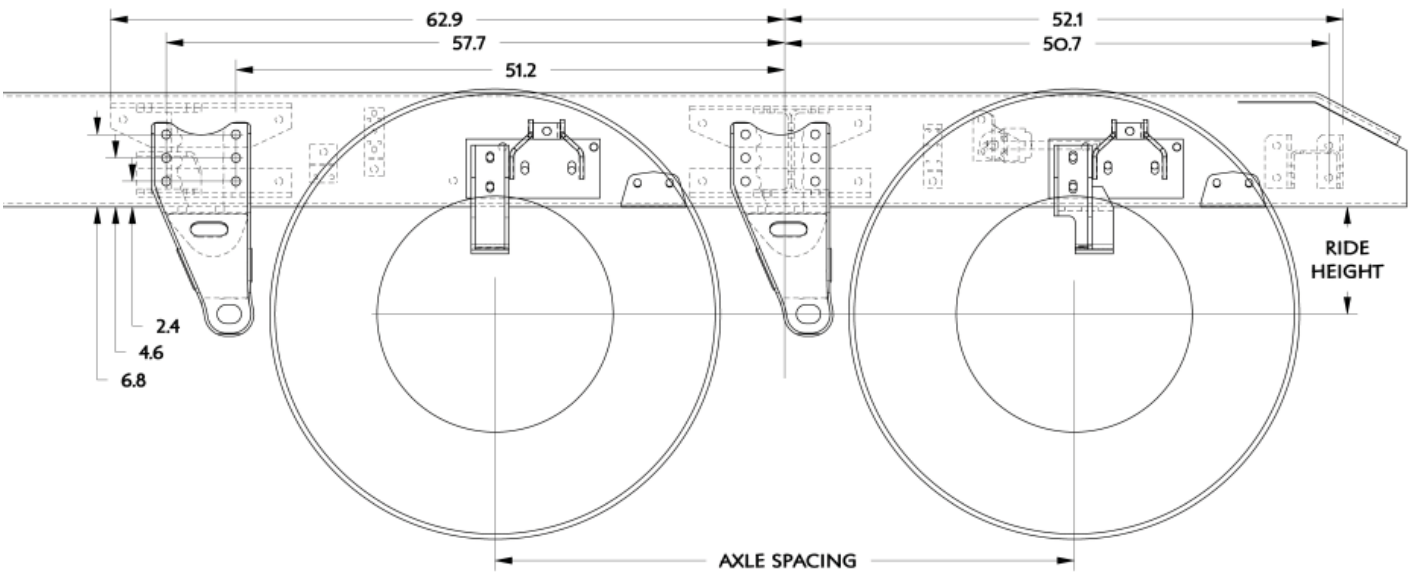

Optional Neway AD Tandem Suspensions

TABLE 3-12. Rear Suspension Options

Suspension Type	Rating	Axle Spacing	Laden Ride Height	Unladen Ride Height
Neway AD246 tandem	46K	54”	10”	10”
Neway AD246 tandem	46K	60”	10”	10”

Downloaded from www.Manualslib.com manuals search engine

https://truckmanualshub.com/

HENDRICKSON PRIMAAX TANDEM SUSPENSION

Shown with 54” Axle Spacings

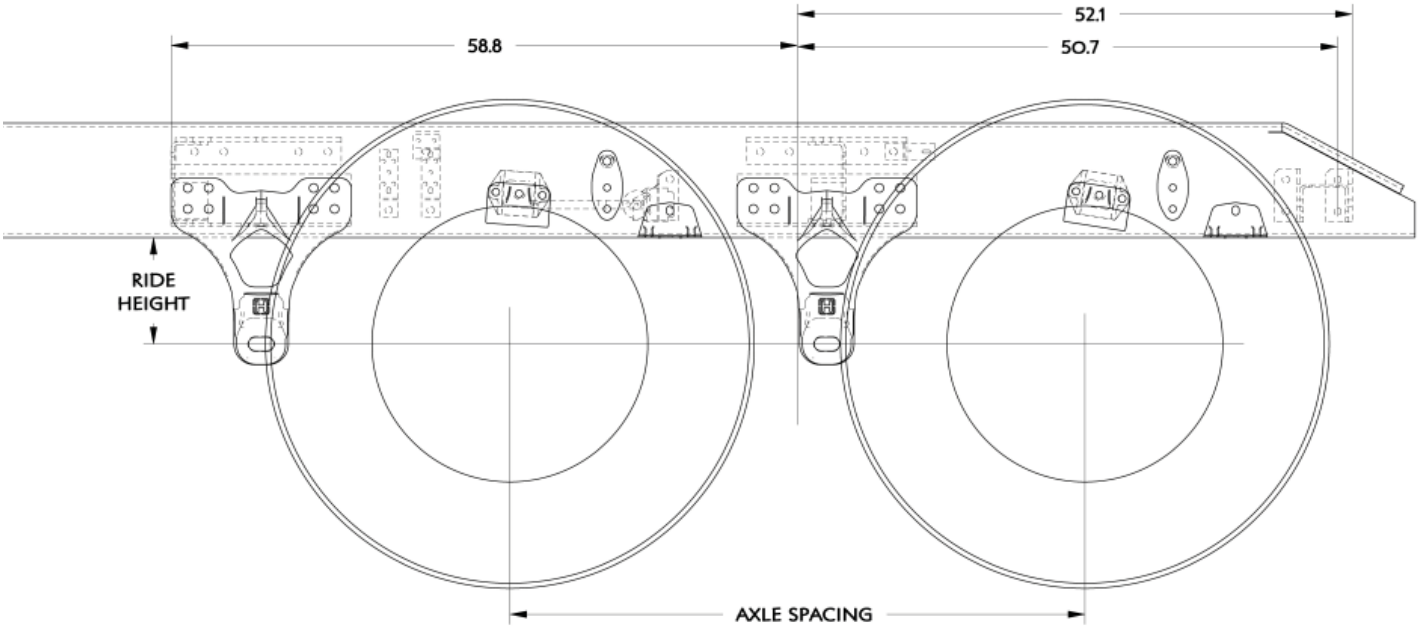

Optional Hendrickson Primaax Tandem Suspensions

TABLE 3-13. Rear Suspension Options

Suspension Type	Rating	Axle Spacing	Laden Ride Height	Unladen Ride Height
Hendrickson Primaax Tandem	46K	54”	10”	10”
Hendrickson Primaax Tandem	46K	60”	10”	10”
Hendrickson Primaax Tandem	46K	72”	10”	10”

Downloaded from www.Manualslib.com manuals search engine

https://truckmanualshub.com/

HENDRICKSON HAS 230 SINGLE REAR SUSPENSION

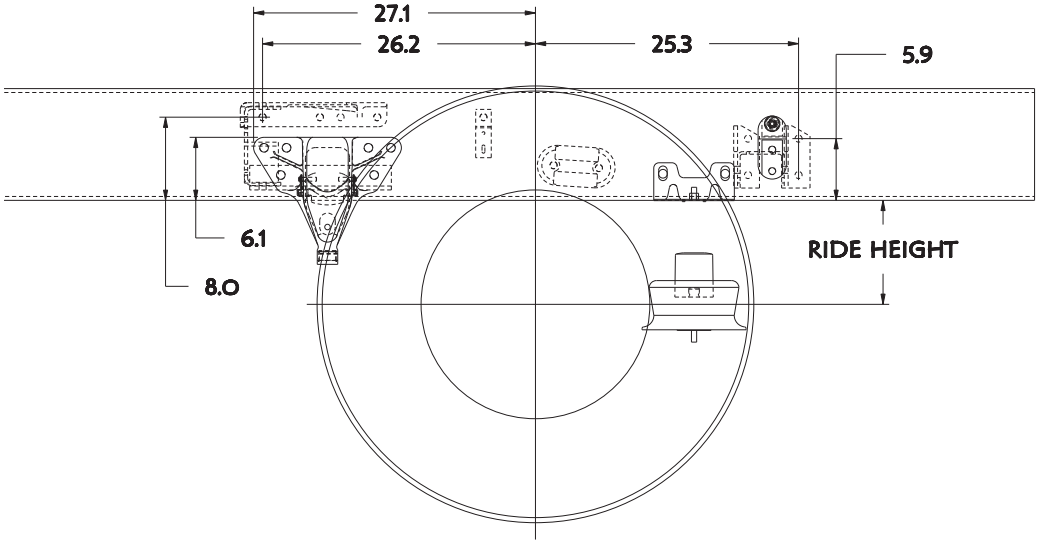

Optional Hendrickson HAS 230 Suspensions

TABLE 3-14. Rear Suspension Options

Suspension Type	Rating	Axle Spacing	Laden Ride Height	Unladen Ride Height
Hendrickson HAS 230	23K	–	10.0”	10.0”

Downloaded from www.Manualslib.com manuals search engine

https://truckmanualshub.com/

HENDRICKSON HMX TANDEM SUSPENSION

Shown with 54” Axle Spacing

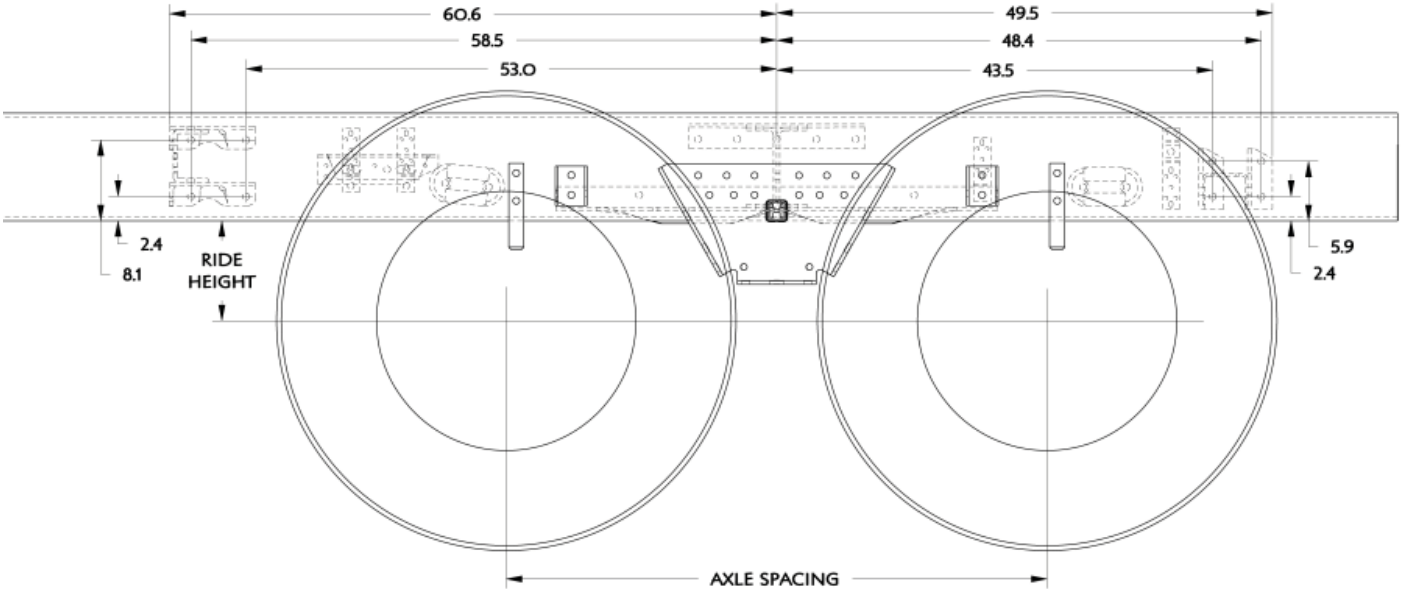

Optional Hendrickson HMX Tandem Suspensions

TABLE 3-15. Rear Suspension Options

Suspension Type	Rating	Axle Spacing	Laden Ride Height	Unladen Ride Height
Hendrickson HMX400 16.5” saddle	40K	54”	9.5”	10.6”
Hendrickson HMX400 17.5” saddle	40K	54”	10.5”	11.6”
Hendrickson HMX460 16.5” saddle	46K	54”	9.5”	10.6”
Hendrickson HMX460 17.5” saddle	46K	54”	10.5”	11.6”
Hendrickson HMX460 18.5” saddle	46K	54”	11.5”	12.6”
Hendrickson HMX460 18.5” saddle	46K	60”	11.5”	12.6”

Downloaded from www.Manualslib.com manuals search engine

https://truckmanualshub.com/

HENDRICKSON RT TANDEM SUSPENSION

Shown with a 54” Axle Spacing Without Track Rods

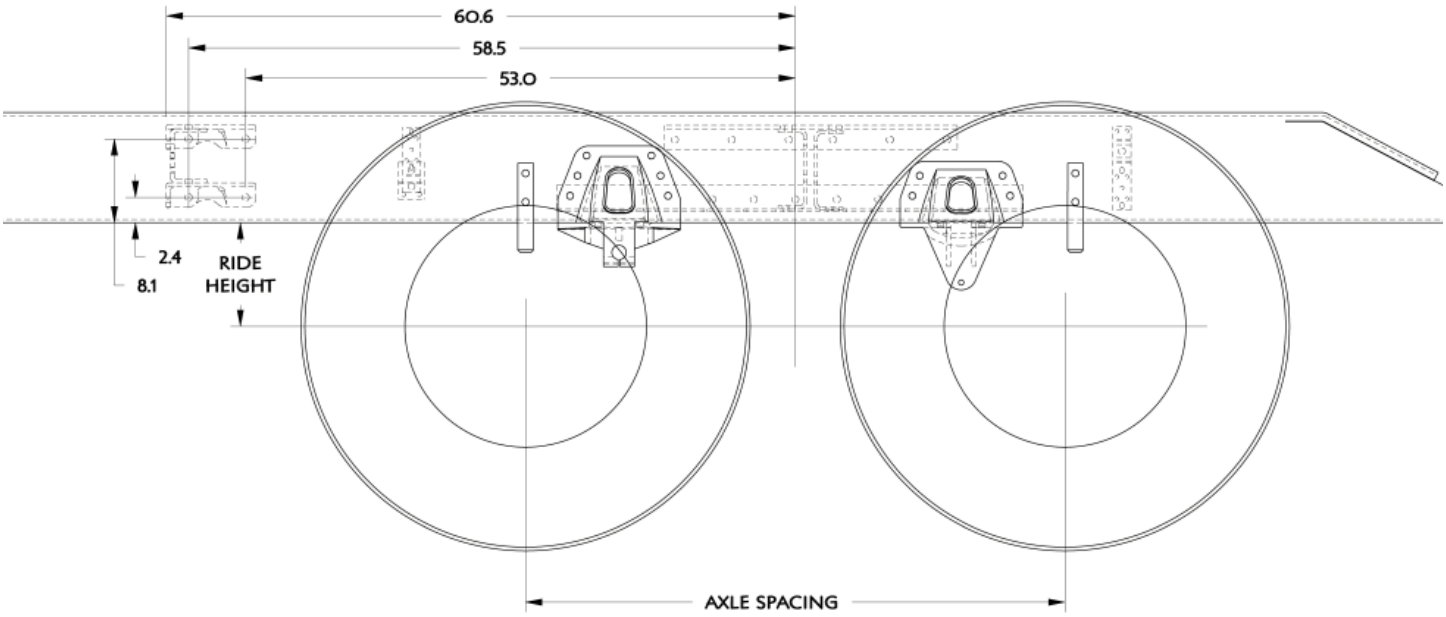

Optional Hendrickson RT Tandem Suspensions

TABLE 3-16. Rear Suspension Options

Suspension Type	Rating	Axle Spacing	Laden Ride Height	Unladen Ride Height
Hendrickson RT463 6” saddle	46K	54”	10.0”	11.1”
Hendrickson RT463 7.19” saddle	46K	54”	11.2”	12.5”
Hendrickson RT463 7.94” saddle	46K	54”	11.9”	13.3”
Hendrickson RT463 6” saddle	46K	60”	10.0”	11.1”
Hendrickson RT403 7.19” saddle	40K	52”	9.7”	10.7”

Downloaded from www.Manualslib.com manuals search engine

https://truckmanualshub.com/

CHALMERS 856-46 TANDEM SUSPENSION

Shown with a 54” Axle Spacing

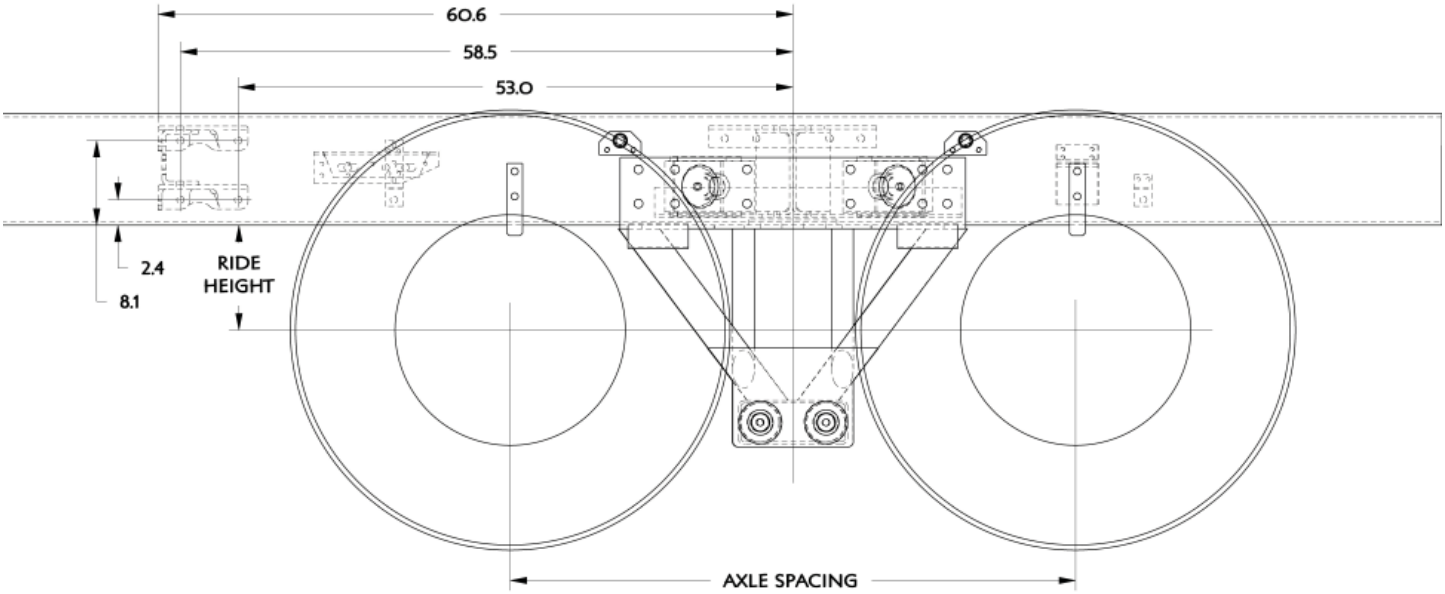

Optional Chalmers Tandem Suspensions

TABLE 3-17. Rear Suspension Options

Suspension Type	Rating	Axle Spacing	Laden Ride Height	Unladen Ride Height
Chalmers 854-40-H	40K	54”	10.2”	12.4”
Chalmers 854-40-L	40K	54”	8.9”	11.1”
Chalmers 854-40-L-HS	40K	54”	9.6”	11.1”
Chalmers 854-40-H-HS	40K	54”	10.9”	12.4”
Chalmers 854-40-H-SR	40K	54”	10.5”	12.4”
Chalmers 854-40-L-SR	40K	54”	9.2”	11.1”
Chalmers 854-46-L	46K	54”	8.9”	11.3”
Chalmers 854-46-L-HS	46K	54”	9.6”	11.3”
Chalmers 854-46-L-SR	46K	54”	9.2”	11.3”
Chalmers 854-46-H	46K	54”	10.1”	12.5”
Chalmers 854-46-H-HS	46K	54”	10.9”	12.5”
Chalmers 854-46-H-SR	46K	54”	10.5”	12.2”
Chalmers 860-46-H	46K	60”	10.1”	12.5”
Chalmers 860-46-H-HS	46K	60”	10.9”	12.5”
Chalmers 872-46-H-HS	46K	72”	11.0”	12.5”

Downloaded from www.Manualslib.com manuals search engine

https://truckmanualshub.com/

PUSHER AXLES

The rear pusher axle layouts are provided as a tool to help layout bodies prior to arrival. When using the pusher layouts to determine available frame space please be aware that clearances required are not shown. For information that may not be detailed in these drawings work with your local Kenworth Dealer to request that information.

Watson & Chalin Tru Track Alumilite 13.2K Steerable Pusher

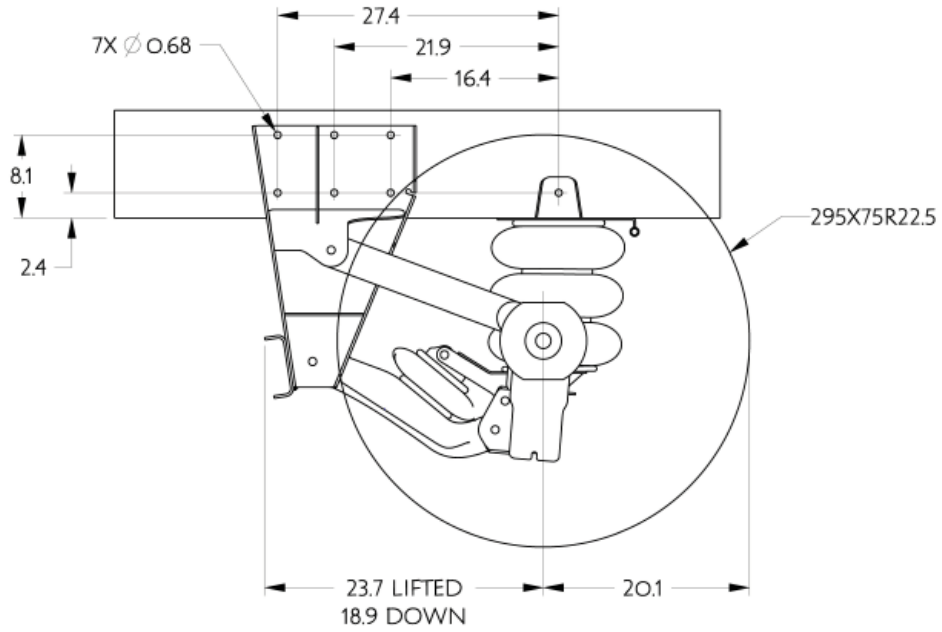

Watson & Chalin Tru Track 20K Steerable Pusher

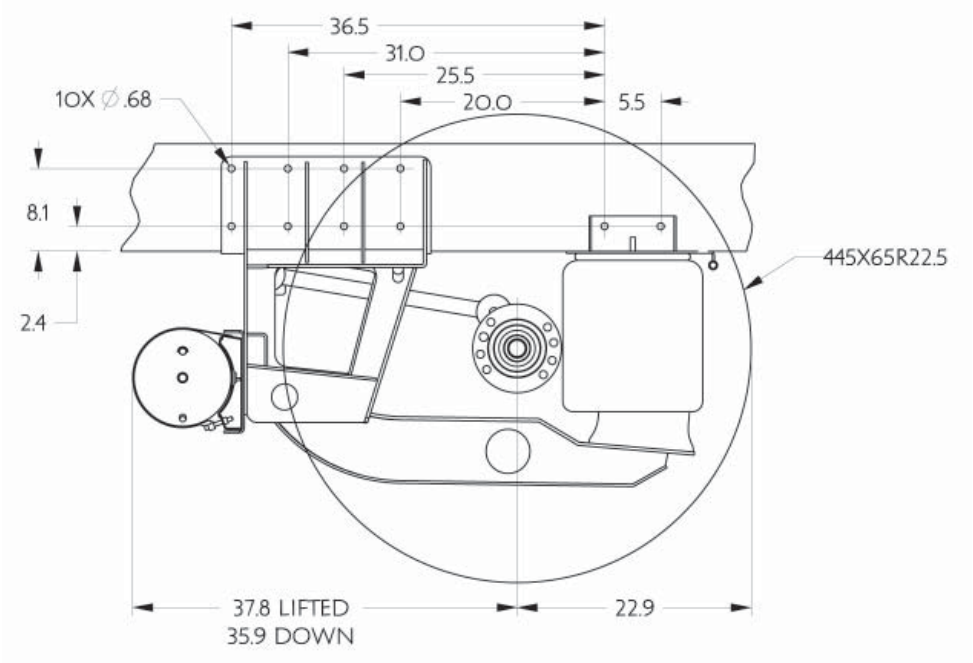

Downloaded from www.Manualslib.com manuals search engine

https://truckmanualshub.com/

Watson & Chalin Atlas 22.5K Non-Steerable Pusher

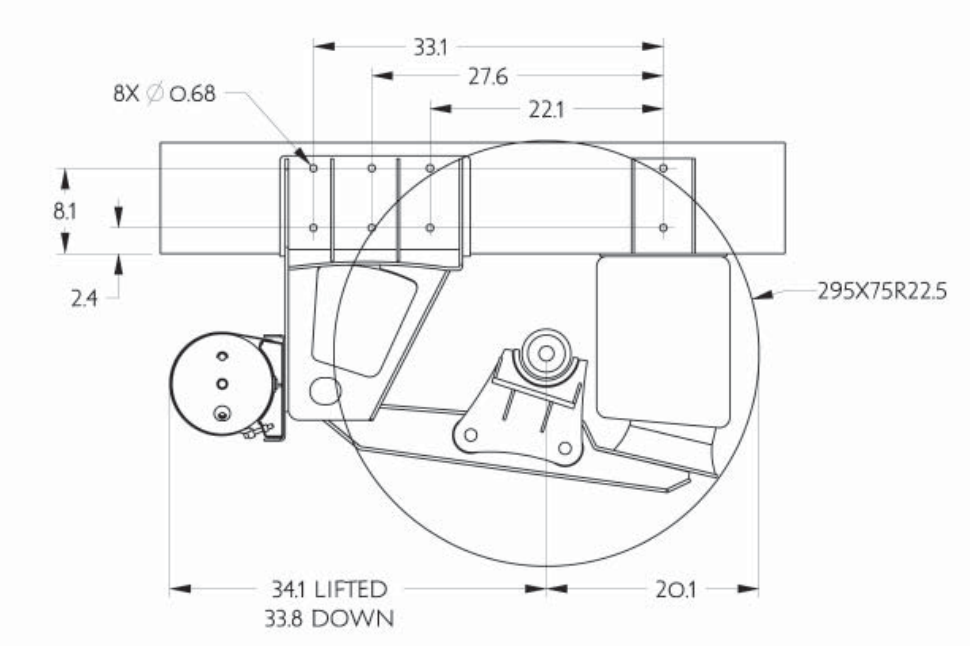

Downloaded from www.Manualslib.com manuals search engine

https://truckmanualshub.com/

GROUND CLEARANCE

This information is provided as a reference, not all optional equipment is included. In order to calculate the height on your specific chassis, please use the ride height information provided on page 3-14. For comparison the FS value shown is 11.4” unladen and 10.4” laden.

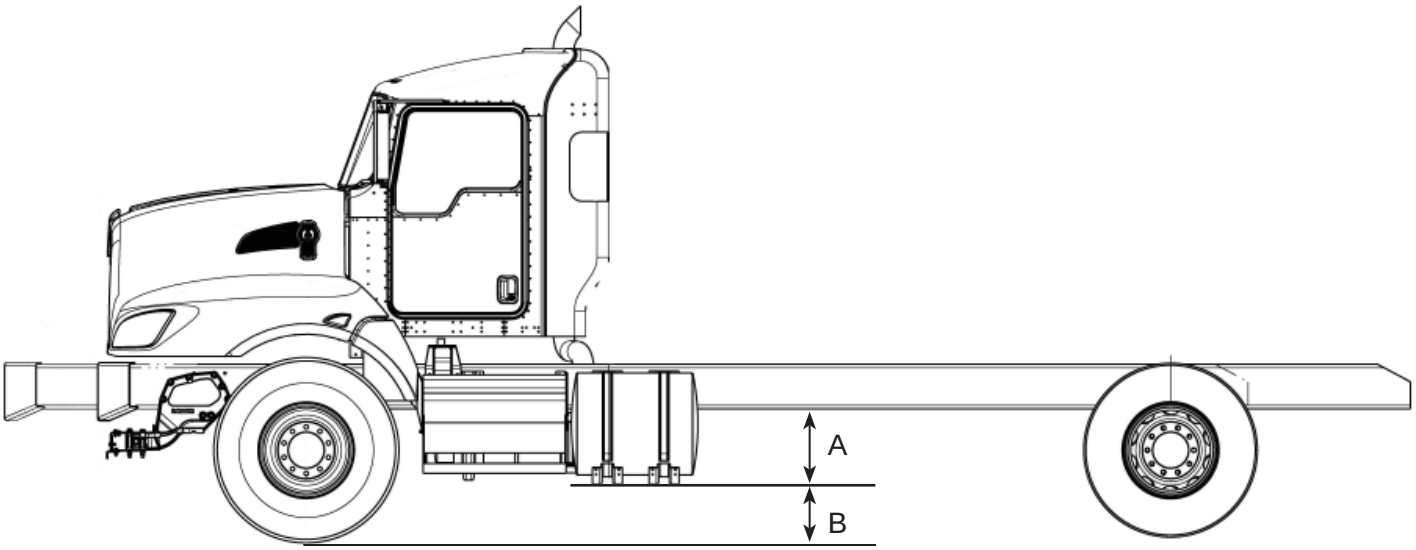

TABLE 3-18. Ground Clearance for Fuel Tanks

Front Suspension	Front Tires	Rear Suspension	Rear Tires	Component	Dimension “A” Distance from Bottom of Frame Rail (in)	Dimension “B” Ground Clearance (in)	
						Unladen	Laden
20K Taper-leaf Spring	M844F 425/65R22.5 Tires	Hendrickson HMX 460 17.5” Saddle Height	M711 11R24.5	22” Fuel Tank	16.3	17.2	14.9
				24.5” Fuel Tank	18.2	15.3	13

Downloaded from www.Manualslib.com manuals search engine

https://truckmanualshub.com/

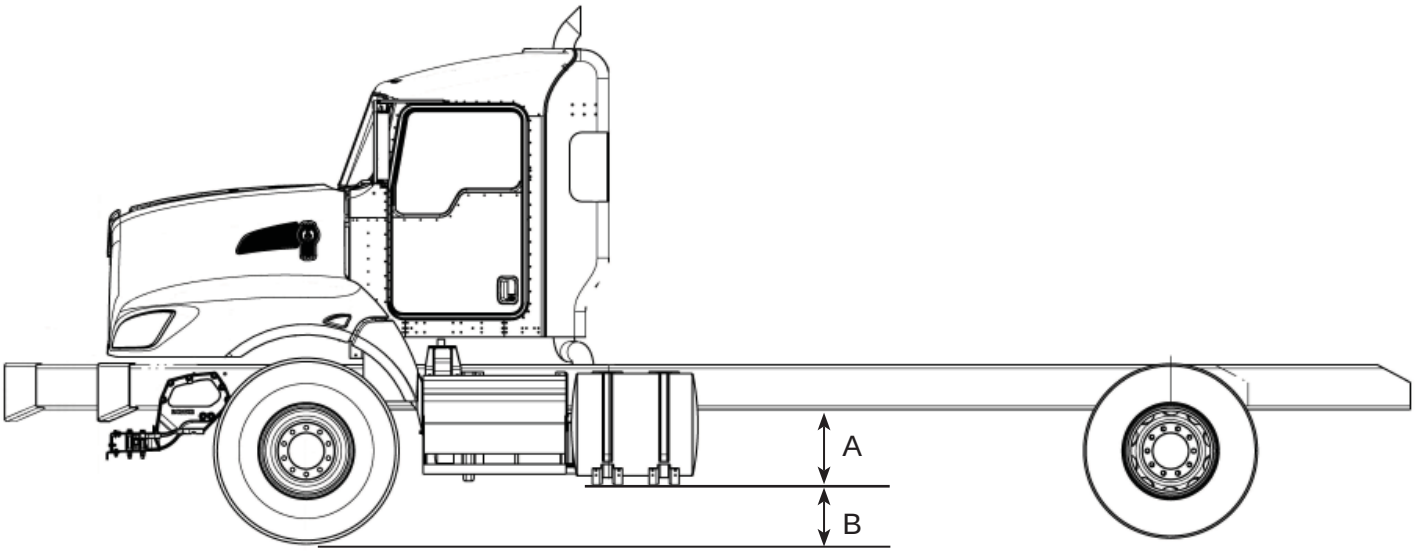

TABLE 3-19. Ground Clearance for Battery Boxes

Front Suspension	Front Tires	Rear Suspension	Rear Tires	Component	Dimension "A" Distance from Bottom of Frame Rail (in)	Dimension "B" Ground Clearance (in)	
						Unladen	Laden
20K Taper-leaf Spring	M844F 425/65R22.5 Tires	Hendrickson HMX 460 17.5" Saddle Height	M711 11R24.5	Battery Box with Air Tanks	17.3	16.2	13.9
				Vocational Battery Box with Air Tanks	17.8	15.7	13.4
				Single DPF Box	15.5	17.9	15.6

Downloaded from www.Manualslib.com manuals search engine

https://truckmanualshub.com/

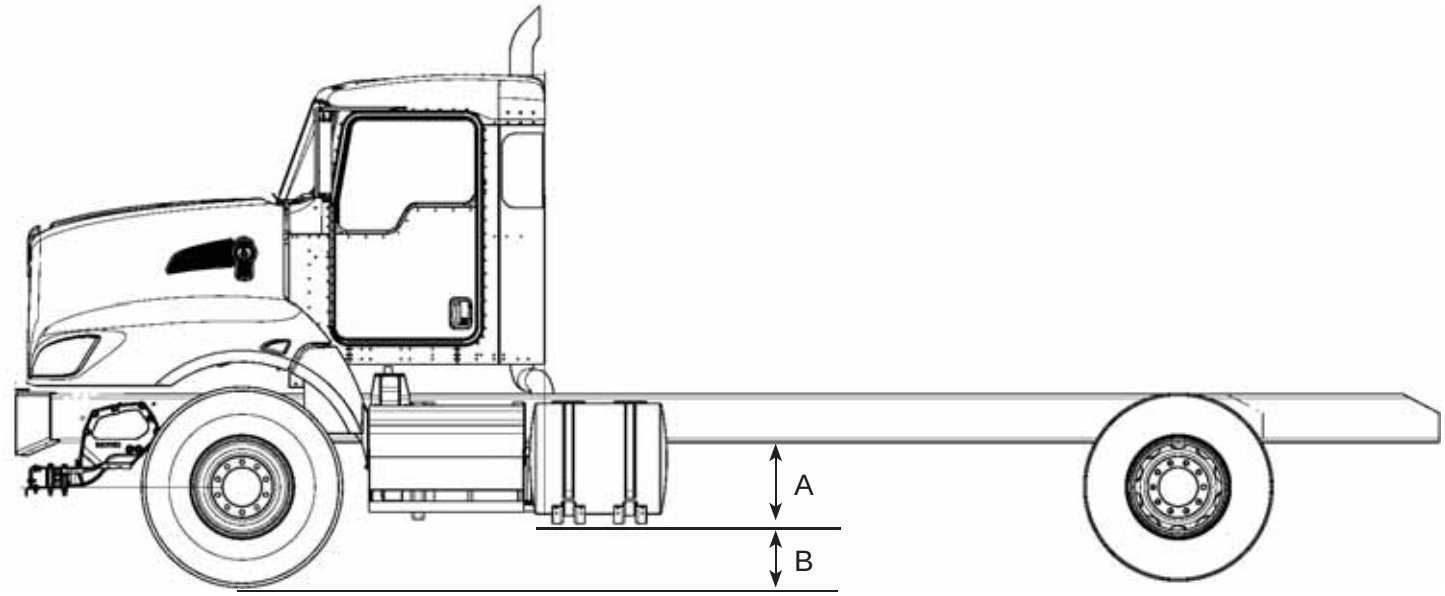

TABLE 3-20. Ground Clearance for Battery Boxes

Front Suspension	Front Tires	Rear Suspension	Rear Tires	Component	Dimension "A" Distance from Bottom of Frame Rail (in)	Dimension "B" Ground Clearance (in)	
						Unladen	Laden
20K Taper-leaf Spring	M844F 425/65R22.5 Tires	Hendrickson HMX 460 17.5" Saddle Height	M711 11R24.5	Battery Box with Air Tanks	17.3	16.2	13.9
				Vocational Battery Box with Air Tanks	17.8	15.7	13.4
				DPF[1] Box	15.6	17.8	15.5

[1] Dimensions shown are for daycabs with high route exhaust. Sleeper ground clearance is reduced by 1.3 inches.

Downloaded from www.Manualslib.com manuals search engine

https://truckmanualshub.com/

PTO CLEARANCES

The following visuals are provided to help aid in determining PTO locations and clearances. For specific dimensions please work through your local Kenworth dealer. Multiple PTO's are shown for layout purposes only. Power equipment, i.e., drive shafts & power pumps are not included. Body builders should select the appropriate PTO for their application and customer requirements. NOTE: Installations depict multiple PTOs. PTO locations shown below are for reference only. Some PTOs may interfere with frame rail and/or other components.

In order to ensure the PTO area remains clear of air equipment, electrical and emissions equipment, Kenworth recommends always ordering PTO controls, even when installing the PTO aftermarket. Kenworth does offer a variety of factory installed PTOs. Contact your local dealer for assistance.

Manual Transmission:

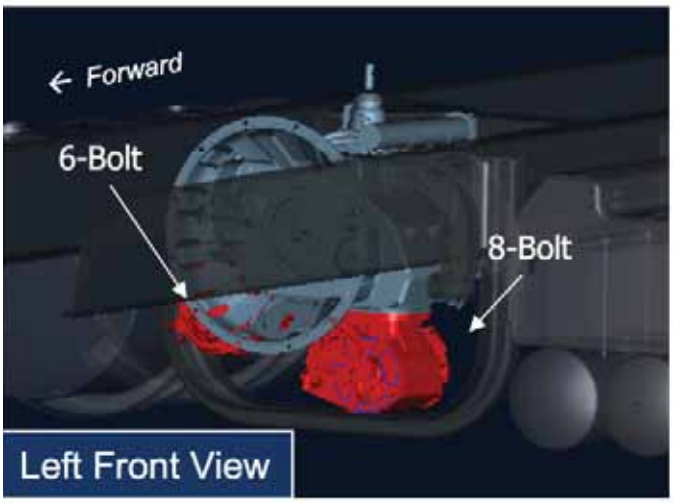

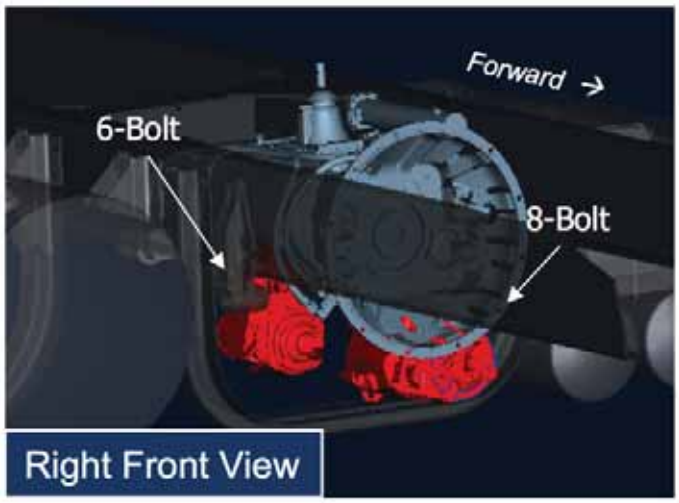

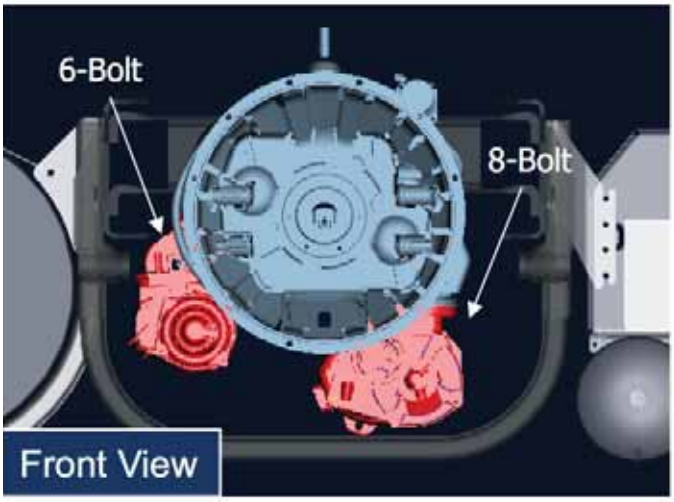

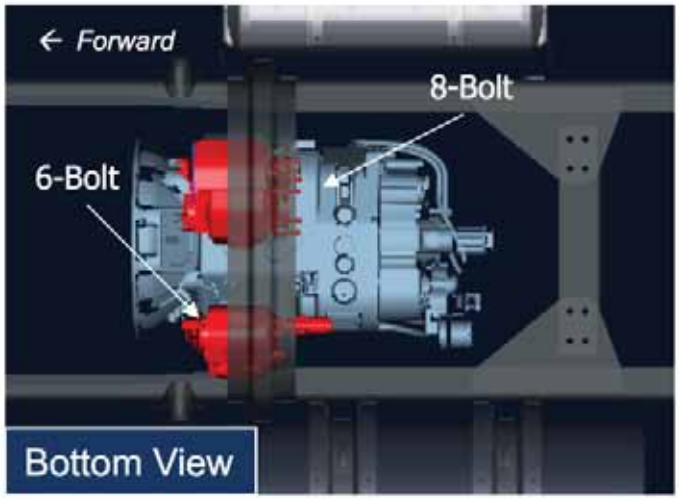

Downloaded from www.Manualslib.com manuals search engine

https://truckmanualshub.com/

Allison Transmission:

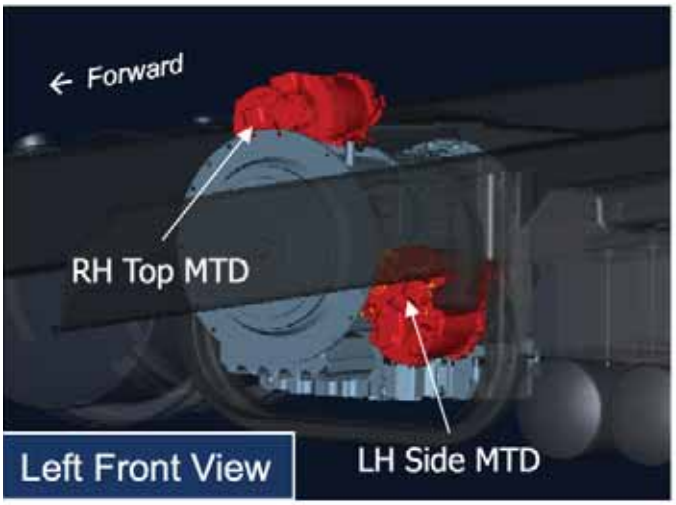

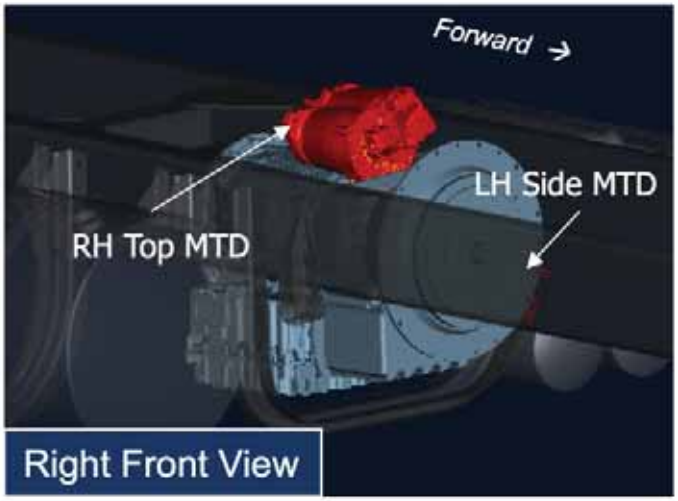

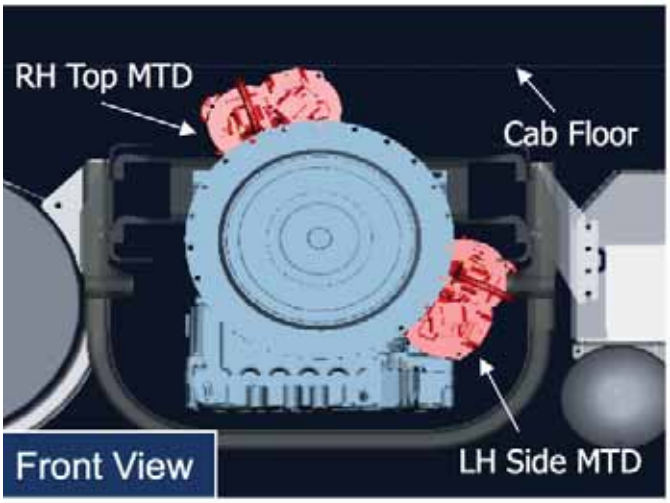

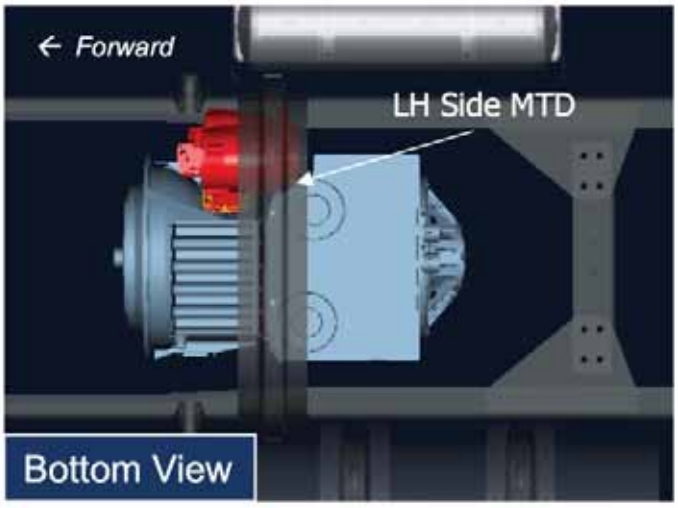

Downloaded from www.Manualslib.com manuals search engine

https://truckmanualshub.com/

EXHAUST AND AFTER-TREATMENT INFORMATION

The following section is designed to give you information regarding the exhaust and after-treatment systems on Kenworth chassis.

All Kenworth's equipped with 2010 emission level engines will utilize Selective Catalyst Reduction (SCR). SCR is a process in which Diesel Exhaust Fluid (DEF) is injected into the exhaust down stream of the engine. DEF is converted to ammonia by the heat of the exhaust system. Inside of the SCR canister a catalyst causes a chemical reaction to occur between the ammonia and NOx, turning it into water and nitrogen. For more information on the specific details of how SCR works, please contact your local Kenworth dealer.

DEF System Schematic:

On most Kenworth chassis the DEF Supply Module (or pump) is integrated into the DEF tank. Kenworth does not allow relocation of this pump. The following schematic details how the DEF lines route to the after-treatment system.

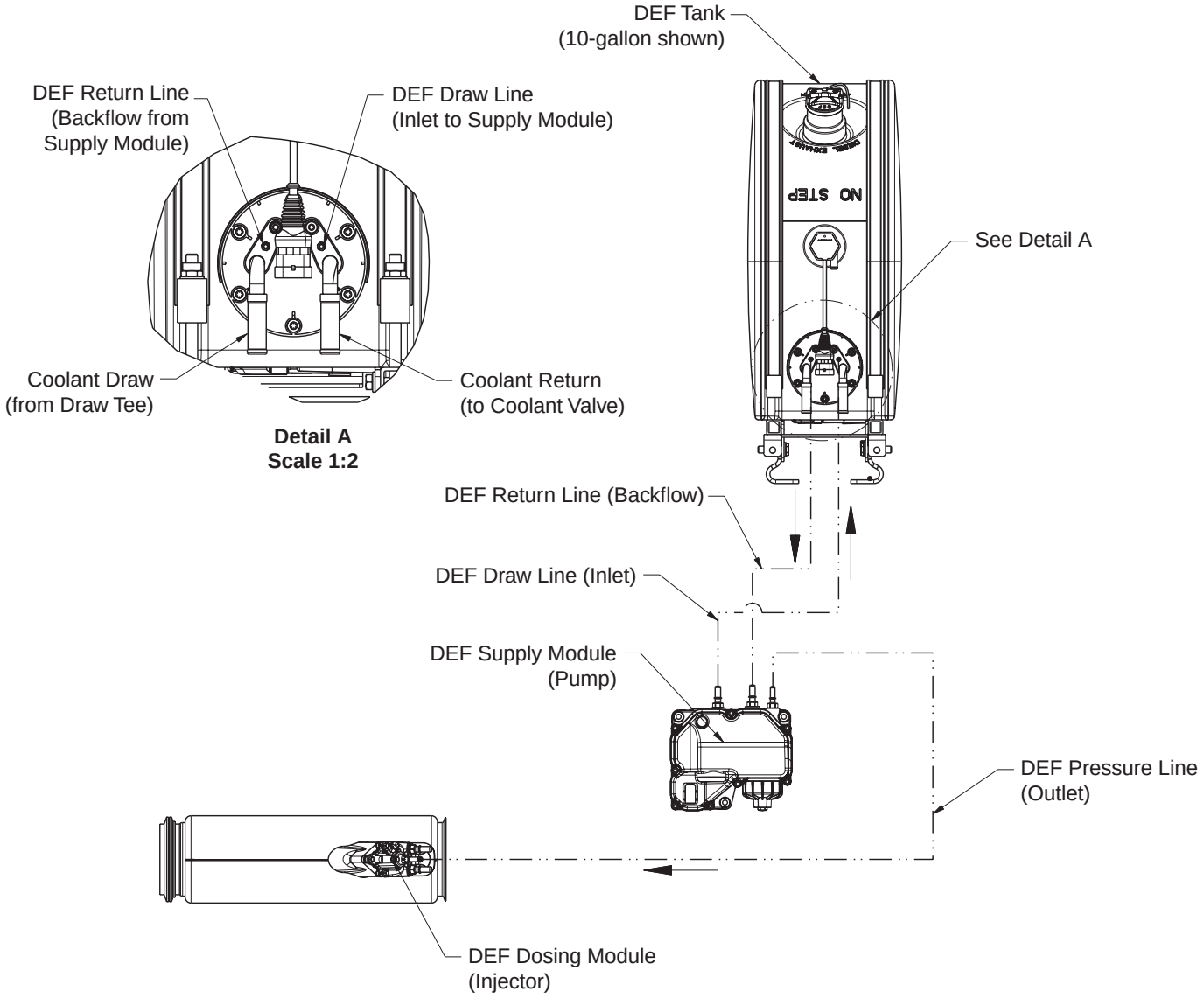

Downloaded from www.Manualslib.com manuals search engine

https://truckmanualshub.com/

DEF will freeze at approximately 11° F. In order to keep DEF from freezing all tanks will be heated with engine coolant. The following schematic shows the routing of these lines. The coolant lines that run to and from the SCR system must not be tampered with, or used for a source of heat and/or cooling for other components on the chassis. It is critical that the system is not compromised in any manner.

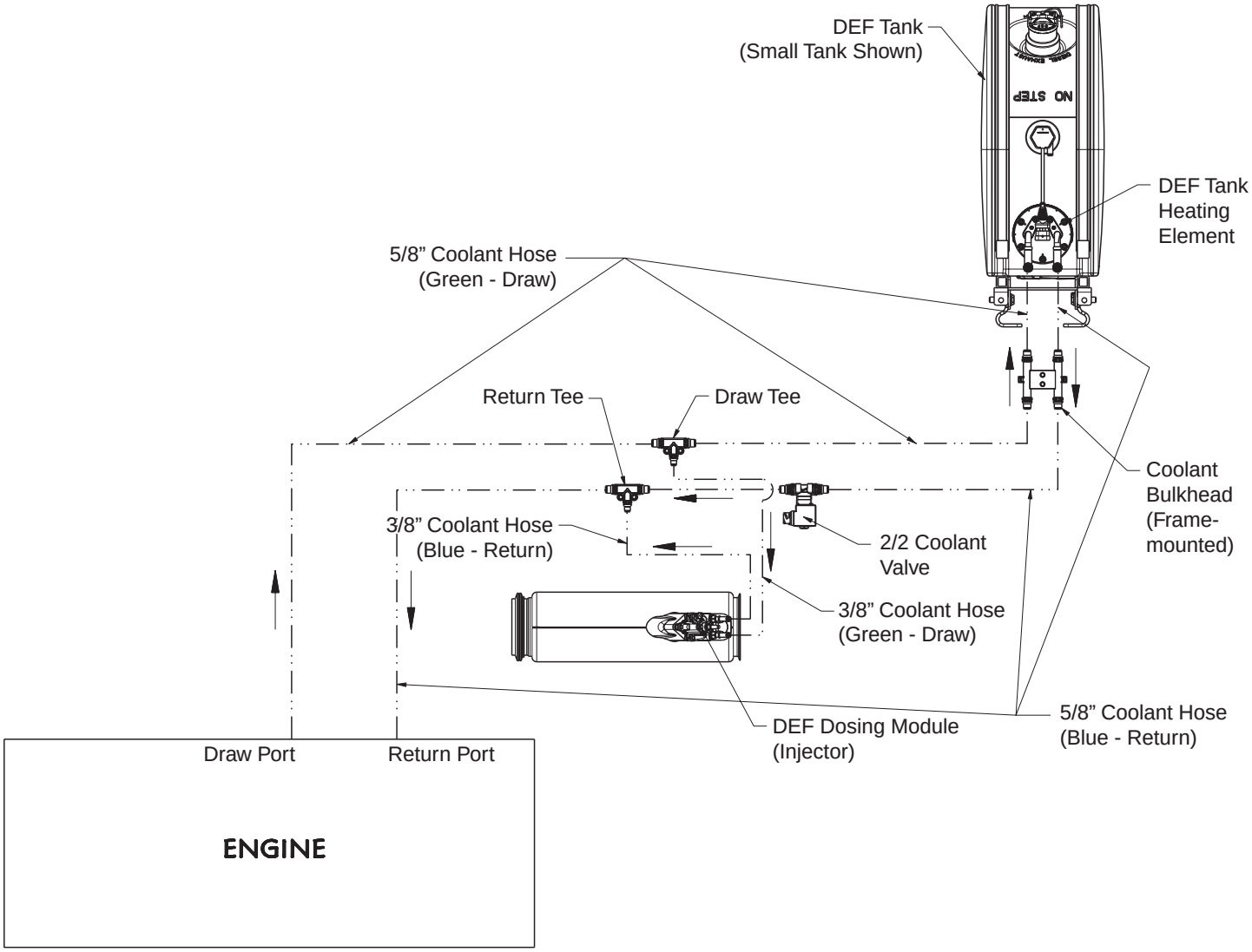

Downloaded from www.Manualslib.com manuals search engine

https://truckmanualshub.com/

GENERAL GUIDELINES FOR DEF SYSTEM

The installation of the DEF tank is a critical component of the SCR system. While Kenworth does not recommended relocating the DEF tank, there are applications and body installations that will require it. The guidelines below must be strictly followed by any entity relocating the tank. Failure to follow the guidelines completely and accurately may result in engine shutdown situations.

Kenworth offers a variety of DEF tank sizes to meet every application. The DEF tank volume is regulated by the E.P.A. Kenworth advises against modifying the tank volume after the truck has been delivered from the factory.

- Total DEF capacity **must** meet or exceed 6% of the usable fuel capacity on the truck. The calculation to determine DEF capacity is:

  Minimum DEF Tank Volume = Useable Fuel Capacity (gal) x 0.06

  Example: For a truck with 200 useable gallons of fuel, the equation is
  DEF required = 200 x 0.06 = 12 gallons or more of DEF.

PACCAR-approved DEF hoses are required when retrofitting for system to function properly. The use of unapproved hoses for DEF lines will void warranty and may cause engine shutdown situations. The DEF pump (or Supply Module) can not be relocated from the DEF tank.

INSTALLATION REQUIREMENTS AND DIMENSIONS FOR DEF SYSTEM

When relocating any DEF system components, the locations must meet the guidelines below. Failure to comply may result in non-conformance to EPA standards and engine shutdown.

DEF piping relative heights: In order to ensure proper functionality of DEF system, the height differences in the guidelines below must be followed during line routing and component placement.

With all relocating procedures, general clearances and routing guidelines must be followed. See section 9 of this manual for general routing guidelines.

When relocating the components the maximum pressure DEF hose length, from Supply module to Dosing Module, is 3 meters (118”).

Maintain a minimum of 3” clearance to shielded exhaust components when routing DEF lines to prevent possible melting.

If the DEF tank is relocated the coolant lines will need to be modified. During this process if the tank is moved forward on the chassis (ie closer to the engine) it is necessary to remove excess coolant lines and maintain the original routing path. If the tank is moved rearward on the chassis the additional length of cooling line required to complete the installation must be installed in a straight section of the existing coolant routing lines. This process will minimizes the change in coolant flow by minimizing changes in restrictions. Increases in restriction occur with excessive line length and bends. Work with your local Kenworth dealer if you are unsure about the coolant line modifications.

Downloaded from www.Manualslib.com manuals search engine

https://truckmanualshub.com/

MEASUREMENT REFERENCE POINTS

For all relocation procedures, the measurement points referenced in the guidelines are taken from the following specific points:

Supply Module: The supply module is commonly called a pump. The measurement point on the supply module is the top of the DEF fluid pressure line. See Figure 4-1.

FIGURE 4-1: Measurement Location of DEF Supply Module (Pump)

Dosing Module: The dosing module is commonly called an injector, this injector is located on the SCR mixing pipe which is between the DPF and SCR canister. The measurement point on the dosing module is the top of the DEF fluid pressure line. See Figure 4-2.

FIGURE 4-2: Measurement Location of DEF Dosing Module (Injector)

The following relocation guidelines are dependant on exhaust configuration and DEF tank type and location.

The Dosing Module should not need to be relocated. However if it is removed for any reason, it is critical that the module be reinstalled at the correct orientation. Figure 4-3 below illustrates the correct installation orientations. The angle references the vertical plane.

Downloaded from www.Manualslib.com manuals search engine

https://truckmanualshub.com/

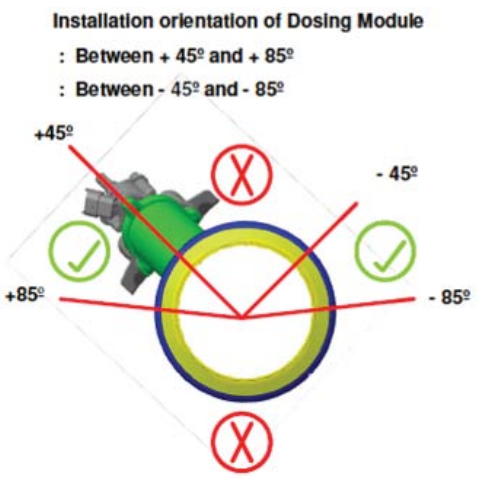

FIGURE 4-3: Orientation of Dosing Module

Right Hand Under DPF and SCR with Small, Medium, or Large DEF Tanks

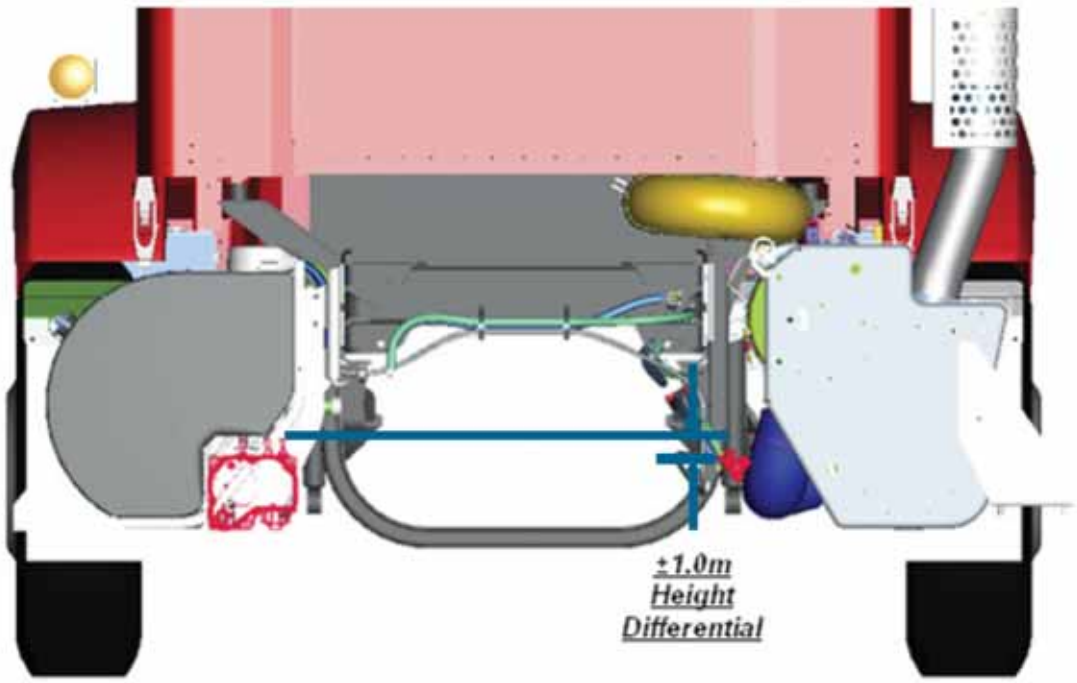

FIGURE 4-4: RH Under Cab Exhaust with Small, Medium, or Large Tanks.

The height differential between the supply module and dosing module can not exceed one meter. The supply module is integrated into the DEF tank assembly, separation of the module from the tank is not allowed.

When relocating the components the maximum pressure DEF hose length, from Supply module to Dosing Module, is 3 meters (118”).

DEF Pressure hose must include a “trap” in the routing if Dosing Module is below the highest point of the Supply Module (See Figure 4-9 on page 4-9).

Downloaded from www.Manualslib.com manuals search engine

https://truckmanualshub.com/

Horizontal (Crossover) DPF and SCR with Rectangular Small or Medium DEF Tanks

FIGURE 4-5: Horizontal Exhaust with Small or Medium Tanks.

The height differential between the supply module and dosing module cannot exceed one meter. The supply module is integrated into the DEF tank assembly, separation of the module frm the tank is not allowed.

When relocating the components the maximum pressure DEF hose length, from Supply module to Dosing Module is 3 meters (118”).

Vertical DPF and SCR with Rectangular Small or Medium DEF Tanks

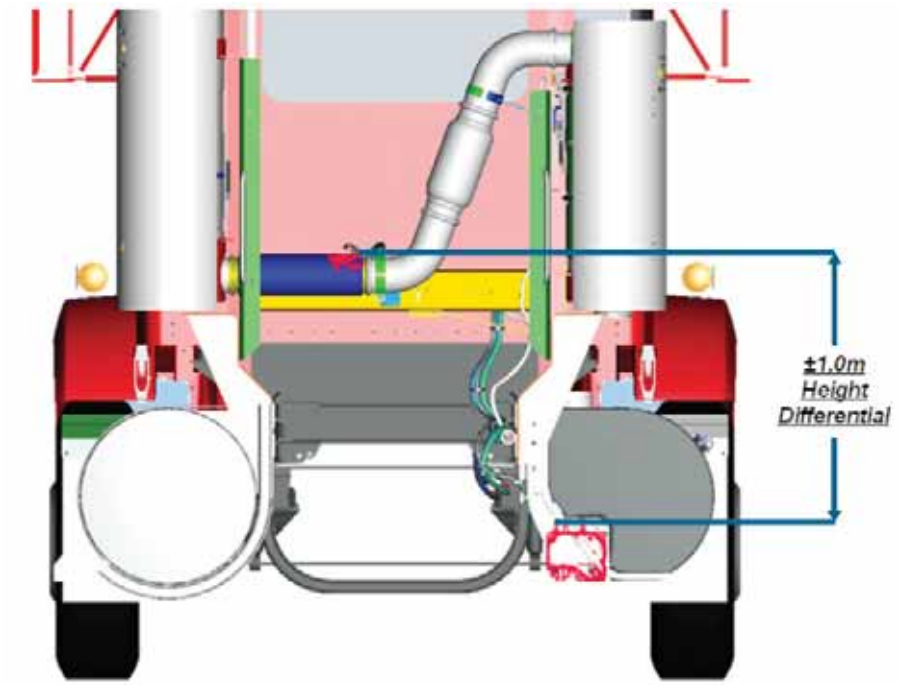

FIGURE 4-6: Vertical Exhaust with Small or Medium Tanks.

The height differential between the supply module and dosing module can not exceed one meter. The supply module is integrated into the DEF tank assembly, separation of the module from the tank is not allowed.

When relocating the components the maximum pressure DEF hose length, from Supply module to Dosing Module, is 3 meters (118”).

Downloaded from www.Manualslib.com manuals search engine

https://truckmanualshub.com/

Right Hand Under DPF and SCR with Clear Back of Cab DEF Tank

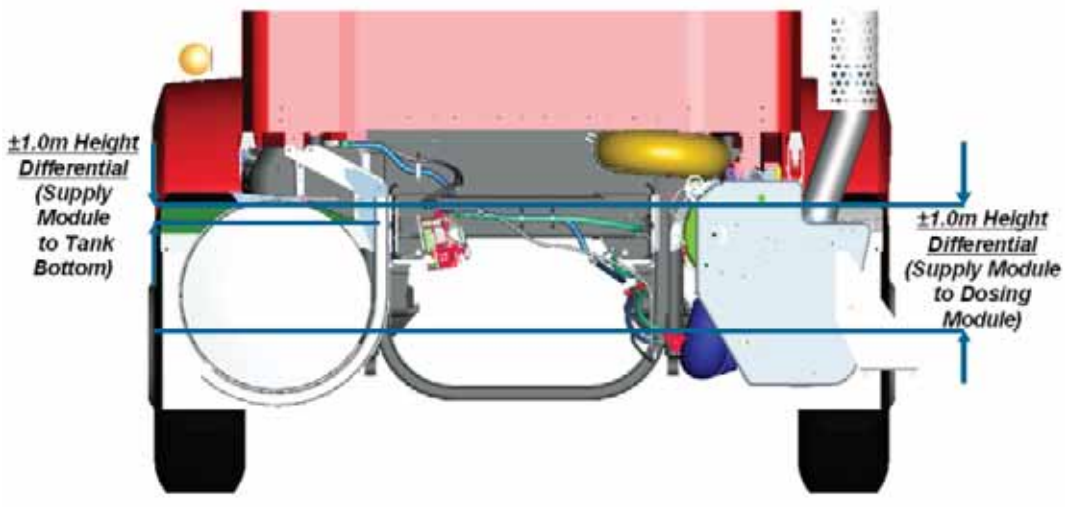

FIGURE 4-7: RH Under Cab Exhaust with Clear Back of Cab Tank.

The installation and design of the Clear Back of Cab (CBOC) tank is highly integrated into the chassis and cooling system. Kenworth does not allow relocation of this tank, only relocation of the supply module.

The height differential between the supply module and dosing module can not exceed one meter. The CBOC tank does not have an integrated supply module. The standard KW installation is a supply module located inside of the frame rail. When relocating either the supply module or the tank, the maximum height differential between the supply module and the bottom of the tank is one meter. The maximum line length is 2 meters between supply module and DEF tank sending unit.

When relocating the components the maximum pressure DEF hose length, from Supply module to Dosing Module, is 3 meters (118”).

DEF Pressure hose must include a “trap” in the routing if Dosing Module is below the highest point of the Supply Module (See Figure 4-8 on page 4-9).

Downloaded from www.Manualslib.com manuals search engine

https://truckmanualshub.com/

Vertical DPF and SCR with Clear Back of Cab DEF Tank

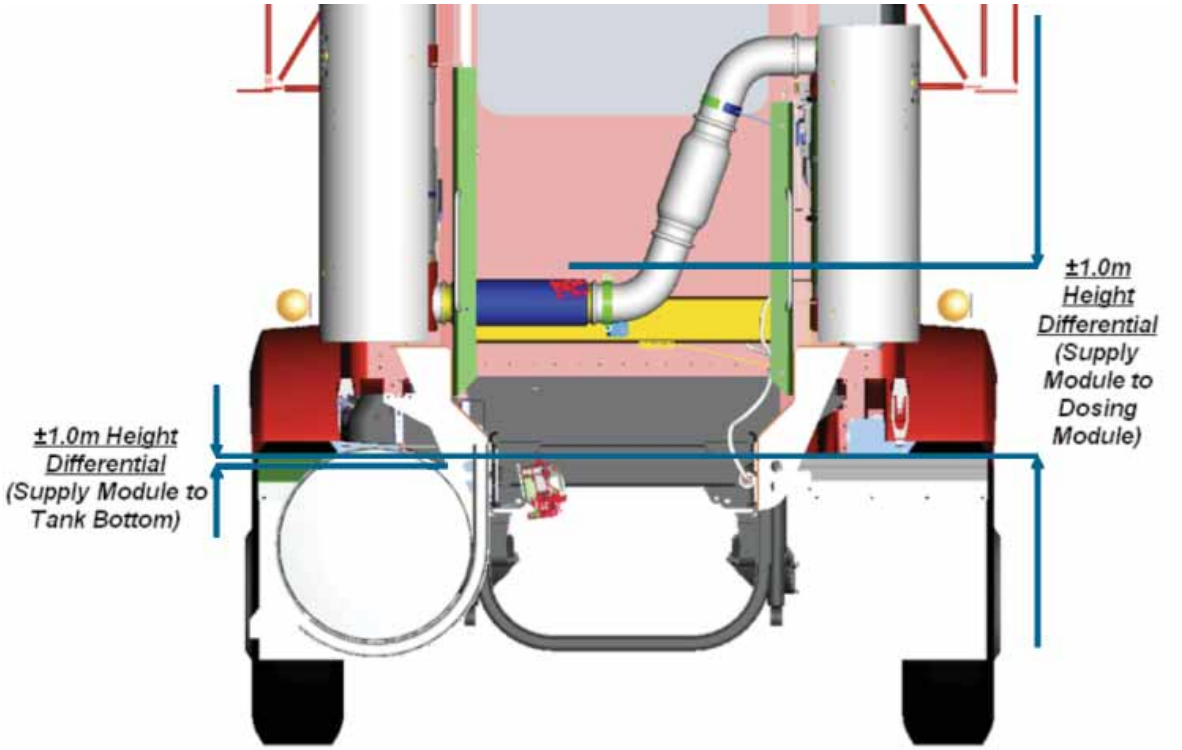

FIGURE 4-7: Vertical with Clear Back of Cab Tank

The installation and design of the Clear Back of Cab (CBOC) tank is highly integrated into the chassis and cooling system. Kenworth does not allow relocation of this tank, only relocation of the supply module.

The height differential between the supply module and dosing module can not exceed one meter. The Clear Back of Cab (CBOC) tank does not have an integrated supply module. The standard KW installation is a supply module located inside of the frame rail. When relocating either the supply module or the tank, the maximum height differential between the supply module and the bottom of the tank is one meter. The maximum line length is 2 meters between supply module and DEF tank sending unit.

When relocating the components the maximum pressure DEF hose length, from Supply module to Dosing Module, is 3 meters (118”).

Routing to the Dosing Module (Injector)

It is important for the function of the dosing module to ensure that the dosing module is not routed downstream of DEF lines or components. If this is unavoidable (for example on RH under exhaust systems) a routing trap must be installed. A minimum of 12” of line length must be routed below the dosing module, in order to catch any leftover DEF when system is purged.

Downloaded from www.Manualslib.com manuals search engine

https://truckmanualshub.com/

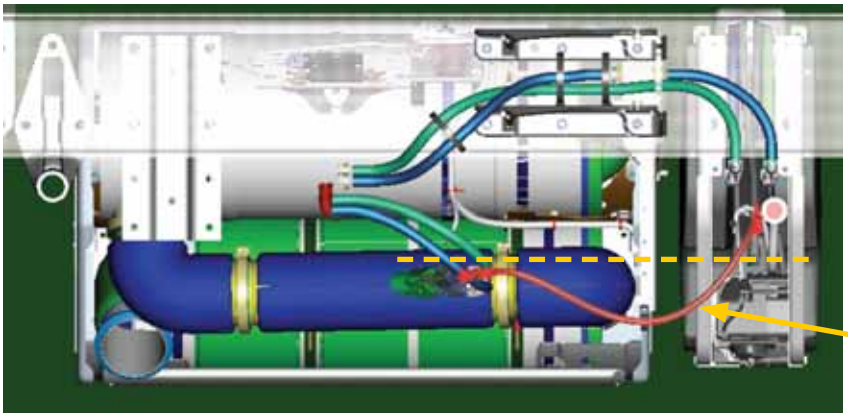

FIGURE 4-8: Routing DEF Lines and DEF Trap

Clear Back of Cab Supply Module

The CBOC Supply Module (or Pump) standard mounting location is inside of the frame rail back of cab. Body builders may need to relocate this component, and should follow the location and length restrictions above. Additionally the mounting and the orientation of the Supply Module must not exceed 45° (from vertical) in two directions as shown in Figure 4-9 below.

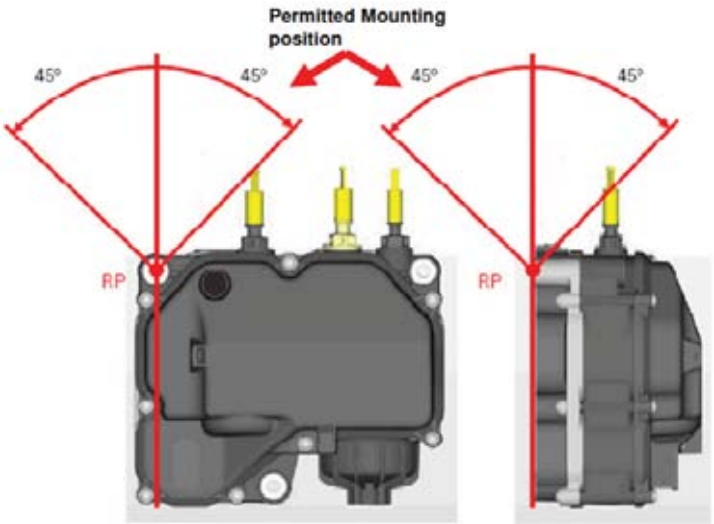

FIGURE 4-9: Supply Module Allowed Clocking Angles

Downloaded from www.Manualslib.com manuals search engine

https://truckmanualshub.com/

GENERAL EXHAUST INFORMATION

Kenworth will offer two main DPF and SCR exhaust systems on T440/T470 chassis in 2010. A Right Hand Under DPF and SCR system, in which both canisters are located underneath the cab access step, and an Independent DPF and SCR located vertically back of cab on stanchion brackets.

RH Under DPF and SCR

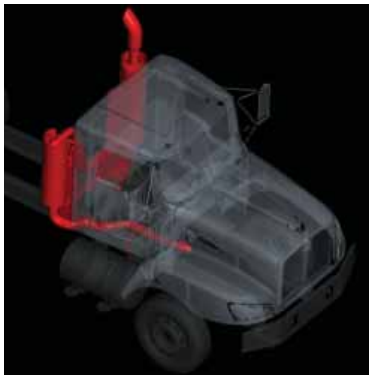

Independent Back of Cab

The following images depict the typical exhaust routings for each system, and can be used to determine exhaust routing paths for systems you choose. Dimensional information can be found in Section 5 of this manual.

Body Builders must not modify (including altering, substituting, and relocating) the DPF and SCR canisters. The exhaust piping after it exits the SCR canister may be modified, however using smaller diameter piping or piping with numerous bends is not recommend as the backpressure requirements of the system may be exceeded.

Downloaded from www.Manualslib.com manuals search engine

https://truckmanualshub.com/

Right Hand Under DPF and SCR on Daycab with Single Side of Cab Tailpipe

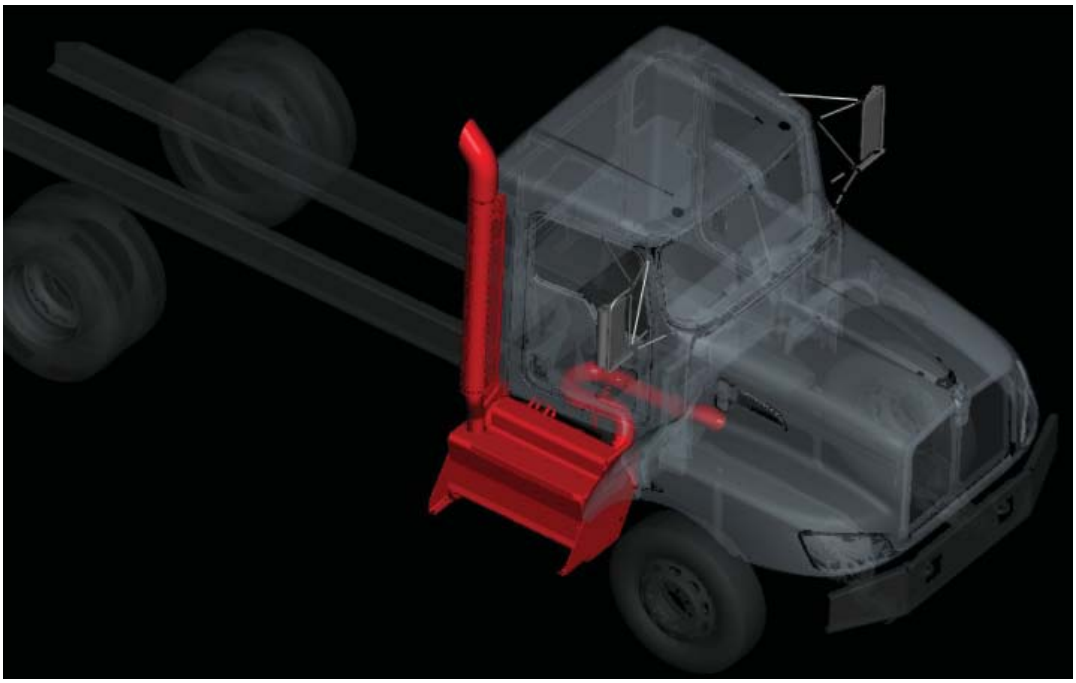

FIGURE 4-10: Isometric View of Right Hand Under DPF and SCR with Single SOC Tailpipe

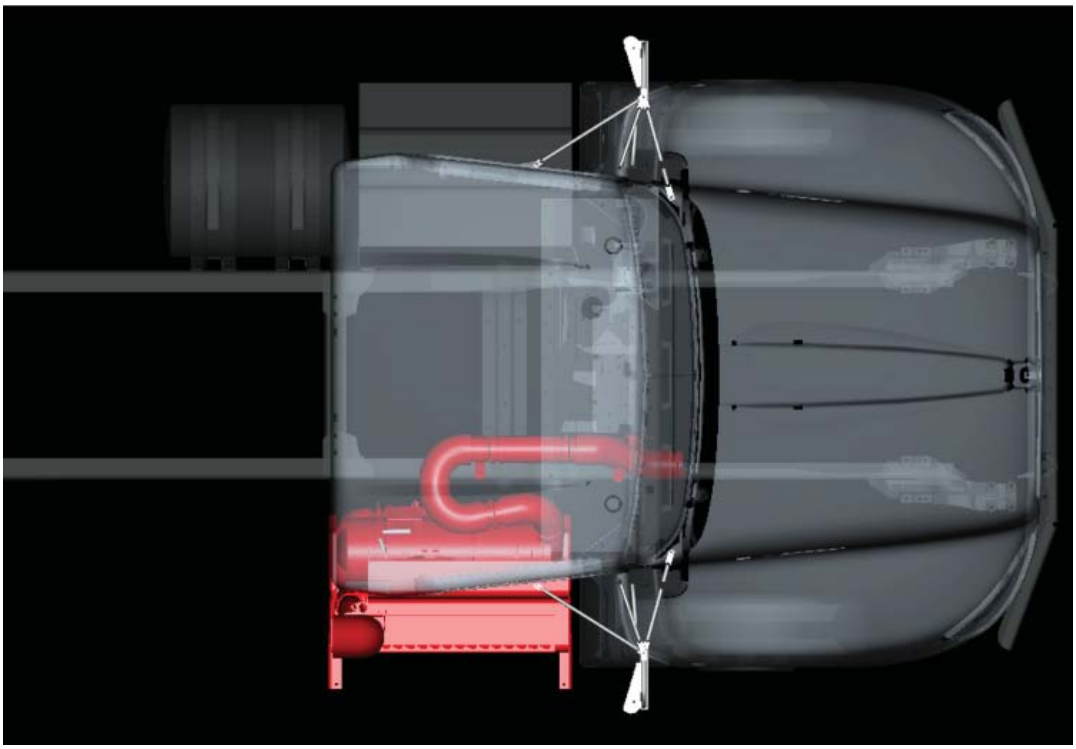

FIGURE 4-11: Top View of Right Hand Under DPF and SCR with Single SOC Tailpipe

Downloaded from www.Manualslib.com manuals search engine

https://truckmanualshub.com/

FIGURE 4-12: Right View of Right Hand Under DPF and SCR with Single SOC Tailpipe

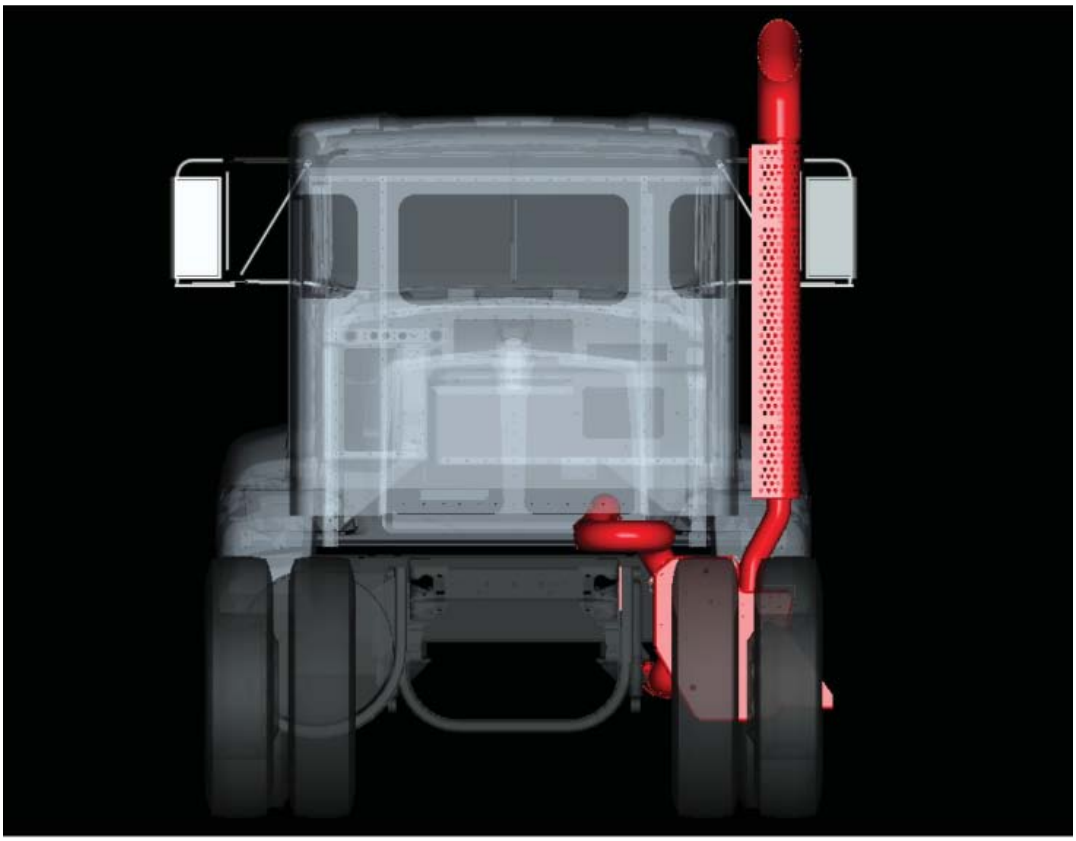

FIGURE 4-13: Back View of Right Hand Under DPF and SCR with Single SOC Tailpipe

Downloaded from www.Manualslib.com manuals search engine

https://truckmanualshub.com/

Right Hand Under DPF and SCR with Single Back of Cab Tailpipe

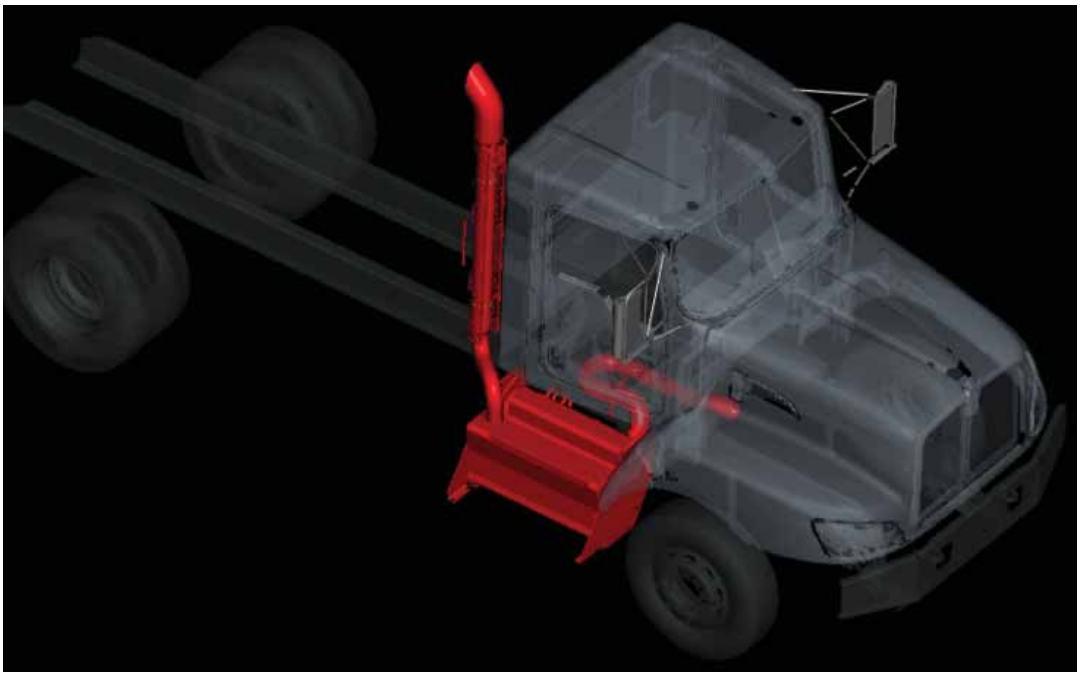

FIGURE 4-14: Isometric View of Right Hand Under DPF and SCR with Single Back of Cab Tailpipe

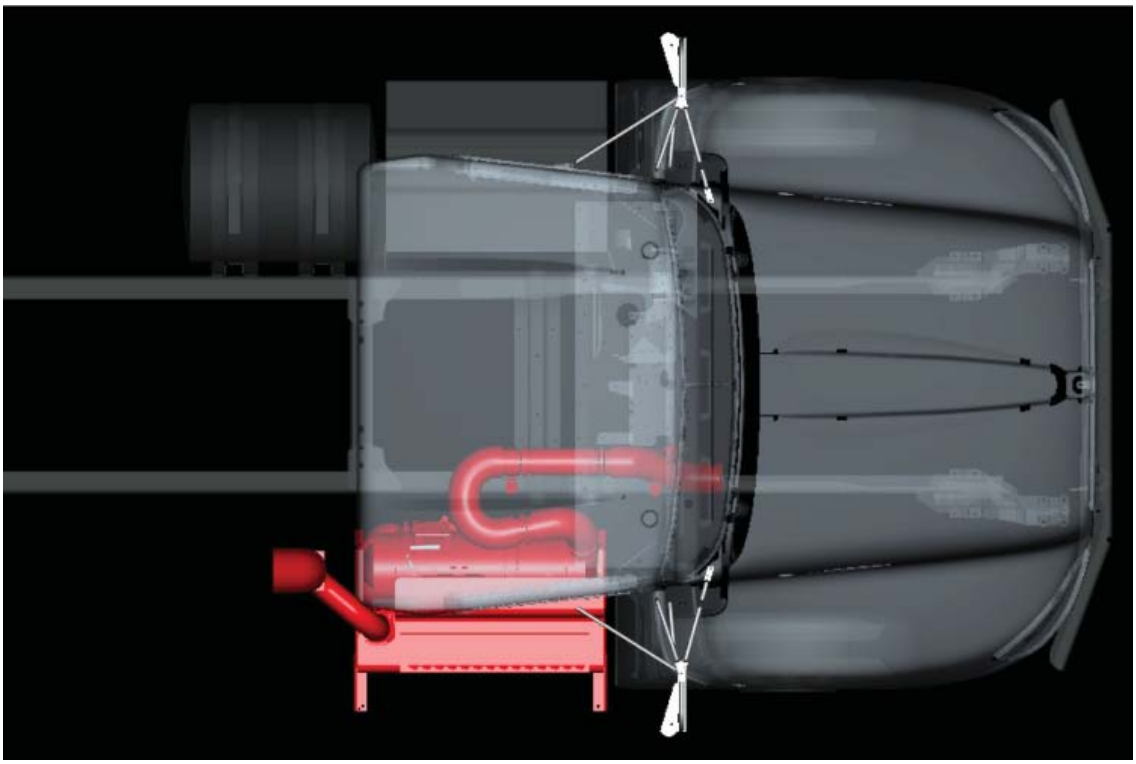

FIGURE 4-15: Top view of Right Hand Under DPF and SCR with Single Back of Cab Tailpipe

Downloaded from www.Manualslib.com manuals search engine

https://truckmanualshub.com/

FIGURE 4-16: Right view of Right Hand Under DPF and SCR with Single Back of Cab Tailpipe

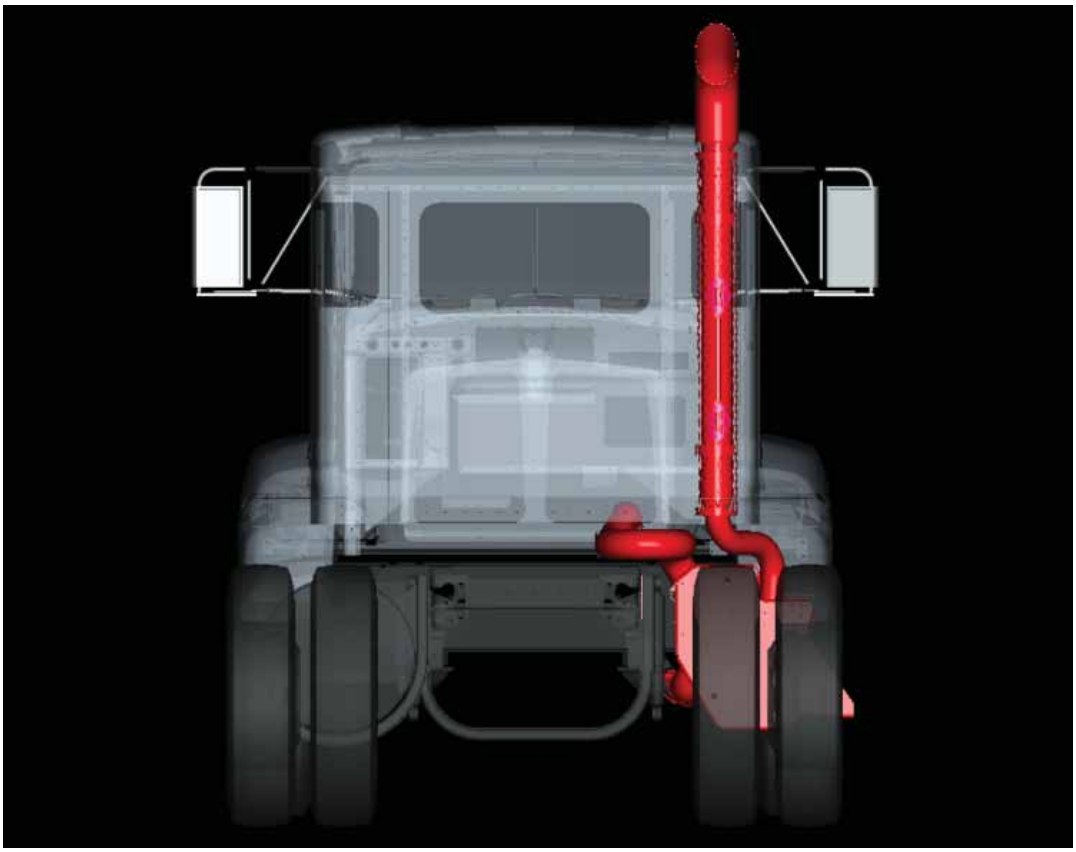

FIGURE 4-17: Back view of Right Hand Under DPF and SCR with Single Back of Cab Tailpipe

Downloaded from www.Manualslib.com manuals search engine

https://truckmanualshub.com/

Vertical Independent DPF and SCR with Horizontal Tailpipe

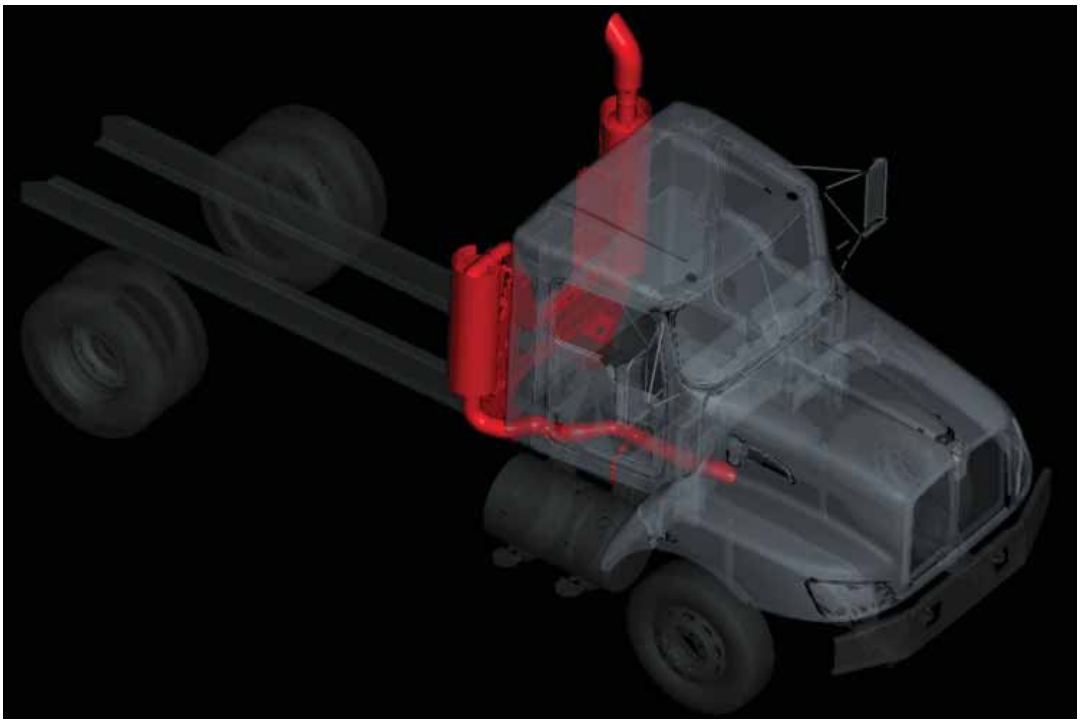

FIGURE 4-18: Isometric View of Vertical DPF and SCR

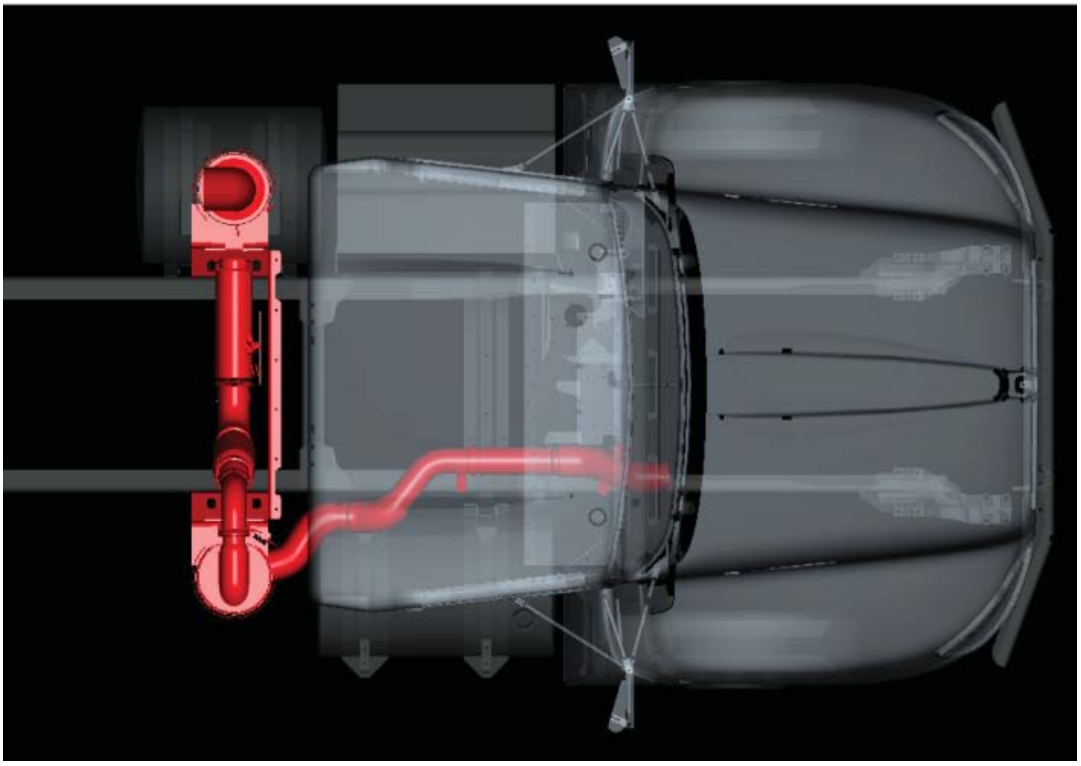

FIGURE 4-19: Top View of Vertical DPF and SCR

Downloaded from www.Manualslib.com manuals search engine

https://truckmanualshub.com/

FIGURE 4-20: Right View of Vertical DPF and SCR

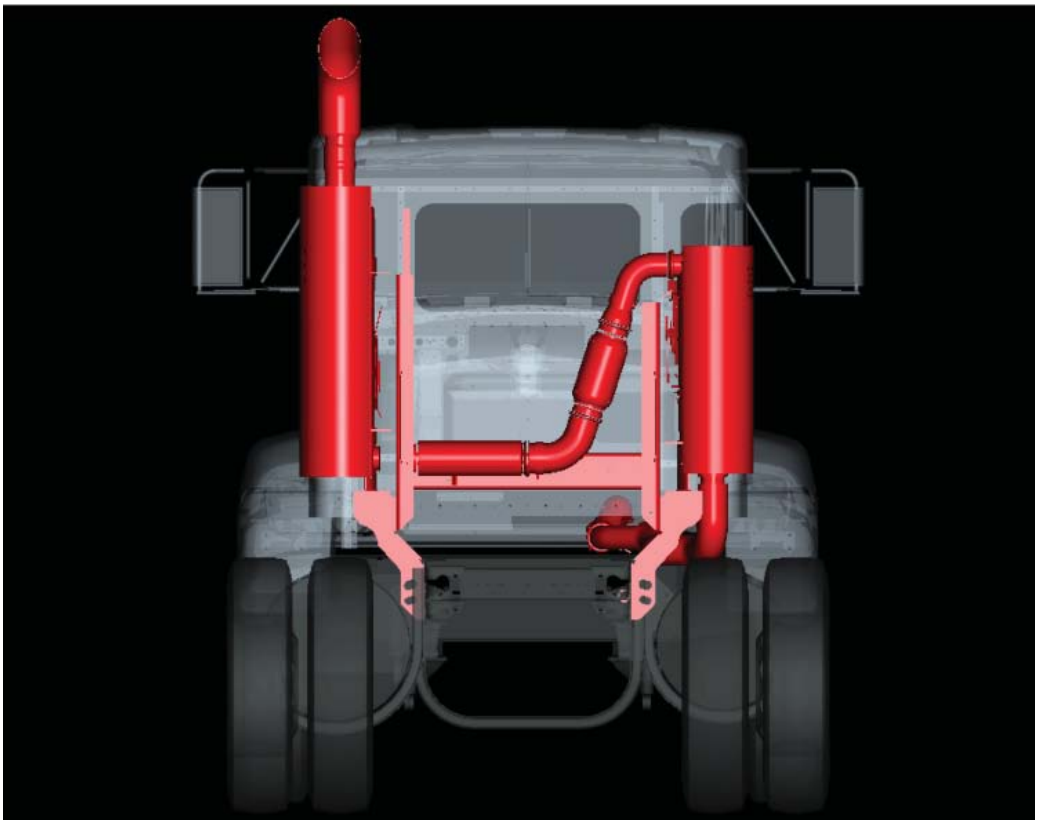

FIGURE 4-21: Back View of Vertical DPF and SCR

Downloaded from www.Manualslib.com manuals search engine

https://truckmanualshub.com/

Right Hand Under DPF and SCR on Aerocabs with Single Side of Cab Tailpipe

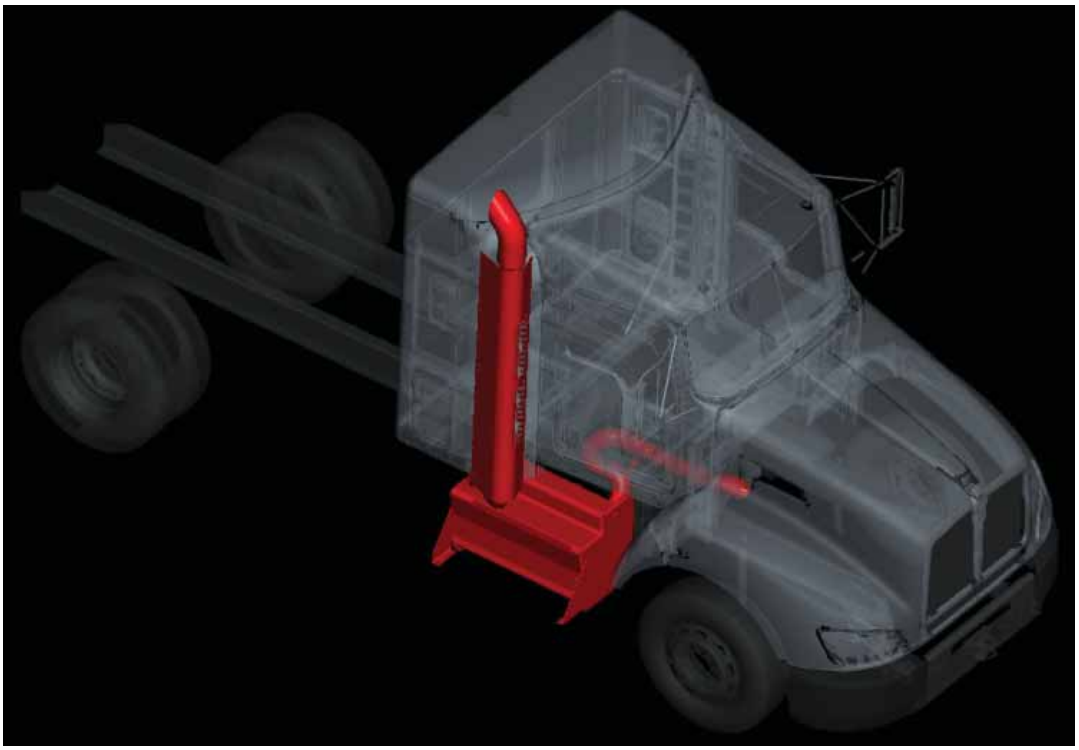

FIGURE 4-22: Isometric View of Right Hand Under DPF and SCR on Aerocab with Single SOC Tailpipe

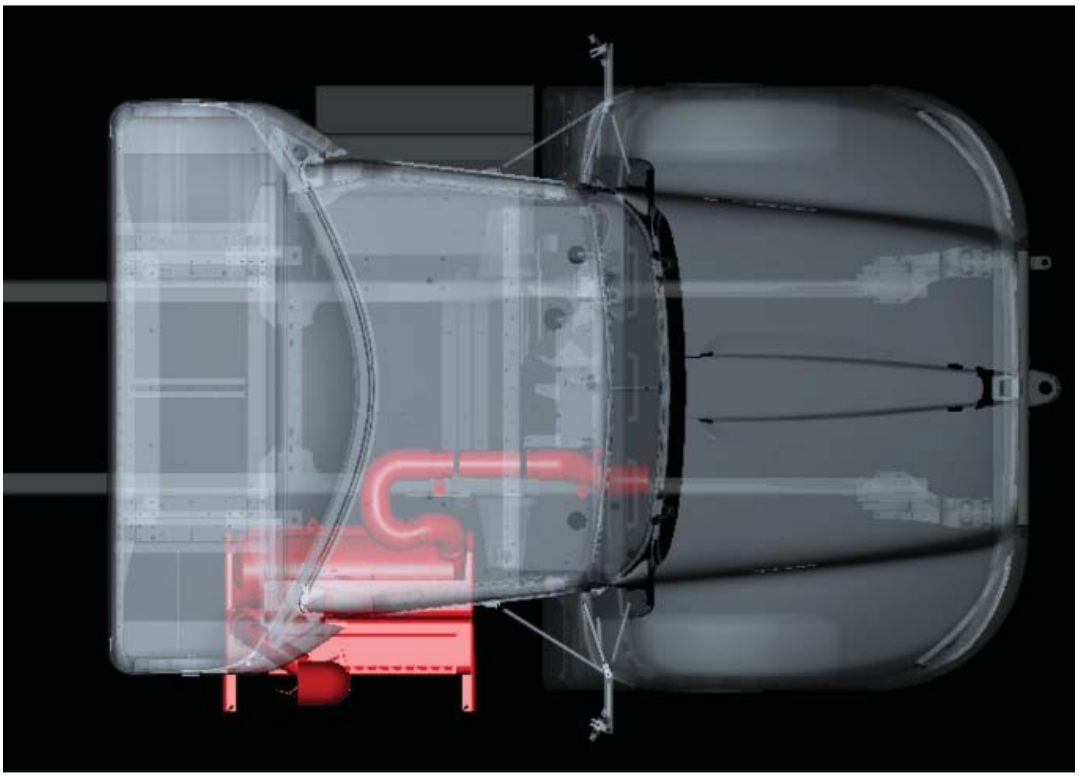

FIGURE 4-23: Top View of Right Hand Under DPF and SCR on Aerocab with Single SOC Tailpipe

Downloaded from www.Manualslib.com manuals search engine

https://truckmanualshub.com/

FIGURE 4-24: Right View of Right Hand Under DPF and SCR on Aerocab with Single SOC Tailpipe

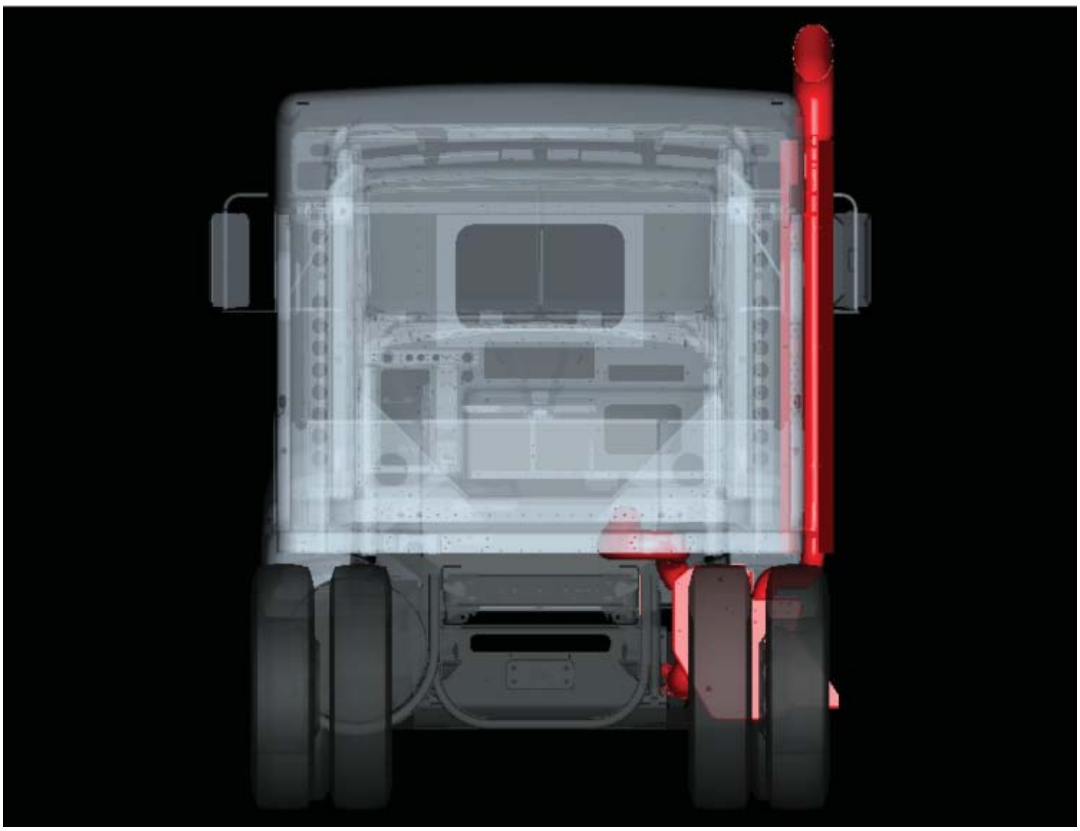

FIGURE 4-25: Back View of Right Hand Under DPF and SCR on Aerocab with Single SOC Tailpipe

Downloaded from www.Manualslib.com manuals search engine

https://truckmanualshub.com/

EXHAUST INFORMATION

This section includes information on how to calculate tailpipe heights, and reference information for PTO clearance. Optional equipment is not shown.

Tailpipe Stack Height Calculation

TABLE 4-1. Stack Height

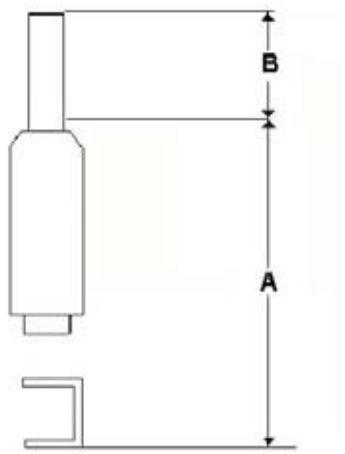

Dimension A		
Tailpipes side of Aerocab, RH under DPF	75.0”	
Tailpipes independent back of sleeper, RH under DPF	75.0”	
DPF mounted independent back of cab or sleeper	Cummins (not ISL) 78.0”	Cummins ISL 75.0”
Tailpipes side of cab mount, DPF RH under	68.5”	
Tailpipes back of cab mount, w/ side extenders, DPF RH under		
Tailpipes back of cab mount, w/o side extenders, DPF RH under	68.0”	

DIMENSION “B” IS THE TAILPIPE LENGTH.

TABLE 4-2. Unladen Stack Height

For approximate unladen stack height (12,000 pound springs) use the following frame heights:

Tire Size	Top of Rail	Ft. Suspension
11R24.5	43.5”	12K
11R22.5	42.5”	12K
285/75R24.5	42”	12K
295/75R22.5	41.5”	12K
425/65R22.5	43.2	20K
385/65R22.5	42.4	20K

*Use Prospector frame heights for more accurate results.

Sample: Tailpipe height 13’6”	=	Desired overall stack height	=	162.0”
	(–)	Prospector frame height	(–)	43.5”
	(+)	Frame rail depth	(+)	10.6”
	(–)	Dimension ‘A’ from chart	(–)	68.6”
	=	Tail pipe length	=	60.5”

Downloaded from www.Manualslib.com manuals search engine

https://truckmanualshub.com/

This page intentionally left blank.

Downloaded from www.Manualslib.com manuals search engine

https://truckmanualshub.com/

FRAME LAYOUTS

The dimensions in the frame layout section are intended to aid in layout of the chassis, and to help determine the best possible combination of fuel tanks, battery boxes, the diesel particulate filter (DPF), SCR canister, and Diesel Exhaust Fluid (DEF) tank. For your application, the layouts focus on the under cab area, with appropriate dimensional information included for pertinent back of cab components. Not all optional equipment is included in this section. Additional components may be placed on the rail behind components shown. The Back of Cab components are shown primarily for reference. For more specific requirements please work with your local Kenworth Dealer. Please read the instructions carefully.

The following dimensions are consistent across the entire section to aid in the comparison of one layout option versus another.

TABLE 5-1.

B = Battery box
D = DEF tank
E = Exhaust
F1 = Fuel Tank RHS
F2 = Fuel Tank LHS
T = Tool Box

The layouts are organized by type, specifically the arrangement of under cab components. The visual index that follows will give you a quick overview of the layouts that are included. Using the index locate the layout that you are interested in, then turn to the specified pages. The charts that follow are then model specific. It is important that the correct chart is used for accurate dimensional information.

Visual Index

Symbol	Description
DPF/SCR	RHUC DPF/SCR
	Vertical DPF/SCR
Batt	Parallel Battery Box, Standard Length
Batt	In Cab Battery Box
Batt	Cantilever Battery Box

Symbol	Description
Tool	Tool Box
D E F	DEF Tank
DEF	Clear BOC DEF Tank
Fuel	Fuel Tank

Downloaded from www.Manualslib.com manuals search engine

https://truckmanualshub.com/

COMMON OPTIONAL COMPONENTS

The frame layouts that follow contain the minimum frame requirements to be operational (fuel tanks, battery box, and after-treatment components). All layouts are shown with standard length battery boxes unless otherwise noted. Dimensions for these components have been provided below to help complete the frame layout for chassis with more fuel tanks, additional tool boxes, etc.

TABLE 5-2. Fuel Tank Overall Length (in)

Fuel Tank Overall Length (in)		
	Fuel Tank Diameter	
Gallons	**22”**	**24.5”**
45	N/A	23.0
56	35.6	N/A
60	38.0	30.6
75	47.3	38.5
90	N/A	45.5
100	62.2	50.0
105	N/A	N/A
110	N/A	55.0
120	74.3	60.6
135	N/A	67.2
150	N/A	74.5
177	N/A	N/A

TABLE 5-3. Battery Box Centerframe Lengths (in)

Battery Box Centerframe Lengths (in)	
	T440/T470
Parallel Short	34.8
Parallel Extended	42.0
Parallel BOC	34.8
Cantilever	17.8
Vocational	15.2

Downloaded from www.Manualslib.com manuals search engine

https://truckmanualshub.com/

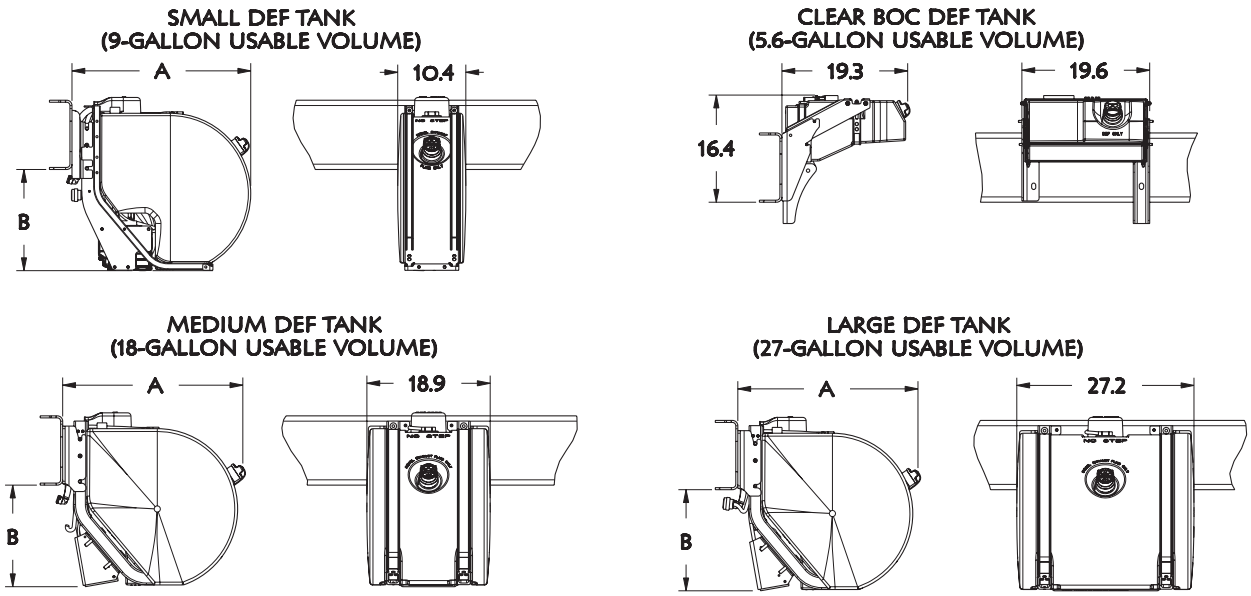

FIGURE 5-1. DEF Tank Dimensions.

TABLE 5-4. DEF Tanks Systems

Description	Usable Volume, Gallons	Fuel Tank Diameter	A	B
Small DEF Tank	9	22”	27.4	15.3
		24.5”	27.4	15.8
Medium DEF Tank	18	22”	27.7	15.0
		24.5”	27.7	15.5
Large DEF Tank	27	22”	27.7	15.0
		24.5”	27.7	15.5

Acronyms Index

Throughout the Frame Layout section you will see these acronyms. They are defined here to help you decode the layouts.

BOC	Back Of Cab
BOS	Back Of Sleeper
CBOC	Clear Back Of Cab
DEF	Diesel Exhaust Fluid
DSOAC	Dual Side Of AeroCab

DSOC	Dual Side Of Cab
LHUC	Left Hand Under Cab
RHUC	Right Hand Under Cab
SOAC	Side Of AeroCab
SOC	Side Of Cab

Downloaded from www.Manualslib.com manuals search engine

https://truckmanualshub.com/

FRAME LAYOUT INDEX

Day Cab Chassis Layout Options

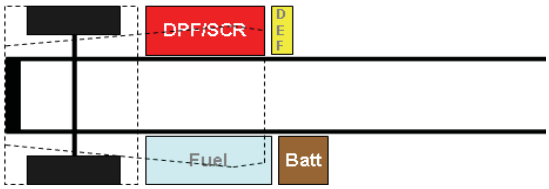

D1 is used with RHUC DPF/SCR, LHUC fuel tank, RH BOC DEF tank, and LH BOC cantilever battery box. Chart located on page 5–8.

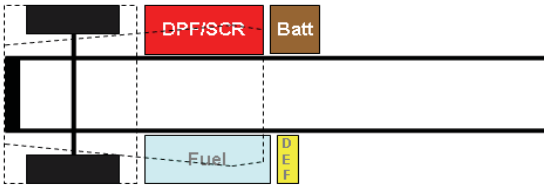

D2 is used with RHUC DPF/SCR, LHUC fuel tank, RH BOC cantilever battery box, and LH BOC DEF tank. Chart located on page 5–9.

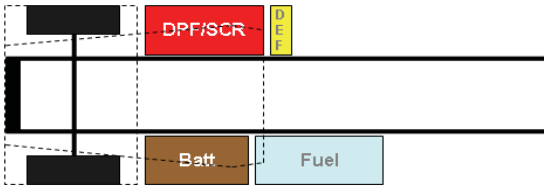

D3 is used with RHUC DPF/SCR, LHUC battery box, RH BOC DEF tank, and LH BOC fuel tank. Chart located on page 5–10.

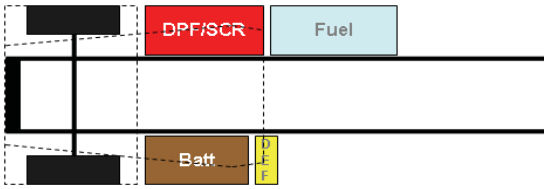

D4 is used with RHUC DPF/SCR, LHUC battery box, LH BOC DEF tank, and RH BOC fuel tank. Chart located on page 5–11.

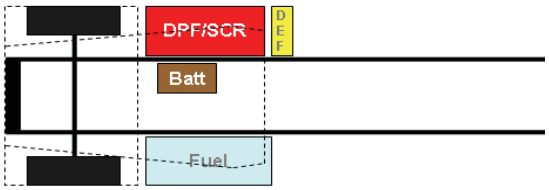

D5 is used with RHUC DPF/SCR, LHUC fuel tank, RH BOC DEF tank, and in cab battery box. Chart located on page 5–12.

Downloaded from www.Manualslib.com manuals search engine

https://truckmanualshub.com/

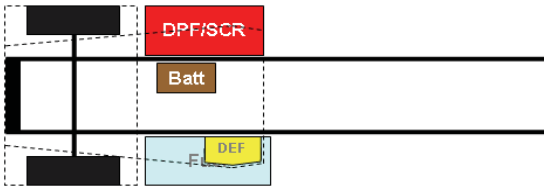

D6 is used with RHUC DPF/SCR, LHUC fuel tank, Clear BOC DEF tank, and in cab battery box. Chart located on page 5–13.

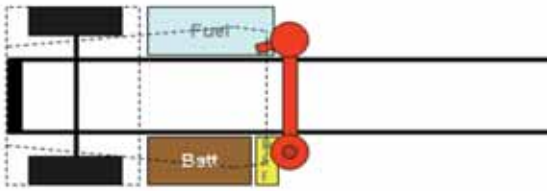

D7 is used with Vertical-Vertical DPF/SCR, LH vertical tailpipe, RHUC fuel tank, LHUC battery box, and LH BOC DEF tank. Charts located on page 5–14.

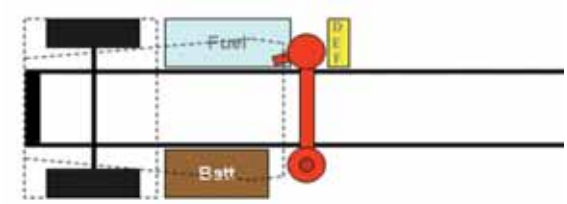

D8 is used with Vertical-Vertical DPF/SCR, LH vertical tailpipe, RHUC fuel tank, LHUC battery box, and RH BOC DEF tank. Chart located on page 5–15.

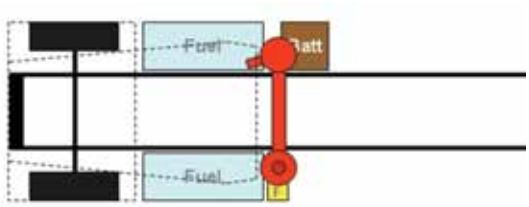

D9 is used with Vertical-Vertical DPF/SCR, LH vertical tailpipe, LHUC & RHUC fuel tanks, RH BOC cantilever battery box, and LH BOC DEF tank. Chart located on page 5–16.

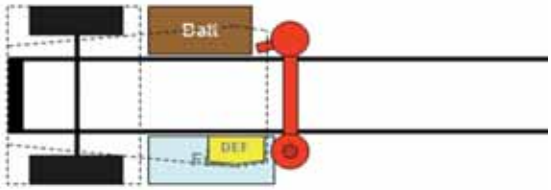

D10 is used with Vertical-Vertical DPF/SCR, LH vertical tailpipe, LHUC fuel tank, RHUC battery box, and Clear BOC DEF tank. Charts located on page 5–17.

Downloaded from www.Manualslib.com manuals search engine

https://truckmanualshub.com/

Sleeper Chassis Layout Options

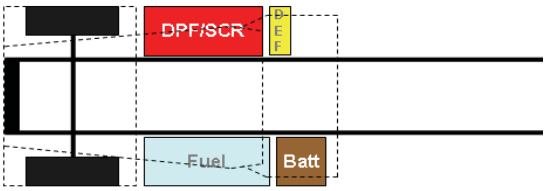

S1 is used with 38” AeroCab sleeper with RHUC DPF/SCR, LHUC fuel tank, RH BOC DEF tank, and LH BOC cantilever battery box. Chart located on page 5–18.

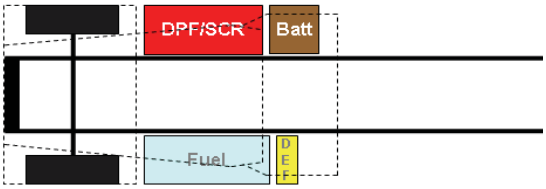

S2 is used with 38” AeroCab sleeper with RHUC DPF/SCR, LHUC fuel tank, LH BOC DEF tank, and RH BOC cantilever battery box. Chart located on page 5–19.

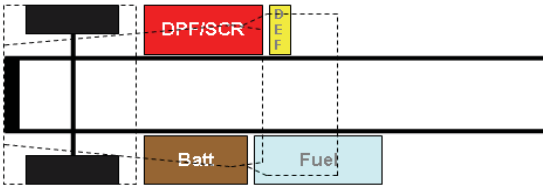

S3 is used with 38” AeroCab sleeper with RHUC DPF/SCR, LHUC battery box, RH BOC DEF tank, and LH BOC fuel tank. Chart located on page 5–20.

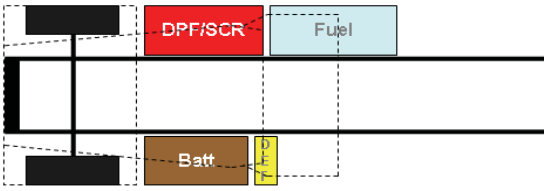

S4 is used with 38” AeroCab sleeper with RHUC DPF/SCR, LHUC battery box, LH BOC DEF tank, and RH BOC fuel tank. Chart located on page 5–21.

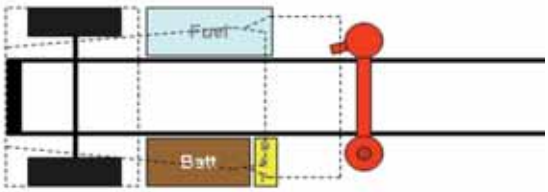

S5 is used with 38” AeroCab sleeper with Vertical-Vertical DPF/SCR, LH vertical tailpipe, RHUC fuel tank, LHUC battery box, and LH BOC DEF tank. Chart located on page 5–22.

Downloaded from www.Manualslib.com manuals search engine

https://truckmanualshub.com/

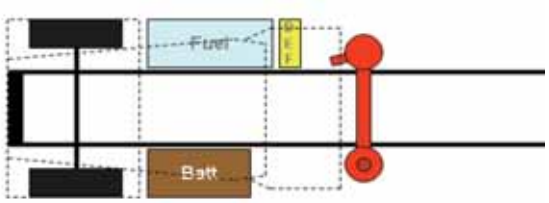

S6 is used with 38” AeroCab sleeper with Vertical-Vertical DPF/SCR, LH vertical tailpipe, RHUC fuel tank, LHUC battery box, and RH BOC DEF tank. Chart located on page 5–23.

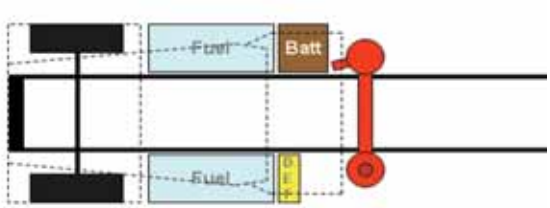

S7 is used with 38” AeroCab sleeper with Vertical-Vertical DPF/SCR, LH vertical tailpipe, RHUC & LHUC fuel tanks, LH BOC DEF tank and RH BOC cantilever battery box. Chart located on page 5–24.

Downloaded from www.Manualslib.com manuals search engine

https://truckmanualshub.com/

D1—Use with the following models: T470/T440

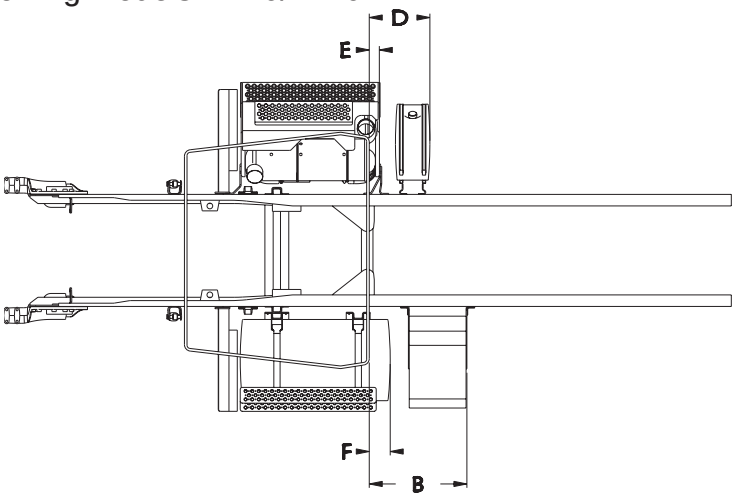

Dimension E (BOC to DPF/SCR)* = 0.4in

TABLE 5-5.

T470/T440							
Fuel Tank Size			Dimension F BOC to Fuel Tank, Daycab* (in)	Dimension B BOC to Battery Box, Daycab* (in)	Dimension D BOC to DEF Tank, Daycab* (in)		
					DEF Tank Size		
Diameter	Gallons	Length (in)			Small	Medium	Large
22” Diameter Tank	56	35.5	-3.7	17.0	18.4	24.8	32.9
	60	38.0	-1.2	19.5			
	75	47.3	8.1	28.8			
	100	62.2	23.0	43.7			
	120	74.2	35.0	55.7			
24.5” Diameter Tank	60	30.5	-8.7	12.0			
	75	38.5	-0.7	20.0			
	90	45.5	6.3	27.0			
	100	50.0	10.8	31.5			
	110	54.9	15.7	36.4			
	120	60.5	21.3	42.0			
	135	67.2	28.0	48.7			
	150	74.5	35.3	56.0			

*Subtract 5.7 inches for the extended Daycab.
NOTE: DIMENSION “B” IS CALCULATED USING A CANTILEVER SIZED BATTERY BOX. OPTIONAL BOXES WILL AFFECT THIS DIMENSION.

Downloaded from www.Manualslib.com manuals search engine

https://truckmanualshub.com/

D2—Use with the following models: T470/T440

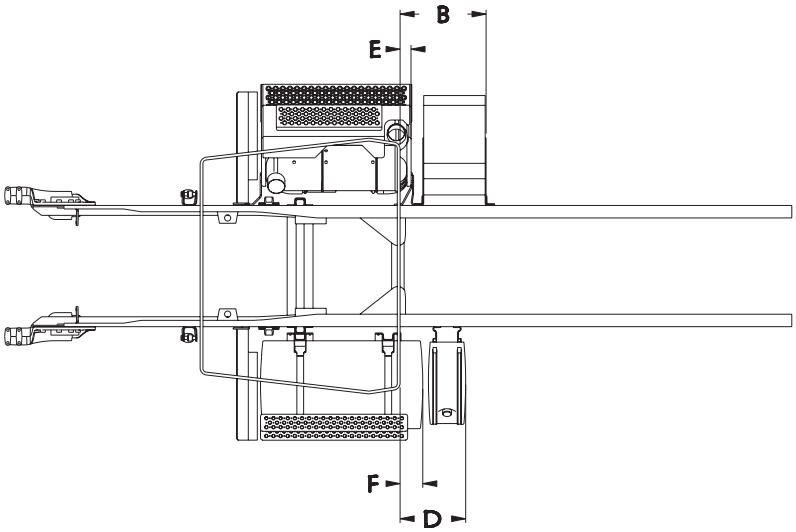

Dimension E (BOC to DPF/SCR)* = 0.4in
Dimension B (BOC to Cantilever Battery Box)* = 21.8in

TABLE 5-6.

T470/T440						
Fuel Tank Size			Dimension F BOC to Fuel Tank, Daycab* (in)	Dimension D BOC to DEF Tank* (in)		
				DEF Tank Size		
Diameter	Gallons	Length (in)		Small	Medium	Large
22” Diameter Tank	56	35.5	-3.7	7.4	17.1	25.2
	60	38.0	-1.2	10.1	19.3	27.4
	75	47.3	8.1	23.9	28.2	36.2
	100	62.2	23.0	34.9	44.7	52.8
	120	74.2	35.0	46.0	55.7	63.8
24.5” Diameter Tank	60	30.5	-8.7	1.9	11.6	19.7
	75	38.5	-0.7	10.1	19.3	27.4
	90	45.5	6.3	18.4	28.2	36.2
	100	50.0	10.8	23.9	30.9	39.0
	110	54.9	15.7	29.4	36.4	44.5
	120	60.5	21.3	34.9	42.0	50.0
	135	67.2	28.0	40.5	47.5	55.5
	150	74.5	35.3	46.0	55.7	63.8

*Subtract 5.7 inches for the extended Daycab.
NOTE: DIMENSION “B” IS CALCULATED USING A CANTILEVER SIZED BATTERY BOX. OPTIONAL BOXES WILL AFFECT THIS DIMENSION.

Downloaded from www.Manualslib.com manuals search engine

https://truckmanualshub.com/

D3—Use with the following models: T470/T440

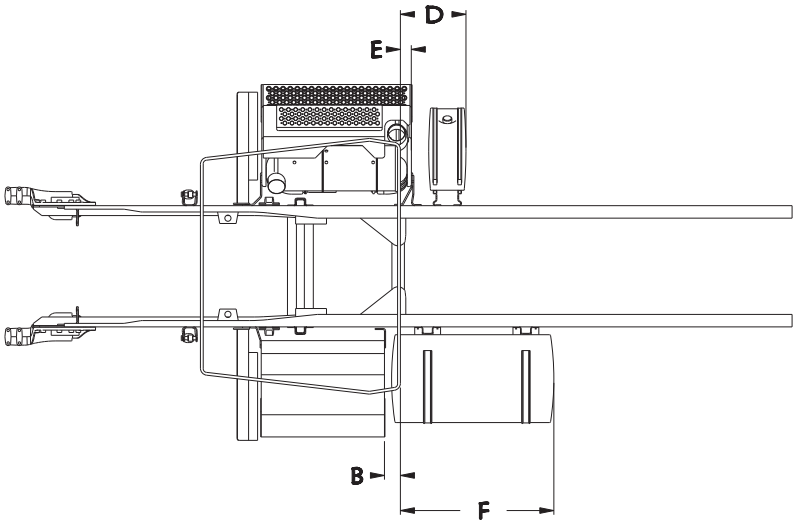

Dimension E (BOC to DPF/SCR)* = .04in
Dimension B (BOC to Battery Box)* = -4.5in

TABLE 5-7.

T470/T440						
Fuel Tank Size			Dimension F BOC to Fuel Tank, Daycab* (in)	Dimension D BOC to DEF Tank, Daycab* (in)		
				DEF Tank Size		
Diameter	Gallons	Length (in)		Small	Medium	Large
22” Diameter Tank	56	35.5	33.0	18.4	24.8	32.9
	60	38.0	35.5			
	75	47.3	44.8			
	100	62.2	59.7			
	120	74.2	71.7			
24.5” Diameter Tank	60	30.5	28.0			
	75	38.5	36.0			
	90	45.5	43.0			
	100	50.0	47.5			
	110	54.9	52.4			
	120	60.5	58.0			
	135	67.2	64.7			
	150	74.5	72.0			

*Subtract 5.7 inches for the extended Daycab.
NOTE: DIMENSIONS “B” AND “F” ARE CALCULATED USING A STANDARD BATTERY BOX. OPTIONAL EXTENDED BOXES WILL CHANGE DIMENSIONS “B” AND “F”

Downloaded from www.Manualslib.com manuals search engine

https://truckmanualshub.com/

D4—Use with the following models: T470/T440

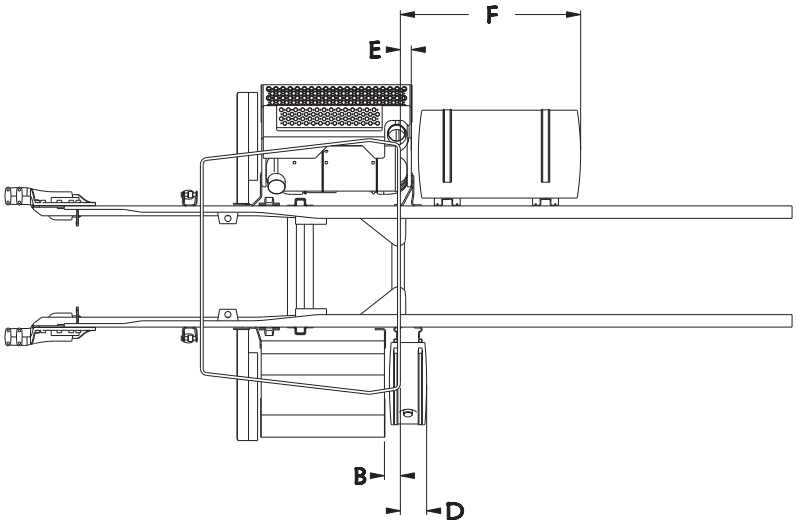

Dimension E (BOC to DPF/SCR)* = 0.4in
Dimension B (BOC to Battery Box)* = -4.5in

TABLE 5-8.

T440/T470						
Fuel Tank Size			Dimension F BOC to Fuel Tank, Daycab* (in)	Dimension D BOC to DEF Tank, Daycab* (in)		
				DEF Tank Size		
Diameter	Gallons	Length (in)		Small	Medium	Large
22” Diameter Tank	56	35.5	38.6	7.4	17.1	25.2
	60	38.0	41.1			
	75	47.3	50.4			
	100	62.2	65.3			
	120	74.2	77.3			
24.5” Diameter Tank	60	30.5	33.6			
	75	38.5	41.6			
	90	45.5	48.6			
	100	50.0	53.1			
	110	54.9	58.0			
	120	60.5	63.6			
	135	67.2	70.3			
	150	74.5	77.6			

*Subtract 5.7 inches for the extended Daycab.
NOTE: DIMENSIONS “B” AND “D” ARE CALCULATED USING A STANDARD BATTERY BOX. OPTIONAL EXTENDED BOXES WILL CHANGE DIMENSIONS “B” AND “D”

Downloaded from www.Manualslib.com manuals search engine

https://truckmanualshub.com/

D5—Use with the following models: T470/T440 and In-cab battery box.

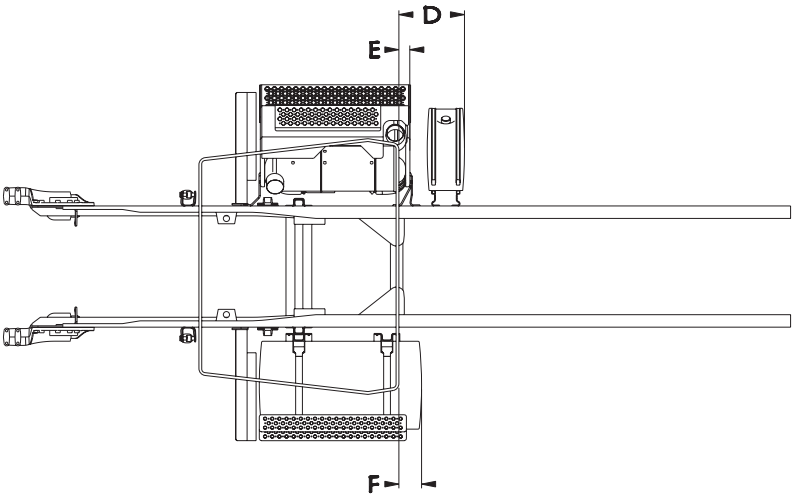

Dimension E (BOC to DPF/SCR)* = 0.4in

TABLE 5-9.

T440/T470						
Fuel Tank Size			Dimension F BOC to Fuel Tank, Daycab* (in)	Dimension D BOC to DEF Tank, Daycab* (in)		
				DEF Tank Size		
Diameter	Gallons	Length (in)		Small	Medium	Large
22” Diameter Tank	56	35.5	-3.7	18.4	24.8	32.9
	60	38.0	-1.2			
	75	47.3	8.1			
	100	62.2	23.0			
	120	74.2	35.0			
24.5” Diameter Tank	60	30.5	-8.7			
	75	38.5	-0.7			
	90	45.5	6.3			
	100	50.0	10.8			
	110	54.9	15.7			
	120	60.5	21.3			
	135	67.2	28.0			
	150	74.5	35.3			

*Subtract 5.7 inches for the extended Daycab.

Downloaded from www.Manualslib.com manuals search engine

https://truckmanualshub.com/

D6—Use with the following models: T470/T440 and In-cab battery box.

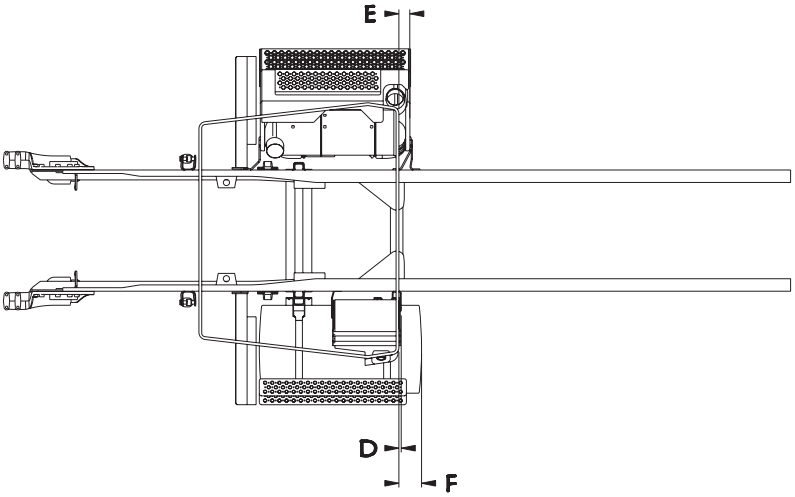

Dimension E (BOC to DPF/SCR)* = 0.4in
Dimension D (BOC to DEF tank)* = 0.7in

TABLE 5-10.

T440/T470			
Fuel Tank Size			Dimension F BOC to Fuel Tank, Daycab* (in)
Diameter	Gallons	Length (in)	
22” Diameter Tank	56	35.5	-3.7
	60	38.0	-1.2
	75	47.3	8.1
	100	62.2	23.0
	120	74.2	35.0
24.5” Diameter Tank	60	30.5	-8.7
	75	38.5	-0.7
	90	45.5	6.3
	100	50.0	10.8

*Subtract 5.7 inches for the extended Daycab.

Downloaded from www.Manualslib.com manuals search engine

https://truckmanualshub.com/

D7—Use with the following models: T470/T440

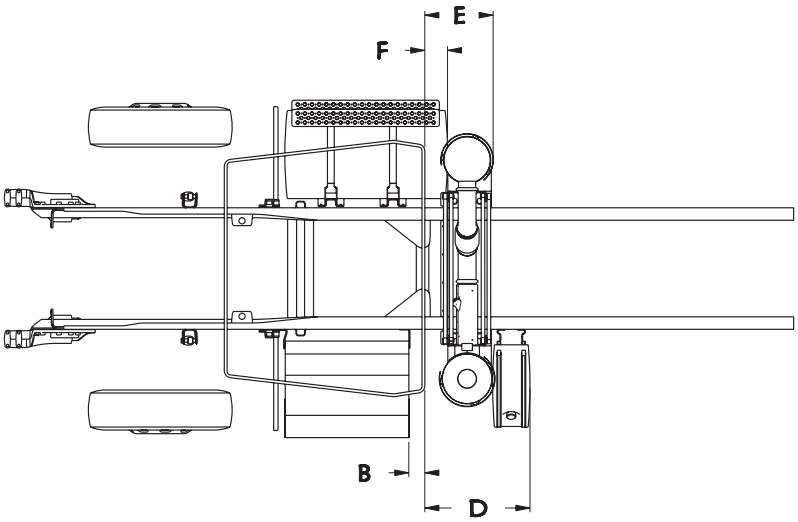

Dimension B (BOC to Battery Box)* = -4.5in
Dimension E (BOC to DPF/SCR) = 19.6in

TABLE 5-11.

T440/T470								
Fuel Tank Size			Dimension F BOC to Fuel Tank, Daycab (in)	Dimension D BOC to DEF Tank, Daycab (in)		Dimension F BOC to Fuel Tank, Ext. Daycab (in)	Dimension D BOC to DEF Tank, Ext. Daycab (in)	
				DEF Tank Size			DEF Tank Size	
Diameter	Gallons	Length (in)		Small	Medium		Small	Medium
22” Diameter Tank	56	35.5	-3.7	7.4	39.2	-9.4	1.7	39.0
	60	38.0	-1.2			-6.9		
	75	47.3	8.1			2.4		
	100	62.2	23.0			17.3		
	120	74.2	35.0			29.3		
24.5” Diameter Tank	60	30.5	-8.7			-14.4		
	75	38.5	-0.7			-6.4		
	90	45.5	6.3			0.6		
	100	50.0	10.8			5.1		
	110	54.9	15.7			10.0		
	120	60.5	21.3			15.6		
	135	67.2	28.0			22.3		
	150	74.5	35.3			29.6		

*Subtract 5.7 inches for the extended Daycab.
NOTE: DIMENSIONS “B” AND “D” ARE CALCULATED USING A STANDARD BATTERY BOX. OPTIONAL EXTENDED BOXES WILL CHANGE DIMENSIONS “B” AND “D”

Downloaded from www.Manualslib.com manuals search engine

https://truckmanualshub.com/

D8—Use with the following models: T470/T440

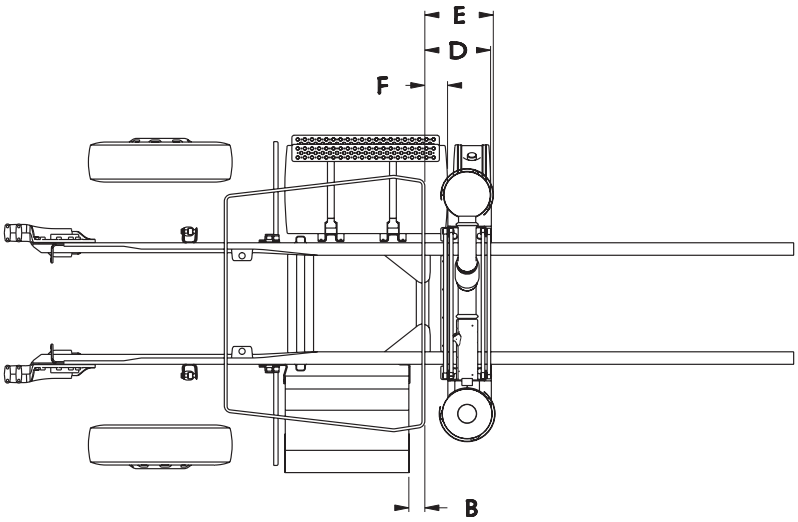

Dimension B (BOC to Battery Box)* = -4.5in
Dimension E (BOC to DPF/SCR) = 19.6in

TABLE 5-12.

T440/T470								
Fuel Tank Size			Dimension F BOC to Fuel Tank, Daycab (in)	Dimension D BOC to DEF Tank, Daycab (in)		Dimension F BOC to Fuel Tank, Ext. Daycab (in)	Dimension D BOC to DEF Tank, Ext. Daycab (in)	
				DEF Tank Size			DEF Tank Size	
Diameter	Gallons	Length (in)		Small	Medium		Small	Medium
22” Diameter Tank	56	35.5	-3.7	18.4	39.2	-9.4	18.2	39.0
	60	38.0	-1.2	18.4	39.2	-6.9	18.2	39.0
	75	47.3	8.1	29.4	39.2	2.4	18.2	39.0
	100	62.2	23.0	34.9	42.6	17.3	29.2	36.9
	120	74.2	35.0	46.0	55.7	29.3	40.3	50.0
24.5” Diameter Tank	60	30.5	-8.7	18.4	39.2	-14.4	18.2	39.0
	75	38.5	-0.7	18.4	39.2	-6.4	18.2	39.0
	90	45.5	6.3	18.4	39.2	0.6	18.2	39.0
	100	50.0	10.8	29.4	39.2	5.1	18.2	39.0
	110	54.9	15.7	29.4	39.2	10.0	29.2	39.0
	120	60.5	21.3	34.9	42.6	15.6	29.2	36.9
	135	67.2	28.0	40.5	55.7	22.3	34.8	50.0
	150	74.5	35.3	46.0	55.7	29.6	40.3	50.0

*Subtract 5.7 inches for the extended Daycab.
NOTE: DIMENSION “B” IS CALCULATED USING A STANDARD BATTERY BOX. OPTIONAL EXTENDED BOXES WILL CHANGE DIMENSION “B”

Downloaded from www.Manualslib.com manuals search engine

https://truckmanualshub.com/

D9—Use with the following models: T470/T440

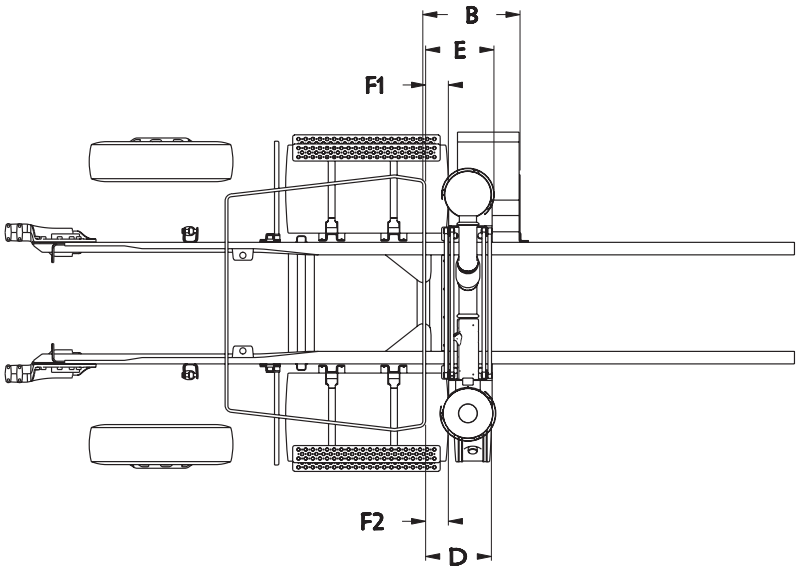

Dimension E (BOC to DPF/SCR) = 19.6in

TABLE 5-13.

T440/T470										
Fuel Tank Size			Dimension F1 & F2 BOC to Fuel Tank, Daycab (in)	Dimension B BOC to Battery Box, Daycab (in)	Dimension D BOC to DEF Tank, Daycab (in)		Dimension F1 & F2 BOC to Fuel Tank, Ext. Daycab (in)	Dimension B BOC to Battery Box, Ext Daycab (in)	Dimension D BOC to DEF Tank, Ext. Daycab (in)	
					DEF Tank Size				DEF Tank Size	
Diameter	Gallons	Length (in)			Small	Medium			Small	Medium
22” Diameter Tank	56	35.5	-3.7	24.1	7.4	39.2	-9.4	24.1	1.7	39.0
	60	38.0	-1.2	24.1	18.4	39.2	-6.9	24.1	4.4	39.0
	75	47.3	8.1	29.6	29.4	39.2	2.4	24.1	18.2	39.0
	100	62.2	23.0	43.7	34.9	44.7	17.3	29.3	29.2	39.0
	120	74.2	35.0	55.7	46.0	55.7	29.3	50.0	40.3	50.0
24.5” Diameter Tank	60	30.5	-8.7	24.1	1.9	39.2	-14.4	24.1	-3.8	39.0
	75	38.5	-0.7	24.1	18.4	39.2	-6.4	24.1	4.4	39.0
	90	45.5	6.3	29.6	18.4	39.2	0.6	29.6	18.2	39.0
	100	50.0	10.8	35.1	29.4	39.2	5.1	29.6	18.2	39.0
	110	54.9	15.7	36.4	29.4	39.2	10.0	35.1	29.2	39.0
	120	60.5	21.3	42.0	34.9	42.0	15.6	35.1	29.2	39.0
	135	67.2	28.0	48.7	40.5	47.5	22.3	43.0	34.8	41.8
	150	74.5	35.3	56.0	46.0	55.7	29.6	50.3	40.2	50.0

NOTE: DIMENSION “B” IS CALCULATED USING A CANTILEVER SIZED BATTERY BOX. OPTIONAL BOXES WILL AFFECT THIS DIMENSION.

Downloaded from www.Manualslib.com manuals search engine

https://truckmanualshub.com/

D10—Use with the following models: T470/T440

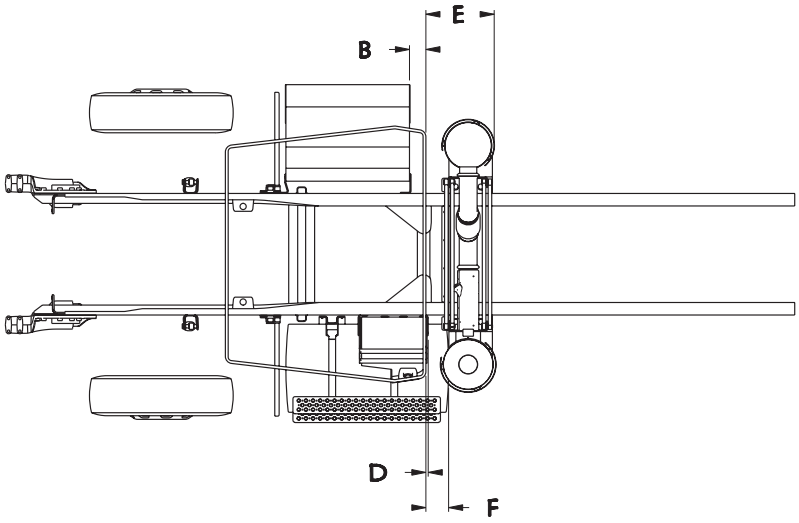

Dimension B (BOC To Battery Box)* = -4.5in
Dimension E (BOC to DPF/SCR) = 19.6in
Dimension D (BOC to DEF tank)* = 0.7in

TABLE 5-14.

T440/T470				
Fuel Tank Size			Dimension F BOC to Fuel Tank, Daycab (in)	Dimension F BOC to Fuel Tank, Extended Daycab (in)
Diameter	Gallons	Length (in)		
22” Diameter Tank	56	35.5	-3.7	-9.4
	60	38.0	-1.2	-6.9
	75	47.3	8.1	2.4
	100	62.2	23.0	17.3
	120	74.2	35.0	29.3
24.5” Diameter Tank	60	30.5	-8.7	-14.4
	75	38.5	-0.7	-6.4
	90	45.5	6.3	0.6
	100	50.0	10.8	5.1

*Subtract 5.7 inches for the extended Daycab.
NOTE: DIMENSION “B” IS CALCULATED USING A STANDARD BATTERY BOX. OPTIONAL EXTENDED BOXES WILL CHANGE DIMENSION “B”

Downloaded from www.Manualslib.com manuals search engine

https://truckmanualshub.com/

S1—Use with the following models: T470/T440 38”

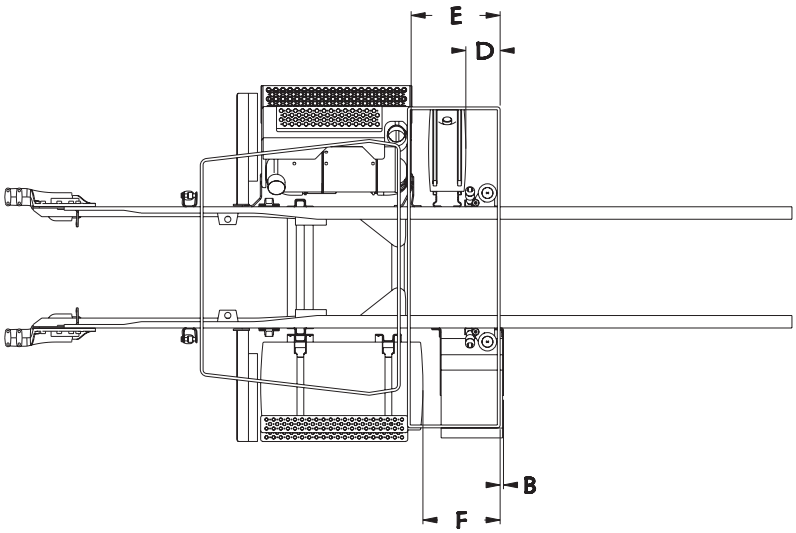

Dimension E (BOS to DPF/SCR) = -17..9in.

TABLE 5-15.

T440/T470 38”							
Fuel Tank Size			Dimension F BOS to Fuel Tank (in)	Dimension B BOS to Battery Box (in)	Dimension D BOS to DEF Tank (in)		
					DEF Tank Size		
Diameter	Gallons	Length (in)			Small	Medium	Large
22” Diameter Tank	56	35.5	-31.7	0.9	12.7	17.0	25.1
	60	38.0	-29.2	0.9			
	75	47.3	-19.9	0.9			
	100	62.2	-5.0	18.4			
	120	74.2	7.0	27.7			
24.5” Diameter Tank	60	30.5	-36.7	-16.0			
	75	38.5	-28.7	0.9			
	90	45.5	-21.7	0.9			
	100	50.0	-17.2	18.4			
	110	54.9	-12.3	18.4			
	120	60.5	-6.7	18.4			
	135	67.2	0.0	18.4			
	150	74.5	7.3	28.0			

NOTE: DIMENSION “B” IS CALCULATED USING A CANTILEVER SIZED BATTERY BOX. OPTIONAL BOXES WILL AFFECT THIS DIMENSION.

Downloaded from www.Manualslib.com manuals search engine

https://truckmanualshub.com/

S2—Use with the following models: T470/T440 38”

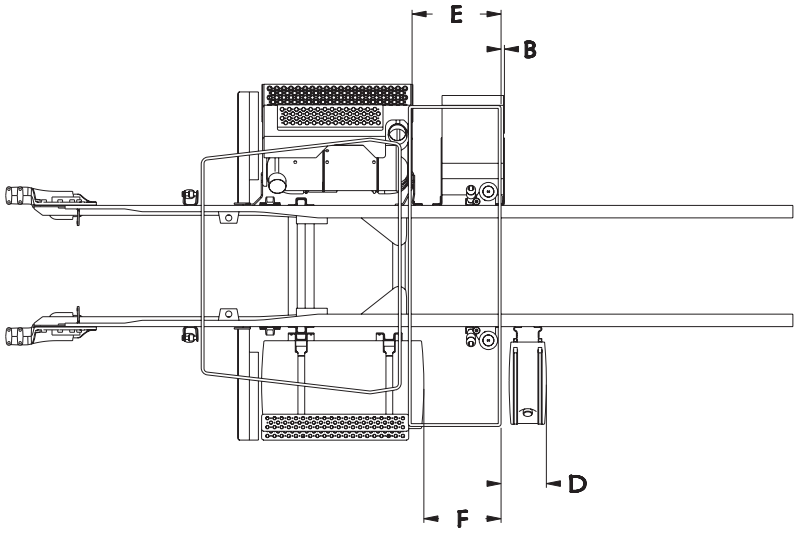

Dimension E (BOS to DPF/SCR) = -17.9in
Dimension B (BOS to Cantilever Battery Box) = 2.9in

TABLE 5-16.

T440/T470 38”						
Fuel Tank Size			Dimension F BOS to Fuel Tank (in)	Dimension D BOS to DEF Tank (in)		
				DEF Tank Size		
Diameter	Gallons	Length (in)		Small	Medium	Large
22” Diameter Tank	56	35.5	-31.7	-20.6	-10.9	25.1
	60	38.0	-29.2	-15.1	17.0	25.1
	75	47.3	-19.9	12.7	17.0	25.1
	100	62.2	-5.0	12.7	17.0	25.1
	120	74.2	7.0	18.0	27.7	35.8
24.5” Diameter Tank	60	30.5	-36.7	-26.1	-16.4	25.1
	75	38.5	-28.7	-15.1	17.0	25.1
	90	45.5	-21.7	12.7	17.0	25.1
	100	50.0	-17.2	12.7	17.0	25.1
	110	54.9	-12.3	12.7	17.0	25.1
	120	60.5	-6.7	12.7	17.0	25.1
	135	67.2	0.0	12.7	19.5	27.5
	150	74.5	7.3	18.0	27.7	35.8

NOTE: DIMENSION “B” IS CALCULATED USING A CANTILEVER SIZED BATTERY BOX. OPTIONAL BOXES WILL AFFECT THIS DIMENSION.

Downloaded from www.Manualslib.com manuals search engine

https://truckmanualshub.com/

S3—Use with the following models: T470/T440 38”

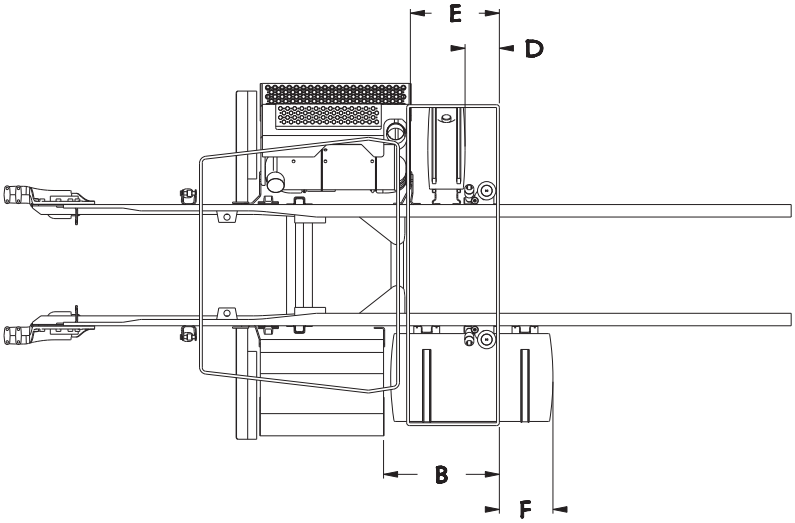

Dimension E (BOS to DPF/SCR) = -17.9in
Dimension B (BOS to Battery Box) = -32.5in

TABLE 5-17.

T440/T470 38”						
Fuel Tank Size			Dimension F BOS to Fuel Tank (in)	Dimension D BOS to DEF Tank (in)		
				DEF Tank Size		
Diameter	Gallons	Length (in)		Small	Medium	Large
22” Diameter Tank	56	35.5	5.0	12.7	17.0	25.1
	60	38.0	7.5			
	75	47.3	16.8			
	100	62.2	31.7			
	120	74.2	43.7			
24.5” Diameter Tank	60	30.5	0.0			
	75	38.5	8.0			
	90	45.5	15.0			
	100	50.0	19.5			
	110	54.9	24.4			
	120	60.5	30.0			
	135	67.2	36.7			
	150	74.5	44.0			

NOTE: DIMENSIONS “B” AND “F” ARE CALCULATED USING A STANDARD BATTERY BOX. OPTIONAL EXTENDED BOXES WILL CHANGE DIMENSIONS “B” AND “F”

Downloaded from www.Manualslib.com manuals search engine

https://truckmanualshub.com/

S4—Use with the following models: T470/T440 38”

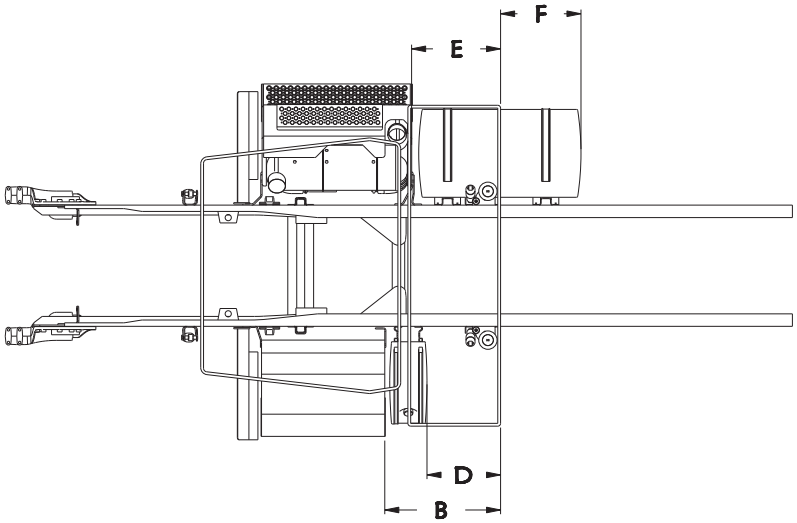

Dimension E (BOS to DPF/SCR) = -17.9in
Dimension B (BOS to Battery Box) = -32.5in

TABLE 5-18.

T440/T470 38”						
Fuel Tank Size			Dimension F BOS to Fuel Tank (in)	Dimension D BOS to DEF Tank (in)		
				DEF Tank Size		
Diameter	Gallons	Length (in)		Small	Medium	Large
22” Diameter Tank	56	35.5	20.3	-20.6	-10.9	-2.8
	60	38.0	22.8			
	75	47.3	32.1			
	100	62.2	47.0			
	120	74.2	59.0			
24.5” Diameter Tank	60	30.5	15.3			
	75	38.5	23.3			
	90	45.5	30.3			
	100	50.0	34.8			
	110	54.9	39.7			
	120	60.5	45.3			
	135	67.2	52.0			
	150	74.5	59.3			

NOTE: DIMENSIONS “B” AND “D” ARE CALCULATED USING A STANDARD BATTERY BOX. OPTIONAL EXTENDED BOXES WILL CHANGE DIMENSIONS “B” AND “D”

Downloaded from www.Manualslib.com manuals search engine

https://truckmanualshub.com/

S5—Use with the following models: T470/T440 38”

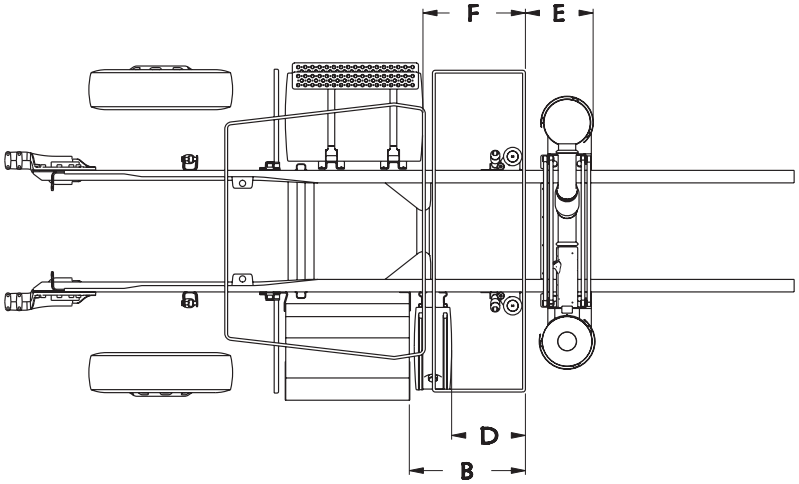

Dimension B (BOS to Battery Box) = -32.5in
Dimension E (BOS to DPF/SCR) = 19.6in

TABLE 5-19.

T440/T470 38”					
Fuel Tank Size			Dimension F BOS to Fuel Tank (in)	Dimension D BOS to DEF Tank (in)	
				DEF Tank Size	
Diameter	Gallons	Length (in)		Small	Medium
22” Diameter Tank	56	35.5	-31.7	-20.6	-10.9
	60	38.0	-29.2		
	75	47.3	-19.9		
	100	62.2	-5.0		
	120	74.2	7.0		
24.5” Diameter Tank	60	30.5	-36.7		
	75	38.5	-28.7		
	90	45.5	-21.7		
	100	50.0	-17.2		
	110	54.9	-12.3		
	120	60.5	-6.7		
	135	67.2	0.0		
	150	74.5	7.3		

NOTE: DIMENSIONS “B” AND “D” ARE CALCULATED USING A STANDARD BATTERY BOX. OPTIONAL EXTENDED BOXES WILL CHANGE DIMENSIONS “B” AND “D”

Downloaded from www.Manualslib.com manuals search engine

https://truckmanualshub.com/

S6—Use with the following models: T470/T440 38”

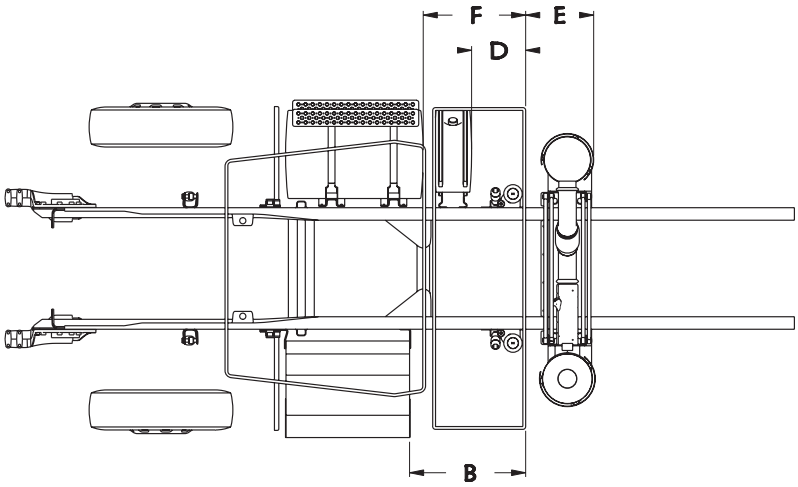

Dimension B (BOS to Battery Box) = -32.5in
Dimension E (BOS to DPF/SCR) = 19.6in

TABLE 5-20.

T440/T470 38”					
Fuel Tank Size			Dimension F BOS to Fuel Tank (in)	Dimension D BOS to DEF Tank (in)	
				DEF Tank Size	
Diameter	Gallons	Length (in)		Small	Medium
22” Diameter Tank	56	35.5	-31.7	-20.6	-9.4
	60	38.0	-29.2	-17.9	-9.4
	75	47.3	-19.9	29.3	39.0
	100	62.2	-5.0	29.3	39.0
	120	74.2	7.0	29.3	39.0
24.5” Diameter Tank	60	30.5	-36.7	-26.1	-9.4
	75	38.5	-28.7	-17.9	-9.4
	90	45.5	-21.7	29.3	39.0
	100	50.0	-17.2	29.3	39.0
	110	54.9	-12.3	29.3	39.0
	120	60.5	-6.7	29.3	39.0
	135	67.2	0.0	29.3	39.0
	150	74.5	7.3	29.3	39.0

NOTE: DIMENSION “B” IS CALCULATED USING A STANDARD BATTERY BOX. OPTIONAL EXTENDED BOXES WILL CHANGE DIMENSION “B”

Downloaded from www.Manualslib.com manuals search engine

https://truckmanualshub.com/

S7—Use with the following models: T470/T440 38”

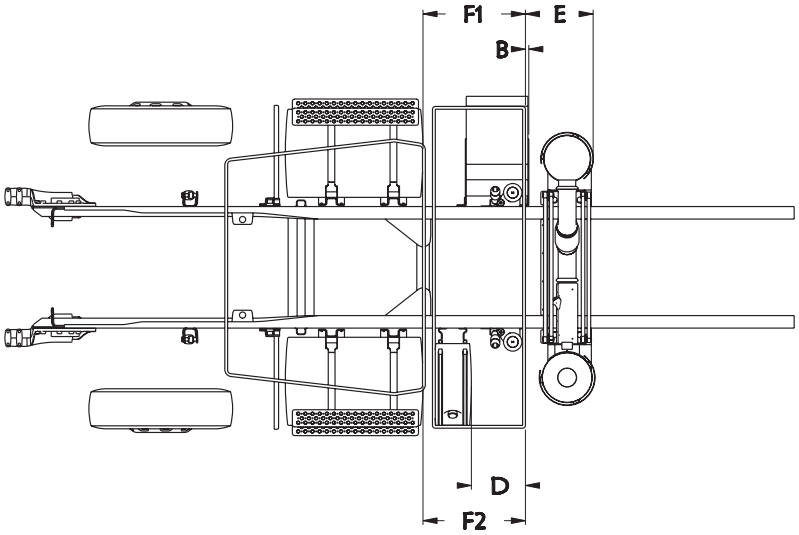

Dimension E (BOS to DPF/SCR) = 19.6in

TABLE 5-21.

T440/T470 38”						
Fuel Tank Size			Dimension F1 & F2 BOS to Fuel Tank (in)	Dimension B BOS to Battery Box (in)	Dimension D BOS to DEF Tank (in)	
					DEF Tank Size	
Diameter	Gallons	Length (in)			Small	Medium
22” Diameter Tank	56	35.5	-31.7	0.9	-20.6	-10.9
	60	38.0	-29.2	0.9	-17.9	39.0
	75	47.3	-19.9	0.9	18.2	39.0
	100	62.2	-5.0	37.1	18.2	39.0
	120	74.2	7.0	37.1	18.2	39.0
24.5” Diameter Tank	60	30.5	-36.7	-16.0	-26.1	-16.4
	75	38.5	-28.7	0.9	-17.9	39.0
	90	45.5	-21.7	0.9	18.2	39.0
	100	50.0	-17.2	37.1	18.2	39.0
	110	54.9	-12.3	37.1	18.2	39.0
	120	60.5	-6.7	37.1	18.2	39.0
	135	67.2	0.0	37.1	18.2	39.0
	150	74.5	7.3	37.1	18.2	39.0

NOTE: DIMENSION “B” IS CALCULATED USING A CANTILEVER SIZED BATTERY BOX. OPTIONAL BOXES WILL AFFECT THIS DIMENSION.

Downloaded from www.Manualslib.com manuals search engine

https://truckmanualshub.com/

FRONT FRAME DIMENSIONS

This section includes drawings of the T470 extended front frame (73”) and standard (50.5”) front frame settings. All dimensions are in inches (in). They illustrate measurements useful to the installation of front frame equipment and bumpers. Kenworth also offers .dxf files and frame layouts of ordered chassis four weeks prior to build. Please work with your Kenworth sales representative to request this feature when specifying your chassis.

Extended Front Frame

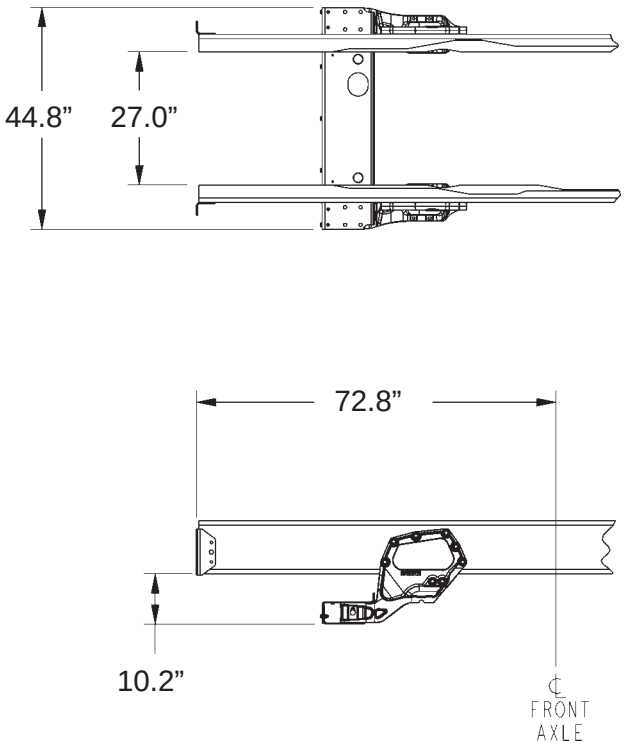

Standard Front Frame

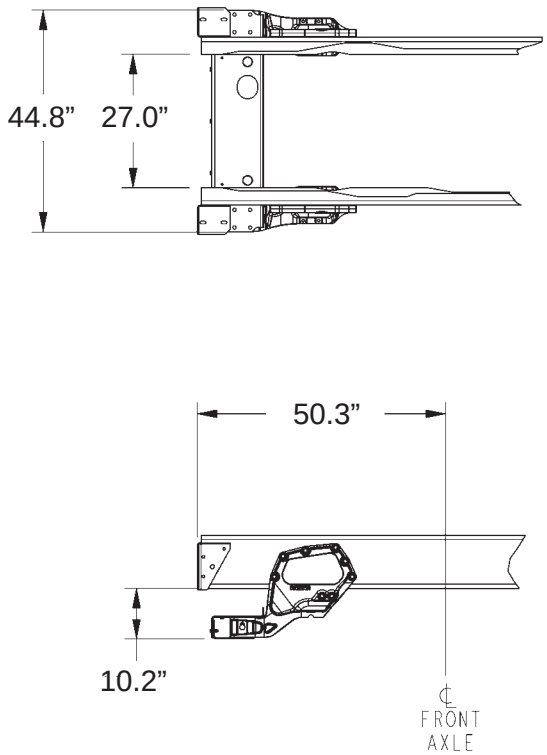

Extended Front Frame

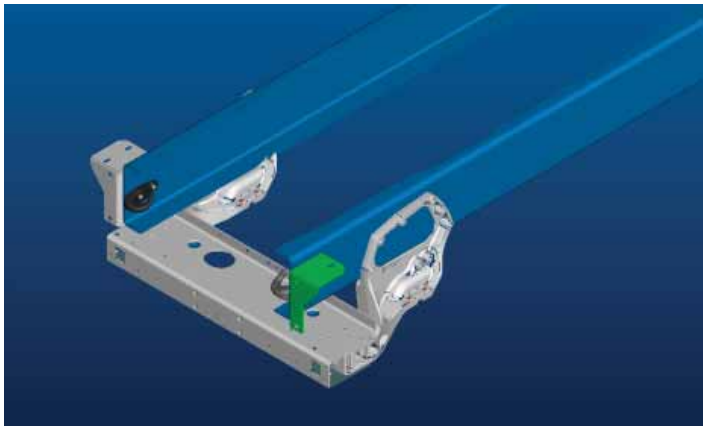

Standard Front Frame

Downloaded from www.Manualslib.com manuals search engine

https://truckmanualshub.com/

FRAME INFORMATION

Frame information provided is per rail, some specifications are written for RBM requirements per pair of rails. Make sure to know the requirement before deciding on the frame rail.

TABLE 6-1. Single Steel Rails

Rail Height		Flange Width		Web Thickness	Section Modulus	RBM (in lbs)	Weight (lbs/in)*
H		W		T	S	R	W
10 - 5/8”	x	3 -1/2”	x	5/16”	14.80	1,776,000	2.90
10 - 3/4”	x	3 -1/2”	x	3/8”	17.80	2,132,000	3.46
10 - 11/16”	x	3 -1/2”	x	1/2”	22.35	2,683,000	4.53
11 - 5/8”	x	3 -7/8”	x	3/8”	21.43	2,572,000	3.80

* Per pair of rails.

TABLE 6-2. Inserted Steel Rails

Rail Height	Insert Material	Section Modulus	RBM (in lbs)	Weight (lbs/in)*
10 - 5/8”	Single 9-7/8”x 2-7/8” x 1/4”	24.37	2,925,000	4.96
10 - 3/4”	Single 9-7/8”x 2-7/8” x 1/4”	27.33	3,280,000	5.53
11 - 5/8”	Single 10-3/4”x 3-1/2” x 3/8”	39.20	4,704,000	7.28

* Per pair of rails.

CRITICAL CLEARANCES

Rear Wheels and Cab

CAUTION:

Insufficient clearance between rear tires and body structure may cause damage to the body during suspension movement. Allow at least 8 inches clearance (See Figure 6–1.)

Normal suspension movement could cause contact between the tires and the body. To prevent this, mount the body so that the minimum clearance between the top of the tire and the bottom of the body is 8 inches (203 mm). This should be measured with the body empty. See Figure 6–1.

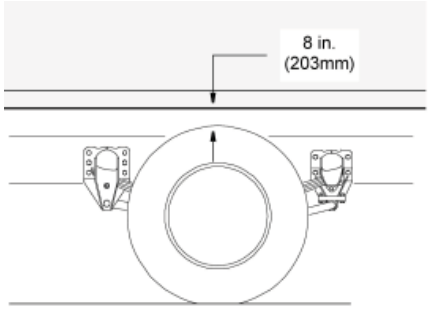

FIGURE 6-1. Minimum Clearance Between Top Of Rear Tires And Body Structure Overhang.

CAUTION:

Maintain adequate clearance between back of cab and the front (leading edge) of mounted body. Failure to comply may result in equipment damage. See Figure 6–2.

Downloaded from www.Manualslib.com manuals search engine

https://truckmanualshub.com/

Note:

Be sure to provide maintenance access to battery box and fuel tank fill neck.

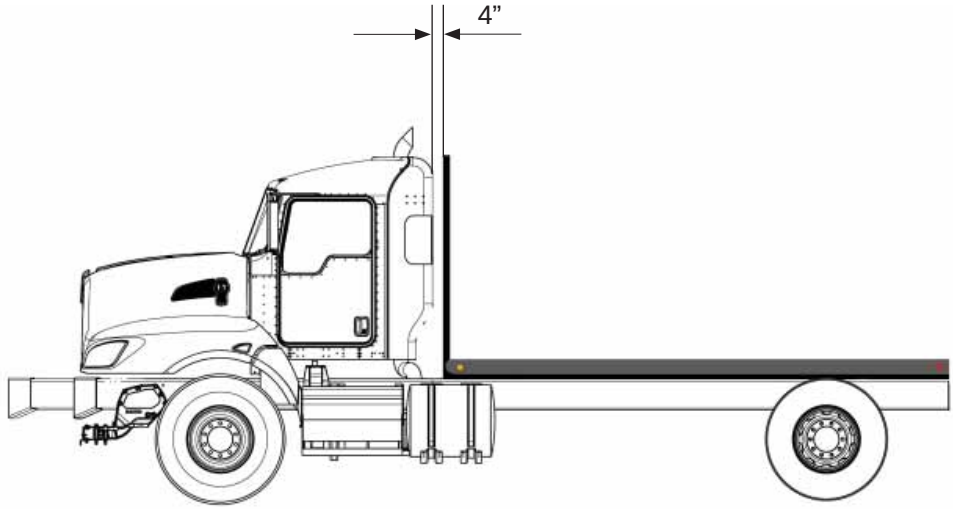

FIGURE 6-2. Minimum Back of Cab Clearance

WARNING:

If the frame rail flanges are modified or damaged, the rail may fail prematurely and cause an accident. When mounting a body to the chassis, DO NOT drill holes in the upper or lower flange of the frame rail. Mount the body using body mounting brackets or U–bolts. Failure to comply may result in personal injury, death, equipment or property damage.

BODY MOUNTING USING BRACKETS

CAUTION:

Always install a spacer between the body subframe and the top flange of the frame rail. Failure to do so may result in corrosion due to dissimilar materials and equipment damage.

Installation of a spacer between the body subframe and the top flange of the frame rail will help prevent premature wear of the components due to chafing or corrosion.

Downloaded from www.Manualslib.com manuals search engine

https://truckmanualshub.com/

Frame Sill

If the body is mounted to the frame with brackets, we recommend that the frame sill spacer be made from a strip of rubber or plastic (delrin or nylon). These materials will not undergo large dimensional changes during periods of high or low humidity. The strip will be less likely to fall out during extreme relative motion between body and chassis. See Figure 6–3.

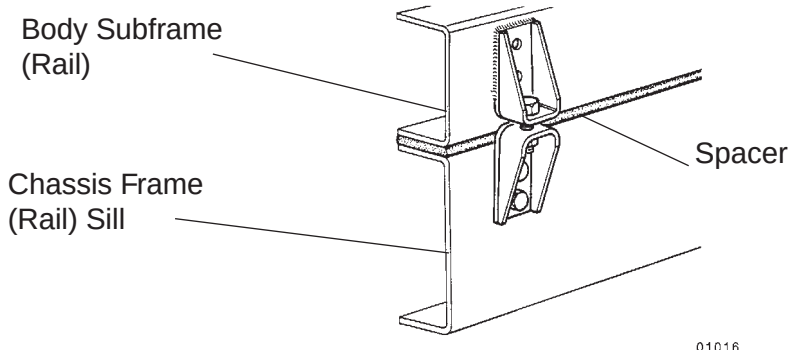

FIGURE 6-3. Spacer Between Frame Sill and Body Rail - Rubber or Plastic

Brackets

When mounting a body to the chassis with brackets, we recommend designs that offer limited amount of relative movement, bolted securely but not too rigid. Brackets should allow for slight movement between the body and the chassis. For instance, Figure 6–4 shows a high compression spring between the bolt and the bracket.

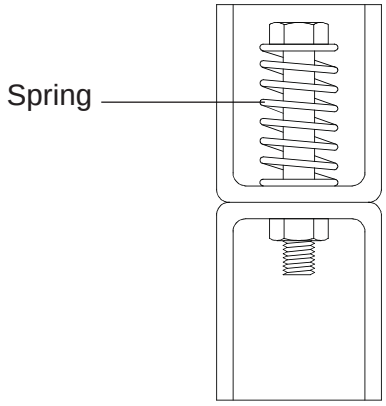

FIGURE 6-4. High Compression Spring Between the Mounting Bolt and Upper Bracket

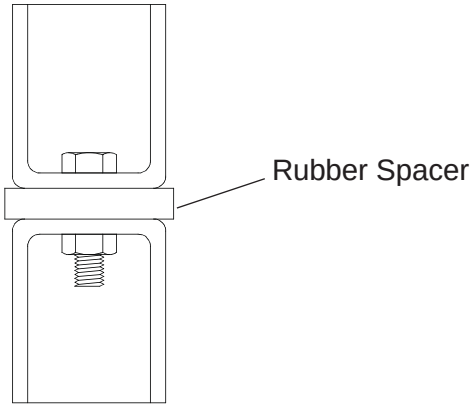

FIGURE 6-5. Rubber Spacer Between Brackets

Another possibility is mounting a rubber spacer between the brackets. See Figure 6–5.

These designs will allow relative movement between the body and the chassis during extreme frame racking situations. Extreme frame racking, and mountings that are too rigid, could cause damage to the body. This is particularly true with tanker installations.

Downloaded from www.Manualslib.com manuals search engine

https://truckmanualshub.com/

MOUNTING HOLES

When installing the lower bracket on frame rails the mounting holes in the chassis frame bracket and frame rail must comply with the general spacing and location guidelines illustrated in Figure 6–6. The hole diameter should not exceed the bolt diameter by more than .060 inches (1.5 mm).

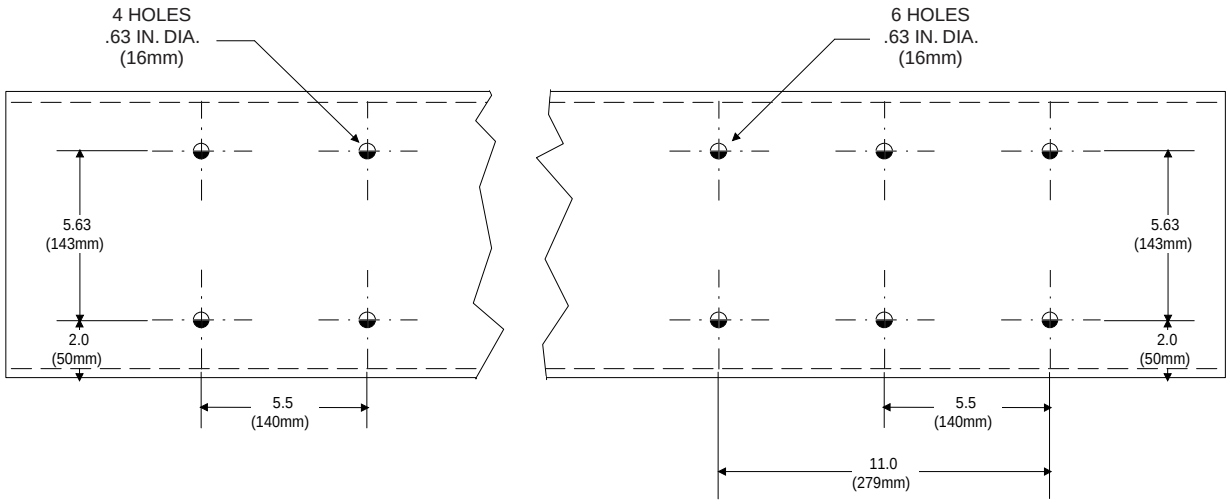

FIGURE 6-6. Crossmember-Gusset Hole Pattern Requirements. [inch (mm)]

Frame Drilling

WARNING:

When mounting a body to the chassis, DO NOT drill holes in the upper or lower flange of the frame rail. If the frame rail flanges are modified or damaged, the rail may fail prematurely. Mount the body using body mounting brackets or U–bolts. Failure to comply may result in personal injury, death, equipment or property damage.

WARNING:

Use care when drilling the frame web so the wires and air lines routed inside the rail are not damaged, failure to do so may cause an inoperable electrical or air system circuit. Failure to comply may result in personal injury, death, equipment or property damage.

WARNING:

Do not drill closely spaced holes in the frame rail. Hole centers of two adjacent holes should be spaced no less than twice the diameter of the largest hole. Closer spacing may induce a failure between the holes. Failure to comply may result in personal injury, death, equipment or property damage.

Downloaded from www.Manualslib.com manuals search engine

https://truckmanualshub.com/

BODY MOUNTING USING U–BOLTS

Spacers

If the body is mounted to the frame with U–bolts, use a hardwood sill (minimum 1/2 inch (12 mm) thick) between the frame rail and body frame to protect the top surface of the rail flange.

WARNING: **Do not allow the frame rails or flanges to deform when tightening the U–bolts. It will weaken the frame. Use suitable spacers made of steel or hardwood on the inside of the frame rail to prevent collapse of the frame flanges. Failure to comply may result in personal injury, death, equipment or property damage.**

Use a hardwood spacer between the bottom flange and the U–bolt to prevent the U–bolt from notching the frame flange. See Figure 6–7.

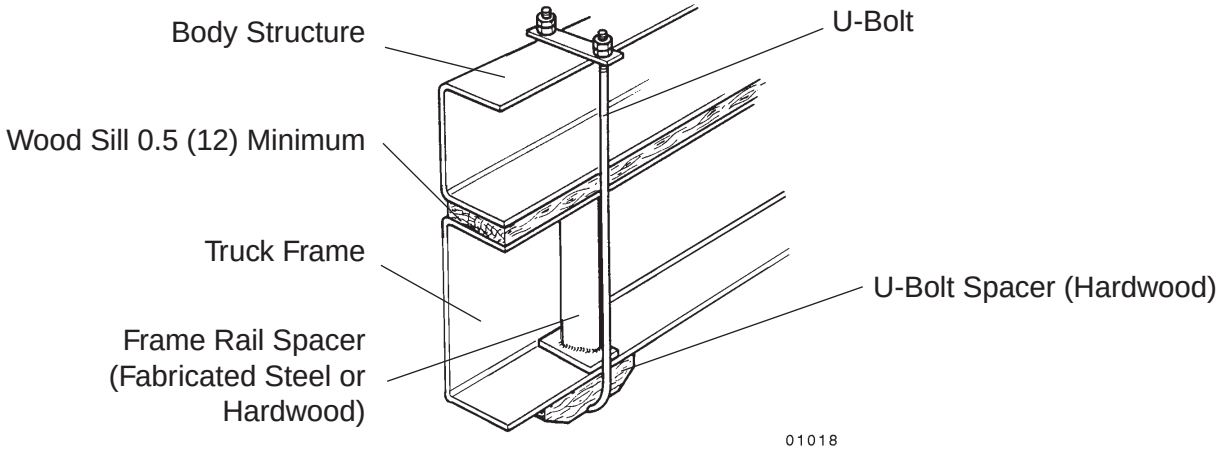

FIGURE 6-7. Acceptable U-Bolt Mounting with Wood and Fabricated Spacers [inch (mm)]

WARNING: **Do not allow spacers and other body mounting parts to interfere with brake lines, fuel lines, or wiring harnesses routed inside the frame rail. Crimped or damaged brake lines, fuel lines, or wiring may result in loss of braking, fuel leaks, electrical overload or a fire. Carefully inspect the installation to ensure adequate clearances for air brake lines, fuel lines, and wiring. Failure to comply may result in personal injury, death, equipment or property damage. See Figure 6–8.**

CAUTION: **Mount U–bolts so they do not chafe on frame rail. Failure to do so may result in premature wear of the U-bolt or frame rail.**

Downloaded from www.Manualslib.com manuals search engine

https://truckmanualshub.com/

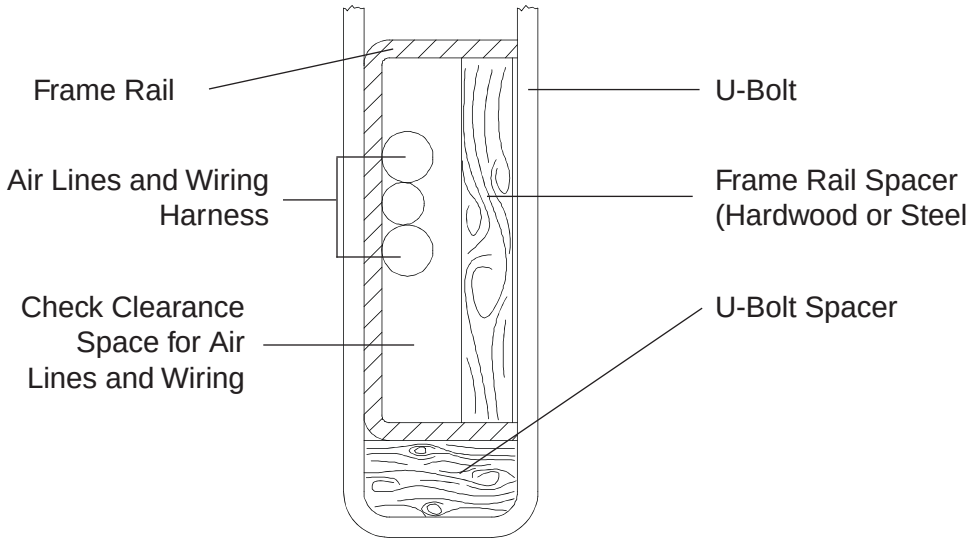

FIGURE 6-8. Clearance Space for Air Lines and Cables

WARNING:

Do not notch frame rail flanges to force a U–bolt fit. Notched or damaged frame flanges may result in premature frame failure. Use a larger size U–bolt. Use a hardwood spacer as shown in Figure 6-7. Failure to comply may result in personal injury, death, equipment or property damage.

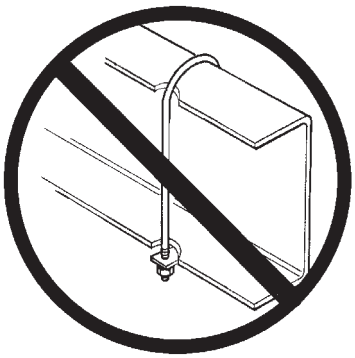

Downloaded from www.Manualslib.com manuals search engine

https://truckmanualshub.com/

Rear Body Mount

When U–bolts are used to mount a body we recommend that the last body attachment be made with a “fishplate” bracket. See Figure 6–9. This provides a firm attaching point and helps prevent any relative fore or aft movement between the body and frame.

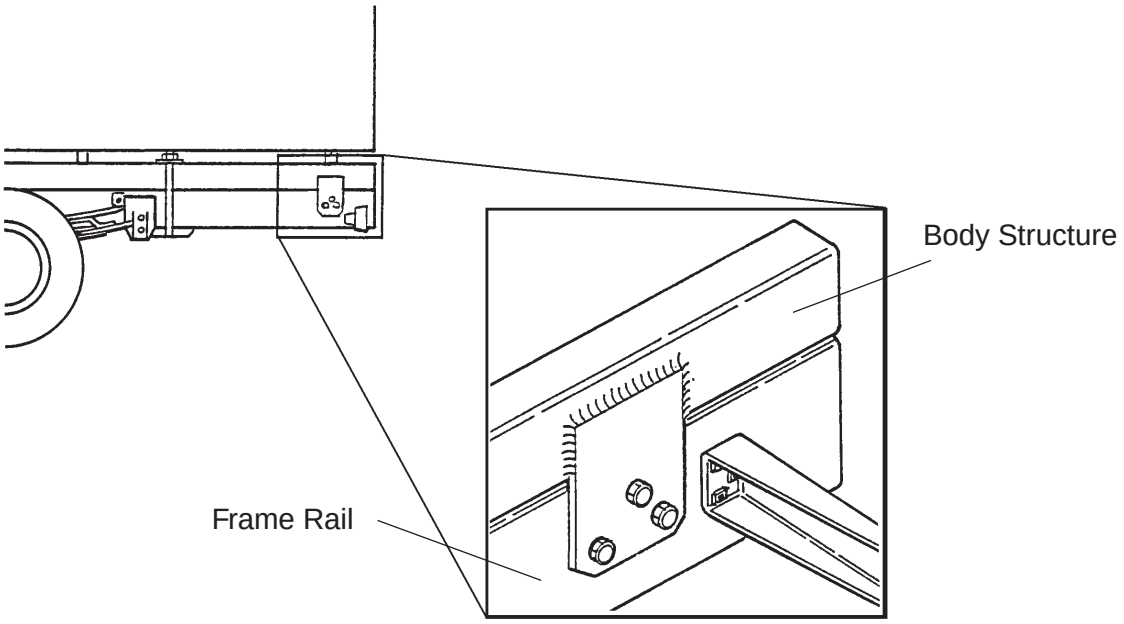

FIGURE 6-9. Example of Fishplate Bracket at Rear End of Body, used with U-Bolts

Downloaded from www.Manualslib.com manuals search engine

https://truckmanualshub.com/

FRAME MODIFICATIONS

Introduction

Kenworth offers customer specified wheelbases. So, in most cases frame modifications to produce a certain wheelbase should not be necessary.

However, some installations may require slight modifications, while other installations will require extensive modifications. Sometimes an existing dealer stock chassis may need to have the wheelbase changed to better fit a customer's application. The modifications may be as simple as shortening or lengthening the frame cutoff, or they may be as complex as changing the wheelbase.

DRILLING RAILS

Location and Hole Pattern

If holes need to be drilled to attach anything to the rail, see SECTION 6 "BODY MOUNTING" for more information. Follow the general spacing and hole location guidelines on Page 6–5, Figure 6–6.

WARNING!

When mounting a body to the chassis, DO NOT drill holes in the upper or lower flange of the frame rail. If the frame rail flanges are modified or damaged, the rail may fail prematurely. Mount the body using body mounting brackets or U–bolts. Failure to comply may result in personal injury, death, equipment or property damage.

WARNING!

Do not drill closely spaced holes in the web of the frame. Hole centers of two adjacent holes should be spaced no less than twice the diameter of the largest hole. Closer spacing may induce a failure between the holes. Failure to comply may result in personal injury, death, equipment or property damage.

CAUTION:

An appropriately sized bolt and nut must be installed and torqued properly in all unused frame holes. Failure to do so may result in frame crack initiation around the hole and equipment damage.

WARNING!

Use care when drilling the frame web so the wires and air lines routed inside the rail are not damaged, failure to do so may cause an inoperable electrical or air system circuit. Failure to comply may result in personal injury, death, equipment or property damage.

CAUTION:

Never use a torch to make holes in the rail. Use the appropriate diameter drill bit. Heat from a torch will affect the material properties of the frame rail and may result in frame rail cracks and equipment damage.

CAUTION:

Hole diameter should not exceed the bolt diameter by more than .060 inches (1.5 mm). Oversized holes may result in excessive frame wear around the hole and equipment damage.

Downloaded from www.Manualslib.com manuals search engine

https://truckmanualshub.com/

MODIFYING FRAME LENGTH

The frame cutoff after the rear axle can be shortened to match a particular body length. Using a torch is acceptable; however, heat from a torch will affect the material characteristics of the frame rail. The affected material will normally be confined to within 1 to 2 inches (25 to 50 mm) of the flame cut and may not adversely affect the strength of the chassis or body installation.

The frame cutoff can be lengthened by adding frame extenders.

When extending 10.5” frame rails, the additional sections can be welded to the existing rails. The joint should be welded and reinforced as illustrated in Figure 7–1.

Note: See page 7-6 for more information on welding frames.

Frame Insert

A frame insert must be added after welding a frame rail extension to compensate for lost strength. The insert should be of the same material as the frame member, or of steel, and at least equal to the frame rail in thickness. Attachment of the insert to the frame should be made with Ream-Fit heat-treated bolts, 5/8 in. (16 mm) dia. or the next larger size. Both the reinforcement and frame holes should be reamed to provide a fit of from .001 in. to .003 in. (.025 to .076 mm) clearance. Do not weld reinforcing members. The insert should span a distance of at least 24 in. (610 mm) on either side of the joint to insure an even distribution of stresses. Cut the ends of the insert at 45° as shown in Figure 7–2 unless the insert extends to the end of the frame.

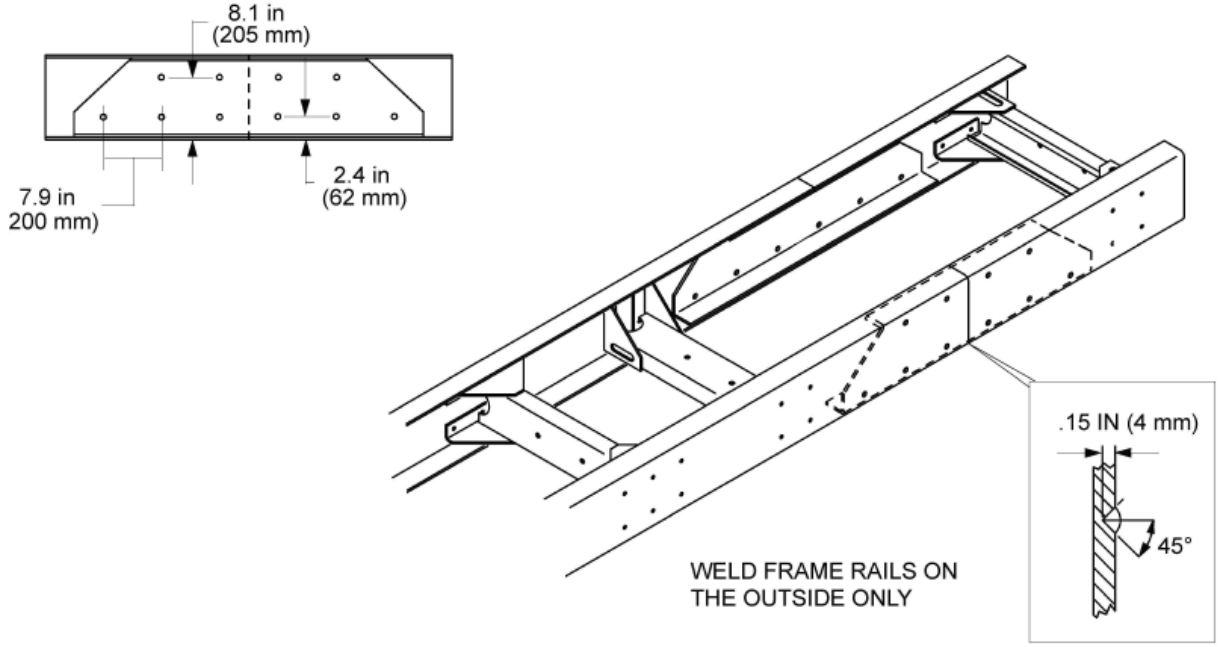

FIGURE 7-1. Detail of Frame Extension and Joint Welding

Downloaded from www.Manualslib.com manuals search engine

https://truckmanualshub.com/

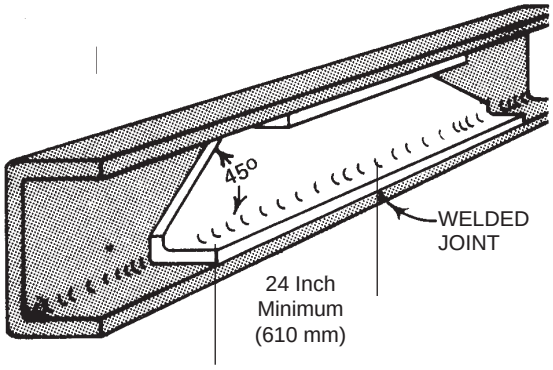

FIGURE 7-2. Frame Insert

Where possible, use existing bolt holes to attach the insert to the frame. Bolt holes must not be located closer to the frame flanges than the present bolt pattern.

If the insert is placed in a section of the main frame where few bolts are located, additional bolts are required. Use the following guideline for locating additional bolt holes.

CHANGING WHEELBASE

We do not recommend modifying the wheelbase. Occasionally, however, a chassis wheelbase will need to be reduced or lengthened. When this needs to be done there are a few guidelines that should to be considered.

WARNING!

When changing the wheelbase, be sure to follow the driveline manufacturer's recommendations for driveline length or angle changes. Incorrectly modified drivelines may fail prematurely due to excessive vibration. Failure to comply may result in personal injury, death, equipment or property damage.

Before changing the wheelbase the driveline angles of the proposed wheelbase need to be examined to ensure that no harmful vibrations are created. Consult the driveline manufacturer for appropriate recommendations.

WARNING!

When changing the wheelbase, a continuous blank frame insert/outsert must be added in the area of the new rear suspension mounting bolts. All new mounting holes must pass through the original rail and the insert/outsert. Failure to do so may cause excessive stress in the original rail due to additional holes. Failure to comply may result in personal injury, death, equipment or property damage.

Before the rear suspension is relocated, check the new location of the spring hanger brackets. The new holes for the spring hanger brackets must not overlap existing holes and should not come any closer than 2 inches (50 mm) to existing holes in the frame.

WARNING!

When relocating a suspension bracket, do not mount it on the extended (added) section of a frame rail. The suspension loading may result in premature failure of the added section splice. Use care when planning the wheelbase so that the rear suspension bracket is always mounted on the original rail section. See Figure 7–3. Failure to comply may result in personal injury, death, equipment or property damage.

Downloaded from www.Manualslib.com manuals search engine

https://truckmanualshub.com/

When reducing the wheelbase, we recommend that the suspension be moved forward and relocated on the original rail. The rail behind the suspension can then be cut to achieve the desired frame cutoff. See Figure 7–3.

WARNING!

Do not drill new holes any closer than 2 inches (50 mm) to existing holes. Frame drilling affects the strength of the rails. Failure to comply may result in personal injury, death, equipment or property damage.

Before the rear suspension is relocated, check the new location of the spring hanger brackets. The new holes for the spring hanger brackets must not overlap existing holes and should not come any closer than 2 inches (50 mm) to existing holes.

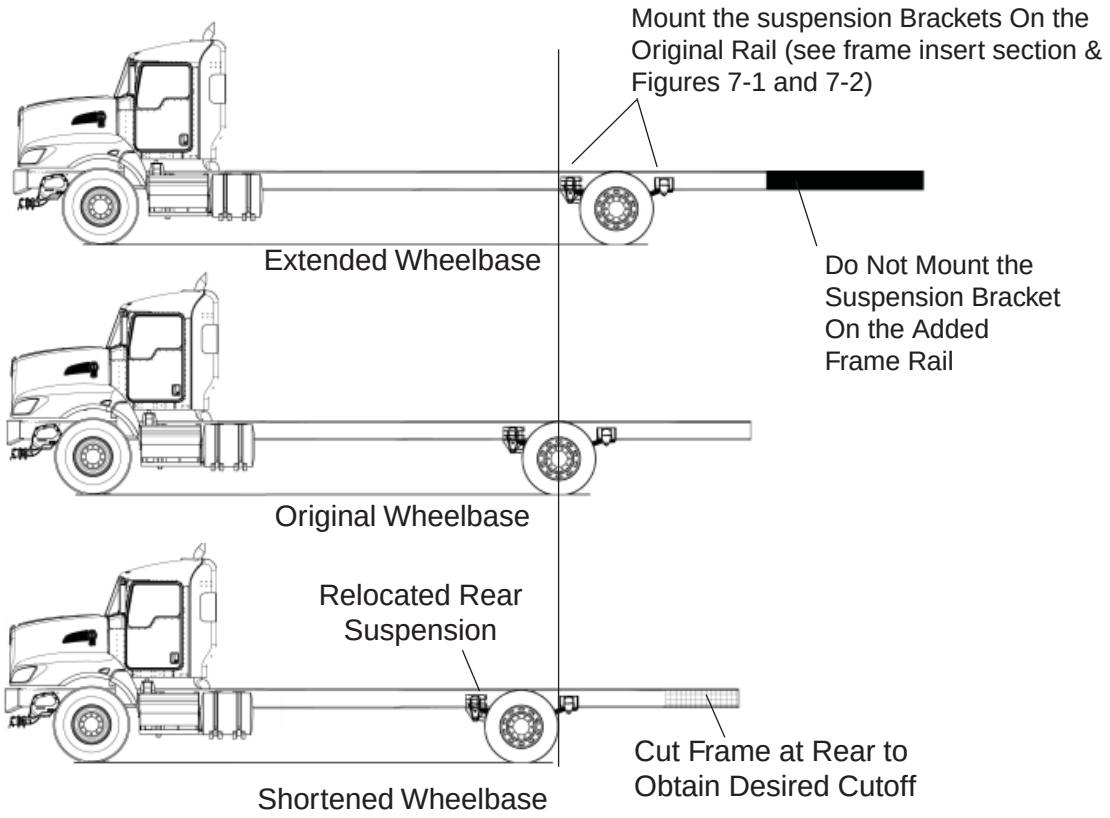

FIGURE 7-3. Comparison of Original, Shortened, and Extended Wheelbases.

Downloaded from www.Manualslib.com manuals search engine

https://truckmanualshub.com/

CROSSMEMBERS

After changing a wheelbase, an additional crossmember may be required to maintain the original frame strength. The maximum allowable distance between adjacent crossmembers is 60 inches (1524 mm). If the distance between adjacent crossmembers exceeds this dimension, add a crossmember between them. See Figure 7–4.

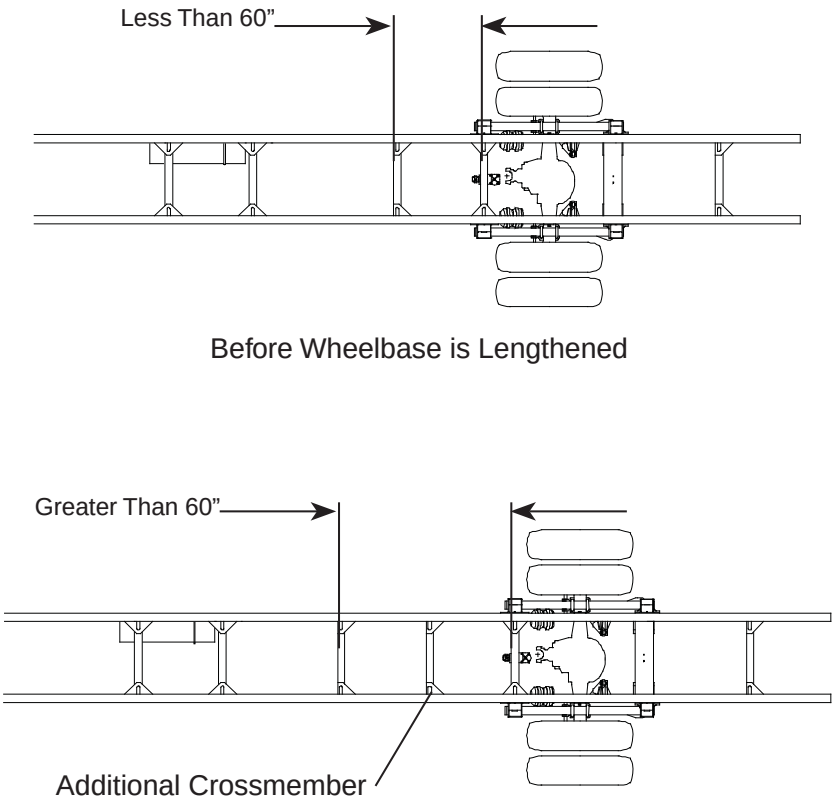

FIGURE 7-4. Crossmember Added When Distance Exceeds 60 Inches (1524 mm)

Downloaded from www.Manualslib.com manuals search engine

https://truckmanualshub.com/

WELDING

Kenworth DOES NOT recommend frame welding. The high heat of welding nullifies the special heat treatment of the rails, greatly reducing the tensile strength of the frame rail. If a frame member becomes cracked from overloading, fatigue, surface damage or a collision, the only permanent repair is to replace the damaged frame member with a new part.

The following information is provided (for temporary emergency repair). Prior to welding a cracked frame rail, the area should be beveled (V'd out) to allow for a better weld. To prevent spreading of the crack, a 7 to 9 mm (1/4 in. to 3/8 in.) dia. hole should be drilled at the end of the crack. Widen the crack along its full length by using two hack saw blades together. When welding steel frames use the shielded arc method. When welding aluminum frames use either the tungsten inert gas (TIG) or consumable electrode method. Be sure to obtain full weld penetration along the entire length of the crack.

Precautions

CAUTION:

Before welding, disconnect the negative terminal battery cable. Failure to comply may result in equipment damage.

CAUTION:

Before welding, disconnect the alternator terminals. Failure to do so may result in damage to the voltage regulator and/or alternator.

CAUTION:

To prevent damage to electrical equipment, disconnect battery cables before arc-welding on a truck, and be sure that the welding ground lead is connected to the frame. Bearings and other parts will be damaged if current must pass through them in order to complete the circuit.

Welding Precautions: All Electronic Engines

Before welding on vehicles with electronic engines, the following precautions should be observed.

1. Disconnect all electrical connections to the vehicle batteries.
2. Disconnect all ECM connectors.
3. Do no use the ECM or engine ground stud for the ground of the welding probe.
4. Ensure that the ground connection for the welder is as close to the weld point as possible. This ensures maximum weld current and minimum risk to damage electrical components on the vehicle.
5. Turn off key.

Note:

Bendix ABS, Bosch ABS and Wabco ABS: Disconnect ECU.

Downloaded from www.Manualslib.com manuals search engine

https://truckmanualshub.com/

TORQUE REQUIREMENTS

TABLE 7-1. Customary Grade 8 UNF or UNC.

Fastener	Torque	
Size	**Nm**	**Lb.-Ft**
5/16	22–30	16–22
3/8	41–54	30–40
7/16	77–88	57–65
1/2	109–122	80–90
9/16	156–190	117-140
5/8	226–265	167–195
3/4	396–462	290–340
7/8	517–626	380–460
1	952–1129	800–830
1-1/8	1346–1591	990–1170
1-1/4	1877–2217	1380–1630

Torque values apply to fasteners with clean threads, lightly lubricated, with hardened steel washers, and nylon-insert nuts.

TABLE 7-2. U.S. Customary – Grade 8. Metric Class 10.9

	Torque	
Fastener	**Nm**	**Lb-Ft**
M6	9–15	7–11
M8	23–31	17–23
M10	33–43	26–32
M12	77–101	57–75
M14	136–164	99–121
M16	163–217	120–160
M20	352–460	260–340

Downloaded from www.Manualslib.com manuals search engine

https://truckmanualshub.com/

This page intentionally left blank.

Downloaded from www.Manualslib.com manuals search engine

https://truckmanualshub.com/

ROUTING

Introduction

This section specifies the general requirements for securing hoses and electrical wires to present an orderly appearance, facilitate inspection and maintenance, and prevent potential damage to these lines.

Definitions

Bundle: Two or more air, electrical, fuel, or other lines tied together to form a unitized assembly.

Clamp: A cushioned rigid or semi-rigid, anti-chafing device for containing the bundle and securing it to the frame or other structural support. Standard clamps have a black elastomer lining. High temperature clamps (e.g., those used with compressor discharge hose) have a white or red elastomer lining (most applications for these are called out in the bills of material). An assembly of two clamps fastened together to separate components is referred to as a “butterfly” clamp. Note: the metal portion of clamps shall be stainless steel or otherwise made capable, through plating or other means, of passing a 200 hour salt spray test per ASTM B117 without rusting.

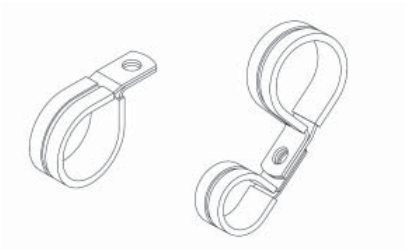

FIGURE 9-1. Clamp and Butterfly Clamp

Butterfly Tie: A tough plastic (nylon or equivalent) locking dual clamp tie strap used to separate bundles or single lines, hoses, etc. These straps must be UV stable. (Tyton DCT11)

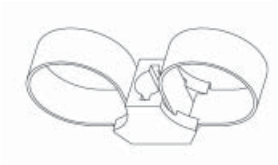

FIGURE 9-2. Butterfly Tie

Tie Strap: A tough plastic (nylon, or equivalent) locking strap used to tie the lines in a bundle together between clamps or to otherwise secure hoses and wires as noted below. These straps must be UV stable.

FIGURE 9-3. Tie Strap

Heavy Duty (HD) Mount: A black rigid device used for securing a tie strap to the frame or other structural support. Mounts are made of impact modified, heat stabilized UV resistant nylon capable of continuous operation between temperatures 220°F (150°) and -40°F (-40°).

Downloaded from www.Manualslib.com manuals search engine

https://truckmanualshub.com/

Note: **Heavy duty tie straps 0.50in (12.7mm) wide (Tyton T255ROHIR or similar) shall be used whenever HD mounts are specified, although 0.25in (6.4mm) tie straps may be used in some specified applications.**

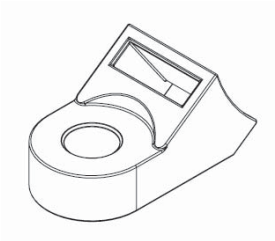

FIGURE 9-4. Heavy Duty (HD) Mount.

Excess of material: More than 3 inches of slack for every 14 inch section of hose routing, except for air conditioner hoses. See section 4.1.3 for air conditioner hose requirements.

Shortness of material: Less than 1 inch of slack on a 14 inch section of hose routing.

ROUTING REQUIREMENTS

Wiring

Electrical ground wire terminals must be securely attached and the complete terminal surface must contact a clean bare metal surface. See R414-558 for grounding wire connection practice. Apply electrical contact corrosion inhibitor Nyogel 759G grease (made by William F. Nye, Inc., New Bedford, MA) per R414-558.

Don't bend wires or use tie straps within 3 inches (75 mm) of (connected) wire connectors or plugs.

Wires in Bundles

Electrical wires (other than the exceptions covered below) running parallel with air or coolant hose bundles, may be included in the bundle if they are isolated from the hoses with a covering of convoluted plastic tubing.

EXCEPTIONS:

Battery cables (including jump start cables) may be bundled with or tied to the charging wire harness. They shall **not** be bundled with or tied directly to any other components, including hoses, wires, or bundles. They shall be separated from other routed components using butterfly ties at intervals not exceeding 14 inches (356 mm). Battery strap (W84-1000) tie down shall be used without exception to secure battery cables to frame mounted or other major component (e.g. engine, tmsn, etc.) mounted standoffs at intervals not exceeding 14 inches (356 mm). The (positive) battery cable shall be covered with convoluted plastic tubing from terminal to terminal.

110/220 volt wires for engine heaters, oil pan heaters, transmission oil heaters and battery pad warmers, shall **not** be included in any hose/wire bundle with a fuel hose. Individual heater wires not in a bundle shall be separated from other components by using butterfly clamps or butterfly ties at intervals not exceeding 14 inches (356 mm). Heater wires with a secondary covering shall be covered with convoluted tubing whether they are in bundles or not.

Downloaded from www.Manualslib.com manuals search engine

https://truckmanualshub.com/

Wires Crossing other Components

Electrical wires crossing over other components, such as lines, bolt heads, fittings, engine components lifting eyes, engine block, cylinder head, etc., close enough to rub shall be isolated with a covering of convoluted tubing **and** separated from the component by using butterfly clamps, butterfly ties, or plastic sheathing. 110/220 volt engine heater wiring shall be installed with butterfly ties or butterfly clamps

Piping

Use no street elbows in air brake, water, fuel, or hydraulic systems unless specified on the piping diagram and the build instructions.

Use no elbows in the air brake system unless specified on the air piping diagram and the build instructions.

Hoses Crossing Components

Hoses crossing over other components close enough to rub shall be protected with a secured covering of convoluted plastic tubing (KW part number K344-813), another section of hose, or plastic sheathing (KW part number K213-1312). The usage of butterfly ties, or butterfly clamps are also recommended.

Air Compressor Discharge Hoses

Wires or hoses shall not be tied to the high temperature air compressor discharge hose. Hoses and wires may be routed across the air compressor discharge hose at a distance of 18 inches (457 mm) or greater from the compressor discharge port. In this case the crossing hoses and wires shall be “butterfly” clamped to the air compressor discharge hose and covered with convoluted tubing at the clamp point (use high temperature clamps on the compressor hose).

Bundles

HD mount and tie strap, or clamp shall be located at intervals not to exceed 14 inches (356 mm) along the bundle.

Regular tie straps shall be located at intervals not to exceed 7 inches (178 mm) between HD mount or clamps. Extra tie straps may be used as needed to contain the hoses and wires in the bundle.

Routing of Wires and Hoses near Moving Components

Wires and Hoses shall be routed away from moving components, such as fans, shackle links, drivelines, steering linkages, etc. so that there is at least 0.5 inches (12.7 mm) clearance when the component is operating at its **maximum** travel limits.

A minimum clearance of 1.0 inchs (25.4) shall be maintained between steering axle tires (and associated rotating parts) in all positions and routed components, such as hoses, oil lines, wires, pipes, etc.

Downloaded from www.Manualslib.com manuals search engine

https://truckmanualshub.com/

Routing of Wires and Hoses near Exhaust System

TABLE 9-1. Exhaust – System Clearance

Description	Shielded	Unshielded
Coolant hoses, HVAC hoses and tubing, and electrical wires within 15” of the turbo and/or over 15” from the turbo	2” minimum	3” minimum
Fuel hoses		
within 15” of the turbo	n/a	4” minimum
over 15” from the turbo	2” minimum	3” minimum
Fuel tanks and hydraulic tanks		
crossing tank	n/a	2” minimum
parallel to tank	n/a	2” minimum
end of tank	n/a	1” minimum
aluminum/ceramic-coated exhaust pipe crossing tank	n/a	1.5” minimum
Air hose		
nylon	3” minimum	8” minimum
wire braid	2” minimum	3” minimum

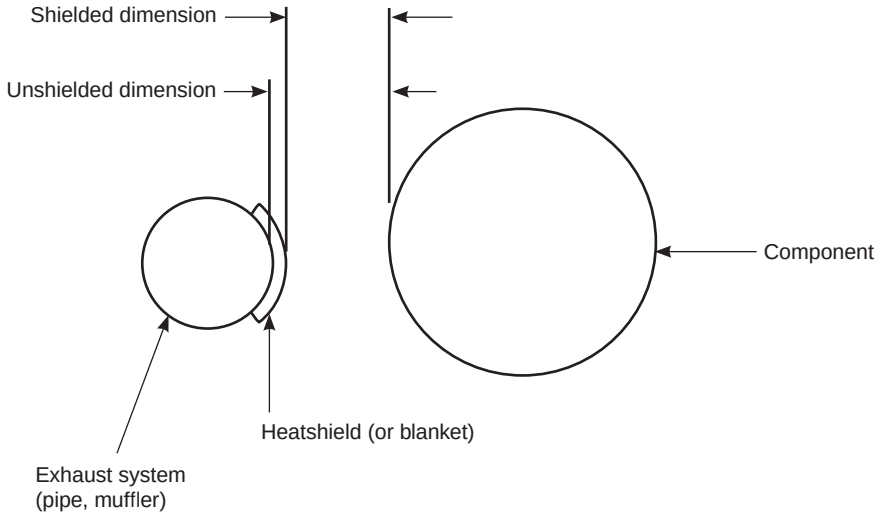

FIGURE 9-5. Definition of measurements.

Downloaded from www.Manualslib.com manuals search engine

https://truckmanualshub.com/

VEHICLE IDENTIFICATION NUMBER

A 17–character number (numeral and letter combination) forms the Vehicle Identification Number (VIN) which includes the Chassis Number. It contains among other information, the model year (4), assembly plant (5), and vehicle serial number (6). See Figure A–1.

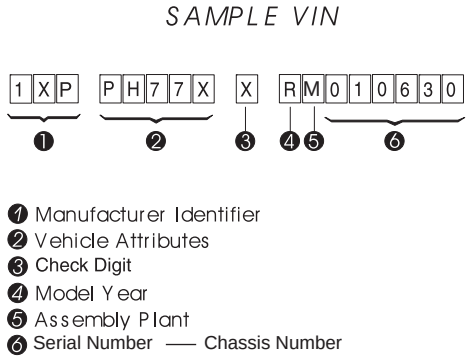

FIGURE A-1. Vehicle Identification Number (VIN).

The model year (4) is designated by an alphanumeric code in the tenth character position in the VIN. See Table A-1 and Figure A–1.

Code	Year	Code	Year
5	2005	A	2010
6	2006	B	2011
7	2007	C	2012
8	2008	D	2013
9	2009		

TABLE A-1. Model Year (Code) Designations.

VIN Location

The VIN is marked on the Incomplete Vehicle Certification Label (on trucks). It is located either on the driver's door edge or door frame. See Figure A–2.

Chassis Number Locations

The Chassis Number comprises the last six characters of the VIN.

- The vehicle chassis number is shown in multiple locations.
- Left side of cab, lower right corner of door frame: stamped plate.
- Tire, Rim, and Weight Rating Data label.
- Major Components and Weights label.
- Noise Emission label.
- Paint Identification label.

Downloaded from www.Manualslib.com manuals search engine

https://truckmanualshub.com/

VEHICLE IDENTIFICATION LABELS

Vehicle Identification Labels are located on the driver's side door edge or on either the driver's or passenger's side door frames. See Figure A-2. Labels include Vehicle Certification, Components and Weights, Tire/Rim and Weight Rating Data, Noise Emissions, and Paint Identification. Quantity and location of labels may differ based on Complete/Incomplete vehicle, and Single/Dual certification.

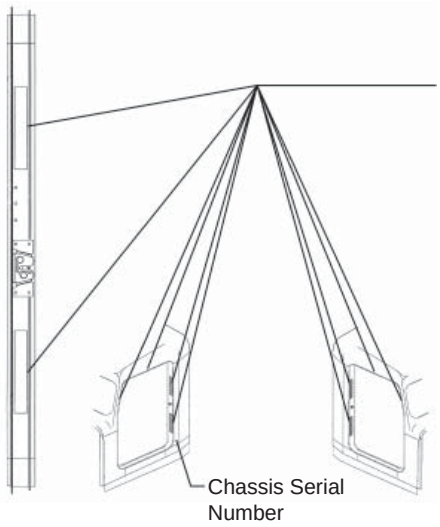

FIGURE A-2. Drivers Door and Door Frame Labels

Tire/Rim and Weight Rating Data Label

The Tire/Rim and Weight Rating Data Label is used in conjunction with the Incomplete Vehicle Certification Label on Incomplete Vehicles. It contains chassis serial number and the following information:

- GVWR — Gross Vehicle Weight Rating
- GAWR FRONT and REAR — Gross Axle Weight Ratings for Front and Rear Axle
- TIRE/RIM SIZES AND INFLATION PRESSURES — Tire/Rim Sizes and Cold Pressure Minimums

Note: **GVWR is the TOTAL WEIGHT the vehicle is designed to carry. This includes the weight of the empty vehicle, loading platform, occupants, fuel, and any load.**

Incomplete Vehicle Certification Label

The Incomplete Vehicle Certification Label contains the chassis VIN, date of manufacture, and listing of applicable motor vehicle safety standards.

Components and Weights Label

The Major Components and Weights Label includes chassis weight and gross weight information, as well as model and serial numbers for the vehicle, engine, transmission, and axles.

Downloaded from www.Manualslib.com manuals search engine

https://truckmanualshub.com/

Noise Emission Label

The Noise Emission Label contains the chassis serial number, date of manufacture, and information regarding US noise emission regulations. This label is not provided on Canadian registered vehicles.

Paint Identification Label

The Paint Identification Label contains the paint colors used by the factory to paint the truck. It lists frame, wheels, cab interior and exterior colors. This label is located either underneath the dash to the left of the steering column support, inside the glovebox, or on the passenger's door frame.

COMPONENT IDENTIFICATION

Each of the following components has their own identification label.

Engine Identification

The engine serial number is stamped on a plate located on the left front of the engine. For further information, please refer to the Engine Operation and Maintenance Manual (included in the glove compartment of each vehicle).

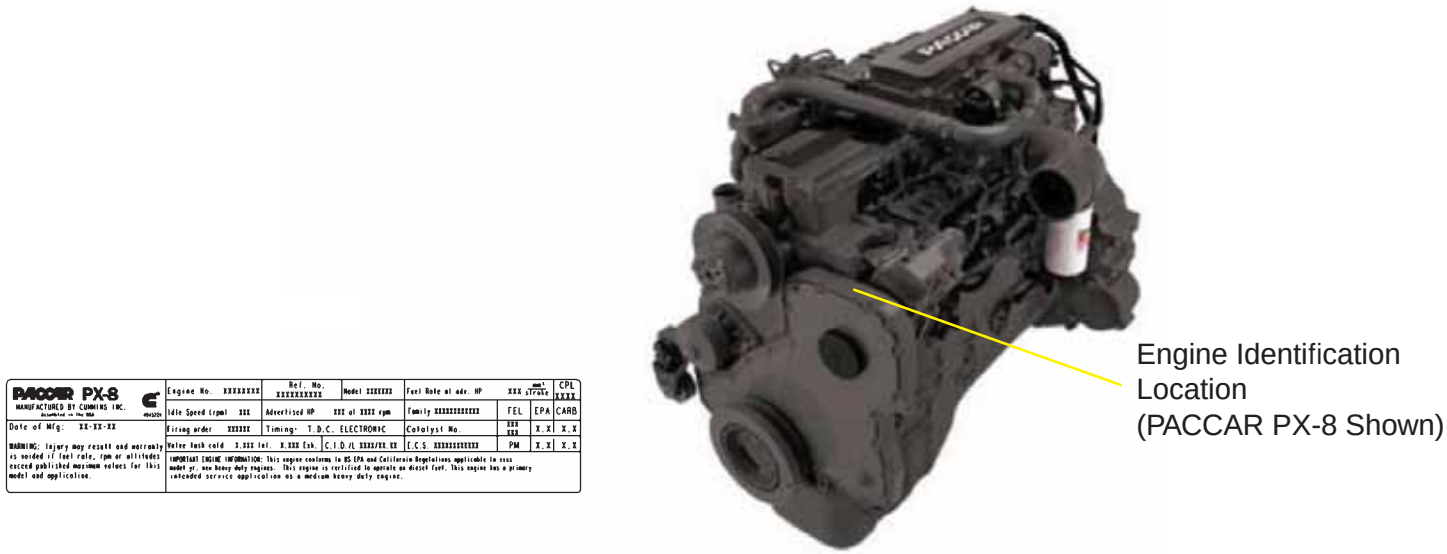

Figure A-3. Engine Identification Location

Transmission Identification

The transmission identification number is stamped on a tag affixed to the right forward side of the transmission case. It includes among other specifications the transmission model, serial, and part number.

Downloaded from www.Manualslib.com manuals search engine

https://truckmanualshub.com/

Front Axle Identification

The front axle has a identification tag located on the front axle beam. It includes the axle model, part number and serial number.

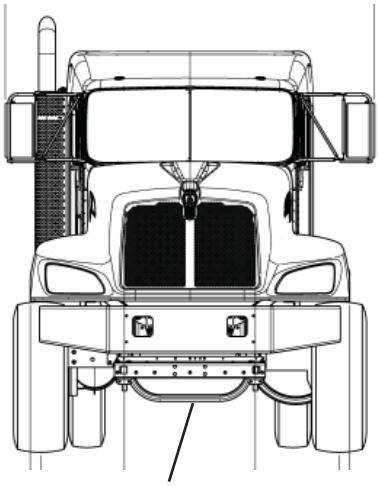

FIGURE A-4. Front Axle Identification

Rear Axle Identification

The rear axle identification numbering system includes two labels or stamps.

1. Axle Housing Number Tag, located on the left forward side of the housing arm. This tag identifies the axle housing.

2. Axle Differential Carrier Identification, located on the top side of the differential carrier. The following information is either stamped, or marked with a metal tag: Model No., Carrier Production Assembly No., Carrier Assembly Serial No., Gear Ratio, Axle Specifications Number and OEM part number and country of origin.

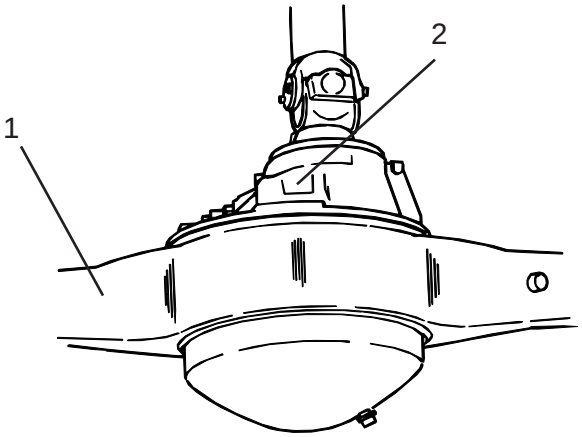

FIGURE A-5. Rear Axle Identification

Note:

Illustrated identification tag locations are typical. Actual locations may vary by axle manufacturer and with single versus tandem axles.

Downloaded from www.Manualslib.com manuals search engine

https://truckmanualshub.com/

This page intentionally left blank.

Downloaded from www.Manualslib.com manuals search engine

https://truckmanualshub.com/

KENWORTH®

A PACCAR COMPANY

Kenworth Truck Company
P.O. Box 1000
Kirkland, WA 98083
(425) 828-5000

12/09

Downloaded from www.Manualslib.com manuals search engine