https://truckmanualshub.com/

MAX-3

Innovation to Create New Market

CPC/Q(D)20-35T3

Diesel/Gasoline Forklift 2.0/2.5/3.0/3.5t

CE

https://truckmanualshub.com/

CPC/Q(D)20T3

T3 series 2.0 forklift specification:

General	1	Manufacture					XCMG					
	2	Model					CPC20T3	CPCD20T3	CPCD20T3	CPCD20T3	CPCD20T3	CPQD20T3
	3	Power type					Diesel	Diesel	Diesel	Diesel	Diesel	Gasoline
	4	Rated capacity				Kg	2000	2000	2000	2000	2000	2000
	5	Load center				mm	500	500	500	500	500	500
Characteristics & Dimensions	6	Lift height			B	mm	3000	3000	3000	3000	3000	3000
	7	Free lift height			E	mm	120	120	120	120	120	120
	8	Fork size		L×W×T	J/W/T	mm	1070×120×40	1070×120×40	1070×120×40	1070×120×40	1070×120×40	1070×120×40
	9	Mast tilt range		F/R	F/K (°)	deg	6/10	6/10	6/10	6/10	6/10	6/10
	10	Fork overhang(wheel center to fork face)			K	mm	481	481	481	481	481	481
	11	Rear overhang			M	mm	430	430	430	430	430	430
	12	Overall dimensions	Length to face of fork		Y	mm	2510	2510	2510	2510	2510	2510
	13		Overall width		Q	mm	1150	1150	1150	1150	1150	1150
	14		Mast lowered height		C	mm	2050	2050	2050	2050	2050	2050
	15		Mast extended height		A	mm	4200	4200	4200	4200	4200	4200
	16		Overhead guard height		P	mm	2160	2160	2160	2160	2160	2160
	17	Turning radius(outsude)			R	mm	2170	2170	2170	2170	2170	2170
Performance	18	Speed	Travel (No load)			Km/h	8/20	20	20	20	20	20
	19		Lifting (Full load)			mm/sec	400	400	400	400	400	400
	20		Lowering (Full load)			mm/sec	400	400	400	400	400	400
	21	Max.Drawbar Pull (Full load)				N	14000	14000	14000	14000	14000	14000
	22	Max.Gradeability (Full load)				%	20	20	20	20	20	20
Chassis	23	Tyres		Front		mm	700-12-12PR	700-12-12PR	700-12-12PR	700-12-12PR	700-12-12PR	700-12-12PR
	24			Rear		mm	600-9-10PR	600-9-10PR	600-9-10PR	600-9-10PR	600-9-10PR	600-9-10PR
	25	Tread		Font	U	mm	970	970	970	970	970	970
	26			Rear	V	mm	970	970	970	970	970	970
	27	Wheelbase			L	mm	1600	1600	1600	1600	1600	1600
	28	Ground clearance	Lowest			mm	135/120	135/120	135/120	135/120	135/120	135/120
	29		Wheelbase center			mm	160/145	160/145	160/145	160/145	160/145	160/145
Weight	30	Self weight				Kg	3380	3380	3380	3380	3380	3380
	31	Weight Distribution	Full load	Front		Kg	4670	4670	4670	4670	4670	4670
	32			Rear		Kg	710	710	710	710	710	710
	33		No load	Front		Kg	1450	1450	1450	1450	1450	1450
	34			Rear		Kg	1930	1930	1930	1930	1930	1930
Power & transmission	35	Battery	Voltage/Capacity(20HR)			V/Ah	12/80	12/80	12/60	12/60	12/60	12/60
	36	Engine	Modal				C490BPG-25	A498BT1-39	S4S	C240	TD27	K25
	37		Manufacture				CHINA	CHINA	Mitsubishi	ISUZU	GCT	Nissan
	38		Rated output/r.p.m			kw	36.8/2650	36.8/2400	35.3/2250	34.5/2500	38.5/2300	37.4/2300
	39		Rated torque/r.p.m			N.m	156/1700-1900	186/1600-1800	166/1700	139/1800	160/2300	176.5/1600
	40		No.of cylinder				4	4	4	4	4	4
	41		Bore×Stroke			mm	90×105	95×105	94×120	86×102	96/92	89×100
	42		Displacement			cc	2670	2980	3331	2369	2663	2488
	43		Emission standard				EURⅢ	EURⅢ	EURⅢ	EURⅢ	/	/
	44		Fuel tank capacity			L	60	70	60	60	60	60
	45	Transmissions	Manufacture				CHINA	CHINA	CHINA	CHINA	CHINA	CHINA
	46		Type				Mechanical / Powershift	Mechanical / Powershift	Powershift	Powershift	Powershift	Powershift
	47		Stage	FWD/RVS			2/2	2/2	1/1	1/1	1/1	1/1
	48	Operating pressure				Mpa	17.5	17.5	17.5	17.5	17.5	17.5

1. Special lifting height available (2-stage mast : 2.5m, 2.7m, 3.0m,3.3m, 3.5m,3.6m, 3.7m,4m,4.3m, 4.5m,5m. Full Free Duplex Mast 3.0m,3.3m,3.5m,3.6m,4.0m. 3-stage mast : 4.3m, 4.5m, 4.8m,5m, 5.5m, 6m,6.5m,7.0m)
2. Attachment available. 3. The specification in the table are for standard models only . For further information please contact us. 4. Specification are subject to change without notice.

https://truckmanualshub.com/

CPC/Q(D)25T3

T3 series 2.5 forklift specification:

General	1	Manufacture					XCMG					
	2	Model					CPC25T3	CPCD25T3	CPCD25T3	CPCD25T3	CPCD25T3	CPQD25T3
	3	Power type					Diesel	Diesel	Diesel	Diesel	Diesel	Gasoline
	4	Rated capacity				Kg	2500	2500	2500	2500	2500	2500
	5	Load center				mm	500	500	500	500	500	500
Characteristics & Dimensions	6	Lift height			B	mm	3000	3000	3000	3000	3000	3000
	7	Free lift height			E	mm	120	120	120	120	120	120
	8	Fork size		L×W×T	J/W/T	mm	1070×120×40	1070×120×40	1070×120×40	1070×120×40	1070×120×40	1070×120×40
	9	Mast tilt range		F/R	F/K (°)	deg	6/10	6/10	6/10	6/10	6/10	6/10
	10	Fork overhang(wheel center to fork face)			K	mm	481	481	481	481	481	481
	11	Rear overhang			M	mm	500	500	500	500	500	500
	12	Overall dimensions	Length to face of fork		Y	mm	2580	2580	2580	2580	2580	2580
	13		Overall width		Q	mm	1150	1150	1150	1150	1150	1150
	14		Mast lowered height		C	mm	2050	2050	2050	2050	2050	2050
	15		Mast extended height		A	mm	4200	4200	4200	4200	4200	4200
	16		Overhead guard height		P	mm	2160	2160	2160	2160	2160	2160
	17	Turning radius(outsude)			R	mm	2240	2240	2240	2240	2240	2240
Performance	18	Speed	Travel (No load)			Km/h	8/20	20	20	20	20	20
	19		Lifting (Full load)			mm/sec	360	360	360	360	360	360
	20		Lowering (Full load)			mm/sec	400	400	400	400	400	400
	21	Max.Drawbar Pull (Full load)				N	14500	14500	14500	14500	14500	14500
	22	Max.Gradeability (Full load)				%	20	20	20	20	20	20
Chassis	23	Tyres		Front		mm	700-12-12PR	700-12-12PR	700-12-12PR	700-12-12PR	700-12-12PR	700-12-12PR
	24			Rear		mm	600-9-10PR	600-9-10PR	600-9-10PR	600-9-10PR	600-9-10PR	600-9-10PR
	25	Tread		Font	U	mm	970	970	970	970	970	970
	26			Rear	V	mm	970	970	970	970	970	970
	27	Wheelbase			L	mm	1600	1600	1600	1600	1600	1600
	28	Ground clearance	Lowest			mm	135/120	135/120	135/120	135/120	135/120	135/120
	29		Wheelbase center			mm	160/145	160/145	160/145	160/145	160/145	160/145
Weight	30	Self weight				Kg	3770	3770	3770	3770	3770	3770
	31	Weight Distribution	Full load	Front		Kg	5480	5480	5480	5480	5480	5480
	32			Rear		Kg	790	790	790	790	790	790
	33		No load	Front		Kg	1410	1410	1410	1410	1410	1410
	34			Rear		Kg	2360	2360	2360	2360	2360	2360
Power & transmission	35	Battery	Voltage/Capacity(20HR)			V/Ah	12/80	12/80	12/60	12/60	12/60	12/60
	36	Engine	Modal				C490BPG-25	C490BPG-25	S4S	C240	TD27	K25
	37		Manufacture				CHINA	CHINA	Mitsubishi	ISUZU	GCT	Nissan
	38		Rated output/r.p.m			kw	36.8/2650	36.8/2650	35.3/2250	34.5/2500	38.5/2300	37.4/2300
	39		Rated torque/r.p.m			N.m	156/1700-1900	156/1700-1900	166/1700	139/1800	160/2300	176.5/1600
	40		No.of cylinder				4	4	4	4	4	4
	41		Bore×Stroke			mm	90×105	90×105	94×120	86×102	96/92	89×100
	42		Displacement			cc	2670	2670	3331	2369	2663	2488
	43		Emission standard				EURⅢ	EURⅢ	EURⅢ	EURⅢ	/	/
	44		Fuel tank capacity			L	60	60	60	60	60	60
	45	Transmissions	Manufacture				CHINA	CHINA	CHINA	CHINA	CHINA	CHINA
	46		Type				Mechanical	Powershift	Powershift	Powershift	Powershift	Powershift
	47		Stage	FWD/RVS			2/2	2/2	1/1	1/1	1/1	1/1
	48	Operating pressure				Mpa	17.5	17.5	17.5	17.5	17.5	17.5

1. Special lifting height available (2-stage mast : 2.5m, 2.7m, 3.0m,3.3m, 3.5m,3.6m, 3.7m,4m,4.3m, 4.5m,5m. Full Free Duplex Mast 3.0m,3.3m,3.5m,3.6m,4.0m. 3-stage mast : 4.3m, 4.5m, 4.8m,5.0m, 5.5m, 6m,6.5m,7.0m)
2. Attachment available. 3. The specification in the table are for standard models only . For further information please contact us. 4. Specification are subject to change without notice.

CPC/Q(D)30T3

https://truckmanualshub.com/

T3 series 3.0 forklift specification:

General	1	Manufacture					XCMG					
	2	Model					CPC30T3	CPCD30T3	CPCD30T3	CPCD30T3	CPCD30T3	CPQD30T3
	3	Power type					Diesel	Diesel	Diesel	Diesel	Diesel	Gasoline
	4	Rated capacity				Kg	3000	3000	3000	3000	3000	3000
	5	Load center				mm	500	500	500	500	500	500
Characteristics & Dimensions	6	Lift height			B	mm	3000	3000	3000	3000	3000	3000
	7	Free lift height			E	mm	120	120	120	120	120	120
	8	Fork size		L×W×T	J/W/T	mm	1070×125×45	1070×125×45	1070×125×45	1070×125×45	1070×125×45	1070×125×45
	9	Mast tilt range		F/R	F/K (°)	deg	6/10	6/10	6/10	6/10	6/10	6/10
	10	Fork overhang(wheel center to fork face)			K	mm	481	481	481	481	481	481
	11	Rear overhang			M	mm	500	500	500	500	500	500
	12	Overall dimensions	Length to face of fork		Y	mm	2710	2710	2710	2710	2710	2710
	13		Overall width		Q	mm	1230	1230	1230	1230	1230	1230
	14		Mast lowered height		C	mm	2070	2070	2070	2070	2070	2070
	15		Mast extended height		A	mm	4210	4210	4210	4210	4210	4210
	16		Overhead guard height		P	mm	2190	2190	2190	2190	2190	2190
	17	Turning radius(outsude)			R	mm	2500	2500	2500	2500	2500	2500
Performance	18	Speed	Travel (No load)			Km/h	8/20	20	20	20	20	20
	19		Lifting (Full load)			mm/sec	400	400	400	400	400	400
	20		Lowering (Full load)			mm/sec	400	400	400	400	400	400
	21	Max.Drawbar Pull (Full load)				N	20000	21000	21000	21000	21000	21000
	22	Max.Gradeability (Full load)				%	20	20	20	20	20	20
Chassis	23	Tyres		Front		mm	28×9-15-14PR	28×9-15-14PR	28×9-15-14PR	28×9-15-14PR	28×9-15-14PR	28×9-15-14PR
	24			Rear		mm	6.50-10-10PR	6.50-10-10PR	6.50-10-10PR	6.50-10-10PR	6.50-10-10PR	6.50-10-10PR
	25	Tread		Font	U	mm	1010	1010	1010	1010	1010	1010
	26			Rear	V	mm	980	980	980	980	980	980
	27	Wheelbase			L	mm	1750	1750	1750	1750	1750	1750
	28	Ground clearance	Lowest			mm	150/120	150/120	150/120	150/120	150/120	150/120
	29		Wheelbase center			mm	170/150	170/150	170/150	170/150	170/150	170/150
Weight	30	Self weight				Kg	4120	4120	4120	4120	4120	4120
	31	Weight Distribution	Full load	Front		Kg	6420	6420	6420	6420	6420	6420
	32			Rear		Kg	700	700	700	700	700	700
	33		No load	Front		Kg	1720	1720	1720	1720	1720	1720
	34			Rear		Kg	2400	2400	2400	2400	2400	2400
Power & transmission	35	Battery	Voltage/Capacity(20HR)			V/Ah	12/80	12/80	12/60	12/60	12/60	12/60
	36	Engine	Modal				C490BPG-25	A498BT1-39	S4S	C240	TD27	K25
	37		Manufacture				CHINA	CHINA	Mitsubishi	ISUZU	GCT	Nissan
	38		Rated output/r.p.m			kw	36.8/2650	36.8/2400	35.3/2250	34.5/2500	38.5/2300	37.4/2300
	39		Rated torque/r.p.m			N.m	156/1700-1900	186/1600-1800	166/1700	139/1800	160/2300	176.5/1600
	40		No.of cylinder				4	4	4	4	4	4
	41		Bore×Stroke			mm	90×105	95×105	94×120	86×102	96/92	89×100
	42		Displacement			cc	2670	2980	3331	2369	2663	2488
	43		Emission standard				EURⅢ	EURⅢ	EURⅢ	EURⅢ	/	/
	44		Fuel tank capacity			L	60	70	70	70	60	70
	45	Transmissions	Manufacture				CHINA	CHINA	CHINA	CHINA	CHINA	CHINA
	46		Type				Mechanical / Powershift	Mechanical / Powershift	Powershift	Powershift	Powershift	Powershift
	47		Stage	FWD/RVS			2/2	2/2	1/1	1/1	1/1	1/1
	48	Operating pressure				Mpa	17.5	17.5	17.5	17.5	17.5	17.5

1. Special lifting height available (2-stage mast : 2.5m, 2.7m, 3.0m,3.3m, 3.5m,3.6m, 3.7m,4m,4.3m, 4.5m,5m. Full Free Duplex Mast 3.0m,3.3m,3.5m,3.6m,4.0m. 3-stage mast : 4.3m, 4.5m, 4.8m,5m, 5.5m, 6m,6.5m,7.0m)
2. Attachment available. 3. The specification in the table are for standard models only . For further information please contact us. 4. Specification are subject to change without notice.

https://truckmanualshub.com/

CPC/Q(D)35T3

T3 series 3.5 forklift specification:

General	1	Manufacture					XCMG				
	2	Model					CPC35T3	CPCD35T3	CPCD35T3	CPCD35T3	CPQD35T3
	3	Power type					Diesel	Diesel	Diesel	Diesel	Gasoline
	4	Rated capacity				Kg	3500	3500	3500	3500	3500
	5	Load center				mm	500	500	500	500	500
Characteristics & Dimensions	6	Lift height			B	mm	3000	3000	3000	3000	3000
	7	Free lift height			E	mm	120	120	120	120	120
	8	Fork size		L×W×T	J/W/T	mm	1070×125×50	1070×125×50	1070×125×50	1070×125×50	1070×125×50
	9	Mast tilt range		F/R	F/K (°)	deg	6/10	6/10	6/10	6/10	6/10
	10	Fork overhang(wheel center to fork face)			K	mm	481	481	481	481	481
	11	Rear overhang			M	mm	550	550	550	550	550
	12	Overall dimensions	Length to face of fork		Y	mm	2760	2760	2760	2760	2760
	13		Overall width		Q	mm	1230	1230	1230	1230	1230
	14		Mast lowered height		C	mm	2070	2070	2070	2070	2070
	15		Mast extended height		A	mm	4210	4210	4210	4210	4210
	16		Overhead guard height		P	mm	2190	2190	2190	2190	2190
	17	Turning radius(outsude)			R	mm	2550	2550	2550	2550	2550
Performance	18	Speed	Travel (No load)			Km/h	8/20	20	20	20	20
	19		Lifting (Full load)			mm/sec	360	360	360	360	360
	20		Lowering (Full load)			mm/sec	400	400	400	400	400
	21	Max.Drawbar Pull (Full load)				N	21000	21000	21000	21000	21000
	22	Max.Gradeability (Full load)				%	20	20	20	20	20
Chassis	23	Tyres		Front		mm	28×9-15-14PR	28×9-15-14PR	28×9-15-14PR	28×9-15-14PR	28×9-15-14PR
	24			Rear		mm	6.50-10-10PR	6.50-10-10PR	6.50-10-10PR	6.50-10-10PR	6.50-10-10PR
	25	Tread		Font	U	mm	1010	1010	1010	1010	1010
	26			Rear	V	mm	980	980	980	980	980
	27	Wheelbase			L	mm	1750	1750	1750	1750	1750
	28	Ground clearance	Lowest			mm	150/120	150/120	150/120	150/120	150/120
	29		Wheelbase center			mm	170/150	170/150	170/150	170/150	170/150
Weight	30	Self weight				Kg	4400	4400	4400	4400	4400
	31	Weight Distribution	Full load	Front		Kg	7140	7140	7140	7140	7140
	32			Rear		Kg	760	760	760	760	760
	33		No load	Front		Kg	1680	1680	1680	1680	1680
	34			Rear		Kg	2720	2720	2720	2720	2720
Power & transmission	35	Battery	Voltage/Capacity(20HR)			V/Ah	12/80	12/80	12/60	12/60	12/60
	36	Engine	Modal				C490BPG-25	A498BT1-39	S4S	TD27	K25
	37		Manufacture				CHINA	CHINA	Mitsubishi	GCT	Nissan
	38		Rated output/r.p.m			kw	36.8/2650	36.8/2400	35.3/2250	38.5/2300	37.4/2300
	39		Rated torque/r.p.m			N.m	156/1700-1900	186/1600-1800	166/1700	160/2300	176.5/1600
	40		No.of cylinder				4	4	4	4	4
	41		Bore×Stroke			mm	90×105	95×105	94×120	96/92	89×100
	42		Displacement			cc	2670	2980	3331	2663	2488
	43		Emission standard				EURIII	EURIII	EURIII	/	/
	44		Fuel tank capacity			L	60	70	70	60	70
	45	Transmissions	Manufacture				CHINA	CHINA	CHINA	CHINA	CHINA
	46		Type				Mechanical / Powershift	Mechanical / Powershift	Powershift	Powershift	Powershift
	47		Stage	FWD/RVS			2/2	2/2	1/1	1/1	1/1
	48	Operating pressure				Mpa	17.5	17.5	17.5	17.5	17.5

1. Special lifting height available (2-stage mast : 2.5m, 2.7m, 3.0m,3.3m, 3.5m,3.6m, 3.7m,4m,4.3m, 4.5m,5m. Full Free Duplex Mast 3.0m,3.3m,3.5m,3.6m,4.0m. 3-stage mast : 4.3m, 4.5m, 4.8m,5m, 5.5m, 6m,6.5m,7.0m)
2. Attachment available. 3. The specification in the table are for standard models only . For further information please contact us. 4. Specification are subject to change without notice.

https://truckmanualshub.com/

Mast Option

2.0~2.5t T3 series mast: (pneumatic)

Tpye	Model	Max.fork height	Overall height			Free lift		Front Overhang		Tilt range		Capacity			
			Lowered	Extended		Without backrest	With backrest			FWD	BWD	Load capacity at 500 mm			
				Without backrest	With backrest							Single tire		Double tire	
												2.0t	2.5t	2.0t	2.5t
		mm	mm	mm	mm	mm	mm	mm	mm	Deg	Deg	kg	kg	kg	kg
Wide view mast	2W200	2000	1555	2740	3420	120	120	476	476	6	10	2000	2500	2000	2500
	2W250	2500	1805	3040	3720	120	120	476	476	6	10	2000	2500	2000	2500
	2W270	2700	1905	3240	3920	120	120	476	476	6	10	2000	2500	2000	2500
	2W300	3000	2055	3540	4220	120	120	476	476	6	10	2000	2500	2000	2500
	2W330	3300	2205	3690	4370	120	120	476	476	6	10	2000	2500	2000	2500
	2W350	3500	2305	3890	4570	120	120	476	476	6	10	2000	2500	2000	2500
	2W360	3600	2355	3990	4670	120	120	476	476	6	10	2000	2500	2000	2500
	2W400	4000	2605	4040	4720	120	120	476	476	6	10	1900	2300	2000	2500
	2W430	4300	2755	4340	5020	120	120	476	476	6	6	1800	2100	1950	2450
	2W450	4500	2855	4290	4970	120	120	476	476	6	6	1700	2000	1900	2400
Wide view full 2-stage mast	2F250	2500	1785	2090	2770	1210	560	476	476	6	10	2000	2500	2000	2500
	2F270	2700	1885	2290	2970	1310	660	476	476	6	10	2000	2500	2000	2500
	2F300	3000	2035	2590	3270	1460	810	476	476	6	10	2000	2500	2000	2500
	2F330	3300	2185	3840	4520	1610	960	476	476	6	10	2000	2500	2000	2500
	2F360	3600	2335	4140	4820	1760	1110	476	476	6	10	2000	2500	2000	2500
	2F400	4000	2585	4540	5220	2060	1410	476	476	6	10	1900	2300	2000	2500
Wide view full 3-stage mast	3F430	4300	2035	4880	5560	1360	730	490	490	6	6	1700	2000	1900	2400
	3F450	4500	2115	5040	5720	1460	810	490	490	6	6	1600	1900	1800	2300
	3F480	4800	2220	5345	6020	1565	915	490	490	6	6	1500	1700	1700	2100
	3F500	5000	2305	5540	6220	1610	960	490	490	6	6	1400	1600	1600	2000
	3F550	5500	2555	6120	6800	1770	1120	490	490	3	6	1050	1200	1500	1800
	3F600	6000	2805	6540	7220	2020	1370	490	490	3	6	700	800	1400	1600

Note:1、With sideshifter minus 150Kg, with integral sideshifter minus 100Kg.

3.0-3.5t T3 series mast: (pneumatic)

Tpye	Model	Max.fork height	Overall height			Free lift		Front Overhang		Tilt range		Capacity			
			Lowered	Extended		Without backrest	With backrest			FWD	BWD	Load capacity at 500 mm			
				Without backrest	With backrest							Single tire	Double tire	Single tire	Double tire
								3.0t	3.5t			3.0t	3.0t	3.5t	3.5t
		mm	mm	mm	mm	mm	mm	mm	mm	Deg	Deg	kg	kg	kg	kg
Wide view mast	2W200	2000	1570	2570	3250	120	120	481	486	6	10	3000	3000	3500	3500
	2W250	2500	1820	3070	3750	120	120	481	486	6	10	3000	3000	3500	3500
	2W270	2700	1920	3270	3950	120	120	481	486	6	10	3000	3000	3500	3500
	2W300	3000	2070	3570	4250	120	120	481	486	6	10	3000	3000	3500	3500
	2W330	3300	2220	3690	4370	120	120	481	486	6	10	3000	3000	3500	3500
	2W350	3500	2320	3890	4570	120	120	481	486	6	10	3000	3000	3500	3500
	2W360	3600	2370	3990	4670	120	120	481	486	6	10	3000	3000	3500	3500
	2W400	4000	2620	4040	4720	120	120	481	486	6	10	2850	3000	3250	3500
	2W430	4300	2770	4340	5020	120	120	481	486	6	6	2700	2900	3000	3400
	2W450	4500	2870	4290	4970	120	120	481	486	6	6	2550	2850	2850	3350
wide view full 2-stage mast	2F250	2500	1805	2220	2900	1210	560	481	486	6	10	3000	3000	3500	3500
	2F270	2700	1905	2320	3000	1310	660	481	486	6	10	3000	3000	3500	3500
	2F300	3000	2055	2620	3300	1460	810	481	486	6	10	3000	3000	3500	3500
	2F330	3300	2205	3870	4550	1610	960	481	486	6	10	3000	3000	3500	3500
	2F360	3600	2355	4020	4700	1760	1110	481	486	6	10	3000	3000	3500	3500
	2F400	4000	2605	4420	5100	2060	1410	481	486	6	10	2850	3000	3250	3500
wide view full 3-stage mast	3F430	4300	2055	4910	5570	1360	730	495	500	6	6	2550	2850	2850	3350
	3F450	4500	2135	5070	5750	1460	810	495	500	6	6	2400	2700	2700	3200
	3F480	4800	2240	5375	6050	1565	915	495	500	6	6	2250	2550	2450	2950
	3F500	5000	2325	5570	6250	1610	960	495	500	6	6	1650	2250	2300	2800
	3F550	5500	2575	6150	6830	1770	1120	495	500	3	6	1800	2250	1800	2550
	3F600	6000	2825	6570	7250	2020	1370	495	500	3	6	1200	2100	1300	2300

Note:1、With sideshifter minus 200Kg, with integral sideshifter minus 150Kg.

https://truckmanualshub.com/

RATED CAPACITIES AND LOAD CENTERES GRAPH

CPC/Q(D)20T3

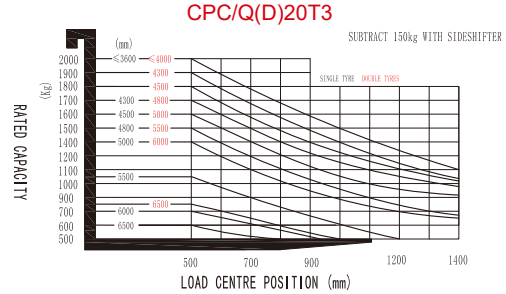

RATED CAPACITIES AND LOAD CENTERES GRAPH

CPC/Q(D)30T3

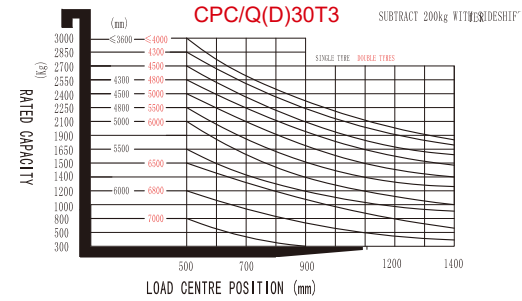

RATED CAPACITIES AND LOAD CENTERES GRAPH

CPC/Q(D)25T3

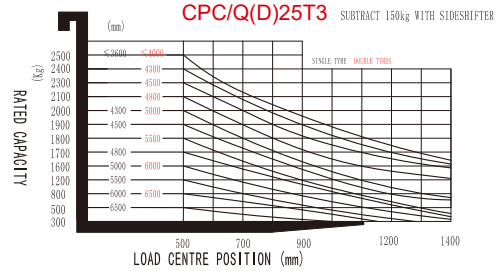

RATED CAPACITIES AND LOAD CENTERES GRAPH

CPC/Q(D)35T3

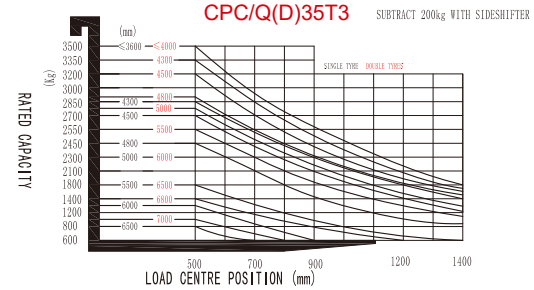

Option

	Options	20T3	25T3	30T3	35T3
1	Fork length	○	○	○	○
2	Fork extension	○	○	○	○
3	Folded fork	○	○	○	○
4	Imported diesel engine	○	○	○	○
5	Import Gasoline Engine	○	○	○	○
8	LPG system	○	○	○	○
9	High exhaust	○	○	○	○
10	Double air filtration	○	○	○	○
11	Solid rubber tire	○	○	○	○
12	No marking solid tire	○	○	○	○
14	Overhead guard	○	○	○	○
15	Mast options	○	○	○	○
16	Attachments	○	○	○	○
17	Integrated side shift	○	○	○	○
19	Cockpit	●	●	●	●
20	Heater	○	○	○	○
21	Front windshield with wiper	○	○	○	○
22	Rear windshield with wiper	○	○	○	○
23	Simple cabin room	○	○	○	○
24	LED lights	○	○	○	○
25	Fire extinguisher	○	○	○	○
26	Suspension seat	○	○	○	○
27	Seat switch	○	○	○	○
28	Warning light	○	○	○	○
29	Insulation mat	○	○	○	○
30	Double front tyre	○	○	○	○
31	Front work light	●	●	●	●
32	Rear working LED light	○	○	○	○
33	OPS system	○	○	○	○
34	fan	○	○	○	○

Note: ● standard ○ option — NA

https://truckmanualshub.com/

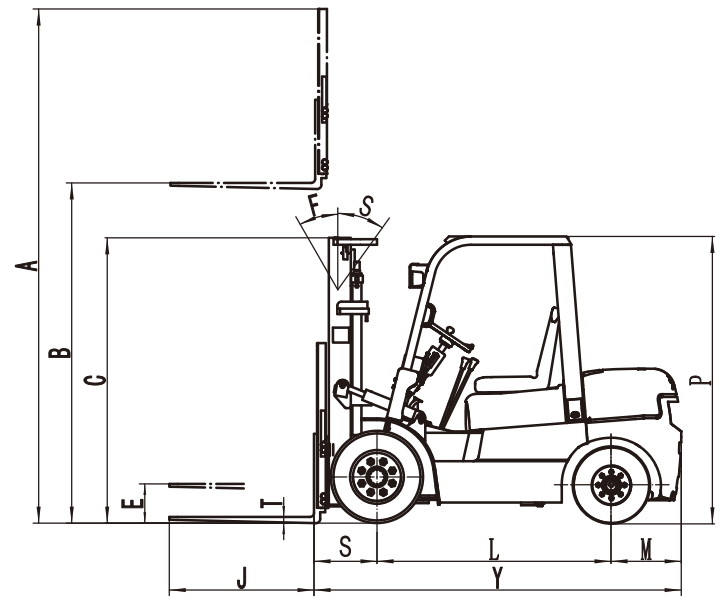

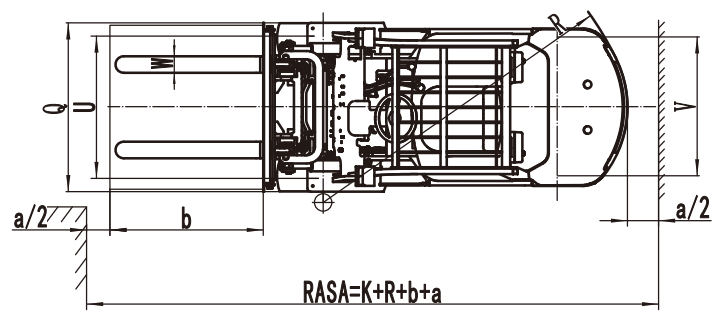

https://truckmanualshub.com/

XCMG | Machmall.com

XCMG | Machmall.com

Machmall.com is an electromechanical product platform officially launched by XCMG, aiming to provide global customers with a complete set of high-quality construction machinery solutions and supporting equipment.

Xuzhou Construction Machinery Group Co., Ltd. (XCMG Group), founded in 1943, is the fourth largest worldwide construction machinery manufacturer and the largest in China with products covering 183 countries and regions.

XCMG have 12 complete solutions:Crane lifting,Mining Construction,Earth-moving Solutions,Road Machinery,Concrete Equipment,Tunnel and Underground Space Construction,Mobile Elevating Work Platform (MEWP),Piling and Non-excavation Equipment,Transportation Equipment, Environmental Sanitation Equipment,Firefighting,Safety and Emergency Rescue

徐工徐工，助您成功

XCMG for your success

XCMG

https://www.machmall.com/

machmall@xcmg.com

008618652183963
86-516 8773 9797