https://truckmanualshub.com/

TRACTOR
AGRALE 7215

FOR THOSE WHO THINK BIG

Tractor 7215 is ideal for those looking for versatility, performance and economy. Suitable for working in crops of Grains, Sugar Cane, Forestry, etc. From simple operation and maintenance, it is the right tractor for those who like to put cost-benefit in the bottom line

AGRALE

www.agrale.com.br
agraleSA

- Prepared for precision farming
- Better gear scaling of the category
- 220 hp MWM engine
- Greater economy of fuel per worked hour

AGRALUB
PARTS & SERVICES
WARRANTY

https://truckmanualshub.com/

TRACTOR AGRALE 7215

Generated on 17/07/2022 12:02:09

ENGINE	
Brand / model	MWM Maxx Force 6.0A
No. of Cylinders	06 Vertical in line / 6.000 cm
Aspiration	Turbocompressor and Aftercooler
Power	220 cv (158,1 kW) @ 2.300 rpm
Maximum Power in PTO	NI
Maximum Torque	74,4 kgf.m (730 N.m) @ 1.500 rpm
DRIVING TRANSMISSION	
Type	Synchronized Manual
No. of Gears	12 Front /4 Reverse
Differential lock	Electro-hydraulic drive
Front axle	Limited slip center differential (4WD)
CLUTCH	
Type	Single dry disc
Drive	Mechanic
POWER TAKEOFF	
Drive	Electro-hydraulic
Type / drive	Independent
Nominal Speed	540 @ 2033 engine rpm and 1000 @ 2077 engine rpm
HYDRAULIC SYSTEM	
Pressure	180 kgf/cm
Maximum Flow	192 L/min. @ 2000 engine rpm
Remote control	Continuous Flow Valves (4) Remote Control (6)
Hitch	NI
Lift capacity	NA

BRAKES	
Service Brake	Wet disc oil bath
Parking Brake	Mechanical actuation
STEERING WHEEL	
Type	Hydrostatic / Telescopic
WHEELSETS	
Standard Front Tires	18.4 26R1
Standard Rear Tires	30.5L 32R1
Optional Weelsets	20.8 x 38 R1 (Double Wheel)
ELECTRIC SYSTEM	
Battery	12 V 135 Ah
Alternator	14 V 90 A
CAPACITIES	
Fuel Tank	460 L
WEIGHTS	
Shipping weight	8.430 kg
Operating weight (curb weight)	11.000 kg
Load Capacity	NA
OPTIONAL ITEMS	
Obs.: Factory preparation for Precision Agriculture.	

STANDARD 12X4
(MOTOR A 2300RPM - PNEUS STANDARD)

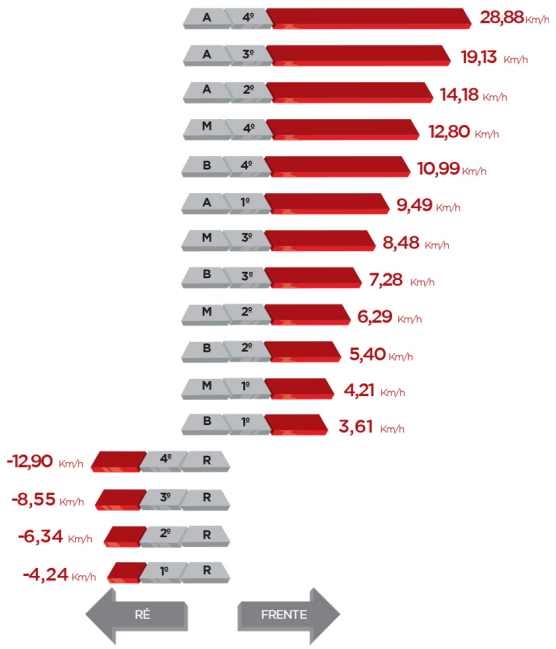

VELOCIDADES (KM/H)

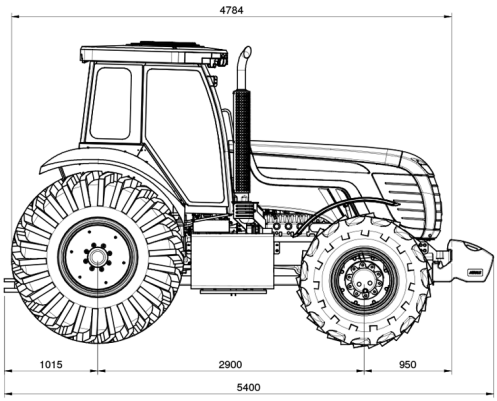

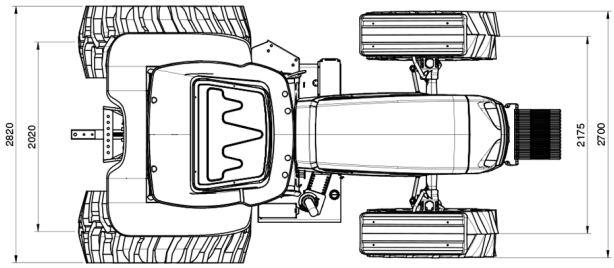

AGRALE

This literature is for the product information and ilustration only, and Agrale, or the Bidder, are able to offer its products with characteristics or different optional informed here in, valid for both, as final document for the offer, the Commercial Proposed celebrated by the legal representative of the company.

www.agrale.com.br
agraleSA