https://truckmanualshub.com/

Kubota

U.S.A. : **KUBOTA TRACTOR CORPORATION**
3401 Del Amo Blvd., Torrance, CA 90503, U.S.A.
Telephone : (310)370-3370
Western Division : 1175 S. Guild Avc., Lodi, CA 95240
Telephone : (209)334-9910
Central Division : 14855 FAA Blvd., Fort Worth, TX 76155
Telephone : (817)571-0900
Northern Division : 6300 at One Kubota Way, Groveport, OH 43125
Telephone : (614)835-1100
Southeast Division : 1025 Northbrook Parkway, Suwanee, GA 30024
Telephone : (770)995-8855

Canada : **KUBOTA CANADA LTD.**
5900 14th Avenue, Markham, Ontario, L3S 4K4, Canada
Telephone : (905)294-7477

France : **KUBOTA EUROPE S.A.S**
19-25, Rue Jules Vercruysse, Z.I. BP88, 95101 Argenteuil Cedex, France
Telephone : (33)1-3426-3434

Italy : **KUBOTA EUROPE S.A.S Italy Branch**
Via Grandi, 29 20068 Peschiera Borrome (MI) Italy
Telephone : (39)02-51650377

Germany : **KUBOTA (DEUTSCHLAND) GmbH**
Senefelder Str. 3-5 63110 Rodgau /Nieder-Roden, Germany
Telephone : (49)6106-873-0

U.K. : **KUBOTA (U.K.) LTD.**
Dormer Road, Thame, Oxfordshire, OX9 3UN, U.K.
Telephone : (44)1844-214500

Spain : **KUBOTA ESPAÑA S.A.**
Avenida Recomba No.5, Poligno Industrial la Laguna, Leganes, 28914 (Madrid) Spain
Telephone : (34)91-508-6442

Australia : **KUBOTA TRACTOR AUSTRALIA PTY LTD.**
25-29 Permas Way, Truganina, VIC 3029, Australia
Telephone : (61)-3-9394-4400

Malaysia : **SIME KUBOTA SDN. BHD.**
No.3 Jalan Sepadu 25/123 Taman Perindustrian Axis,
Seksyen 25, 40400 Shah Alam, Selangor Darul Ehsan Malasia
Telephone : (60)3-736-1388

Philippines : **KUBOTA AGRO-INDUSTRIAL MACHINERY PHILIPPINES, INC.**
155 Panay Avenue, South Triangle Homes, 1103 Quezon City, Philippines
Telephone : (63)2-9201071

Taiwan : **SHIN TAIWAN AGRICULTURAL MACHINERY CO., LTD.**
16, Fengping 2nd Rd, Taliao Shiang Kaohsiung 83107, Taiwan R.O.C.
Telephone : (886)7-702-2333

Indonesia : **P.T. KUBOTA INDONESIA**
JALAN. Setyabudi 279, Semarang, Indonesia
Telephone : (62)-24-7472849

Thailand : **SIAM KUBOTA CORPORATION CO., LTD.**
101/19-24 Moo 20, Navanakorn Industrial Estate, Tambon Khlongnueng, Amphur Khlongluang,
Pathumthani 12120, THAILAND
Telephone : (66)2-909-0300

Korea : **KUBOTA KOREA CO., LTD.**
106-24 Mongsan-Ri, Mankyung-Up, Kimje-City, Chonrapuk-Do, KOREA
Telephone : (82)-63-544-5822

India : **KUBOTA AGRICULTURAL MACHINERY INDIA PVT. LTD.**
Regus, Level 2 Altius, Olympia Tech Park, No.1 SIDCO Industrial Estate, Guindy, Chennai 600032, TN, India
Telephone : (91)-44-4299-4237

Vietnam : **KUBOTA VIETNAM CO., LTD.**
Lot B-3A2-CN, My Phuoc 3 Industrial Park, Ben Cat District, Binh Duong Province, Vietnam
Telephone : (84)-650-3577-507

KUBOTA Corporation

English (Australia)
Code No. 6C265-6311-1

B2630·B3030·B3000

OPERATOR'S MANUAL

KUBOTA TRACTOR

MODELS B2630·B3030·B3000

1AGAEDPAP0010

READ AND SAVE THIS MANUAL

Kubota

PRINTED IN JAPAN

© KUBOTA Corporation 2011

Downloaded from www.Manualslib.com manuals search engine

https://truckmanualshub.com/

ABBREVIATION LIST

Abbreviations	Definitions
2WD	Two Wheel Drive
4WD	Four Wheel Drive
API	American Petroleum Institute
ASABE	American Society of Agricultural and Biological Engineers, USA
ASTM	American Society for Testing and Materials, USA
DIN	Deutsches Institut für Normung, GERMANY
DT	Dual Traction [4WD]
fpm	Feet Per Minute
GST	Glide Shift Transmission
Hi-Lo	High Speed-Low Speed
HST	Hydrostatic Transmission
m/s	Meters Per Second
PTO	Power Take Off
RH/LH	Right-hand and left-hand sides are determined by facing in the direction of forward travel
ROPS	Roll-Over Protective Structures
rpm	Revolutions Per Minute
r/s	Revolutions Per Second
SAE	Society of Automotive Engineers, USA
SMV	Slow Moving Vehicle

KUBOTA Corporation is ···

Since its inception in 1890, KUBOTA Corporation has grown to rank as one of the major firms in Japan.

To achieve this status, the company has through the years diversified the range of its products and services to a remarkable extent, until today, 19 plants and 16,000 employees produce over 1,000 different items, large and small.

All these products and all the services which accompany them, however, are unified by one central commitment. KUBOTA makes products which, taken on a national scale, are basic necessities. Products which are indispensable, products intended to help individuals and nations fulfill the potential inherent in their environment. For KUBOTA is the Basic Necessities Giant.

This potential includes water supply, food from the soil and from the sea, industrial development, architecture and construction, transportation.

Thousands of people depend on KUBOTA's know-how, technology, experience and customer service. You too can depend on KUBOTA.

B2630/B3030/B3000
AP . K . 1 - 1 . 0 . AK

Downloaded from www.Manualslib.com manuals search engine

https://truckmanualshub.com/

UNIVERSAL SYMBOLS

As a guide to the operation of your tractor, various universal symbols have been utilized on the instruments and controls. The symbols are shown below with an indication of their meaning.

- Safety Alert Symbol
- Diesel Fuel
- Fuel-Level
- Engine-Rotational Speed
- Hourmeter/Elapsed Operating Hours
- Engine Coolant-Temperature
- Parking Brake
- Battery Charging Condition
- Engine Oil-Pressure
- Turn Signal
- Engine-Stop
- Engine-Run
- Diesel Preheat/Glow Plugs(Low Temperature Start Aid)
- Starter Control
- Power Take-Off Control-Off Position (Disengaged)
- Power Take-Off Control-On Position (Engaged)
- Differential Lock
- Position Control-Raised Position
- Position Control-Lowered Position
- Draft Control-Shallow Position
- Draft Control-Deep Position
- 3-Point Lowering Speed Control
- Remote Cylinder-Retract
- Remote Cylinder-Extend
- Steering Wheel-Tilt Control
- Hazard Warning Lights
- Headlight
- Four-Wheel Drive-On
- Four-Wheel Drive-Off
- Fast
- Slow
- Creep
- Read Operator's Manual
- Tractor-Forward Movement-Overhead View of Machine
- Tractor-Rearward Movement-Overhead View of Machine
- Engine Speed Control

Downloaded from www.Manualslib.com manuals search engine

https://truckmanualshub.com/

FOREWORD

You are now the proud owner of a KUBOTA Tractor. This tractor is a product of KUBOTA quality engineering and manufacturing. It is made of fine materials and under a rigid quality control system. It will give you long, satisfactory service. To obtain the best use of your tractor, please read this manual carefully. It will help you become familiar with the operation of the tractor and contains many helpful hints about tractor maintenance. It is KUBOTA's policy to utilize as quickly as possible every advance in our research. The immediate use of new techniques in the manufacture of products may cause some small parts of this manual to be outdated. KUBOTA distributors and dealers will have the most up-to-date information. Please do not hesitate to consult with them.

SAFETY FIRST

This symbol, the industry's "Safety Alert Symbol", is used throughout this manual and on labels on the machine itself to warn of the possibility of personal injury. Read these instructions carefully. It is essential that you read the instructions and safety regulations before you attempt to assemble or use this unit.

DANGER : Indicates an imminently hazardous situation which, if not avoided, will result in death or serious injury.

WARNING : Indicates a potentially hazardous situation which, if not avoided, could result in death or serious injury.

CAUTION : Indicates a potentially hazardous situation which, if not avoided, may result in minor or moderate injury.

IMPORTANT : Indicates that equipment or property damage could result if instructions are not followed.

NOTE : Gives helpful information.

Downloaded from www.Manualslib.com manuals search engine

https://truckmanualshub.com/

CONTENTS

⚠SAFE OPERATION 1
SERVICING OF TRACTOR 1
SPECIFICATIONS 2
SPECIFICATION TABLE 2
TRAVELING SPEEDS 4
IMPLEMENT LIMITATIONS 5
INSTRUMENT PANEL AND CONTROLS 7
PRE-OPERATION CHECK 10
DAILY CHECK 10
OPERATING THE ENGINE 11
STARTING THE ENGINE 11
Block Heater (Option) 13
STOPPING THE ENGINE 13
WARMING UP 14
Warm-up Transmission Oil at Low Ambient Temperatures 14
JUMP STARTING 14
OPERATING THE TRACTOR 16
OPERATING NEW TRACTOR 16
Do not Operate the Tractor at Full Speed for the First 50 Hours 16
Changing Lubricating Oil for New Tractors 16
OPERATING FOLDABLE ROPS 16
To Fold the ROPS 16
To Raise the ROPS to Upright Position 17
Adjustment of Foldable ROPS 18
STARTING 18
Operator's Seat 18
Seat Belt 19
Tilt Steering Adjustment 19
Head Light / Turn Signal / Hazard Light Switch 20
Horn Button 20
Brake Pedals (Right and Left) 21
Range Gear Shift Lever (L-M-H) 22
Front Wheel Drive Lever 22
Hand Throttle Lever 23
Parking Brake Lever 23
Speed Control Pedal 23
Cruise Control Lever 24
STOPPING 25
Stopping 25
CHECK DURING DRIVING 25
Immediately Stop the Engine if: 25
Easy Checker (TM) 25
Fuel Gauge 26

Downloaded from www.Manualslib.com manuals search engine

https://truckmanualshub.com/

Coolant Temperature Gauge 26
Hourmeter / Tachometer 26
PARKING 27
Parking 27
OPERATING TECHNIQUES 27
Differential Lock 27
Operating the Tractor on a Road 28
Operating on Slopes or Rough Terrain 28
Directions for Use of Power Steering 28

PTO 29
PTO OPERATION 29
PTO Select Lever 29
PTO Clutch Lever 30
PTO shaft Cover and Shaft Cap 30
Stationary PTO 31

THREE-POINT HITCH & DRAWBAR 32
3-POINT HITCH 33
Selecting the holes of lifting rods and lower links 33
Selecting the Top Link Mounting Holes 33
Drawbar 33
Lifting Rod (Right, Ratchet type) 33
Top Link 33
Telescopic Stabilizers 34
Telescopic Lower Links 34
DRAWBAR 34
Adjusting Drawbar Length 34

HYDRAULIC UNIT 35
3-POINT HITCH CONTROL SYSTEM 35
Position Control 35
3-point Hitch Lowering Speed 35
AUXILIARY HYDRAULICS 35
Hydraulic Block Type Outlet 35
Hydraulic Control Unit Use Reference Chart 38

TIRES, WHEELS AND BALLAST 39
TIRES 39
Inflation Pressure 39
Dual Tires 39
WHEEL ADJUSTMENT 39
Front Wheels 39
Rear Wheels 39
Treads 40
BALLAST 41
Front Ballast 41
Rear Ballast 41

CAB OPERATION 42
DOOR AND WINDOW 42
Locking and Unlocking the Door 42
Opening the Door 42

Downloaded from www.Manualslib.com manuals search engine

Rear Window 42
WORK LIGHT 43
Work Light Switch 43
Front Work Light 43
Rear Work Light (if equipped) 43
WIPER 44
Front Wiper / Washer Switch 44
Rear Wiper Switch 44
Using the Wipers in Cold Season 44
AIR CONDITIONER 45
Airflow 45
Air Control Vent 45
Control Panel 46
Operation 47
REAR DEFOGGER 50
Electrical Outlet 50

MAINTENANCE 51
SERVICE INTERVALS 51
LUBRICANTS, FUEL AND COOLANT 54

PERIODIC SERVICE 56
HOW TO OPEN THE HOOD 56
Hood 56
Front Grille 56
Engine Side Cover 57
DAILY CHECK 57
Walk Around Inspection 57
Checking and Refueling 57
Checking Engine Oil Level 58
Checking Transmission Fluid Level 58
Checking Coolant Level 59
Cleaning Air Conditioner Condenser Screen 59
Cleaning Grill and Radiator Screen 60
Checking Brake Pedal 60
Checking Gauges, Meter and Easy Checker(TM) 60
Checking Head Light, Hazard Light etc. 60
Checking Seat Belt and ROPS 60
Checking and Cleaning of Electrical Wiring and Battery Cables 61
Checking Movable Parts 61
EVERY 50 HOURS 61
Lubricating Grease Fittings 61
Checking Engine Start System 62
Checking Wheel Bolt Torque 62
EVERY 100 HOURS 63
Checking Battery Condition 63
Changing Engine Oil 64
Cleaning Air Cleaner Primary Element 65
Cleaning Fuel Filter 65
Adjusting Fan Belt Tension 66
Adjusting Brake Pedal 66
Checking Fuel Line 67

Downloaded from www.Manualslib.com manuals search engine

https://truckmanualshub.com/

EVERY 200 HOURS 67
Replacing Engine Oil Filter 67
Checking Radiator Hose and Clamp 67
Adjusting Air-Conditioner Belt Tension 68
Cleaning the Inner Air Filter 68
Cleaning the Fresh Air Filter 69
Checking the Air conditioner Condenser 69
Checking Intake Air Line 69
Adjusting Toe-in 70
EVERY 300 HOURS 70
Changing Transmission Fluid 70
Replacing Transmission Oil Filter 71
Changing Front Axle Case Oil 72
EVERY 400 HOURS 72
Adjusting Front Axle Pivot [4WD] 72
Replacing Fuel Filter Element 72
EVERY 800 HOURS 72
Adjusting Engine Valve Clearance 72
EVERY 1500 HOURS 72
Checking Fuel Injection Nozzle Injection Pressure 72
EVERY 3000 HOURS 72
Checking Injection Pump 72
EVERY 1 YEAR 73
Replacing Air Cleaner Primary Element and Secondary Element 73
Checking the Air Conditioner Pipe and Hose 73
Checking the CAB Isolation Cushion 73
EVERY 2 YEARS 73
Flushing Cooling System and Changing Coolant 73
Anti-Freeze 74
Replacing Radiator Hose (Water pipes) 74
Replacing Fuel Hose 74
Replacing Intake Air Line 74
Replacing the Air Conditioner Hose 74
SERVICE AS REQUIRED 75
Bleeding Fuel System 75
Draining Clutch Housing Water 75
Replacing Fuse 75
Replacing Light Bulb 76
Lubricating Points 76
Adding the Washer Liquid 76
Checking the Amount of Refrigerant (gas) 76

STORAGE 78
TRACTOR STORAGE 78
REMOVING THE TRACTOR FROM STORAGE 78

TROUBLESHOOTING 79
ENGINE TROUBLESHOOTING 79

OPTIONS 80

Downloaded from www.Manualslib.com manuals search engine

https://truckmanualshub.com/

SAFE OPERATION

Careful operation is your best insurance against an accident.

Read and understand this manual carefully before operating the tractor.

All operators, no matter how much experience they may have, should read this and other related manuals before operating the tractor or any implement attached to it. It is the owner's obligation to instruct all operators in safe operation.

1. BEFORE OPERATING THE TRACTOR

1. Know your equipment and its limitations. Read this entire manual before attempting to start and operate the tractor.
2. Pay special attention to the danger, warning and caution labels on the tractor.
3. KUBOTA recommends the use of a CAB or Roll Over Protective Structures (ROPS) and seat belt in almost all applications. This combination will reduce the risk of serious injury or death, should the tractor be upset.
   If the tractor is equipped with a foldable ROPS it may be temporarily folded down only when absolutely necessary for areas with height constraints.
   (There is no operator protection provided by the ROPS in the folded position. For operator safety the ROPS should be placed in the upright and locked position and the seat belt fastened for all other operations.)
   If the CAB or ROPS is loosened or removed for any reason, make sure that all parts are reinstalled correctly before operating the tractor.
   Never modify or repair a ROPS because welding, bending, drilling, grinding, or cutting may weaken the structure.
   A damaged CAB or ROPS structure must be replaced, not repaired or revised.
   If any structural member of the CAB or ROPS is damaged, replace the entire structure at your local KUBOTA Dealer.

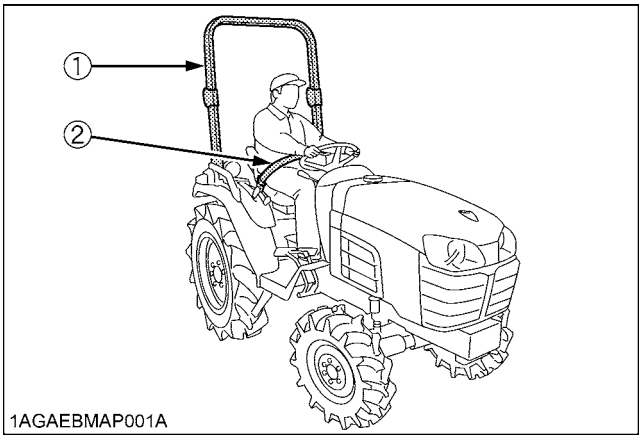

(1) ROPS
(2) Seat belt

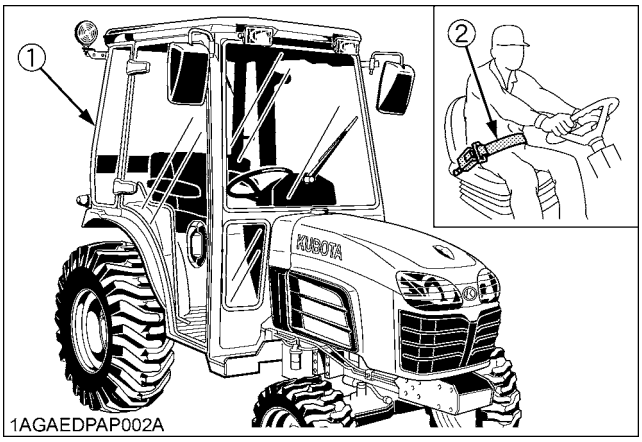

(1) CAB
(2) Seat belt

4. Always use the seat belt if the tractor has a CAB or ROPS.
   Do not use the seat belt if a foldable ROPS is down or there is no ROPS. Check the seat belt regularly and replace if frayed or damaged.
5. Do not operate tractor or any implement attached to it while under the influence of alcohol, medication, controlled substances or while fatigued.
6. Carefully check the vicinity before operating tractor or any implement attached to it. Check for overhead clearance which may interfere with a CAB or ROPS. Do not allow any bystanders around or near tractor during operation.
7. Before allowing other people to use your tractor, explain how to operate and have them read this manual before operation.

Downloaded from www.Manualslib.com manuals search engine

https://truckmanualshub.com/

8. Never wear loose, torn, or bulky clothing around tractor. It may catch on moving parts or controls, leading to the risk of an accident. Use additional safety items, e.g. hard hat, safety boots or shoes, eye and hearing protection, gloves, etc., as appropriate or required.
9. Do not allow passengers to ride on any part of the tractor at anytime. The operator must remain in the tractor seat during operation.
10. Check brakes, linkage pins and other mechanical parts for improper adjustment and wear. Replace worn or damaged parts promptly. Check the tightness of all nuts and bolts regularly. (For further details, see "MAINTENANCE" section.)
11. Keep your tractor clean. Dirt, grease, and trash build up may contribute to fires and lead to personal injury.
12. Use only implements meeting the specifications listed under "IMPLEMENT LIMITATIONS" in this manual or implements approved by KUBOTA.
13. Use proper weights on the front or rear of the tractor to reduce the risk of upsets. When using the front loader, put an implement or ballast on the 3-point hitch to improve stability. Follow the safe operating procedures specified in the implement or attachment manual.
14. Do not modify the tractor. Unauthorized modification may affect the function of the tractor, which may result in personal injury.

2. OPERATING THE TRACTOR

◆ Starting

1. Always sit in the operator's seat when starting engine or operating levers or controls. Adjust seat per instructions in the operating the tractor section. Never start engine while standing on the ground.
2. Before starting the engine, make sure that all levers (including auxiliary control levers) are in their neutral positions, that the parking brake is engaged, and that the Power Take-Off (PTO) is disengaged or "OFF".
   Fasten the seat belt if the tractor has a CAB, a fixed ROPS or a foldable ROPS in the upright and locked position.
3. Do not start engine by shorting across starter terminals or bypassing the safety start switch. Machine may start in gear and move if normal starting circuitry is bypassed.
4. Do not operate or idle engine in a non-ventilated area. Carbon monoxide gas is colorless, odorless, and deadly.
5. Check before each use that operator presence controls are functioning correctly. Test safety systems. (See "Checking Engine Start System" in "EVERY 50 HOURS" in "PERIODIC SERVICE" section.)
   Do not operate unless they are functioning correctly.

◆ Working

1. Pull only from the drawbar. Never hitch to axle housing or any other point except drawbar; such arrangements will increase the risk of serious personal injury or death due to a tractor upset.

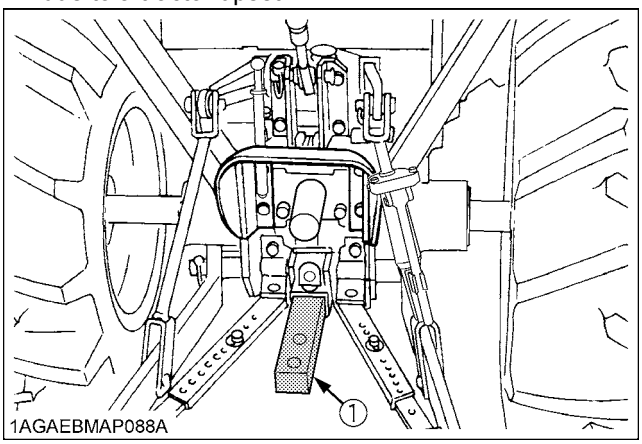

(1) Drawbar

2. Keep all shields and guards in place. Replace any that are missing or damaged.
3. Avoid sudden starts. To avoid upsets, slow down when turning, on uneven ground, and before stopping.
4. The tractor cannot turn with the differential locked and attempting to do so could be dangerous.
5. Do not operate near ditches, holes, embankments, or other ground surface features which may collapse under the tractor's weight. The risk of tractor upset is even higher when the ground is loose or wet. Tall grass can hide obstacles, walk the area first to be sure.
6. Watch where you are going at all times. Watch for and avoid obstacles. Be alert at row ends, near trees, and other obstructions.
7. When working in groups, always let the others know what you are going to do before you do it.
8. Never try to get on or off a moving tractor.

◆ Safety for children

Tragedy can occur if the operator is not alert to the presence of children. Children generally are attracted to machines and the work they do.

1. Never assume that children will remain where you last saw them.
2. Keep children out of the work area and under the watchful eye of another responsible adult.
3. Be alert and shut your machine down if children enter the work area.
4. Never carry children on your machine. There is no safe place for them to ride. They may fall off and be run over or interfere with your control of the machine.
5. Never allow children to operate the machine even under adult supervision.
6. Never allow children to play on the machine or on the implement.
7. Use extra caution when backing up. Look behind and down to make sure area is clear before moving.

Downloaded from www.Manualslib.com manuals search engine

https://truckmanualshub.com/

8. When parking your machine if at all possible park on a firm, flat and level surface; if not, park across a slope. Set the parking brake(s), lower the implements to the ground, remove the key from the ignition and lock the cab door (if equipped) and chock the wheels.

◆ Operating on slopes

Slopes are major factor related to loss-of-control and tip-over accidents, which can result in severe injury or death. All slopes require extra caution.

1. To avoid upsets, always back up steep slopes. If you cannot back up the slope or if you feel uneasy on it, do not operate on it. Stay off slopes too steep for safe operation.
2. Driving forward out of a ditch, mired condition or up a steep slope increases the risk of a tractor to be upset backward. Always back out of these situations. Extra caution is required with four-wheel drive models because their increased traction can give the operator false confidence in the tractor's ability to climb slopes.
3. Keep all movement on slopes slow and gradual. Do not make sudden changes in speed, direction or apply brake and make sudden motions of the steering wheel.
4. Avoid changing gears speed when climbing or going down a slope. If on a slope changing gears to neutral could cause loss of control.

◆ Driving the tractor on the road

1. Lock the two brake pedals together to help assure straight-line stops. Uneven braking at road speeds could cause the tractor to tip over.

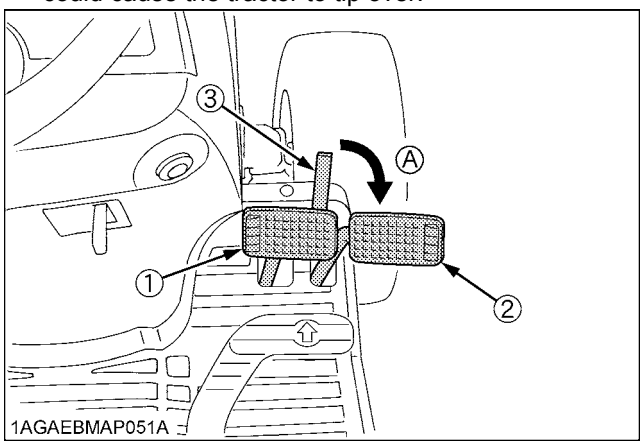

(1) Brake Pedal (LH) *(A) Whenever travelling on the road*
(2) Brake Pedal (RH)
(3) Brake Pedal Lock

2. Check the front wheel engagement. The braking characteristics are different between two and four wheel drive. Be aware of the difference and use carefully.
3. Always slow the tractor down before turning. Turning at high speed may tip the tractor over.
4. Make sure that the Slow Moving Vehicle (SMV) sign is clean and visible. Use hazard lights and turn signals as required.

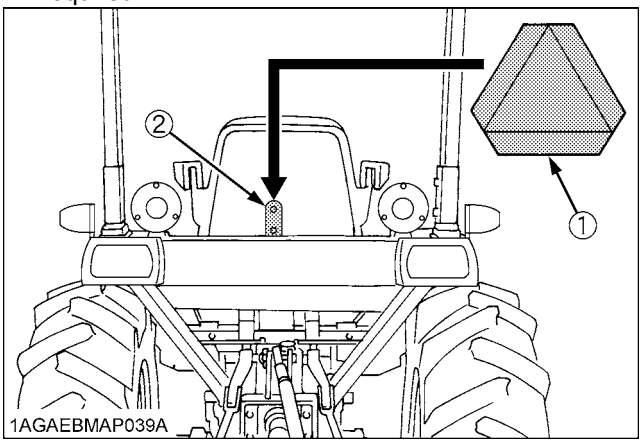

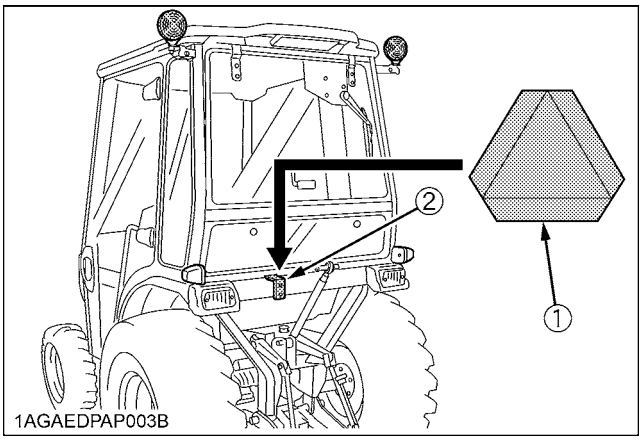

(1)SMV emblem
(2) Bracket

5. Observe all local traffic and safety regulations.
6. Turn the headlights on.
7. Drive at speeds that allow you to maintain control at all times.
8. Do not apply the differential lock while traveling at road speeds. The tractor may run out of control.
9. Avoid sudden motions of the steering wheel as they can lead to a dangerous loss of stability. The risk is especially great when the tractor is traveling at road speeds.
10. Do not operate an implement while the tractor is on the road. Lock the 3-point hitch in the raised position.

Downloaded from www.Manualslib.com manuals search engine

https://truckmanualshub.com/

11. When towing other equipment, use a safety chain and place an SMV emblem on it as well.

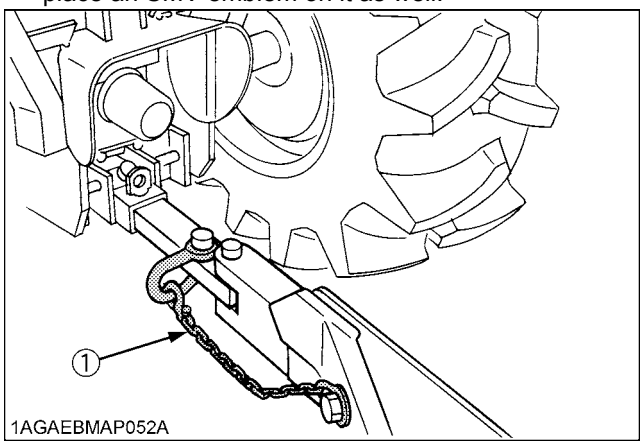

(1) Safety chain

3. PARKING THE TRACTOR

1. Disengage the PTO, lower all implements to the ground, place all control levers in their neutral positions, set the parking brake, stop the engine, and remove the key.
2. Make sure that the tractor has come to a complete stop before dismounting.
3. Avoid parking on steep slopes, if at all possible park on a firm and level surface; if not, park across a slope with chock the wheels.
   Failure to comply with this warning may allow the tractor to move and could cause injury or death.

4. OPERATING THE PTO

1. Wait until all moving components have completely stopped before getting off the tractor, connecting, disconnecting, adjusting, cleaning, or servicing any PTO driven equipment.
2. Keep the PTO shaft cover in place at all times. Replace the PTO shaft cap when the shaft is not in use.

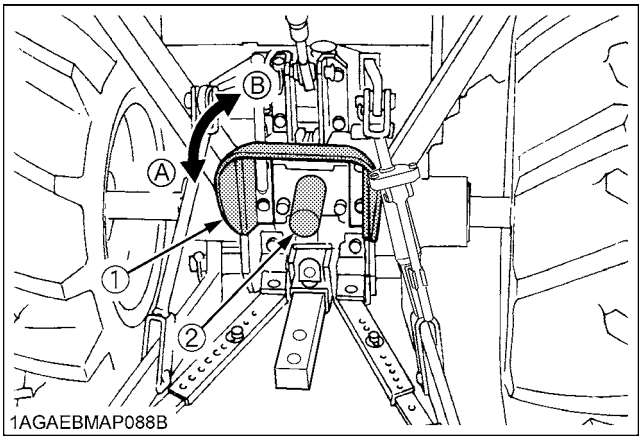

(1) PTO Shaft cover *(A) "NORMAL POSITION"*
(2) PTO Shaft cap *(B) "RAISED POSITION"*

3. Before installing or using PTO driven equipment, read the manufacturer's manual and review the safety labels attached to the equipment.
4. When operating stationary PTO driven equipment, always apply the tractor parking brake and place chocks behind and in front of the rear wheels. Stay clear of all rotating parts. Never step over rotating parts.

5. USING 3-POINT HITCH

1. Use the 3-point hitch only with equipment designed for 3-point hitch usage.
2. When using a 3-point hitch mounted implement, be sure to install the proper counterbalance weight on the front of the tractor.
3. When transporting on the road, set the implement lowering speed knob in the "LOCK" position to hold the implement in the raised position.

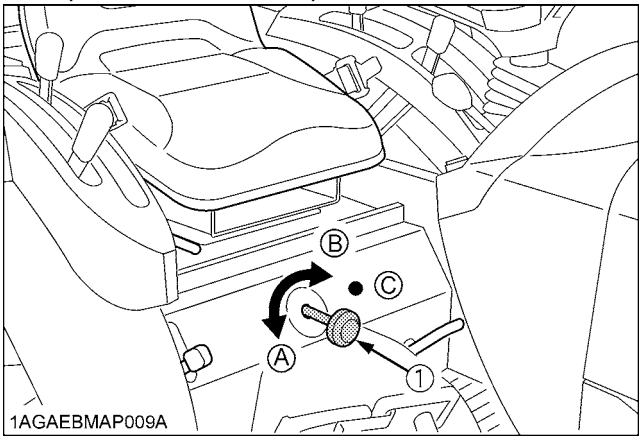

(1) 3-point hitch lowering speed knob *(A) "FAST"*
(B) "SLOW"
(C) "LOCK"

Downloaded from www.Manualslib.com manuals search engine

https://truckmanualshub.com/

6. SERVICING THE TRACTOR

Before servicing the tractor, park it on a firm, flat and level surface, set the parking brake, lower all implements to the ground, place the gear shift lever in neutral, stop the engine and remove the key.

1. Allow the tractor time to cool off before working on or near the engine, muffler, radiator, etc.
2. Always stop the engine before refueling. Avoid spills and overfilling.
3. Do not smoke when working around battery or when refueling. Keep all sparks and flames away from battery and fuel tank. The battery presents an explosive hazard, because it gives off hydrogen and oxygen especially when recharging.
4. Before "jump starting" a dead battery, read and follow all of the instructions. (See "JUMP STARTING" in "OPERATING THE ENGINE" section.)
5. Keep first aid kit and fire extinguisher handy at all times.
6. Do not remove radiator cap while coolant is hot. When cool, slowly rotate cap to the first stop and allow sufficient time for excess pressure to escape before removing the cap completely. If the tractor has a coolant recovery tank, add coolant or water to the tank, not the radiator. (See "Checking Coolant Level" in "DAILY CHECK" in "PERIODIC SERVICE" section.)
7. Disconnect the battery's ground cable before working on or near electric components.
8. To avoid the possibility of battery explosion, do not use or charge the refillable type battery if the fluid level is below the LOWER (lower limit level) mark. Check the fluid level regularly and add distilled water as required so that the fluid level is between the UPPER and LOWER levels.
9. To avoid sparks from an accidental short circuit, always disconnect the battery's ground cable (-) first and reconnect it last.

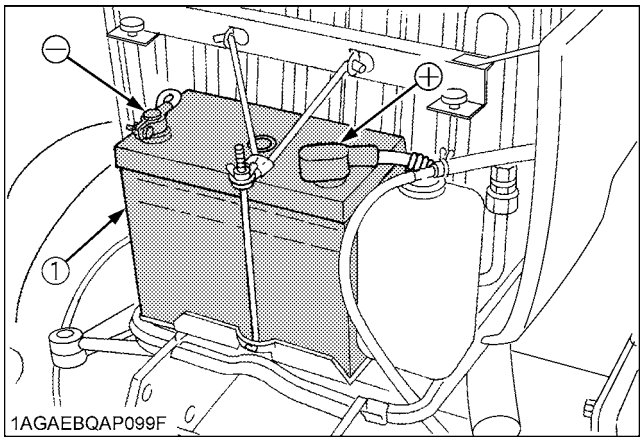

(1) Battery

10. Do not attempt to mount a tire on a rim. This should be done by a qualified person with the proper equipment.
11. Do not work under any hydraulically supported devices. They can settle, suddenly leak down, or be accidentally lowered. If necessary to work under tractor or any machine elements for servicing or adjustment, securely support them with stands or suitable blocking beforehand.
12. Always maintain the correct tire pressure. Do not inflate tires above the recommended pressure shown in the operator's manual.

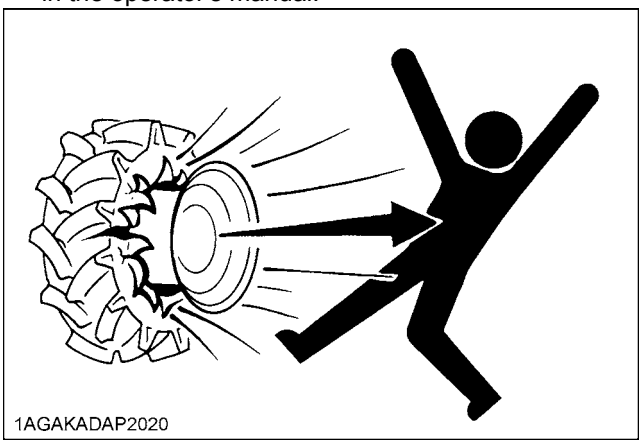

13. Securely support the tractor when either changing wheels or adjusting the wheel tread width.
14. Make sure that wheel bolts have been tightened to the specified torque.
15. Escaping hydraulic fluid under pressure has sufficient force to penetrate skin, causing serious personal injury. Before disconnecting hydraulic lines, be sure to release all residual pressure. Before applying pressure to the hydraulic system, make sure that all connections are tight and that all lines, pipes, and hoses are free of damage.

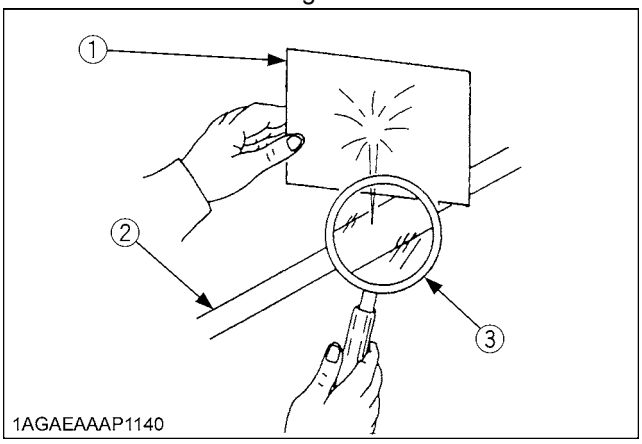

(1) Cardboard
(2) Hydraulic line
(3) Magnifying glass

Downloaded from www.Manualslib.com manuals search engine

https://truckmanualshub.com/

16. Fluid escaping from pinholes may be invisible. Do not use hands to search for suspected leaks; use a piece of cardboard or wood. Use of safety goggles or other eye protection is also highly recommended. If injured by escaping fluid, see a medical doctor at once. This fluid will produce gangrene or severe allergic reaction.

Downloaded from www.Manualslib.com manuals search engine

https://truckmanualshub.com/

7. DANGER, WARNING AND CAUTION LABELS

(1) Part No. 6C070-4742-2

⚠ C A U T I O N

TO AVOID PERSONAL INJURY:

1. Read and understand the operator's manual before operation.
2. Before starting the engine, make sure that everyone is at a safe distance from the tractor and that the PTO is OFF.
3. Do not allow passengers on the tractor at any time.
4. Before allowing other people to use the tractor, have them read the operator's manual.
5. Check the tightness of all nuts and bolts regularly.
6. Keep all shields in place and stay away from all moving parts.
7. Lock the two brake pedals together before driving on the road.
8. Slow down for turns, or rough roads, or when applying individual brakes.
9. On public roads use SMV emblem and hazard lights, if required by local traffic and safety regulations.
10. Pull only from the drawbar.
11. Before dismounting, lower the implement to the ground, set the parking brake, stop the engine and remove the key.
12. Securely support tractor and implements before working underneath.

1AGAEBMAP068E

(2) Part No. 6C150-4743-1
[ROPS]

⚠ WARNING

BEFORE DISMOUNTING TRACTOR:
1. ALWAYS SET PARKING BRAKE.
Leaving transmission in gear with the engine stopped will not prevent tractor from rolling.
2. PARK ON LEVEL GROUND WHENEVER POSSIBLE.
If parking on a slope, position tractor across the slope.
3. LOWER ALL IMPLEMENTS TO THE GROUND.
4. STOP THE ENGINE.

1AGAEBMAP069E

(3) Part No. 6C230-4743-1
[CAB]

⚠ WARNING

BEFORE DISMOUNTING TRACTOR:
1. ALWAYS SET PARKING BRAKE.
Leaving transmission in gear with the engine stopped will not prevent tractor from rolling.
2. PARK ON LEVEL GROUND WHENEVER POSSIBLE.
If parking on a slope, position tractor across the slope.
3. LOWER ALL IMPLEMENTS TO THE GROUND.
4. STOP THE ENGINE.

1AGAMAOAP0790

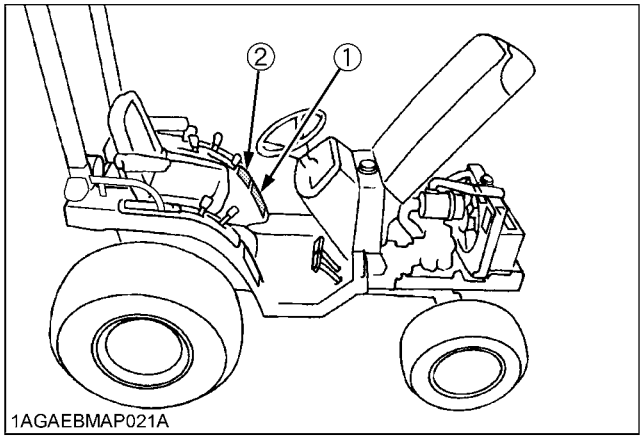

1AGAEBMAP021A

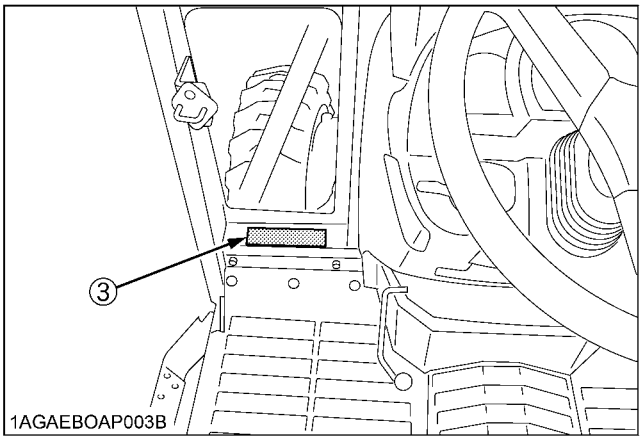

1AGAEBOAP003B

1AGAEDPAP004A

Downloaded from www.Manualslib.com manuals search engine

https://truckmanualshub.com/

(1) Part No. TA040-4932-2 **[Rigid ROPS type]**

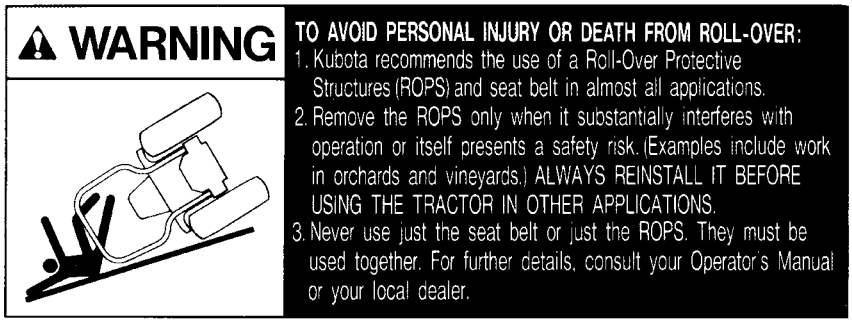

1AGAEBMAP070E

(1) Part No. TA240-9848-1 **[Foldable ROPS type]**

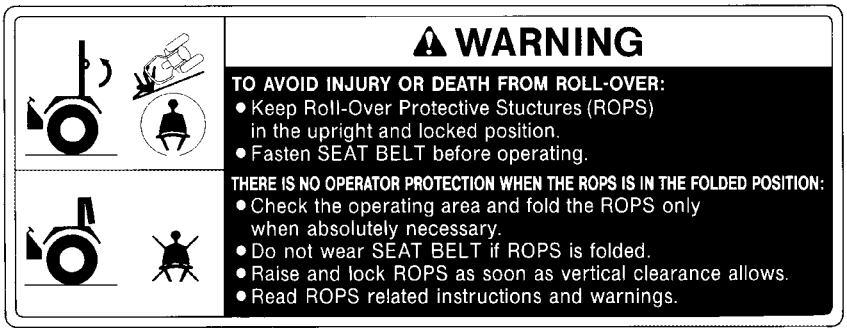

1AGAEBMAP071E

(3) Part No. 6C392-3014-1 **[ROPS]**

1AGAECHAP060E

(3) Part No. 6C300-3012-1 **[CAB]**

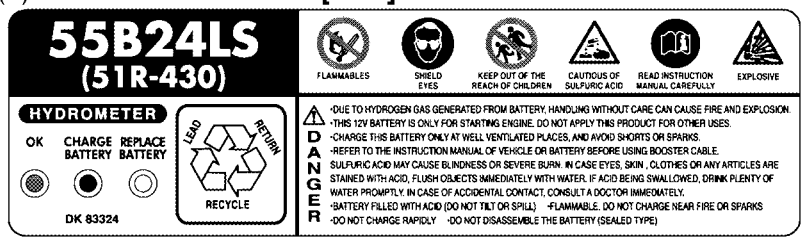

1AGAECDAP059E

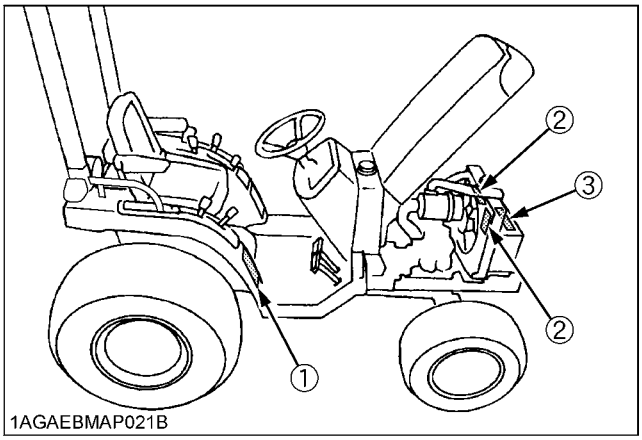

1AGAEBMAP021B

1AGAEDPAP006A

(2) Part No. 32751-4958-1

Do not get your hands close to engine fan and fan belt.

1AGAEBMAP073A

Downloaded from www.Manualslib.com manuals search engine

https://truckmanualshub.com/

(1) Part No. 6C090-4965-1

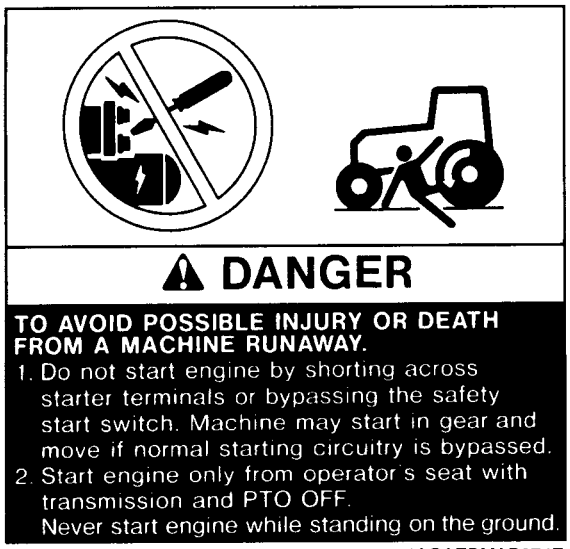

1AGAEBMAP074E

(2) Part No. 6C200-4959-1

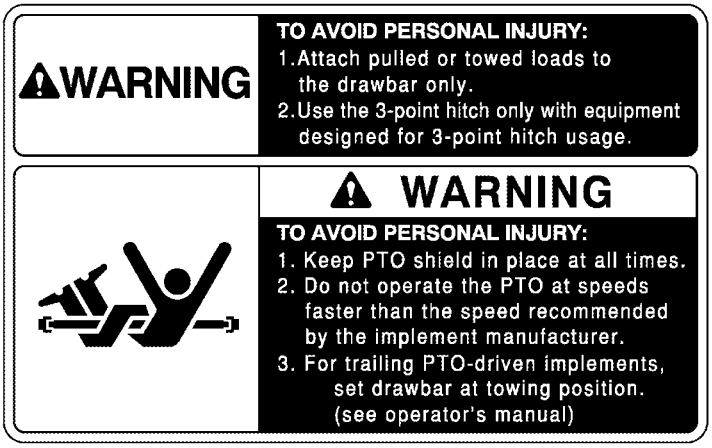

1AGAECEAP013E

(3) Part No. 6C040-4741-2

1AGAEBMAP077A

(4) Part No. TA040-4958-1

Do not touch hot surface like muffler, etc.

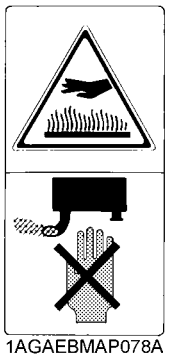

1AGAEBMAP078A

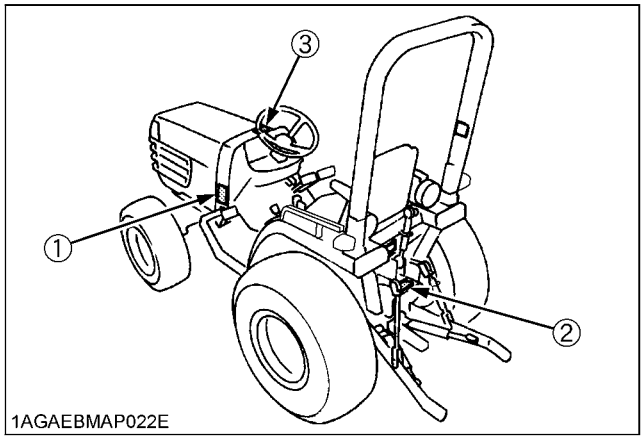

1AGAEBMAP022E

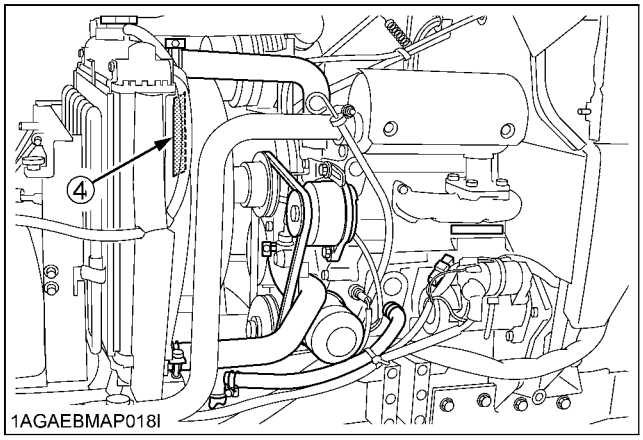

1AGAEBMAP018I

1AGAEDYAP001A

Downloaded from www.Manualslib.com manuals search engine

https://truckmanualshub.com/

(1) Part No. 6C140-4746-1
[Rigid ROPS type]

⚠ WARNING

TO AVOID PERSONAL INJURY:
Do not modify or repair a ROPS because welding, grinding, drilling or cutting any portion may weaken the structure.

1AGAEBMAP079E

(2) Part No. 3A111-9554-1
[Foldable ROPS type]

⚠ WARNING

Never modify or repair a ROPS because welding, grinding, drilling or cutting any portion may weaken the structure.

⚠ CAUTION

TO AVOID INJURY WHEN RAISING OR FOLDING ROPS:
- Set parking brake and stop engine.
- Remove any obstruction that may prevent raising or folding of the ROPS.
- Do not allow any bystanders.
- Always perform function from a stable position at the rear of the tractor.
- Hold the top of the ROPS securely when raising or folding.
- Make sure all pins are installed and locked.

1AGAEBMAP080E

(3) Part No. TA040-4902-1
[CAB]

1AGAMAOAP0780

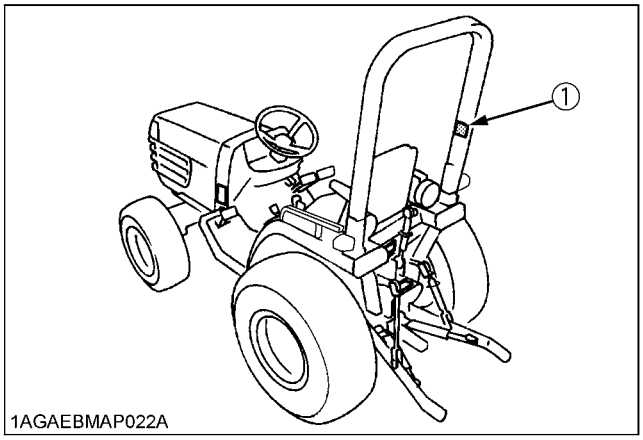

1AGAEBMAP022A

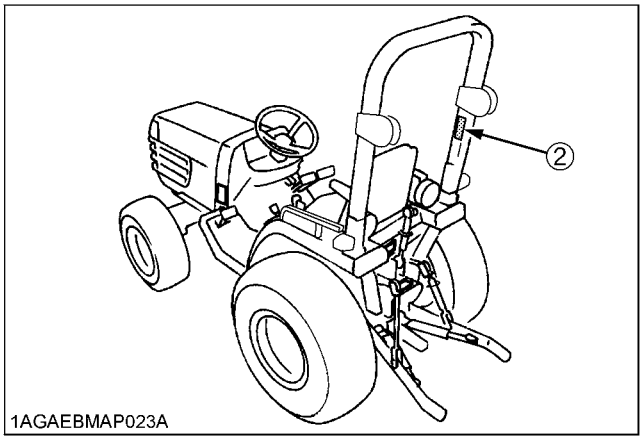

1AGAEBMAP023A

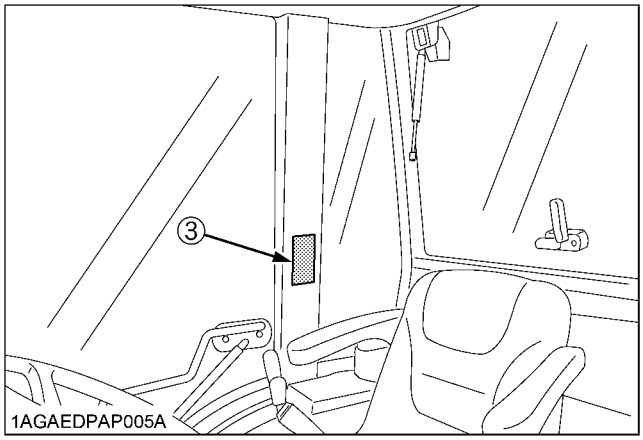

1AGAEDPAP005A

1AGAEDPAP021A

Downloaded from www.Manualslib.com manuals search engine

https://truckmanualshub.com/

(1) Part No. 6C200-4751-1

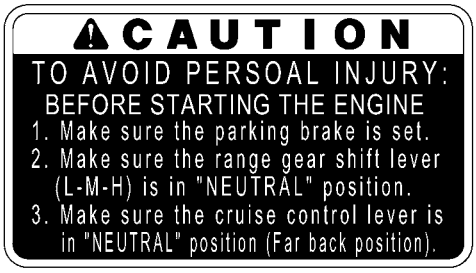

1AGAEBNAP004E

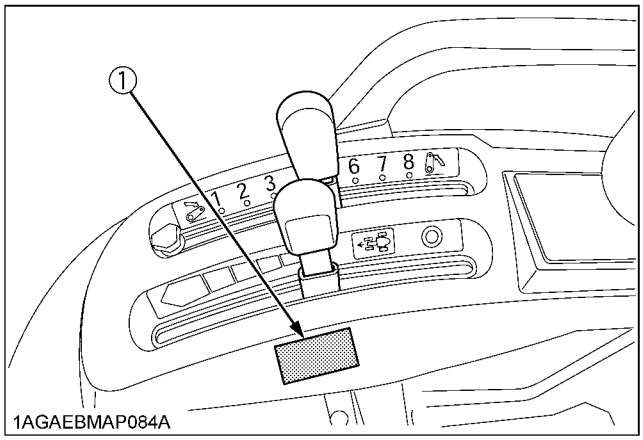

1AGAEDYAP002A

8. CARE OF DANGER, WARNING AND CAUTION LABELS

1. Keep danger, warning and caution labels clean and free from obstructing material.
2. Clean danger, warning and caution labels with soap and water, dry with a soft cloth.
3. Replace damaged or missing danger, warning and caution labels with new labels from your local KUBOTA Dealer.
4. If a component with danger, warning and caution label(s) affixed is replaced with new part, make sure new label(s) is (are) attached in the same location(s) as the replaced component.
5. Mount new danger, warning and caution labels by applying on a clean dry surface and pressing any bubbles to outside edge.

Downloaded from www.Manualslib.com manuals search engine

https://truckmanualshub.com/

Downloaded from www.Manualslib.com manuals search engine

https://truckmanualshub.com/

SERVICING OF TRACTOR

Your dealer is interested in your new tractor and has the desire to help you get the most value from it. After reading this manual thoroughly, you will find that you can do some of the regular maintenance yourself.
However, when in need of parts or major service, be sure to see your KUBOTA Dealer.
For service, contact the KUBOTA Dealership from which you purchased your tractor or your local KUBOTA Dealer.
When in need of parts, be prepared to give your dealer the tractor, CAB and engine serial numbers.
Locate the serial numbers now and record them in the space provided.

	Type	Serial No.
Tractor		
CAB / ROPS		
Engine		
Date of Purchase		
Name of Dealer		
(To be filled in by purchaser)		

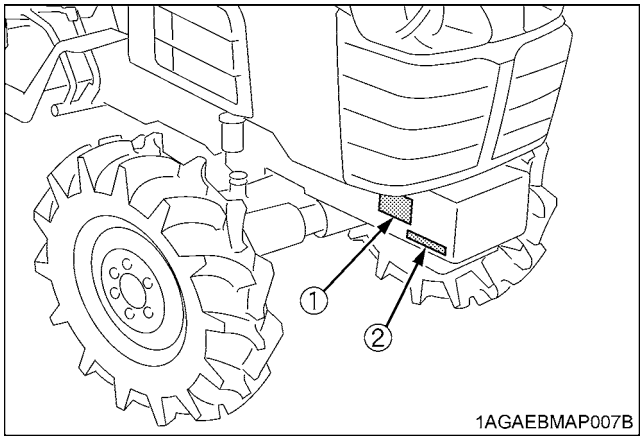

(1) Tractor identification plate
(2) Tractor serial number

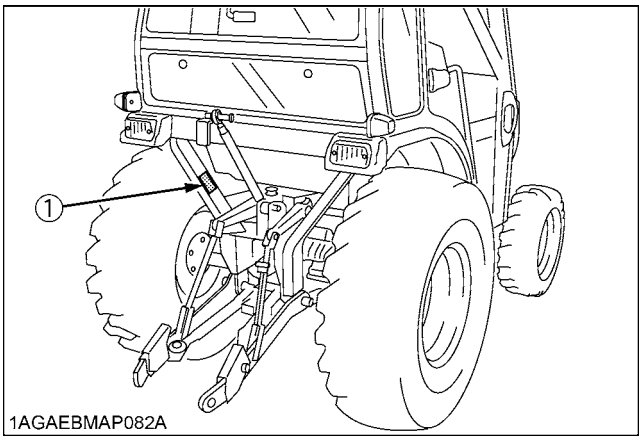

(1) CAB identification plate (CAB Serial No.)

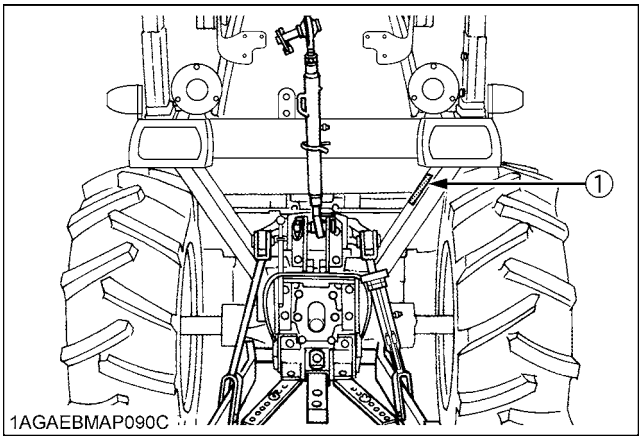

(1) ROPS identification plate (ROPS Serial No.)

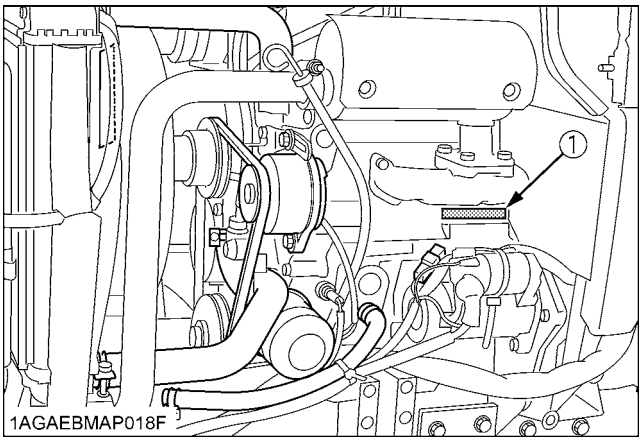

(1) Engine serial number

Downloaded from www.Manualslib.com manuals search engine

https://truckmanualshub.com/

SPECIFICATIONS

SPECIFICATION TABLE

Model				B2630HSD	B3030HSD	B3000HSDCC
PTO power			kW (HP)	14.5 (19.5)*	17.1 (23.0)*	
Engine	Maker			KUBOTA		
	Model			D1105-E3-D21	V1505-E3-D21	V1505-E3-D21-Q
	Type			Indirect Injection. Vertical, water-cooled 4 cycle diesel		
	Number of cylinders			3	4	
	Bore and stroke		mm (in.)	ϕ78x78.4 (ϕ3.1x3.1)		
	Total displacement		cm^3 (cu.in.)	1123 (68.5)	1498 (91.5)	
	Engine gross power		kW (HP)	19.4 (26.0)*	22.3 (30.0)*	
	Rated revolution		rpm	2800	2600	
	Low idling revolution		rpm	1000-1100		
	Maximum torque		N-m (ft-lb)	77.6 (57.2)	98.7 (72.7)	
	Battery			12 V, RC : 79 min, CCA : 430 A		12 V, RC : 80 min, CCA : 430 A
Capacities	Fuel tank		L (U.S.gals.)	31 (8.1)		
	Engine crankcase (with filter)		L (U.S.qts.)	3.0 (3.2)	4.1 (4.3)	
	Engine coolant		L (U.S.qts.)	4.5 (4.7)		5.2 (5.5)
	Transmission case		L (U.S.gals.)	15 (4.0)		
Dimensions	Overall length (without 3P)		mm (in.)	2520 (99.2)		2640 (103.9)
	Overall width (min. tread)		mm (in.)	1365 (53.7)		
	Overall height		mm (in.)	1995 (78.5)		2150 (84.6)
	Wheel base		mm (in.)	1666 (65.6)		
	Minimum ground clearance		mm (in.)	370 (14.6)		
	Tread	Front	mm (in.)	935 (36.8)		
		Rear	mm (in.)	1050 (41.3)		
Weight (with ROPS or CAB)			kg (lbs.)	810 (1786)	840 (1852)	1030 (2271)
Clutch				N/A		
Traveling system	Tires	Front		7-12		
		Rear		12.4-16		
	Steering			Hydrostatic type power steering		
	Transmission			Main-hydrostatic transmission, 3 range gear shift (3 forward, 3 reverse)		
	Brake			Wet disk type		
	Minimum turning radius (with brake)		m (feet)	2.1 (6.9)		

Downloaded from www.Manualslib.com manuals search engine

https://truckmanualshub.com/

Model				B2630HSD	B3030HSD	B3000HSDCC
Hydraulic unit	Hydraulic control system			Position control		
	Pump capacity		L / min (gals / min)	3P: 21.2 (5.6), Power steering: 16.0 (4.2)	3P: 19.7 (5.2), Power steering: 14.8 (3.9)	
	Three point hitch			SAE Category 1		
	Max. lift force	At lift points	kg (lbs.)	970 (2139)		
		24 in.behind lift point	kg (lbs.)	760 (1676)		
PTO	Rear-PTO			SAE 1-3/8, 6 splines		
	PTO / Engine speed		rpm	1 speed 540 / 2768	1 speed 540 / 2592	
	Mid-PTO			USA No. 5 (KUBOTA 10-tooth) involute spline		
	PTO / Engine speed		rpm	1 speed 2500 / 2753	1 speed 2500 / 2600	

NOTE: * Manufacturer's estimate The company reserves the right to change the specifications without notice.

Downloaded from www.Manualslib.com manuals search engine

https://truckmanualshub.com/

TRAVELING SPEEDS

(At rated engine rpm)

Model		B2630			
Tire size (Rear)		12.4 - 16 Farm		13.6 - 16 Turf	
	Range gear shift lever	km / h	mph	km / h	mph
Forward	Low	0 to 4.8	0 to 3.0	0 to 4.9	0 to 3.1
	Middle	0 to 8.9	0 to 5.5	0 to 9.1	0 to 5.7
	High	0 to 18.6	0 to 11.5	0 to 19.0	0 to 11.8
Reverse	Low	0 to 3.8	0 to 2.4	0 to 3.9	0 to 2.4
	Middle	0 to 7.1	0 to 4.4	0 to 7.3	0 to 4.5
	High	0 to 14.8	0 to 9.2	0 to 15.2	0 to 9.4

Model		B3030 / B3000			
Tire size (Rear)		12.4 - 16 Farm		13.6 - 16 Turf	
	Range gear shift lever	km / h	mph	km / h	mph
Forward	Low	0 to 5.0	0 to 3.1	0 to 5.2	0 to 3.2
	Middle	0 to 9.4	0 to 5.8	0 to 9.6	0 to 6.0
	High	0 to 19.5	0 to 12.1	0 to 20.0	0 to 12.4
Reverse	Low	0 to 4.0	0 to 2.5	0 to 4.1	0 to 2.6
	Middle	0 to 7.4	0 to 4.6	0 to 7.6	0 to 4.7
	High	0 to 15.5	0 to 9.6	0 to 15.9	0 to 9.9

The company reserves the right to change the specification without notice.

Downloaded from www.Manualslib.com manuals search engine

https://truckmanualshub.com/

IMPLEMENT LIMITATIONS

The KUBOTA Tractor has been thoroughly tested for proper performance with implements sold or approved by KUBOTA. Use with implements which are not sold or approved by KUBOTA and which exceed the maximum specifications listed below, or which are otherwise unfit for use with the KUBOTA Tractor may result in malfunctions or failures of the tractor, damage to other property and injury to the operator or others. [Any malfunctions or failures of the tractor resulting from use with improper implements are not covered by the warranty.]

Tread (max. width) with farm tires		Lower link end max. loading weight W 0
Front	Rear	
935 mm (36.8 in.)	1050 mm (41.3 in.)	360 kg (800 lbs.)

Actual figures		
Implement weight W 1 and / or size	Max. Drawbar Load W 2	Trailer loading weight W 3 Max. capacity
As in the following list (Shown on the next page)	500 kg (1100 lbs.)	1500 kg (3300 lbs.)

Lower link end max. loading weight.....The max. allowable load which can be put on the lower link end : W 0
Implement weight.....The implement's weight which can be put on the lower link : W 1
Max. drawbar load.....W 2
Trailer loading weight .....The max. loading weight for trailer (without trailer's weight) : W 3

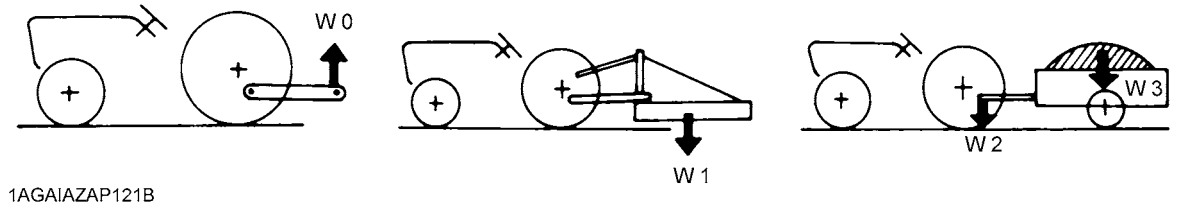

NOTE :
- Implement size may vary depending on soil operating conditions.

Downloaded from www.Manualslib.com manuals search engine

https://truckmanualshub.com/

Implement		Remarks		B2630 / B3030 / B3000
Mower	Mid-mount	Max. cutting width Max. weight	mm (in.) kg (lbs.)	1830 (72) 205 (451)
	Rotary-cutter (1 Blade)	Max. cutting width Max. weight	mm (in.) kg (lbs.)	1220 (48) 227 (500)
	Rear-mount (2 or 3 Blades)	Max. cutting width Max. weight	mm (in.) kg (lbs.)	1830 (72) 227 (500)
	Flail-mower	Max. cutting width	mm (in.)	1220 (48)
	Sickle bar	Max. cutting width	mm (in.)	1524 (60)
Rotary tiller		Max. tilling width Max. weight Slip clutch	mm (in.) kg (lbs.)	1270 (50) 250 (550) Necessary
Bottom plow		Max. size	mm (in.)	305 (12) x 2
Disc plow		Max. size	mm (in.)	559 (22) x 2
Cultivator		Max. size	mm (in.)	1524 (60) 1 Row
Disc harrow		Max. harrowing width Max. weight	mm (in.) kg (lbs.)	1676 (66) 250 (550)
Sprayer		Max. tank capacity	L (U.S.gals.)	246 (65)
Front blade		Max. cutting width Sub frame	mm (in.)	1676 (66) Necessary
Rear blade		Max. cutting width Max. weight	mm (in.) kg (lbs.)	1676 (66) 250 (550)
Front loader		Max. lifting capacity Max. width	kg (lbs.) mm (in.)	400 (880) 1524 (60)
Box blade		Max. cutting width Max. weight	mm (in.) kg (lbs.)	1372 (54) 227 (500)
Back hoe		Max. digging depth Max. weight Sub frame	mm (in.) kg (lbs.)	2295 (90) 400 (880) Necessary
Snow blower		Max. working width Max. weight	mm (in.) kg (lbs.)	1542 (60) 227 (500)
Trailer		Max. load capacity Max. drawbar load	kg (lbs.) kg (lbs.)	1500 (3300) 500 (1100)

NOTE :
- Implement size may vary depending on soil operating conditions.

Downloaded from www.Manualslib.com manuals search engine

https://truckmanualshub.com/

INSTRUMENT PANEL AND CONTROLS

■ Instrument Panel, Switches and Hand Controls

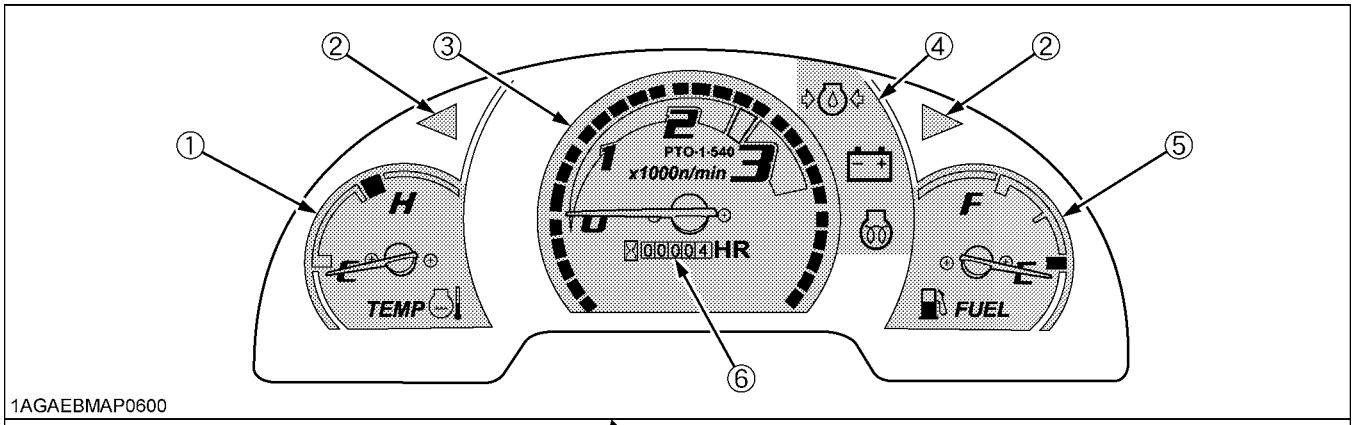

1AGAEBMAP0600

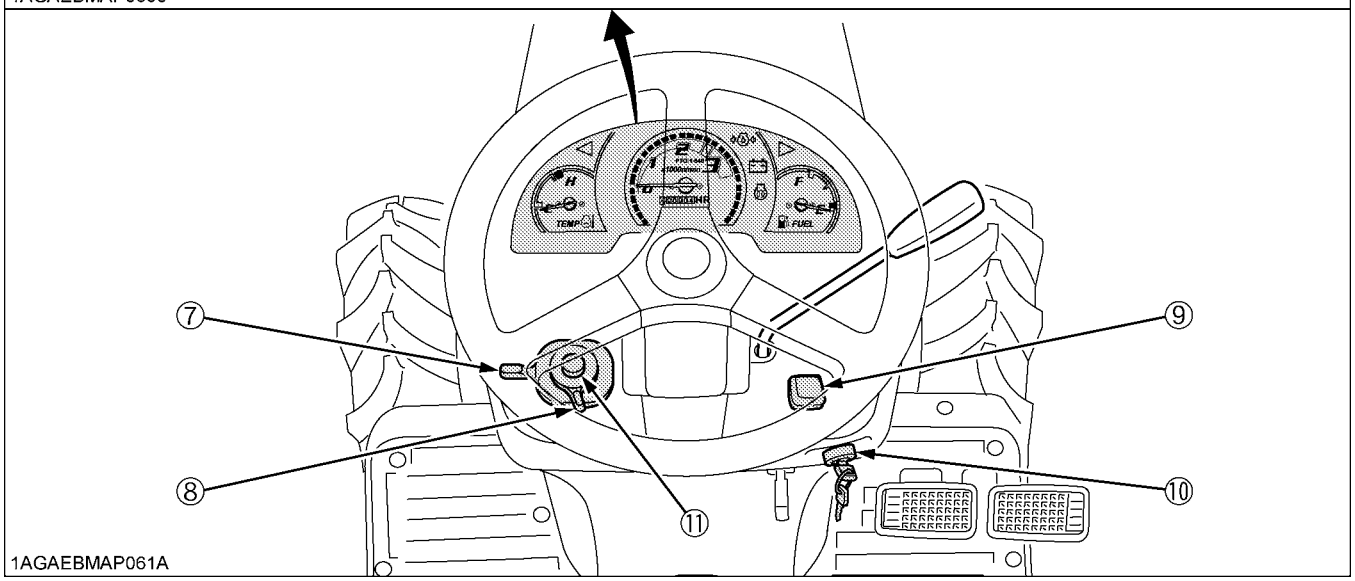

1AGAEBMAP061A

ILLUSTRATED CONTENTS

(1) Coolant temperature gauge 26
(2) Turn signal / Hazard light indicator 20
(3) Tachometer 26
(4) Easy Checker(TM) 25
(5) Fuel gauge 26
(6) Hourmeter 26
(7) Turn signal light switch 20
(8) Head light switch 20
(9) Hazard light switch 20
(10) Key switch 11
(11) Horn button 20

Downloaded from www.Manualslib.com manuals search engine

https://truckmanualshub.com/

■ Pedal Location Label

The label is located on the cover under seat.

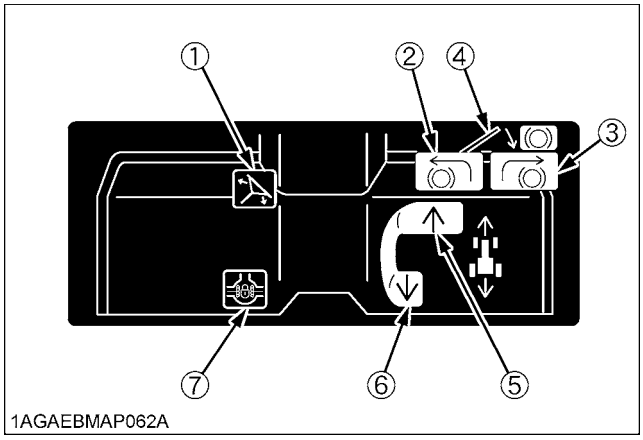

(1) Steering wheel tilt pedal
(2) Brake pedal (left)
(3) Brake pedal (right)
(4) Brake pedal lock
(5) Speed control pedal (forward)
(6) Speed control pedal (reverse)
(7) Differential lock pedal

Downloaded from www.Manualslib.com manuals search engine

https://truckmanualshub.com/

■ Foot and Hand Controls

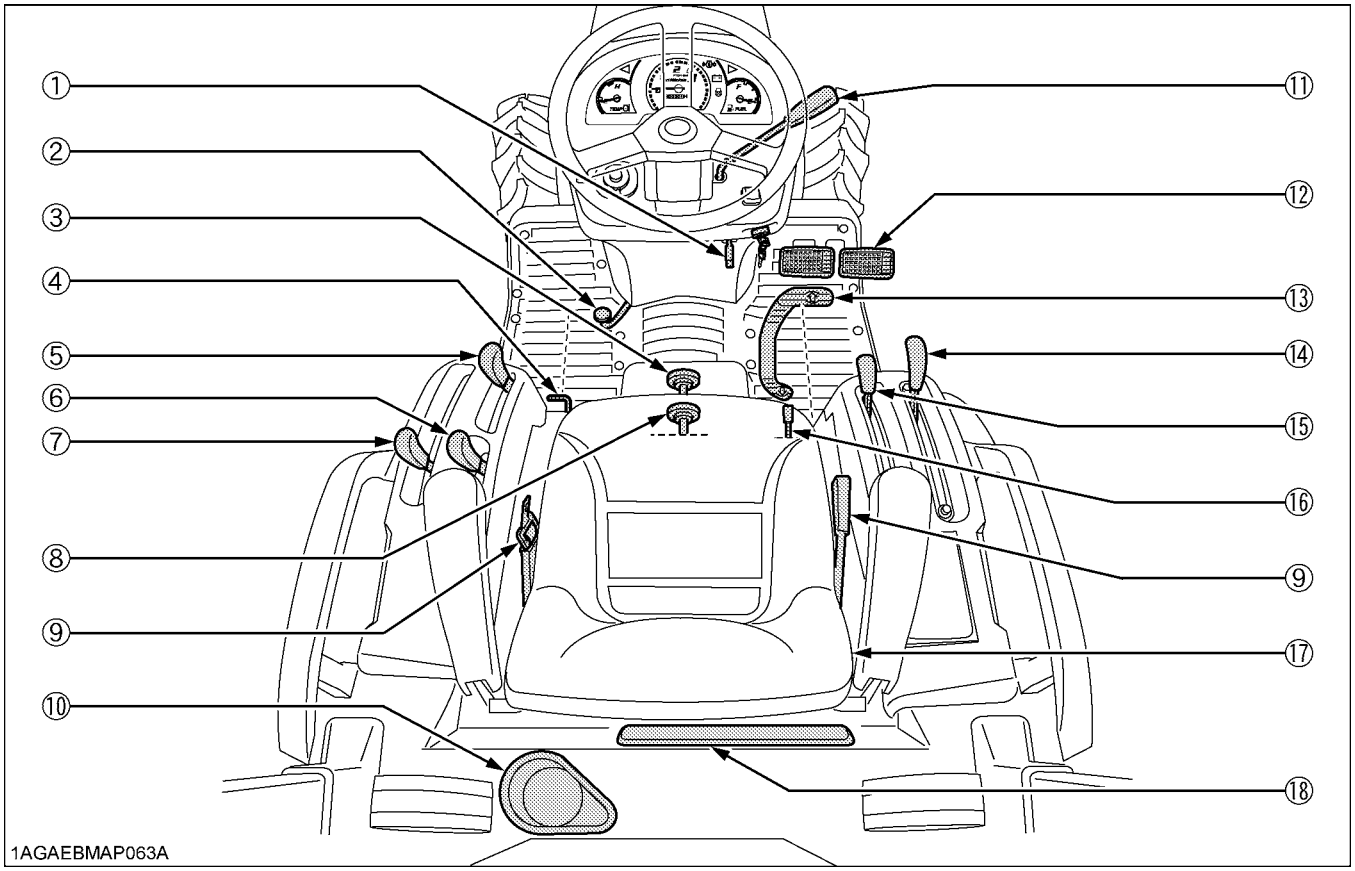

ILLUSTRATED CONTENTS

(1) Parking brake lever..... 23,27
(2) Steering wheel tilt pedal..... 19
(3) 3-Point hitch lowering speed knob..... 35
(4) Differential lock pedal..... 27
(5) PTO clutch lever..... 30
(6) PTO select ever..... 29
(7) Range gear shift lever..... 22
(8) Suspension adjust knob [B3030, B3000 only] 18
(9) Seat belt..... 19
(10) Cup holder [Except B3000]..... ---

ILLUSTRATED CONTENTS

(11) Hand throttle lever..... 23
(12) Brake pedal..... 21
(13) Speed control pedal..... 23
(14) Position control lever..... 35
(15) Cruise control lever 24
(16) Front wheel drive lever 22
(17) Operator's seat 18
(18) Tool box..... ---

Downloaded from www.Manualslib.com manuals search engine

https://truckmanualshub.com/

PRE-OPERATION CHECK

DAILY CHECK

To prevent trouble from occurring, it is important to know the condition of the tractor well. Check it before starting.

CAUTION

To avoid personal injury:

- **Be sure to check and service the tractor on a level surface with the engine shut off and the parking brake "ON" and implement lowered to the ground.**

Check item

- Walk around inspection
- Check engine oil level
- Check transmission oil level
- Check coolant level
- Clean air conditioner condenser screen
- Clean grill and radiator screen
- Check air cleaner evacuator valve
  (When used in a dusty place)
- Check brake pedal
- Check indicators, gauges and meter
- Check lights
- Check wire harness
- Check seat belt
- Check ROPS and CAB
- Check movable parts
- Refuel
  (See "DAILY CHECK" in "PERIODIC SERVICE" section.)
- Care of danger, warning and caution labels
  (See "DANGER, WARNING AND CAUTION LABELS" in "SAFE OPERATION" section.)

Downloaded from www.Manualslib.com manuals search engine

https://truckmanualshub.com/

OPERATING THE ENGINE

CAUTION

To avoid personal injury:

- **Read "Safe Operation" in the front of this manual.**
- **Read the danger, warning and caution labels located on the tractor.**
- **To avoid the danger of exhaust fume poisoning, do not operate the engine in a closed building without proper ventilation.**
- **Never start engine while standing on ground. Start engine only from operator's seat.**
- **Make it a rule to set all shift levers to the "NEUTRAL" positions and to place PTO lever in "OFF" position before starting the engine.**

IMPORTANT :

- Do not use starting fluid or ether.
- To protect the battery and the starter, make sure that the starter is not continuously turned for more than 30 seconds.

STARTING THE ENGINE

1. Make sure the parking brake is set.

1. To set the parking brake;
   (1) Interlock the brake pedals.
   (2) Depress the brake pedals.
   (3) Latch the brake pedals with the parking brake lever.
2. To release the parking brake, depress the brake pedals again.

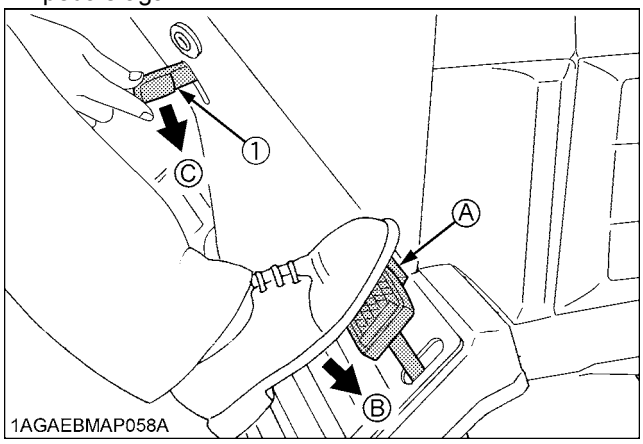

(1) Parking brake lever
(A) Interlock the brake pedals
(B) "DEPRESS"
(C) "PUSH-DOWN"

NOTE :

- It is recommended that the operator practice engaging and disengaging the parking brake on a flat surface without the engine running before operating the tractor for the first time.

2. Place the PTO clutch lever in "OFF" position.

3. Make sure the cruise control lever is in "NEUTRAL" position.
Place the speed control pedal in "NEUTRAL" position.
Place the range gear shift lever (L-M-H) in "NEUTRAL" position.

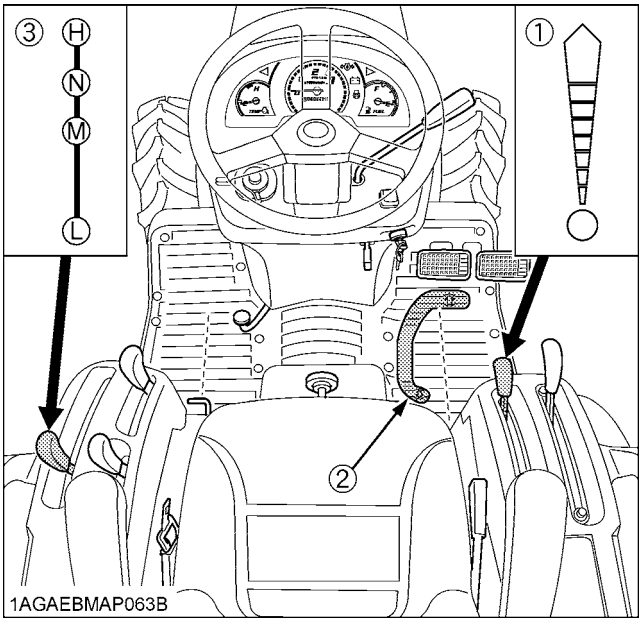

(1) Cruise control lever
(2) Speed control pedal
(3) Range gear shift lever (L-M-H)
(N) "NEUTRAL POSITION"
O ....Cruise "NEUTRAL POSITION"

NOTE :

- Depress the both brake pedals together, doing so the cruise control lever automatically returns to the off position.
- Step out the foot from speed control pedal, doing so the pedal automatically returns to the neutral position.

Downloaded from www.Manualslib.com manuals search engine

https://truckmanualshub.com/

4. Place the position control lever in "LOWEST" position.

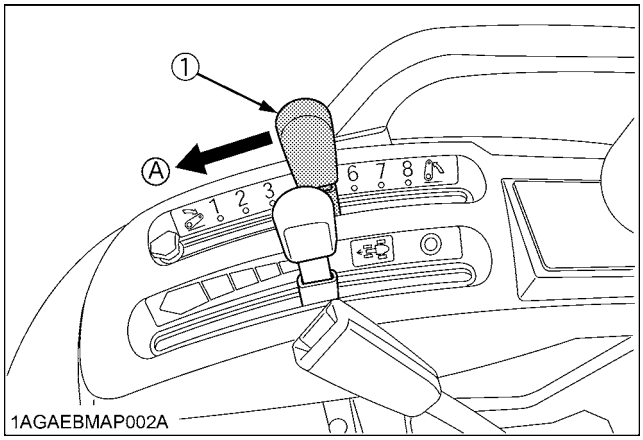

(1) Position control lever *(A) "DOWN"*

5. Set the throttle lever to about 1/2 way.

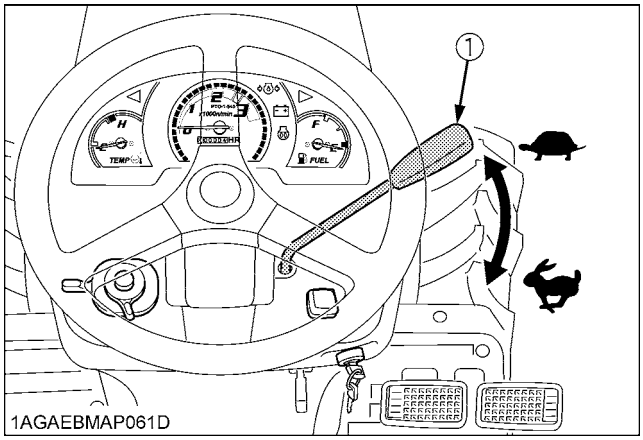

(1) Hand throttle lever *"INCREASE"* *"DECREASE"*

6. Insert the key into the key switch and turn it "ON".

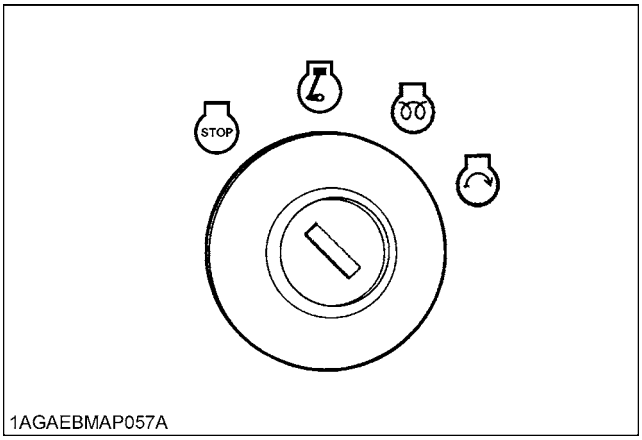

"OFF"
"ON"
"PREHEAT"
"START"

◆ **Check Easy Checker(TM) lamps:**

1. When the key is turned "ON", lamps (3) (4) should come on. If trouble should occur at any location while the engine is running, the warning lamp corresponding to that location comes on.

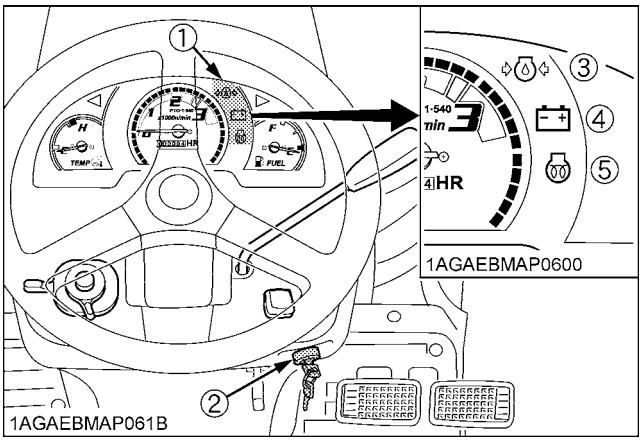

(1) Easy checker(TM)
(2) Key switch
(3) Engine oil pressure
(4) Electrical charge
(5) Glow plug indicator

IMPORTANT :

- Daily checks with the Easy Checker(TM) only are not sufficient. Never fail to conduct physical daily checks carefully by referring to "DAILY CHECK" section. (See "DAILY CHECK" in "PERIODIC SERVICE" section.)

Downloaded from www.Manualslib.com manuals search engine

https://truckmanualshub.com/

7. Turn the key to "PREHEAT" position and hold it for about 2 to 3 seconds.

For the appropriate preheating time, refer to the table below:

Temperature	Preheating Time
Over 0 °C (32 °F)	2 to 3 sec.
0 to -5 °C (32 to 23 °F)	5 sec.
-5 to -15 °C (23 to 5 °F)	10 sec.

NOTE :
- Glow plug indicator (5) comes on while engine is being preheated.

8. Turn the key to "START" position and release when the engine starts.

IMPORTANT :
- Because of the safety devices, the engine will not start except when the PTO clutch lever is placed in the "OFF" position and speed control pedal is placed in the "NEUTRAL" position.

◆ **Cold Weather Starting**

When the ambient temperature is below -5℃ (23℉) and the engine is very cold. If the engine fails to start, turn off the key for 30 seconds. Then repeat steps **7** and **8**. To protect the battery and the starter, make sure that the starter is not continuously turned for more than 30 seconds.

■Block Heater (Option)

A block heater is available as an option from your dealer. It will assist you in starting your tractor when the ambient temperature is below -15℃ (5℉)

9. Check to see that all the lamps on the Easy Checker(TM) are "OFF".

If a lamp is still on, immediately stop the engine and determine the cause.

STOPPING THE ENGINE

1. After slowing the engine to idle, turn the key to "OFF".

2. Remove the key.

Downloaded from www.Manualslib.com manuals search engine

https://truckmanualshub.com/

WARMING UP

CAUTION

To avoid personal injury:

- **Be sure to set the parking brake during warm-up.**
- **Be sure to set all shift levers to the "NEUTRAL" positions and to place PTO clutch lever in "OFF" position during warm-up.**

For five minutes after engine start-up, allow engine to warm up without applying any load, this is to allow oil to reach every engine part. If load should be applied to the engine without this warm-up period, trouble such as seizure, breakage or premature wear may develop.

■Warm-up Transmission Oil at Low Ambient Temperatures

Hydraulic oil serves as transmission fluid. In cold weather, the oil may be cold with increased viscosity. This can cause delayed oil circulation or abnormally low hydraulic pressure for some time after engine start-up. This in turn can result in trouble in the hydraulic system. To prevent the above, observe the following instructions:
Warm up the engine at about 50 % of rated rpm according to the table below:

Ambient temperature	Warm-up time requirement
Above 0 °C (32 °F)	At least 5 minutes
0 to -10 °C (32 to 14 °F)	5 to 10 minutes
-10 to -20 °C (14 to -4 °F)	10 to 15 minutes
Below -20 °C (-4 °F)	More than 15 minutes

IMPORTANT :

- Do not operate the tractor under full load condition until it is sufficiently warmed up.

JUMP STARTING

CAUTION

To avoid personal injury:

- **Battery gases can explode. Keep cigarettes, sparks, and flames away from battery.**
- **If tractor battery is frozen, do not jump start engine.**
- **Do not connect other end of negative (-) jumper cable to negative (-) terminal of tractor battery.**

When jump starting engine, follow the instructions below to safely start the engine.

1. Bring helper vehicle with a battery of the same voltage as disabled tractor within easy cable reach. "THE VEHICLES MUST NOT TOUCH".
2. Engage the parking brakes of both vehicles and put the shift levers in neutral. Shut both engines off.
3. Put on safety goggles and rubber gloves.
4. Ensure the vent caps are securely in place. (if equipped)
5. Cover vent holes with damp rags. Do not allow the rag to touch the battery terminals.
6. Attach the red clamp to the positive (red, (+) or pos.) terminal of the dead battery and clamp the other end of the same cable to the positive (red, (+) or pos.) terminal of the helper battery.
7. Clamp the other cable to the negative (black, (-) or neg.) terminal of the helper battery.
8. Clamp the other end to the engine block or frame of the disabled tractor as far from the dead battery as possible.
9. Start the helper vehicle and let its engine run for a few moments. Start the disabled tractor.
10. Disconnect the jumper cables in the exact reverse order of attachment. (Steps 8, 7 and 6).
11. Remove and discard the damp rags.

Downloaded from www.Manualslib.com manuals search engine

https://truckmanualshub.com/

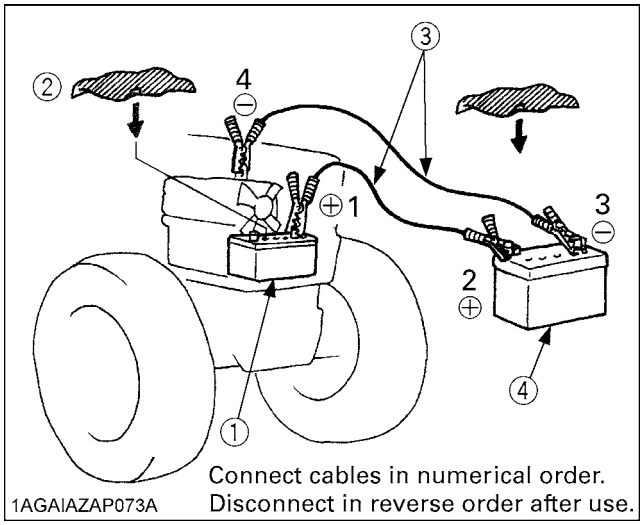

(1) Dead battery
(2) Lay a damp rag over the vent caps
(3) Jumper cables
(4) Helper battery

IMPORTANT :

- This machine has a 12volt negative (-) ground starting system.
- Use only same voltage for jump starting.
- Use of a higher voltage source on tractors electrical system could result in severe damage to tractor's electrical system.
  Use only matching voltage source when "Jump starting" a low or dead battery condition.

Downloaded from www.Manualslib.com manuals search engine

https://truckmanualshub.com/

OPERATING THE TRACTOR

OPERATING NEW TRACTOR

How a new tractor is handled and maintained determines the life of the tractor.

A new tractor just off the factory production line has been, of course, tested, but the various parts are not accustomed to each other, so care should be taken to operate the tractor for the first 50 hours at a slower speed and avoid excessive work or operation until the various parts become "broken-in." The manner in which the tractor is handled during the "breaking-in." period greatly affects the life of your tractor. Therefore, to obtain the maximum performance and the longest life of the tractor, it is very important to properly break-in your tractor. In handling a new tractor, the following precautions should be observed.

■Do not Operate the Tractor at Full Speed for the First 50 Hours

- Do not start quickly nor apply the brakes suddenly.
- In winter, operate the tractor after fully warming up the engine.
- Do not run the engine at speeds faster than necessary.
- On rough roads, slow down to suitable speeds.
  Do not operate the tractor at fast speed.

The above precautions are not limited only to new tractors, but to all tractors. But it should be especially observed in the case of new tractors.

■Changing Lubricating Oil for New Tractors

The lubricating oil is especially important in the case of a new tractor. The various parts are not "broken-in" and are not accustomed to each other; small metal grit may develop during the operation of the tractor; and this may wear out or damage the parts. Therefore, care should be taken to change the lubricating oil a little earlier than would ordinarily be required.

For further details of change interval hours, see "MAINTENANCE" section.

OPERATING FOLDABLE ROPS

CAUTION

To avoid personal injury:

- **When raising or folding the ROPS, apply parking brake, stop the engine and remove the key.**
  Always perform function from a stable position at the rear of tractor.
- **Fold the ROPS down only when absolutely necessary and fold it up and lock it again as soon as possible.**
- **Before proceeding to fold ROPS, check for any possible interference with installed implements and attachments.**
  If interference occurs, contact your KUBOTA Dealer.

■To Fold the ROPS

1. Remove both set bolts.

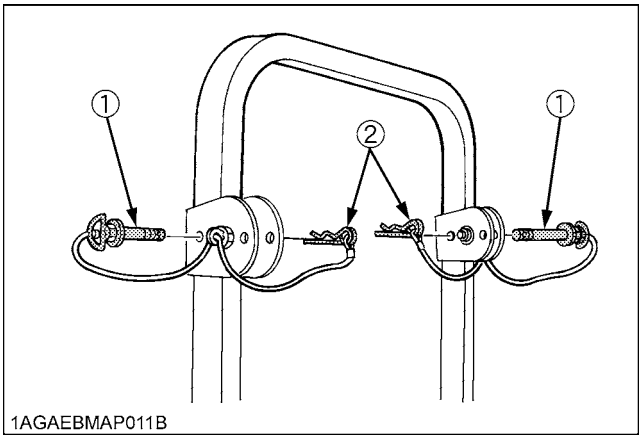

(1) Set bolt
(2) Hair pin

Downloaded from www.Manualslib.com manuals search engine

https://truckmanualshub.com/

2. Fold the ROPS.

CAUTION

To avoid personal injury:

- **Hold the ROPS tightly with both hands and fold the ROPS slowly and carefully.**

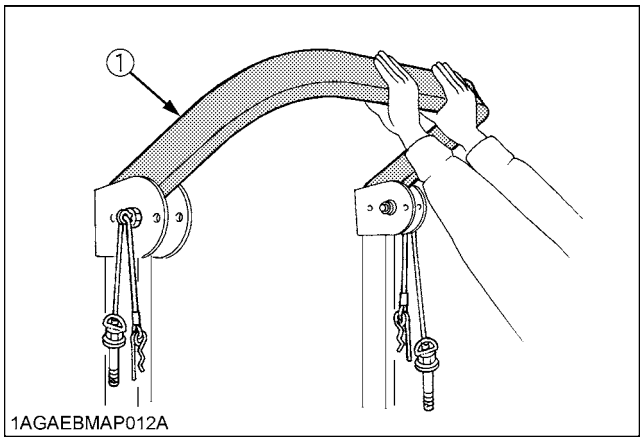

(1) ROPS

3. Align set bolt holes and insert both set bolts. Slightly tighten the set bolts and secure them with the hair pins.

CAUTION

To avoid personal injury:

- **Make sure that both set bolts are properly installed and secured with the hair pins.**

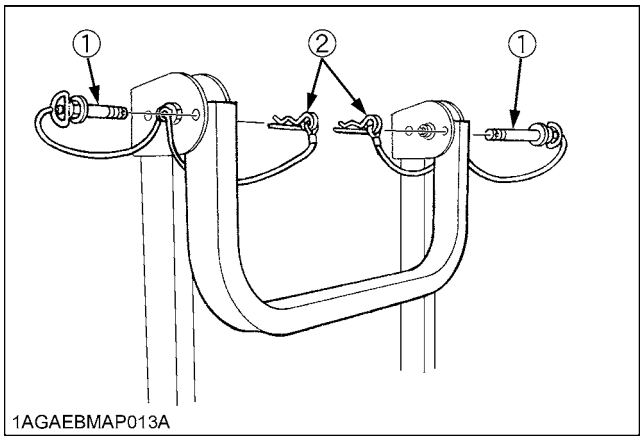

(1) Set bolt
(2) Hair pin

■To Raise the ROPS to Upright Position

1. Remove both hair pins and set bolts.

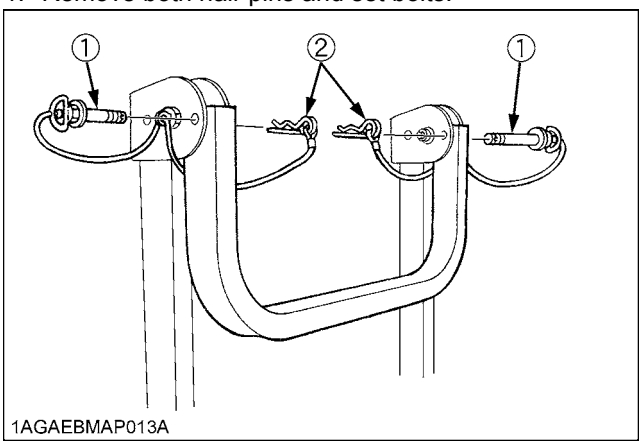

(1) Set bolt
(2) Hair pin

2. Raise ROPS to the upright position.

CAUTION

To avoid personal injury:

- **Raise the ROPS slowly and carefully.**

3. Align set bolt holes, insert both set bolts. Slightly tighten the set bolts and secure them with the hair pins.

CAUTION

To avoid personal injury:

- **Make sure that both set bolts are properly installed as soon as the ROPS is in the upright position and secured with the hair pins.**

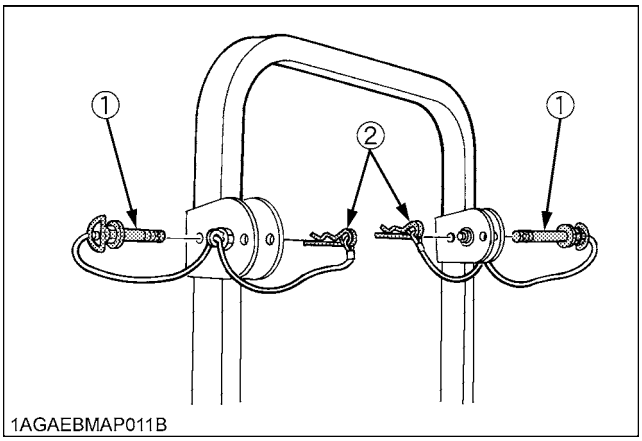

(1) Set bolt
(2) Hair pin

Downloaded from www.Manualslib.com manuals search engine

https://truckmanualshub.com/

■Adjustment of Foldable ROPS

- Adjust free fall of the ROPS upper frame regularly.
- If you feel less friction when folding the ROPS, remove the cotter pin (1), tighten the nut (2) until you feel the right friction in the movement and then replace the cotter pin.

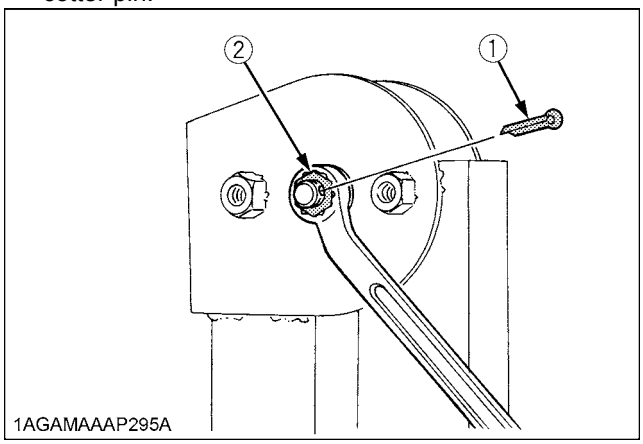

(1) Cotter pin
(2) Nut

STARTING

1. Adjusting the operator's position.

■Operator's Seat

CAUTION

To avoid personal injury:

- **Make sure that the seat is completely secured after each adjustment.**
- **Do not allow any person other than the driver to ride on the tractor.**

◆ Position adjustment

Pull in the position adjust lever and slide the seat backward or forward, as required. The seat will lock in position when the lever is released.

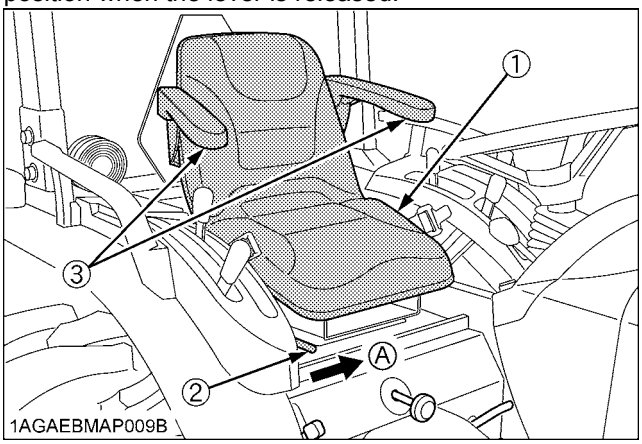

(1) Seat
(2) Position adjust lever
(3) Arm rest
(A) "PULL IN"

IMPORTANT :

- After adjusting the operator's seat, be sure to check that the seat is properly locked.

Downloaded from www.Manualslib.com manuals search engine

https://truckmanualshub.com/

◆ **Suspension adjustment**
[B3030 and B3000 only]
Turn the suspension adjust knob to achieve the optimum suspension setting.

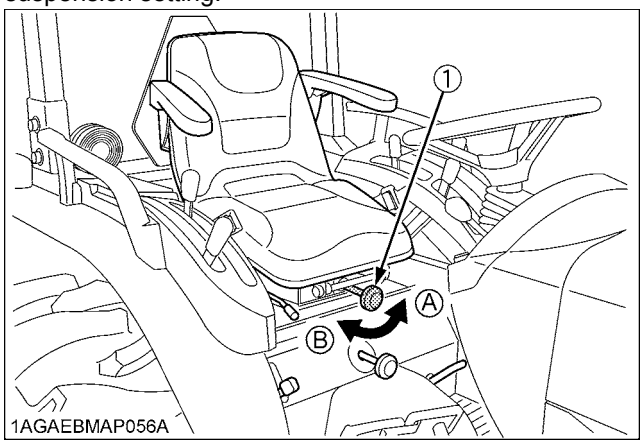

(1) Suspension adjust knob *(A) To decrease tension*
(B) To increase tension

◆ **Armrest angle adjustment**
The armrest angle can be adjusted by the hex socket bolt (socket size 7/32").

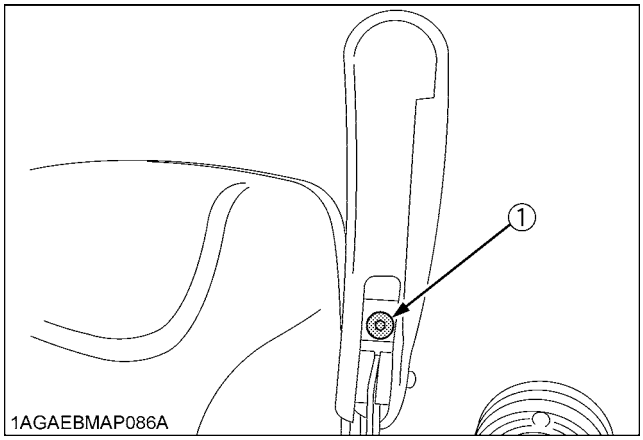

(1) Hex socket bolt

■Seat Belt

CAUTION
To avoid personal injury:
- **Always use the seat belt when the ROPS and CAB is installed.**
- **Do not use the seat belt if a foldable ROPS is down or there is no ROPS.**

Adjust the seat belt for proper fit and connect to the buckle. The seat belt is auto-locking retractable type.

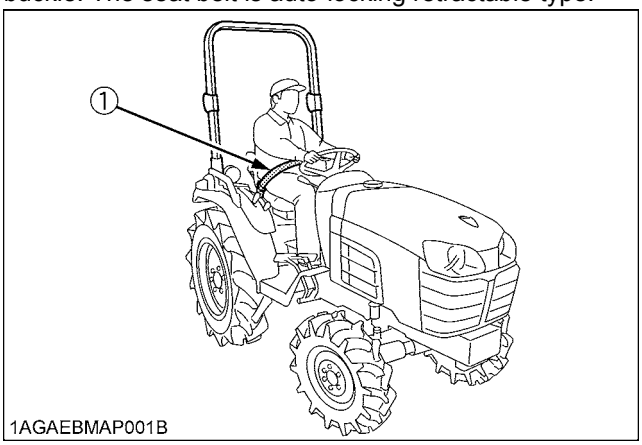

(1) Seat belt

■Tilt Steering Adjustment

CAUTION
To avoid personal injury:
- **Do not adjust the steering wheel while the tractor is in motion.**

Press down the steering wheel pedal, to release the lock so the steering wheel can be adjusted to one of three desired positions.

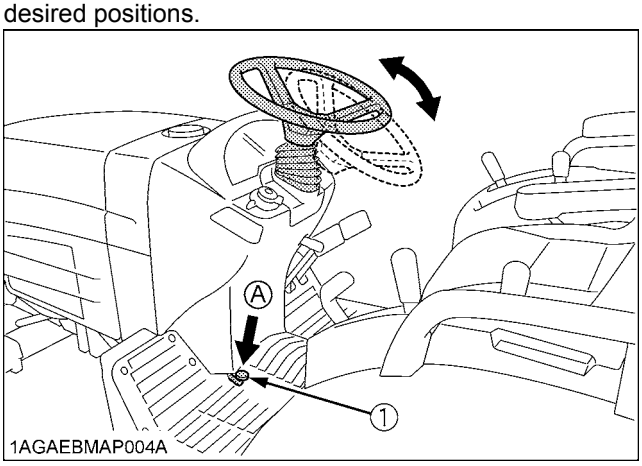

(1) Steering wheel tilt pedal *(A) "PRESS DOWN"*

Downloaded from www.Manualslib.com manuals search engine

https://truckmanualshub.com/

2. Selecting light switch positions.

■Head Light / Turn Signal / Hazard Light Switch

◆ **Head Light Switch**

(A) ○ .....Head light OFF.

(B) ≡D .....Head light ON.

◆ **Turn Signal Light Switch**

To indicate a right turn, turn the turn signal light switch clockwise. To indicate a left turn, turn the turn signal light switch counter-clockwise. The corresponding right and left turn signal lights and indicator on the instrument panel will flash. Turn signal is active when key switch is in the "ON" position.

NOTE :

- Be sure to return switch to center position after turning.

◆ **Hazard Light Switch**

When hazard light switch is pushed, the hazard lights flash along with the indicator on the instrument panel. Press the hazard light switch again to turn off the light. The hazard light switch is operative, even when the key switch is at "OFF" position.

NOTE :

- The indicator in the hazard light switch will light up when the head light switch is turned on.

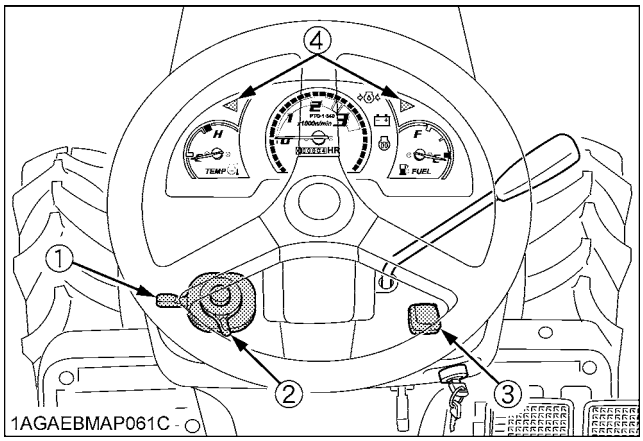

(1) Turn signal light switch
(2) Head light switch
(3) Hazard light switch
(4) Hazard / Turn signal indicator

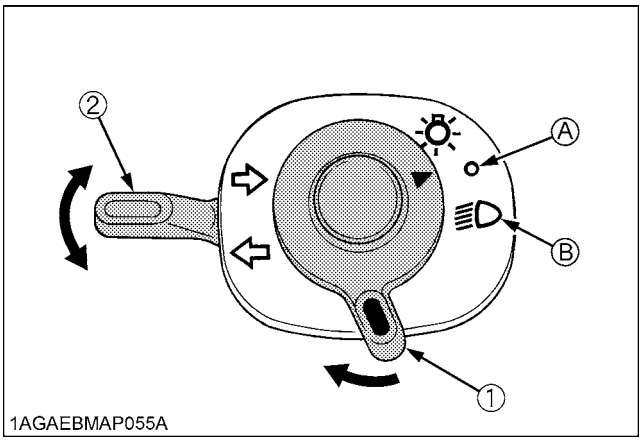

(1) Head light switch *(A) "OFF"*
(2) Turn signal light switch *(B) "ON"*

■Horn Button

The horn will sound when the key switch is in the "ON" position and the horn button pressed.

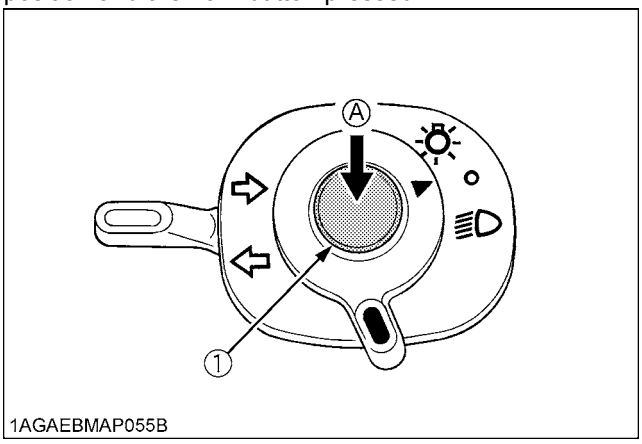

(1) Horn button *(A) "PUSH"*

Downloaded from www.Manualslib.com manuals search engine

https://truckmanualshub.com/

3. Checking the brake pedal.

■Brake Pedals (Right and Left)

WARNING

To avoid personal injury:

- **Applying only one rear wheel brake at high speeds could cause the tractor to swerve or roll-over.**

CAUTION

To avoid personal injury:

- **An accident may occur if the tractor is suddenly braked, such as by heavy towed loads shifting forward or loss of control.**
- **The braking characteristics are different between two and four wheel drive. Be aware of the difference and use carefully.**
- **When driving on icy, wet or loose surfaces, make sure the tractor is correctly ballasted to avoid skidding and loss of steering control. Operate at reduced speed.**

1. Before operating the tractor on the road or before applying the parking brake, be sure to interlock the right and left pedals as illustrated below.
2. Use individual brakes to assist in making sharp turns at slow speeds (Field Operation Only). Disengage the brake pedal lock and depress only one brake pedal.
3. Be sure brake pedals have equal adjustment when using locked together.

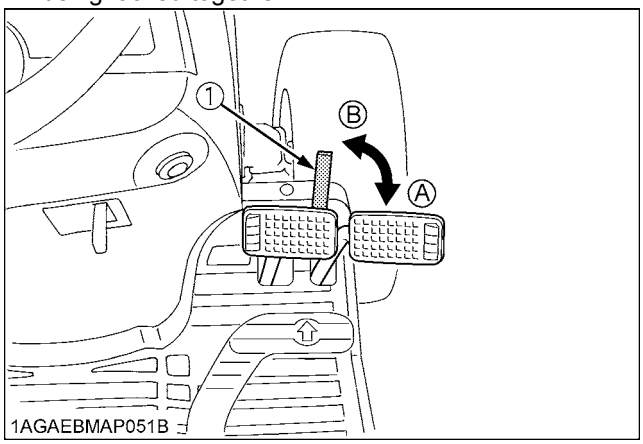

(1) Brake pedal lock *(A) "LOCK"* *(B) "RELEASE"*

4. Raise the implement. (See "HYDRAULIC UNIT" section.)

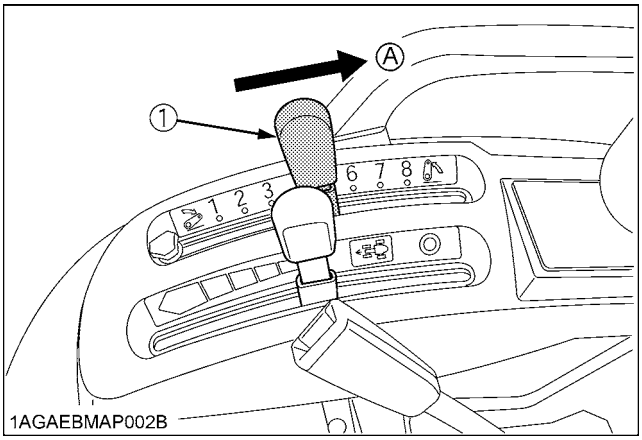

(1) Position control lever *(A) "UP"*

Downloaded from www.Manualslib.com manuals search engine

https://truckmanualshub.com/

5. Selecting the Travel Speed.

■Range Gear Shift Lever (L-M-H)

The range gear shift can only be shifted when tractor is completely stopped.

IMPORTANT :

Do not force the range gear shift lever.

- If it is difficult to shift the range shift lever into neutral position;
  (1) Depress the brake pedal firmly for several seconds.
  (2) Without reducing the brake pedal force, shift the range shift lever.
- If it is difficult to shift the range shift lever into "L", "M" or "H" from neutral position;
  (1) Slightly depress the speed control pedal to rotate the gears inside of transmission.
  (2) Release the speed control pedal to neutral position.
  (3) Shift the range shift lever.
- To avoid damage of transmission, stop tractor before shifting between ranges.

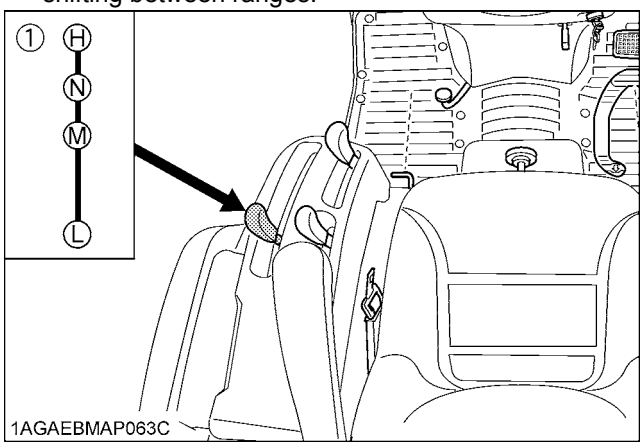

(1) Range gear shift lever (L-M-H)

(H) "HIGH"
(M) "MIDDLE"
(L) "LOW"
(N) "NEUTRAL POSITION"

■Front Wheel Drive Lever

CAUTION

To avoid personal injury:

- **Do not engage the front wheel drive when traveling at road speed.**
- **When driving on icy, wet or loose surfaces, make sure the tractor is correctly ballasted to avoid skidding and loss of steering control. Operate at reduced speed and engage front wheel drive.**
- **An accident may occur if the tractor is suddenly braked, such as by heavy towed loads shifting forward or loss of control.**
- **The braking characteristics are different between two and four wheel drive. Be aware of the difference and use carefully.**

Use the lever to engage the front wheels with the tractor stopped. Shift the lever to "ON" to engage the front wheel drive.

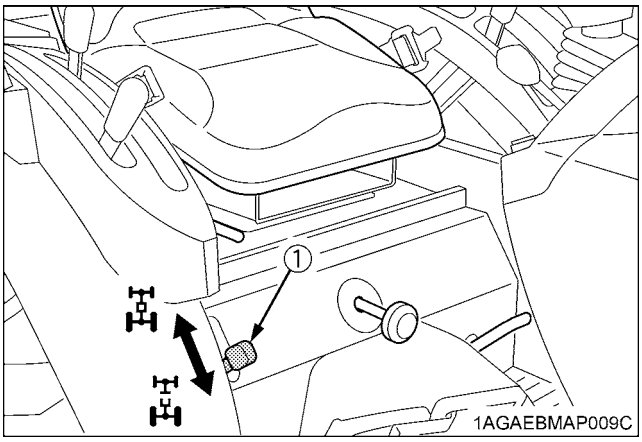

(1) Front wheel drive lever *"ON"* *"OFF"*

IMPORTANT :

- To avoid damage of transmission, when front wheel drive lever is not smoothly shifted, slightly step forward or rearward on speed control pedal.
- Tires will wear quickly if front wheel drive is engaged on paved roads.

◆ **Front wheel drive is effective for the following jobs:**

1. When greater pulling force is needed, such as working in a wet field, when pulling a trailer, or when working with a front-end loader.
2. When working in sandy soil.
3. When working on a hard soil where a rotary tiller might push the tractor forward.
4. Additional braking at reduced speeds.

Downloaded from www.Manualslib.com manuals search engine

https://truckmanualshub.com/

6. Accelerate the Engine.

■Hand Throttle Lever

Pulling the throttle lever back increases engine speed, and pushing it forward decreases engine speed.

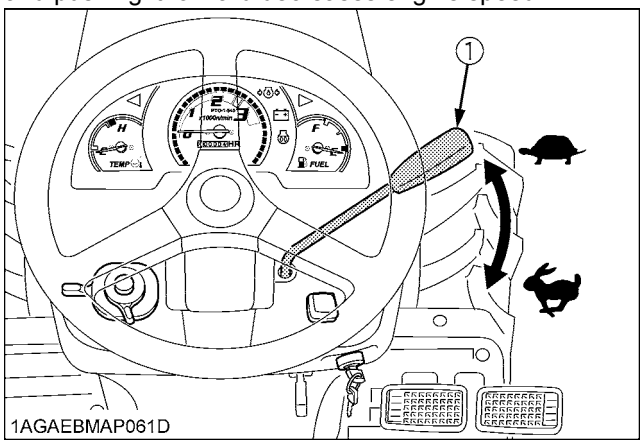

(1) Hand Throttle lever

"INCREASE"
"DECREASE"

7. Unlock the Parking Brake.

■Parking Brake Lever

To release the parking brake, depress the brake pedals again.

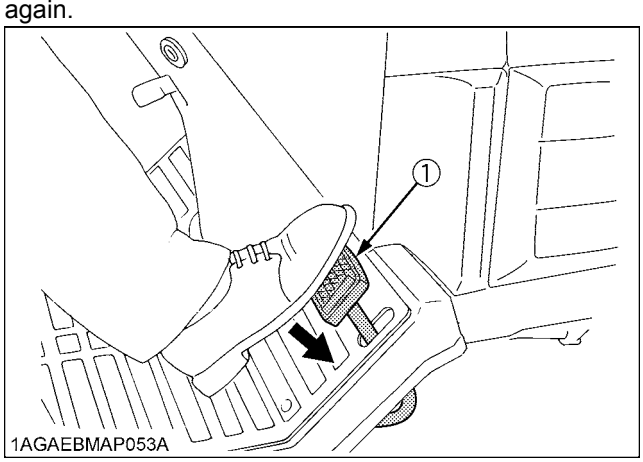

(1) Brake pedals

8. Depress the Speed Control Pedal.

■Speed Control Pedal

WARNING

To avoid personal injury:

- **Do not operate if tractor moves on level ground with foot off of Speed Control Pedal.**
- **Consult your local KUBOTA Dealer.**

Forward Pedal

Depress the speed control pedal with the toe of your right foot to move forward.

Reverse Pedal

Depress the speed control pedal with the heel of your right foot to move backward.

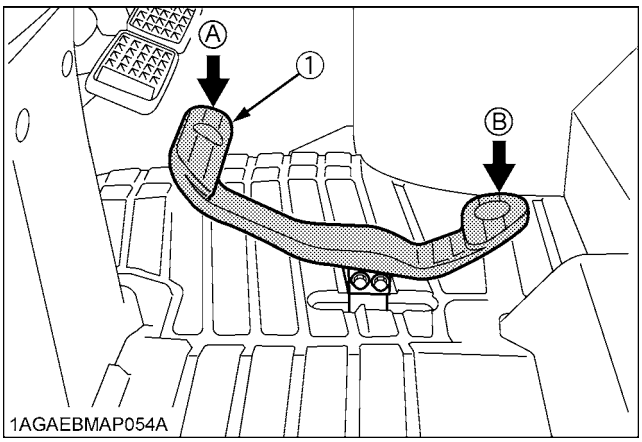

(1) Speed control pedal

(A) "FORWARD"
(B) "REVERSE"

IMPORTANT :

- To prevent serious damage to the HST, do not adjust the stopper bolts.

NOTE :

- When you stand up from the seat with the speed control pedal stepped on or the cruise control lever engaged (ON), the engine will stop regardless of whether the machine is moving or not. This is become the tractor is equipped with Operator Presence Control system (OPC).

Downloaded from www.Manualslib.com manuals search engine

https://truckmanualshub.com/

■Cruise Control Lever

CAUTION

To avoid personal injury:

- **Pull the cruise control lever completely to the rear before starting the engine.**
- **Do not use the cruise control when driving on the road.**
- **Be sure to connect both the left and the right brakes when driving on the road. The speed cruise control won't be released with single brake activation.**

Cruise control is designed for tractor operating efficiency and operator comfort. This device will provide a constant forward operating speed by mechanically holding the cruise control lever at the selected position.

◆ To engage Cruise Control Device

1. The proper forward speed will be maintained if you apply the cruise control lever at any position.
2. To operate faster than the set speed, depress the speed control pedal further down in this condition. The set speed will be resumed if you release the pedal.

◆ To disengage Cruise Control Device

- Move the lever all the way back and then to "NEUTRAL" position to release the cruise control.
- Depress both brake pedals.

NOTE :

- Cruise control will be disengaged automatically when both brake pedals are depressed.
- The cruise control device does not disengage when the individual right or left brake is applied.
- Cruise control device will not operate in reverse.
- Preferably set the cruise control lever, while holding down the speed control pedal. This makes the setting smoother.
- When releasing the cruise mode, be sure to return the cruise control lever fully backward.

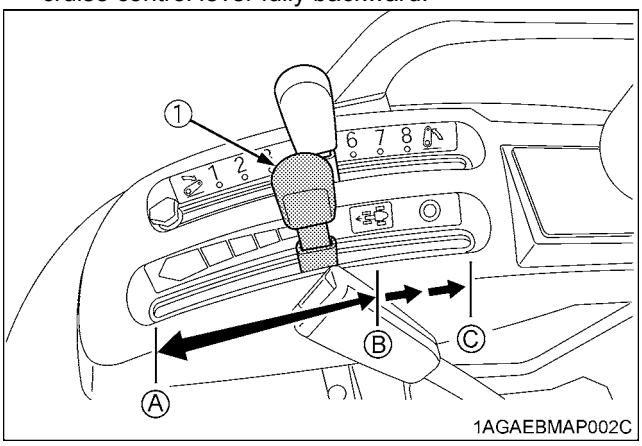

(1) Cruise control lever
(A) "INCREASE"
(B) "DECREASE"
(C) "NEUTRAL"

NOTE :

- When you stand up from the seat with the speed control pedal stepped on or the cruise control lever engaged (ON), the engine will stop regardless of whether the machine is moving or not. This is because the tractor is equipped with Operator Presence Control system (OPC).

Downloaded from www.Manualslib.com manuals search engine

https://truckmanualshub.com/

STOPPING

■Stopping

1. Slow the engine down.
2. Step on the brake pedal.
3. After the tractor has stopped, disengage the PTO, lower the implement to the ground, shift the transmission to neutral and set the parking brake.

CHECK DURING DRIVING

■Immediately Stop the Engine if:

- The engine suddenly slows down or accelerates.
- Unusual noises suddenly are heard.
- Exhaust fumes suddenly become very dark.

While driving, make the following checks to see that all the parts are functioning normally.

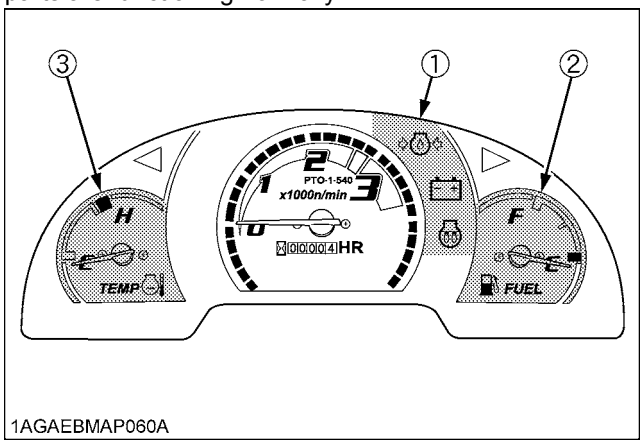

1AGAEBMAP060A

(1) Easy checker(TM)
(2) Fuel gauge
(3) Coolant temperature gauge

■Easy Checker (TM)

If the warning lamps of the Easy Checker(TM) come on during operation, immediately stop the engine, and find the cause as shown below.
Never operate the tractor while Easy Checker(TM) lamp is on.

Engine oil pressure
If the oil pressure in the engine goes below the prescribed level, the warning lamp in the Easy Checker(TM) will come on.
If this should happen during operation, and it does not go off when the engine is accelerated to more than 1000 rpm, check level of engine oil.
(See "Checking Engine Oil Level" in "DAILY CHECK" in "PERIODIC SERVICE" section.)

Electrical charge
If the alternator is not charging the battery, the warning lamp in the Easy Checker(TM) will come on.
If this should happen during operation, check the electrical charging system or consult your local KUBOTA Dealer.

NOTE :
- For checking and servicing of your tractor, consult your local KUBOTA Dealer for instructions.

Downloaded from www.Manualslib.com manuals search engine

https://truckmanualshub.com/

■Fuel Gauge

When the key switch is on, the fuel gauge indicates the fuel level.

Be careful not to empty the fuel tank. Otherwise air may enter the fuel system.

Should this happen, the system should be bled. (See "Bleeding Fuel System" in "SERVICE AS REQUIRED" in "PERIODIC SERVICE" section.)

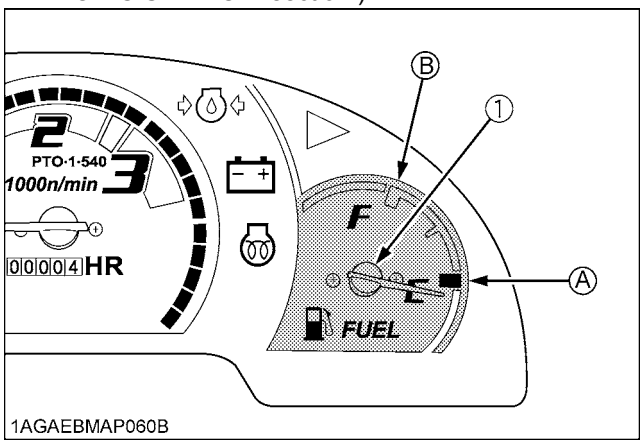

(1) Fuel gauge
(A) "EMPTY"
(B) "FULL"

■Coolant Temperature Gauge

CAUTION

To avoid personal injury:

- **Do not remove radiator cap until coolant temperature is well below its boiling point. Then loosen cap slightly to the stop to relieve any pressure before removing cap completely.**

1. With the key switch at "ON", this gauge indicates the temperature of the coolant. "C" for "cold" and "H" for "hot".
2. If the indicator reaches the "H" position (red zone), engine coolant is overheated. Check the tractor by referring to "TROUBLESHOOTING" section.

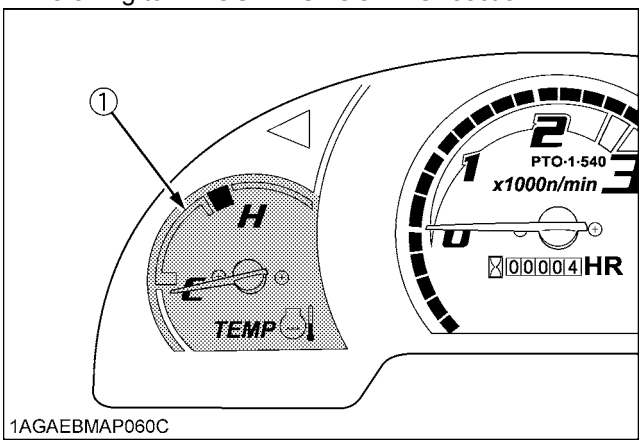

(1) Coolant temperature gauge

■Hourmeter / Tachometer

This meter gives readings for engine speed, PTO shaft speed and the hours the tractor has been operated.

1. The tachometer indicates the engine speed and the 540 PTO shaft speed location on the dial.
2. The hourmeter indicates in five digits the hours the tractor has been used; the last digit indicates 1/10 of an hour.

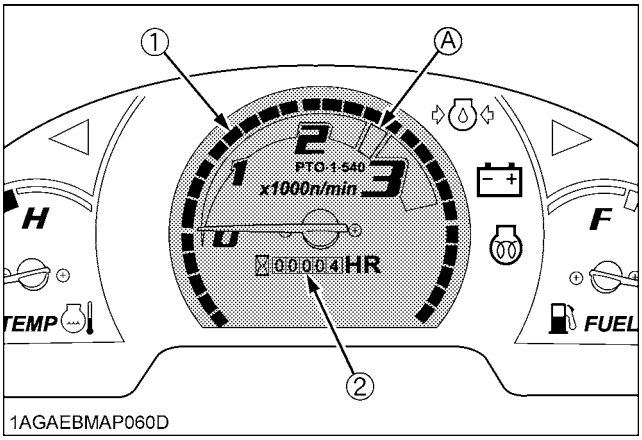

(1) Engine revolution
(2) Hours used
(A) PTO: 540 rpm

Downloaded from www.Manualslib.com manuals search engine

https://truckmanualshub.com/

PARKING

■Parking

CAUTION

To avoid personal injury:

- **Always set the parking brake, stop the engine and remove the key before leaving the tractor seat.**

1. When parking, be sure to set the parking brake.
   To set the parking brake;
   (1) Interlock the brake pedals.
   (2) Depress the brake pedals.
   (3) Latch the brake pedals with the parking brake lever.

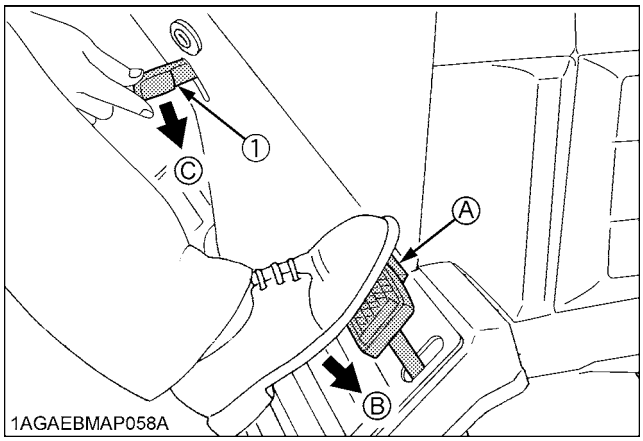

(1) Parking brake lever
(A) Interlock the brake pedals
(B) "DEPRESS"
(C) "PUSH-DOWN"

2. Before getting off the tractor, disengage the PTO, lower all implements to the ground, place all control levers in their neutral positions, set the parking brake, stop the engine and remove the key.
3. If it is necessary to park on an incline, be sure to chock the wheels to prevent accidental rolling of the machine.

OPERATING TECHNIQUES

■Differential Lock

WARNING

To avoid personal injury due to loss of steering control:

- **Do not operate the tractor at high speed with differential lock engaged.**
- **Do not attempt to turn with the differential lock engaged.**
- **Be sure to release the differential lock before making a turn in field conditions.**

If one of the rear wheels should slip, step on the differential lock pedal. Both wheels will turn together, then reduce slippage.
Differential lock is maintained only while the pedal is depressed.

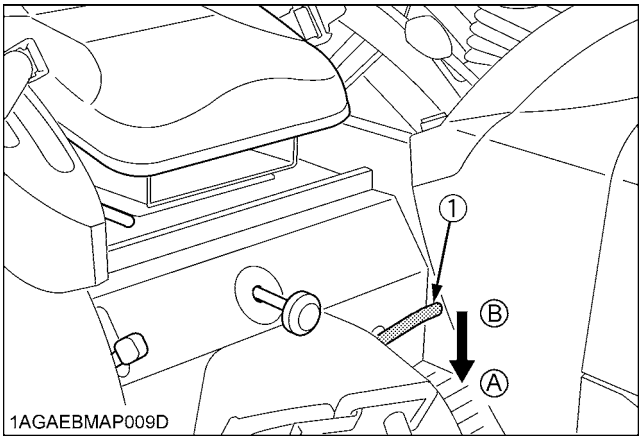

(1) Differential lock pedal
(A) Press to "ENGAGE"
(B) Release to "DISENGAGE"

IMPORTANT :

- When using the differential lock, always slow the engine down.
- To prevent damage to power train, do not engage differential lock when one wheel is spinning and the other is completely stopped.
- If the differential lock cannot be released in the above manner, step lightly on the brake pedals alternately.

Downloaded from www.Manualslib.com manuals search engine

https://truckmanualshub.com/

■Operating the Tractor on a Road

CAUTION

To avoid personal injury:

- **To help assure straight line stops when driving at transport speeds, lock the brake pedals together. Uneven braking at road speeds could cause the tractor to roll-over.**
- **When traveling on road with 3-point hitch mounted implement attached, be sure to have sufficient front weight on the tractor to maintain steering ability.**
- **Towed equipment (without brake) must not exceed 1.5 times the tractor weight when traveling on roads or at high speeds.**

Be sure SMV emblem and hazard light are clean and visible. If towed or rear-mounted equipment obstructs these safety devices, install SMV emblem and hazard light on equipment.
Consult your local KUBOTA dealer for further detail.

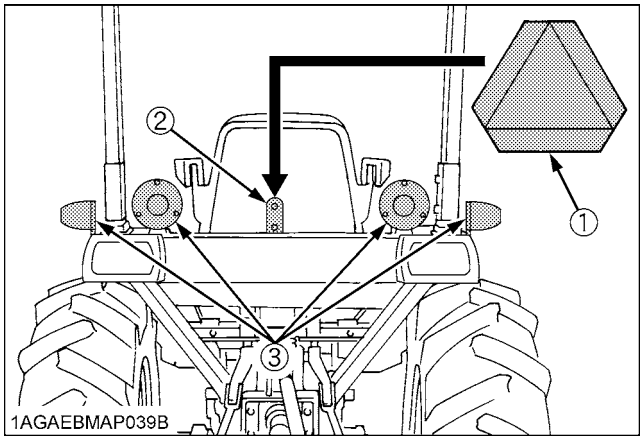

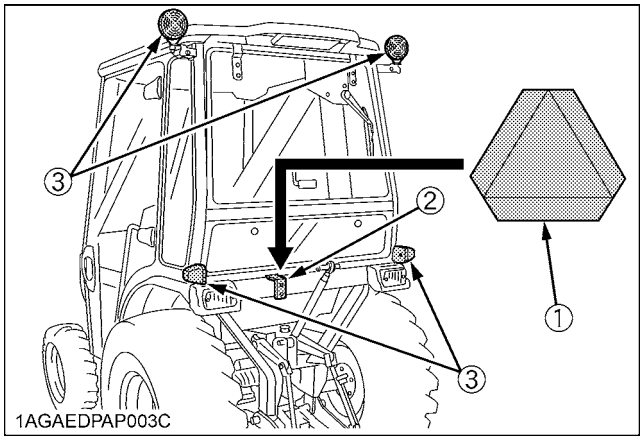

(1) SMV emblem
(2) Bracket
(3) Hazard light

■Operating on Slopes or Rough Terrain

CAUTION

To avoid personal injury:

- **Always back up when going up a steep slope. Driving forward could cause the tractor to tip over backward. Stay off hills and slopes too steep for safe operation.**
- **Avoid changing gears when climbing or descending a slope.**
- **If operating on a slope, never disengage shift levers to neutral. Doing so could cause loss of control.**
- **Do not drive the tractor close to the edges of ditches or banks which may collapse under the weight of the tractor. Especially when the ground is loose or wet.**

1. Slow down for slopes, rough ground, and sharp turns, especially when transporting heavy, rear mounted equipment.
2. Before descending a slope, be sure that the range lever is in the low so that speed can be controlled without using brakes.

■Directions for Use of Power Steering

1. Power steering is activated only while the engine is running. While the engine is stopped, the tractor functions in the same manner as tractors without power steering.
2. When the steering wheel is turned all the way to the stop, the relief valve is activated. Do not hold the steering wheel in this position for a long period of time.
3. Avoid turning the steering wheel while the tractor is stopped, or tires may wear out sooner.
4. The power steering mechanism makes the steering easier. Be careful when driving on a road at high speeds.

Downloaded from www.Manualslib.com manuals search engine

https://truckmanualshub.com/

PTO

PTO OPERATION

WARNING

To avoid personal injury:

- **Before operation, be sure to select the correct PTO lever (mid, mid/rear, rear).**

CAUTION

To avoid personal injury:

- **Disengage PTO, stop engine, and allow all rotating components to come to a complete stop before connecting, disconnecting, adjusting, or cleaning any PTO driven equipment.**

■PTO Select Lever

The tractor has a 540 rpm rear PTO speed and a 2500 rpm mid-PTO speed.

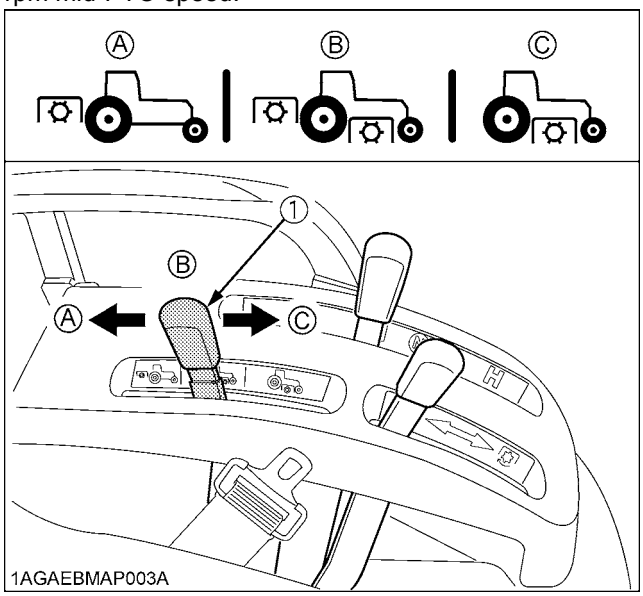

(1) PTO select lever

(A) Rear-PTO position
(B) Mid-Rear-PTO position
(C) Mid-PTO position

◆ **Mid-PTO**

To use Mid-PTO, shift the PTO select lever to Mid-PTO position and the PTO clutch lever to "ON" position.

◆ **Mid-Rear PTO**

To use mid and rear PTO at the same time, shift the PTO select lever to mid-rear PTO position and the PTO clutch lever to "ON" position.

◆ **Rear PTO**

To use rear PTO, shift the PTO select lever to rear PTO position and the PTO clutch lever to "ON" position.

IMPORTANT :

- To avoid shock loads to the PTO, reduce engine throttle from full to half speed by pushing up on engine throttle when engaging the PTO, then open the throttle to the recommended speed.
- To avoid damage of transmission, when PTO select lever is not smoothly shifted, slightly shift PTO clutch lever.
- To avoid damage of transmission, do not shift PTO select lever until the PTO has stopped completely.

◆ **Mid-PTO**

The Mid-PTO is available for KUBOTA approved implements.

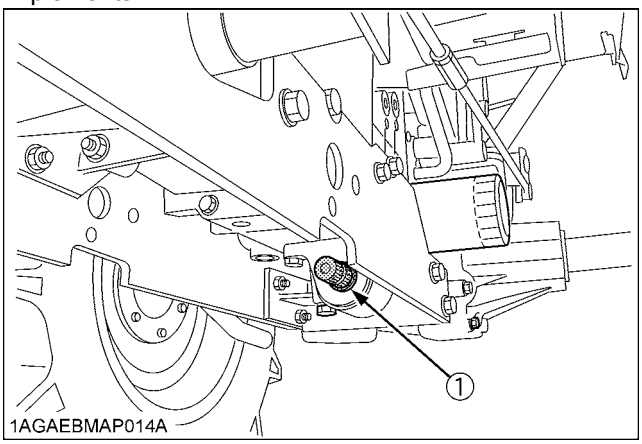

(1) Mid-PTO

◆ **Mid-PTO**

		B2630	B3030/B3000
Engine speed	rpm	2753	2600
PTO speed	rpm	2500	2500

◆ **Rear PTO**

		B2630	B3030/B3000
Engine speed	rpm	2768	2592
Shaft		6-spline	6-spline
PTO speed	rpm	540	540

Downloaded from www.Manualslib.com manuals search engine

https://truckmanualshub.com/

■PTO Clutch Lever

1. The PTO clutch lever engages or disengages the PTO clutch which gives the PTO independent control.
2. Shift the lever to "ON" to engage the PTO clutch. Shift the lever to "OFF" to disengage the PTO clutch.

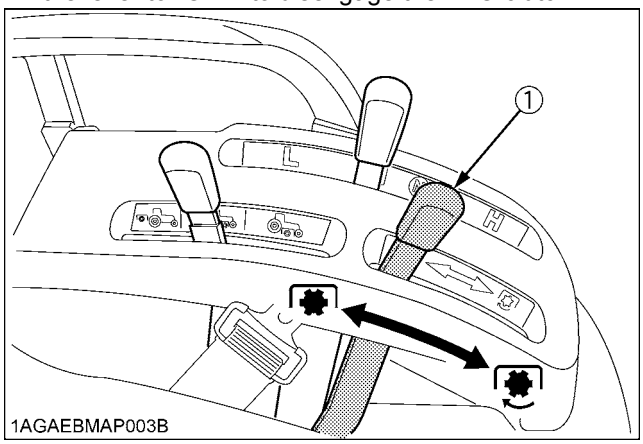

(1) PTO clutch lever

"ON" "ENGAGE"
"OFF" "DISENGAGE"

IMPORTANT :

- To avoid shock loads to the PTO, reduce engine throttle from full to half speed by pushing up on engine throttle when engaging the PTO, then re-engage the engine to full.
- To avoid damage to PTO clutch and implement, shift the PTO clutch lever slowly, when engaging the PTO clutch. Do not keep the PTO clutch lever half way.

NOTE :

- Tractor engine will not start if the PTO clutch lever is in the engaged "ON" position.
- When you stand up from the seat with the PTO clutch lever at "ON" position, the engine will stop regardless of the position of the PTO select lever.
  This is because the tractor is equipped with Operator Presence Control system (OPC).

■PTO shaft Cover and Shaft Cap

Keep the PTO shaft cover in place at all times. Replace the PTO shaft cap when the PTO is not in use. Before connecting or disconnecting a drive shaft to PTO shaft, be sure engine is "OFF" and raise up the PTO shaft cover. Afterward be sure to return the PTO shaft cover to the "NORMAL POSITION".

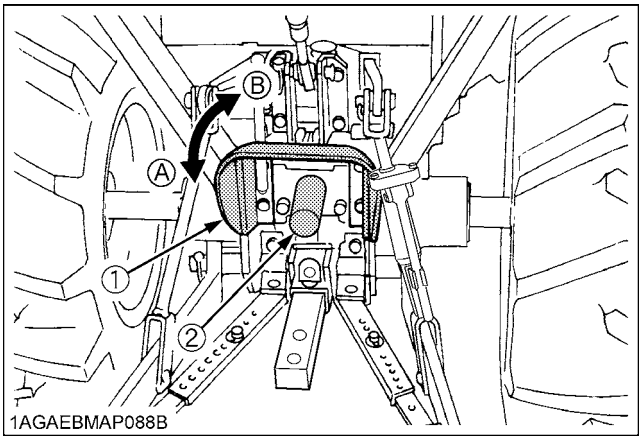

(1) PTO shaft cover
(2) PTO shaft cap

(A) "NORMAL POSITION"
(B) "RAISED POSITION"

Downloaded from www.Manualslib.com manuals search engine

https://truckmanualshub.com/

■Stationary PTO

To park the tractor and use the PTO system (for chipper or pump, for example), start the PTO system in the following steps.

1. Apply the parking brakes and place blocks at the tires.
2. Make sure the shift levers are at NEUTRAL, and start the engine .
3. Set the PTO select lever to rear only position.
4. Dismount the seat and tilt up.
5. Set the PTO clutch lever to engage "ON".
6. Set the engine speed to provide recommended rear PTO speed.

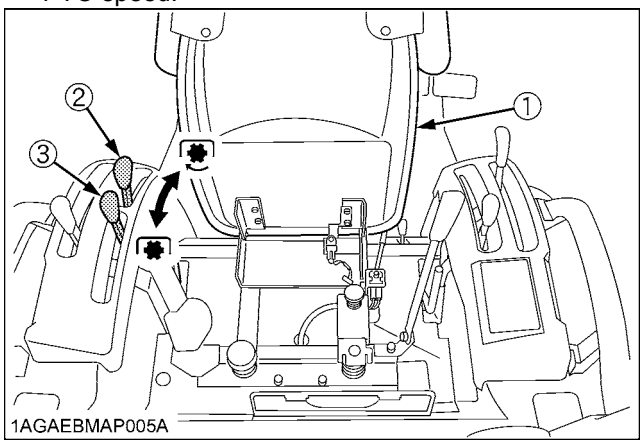

(1) Seat
(2) PTO clutch lever
(3) PTO select lever

"ON"
"OFF"

NOTE :

- If the PTO clutch lever is shifted to "ON"(Engaged) position under the following condition, the engine will stop itself.
  (1) The range gear shift lever (H-M-L) is not at "NEUTRAL" position.
  (2) The PTO select lever is not at "REAR PTO" position.
  (3) The seat is not tilted forward.

Downloaded from www.Manualslib.com manuals search engine

https://truckmanualshub.com/

THREE-POINT HITCH & DRAWBAR

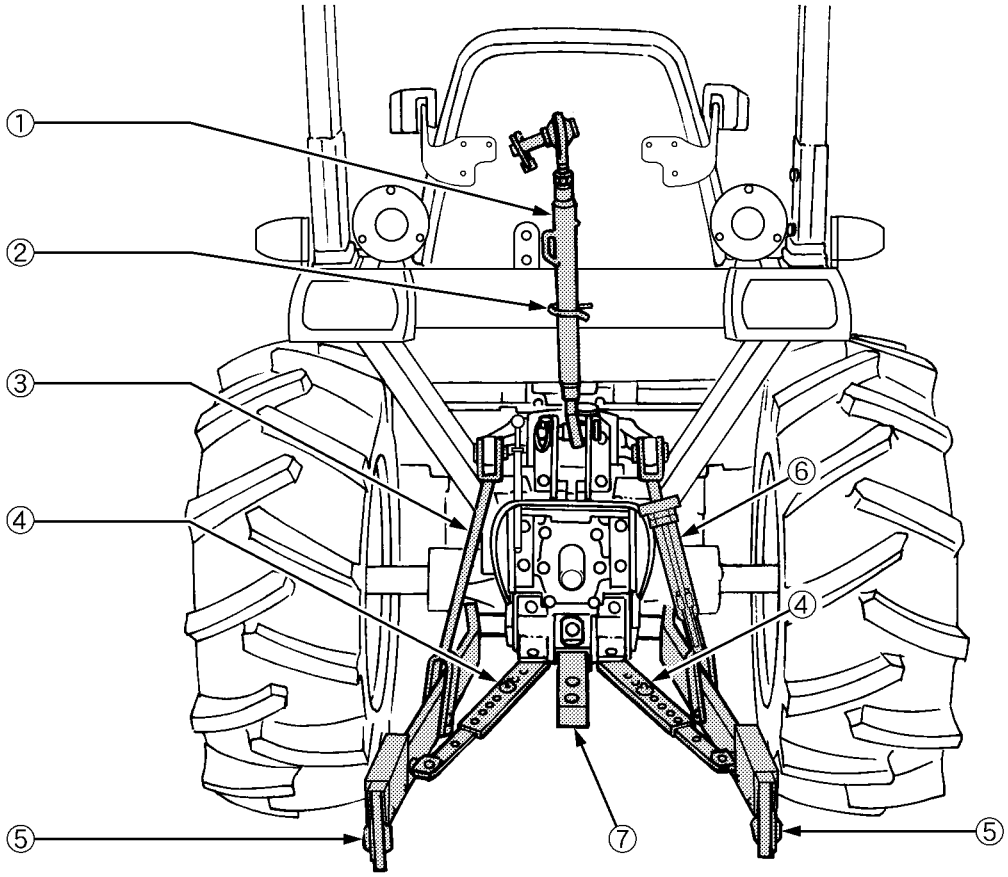

1AGAEDYAP003A

(1) Top link
(2) Top link holder
(3) Lifting rod (Left)
(4) Telescopic stabilizers
(5) Lower link (Telescopic type)
(6) Lifting rod (Right, Ratchet type)
(7) Drawbar

Downloaded from www.Manualslib.com manuals search engine

https://truckmanualshub.com/

3-POINT HITCH

1. Make preparations for attaching implement.

■Selecting the holes of lifting rods and lower links

There are two holes in the lower links. For most operations the lifting rods should be attached to the (A) holes.

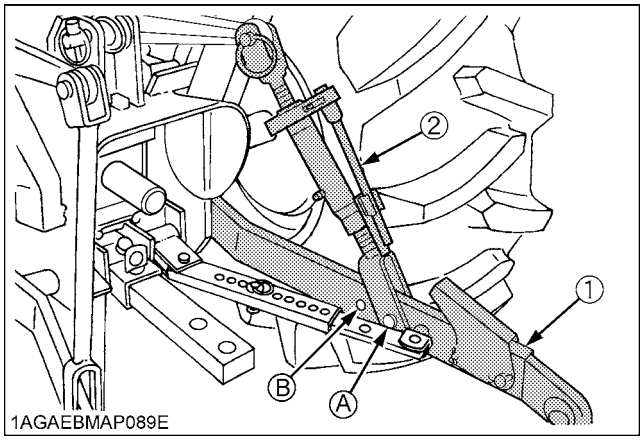

(1) Lower links *holes:(A),(B)*
(2) Lifting rods

NOTE :
- The lifting rods may be attached to (B) hole for higher lifting height. (with reduced lifting force)

■Selecting the Top Link Mounting Holes

Select the proper set of holes by referring to the "Hydraulic Control Unit Use Reference Chart" in "HYDRAULIC UNIT" section.

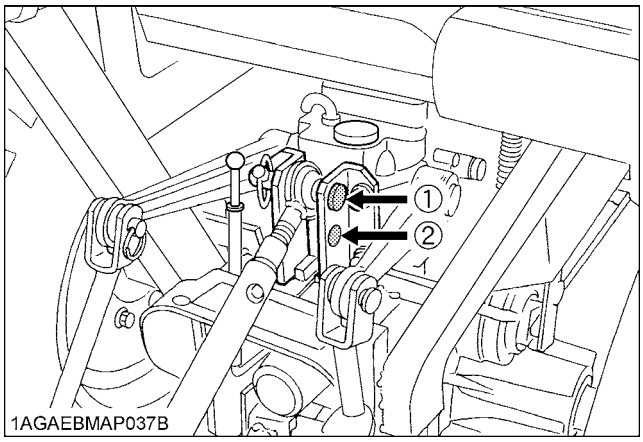

■Drawbar

Remove the drawbar if a close mounted implement is being attached.

2. Attaching and detaching implements

CAUTION

To avoid personal injury:
- **Be sure to stop the engine and remove the key.**
- **Do not stand between tractor and implement unless parking brake is applied.**
- **Before attaching or detaching implement, locate the tractor and implement on a firm, flat and level surface.**
- **Whenever an implement or other attachment is connected to the tractor 3-point hitch, check full range of operation for interference, binding or PTO driveline separation.**

■Lifting Rod (Right, Ratchet type)

To level a 3-point mounted implement,
1. Press the up and down changing lever.
2. Turn the adjusting handle from side to side to shorten or lengthen the adjustable lifting rod with the implement on the ground.

IMPORTANT :
- After adjustment, be sure to lock the adjusting handle with the handle stopper.

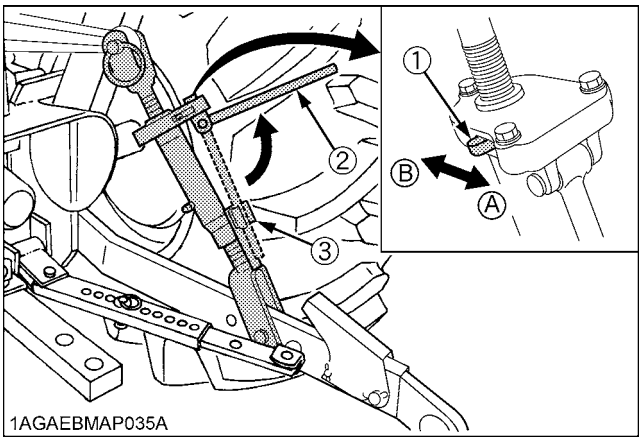

(1) Up and down changing lever *(A) To shorten the lifting rod*
(2) Adjusting handle *(B) To lengthen the lifting rod*
(3) Handle stopper

■Top Link

1. Adjust the angle of the implement to the desired position by shortening or lengthening the top link.
2. The proper length of the top link varies according to the type of implement being used.

Downloaded from www.Manualslib.com manuals search engine

https://truckmanualshub.com/

■Telescopic Stabilizers

Adjust the telescopic stabilizers to control horizontal sway of the implement. Select the proper set of holes by referring to the "Hydraulic Control Unit Use Reference Chart" in "AUXILIARY HYDRAULICS" in "HYDRAULIC UNIT" section.

After aligning satisfactorily, insert the set-pin through any one of the eight holes on the outer tube that align with one of the holes on the inner bar, both stabilizers will be locked.

If the set-pin is inserted through the slot to engage one of the holes on the inner bar, a limited degree of sway will be permitted.

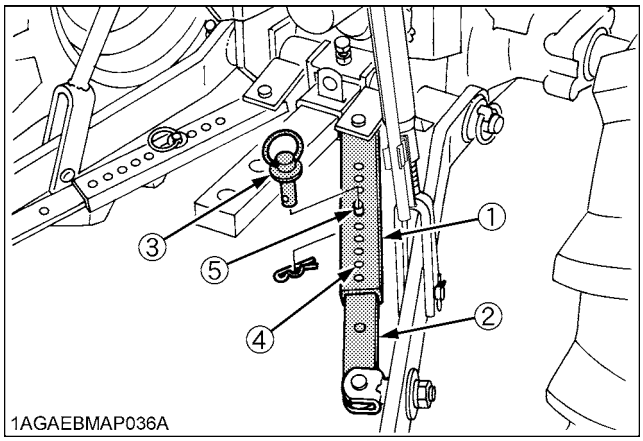

(1) Outer tube
(2) Inner bar
(3) Set-pin
(4) Hole
(5) Slot

■Telescopic Lower Links

To attach an implement, follow the instructions below:

1. Push the levers, pull out the lower link ends, and attach to the implement.
2. Back up the tractor slightly to make sure the lower links are pushed in securely.

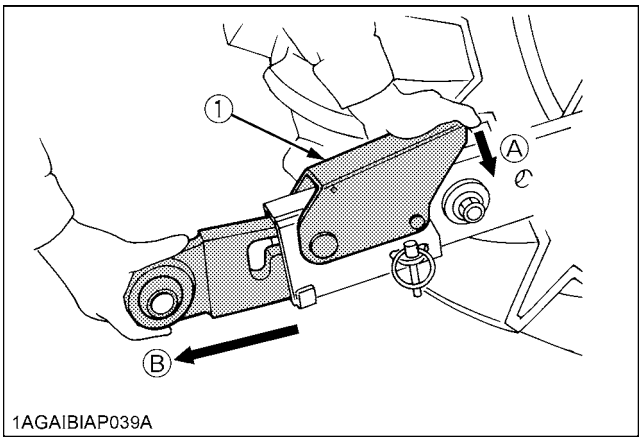

(1) Lever
(A) "PUSH"
(B) "PULL OUT"

DRAWBAR

⚠ WARNING

To avoid personal injury:

- **Never pull from the top link, the rear axle or any point above the drawbar. Doing so could cause the tractor to tip over rearward causing personal injury or death.**

■Adjusting Drawbar Length

When towing an implement, use of (B) hole in drawbar is recommended.

The acceptable drawbar load is provided in the "IMPLEMENT LIMITATIONS" section.

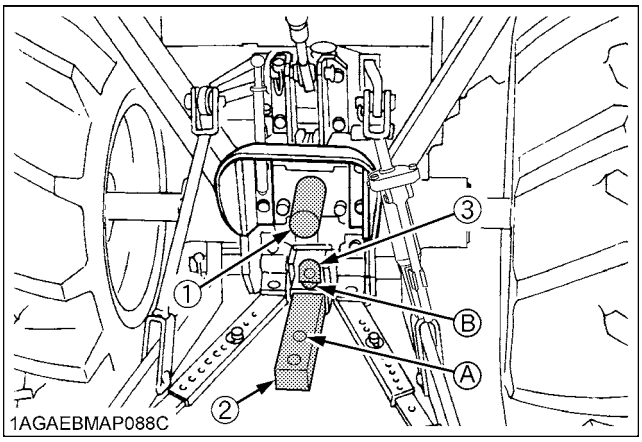

(1) PTO Shaft cap
(2) Drawbar
(3) Drawbar pin
Hole : (A), (B)

Downloaded from www.Manualslib.com manuals search engine

https://truckmanualshub.com/

HYDRAULIC UNIT

3-POINT HITCH CONTROL SYSTEM

■Position Control

This will control the working depth of 3-point hitch mounted implement regardless of the amount of pull required.

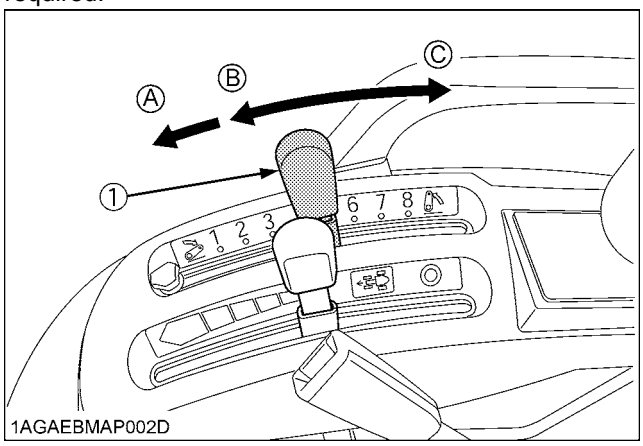

(1) Position control lever
(A) "FLOAT"
(B) "DOWN"
(C) "UP"

■3-point Hitch Lowering Speed

CAUTION

To avoid personal injury:

- **Fast lowering speed may cause damage or injury. Lowering speed of implement should be adjusted to two or more seconds.**

The lowering speed of the 3-point hitch can be controlled by adjusting the 3-point hitch lowering speed knob.

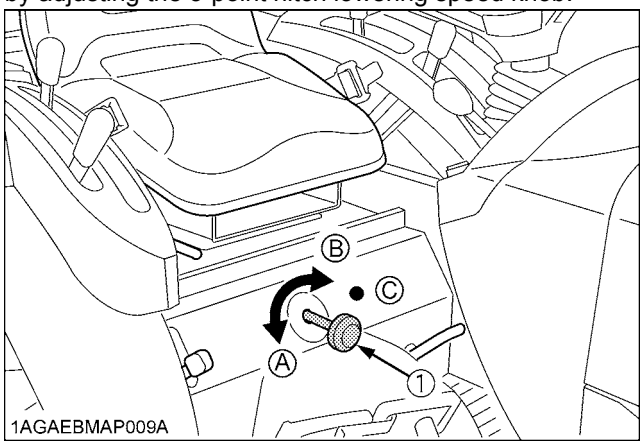

(1) 3-point hitch lowering speed knob
(A) "FAST"
(B) "SLOW"
(C) "LOCK"

AUXILIARY HYDRAULICS

Two hydraulic outlets (mid and rear) are provided on the tractor.

■Hydraulic Block Type Outlet

Hydraulic block type outlet is useful when adding hydraulically operated equipment such as front end loader, front blade, etc.

When implement is attached

1. Remove the block cover.
2. Attach the block outlet cover. (option)

[Mid outlet]

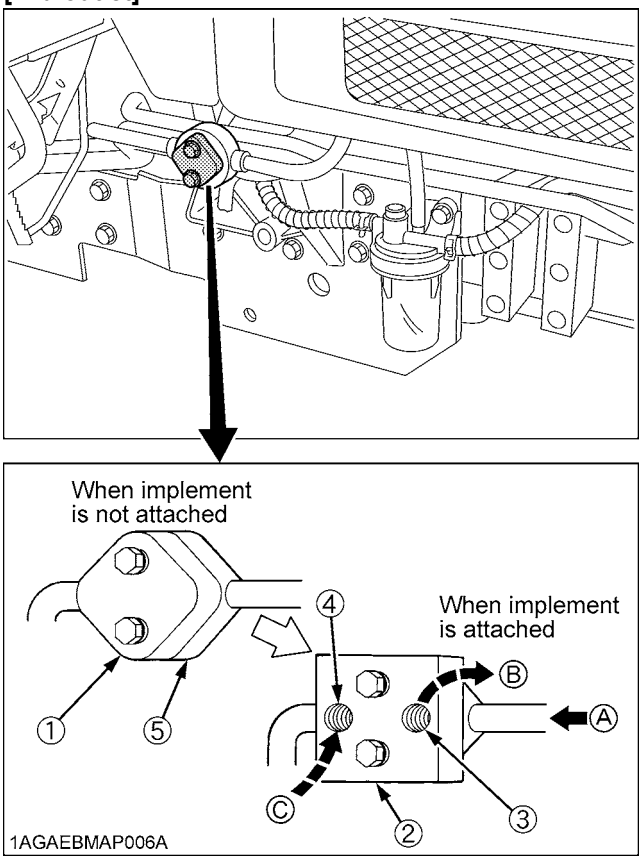

(1) Block cover
(2) Block outlet cover (option)
(3) Outlet
(4) Inlet
(5) Hydraulic block

(A) From gear pump
(B) To implement inlet
Max. flow
[B2630]: 21.2L/min (5.6 U.S.gals./min)
[B3030/B3000]: 19.7 L/min (5.2 U.S.gals./min)
No relief valve in the hydraulic block.
(C) From implement outlet

Downloaded from www.Manualslib.com manuals search engine

https://truckmanualshub.com/

IMPORTANT :

- For mid outlet, be sure to use the control valve of the "Power beyond type" (with relief valve that has a third line return to tank).

NOTE :

- The "tank" port flow from implement valve should be connected to the port located on the right hand side of transmission case.

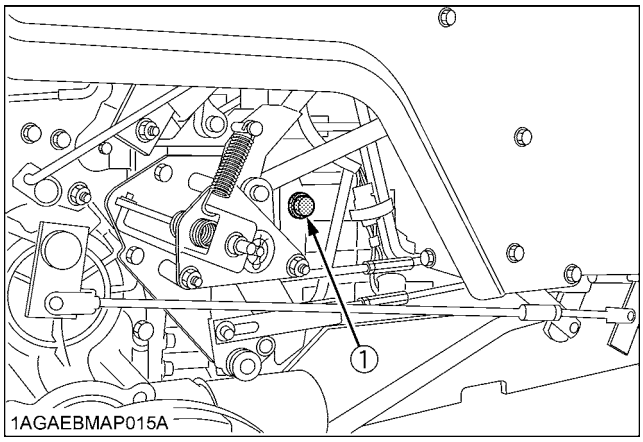

(1) Return port

[Rear outlet]

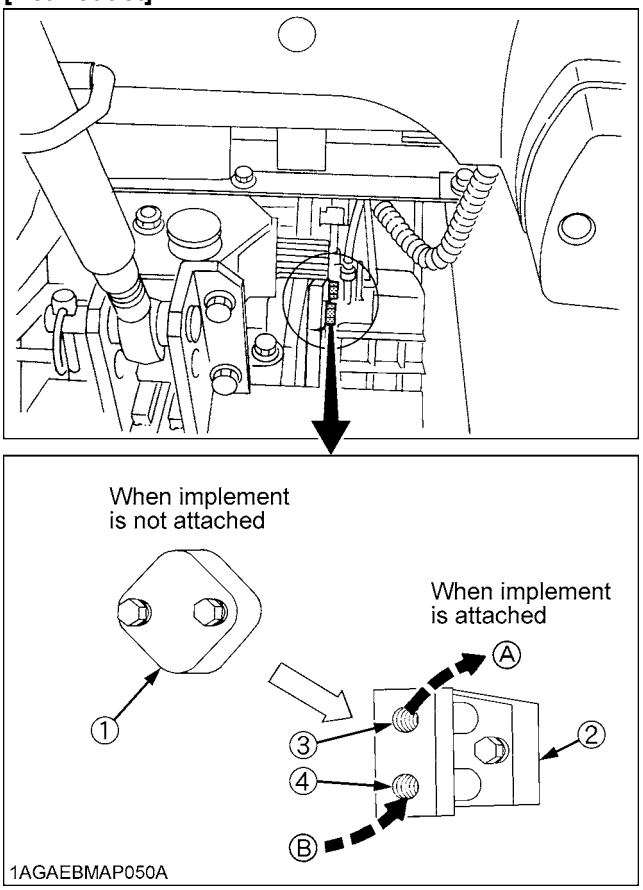

(1) Block cover
(2) Block outlet cover (option)
(3) Outlet
(4) Inlet

(A) To implement inlet
Max. flow
[B2630]: 21.2 L/min
(5.6 U.S.gals./min)
[B3030/B3000]: 19.7 L/min
(5.2 U.S.gals./min)
Max. pressure
[B2630]: 15.2 to 16.2 MPa
(155 to 165 kgf/cm²)
(2204 to 2349 psi)
[B3030/B3000]:
15.0 to 16.0 MPa
(153 to 163 kgf/cm²)
(2175 to 2320 psi)
(B) from implement outlet

NOTE :

- If the implement control valve has a relief valve, the tank port flow from implement should be connected to the port located on the right hand side of transmission case.

Downloaded from www.Manualslib.com manuals search engine

https://truckmanualshub.com/

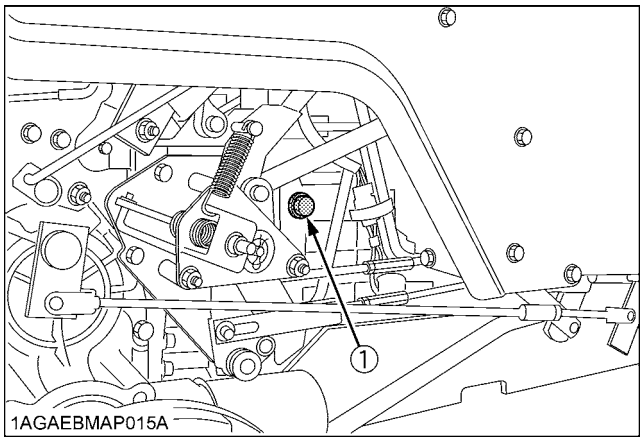

(1) Return port

Downloaded from www.Manualslib.com manuals search engine

https://truckmanualshub.com/

■Hydraulic Control Unit Use Reference Chart

In order to handle the hydraulics properly, the operator must be familiar with the following. Though this information may not be applicable to all types of implements and soil conditions, it is useful for general conditions.

Implement	1AGAIAZAP122A Soil condition	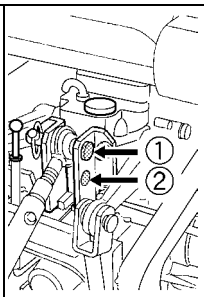 1AGAEBMAP037C Top link mounting holes	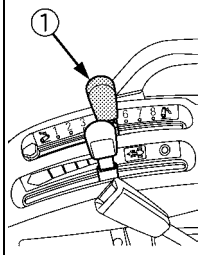 1AGAEBMAP002E (1) Position control lever	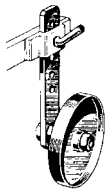 1AGAIAZAP070A Gauge wheel	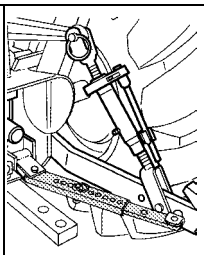 1AGAEBMAP089B Telescopic stabilizers	Remarks
Moldboard plow	Light soil Medium soil Heavy soil	(1) is standard. (2) is used only when there is some obstacle that prevents you from using the standard.	Position control	YES/NO	Loose	Insert the set-pin through the slot on the outer tube that align with one of the holes on the inner bar. For implements with gauge wheels, lower the implements to the ground.
Disc plow	---					
Harrower (spike, springtooth, disc type)	---					
Sub-soiler						
Weeder, ridger	---			YES	Tighten	Telescopic stabilizer should be tight enough to prevent excessive implement movement when implement is in raised position. For implements with gauge wheels, lower the implements to the ground.
Earthmover, digger, scraper, manure fork, rear carrier				YES/NO		
Mower (mid-and rear-mount type), hayrake, tedder...						

Downloaded from www.Manualslib.com manuals search engine

https://truckmanualshub.com/

TIRES, WHEELS AND BALLAST

TIRES

WARNING

To avoid personal injury:

- **Do not attempt to mount a tire on a rim. This should be done by a qualified person with the proper equipment.**
- **Always maintain the correct tire pressure. Do not inflate tires above the recommended pressure shown in the operator's manual.**

IMPORTANT :

- Do not use tires other than those approved by KUBOTA.

■Inflation Pressure

Though the tire pressure is factory-set to the prescribed level, it naturally drops slowly in the course of time. Thus, check it everyday and inflate as necessary.

	Tire sizes	Inflation Pressure
Rear	12.4-16, 4PR	110 kPa (1.1 kgf/cm^2, 16 psi)
	13.6-16, 4PR	100 kPa (1.0 kgf/cm^2, 14 psi)
	12.4-16Ind, 4PR	138 kPa (1.4 kgf/cm^2, 20 psi)
Front	A6-12, 4PR	200 kPa (2.0 kgf/cm^2, 28 psi)
	7-12, 4PR	170 kPa (1.7 kgf/cm^2, 24 psi)
	24x8.50-14, 4PR	150 kPa (1.5 kgf/cm^2, 22 psi)
	23x8.50-14Ind, 4PR	241 kPa (2.5 kgf/cm^2, 35 psi)
	24x8.50-12, 4PR	160 kPa (1.6 kgf/cm^2, 23 psi)

NOTE :

- Maintain the maximum recommended pressure in the front tires, when using a front loader or when equipped with a full load of front weights.

■Dual Tires

Dual tires are not approved.

WHEEL ADJUSTMENT

CAUTION

To avoid personal injury:

- **When working on slopes or when working with trailer, set the wheel tread as wide as practical for maximum stability.**
- **Support tractor securely on stands before removing a wheel.**
- **Do not work under any hydraulically supported devices. They can settle, suddenly leak down, or be accidentally lowered. If necessary to work under tractor or any machine elements for servicing or adjustment, securely support them with stands or suitable blocking beforehand.**
- **Never operate tractor with a loose rim, wheel, or axle.**

■Front Wheels

Front tread width can not be adjusted.

IMPORTANT :

- Do not turn front discs to obtain wider tread. In setting up the front wheels, make sure that the inflation valve stem of the tires face outward.
- When re-fitting or adjusting a wheel, tighten the bolts to the following torques then recheck after driving the tractor 200 m (200 yards) and 10 times of shuttle movement by 5 m (5 yards), and thereafter according to service interval. (See "MAINTENANCE" section.)

■Rear Wheels

Rear tread width can not be adjusted.

IMPORTANT :

- When re-fitting or adjusting a wheel, tighten the bolts to the following torques then recheck after driving the tractor 200 m (200 yards) and 10 times of shuttle movement by 5 m (5 yards), and thereafter according to service interval. (See "MAINTENANCE" section.)

Downloaded from www.Manualslib.com manuals search engine

https://truckmanualshub.com/

■Treads

◆ USA models

Front	7-12 Farm	24x8.50-14 Turf	23x8.50-14 Ind.
	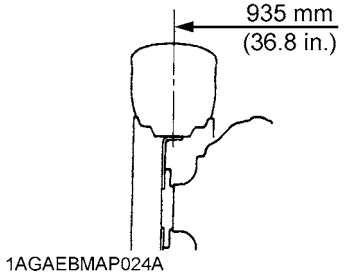	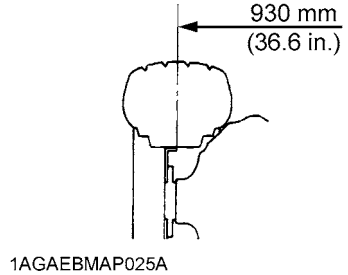	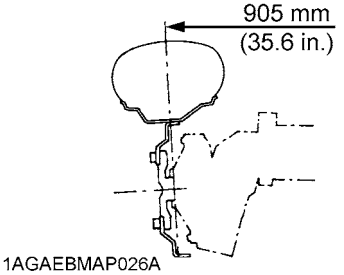
Rear	12.4-16 Farm	13.6-16 Turf	12.4-16 Ind
	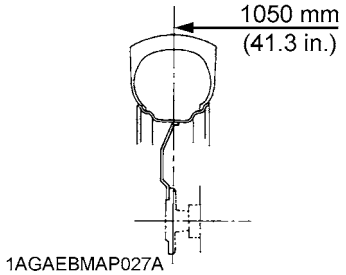	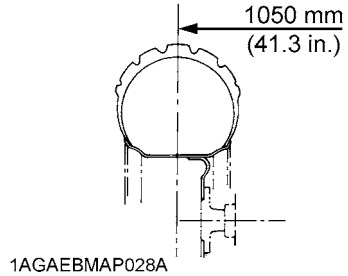	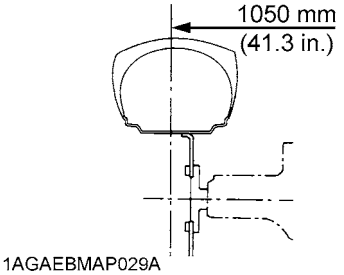

◆ Except USA models

Front	A6-12 Farm	24x8.50-12 Turf
	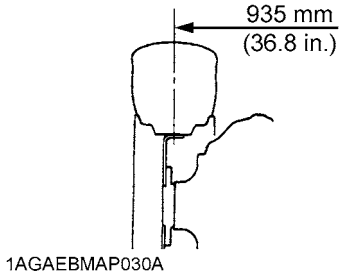	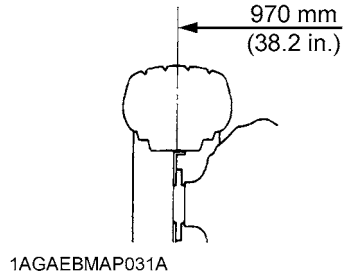
Rear	12.4-16 Farm	13.6-16 Turf
	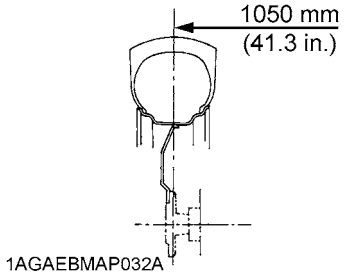	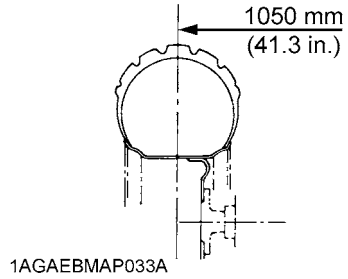

Downloaded from www.Manualslib.com manuals search engine

https://truckmanualshub.com/

BALLAST

CAUTION

To avoid personal injury:

- **Additional ballast will be needed for transporting heavy implements. When the implement is raised, drive slowly over rough ground, regardless of how much ballast is used.**
- **Do not fill the front wheels with liquid.**

■Front Ballast

Add weights if needed for stability and improving traction. Heavy pulling and heavy rear mounted implements tend to lift front wheels. Add enough ballast to maintain steering control and prevent tip over.
Remove weight when no longer needed.

◆ Front End Weights (option)

The front end weights can be attached to the bumper.
See your implement operator's manual for required number of weights or consult your local KUBOTA Dealer to use.

NOTE :

[For installation of up to three weights]

- Besides the weight, mounting bolt kit(s) are required for mounting the weight.

[For installation of up to five weights]

- Besides the weight, a front weight bracket and mounting bolt kit(s) are required for mounting the weight.

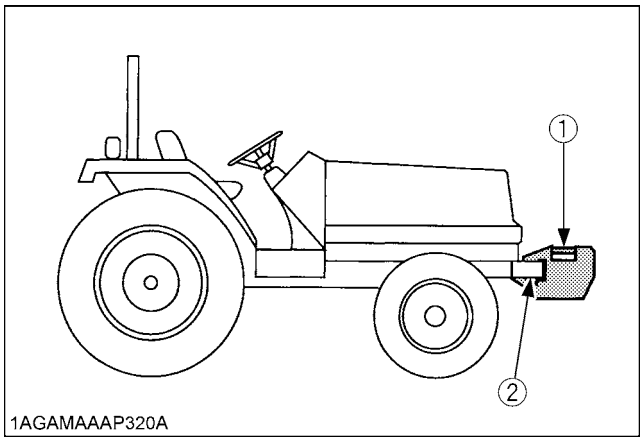

(1) Front end weights
(2) Front weight bracket (option)

IMPORTANT :

- Do not overload tires.
- Add no more weight than indicated in chart.

Maximum weight	25 kg x 5 pieces (275 lbs.)

■Rear Ballast

Add weight to rear wheels if needed to improve traction or for stability. The amount of rear ballast should be matched to job and the ballast should be removed when it is not needed.
The weight should be added to the tractor in the form of liquid ballast.

◆ Liquid Ballast in Rear Tires

Water and calcium chloride solution provides safe economical ballast. Used properly, it will not damage tires, tubes or rims. The addition of calcium chloride is recommended to prevent the water from freezing. Use of this method of weighting the wheels has the full approval of the tire companies. See your tire dealer for this service.
Liquid weight per tire (75 Percent filled)

Tire sizes	12.4 - 16
Slush free at -10 ℃ (14 ℉) Solid at -30 ℃ (-22 ℉) [Approx. 1 kg (2 lbs.) $CaCl_2$ per 4 L (1 gal) of water]	85 kg (187 lbs.)
Slush free at -24 ℃ (-11 ℉) Solid at -47 ℃ (-52 ℉) [Approx. 1.5 kg (3.5 lbs.) $CaCl_2$ per 4 L (1 gal) of water]	89 kg (196 lbs.)
Slush free at -47 ℃ (-52 ℉) Solid at -52 ℃ (-62 ℉) [Approx. 2.25 kg (5 lbs.) $CaCl_2$ per 4 L (1 gal) of water]	94 kg (207 lbs.)

IMPORTANT :

- Do not fill tires with water or solution more than 75% of full capacity (to the level of valve stem at 12 o'clock position).

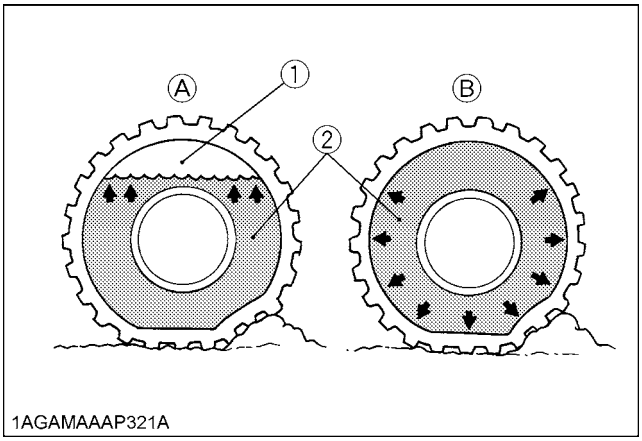

(1) Air
(2) Water

(A) Correct : 75% Full
Air compresses like a cushion
(B) Incorrect : 100% Full
Water can not be compressed

Downloaded from www.Manualslib.com manuals search engine

https://truckmanualshub.com/

CAB OPERATION

DOOR AND WINDOW

■Locking and Unlocking the Door

From the outside ..... Insert the key into the door lock. Turn the key clockwise to unlock the door. To lock the door, turn the key in the opposite direction. The key can be removed when it is in the vertical direction.

From the inside ..... Push down the lock knob to lock the door.
Pull up the lock knob to unlock the door.

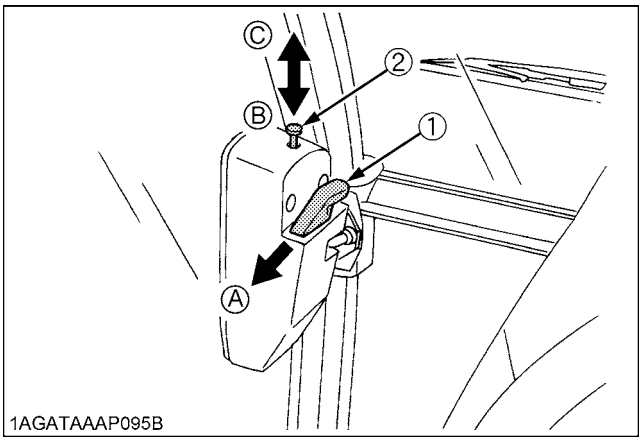

(1) Inner door handle
(2) Lock knob
(A) "PULL"
(B) "PUSH" (Lock)
(C) "PULL" (Unlock)

■Opening the Door

From the outside ..... Unlock the door, and pull the outer door handle.

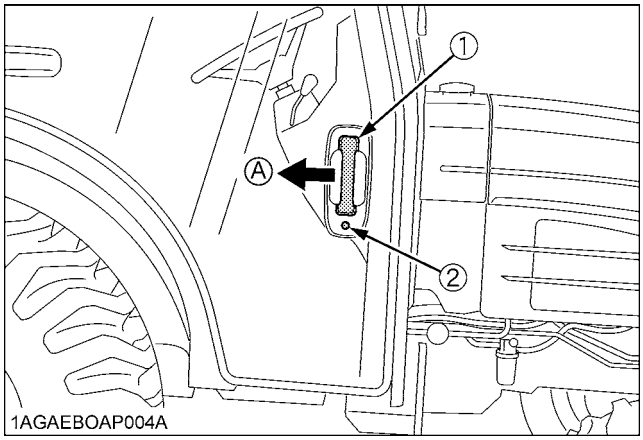

(1) Outer door handle
(2) Door lock
(A) "PULL"

From the inside ..... Unlock the door and pull the inner door handle.

■Rear Window

Turn the rear window handle clockwise to the vertical position and push the handle. The rear window is opened by the gas spring cylinder.

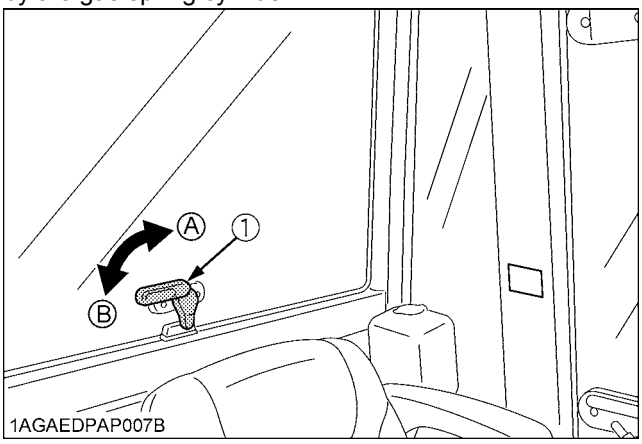

(1) Rear window handle
(A) "OPEN"
(B) "CLOSE"

Downloaded from www.Manualslib.com manuals search engine

https://truckmanualshub.com/

WORK LIGHT

■Work Light Switch

Turn on the key switch and press the top half of the work light switch. The work light and the switch's indicator light up. Press the bottom half of the work light switch to turn off the light and indicator.

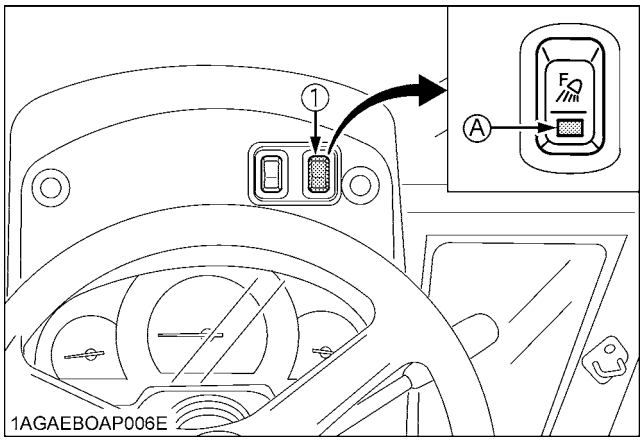

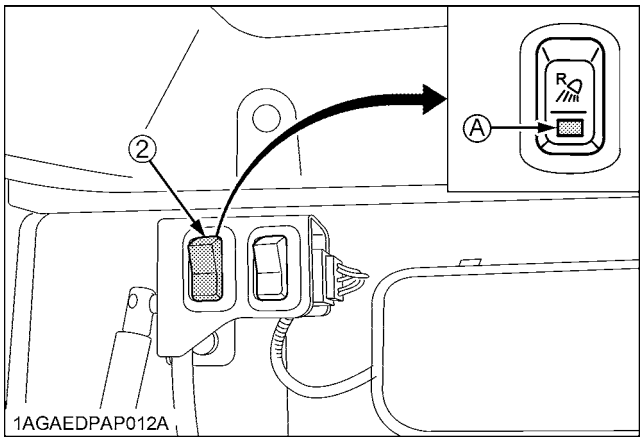

(1) Front work light switch
(2) Rear work light switch (if equipped)
(A) Indicator for work lights

■Front Work Light

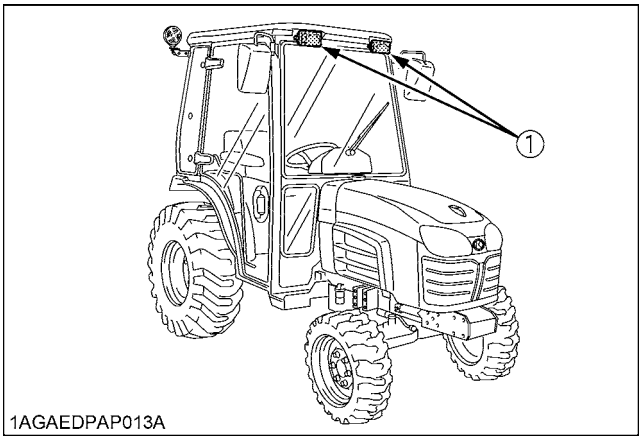

(1) Front work light

■Rear Work Light (if equipped)

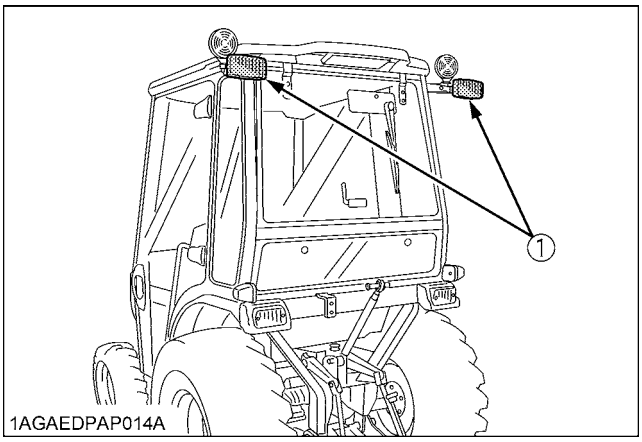

(1) Rear work light

Downloaded from www.Manualslib.com manuals search engine

https://truckmanualshub.com/

WIPER

■Front Wiper / Washer Switch

When the button marked is pressed to the first step, the wiper only is activated.
When the button is pressed further to the second step, washer liquid jets out.
The washing continues while the button is pressed and wiper is activated continuously. (Washer liquid jets out to the rear window also.)
Hold down the bottom half of the switch when the front wiper is off, and washer liquid will keep jets out.
To wet the glass before activating the wipers, press the bottom half of the switch. (Washer liquid jets out to the rear window also.)

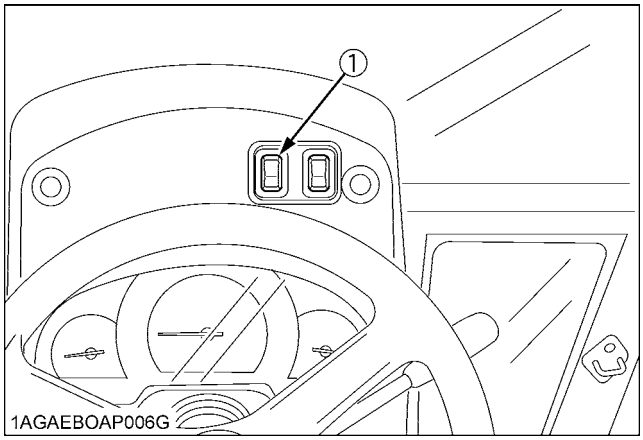

(1) Front wiper / washer switch

■Rear Wiper Switch

1. Press the upper half of the wiper switch, and the wiper is activated. Press the lower half of the wiper switch, and the wiper stops at the initial position.
2. To jet washer liquid, push the front wiper / washer switch. (Washer liquid jets out to the front window also.)

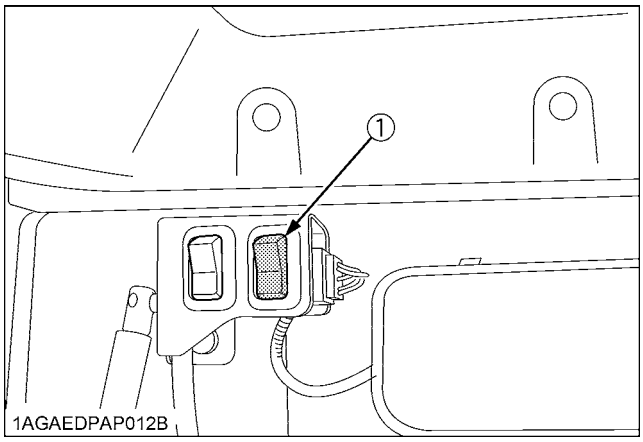

(1) Rear wiper switch

IMPORTANT :
- Do not activate the wipers when the windows are dry, they may be scratched.
  Be sure to jet washer liquid first and then activate the wipers.

■Using the Wipers in Cold Season

1. While not used in cold season, keep the wiper blades off the windshield to prevent them from being stuck with ice.
2. If the windshield is covered with snow, scrape it off the windshield before using the wipers.
3. If the wiper blades are stuck on the windshield with ice and fail to move, be sure to turn the main key switch to "OFF" and remove the ice off the blades. Then place the main key switch back to "ON".
4. When commercially available cold-season wiper blades are used, make sure their size is the same as or smaller than that of the standard ones.

IMPORTANT :
- In cold season, the wiper blades and the wiper motor might get overloaded causing damage. To avoid this, be sure to take the above precautions.

Downloaded from www.Manualslib.com manuals search engine

https://truckmanualshub.com/

AIR CONDITIONER

■Airflow

Air in the CAB and fresh air introduced into the CAB flow as shown below. Adjust the seven air ports to obtain the desired condition.

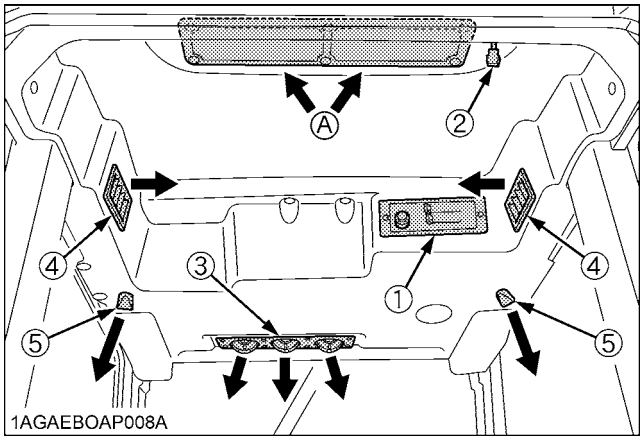

(1) Control panel
(2) Recirculation / Fresh air selection lever
(3) Front air outlet (defrost, windshield, foot area)
(4) Side air outlet (face, back area)
(5) Door air outlet (door area)
(A) Inner air recirculation

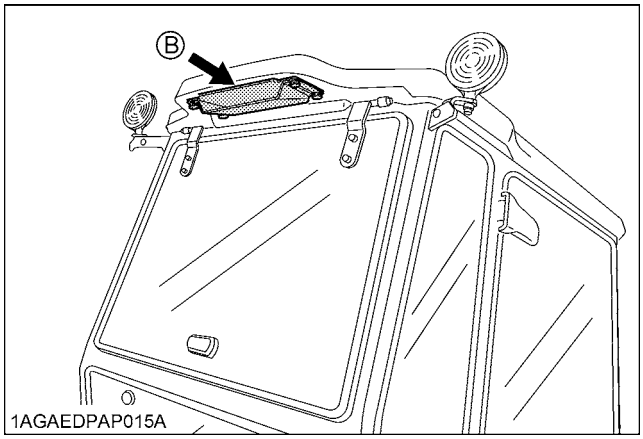

(B) Fresh air inlet

■Air Control Vent

◆ Front air outlet

The front air outlets can be independently adjusted as required. To defrost the windshield, rotate the outlets toward the windshield.

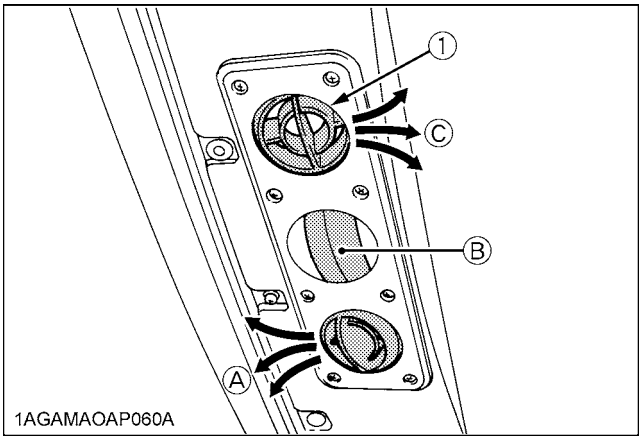

(1) Front air outlet
(A) "WINDSHIELD"
(B) "CLOSED"
(C) "CHEST AREA"

◆ Side air outlet and door air outlet

The side and door air outlets can be adjusted to direct air on to the operator, door window or the rear of the CAB.

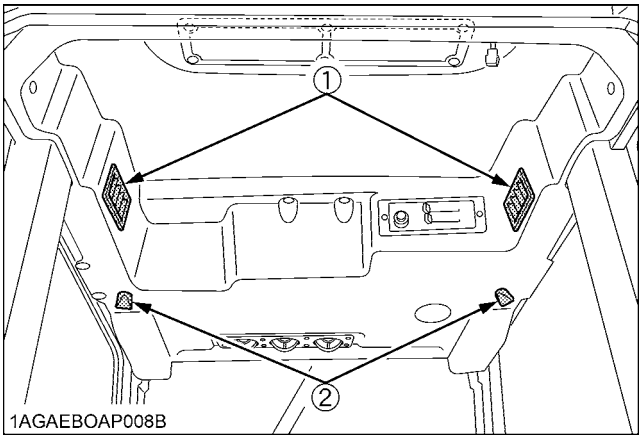

(1) Side air outlet
(2) Door air outlet

NOTE :

- If the airflow rate at the face is too low, close the front air outlet.

Downloaded from www.Manualslib.com manuals search engine

https://truckmanualshub.com/

CAUTION

To avoid personal injury;

- **Replace the water hoses every two years.**
- **Daily inspection**
  Have the tractor repaired immediately if any of the following defects are discovered.
  (Such defects may cause burns or injury. They may also cause engine seizure or other serious failure.)
  - **Scratches, cracks or swelling in water hoses.**
  - **Water leakage at water hose joints.**
  - **Missing or damaged water hose protective wrap or grommets.**
  - **Loose mounting bolts, damaged brackets.**
- **Do not touch the water hoses and the heater with your hand. You may get burned.**
- **If the window fails to defrost in extreme conditions or becomes cloudy when dehumidifying the CAB, wipe off moisture with a soft cloth.**
- **Do not block all the air outlets of the air conditioner. A problem could occur.**

◆ Recirculation / fresh air selection lever

FRESH AIR:	Set the lever to the FRESH position, and fresh air will flow into the CAB. This is helpful when you work in dusty conditions or if the glass windows get foggy.
RECIRCULATION:	Set the lever to the RECIRC position, and the in-CAB air will be recirculated. This is useful for cooling or heating the CAB quickly or keeping it extra cool or warm.

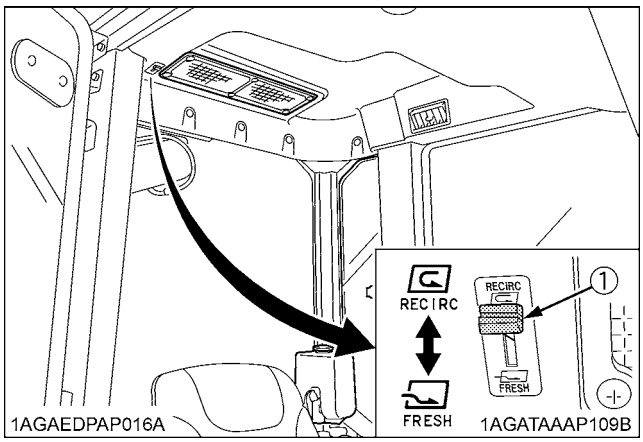

(1) Recirculation / fresh air selection lever

FRESH *"FRESH AIR"*
RECIRC *"RECIRCULATION"*

NOTE :

- When heating, do not keep the lever at the "RECIRCULATION" position for a long time. The windshield easily gets foggy.
- While working in a dusty conditions, keep the lever at the "FRESH AIR" position. This increases the pressure in the CAB, which helps prevent dust from coming into the CAB.

■Control Panel

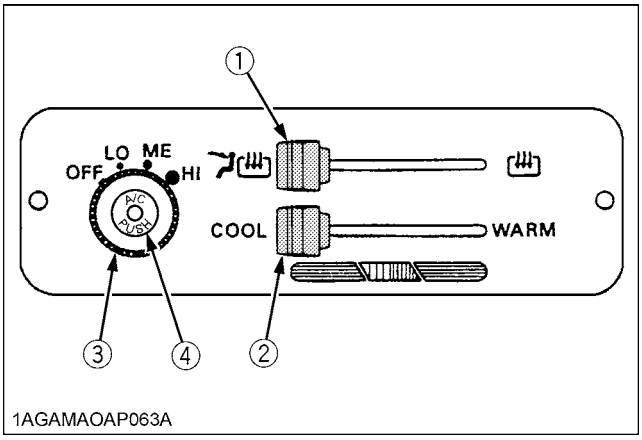

(1) Mode lever
(2) Temperature control lever
(3) Blower switch
(4) Air conditioner switch with indicator light

◆ Mode lever

Set the mode lever to the desired position.

Air is blown from the front and side air outlets.
Air is blown from only the front air outlets.

◆ Temperature Control Lever

Set this lever at the desired position to obtain the optimum air temperature. Move the lever to the right to obtain warmer air. Move it to the left to obtain cooler air.

◆ Blower Switch

Air volume can be changed in three steps. At the "HI" position, the largest air volume is obtained.

◆ Air Conditioner Switch

Push this switch to activate the air conditioner. An indicator light will light up when the switch is set to "ON". Push the switch again to turn the air conditioner off, in which case the indicator light will be off.

Downloaded from www.Manualslib.com manuals search engine

https://truckmanualshub.com/

■Operation

◆ Heating

1. Set the mode lever to the or position.
2. Set the recirculation / fresh air selection lever to the "FRESH AIR" position. To raise the temperature in the CAB quickly, set this lever to the "RECIRCULATION" position.
3. Adjust the blower (LO/ME/HI) switch and the temperature control lever to achieve a comfortable temperature level.

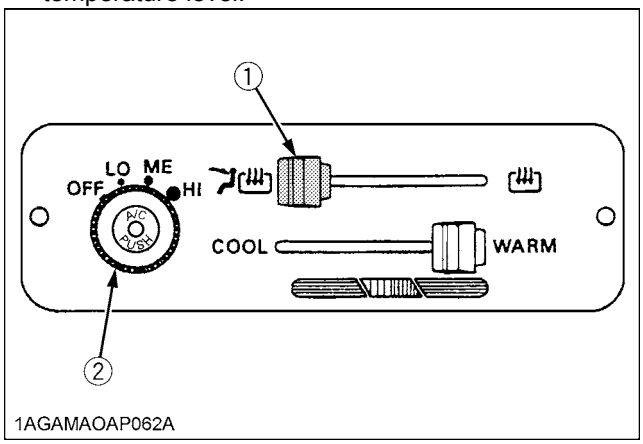

(1) Mode lever
(2) Blower switch

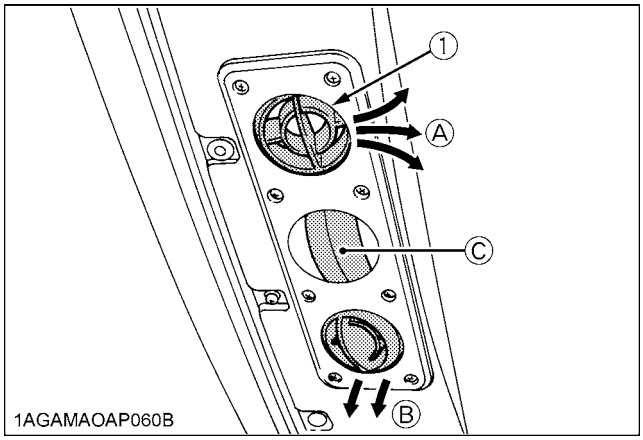

(1) Front air outlet

(A) "CHEST AREA"
(B) "FOOT AREA"
(C) "CLOSED"

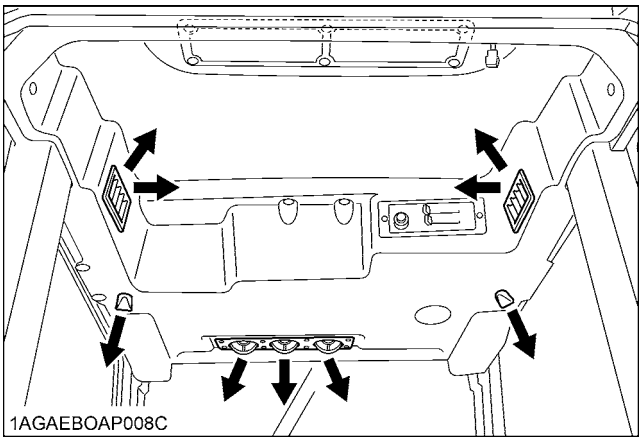

◆ Cooling or dehumidifying-heating

1. Set the mode lever to the position.
2. Rotate the front air outlet toward the chest area.
3. Set the recirculation / fresh air selection lever to the "FRESH AIR" position. To reduce the temperature in the CAB quickly, set this lever to the "RECIRCULATION" position.
4. Press and turn on the air-conditioner switch with indicator.
5. Turn on the blower (LO/ME/HI) switch.
6. Adjust the temperature control lever to the "COOL" or an intermediate position to achieve a comfortable temperature level.

NOTE :

- In summer when the heater is not used, keep the temperature control lever at the "COOL" (leftmost) position. Otherwise, hot air will raise the temperature in the CAB.

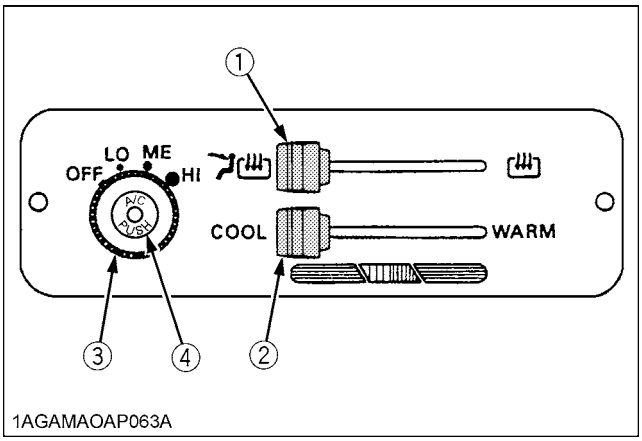

(1) Mode lever
(2) Temperature control lever
(3) Blower switch
(4) Air conditioner switch with indicator light

Downloaded from www.Manualslib.com manuals search engine

https://truckmanualshub.com/

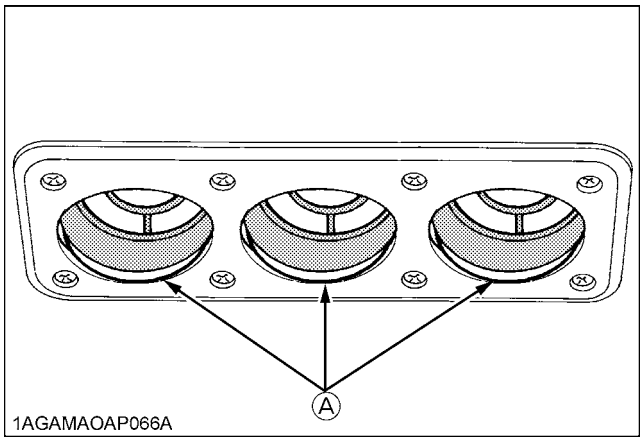

(A) "CHEST AREA"

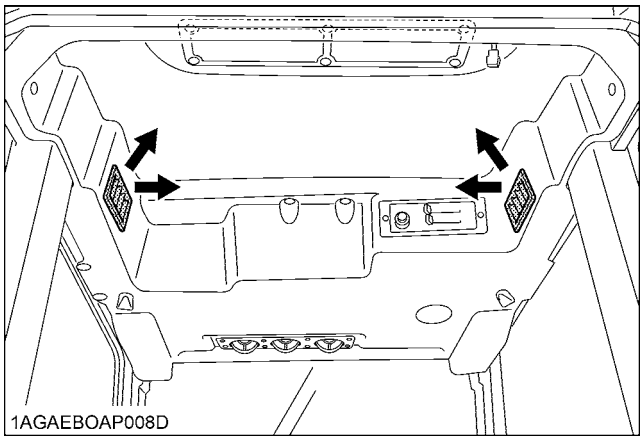

◆ **Foot warming and head cooling**

1. Set the mode lever to the position.
2. In the cooling or dehumidifying-heating mode, set the temperature control lever at the center position.
3. Open the front air outlet and direct it to your feet.
4. You can feel your head cool and your feet warm.

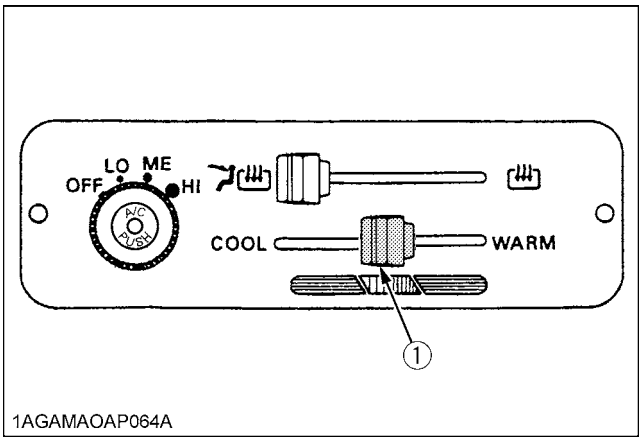

(1) Temperature control lever

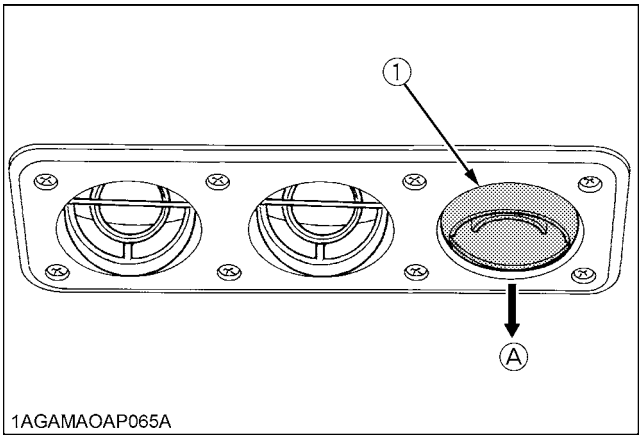

(1) Front air outlet *(A) "FOOT AREA"*

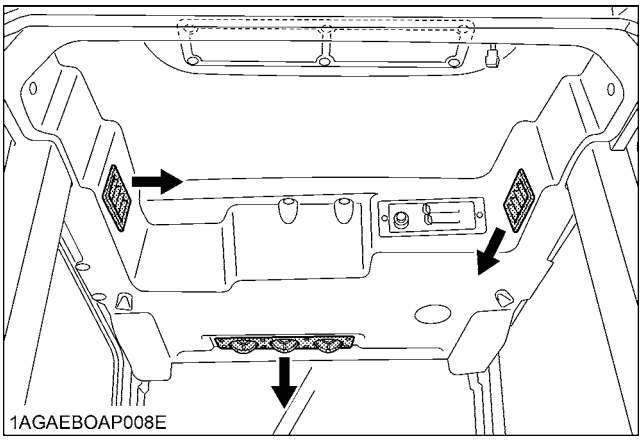

Downloaded from www.Manualslib.com manuals search engine

https://truckmanualshub.com/

◆ Defrosting or demisting

To defrost or demist the windshield, take the following steps.

1. Set the mode lever to the position.
2. Open the front air outlet, door air outlet and direct it to the windshield.
3. Shut the side air outlet.
4. Set the recirculation / fresh air selection lever to the "FRESH AIR" position.
5. Set the blower switch and the temperature control lever to the "HI" and "WARM" (rightmost) positions, respectively.

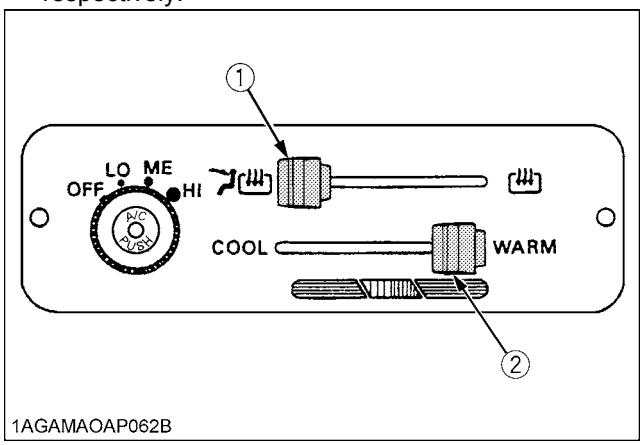

(1) Mode lever
(2) Temperature control lever

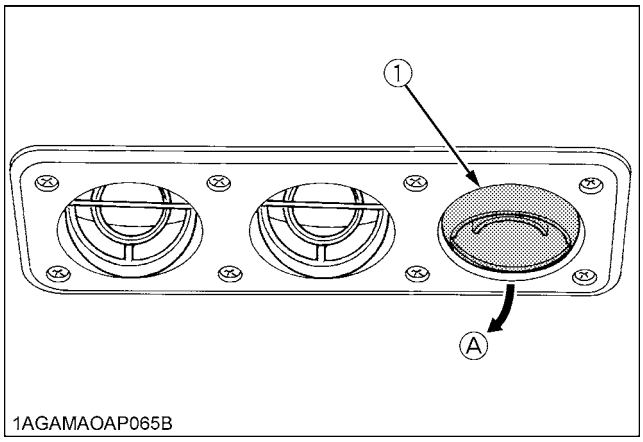

(1) Front air outlet *(A) "WINDSHIELD"*

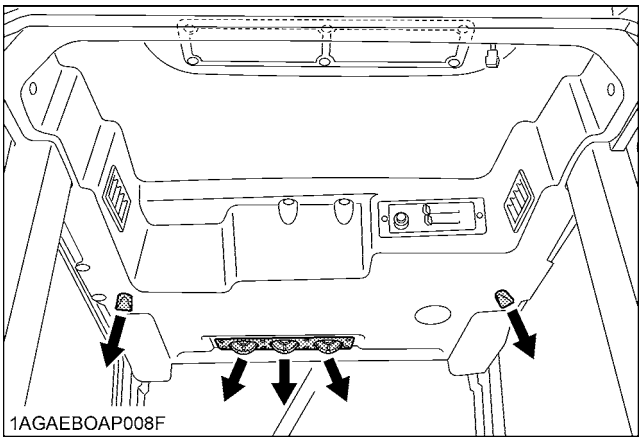

Downloaded from www.Manualslib.com manuals search engine

https://truckmanualshub.com/

REAR DEFOGGER

To activate the rear window defogger, press the switch marked while the key switch is in the "ON" position. To turn the defogger off, push down the switch marked "OFF".

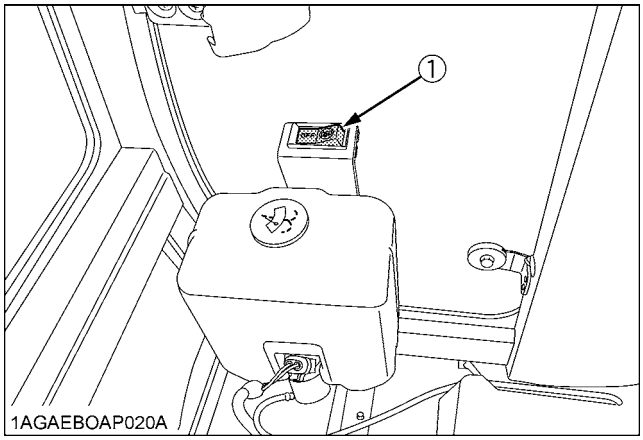

(1) Defogger switch

IMPORTANT :

- The battery will discharge if the defogger and the key switch remain in the "ON" or "ACC" positions with the engine stopped.
  Always use the defogger with the engine running.

■Electrical Outlet

An electrical outlet is supplied for use with implement.

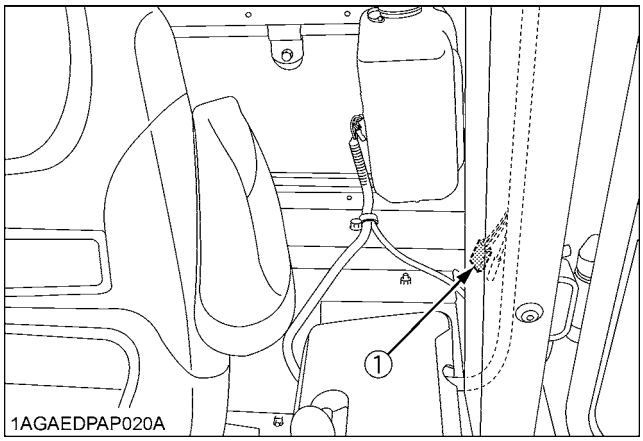

(1) Accessory electrical outlet (20A)

Downloaded from www.Manualslib.com manuals search engine

https://truckmanualshub.com/

MAINTENANCE

SERVICE INTERVALS

No.	Items		Indication on hour meter															Since then	Ref page		
			50	100	150	200	250	300	350	400	450	500	550	600	650	700	800				
1	Clogging of air conditioner condenser screen [CAB only]	Clean																Daily	59		
2	Engine oil	Change	◎	○		○		○		○		○		○		○	○	every 100 Hr	64		
3	Engine oil filter	Replace	◎			○				○				○			○	every 200 Hr	67		
4	Transmission oil filters	Replace	◎					○						○				every 300 Hr	71		
5	Transmission fluid	Change	◎					○						○				every 300 Hr	70		
6	Front axle case oil	Change						○						○				every 300 Hr	72		
7	Front axle pivot	Adjust								○							○	every 400 Hr	72		
8	Engine start system	Check	○	○	○	○	○	○	○	○	○	○	○	○	○	○	○	every 50 Hr	62		
9	Greasing	-	○	○	○	○	○	○	○	○	○	○	○	○	○	○	○	every 50 Hr	61		
10	Wheel bolt torque	Check	○	○	○	○	○	○	○	○	○	○	○	○	○	○	○	every 50 Hr	62		
11	Battery condition	Check		○		○		○		○		○		○		○	○	every 100 Hr	63	*5	
12	Air cleaner element [Double element type] Primary element	Clean		○		○		○		○		○		○		○	○	every 100 Hr	65	*1	@
		Replace																every 1 year	73	*2	
	Air cleaner element [Double element type] Secondary element	Replace																every 1 year	73		
13	Fuel filter element	Clean		○		○		○		○		○		○		○	○	every 100 Hr	65		@
		Replace								○							○	every 400 Hr	72		
14	Fan belt	Adjust		○		○		○		○		○		○		○	○	every 100 Hr	66		
15	Brake	Adjust		○		○		○		○		○		○		○	○	every 100 Hr	66		

Downloaded from www.Manualslib.com manuals search engine

https://truckmanualshub.com/

No.	Items		Indication on hour meter															Since then	Ref page		
			50	100	150	200	250	300	350	400	450	500	550	600	650	700	800				
16	Tension of air conditioner drive belt [CAB only]	Adjust				○				○				○			○	every 200 Hr	68		
17	Clogging of inner air filter [CAB only]	Clean				○				○				○			○	every 200 Hr	68		
18	Clogging of fresh air filter [CAB only]	Clean				○				○				○			○	every 200 Hr	69		
19	Clogging of air conditioner condenser [CAB only]	Check				○				○				○			○	every 200 Hr	69		
20	Radiator hose and clamp	Check				○				○				○			○	every 200 Hr	67		
		Replace																every 2 year	74		
21	Fuel line	Check		○		○		○		○		○		○		○	○	every 100 Hr	67		@
		Replace																every 2 year	74	*3	
22	Intake air line	Check				○				○				○			○	every 200 Hr	69		@
		Replace																every 2 year	74	*3	
23	Toe-in	Adjust				○				○				○			○	every 200 Hr	70		
24	Engine valve clearance	Adjust															○	every 800 Hr	72	*4	
25	Fuel injection nozzle Injection pressure	Check																every 1500 Hr	72	*4	@
26	Injection pump	Check																every 3000 Hr	72	*4	@
27	Air conditioner pipes and hoses [CAB only]	Check																every 1 year	73		
		Replace																every 2 year	74		
28	CAB isolation cushion [CAB only]	Check																every 1 year	73		
29	Cooling system	Flush																every 2 year	73		
30	Coolant	Change																every 2 year	73		

Downloaded from www.Manualslib.com manuals search engine

https://truckmanualshub.com/

No.	Items		Indication on hour meter															Since then	Ref page		
			50	100	150	200	250	300	350	400	450	500	550	600	650	700	800				
31	Fuel system	Bleed																service as required	75		
32	Clutch housing water	Drain																	75		
33	Fuse	Replace																	75		
34	Light bulb	Replace																	76		
35	Washer liquid [CAB only]	Check																	76		
36	Amount of refrigerant (gas) [CAB only]	Check																	76		

IMPORTANT :

- The jobs indicated by ◎ must be done after the first 50 hours of operation.
  *1 Air cleaner should be cleaned more often in severe dusty conditions.
  *2 Every year or after 6 cleanings.
  *3 Replace only if necessary.
  *4 Consult your local KUBOTA Dealer for this service.
  *5 When the battery is used for less than 100 hours per year, check the fluid level annually.
- The items listed above (@ marked) are registered as emission related critical parts by KUBOTA in the U.S.EPA nonroad emission regulation. As the engine owner, you are responsible for the performance of the required maintenance on the engine according to the above instruction.
  Please see the Warranty Statement in detail.

Downloaded from www.Manualslib.com manuals search engine

https://truckmanualshub.com/

LUBRICANTS, FUEL AND COOLANT

No.	Locations	Capacities			Lubricants	
		B2630	B3030	B3000		
1	Fuel	31 L (8.1 U.S.gals.)			No. 2-D diesel fuel No. 1-D diesel fuel if temperature is below -10 ℃(14 ℉)	
2	Coolant (with recovery tank)	4.5 L (4.7 U.S.qts.)		5.2 L (5.5 U.S.qts.)	Fresh clean soft water with anti-freeze	
3	Engine crankcase	3.0 L (3.2 U.S.qts.)	4.1 L (4.3 U.S.qts.)		● Engine oil : API Service Classification CD, CE or CF	
					Above 25℃(77℉)	SAE30, SAE10W-30 or 15W-40
					0 to 25℃ (32 to 77℉)	SAE20, SAE10W-30 or 15W-40
					Below 0℃(32℉)	SAE10W, SAE10W-30 or 15W-40
4	Transmission case	15 L (4.0 U.S.gals.)			● KUBOTA UDT or SUPER UDT fluid*	
5	Front axle case	4.7 L (5.0 U.S.qts.)			● KUBOTA UDT or SUPER UDT fluid* or SAE80 - SAE 90 gear oil	
6	Greasing	No. of greasing points			Capacity	Type of grease
	● Top link	1			Until grease overflows.	Multipurpose Grease NLGI-2 OR NLGI-1 (GC-LB)
	● Lift rod [RH]	1				
	● Speed control pedal	1				
	● Battery terminals	2			moderate amount	

NOTE: *KUBOTA UDT or SUPER UDT fluid --- KUBOTA original transmission hydraulic fluid

Downloaded from www.Manualslib.com manuals search engine

https://truckmanualshub.com/

NOTE :

◆ **Engine Oil:**

- Oil used in the engine should have an American Petroleum Institute (API) service classification and Proper SAE Engine Oil according to the ambient temperatures as shown above:
- With the emission control now in effect, the CF-4 and CG-4 lubricating oils have been developed for use of a low-sulfur fuel on on-road vehicle engines. When an off-road vehicle engine runs on a high-sulfur fuel, it is advisable to employ the "CF or better" lubricating oil with a high Total Base Number (TBN of 10 minimum).

- Refer to the following table for the suitable API classification engine oil according to the engine type (with internal EGR, external EGR or non-EGR) and the fuel (low-sulfur or high-sulfur fuel).

Fuel used	Engine oil classification (API classification)	
	Oil class of engines except external EGR	Oil class of engines with external EGR
High Sulfur Fuel [≧ 0.05% (500 ppm)]	**CF** (If the "CF-4, CG-4, CH-4 or CI-4" lubricating oil is used with a high-sulfur fuel, change the lubricating oil at shorter intervals. (approximately half))	---
Low Sulfur Fuel [<0.05% (500 ppm)] or Ultra Low Sulfur Fuel [<0.0015% (15 ppm)]	**CF, CF-4, CG-4, CH-4** or **CI-4**	**CF** or **CI-4** (Class CF-4, CG-4 and CH-4 engine oils cannot be used on EGR type engines)

EGR: Exhaust Gas Re-circulation

- The CJ-4 engine oil is intended for DPF (Diesel Particulate Filter) type engines, and cannot be used on this tractor.

	except external EGR	with external EGR
Models	B2630, B3030,B3000	---

◆ **Fuel:**

- Cetane number of 45 minimum. Cetane number greater than 50 is preferred, especially for temperatures below -20℃ or elevations above 1500 m.
- If diesel fuel with sulfur content greater than 0.5% (5000 ppm) sulfur content is used, reduce the service interval for engine oil and filter by 50%.
- NEVER use diesel fuel with sulfur content greater than 0.05% (500 ppm) for EXTERNAL EGR type engine.
- DO NOT use diesel fuel with sulfur content greater than 1.0% (10000 ppm).
- Diesel fuels specified to EN 590 or ASTM D975 are recommended.
- No.2-D is a distillate fuel of lower volatility for engines in industrial and heavy mobile service. (SAE J313 JUN87)

◆ **Transmission Oil:**

The oil used to lubricate the transmission is also used as hydraulic fluid. To insure proper operation of the hydraulic system and to complete lubrication of the transmission, it is important that a multi-grade transmission fluid is used in this system. We recommend the use of **KUBOTA UDT or SUPER UDT fluid** for optimum protection and performance. (Consult your local KUBOTA Dealer for further detail.)
Do not mix different brands together.

- Indicated capacities of water and oil are manufacturer's estimate.

Downloaded from www.Manualslib.com manuals search engine

https://truckmanualshub.com/

PERIODIC SERVICE

HOW TO OPEN THE HOOD

CAUTION

To avoid personal injury from contact with moving parts;

- **Never open the hood or engine side cover while the engine is running.**
- **Do not touch muffler or exhaust pipes while they are hot; Severe burns could result.**
- **Support hood with other hand while unlocking support link.**

■Hood

To open the hood, twist the mascot to release the latch and open the hood.

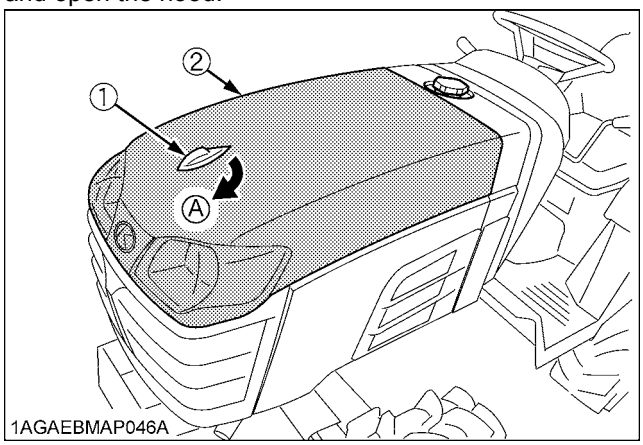

(1) Mascot *(A) "OPEN"*
(2) Hood

NOTE :

- To close the hood, hold the hood and release the support rod.

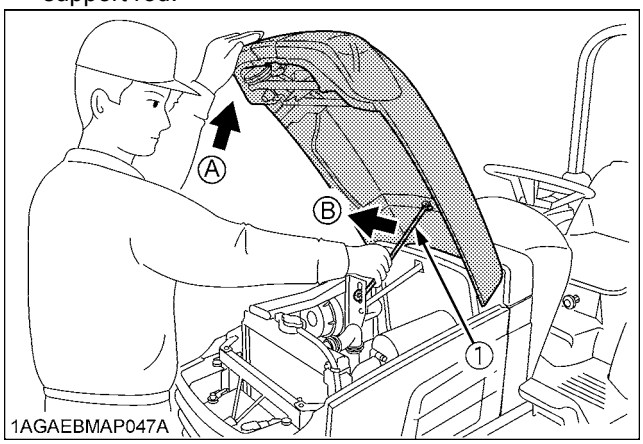

(1) Support rod *(A) "HOLD"*
(B) "PULL"

■Front Grille

1. To remove the front grill, loosen knob bolts, pull outward as indicated by arrows, and then lift the front grill off.

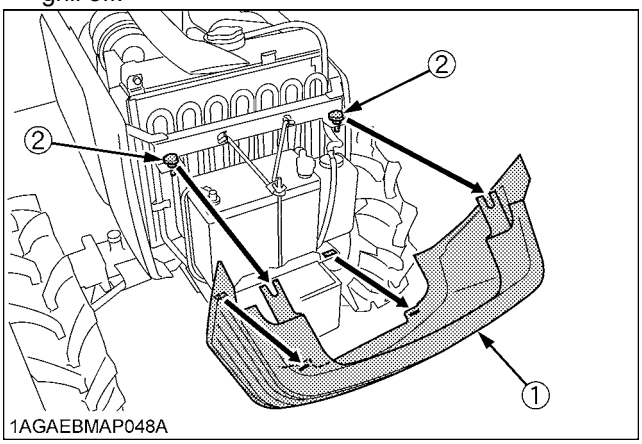

(1) Front grill
(2) Knob bolt

2. To attach the front grill, fit the projections of the cover bottom into the insertion holes and tighten up the knob bolts.

Downloaded from www.Manualslib.com manuals search engine

https://truckmanualshub.com/

■Engine Side Cover

1. Slightly pull the arrow-marked part "A" of the cover upward and outward.
2. Slightly raise the front end to draw the pins out of the holes.
3. Pull the cover toward yourself off position.
4. To attach the cover, take the reverse order. Finally fit the notches and push the arrow-marked parts inward.

● **Removing the side cover**

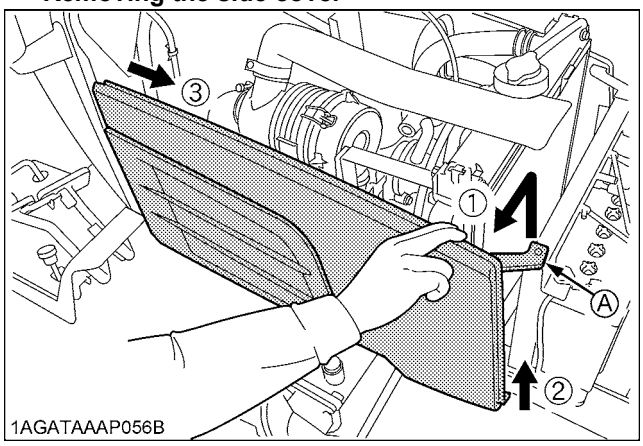

● **Attaching the side cover**

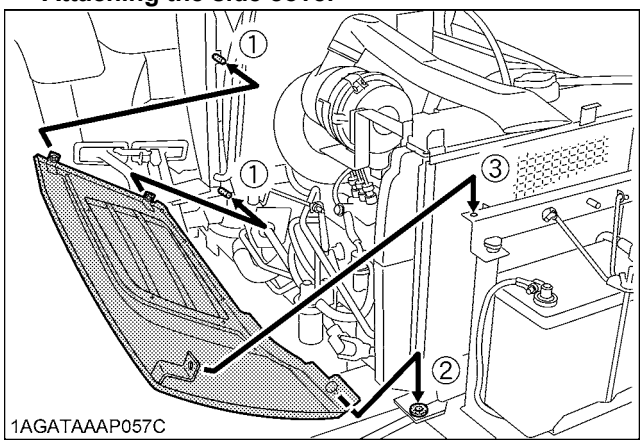

DAILY CHECK

For your own safety and maximum service life of the machine, make a thorough daily inspection before operating the machine to start the engine.

CAUTION

To avoid personal injury:

- **Be sure to check and service the tractor on a flat place with the engine shut off and the parking brake "ON".**

■Walk Around Inspection

Look around and under the tractor for such items as loose bolts, trash build-up, oil or coolant leaks, broken or worn parts.

■Checking and Refueling

CAUTION

To avoid personal injury:

- **Do not smoke while refueling.**
- **Be sure to stop the engine before refueling.**

1. Turn the key switch to "ON", check the amount of fuel by fuel gauge.
2. Fill fuel tank when fuel gauge shows 1/4 or less fuel in tank.
3. Use grade No.2-Diesel fuel at temperatures above -10℃ (14℉).
   Use grade No.1-Diesel fuel at temperatures below -10℃ (14℉).

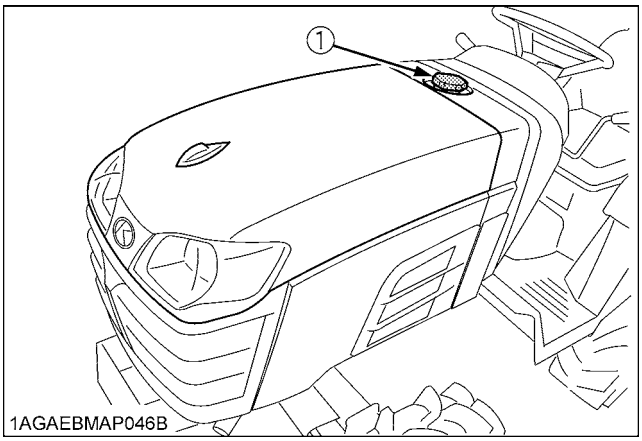

(1) Fuel tank cap

Fuel tank capacity	31 L (8.1 U.S.gals.)

Downloaded from www.Manualslib.com manuals search engine

https://truckmanualshub.com/

IMPORTANT :
- Do not permit dirt or trash to get into the fuel system.
- Be careful not to let the fuel tank become empty, otherwise air will enter the fuel system, necessitating bleeding before next engine start.
- Be careful not to spill during refueling. If should spill, wipe it off at once, or it may cause a fire.
- To prevent condensation (water) accumulation in the fuel tank, fill the tank before parking overnight.

■Checking Engine Oil Level

CAUTION

To avoid personal injury:
- **Be sure to stop the engine before checking the oil level.**

1. Park the machine on a flat surface.
2. Check engine oil before starting the engine or 5 minutes or more after the engine has stopped.
3. To check the oil level, draw out the dipstick, wipe it clean, replace it, and draw it out again. Check to see that the oil level lies between the two notches.
   If the level is too low, add new oil to the prescribed level at the oil inlet.
   (See "LUBRICANTS" in "MAINTENANCE" section.)

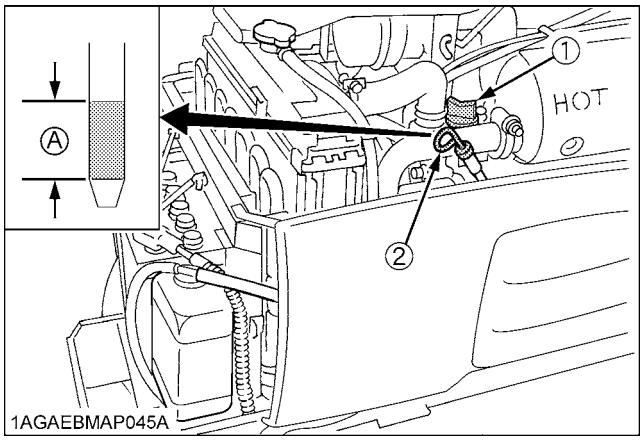

(1) Oil inlet *(A) Oil level is acceptable within this range.*
(2) Dipstick

IMPORTANT :
- When using an oil of different maker or viscosity from the previous one, remove all of the old oil.
  Never mix two different types of oil.
- If oil level is low, do not run engine.

■Checking Transmission Fluid Level

1. Park the machine on a flat surface, lower the implement and shut off engine.
2. To check the oil level, draw out the dipstick, wipe it clean, replace it, and draw it out again. Check to see that the oil level lies between the two notches.
   If the level is too low, add new oil to the prescribed level at the oil inlet.
   (See "LUBRICANTS" in "MAINTENANCE" section.)

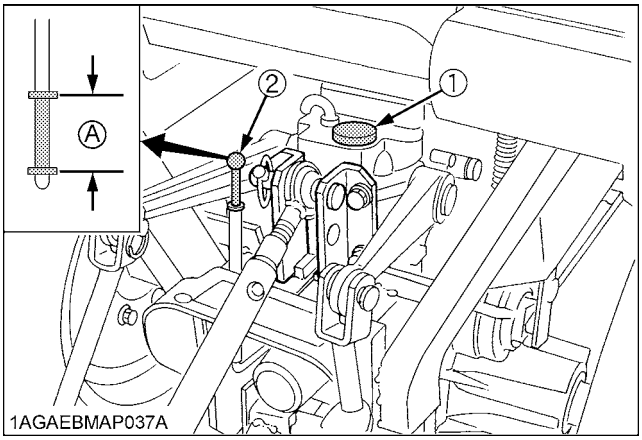

(1) Oil inlet *(A) Oil level is acceptable within this range.*
(2) Dipstick

IMPORTANT :
- If oil level is low, do not run engine.

Downloaded from www.Manualslib.com manuals search engine

https://truckmanualshub.com/

■Checking Coolant Level

CAUTION

To avoid personal injury:

- **Do not remove radiator cap while coolant is hot. When cool, slowly rotate cap to the first stop and allow sufficient time for excess pressure to escape before removing the cap completely.**

1. Check to see that the coolant level is between the "FULL" and "LOW" marks of recovery tank.
2. When the coolant level drops due to evaporation, add soft water only up to the full level.
   In case of leakage, add anti-freeze and soft water in the specified mixing ratio up to the full level.
   (See "Flushing Cooling System and Changing Coolant" in "EVERY 2 YEARS" in "PERIODIC SERVICE" section.)

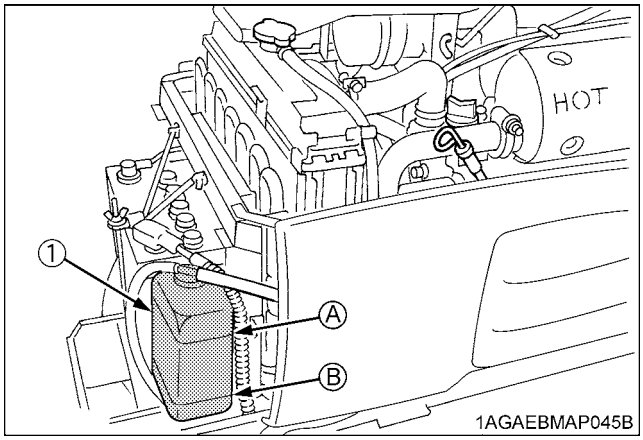

(1) Recovery tank *(A) "FULL"* *(B) "LOW"*

IMPORTANT :

- If the radiator cap has to be removed, follow the caution above and securely retighten the cap.
- Use clean, fresh soft water and anti-freeze to fill the recovery tank.
- If water should leak, consult your local KUBOTA Dealer.

■Cleaning Air Conditioner Condenser Screen

[CAB only]

CAUTION

To avoid personal injury:

- **Be sure to stop the engine before removing the screen.**

1. Detach the air conditioner condenser screen and remove all foreign materials.

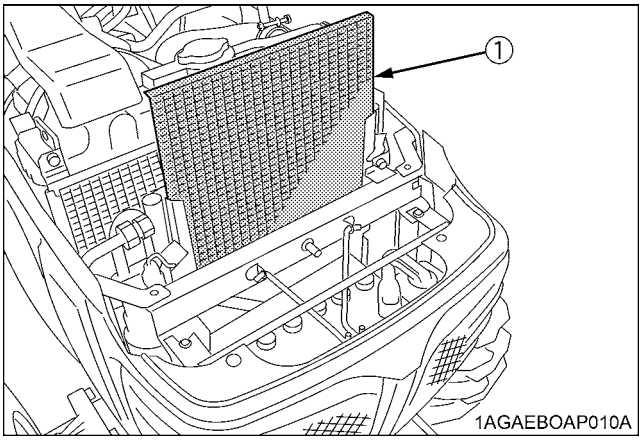

(1) Air conditioner condenser screen

IMPORTANT :

- Grill and screen must be clean from debris to prevent engine from overheating and to allow good air intake for air cleaner.

Downloaded from www.Manualslib.com manuals search engine

https://truckmanualshub.com/

■Cleaning Grill and Radiator Screen

CAUTION

To avoid personal injury:

- **Be sure to stop the engine and remove the key before removing the screen.**

1. Check front grill and side screens to be sure they are clean of debris.
2. Detach the screen and remove all foreign material and clean the front of radiator completely.

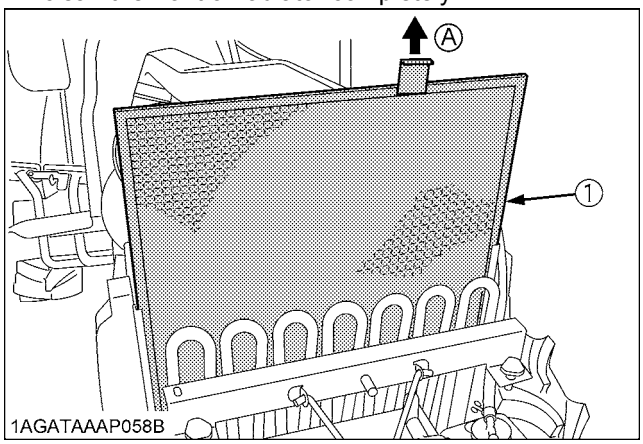

(1) Radiator screen *(A) "DETACH"*

IMPORTANT :

- Grill and screen must be clean from debris to prevent engine from overheating and to allow good air intake for the air cleaner.

NOTE :

- If the dust or chaff has accumulated between the battery and radiator, open the shutter plate and clean the front of radiator completely.

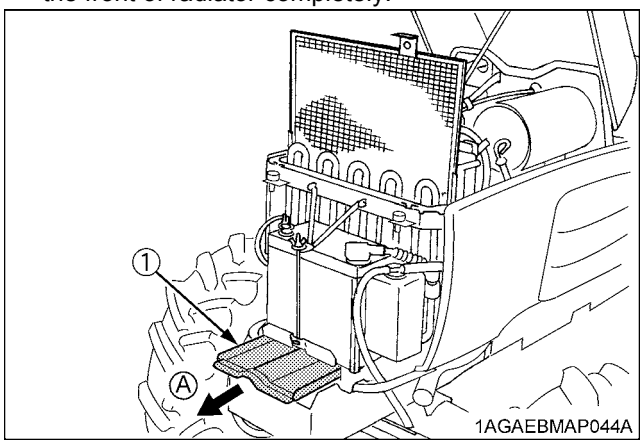

(1) Shutter plate *(A) "PULL"*

■Checking Brake Pedal

1. Inspect the brake pedals for free travel, and smooth operation.
2. Adjust if incorrect measurement is found:
   (See "Adjusting Brake Pedal" in "EVERY 100 HOURS" in "PERIODIC SERVICE" section.)

■Checking Gauges, Meter and Easy Checker(TM)

1. Inspect the instrument panel for broken gauge(s), meter(s) and Easy Checker(TM).
2. Replace if broken.

■Checking Head Light, Hazard Light etc.

1. Inspect the lights for broken bulbs and lenses.
2. Replace if broken.

■Checking Seat Belt and ROPS

1. Always check condition of seat belt and ROPS attaching hardware before operating tractor.
2. Replace if damaged.

Downloaded from www.Manualslib.com manuals search engine

https://truckmanualshub.com/

■Checking and Cleaning of Electrical Wiring and Battery Cables

CAUTION

To avoid personal injury:

- **A loosened terminal or connector, or damaged wire may affect the performance of electrical components or cause short circuits. Leakage of electricity could result in a fire hazard, a dead battery or damage to electrical components.**
- **Replace damaged wires or connections promptly.**
- **If a fuse blows soon after replacement, DO NOT USE A LARGER THAN RECOMMENDED FUSE OR BYPASS THE FUSE SYSTEM.**
- **Many wiring connections are protected by waterproof plugs, plug and unplug these connections carefully and make sure they are sealed correctly after assembly.**
- **Accumulation of dust, chaff and spilled fuel deposits around the battery, electrical wiring, engine or exhaust system are fire hazards. CLEAN THESE AREAS BEFORE STARTING WORK.**
  To avoid premature electrical malfunctions DO NOT APPLY high pressure water directly to battery, wiring, connectors, electrical components or instrument panel.

Inspect the following regularly:

1. Check wiring for chafed or cracked insulation.
2. Check wiring harness clamps. Replace if necessary.
3. Check connectors and terminals for looseness, contamination or overheated (discolored) connections.
4. Check instrument panel for correct operation of switches and gauges.

Consult your KUBOTA Dealer regarding maintenance, diagnosis and repair.

■Checking Movable Parts

If any of the movable parts, such as levers and pedals, is not smoothly moved because of rust or anything sticky, do not attempt to force it into motion.
In the above case, remove the rust or the sticky thing, and apply oil or grease on the relevant spot.
Otherwise, the machine may get damaged.

EVERY 50 HOURS

■Lubricating Grease Fittings

Apply a small amount of multipurpose grease to the following points every 50 hours:
If you operated the machine in extremely wet and muddy conditions, lubricate grease fittings more often.

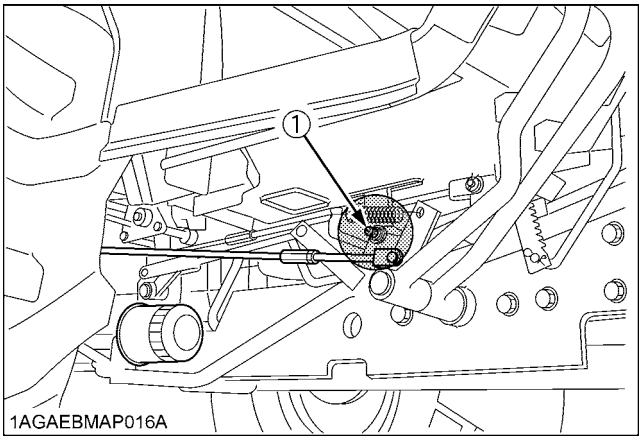

(1) Grease fitting (Speed control pedal)

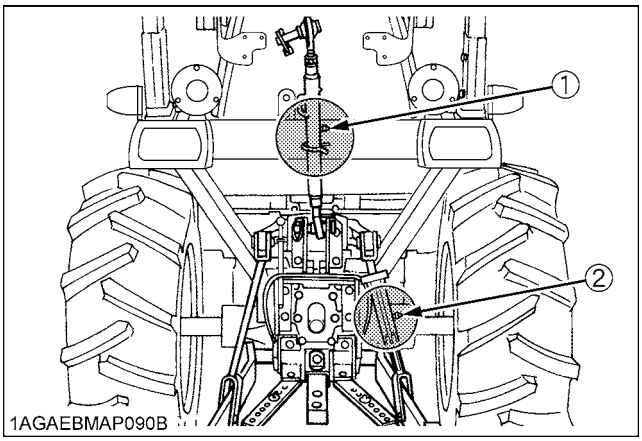

(1) Grease fitting (Top link)
(2) Grease fitting (Lifting rod, right)

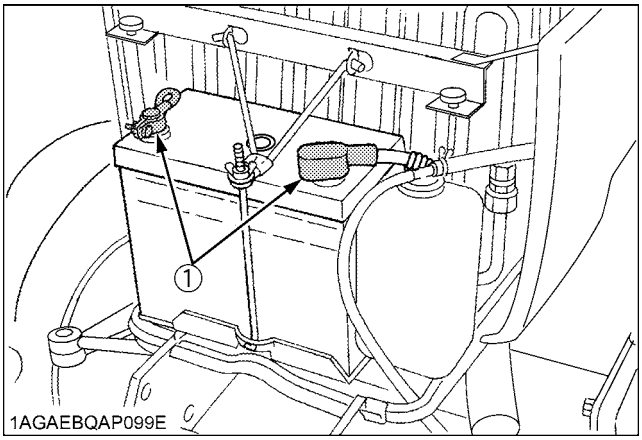

(1) Battery terminals

Downloaded from www.Manualslib.com manuals search engine

https://truckmanualshub.com/

■Checking Engine Start System

CAUTION

To avoid personal injury:

- **Do not allow anyone near the tractor while testing.**
- **If the tractor does not pass the test, do not operate the tractor.**

◆ **Preparation before testing.**

1. Sit on operator's seat.
2. Set the parking brake and stop the engine.
3. Shift the range gear shift lever to "NEUTRAL" position.
4. Place the speed control pedal in "NEUTRAL" position.
5. Shift the PTO clutch lever to "OFF" position.

◆ **Test : Switch for the speed control pedal.**

1. Depress the speed control pedal.
2. Turn the key to "START" position.
3. The engine must not crank.
4. If it cranks, consult your local KUBOTA Dealer for this service.

◆ **Test : Switch for the PTO clutch lever.**

1. Place the speed control pedal in "NEUTRAL" position.
2. Shift the PTO clutch lever to "ON" position.
3. Turn the key to "START" position.
4. The engine must not crank.
5. If it cranks, consult your local KUBOTA Dealer for this service.

◆ **Test : Switches for the operator's seat and the PTO clutch lever.**

1. Sit on the operator's seat.
2. Start the engine.
3. Engage the PTO clutch lever.
4. Stand up. (Do not get off the machine.)
5. The engine must shut off after approximately 1 second.
6. If it does not stop, consult your local KUBOTA Dealer for this service.

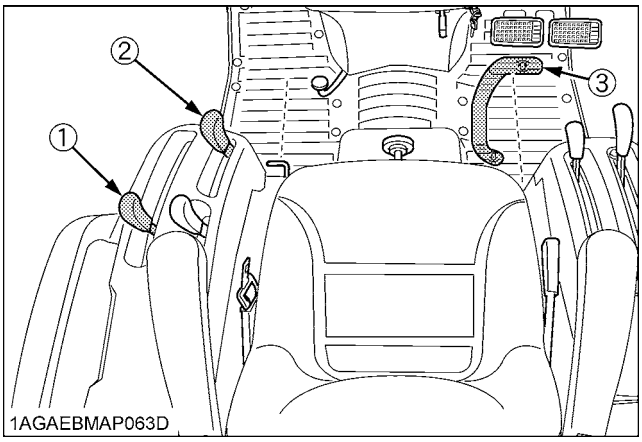

(1) Range gear shift lever (L-M-H)
(2) PTO clutch lever
(3) Speed control pedal

■Checking Wheel Bolt Torque

CAUTION

To avoid personal injury:

- **Never operate tractor with a loose rim, wheel, or axle.**
- **Any time bolts and nuts are loosened, retighten to specified torque.**
- **Check all bolts and nuts frequently and keep them tight.**

Check wheel bolts and nuts regularly especially when new. If they are loose, tighten them as follows.

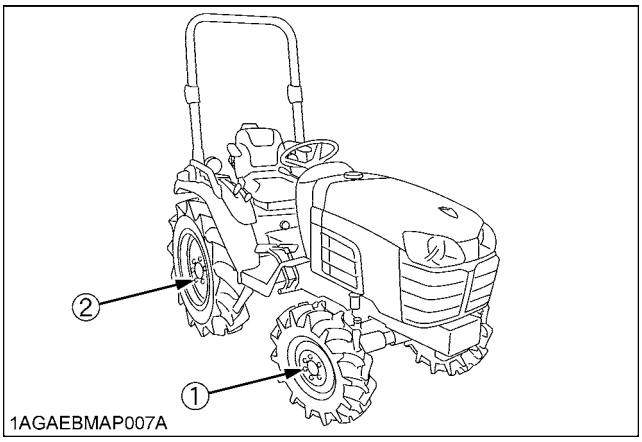

(1) Nut: 77 to 90 N-m (7.9 to 9.2 kgf-m, 57 to 67 ft-lbs.)
(2) Bolt: 196 to 225 N-m (20 to 23 kgf-m, 145 to 166 ft-lbs.)
Nut: 167 to 191 N-m (17 to 19.5 kgf-m, 123 to 141 ft-lbs.)

Downloaded from www.Manualslib.com manuals search engine

https://truckmanualshub.com/

EVERY 100 HOURS

■Checking Battery Condition

DANGER

To avoid the possibility of battery explosion:
For the refillable type battery, follow the instructions below.

- **Do not use or charge the refillable type battery if the fluid level is below the LOWER (lower limit level) mark. Otherwise, the battery component parts may prematurely deteriorate, which may shorten the battery's service life or cause an explosion. Check the fluid level regularly and add distilled water as required so that the fluid level is between the UPPER and LOWER levels.**

CAUTION

To avoid personal injury:

- **Never remove the vent caps while the engine is running.**
- **Keep electrolyte away from eyes, hands and clothes. If you are spattered with it, wash it away completely with water immediately and get medical attention.**
- **Wear eye protection and rubber gloves when working around the battery.**

The factory-installed battery is of non-refillable type. If the indicator turns white, do not charge the battery but replace it with new one.

Mishandling the battery shortens the service life and adds to maintenance costs.
The original battery is maintenance free, but needs some servicing.
If the battery is weak, the engine will be difficult to start and the lights will be dim. It is important to check the battery periodically.

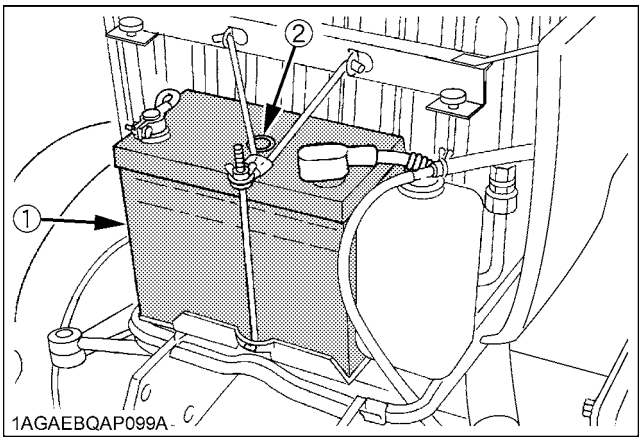

(1) Battery
(2) Indicator

◆ **How to read the indicator**

Check the battery condition by reading the indicator.

State of indicator display	
Green	Specific gravity of electrolyte and quality of electrolyte are both in good condition.
Black	Needs charging battery.
White	Needs replacing battery.

◆ **Battery Charging**

CAUTION

To avoid personal injury:

- **When the battery is being activated, hydrogen and oxygen gases in the battery are extremely explosive. Keep open sparks and flames away from the battery at all times, especially when charging the battery.**
- **When charging the battery, ensure the vent caps are securely in place. (if equipped)**
- **When disconnecting the cable from the battery, start with the negative terminal first.**
  When connecting the cable to the battery, start with the positive terminal first.
- **Never check battery charge by placing a metal object across the posts.**
  Use a voltmeter or hydrometer.

Downloaded from www.Manualslib.com manuals search engine

https://truckmanualshub.com/

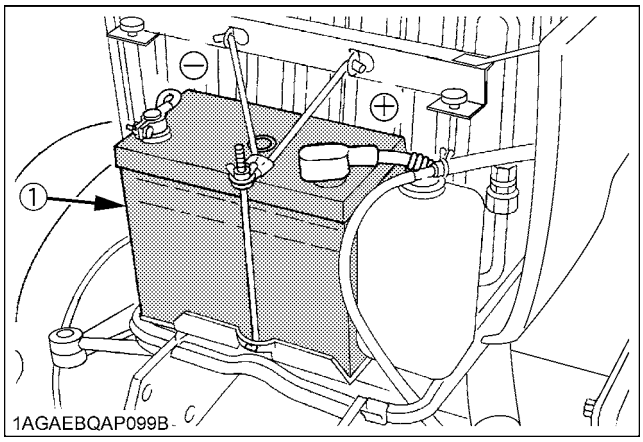

(1) Battery

1. To slow charge the battery, connect the battery positive terminal to the charger positive terminal and the negative to the negative, then recharge in the standard fashion.
2. A boost charge is only for emergencies. It will partially charge the battery at a high rate and in a short time.
   When using a boost-charged battery, it is necessary to recharge the battery as early as possible.
   Failure to do this will shorten the battery's service life.
3. The battery is charged if the indicator display turns green from black.
4. When exchanging an old battery for a new one, use battery of equal specification shown in **table 1**.

[TABLE 1]

Battery Type	Volts (V)	Capacity at 5H.R	Reserve at (min)	Cold Cranking Amps	Normal Charging Rate(A)
55B24L(S)-MF	12	36	80	430	4.5

◆ Direction for Storage

1. When storing the tractor for a long period, remove the battery from tractor, adjust the electrolyte to the proper level and store in a dry place out of direct sunlight.
2. The battery self-discharges while it is stored.
   Recharge it once every three months in hot seasons and once every six months in cold seasons.

■Changing Engine Oil

CAUTION

To avoid personal injury:

- **Be sure to stop the engine before changing the oil.**
- **Allow engine to cool down sufficiently, oil can be hot and can burn.**

1. To drain the used oil, remove the drain plug at the bottom of the engine and drain the oil completely into the oil pan.
   All the used oil can be drained out easily when the engine is still warm.
2. After draining reinstall the drain plug.
3. Fill with the new oil up to the upper notch on the dipstick.
   (See "LUBRICANTS" in "MAINTENANCE" section.)

Oil capacity with filter	B2630	3.0 L (3.2 U.S.qts.)
	B3030/ B3000	4.1 L (4.3 U.S.qts.)

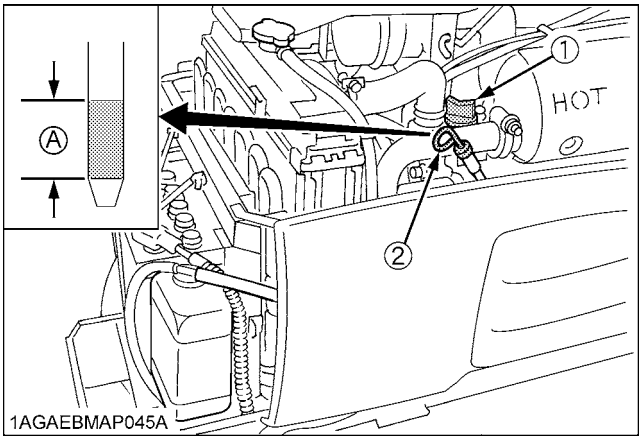

(1) Oil inlet *(A) Oil level is acceptable within this range*
(2) Dipstick

Downloaded from www.Manualslib.com manuals search engine

https://truckmanualshub.com/

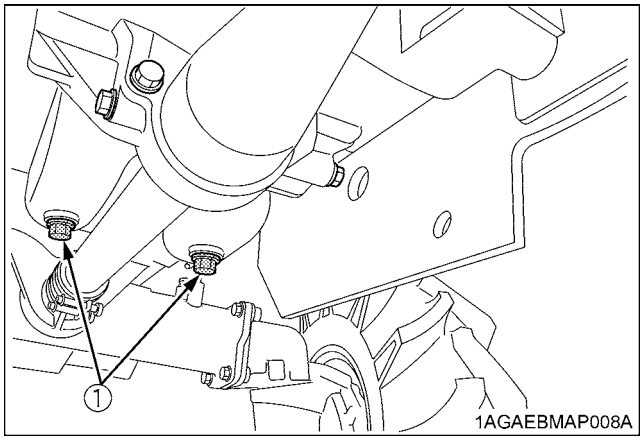

(1) Drain plug (both sides)

■Cleaning Air Cleaner Primary Element

1. Remove the air cleaner cover and primary element.
2. Clean the primary element:
   (1) When dry dust adheres to the element, blow compressed air from the inside, turning the element. Pressure of compressed air must be under 205 kPa (2.1 kgf/cm², 30 psi).
   (2) When carbon or oil adheres to the element, soak the element in detergent for 15 minutes then wash it several times in water, rinse with clean water and dry it naturally. After element is fully dried, inspect inside of the element with a light and check if it is damaged or not.
3. Replace air cleaner primary element:
   Once yearly or after every sixth cleaning, whichever comes first.

NOTE :
- Check to see if the evacuator valve is blocked with dust.

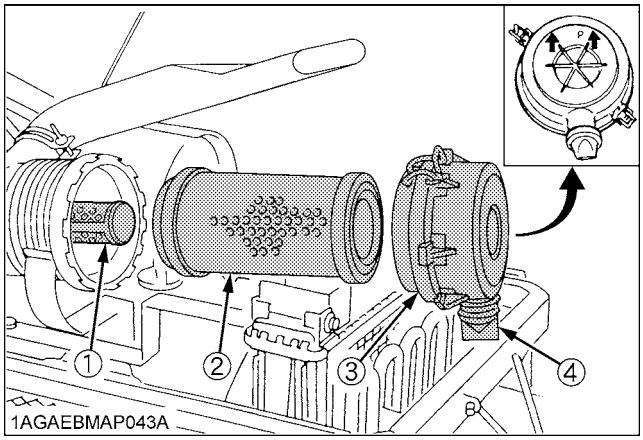

(1) Secondary (safety) element
(2) Primary element
(3) Cover
(4) Evacuator valve

IMPORTANT :
- The air cleaner uses a dry element, never apply oil.
- Do not run the engine with filter element removed.
- Be sure to refit the cover with the arrow ⬆ (on the rear of cover) upright. If the cover is improperly fitted, evacuator valve will not function and dust will adhere to the element.
- Do not touch the secondary element except in cases where replacing is required.
  (See "Replacing Air Cleaner Secondary Element" in "EVERY 1 YEAR" in "PERIODIC SERVICE" section.)

◆ Evacuator Valve

Open the evacuator valve once a week under ordinary conditions - or daily when used in a dusty place - to get rid of large particles of dust and dirt.

■Cleaning Fuel Filter

This job should not be done in the field, but in a clean place.

1. Loosen and remove the filter bowl, and rinse the inside with kerosene.
2. Take out the element and dip it in the kerosene to rinse.
3. After cleaning, reassemble the fuel filter, keeping out dust and dirt.
4. Bleed the fuel system.
   (See "SERVICE AS REQUIRED" in "PERIODIC SERVICE" section.)

IMPORTANT :
- When the fuel filter bowl has been removed, fuel stops flowing from the fuel tank. If the fuel tank is almost full, however, the fuel will flow back from the fuel return pipe to the fuel filter. Before checking, make sure the fuel tank is less than half-full.

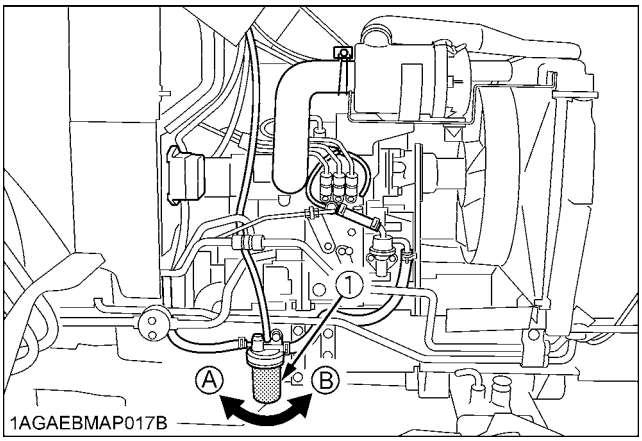

(1) Fuel filter bowl
(A) "LOOSEN"
(B) "TIGHTEN"

Downloaded from www.Manualslib.com manuals search engine

https://truckmanualshub.com/

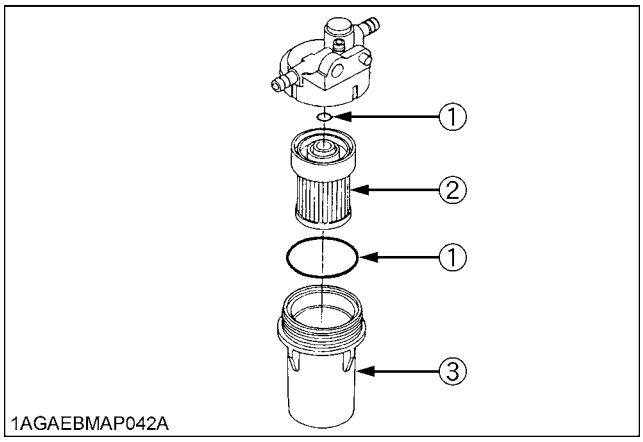

(1) O ring
(2) Filter element
(3) Filter bowl

IMPORTANT :
- If dust, dirt or water enters the fuel system, the fuel pump and injection nozzles are subject to premature wear. To prevent this, be sure to clean the fuel filter bowl and element periodically.

■Adjusting Fan Belt Tension

CAUTION

To avoid personal injury:
- **Be sure to stop the engine before checking belt tension.**

Proper fan belt tension	A deflection of between 7 to 9 mm (0.28 to 0.35 in.) when the belt is pressed in the middle of the span.

1. Stop the engine and remove the key.
2. Apply moderate thumb pressure to belt between pulleys.
3. If tension is incorrect, loosen the alternator mounting bolts and, using a lever placed between the alternator and the engine block, pull the alternator out until the deflection of the belt falls within acceptable limits.
4. Replace fan belt if it is damaged.

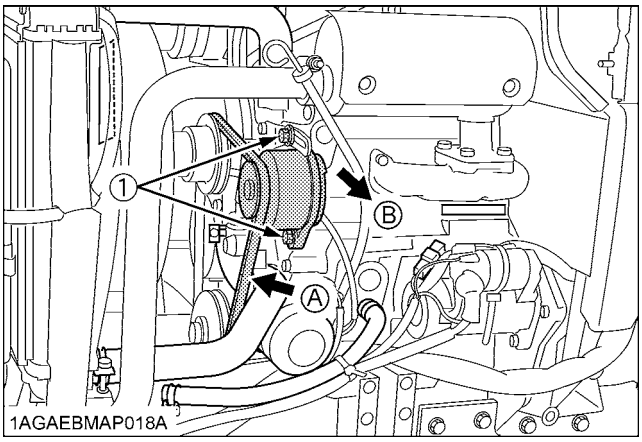

(1) Bolt
(A) Check the belt tension
(B) To tighten

■Adjusting Brake Pedal

CAUTION

To avoid personal injury:
- **Stop the engine and chock the wheels before checking brake pedal.**

Proper brake pedal free travel	30 to 40 mm (1-3/16 to 1-19/32 in.) on the pedal
	Keep the free travel in the right and left brake pedals equal.

1. Release the parking brake.
2. Slightly depress the brake pedals and measure free travel at the top of pedal stroke.
3. If adjustment is needed, loosen the lock nut and turn the turnbuckle to adjust the rod length within acceptable limits.
4. Retighten the lock nut.

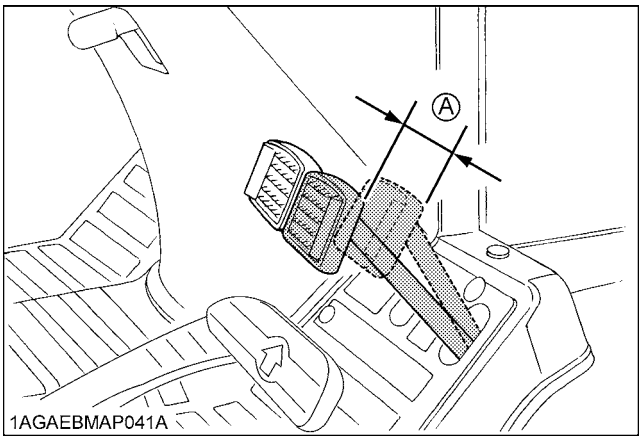

(A) "FREE TRAVEL"

Downloaded from www.Manualslib.com manuals search engine

https://truckmanualshub.com/

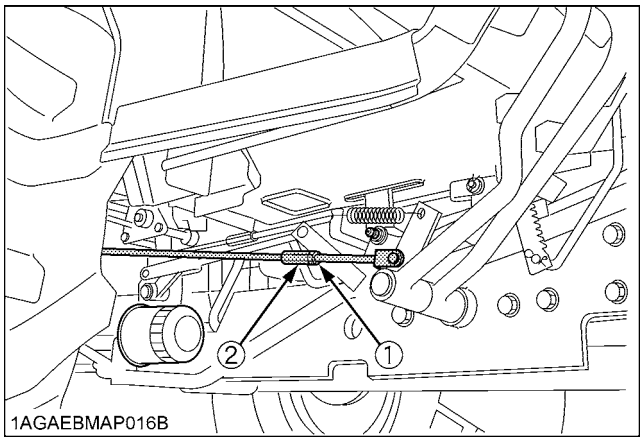

(1) Lock nut
(2) Turnbuckle

■Checking Fuel Line

1. Check to see that all lines and hose clamps are tight and not damaged.
2. If hoses and clamps are found worn or damaged, replace or repair them at once.

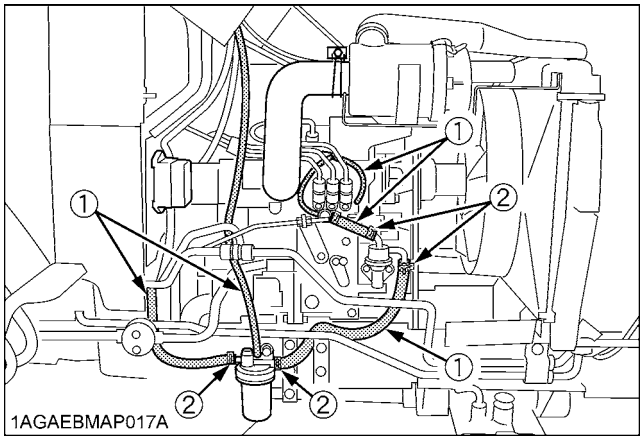

(1) Fuel lines
(2) Clamp bands

NOTE :
- If the fuel line is removed, be sure to properly bleed the fuel system.
  (See "Bleeding Fuel System" in "SERVICE AS REQUIRED" in "PERIODIC SERVICE" section.)

EVERY 200 HOURS

■Replacing Engine Oil Filter

CAUTION

To avoid personal injury:
- **Be sure to stop the engine before changing the oil filter cartridge.**
- **Allow engine to cool down sufficiently, oil can be hot and can burn.**

1. Remove the oil filter.
2. Put a film of clean engine oil on the rubber seal of the new filter.
3. Tighten the filter quickly until it contacts the mounting surface.
   Tighten filter by hand an additional 1/2 turn only.
4. After the new filter has been replaced, the engine oil normally decreases a little. Make sure that the engine oil does not leak through the seal and be sure to check the oil level on the dipstick. Then, replenish the engine oil up to the prescribed level.

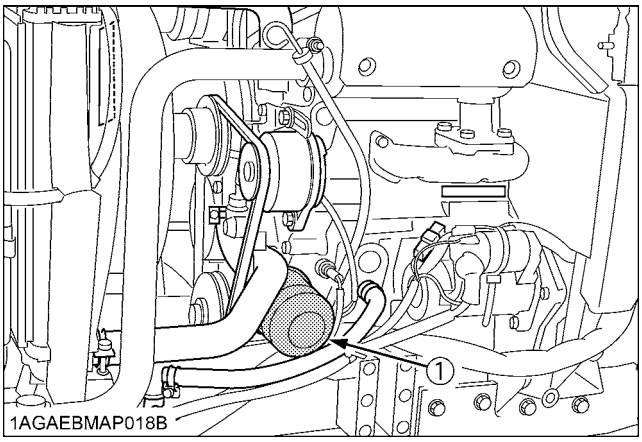

(1) Engine oil filter

IMPORTANT :
- To prevent serious damage to the engine, use only a KUBOTA genuine filter.

■Checking Radiator Hose and Clamp

Check to see if radiator hoses are properly fixed every 200 hours of operation or six months, whichever comes first.

1. If hose clamps are loose or water leaks, tighten bands securely.
2. Replace hoses and tighten hose clamps securely, if radiator hoses are swollen, hardened or cracked.

Replace hoses and hose clamps every 2 years or earlier if checked and found that hoses are swollen, hardened or cracked.

Downloaded from www.Manualslib.com manuals search engine

https://truckmanualshub.com/

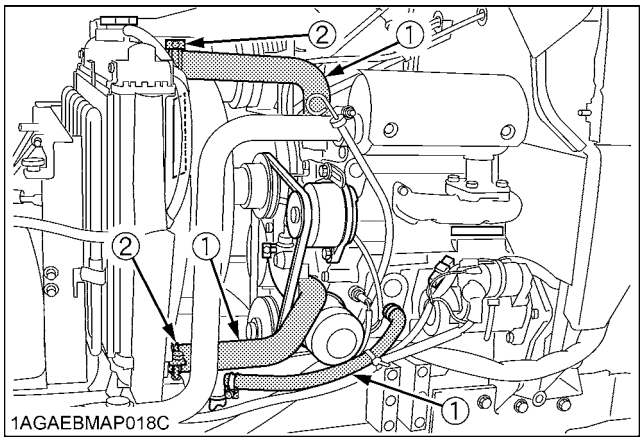

(1) Radiator hoses (4 hoses)
(2) Clamp bands (8 clamps)

◆ **Precaution at Overheating**

Take the following actions in the event the coolant temperature is nearly or more than the boiling point, what is called "Overheating"

1. Park the tractor in a safe place and keep the engine unloaded idling.
2. Don't stop the engine suddenly, but stop it after about 5 minutes of unloaded idling.
3. Keep yourself well away from the machine for further 10 minutes or while the steam blows out.
4. Check that there are no dangers such as burns. Get rid of the causes of overheating according to the manual, see "TROUBLESHOOTING" section, and then, start again the engine.

■Adjusting Air-Conditioner Belt Tension

[CAB only]

Push on the belt between the pulleys with a finger. A deflection of 10 to 12 mm (0.4 to 0.48 in.) under a 10 kgf (22 lbs.) load is appropriate.

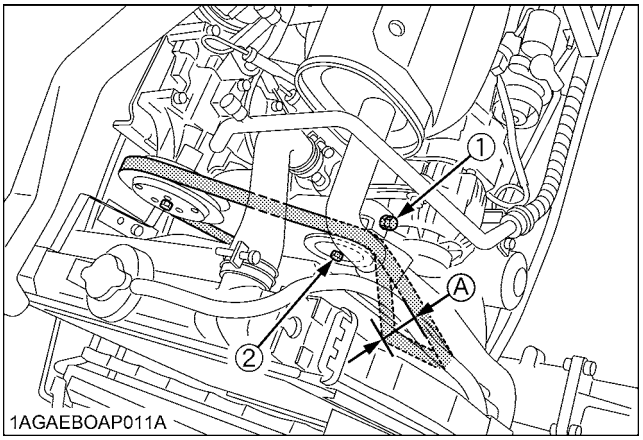

(1) Adjusting bolt *(A) 10 to 12 mm*
(2) Nut

■Cleaning the Inner Air Filter

[CAB only]

Remove the inner filter, and blow air from the direction opposite to the filter's normal air flow.

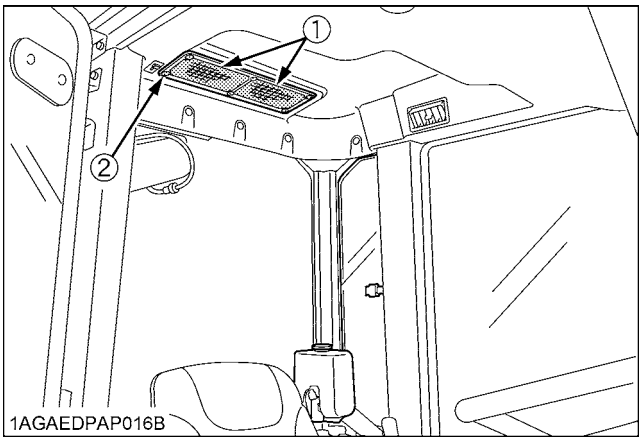

(1) Inner air filter
(2) Screw

Downloaded from www.Manualslib.com manuals search engine

https://truckmanualshub.com/

■Cleaning the Fresh Air Filter

[CAB only]

Remove the knob bolts and pull out filter.

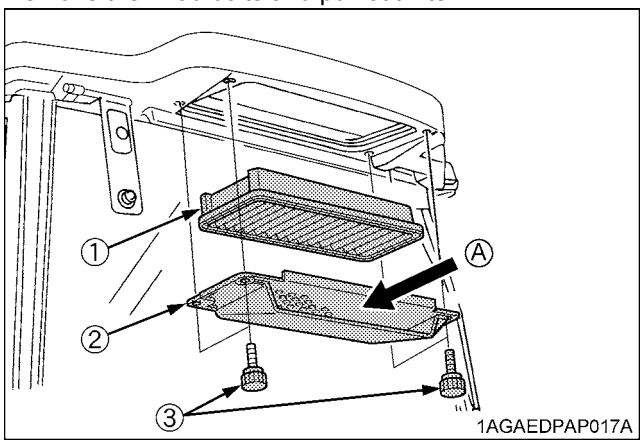

(1) Fresh air filter *(A) Air inlet port*
(2) Cover
(3) Knob bolt

NOTE :
- Attach the filter and cover as illustration above.

◆ **Cleaning the air filter**
- Normal use
  Blow air from the opposite direction to the filter's normal air flow.
  Pressure of compressed air must be under 205 kPa (2.1 kgf/cm², 30 psi).

IMPORTANT :
- Do not hit the filter. If the filter becomes deformed, dust may enter into the air-conditioner, which may cause damage and malfunction.

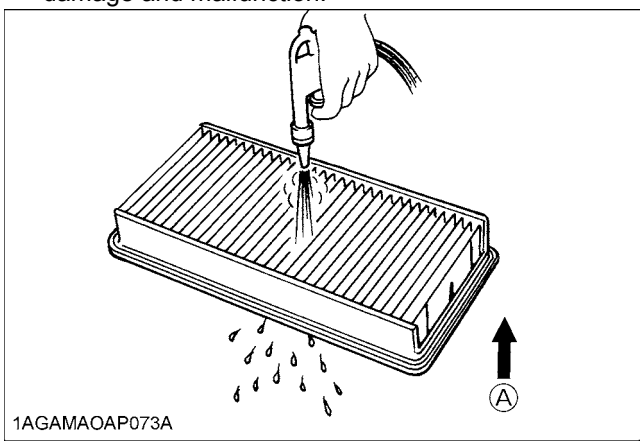

(A) "AIR CONDITIONER AIRFLOW"

NOTE :
- If the filter is very dirty:
  Dip the filter in lukewarm water with mild dish washing detergent.
  Move it up and down as well as left and right to loosen dirt. Rinse the filter with clean water and let it air-dry.

IMPORTANT :
- Do not use gasoline, thinner or similar chemicals to clean the filter as damage to the filter may occur.
- It may also cause an unpleasant odor in the CAB when the system is used next.

■Checking the Air conditioner Condenser

[CAB only]

Check air conditioner condenser to be sure it is clean of debris.

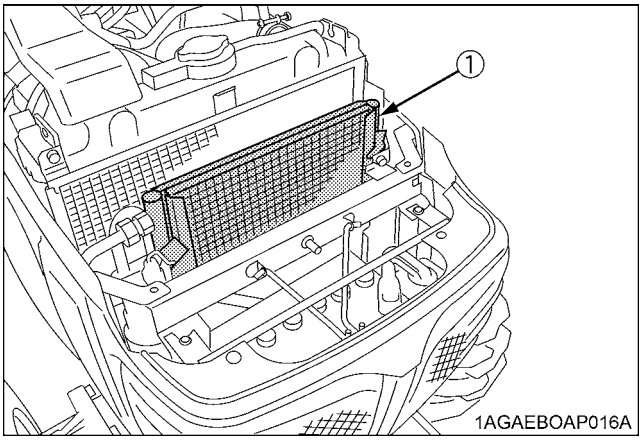

(1) Air conditioner condenser

■Checking Intake Air Line

1. Check to see that hoses and hose clamps are tight and not damaged.
2. If hoses and clamps are found worn or damaged, replace or repair them at once.

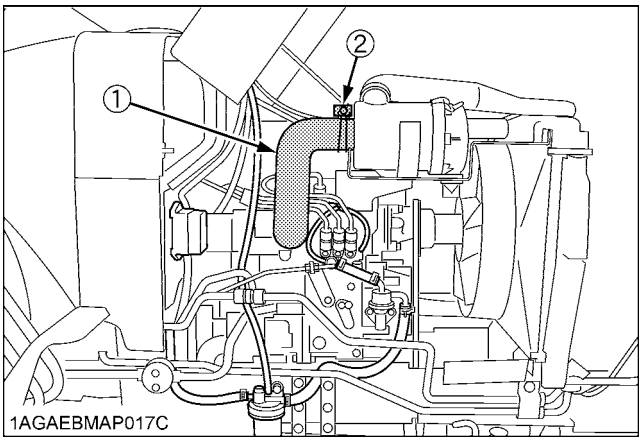

(1) Hose
(2) Hose clamps

Downloaded from www.Manualslib.com manuals search engine

https://truckmanualshub.com/

■Adjusting Toe-in

1. Park tractor on a flat place.
2. Turn steering wheel so front wheels are in the straight ahead position.
3. Lower the implement, lock the park brake and stop the engine.
4. Measure distance between tire beads at front of tire, hub height.
5. Measure distance between tire beads at rear of tire, hub height.
6. Front distance should be 0 to 10 mm (0 to 3/8 in.) less than rear distance. If not, adjust tie rod length.

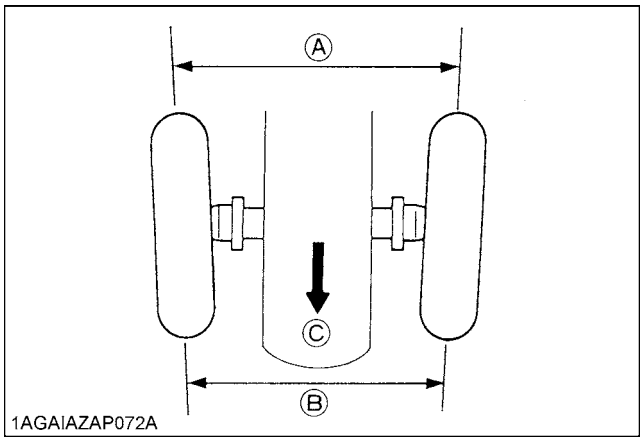

(A) Wheel - to - wheel distance at rear
(B) Wheel - to - wheel distance at front
(C) "FRONT"

◆ Adjusting procedures

1. Loosen the tie-rod nut.
2. Turn the tie-rod joint to adjust the rod length until the proper toe-in measurement is obtained.
3. Retighten the tie-rod nut.

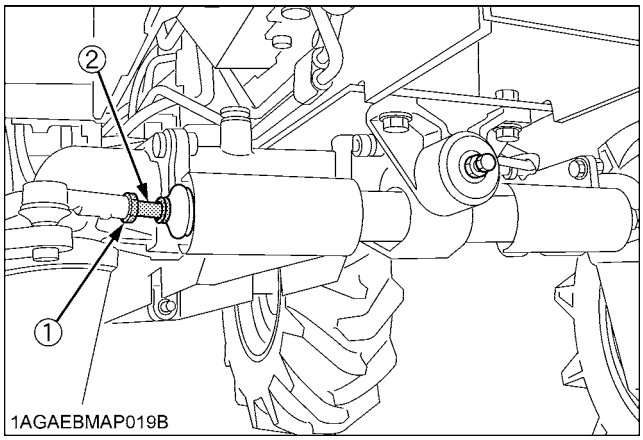

(1) Tie-rod nut
(2) Tie-rod joint

EVERY 300 HOURS

■Changing Transmission Fluid

CAUTION

To avoid personal injury:

- **Allow engine to cool down sufficiently, oil can be hot and can burn.**

1. To drain the used oil, remove the drain plug at the bottom of the transmission case and drain the oil completely into the oil pan.
2. After draining reinstall the drain plug.
3. Fill with new KUBOTA SUPER UDT fluid up to the upper notch on the dipstick.
   (See "LUBRICANTS" in "MAINTENANCE" section and "DAILY CHECK" in "PERIODIC SERVICE" section)
4. After running the engine for a few minutes, stop it and check the oil level again; add oil to prescribed level.
5. Properly dispose of used oil.

Oil capacity	15 L (4.0 U.S.gals.)

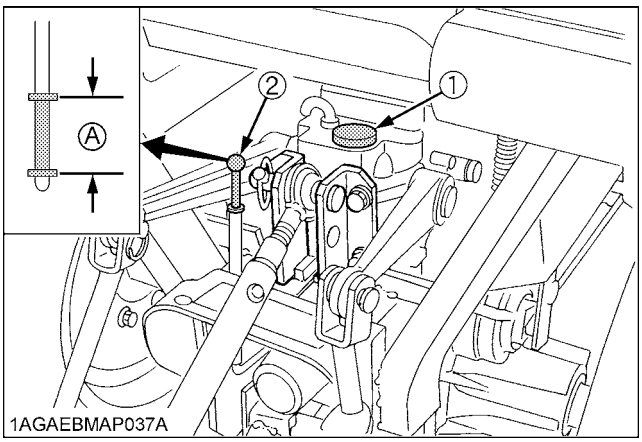

(1) Oil inlet
(2) Dipstick
(A) Oil level is acceptable within this range

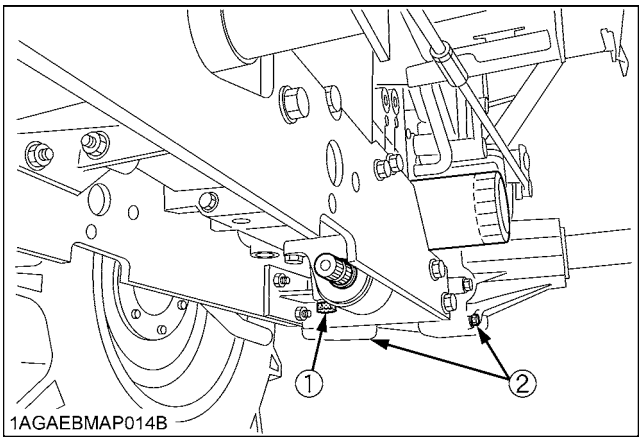

(1) Drain plug
(2) Drain plug (Both sides)

Downloaded from www.Manualslib.com manuals search engine

https://truckmanualshub.com/

IMPORTANT :
- If the 3-point hitch can not be raised by setting the hydraulic control lever to the UP position after long term storage or when changing the transmission oil, turn steering wheel to the right and left several times to bleed air from the system.
- Do not operate the tractor immediately after changing the transmission fluid.

■Replacing Transmission Oil Filter

CAUTION

To avoid personal injury:
- **Be sure to stop the engine before changing the oil filter cartridge.**
- **Allow engine to cool down sufficiently, oil can be hot and can burn.**

1. Remove the drain plugs at the bottom of the transmission case and drain the oil completely into the oil pan.
2. After draining reinstall the drain plugs.

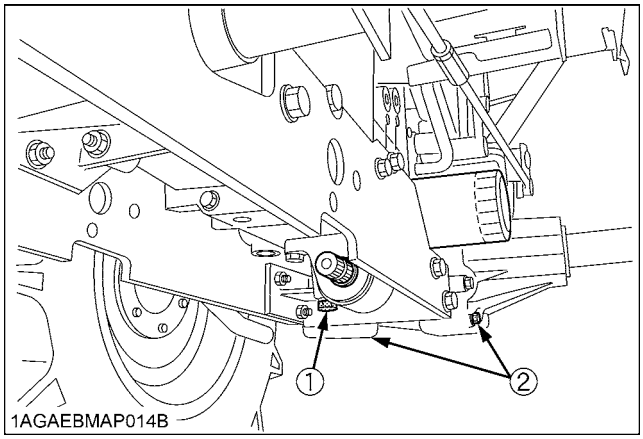

(1) Drain plug
(2) Drain plug (Both sides)

3. Remove the oil filter

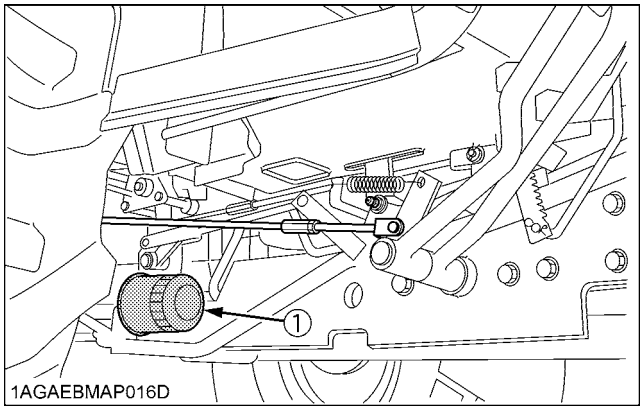

(1) Transmission oil filter

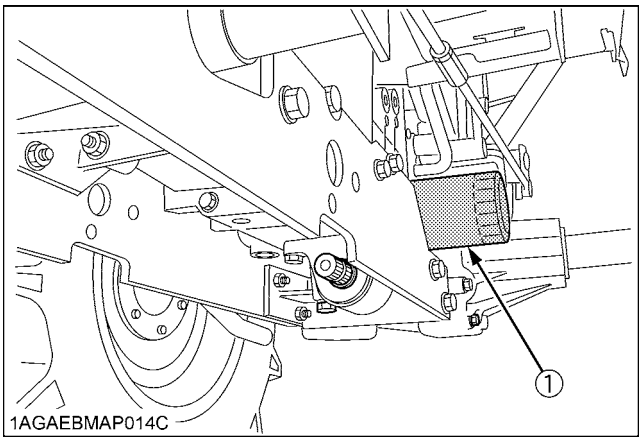

(1) Transmission oil filter

4. Put a film of clean transmission oil on the rubber seal of the new filter.
5. Quickly tighten the filter until it contacts the mounting surface, then tighten it by hand an additional 1/2 turn only.
6. After the new filters have been replaced, fill the transmission oil up to the upper notch on the dipstick.

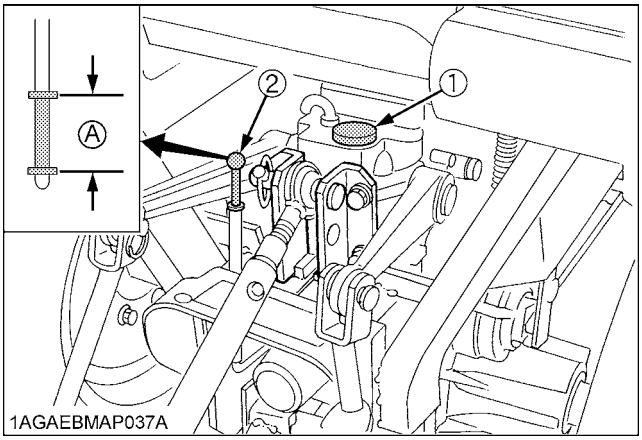

(1) Oil inlet *(A) Oil level is acceptable within this range*
(2) Dipstick

7. After running the engine for a few minutes, stop the engine and check the oil level again, add oil to the prescribed level.
8. Make sure that the transmission fluid doesn't leak past the seal on the filter.

IMPORTANT :
- To prevent serious damage to the hydraulic system, use only a KUBOTA genuine filter.

Downloaded from www.Manualslib.com manuals search engine

https://truckmanualshub.com/

■Changing Front Axle Case Oil

1. Park the tractor on a firm, flat and level surface.
2. To drain the used oil, remove the right and left drain plugs and filling plug at the front axle case and drain the oil completely into the oil pan.
3. After draining, reinstall the drain plugs.
4. Fill with new oil up to the upper notch on the dipstick. (See "LUBRICANTS" in "MAINTENANCE" section.)

IMPORTANT :
- After ten minutes, check the oil level again; add oil to prescribed level.

5. After filling, reinstall the filling plug.
6. Properly dispose of used oil.

Oil capacity	4.7 L (5.0 U.S.qts.)

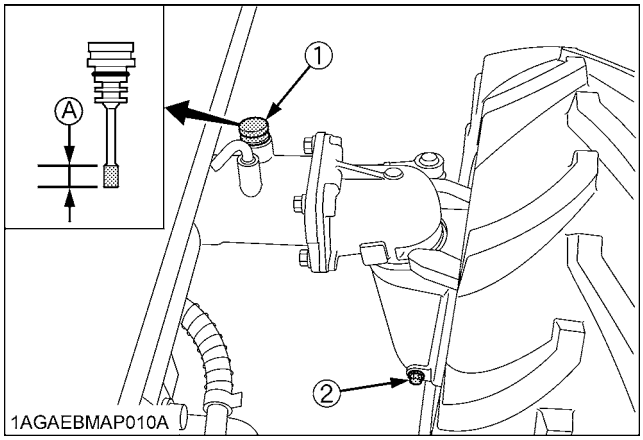

(1) Filling plug with dipstick
(2) Drain plug
(A) Oil level is acceptable within this range

EVERY 400 HOURS

■Adjusting Front Axle Pivot [4WD]

If the front axle pivot pin adjustment is not correct, front wheel vibration can occur causing vibration in the steering wheel.

◆ Adjusting procedure

Loosen the lock nut, and tighten the adjusting screw so that the oscillating load is 50 to 100 N (5.1 to 10.2 kgf, 11.2 to 22.5 lbf). (If the adjusting screw is tightened, loosened and retightened, apply liquid gasket to its tip.) Retighten the lock nut.
Consult your local KUBOTA Dealer for further details.

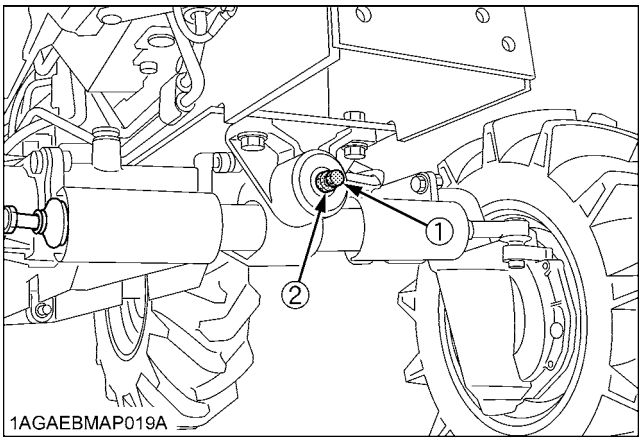

(1) Adjusting screw
(2) Lock nut

■Replacing Fuel Filter Element

(See "Cleaning Fuel Filter" in "EVERY 100 HOURS" in "PERIODIC SERVICE" section.)

EVERY 800 HOURS

■Adjusting Engine Valve Clearance

Consult your local KUBOTA Dealer for this service.

EVERY 1500 HOURS

■Checking Fuel Injection Nozzle Injection Pressure

Consult your local KUBOTA Dealer for this service.

EVERY 3000 HOURS

■Checking Injection Pump

Consult your local KUBOTA Dealer for this service.

Downloaded from www.Manualslib.com manuals search engine

https://truckmanualshub.com/

EVERY 1 YEAR

■Replacing Air Cleaner Primary Element and Secondary Element

(See "Cleaning Air Cleaner Primary Element" in "EVERY 100 HOURS" in "PERIODIC SERVICE" section.)

IMPORTANT :
- To prevent serious damage to the engine, use only a KUBOTA genuine filter.

■Checking the Air Conditioner Pipe and Hose

[CAB only]

1. Check to see that all lines and hose clamps are tight and not damaged.
2. If hoses and clamps are found worn or damaged, consult your local KUBOTA Dealer for this service.

■Checking the CAB Isolation Cushion

Check the cushion for any breakage or fatigue. Replace them if they have deteriorated.

EVERY 2 YEARS

■Flushing Cooling System and Changing Coolant

CAUTION

To avoid personal injury:
- **Do not remove radiator cap while coolant is hot. When cool, slowly rotate cap to the first stop and allow sufficient time for excess pressure to escape before removing the cap completely.**

1. Stop the engine, remove the key and let it cool down.
2. To drain the coolant, open the radiator drain cock, and remove radiator cap. The radiator cap must be removed to completely drain the coolant.
3. After all coolant is drained, close the drain cock.
4. Fill with clean soft water and cooling system cleaner.
5. Follow directions of the cleaner instruction.
6. After flushing, fill with clean soft water and anti-freeze until the coolant level is just below the radiator cap. Install the radiator cap securely.
7. Fill with coolant up to the "FULL" mark of recovery tank.
8. Start and operate the engine for few minutes.
9. Stop the engine, remove the key and let cool.
10. Check coolant level of recovery tank and add coolant if necessary.
11. Properly dispose of used coolant.

Model	Coolant capacity (with recovery tank)
B2630	4.5 L (4.7 U.S.qts.)
B3030	
B3000	5.2 L (5.5 U.S.qts.)

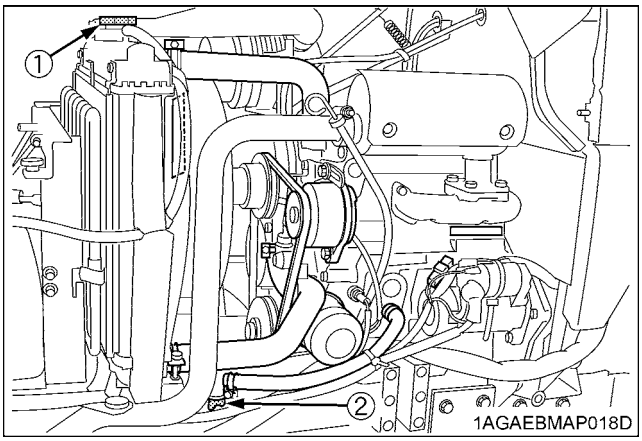

(1) Radiator cap
(2) Drain cock

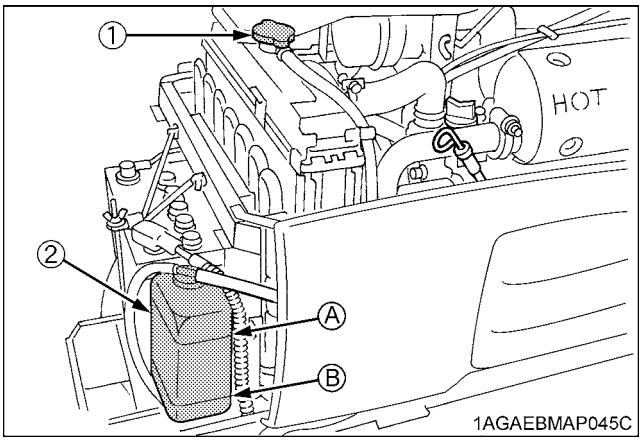

(1) Radiator cap *(A) "FULL"*
(2) Recovery tank *(B) "LOW"*

IMPORTANT :
- Do not start engine without coolant.
- Use clean, fresh soft water and anti-freeze to fill the radiator and recovery tank.
- When mixing the anti-freeze with water, the anti-freeze mixing ratio is 50 %.
- Securely tighten radiator cap. If the cap is loose or improperly fitted, water may leak out and the engine could overheat.

Downloaded from www.Manualslib.com manuals search engine

https://truckmanualshub.com/

■Anti-Freeze

CAUTION

To avoid personal injury:

- **When using antifreeze, put on some protection such as rubber gloves (Antifreeze contains poison.).**
- **If should drink antifreeze, throw up at once and take medical attention.**
- **When antifreeze comes in contact with the skin or clothing, wash it off immediately.**
- **Do not mix different types of Antifreeze. The mixture can produce chemical reaction causing harmful substances.**
- **Antifreeze is extremely flammable and explosive under certain conditions. Keep fire and children away from antifreeze.**
- **When draining fluids from the engine, place some container underneath the engine body.**
- **Do not pour waste onto the grounds, down a drain, or into any water source.**
- **Also, observe the relevant environmental protection regulations when disposing of antifreeze.**

If it freezes, coolant can damage the cylinders and radiator. If the ambient temperature falls below 0℃ (32℉) or before a long-term storage, let out cooling water completely, or mix fresh water with long-life coolant and fill the radiator and recovery tank with the mixture.

1. Long-life coolant (hereafter LLC) comes in several types. Use ethylene glycol (EG) type for this engine.
2. Before employing LLC-mixed cooling water, fill the radiator with fresh water and empty it again.
   Repeat this procedure 2 or 3 times to clean up the inside.
3. Mixing the LLC
   Put the LLC in cooling water in the percentage (%) for a target temperature. When mixing, stir it up well, and then fill into the radiator.
4. The procedure for the mixing of water and antifreeze differs according to the make of the antifreeze and the ambient temperature. Refer to SAE J1034 standard, more specifically also to SAE J814c.

IMPORTANT :

- When the antifreeze is mixed with water, the antifreeze mixing ratio must be less than 50%.

Vol % Anti-freeze	Freezing Point		Boiling Point*	
	℃	℉	℃	℉
40	-24	-12	106	222
50	-37	-34	108	226

∗ At 1.013 x 10^5Pa (760mmHg) pressure (atmospheric). A higher boiling point is obtained by using a radiator pressure cap which permits the development of pressure within the cooling system.

5. Adding the LLC
   (1) Add only water if the mixture reduces in amount by evaporation.
   (2) If there is a mixture leak, add the LLC of the same manufacturer and type in the same mixture percentage.
   ∗ Never add any long-life coolant of different manufacturer. (Different brands may have different additive components, and the engine may fail to perform as specified.)
6. When the LLC is mixed, do not employ any radiator cleaning agent. The LLC contains anticorrosive agent. If mixed with the cleaning agent, sludge may build up, adversely affecting the engine parts.
7. Kubota's genuine long-life coolant has a service life of 2 years. Be sure to change the coolant every 2 years.

NOTE :

- The above data represent industry standards that necessitate a minimum glycol content in the concentrated antifreeze.
- When the coolant level drops due to evaporation, add water only to keep the antifreeze mixing ratio less than 50%. In case of leakage, add antifreeze and water in the specified mixing ratio before filling in to the radiator.

■Replacing Radiator Hose (Water pipes)

Replace the hoses and clamps.
(See "Checking Radiator Hose and Clamp" in "EVERY 200 HOURS" in "PERIODIC SERVICE" section.)

■Replacing Fuel Hose

Consult your local KUBOTA Dealer for this service.

■Replacing Intake Air Line

Consult your local KUBOTA Dealer for this service.

■Replacing the Air Conditioner Hose

[CAB only]

Downloaded from www.Manualslib.com manuals search engine

https://truckmanualshub.com/

SERVICE AS REQUIRED

■Bleeding Fuel System

Air must be removed:

1. When the fuel filter or lines are removed.
2. When the tank is completely empty.
3. After the tractor has not been used for a long period of time.

◆ **Bleeding procedure is as follows:**

1. Fill the fuel tank with fuel.
2. Start the engine and run for about 30 seconds, and then stop the engine.

■Draining Clutch Housing Water

The tractor is equipped with a drain plug under the clutch housing.

After operating in rain, snow or tractor has been washed, water may get into the clutch housing.

Remove the drain plug and drain the water, then install the plug again.

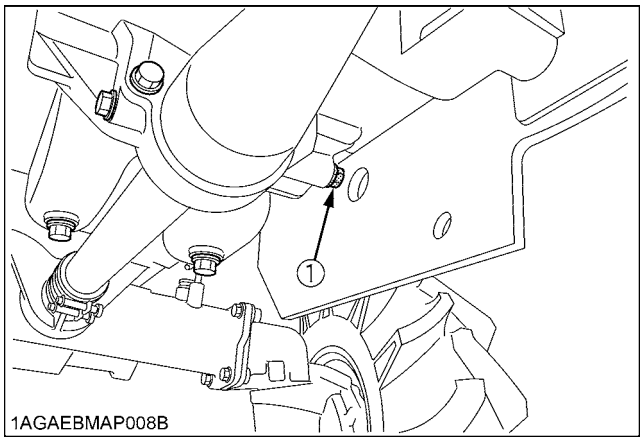

(1) Water drain plug

■Replacing Fuse

The tractor electrical system is protected from potential damage by fuses.

A blown fuse indicates that there is an overload or short somewhere in the electrical system.

If any of the fuses should blow, replace with a new one of the same capacity.

IMPORTANT :

- Before replacing a blown fuse, determine why the fuse blew and make any necessary repairs. Failure to follow this procedure may result in serious damage to the tractor electrical system. Refer to the "TROUBLESHOOTING" section of this manual or your local KUBOTA Dealer for specific information dealing with electrical problems.

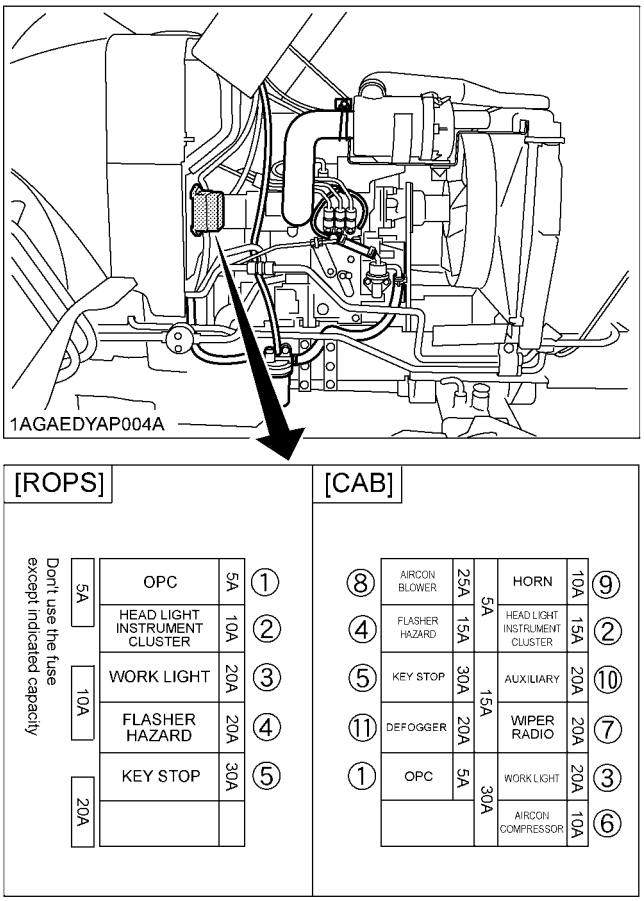

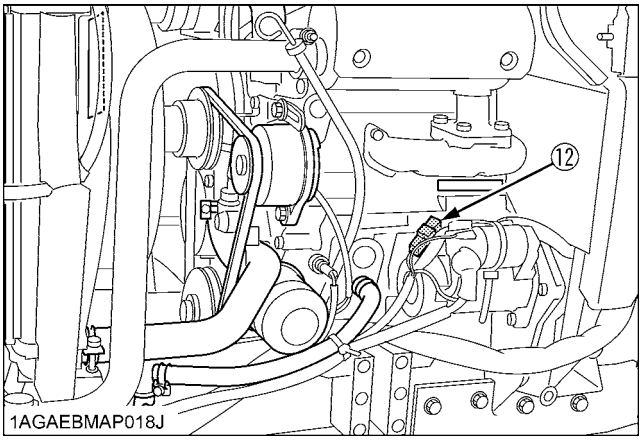

Downloaded from www.Manualslib.com manuals search engine

https://truckmanualshub.com/

◆ **Protected circuit**

FUSE No.	CAPACITY (A)		Protected circuit	ROPS	CAB
	ROPS	CAB			
(1)	5		OPC	○	○
(2)	10	15	Head light instrument cluster	○	○
(3)	20		Work light	○	○
(4)	20	15	Flasher / Hazard	○	○
(5)	30		Key stop	○	○
(6)	10		Aircon compressor	---	○
(7)	20		Wiper radio	---	○
(8)	25		Aircon blower	---	○
(9)	10		Horn	---	○
(10)	20		Auxiliary	---	○
(11)	20		Defogger	---	○
(12)	Slow blow fuse		Check circuit against wrong battery connection	○	○

■Replacing Light Bulb

1. Head light
   Take the bulb out of the light body and replace with a new one.
2. Other lights
   Detach the lens and replace the bulb.

Light	Capacity	
	ROPS	CAB
Head light	23W	
Tail light	8W	
Turn signal / Hazard light	27W and 20W	
Instrument panel light	1.7W	
Hazard light switch indicator	0.6W	
Work light	---	35W
Tail light / Brake light (if equipped)	5W / 21W	

■Lubricating Points

[CAB only]

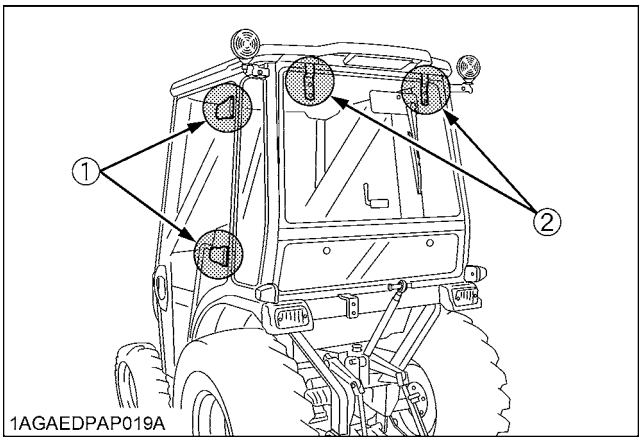

(1) Door hinge
(2) Rear window hinge

■Adding the Washer Liquid

[CAB only]

Add a proper amount of automobile washer liquid.
(Tank capacity: 1.5 liters (0.40 U.S.gals.))

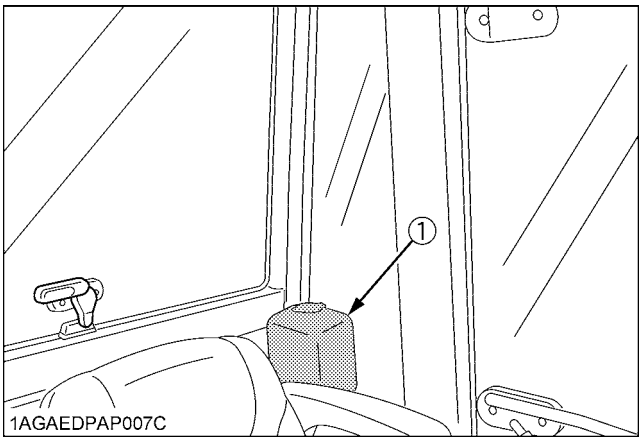

(1) Washer liquid tank

■Checking the Amount of Refrigerant (gas)

[CAB only]

WARNING

To avoid personal injury:

- **Liquid contact with eyes or skin may cause frostbite.**
- **In the event of a leakage, wear safety goggles. Escaping refrigerant can cause severe injuries to eyes.**
- **In contact with a flame, R134a refrigerant gives a toxic gas.**

Downloaded from www.Manualslib.com manuals search engine

https://truckmanualshub.com/

- **Do not disconnect any part of the refrigeration circuit of the air conditioning system. Consult your local KUBOTA Dealer for assistance and service.**

A shortage of refrigerant impairs the air-conditioner performance. Check the following points. If it is indicated that the amount of refrigerant is extremely low, ask your dealer to inspect and charge.

◆ **Checking procedure**

1. Run the air-conditioner in the following conditions.
   - Engine speed: About 1500 rpm
   - Temperature control lever: Maximum cooling position (leftmost)
   - Fan switch: Highest blow (HI)
   - Air-conditioner switch: ON
2. Look into the sight glass to see if the refrigerant is flowing through its circuit.

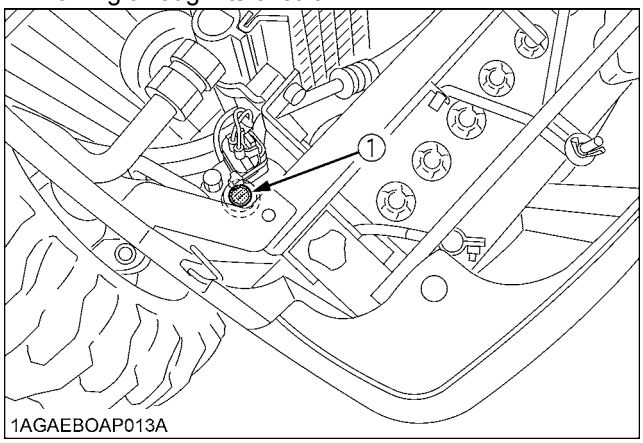

(1) Sight glass

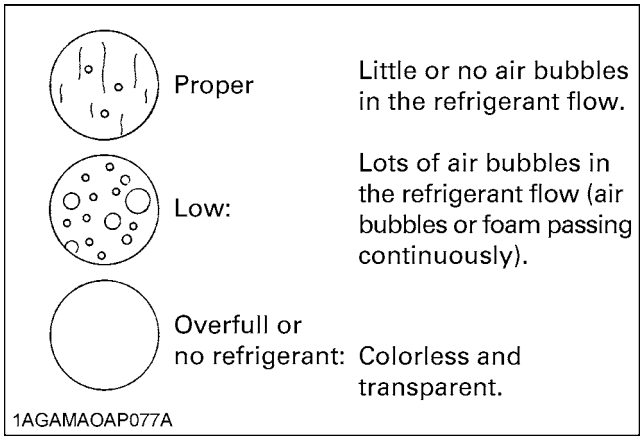

IMPORTANT :

- Charge only with R134a not R12 refrigerant (gas).

Downloaded from www.Manualslib.com manuals search engine

https://truckmanualshub.com/

STORAGE

CAUTION

To avoid personal injury:

- **Do not clean the machine while the engine is running.**
- **To avoid the danger of exhaust fume poisoning, do not operate the engine in a closed building without proper ventilation.**
- **When storing, remove the key from the key switch to avoid unauthorized persons from operating the tractor and getting injured.**

TRACTOR STORAGE

If you intend to store your tractor for an extended period of time, follow the procedures outlined below. These procedures will insure that the tractor is ready to operate with minimum preparation when it is removed from storage.

1. Check the bolts and nuts for looseness, and tighten if necessary.
2. Apply grease to tractor areas where bare metal will rust also to pivot areas.
3. Detach the weights from the tractor body.
4. Inflate the tires to a pressure a little higher than usual.
5. Change the engine oil and run the engine to circulate oil throughout the engine block and internal moving parts for about five minutes.
6. With all implements lowered to the ground, coat any exposed hydraulic cylinder piston rods with grease.
7. Remove the battery from the tractor. Store the battery following the battery storage procedures.
   (See "Battery" in "EVERY 100 HOURS" in "PERIODIC SERVICE" section.)
8. Keep the tractor in a dry place where the tractor is sheltered from the elements. Cover the tractor.
9. Store the tractor indoors in a dry area that is protected from sunlight and excessive heat. If the tractor must be stored outdoors, cover it with a waterproof tarpaulin.
   Jack the tractor up and place blocks under the front and rear axles so that all four tires are off the ground. Keep the tires out of direct sunlight and extreme heat.

IMPORTANT :

- When washing the tractor, be sure to stop the engine. Allow sufficient time for the engine to cool before washing.
- Cover the tractor after the muffler and the engine have cooled down.

REMOVING THE TRACTOR FROM STORAGE

1. Check the tire air pressure and inflate the tires if they are low.
2. Jack the tractor up and remove the support blocks from under the front and rear axles.
3. Install the battery. Before installing the battery, be sure it is fully charged.
4. Check the fan belt tension.
5. Check all fluid levels (engine oil, transmission/ hydraulic oil, engine coolant and any attached implements).
6. Start the engine. Observe all gauges. If all gauges are functioning properly and reading normal, move the tractor outside. Once outside, park the tractor and let the engine idle for at least five minutes. Shut the engine off and walk around tractor and make a visual inspection looking for evidence of oil or water leaks.
7. With the engine fully warmed up, release the parking brake and test the brakes for proper adjustment as you move forward. Adjust the brakes as necessary.

Downloaded from www.Manualslib.com manuals search engine

https://truckmanualshub.com/

TROUBLESHOOTING

ENGINE TROUBLESHOOTING

If something is wrong with the engine, refer to the table below for the cause and its corrective measure.

Trouble		Cause	Countermeasure
Engine is difficult to start or won't start.		● No fuel flow.	● Check the fuel tank and the fuel filter. Replace filter if necessary.
		● Air or water is in the fuel system.	● Check to see if the fuel line coupler bolt and nut are tight. ● Bleed the fuel system (See "Bleeding Fuel System" in "SERVICE AS REQUIRED" in "PERIODIC SERVICE" section.)
		● In winter, oil viscosity increases, and engine revolution is slow.	● Use oils of different viscosities, depending on ambient temperatures. ● Use engine block heater. (Option)
		● Battery becomes weak and the engine does not turn over quick enough.	● Clean battery cables & terminals. ● Charge the battery. ● In cold weather, always remove the battery from the engine, charge and store it indoors. Install it on the tractor only when the tractor is going to be used.
Insufficient engine power.		● Insufficient or dirty fuel. ● The air cleaner is clogged.	● Check the fuel system. ● Clean or replace the element.
Engine stops suddenly.		● Insufficient fuel.	● Refuel. ● Bleed the fuel system if necessary.
Exhaust fumes are colored.	Black	● Fuel quality is poor. ● Too much oil. ● The air cleaner is clogged.	● Change the fuel and fuel filter. ● Check the proper amount of oil. ● Clean or replace the element.
	Blue white	● The inside of exhaust muffler is dumped with fuel. ● Injection nozzle trouble. ● Fuel quality is poor.	● Heat the muffler by applying load to the engine. ● Check the injection nozzle. ● Change the fuel and fuel filter.
Engine overheats		● Engine overloaded	● Shift to lower gear or reduce load.
		● Low coolant level	● Fill cooling system to the correct level; check radiator and hoses for loose connections or leaks.
		● Loose or defective fan belt	● Adjust or replace fan belt.
		● Dirty radiator core or grille screens	● Remove all trash.
		● Coolant flow route corroded	● Flush cooling system.

If you have any questions, consult your local KUBOTA Dealer.

Downloaded from www.Manualslib.com manuals search engine

https://truckmanualshub.com/

OPTIONS

Consult your local KUBOTA Dealer for further detail.

- Rear Work Light
  High visibility for night work
- Engine Block Heater
  For extremely cold weather starting
- Front end weights
  For front ballast
- Mounting Kit (Front end weights)
  To mount Front end weights
- CD Radio Mount Kit

Downloaded from www.Manualslib.com manuals search engine