Always follow manufacturer instructions
https://truckmanualshub.com/

SK800

Kubota® D1105

Operator's Manual

CE

CMW®

Issue 2.0
Original Instruction

053-2976

AAA Rent-All 225-291-1356

Always follow manufacturer instructions
https://truckmanualshub.com/

Overview

Chapter Contents

Serial Number Location 2

Intended Use 3

Equipment Modification 3

Machine Components 4

Operator Orientation 5

Operating Area 5

About This Manual 6

- Bulleted Lists 6
- Numbered Lists 6

California Proposition 65

WARNING Diesel engine exhaust and some of its constituents are known to the State of California to cause cancer, birth defects, and other reproductive harm. www.P65warnings.ca.gov.

AAA Rent-All 225-291-1356

Always follow manufacturer instructions
https://truckmanualshub.com/

Serial Number Location

Record serial number and date of purchase in spaces provided. Serial number is located as shown.

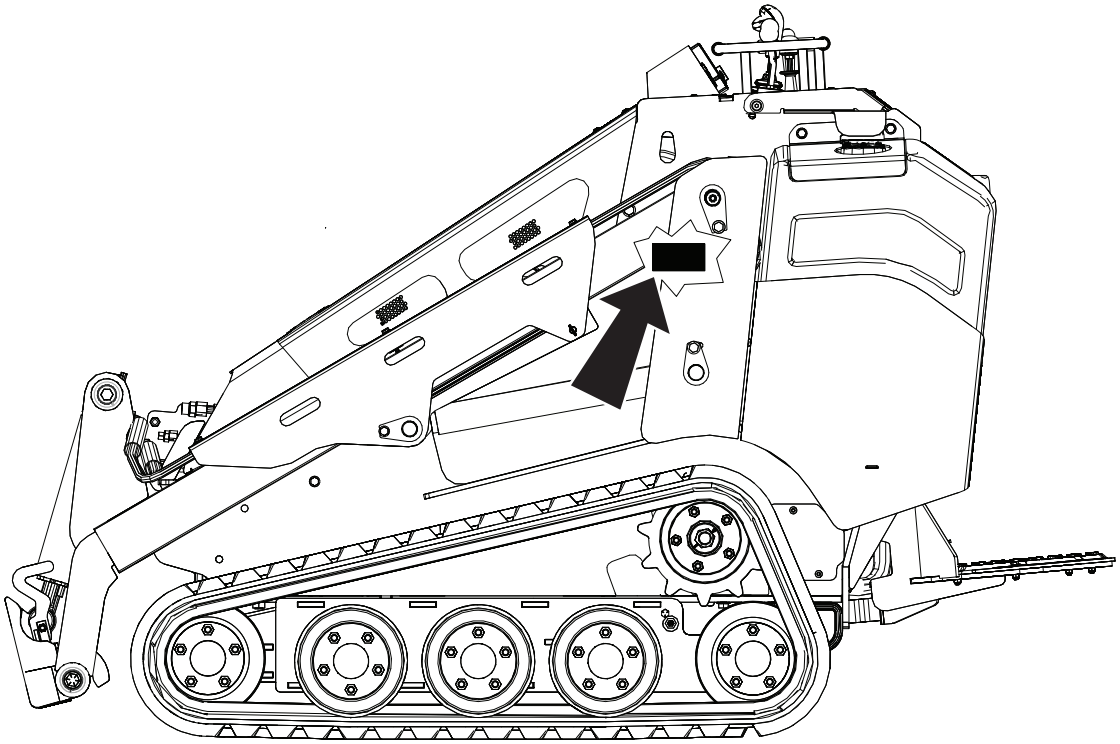

t46om013w.eps

Item	
Date of manufacture	
Date of purchase	
Machine serial number	

AAA Rent-All 225-291-1356

Always follow manufacturer instructions
https://truckmanualshub.com/

Intended Use

The SK800 is a platform, rubber track compact tool carrier unit designed for medium-duty construction work. The machine has a quick attach plate which makes it easy for an operator to connect different attachments.

This machine is intended for operation only according to the instructions in this manual. Operate machine in ambient temperatures from 10° to 115°F (-12° to 46°C). Contact your Ditch Witch® dealer for provisions required for operating in extreme temperatures. Use in any other way is considered contrary to the intended use.

This machine should be operated, serviced, and repaired only by professionals familiar with its particular characteristics and acquainted with the relevant safety procedures.

Equipment Modification

This equipment was designed and built in accordance with applicable standards and regulations. Modification of equipment could mean that it will no longer meet regulations and may not function properly or in accordance with the operating instructions. Modification of equipment should only be made by competent personnel possessing knowledge of applicable standards, regulations, equipment design functionality/requirements and any required specialized training.

AAA Rent-All 225-291-1356

Always follow manufacturer instructions
https://truckmanualshub.com/

Machine Components

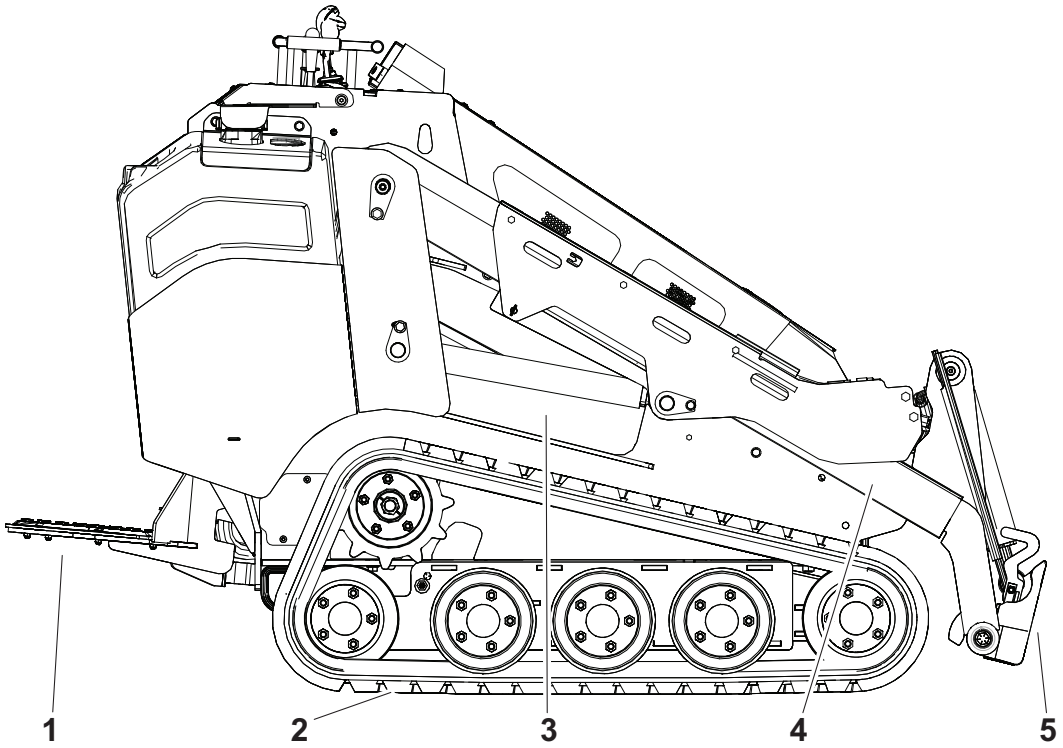

t46om014w.eps

1. Operator station platform
2. Tracks
3. Engine compartment
4. Lift arms
5. Attachment plate

AAA Rent-All 225-291-1356

Always follow manufacturer instructions
https://truckmanualshub.com/

Operator Orientation

IMPORTANT: Top view of machine is shown.

1. Front
2. Right side
3. Rear
4. Left side

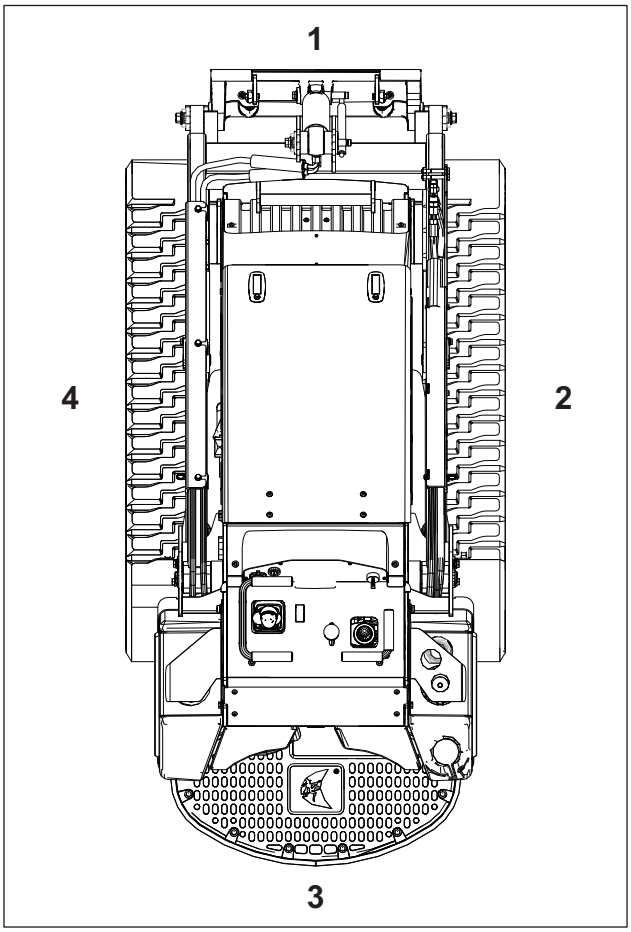

t46om015w.eps

Operating Area

IMPORTANT: Top view of machine is shown.

Operator should stand only in the location shown.

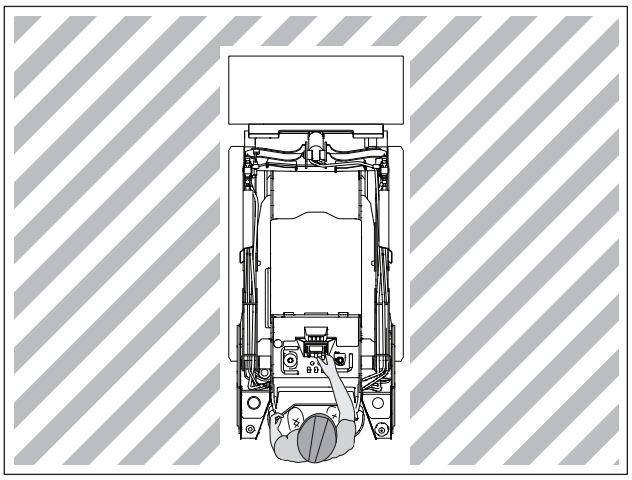

t62om004w19.eps

AAA Rent-All 225-291-1356

Always follow manufacturer instructions
https://truckmanualshub.com/

About This Manual

This manual contains information for the proper use of this machine. Cross references such as "See page 50" will direct you to detailed procedures.

Bulleted Lists

Bulleted lists provide helpful or important information or contain procedures that do not have to be performed in a specific order.

Numbered Lists

Numbered lists contain illustration callouts or list steps that must be performed in order.

AAA Rent-All 225-291-1356

Always follow manufacturer instructions
https://truckmanualshub.com/

Foreword

This manual is an important part of your equipment. It provides safety information and operation instructions to help maintain your Ditch Witch equipment.

Read this manual before using your equipment. Keep it with the equipment at all times for future reference. If you sell your equipment, be sure to give this manual to the new owner.

If you need a replacement copy, contact your Ditch Witch dealer. If you need assistance in locating a dealer, visit our website at www.ditchwitch.com or write to the following address:

The Charles Machine Works, Inc.
ATTN: Marketing Department
PO Box 66
Perry, OK 73077-0066
USA

The descriptions and specifications in this manual are subject to change without notice. The Charles Machine Works, Inc. reserves the right to improve equipment. Some product improvements may have taken place after this manual was published. For the latest information on Ditch Witch equipment, see your Ditch Witch dealer.

Thank you for buying and using Ditch Witch equipment.

AAA Rent-All 225-291-1356

Always follow manufacturer instructions
https://truckmanualshub.com/

SK800
Operator's Manual

Kubota® D1105

Issue number 2.0/OM-7/20
Part number 053-2976

Copyright 2017, 2020
by The Charles Machine Works, Inc.

Ditch Witch® and Ditch Witch are registered trademarks of The Charles Machine Works, Inc.

This product and its use may be covered by one or more patents at http://patents.charlesmachine.works.

AAA Rent-All 225-291-1356

Always follow manufacturer instructions
https://truckmanualshub.com/

Contents

Overview 1

Machine serial number, information about the type of work this machine is designed to perform, basic machine components, and how to use this manual

Foreword 7

Part number, revision level, and publication date of this manual, and factory contact information

Safety 11

Machine safety alerts and emergency procedures

Prepare 19

Procedures for preparing jobsite, preparing operator, and preparing equipment

Controls 31

Machine controls, gauges, and indicators and how to use them

Drive 41

Procedures for startup, cold start, driving, and shutdown

Transport 47

Procedures for lifting, hauling, and retrieving

Complete the Job 55

Procedures for restoring the jobsite and rinsing and storing equipment

Maintenance 57

Maintenance intervals and instructions for this machine including lubrication, replacement of wear items, and basic maintenance

Specifications 79

Machine specifications including weights, measurements, power ratings, and fluid capacities

AAA Rent-All 225-291-1356

Always follow manufacturer instructions
https://truckmanualshub.com/

Support **85**

The warranty policy for this machine and procedures for obtaining warranty consideration and training

AAA Rent-All 225-291-1356

Always follow manufacturer instructions
https://truckmanualshub.com/

Safety

Chapter Contents

For additional precautions, see "Prepare" chapter.

Guidelines 12

Emergency Procedures 13

- Electric Strike Description 13
- If an Electric Line is Damaged 14
- If a Gas Line is Damaged 14
- If a Fiber Optic Cable is Damaged 14
- If Machine Catches on Fire 14

Safety Alert Classification 15

Machine Safety Alerts 16

AAA Rent-All 225-291-1356

Always follow manufacturer instructions
https://truckmanualshub.com/

Guidelines

WARNING Misuse of machine can cause death or serious injury. Read and understand operator's manual and all other safety instructions before use. Know how to use all controls.

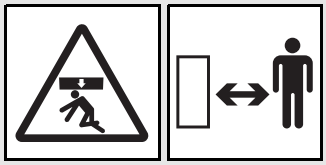

WARNING Raised component. Crushing can cause death or serious injury. Stay away. Use correct equipment and procedures.

Follow these guidelines before operating any jobsite equipment:

- Complete proper training.
- Read and understand operator's manual before using equipment.
- Wear personal protective equipment. See "Prepare Operator" in "Prepare" chapter.
- Mark proposed path with white paint and have underground utilities located before working. In the US or Canada, call 811 (US) or 888-258-0808 (US and Canada). Also contact any local utilities that do not participate in the One-Call service. In countries that do not have a One-Call service, contact all local utility companies to have underground utilities located.
- Classify jobsite based on its hazards and use correct tools and machinery, safety equipment, and work methods for jobsite.
- Mark jobsite clearly and keep spectators away.
- Review jobsite hazards, safety and emergency procedures, and individual responsibilities with all personnel before work begins. Safety videos are available from your Ditch Witch dealer or at www.ditchwitch.com/safe. Safety Data Sheets (SDS) are available at www.ditchwitch.com/support.
- Fully inspect equipment before operating. Repair or replace any worn or damaged parts. Replace missing or damaged safety shields and safety alert signs. Contact your Ditch Witch dealer for assistance.
- Follow instructions on all safety alert signs on machine.
- Use equipment carefully per the instructions in this manual. Stop operation and investigate anything that does not look or feel right.
- Do not operate machine where flammable gas may be present.
- Only operate equipment in well ventilated areas.
- Always tie down equipment and properly stow accessories, even if traveling short distances.
- Contact your Ditch Witch dealer if you have any questions about operation, maintenance, or equipment use.
- Complete the equipment checklist located at www.ditchwitch.com/safe.

AAA Rent-All 225-291-1356

Always follow manufacturer instructions
https://truckmanualshub.com/

Emergency Procedures

WARNING Underground utilities. Contact can cause death or serious injury. Locate and verify underground utilities before digging or drilling.

Before operating any equipment, review emergency procedures and check that all safety precautions have been taken.

EMERGENCY SHUTDOWN: Shut off machine or press remote engine stop button (if equipped).

Electric Strike Description

When working near electric cables, remember the following:

- Electricity follows all paths to ground, not just path of least resistance.
- Pipes, hoses, and cables will conduct electricity back to all equipment.
- Low voltage current can injure or kill. Many work-related electrocutions result from contact with less than 440 volts.

Most electric strikes are not noticeable, but indications of a strike include:

- power outage
- smoke
- explosion
- popping noises
- arcing electricity

If any of these occur, assume an electric strike has occurred.

AAA Rent-All 225-291-1356

Always follow manufacturer instructions
https://truckmanualshub.com/

If an Electric Line is Damaged

If you suspect an electric line has been damaged, DO NOT MOVE. Take the following actions. The order and degree of action will depend on the situation.

- If you are **on the machine,** REMAIN ON MACHINE. Raise attachments and drive from immediate area.
- If you are **off the machine**,
  - DO NOT TOUCH ANY EQUIPMENT.
  - If you must leave the area, take small steps with feet close together to reduce the hazard of being shocked from one foot to the other.
- Warn people nearby that an electric strike has occurred. Instruct them to leave the area.
- Have someone contact electric company to shut off power.
- If you leave the area, do not return to jobsite or allow anyone into area until given permission by utility company.

If a Gas Line is Damaged

If you suspect a gas line has been damaged, take the following actions. The order and degree of action will depend on the situation.

- Immediately shut off engine(s), if this can be done safely and quickly.
- Remove any ignition source(s), if this can be done safely and quickly.
- Warn others that a gas line has been cut and that they should leave the area.
- After warning others to leave the area, leave jobsite as quickly as possible.
- Immediately call your local emergency phone number and utility company.
- If jobsite is along street, stop traffic from driving near jobsite.
- Do not return to jobsite until given permission by emergency personnel and utility company.

If a Fiber Optic Cable is Damaged

Do not look into cut ends of fiber optic or unidentified cable. Vision damage can occur. Contact utility company.

If Machine Catches on Fire

Perform emergency shutdown procedure and then take the following actions. The order and degree of action will depend on the situation.

- Immediately move battery disconnect switch (if equipped and accessible) to disconnect position.
- If fire is small and fire extinguisher is available, attempt to extinguish fire.
- If fire cannot be extinguished, leave area as quickly as possible and contact emergency personnel.

AAA Rent-All 225-291-1356

Always follow manufacturer instructions
https://truckmanualshub.com/

Safety Alert Classifications

These classifications and the icons defined on the following pages work together to alert you to situations which could be harmful to you, jobsite bystanders, or your equipment. When you see these words and icons in the book or on the machine, carefully read and follow all instructions. YOUR SAFETY IS AT STAKE.

When you see this safety alert sign, carefully read and follow all instructions.
YOUR SAFETY IS AT STAKE. Read this entire section before using your equipment.

Watch for the three safety alert levels: **DANGER**, **WARNING**, and **CAUTION**. Learn what each level means.

DANGER indicates a hazardous situation that, if not avoided, will result in death or serious injury. This signal word is to be limited to the most extreme situations.

WARNING indicates a hazardous situation that, if not avoided, could result in death or serious injury.

CAUTION indicates a hazardous situation that, if not avoided, could result in minor or moderate injury.

Watch for two other words: ***NOTICE*** and **IMPORTANT**.

NOTICE indicates information considered important, but not hazard-related (e.g., messages relating to property damage).

IMPORTANT can help you do a better job or make your job easier in some way.

AAA Rent-All 225-291-1356

Always follow manufacturer instructions
https://truckmanualshub.com/

Machine Safety Alerts

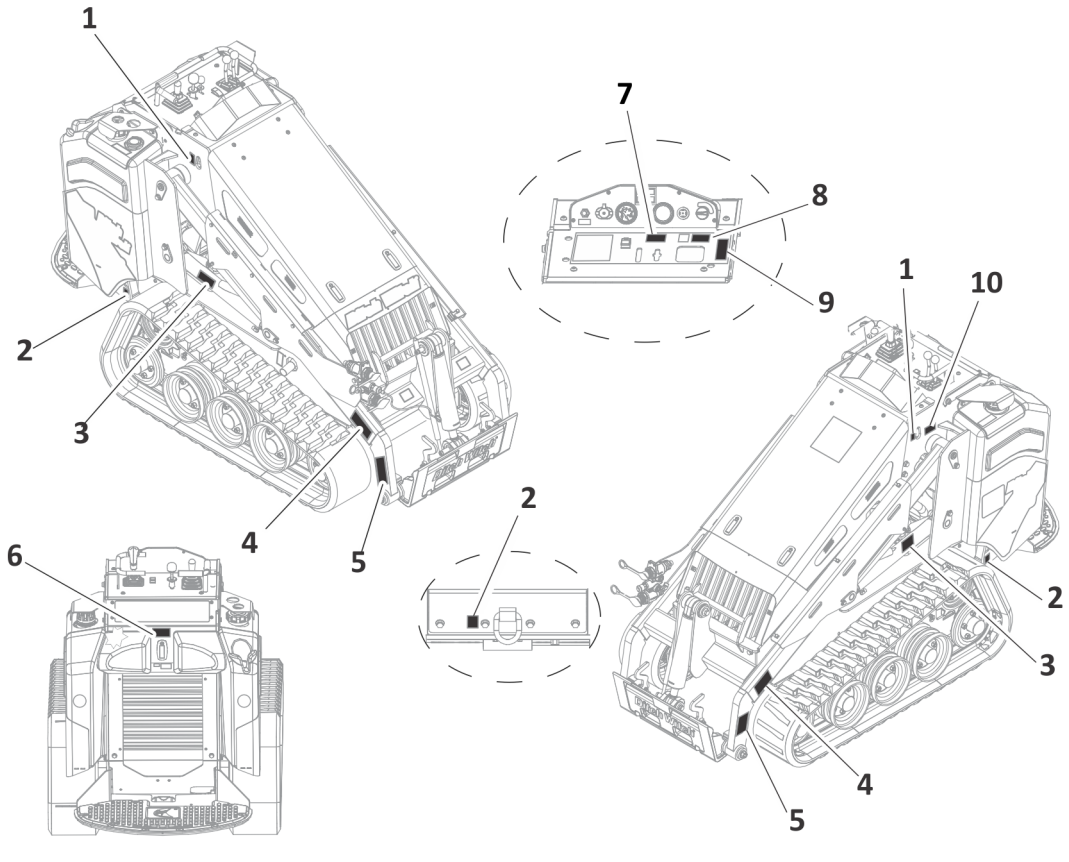

1		Lift point. See Transport chapter for more information.
2		Tiedown location. See Transport chapter for more information.
3	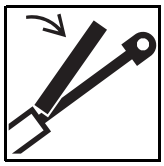	**WARNING** Raised component. Crushing can cause death or serious injury. Stay away or secure raised component with locking device. Use correct equipment and procedures.

AAA Rent-All 225-291-1356

Always follow manufacturer instructions
https://truckmanualshub.com/

4	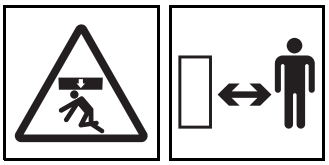	**WARNING** Lifted load. Crushing can cause death or serious injury. Stay away from lifted load and its range of movement.
5	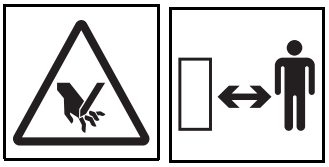	**WARNING** Moving parts. Contact can cause serious injury. Stay away.
6	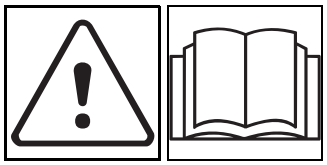	**WARNING** Misuse of machine can cause death or serious injury. Read and understand operator's manual and all other safety instructions before use. Know how to use all controls.
7	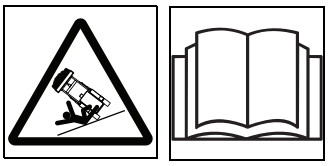	**WARNING** Tip over. Crushing can cause death or serious injury. Follow procedures in operator's manual. Drive cautiously.
8		**WARNING** Underground utilities. Contact can cause death or serious injury. Locate and verify underground utilities before digging or drilling.
9		**CAUTION** High noise levels. Exposure can cause hearing loss. Wear hearing protection.
10		**WARNING** Pre-heater. Fire or explosion can cause death or serious injury. Never use starter fluid.

AAA Rent-All 225-291-1356

Always follow manufacturer instructions
https://truckmanualshub.com/

AAA Rent-All 225-291-1356

Always follow manufacturer instructions
https://truckmanualshub.com/

Prepare

Chapter Contents

For additional precautions, see "Safety" chapter.

Prepare Jobsite 20

- Review Job Plan 20
- Select Start and End Points 20
- Identify Hazards 21
- Locate Utilities 22
- Classify Jobsite 23
- Arrange for Traffic Control 24

Prepare Operator. 25

Prepare Equipment 26

- Check Supplies 26
- Check Equipment 26
- Assemble Accessories 27
- Connect Attachment 27

AAA Rent-All 225-291-1356

Always follow manufacturer instructions
https://truckmanualshub.com/

Prepare Jobsite

WARNING Underground utilities. Contact can cause death or serious injury. Locate and verify underground utilities before digging or drilling.

To help avoid injury:

- Expose lines by careful hand digging or soft excavation before operating equipment. Use appropriate equipment and procedures for exposing utility lines.
- Classify jobsite and follow precautions based on classification.
- Follow local regulations for digging near utilities.

A successful job begins before working. The first step in planning is reviewing information already available about the job and jobsite.

Review Job Plan

Review blueprints or other plans. Check for information about existing or planned structures, elevations, or proposed work that may be taking place at the same time.

Select Start and End Points

Select one end to use as a starting point. Consider the following when selecting a starting point:

Slope

Equipment should be parked on a level site. Consider how slope will affect setup and operation. Assess the risks on each slope to determine if factors affecting risks create an unsafe condition for working. See "Slope Guidelines" on page 52.

Space

Check that starting and ending points allow enough space for working.

Comfort

Consider shade, wind, fumes, and other site features.

AAA Rent-All 225-291-1356

Always follow manufacturer instructions
https://truckmanualshub.com/

Identify Hazards

Inspect jobsite before transporting equipment. Check for the following:

- overall grade or slope
- changes in elevation such as hills or open trenches
- obstacles such as buildings, railroad crossings, or streams
- signs of utilities

  - "buried utility" notices
  - gas or water meters
  - drop boxes
  - manhole covers
  - utility facilities without overhead lines
  - junction boxes
  - light poles
  - sunken ground

- traffic
- access
- soil type and condition
- loose material such as fencing or cable

Identify safety hazards and classify jobsite if attachment will penetrate ground. See "Classify Jobsite" on page 23.

AAA Rent-All 225-291-1356

Always follow manufacturer instructions
https://truckmanualshub.com/

Locate Utilities

Notify One-Call Services

Mark proposed path with white paint and have underground utilities located before working.

- In the US or Canada, call 811 (US) or 888-258-0808 (US and Canada). Also contact any local utilities that do not participate in the One-Call service.
- In countries that do not have a One-Call service, contact all local utility companies to have underground utilities located.

Verify Underground Utilities

Have an experienced locating equipment operator sweep area within 20' (6 m) to each side of proposed excavation to verify previously marked line and cable locations. Mark location of all buried utilities and obstructions.

Locate Overhead Lines

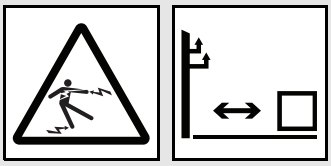

DANGER Overhead electrical lines. Contact will cause death or serious injury. Know location of lines. Stay away.

Note location and height of all overhead lines in jobsite and ensure that equipment maintains proper distance from live lines.

AAA Rent-All 225-291-1356

Always follow manufacturer instructions
https://truckmanualshub.com/

Classify Jobsite

Select a Classification

Jobsites are classified according to underground hazards present, not by line being installed. Jobsite may have more than one classification.

If working . . .	then classify jobsite as . . .
within 10' (3m) of a buried electric line	electric
within 10' (3m) of a natural gas line	natural gas
in concrete, sand, or granite which is capable of producing crystalline silica dust	crystalline silica dust
within 10' (3m) of any other hazard	other

Classify jobsite as electric if jobsite is in question or if the possibility of unmarked electric utilities exists.

Apply Precautions

WARNING Underground utilities. Contact can cause death or serious injury. Locate and verify underground utilities before digging or drilling.

Once classified, precautions appropriate for jobsite must be taken. Follow US Department of Labor regulations on excavating and trenching (Part 1926, Subpart P) and other similar regulations.

Electric Jobsite Precautions

Use one or both of these methods:

- Expose line by careful hand digging or soft excavation.
- Have service shut down while work is in progress. Have electric company test lines before returning them to service.

Natural Gas Jobsite Precautions

Position equipment upwind from gas lines and use one or both of these methods:

- Expose line by careful hand digging or soft excavation.
- Have service shut down while work is in progress. Have gas company test lines before returning them to service.

AAA Rent-All 225-291-1356

Always follow manufacturer instructions
https://truckmanualshub.com/

Crystalline Dust Jobsite Precautions

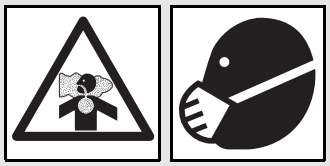

CAUTION Silica dust. Exposure can cause lung disease or cancer. Use breathing protection.

Crystalline silica dust is a naturally occurring substance found in soil, sand, concrete, granite, and quartz.

To reduce exposure when cutting, drilling, or working these materials:

- Use water spray or other means to control dust.
- Refer to US Occupational Safety and Health Administration (OSHA) guidelines or other applicable regulating guidelines for appropriate breathing protection or dust control methods.

Other Jobsite Precautions

You may need to use different methods to safely avoid other underground hazards. Talk with those knowledgeable about hazards present at each site to determine which precautions should be taken or if job should be attempted.

Clear objects such as landscaping fabric, cable, and wire from the work area. These objects may be underground or partially buried.

Arrange for Traffic Control

Vehicle and pedestrian traffic must be a safe distance from equipment. Evaluate jobsite and allow an appropriate buffer zone around equipment. If working near a road or other traffic area, contact local authorities about safety procedures and regulations.

AAA Rent-All 225-291-1356

Always follow manufacturer instructions
https://truckmanualshub.com/

Prepare Operator

WARNING Jobsite hazards. Exposure can cause death or serious injury. Use correct equipment and work methods. Use and maintain appropriate safety equipment.

To help avoid injury:

- Wear personal protective equipment including hard hat, safety eye wear, foot protection, hearing protection, and gloves (except when near rotating equipment).
- Remove jewelry.
- Wear close-fitting, high visibility clothing.
- Have other personal protective equipment, such as insulated boots and gloves, breathing protection, and face shield, etc. available for use depending on jobsite hazards or requirements.

Follow these guidelines before operating any jobsite equipment:

- Complete proper training and read operator's manual before using equipment.
- Plan for emergency services. Have the telephone numbers for local emergency and medical facilities on hand. Check that you will have access to a telephone.
- Review jobsite hazards, safety and emergency procedures, and individual responsibilities with all personnel before work begins. Safety videos are available from your Ditch Witch dealer or at www.ditchwitch.com/safe. Safety Data Sheets (SDS) are available at www.ditchwitch.com/support.
- Use equipment carefully. Stop operation and investigate anything that does not look or feel right.

AAA Rent-All 225-291-1356

Always follow manufacturer instructions
https://truckmanualshub.com/

Prepare Equipment

Check Supplies

- fuel
- diesel exhaust fluid (DEF), if needed
- marking flags or paint
- notepad and pencil
- spare fuses
- lubricants

Check Equipment

Fluid Levels

- fuel
- engine oil
- diesel exhaust fluid (DEF), if needed
- hydraulic fluid
- engine coolant

Condition and Function

- all controls

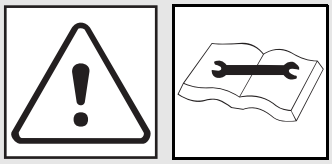

WARNING Improper control function. Use can cause death or serious injury. If control does not work as described in instructions, stop machine and have it serviced.

- battery
- hoses and valves
- pumps and motors
- tires or tracks
- signs, guards, and shields
- filters (air, oil, hydraulic, fuel)
- belts

AAA Rent-All 225-291-1356

Always follow manufacturer instructions
https://truckmanualshub.com/

Assemble Accessories

If required, mount fire extinguisher near the power unit but away from possible points of ignition. The fire extinguisher should always be classified for both oil and electric fires. It should meet legal and regulatory requirements.

Connect Attachment

NOTICE: Use only Ditch Witch-approved attachments. Attachments can change the stability and operating characteristics of the machine. See attachment operation manual for instructions regarding proper operation of attachments.

IMPORTANT: Before connecting attachment to machine, ensure that attachment and receiver plates are free of dirt and debris.

1. Position attachment on level surface with enough space behind it to accommodate machine.
2. Start engine.

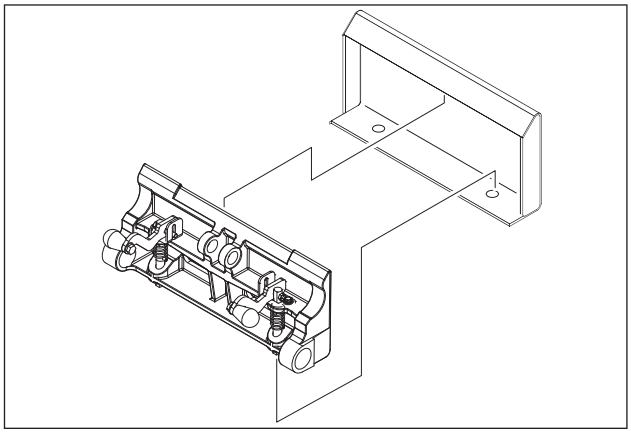

AAA Rent-All 225-291-1356

Always follow manufacturer instructions
https://truckmanualshub.com/

3. Tilt attachment plate (2) forward.
4. Position attachment plate in upper lip of receiver plate (1) on attachment.
5. Raise lift arms while tilting back attachment plate to engage pins.

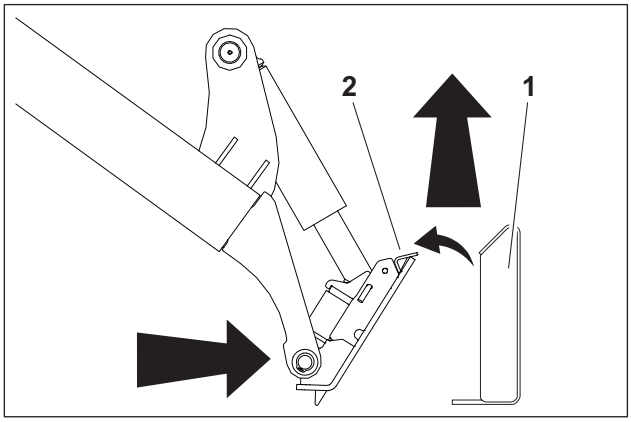

t62om006w19.eps

6. Ensure pins are engaged by rotating attachment down.

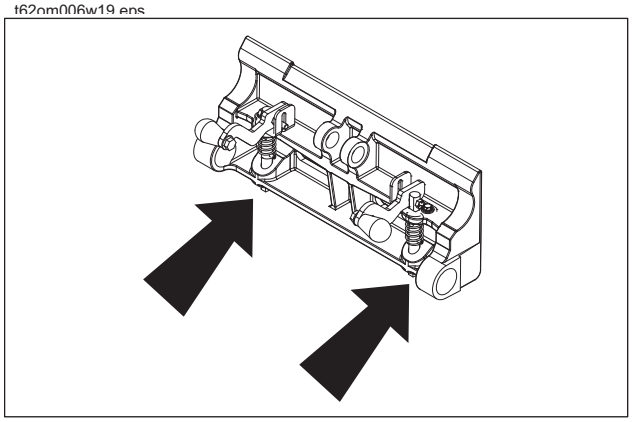
t43om007w.eps

AAA Rent-All 225-291-1356

Always follow manufacturer instructions
https://truckmanualshub.com/

Hydraulic Connection

If attachment requires hydraulic power for operation, connect hydraulic hoses.

WARNING Pressurized fluid or air. Injection can cause death or serious injury. Refer to operator's manual for correct use.

To help avoid injury:

- Use a piece of cardboard or wood, rather than hands, to check for leaks.
- Before disconnecting a hydraulic line, turn engine off and operate all controls to relieve pressure.
- Lower, block, or support any raised component with a hoist.
- Cover connection with heavy cloth and loosen connector nut slightly to relieve residual pressure. Catch all fluid in a container.
- Before using system, check that all connections are tight and all lines are undamaged.
- If you are injured, seek immediate medical attention from a doctor familiar with this type of injury.

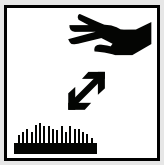

CAUTION Hot parts. Contact can cause burns. Only touch when cool or wear gloves.

1. Ensure machine is shut off.
2. Activate accessories using ignition switch.
3. Operate auxiliary controls to relieve residual pressure at hydraulic couplers.
4. Remove dirt and debris from hydraulic couplers.
5. Connect male coupler from attachment to female coupler (3) on machine.
6. Connect female coupler from attachment to male coupler (1) on machine.
7. If needed, connect attachment case drain hose to case drain connector (2).
8. Ensure that connections are secure by pulling on hoses.

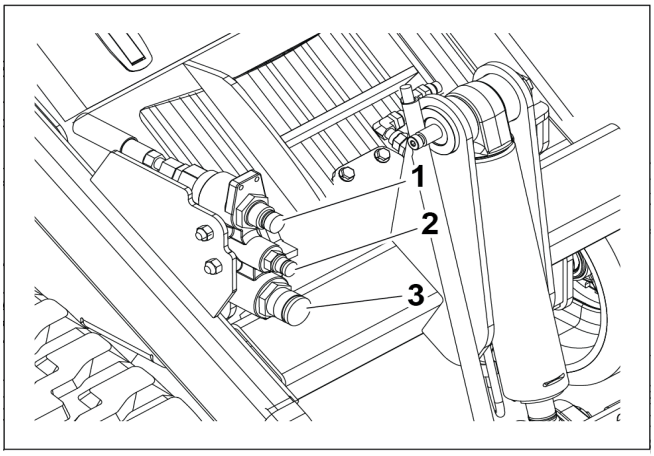

t55om008w.eps

AAA Rent-All 225-291-1356

Always follow manufacturer instructions
https://truckmanualshub.com/

AAA Rent-All 225-291-1356

Always follow manufacturer instructions
https://truckmanualshub.com/

Controls

Chapter Contents

Attachment Plate 32

Battery Disconnect 33

Gauges and Indicators 34

Operator Station 37

AAA Rent-All 225-291-1356

Always follow manufacturer instructions
https://truckmanualshub.com/

Attachment Plate

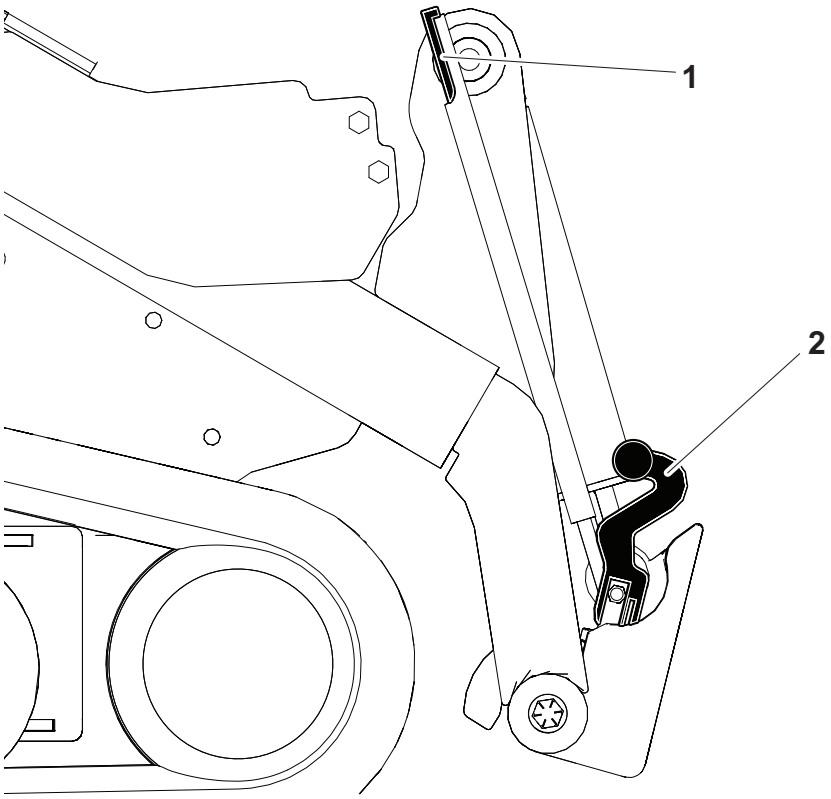

t51om034w.eps

1. Level indicator
2. Attachment latches

Item	Description	IMPORTANT
1. Level indicator	To level bucket, adjust bucket position until indicator is at top of sleeve.	To level other attachments, adjust attachment position until it is level. Mark indicator position on sleeve. Use mark to indicate when attachment is level.
2. Attachment latches	To lock attachment, ensure latch is down after attachment is connected. To unlock, move latch up.	See "Connect Attachment" on page 27.

AAA Rent-All 225-291-1356

Always follow manufacturer instructions
https://truckmanualshub.com/

Battery Disconnect

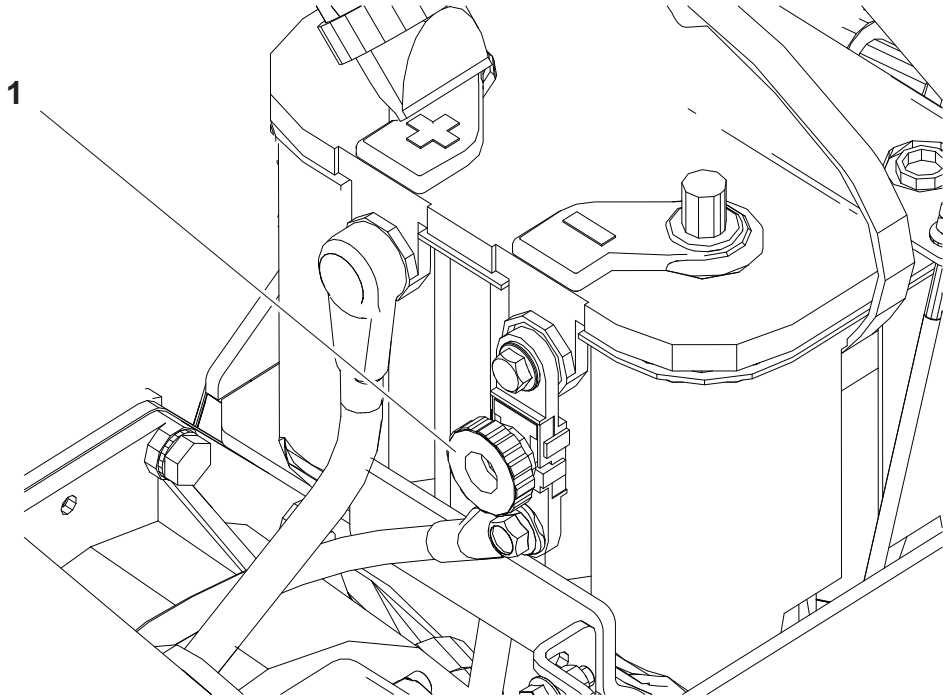

t46om003w.eps

Item	Description	IMPORTANT
Battery disconnect switch	To disconnect, move left. To connect, move right.	***NOTICE:*** • Do not disconnect with engine running. • To avoid equipment damage, wait two minutes after turning engine off before disconnecting battery.

AAA Rent-All 225-291-1356

Always follow manufacturer instructions
https://truckmanualshub.com/

Gauges and Indicators

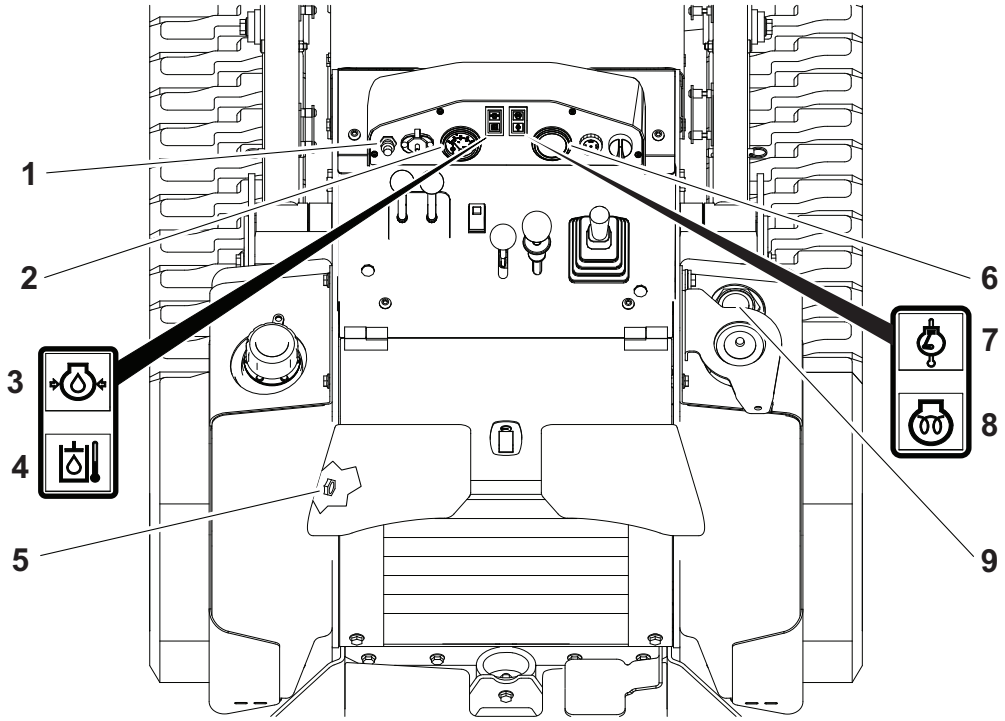

t46om001w.eps

1. Glow plug button
2. Engine coolant temperature gauge
3. Engine oil pressure indicator
4. Hydraulic fluid temperature indicator
5. Hydraulic fluid level sight glass
6. Hourmeter
7. Engine coolant temperature indicator
8. Glow plug indicator
9. Fuel gauge

Item	Description	IMPORTANT
1. Glow plug button 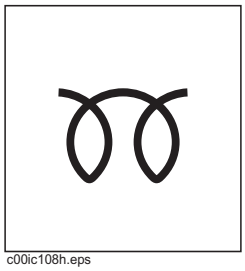 c00ic108h.eps	To turn on, press and hold.	To help start cold engine, press glow plug button according to ambient temperatures below. • If below 40°F (4°C), press and hold for 5 seconds. • If below 20°F (-7°C), press and hold for 10 seconds. • Do not press and hold for more than 20 seconds continuously.

AAA Rent-All 225-291-1356

Always follow manufacturer instructions
https://truckmanualshub.com/

Item	Description	IMPORTANT
2. Engine coolant temperature gauge 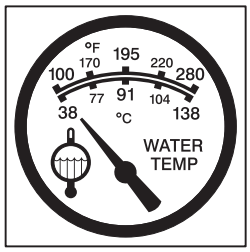 c00ic086a.eps	Displays coolant temperature.	
3. Engine oil pressure indicator 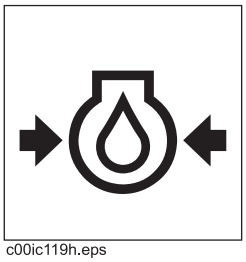 c00ic119h.eps	Lights when engine oil pressure is low.	Lights briefly when engine is started.
4. Hydraulic fluid temperature indicator 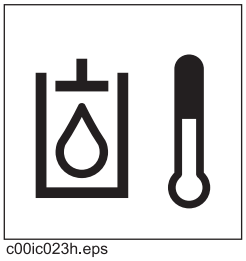 c00ic023h.eps	Lights when hydraulic fluid temperature is too high.	When indicator lights, alarm will sound.
5. Hydraulic fluid level sight glass	Shows level of hydraulic fluid.	
6. Hourmeter 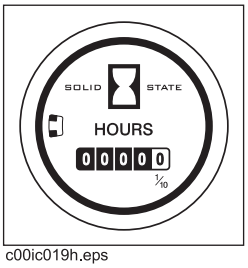 c00ic019h.eps	Displays engine operating time.	Use these times to schedule service.

AAA Rent-All 225-291-1356

Always follow manufacturer instructions
https://truckmanualshub.com/

Item	Description	IMPORTANT
7. Engine coolant temperature indicator 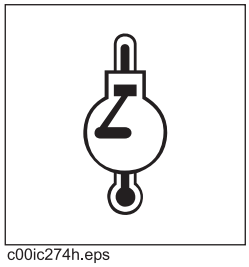 c00ic274h.eps	Lights when engine coolant temperature is too high.	When indicator lights, alarm will sound.
8. Glow plug indicator 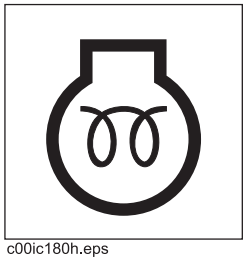 c00ic180h.eps	Lights when ignition switch is on and glow plug button is pressed.	
9. Fuel gauge	Shows level of fuel.	See "Approved Fuel" on page 62.

AAA Rent-All 225-291-1356

Always follow manufacturer instructions
https://truckmanualshub.com/

Operator Station

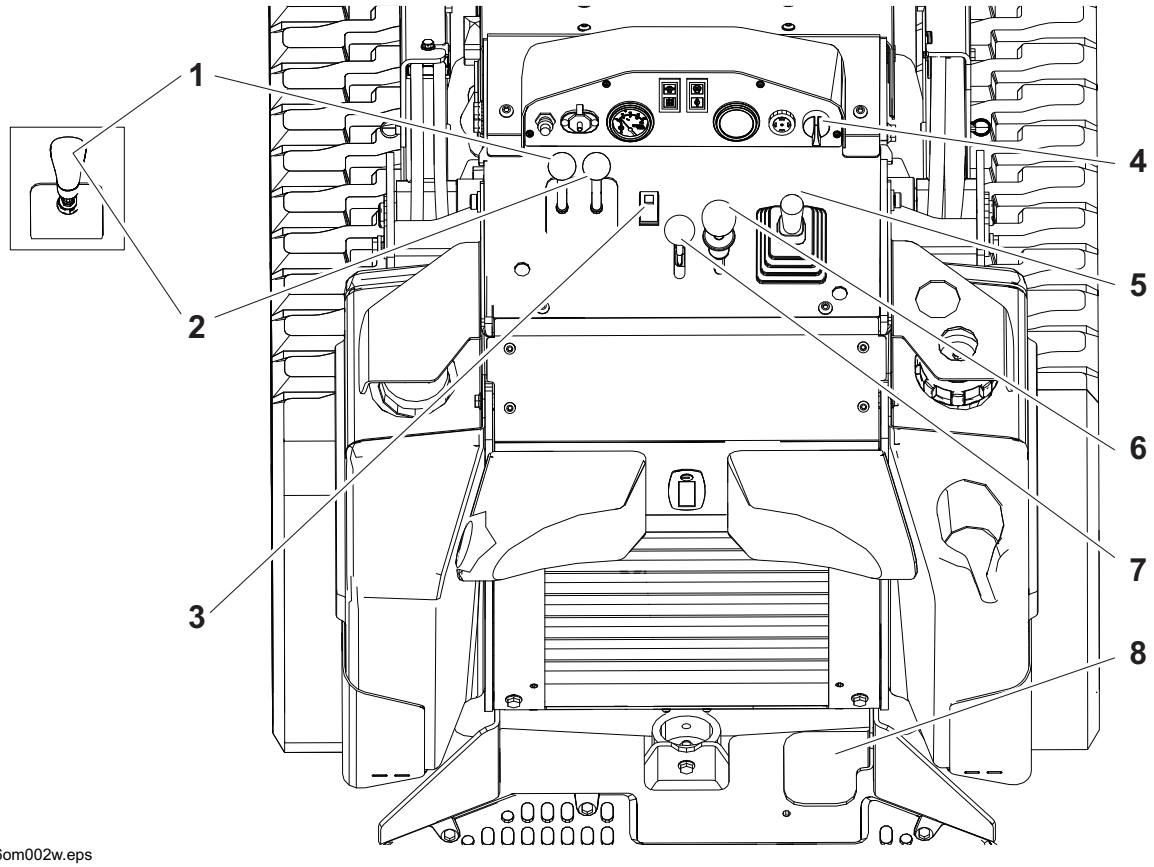

t46om002w.eps

1. Left track drive control/track drive joystick*
2. Right track drive control/track drive joystick*
3. Parking brake
4. Ignition switch
5. Lift arm control
6. Attachment drive control
7. Throttle
8. Attachment drive foot control

* If equipped

AAA Rent-All 225-291-1356

Always follow manufacturer instructions
https://truckmanualshub.com/

Item	Description	IMPORTANT
1. Left track drive control **2. Right track drive control** 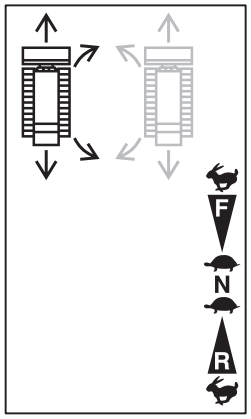 c00ic087a.eps	To drive forward, push both controls forward. To drive in reverse, pull back. To go faster in either direction, move control farther from neutral position. To steer, move left or right.	See "Steer" on page 43.
Track drive joystick (if equipped)	To drive forward, push. To drive in reverse, pull. To go faster in any direction, move farther from neutral position. To steer, move left or right.	See "Steer" on page 43.
3. Parking brake switcgh 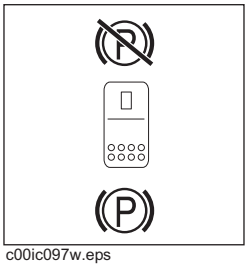 c00ic097w.eps	To set, move red switch toward operator and press bottom. To release, move red switch toward operator and press top.	Do not set parking brake when machine is moving.
4. Ignition switch 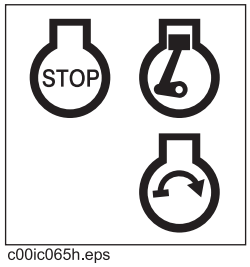 c00ic065h.eps	To activate accessories, turn right. To start engine on, turn right and hold. To shut off machine, turn left.	

AAA Rent-All 225-291-1356

Always follow manufacturer instructions
https://truckmanualshub.com/

Item	Description	IMPORTANT
5. Lift arm control 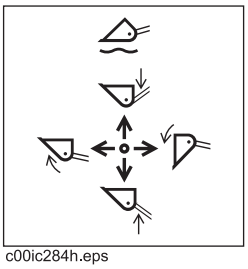 c00ic284h.eps	To move lift arms down, push. To float, push to end. To move lift arms up, pull. To curl attachment up, move left. To curl attachment down, move right.	
6. Attachment drive control c00ic090a.eps	To engage attachment drive in reverse, push. To engage in forward, pull.	Use attachment drive foot control to hold in engaged position when hands are busy operating other controls.
7. Throttle c00ic007c.eps	To increase engine speed, push. To decrease, pull.	Increasing engine speed also increases attachment speed.
8. Attachment drive foot control	To hold attachment drive control in forward or reverse, lift lever lock, move lever in desired direction, and press pedal.	Use when hands are needed to operate other controls.

AAA Rent-All 225-291-1356

Always follow manufacturer instructions
https://truckmanualshub.com/

AAA Rent-All 225-291-1356

Always follow manufacturer instructions
https://truckmanualshub.com/

Drive

Chapter Contents

For additional precautions, see "Safety" and "Prepare" chapters.

IMPORTANT: For more information on how to operate controls, see "Controls" chapter.

Start **42**

Steer **43**

- Single Joystick Ground Drive 43
- Dual Lever Ground Drive 43

Operate **43**

- Slope Guidelines 44
- Reduce Track Wear 45

Shut Down **45**

AAA Rent-All 225-291-1356

Always follow manufacturer instructions
https://truckmanualshub.com/

Start

EMERGENCY SHUTDOWN: Shut off machine or press remote engine stop button (if equipped).

WARNING Misuse of machine can cause death or serious injury. Read and understand operator's manual and all other safety instructions before use. Know how to use all controls.

To help avoid injury:

- Allow hydraulic fluid time to warm before operating in cold weather. Cold hydraulic fluid can lengthen ground drive stopping time.
- For starting in extreme temperatures, contact your Ditch Witch dealer.

WARNING Pre-heater. Fire or explosion can cause death or serious injury. Never use starter fluid.

NOTICE: If engine turns but does not start within 10 seconds, allow starter to cool. Wait at least 30 seconds and try again.

1. Ensure all controls are in neutral.
2. Set parking brake.
3. Activate accessories using ignition switch.
4. **If starting machine in normal conditions,** start engine and run at low throttle under light load for at least one minute before applying heavier load.

   If starting machine in cold weather:

   1. Start engine.
   2. Set parking brake.
   3. Warm engine and hydraulic fluid by gradually increasing engine speed for up to 30 minutes.
   4. After warmup, carefully operate all hydraulic controls at low throttle until controls operate as described in controls chapter.

AAA Rent-All 225-291-1356

Always follow manufacturer instructions
https://truckmanualshub.com/

Steer

Single Joystick Ground Drive

To steer while moving forward, push joystick and then move left or right. Machine will gradually turn.

To steer while moving in reverse, pull joystick and then move left or right. Machine will gradually turn.

For tight steering at low speed, release joystick and then move left or right. Tracks will counter-rotate and machine will turn in a tight circle.

Dual Control Ground Drive

To steer while moving forward, move one control slightly more than the other to turn in desired direction. Machine will gradually turn.

To steer while moving in reverse, move one control slightly more than the other to turn in desired direction. Machine will gradually turn.

For tight steering at low speed, pull one control and push the other to turn in desired direction. Tracks will counter-rotate and machine will turn in a tight circle.

Operate

NOTICE:

- Drive carefully in congested areas. Know machine's clearance and turning radius.
- Survey field of vision when operating machine.

EMERGENCY EXIT: Release controls and step off platform.

1. Release parking brake.
2. Raise attachment off ground.
3. Drive machine.
4. Adjust throttle as needed.
5. See attachment operation manual for instructions regarding proper operation of attachments.

AAA Rent-All 225-291-1356

Always follow manufacturer instructions
https://truckmanualshub.com/

Slope Guidelines

WARNING Tipover. Crushing can cause death or serious injury. Follow procedure in operator's manual. Drive cautiously.

To help avoid injury:

- Operate at slow speed when on rough terrain.
- Avoid driving across slopes.
- Never jerk control levers. Use a steady, even motion.
- Always operate with heavy end uphill.
- Always drive with attachment low to the ground.
- See page 80 for operating capacity.

Operating safely on a slope depends upon many factors including:

- distribution of machine weight, including front loading and absence of load
- height of load
- even or rough ground conditions
- potential for ground giving way causing unplanned tilt forward, reverse or sideways
- nearness of ditches, ruts, stumps or other obstructions and sudden changes in slope
- speed
- turning
- braking performance
- operator skill

These varying factors make it impractical to specify a maximum safe operating angle in this manual. It is therefore important for the operator to be aware of these conditions and adjust operation accordingly. Maximum engine angle and braking performance are two absolute limits which must never be exceeded. These maximums are stated below since they are design limits. **These design limits usually exceed the operating limits and must never be used alone to establish safe operating angle for variable conditions**.

Maximum engine lubrication angle: 20°

Maximum service brake retarding force: equal to traction of both tracks

Maximum parking brake holding force: equal to traction of one track

AAA Rent-All 225-291-1356

Always follow manufacturer instructions
https://truckmanualshub.com/

Reduce Track Wear

Rubber tracks are best suited at soil-based jobsites with minimal rocks and debris. To reduce track wear drive slowly and make wide turns. Avoid the following:

- spinning tracks under heavy load
- turning on sharp objects such as stones, broken concrete, or debris
- quick turns on asphalt or concrete
- driving over curbs or ledges
- driving with track edges pressed against hard walls or curbs
- operating on corrosive materials such as salt or fertilizer

Shut Down

1. When job is complete, move machine to level ground.
2. Stop machine movement.
3. Set parking brake.
4. Lower lift arms to ground.
5. Return all controls to neutral.
6. Run engine at low throttle with no load for at least five minutes to cool.
7. Shut off machine.
8. If leaving machine unattended, remove key.
9. For maintenance or long-term storage, disconnect battery using battery disconnect switch.

> ***NOTICE:*** Wait two minutes after shutting off machine before disconnecting battery.

AAA Rent-All 225-291-1356

Always follow manufacturer instructions
https://truckmanualshub.com/

AAA Rent-All 225-291-1356

Always follow manufacturer instructions
https://truckmanualshub.com/

Transport

Chapter Contents

For additional precautions, see "Safety" and "Prepare" chapters.

IMPORTANT: For more information on how to operate controls, see "Controls" chapter.

Lift **48**

- Points 48
- Procedure 48

Haul **49**

- Inspect Trailer 49
- Load 50
- Tie Down 51
- Unload 52

Retrieve **52**

AAA Rent-All 225-291-1356

Always follow manufacturer instructions
https://truckmanualshub.com/

Lift

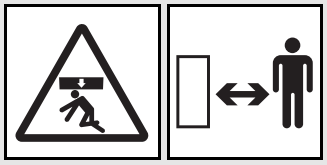

WARNING Lifted load. Crushing weight can cause death or serious injury. Stay away from lifted load and its range of movement.

To help avoid injury: Only lift unit without attachment installed.

Points

Lifting points are identified by lifting decals. Lifting at other points is unsafe and can damage machinery.

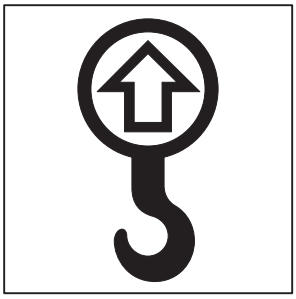

ic1319a.eps

Procedure

IMPORTANT: Do not lift machine with attachments installed.

IMPORTANT: Front of unit will be lower than rear.

Use a equipment capable of supporting the machine's size and weight. See "Specifications" on page 79 or measure and weigh equipment before lifting.

Use one of the methods below:

- Use two lift points nearest operator station.
- Use three lift points as shown.

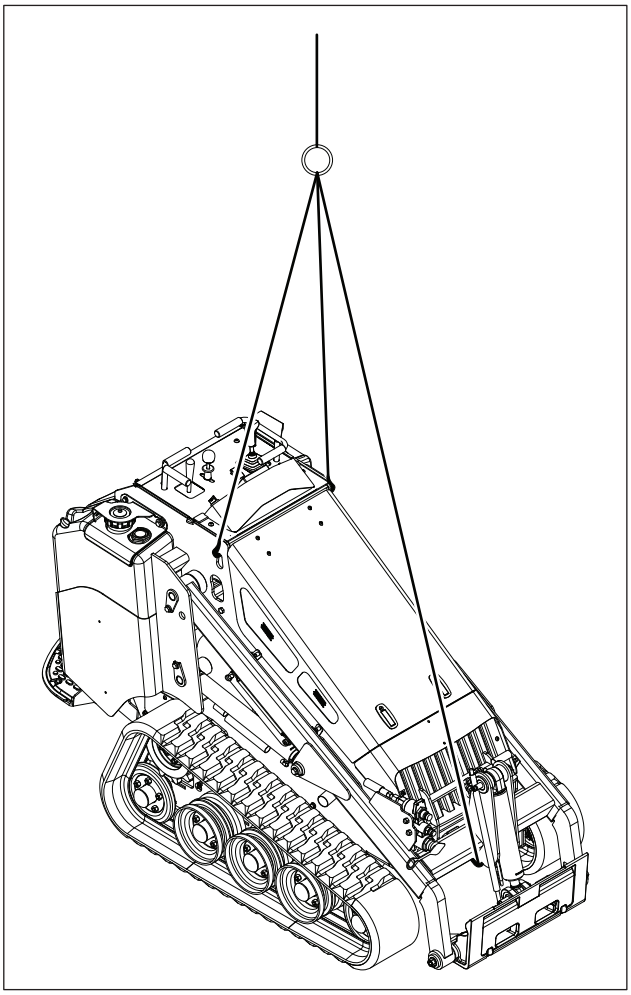

t43om008w.eps

AAA Rent-All 225-291-1356

Always follow manufacturer instructions
https://truckmanualshub.com/

Haul

WARNING Misuse of machine can cause death or serious injury. Read and understand operator's manual and all other safety instructions before use. Know how to use all controls.

To help avoid injury:

- Read trailer operator's manual before loading or transporting machine.
- Ensure tow vehicle has proper tow capacity rating.
- Attach trailer to vehicle before loading or unloading.
- Load and unload trailer on level ground.
- To help prevent trailer sway, load trailer so that 10-15 percent of total vehicle weight (equipment plus trailer) is on tongue.
- If loading onto tilt-bed trailer, be prepared for trailer to tilt.

Inspect Trailer

- Check hitch for wear and cracks.
- Check battery for 12V charge.
- Inspect lights for cleanliness and correct operation.
- Inspect reflectors and replace if needed.
- Check tire pressure.
- Check lug nut torque.
- Ensure trailer brakes are adjusted to come on with tow vehicle brakes.
- Check trailer bed for cracks.

AAA Rent-All 225-291-1356

Always follow manufacturer instructions
https://truckmanualshub.com/

Load

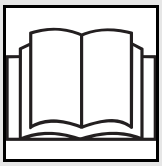

WARNING Horizontal movement. Crushing can cause death or serious injury. Read and understand operator's manual and all safety instructions before use.

To help avoid injury: Start and operate only from platform.

1. Release parking brake.
2. Start engine.
3. Move throttle to low speed.
4. Raise attachment clear of trailer, but keep it low.
5. Move machine to rear of trailer and align with ramps.
6. Drive forward slowly to move machine onto trailer until tiedown position is reached.
7. Lower attachment to trailer bed.
8. Set parking brake.
9. Ensure all controls are in neutral position.
10. Shut off machine.
11. Tie down machine.

AAA Rent-All 225-291-1356

Always follow manufacturer instructions
https://truckmanualshub.com/

Tie Down

Points

Tiedown points are identified by tiedown decals. Securing to truck or trailer at other points is unsafe and can damage machinery.

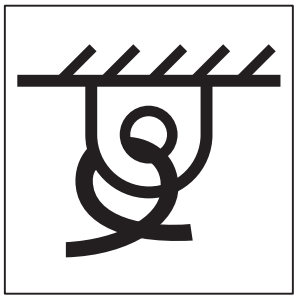

ic1320a.eps

Procedure

Loop a transport chain around each tie down point. See chart below for correct distances between tiedown ends. Ensure tiedowns are tight before transporting.

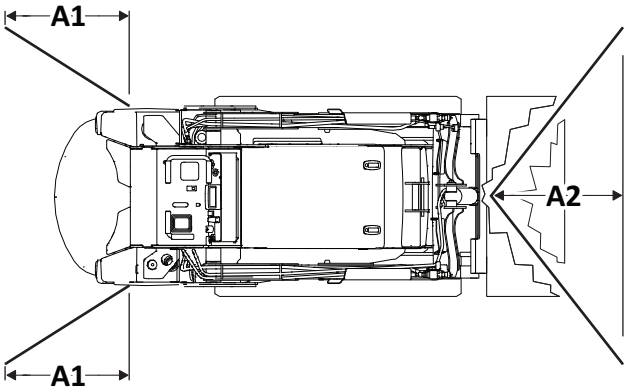

t53om061w20.eps

Distance	US	Metric
A1	8-30”	20-76cm
A2	12-40”	30-102cm

AAA Rent-All 225-291-1356

Always follow manufacturer instructions
https://truckmanualshub.com/

Unload

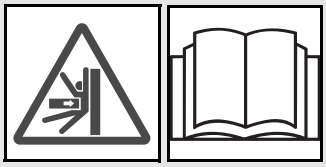

WARNING Horizontal movement. Crushing can cause death or serious injury. Read and understand operator's manual and all safety instructions before use.

To help avoid injury: Start and operate only from platform.

1. Prepare trailer and ramps for unloading.
2. Remove tiedowns.
3. Start engine.
4. Release parking brake.
5. Raise attachment off ground, but keep it low.
6. Move throttle to low speed and slowly back machine down trailer or ramps.

Retrieve

Under normal conditions, machine should not be towed. If machine breaks down and retrieval is necessary:

- Tow for no more than 100' (30m) at less than 1mph (1.6km/h).
- Use towing chains appropriately rated for maximum towing force.
- Use maximum force of 1.5 times machine weight.

1. Set parking brake if engine will start.
2. Block tracks to prevent machine from rolling.
3. Attach chain to tow points shown facing towing vehicle.

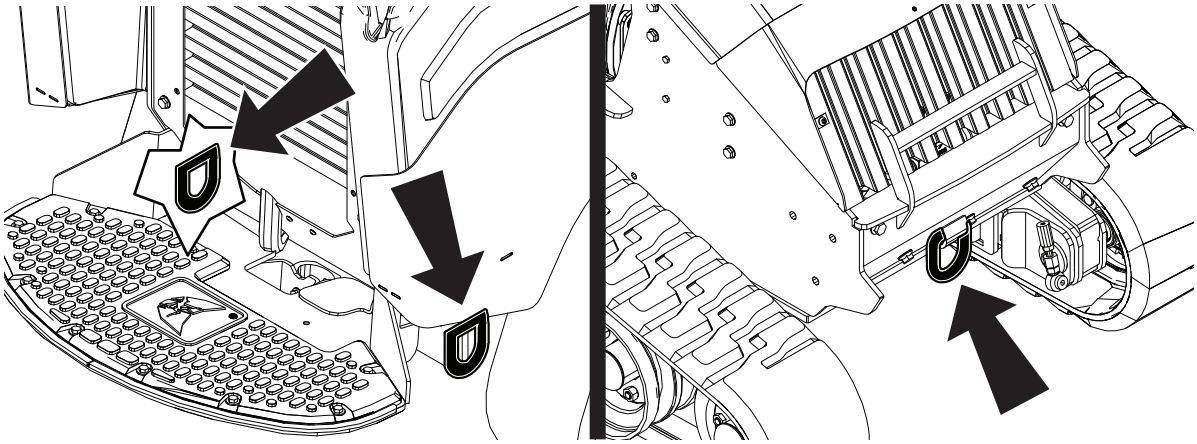

t43om010w.eps

AAA Rent-All 225-291-1356

Always follow manufacturer instructions
https://truckmanualshub.com/

4. Activate tow valves on both front and rear pumps by turning levers into position shown.

> ***NOTICE:*** When bypass valves are open, only parking brake functions.

5. Remove blocks.
6. Release parking brake if engine will start. If engine will not start, remove rear panel and unbolt parking brake assembly.
7. After towing, turn levers to operating position.

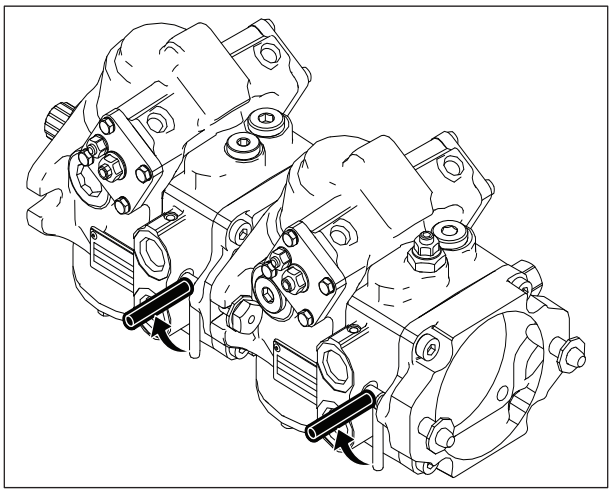

t51om032w.eps

AAA Rent-All 225-291-1356

Always follow manufacturer instructions
https://truckmanualshub.com/

AAA Rent-All 225-291-1356

Always follow manufacturer instructions
https://truckmanualshub.com/

Complete the Job

Chapter Contents

⚠	For additional precautions, see "Safety" and "Prepare" chapters.

Rinse Equipment 56

Disconnect Attachment 56

Stow Tools 56

AAA Rent-All 225-291-1356

Always follow manufacturer instructions
https://truckmanualshub.com/

Rinse Equipment

NOTICE:

- Do not spray water onto operator's console or electrical center in engine compartment. Water can damage electrical components. Wipe down instead.
- Ensure all mud and debris is rinsed from tracks before parking unit overnight.

1. Spray water onto equipment to remove dirt and mud.
2. Remove mud from track sprockets.
3. Wash undercarriage.

Disconnect Attachment

1. Lower attachment to the ground.
2. Shut off machine.
3. Disengage lock pins by lifting handles upward.
4. Disconnect hydraulic hoses, if used.
5. Start engine.
6. Tilt mount plate forward and back machine away from attachment.

Stow Tools

Ensure all tools and accessories are loaded and properly secured on trailer.

AAA Rent-All 225-291-1356

Always follow manufacturer instructions
https://truckmanualshub.com/

Maintenance

Chapter Contents

For additional precautions, see "Safety" and "Prepare" chapters.

Maintenance Precautions 58

- Washing Precaution 58
- Welding Precaution 59
- Working under Raised Lift Arms 59

Recommended Lubricants 60

- Engine Oil Temperature Chart 61
- Approved Coolant 61
- Approved Fuel 62

Maintenance Interval Chart 63

Procedures 65

AAA Rent-All 225-291-1356

Always follow manufacturer instructions
https://truckmanualshub.com/

Maintenance Precautions

WARNING Jobsite hazards. Exposure can cause death or serious injury. Use correct equipment and work methods. Use and maintain appropriate safety equipment.

To help avoid injury:

- Wear personal protective equipment including hard hat, safety eye wear, foot protection, hearing protection, and gloves (except when near rotating equipment).
- Remove jewelry.
- Wear close-fitting, high visibility clothing.
- Have other personal protective equipment, such as insulated boots and gloves, breathing protection, and face shield, etc. available for use depending on jobsite hazards or requirements.

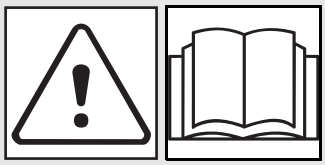

WARNING Misuse of machine can cause death or serious injury. Read and understand operator's manual and all other safety instructions before use. Know how to use all controls.

To help avoid injury:

- Unless otherwise instructed, all service should be performed with the engine off and cool.
- Lower unsecured, raised components before servicing equipment.
- Unless otherwise instructed, all service should be performed with machine parked on level surface.
- Refer to US Occupational Safety and Health Administration (OSHA) guidelines for appropriate lockout-tagout procedures.

Washing Precaution

NOTICE: Do not spray water onto operator's console or electrical center in engine compartment. Water can damage electrical components. Wipe down instead.

AAA Rent-All 225-291-1356

Always follow manufacturer instructions
https://truckmanualshub.com/

Welding Precaution

NOTICE: Welding can damage electronics.

- Welding currents can damage electronic components. Always disconnect the ECU ground connection from the frame, harness connections to the ECU, and other electronic components prior to welding on machine or attachments.
- Connect welder ground close to welding point and make sure no electronic components are in the ground path.
- Disconnect battery at battery disconnect switch before welding to prevent damage to battery.
- Never turn off battery disconnect switch with engine running, or alternator and other electronic equipment devices may be damaged.

Working under Raised Lift Arms

WARNING Raised component. Crushing can cause death or serious injury. Stay away or secure raised component with locking device. Use correct equipment and procedures.

Pin safety supports as shown when working under raised lift arms.

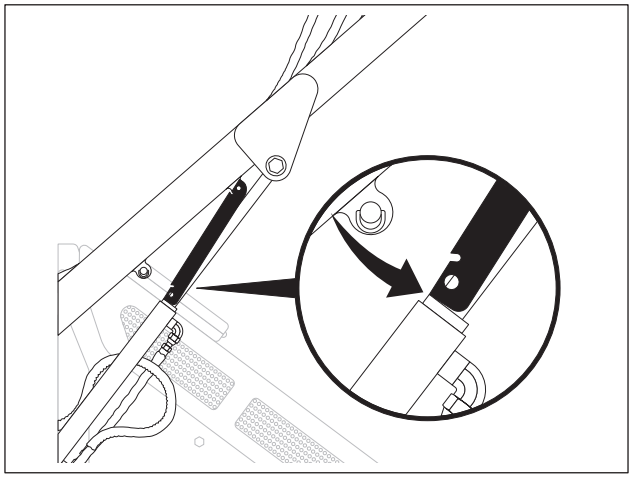

t35om037w.eps

AAA Rent-All 225-291-1356

Always follow manufacturer instructions
https://truckmanualshub.com/

Recommended Lubricants

Item	Description
DEAC	Diesel engine antifreeze/coolant, low silicate, fully-formulated meeting CES 14603 See "Approved Coolant" on page 61.
DEO	**HRC:** Diesel engine oil meeting or exceeding API CH-4 (CH-4, CI-4, CJ-4) or ACEA E7 (E6, E7 or E9). See "Engine Oil Temperature Chart" on page 61. API American Petroleum Institute, ACEA European Automobile Manufacturer's Association
	LRC: Diesel engine oil compatible with the sulfur content of the fuel used. • If the fuel sulfur content exceeds 500ppm (500mg/kg), the oil's base number (TBN)) should exceed 10. • If the fuel sulfur content exceeds 5000ppm (5000mg/kg), reduce change interval to every 50 hours. • See viscosity chart.
MPG	Multipurpose grease, lithium based NLGI GC-LB Grade 2
THF	Tractor hydraulic fluid, Phillips 66® PowerTran Fuid, Mobilfluid® 423, Chevron® Tractor Hydraulic Fluid, Texaco® TDH Oil, or equivalent

Proper lubrication and maintenance protects Ditch Witch equipment from damage and failure. Service intervals listed are for minimum requirements. In extreme conditions, service machine more frequently. Use only genuine Ditch Witch parts, filters, approved lubricants, TJC, and approved coolants to maintain warranty. Fill to capacities listed in "Specifications" on page 79.

For more information on engine lubrication and maintenance, see your engine manual.

AAA Rent-All 225-291-1356

Always follow manufacturer instructions
https://truckmanualshub.com/

Engine Oil Temperature Chart

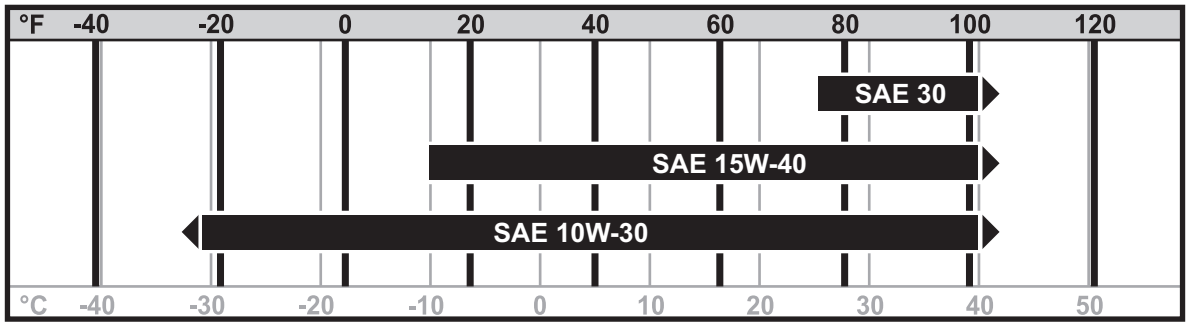

t46om017w.eps

Temperature range anticipated before next oil change

Approved Coolant

NOTICE:

- Use only pre-diluted coolant or concentrated coolant mixed with distilled water. Do not use tap water.
- Using water or high-silicate automotive-type coolant will lead to engine damage or premature engine failure.
- Mixing heavy-duty diesel engine coolant and automotive-type coolants will lead to coolant breakdown and engine damage.

This machine was filled with coolant meeting ASTM D6210 before shipment from factory. Add or replace only with low-silicate, fully-formulated diesel engine coolant meeting this specification. This coolant is available, pre-diluted, from your Ditch Witch dealer as part number 255-1055.

AAA Rent-All 225-291-1356

Always follow manufacturer instructions
https://truckmanualshub.com/

Approved Fuel

HRC (Highly Regulated Countries)

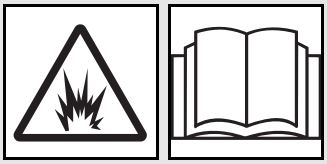

WARNING Ultra Low Sulfur Diesel (ULSD) poses a greater static ignition hazard than earlier diesel formulations with higher sulfur content. Avoid death or serious injury from fire or explosion; consult with your fuel or fuel system supplier to ensure the delivery system is in compliance with fueling standards for proper grounding and bonding practices.

This engine is designed to run on diesel fuel. Use only high quality fuel meeting ASTM D975 No. 2D, EN590, or equivalent. At temperatures below 32°F (0°C) winter fuel blends are acceptable. See the engine manual for more information.

NOTICE: Use only Ultra Low Sulfur Diesel (less than 15ppm sulfur content in the US and Canada or 10mg/kg in EU and Japan) in this unit. Operating with higher sulfur content will damage the engine and aftertreatment device.

Biodiesel blends up to 5% (B5) are approved for use in this unit. The fuel must meet the specifications for diesel fuel shown above. In certain markets, higher blends may be used if certain steps are taken. Extra attention is needed when using biodiesel, especially when operating in cold weather or storing fuel. Contact your Ditch Witch® dealer or the engine manufacturer for more information.

LRC (Less Regulated Countries)

This engine is designed to run on diesel fuel. Use only high quality fuel meeting ASTM D975 No. 2D, EN590, or equivalent. At temperatures below 32°F (0°C) winter fuel blends are acceptable. See the engine manual for more information.

NOTICE: Worldwide, fuel sulfur regulations vary widely. Fuel used should always comply with local regulations. Prior to shipping, LRC units were filled with CJ-4 DEO. If using fuel with sulfur content above 15ppm (15mg/kg), change oil initially at 250 hours.

Biodiesel blends up to 5% (B5) are approved for use in this unit. The fuel must meet the specifications for diesel fuel shown above. In certain markets, higher blends may be used if certain steps are taken. Extra attention is needed when using biodiesel, especially when operating in cold weather or storing fuel. Contact your Ditch Witch® dealer or the engine manufacturer for more information.

AAA Rent-All 225-291-1356

Always follow manufacturer instructions
https://truckmanualshub.com/

Maintenance Interval Chart

IMPORTANT: Chart indicates first instance of repeated maintenance procedures. See detailed information below.

▽	Adjust, service, or test	□	Change, initial	○	Lube, initial
▲	Check	■	Change	●	Lube

Service	Startup	10 Hours	50 Hours	150 Hours	300 Hours	600 Hours	1000 Hours	As Needed
Battery		▲						▽
Coolant	▲	▲					■	
Dust ejector valve	▲	▲						
Engine compartment		▲						
Filter, air	▲	▲						■
Filter, engine oil (see Oil, engine)								
Filter, fuel						■		
Filter, hydraulic fluid			□		■			
Fluid, hydraulic	▲	▲				■		
Fuse box	▲							
Fuel hose			▲					
Hydraulic hoses	▲	▲						
Idler roller bearings			▲		▲			▽
Intake air line					▲			
Lug nuts		▲	▲		▲			
Oil, engine	▲	▲	□	■				
Parking brake	▲	▲						

AAA Rent-All 225-291-1356

Always follow manufacturer instructions
https://truckmanualshub.com/

Service	Startup	10 Hours	50 Hours	150 Hours	300 Hours	600 Hours	1000 Hours	As Needed
Radiator/Hydraulic fluid cooler			▲					▽
Track tension	▲	▲						▽

AAA Rent-All 225-291-1356

Always follow manufacturer instructions
https://truckmanualshub.com/

Procedures

Battery

CAUTION Corrosive fluid. Contact can cause death or serious injury. Avoid contact. Wear appropriate gloves. See Safety Data Sheet (SDS) for more information.

To help avoid injury:

- Never attempt to charge a battery that is leaking, bulging, heavily corroded, frozen, or otherwise damaged.
- Refer to Safety Data Sheet (SDS) for additional information regarding battery.

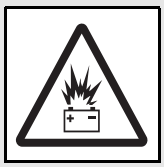

CAUTION Explosive hydrogen gas. Fire or explosion can cause death or serious injury. Keep heat flames, sparks, and other sources of ignition away.

To help avoid injury:

- Use a single 12V maximum source for charging. Never connect to rapid chargers or dual batteries.
- Never lean over battery when making connections.
- Never allow vehicles to touch when charging.
- Never short-circuit battery terminals for any reason or strike battery posts or cable terminals.
- Refer to Safety Data Sheet (SDS) for additional information regarding battery.

NOTICE:

- Electronic components can be easily damaged by electrical surges. Jump starting can damage electronics and electrical systems, and is not recommended. Try to charge the battery instead. Use quality large diameter jumper cables capable of carrying high currents (400 amps or more). Low quality cables may not allow enough current flow to charge a dead/discharged battery.
- Read all steps thoroughly and review illustration before performing procedure.

Check every 10 hours. Charge as needed.

AAA Rent-All 225-291-1356

Always follow manufacturer instructions
https://truckmanualshub.com/

Check

1. Disconnect battery at battery disconnect switch, if equipped.
2. Ensure no ignition sources are near battery.
3. Loosen and remove battery cable clamps carefully, negative (-) cable first.
4. Clean cable clamps and terminals to remove dull glaze.
5. Check for signs of internal corrosion in cables.
6. Connect battery cable clamps, positive (+) cable first.
7. Tighten any loose connections.
8. Ensure that battery tiedowns are secure.
9. Turn battery disconnect, if equipped, on.

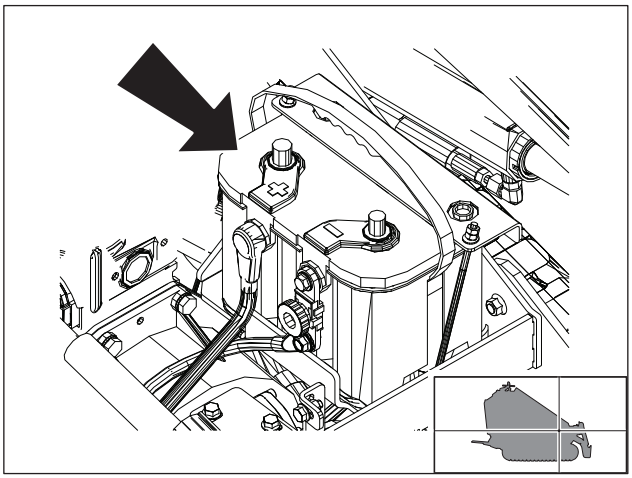

t46om007w.eps

AAA Rent-All 225-291-1356

Always follow manufacturer instructions
https://truckmanualshub.com/

Charge

1. Park service vehicle close to disabled equipment but do not allow vehicles to touch.
2. Set parking brake in both, if equipped.
3. Turn both off.
4. Disconnect machine controller, if equipped.
5. Inspect battery in disabled machine (B) for signs of cracking, bulging, leaking, or other damage.
6. Connect red positive (+) jumper cable clamp to positive (+) post of battery (2) in disabled machine.

> **IMPORTANT:** Some equipment may have a positive jumper cable terminal (1) located externally. If so equipped, connect red positive (+) jumper cable clamp to terminal.

7. Connect the other red positive (+) jumper cable clamp to positive (+) post of battery in service vehicle (A).
8. Connect black negative (-) cable clamp to negative (-) post of battery in service vehicle.

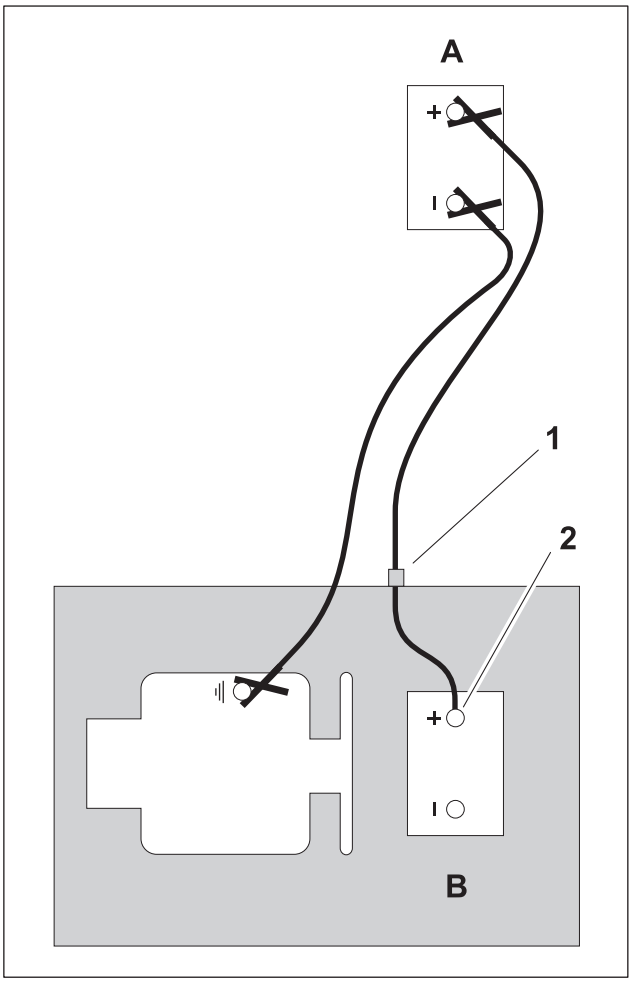

Battery_Jumpstart_B.eps

9. Connect the other black negative (-) cable clamp to engine or frame ground on disabled machine, at least 12" (305 mm) from failed battery, as shown.
10. Operate service vehicle engine at 1500-2000 rpm for a few minutes to build an electrical charge in failed battery.
11. Stop engine in service vehicle.
12. Remove jumper cables from service vehicle, black negative (-) clamp first. Do not allow clamps to touch.
13. Remove black negative (-) cable clamp from disabled engine or frame ground.
14. Remove red positive (+) cable clamp from disabled machine.
15. Reconnect machine controller, if equipped.
16. Start disabled machine.

AAA Rent-All 225-291-1356

Always follow manufacturer instructions
https://truckmanualshub.com/

Belt, Fan

Check every 150 hours. Adjust tension as needed. Change as needed.

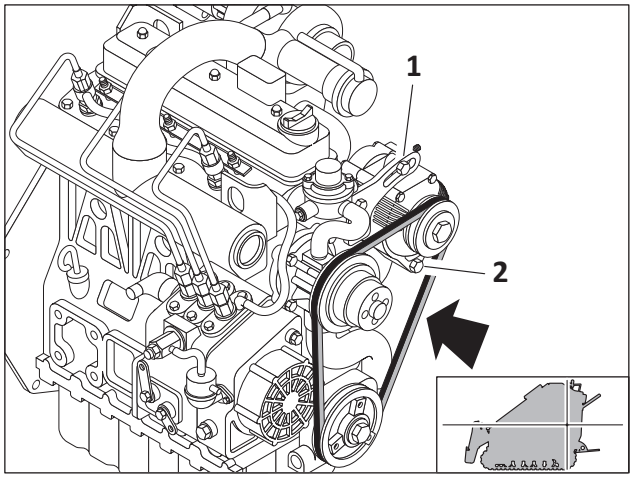

t18om048t.eps

Check

Check for excessive slack, damage, or wear. Belt is properly tensioned when it moves about 1/4-3/8" (7-9mm) when pushed at long span (shown).

Adjust Tension

1. Loosen two alternator bolt (1, 2).
2. Adjust position as needed.
3. Tighten bolts.
4. Check tension.

Change

1. Loosen two alternator bolts (1,2).
2. Replace fan belt.
3. Adjust position as needed.
4. Tighten bolts.
5. Check tension.

AAA Rent-All 225-291-1356

Always follow manufacturer instructions
https://truckmanualshub.com/

Coolant

NOTICE: See "Approved Coolant" on page 61.

Check before startup and every 10 hours. Change every 1000 hours.

Check Level

1. Check at overflow bottle (2).
2. Add DEAC at fill (1) as needed to keep level at halfway point on overflow bottle.

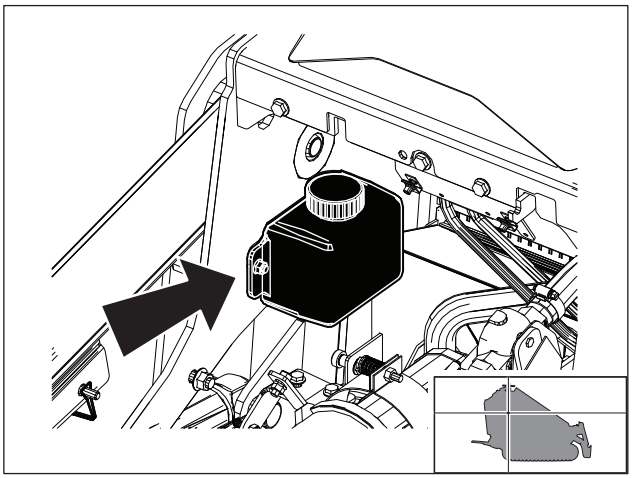

t46om006w.eps

Change

1. Remove plug (3) to drain.
2. Install plug.
3. Add DEAC at fill to keep level at halfway point on overflow bottle.

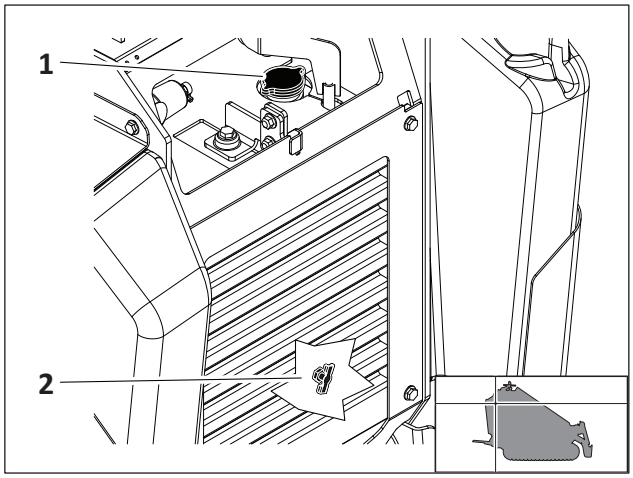

t35om031w.eps

Dust Ejector Valve

Check dust ejector valve (shown) before startup and every 10 hours. Ensure valve is not inverted, damaged, plugged, or cracked.

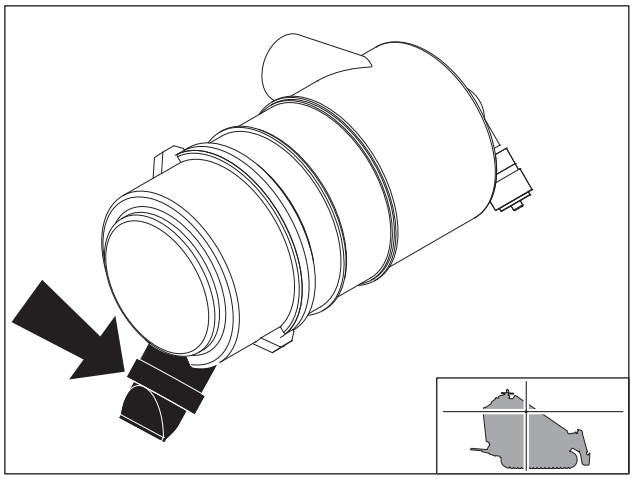

t43om004h.eps

AAA Rent-All 225-291-1356

Always follow manufacturer instructions
https://truckmanualshub.com/

Engine Compartment

NOTICE: Check more often if operating in large brush, grassy conditions, or if machine is being stored.

Check for debris every 10 hours. Remove debris from engine compartment manually. Do not use water or compressed air.

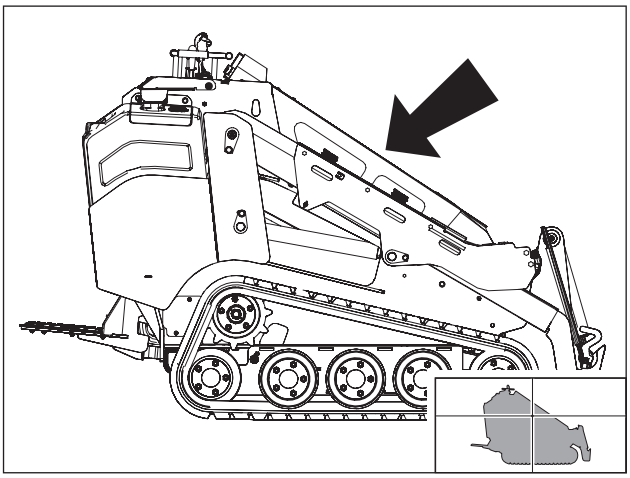

t53om017w20.eps

Filter, Air

NOTICE: Only open air filter housing when red band on indicator is visible. Change the elements. Do not attempt to clean them.

- Improperly installed primary element can lead to premature engine failure.
- Compressed air or water can damage filter elements.
- Tapping filter elements to loosen dirt can damage elements.

Check before startup and every 10 hours. Change when needed.

Check

Check air filter service indicator (1). Change filter when red band on indicator is visible.

Change

1. Remove cover (5).
2. Remove primary element (3).
3. Wipe inside of housing (2) and cover.
4. Insert secondary element (4) and ensure it is seated correctly.
5. Insert new primary element.
6. Install cover with dust ejector (6)) facing down.
7. Reset air filter service indicator.

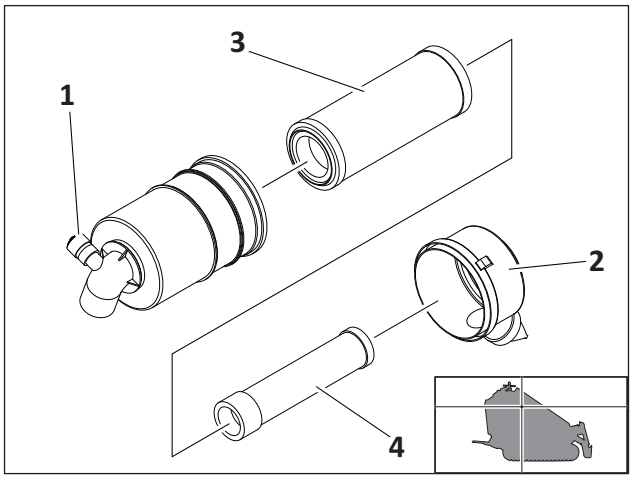

t35om032w.eps

AAA Rent-All 225-291-1356

Always follow manufacturer instructions
https://truckmanualshub.com/

Filter, Fuel

Change canister filter (1) and inline filter (2) every 600 hours. If refueling from cans, replace filters more often.

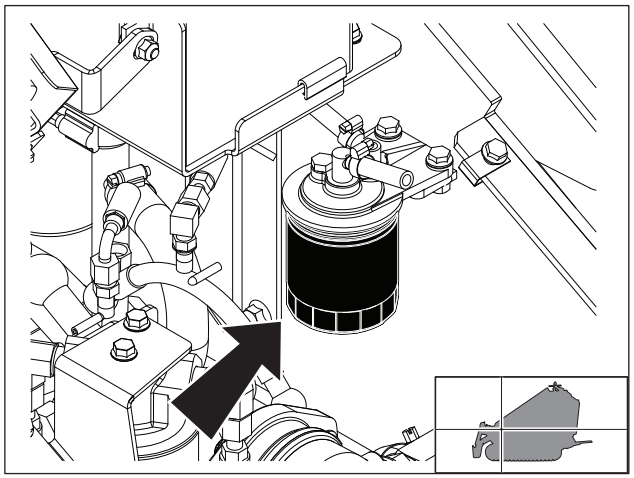

t35om028w.eps

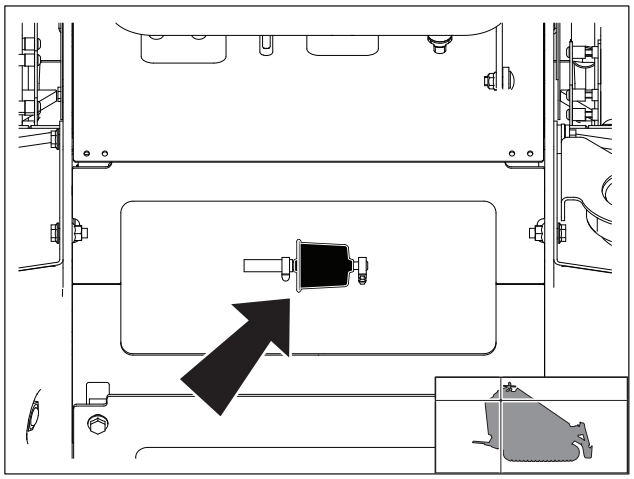

t35om030w.eps

Filter, Hydraulic Fluid

Change filter (shown) at 50 hours and every 300 hours thereafter.

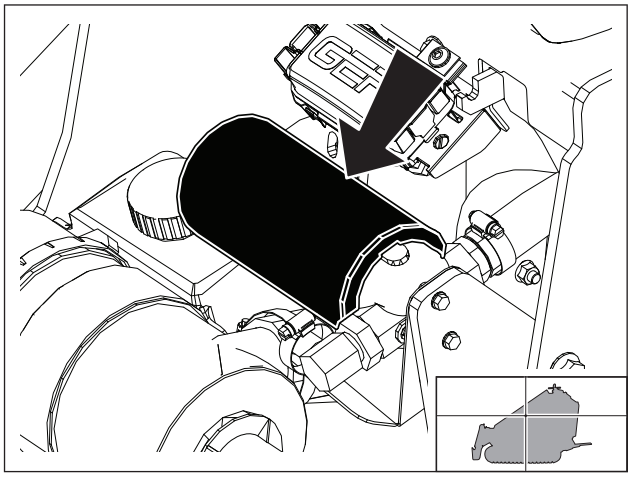

t53om020w20.eps

AAA Rent-All 225-291-1356

Always follow manufacturer instructions
https://truckmanualshub.com/

Fluid, Hydraulic

NOTICE: Change every 250 hours if jobsite temperature exceeds 100°F (38°C) more than 50% of the time.

IMPORTANT: Ensure cylinders are fully retracted.

Check before startup and every 10 hours. Change every 600 hours.

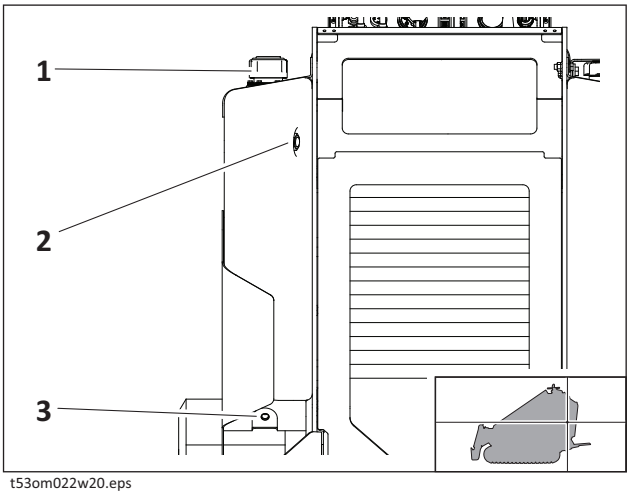

t53om022w20.eps

Check Level

1. Check level at sight glass (2).
2. Add THF at fill (1) as needed to keep level at halfway point on sight glass.

Change Fluid

1. Remove plug (3) to drain.
2. Install plug.
3. Add THF at fill to keep level at halfway point on sight glass.

AAA Rent-All 225-291-1356

Always follow manufacturer instructions
https://truckmanualshub.com/

Fuel Hose

Check fuel hose (shown) and clamp bands every 50 hours.

If clamp is loose, apply oil to the threads and retighten. If hose is worn, replace.

Bleed fuel system if hose and/or clamp is changed.

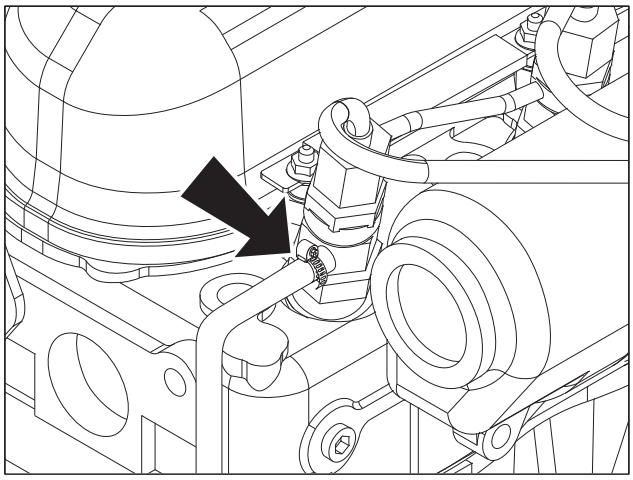

t18om053t.eps

Fuse Box

IMPORTANT: Leave cover in place unless fuses are being checked or replaced.

Check fuse box cover (shown) for damage before startup. If cover is missing or damaged, replace.

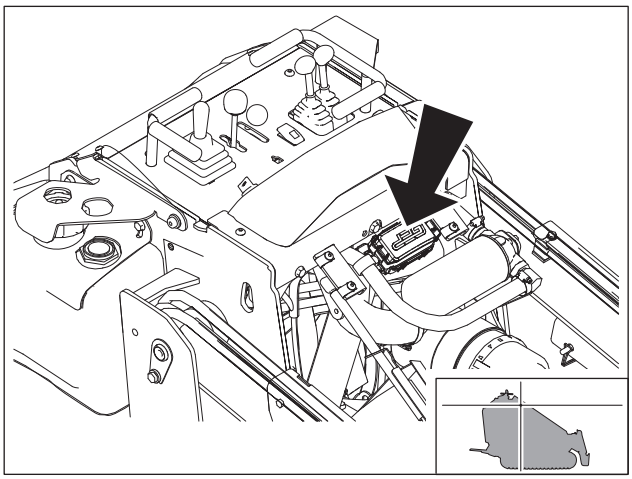

t43om005h.eps

AAA Rent-All 225-291-1356

Always follow manufacturer instructions
https://truckmanualshub.com/

Hydraulic Hoses

WARNING Pressurized fluid or air. Injection can cause death or serious injury. Refer to operator's manual for correct use.

To help avoid injury:

- Use a piece of cardboard or wood, rather than hands, to check for leaks.
- Before disconnecting a hydraulic line, turn engine off and operate all controls to relieve pressure.
- Lower, block, or support any raised component with a hoist.
- Cover connection with heavy cloth and loosen connector nut slightly to relieve residual pressure. Catch all fluid in a container.
- Before using system, check that all connections are tight and all lines are undamaged.
- If you are injured, seek immediate medical attention from a doctor familiar with this type of injury.

Check for leaks where shown before startup and every 10 hours of operation.

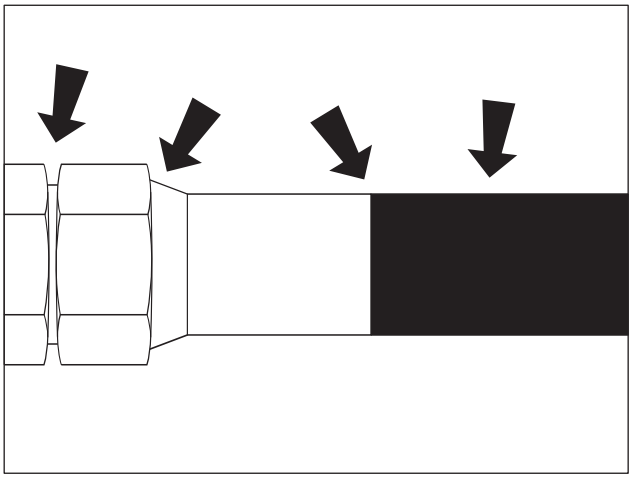

CheckHoses.eps

AAA Rent-All 225-291-1356

Always follow manufacturer instructions
https://truckmanualshub.com/

Idler Roller Bearings

Check idler roller bearings (shown) at 50 hours and every 300 hours thereafter. Adjust as needed.

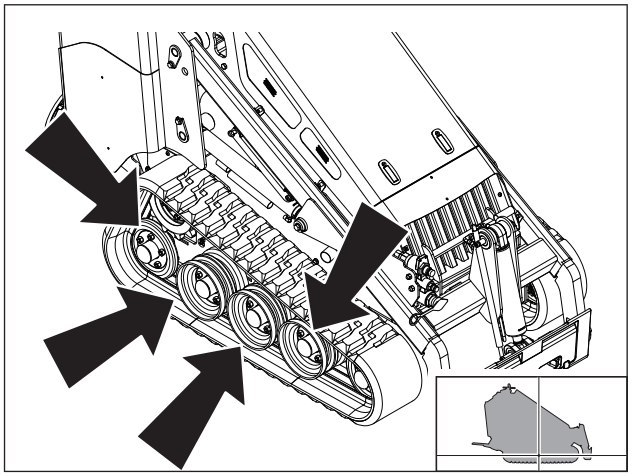

t53om024w20.eps

Check

1. Lift machine.
2. Release track tension. See "Track Tension" on page 78.
3. Check for movement of each hub when rocked back and forth. If hub has noticeable movement, adjust.
4. Adjust track tension.

Adjust

1. Remove dust cap cover (1).
2. Ensure bearings are properly seated by tightening castle nut (2) to 30-40ft•lb (41-54N•m) while turning hub (3).

> ***NOTICE:*** Do not move hub after this step is complete.

3. Loosen and then hand-tighten castle nut.
4. Insert cotter pin into wheel spindle (5).

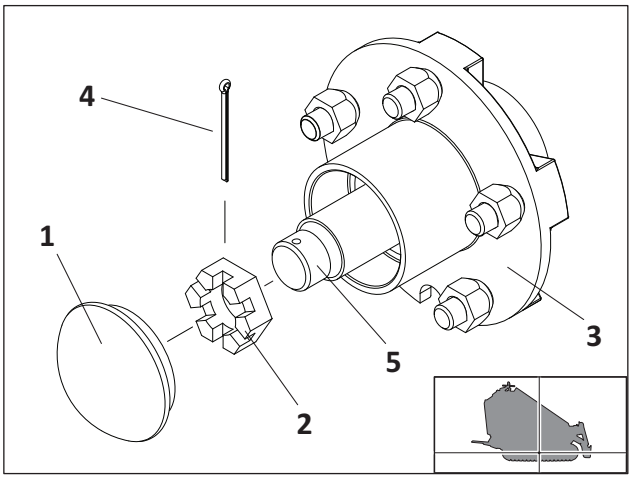

t43om028w.eps

> ***NOTICE:*** If hole is visible in slot but cotter pin cannot be inserted, slightly loosen or tighten castle nut to align slot with hole and insert cotter pin. If hole is not visible in slot, loosen to next available slot and insert cotter pin.

5. Bend legs of cotter pin over top of spindle.

> **IMPORTANT:** Hub should not have noticeable movement when rocked back and forth.

6. Clean lip seal on bearing cap, apply Loctite® 242 and install cap.
7. Adjust track tension.

AAA Rent-All 225-291-1356

Always follow manufacturer instructions
https://truckmanualshub.com/

Intake Air Line

> ***NOTICE:*** Keep dust out of the intake air line to prevent damage to the engine.

Check intake air line (shown) for dirt and debris every 300 hours.

If clamp is loose, apply oil to threads and retighten.

If hose is cracked or worn, replace.

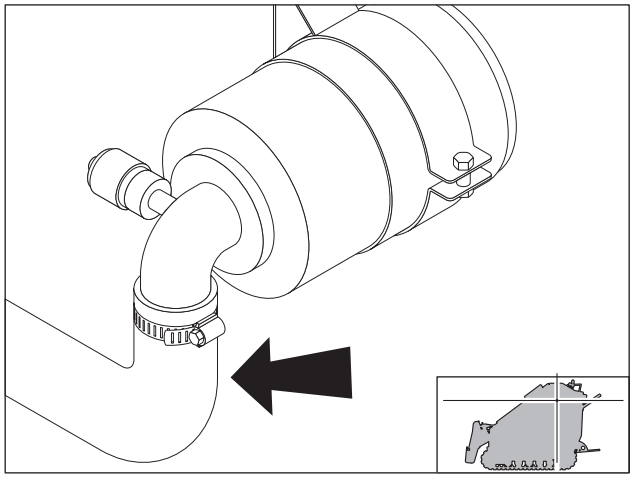

t18om056t.eps

Lug Nuts

Check lug nuts (shown) at 10 hours, 50 hours, and every 300 hours thereafter. Tighten to 88-95ft•lb (108-129N•m) as needed.

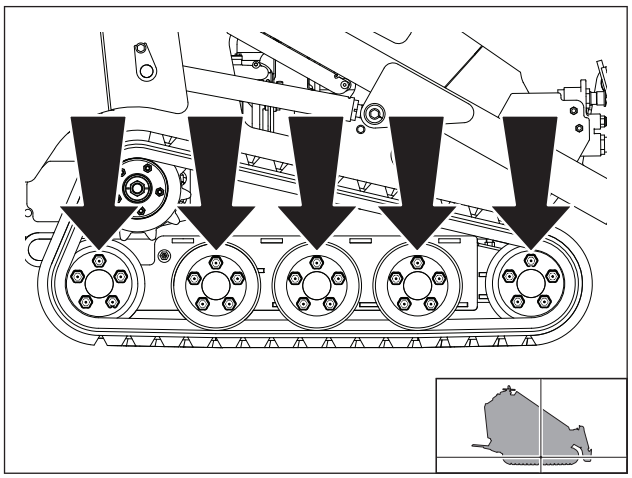

t53om027w20.eps

Oil, Engine

Check before startup and every 10 hours. Change at 50 hours and every 150 hours thereafter.

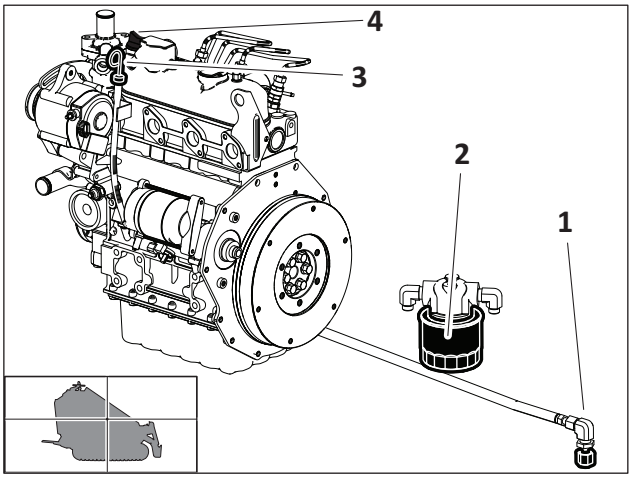

t46om011w.eps

Check Level

1. Check level at dipstick (3).
2. Add DEO at fill (4) as needed to keep level at highest line on dipstick.

Change Oil and Filter

1. While oil is warm, remove plug (1) to drain.
2. Install plug.
3. Remove filter (2) and replace with new filter.
4. Add DEO at fill to keep level at highest line on dipstick.

AAA Rent-All 225-291-1356

Always follow manufacturer instructions
https://truckmanualshub.com/

Parking Brake

Check before startup and every 10 hours.

1. Start engine.
2. Ensure parking brake pin (shown) moves freely allowing brake to be set and released.
3. Clean mud and debris from area around pin.

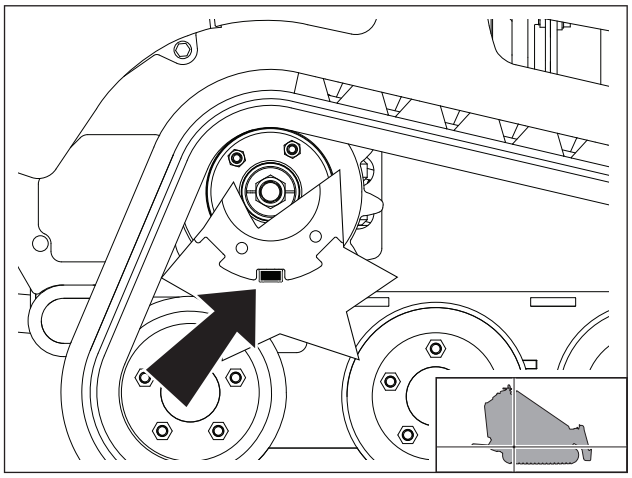

t53om029w20.eps

Radiator/Hydraulic Fluid Cooler

> ***NOTICE:*** Radiator may need to be cleaned more frequently in dusty or grassy conditions.

Check every 50 hours. Clean as needed.

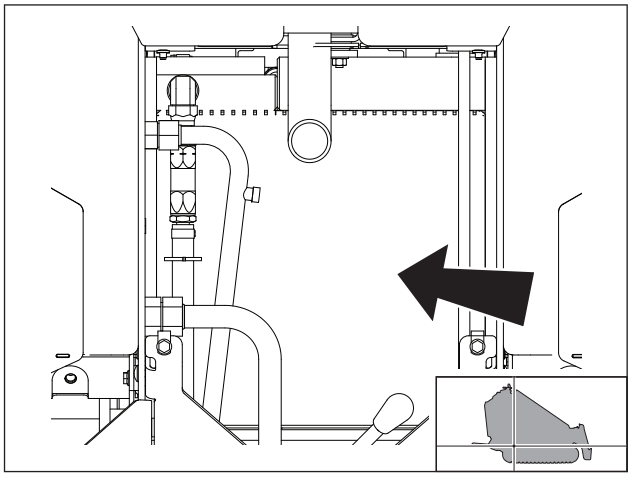

t53om030w20.eps

Check

Check radiator (shown) for dirt, grass, and other debris. Check radiator hoses for wear. Check hose clamps for proper tightness.

Clean

1. Clean fins with compressed air or spray wash.

> ***NOTICE:*** Do not damage fins with high pressure air or water.

2. Open rear hood and spray through radiator toward engine.
3. If grease and oil are present on radiator, spray with solvent and allow to soak overnight.

AAA Rent-All 225-291-1356

Always follow manufacturer instructions
https://truckmanualshub.com/

Track Tension

WARNING Contents under pressure. Impact can cause death or serious injury. Relieve pressure before opening.

To help avoid injury:

- Service track grease cylinder only while standing away from zerk.
- Cover connection with heavy cloth when relieving pressure in cylinder.

Check before startup and every 10 hours. Adjust as needed.

Check

1. Lift track.
2. Remove gauge (1) from stored location.
3. Thread gauge into connection (2).
4. Track is correctly tensioned when gauge measures 700-900psi (48-62bar).

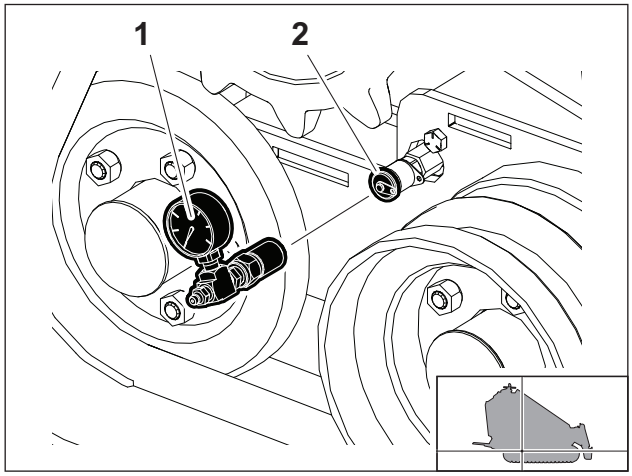

t53om032w20.eps

Adjust

1. Lift track.
2. Remove gauge from stored location.
3. Thread gauge into connection.
4. Adjust tension.
   - To tighten, pump MPG into grease zerk until gauge measures 700-900psi (48-62bar).
   - To loosen, remove plug and drain all grease. Then follow tightening procedure.
5. Start engine.
6. Drive forward one machine length and check track tension.

AAA Rent-All 225-291-1356

Always follow manufacturer instructions
https://truckmanualshub.com/

Specifications

Chapter Contents

SK800 80

Declaration of Conformity 83

AAA Rent-All 225-291-1356

Always follow manufacturer instructions
https://truckmanualshub.com/

SK800

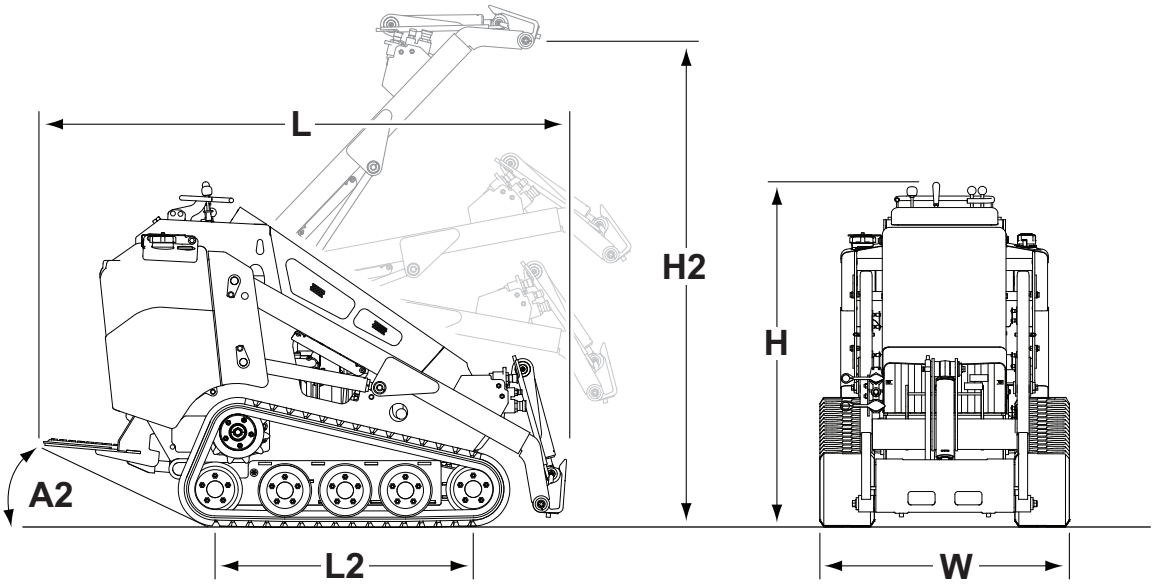

t35om026w.eps

Dimensions		US	Metric
A2	Angle of departure	27°	27°
H	Overall height of machine	57”	1450mm
H2	Hinge pin height, max	83”	2108mm
	Operating height, max, standard bucket	105”	2667mm
L	Overall length of loader, no attachment	86”	2190mm
	Overall length of machine, standard bucket	105”	2670mm
L2	Wheelbase/track length	43”	1092mm
	Ground clearance, min (center)	8.9”	226mm
	Ground clearance, min (side)	3.7”	94mm
W	Track width, max	42”	1065mm
	Track width, min	36”	915mm
	Unit width, excluding tracks	35”	838mm
	Bucket rollback angle, full height	90°	90°
	Bucket rollback angle, ground level	25°	25°

AAA Rent-All 225-291-1356

Always follow manufacturer instructions
https://truckmanualshub.com/

Dimensions		US	Metric
	Bucket width, max	44"	1120mm
	Bucket width, min	36"	915mm
	Dump angle, standard bucket at max dump height	35°	35°
	Dump height, max, with standard bucket	66"	1676mm
	Reach, standard bucket at max dump height	17"	430mm
	Rear overhang, max	29"	735mm
	Swing radius, max, standard bucket	65"	1650mm
	Swing radius, no attachment	44"	1120mm

Operation	US	Metric
Ground drive speed, forward and reverse	4.3mph	6.9km/h
Ground pressure, 7" (180mm) tracks *	5.2psi	0.36bar
Ground pressure, 9" (230mm) tracks *	4.3psi	0.29bar
Machine weight (no attachment, fluids full)	2920lb	1324kg
Operating capacity (35% of tipping capacity) The rated operating capacity for this machine was determined using a standard bucket in the maximum reach position with center of gravity 7" (18cm) from the attachment plate. Depending on the attachment, the actual operating capacity of the attachment may vary.	860lb	390kg
Tipping capacity	2465lb	1118kg

* Includes machine weight, 175-lb (80-kg) bucket, 165-lb (75-kg) operator

Power Plant		US	Metric
Engine: Kubota® D1105, EPA Tier 4, EU Stage IIIa			
	Fuel	Diesel	
	Number of cylinders	3	
	Displacement	68.5in^3	1.12L
	Bore	3.07"	78mm
	Stroke	3.09"	78.4mm
Manufacturer's gross power rating (per SAE J1955)		24.8hp	18.5kW
Estimated net power rating (per SAE 1348)		23.1hp	17.2kW

AAA Rent-All 225-291-1356

Always follow manufacturer instructions
https://truckmanualshub.com/

Power Plant	US	Metric
Rated engine speed	3000rpm	3000rpm

Hydraulic System		US	Metric
Auxiliary: double gear pump			
	Flow rate (pump 1)	6.5gpm	24L/min
	Flow rate (pump 2)	5.5gpm	21L/min
	Pressure	3000psi	207bar
Ground drive: dual hydrostat			
	Flow rate	12.7gpm	48.1L/min
	Pressure	3625psi	250bar

Fluid Capacities	US	Metric
Engine oil, with filter	5.0qt	4.7L
Fuel tank	10.5gal	40L
Hydraulic reservoir	9.2gal	35L

Battery
SAE reserve capacity 110min, SAE cold crank @ 0°F (-18°C) 800amp, 12V electrical system

Vibration Levels
Average vibration transmitted to the operator's hand during normal operation with a loader bucket is 4.31m/sec^2. Average vibration transmitted to the whole body during normal operation with a loader bucket is 1.07m/sec^2. Actual vibration will depend on the attachment being used.

Noise Level
This machine can generate sound levels exceeding 80dBA. Always wear appropriate hearing protection when operating machine. Find sound power and pressure information at www.ditchwitch.com, or contact customersupport@ditchwitch.com.

Specifications are called out according to SAE recommended practices. Specifications are general and subject to change without notice. If exact measurements are required, equipment should be weighed and measured. Due to selected options, delivered equipment may not match that shown.

AAA Rent-All 225-291-1356

Always follow manufacturer instructions
https://truckmanualshub.com/

Declaration of Conformity

Countries in the European Union should have received a Declaration of Conformity (DOC) with this machine similar to the example below.

The Charles Machine Works, Inc.
PO Box 661959 West Fir Avenue
Perry, Oklahoma, USA 73077-0066
Phone: 580 572 3784
FAX: 580 572 3525

Declares that the product:

Model: **Ditch Witch® XXXX**
Type: (Machine Type)
Engine Power: xxx kW
Serial Number: CMWXXXXXXXXXXXXXX

Conforms to the requirements of:

2006/42/EC Machinery Directive
2004/108/EC Electromagnetic Compatibility Directive
2000/14/EC Noise Emission Directive
Measured sound power level (Annex V): **XXXdBA**
Guaranteed sound power level (Annex V): **XXXdBA**

The Technical Construction File is maintained at the manufacturer's location.

The manufacturer's European representative is:

Ditch Witch Barcelona
International Underground Systems, S.L.
C/EL PLA, 130 *Poligon Industrial EI Pla
08980 Sant Feliu De Llobregat *Spain
Phone: +34 93 632 7344
FAX: +34 93 632 7343

AAA Rent-All 225-291-1356

Always follow manufacturer instructions
https://truckmanualshub.com/

AAA Rent-All 225-291-1356

Always follow manufacturer instructions
https://truckmanualshub.com/

Support

Registration

If your equipment was purchased through a Ditch Witch dealer, it is already registered. If you purchased from any other source, please email productsupportwarrantyadmin@ditchwitch.com or fill out the registration card located in the back of the parts manual. Registration enables you to receive updates on this equipment as well as information on new products of interest.

Procedure

Notify your dealer immediately of any malfunction or failure of Ditch Witch equipment.

Always give model, serial number, and approximate date of your equipment purchase. This information should be recorded and placed on file by the owner at the time of purchase.

Return damaged parts to dealer for inspection and warranty consideration if in warranty time frame.

Order genuine Ditch Witch replacement or repair parts from your authorized Ditch Witch dealer. Use of another manufacturer's parts may void warranty consideration.

Resources

Publications

Contact your Ditch Witch dealer for publications and videos covering safety, operation, service, and repair of your equipment.

Ditch Witch Training

For information about on-site individualized training, contact your Ditch Witch dealer.

AAA Rent-All 225-291-1356

Always follow manufacturer instructions
https://truckmanualshub.com/

Warranty

Ditch Witch Equipment and Replacement Parts
Limited Warranty Policy

Subject to the limitation and exclusions herein, free replacement parts will be provided at any authorized Ditch Witch dealership for any Ditch Witch equipment or parts manufactured by the Ditch Witch factory that fail due to a defect in material or workmanship within one (1) year of first commercial use. Free labor will be provided at any authorized Ditch Witch dealership for installation of parts under this warranty during the first year following "initial commercial" use of the serial-numbered Ditch Witch equipment on which it is installed. The customer is responsible for transporting their equipment to an authorized Ditch Witch dealership for all warranty work.

Exclusions from Product Warranty

- All incidental or consequential damages.
- All defects, damages, or injuries caused by misuse (including, but not limited to, rollover), abuse, improper installation, alteration, neglect, or uses other than those for which products were intended.
- All defects, damages, or injuries caused by improper training, operation, or servicing of products in a manner inconsistent with manufacturer's recommendations.
- All engines and engine accessories (these are covered by original manufacturer's warranty).
- Tires, belts, and other parts which may be subject to another manufacturer's warranty (such warranty will be available to purchaser).
- ALL IMPLIED WARRANTIES NOT EXPRESSLY STATED HEREIN, INCLUDING ANY WARRANTY OF FITNESS FOR A PARTICULAR PURPOSE AND MERCHANTABILITY.

IF THE PRODUCTS ARE PURCHASED FOR COMMERCIAL PURPOSES, AS DEFINED BY THE UNIFORM COMMERCIAL CODE, THEN THERE ARE NO WARRANTIES WHICH EXTEND BEYOND THE FACE HEREOF AND THERE ARE NO IMPLIED WARRANTIES OF ANY KIND WHICH EXTEND TO A COMMERCIAL BUYER. ALL OTHER PROVISIONS OF THIS LIMITED WARRANTY APPLY INCLUDING THE DUTIES IMPOSED.

Ditch Witch products have been tested to deliver acceptable performance in most conditions. This does not imply they will deliver acceptable performance in all conditions. Therefore, to assure suitability, products should be operated under anticipated working conditions prior to purchase.

Defects will be determined by an inspection within thirty (30) days of the date of failure of the product or part by Ditch Witch Product Support (DWPS) or its authorized dealer. DWPS will provide the location of its inspection facilities or its nearest authorized dealer upon inquiry. DWPS reserves the right to supply remanufactured replacements parts under this warranty as it deems appropriate.

Extended warranties are available upon request from your local Ditch Witch dealer or the Ditch Witch factory.

Some states do not allow exclusion or limitation of incidental or consequential damages, so above limitation of exclusion may not apply. Further, some states do not allow exclusion of or limitation of how long an implied warranty lasts, so the above limitation may not apply. This limited warranty gives product owner specific legal rights and the product owner may also have other rights which vary from state to state.

For information regarding this limited warranty, contact the DWPS department, P.O. Box 66, Perry, OK 73077-0066, or contact your local dealer.

First version: 1/91; Latest version: 7/19

AAA Rent-All 225-291-1356