https://truckmanualshub.com/

SERVICE MANUAL

EH45
Compact Excavator

NEW HOLLAND
CONSTRUCTION

6-75750NA

https://truckmanualshub.com/

SERVICE MANUAL

NEW HOLLAND CONSTRUCTION

EH45

HYDRAULIC EXCAVATOR

Section 1 - SPECIFICATION

Section 2 - MAINTENANCE

Section 3 - SYSTEM

Section 4 - DISASSEMBLY

Section 5 - TROUBLESHOOTING

Section 6 - ENGINE

Section 7 - MISCELLANEOUS

NEW HOLLAND

Source Code No. S5PJ0002E-01

Form Number - 6-75750

Find manuals at https://best-manuals.com

https://truckmanualshub.com/

Any use of editorial or pictorial content is strictly prohibited without express written permission from
New Holland Construction, LLC. Carol Stream, IL 60188 U.S.A.

Copyright © 2003 New Holland Construction, LLC. All Rights Reserved.

Find manuals at https://best-manuals.com

https://truckmanualshub.com/

TABLE OF CONTENTS

Book Code No. and Distribution Month/Year			Section	Chapter Title	Chapter Number
			Section 1 **SPECIFICATIONS**		
S5PJ0102E-00 Oct 2001	S5PJ0102E-01 Jan 2003			Preliminary Remarks	S5**PJ01**02E
S5PJ0202E-00 Oct 2001	S5PJ0202E-01 Jan 2003			Specifications	S5**PJ02**02E
S5PJ0302E-00 Oct 2001	S5PJ0302E-01 Jan 2003			Attachment Dimensions	S5**PJ03**02E
S5PJ1102E-00 Oct 2001	S5PJ1102E-01 Dec 2002		Section 2 **MAINTENANCE**	Tools	S5**PJ10**02E
S5PJ1202E-00 Oct 2001	S5PJ1202E-01 Jan 2003			Standard Maintenance Time Table	S5**PJ12**02E
S5PJ1302E-00 Oct 2001	S5PJ1302E-01 Jan 2003			Maintenance Standard and Test Procedures	S5**PJ13**02E
			Section 3 **SYSTEM**		
S5PJ2202E-00 Oct 2001	S5PJ2202E-01 Jan 2003			Hydraulic Systems	S5**PJ22**02E
S5PJ2302E-00 Jan 2001	S5PJ2302E-01 Jan 2003			Electric System	S5**PJ23**02E
S5PJ2402E-00 Oct 2001	S5PJ2402E-01 Jan 2003			Components System	S5**PJ24**02E
S5PJ3102E-00 Oct 2001	S5PJ3102E-01 Jan 2003		Section 4 **DISASSEMBLY and ASSEMBLY**	Disassembling and Assembling	S5**PJ31**02E
S5PJ3202E-00 Jan 2001	S5PJ3202E-01 Jan 2003			Attachments	S5**PJ32**02E
S5PJ3302E-00 Oct 2001	S5PJ3302E-01 Jan 2003			Upper Structure	S5**PJ33**02E
S5PJ3402E-00 Oct 2001	S5PJ3402E-01 Jan 2003			Travel System	S5**PJ34**02E
			Section 5 **TROUBLESHOOTING**		
S5PJ4202E-00 Oct 2001	S5PJ4202E-01 Jan 2003			Troubleshooting (Hydraulic)	S5**PJ42**02E
S5PJ4302E-00 Oct 2001	S5PJ4302E-01 Jan 2003			Troubleshooting (Electrical)	S5**PJ43**02E
S5PJ4402E-00 Oct 2001	S5PJ4402E-01 Jan 2003			Troubleshooting (Engine)	S5**PJ44**02E
S5PJ5102E-00 Oct 2001	S5PJ5102E-01 Jan 2003		Section 6 **ENGINE**	Engine	S5**PJ51**02E
			Section 7 **MISCELLANEOUS**		

Find manuals at https://best-manuals.com

https://truckmanualshub.com/

1.1 GENERAL SAFETY INFORMATION

WARNING

Do Not operate or perform any maintenance on this machine until all instructions found in the OPERATOR'S MANUAL have been thoroughly read and understood.

Improper operation or maintenance of this machine may cause accidents and could result in serious injury or death.

Always keep the manual in the operator's seat pocket.

If it is missing or damaged, place an order with an authorized Distributor for a replacement.

If you have any questions, please consult an authorized Distributor.

1. Most accidents, which occur during operation, are due to neglect of precautionary measures and safety rules. Sufficient care should be taken to avoid these accidents. Erroneous operation, lubrication or maintenance services are very dangerous and may cause injury or death of personnel. Therefore all precautionary measures, **NOTES, DANGERS, WARNINGS** and **CAUTIONS** contained in this manual and on the machine should be read and understood by all personnel before starting any work with or on the machine.
2. Operation, inspection, and maintenance should be carefully carried out, and safety must be given the first priority. Messages of safety are indicated with marks. The safety information contained in this manual is intended only to supplement safety codes, insurance requirements, local laws, rules and regulations.
3. Messages of safety appear in this manual and on the machine. All messages of safety are identified by the words **DANGER**, **WARNING** and **CAUTION**.
   a. **DANGER** – Indicates an imminently hazardous situation which, if not avoided, will result in death or serious injury and is represented as follows:

DANGER

   b. **WARNING** – Indicates a potentially hazardous situation which, if not avoided, could result in death or serious injury and is represented as follows:

WARNING

   c. **CAUTION** – Indicates a potentially hazardous situation which, if not avoided, may result in minor or moderate injury. It may also be used to alert against possible damage to the machine and its components and is represented as follows:

CAUTION

4. It is very difficult to forecast every danger that may occur during operation. However, safety can be ensured by fully understanding proper operating procedures for this machine according to methods recommended by the manufacturer.
5. While operating the machine, be sure to perform work with great care, so as not to damage the machine, or allow accidents to occur.
6. Continue studying this manual until all Safety, Operation and Maintenance procedures are completely understood by all persons working with the machine.

WARNING

The proper and safe lubrication and maintenance for this machine, recommended by the manufacturer, is outlined in the OPERATOR'S MANUAL for this machine.

Improper performance of lubrication or maintenance procedures are dangerous and could result in injury or death. Read and understand the OPERATOR'S MANUAL before performing any lubrication or maintenance.

Find manuals at https://best-manuals.com

https://truckmanualshub.com/

1.2 SAFETY PRECAUTIONS

The serviceman or mechanic may be unfamiliar with many of the systems on this machine. This makes it important to use caution when performing service work. A knowledge of the system and or components is important before the removal or disassembly of any component.

Because of the size of some of the machine components, the serviceman or mechanic should check the weights noted in this manual. Use proper lifting procedures when removing any components. Weight of components table for SK40SR-2 / SK45SR-2 is shown in page 02-1-7, 8 of chapter SPECIFICATIONS in this manual.

The following is a list of basic precautions that must always be observed.

1. Read and understand all warning plates and decals on the machine before operating, maintaining or repairing this machine.
2. Always wear protective glasses and protective shoes when working around machines. In particular, wear protective glasses when using hammers, punches or drifts on any part of the machine or attachments. Use welders gloves, hood/goggles, apron and the protective clothing appropriate to the welding job being performed. Do not wear loose fitting or torn clothing. Remove all rings from fingers, loose jewelry, confine long hair and loose clothing before working on this machinery.
3. Disconnect the battery and hang a “Do Not Operate” tag in the operator’s compartment. remove ignition keys.
4. If possible, make all repairs with the machine parked on a level, hard surface. Block the machine so it does not roll while working on or under the machine. Hang a “Do Not Operate” tag in the operator’s compartment.
5. Do not work on any machine that is supported only by lift, jacks or a hoist. Always use blocks or jack stands, capable of supporting the machine, before performing any disassembly.

WARNING

Do not operate this machine unless you have read and understand the instructions in the OPERATOR’S MANUAL. Improper machine operation is dangerous and could result in injury or death.

6. Relieve all pressure in air, oil or water systems before any lines, fittings or related items are disconnected or removed. Always make sure all raised components are blocked correctly and be alert for possible pressure when disconnecting any device from a system that utilizes pressure.
7. Lower the bucket, blade or other attachments to the ground before performing any work on the machine. If this cannot be done, make sure the bucket, blade or other attachment is blocked correctly to prevent it from dropping unexpectedly.
8. Use steps and grab handles when mounting or dismounting a machine. Clean any mud, grease, oil or debris from steps, walkways or work platforms before using. Always face the machine when using steps, ladders and walkways. When it is not possible to use the designed access system, provide ladders, scaffolds, or work platforms to perform safe repair operations.
9. To avoid back injury, use a hoist when lifting components which weigh 23 kg (50 lbs) or more. Make sure all chains, hooks, slings, etc., are in good condition and are the correct capacity. Be sure hooks are positioned correctly. Lifting eyes are not to be side loaded during a lifting operation.
10. To avoid burns, be alert for hot parts on machines which have just been stopped and hot fluids in lines, tubes and components.
11. Be careful when removing cover plates. Gradually back off the last two bolts or nuts located at opposite ends of the cover or device and carefully pry cover loose to relieve any spring or other pressure, before removing the last two bolts or nuts completely.
12. Be careful when removing filler caps, breathers and plugs on the machine. Hold a rag over the cap or plug to prevent being sprayed or splashed by liquids under pressure. The danger is even greater if the machine has just been stopped because fluids can be hot.
13. Always use the proper tools that are in good condition and that are suited for the job at hand. Be sure you understand how to use them before performing any service work.
14. Reinstall all fasteners with the same part number. Do not use a lesser quality fastener if replacements are necessary.

Find manuals at https://best-manuals.com

https://truckmanualshub.com/

15. Repairs which require welding should be performed only with the benefit of the appropriate reference information and by personnel adequately trained and knowledgeable in welding procedures. Determine type of metal being welded and select correct welding procedure and electrodes, rods or wire to provide a weld metal strength equivalent at least to that of the parent metal. Make sure to disconnect battery before any welding procedures are attempted.
16. Do not damage wiring during removal operations. Reinstall the wiring so it is not damaged nor will be damaged in operation of the machine by contacting sharp corners, or by rubbing against some object or hot surface. Do not connect wiring to a line containing fluid.
17. Be sure all protective devices including guards and shields are properly installed and functioning correctly before starting a repair. If a guard or shield must be removed to perform the repair work, use extra caution and replace the guard or shield after repair is complete.
18. The maintenance and repair work while holding the bucket raised is dangerous due to the possibility of a falling attachment. Don't fail to lower the attachment and place the bucket to the ground before starting the work.
19. Loose or damaged fuel, lubricant and hydraulic lines, tubes and hoses can cause fires. Do not bend or strike high pressure lines or install ones which have been bent or damaged. Inspect lines, tubes and hoses carefully. Do not check for leaks with your hands. Very small (pin hole) leaks can result in a high velocity oil stream that will be invisible close to the hose. This oil can penetrate the skin and cause personal injury. Use cardboard or paper to locate pin hole leaks.
20. Tighten connections to the correct torque. Make sure that all heat shields, clamps and guards are installed correctly to avoid excessive heat, vibration or rubbing against other parts during operation. Shields that protect against oil spray onto hot exhaust components in event of a line, tube or seal failure must be installed correctly.
21. Do not operate a machine if any rotating part is damaged or contacts any other part during operation. Any high speed rotating component that has been damaged or altered should be checked for balance before reusing.
22. Be careful when servicing or separating the tracks. Chips can fly when removing or installing a track pin. Wear safety glasses and long sleeve protective clothing. Tracks can unroll very quickly when separated. Keep away from front and rear of machine. The machine can move unexpectedly when both tracks are disengaged from the sprockets. Block the machine to prevent it from moving.

Find manuals at https://best-manuals.com

https://truckmanualshub.com/

Book Code No. S5PJ01 02E ②

NEW HOLLAND EH45

PJ01

Model Cross-reference:
SK45SR-2 is NEW HOLLAND Model EH45

PRELIMINARY REMARKS

TABLE OF CONTENTS

1. GENERAL PRECAUTIONS FOR REPAIRS 1-1
2. ESCAPING PROCEDURE IN CASE OF EMERGENCY 1-4
3. INTERNATIONAL UNIT CONVERSION SYSTEM 1-5

Find manuals at https://best-manuals.com

https://truckmanualshub.com/

REVISION	DATE OF ISSUE	REMARKS
First Edition	October, 2001	S5PJ0102E K·E
Second Revision	January, 2003	S5PJ0102E ① K·E

Any use of editorial or pictorial content is strictly prohibited without express written permission from
New Holland Construction, LLC. Carol Stream, IL 60188 U.S.A.

Copyright © 2003 New Holland Construction, LLC. All Rights Reserved.

Find manuals at https://best-manuals.com

https://best-manuals.com

1. GENERAL PRECAUTIONS FOR REPAIRS

1.1 PREPARATION BEFORE DISASSEMBLING

(1) Understanding operating procedure
Read OPERATION & MAINTENANCE MANUAL carefully to understand the operating procedure.

(2) Cleaning machines
Remove soil, mud, and dust from the machine before carrying it into the service shop to prevent loss of work efficiency, damage of parts, and difficulty in rust prevention and dust protection while reassembling.

(3) Inspecting machines
Identify the parts to be disassembled before starting work, determine the disassembling procedure by yourself considering the workshop situations etc., and request procurement of necessary parts in advance.

(4) Recording
Record the following items for communication and prevention of recurring malfunction.
1) Inspection date and place
2) Model name, applicable machine number, and hour meter read
3) Trouble condition, location and cause.
4) Visible Oil leakage, water leakage and damage
5) Clogging of filters, oil level, oil quality, oil contamination and loosening of connections
6) Result of consideration if any problem exists based on the operation rate per month calculated from hour meter indication after the last inspection date.

(5) Arrangement and cleaning in service shop
1) Tools required for repair work.
2) Prepare space to place the disassembled parts.
3) Prepare oil containers for spilling oil etc.

1.2 SAFETY IN DISASSEMBLING AND ASSEMBLING

1) Wear appropriate clothes with long sleeves, safety shoes, safety helmet and protective glasses.
2) Suspend warning tag "DO NOT OPERATE" from the doorknob or the operating lever, and have a preliminary meeting before starting work.
3) Stop the engine before starting inspection and maintenance to prevent the operator being caught in machine.
4) Identify the location of a first-aid kit and a fire extinguisher, and also where to make contact in a state of emergency.
5) Choose a hard, level and safe place, and place the attachment on the ground securely.
6) Use a lifter such as a crane to remove heavy parts (20 kg [45 lbs] or more) from the machine.
7) Use proper tools, and replace or repair defective tools.
8) Support the machine and attachment with supports or blocks if the work is performed in the lifted condition.

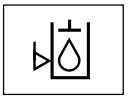

1.3 DISASSEMBLING AND ASSEMBLING HYDRAULIC EQUIPMENT

(1) Removing hydraulic equipment
1) Before disconnecting pipes, release the hydraulic pressure of the system, or open the return side cover and take out the filter.
2) Carefully drain oil of the removed pipes into a containers without spilling on the floor.
3) Apply plugs or caps on the pipe ends to avoid oil spillage and dust intrusion.
4) Clean off the external surface of the equipment before disassembling, and drain hydraulic and gear oil before placing it on the workbench.

(2) Disassembling hydraulic equipment
1) Do not disassemble, reassemble or modify the hydraulic equipment without the permission of the manufacturer, who is not responsible for the performance and function of the product after reassembling.
2) When disassembling and reassembling for unavoidable reason, refer the work to qualified personnel who have the specific knowledge or completed the parts service training.
3) Provide matching marks to facilitate reassembling work.
4) Before starting the work, read the manual of disassembling procedure, if it is provided, and decide whether the work can be performed by yourself.
5) Use the special jig and tools without fail if they are specified.
6) If it is hard to remove a part according to the procedure, do not try it by force but investigate the cause.

Find manuals at https://best-manuals.com

https://truckmanualshub.com/

7) Place the removed parts in order and attach tags to facilitate the reassembling.
8) Note the location and quantity of parts commonly applied to multiple locations.

(3) Inspecting parts
1) Ensure that the disassembled parts are free from seizure, interference and uneven contact.
2) Measure and record wear condition of parts and clearance.
3) If the problem is found in a part, repair or replace it with a new one.

(4) Reassembling hydraulic equipment
1) Turn ON the ventilation fan or open windows to maintain good ventilation prior to starting the cleaning of parts.
2) Perform rough and finish cleaning before assembling.
3) Remove washing oil by air and apply clean hydraulic or gear oil for assembling.
4) Always replace the removed O-rings, backup rings and oil seals with new ones by applying grease in advance.
5) Remove dirt and moisture from and perform degreasing on the surface where liquid gasket to be applied.
6) Remove rust preventive agent from the new parts before use.
7) Fit bearings, bushings and oil seals using special jigs.
8) Assemble the parts utilizing matching marks.
9) Ensure all the parts are completely assembled after the work.

(5) Installing hydraulic equipment
1) Ensure hydraulic oil and lubricant are properly supplied.
2) Perform air releasing when:
   a. Hydraulic oil changed
   b. Parts of suction side piping replaced
   c. Hydraulic pump installed
   d. Slewing motor installed
   e. Travel motor installed
   f. Hydraulic cylinder installed

⚠ Operation of the hydraulic equipment without filling hydraulic oil or lubricant or without performing air releasing will result in damage to the equipment.

3) Perform air releasing after loosening the upper drain plug, starting the engine and keep it in low idle condition. Complete the air releasing when seeping of hydraulic oil is recognized, and tightly plug.
4) Perform air releasing of the travel motor and the hydraulic cylinders by running the engine for more than 5 minutes at low speed without load.

⚠ Do not allow the hydraulic cylinder to bottom on the stroke end just after the maintenance.

5) Perform air releasing of pilot line by performing a series of digging, slewing and travel.
6) Check hydraulic oil level after placing the attachment to the oil check position, and replenish oil if necessary.

Checking hydraulic oil level

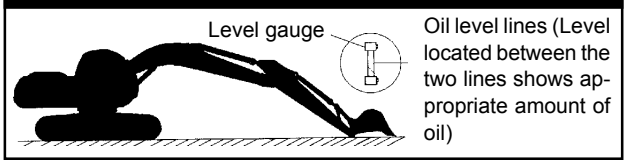

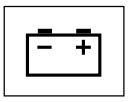

1.4 ELECTRICAL EQUIPMENT

(1) Do not disassemble electrical equipment.

(2) Handle it carefully not to drop and give a shock.

(3) Turn the key OFF prior to connecting and disconnecting work.

(4) Disconnect the connector by holding it and pressing the lock. Do not pull the wire to apply force to the caulking portion.

(5) Connect the connector and ensure it is completely locked.

(6) Turn the key OFF prior to touching the terminal of starter or generator.

(7) Remove the ground (earth) terminal of battery when handling tools around the battery or its relay.
(8) Do not splash water on the electrical equipment and connectors during machine washing.

(9) Check for moisture adhesion inside the waterproof connector after pulling it out, since it is hard to remove moisture from the connector. If moisture adhesion is found, dry it completely before the connection.
• Battery electrolyte is hazardous.

https://truckmanualshub.com/

⚠ Battery electrolyte is dilute sulfuric acid. Exposure of skin or eyes to this liquid will cause burning or loss of eyesight. If the exposure occurs, take the following emergency measures and seek the advice of a medical specialist.

- When skin exposed: Wash with water and soap sufficiently.
- When eyes exposed: Immediately wash away with city water continuously for more than 10 minutes.
- When a large amount of the liquid flows out: Neutralize with sodium bicarbonate or wash away with city water.
- When swallowed: Drink a large amount of milk or water.
- When clothes exposed: Immediately undress and wash.

1.5 HYDRAULIC PARTS

1) O-ring
   - Ensure O-rings have elasticity and are not damaged before use.
   - Use the appropriate O-rings. O-rings are made of various kinds of materials having different hardness to apply to a variety of parts, such as the part for moving or fixed portion, subjected to high pressure, and exposed to corrosive fluid, even if the size is same.
   - Fit the O-rings without distortion and bend.
   - Always handle floating seals as a pair.
2) Flexible hose (F hose)
   - Use the appropriate parts. Different parts are used depending on the working pressure even the size of fitting and the total length of the hose is same.
   - Tighten the fitting at the specified torque. Ensure no kink, tension, interference nor oil leakage is recognized.

1.6 WELDING REPAIR

(1) Refer repair welding to qualified personnel according to the appropriate procedure.

(2) Disconnect the ground (earth) cable of the battery before starting the repair. Failure to do so will cause damage to the electrical equipment.

(3) Move away the articles in advance that may cause fire if exposed to sparks.

(4) Before starting the repair of the attachment, do not fail to cover the plated surface of the piston rod with flameproof sheet to prevent it from being exposed to sparks.

1.7 ENVIRONMENTAL MEASURE

(1) Run the engine at the place that is sufficiently ventilated.

(2) Industrial waste disposal
Dispose of the following parts according to the relevant regulations:
Waste oil and waste container
Battery

(3) Precautions for handling hydraulic oil
Exposure of eyes to hydraulic oil will cause inflammation. Wear protective glasses before handling to avoid an accident. If an eye is exposed to the oil, take the following emergency measures:
- When an eye exposed: Immediately wash away with city water sufficiently till stimulative feeling vanishes.
- When swallowed: Do not let vomit, and receive medical treatment immediately.
- When skin exposed: Wash with water and soap sufficiently.

(4) Others
Use genuine replacement parts and lubricants

https://truckmanualshub.com/

2. ESCAPING PROCEDURE IN CASE OF EMERGENCY

2.1 WHEN CAB DOOR DOES NOT OPEN ;(CAB spec. only)

(1) Escape from the front window.

(2) Escape from skylight.

(3) When front window and skylight do not open ; The life hammer is always reserved on the rear left side of cab. Break the glass on the rear side of cab, and escape from there.

- Break the window glass with care to protect eyes, and don't fail to break the window on which label "Emergency exit" is stuck.

(4) In addition, the life hammer is equipped with a cutter on the lever side to cut the seat belt, etc.

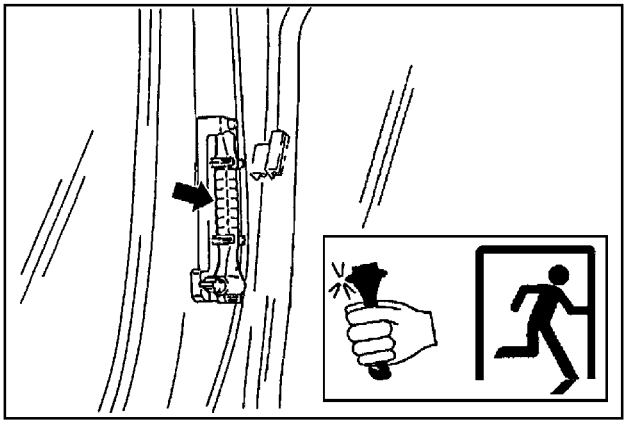

FIG. 2-1 LIFE HAMMER AND "EMERGENCY EXIT" LABEL

2.2 WHEN MACHINE CAN NOT GO OUT FROM THE SOFT GROUND BY ITSELF ;

1. If the machine should become stuck in soft soil areas it may be necessary to tow the machine. Attach a wire rope or chain, with the capacity to pull the machine out, to the lower frame towing eyes.
2. Attach other end to the vehicle used to pull the machine. Operate the Machine's Travel Lever in the proper direction while pulling with the other vehicle.

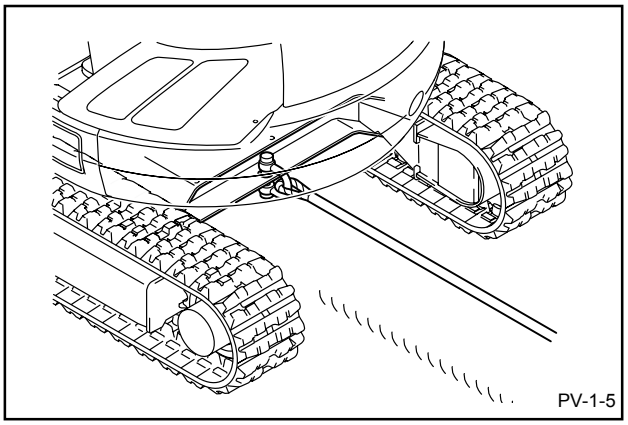

FIG. 2-2 TOW MACHINE PROPERLY

WARNING

- While towing, do not enter between the machine and towing vehicle.
- Do not apply a shock load onto the towing rope.
- Make sure to always use towing eyes (shackles) or the towing.
- Keep the wire rope horizontally, and perpendicularly to the crawler frame.
- Tow the machine slowly at low speed mode.
- For the towing of the machine body, provide pads to be applied to the corner of crawler frame to prevent the wire rope and crawler frame from any damages.

http://auckmanual.com.mx/

3. INTERNATIONAL UNIT CONVERSION SYSTEM

(Based on MARKS' STANDARD HANDBOOK FOR MECHANICAL ENGINEERS)

Introduction

Although this manual uses the JIS unit system, if you need SI unit, refer to the following international system of units.

Given hereinafter is an excerpt of the units that are related to this manual :

1. Etymology of SI Units
   French:Le Systéme International d' Unités
   English:International System of Units
2. Construction of SI Unit System

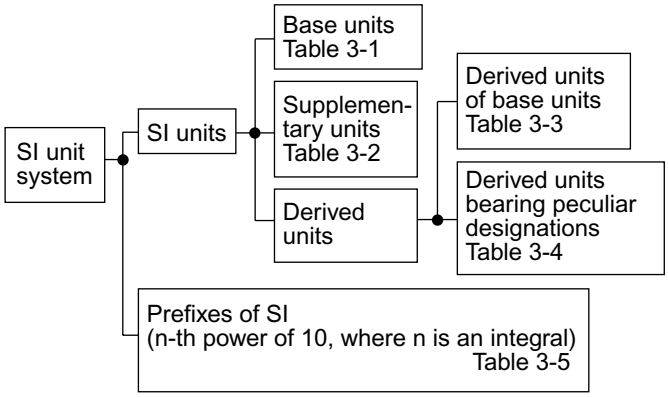

(1)Base Units [Table 3-1]

QUANTITY	UNIT	SYMBOL
Length	metre	m
Mass	kilogram	kg
Time	second	s
Electric current	ampere	A
Thermodynamic temperature	kelvin	K
Amount of substance	mol	mol
Luminous intensity	candela	cd

(2)Supplementary Units [Table 3-2]

QUANTITY	UNIT	SYMBOL
Plane angle	radian	rad
Solid angle	steradian	sr

(3)Derived Units [Table 3-3]

QUANTITY	UNIT	SYMBOL
Area	square metre	m^2
Volume	cubic metre	m^3
Velocity	metre per second	m/s
Acceleration	metre per second squared	m/s^2
Density	kilogram per cubic metre	kg/m^3

(4)Derived Units bearing Peculiar Designations [Table 3-4]

QUANTITY	UNIT	SYMBOL	FORMULA
Frequency	Hertz	Hz	1/s
Force	Newton	N	$kg{\cdot}m/s^2$
Pressure and Stress	Pascal	Pa	N/m^2
Energy, Work and Quantity of heat	Joule	J	N·m
Power	Watt	W	J/s
Quantity of electricity	Coulomb	C	A·s
Electric potential difference, Voltage, and Electromotive force	Volt	V	W/A
Quantity of static electricity and Electric capacitance	Farad	F	C / V
Electric resistance	Ohm	Ω	V / A
Celcius temperature	Celcius degree or degree	˚C	(t+273.15)K
Illuminance	Lux	lx	lm/m^2

(5)Prefixes of SI [Table 3-5]

PREFIX	SYMBOL	MULTIPLICATION FACTORS
Giga	G	10^9
Mega	M	10^6
Kilo	k	10^3
Hecto	h	10^2
Deca	da	10
Deci	d	10^{-1}
Centi	c	10^{-2}
Milli	m	10^{-3}
Micro	μ	10^{-6}
Nano	n	10^{-9}
Pico	p	10^{-12}

(6)Unit Conversion [Table 3-6]

QUANTITY	JIS	SI	CONVERSION FACTOR
Weight	kgf	—	
Mass	—	kg	
Force	kgf	N	1 kgf=9.807 N
Torque	kgf·m	N·m	1 kgf·m=9.807 N·m
Pressure	kgf/cm^2	MPa	1 kgf/cm^2=0.09807 MPa
Motive power	PS	kW	1 PS=0.7355 kW
Revolution	rpm	min^{-1}	r/min ∗1

∗1 Units that are allowed to use

https://truckmanualshub.com/

(7)Unit conversion logarithmic chart

FORCE

1 N=0.10197 kgf

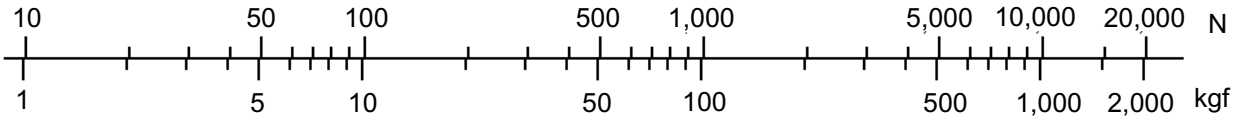

1 kgf=9.807 N

TORQUE

1 N•m=0.102 kgf•m

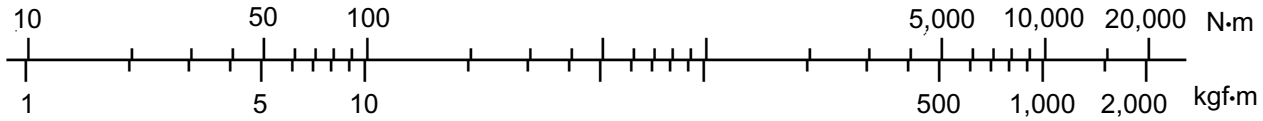

1 kgf•m=9.807 N•m

PRESSURE

1 MPa=10.197 kgf/cm^2

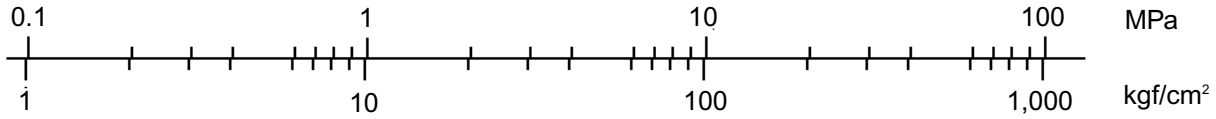

1 kgf/cm^2=0.09807 MPa

https://truckmanualshub.com/

Book Code No. S5PJ02 02E ①

NEW HOLLAND EH45

PJ02

Model Cross-reference:
SK45SR-2 is NEW HOLLAND Model EH45

SPECIFICATIONS

TABLE OF CONTENTS

1. COMPONENTS NAME 1-1
2. MACHINE DIMENSIONS 1-2
3. SPECIFICATIONS AND PERFORMANCE 1-6
4. MACHINE AND COMPONENTS WEIGHT (DRY) 1-7
5. TRANSPORTATION 1-9
6. TYPE OF CRAWLER SHOES 1-11
7. TYPE OF BUCKET 1-11
8. MACHINE LIFTING PROCEDURE 1-12
9. WORKING RANGES 1-14
10. LIFTING CAPACITIES 1-16
11. ENGINE SPECIFICATIONS 1-18

https://truckmanualshub.com/

REVISION	DATE OF ISSUE	REMARKS
First Edition	October, 2001	S5PJ0202E K·E
Second Revision	January, 2003	S5PJ0202E ① K·E

Any use of editorial or pictorial content is strictly prohibited without express written permission from
New Holland Construction, LLC. Carol Stream, IL 60188 U.S.A.

Copyright © 2003 New Holland Construction, LLC. All Rights Reserved.

1. COMPONENTS NAME

https://www.pdfmanuals.com/

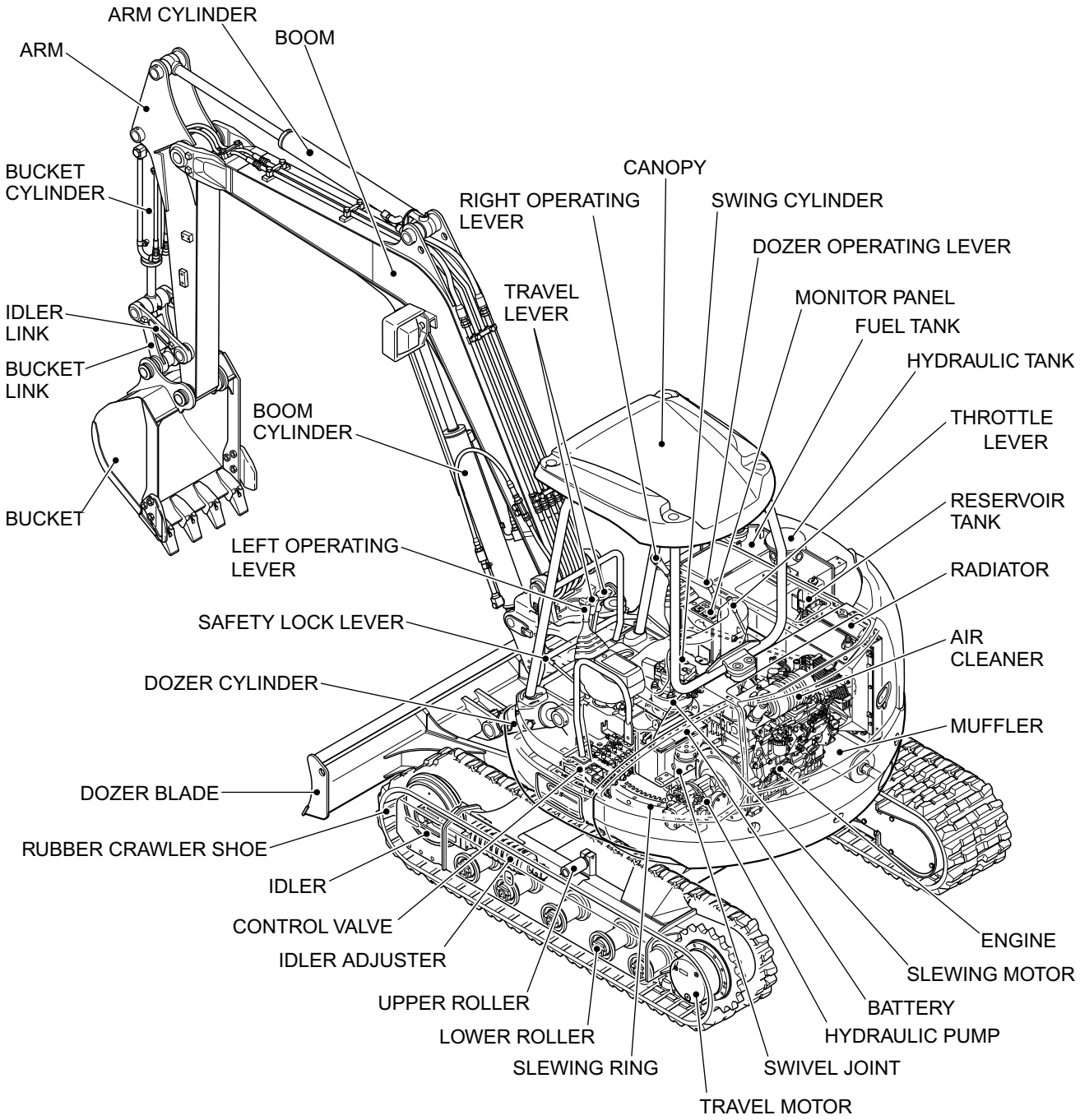

■ SK40SR-2

A. CANOPY

Unit : mm (ft-in)

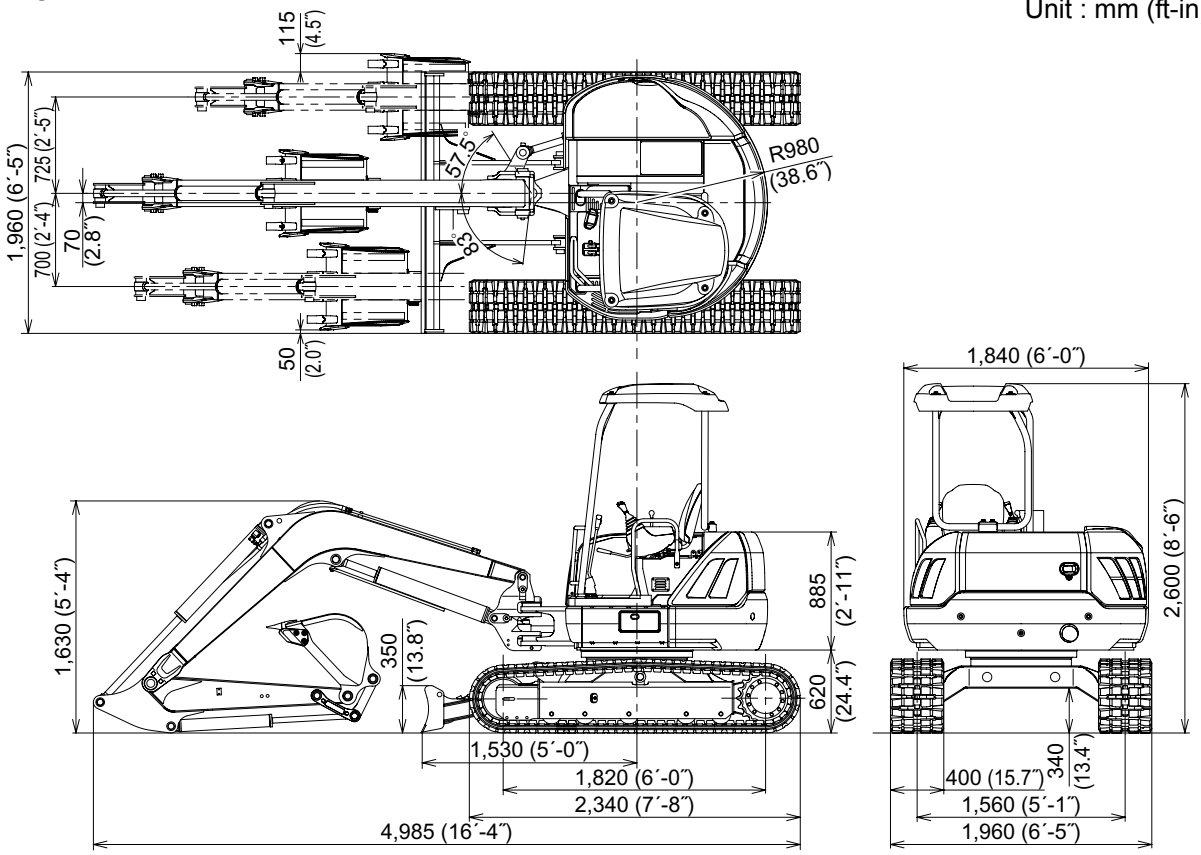

B. CAB

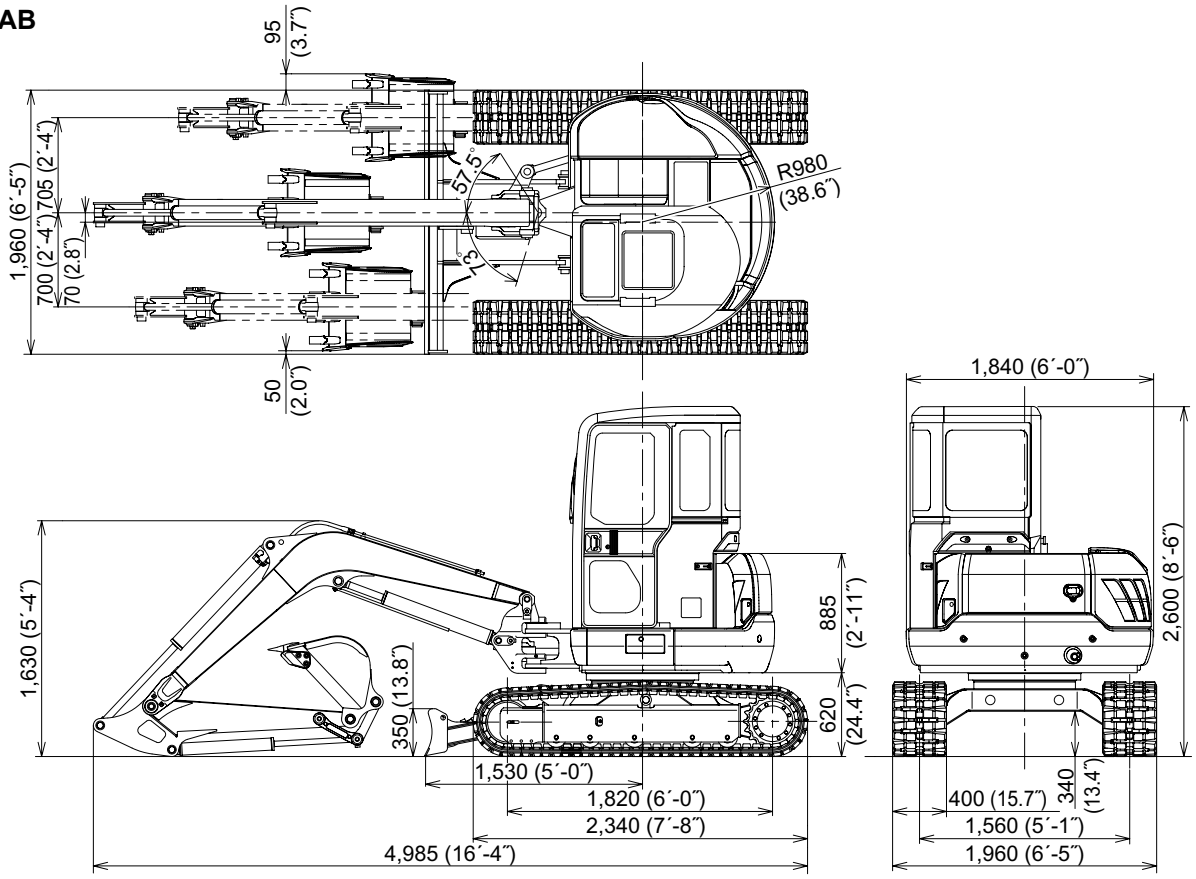

https://truckmanualshub.com/

■ SK45SR-2 EU Model

A. CANOPY

Unit : mm (ft-in)

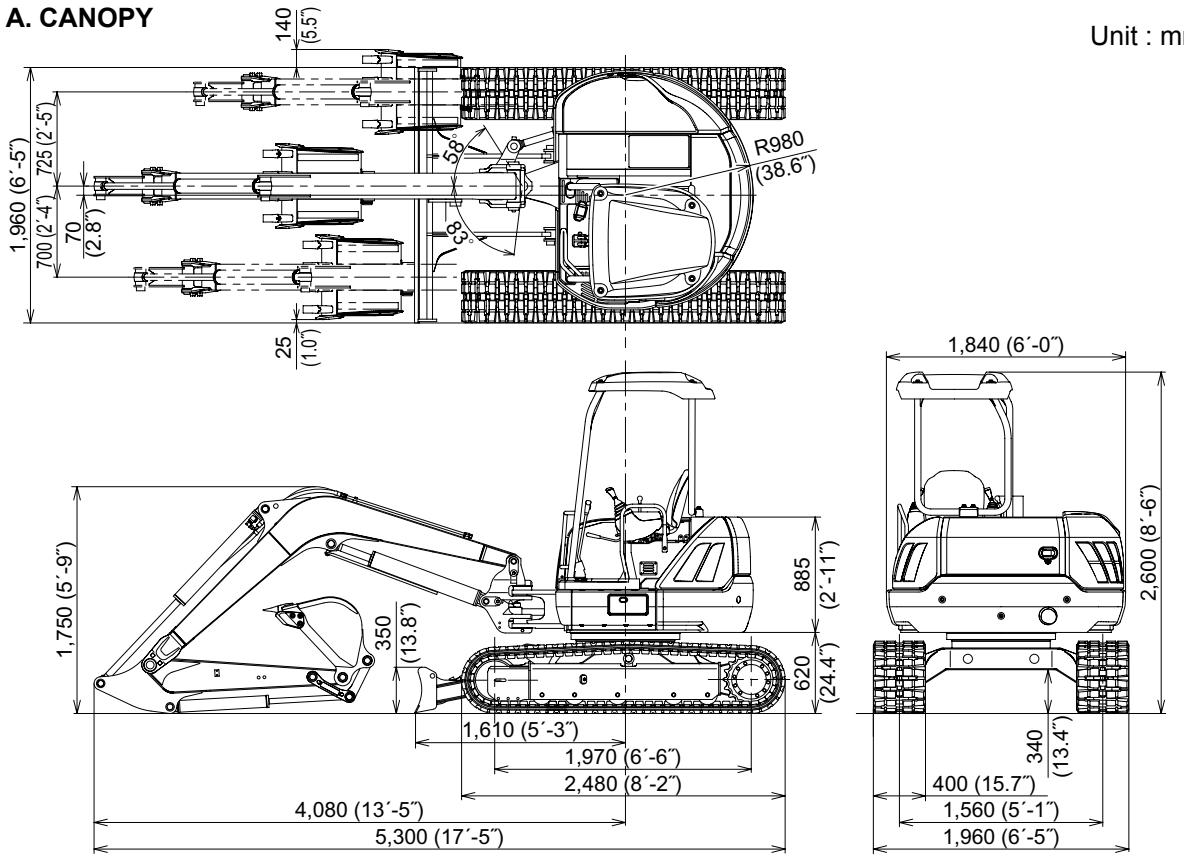

B. CAB

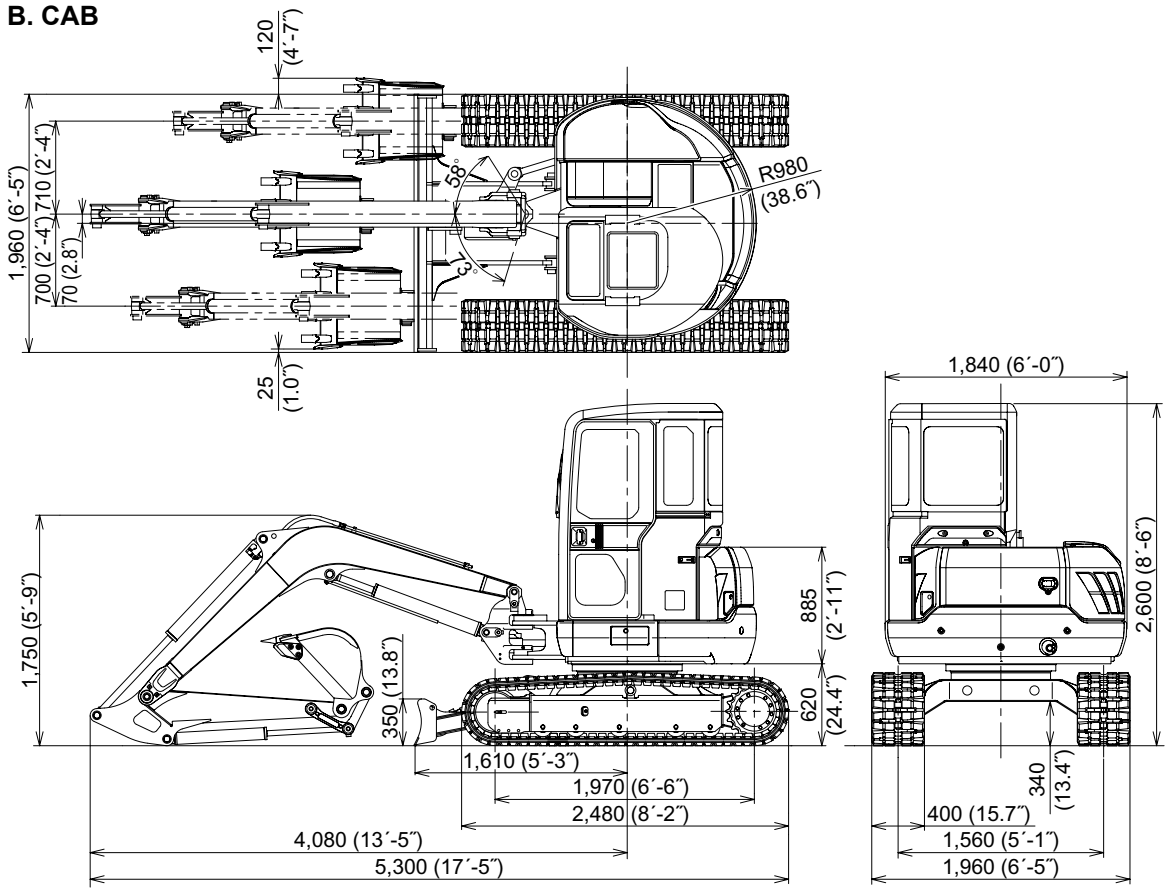

https://truckmanualshub.com/

■ SK45SR-2 KAI Model

A. CANOPY

Unit : mm (ft-in)

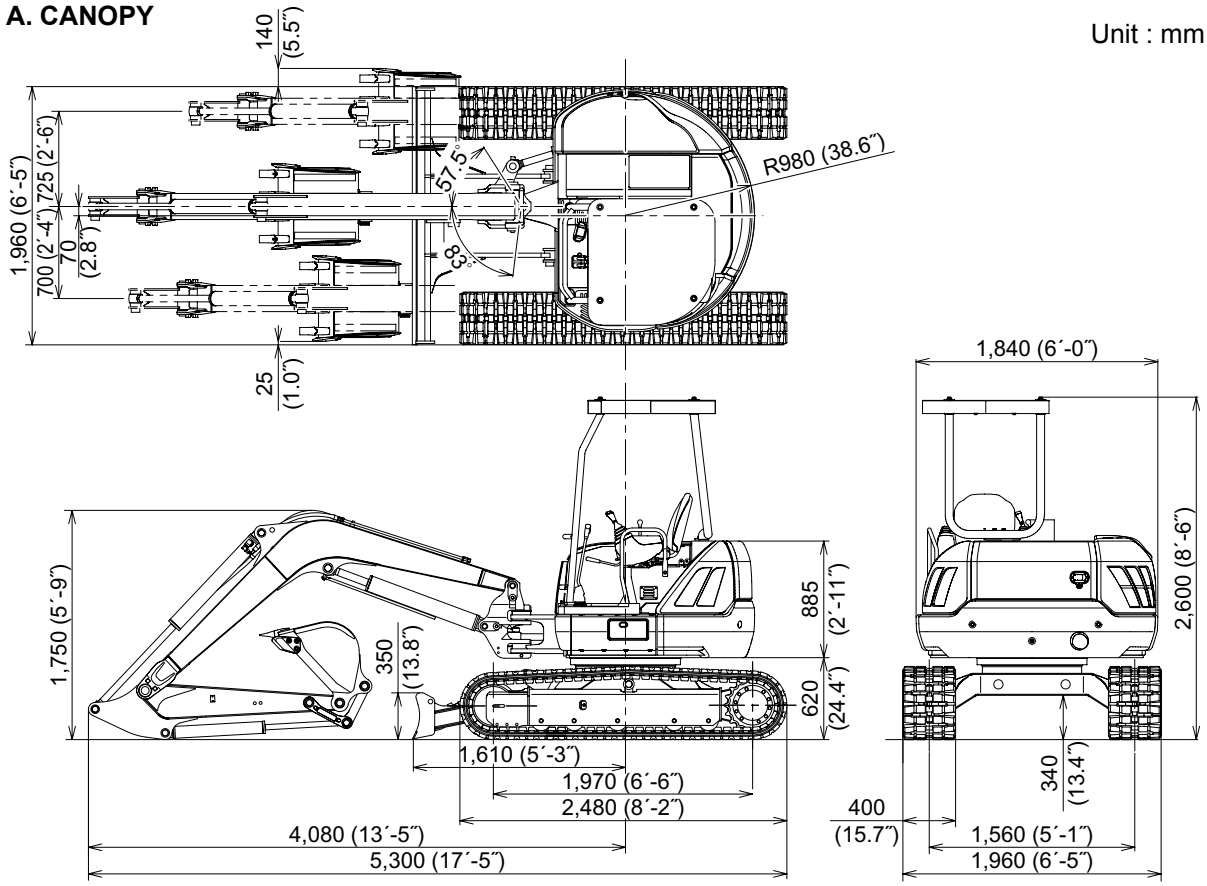

B. CAB

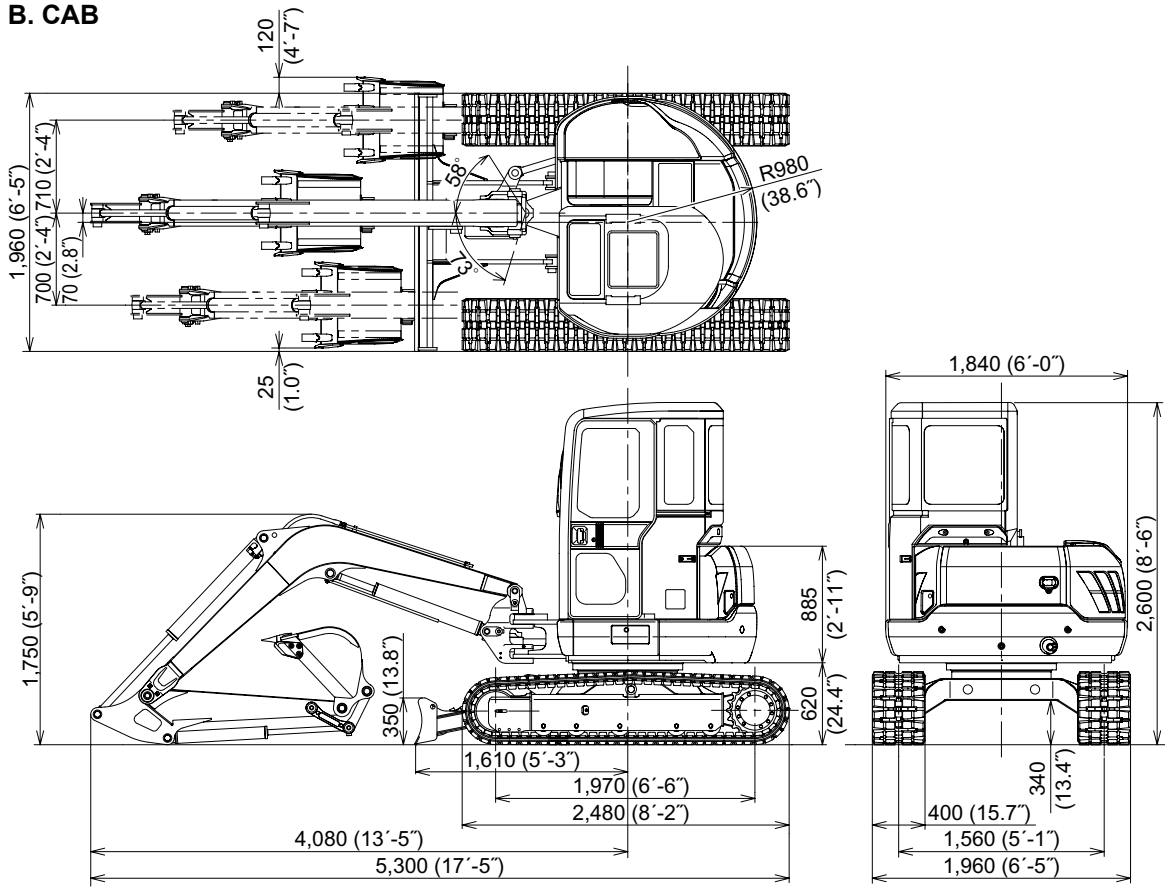

SK40SR-2

■ SPEED AND GRADEABILITY

Model		SK40SR-2 (with Rubber Shoe)	
Serial No		PH03-02001~	
Item			
Slewing Speed	min^{-1} {rpm}	9.3 {9.3}	
Travel Speed	km/h (mph)	Low (1st.)	High (2nd.)
		2.5 (1.5)	4.5 (2.8)
Gradeability	%(degree)	58 (30)	

■ ENGINE

Model (YANMAR)		[4TNE84] 4TNE84-EYB
Type		Vertical,4-cycle,water cooled diesel engine
Number of cylinders-Bore X Stroke		4−Ø84 mm X 90 mm
Total Displacement	L	1.99
Rated Output	kW/min^{-1} {PS/rpm}	22.8 / 2,100 {31.0 / 2,100}
Maximum Torque	N·m/min^{-1} {kgf·m/rpm}	118 / 1,400 {12 /1,400}
Starter	V X kW	12 X 2.0
Generator (Dynamo)	V X A	12 X 40

Note) ● The model name in [ ] is for the earlier one before the improvement / change.

■ HYDRAULIC COMPONENTS

Hydraulic Pump	Variable displacement axial piston + gearpump
Slewing Motor	Axial piston
Travel Motor	Axial psiton, 2 speed motor
Control Valve	10 spool multiple control valve
Cylinder (Boom,Arm,Swing Bucket,Dozer)	Double acting cylinder
Return filter	Paper filter with safety valve (30μ)

■ OFFSET DIGGING · DOZER

Mechanism			Boom swing operation by cylinder stroke
Boom swing angle	degree	Right	Approx.58
		Left	Approx.83 (Cab spec : 73)
Stroke of dozer (Up / Down)	mm (in)		360 /320 (14.2 / 12.6)

■ WEIGHT

Unit : kg (lb)

Machine Weight	Rubber shoe, Canopy
	4,060 (8,950)
Upper slewing body	1,770 (3,900)
Travel system	1,660 (3,660)
Attachment (Boom+STD Arm+STD Bucket)	450 (990)
Oil & Water	104 (230)

Note) This figure is calculated with Japanese standard bucket.
Bucket weight 100 kg (220 lb)

https://truckmanualshub.com/

■ SPEED AND GRADEABILITY

Model		SK45SR-2 (with Rubber Shoe)	
Serial No		PJ02-00101~	
Item			
Slewing Speed	min^{-1} {rpm}	9.5 {9.5}	
Travel Speed	km/h (mph)	Low (1st.)	High (2nd.)
		2.6 (1.6)	4.6 (2.9)
Gradeability	%(degree)	58 (30)	

■ ENGINE

Model (YANMAR)		[4TNE88-NYBB (EU), 4TNE88-EYBD (KAI)] 4TNE88-EYBC
Type		Vertical,4-cycle,water cooled diesel engine
Number of cylinders-Bore X Stroke		4−Ø88 mm X 90 mm
Total Displacement	L	2.18
Rated Output	kW/min^{-1} {PS/rpm}	27.2 / 2,200 {37.0 / 2,200}
Maximum Torque	N·m/min^{-1} {kgf·m/rpm}	147 / 1,400 {15 / 1,400}
Starter	V X kW	12 X 2.0
Generator (Dynamo)	V X A	12 X 40

Note) ● The model name in [ ] are for the earlier one before the improvement / change.

■ HYDRAULIC COMPONENTS

Hydraulic Pump	Variable displacement axial piston + gearpump
Slewing Motor	Axial piston
Travel Motor	Axial psiton, 2 speed motor
Control Valve	10 spool multiple control valve
Cylinder (Boom,Arm,Swing Bucket,Dozer)	Double acting cylinder
Return filter	Paper filter with safety valve (30μ)

■ OFFSET DIGGING · DOZER

Mechanism			Boom swing operation by cylinder stroke
Boom swing angle	degree	Right	Approx.58
		Left	Approx.83 (Cab spec : 73)
Stroke of dozer (Up / Down)	mm (in)		360 /380 (14.2 / 15.0)

Unit:kg (lb)

■ WEIGHT	EU	KAI
Machine Weight	Rubber shoe, Canopy	←
	4,630 (10,210)	←
Upper slewing body	2,100 (4,630)	←
Travel system	1,870 (4,120)	←
Attachment (Boom+STD Arm+STD Bucket)	600 (1,260)	← (In case of Japanese STD bucket)
Oil & Water	109 (240)	←

Note) This figure is calculated with Japanese standard bucket.
Bucket weight 104 kg (230 lb)

4. MACHINE&COMPONENTS WEIGHT (DRY)

https://truckmanualshop.com/

Unit : kg(lb)

Item \ Model / Specification	SK40SR-2	
	Rubber shoe	
	Canopy	Cab
Complete Machine	4,060 (8,950)	4,160 (9,170)
1. Upper Structure (Assy of followings)	1,770 (3,900)	1,870 (4,120)
1.1 Upper frame	490 (1,080)	←
1.2 Canopy/Cab	82 (180)	180 (400)
1.3 Engine	180 (400)	←
1.4 Hydraulic pump	35 (77)	←
1.5 Radiator	19 (40)	←
1.6 Hydraulic tank	36 (79)	←
1.7 Fuel tank	23 (50)	←
1.8 Swing bracket	99 (220)	←
1.9 Swing cylinder	48 (105)	←
1.10 Slewing motor (with reduction)	43 (95)	←
1.11 Control valve	35 (77)	←
1.12 Counterweight	260 (570)	←
1.13 Guard・Bonnet	130 (287)	←
1.14 Boom cylinder	49 (110)	←
2. Undercarriage (Assy of followings)	1,660 (3,660)	←
2.1 Lower frame	480 (1,060)	←
2.2 Slewing bearing	76 (170)	←
2.3 Travel motor (with reduction)	56 (120) X 2	
2.4 Upper roller	5 (11) X 2	←
2.5 Lower roller	10 (22) X 2	←
2.6 Front idler	32 (70) X 2	←
2.7 Idler adjuster	23 (50) X 2	←
2.8 Sprocket	15 (33) X 2	←
2.9 Rubber crawler (400mm width)	230 (510) X 2	←
2.10 Swivel joint	22 (48)	←
2.11 Dozer	180 (400)	←
2.12 Dozer cylinder	26 (57)	←
3. Attachment(Assy of followings)	450 (990)	←
3.1 Boom assy	190 (420)	←
3.1.1 Boom	150 (320)	←
3.1.2 Arm cylinder	41 (90)	←
3.2 Arm assy	130 (290)	←
3.2.1 Arm	73 (160)	←
3.2.2 Bucket cylinder	26 (57)	←
3.2.3 Bucket Link	11 (24)	←
3.2.4 Idler Link	4 (9) X 2	←
3.3 Bucket assy (0.13m^3) (0.17 cu·yd)	100 (220)	←
4. Fluid,Water (Assy of followings)	104 (230)	←
4.1 Hydraulic oil	57 (125)	←
4.2 Fuel	42 (92)	←
4.3 Engine oil	5 (11)	←
4.4 Water (Coolant)	5 (11)	←

Note : (1) In case of iron crawlers, add 40kg (88 lb) to the weight of complete machine.
(2) Bucket weight is shown with Japanese standard bucket weight.

https://truckmanualshub.com/

Unit : kg(lb)

Item \ Model / Specification	SK45SR-2 EU • KAI	
	Rubber shoe	
	Canopy	Cab
Complete Machine	4,630 (10,210)	4,730 (10,430)
1. Upper Structure (Assy of followings)	2,100 (4,630)	2,200 (4,850)
1.1 Upper frame	620 (1,370)	←
1.2 Canopy/Cab	82 (180)	180 (400)
1.3 Engine	180 (400)	←
1.4 Hydraulic pump	35 (77)	←
1.5 Radiator	19 (40)	←
1.6 Hydraulic tank	36 (79)	←
1.7 Fuel tank	23 (50)	←
1.8 Swing bracket	99 (220)	←
1.9 Swing cylinder	48 (105)	←
1.10 Slewing motor (with reduction)	43 (95)	←
1.11 Control valve	35 (77)	←
1.12 Counterweight	550 (1,210)	←
1.13 Guard • Bonnet	130 (287)	←
1.14 Boom cylinder	58 (730)	←
2. Undercarriage (Assy of followings)	1,870 (4,120)	←
2.1 Lower frame	620 (1,370)	←
2.2 Slewing bearing	76 (170)	←
2.3 Travel motor (with reduction)	56 (120) X 2	
2.4 Upper roller	5 (11) X 2	←
2.5 Lower roller	10 (22) X 2	←
2.6 Front idler	32 (70) X 2	←
2.7 Idler adjuster	23 (50) X 2	←
2.8 Sprocket	15 (33) X 2	←
2.9 Rubber crawler (400mm width)	246 (540) X 2	←
2.10 Swivel joint	22 (48)	←
2.11 Dozer	190 (420)	←
2.12 Dozer cylinder	26 (57)	←
3. Attachment(Assy of followings)	600 (1,260)	←
3.1 Boom assy	220 (485)	←
3.1.1 Boom	170 (370)	←
3.1.2 Arm cylinder	46 (100)	←
3.2 Arm assy	140 (310)	←
3.2.1 Arm	110 (240)	←
3.2.2 Bucket cylinder	26 (57)	←
3.2.3 Bucket Link	11 (24)	←
3.2.4 Idler Link	4 (9) X 2	←
3.3 Bucket assy (0.14m^3) (0.18 cu·yd)	104 (230)	←
4. Fluid,Water (Assy of followings)	109 (240)	←
4.1 Hydraulic oil	57 (125)	←
4.2 Fuel	42 (92)	←
4.3 Engine oil	5 (11)	←
4.4 Water (Coolant)	5 (11)	←

Note : (1) In case of iron crawlers, add 40kg (88 lb) to the weight of complete machine.
(2) Bucket weight is shown with Japanese standard bucket weight.

https://manuals.hoeme.com/

■ LOADING MACHINE ON A TRAILER

1. Keep trailer bed clean.Put chocks against truck wheels.
2. Use a ramp or loading dock. Ramps must be strong enough, have a low angle, and correct height. Load and unload machine on a level surface.
3. Travel machine onto ramps slowly. Center the machine over the trailer.
4. Lower all attachment.
5. Stop engine. Remove key from switch.

⚠ **Do not put chains over or against hydraulic lines, hoses or rubber tracks.**

6. Fasten machine to trailer with chains or cables.

During transportation, the bucket or attachments may hit the canopy or the cab. Therefore, set the machine in the transporting position by observing following points:

1. Extend the bucket cylinder fully.
2. Extend the arm cylinder fully.
3. Lower the boom.
4. If machine cannot be transported with arm cylinder fully extended, remove bucket or attachment and extend arm cylinder.

(2) Transportation Dimention and Weight of Attachment

(1) Boom

Model	SK40SR-2	SK45SR-2
Length X Height X Width mm (ft-in)	2,785 X 1,025 X 290 (9´-2˝ X 3´-4˝ X 11.4˝)	3,015 X 1,045 X 290 (9´-11˝ X 3´-5˝ X 11.4˝)
Weight kg (lb)	190 (420)	220 (420)

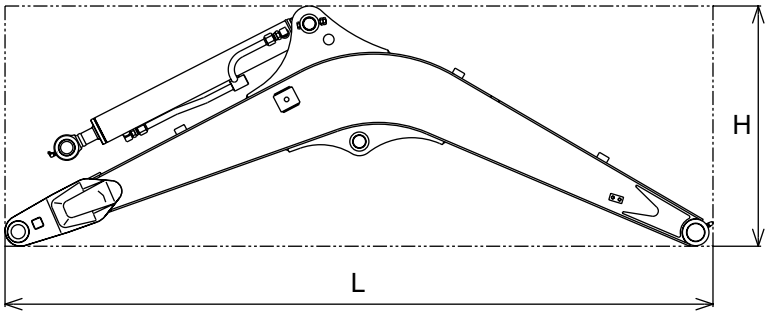

(2) Arm and Bucket (Japanese standard bucket)

Model	SK40SR-2	SK45SR-2
Arm length m (ft-in)	1.36 (4´-6˝)	1.48 (4´-10˝)
Length X Height X Width mm (ft-in)	2,570 X 510 X 600 (8´-5˝ X 1´-8˝ X 2´-0˝)	2,700 X 510 X 600 (8´10˝ X 1´8˝ X 2´0˝)
Weight kg (lb)	230 (510)	250 (550)

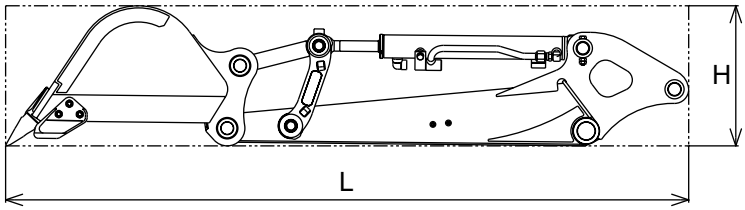

(3) Arm

https://truckmanualshub.com/

Model	SK40SR-2	SK45SR-2
Arm length m (ft-in)	1.36 (4´-6˝)	1.48 (4´-10˝)
Length X Height X Width mm (ft-in)	1,815 X 425 X 250 (5´-11˝ X 1´-5˝ X 9.8˝)	1,945 X 425 X 250 (6´-5˝ X 1´-5˝ X 9.8˝)
Weight kg (lb)	130 (290)	140 (310)

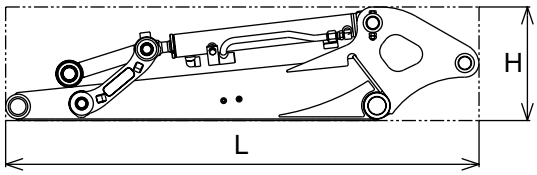

(4) Bucket (Japanese standard bucket)

Model	SK40SR-2	SK45SR-2
Bucket capacity m^3(cu·yd) (SAE heaped)	0.13 (0.17)	0.14 (0.18)
Length X Height X Width mm (ft-in)	780 X 695 X 600 (2´-7˝ X 2´-3˝ X 2´-0˝)	780 X 695 X 650 (2´-7˝ X 2´-3˝ X 2´-2˝)
Weight kg (lb)	100 (220)	104 (230)

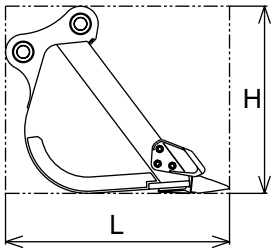

(5) Dozer

Model	SK40SR-2	SK45SR-2
Length X Height X Width mm (ft-in)	1,050 X 335 X 1,960 (3´-5˝ X 1´-1˝ X 6´-5˝)	1,125 X 335 X 1,960 (3´-8˝ X 1´-1˝ X 6´-5˝)
Weight kg (lb)	180 (400)	190 (420)

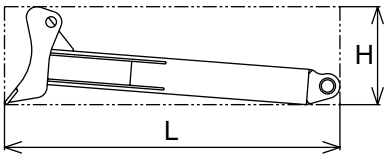

https://trackmanuals.tub.com/

6. TYPE OF CRAWLER SHOES

Type	Model	Shoe width mm (in)	Total Crawler width mm (ft-in)	Ground pressure kgf/cm² (psi)	
				Canopy	Cab
Rubber shoe 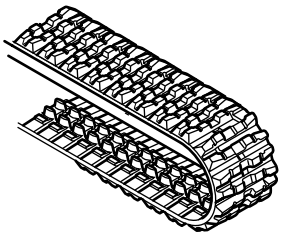	SK40SR-2	400 (15.7)	1,960 (6´-5˝)	0.25 (3.6)	0.25 (3.6)
	SK45SR-2	400 (15.7)	1,960 (6´-5˝)	0.27 (3.8)	0.27 (3.8)
Iron shoe(option) 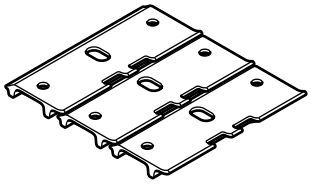	SK40SR-2	400 (15.7)	1,960 (6´-5˝)	0.26 (3.7)	0.27 (3.8)
	SK45SR-2	400 (15.7)	1,960 (6´-5˝)	0.27 (3.8)	0.28 (3.9)

7. TYPE OF BUCKET

(Japanese standard bucket)

Type	Heaped capacity m³(cu·yd)	Outer width mm (in)		Number of tooth	Weight kg (lb)
		with side cutter	without side cutter		
Back hoe bucket 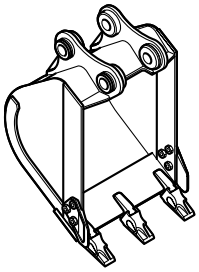	0.09 (0.11)	450 (17.7˝)	370 (14.5˝)	3	83 (182)
	0.12 (0.16)	550 (21.6˝)	470 (18.5˝)	4	96 (210)
	0.13 (0.17)*1	600 (23.6˝)	520 (20.4˝)	4	100 (220)
	0.14 (0.18)*2	650 (25.3˝)	570 (22.4˝)	4	104 (230)
	0.16 (0.20)	700 (27.5˝)	620 (24.4˝)	4	107 (235)
	0.18 (0.24)	750 (29.5˝)	670 (26.3˝)	5	117 (258)

Note) :

Marked *1 shows standard bucket of SK40SR-2.

Marked *2 shows standard bucket of SK45SR-2.

8. MACHINE LIFTING PROCEDURE

https://truckmanualshop.com

■ LIFTING PROCEDURES FOR THE MACHINE COMPLETE

WARNING

- **The wire ropes to be used for lifting the machine should have sufficient strength against the machine weight.**
- **Improper lifting method and/or rope rigging manner might cause for a movement or slip of the machine while it is being lifted, resulting serious injury or damages to the machine.**
- **Do not impose a load suddenly on the wire ropes and slings.**
- **When the lifting work is carried out in cooperation with multiple persons, make sure to check every situation by exchanging signals with each other.**
- **During the lifting work, keep any persons away from the lifted machine, especially under the machine**

Carry out the lifting work on a level ground.

[1] Manipulate each operating lever to take the machine to a position as shown in the figure.

[2] Operate the boom swing lever to face the boom directly in front, and raise the dozer blade.

[3] Stop the engine, and set the safety lock lever to "LOCKED" position. Then get off the machine after ensuring for no abnormalities around the operator's seat.

[4] Install shackles to both bores (C) provided at both ends of the dozer blade, and put the wire ropes on them.

[5] Put the wire ropes on the (D) portion of the boom.

[6] If any portions of the wire ropes directly touch the machine when the wire ropes are lifted, protect the machine from damage by means of applying a wooden piece or rag between them.

[7] Slightly lift the machine to confirm the balance, then lift up the machine.

MACHINE MODEL	WEIGHT
SK40SR-2	4,060 kg (8,950 lb)
SK45SR-2	4,630 kg (10,210 lb)

● SK40SR-2

ITEM	SIZE	Q'TY
CABLE (A)	Ø 1˝ X 2,700 mm	1
CABLE (B)	Ø 1˝ X 5,100 mm	2

● SK45SR-2

ITEM	SIZE	Q'TY
CABLE (A)	Ø 1˝ X 2,600 mm	1
CABLE (B)	Ø 1˝ X 5,100 mm	2

Model SK40SR-2

Weight : 4,060 kg (8,950 lb)

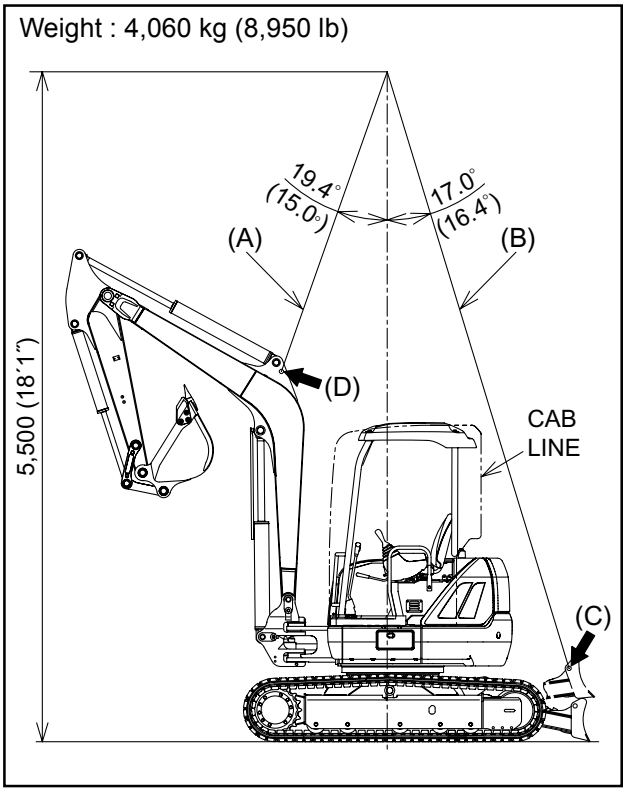

Note : This figure is calculated with Japanese standard bucket.
Bucket weight : 100 kg (220 lb)

https://truckmanualshub.com/

Weight : 4,630 kg
(10,210 lb)

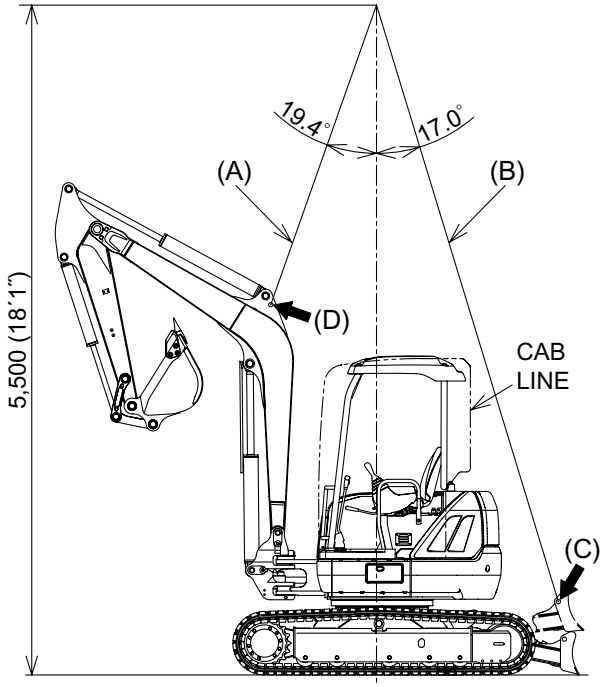

Note : This figure is calculated with Japanese standard bucket.
Bucket weight : 104 kg (230 lb)

Weight : 4,630 kg
(10,210 lb)

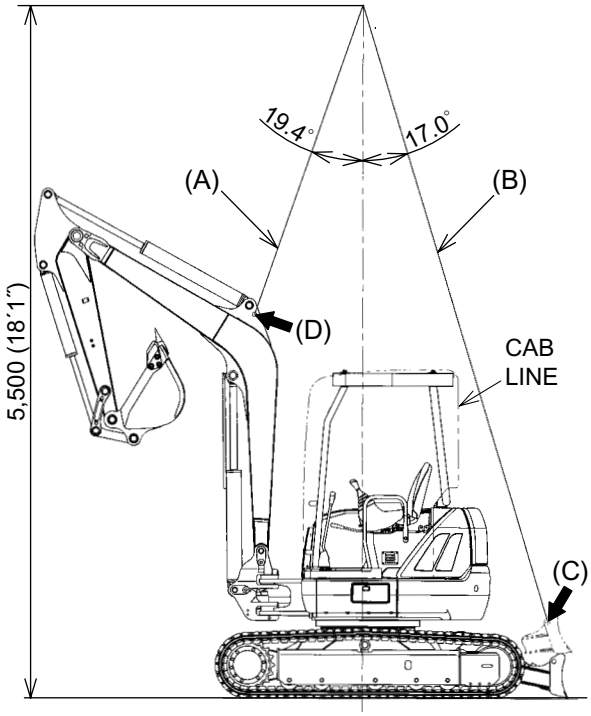

Note : This figure is calculated with Japanese standard bucket.
Bucket weight : 104 kg (230 lb)

9. WORKING RANGES

SK40SR-2

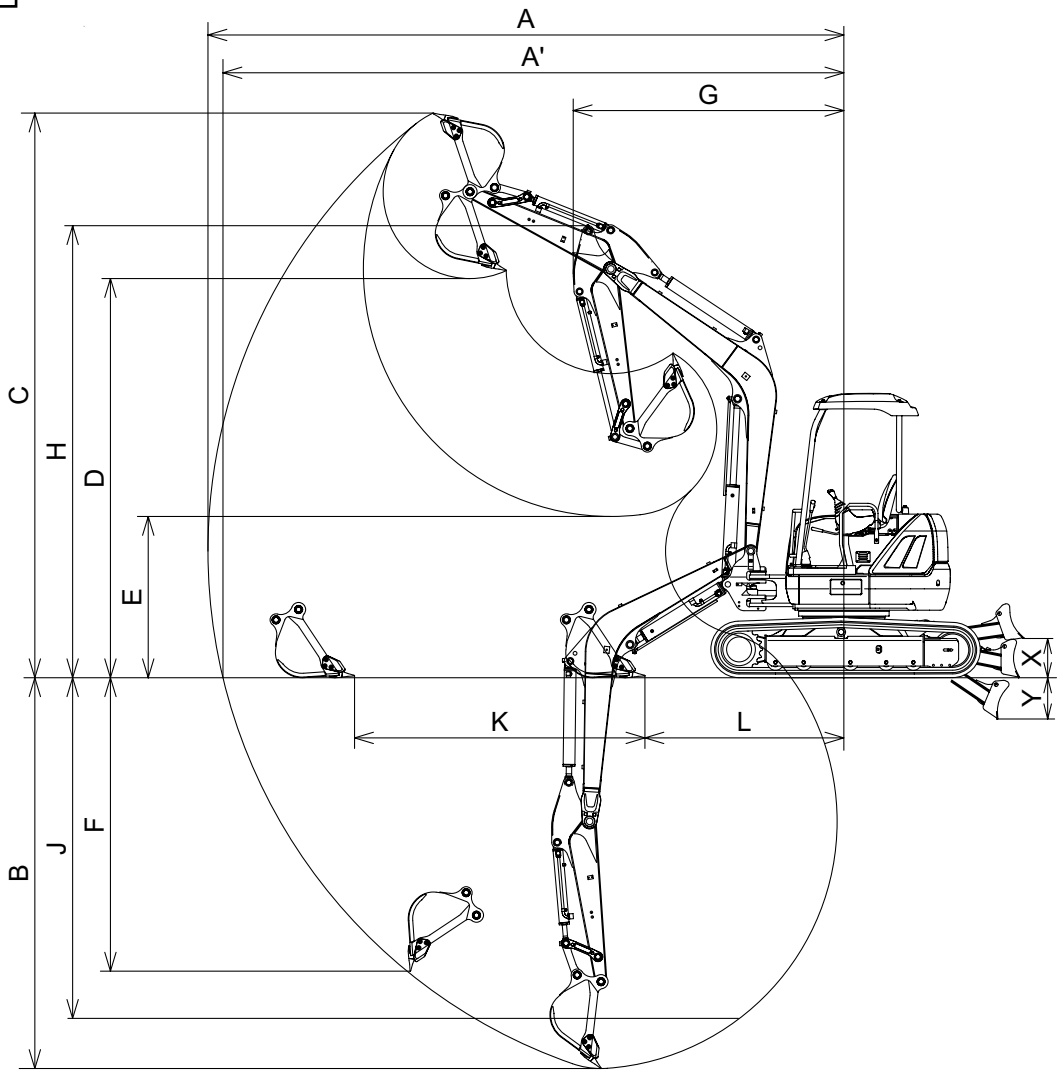

Unit : mm (ft-in)

Model			SK40SR-2	
Item	Attachment	Arm	Standard Arm 1.36 m (4´-6˝)	Long Arm 1.66 m (5´-5˝)
		Bucket	0.13 m³ (0.17 cu·yd)	0.13 m³ (0.17 cu·yd)
A	Max. digging reach		5,560 (18´-3˝)	5,840 (19´-2˝)
A'	Max. digging reach at ground level		5,410 (17´-9˝)	5,700 (18´-8˝)
B	Max. digging depth		3,400 (11´-2˝)	3,670 (12´-0˝)
C	Max. digging height		5,480 (18´-0˝)	5,690 (18´-8˝)
D	Max. dumping clearance		3,900 (12´-10˝)	4,100 (13´-5˝)
E	Min. dumping clearance		1,610 (5´-3˝)	1,320 (4´-4˝)
F	Max. vertical wall digging depth		2,570 (8´-5˝)	2,870 (9´-5˝)
G	Min. front slew radius		1,990 (6´-6˝)	2,100 (6´-11˝)
H	Height at min. slew radius		4,180 (13´-9˝)	4,190 (13´-9˝)
J	8-feet level digging depth		2,920 (9´-7˝)	3,270 (10´-9˝)
K	Horizontal digging stroke at ground level	Stroke	2,420 (7´-11˝)	2,840 (9´-4˝)
L		Minimum	1,790 (5´-10˝)	1,650 (5´-5˝)
X	Dozer strokes	Above	360 (1´-2˝)	360 (1´-2˝)
Y		Below	320 (1´-1˝)	320 (1´-1˝)

Note : This table is calculated with Japanese standard bucket.

https://truckmanualshub.com/

SK45SR-2

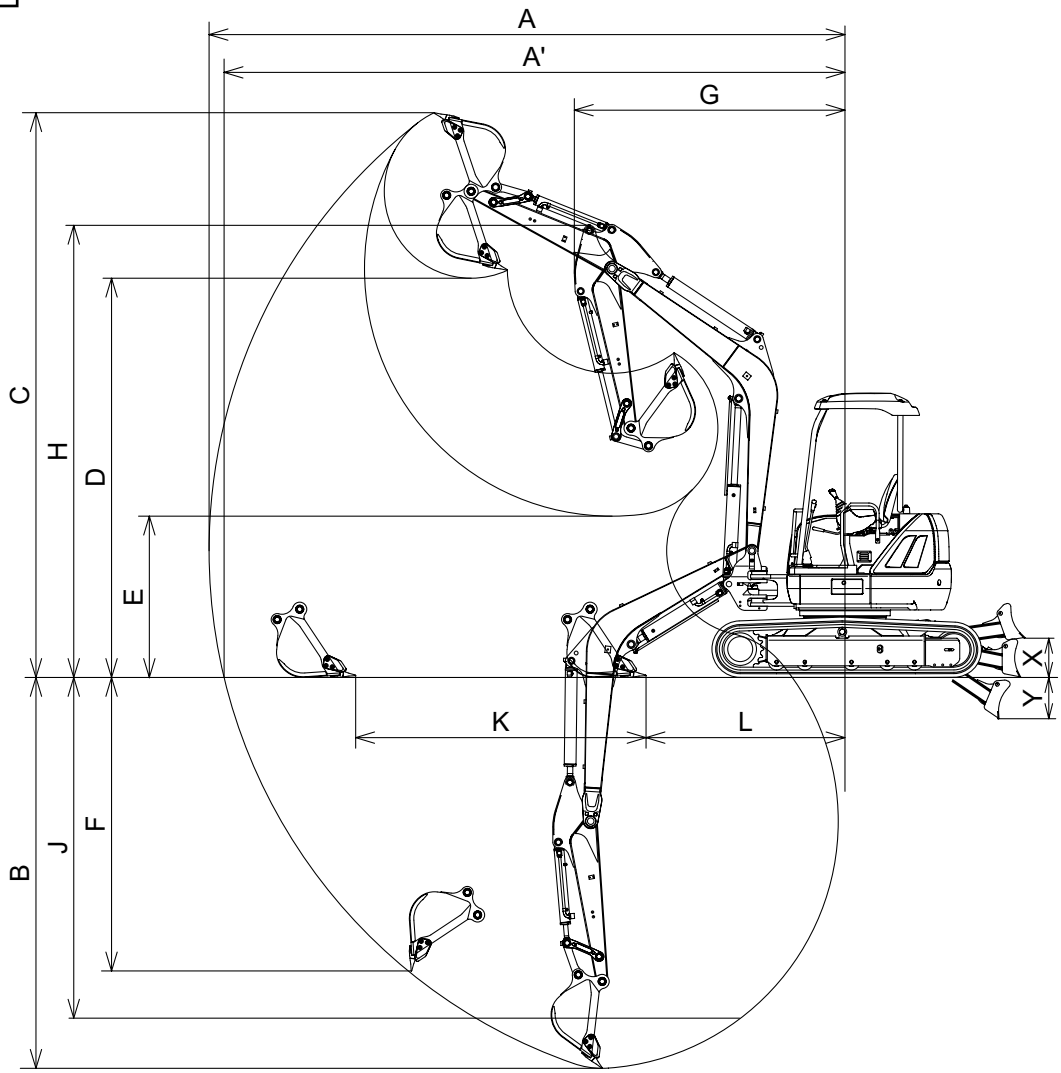

Unit : mm (ft-in)

Model			SK45SR-2	
Item	Attachment	Arm	Standard Arm 1.48 m (4´-10˝)	Long Arm 1.78 m (5´-10˝)
		Bucket	0.14 m³ (0.18 cu·yd)	0.14 m³ (0.18 cu·yd)
A	Max. digging reach		5,860 (19´-3˝)	6,150 (20´-2˝)
A'	Max. digging reach at ground level		5,720 (18´-9˝)	6,010 (19´-9˝)
B	Max. digging depth		3,600 (11´-10˝)	3,900 (12´-10˝)
C	Max. digging height		5,200 (17´-1˝)	5,380 (17´-8˝)
D	Max. dumping clearance		3,680 (12´-1˝)	3,850 (12´-8˝)
E	Min. dumping clearance		1,490 (4´-11˝)	1,190 (3´-11˝)
F	Max. vertical wall digging depth		2,700 (8´-10˝)	3,030 (9´-11˝)
G	Min. front slew radius		2,490 (8´-2˝)	2,500 (8´-2˝)
H	Height at min. slew radius		4,160 (13´-8˝)	4,170 (13´-8˝)
J	8-feet level digging depth		3,140 (10´-4˝)	3,480 (11´-5˝)
K	Horizontal digging stroke at ground level	Stroke	2,680 (8´-10˝)	3,120 (10´-3˝)
L		Minimum	1,830 (6´-0˝)	1,680 (5´-6˝)
X	Dozer strokes	Above	360 (1´-2˝)	360 (1´-2˝)
Y		Below	380 (1´-3˝)	380 (1´-3˝)

Note : This table is calculated with Japanese standard bucket.

This fugure is drawn according to EU specification

10. LIFTING CAPACITIES

https://truckmanualshub.com/

SK40SR-2

(1) Conditions of calculation

1) The lifting load shows the lower value either 87% of lifting capacity by hydraulic pressure, or 75% of tipping load.
2) The load point is on the bucket lift point, and the bucket cylinder is extended (bucket IN).
3) Weight of hooks, slings, and all other lifting equipment shall be considered a part of the load.
4) The values in the upper rows show the lifting capacity at a machine facing sideways, and values in the lower rows show a machine facing longitudinally.
5) Unit : ton,
   Crawler : 400mm (16 in), Rubber crawler shoe.
6) Set hydraulic pressure 230 kgf / cm^2 (3270 psi)

(2) Lifting conditions (With Japanese standard bucket.)

Machine : SK40SR-2
Arm length : 1.36m (4´6²)
Bucket weight 100 kg (220 lb)
Bucket capacity : 0.13m^3
(0.17 cu·yd)
Dozer blade : Up position

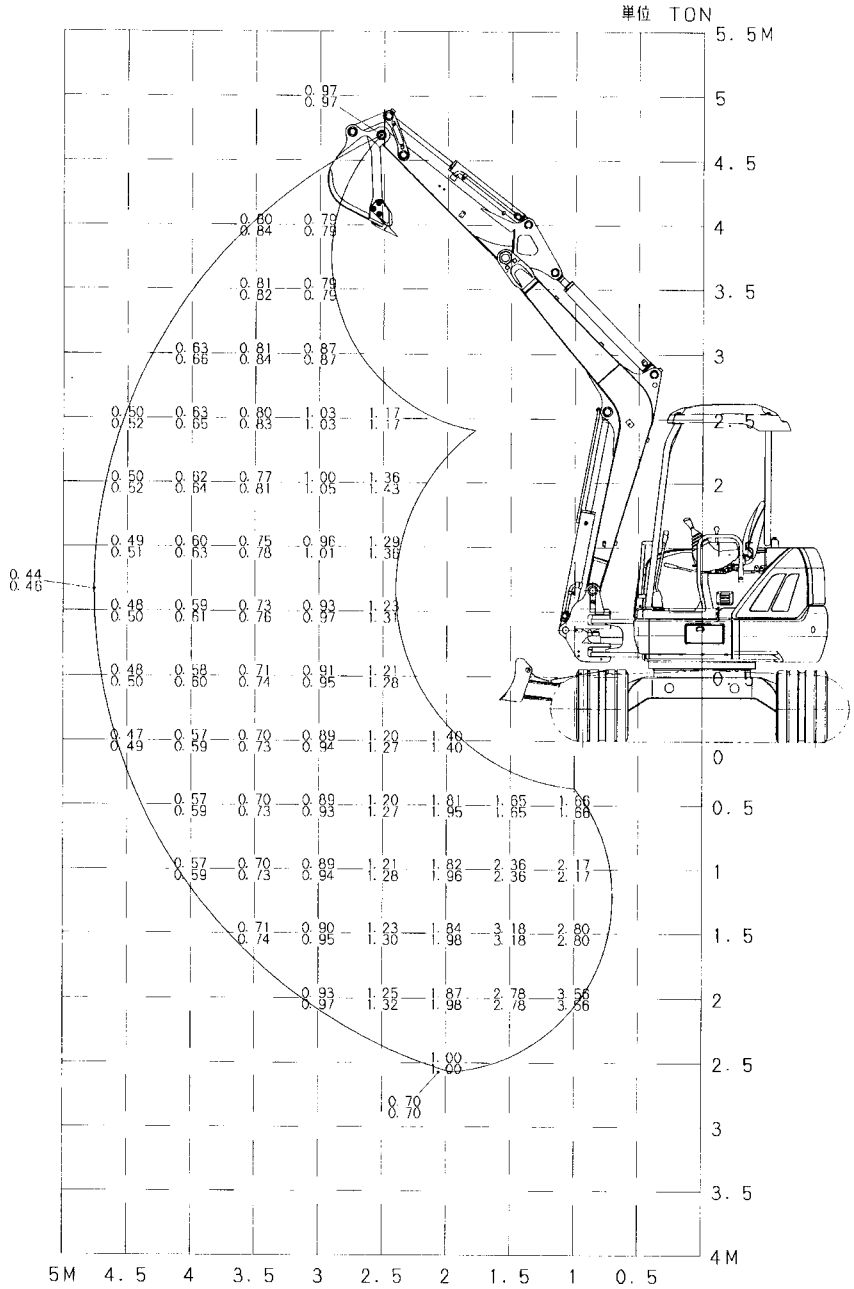

https://truckmanualshub.com/

SK45SR-2

(1) Conditions of calculation

1) The lifting load shows the lower value either 87% of lifting capacity by hydraulic pressure, or 75% of tipping load.
2) The load point is on the bucket lift point, and the bucket cylinder is extended (bucket IN).
3) Weight of hooks, slings, and all other lifting equipment shall be considered a part of the load.
4) The values in the upper rows show the lifting capacity at a machine facing sideways, and values in the lower rows show a machine facing longitudinally.
5) Unit : ton,
   Crawler : 400mm (16 in), Rubber crawler shoe.
6) Set hydraulic pressure 230 kgf / cm² (3270 psi)

(2) Lifting conditions (With Japanese standard bucket.)

Machine : SK45SR-2
Arm length : 1.48m (4´10²)
Bucket weight 104 kg (230 lb)
Bucket capacity : 0.14m³
(0.18 cu·yd)
Dozer blade : Up position

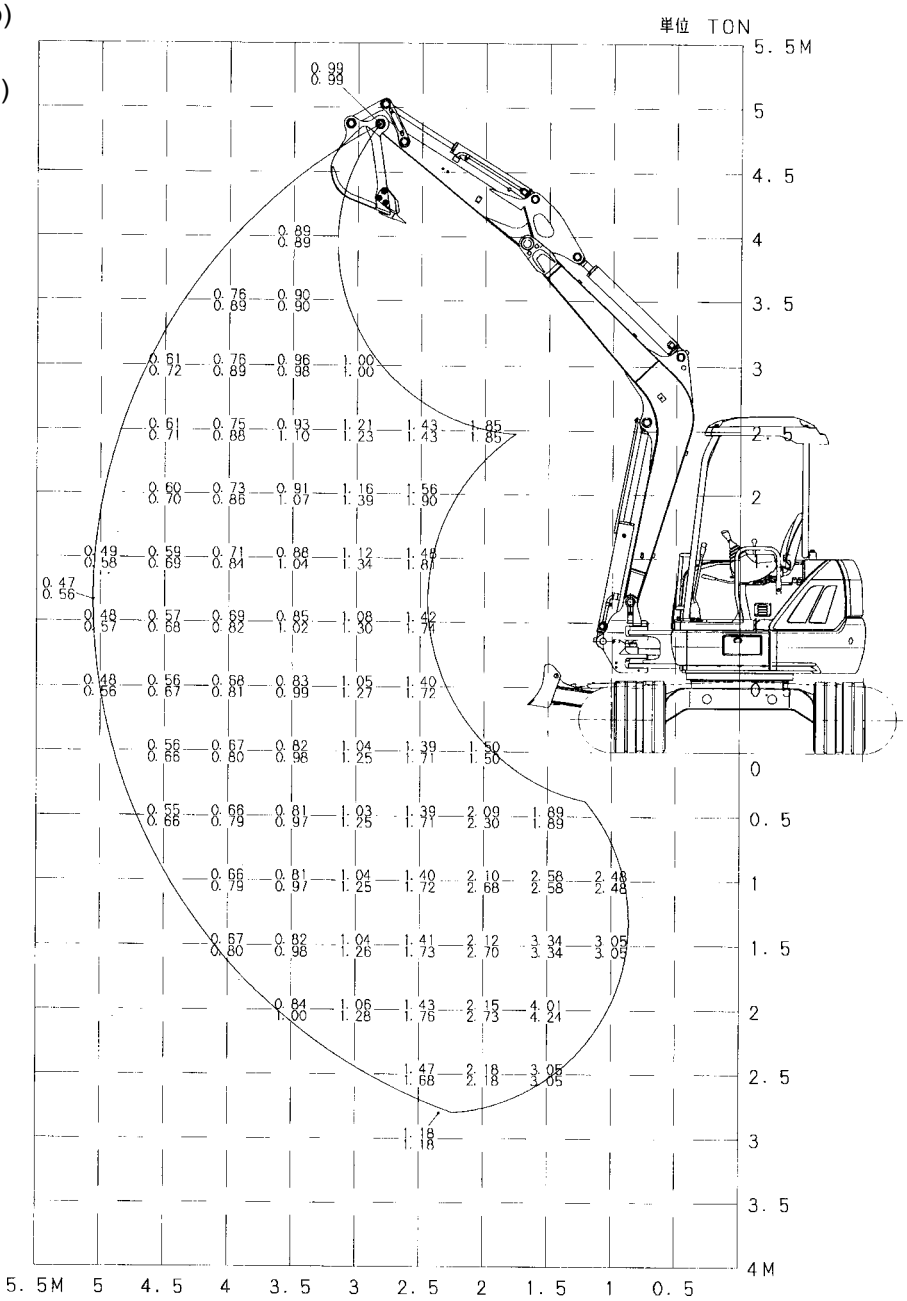

https://truckmanualshop.com

11. ENGINE SPECIFICATIONS

11.1 SPECIFICATIONS

SK40SR-2

Model		SK40SR-2	
Applicable machine		PH03-02001~	
Engine Model		[4TNE84] 4TNE84-EYB	
Type		Vertical, 4-cycle water-cooled diesel engine	
No. of cylinders - BoreXStroke	mmXmm	4−ø84 X 90	
Total displacement	L	1.99	
Compression ratio		18	
Rated output	kW/min^{-1} {PS/rpm}	22.8 / 2,100 {31 / 2,100}	
Maximum torque	$N{\cdot}m/min^{-1}$ {kgf·m/rpm}	117.6~130.3 / 1,400 {12.0 ~ 13.3 / 1,400}	
Low idling	min^{-1} {rpm}	1,075 ± 25 {1,075 ± 25}	
High idling	min^{-1} {rpm}	2,290 ± 25 {2,290 ± 25}	
Fuel consumption rate	g/kW·h {g/PS·h}	238 {175} or less	
Allowable tilting angles		Back and forth, left and right 25° (momentary 30°)	
Rotating direction		Counterclockwise as seen from flywheel side	
Firing order		1−3−4−2	
Fuel injection timing (b.T.D.C.)	degree (°)	[12 ± 1] 10 ± 1	
Fuel injection pressure	MPa {kgf/cm^2}	19.6^{+1}_{0} {200^{+10}_{0}}	
Valve action	degree (°)	Open	Close
	Intake valve	b.T.D.C 15 ± 5	a.B.D.C 45 ± 5
	Exhaust valve	b.T.D.C 56 ± 5	a.B.D.C 18 ± 5
Valve clearance	Intake valve	0.2 mm (0.008 in) in cold condition	
	Exhaust valve	0.2 mm (0.008 in) in cold condition	
Thermostat action Start/ Full open	°C	71 ± 1.5 / 85	
Compression pressure	MPa {kgf/cm^2} at min^{-1} {rpm}	3.2 ± 0.1 {33 ± 1} 250	
Lubrication oil pressure	MPa {kgf/cm^2} at min^{-1} {rpm}	$0.37^{+0.1}_{-0.05}$ {$3.8^{+1.0}_{-0.5}$} 2,100	
Dimensions L X W X H	mm	700 X 500 X 630	
Dry weight	kg	180	
Governor		Mechanical centrifugal governor (All speed type)	
Fuel filtration		Full flow,Paper filter	
Lubrication system		Forced lubrication with trochoid pump	
Engine oil filtration		Full flow,Paper filter cartridge	
Cooling system		Liquid cooling / Radiator, Plastic 6 bladed,OD : ø335 (Discharge type) Crank pully / Fan Pully : ø120 / ø110	
Starter capacity	V X kW	12 X 2.0	
Generator capacity (Dynamo)	V X A	12 X 40	
Starting aid		Air heater (pre-heat : 15 sec)	
Cooling water capacity : Max / Engine	L	2.7	
Engine oil volume : Max / Effective	L	5.8 / 2.3	

Note) ● The model name & value in [ ] are for the earlier ones before the improvement / change.

https://truckmanualshub.com/

SK45SR-2

Model		SK45SR-2	
Applicable machine		PJ02-00101~	
Engine Model		[4TNE88-NYBB (EU), 4TNE88-EYBD (KAI)] 4TNE88-EYBC	
Type		Vertical, 4-cycle water-cooled diesel engine	
No. of cylinders - BoreXStroke mmXmm		4−ø88 X 90	
Total displacement L		2.18	
Compression ratio		18	
Rated output kW/min^{-1} {PS/rpm}		27.2 / 2,200 {37 / 2,200}	
Maximum torque N·m/min^{-1} {kgf·m/rpm}		135.2~147.1 / 1,400 {13.8 ~ 15.0 / 1,400}	
Low idling min^{-1} {rpm}		1,075 ± 25 {1,075 ± 25}	
High idling min^{-1} {rpm}		2,400 ± 25 {2,400 ± 25}	
Fuel consumption rate g/kW·h {g/PS·h}		238 {175} or less	
Allowable tilting angles		Back and forth, left and right 25° (momentary 30°)	
Rotating direction		Counterclockwise as seen from flywheel side	
Firing order		1−3−4−2	
Fuel injection timing (b.T.D.C.) degree (°)		[12 ± 1] 10 ± 1	
Fuel injection pressure MPa {kgf/cm^2}		19.6^{+1}_{0} {200^{+10}_{0}}	
Valve action degree (°)		Open	Close
	Intake valve	b.T.D.C 15 ± 5	a.B.D.C 45 ± 5
	Exhaust valve	b.T.D.C 56 ± 5	a.B.D.C 18 ± 5
Valve clearance	Intake valve	0.2 mm (0.008 in) in cold condition	
	Exhaust valve	0.2 mm (0.008 in) in cold condition	
Thermostat action Start/ Full open °C		71 ± 1.5 / 85	
Compression pressure MPa {kgf/cm^2} at min^{-1} {rpm}		3.4 ± 0.1 {35 ± 1} 250	
Lubrication oil pressure MPa {kgf/cm^2} at min^{-1} {rpm}		$0.37^{+0.1}_{-0.05}$ {$3.8^{+1.0}_{-0.5}$} 2,200	
Dimensions L X W X H mm		700 X 500 X 630	
Dry weight kg		180	
Governor		Mechanical centrifugal governor (All speed type)	
Fuel filtration		Full flow,Paper filter	
Lubrication system		Forced lubrication with trochoid pump	
Engine oil filtration		Full flow,Paper filter cartridge	
Cooling system		Liquid cooling / Radiator, Plastic 6 bladed,OD : ø335 (Discharge type) Crank pully / Fan Pully : ø120 / ø96	
Starter capacity V X kW		12 X 2.0	
Generator capacity (Dynamo) V X A		12 X 40	
Starting aid		Air heater (pre-heat : 15 sec)	
Cooling water capacity : Max / Engine L		2.7	
Engine oil volume : Max / Effective L		5.8 / 2.3	

Note) ● The model names & value in [ ] are for the earlier ones before the improvement / change.

 https://truckmanualshub.com/

■ SK40SR-2

Model : [4TNE84] 4TNE84-EYB

Rated Output : 22.8 kW / 2,100 min^{-1} {31 PS / 2,100 rpm}

Note) ● The model name in [ ] is for the earlier one before the improvement / change.

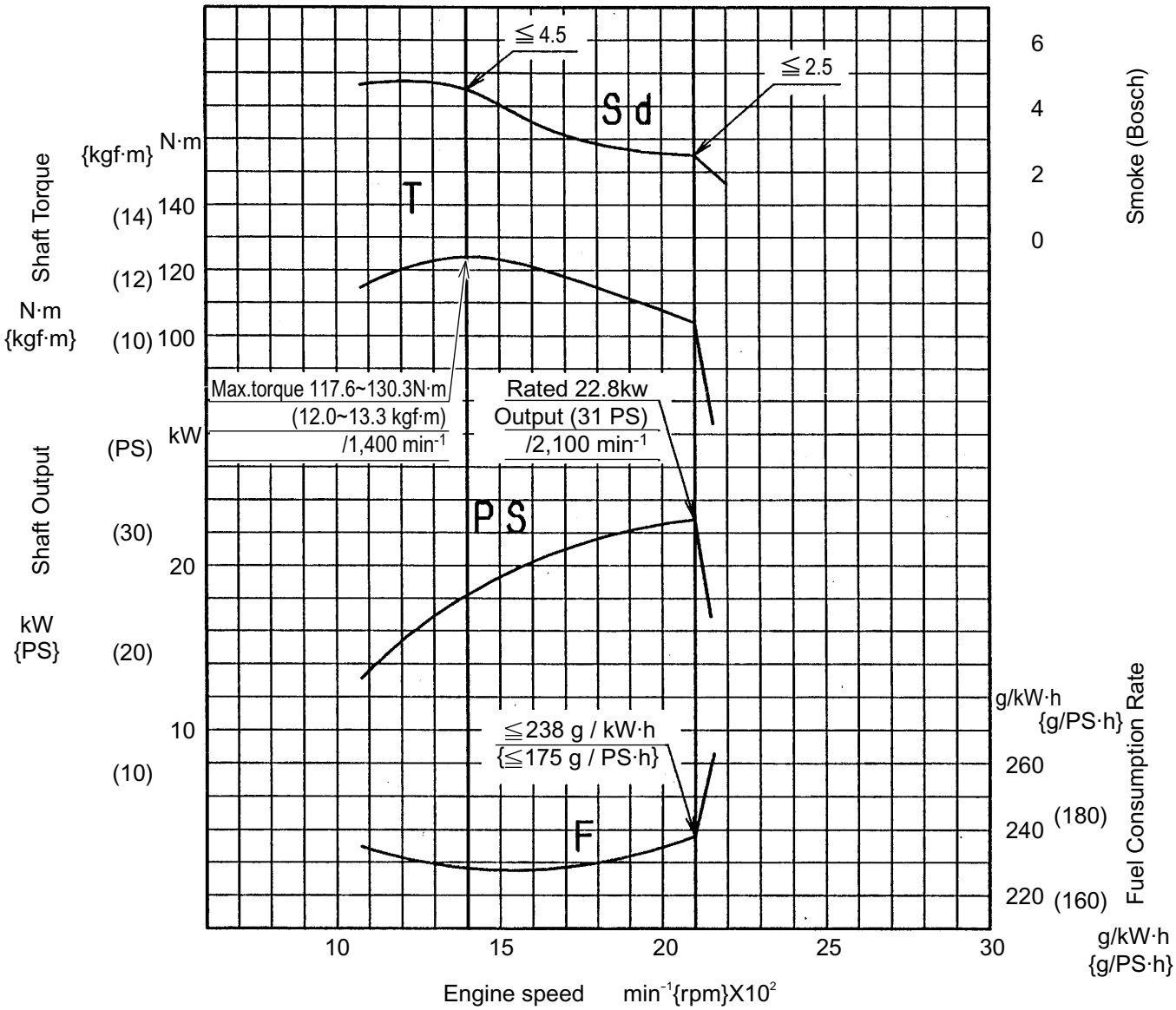

$$\text{Fuel consumption volume} = \frac{F}{\rho \times 1000} \times P \times \alpha$$

$$= \frac{238}{0.835 \times 1000} \times 22.8 \times \alpha$$

$$= 6.5\alpha$$

F : Fuel consumption rate (g/PS·h)
P : Shaft output (PS)
ρ : Speific gravity
α : Standard load factor (0.60~0.70)

Fuel consumption in normal operation;
3.9~4.55 ℓ/h (load factor : (0.60~0.70))

https://truckmanualshub.com/

■ SK45SR-2

Model : [4TNE88-NYBB (EU)]

[4TNE88-EYBD (KAI)] 4TNE88-EYBC

Rated Output : 27.7 kW / 2,200 min^{-1} {37 PS / 2,200 rpm}

Note) ● The model names in [ ] are for the earlier one before the improvement / change.

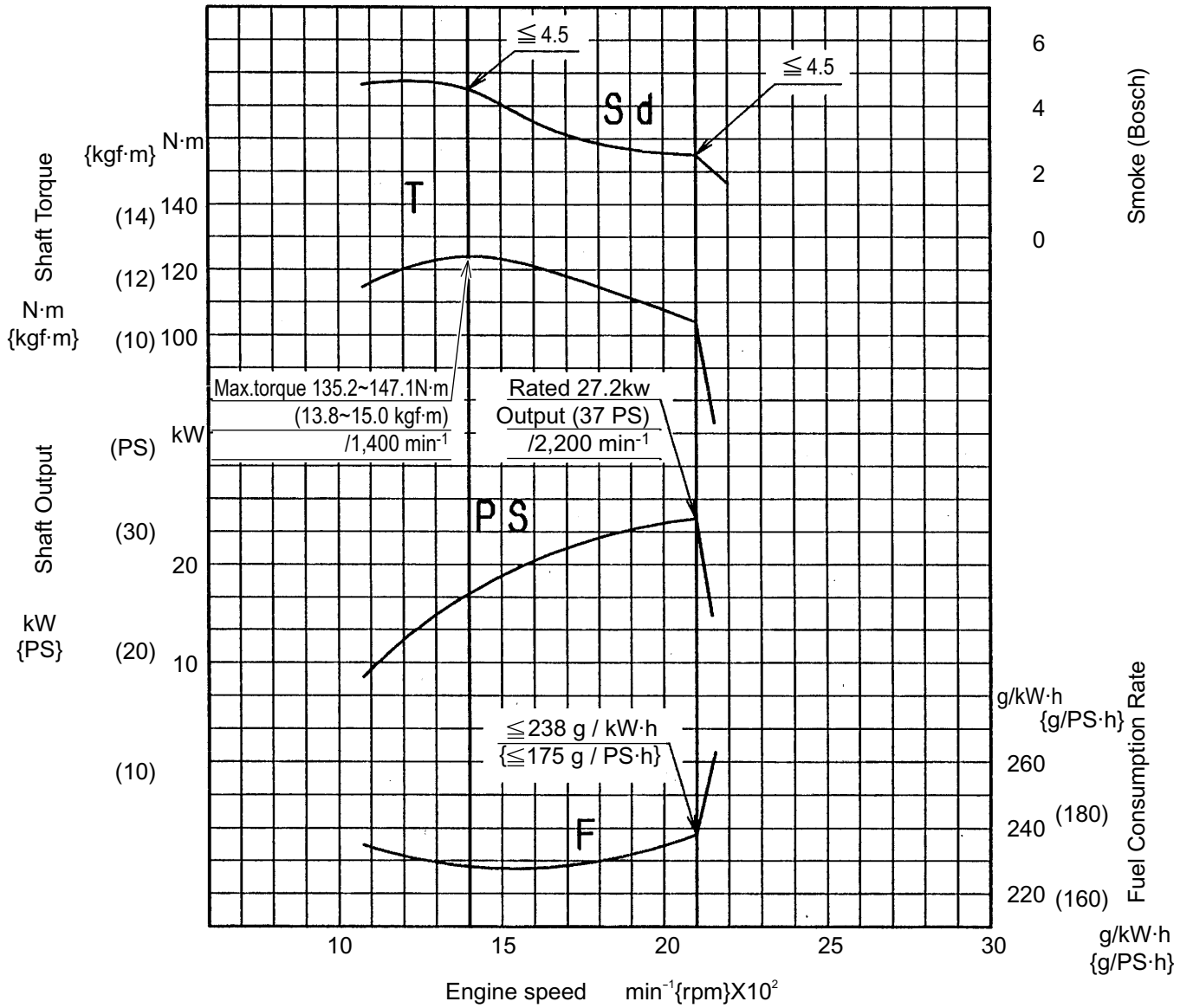

$$\text{Fuel consumption volume} = \frac{F}{\rho \times 1000} \times P \times \alpha$$

$$= \frac{238}{0.835 \times 1000} \times 27.2 \times \alpha$$

$$= 7.75\ \alpha$$

F : Fuel consumption rate (g/PS·h)
P : Shaft output (PS)
ρ : Speific gravity
α : Standard load factor (0.60~0.70)

Fuel consumption in normal operation;
4.65~5.43 ℓ/h (load factor : (0.60~0.70))

https://truckmanualshub.com/

NOTES

https://truckmanualshub.com/

Book Code No. S5PJ03 02E ②

NEW HOLLAND EH45

Model Cross-reference:
SK45SR-2 is NEW HOLLAND Model EH45

PJ03

ATTACHMENT DIMENSIONS

TABLE OF CONTENTS

1. BOOM
1.1 Boom dimensional drawings 1-1
1.2 Boom maintenance standards 1-2

2. ARM
2.1 Arm dimensional drawings 1-4
2.2 Arm maintenance standards 1-6

3. BUCKET
3.1 Bucket dimensional drawings 1-8
3.2 Detail dimensional drawings of lug section 1-9
3.3 Detail dimensional drawings of boss section 1-10

4. DOZER
4.1 Dozer dimensional drawings 1-11
4.2 Dozer maintenance standards 1-12

5. SWING.
5.1 Swing bracket dimensional drawings 1-13
5.2 Swing portion maintenance standards 1-14

https://truckmanualshub.com/

This as a preview PDF file from **best-manuals.com**

Best Manuals

Download full PDF manual at **best-manuals.com**