https://truckmanualshub.com/

CANYCOM

Off-road Rubber Track Dumper

S160

Operator's Manual

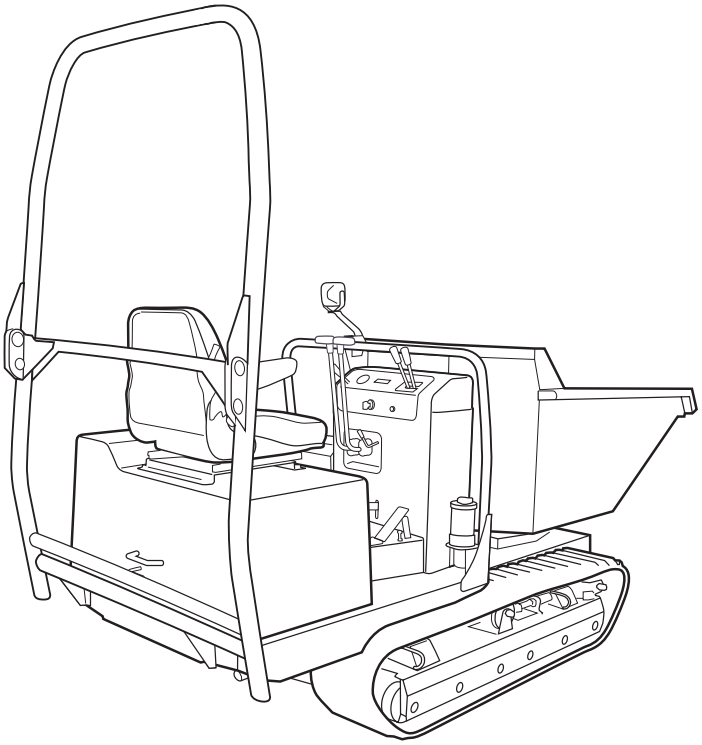

⚠WARNING!

Read this manual completely before operating or maintaining this machine. Failure to follow safety precautions could result in serious injury or death. Keep this manual for future reference by you and by all those who operate and maintain this machine.

3683 5106 002

CHIKUSUI CANYCOM, INC.
90-1 Fukumasu, Yoshii-machi,
Ukiha-shi, Fukuoka, Japan 839-1396
Tel.+81-(0)943-75-2195 Fax.+81-(0)943-75-4396

Downloaded from www.Manualslib.com manuals search engine

https://truckmanualshub.com/

CHIKUSUI CANYCOM, INC.

http://www.canycom.co.jp/

- Sales Headquarters TEL +81-(0)943-75-2195 FAX +81-(0)943-75-4396
- Foreign Trade Center TEL +81-(0)3-3552-6277 FAX +81-(0)3-3552-6288

Authorized Dealer

All rights reserved. Unauthorized use or reproduction of this material is prohibited.

Downloaded from www.Manualslib.com manuals search engine

https://truckmanualshub.com/

Notice to Users and Maintenance Personnel

Thank you for purchasing this machine.
This manual provides information needed for safe and effective use of this machine to those who operate or maintain the machine. Make sure to read and understand the manual thoroughly before operating this product. Also make sure to read the separate operator's manual for the engine.

⚠WARNING!

- **This machine can be very dangerous if the safety precautions in this manual and on the labels attached to this machine are not followed. Read and understand this manual and the safety labels on the machine thoroughly before using this machine. Always follow the instructions and safety precautions, or serious injury or death could result.**

- **This machine should only be used for its intended purpose: hauling and dumping. Any other use could be dangerous.**

- **This machine may not be operated on public road or what is considered to be public road. It is the sole responsibility of the operator to consult the local regulations.**

- **Do not modify this machine, or do not operate this machine with the safety covers removed or open. A serious accident could result.**

⚠CAUTION!

- **Store this manual in a safe, accessible place for easy reference.**

Downloaded from www.Manualslib.com manuals search engine

https://truckmanualshub.com/

Notice to Owner

⚠CAUTION!

- **Be sure that everyone who uses this machine, including those who rent or lease this machine, receives a copy of this Operator's Manual and understands the importance of reading and following the information in this manual.**

Warning Terms Used in this Manual

In this manual, the following four warning terms are used to signal the four levels of hazard (or seriousness of possible accidents). Read and understand what they mean and always follow the instructions in this manual.

Warning Term	Definition
⚠DANGER!	**Indicates an imminently hazardous situation which will result in death or serious injury if the user does not follow the procedures or the instructions.**
⚠WARNING!	**Indicates a potentially hazardous situation which could result in death or serious injury if the user does not follow the procedures or the instructions.**
⚠CAUTION!	**Indicates a potentially hazardous situation which could result in minor to moderate injury or damage to the machine if the user does not follow the procedures or the instructions.**
NOTE	**Indicates important information which needs particular attention.**

Downloaded from www.Manualslib.com manuals search engine

https://truckmanualshub.com/

Warranty and After-Sales Service

Warranty

Chikusui Canycom, Inc. provides you a warranty through Canycom U.S.A. A copy of this warranty is reproduced in the back of the manual.

After-Sales Service

Consult your local CANYCOM dealer or our company's sales department regarding service orders or any questions or problems that may arise when using this machine. Please make sure to have the product name, serial number, and the make and type of the engine handy at the time of contact. The model and serial number can be found on the model label as shown below, and the make and type of the engine can be found in Chapter5 "Specifications" of this manual (Page13).

Location of Model Label

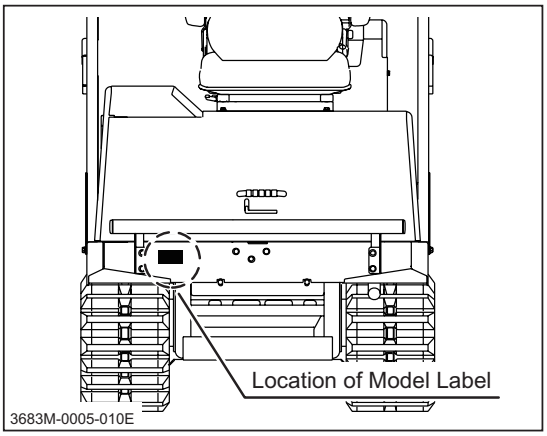

Model Label

Availability of Spare Parts

The replacement or repair parts for this product shall remain available for seven years after the production of this type of machine is discontinued.

Downloaded from www.Manualslib.com manuals search engine

https://truckmanualshub.com/

Contents

1. Safety 1

Safety Labels 1

Safety Precautions 3

Training 3
Preparation 4
Operation 4
Servicing 9

2. Controls and Components 10

Name and Function of Controls 10

3. Specifications 13

Product Specifications 13

Contents of the Tool Bag 14

4. Operation 15

Preparation 15

Pre-start up Inspection 15
Checking and Filling Fuel 15
Using ROPS (on ROPS Model) 16
Adjusting Seat 17
Using Seat Belt (on ROPS Model) 18

Downloaded from www.Manualslib.com manuals search engine

https://truckmanualshub.com/

Driving 19

Starting 19
Driving 24
Stopping 27
Parking 28

Working 29

Dumping and Turning Bucket 29
Using Safety Prop 31

5. Maintenance 32

Maintenance Schedule 32

List of Fluids and Lubricants 37

Greasing Points 37

List of Consumables and Spares 38

Removing and Installing Body Panels 39

Engine Compartment 39
Step and Control Box 40

Engine 41

Engine Oil 41
Oil Filter 42
Air Cleaner 43
Coolant 43
Fuel Filter 45

Downloaded from www.Manualslib.com manuals search engine

https://truckmanualshub.com/

Drive Train 46

Tracks 46
HST (Hydrostatic Transmission) Fluid 47
Transmission Oil 49
Drive Belts 51
Parking Brake 52
Greasing 53

Electrical System 54

Battery 54
Fuses 56

After Use Care 57

After Normal Use 57
After Cold Weather Use 57

Storage 58

6. Troubleshooting 59

Troubleshooting 59

7. Transporting 63

Hauling 63

Loading and Unloading 63

Hoisting and Towing 65

Downloaded from www.Manualslib.com manuals search engine

https://truckmanualshub.com/

Warranty

Warranty Certificate is attached at the end of this manual.

* Have the warranty certificate signed and sealed after you have received and fully understood the instructions for handling this machine and received the receipt.

Appendix

• Operator's Manual for the Engine

* Be sure to read and understand it together with this manual .

Downloaded from www.Manualslib.com manuals search engine

https://truckmanualshub.com/

Safety Labels

The safety labels shown on the next page are attached to the machine. See the illustration below for the location and the illustration on the next page for the content of each label on the machine.

- **Locate all the warning labels attached to this machine. Read and follow the instructions and precautions in them. Failure to do so could result in serious injury or death to the operator or bystanders.**

- **Keep the labels clean and legible. Do not use solvents or gasoline to clean the labels.**

- **Replace these labels immediately if they have been removed, have fallen off or become illegible. Use the part number, on the label or shown in this manual, to order a replacement label from your CANYCOM representative.**

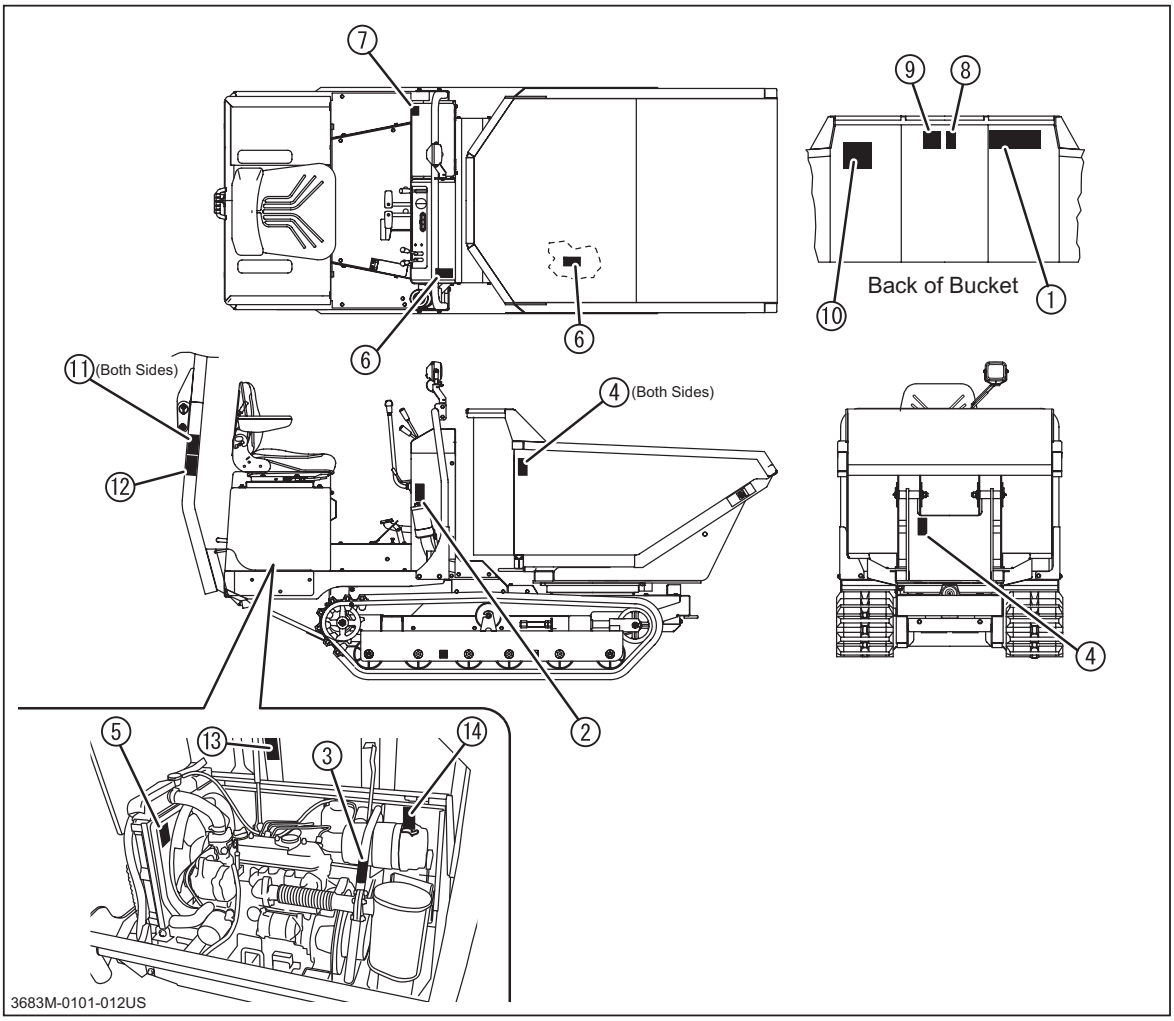

Downloaded from www.Manualslib.com manuals search engine

https://truckmanualshub.com/

① 3670 5143 000

CAUTION! Noise Hazard. Wear approved ear protection during operation.

WARNING! Read and FULLY understand the operator's manual before use or maintenance.

WARNING! Electric shock hazard. Keep away from electric power lines and utility poles.

WARNING! Moving fan blades can sever hand and fingers. Keep hands away to avoid injury.

WARNING! Moving belts can entangle hand and arm. Keep hands away to avoid injury.

DANGER! Power sources. Hydraulic and electric power sources are present. Lockout ALL energy sources before servicing.

3670 5143 000

② 3677 5042 001

DANGER! Flammable liquid present. Keep away all ignition sources.

3677 5042 001

③ 3677 5043 001

WARNING! Hot surfaces. Do NOT touch.

3677 5043 001

④ 3677 5044 001

WARNING! Impact hazard. Keep away from the machine in operation. The machine or its equipment may move suddenly.

3677 5044 001

⑤ 3677 5045 001

WARNING! Hot liquids. Burn hazard. Do NOT open the radiator cap after operating this machine.

3677 5045 001

⑥ 3677 5046 001

DANGER! Crush hazard. To prevent death or serious injury, do NOT place any part of your body under the loading deck.

3677 5046 001

⑦ 3677 5047 001

WARNING! Hazardous voltage. Use of unapproved test probes or conductive objects is strictly prohibited. See operation manual.

3677 5047 001

⑧ 3677 5048 001

WARNING! Upset hazard. To avoid serious injury or death, do NOT rotate and dump on an incline.

3677 5048 001

⑨ 3670 5141 000

WARNING! Accelarate or decelerate slowly. Sudden starts, stops, or turns can cause tip-over. Avoid running over obstacles.

WARNING! Never operate on a slope steeper than 25 degrees. Observe load limit when operating on a slope below that angle.

3670 5141 000

⑩ 3667 5073 000

Vorsicht! ATTENTION CAUTION

Beim Anschluß der Batterieploklemmen sicherstellen, da das Massekabel mit dem (-) Minuspol der Batterie, und das Pluskabel mit dem (+) Pluspol der Batterie verbunden werden.

S'assurer que lors de la connexion du câble d'accélérateur, les bornes (+) et (-)soient bien connectées aux bornes (+) et (-) de la batterie. Des mauvais branchements peuvent causer, lors de la mise en route du moteur, des dommages au système électrique entraînant le feu ou une explosion.

Make sure that when connecting Booster Cables that positive (+) goes to positive (+) and negative (-)goes to negative (-) terminals on the batteries. Insecure leads may cause difficulty in starting engine, damage of electrical system possibly resulting in a fire or explosion.

Zu lockere Kabelverbindungen können Startprobleme oder Schäden im Elektriksystem nach sich ziehen, die im Extremfall zu Kabelbränden oder zur Explosion der Batterie führen könnten.

Toujours connecter en premier le câble (+) et le déconnecter en dernier.Un mauvais branchement peut entraîner des dommages au systéme électrique.

Always connect the positive (+) cable first and disconnect last. Misconnection of the terminal may result in damage of electrical system.

Immer das (+) Pluskabel zuerst anschließen, und zuletzt abklemmen. Eine Verwechslung der Pole kann zu Schäden der Elektrik führen. Beim Anschluß das (+) Pluskabel oder den (+) Pluspol niemals mit Metallteilen oder dem (-) Minuspol in Kontakt bringen, Kurzschlußgefahr!

Lors de la connexion du câble d'accélérateur (+), ne pas le fait entrer en contact avec le câble (-) ou toute autre partie métallique.

When connecting Booster Cables do not allow the positive (+) terminal of the Booster Cables to come into contact with negative (-) terminal or Booster Cable or any other metal parts.

3667 5073 000

⑪ 3677 5055 000

DANGER! Crush Hazard

Keep hands away from ROPS joint. Shearing action of ROPS can cause serious injury or death.

3677 5055 000

⑫ 3677 5056 000

WARNING! The protection offered by this ROPS will be impaired if it has been altered, damaged, or has been involved in an overturn. Inspect ROPS, seatbelts, and their attaching components daily for cracks, deformations, or other unsafe conditions. Seatbelts must be worn while operating vehicle. Failure to properly use and maintain ROPS, seatbelts, and their attaching components may result in severe injury or death to the operator or a bystander.

3677 5056 000

⑬ 3683 5026 001

WARNING! Moving fan blades can sever hand and fingers. Keep hands away to avoid injury.

3683 5026 001

⑭ 3683 5025 001

WARNING! Moving belt can entangle hands and arms. Keep hands away to avoid injury.

3683 5025 001

3683M-0101-022US

Downloaded from www.Manualslib.com manuals search engine

https://truckmanualshub.com/

Safety Precautions

This section contains safety precautions to follow when operating and maintaining the machine. Read and understand the precautions in this section as well as throughout this manual and follow them when operating or maintaining the machine. Failure to follow safety precautions could result in property damage, serious injury or death to the operator or bystanders.

Training

All operators and mechanics should receive practical instructions from their employer or renter. Such instructions should cover the following issues:

- **It is essential to familiarize yourself with the controls, safety labels and the proper use of the machine.**

- **Never allow people unfamiliar with these instructions to operate or service the machine. Do not let anyone under 18 years of age to operate this machine. Local regulations may restrict the minimum age for operating the machine. Consult your local authority.**

- **The operator is responsible for the accidents or hazards caused to other people or their property.**

- **This machine has a riding capacity for one person only. Do not carry passengers other than the operator.**

- **Always keep in mind that care and concentration is required when working with ride-on machines.**

- **Loss of control on a slope cannot be regained by the application of the brake. The main reasons for loss of control are:**

→ insufficient grip of tracks.
→ excessive speed.
→ misjudging of the ground conditions, especially slopes.
→ excessive load.
→ incorrect distribution of load.

Downloaded from www.Manualslib.com manuals search engine

https://truckmanualshub.com/

Preparation

⚠WARNING!

- **Fuel is highly flammable. See Checking and Filling Fuel, page 15, for important safety information on handling fuel.**

- **Always wear protective footwear, long trousers, hardhat, safety glasses and ear protection when operating or servicing the machine. Proper clothing will minimize the chance of injury. Do not operate the equipment if you have long hair, loose clothing, or jewelry; all of which may get tangled in moving parts. Do not operate the machine barefoot or with open sandals.**

- **Prepare beforehand the working rules and procedures such as signaling and trafic control for the work place. Following such rules will reduce the risk of accidents.**

- **Never handle fuel or grease, service the engine, or recharge the battery in the presence of fire or spark.**

- **Perform the daily pre-startup inspection (see Preparation, pages 15-18) before starting the machine. Repair or replace damaged parts before starting the machine.**

Operation

This machine is intended for carrying sand and dirt. Carrying other materials may damage the machine. Avoid carrying liquid concrete. That will damage the machine.

The stability of the machine is affected by the speed, rate of steering, terrain and the load. Always pay close attention to these factors or a loss of control or tip over could occur, resulting in property damage, serious injury or death.

General Driving

- **Do not operate the engine in a confined space where dangerous carbon monoxide fumes can accumulate.**

- **Do not touch the engine, muffler or exhaust pipe while the engine is running or soon after it has stopped. These areas will be very hot and can cause burns.**

Downloaded from www.Manualslib.com manuals search engine

https://truckmanualshub.com/

- Do not operate the machine under the influence of alcohol or drugs.
- Always check for obstacles before operating on new terrain.
- Before starting the engine and moving the machine, scan around your surroundings and make sure all persons and other vehicles are a safe distance away from the machine. Sound the horn to warn bystanders.
- On the machine equipped with the optional ROPS, always keep the ROPS in the extended position when in use. Fold the ROPS only when it is absolutely necessary to do so when transporting the machine.
- On the machine equipped with the ROPS, always wear the seat belt when in use.
- Always stay seated in the operator's seat when driving the machine. Never operate the steering lever off of the machine.
- On a slippery surface, travel slowly and exercise caution to reduce the chance of skidding or sliding out of control. Never operate on ice.
- Always make certain that there is no obstacle or a person behind the machine when backing up. After confirming that it is safe to back up, move slowly and avoid sharp turns.
- To reduce the risk of tip over, pay special attention when encountering an obstacle or a slope, or when braking on a slope or during a turn. See Driving on a Slope on the next page.
- Never attempt to drive over a large obstacle such as rock or fallen tree.
- Always travel slowly and use extra caution when operating on unfamiliar terrain. Be alert when traveling on changing terrain.
- Never operate on terrain that you are not comfortable with. Avoid terrain that is so rough, slippery or loose that you feel like you could tip over.
- Do not operate the machine near the edge of a cliff, an overhang or a slide area.

Downloaded from www.Manualslib.com manuals search engine

https://truckmanualshub.com/

- Do not make sudden maneuvers. A sudden start, stop, or turn can make the machine lose control and could cause a tip over. Be especially cautious when traveling on soft or wet ground.

- Drive at a safe speed, taking into account the surface gradient, surface conditions and load.

- Use an observer to help direct the machine when the visibility is poor, terrain is rugged or hilly, or maneuvering room is limited. The observer should be able to see the machine and its immediate surroundings, and should give pre-arranged signals to direct the operator.

Driving on a Slope

⚠WARNING!

- Never use on a slope steeper than 20 degrees.

- Driving on a slope can be dangerous. It can result in a tip over and cause serious injury or death. Take the following precautions.

- Always follow proper procedures for driving on a slope as described in this manual.

- Driving on a slope in a wrong manner can cause a loss of control or a vehicle tip over. Check the terrain carefully before attempting to drive on a slope.

- Never drive on a slope that you are not comfortable with. Avoid a slope that is so rough, slippery, or loose that you feel like you could tip over.

- When driving up a slope, proceed at a steady rate of speed and throttle position.

- Never move the throttle lever or the control stick suddenly.

- If the engine stalls or loses traction during a climb and cannot make it to the top of the slope, do not try to turn the machine around. Carefully back down slowly, straight down the slope.

Downloaded from www.Manualslib.com manuals search engine

https://truckmanualshub.com/

- Drive straight up or down slopes. Avoid turning on a slope.

- When going over the top of a slope, go slow; an obstacle, a sharp drop, or another vehicle or person could be on the other side of the crest.

- Avoid driving the machine across a slope.

- Without a load, drive the machine backwards up a slope (operator's seat toward the top) when climbing, and drive it forward when going down a slope.

- With a load, drive the machine forward up a slope (operator's seat away from the top) when climbing, and drive it backwards when going down a slope. Be especially cautious when operating on a slope with a load.

- When driving down a slope, use the steering levers so that the machine travels down at the minimum speed. Use the engine speed to help keep the machine speed low.

Loading and Driving with a Load

- The maximum payload for this machine is 15.7kN (3527lbs). Do not exceed this maximum payload under any circumstance.

- Do not operate on a slope steeper than 20 degrees when carrying a load. Do not carry more than 800 kg when operating on a slope between 15 and 20 degrees.

- Load cargo in the bucket so the weight is evenly distributed. When carrying a cargo, strap the cargo to the load deck to prevent the cargo from shifting. Ensure that cargo does not obstruct the operator's field of view.

- When carrying a load, drive at a reduced speed. Allow a greater distance for braking.

- Before crossing a bridge or an overpass, make certain that the total combined weight of the machine, the load and the driver is within the stated weight limit for the bridge or the overpass. Then, proceed carefully and at a constant speed.

Downloaded from www.Manualslib.com manuals search engine

https://truckmanualshub.com/

Dumping/Turning

When turning the bucket and dumping material from the bucket, take the following precautions.

- Always follow the proper procedures for dumping or turining as described in this manual.
- Only operate the bucket with the engine running.
- Always stay seated in the operator's seat when dumping or turning the bucket. Never operate the dump or turn lever off of the machine.
- Perform the dump operation on a flat, level and stable surface whenever possible. Raising or lowering the load deck on a slope or rough terrain could result in a tip over.
- Pay special care when dumping with the bucket turned to a side. Be tentative when raising the bucket which is turned to a side.
- Make certain that all persons are at a safe distance away from the machine when raising, lowering, or turning the bucket.
- Do not move the machine or leave it unattended with the bucket in the raised position.
- Engage the bucket safety prop if you must place any part of your body under the bucket in the raised position.

Parking

- Park the machine on a flat, level and stable surface. Never park on a slope steeper than 15 degrees. Avoid parking on a slope less than 15 degrees. If parking on a slope less than 15 degrees is unavoidable, turn the bucket straight, apply the parking brake and block the tracks at the lower end of the machine.

→ Without a load, park the machine with the operator's seat facing downhill
→ With a load, park the machine with the operator's seat facing uphill
→ Do not park sideways on a slope.

- Observe all the previous precautions for driving, driving on a slope, loading and driving with a load, and dumping.

Downloaded from www.Manualslib.com manuals search engine

https://truckmanualshub.com/

- Whenever you park the machine, apply the parking brake and stop the engine. Remove the key whenever you leave the machine unattended to prevent unauthorized use or accidental starting.

- Diesel fuel is flammable and can be explosive. When parking the machine indoors, make certain that the building is well ventilated and that the machine is not close to any source of flame or spark, including appliances with pilot lights.

Servicing

- Do not service the machine when the engine is running. If it is absolutely necessary to run the engine while servicing, pay attention to the moving parts.

- Do not operate the engine in a confined space where dangerous carbon monoxide fumes can accumulate.

- Make sure all hydraulic line connectors are tight and all hydraulic hoses and lines are in good condition and leak-free before applying hydraulic pressure to the system.

- Keep your body and hands away from pinhole leaks or nozzles that eject hydraulic fluid under high pressure. Use paper or cardboard, not your hands, to search for leaks. Hydraulic fluid escaping under pressure can have sufficient force to penetrate the skin and cause serious injury.

- Check all fuel lines on a regular basis for tightness and wear. Tighten or repair them as needed.

- If the engine must be running to perform a service, keep hands, feet, clothing and any part of the body away from any moving part, especially the cooling fan and the belts at the side of the engine.

- Do not touch the engine, muffler, or exhaust pipe while the engine is running or soon after it has stopped. These areas will be very hot and can cause burns.

- The engine must be shut off before checking or adding oil.

Downloaded from www.Manualslib.com manuals search engine

https://truckmanualshub.com/

Name and Function of Controls

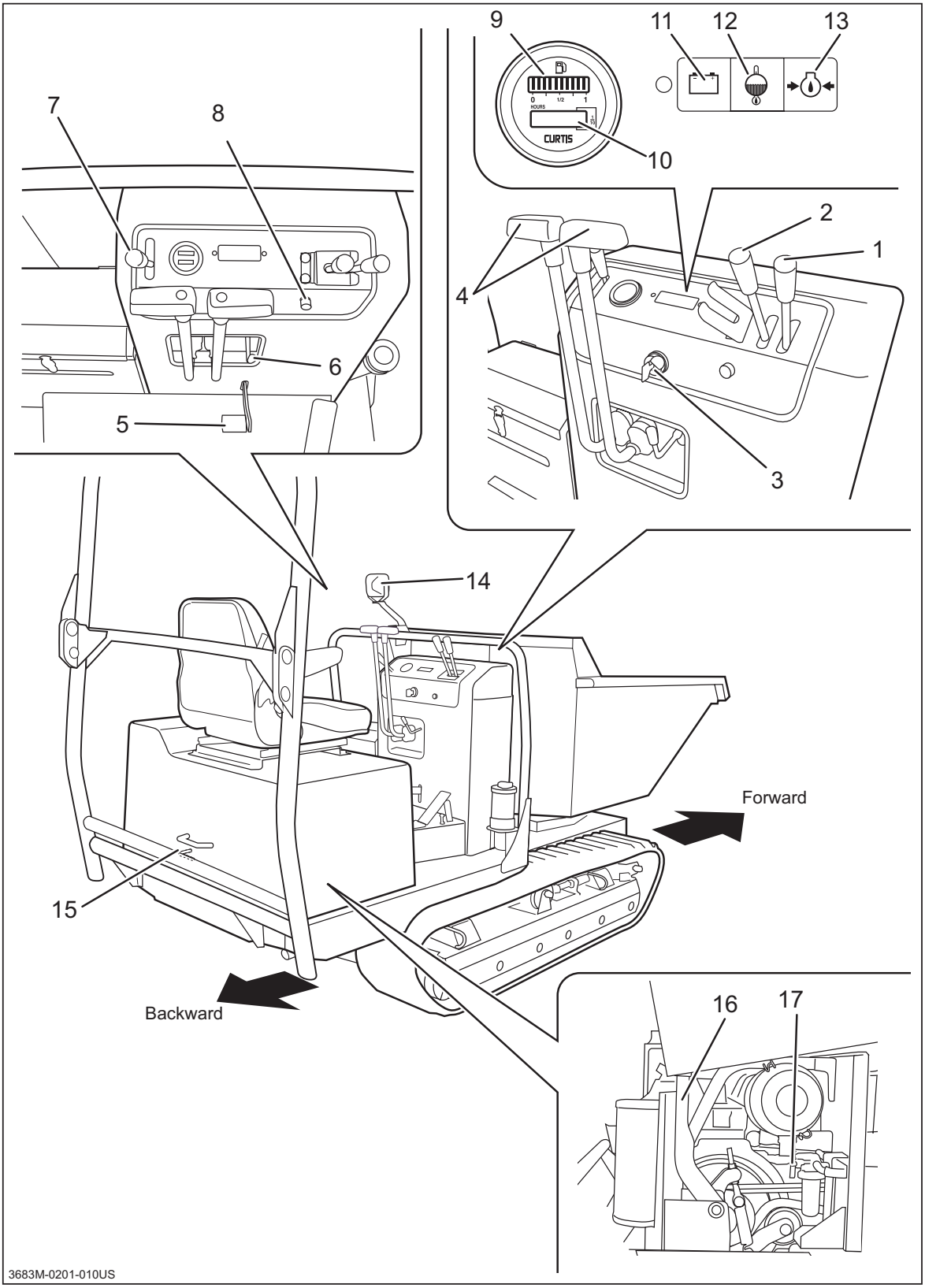

Downloaded from www.Manualslib.com manuals search engine

https://truckmanualshub.com/

1 **Dump Lever** . . . . . Raises or lowers bucket.

2 **Turn Lever** . . . . . Turns bucket.

3 **Main Switch** . . . . . Main Switch is used to start or stop the engine.

4 **Steering Levers** . . . . . Steering Levers are used to control the traveling direction (forward or backward) and speed of the tracks.

5 **Parking Brake Pedal** . . . . . Parking Brake Pedal is used to park the machine securely.

6 **Parking Brake Lock Lever** . . Parking Brake Lock Lever is used to lock or release Parking Brake.

7 **Throttle Lever** . . . . . Throttle Lever is used to control the engine speed.

8 **Horn Button** . . . . . Pressing this button sounds the horn. Use this for warning during traveling or signaling during operation.

9 **Fuel Gauge** . . . . . Displays the amount of fuel in the tank.

10 **Hour Meter** . . . . . Hour Meter displays and records the total amount of time the machine has been in use, in the unit of 0.1 hour.

11 **Battery Warning Lamp** . . . . . Lights up when Main Switch is turned to the [| (run)] position. If there is no problem, it goes off when the engine is started. If a problem with battery charge system is detected when the engine is running, it lights up.

12 **Coolant Temperature Warning Lamp** . . . . . It lights up when the coolant temperature is beyond normal operating range.

13 **Oil Pressure Warning Lamp** . . . . Lights up when Main Switch is turned to the [| (run)] position. If there is no problem, it goes off when the engine is started. If a low oil pressure is detected when the engine is running, it lights up.

Downloaded from www.Manualslib.com manuals search engine

https://truckmanualshub.com/

14 Work Light . . . . . Work Light provides illumination for operation in the dark. It is turned on or off by the switch on its back.

15 Engine Cover Latch Lever . Engine Cover Latch Lever releases engine cover .

16 Clutch Lever . . . . . Disengages the clutch.

17 Fuel Cock . . . . . Shuts off fuel flow.

Downloaded from www.Manualslib.com manuals search engine

https://truckmanualshub.com/

Product Specifications

⚠CAUTION!

· **Use this product properly after understanding its specifications thoroughly.**

Model and Type				S160 Swivel Dump
Machine Mass			kg (lbs)	1400 (3086)
Maximum Payload			kN (lbs)	15.7 (3527)
Dimensions	Overall Length		mm (in.)	2940 (115.7)
	Overall Width		mm (in.)	1150 (45.3)
	Overall Height		mm (in.)	2385 (93.9)
	Track Contact Length		mm (in.)	1195 (47.0)
	Track Gauge		mm (in.)	840 (33.1)
	Ground Clearance		mm (in.)	160 (6.3)
	Loading Deck Height		mm (in.)	630 (24.8)
Loading Deck	Inside Dimensions	Length	mm (in.)	1475 (58.1)
		Width	mm (in.)	1010 (39.8)
		Height	mm (in.)	550 (21.7)
	Payload	Struck	m^3 (cu.ft.)	0.6 (21.2)
		Heaped	m^3 (cu.ft.)	0.74 (26.1)
Engine	Model			Kubota D1105-E3B
	Type			Water-cooled 4-cycle Diesel, in-line 3 cylinder
	Cylinder (Bore×Stroke)		mm (in.)	78X78.4 (3.07X3.09)
	Displacement		cm^3 (cu.in.)	1123 (68.5)
	Rated Output		kw(PS)	15.1 (20.5)
	Maximum Torque		N•m(lbf•ft)	70.3 (51.8)
	Starter System			Electric
	Fuel			Diesel No.2-D (ASTM D975)
	Fuel Consumption		g/kW•h(oz/PS•h)	255 (6.67)
	Fuel Tank Capacity		L (US gal.)	22 (5.8)
	Oil Capacity		L (US qt.)	3.3 (3.5)
	Coolant Capacity		L (US qt.)	3.5 (3.7) [excluding reservoir]
Electrical	Battery Type			95D31R
	Battery Capacity		V/AH	12/65
	Working Lamp		V/W	12/18.4

Downloaded from www.Manualslib.com manuals search engine

https://truckmanualshub.com/

Model and Type				S160 Swivel Dump
Performance and Operating Range	Speed		km/h (mph)	0-7.0 (0-4.4)
	Minimum Turning Radius		m (ft)	3.2 (10.5)
	Gradability		Degrees	25 (Empty) / 15 (Loaded)
	Stability Angle (Loaded)		Degrees	25 (Right) / 25 (Left)
	Operating Temperature		°C (°F)	-15~40 (5~104)
	Altitude		m (ft.)	0~1,500 (0~4921)
HST Oil Capacity			L (US gal.)	32 (8.45)
Drive Train	Main Transmission			Twin HST
	Steering			Twin HST, 2 Lever
	Brakes			Internally Expanding
	Track Size			280×51×72
	Tranamission Oil Capacity		L (US qt.)	3.2 (3.4)
Dumping System	Dumping System			Swivel Dump
	Hydraulic Pump	Type		Gear Pump
		Max. Speed	rpm	2,100
		Max. Discharge	L/min (US qt./min)	16.8 (17.8)
	Relief Pressure		MPa (PSI)	14.0(2030)
	Cylinder(Bore X Stroke)		mm	65X625
	Performance	Max. Angle	Degrees	90
		Lifting Time	Sec	approx. 7.4
		Lowering Time	Sec	approx. 5.0
	Hydraulic Fluid Capacity		L	Shared with HST System
Swivel System	Swivel System			Hydraulic (Twin cylinder)
	Swiveling Angle		Degrees	90 (Right) - 90 (Left)
	Swiveling Time		Sec	approx. 6.6/90°
	Cylinder(Bore X Stroke)		mm (in.)	50X190 (1.97X7.48)

*These specifications are subject to change without notice.

Contents of the Tool Bag

No.	Content	Quantitiy	Note
1	Operator's Manual	1	This Manual
2	Operator's Manual for the Engine	1	
3	Engine Service Tool	1	for Servicing the Engine

Downloaded from www.Manualslib.com manuals search engine

https://truckmanualshub.com/

Preparation

Pre-start up Inspection

Always perform an inspection before use.
Refer to **Maintenance Schedule** (page 32) for the inspection schedule and procedure.

Checking and Filling Fuel

⚠WARNING!

- **Keep fire and spark away when handling fuel.**
- **Always stop the engine before refueling.**
- **Do not overfill fuel so that fuel will not overflow. Check fuel gauge when filling. In case fuel is spilt, wipe out immediately.**

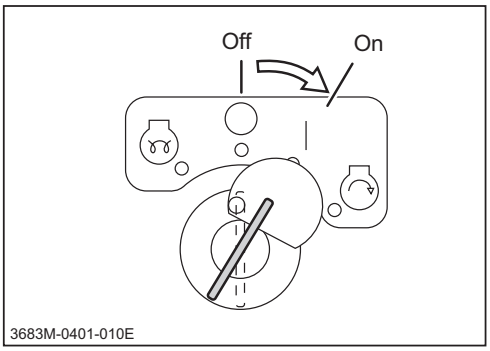

Checking Fuel

1. Insert key into main switch.
2. Turn main switch to [| (on)] position and wait a few seconds.

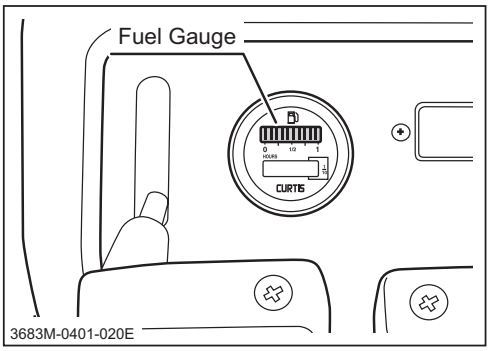

3. Check fuel gauge.
4. Turn main switch to [◯ (off)] position and remove key.

Downloaded from www.Manualslib.com manuals search engine

https://truckmanualshub.com/

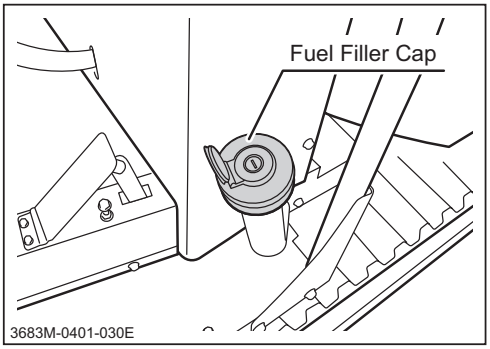

Filling Fuel

1. Insert key in fuel filler cap and unlock it.
2. Open fuel filler cap and remove key.
3. Insert key in main switch and turn it to [| (On)] position.
4. Fill fuel. Check fuel gauge when filling.
5. Turn main switch to [◯ (Off)] position and remove key.
6. Put fuel filler cap back and tighten it securely. Insert key to lock it and remove key.

NOTE

- **Fuel : Diesel Fuel No.2-D (ASTM D975)**
- **Fuel Tank Capacity : 22L (5.8US Gal.)**

Using ROPS (on ROPS Model)

⚠WARNING!

- **On machine equipped with optional ROPS, always keep ROPS in the extended (unfolded) position when riding the machine. Folding feature is provided for the convenience of transporting the machine.**
- **Stay clear of ROPS when folding it. Upper portion of ROPS may fall.**
- **Beware of the pinch points when extending or folding ROPS.**

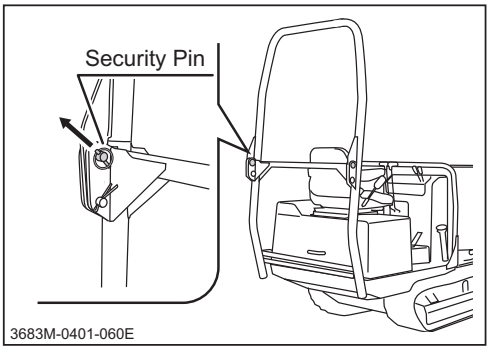

Unfolding/folding ROPS

1. Pull off security pin from ROPS lock pin.

Downloaded from www.Manualslib.com manuals search engine

https://truckmanualshub.com/

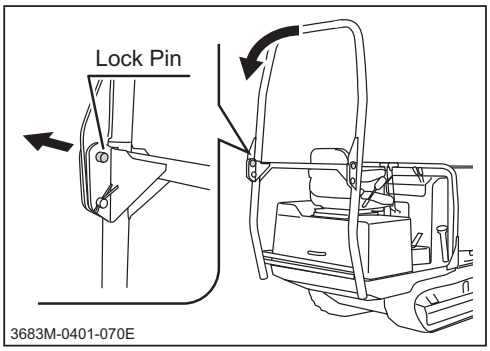

2. Pull off lock pin from either side of ROPS.
3. Fold ROPS.
4. Extend and secure ROPS in the reverse order.

Adjusting Seat

⚠WARNING!

- **When adjusting seat, make certain the seat is securely locked.**

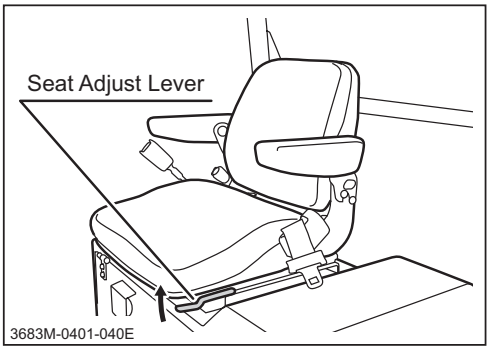

Sliding seat

1. Pull up seat adjust lever.
2. Slide seat to a comfortable position. Release the lever.

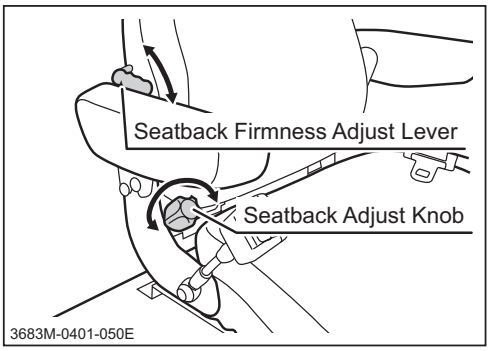

Adjusting seat back

1. Turn seatback adjust knob to adjust the angle of seatback.
2. Turn seatback firmness adjust lever up or down to adjust the firmness of seatback.

Downloaded from www.Manualslib.com manuals search engine

https://truckmanualshub.com/

Using Seat Belt (on ROPS Model)

⚠WARNING!

- **On machine equipped with optional ROPS, Always wear seat belt.**

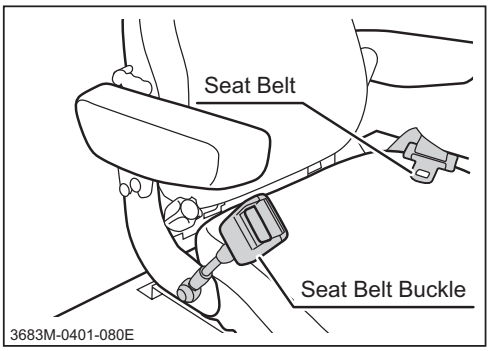

Fastening seat belt

1. Adjust seat (Page 17).
2. Pull seat belt from reel and insert it into seat belt buckle.

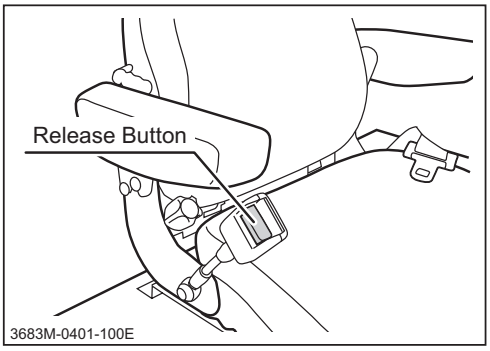

Unfastening seat belt

1. Press release button to unfasten seat belt.

Downloaded from www.Manualslib.com manuals search engine

https://truckmanualshub.com/

Driving

Starting

⚠WARNING!

- Always start and run the engine in a well ventilated place.
- Always make certain of the safety of your surroundings when starting the engine.
- An engine that has been running is very hot. Avoid touching the engine and its ancillaries, or severe burns may result.
- Do not open engine cover while engine is running.

⚠CAUTION!

- Do not turn the starter when the engine is running. Starter motor and/or the engine may be damaged.
- Do not turn the starter for more than 15 seconds. If the engine does not start, wait for 30 seconds or more before attempting to start again.
- Do not use this machine in temperatures above 40ºC or below -15ºC. This machine cannot perform adequately in these temperature ranges. Using this machine under such conditions may result in an accident or cause damage to the machine.
- In the winter or cold climate, warm up the engine thoroughly before driving the machine. A cold engine delivers poor performance, which may result in an accident. It also causes excessive wear.
- Do not use this product in dusty places such as desert. Dust may clog the air cleaner or enter the engine, which may reslt in loss of performance and an accident. It also causes excessive wear.

Downloaded from www.Manualslib.com manuals search engine

https://truckmanualshub.com/

⚠CAUTION!

- **Do not use this machine in the altitude above 1500m in its original configuration. This machine cannot perform adequately above that altitude. Using this machine under such conditions may result in an accident or cause damage to the machine. If you need to use this machine above that altitude, contact your CANYCOM representative.**

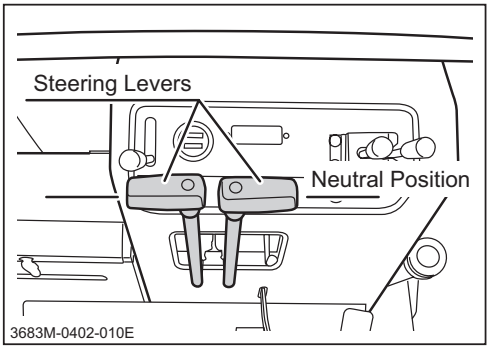

Normal Starting

1. Make sure steering levers are in the neutral position.

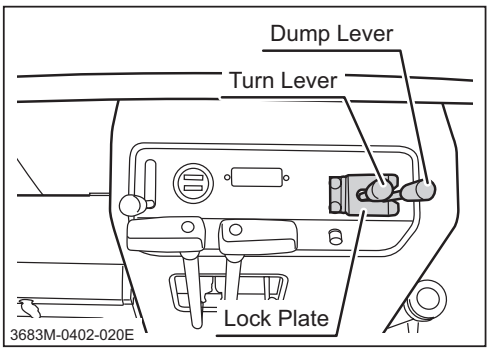

2. Make sure dump and turn (swivel) levers are in the neutral position and lock plate is in the locked position (around the base of the levers).

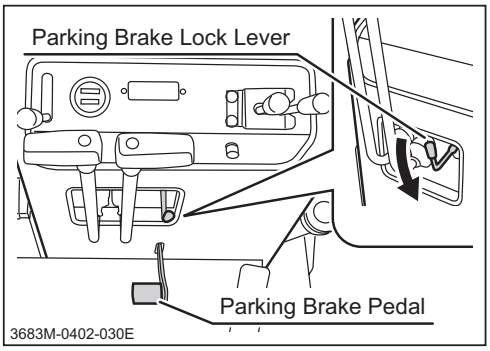

3. Depress parking brake pedal fully with parking brake lock lever pushed down to engage parking brake.

NOTE

- **The engine cannot be started unless the steering levers are neutral and the parking brake is engaged. This is due to a safety feature on this product.**

Downloaded from www.Manualslib.com manuals search engine

https://truckmanualshub.com/

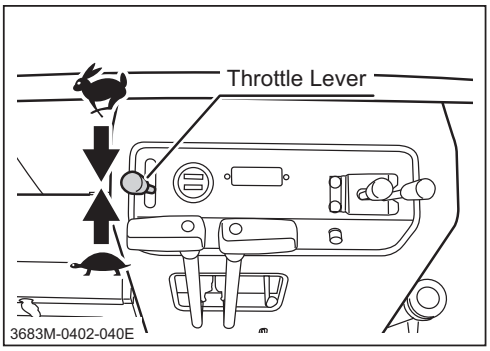

4. Set throttle lever in between [(fast)] and [(slow)] positions.

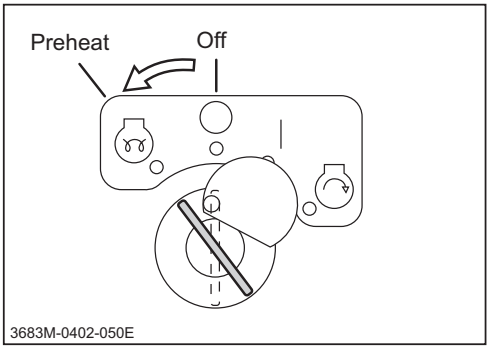

5. Insert key into main switch.
6. Turn main switch to [(preheat)] position.

NOTE

- **Preheat engine for about 10 seconds when starting in normal temperature and for about 20 to 30 seconds when starting in cold weather (ambient temperature below -5 °C).**
- **There is no need to preheat if the engine is already warm.**

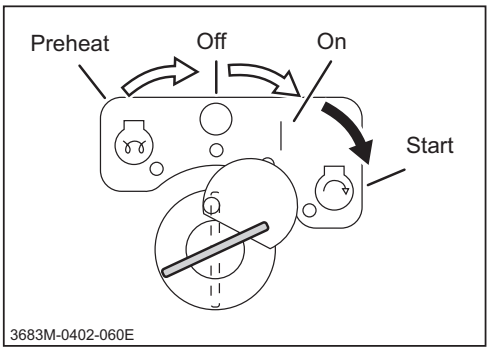

7. Turn main switch to [(start)] position to start the engine. Once the engine starts, release key immediately; switch will automatically return to [| (on)] position.
8. Move throttle lever to [(slow)] position.

Downloaded from www.Manualslib.com manuals search engine

https://truckmanualshub.com/

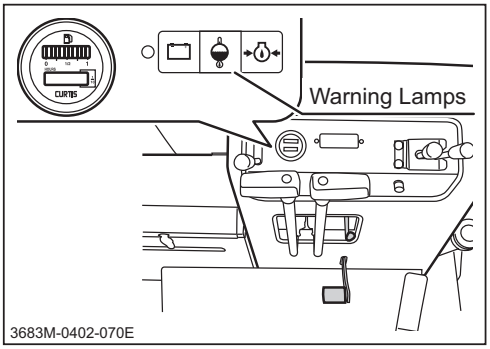

9. Make certain the warning lamps (L-R battery, coolant temp., oil pressure) are not lit.
10. Allow the engine to warm up by running it for 3-5 minutes without any load. (It is not necessary when the engine is already warm.)

NOTE

- **Drive the machine gently in the first 40 to 50 hours of use after purchase for breaking-in.**
- **If any of warning lamps is lit, stop the engine immediately and investigate the cause.**

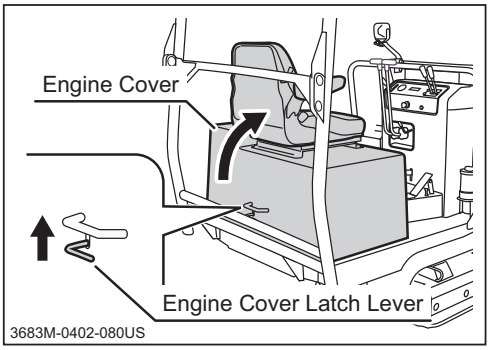

Starting in the cold

1. Move up engine cover latch lever to unlatch and open engine cover. Raise engine cover until it is held in place by stay.

NOTE

- **Slide the seat to the furtherst to the back when opening engine cover.**

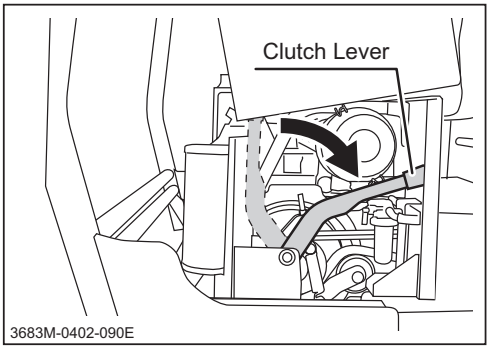

2. Move down clutch lever down to disengage the clutch.

Downloaded from www.Manualslib.com manuals search engine

https://truckmanualshub.com/

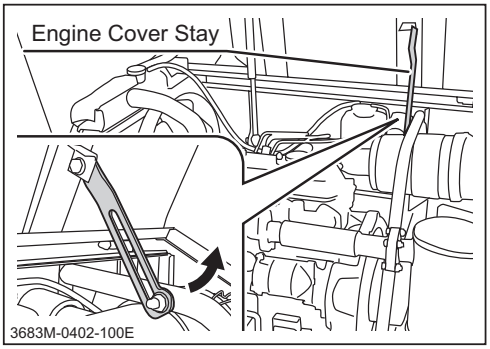

3. Pull the lower end of engine cover stay to undo it. Close engine cover.
4. Start the engine by following the steps 1-10 of the normal starting procedure.

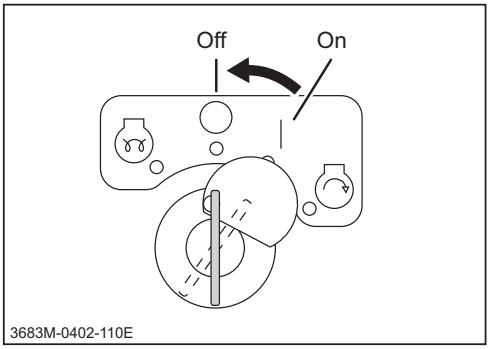

5. When the engine is fully warmed up, stop the engine by turning main switch to [○ (off)] position.

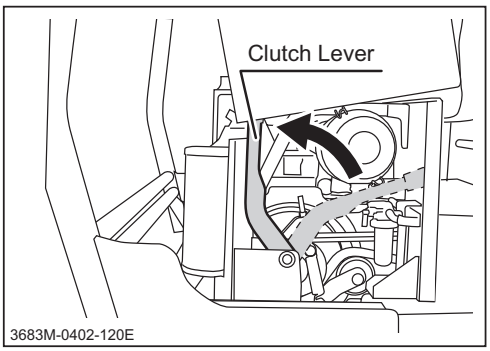

6. Open the engine cover and raise clutch lever to engage the clutch.
7. Close engine cover.
8. Start engine normally.

Downloaded from www.Manualslib.com manuals search engine

https://truckmanualshub.com/

Driving

⚠WARNING!

- Do not allow bystanders to come near the machine when driving.
- Always make certain of the safety of your surroundings before driving; start slow.
- Always stay seated in the operator's seat when driving the machine. Never operate the steering lever off of the machine. This may cause the machine to run over or crush the operator.
- Always make certain of the safety of your surroundings before turning
- Do not make sudden starts, acceralation, change of speed, change of direction, or stop. Do not turn at speed. Avoid sudden maneuvers; this may cause the operator to fall or to be thrown, or the machine to tip over.
- Do not turn the key to [○ (off)] position while traveling. Machine can lose stability and tip over.
- Always move the steering levers back to the neutral position before releasing. Letting it go from other operating positions may result in sudden deceleration and can cause the machine to tip over or the operator to fall or to be thrown.

⚠CAUTION!

- Do not operate steering levers when the parking brake is engaged (parking brake pedal is pressed down). It can wear out the brake.

Downloaded from www.Manualslib.com manuals search engine

https://truckmanualshub.com/

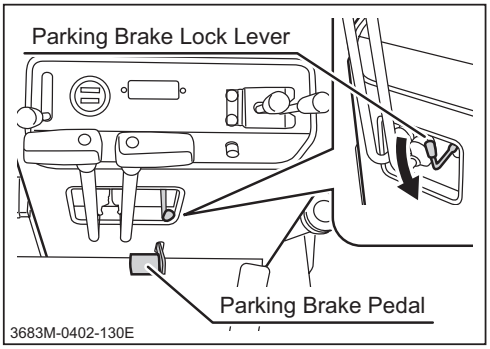

1. Make certain of the safety of your surroundings.
2. Unlock parking brake by depressing parking brake pedal and move parking brake lock lever down.

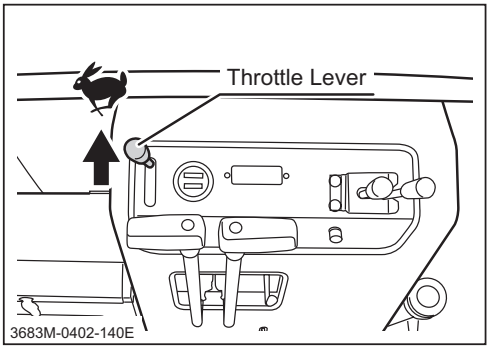

3. Move the throttle lever toward [(fast)] position to increase the engine speed.

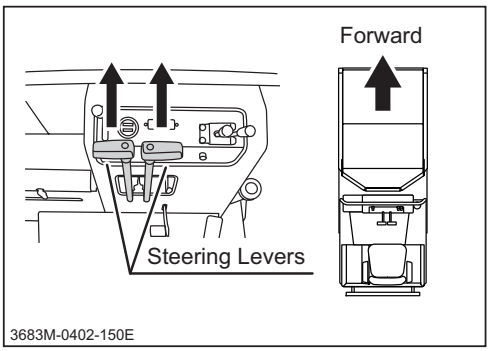

Moving Forward

4. Move left and right steering levers gradually forward together to move the machine forward. The angle of steering levers controls the machine speed.

NOTE

- **See Specifications (page 13) for the speed range.**

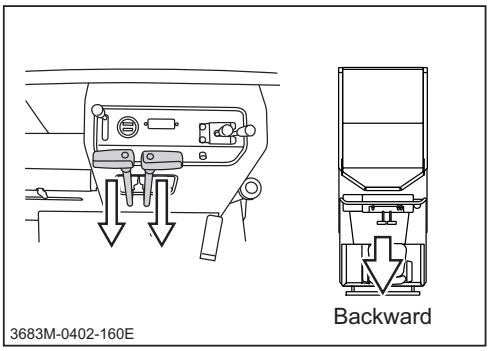

Moving Backward

5. Move both steering levers gradually backward together to move the machine backward. The angle of steering levers controls the machine speed.

Downloaded from www.Manualslib.com manuals search engine

https://truckmanualshub.com/

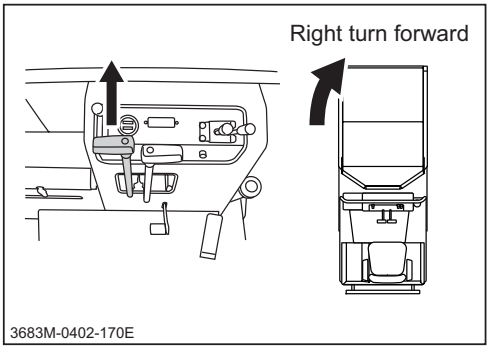

Turning Forward

6. Move left steering lever gradually forward to turn right.

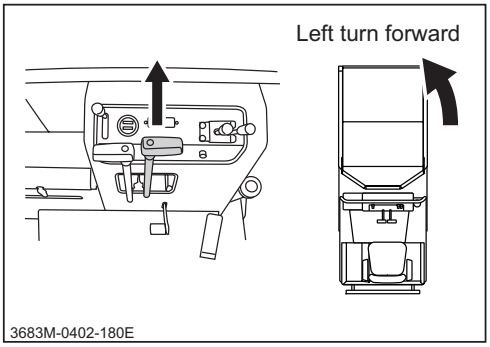

7. Move right steering lever gradually forward to turn left.

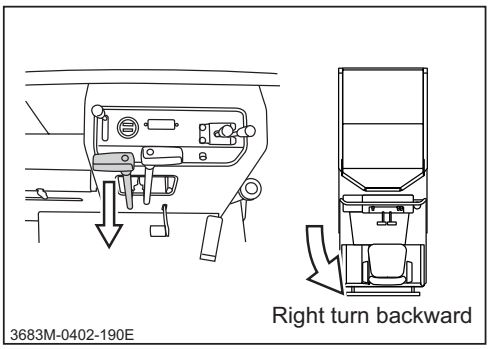

Turning Backward

8. Move left steering lever gradually backward to turn right backwards.

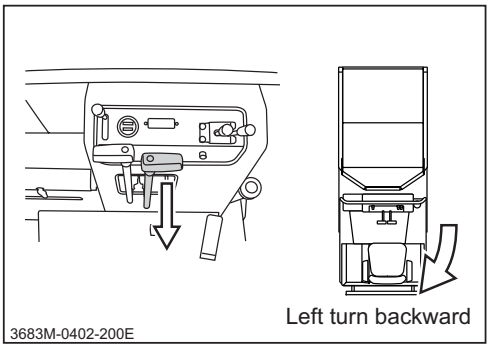

9. Move right steering lever gradually backward to turn left backwards.

Downloaded from www.Manualslib.com manuals search engine

https://truckmanualshub.com/

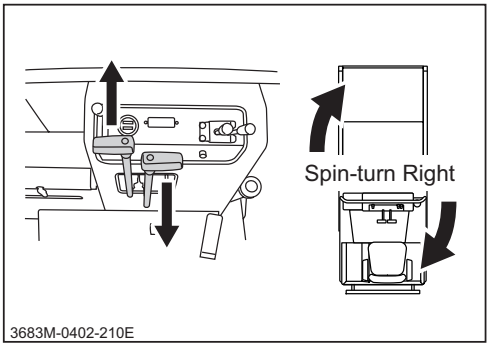

Spin-Turning

10. Move steering levers in opposite directions to make a turn on spot (spin-turn).

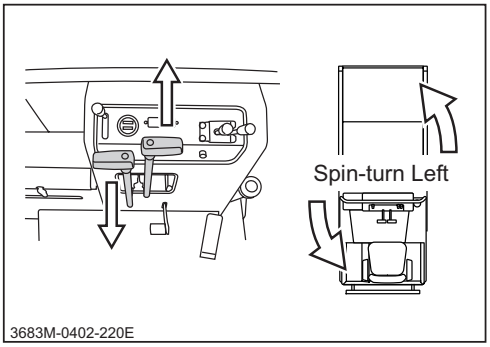

Stopping

⚠WARNING!

- **Do not make a sudden stop. The machine may skid or tip over.**
- **Do not release steering levers suddenly. The machine may stop suddenly and skid or tip over.**
- **Always park on a firm, level place. Never park on a potentially dangerous place.**

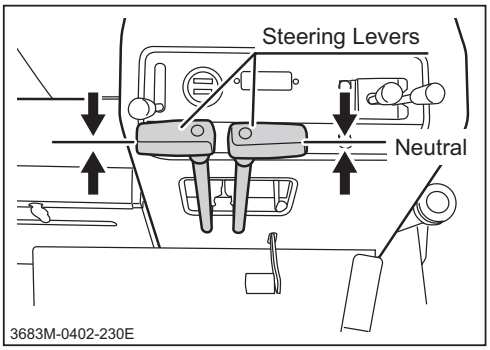

1. Move steering levers gradually to the neutral position.

Downloaded from www.Manualslib.com manuals search engine

https://truckmanualshub.com/

Parking

⚠WARNING!

- **Always park on a firm, level place. Never park on a potentially dangerous place.**
- **Avoid parking on a slope. Never park on a slope with an incline of 15 degrees or steeper. If it is absolutely necessary to park the machine on a slope less than 15 degrees, make certain to apply parking brake firmly and block the tracks with chocks.**

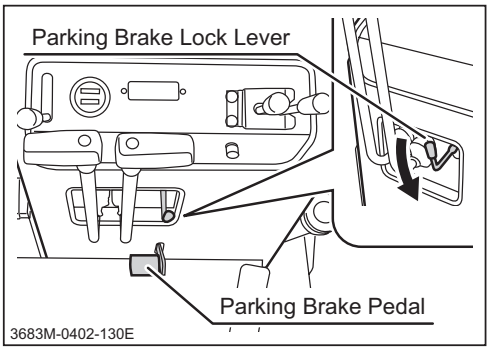

1. Stop the machine.
2. Depress parking brake pedal fully with parking brake lock lever pushed down to engage parking brake.

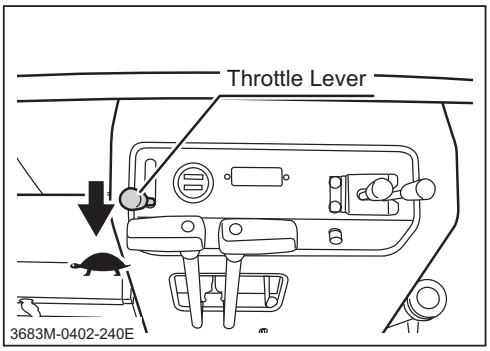

3. Move throttle lever toward [(slow)] position to decrease the engine speed.

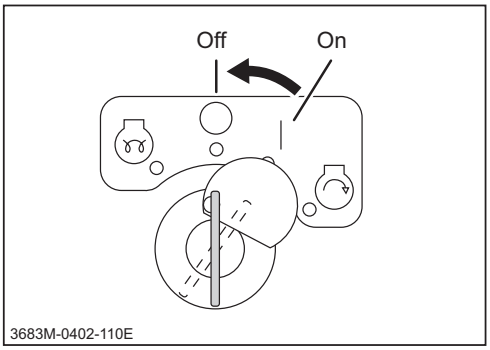

4. Turn main switch to [○ (off)] position. Remove the key from main switch.

NOTE

- **Leaving the main switch in [| (on)] position drains the battery and cause it to discharge.**

Downloaded from www.Manualslib.com manuals search engine

https://truckmanualshub.com/

Working

Dumping and Turning Bucket

⚠WARNING!

- **Always make certain of the safety of your surroundings when dumping or turning bucket.**
- **Never operate the dumping or turning lever off of the machine. This may cause the bucket to hit or cruch the operator or bystander.**
- **Avoid dumping or turning bucket on a slope. The machine may tip over.**

⚠CAUTION!

- **Always run the engine when dumping or turning bucket.**
- **When lowering the loaded bucket, slow the engine speed and lower the bucket gently.**

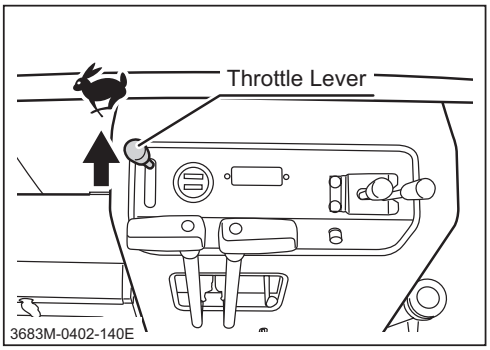

1. Move the throttle lever to [(fast)] position to increase the engine speed.

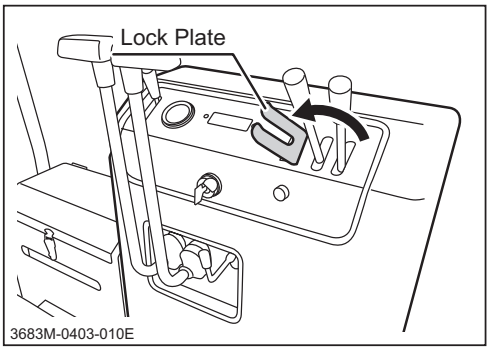

Raising Bucket

2. Turn the lock plate to the side so that the dump lever can be operated.

Downloaded from www.Manualslib.com manuals search engine

https://truckmanualshub.com/

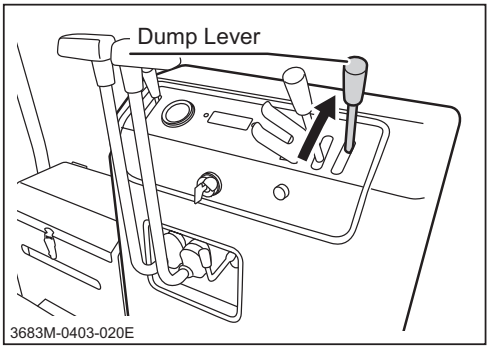

3. Move dump lever gradually toward [(up)] to raise bucket.
4. When bucket reaches its upper limit, a hissing noise is heard; move dump lever back to [● (neutral)] position.

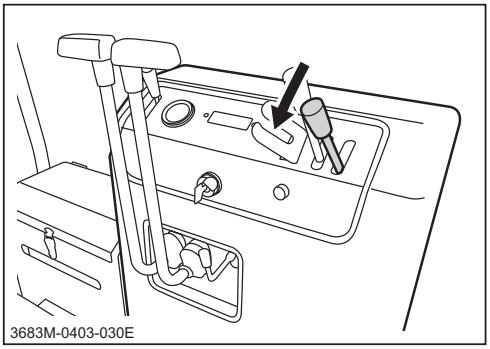

Lowering Bucket

5. Move dump lever gradually toward [(down)] to lower bucket.
6. When bucket reaches its lower limit, a hissing noise is heard; move dump lever back to [● (neutral)] position.
7. Turn lock plate back in place to lock dump lever.

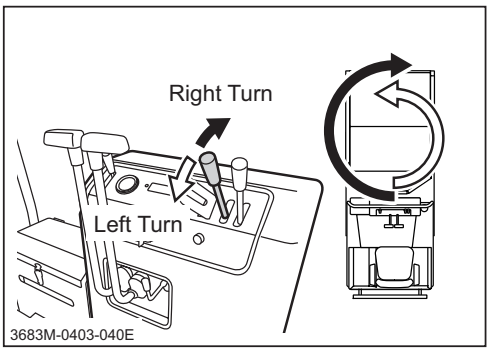

Turning

8. Turn lock plate to the side so that turn lever can be operated.
9. Move turn lever gradually toward [(left)] to turn bucket left.
10. When bucket reaches its limit, a hissing noise is heard; move turn lever back to [● (neutral)] position.
11. Move turn lever gradually toward [(right)] to turn bucket right.
12. When bucket reaches its limit, a hissing noise is heard; move turn lever back to [● (neutral)] position.
13. Turn lock plate back in place to lock turn lever.

Downloaded from www.Manualslib.com manuals search engine

https://truckmanualshub.com/

Using Safety Prop

⚠WARNING!

- **Place safety prop under bucket when inspecting or working under bucket.**

⚠CAUTION!

- **Make certain to undo safety prop before lowering bucket.**

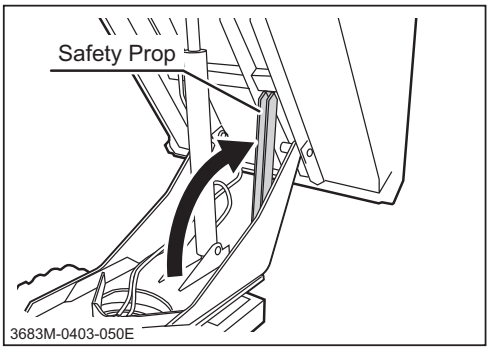

1. Raise bucket.
2. Hold the bucket with safety prop.

Downloaded from www.Manualslib.com manuals search engine

https://truckmanualshub.com/

Maintenance Schedule

⚠WARNING!

- **Follow the scheduled maintenance as described below. Failure to do so may result in mechanical or property damage, injury or death.**

- **Perform a pre-startup inspection (PSI) before each use, a monthly inspection once a month, and a yearly inspection once a year.**

- **Some maintenance procedures described below may require special knowledge or tools and instruments. Contact your Canycom representative to perform such procedures.**

Item			Description	Schedule			Note
				PSI	Mon	Year	
Engine	General	Starting	Engine shall start easily without making any irregular noise.	√	√	√	
			Glow plugs work correctly..	√	√	√	
		Running	Engine speed shall be set properly at idle and at full without loading. Engine shall stay running smoothly.		√	√	Contact your Canycom representative for inspection.
			When accelerating engine, throttle lever shall move smoothly, and engine shall accelerate smoothly without stopping or knocking.	√	√	√	
		Exhaust	Warm up engine thoroughly, and observe exhaust sound and gas from idle to fast speed; exhaust sound shall be normal and smoke shall not be excessive.	√	√	√	
			There shall be no leak in exhaust system or muffler.		√	√	
		Air Cleaner	Air cleaner case shall not be deformed or cracked. Case lid and connecting air hose shall be firmly in place.		√	√	
			Cleaner element shall be in good shape without damage or excessive dust.		√	√	Cleaning/Replacing: Page 43
		Fasteners	Bolts and nuts fastening cylinder head, intake and exhaust manifolds shall be tightly fastened. * this may be skipped if there is no gas or water leaks found in these areas.			√	

Downloaded from www.Manualslib.com manuals search engine

https://truckmanualshub.com/

Item			Description	Schedule PSI	Schedule Mon	Schedule Year	Note
Engine	General	Valve Clearance	Valve clearance shall be correct. * this may be skipped if there is no noise due to incorrect valve clearance, and engine runs normally.			√	Contact your Canycom representative for inspection.
Engine	General	Compression	Compression shall be normal * this may be skipped if running and exhaust condition is normal at idle and under acceleration.			√	Contact your Canycom representative for inspection.
Engine	General	Engine Mount	Engine base shall be free of cracks or deformation.	√	√	√	
Engine	General	Engine Mount	Mounting bolts and nuts shall not be loose or missing.	√	√	√	
Engine	Lubrication System		Oil shall be clean and at correct level.	√	√	√	Inspecting/Changing: Page 41
Engine	Lubrication System		No noticable oil leaks shall be found in head cover, oil pan, or pipes.	√	√	√	
Engine	Fuel System		There shall not be any leaks in fuel tank, hoses, or pipes.	√	√	√	
Engine	Fuel System		Fuel hoses shall be free of damage or deterioration.	√	√	√	
Engine	Fuel System		Fuel filter shall not be excessively dirty or clogged.		√	√	
Engine	Fuel System		There shall not be sediment or water in fuel tank.		√	√	
Engine	Fuel System		Injection puressure and injection condition from the nozzle shall be normal. * this may be skipped if running and exhaust condition is normal at idle and under acceleration.			√	Contact your Canycom representative for inspection.
Engine	Cooling System		Coolant shall be clean and at the correct level.	√	√	√	Inspecting/Filling: Page 43
Engine	Cooling System		There shall not be any leaks from radiator, engine, water pump, or hoses.	√	√	√	
Engine	Cooling System		Radiator fins shall be free of clogging.	√	√	√	
Engine	Cooling System		Radiator cap valve shall function properly.			√	
Engine	Cooling System		Fan belt shall be free of wear and damage, and shall be properly tensioned.			√	
Engine	Cooling System		Cooling fan, duct, and cover shall be free of cracks, damage, or deformation.			√	
Engine	Cooling System		Mounting bolts and nuts on cooling fan, duct, and covers shall not be loose or missing.			√	

Downloaded from www.Manualslib.com manuals search engine

https://truckmanualshub.com/

Item			Description	Schedule			Note
				PSI	Mon	Year	
Engine	Electrical System	Charge System	Charge system is working correctly.			√	Contact your Canycom representative for inspection.
		Battery	Battery electrolyte level shall be correct.		√	√	Inspecting/Filling: Page 55
			Terminals shall be free of marked corrosion and are tightly secured.		√	√	
		Wiring	Connections shall be securely connected.		√	√	
			Wiring shall be free of damages.		√	√	
Drive Train	Clutch		Clutch shall not make noise and shall disengage completely when operated at idle.		√	√	
			Clutch shall not slip and shall engage smoothly.		√	√	
	Drive Belts		Belt tension shall be properly adjusted.		√	√	Inspecting/Adjusting: Page 51
			Belt shall be free of damage, excessive wear, or dirt; shall be free of oil or grease.		√	√	
	Transmission		Irregular noise or overheating shall not be observed.	√	√	√	
			Oil shall be clean and filled to the proper level.		√	√	Replacing: Page 49
			There shall not be oil leaks in or around transmission.		√	√	
	HST Pump		Drive the machine forward and backward, turn left and right in both directions; machine shall move normally and free of irregular noise or overheating.	√	√	√	
			Hydraulic fluid shall be filled to a proper level.		√	√	Inspecting/Changing: Page 47
			Hydraulic fluid shall be clean and free of dirt or contamination.		√	√	Inspecting/Changing: Page 47
			There shall be no fluid leaks in or around fluid tank.		√	√	
	Linkage		Rods, links, and wires in linkage shall be free of deformation or damage.		√	√	
			Connections shall be free of looseness, excessive play, or missing cotter pins.		√	√	

Downloaded from www.Manualslib.com manuals search engine

https://truckmanualshub.com/

Item		Description	Schedule			Note
			PSI	Mon	Year	
Undercarriage	Wheels Sprockets Idlers	Shall be free of cracks, defromation, or excessive wear.	√	√	√	
		There shall not be excessive play in axle. Irregular noise or overheating shall not be observed when traveling.	√	√	√	
		Mounting bolt or nut shall not be loose or missing.	√	√	√	
		There shall be no oil leak in or around axle.		√	√	
	Tracks	There shall not be marked cut, deterioration, or wear.	√	√	√	
		Track shall be properly tensioned; shall not be too loose or too tight.	√	√	√	Adjusting: Page 46
		Track core shall not be missing or damaged.	√	√	√	
		Tension bolt shall be free of deformation or corrosion.	√	√	√	
Brake System	Parking Brake	Parking brake shall work properly.	√	√	√	Adjusting: Page 52
		Parking brake shall be able to hold the machine on a 20-degree slope.		√	√	
	Linkage	Rods, links, and wires in linkage shall be free of deformation or damage.		√	√	
		Connections shall be free of looseness, excessive play, or missing cotter pins.		√	√	
Hydraulic System	Hydraulic Pump	There shall be no leak in or around hydraulic pump.		√	√	
		Fastening bolts and nuts shall not be loose or missing.		√	√	
		No irregular vibration, noise, or heat shall be observed when hydraulic pump is in operation.		√	√	
		Amount and pressure of discharge under load shall be within the standard range specified by the manufacturer. *this may be skipped if irregular vibration, noise, or heat described above is not observed.			√	
	Hydraulic Valve	There shall be no leak in or around hydraulic valve.		√	√	

Downloaded from www.Manualslib.com manuals search engine

https://truckmanualshub.com/

Item		Description	Schedule			Note
			PSI	Mon	Year	
Hydraulic System	Plumbing	Plumbing shall be free of cracks, damage, twists, or deterioration.		√	√	
		There shall be no leaks in pipes, hoses, joints, or seals.		√	√	
		Plumbing shall be mounted properly, and fastening bolts and nuts shall not be loose or missing.		√	√	
		Breather shall not be clogged.		√	√	
	Hydraulic Cylinders	Shall work smoothly.		√	√	
		There shall be no leaks when extending and contracting cylinder.		√	√	
		Extend dump cylinder fully under load and hold. Stroke shall be within the range specified by manufacturer.			√	
		Cylinder tube and rod shall be free of dents, cracks, bends, or scratches.		√	√	
		Cylinder mounting pins shall be free of damage or excessive wear.		√	√	
Body, Chassis, Loading Deck	Chassis Frame	Shall be free of cracks, deformation, or corrosion.		√	√	
		Fastening bolts or nuts shall not be loose or missing.		√	√	
	Body Panels	Shall be free of cracks or deformation.		√	√	
		Doors shall open, close, and lock properly.	√	√	√	
		Fastening bolts or nuts shall not be loose or missing.		√	√	
	Loading Deck	Loading deck shall be raised,lowered and turned smoothly.		√	√	
		Shall be free of cracks, deformation, or corrosion.		√	√	
		Fastening bolts or nuts shall not be loose or missing.		√	√	
	Safety Prop	Safety prop shall be free of any deformation.		√	√	
	Labels	Warning labels and instruction plates shall be clean, legible, and free of damage.	√	√	√	
Safety Devices	Work Lamp	Work lamp shall work.	√	√	√	
		Lamp lens shall be free of cracks or chipping and water shall not be in the lamp.		√	√	
	Horn	Horn shall work.	√	√	√	

Downloaded from www.Manualslib.com manuals search engine

https://truckmanualshub.com/

List of Fluids and Lubricants

Item	Schedule	Grade	Cap.	Ref.
Fuel	As needed.	Diesel Fuel (Diesel No2-D, ASTM D975	22L (5.8US gal.)	Page 15
Engine Oil	Fill Inspect daily. Fill as needed. Change Initially - After 50 hours of use. Every 100 hours afterwards.	Diesel Engine Oil API rating: CD or better. SAE rating: 10W-30	3.3L (3.5US qt.)	Page 41
Transmission Oil	Change Initially - After 50 hours of use. Every 100 hours afterwards.	Gear Oil API rating: GL-4 or 5 SAE rating: 80	3.2L (3.4US qt.)	Page 49
HST Fluid	Change Initially - After 50 hours. Every 500 hours afterwards.	High viscosity index hydraulic fluid, ISO VG46	32L (8.45US gal.)	Page 47
Engine Coolant	Check Everyday Add as needed Change every 2 years	Long Life Coolant (LLC) and pure water Mixture	-	Page 43
Battery Electrolyte	Inspect daily.	Distilled Water	-	Page 54

Greasing Points

Point	Schedule	Grade	Cap.	Ref.
Greasing Points	6 months after the purchase. Every 6 months afterwards.	Chassis Grease	-	Page 53

Downloaded from www.Manualslib.com manuals search engine

https://truckmanualshub.com/

List of Consumables and Spares

⚠CAUTION!

- **When replacing consumable or spare, always use CANYCOM genuine part.**

Item	Part No.	Schedule	Qty.	Ref.
Engine				
Air Cleaner Element	-	Clean: Initially after 50 hours. Afterwards every 100 hours. Replace yearly or if defective.	1	Page 43
Oil Filter	-	Initially: 50 hours. Every 200 hours afterwards.	1	Page 42
Fuel Filter	-	Replace every 450 hours or if defective.	1	Page 45
Drive Train				
Drive Belt (SC62)	08531500062	Replace if defective.	2	Page 51
Track	36732011000	Replace if defective or reaches the wear limit.	2	Page 46
Brake Lining	73054005000	Replace if defective. (Replace in pairs)	2	Page 52
Electrical System				
Battery (40B19R)	-	Replace if defective.	1	Page 54
Fuse 40A	-	Replace if defective.	2	Page 56
Light Bulb	09808121844	Replace if defective.	1	
Hydraulic System				
Hydraulic Hose (Dump)	-	Every 2 years or if defective.	1	
Hydraulic Hose (Oil Cooler)	-	Every 2 years or if defective.	1	
Hydraulic Hose (HST)	-	Every 2 years or if defective.	1	
Suction Filter	36836031000	Every 500 hours.	1	Page 47
Line Filter	35706161000	Every 500 hours.	1	Page 47

NOTE

- **Rubber products such as the hydraulic hose deteriorate over time. Replace them every 2 years.**
- **Track wear limit: 5mm of lug height**

Downloaded from www.Manualslib.com manuals search engine

https://truckmanualshub.com/

Removing and Installing Body Panels

⚠WARNING!

- **Do not open engine cover while engine is running.**

⚠CAUTION!

- **Cut or pinch hazard exists when removing or installing body panels; beware of sharp edges and pinch points.**
- **Make certain to reinstall panels and closing doors after removing or opening for repairs or inspection.**

Engine Compartment

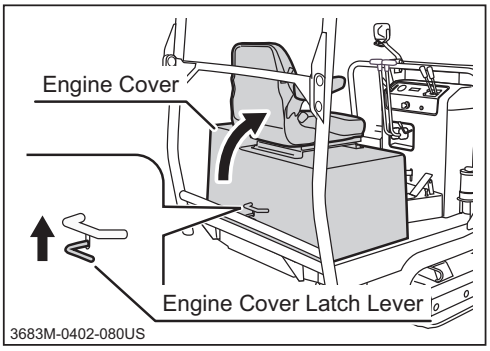

Opening Engine Cover

1. Move up engine cover latch lever to unlatch and open engine cover. Raise engine cover until it is held in place by stay.

NOTE

- **Slide the seat to the furtherst to the back when opening engine cover.**

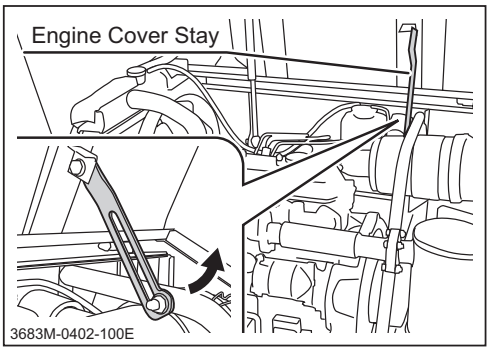

Closing Engine Cover

1. Pull the lower end of engine cover stay to undo it. Close engine cover.

Downloaded from www.Manualslib.com manuals search engine

https://truckmanualshub.com/

Step and Control Box

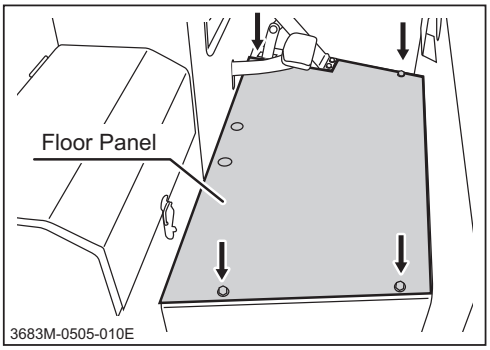

Removing Floor Panel

1. Unfasten (4) bolts to remove floor panel.

Installing Floor Panel

1. Place floor panel and fasten bolts to install.

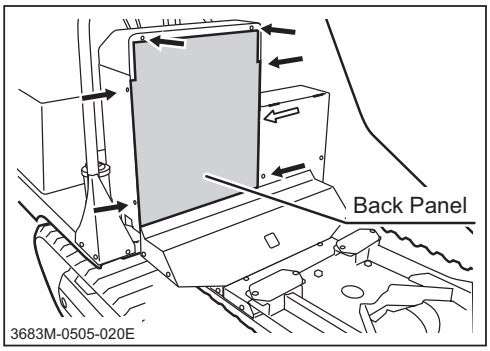

Removing Control Box Back Panel

1. Raise bucket.
2. Hold bucket with safety prop.
3. Unfasten (7) bolts (one is in the battery box) to remove back panel.

Installing Control Box Back Panel

1. Place back panel and fasten bolts to install.
2. Undo the safety prop and lower bucket.

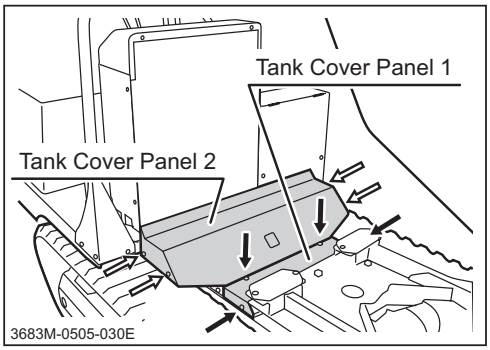

Removing Tank Cover Panels

1. Raise bucket.
2. Hold bucket with safety prop.
3. Unfasten (4) bolts that secure tank cover panel 1 and remove the panel.
4. Unfasten (4) bolts that secure tank cover panel 2 and remove the panel.

Installing Tank Cover Panels

1. Place tank cover panel 2 and fasten bolts to install.
2. Place tank cover panel 1 and fasten bolts to install.
3. Undo safety prop and lower bucket.

Downloaded from www.Manualslib.com manuals search engine

https://truckmanualshub.com/

Engine

⚠WARNING!

- **Always stop the engine before servicing.**
- **An engine that has been running is very hot. Allow the engine to cool before servicing, or severe burns may result.**
- **Keep fire and spark away when handling fuel.**

Engine Oil

⚠CAUTION!

- **Dispose of the drained oil properly.**
- **Make certain to fill the engine with correct grade of oil to the specified level. Insufficient amount or wrong grade of oil reduces performance and may cause permanent damage to the engine.**

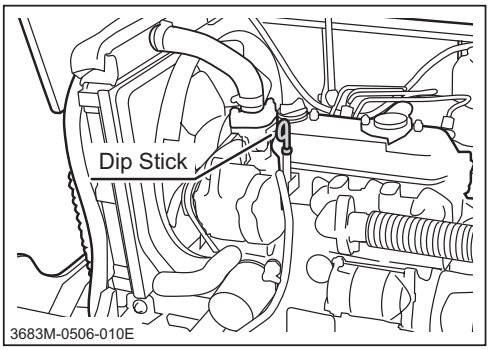

Inspecting

1. Park the machine on a level surface.
2. Open engine cover.
3. Follow the instructions in the **Operator's Manual for the Engine** to inspect oil.

NOTE

- **To obtain correct reading, check oil level before starting, or wait about 10 minutes after stopping the engine to allow oil to drain back to the oil pan.**
- **Always check oil level on a level surface.**

Downloaded from www.Manualslib.com manuals search engine

https://truckmanualshub.com/

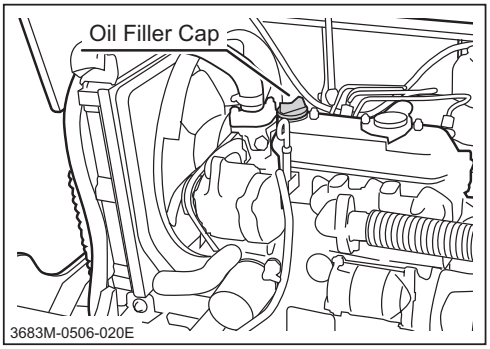

Filling

1. Remove oil filler cap.
2. Follow the instructions in the **Operator's Manual for the engine** to fill oil.
3. Put oil filler cap back in place and tighten it securely.

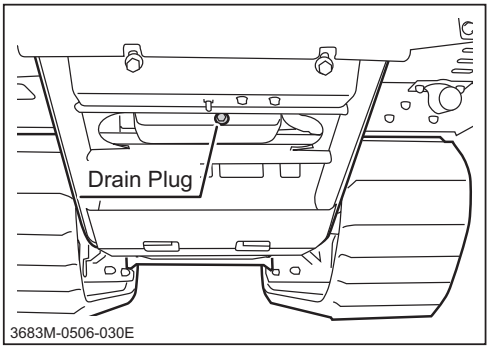

Changing

1. Have an appropriate oil drain pan.
2. Remove drain plug to drain oil.
3. Clean drain plug and put it back in place and tighten it securely.
4. Fill oil.
5. Close engine cover.

NOTE

- **Oil Capacity: 3.3L (3.5US qt.)**
- **Oil to Use: Diesel Engine Oil, API rating GL-4 or 5, SAE index 10W-30.**
- **Removing oil filler cap helps drain oil faster.**

Oil Filter

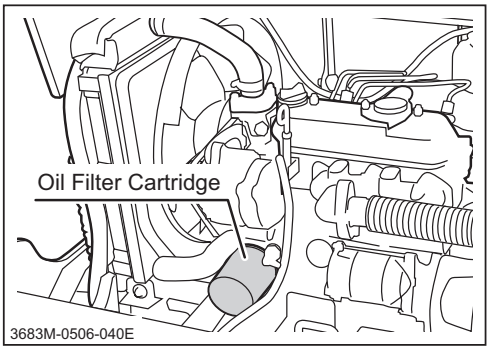

1. Open engine cover.
2. Follow the instructions in the **Operator's Manual for the engine** to change oil filter cartridge.
3. Fill oil.
4. Close engine cover.

Downloaded from www.Manualslib.com manuals search engine

https://truckmanualshub.com/

Air Cleaner

⚠CAUTION!

- **Clean air cleaner element regularly. Dirty cleaner element reduces engine performance and life.**
- **Replace cleaner element if damaged.**

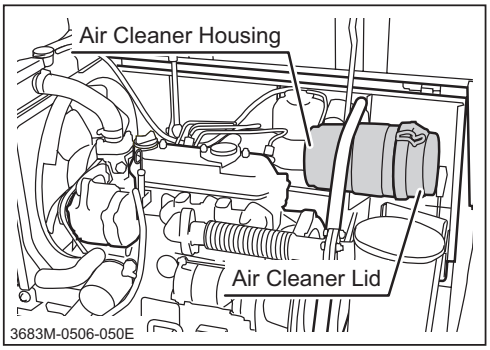

1. Open engine cover.
2. Follow the instructions in the **Operator's Manual for the engine** to inspect, clean or change air cleaner element.
3. Close engine cover.

Coolant

⚠CAUTION!

- **Do not open radiator cap when engine or radiator is hot. Opening cap when they are still hot may release boiling coolant and cause severe burns. Wait for engine to cool after operation (about 10 minutes) before opening.**
- **Take extreme care when handling the coolant; antifreeze solution is inflammable. Avoid exposure to open flame. It is also toxic. If coolant is caught in the eye, wash the eye clean with running water and consult a physician immediately.**
- **Dispose of the drained coolant properly.**

Downloaded from www.Manualslib.com manuals search engine

https://truckmanualshub.com/

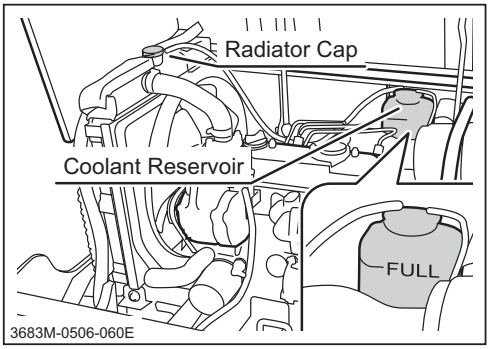

Inspecting/Filling

1. Open engine cover.
2. When the engine is cold, check engine coolant level in reservoir tank. If the level is below [FULL] mark, add water.
3. Open radiator cap.
4. Check engine coolant level. If the level is low, add water.
5. Put radiator cap back in place.
6. Close engine cover.

NOTE

- **When coolant temperature warning lamp is lit, it may mean the coolant level is low. Immediately inspect and add water as necessary.**

Ambient Temperature	Antifreeze Mixture
-10 °C	30%
-15 °C	35%
-20 °C	40%
-25 °C	45%

* The value for the ambient temperature is 5°C lower than the actual minimum temperature.

Antifreeze Mixture (Reference)

When this machine is shipped from the factory, it is filled with a mixture of 40% antifreeze and 60% water. To prevent coolant from freezing, use a mixture of water and antifreeze determined by the minimum temperature in the operation area using the table on the left.

NOTE

- **Antifreeze to use: Long Life Coolant (LLC).**
- **Use pure water to make antifreeze mixture.**

Downloaded from www.Manualslib.com manuals search engine

https://truckmanualshub.com/

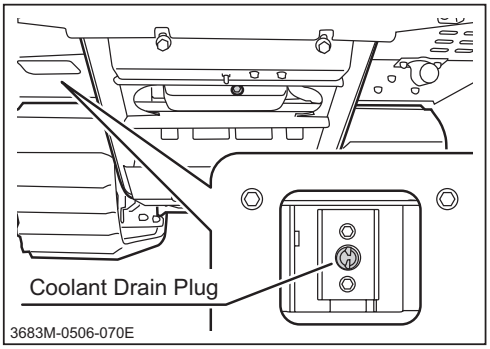

Changing

1. Open engine cover.
2. Have an appropriate drain pan.
3. Remove coolant drain plug to drain coolant. Wash inside radiator.
4. Put drain plug back in place and tighten it securely.
5. Fill coolant.
6. Close engine cover.

NOTE

- **Coolant Capacity (excluding reservoir): 3.5L (3.7US qt.)**
- **Reservoir Capacity: 0.7L (0.74US qt.)**
- **Removing radiator cap helps drain the coolant.**

Fuel Filter

⚠WARNING!

- **Fuel is highly flammable. Keep fire and spark away when servicing fuel filter. If fuel is spilt, wipe immediately.**

⚠CAUTION!

- **Dispose risidual fuel in fuel filter properly.**

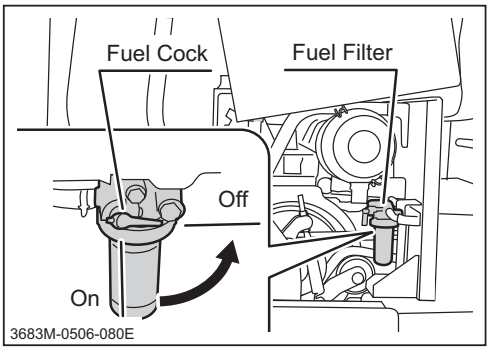

Inspecting/Cleaning

1. Open engine cover.
2. Turn fuel cock to [Off] position.
3. Follow the instructions in the **Operator's Manual for the engine** to inspect, clean, or change fuel filter.
4. Turn fuel cock to [On] position.
5. Close engine cover.

Downloaded from www.Manualslib.com manuals search engine

https://truckmanualshub.com/

Drive Train

⚠WARNING!

- **Stop the engine when servicing the drive train.**
- **Allow the machine to cool off before servicing. The engine is very hot after operation and may pose a burn hazard.**

Tracks

⚠WARNING!

- **Hoist the machine securely when inspecting and adjusting the track. Use hoisting slings of sufficient strength. Always use the slings of the same length when more than one is used.**
- **Make certain to adjust track tension properly. Inproperly tensioned tracks may wear or come off, resulting in property damage, serious injury or death.**

⚠CAUTION!

- **Always unload the machine before hoisting.**

NOTE

- **Track stretches during its use-life. Inspect and adjust regularly.**

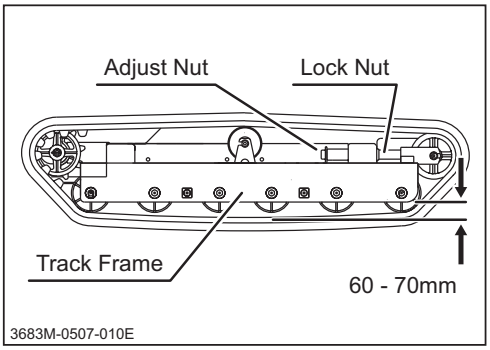

Inspecting

1. Hoist the machine.
2. Inspect the clearance between track and the track frame to be between 60 and 70mm. Adjust tracks if the clearance is not within this range.

Downloaded from www.Manualslib.com manuals search engine

https://truckmanualshub.com/

Adjusting

1. Loosen lock nut.
2. Adjust track with adjust bolt so that the clearance between track and track frame at the furthest are between 60 and 70mm.
3. Tighten lock nut
4. Lower the machine.

HST (Hydrostatic Transmission) Fluid

⚠CAUTION!

- **Dispose of the drained fluid properly, according to the national and local regulations.**
- **Burn hazard; pay special attention when handling the hydraulic fluid. Hot fluid may cause burns.**

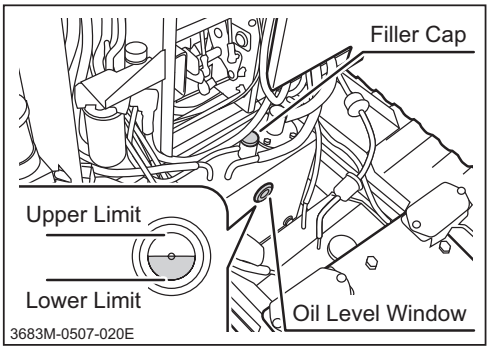

Inspecting/Filling

1. Park the machine on level ground.
2. Lift the bucket and hold it with the safety prop. (Page 31) Lock the dump lever with lock plate.
3. Remove tank cover panels 1 and 2. (Page 40)
4. Visually inspect oil level window.
5. If the level is low, open filler cap and fill fluid. Put filler cap back in place.
6. Install tank cover panels.
7. Undo safety prop. Lower bucket.

Downloaded from www.Manualslib.com manuals search engine

https://truckmanualshub.com/

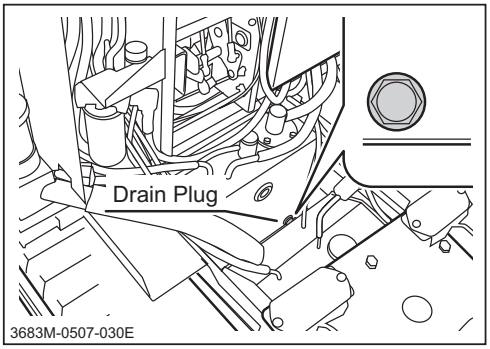

Changing

1. Lift the bucket and hold bucket with safety prop. (Page 31) Lock dump lever with lock plate.
2. Remove tank cover panels 1 and 2. (Page 40)
3. Have an appropriate oil drain pan.
4. Remove drain plug to drain fluid.
5. Wipe drain plug and drain hole clean. Put drain plug back in place. Tighten it securely.

NOTE

- **Replace both line filter cartridge and suction filter element when hydraulic fluid is changed.**

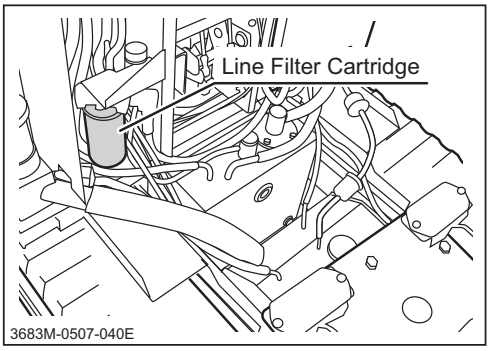

6. Remove line filter cartridge with the oil filter wrench.
7. Have a new line filter cartridge ready. Apply clean hydraulic fluid (oil) on the cartridge oil seal evenly.
8. Screw in the new line filter cartridge. Tighten it by hand until the cartridge is firmly in place.

NOTE

- **Do NOT use the filter wrench when tightening the filter cartridge. Tighten it by hand.**

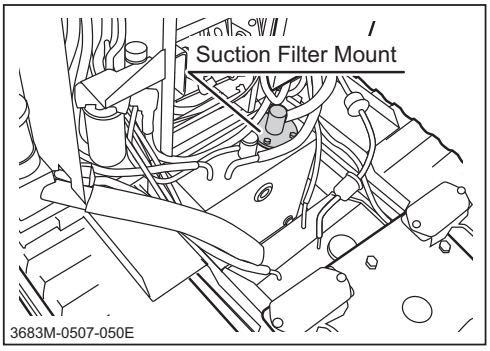

9. Unfasten the bolts and remove suction filter mount.
10. Unfasten suction filter with a wrench and install a new filter. Tighten it securely.

Downloaded from www.Manualslib.com manuals search engine

https://truckmanualshub.com/

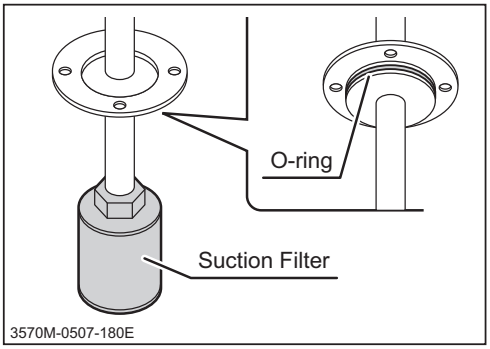

11. Coat O-ring with hydraulic fluid evenly and insert suction filter mount in tank. Make sure to insert it straight so that O-ring does not get out of the groove. Fasten the suction filter mount with bolts.
12. Open filler cap and fill fluid. Put filler cap back in place.
13. Undo safety prop. Lower bucket.
14. Start the engine and engage the clutch to circulate the fluid. Watch for leaks.
15. Lift bucket and hold bucket with safety prop. Inspect fluid level.
16. Install tank cover plates 1 and 2. (Page 40)
17. Undo safety prop. Lower bucket.

Transmission Oil

⚠WARNING!

- **Always park the machine on a level surface and block the tracks with chocks when working under the machine.**

⚠CAUTION!

- **Dispose of the drained oil properly, according to the national and local regulations.**

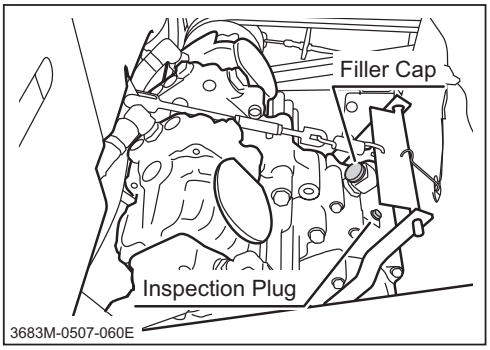

Inspecting

1. Park the machine on a level ground.
2. Remove floor panel.
3. Remove filler cap and inspection plug. Pour oil into filler until oil flows out of inspection plug.
4. Visually inspect the condition of oil. If dirty, change it.

Downloaded from www.Manualslib.com manuals search engine

https://truckmanualshub.com/

5. Wipe excess oil around inspection hole. Clean inspection plug and filler cap. Put inspection plug and filler cap back in place and tighten them securely.

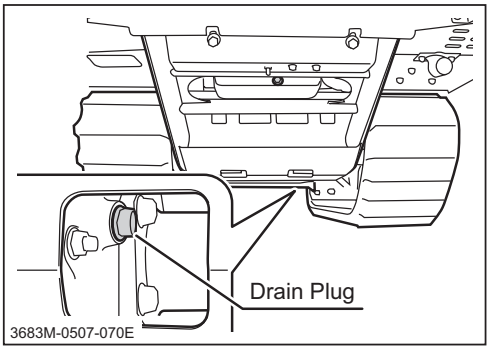

Draining

1. Have an appropriate oil drain pan ready.
2. Remove drain plug to drain oil.
3. Clean drain plug and seal washer. Put drain plug back in place and tighten it securely. Watch for leaks.

NOTE

- **Removing filler cap helps drain oil.**

Filling

1. Remove filler cap and inspection plug.
2. Fill oil slowly until oil flow out of inspection hole.
3. Wipe around inspection hole.
4. Clean inspection plug and seal washer. Put inspection plug back in place and tighten it securely. Watch for leaks.
5. Put filler cap back in place.
6. Install floor panel.

NOTE

- **Oil Capacity: 3.3L (3.5US qt.)**
- **Oil to Use: Gear Oil, API rating GL-4 or 5, SAE index #80.**

Downloaded from www.Manualslib.com manuals search engine

https://truckmanualshub.com/

Drive Belts

⚠CAUTION!

- **Adjust belt tension properly. Inproperly tensioned belts may reduce performance and its service life.**

Inspecting

1. Open engine cover.
2. Visually inspect belts. Replace belt if damaged.

NOTE

- **Contact your CANYCOM representative when belt needs to be replaced.**

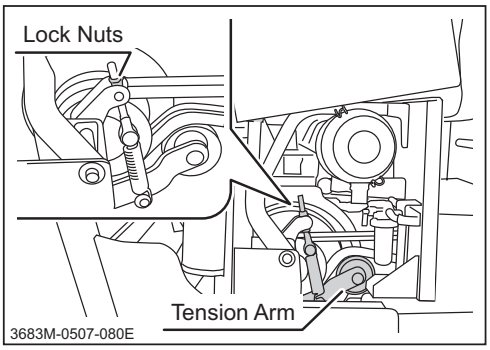

Adjusting

1. Open engine cover.
2. Loosen lock nut.

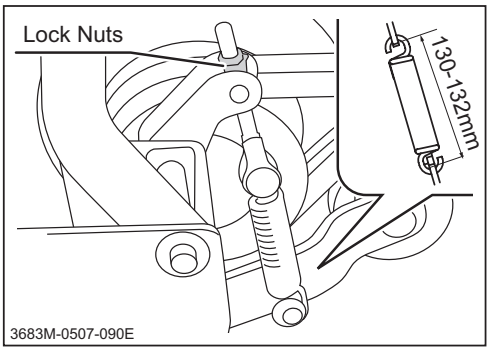

3. Adjust lock nut so that the inside dimension between spring hooks is between 130 and 132 mm.
4. Close engine cover.

Downloaded from www.Manualslib.com manuals search engine

https://truckmanualshub.com/

Parking Brake

⚠WARNING!

- **Always keep brake adjusted for maximum performance. Improperly adjusted brakes may result in property damage, serious injury, or death.**

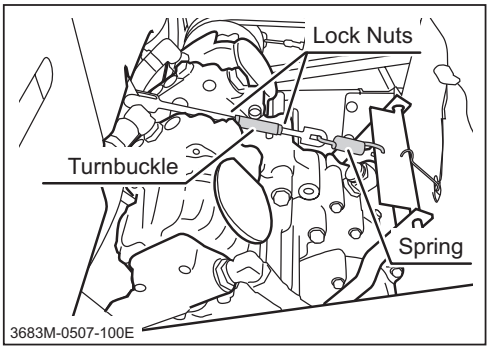

Inspecting/Adjusting

1. Make certain steering levers are in the neutral position.
2. Depress parking brake pedal and lock it.
3. Remove floor panel.
4. Loosen lock nuts on brake linkage.

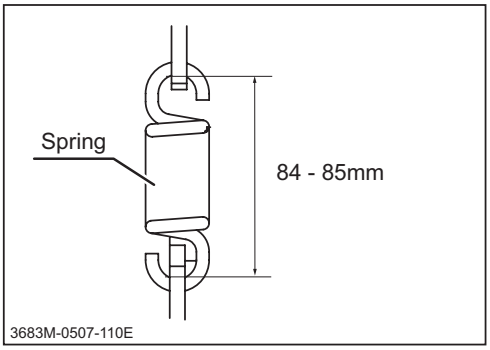

5. Adjust turmbuckle so that the distance between spring hooks is between 84 and 85mm.
6. Tighten lock nuts securely.
7. Install floor panel.

Downloaded from www.Manualslib.com manuals search engine

https://truckmanualshub.com/

Greasing

⚠CAUTION!

- **Follow the maintenance schedule to grease the machine. Lack of greasing may result in rust, excessive wear or seizure.**

1. Grease greasing points as shown below.

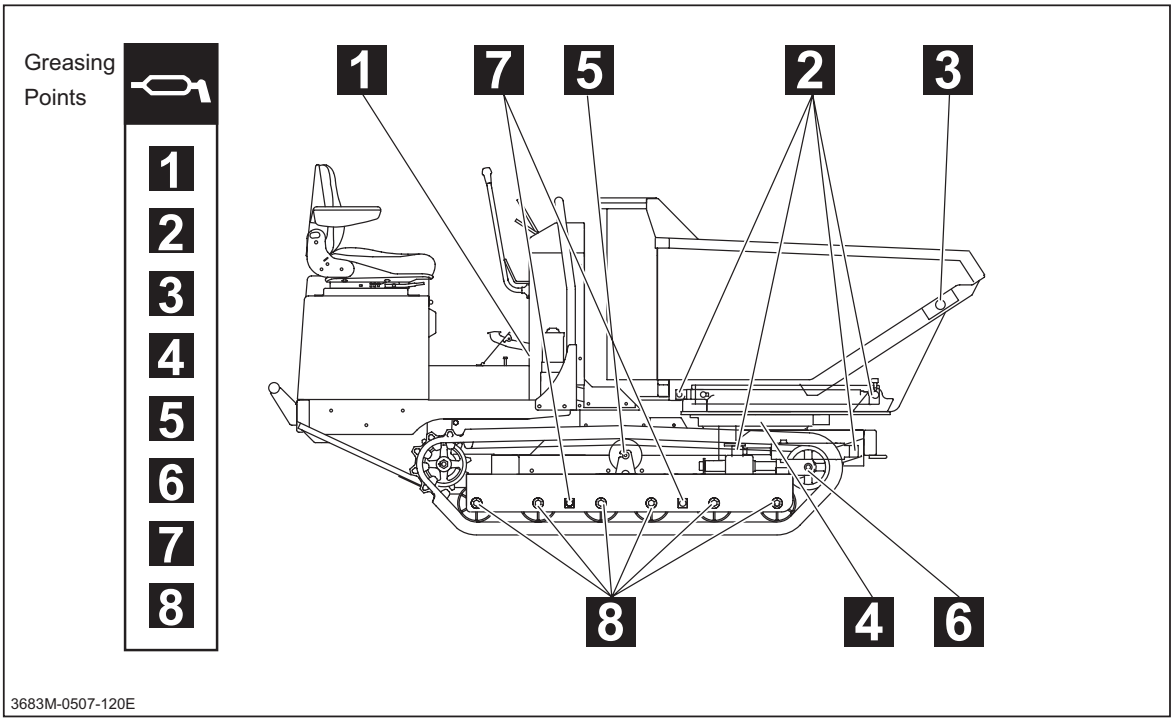

NOTE

- **Grease to use: Chassis Grease**
- **When using a manual grease gun, pump 5-6 times. When the handle of the gun becomes heavy, stop pumping immediately.**
- **When using a pneumatic grease gun, pump it for a few seconds.**

Downloaded from www.Manualslib.com manuals search engine

https://truckmanualshub.com/

Electrical System

⚠WARNING!

- **Always stop the engine and turn the main switch to [◯ (OFF)] position, and disconnect the negative (-) terminal of battery when servicing the electrical system.**

Battery

⚠WARNING!

- **Explosion hazard. Keep open flame or spark away from battery. Hydrogen gas generated during charging is extremely explosive.**
- **Battery fluid (diluted sulfic acid) is corrosive and causes severe burns. Be extremeley cautious when handling battery fluid. If battery fluid is spilt on clothes, immediately rinse with plenty of water. If spilt on skin or in an eye, immediately rinse with plenty of water and promptly consult a physician.**
- **Never charge battery when the fluid level is below the lower limit. Charging battery with insufficient fluid may shorten battery life or cause an explosion.**
- **Never fill battery fluid beyond the upper limit. Battery fluid may spill and cause damage to the machine or personal injury.**
- **Always disconnect the negative (-) terminal first, and connect the positive (+) terminal first. Disconnecting or connecting in the opposite order may cause a short circuit.**
- **When installing the battery, make certain to connect the positive (+) and negative (-) terminals to their respective original positions. Avoid contact between terminals and other surrounding parts.**

Downloaded from www.Manualslib.com manuals search engine

https://truckmanualshub.com/

⚠CAUTION!

- **Always remove battery from the machine before charging. Failure to do so may cause damage to the electrical components and wiring.**
- **Follow the battery charger user's manual when charging.**

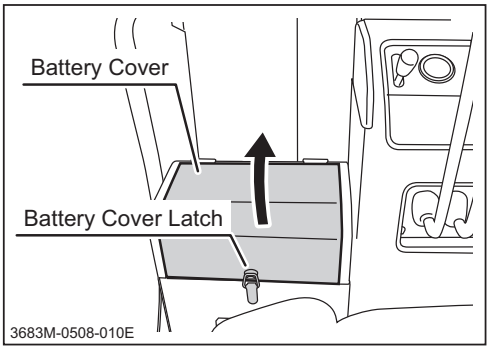

Inspecting

1. Park the machine on level ground.
2. Unlatch battery cover latch and open battery cover.

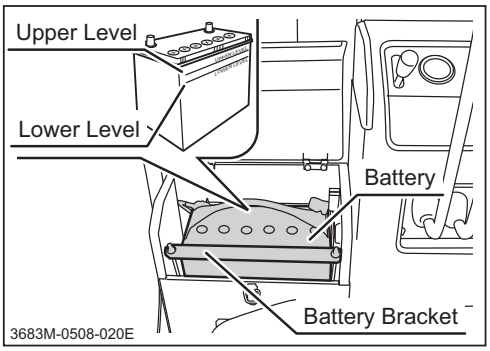

3. Visually inspect that battery fluid level is between the "Upper Level" and "Lower Level" lines. If the fluid level is below the "Lower Level," fill.

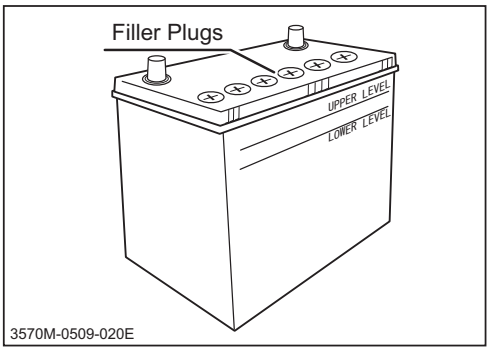

Filling

4. Remove battery bracket and battery from the machine.
5. Open filler plugs and add distilled water to battery evenly until fluid level is between the "Upper Level" and "Lower Level" lines.
6. Put filler plugs back in place.
7. Install battery.
8. Close battery cover and latch it.

Downloaded from www.Manualslib.com manuals search engine

https://truckmanualshub.com/

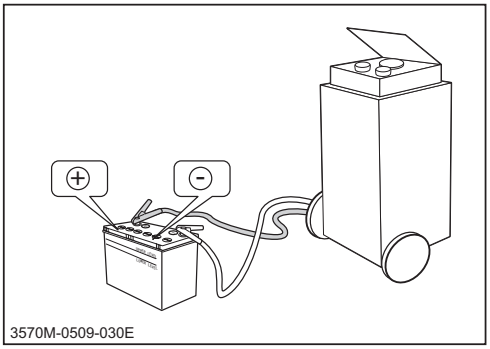

Charging

1. Remove battery from the machine.
2. Remove all filler plugs.
3. Follow the instructions in **the battery charger user's manual** to charge the battery.
4. When battery is fully charged, put filler plugs back in place and install battery.

NOTE

- **Rapid charging is only an emergency measure. This method uses a large amount of current to compensate the lost charge in a short time. However, the battery needs to be fully charged in the ordinary method for a longer service life.**

Fuses

⚠CAUTION!

- **If a fuse blows, investigate the cause before replacing. Always replace a fuse with the one of the correct rating.**

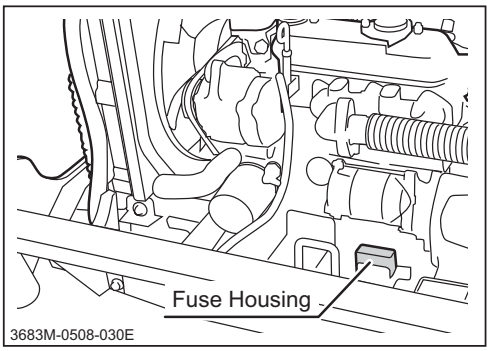

1. Open engine cover.
2. Open the lid of fuse housing.

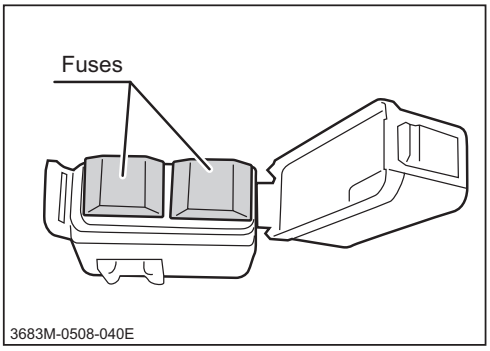

3. Locate the blown fuse and replace it with a new one of the correct rating.
4. Put the lid back in place.
5. Close engine cover.

NOTE

- **Replacement Fuse: 40A (2pcs.)**

Downloaded from www.Manualslib.com manuals search engine

https://truckmanualshub.com/

After Use Care

⚠CAUTION!

- **Do not wash the engine, control panel, electrical parts, or tank caps with air breather with running water; water may enter inside and cause rust or damage.**
- **Clean the machine after use; leaving dirt or foreign objects may cause damage.**
- **Do not attempt to move the machine when it becomes inoperable due to freezing.**

After Normal Use

1. Clean the machine; wash off dirt, mud, and other foreign matter after use.
2. If the machine is to be left outside, cover the machine with protective, water-proof covering after the machine is cooled off.

After Cold Weather Use

1. Clean the machine; wash off dirt, mud, and other foreign matter after use.
2. Park the machine on a paved or firm, dry surface.
3. If the machine is to be left outside, cover the machine with protective, water-proof covering after it is cooled off.

Downloaded from www.Manualslib.com manuals search engine

https://truckmanualshub.com/

Storage

⚠WARNING!

- **Fire hazard; do not store the machine where there is a possiblity of ignition.**

⚠CAUTION!

- **Do not wash the engine or control panel with running water; water may enter inside and cause rust or damage.**
- **Clean the machine before storage; leaving dirt or foreign objects may cause rust or damage.**
- **Do not store the machine in a humid, dusty, or hot place.**

1. Follow the instructions in **Parking** (page 28) to park the machine.
2. Clean dirt off of the machine.
3. Change engine oil (page 41).

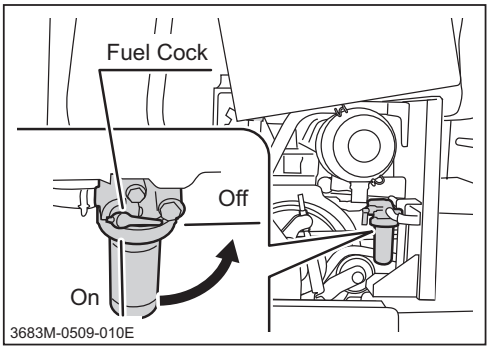

4. Clean the air cleaner (page 43).
5. Open engine cover and turn fuel cock to "OFF" position. Close engine cover.
6. Remove battery from the machine. Service battery (page 54).
7. Cover the machine with protective, water-proof covering after the machine is cooled off.

NOTE

- **Battery dischages even when it is not in use. A battery may hold charge for a few months, but it is a good practice to charge battery before it goes flat; it will extend the battery life.**
- **Refer to the Operation Manual for the engine, for detailed instructions on preparing the engine for storage.**
- **Do not forget to turn the fuel cock to "ON" position when starting the machine.**

Downloaded from www.Manualslib.com manuals search engine

https://truckmanualshub.com/

Troubleshooting

- **If any malfunction or abnormal condition is found, immediately stop using the machine and take an appropriate measure according to the Troubleshooting chart below. If the malfunction or abnormal condition is not listed in the chart, or the suggested measure does not solve the problem, consult with your CANYCOM representative.**

- **Some corrective measures listed below require special knowledge and/or equipment. Please contact your CANYCOM representative in such a case.**

Area	Malfunction	Possible Cause	Corrective Measure	Ref.
Engine	Engine does not start, or is difficult to start.	Parking brake lever is angaged (safety mechanism is on).	→Disengage parking brake.	Page 20
		Battery is discharged.	→Add battery fluid. →Charge Battery. →Replace battery.	Page 54
		Battery cable is disconnected.	→Connect battery cable.	
		Blown fuse.	→Replace fuse.	Page 56
		Bad connection orbreakage in the wiring.	→Please contact your CANYCOM representative.	
		Out of fuel.	→Fill fuel.	Page 15
		Air is in fuel.	→Please contact your CANYCOM representative.	
		Insufficient or wrong oil.	→Fill or change oil	Page 41
		Contamination in fuel system.	→Please contact your CANYCOM representative.	
		Other (other than the above).	→Please contact your CANYCOM representative.	
	Engine stalls.	Out of fuel.	→Fill fuel	Page 15
		Engine is cold.	→Warm up engine.	
		Choke lever is in [Close] position.	→Please contact your CANYCOM representative.	

Downloaded from www.Manualslib.com manuals search engine

https://truckmanualshub.com/

Area	Malfunction	Possible Cause	Corrective Measure	Ref.
Engine	Engine stops abruptly.	Out of fuel.	→Fill fuel.	Page 15
		Piston seizure due to insufficient or bad oil.	→Please contact your CANYCOM representative.	
		Other (other than the above).	→Please contact your CANYCOM representative.	
	Engine does not stop.	Electrical malfunction.	→Please contact your CANYCOM representative.	
		Other (other than the above).	→Please contact your CANYCOM representative.	
	Idling is not stable	Insufficient intake air (clogged air cleaner) .	→Clean or replace air cleaner element.	Page 43
		Other (other than the above).	→Please contact your CANYCOM representative.	
	Poor power or acceleration	Bad fuel.	→Change fuel.	
		Wrong oil (improper viscosity).	→Clean or replace air cleaner element.	Page 41
		Accelerator (throttle) is not properly adjusted.	→Please contact your CANYCOM representative.	
		Insufficient intake air (clogged air cleaner) .	→Clean or replace air cleaner element.	Page 43
		Excessive load.	→Reduce load.	
		Loose drive belt.	→Adjust.	Page 51
		Other (other than the above).	→Please contact your CANYCOM representative.	
	Irregular noise or vibration from or around engine.		→Please contact your CANYCOM representative.	
	Excessive oil consumption.		→Please contact your CANYCOM representative.	

Downloaded from www.Manualslib.com manuals search engine

https://truckmanualshub.com/

Area	Malfunction	Possible Cause	Corrective Measure	Ref.
Engine	Engine overheats.	Insufficient amount of engine oil.	→Fill oil.	Page 41
		Insufficient amount of engine coolant.	→Fill coolant.	Page 41
		Radiator or cooling fan is clogged or blocked.	→Clean.	
		Other (other than the above).	→Please contact your CANYCOM representative.	
	Excessive fuel consumption.	Clogged air cleaner.	→Clean or replace air cleaner element.	Page 43
		Other (other than the above).	→Please contact your CANYCOM representative.	
	Black smoke comes out of exhaust.	Bad fuel.	→Change fuel.	
		Clogged air cleaner.	→Clean or replace air cleaner element.	Page 43
		Other (other than the above).	→Please contact your CANYCOM representative.	
	Black smoke comes out of exhaust.	Engine oil level is too high.	→Adjust oil level.	
		Other (other than the above).	→Please contact your CANYCOM representative.	
	Accelerator lever is catching.	Faulty wire, rod, or linkage.	→Please contact your CANYCOM representative.	
Drive Train	Machine does not move (forward, backward, turning) when steering levers are in the corresponding position.	Clutch is not engaged.	→Engage clutch.	Page 23
		Parking brake is applied.	→Release parking brake.	Page 20
		Excessive load.	→Reduce load.	
		Insufficient or deteriorated HST fluid.	→Add or change fluid.	Page 47
		Other (other than the above).	→Please contact your CANYCOM representative.	
	Irregular noise or heat is observed at or around track.		→Please contact your CANYCOM representative.	

Downloaded from www.Manualslib.com manuals search engine

https://truckmanualshub.com/

Area	Malfunction	Possible Cause	Corrective Measure	Ref.
Brake	Brake does not work well.	Not properly adjusted.	→Adjust.	Page 52
		Brake is wet with water.	→Apply brake a few times to dry.	
		Other (other than the above).	→Please contact your CANYCOM representative.	
Track	Track does not move smoothly.	Not properly adjusted.	→Adjust.	Page 46
		Other (other than the above).	→Please contact your CANYCOM representative.	
Safety Devices	Lamp does not light.	Blown bulb.	→Replace.	
		Blown fuse.	→Replace.	Page 56
		Other (other than the above).	→Please contact your CANYCOM representative.	
	Horn does not work.	Blown fuse.	→Replace.	Page 56
		Other (other than the above).	→Please contact your CANYCOM representative.	
Hydraulic (dump and turn) system	Dump or turn does not work.	Insufficient or deteriorated hydraulic fluid.	→Add or change fluid.	Page 47
		Other (other than the above).	→Please contact your CANYCOM representative.	

Downloaded from www.Manualslib.com manuals search engine

https://truckmanualshub.com/

Hauling

Loading and Unloading

⚠WARNING!

- **Park the transporter (truck) on a level ground. Always use chocks to secure wheels.**
- **Do not allow bystandars to come close to the machine or the transporter when loading or unloading the machine.**
- **Use only the loading ramps with sufficient strength (to withstand the combined weight of the machine and the operator), width (more than 1.2 times the width of the track), and length (more than 4 times the height of the loading deck of the transporter), and have anti-slip ramp surfaces.**
- **Secure the hooks of the loading ramps firmly and flush with the loading deck.**
- **Move slowly backward when loading onto, and move slowly forward when unloading off of the transporter. Pay special care when going over the joint between the loading deck and the ramps; the machine may tip.**
- **Do not turn on the loading ramps. The machine may fall.**
- **Tie down the machine securely. Make sure the machine does not move around on the loading deck.**

Downloaded from www.Manualslib.com manuals search engine

https://truckmanualshub.com/

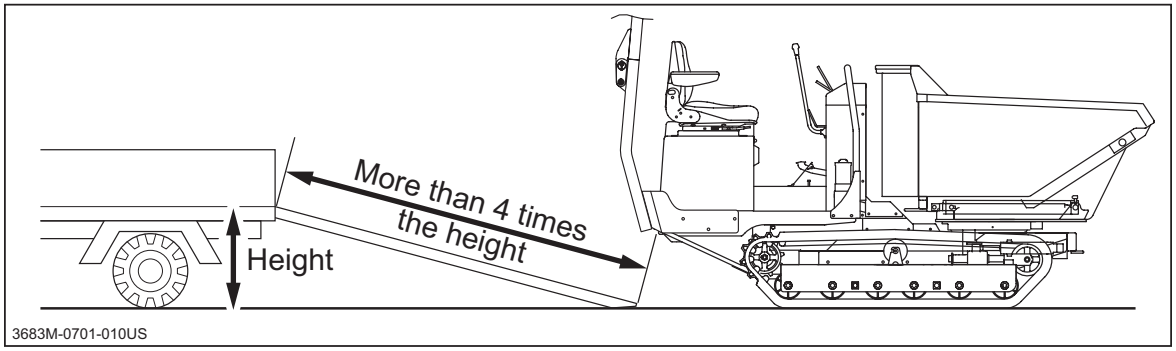

Loading to the Transporter

1. Park the transporter. Secure the wheels with chocks.
2. Place the loading ramps. Secure the hooks of the ramps firmly and flush with the loading deck.
3. Drive the machine slowly backward onto the loading deck.
4. Park the machine according to the instructions in **"Parking"** (Page 28).

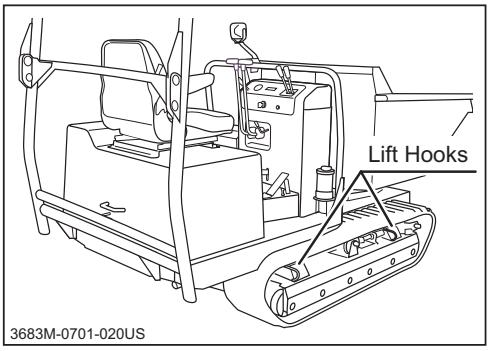

5. Tie the machine at lift hooks with rope or tie-down belts and secure it onto the loading deck of the transporter securely.

Unloading from the Transporter

1. Park the transporter. Secure the wheels with chocks.
2. Undo rope or tie-downs that secure the machine.
3. Place the loading ramps. Secure the hooks of the amps firmly and flush with the loading deck.
4. Drive the machine slowly forward from the loading deck to the ground.

Downloaded from www.Manualslib.com manuals search engine

https://truckmanualshub.com/

Hoisting and Towing

⚠WARNING!

- **Use hoisting sling of sufficient strength. Always use the slings of the same length when more than one is used.**

⚠CAUTION!

- **Always unload the machine before hoisting.**
- **Do not use the wire rope when hoisting. It will damage tracks.**

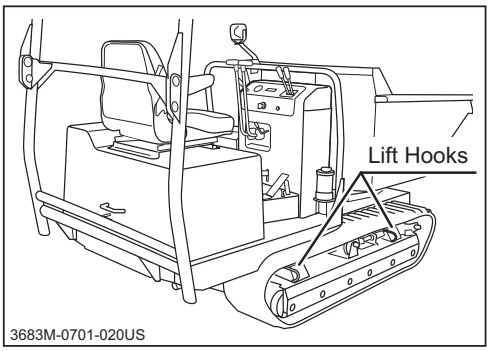

Hoisting

1. Attach hoisting slings to 4 lift hooks located on the corners of the machine. Hoist the center of the slings.

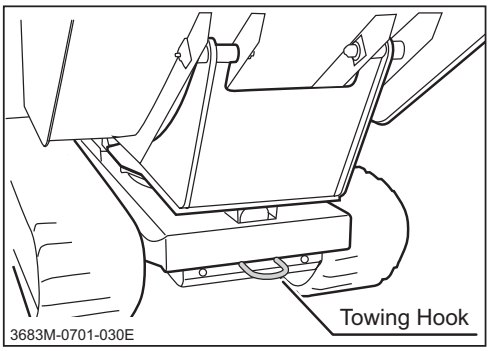

Towing

1. Hook the towing belt to towing hook in the front of the machine.

Downloaded from www.Manualslib.com manuals search engine