https://truckmanualshub.com/

LCT Engines

Service Manual

LCT

LIQUID COMBUSTION TECHNOLOGY

PGM45015 07/17/18 revl

ENGINEERING A NEW GENERATION OF POWER

https://truckmanualshub.com/

Table of Contents

Engine Model Number & Serial Numbering System	**2-3**
General Specifications	**4-5**
General Troubleshooting	**6-7**
Advanced Troubleshooting (for authorized LCT technicians)	**8-10**
Spark Plug Service	**10**
Engine Oil Level Check	**11**
Engine Oil Change	**11**
Engine Oil Recommendations	**11**
Maintenance Schedule	**12**
Torque Specifications	**13-14**
Summer Engine Dimensions	**15-20**
79cc	15
136cc	16
179cc / 208cc / 223cc	17
291cc	18
414cc	19
420cc	20
Winter Engine Dimensions	**21-25**
136cc	21
179cc / 208cc / 223cc (Gen II)	22
254cc	23
291cc / 306cc	24
369cc / 414cc / 420cc	25

⚠ WARNING

CALIFORNIA PROPOSITION 65

This product can expose you to chemicals including gasoline engine exhaust, which is known to the State of California to cause cancer, and carbon monoxide, which is known to the State of California to cause birth defects or other reproductive harm. For more information go to www.P65Warnings.ca.gov.

Current Patents: D596649; D634,337; D611,411; D593,190; D635,585, D549,241; RE43920; RE45,913; D572,659; D595,227; 9328696; 7975806; D580610; D590,110S; D627,368; D585,348; D600,252; D604,686; 201030127679.3; 200830020200.9; 200830299875.1; 201530458407.4; 201520911505.3; 201630277717; 201620636943.8; 201620636960.1; 201620636872.1; 201620636858.1; 201620528656.5; 201620583290.1; 201620616109.2; 200720046150.1; 200820217113.7; 200820214886.X; 200820217112.2; 200820214887.4; 200920040686.1; 200920038850.5; 200920044163.4; 201020258898.X; 200730184074.6; 200730184075; 200830021742.8; 200830023405.2; 200830028283.6; 200830299876.6; 200830299874.7; 200830299873.2; 200930031746.9; 200930036278.4; 200930035200; 201030127696.7; 201030127678.9; 201030127608.3; 200910210967.1; 201130459836.5; 201130500118.8; 201130459770.X; 201220024217.2; 201220042903.2; 201220186503.9; 201220218354.X; 201230237494.7; 201230271026.1; 201420342024.0; 201420633124.9; 201430417951.X; 201520233712.8; 201530103964.4; 201530225241.1; 201530225068.5; 201530225179.6; 201520911627.2; 201621429154.3; 201621429150.5; 201621429142.0; 201630636079.7; 201630636165.8; 201630636136.1; 201621326210.0; 201621429144.X; 201630636166.2

https://truckmanualshub.com/

Engine Model Number & Serial Numbering System

The first two lines of an engine's number is the model number. It is alphanumeric and engraved on the side of the block to the right of the recoil. The third line is alphanumeric and is also the serial number.

Engine Serial Number Sequence

16 95H 03 00001 A:

- A — Assembly Line Designation (A, B, C, D)
- 00001 — Sequential Engine Number
- 03 — Produced Month
- 95H — Engine Series Designation
- 16 — Produced Year

Example:
Engine Serial Number 1695H0300001A represents:

16:	2016
95H:	306cc Horizontal Engine Series
03:	March
00001:	1st Engine Produced During Month of March
A:	Horizontal Assembly Line

LCT Engine Model Numbering System Definition (see chart on page 3):

1. **Preproduction** - This column is coded and reserved for prototype engines only.
2. **Plant** - This column is coded and used for LCT internal use only.
3. **Design Family** - This column is used for emissions regulations and coded for LCT internal use only.
4. **Crankshaft** - This column indicated whether the PTO shaft (crankshaft) is configured in the engine horizontally or vertically.
5. **Shaft** - This column is used for the description of the PTO shaft. This will aid in determining what will be the engine's primary use.
6. **Shaft Detail** - This column references a chart that designates which LCT engineering drawing corresponds to the PTO shaft. This is for LCT internal use only.
7. **Horsepower** - This column is coded to designate the engine's power output (horsepower) with its corresponding size (cubic centimeters).
8. **Paint Code** - This column is coded to which color scheme the engine is equipped with.
9. **Starter Type** - This column is coded to which type of starting system the engine is equipped with.
10. **Options** - This column is coded to designate which equipment options the engine is equipped with.
11. **Emissions Label** - This column is coded for the emissions standards the engine meets.
12. **Pack Code** - This column is reserved for LCT Packaging Department only.

NOTE:
The LCT Engine Model and Serial Number Systems is subject to be changed or edited at any time.

Copyright © 2018 Liquid Combustion Technology, LLC

https://truckmanualshub.com/

Engine Model Number & Serial Numbering System

Plant	Design Family	Crankshaft	Shaft	HP	Paint Code	Starter Type	Options	Emissions Label	Pack Code
P	LM Moderate	H Horizontal	T Threaded	150 [1.5hp (63cc)]	1 - JPC Black Recoil (Standard JPC Black)	E - 12VDC/ 120VAC Electric	A - Fixed Speed	E1 - 50 State	S - Single Pack
S	LO ***Hybrid	V Vertical	K Straight-Keyed	175 [1.75hp (79cc)]	2 - Black Tank (Pantone Black G (Glossy))	P- Recoil	B - Manual Choke	E2 - 49 State	M - Multi-Pack
D	LX Extended		P Tapered	200 [2.0hp (87cc)]	3 - Titan Yellow Blower Housing	Z - Recoil/ Electric Provision	C - Catalytic Muffler	E4 - California Preempt	
	LD Diesel		S Splined (No Attach.)	250 [2.5hp (98cc)]	4 - Black Blower Housing (Pantone Black G (Glossy))	Y - 220VAC Electric	D - Generator Air Filter	E5 - California Exh Only	
	W1 GEN I Snow		G1 2:1 Reduction (GEAR)	350 [3.5hp (106cc)]	5 - Yellow Recoil (Pantone 1235C)	X - 12V DC with Starter Box	E - Generator Muffler	E7 - European Compliant	
	W2 GEN II Snow		G2 6:1 Reduction (GEAR)	400 [4.0hp (136cc)]	6 - Yellow Tank (Pantone 1235C)	V - [TBD]	F - No Tank	E8 - Australian Compliant	
	W3 Single Stage Snow 1		G3 2:1 Reduction (CHAIN)	500 [5.0hp (179cc)]	7 - Black Tank (Pantone Black M (Matte))	U - [TBD]	G - High Oil Fill Tube	E9 - South East Asia	
	W4 *Snow King		G4 2:1 Reduction (CLUTCH)	650 [6.5hp (208cc)]	8 - Black Blower Housing (Pantone Black M (Matte))	T - [TBD]	H - Commercial Fuel Tank (Large Fuel Tank)	EA - Canadian Compliant	
	W5 **Snow King			750 [7.5hp (254cc)]	9 - Yellow Blower Housing (Pantone 1235C)	S -[TBD]	I - AC Charging Coil Equipped	EB - NON CERTIFIED	
	W6 Private Label Snow			850 [8.5hp (291cc)]	1A - Titan Green Blower Housing (Pantone Green 364C)		J - DC Charging Coil Equipped	E12 - [TBD]	
	W7 Ariens Single Stage			950 [9.5hp (306cc)]	1B - Titan Green Recoil (Pantone Green 364C)		K - Evaporative Emission Equipped	E13 - [TBD]	
	W8 GEN III Snow			1000 [10.0hp (369cc)]	1D - XH Black Recoil (Pantone Black M (Matte))		L - Coaxial Idle Down Equipped	E14 - [TBD]	
	ID Inverter Design Engine			1250 [12.5hp (414cc)]	1C - Carmine Red Blower Housing (RAL 3002)		M - Remote Throttle Control	E15 - [TBD]	
				1300 [13.0hp (420cc)]	1E - Blue Recoil (PMS 294C)		N - High Ouput Air Filter - Non CA		
				CI219A [4hp (219cc)]	1F - Blue Fuel Tank (PMS 294C)		O - Snow Equipped		
				CI306 [6hp (306cc)]	1G - Blue Blower Housing (PMS 294C)		P - Pleated Paper Air Filter		
				CI306A [7hp (306cc)]	1H - Titan Orange Blower Housing		Q - No Low Oil Sensor		
				CI418 [8hp (418cc)]	1I - Titan Orange Recoil		R - Low Temperature Muffler		
				CI418A [9hp (418cc)]	IJ - Sliver Recoil (Titan Spec Silver)		S - Atm. Vented Plastic Fuel Cap w/ Tether Cord		
				CI219 [3.5hp (219cc)]	1K - Sliver Blower Housing (Titan Spec Silver)		T - Two Low Oil Fill Plugs		
				CI219A [4.0hp (219cc)]	1L - [TBD]		U - Upgrade Bearing		
				CI435A [9hp (435cc)]	1M - [TBD]		V - Viton Oil Seals		
					1N - XH Black Recoil (Pantone Black G (Glossy)		X - Single Stator Charging System		
					1O - Yellow Fuel Tank (PMS B1046)		Y - Dual Stator Charging System		
					1P - JPC Black Recoil (Lightweight Recoil Design)		Z - CE Compliance Package		
					1Q - [TBD]		1 - Integrated On/Off Speed Controls		
					1R - [TBD]		2 - Remote Choke		
					1S - [TBD]		3 -2.7L Fuel Tank		
					1T - [TBD]		4 - 3.6L - Fuel Tank		
					1U - [TBD]		5 - 60W AC Alternator		
					1V - [TBD]		6 - ROV Fuel Tank Equipped		
					1W - [TBD]		7 - Reduced Sound Muffler Package		
					1X - [TBD]		8 - [TBD]		
					1Y - [TBD]		9 - Front Oil Drain Tube		
					1Z - [TBD]		10 - [TBD]		
					2A - [TBD]		11 - [TBD]		
					2B - [TBD]				
					2C - [TBD]				
					2D - Yellow Recoil (Yellow C)				
					2E - Yellow Blower Housing (Yellow C)				
					2F - Yellow Fuel Tank (Yellow C)				
					2G - Blue Recoil (PMS 287C)				
					2H - Blue Blower Housing (PMS 287C)				
					2I - Blue Fuel Tank (PMS287C)				
					2J - [TBD]				
					2K - [TBD]				
					2L - [TBD]				
					2M - [TBD]				
					2N - [TBD]				
					2O - [TBD]				
					2P - [TBD]				

NOTES:

* W4 DESIGNATOR IS USED FOR FULL ENGINE DRESSED SNOW KING PLATFORMS

** W5 DESIGNATOR IS USED FOR LIMITED ENGINE DRESSED SNOW KING PLATFORMS

*** LO DESIGNATOR IS USED FOR SUMMER SPEC ENGINES WITH WINTER SELF TAPPING MOUNT CYLINDERS

Both Model & ID Numbers to be on PMI & Specification Sheet

Model No.	PLMHK14650124PBGPSTUVE2M	ID Number	920811000
P	Manufacturing Facility	9	Horizontal
LM	Moderate Design Family	208	cc Displacement
H	Horizontal Crankshaft	1	Summer
K	Keyed PTO design	1000	Sequential Number
14	#14 Crankshaft Drawing		
650	6.5hp (208cc) engine		
1	Black Recoil (Glossy)		
2G	Blue Recoil (PMS287C)		
2	Black Tank (Glossy)		
4	Black Blower Housing (Glossy)		
P	Pull Start		
B	Manual Choke		
G	High Oil Fill Tube		
P	Pleated Paper Air Filter		
S	Atmosphere Vented Plastic Fuel Cap w/ Tether Cord		
T	Two Low Oil Fill Plugs		
U	C&U Bearings		
V	Viton Oil Seals		
E2	49 State Compliant		
M	Multi-Pack		

EXAMPLE

Copyright © 2018 Liquid Combustion Technology, LLC

https://truckmanualshub.com/

General Specifications

Item	79cc	136cc	179cc	208cc	223cc	254cc
Maximum Speed	3850±50rpm	3850±50rpm	3850±50rpm	3850±50rpm	3850±50rpm	3600±50rpm
Idle Speed	2050+/-50rpm	2050+/-50rpm	2050+/-50rpm	2050+/-50rpm	2050+/-50rpm	2050+/-50rpm
Compression Ratio	8.5:1	8.5:1	8.5:1	8.5:1	8.5:1	8.5:1
Displacement	79cc	136cc	179cc	208cc	223cc	254cc
Compression Release	yes	yes	yes	yes	yes	yes
Cast Iron Sleeve	yes	yes	yes	yes	yes	yes
Bore x Stroke	2.02" x 1.49" (51.4mm x 38mm)	2.44" x 1.77" (62mm x 45mm)	2.55" x 2.13" (65mm x 54mm)	2.76" x 2.13" (70mm x 54mm)	70x58	2.99" x 2.2" (76mm x 56mm)
PTO Rotation	CCW (measured from PTO side)	CCW (measured from PTO side)	CCW (measured from PTO side)	CCW (measured from PTO side)	CCW (measured from PTO side)	CCW (measured from PTO side)
Fuel (DO NOT USE E85)	regular unleaded gasoline	regular unleaded gasoline	regular unleaded gasoline	regular unleaded gasoline	regular unleaded gasoline	regular unleaded gasoline
Low Oil Shutoff	if equipped	if equipped	if equipped	if equipped	yes	if equipped
Fuel Shutoff Valve	yes	yes	yes	yes	yes	yes
Oil Fill Capacity	13oz	16oz	16oz	16oz	16oz	20oz
Spark Plug Gap	0.7-0.8mm (.027-.030 in.)	0.7-0.8mm (.027-.030 in.)	0.7-0.8mm (.027-.030 in.)	0.7-0.8mm (.027-.030 in.)	0.7-0.8mm (.027-.030 in.)	0.7-0.8mm (.027-.030 in.)
Ignition Air Gap (At Flywheel)	0.4 +/- 0.2mm	0.4 +/- 0.2mm	0.4 +/- 0.2mm	0.4 +/- 0.2mm	0.4 +/- 0.2mm	0.4 +/- 0.2mm
Valve Adjustment (gap) Intake	.11 +/- .02mm (.003-.005in)	.15 +/- .02mm (.005-.007in)	.15 +/- .02mm (.005-.007in)	.15 +/- .02mm (.005-.007in)	.15 +/- .02mm (.005-.007 in.)	.15 +/- .02mm (.005-.007in)
Valve Adjustment (gap) Exhaust	.13 +/- .02mm (.004-.006 in.)	.20 +/- .02mm (.007-.009 in.)	.20 +/- .02mm (.007-.009 in.)	.20 +/- .02mm (.007-.009 in.)	.20 +/- .02mm (.007-.009 in.)	.20 +/- .02mm (.007-.009 in.)
Dry Weight (Summer Engines)	22.72 lbs. (10.3kg)	31 lbs. (14.1kg)	35 lbs. (16.6kg)	35 lbs. (16.6kg)	35 lbs. (16.8kg)	NA
Dry Weight (Winter - Gen II / PW2)	NA	38 lbs. (17.3kg)	42 lbs. (19.1kg)	42 lbs. (19.1kg)	42 lbs. (19.3kg)	45.23 lbs. (20.5kg)
Dry Weight (Winter - PW3)	NA	30 lbs. (13.6kg)	36 lbs. (16.4kg)	36 lbs. (16.4kg)	NA	NA

Copyright © 2018 Liquid Combustion Technology, LLC

https://truckmanualshub.com/

General Specifications

Item	291cc	306cc	369cc	414cc	420cc
Maximum Speed	3850±50rpm	3850±50rpm	3850±50rpm	3850±50rpm	3850±50rpm
Idle Speed	2050+/-50rpm	2050+/-50rpm	2050+/-50rpm	2050+/-50rpm	2050+/-50rpm
Compression Ratio	9:1	9:1	8.1:1	8.1:1	8.1:1
Displacement	291cc	306cc	369cc	414cc	420cc
Compression Release	yes	yes	yes	yes	yes
Cast Iron Sleeve	yes	yes	yes	yes	yes
Bore x Stroke	3.15" x 2.28" (80mm x 58mm)	3.22" x 2.28" (82mm x 58mm)	3.34" x 2.55" (85mm x 65mm)	3.54" x 2.56" (90mm x 65mm)	3.54" x 2.59" (90mm x 66mm)
PTO Rotation	CCW (measured from PTO side)	CCW (measured from PTO side)	CCW (measured from PTO side)	CCW (measured from PTO side)	CCW (measured from PTO side)
Fuel (DO NOT USE E85)	regular unleaded gasoline	regular unleaded gasoline	regular unleaded gasoline	regular unleaded gasoline	regular unleaded gasoline
Low Oil Shutoff	if equipped	if equipped	if equipped	if equipped	if equipped
Fuel Shutoff Valve	yes	yes	yes	yes	yes
Oil Fill Capacity	32oz	32oz	38oz	38oz	38oz
Spark Plug Gap	0.7-0.8mm (.027-.030 in.)	0.7-0.8mm (.027-.030 in.)	0.7-0.8mm (.027-.030 in.)	0.7-0.8mm (.027-.030 in.)	0.7-0.8mm (.027-.030 in.)
Ignition Air Gap (At Flywheel)	0.4 +/- 0.2mm	0.4 +/- 0.2mm	0.4 +/- 0.2mm	0.4 +/- 0.2mm	0.4 +/- 0.2mm
Valve Adjustment (gap) Intake	.15 +/- .02mm (.005-.007in)	.15 +/- .02mm (.005-.007in)	.15 +/- .02mm (.005-.007in)	.15 +/- .02mm (.005-.007in)	.15 +/- .02mm (.005-.007in)
Valve Adjustment (gap) Exhaust	.20 +/- .02mm (.007-.009 in.)	.20 +/- .02mm (.007-.009 in.)	.20 +/- .02mm (.007-.009 in.)	.20 +/- .02mm (.007-.009 in.)	.20 +/- .02mm (.007-.009 in.)
Dry Weight (Summer Engines)	57.32 lbs. (26kg)	57.32 lbs. (26kg)	69.45 lbs. (31.5kg)	69.45 lbs. (31.5kg)	69.45 lbs. (31.5kg)
Dry Weight (Winter - Gen II / PW2)	61 lbs. (27.7kg)	61 lbs. (27.7kg)	72 lbs. (32.7kg)	72 lbs. (32.7kg)	72 lbs. (32.7kg)
Dry Weight (Winter - PW3)	NA	NA	NA	NA	NA

Copyright © 2018 Liquid Combustion Technology, LLC

https://truckmanualshub.com/

General Troubleshooting

Engine will not start:

1. Check oil level- Do you have the correct amount of oil? (Ref: Engine Oil Service, pg. 10)
   Remedy: Oil should be visible and to the top 2 threads of the LOWEST oil fill spout.

---

2. Is on/off switch on?
   Remedy: Turn to the on position per engine specification.

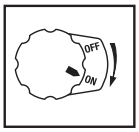

---

3. Snow Only:
   a) Is the Run/Stop switch in the Run Position?
      Remedy: Push switch to the Run Position.
   b) Is the snow safety key inserted into slot?
      Remedy: Push key into slot to fully engage.

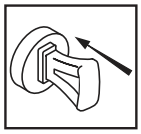

---

4. Do you have fuel in the fuel tank?
   Remedy: Add fuel.

---

5. Is the fuel petcock turned to the on position?
   Remedy: Turn to the on position.

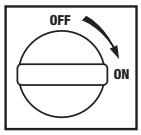

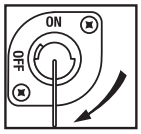

---

6. Was the engine choked?
   Remedy: When starting the engine the choke lever should be pushed left to the on position, and after starting, pushed right to the off position. If engine is equipped with twist type choke, the knob should be turned clockwise to the start position, and after starting, turned counter-clockwise to the run position. If engine still does not start move to half choke and pull twice.

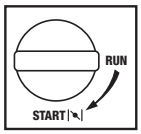

Twist Choke

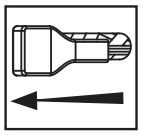

Snow

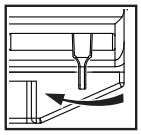

Summer

---

7. Is the spark plug boot securely fastened to the spark plug?
   Remedy: Slide over spark plug and fit securely.

---

8. Has the fuel being used been purchased within the last 30-days and was it stored in a plastic container?
   Remedy: Replace old fuel with new fuel.

---

9. Is the engine flooded?
   Remedy: Remove spark plug and replace with any of the spark plugs listed under Spark Plug Service, pg. 9.

• NOTICE
Using an incorrect spark plug may cause engine damage.

Copyright © 2018 Liquid Combustion Technology, LLC

https://truckmanualshub.com/

General Troubleshooting

Engine stops running:

1. Has the fuel being used been purchased within the last 30-days and was it stored in a plastic container?
   Remedy: Replace old fuel with new fuel.

---

2. Is the air filter dirty?
   Remedy: Replace air filter element if dirty. Clean prefilter of any dirt or dust per engine specification.

---

3. Was the engine choked?
   Remedy: When starting the engine the choke lever should be pushed left to the on position, and after starting, pushed right to the off position. If engine is equipped with twist type choke, the knob should be turned clockwise to the start position, and after starting, turned counter-clockwise to the run position. If engine still does not start move to half choke and pull twice.

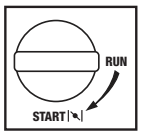

Twist Choke

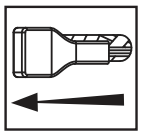
Snow

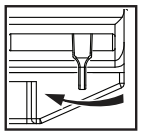
Summer

---

4. Is the spark plug corroded?
   Remedy: Remove spark plug and replace with any of the plugs listed under Spark Plug Service, pg.9.

• NOTICE
Using an incorrect spark plug may cause engine damage.

---

5. Has the engine run out of fuel?
   Remedy: Refuel engine.

---

6. Is the fuel petcock turned to the on position?
   Remedy: Turn to the on position.

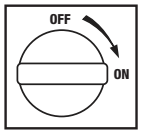

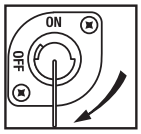

---

7. Is the throttle set too low (variable speed models only)?
   Remedy: Increase the throttle per engine specification.

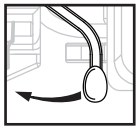

Copyright © 2018 Liquid Combustion Technology, LLC

https://truckmanualshub.com/

Advanced Troubleshooting – For Authorized LCT Technicians

ENGINE		
Complaint	**Symptom and possible causes**	**Remedy**
Engine will not start, or is hard to start	**Compression too low**	
	1. Valves out of adjustment	Adjust
	2. Worn valve guides or poor seating of valves	Repair or Replace
	3. Mistiming valves	Adjust
	4. Excessively worn piston rings	Replace
	5. Worn-down cylinder bore	Replace
	6. Poor seating of spark plug	Retighten
	7. Failed head gasket	Replace
	Plug not sparking	
	1. Fouled spark plug	Replace
	2. Wet spark plug	Dry off
	3. Defective ignition coil	Replace
	4. Spark plug wire damaged	Replace
	5. Kill switch in “OFF” position	Switch to “On”
	6. Ignition coil air gap is too wide	Reset
	7. Ignition coil failure	Replace
	No fuel reaching the intake manifold	
	1. Clogged fuel filter or fuel line	Replace
	2. Dirty/gummed up carburetor	Clean
	3. Fuel petcock is turned off	Turn on
	4. Fuel tank is empty	Fill
Engine idles poorly	1. Out of adjustment tappet clearance	Adjust
	2. Poor seating of valves	Replace or Repair
	3. Defective valve guides	Replace
	4. Worn down camshaft	Replace
	5. Too wide spark plug gap	Adjust or replace
	6. Defective ignition coil	Replace
	7. Ignition coil air gap too wide	Adjust
	8. Dirty/gummed up carburetor	Clean
	9. Stale fuel	Replace
Engine stalls easily	1. Dirty/gummed up carburetor	Clean
	2. Fouled spark plug	Replace
	3. Clogged fuel line	Replace
	4. Valves out of adjustment	Adjust

Copyright © 2018 Liquid Combustion Technology, LLC

https://truckmanualshub.com/

Noisy Engine	**Excessive Valve Chatter**	
	1. Too large valve clearance	Adjust
	2. Weakened or broken valve spring	Replace
	3. Worn tappet or cam lobe	Replace
	4. Worn and burnt camshaft journal	Replace
	Noise seems to come from piston	
	1. Worn down piston or cylinder	Replace
	2. Fouled with carbon combustion chamber	Clean
	3. Worn piston pin or piston pin bore	Replace
	4. Worn piston rings or ring grooves	Replace
	Noise seems to come from crankshaft	
	1. Rattling bearings due to wear	Replace
	2. Worn and burnt main bearings	Replace
	3. Worn and burnt pin bearing	Replace
	4. Too large endplay	Adjust
	Noise seems to come from outside of engine	
	1. Loose trim item	Tighten
Engine runs poorly in high speed range	**Defective engine internal/electrical parts**	
	1. Weakened valve springs	Replace
	2. Worn camshaft	Replace
	3. Valve timing out of adjustment	Adjust
	4. Too narrow spark plug gaps	Adjust
	5. Defective ignition coil	Replace
	6. Clogged air cleaner element	Replace
	7. Clogged fuel line, resulting in inadequate fuel supply to carburetor	Replace
	8. Worn bearings	Replace
	9. Blown head gasket	Replace
	10. Ignition coil air gap too wide	Adjust
	11. Dirty/gummed up carburetor	Clean
	12. Stale fuel	Replace
	Defective air flow system	
	1. Carburetor gasket leak - sucking air causing engine to run lean	Replace
Engine lacks power	**Defective engine internal/electrical parts**	
	1. Loss of valve clearance	Adjust
	2. Weakened valve springs	Replace
	3. Out of adjustment valve timing	Adjust
	4. Worn piston ring or cylinder	Replace
	5. Poor seating of valves	Replace
	6. Fouled spark plug	Replace
	7. Incorrect spark plug	Replace
	8. Clogged air filter element	Replace
	9. Carburetor gasket leak - sucking air causing engine to run lean	Replace
	10. Too much engine oil	Adjust
	11. Air fins clogged on engine causing to overheat	Remove debris
	12. Not enough oil in engine	Adjust

Copyright © 2018 Liquid Combustion Technology, LLC

https://truckmanualshub.com/

Dirty or heavy exhaust smoke	1. Too much engine oil in the engine	Adjust
	2. Worn piston rings or cylinder	Replace
	3. Worn valve guides	Replace
	4. Scored or scuffed cylinder wall	Replace
	5. Worn valve stems	Replace
	6. Defective stem seal	Replace
	7. Worn oil ring side rails	Replace
No spark or poor spark	1. Defective ignition coil	Replace
	2. Defective spark plug	Replace
	3. Open-circuit wiring connection	Check and repair
Spark plug fouled with carbon	1. Incorrect gasoline	Replace
	2. Dirty air cleaner element	Replace
	3. Too cold spark plug	Use hotter plug
Spark plug becomes fouled too soon	1. Worn piston rings	Replace
	2. Worn piston or cylinder	Replace
	3. Excessive clearance of valve stems in valve guides	Replace
	4. Worn valve stem oil seal	Replace
Spark plug electrode over-heated or burnt	1. Too hot spark plug	Use colder plug
	2. Overheated the engine	Tune up
	3. Loose spark plug	Tighten
	4. Too lean fuel mixture	Check for air leak

Spark Plug Service

Recommended spark plugs: Torch Plug: F6RTP (Platinum) and F6RTC

Cross References

- **Champing plug cross reference is: RN9YC (some tables show RN9YCC)**
- **NGK plug cross reference is: BPR6ES**
- **BOSCH plug cross reference is: WR6DC**

- **NOTICE**
  Using an incorrect spark plug may cause engine damage.

1. When engine is cool, disconnect the spark plug cap and remove any debris from the spark plug area with high pressure air.
2. Remove the spark plug with a 13/16-inch (21mm) spark plug wrench.
3. Inspect the spark plug. Replace it if the electrodes are worn or if the insulator is cracked or chipped. Spark plug gap should be set to 0.027 - 0.030 inches (0.7 - 0.8mm).
4. Install the spark plug carefully to avoid cross threading. Screw in spark plug by hand until it stops turning.
5. Tighten the spark plug with a 13/16-inch (21mm) spark plug wrench. Tighten 1/4 turn after the spark plug seats.

   - **NOTICE**
     A loose spark plug can overheat and damage the engine. Over-tightening the spark plug can damage the threads in the cylinder head.

6. Attach the spark plug cap. Ensure spark plug cap snaps into place securely.

Copyright © 2018 Liquid Combustion Technology, LLC

https://truckmanualshub.com/

Engine Oil Level Check

Check the engine oil level with the engine stopped and with the engine in a level position.

1. Remove either side mounted filler cap dipstick or high oil fill dipstick and wipe it clean.
2. Insert the dipstick into the filler neck and turn clockwise until fully seated. Then remove the dipstick by turning it counter clockwise. Check the oil level shown on the dipstick.
3. If the oil level is low, fill to the edge of the oil filler hole with the recommended oil.
4. Securely screw in the filler cap/dipstick. Running the engine with a low oil level can cause engine damage. Always check the engine oil before start up.

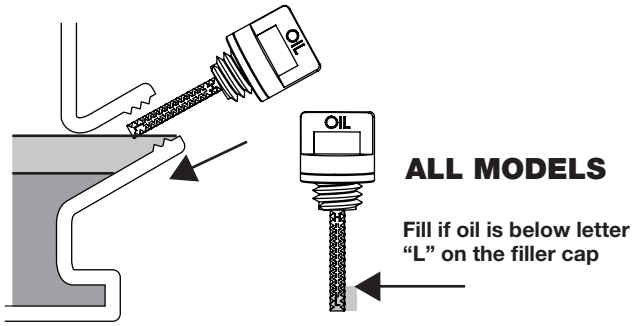

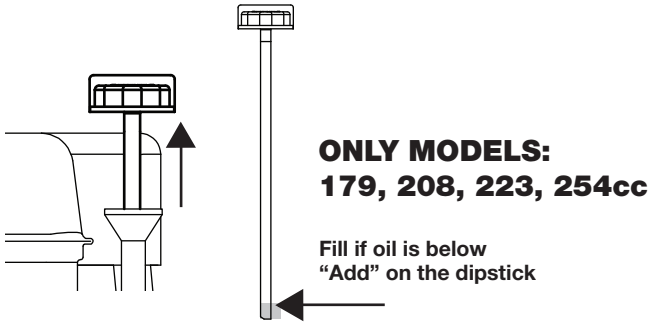

Engine Oil Change

Drain the used oil while the engine is warm. Warm oil drains quickly and completely. Avoid contact with hot oil.

1. Place a suitable container below the engine to catch the used oil then remove the filler cap/dipstick and the drain plug.
2. Allow the used oil to drain completely, then reinstall the drain plug, and tighten it securely. Do not over tighten. Dispose of used motor oil in a manner that is compatible with the environment. We suggest you take used oil in a sealed container to your local recycling center or service station for reclamation. Do not throw used oil in the trash, pour it on the ground, or pour down a drain.
3. With the engine in a level position, fill to the outer edge of the oil filler hole with the recommended oil. (see fill limits right)

• **NOTICE** Running the engine with a low oil level can cause engine damage.

4. Securely screw in the filler cap/dipstick.

Engine Oil Capacities

79cc	13 oz (.384 liter)
136/179/208/223cc	16 oz (.473 liter)
254cc	20 oz (.591 liter)
291/306cc	32 oz (.946 liter)
369/414/420cc	38 oz (1.123 liter)

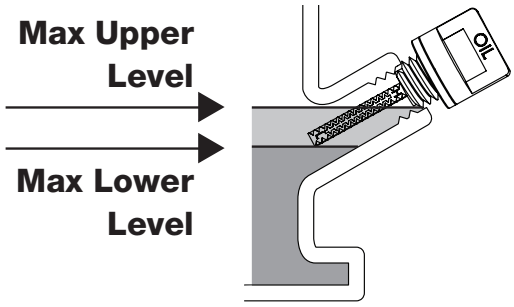

Engine Oil Recommendations

Engine oil affects performance and service life. Use 4-stroke automotive detergent oil.

SAE 10W-30 is recommended for general use. Other viscosities shown in the chart may be used when the average temperature in your area warrants.

The SAE oil viscosity and service classification are in the API label on the oil container. The manufacturer recommends you use API SERVICE category SJ engine oil, or better.

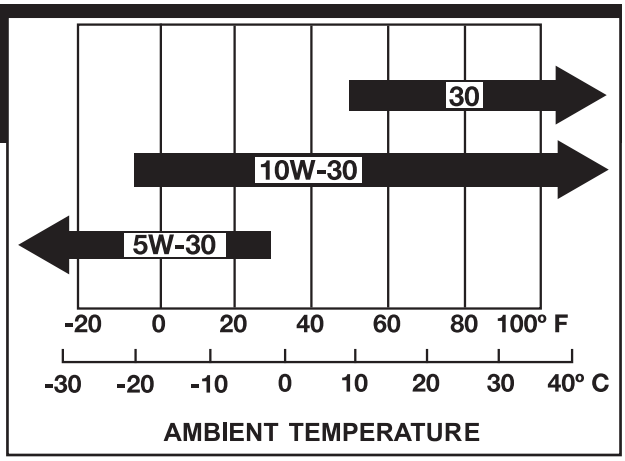

Copyright © 2018 Liquid Combustion Technology, LLC

https://truckmanualshub.com/

Maintenance Schedule

Normal Operating Conditions (less than 40 hrs. per year)

	EACH USE	FIRST MONTH	EVERY 6 MONTHS	ONCE A YEAR
Engine Oil Level	Check			
Engine Oil		Replace	Replace	
Air Filter	Check			Clean / Replace
Spark Plug*			Clean	Replace
Cylinder/Head Fins				Clean
Oil Leaks	Check			
Bolts	Check			
Fuel Hose Clamps	Check			

* Spark plug gap to be set to 0.027 - 0.030 inches (0.7 - 0.8mm).

Extreme Operating Conditions (greater than 40 hrs. per year)

	EACH USE	EVERY 40 HOURS
Engine Oil Level	Check	
Engine Oil		Replace
Air Filter	Check	
Spark Plug*		Replace
Cylinder/Head Fins	Check	Clean
Oil Leaks	Check	
Bolts	Check	
Fuel Hose Clamps	Check	

* Spark plug gap to be set to 0.027 - 0.030 inches (0.7 - 0.8mm).

⚠ NOTE

Following proper maintenance is critical under extreme operating conditions.

Liquid Combustion Technology engines are made under one or more of the following patents:

PATENT NUMBER:				
US D503,723 S	US D534,923 S	US D560,275 S	US D593,190 S	US D533,195 S
US D516,582 S	US D539,818 S	US D570,877 S	US D596,649 S	US D611,411 S
US D521,024 S	US D543,216 S	US D570,879 S	US D600,252 S	US D627,368 S
US D532,794 S	US D549,241 S	US D585,348 S	US D604,686 S	

Other Patents Pending

Copyright © 2018 Liquid Combustion Technology, LLC

https://truckmanualshub.com/

Torque Specifications

Item	79cc Torque (N.M)	136cc Torque (N.M)	179cc Torque (N.M)	208/223cc Torque (N.M)	254cc Torque (N.M)
Oil Drain Bolt	31 (270-280 in-lbs.)	31 (270-280 in-lbs.)	31 (270-280 in-lbs.)	31 (270-280 in-lbs.)	31 (270-280 in-lbs.)
Oil drain extended tube (if equipped)*	NA	36 (320-330 in lbs.)	36 (320-330 in lbs.)	36 (320-330 in lbs.)	36 (320-330 in lbs.)
LOS Switch Mtg Bolts	NA	8 (71 in-lbs.)	8 (71 in-lbs.)	8 (71 in-lbs.)	8 (71 in-lbs.)
Spark plug	20-25 (177-222 in-lbs.)	20-25 (177-222 in-lbs.)	20-25 (177-222 in-lbs.)	20-25 (177-222 in-lbs.)	20-25 (177-222 in-lbs.)
Carburetor Mtg Studs	8-12 (71-106 in-lbs.)	8-12 (71-106 in-lbs.)	8-12 (71-106 in-lbs.)	8-12 (71-106 in-lbs.)	8-12 (71-106 in-lbs.)
Exhaust Studs	20-24 (177-212 in-lbs.)	20-24 (177-212 in-lbs.)	20-24 (177-212 in-lbs.)	20-24 (177-212 in-lbs.)	20-24 (177-212 in-lbs.)
Connecting rod bolt	12-14 (106-124 in-lbs.)	12-14 (106-124 in-lbs.)	12-14 (106-124 in-lbs.)	12-14 (106-124 in-lbs.)	12-14 (106-124 in-lbs.)
Ignition Coil mtg bolts	10-12 (86-106 in-lbs.)	10-12 (86-106 in-lbs.)	10-12 (86-106 in-lbs.)	10-12 (86-106 in-lbs.)	10-12 (86-106 in-lbs.)
Valve adjustment lock-ing nut	10 (86 in-lbs.)	10 (86 in-lbs.)	10 (86 in-lbs.)	10 (86 in-lbs.)	10 (86 in-lbs.)
Governor Arm locking bolt	8 (71 in-lbs.)	8 (71 in-lbs.)	8 (71 in-lbs.)	8 (71 in-lbs.)	8 (71 in-lbs.)
Carburetor mtg nut (summer/winter)	7 (62 in-lbs.)	7 (62 in-lbs.)	7 (62 in-lbs.)	7 (62 in-lbs.)	7 (62 in-lbs.)
Muffler mtg nut	20 (172 in-lbs.)	20-24 (177-212 in-lbs.)	20-24 (177-212 in-lbs.)	20-24 (177-212 in-lbs.)	20-24 (177-212 in-lbs.)
Rocker Arm mtg stud	8 (71 in-lbs.)	20-25 (177-222 in-lbs.)	20-25 (177-222 in-lbs.)	20-25 (177-222 in-lbs.)	20-25 (177-222 in-lbs.)
Crankcase PTO Cover bolts	12-14 (106-120 in-lbs.)	24-26 (212-230 in-lbs.)	24-26 (212-230 in-lbs.)	24-26 (212-230 in-lbs.)	24-26 (212-230 in-lbs.)
Cylinder Head Bolts	30 (22 ft-lbs.)	36 (27 ft-lbs.)	36 (27 ft-lbs.)	36 (27 ft-lbs.)	38-42 (28-31 ft-lbs.)
Flywheel nut	60 (44 ft-lbs.)	75-80 (55-59 ft-lbs.)	75-80 (55-59 ft-lbs.)	75-80 (55-59 ft-lbs.)	84-86 (62-64 ft-lbs.)
Valve Cover mtg bolt(s)	6-10 (52-86 in-lbs.)	6-10 (52-86 in-lbs.)	6-10 (52-86 in-lbs.)	6-10 (52-86 in-lbs.)	6-10 (52-86 in-lbs.)
Fuel Tank mtg bolts	6-10 (52-86 in-lbs.)	6-10 (52-86 in-lbs.)	6-10 (52-86 in-lbs.)	6-10 (52-86 in-lbs.)	6-10 (52-86 in-lbs.)
Speed Control mtg bolts	6-10 (52-86 in-lbs.)	6-10 (52-86 in-lbs.)	6-10 (52-86 in-lbs.)	6-10 (52-86 in-lbs.)	6-10 (52-86 in-lbs.)
Recoil Starter mtg bolts	6-10 (52-86 in-lbs.)	6-10 (52-86 in-lbs.)	6-10 (52-86 in-lbs.)	6-10 (52-86 in-lbs.)	6-10 (52-86 in-lbs.)
Electric Starter mtg bolts	NA	6-10 (52-86 in-lbs.)	6-10 (52-86 in-lbs.)	6-10 (52-86 in-lbs.)	6-10 (52-86 in-lbs.)
Blower Housing mtg bolts	6-10 (52-86 in-lbs.)	6-10 (52-86 in-lbs.)	6-10 (52-86 in-lbs.)	6-10 (52-86 in-lbs.)	6-10 (52-86 in-lbs.)
Sheet Metal mtg bolts	6-10 (52-86 in-lbs.)	6-10 (52-86 in-lbs.)	6-10 (52-86 in-lbs.)	6-10 (52-86 in-lbs.)	6-10 (52-86 in-lbs.)

**Torque values are with thread locking compound applied to the threads.*

Copyright © 2018 Liquid Combustion Technology, LLC

https://truckmanualshub.com/

Torque Specifications

Item	291cc Torque (N.M)	306cc Torque (N.M)	369cc Torque (N.M)	414cc Torque (N.M)	420cc Torque (N.M)
Oil Drain Bolt	38 (330-340 in lbs.)	38 (330-340 in lbs.)	38 (330-340 in lbs.)	38 (330-340 in lbs.)	38 (330-340 in lbs.)
Oil drain extended tube (if equipped)*	45 (400-410 in lbs.)	45 (400-410 in lbs.)	45 (400-410 in lbs.)	45 (400-410 in lbs.)	45 (400-410 in lbs.)
LOS Switch Mtg Bolts	8 (71 in-lbs.)	8 (71 in-lbs.)	8 (71 in-lbs.)	8 (71 in-lbs.)	8 (71 in-lbs.)
Spark plug	20-25 (177-222 in-lbs.)	20-25 (177-222 in-lbs.)	20-25 (177-222 in-lbs.)	20-25 (177-222 in-lbs.)	20-25 (177-222 in-lbs.)
Carburetor Mtg Studs	8-12 (71-106 in-lbs.)	8-12 (71-106 in-lbs.)	8-12 (71-106 in-lbs.)	8-12 (71-106 in-lbs.)	8-12 (71-106 in-lbs.)
Exhaust Studs	20-24 (177-212 in-lbs.)	20-24 (177-212 in-lbs.)	20-24 (177-212 in-lbs.)	20-24 (177-212 in-lbs.)	20-24 (177-212 in-lbs.)
Connecting rod bolt	20 (177 in-lbs.)	20 (177 in-lbs.)	20-24 (177-212 in-lbs.)	20-24 (177-212 in-lbs.)	20-24 (177-212 in-lbs.)
Ignition Coil mtg bolts	10-12 (86-106 in-lbs.)	10-12 (86-106 in-lbs.)	10-12 (86-106 in-lbs.)	10-12 (86-106 in-lbs.)	10-12 (86-106 in-lbs.)
Valve adjustment lock-ing nut	10 (86 in-lbs.)	10 (86 in-lbs.)	10 (86 in-lbs.)	10 (86 in-lbs.)	10 (86 in-lbs.)
Governor Arm locking bolt	8 (71 in-lbs.)	8 (71 in-lbs.)	8 (71 in-lbs.)	8 (71 in-lbs.)	8 (71 in-lbs.)
Carburetor mtg nut (summer/winter)	8 (71 in-lbs.)	8 (71 in-lbs.)	8 (71 in-lbs.)	8 (71 in-lbs.)	8 (71 in-lbs.)
Muffler mtg nut	20-24 (177-212 in-lbs.)	20-24 (177-212 in-lbs.)	20-24 (177-212 in-lbs.)	20-24 (177-212 in-lbs.)	20-24 (177-212 in-lbs.)
Rocker Arm mtg stud	20-25 (177-222 in-lbs.)	20-25 (177-222 in-lbs.)	20-25 (177-222 in-lbs.)	20-25 (177-222 in-lbs.)	20-25 (177-222 in-lbs.)
Crankcase PTO Cover bolts	24-26 (212-230 in-lbs.)	24-26 (212-230 in-lbs.)	24-26 (212-230 in-lbs.)	24-26 (212-230 in-lbs.)	24-26 (212-230 in-lbs.)
Cylinder Head Bolts	40-42 (29.5-31 ft-lbs.)	40-42 (29.5-31 ft-lbs.)	48 (35 ft-lbs.)	48 (35 ft-lbs.)	48 (35 ft-lbs.)
Flywheel nut	116-120 (86-89 ft-lbs.)	116-120 (86-89 ft-lbs.)	116-120 (86-89 ft-lbs.)	116-120 (86-89 ft-lbs.)	116-120 (86-89 ft-lbs.)
Valve Cover mtg bolt(s)	12-13 (106-115 in-lbs.)	12-13 (106-115 in-lbs.)	12-13 (106-115 in-lbs.)	12-13 (106-115 in-lbs.)	12-13 (106-115 in-lbs.)
Fuel Tank mtg bolts	22-26 (189-223in-lbs.)	22-26 (189-223in-lbs.)	22-26 (189-223in-lbs.)	22-26 (189-223in-lbs.)	22-26 (189-223in-lbs.)
Speed Control mtg bolts	6-10 (52-86 in-lbs.)	6-10 (52-86 in-lbs.)	6-10 (52-86 in-lbs.)	6-10 (52-86 in-lbs.)	6-10 (52-86 in-lbs.)
Recoil Starter mtg bolts	6-10 (52-86 in-lbs.)	6-10 (52-86 in-lbs.)	6-10 (52-86 in-lbs.)	6-10 (52-86 in-lbs.)	6-10 (52-86 in-lbs.)
Electric Starter mtg bolts	10-14 (86-124 in-lbs.)	10-14 (86-124 in-lbs.)	10-14 (86-124 in-lbs.)	10-14 (86-124 in-lbs.)	10-14 (86-124 in-lbs.)
Blower Housing mtg bolts	6-10(52-86 in-lbs.)	6-10 (52-86 in-lbs.)	6-10 (52-86 in-lbs.)	6-10 (52-86 in-lbs.)	6-10 (52-86 in-lbs.)
Sheet Metal mtg bolts	6-10 (52-86 in-lbs.)	6-10 (52-86 in-lbs.)	6-10 (52-86 in-lbs.)	6-10 (52-86 in-lbs.)	6-10 (52-86 in-lbs.)

**Torque values are with thread locking compound applied to the threads.*

Copyright © 2018 Liquid Combustion Technology, LLC

https://truckmanualshub.com/

79cc Summer Engine Dimensions

*Drawings do not accurately represent actual engine appearance.

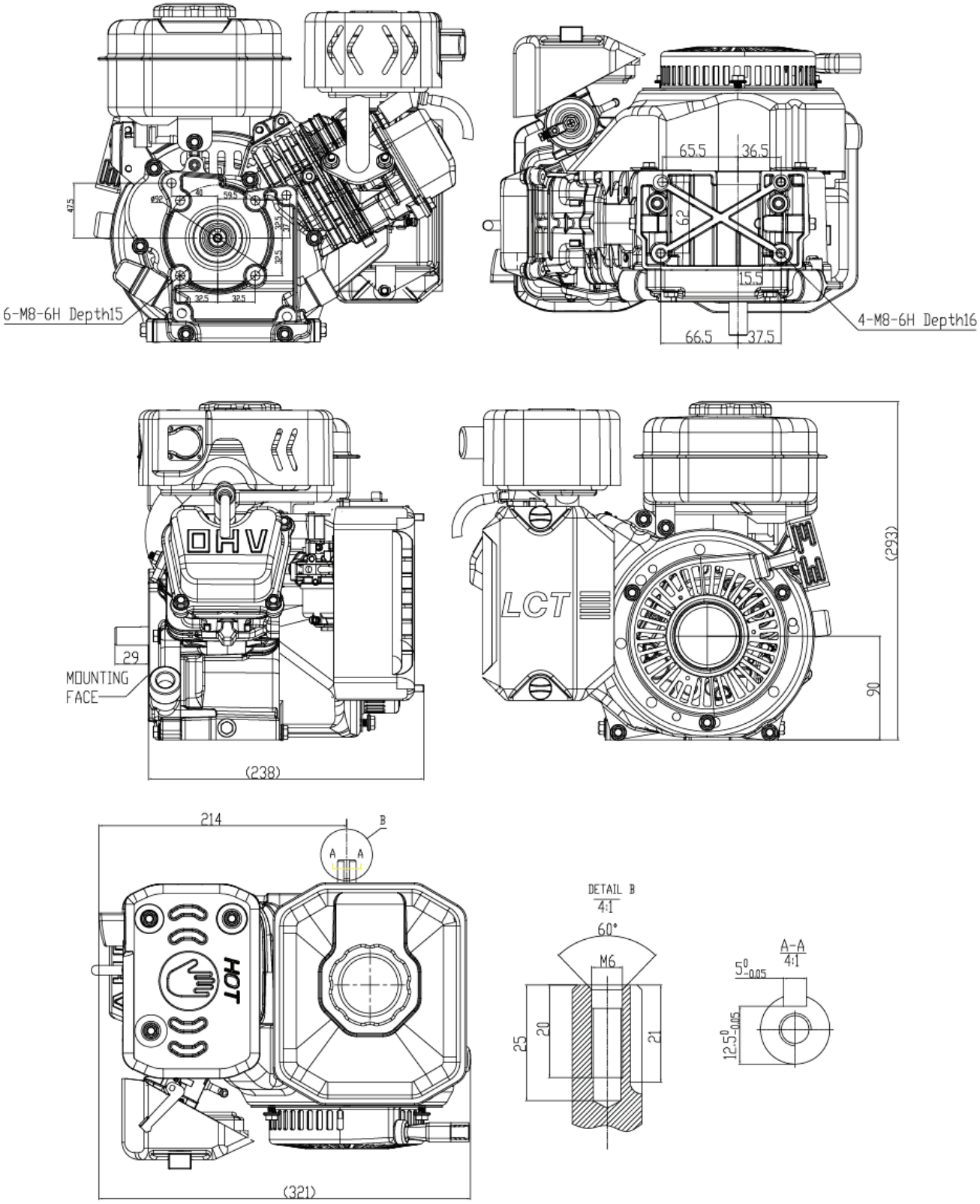

Copyright © 2018 Liquid Combustion Technology, LLC

https://truckmanualshub.com/

136cc Summer Engine Dimensions

*Drawings do not accurately represent actual engine appearance.

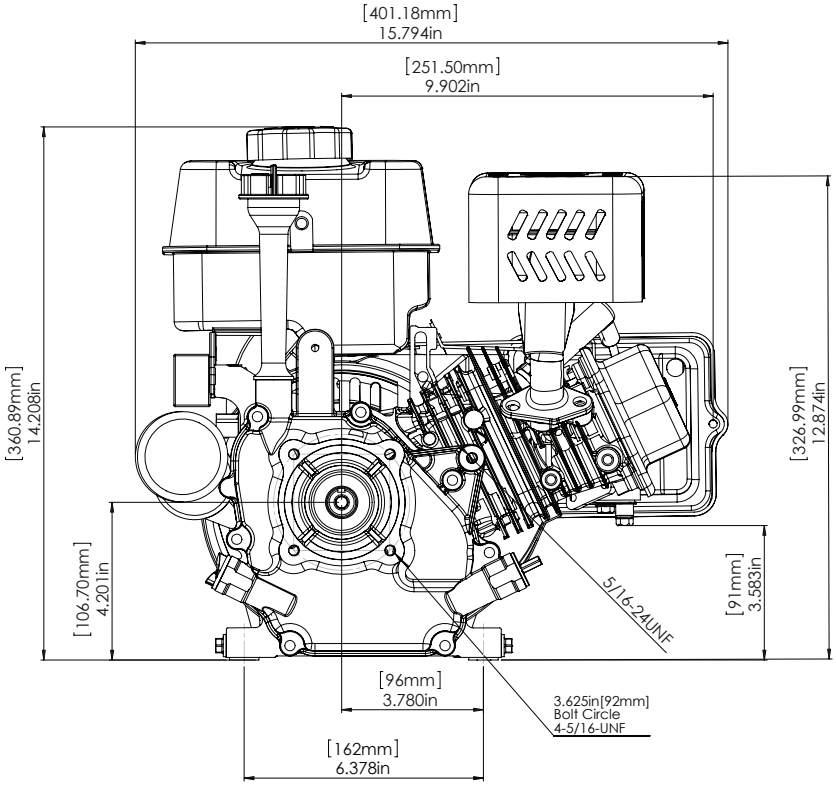

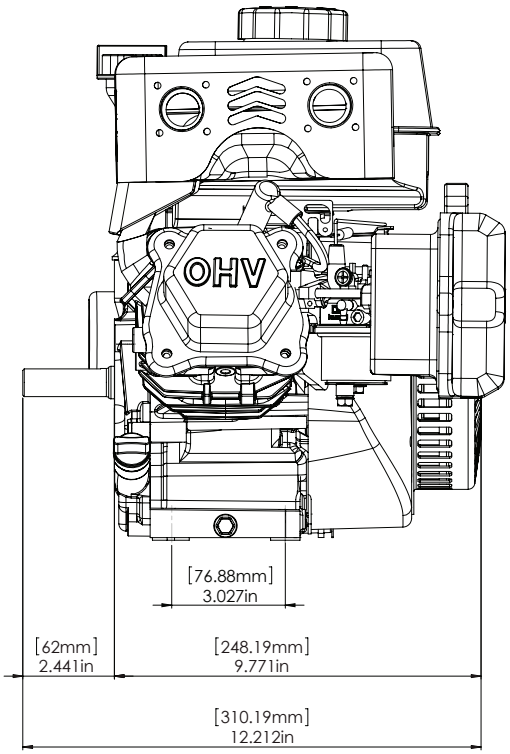

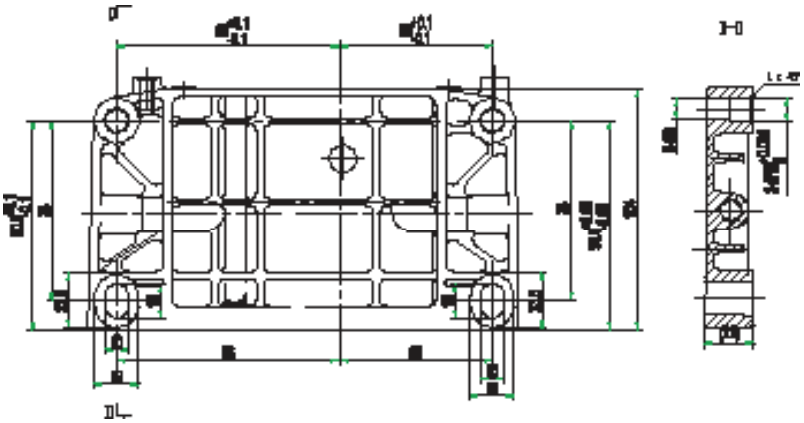

Copyright © 2018 Liquid Combustion Technology, LLC

https://truckmanualshub.com/

179cc / 208cc / 223cc Summer Engine Dimensions

*Drawings do not accurately represent actual engine appearance.

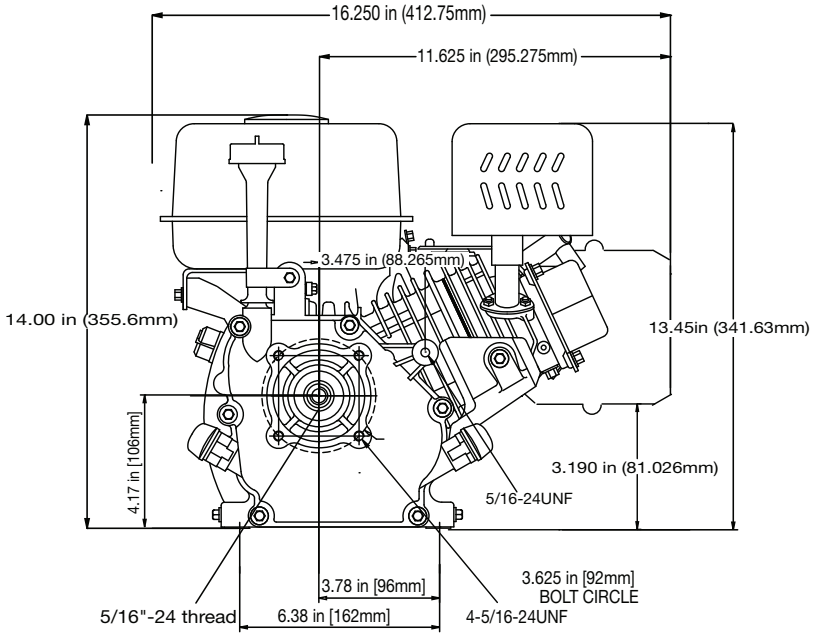

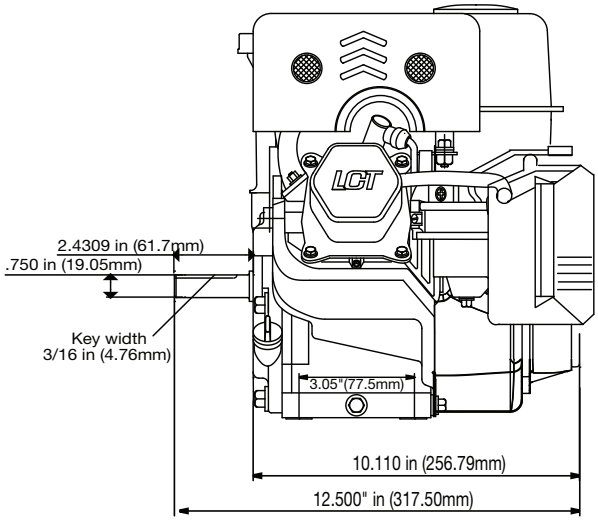

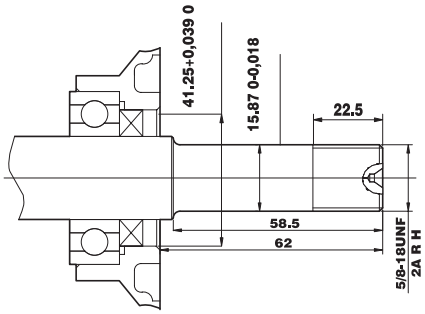

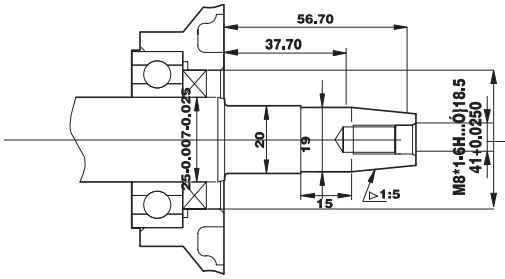

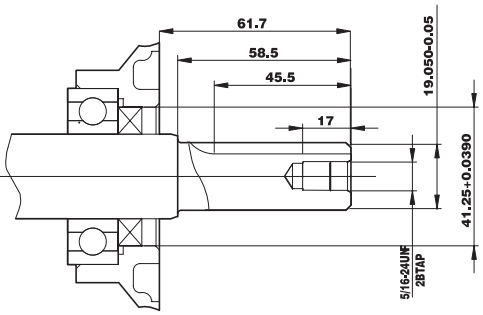

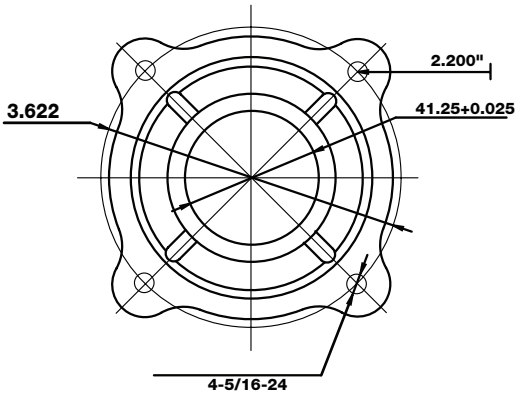

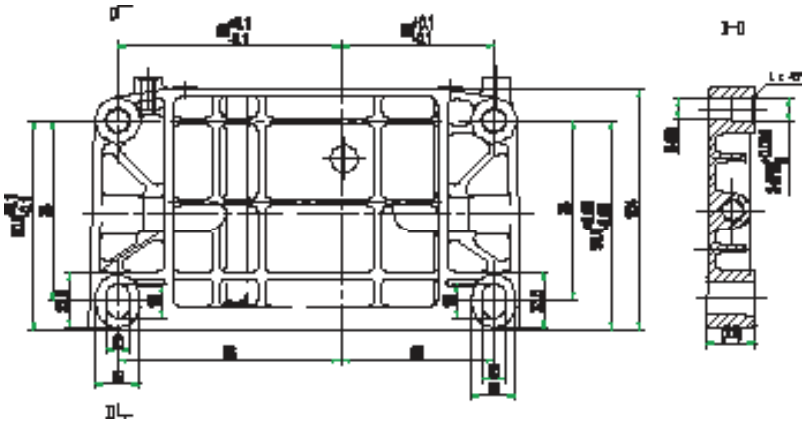

Copyright © 2018 Liquid Combustion Technology, LLC

https://truckmanualshub.com/

291cc Summer Engine Dimensions

*Drawings do not accurately represent actual engine appearance.

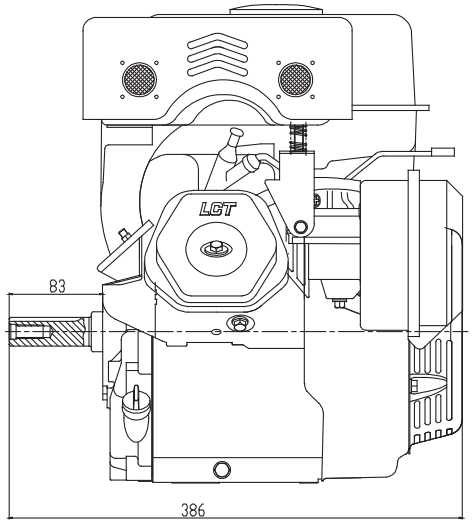

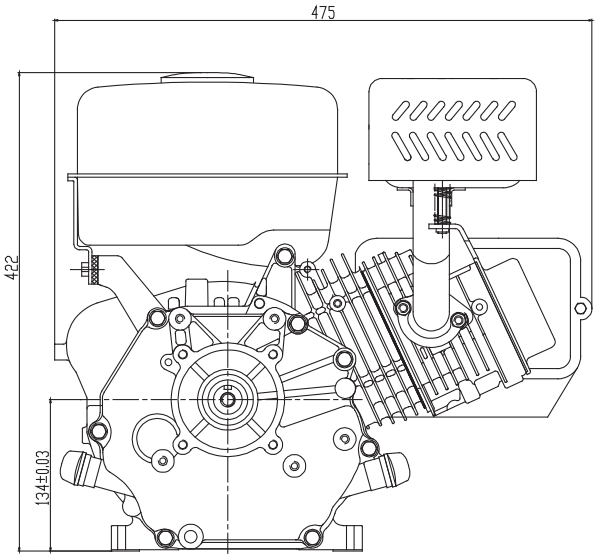

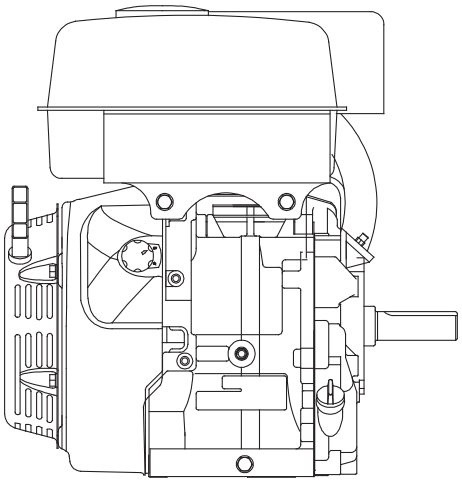

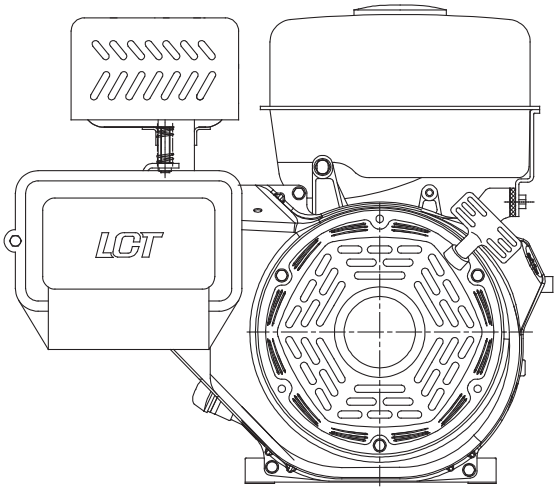

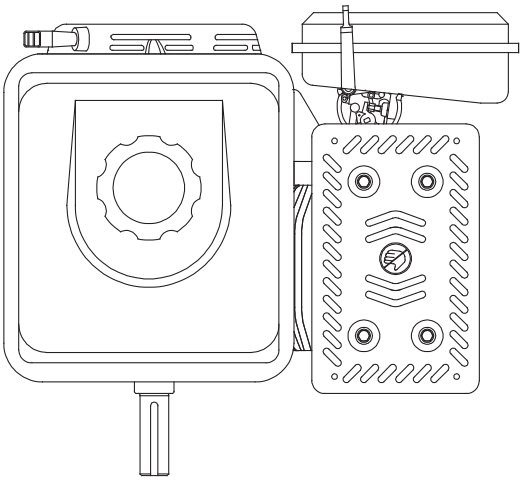

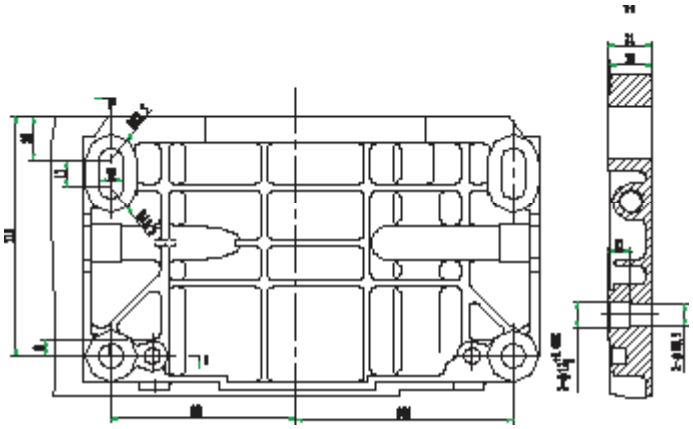

https://truckmanualshub.com/

414cc Summer Engine Dimensions

*Drawings do not accurately represent actual engine appearance.

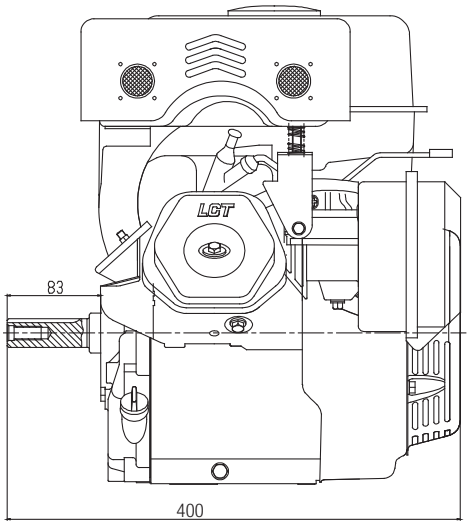

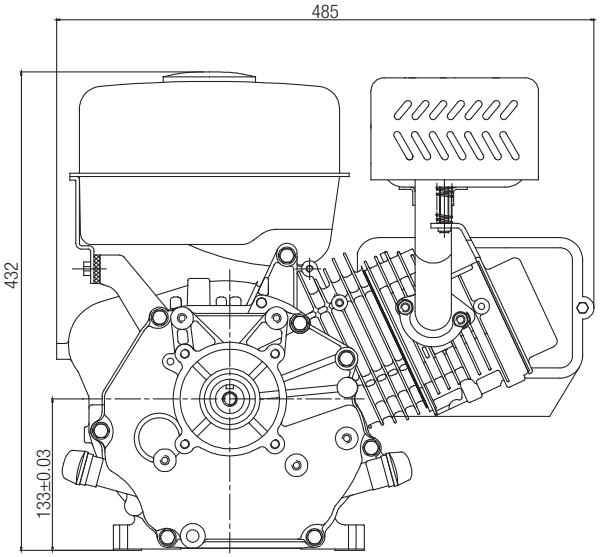

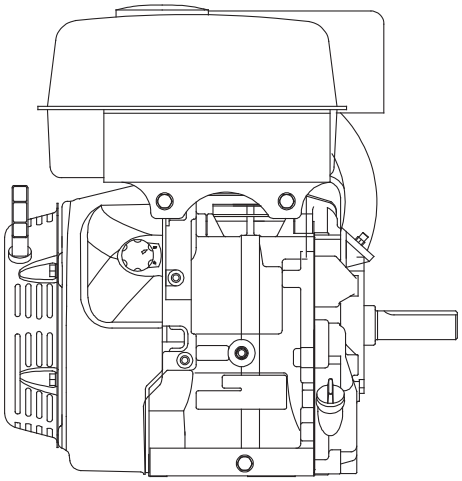

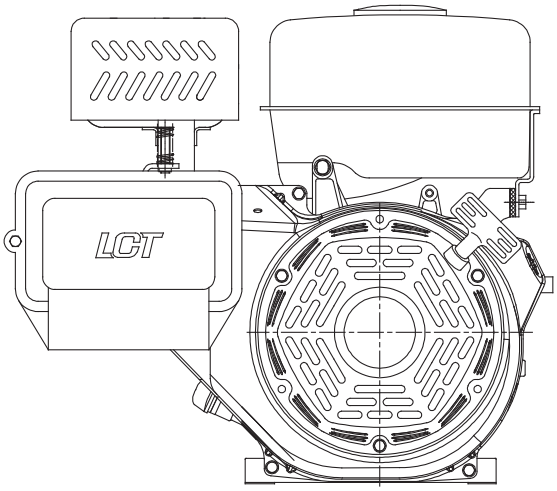

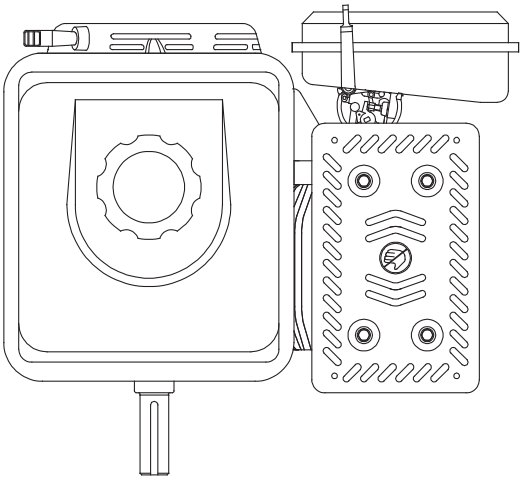

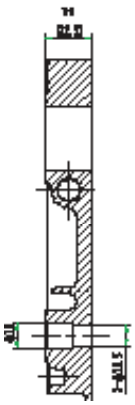

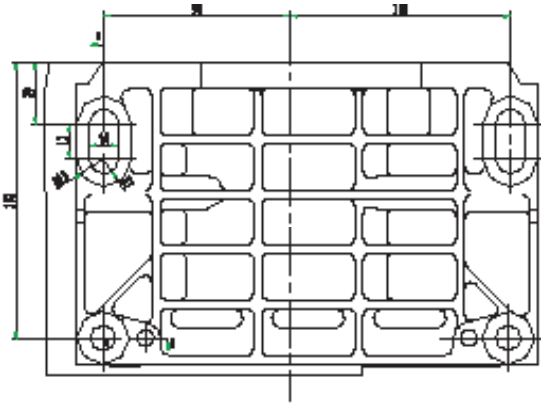

Copyright © 2018 Liquid Combustion Technology, LLC

https://truckmanualshub.com/

420cc Summer Engine Dimensions

*Drawings do not accurately represent actual engine appearance.

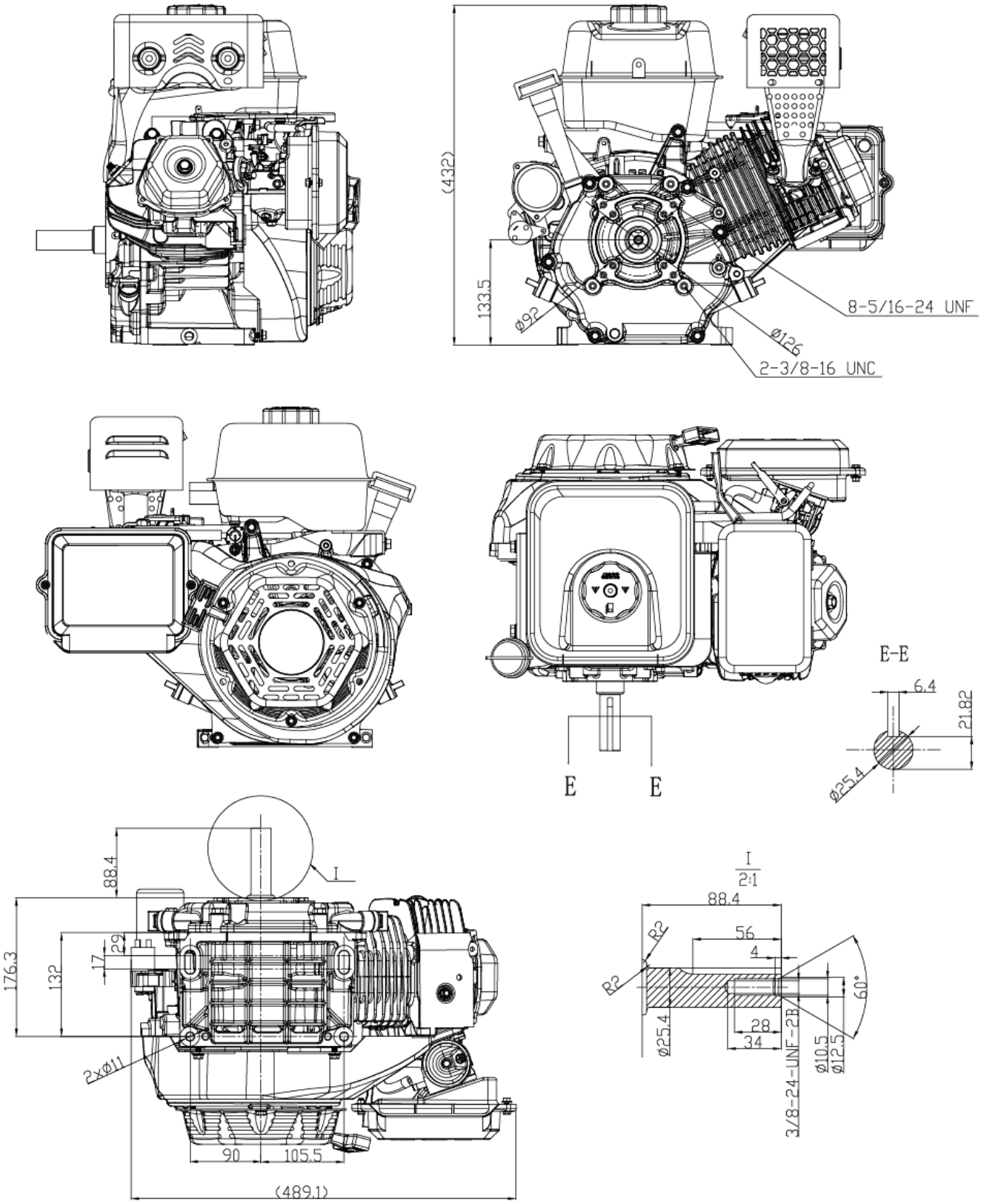

Copyright © 2018 Liquid Combustion Technology, LLC

https://truckmanualshub.com/

136cc Snow Engine Dimensions

*Drawings do not accurately represent actual engine appearance.

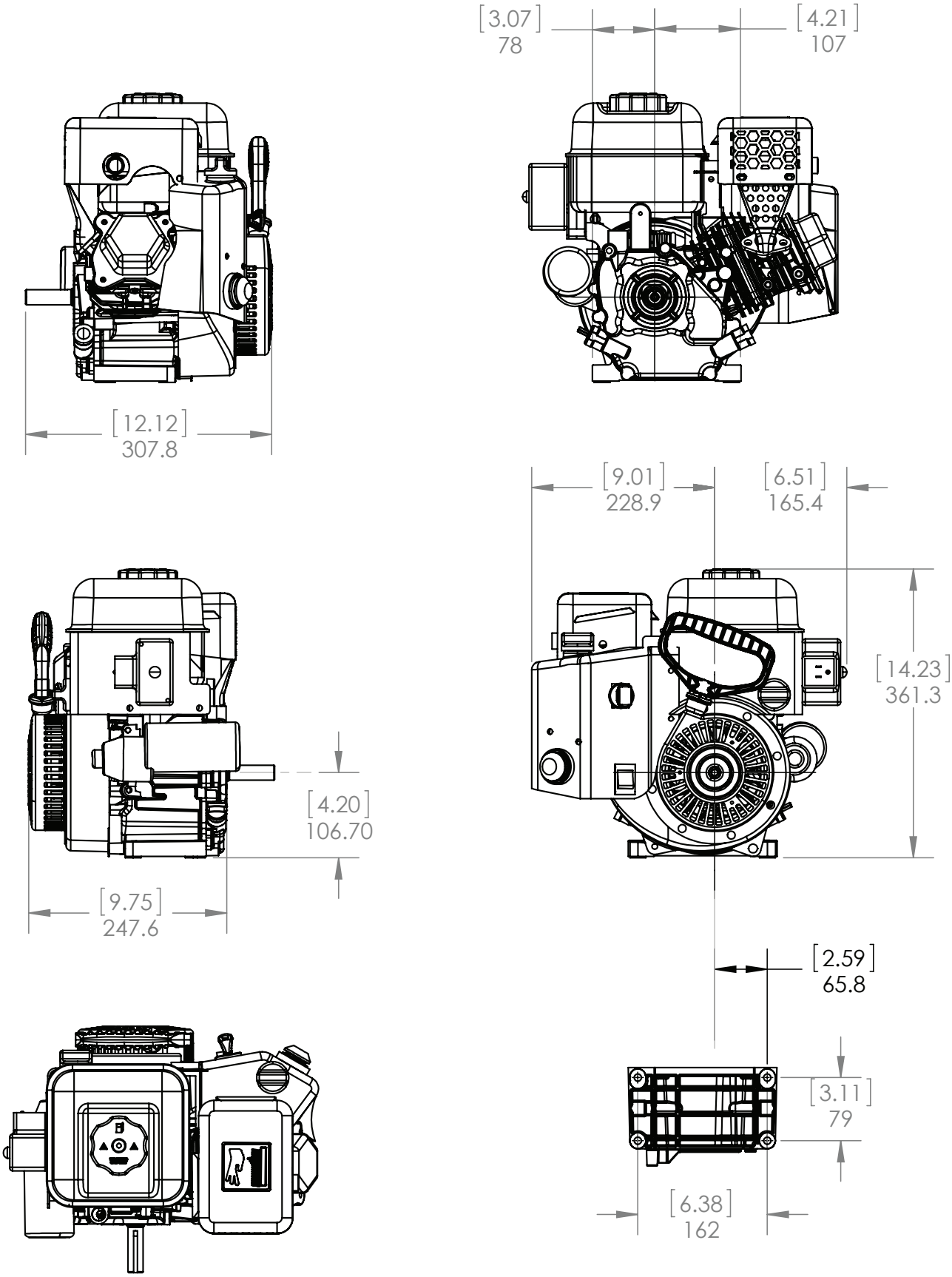

Copyright © 2018 Liquid Combustion Technology, LLC

https://truckmanualshub.com/

179cc / 208cc / 223cc GEN II Snow Engine Dimensions

*Drawings do not accurately represent actual engine appearance.

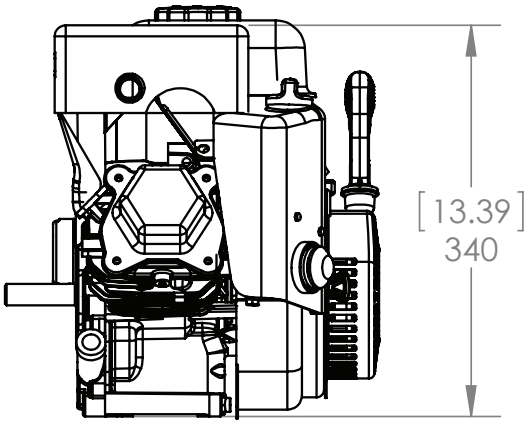

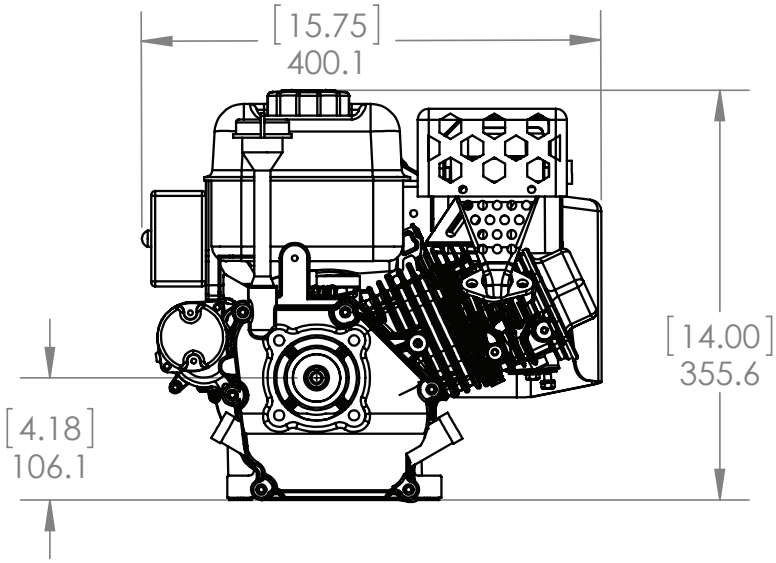

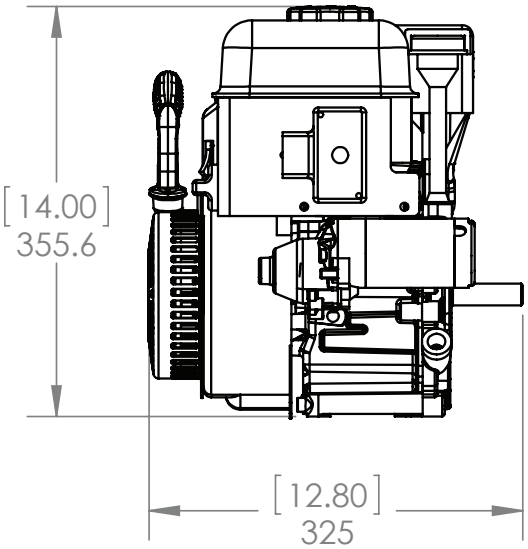

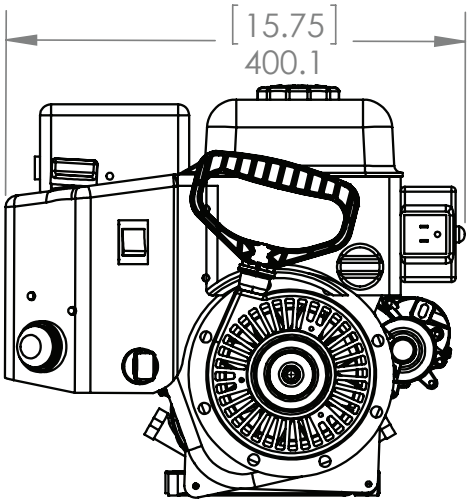

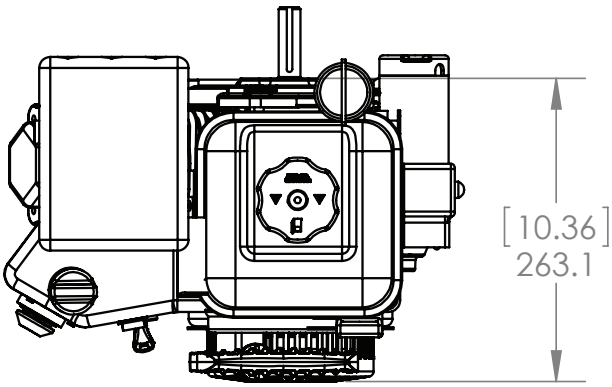

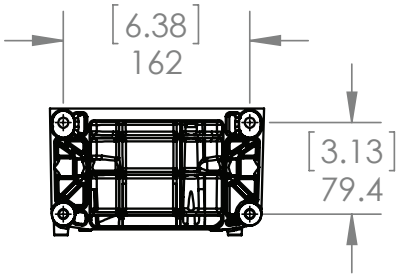

Copyright © 2018 Liquid Combustion Technology, LLC

https://truckmanualshub.com/

254cc Snow Engine Dimensions

*Drawings do not accurately represent actual engine appearance.

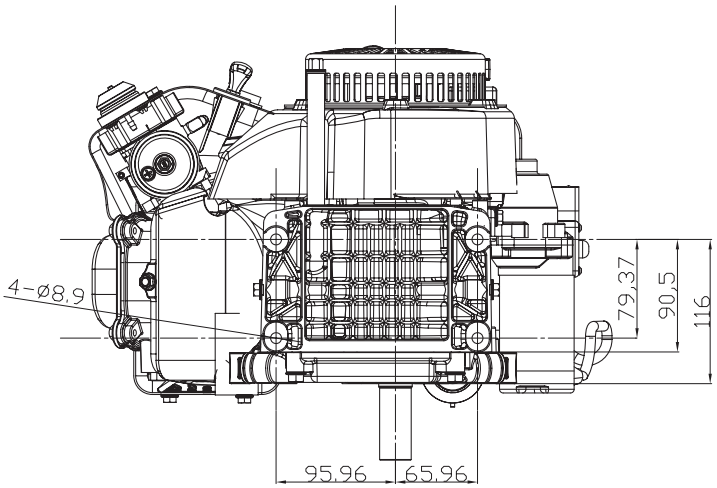

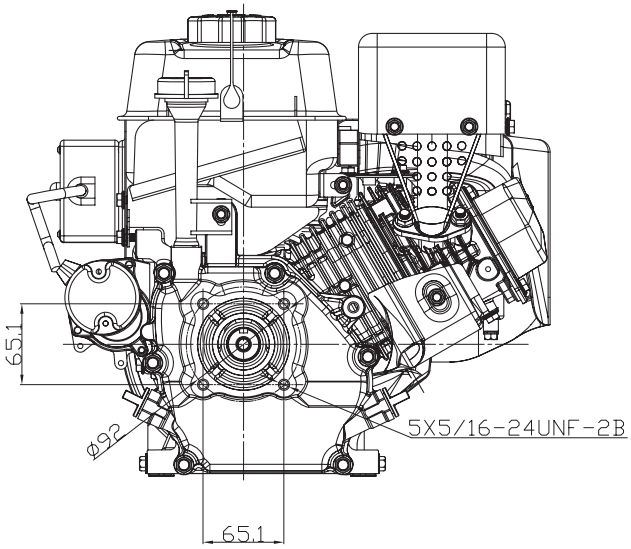

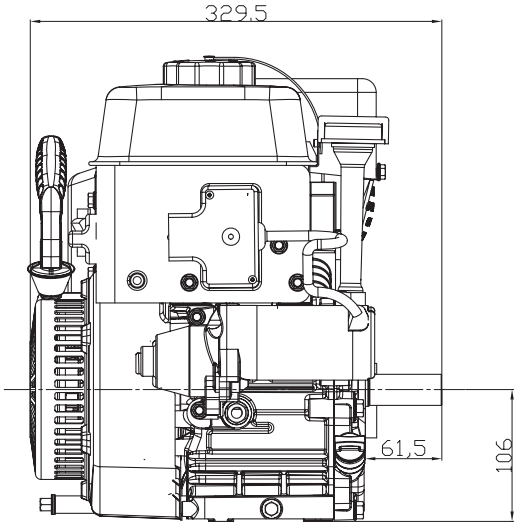

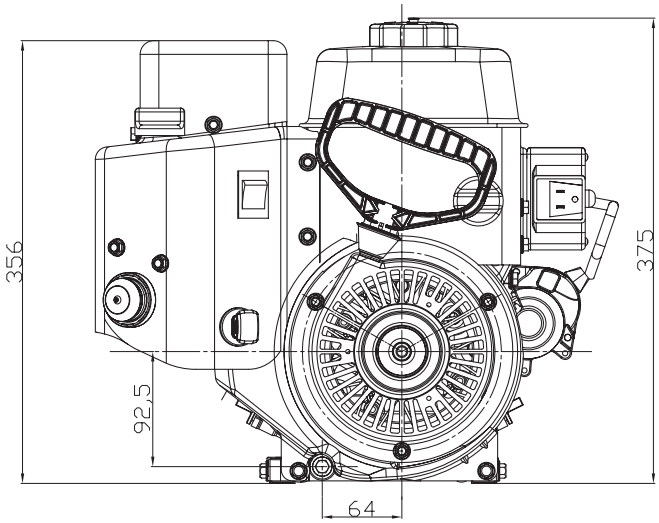

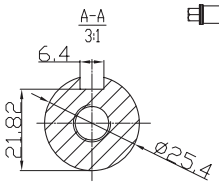

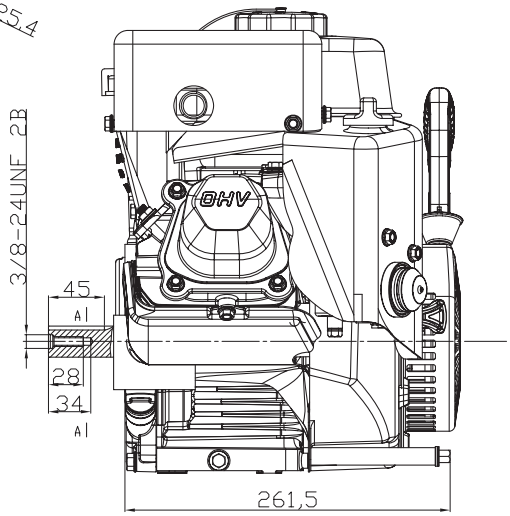

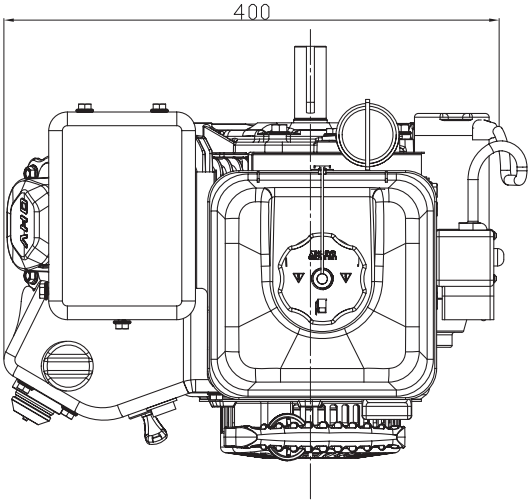

Copyright © 2018 Liquid Combustion Technology, LLC

https://truckmanualshub.com/

291cc / 306cc Snow Engine Dimensions

*Drawings do not accurately represent actual engine appearance.

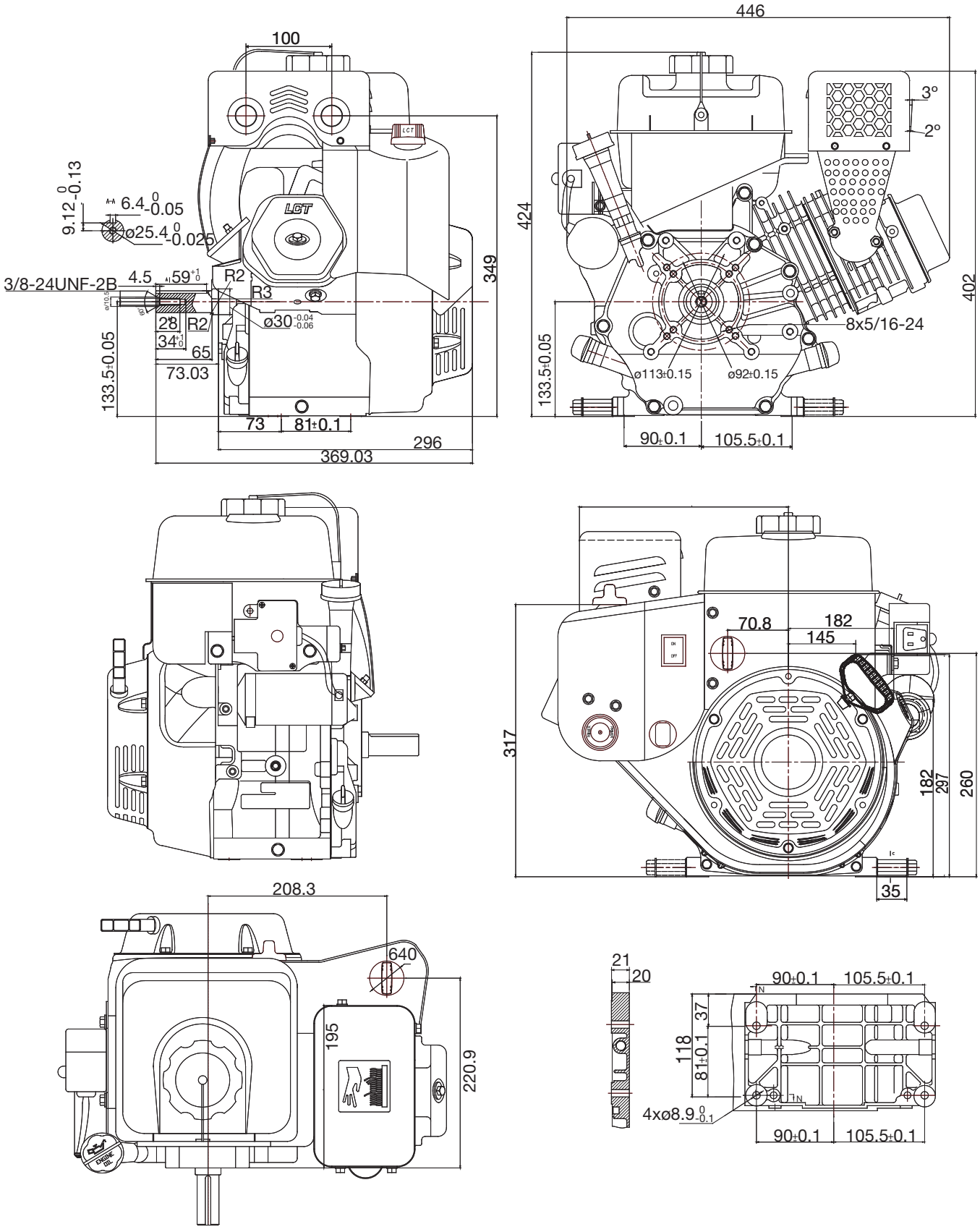

Copyright © 2018 Liquid Combustion Technology, LLC

https://truckmanualshub.com/

369cc / 414cc / 420cc Snow Engine Dimensions

*Drawings do not accurately represent actual engine appearance.

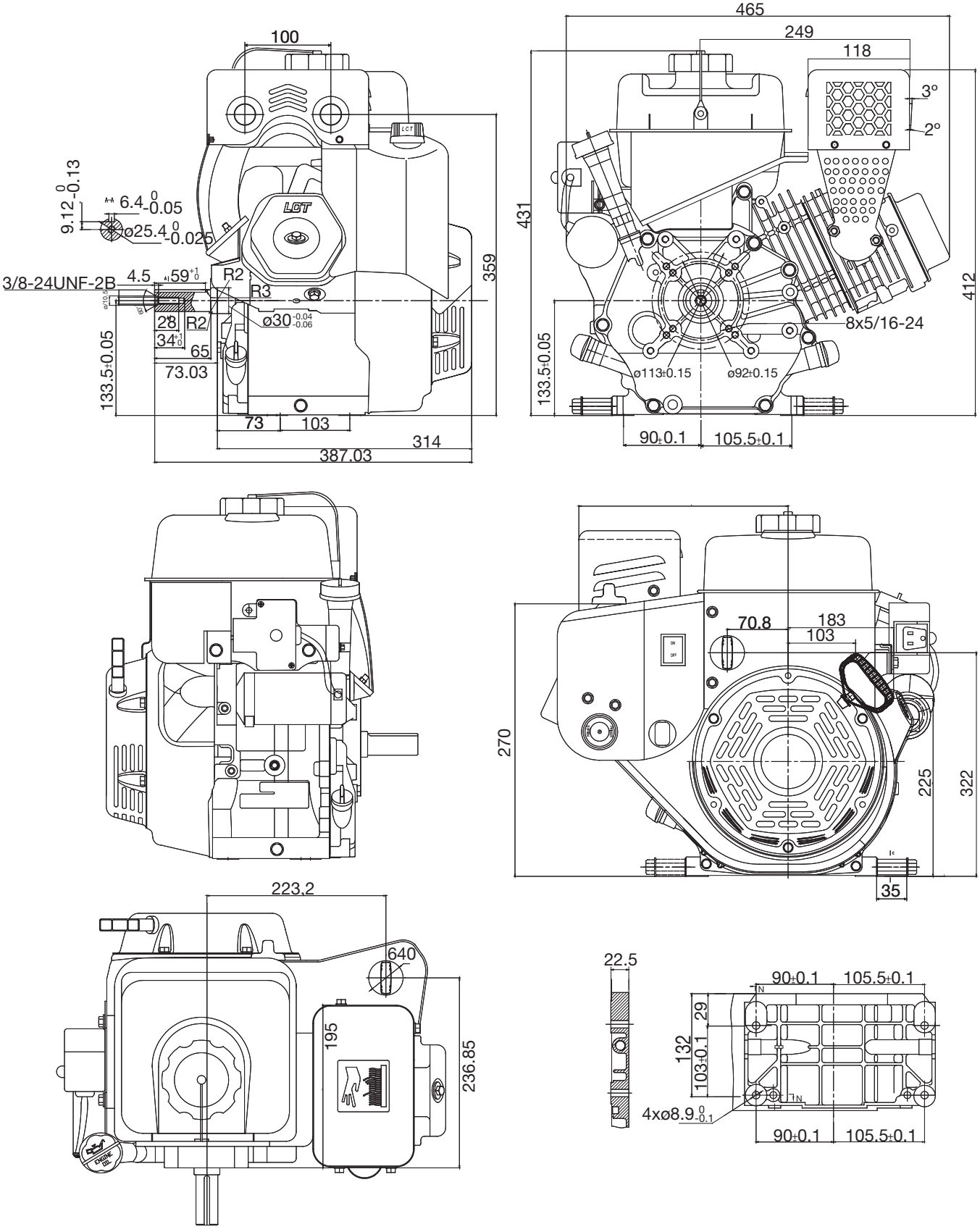

Copyright © 2018 Liquid Combustion Technology, LLC

https://truckmanualshub.com/

LCT

LIQUID COMBUSTION TECHNOLOGY

Liquid Combustion Technology, LLC | 100 Roe Road | Travelers Rest, SC 29690

Phone: 877-274-2214