IMPORTANT:
- The jobs indicated by must be done after the first 50 hours of operation.

*1 Air cleaner should be cleaned more often in dusty conditions than in normal conditions.
*2 Every year or every 6 times of cleaning.
*3 Replace only if necessary.
*4 Consult your local KUBOTA Dealer for this service.
*5 When the battery is used for less than 100 hours per year, check the battery condition by reading the indicator annually.

- The items listed above (@ marked) are registered as emission related critical parts by KUBOTA in the U.S.EPA nonroad emission regulation. As the engine owner, you are responsible for the performance of the required maintenance on the engine according to the above instruction.
  Please see the Warranty Statement in detail.

LUBRICANTS

No.	Locations	Capacities		Lubricants	
		BX1800	BX2200		
1	Fuel	21 L (5.5 U.S.gals.)		No.2-D diesel fuel No.1-D diesel fuel if temperature is below -10°C (14°F)	
2	Coolant (with recovery tank)	2.9 L (3.1 U.S.qts.)	3.5 L (3.7 U.S.qts.)	Fresh clean water with anti-freeze	
3	Engine crankcase	1.9 L (2.0 U.S.qts.)	2.5 L (2.6 U.S.qts.)	• Engine oil: API Service Classification CD, CE or CF Above 25°C (77°F): SAE30, SAE10W-30 or 10W-40 0 to 25°C (32 to 77°F): SAE20, SAE10W-30 or 10W-40 Below 0°C (32°F): SAE10W,SAE10W-30 or 10W-40	
4	Transmission case	10.1L (2.7 U.S.gals.)		• KUBOTA SUPER UDT fluid*	
5	Front axle case (4WD only)	4.7 L (5.0 U.S.qts.)		• KUBOTA SUPER UDT fluid* or SAE 80 · SAE 90 gear oil	
6	Greasing	No. of greasing points		Capacity	Type of grease
	Battery terminal	2		moderate amount	Multipurpose type grease
	Speed control pedal	1		until grease overflows	

NOTE: * KUBOTA SUPER UDT···KUBOTA Original Transmission hydraulic fluid

NOTE:
- Engine oil:
  Oil used in the engine should have an American Petroleum Institute (API) service classification and Proper SAE Engine Oil according to the ambient temperatures as shown above:
- Transmission oil:
  The oil used to lubricate the transmission is also used as hydraulic fluid. To insure proper operation of the hydraulic system and complete lubrication of the transmission, it is important that a multi-grade transmission fluid be used in this system. We recommend the use of **KUBOTA SUPER UDT** fluid for optimum protection and performance.
  (Consult your local KUBOTA Dealer for further detail.)
  Do not mix different brands or grades.
- Indicated capacity of water and oil are manufacturer's estimate.

PERIODIC SERVICE

CAUTION
To avoid personal injury:
- **Do not work under any hydraulically supported devices. They can settle, suddenly leak down, or be accidentally lowered. If necessary to work under tractor or any machine elements for servicing or adjustment, securely support them with stands or suitable blocking beforehand.**

HOW TO OPEN THE HOOD

CAUTION
To avoid personal injury from contact with moving parts:
- **Never open the hood or engine side cover while the engine is running.**
- **Do not touch muffler or exhaust pipes while they are hot; severe burns could result.**

Hood

To open the hood, pull the knob to release the latch and open the hood.

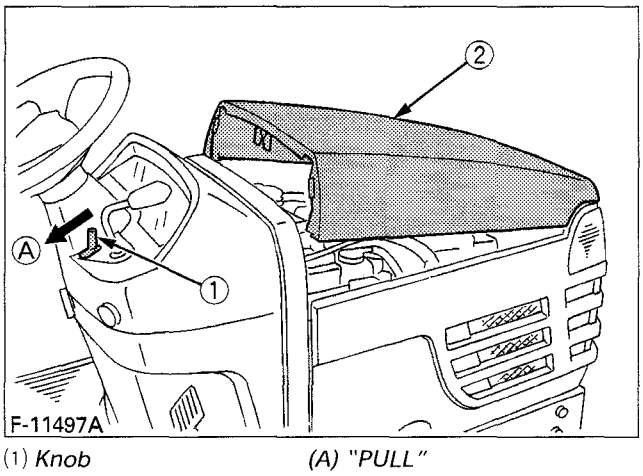

(1) *Knob* (A) *"PULL"*
(2) *Hood*

Engine Cover

To remove the engine cover, remove the bolts, loosen the nuts and pull forward as indicated by arrows below.
It is not necessary to detach the engine cover for daily check.

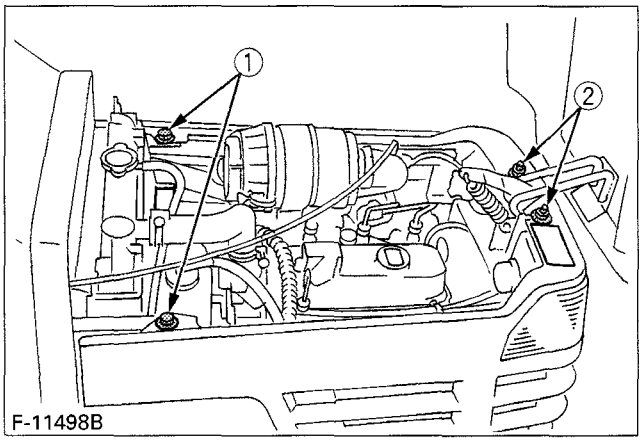

(1) Bolts
(2) Nuts

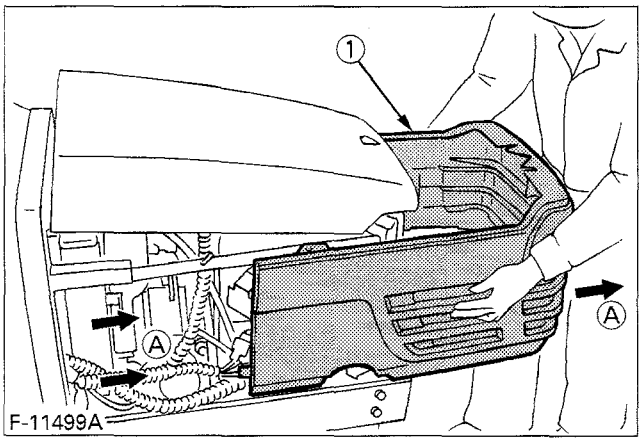

(1) Engine cover *(A) "PULL"*

NOTE:
- When reinstall the engine cover, tighten the bolts and nuts to the following torques.
  - 3.9 to 5.8 N·m (0.4 to 0.6 kgf·m, 2.9 to 4.3 ft·lbs)

DAILY CHECK

For your own safety and maximum service life of the machine, make a thorough daily inspection before operating the machine to start the engine.

CAUTION
To avoid personal injury:
- **Be sure to check and service the tractor on a firm, flat and level surface with the engine stopped and the parking brake "ON" and implements lowered to the ground.**

Walk Around Inspection

Look around and under the tractor for such items as loose bolts, trash build-up, oil or coolant leaks, broken or worn parts.

Checking and Refueling

CAUTION
To avoid personal injury:
- **Do not smoke while refueling.**
- **Be sure to stop the engine and remove the key before refueling.**

1. Turn the key switch to "ON", check the amount of fuel by fuel gauge.
2. Fill fuel tank when fuel gauge shows 1/4 or less fuel in tank.
3. Use grade No.2-Diesel fuel at temperatures above -10℃(14℉).
   Use grade No.1-Diesel fuel at temperatures below -10℃(14℉).

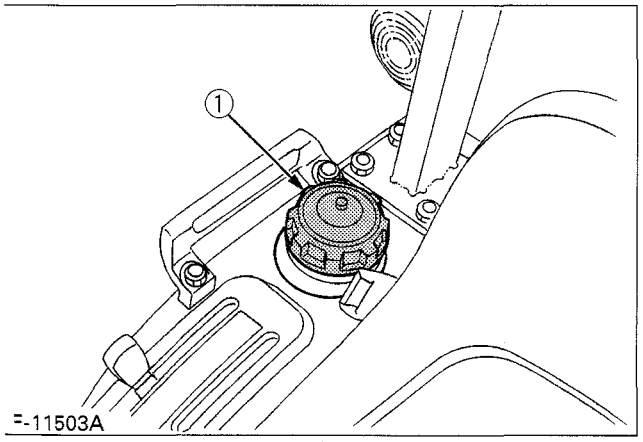

1) *Fuel tank cap*

Fuel tank capacity	21 L (5.5 U.S.gals.)

IMPORTANT:
- Do not permit dirt, trash or water to get into the fuel system.
- Be careful not to let the fuel tank become empty, otherwise air will enter the fuel system, necessitating bleeding before next engine start.
- Be careful not to spill fuel during refueling. If a spill should occur, wipe it off at once, or it may cause a fire.
- To prevent condensation (water accumulation) in the fuel tank, fill the tank before parking overnight.

NOTE:
- No.2-D is a distillate fuel of lower volatility for engines in industrial and heavy mobile service.
- Grade of Diesel Fuel Oil According to ASTM D975 (SAE J313 JUN87)

Flash Point °C(°F)	Water and Sediment, volume %	Carbon Residue on, 10 percent Residuum, %	Ash, weight %
Min	Max	Max	Max
52 (125)	0.05	0.35	0.01

Distillation Temperatures ,°C(°F) 90% Point		Viscosity Kinematic cSt or mm²/s at 40°C		Viscosity Saybolt, SUS at 100°F		Sulfur, Weight %	Copper Strip Corrosion	Cetane Number
Min	Max	Min	Max	Min	Max	Max	Max	Min
282 (540)	338 (640)	1.9	4.1	32.6	40.1	0.50	No.3	40

Checking Engine Oil Level

CAUTION
To avoid personal injury:
- **Be sure to stop the engine and remove the key before checking the oil level.**

1. Park the machine on a firm, flat and level surface.
2. Check engine oil before starting the engine, or, after 5 minutes or more when the engine has been stopped.
3. To check the oil level, draw out the dipstick, wipe it clean, replace it, and draw it out again. Check to see that the oil level lies between the two notches.
   If the level is too low, add new oil to the prescribed level at the oil inlet.
   (See "LUBRICANTS" in Maintenance Section)

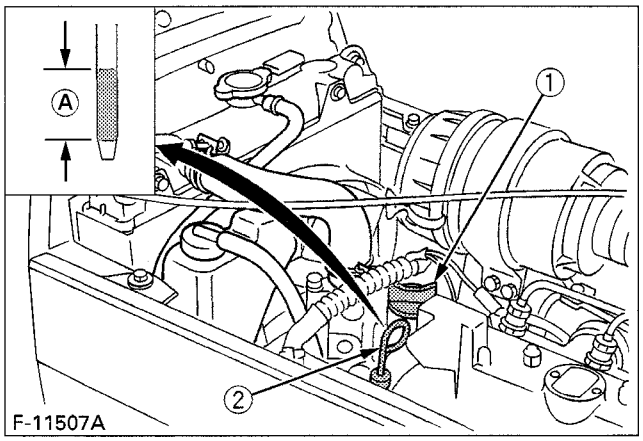

(1) Oil inlet (A) Oil level is acceptable within this range.
(2) Dipstick

IMPORTANT:
- When using an oil of different maker or viscosity from the previous one, remove all of the old oil and oil filter. Never mix two different types of oil.
- If oil level is low, do not run engine.

Checking Transmission Fluid Level

1. Park the machine on a firm, flat and level surface, lower the implement to the ground and stop the engine.
2. To check the oil level, draw out the dipstick, wipe it clean, replace it, and draw it out again. Check to see that the oil level lies between the two notches.
   If the level is too low, add new oil to the prescribed level at the oil inlet.
   (See "LUBRICANTS" in Maintenance Section)

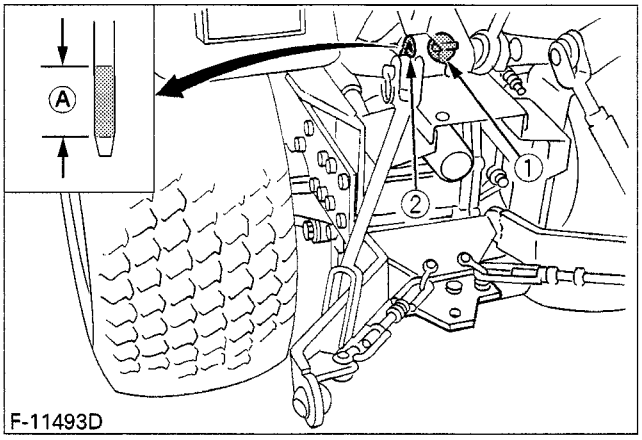

(1) Oil inlet (A) Oil level is acceptable within this range.
(2) Dipstick

IMPORTANT:
- If oil level is low, do not run engine.

Checking Coolant Level

CAUTION
To avoid personal injury:
- **Be sure to stop the engine and remove the key before checking coolant level.**
- **Do not remove the radiator cap while coolant is hot. When cool, slowly rotate cap to the first stop and allow sufficient time for excess pressure to escape before removing cap completely.**

1. Check to see that the coolant level is between the "H" and "L" marks of recovery tank.
2. When the coolant level drops due to evaporation, add water only. In case of leakage, add antifreeze and water in the specified mixing ratio up to the "H" level.
   (See "Flush Cooling System and Changing Coolant" in every 2 years maintenance.)

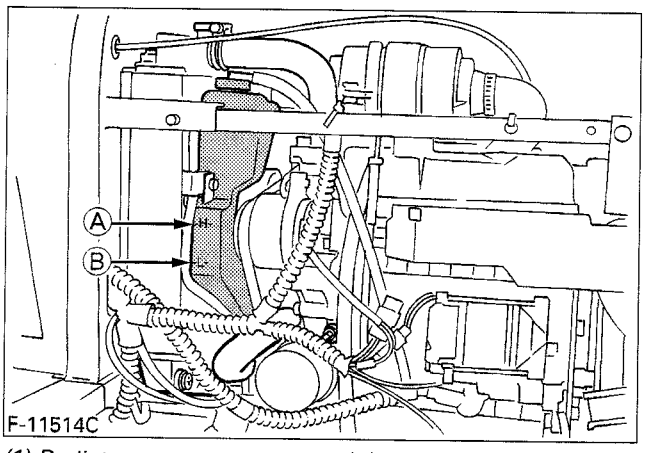

(1) Radiator cap *(A) "H"* *(B) "L"*

IMPORTANT:
- If the radiator cap has to be removed, follow the caution above and securely retighten the cap.
- Use clean, fresh water and anti-freeze to fill the radiator.
- If water should leak, consult your local KUBOTA Dealer.

Cleaning Panel and Radiator Screen

CAUTION
To avoid personal injury:
- **Be sure to stop the engine and remove the key before removing the screen.**

1. Check panel screen to be sure they are clean from debris.
2. Detach the radiator screen, and then remove all the foreign material.

NOTE:
- If the dust or chaff is accumulated in the battery compartment, open the panel and clean completely.

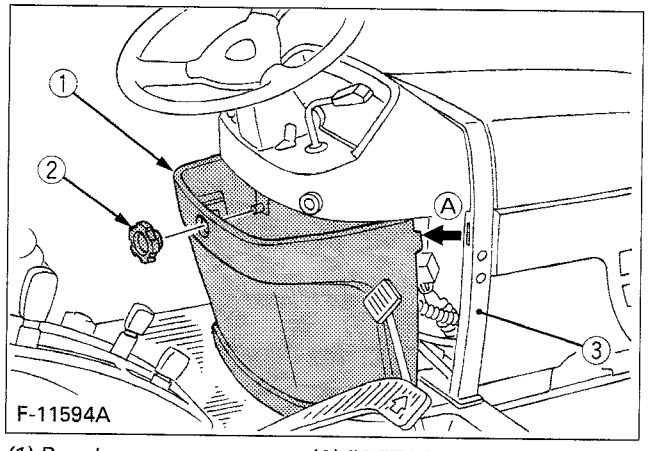

(1) Panel *(A) "DETACH"*
(2) Knob
(3) Center pillar

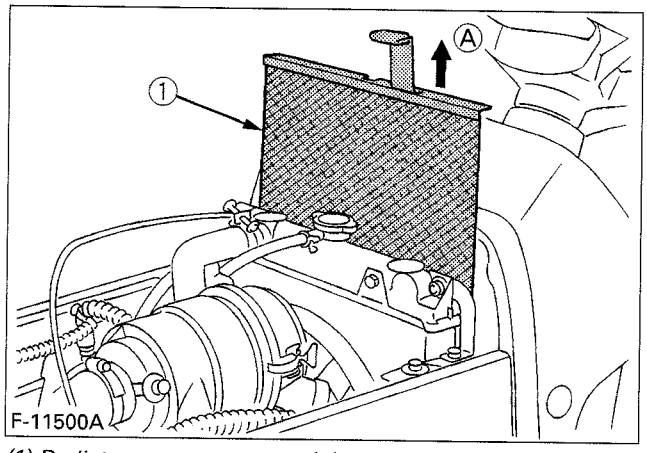

(1) Radiator screen *(A) "DETACH"*

IMPORTANT:
- Panel and radiator screen must be clean from debris to prevent engine from overheating and to allow good air intake for air cleaner.
- Be sure to reinstall the panel on the piller completely to prevent the invasion of dust.

Checking Brake Pedal

1. Inspect the brake pedal for free travel, and smooth operation.
2. Adjust if incorrect measurement is found: (See "Adjusting Brake Pedal" in every 100 hours maintenance.)

Checking Gauges, Meters and Easy Checker™

1. Inspect the instrument panel for broken gauge(s), meter(s) and Easy Checker™ lamps.
2. Replace if broken.

Checking Head Light, Hazard Light etc.

1. Inspect the lights for broken bulbs and lenses.
2. Replace if broken.

Checking and Cleaning of Electrical Wiring and Battery Cables

CAUTION
To avoid personal injury:

- **A loosened terminal or connector, or damaged wire may affect the performance of electrical components or cause short circuits. Leakage of electricity could result in a fire hazard, a dead battery or damage to electrical components.**
- **Replace damaged wires or connections promptly.**
- **If a fuse blows soon after replacement, DO NOT USE A LARGER THAN RECOMMENDED FUSE OR BYPASS THE FUSE SYSTEM.**
- **Many wiring connections are protected by waterproof plugs, plug and unplug these connections carefully and make sure they are sealed correctly after assembly.**
- **Accumulation of dust, chaff or spilled fuel deposits around the battery, electrical wiring, engine or exhaust system are a fire hazard.**
  CLEAN THESE AREAS STARTING WORK.
  To avoid premature electrical malfunctions DO NOT APPLY high pressure water directly to battery, wiring, connectors, electrical components or instrument panel.

Inspect the following Regularly:

1. Check wiring for chafed or cracked insulation.
2. Check wiring harness clamps. Replace if necessary.
3. Check connectors and terminals for looseness, contamination or overheated (discolored) connections.
4. Check instrument panel for correct operation of switches and gauges

Consult your KUBOTA Dealer regarding maintenance, diagnosis and repair.

Checking Seat Belt and ROPS

1. Always check condition of seat belt and ROPS attaching hardware before operating tractor.
2. Replace if damaged.

EVERY 50 HOURS

Checking Engine Start System

CAUTION
To avoid personal injury:

- **Do not allow anyone near the tractor while testing.**
- **If the tractor does not pass the test do not operate the tractor.**

◆ Preparation before testing

1. Sit on operator's seat.
2. Set the parking brake and stop the engine.
3. Shift the range gear shift lever in "NEUTRAL" position.
4. Shift the PTO clutch lever to "OFF" position.

◆ Test 1:

1. Shift the range gear shift lever to "LOW" or "HIGH" position.
2. Turn the key to "START" position.
3. The engine must not crank.

◆ Test 2:

1. Shift the range gear shift lever to "NEUTRAL" position.
2. Shift the PTO clutch lever to "ON" position.
3. Turn the key to "START" position.
4. The engine must not crank.

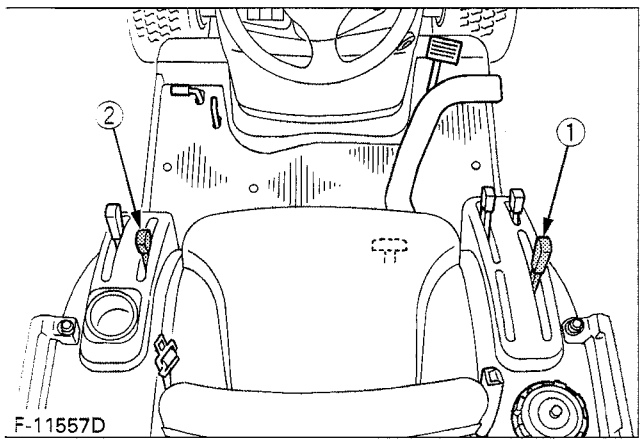

(1) Range gear shift lever (Hi-Lo)
(2) PTO clutch control lever

NOTE:
- If the engine cranks during any of these tests, consult your local KUBOTA Dealer to have unit checked before operating.

Lubricating Grease Fittings

Apply a small amount of multipurpose grease to the following points every 50 hours.

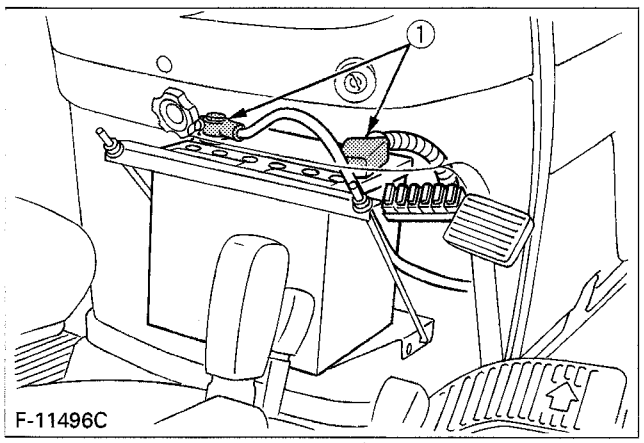

(1) Battery terminals

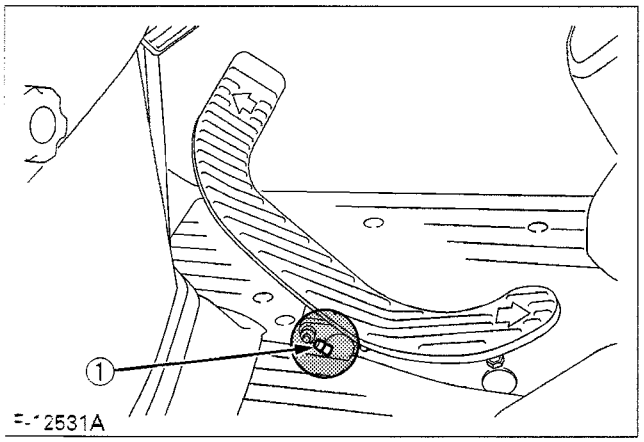

(1) Grease fitting (Speed control pedal)

Checking Wheel Bolt Torque

CAUTION
To avoid personal injury:
- **Never operate tractor with a loose rim, wheel, or axle.**
- **Any time bolts are loosened, retighten to specified torque.**
- **Check all bolts frequently and keep them tight.**

Check wheel bolts regularly especially when new. If they are loose, tighten them as follows.

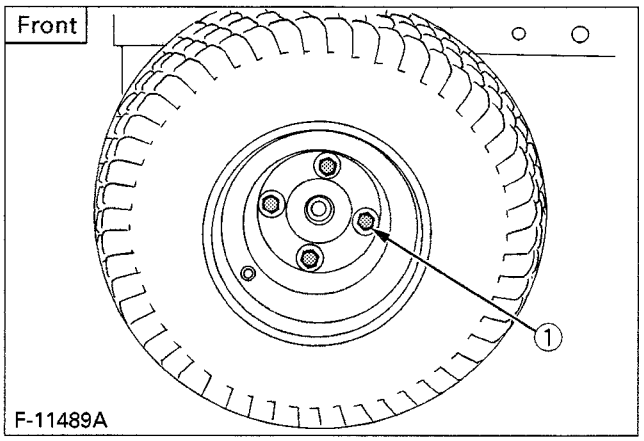

(1) 149.2 to 179.0 N·m (15.2 to 18.3 kgf·m, 110 to 132 ft·lbs.)

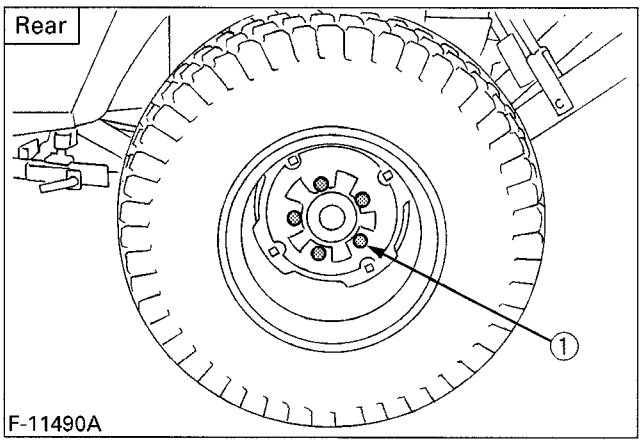

(1) 108.5 to 130.2 N·m (11.1 to 13.3 kgf·m, 80 to 96 ft·lbs.)

EVERY 100 HOURS

Battery

DANGER
To avoid the possibility of battery explosion: For the refillable type battery, follow the instructions below.

- **Do not use or charge the refillable type battery if the fluid level is below the LOWER (lower limit level) mark. Otherwise, the battery component parts may prematurely deteriorate, which may shorten the battery's service life or cause an explosion. Check the fluid level regularly and add distilled water as required so that the fluid level is between the UPPER and LOWER levels.**

CAUTION
To avoid personal injury:

- **Never remove the vent caps while the engine is running.**
- **Keep electrolyte away from eyes, hands and clothes. If you are spattered with it, wash it away completely with water immediately and get medical attention.**
- **Wear eye protection and rubber gloves when working around the battery.**

Mishandling the battery shortens the service life and adds to maintenance costs.

The original battery is maintenance free, but needs some servicing.
If the battery is weak, the engine will be difficult to start and the lights will be dim. It is important to check the battery periodically.

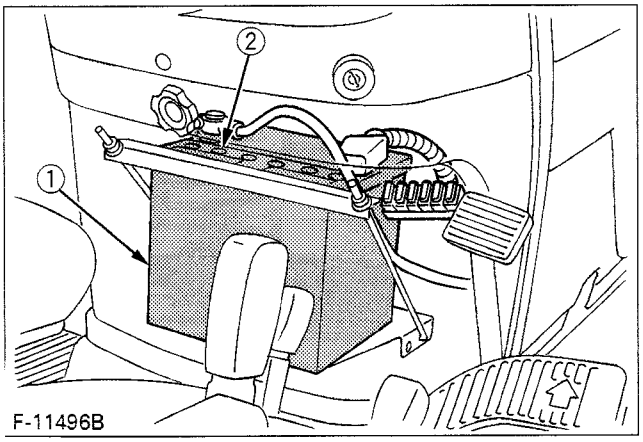

(1) Battery
(2) Vent cap

◆ How to read the indicator (65D23L, 75D23L)
Check the battery condition by reading the indicator.

State of indicator display	
Green	Specific gravity of electrolyte and quality of electrolyte are both in good condition.
Black	Needs charging battery.
White	Needs changing battery.

When the indicator turns white, do not charge the battery but replace it with new one.

◆ Battery Charging

CAUTION
To avoid personal injury:

- **When the battery is being activated, hydrogen and oxygen gases in the battery are extremely explosive. Keep open sparks and flames away from the battery at all times, especially when charging the battery.**
- **When charging the battery, ensure the vent caps are securely in place. (if equipped)**
- **When disconnecting the cable from the battery, start with the negative terminal first.**
- **When connecting the cable to the battery, start with the positive terminal first.**
- **Never check battery charge by placing a metal object across the posts. Use a voltmeter or hydrometer.**

1. Make sure each electrolyte level is to the bottom of vent wells, if necessary add distilled water in a well-ventilated area.

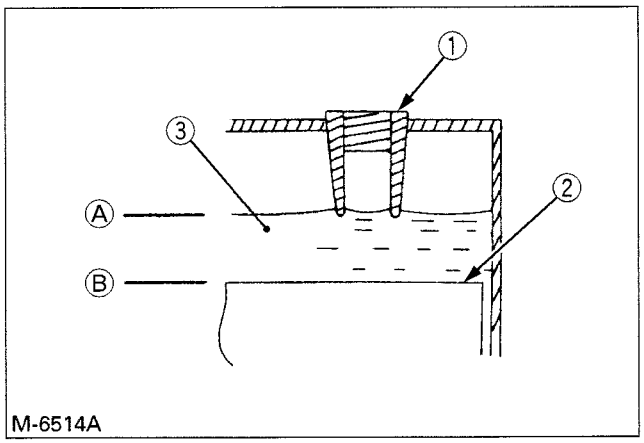

(1) Vent well
(2) Separator
(3) Electrolyte
(A) Highest level
(B) Lowest level

2. The water in the electrolyte evaporates during recharging. Liquid shortage damages the battery. Excessive liquid spills over and damages the tractor body.
3. To slow charge the battery, connect the battery positive terminal to the charger positive terminal and the negative to the negative, then recharge in the standard fashion.
4. A boost charge is only for emergencies. It will partially charge the battery at a high rate and in a short time.
   When using a boost-charged battery, it is necessary to recharge the battery as early as possible.
   Failure to do this will shorten the battery's service life.
5. When the specific gravity of electrolyte is between 1.27 and 1.29 the charging is completed.
6. When exchanging an old battery for a new one, use battery of equal specification shown in **Table 1.**

Table 1

Tractor Type	Battery Type	Volts (V)	Reserve Capacity (min)	Cold Cranking Amps
BX1800	26/26R	12	62	435
	65D23L*	12	111	490
BX2200	526RA	12	80	535
	75D23L*	12	90	550

* : with the indicator

◆ Battery for Storage

1. When storing the tractor for a long period, remove the battery from tractor, adjust the electrolyte to the proper level and store in a dry place out of direct sunlight.
2. The battery self-discharges while it is stored. Recharge it once every three months in hot seasons and once every six months in cold seasons.

■ Changing Engine Oil

CAUTION
To avoid personal injury:
- **Be sure to stop the engine and remove the key before changing the oil.**
- **Allow engine to cool down sufficiently, oil can be hot and can burn.**

1. To drain the used oil, remove the drain plug at the bottom of the engine and drain the oil completely into the oil pan.
   All the used oil can be drained out easily when the engine is still warm.
2. After draining reinstall the drain plug.
3. Fill with the new oil up to the upper notch on the dipstick.
   (See "LUBRICANTS" in Maintenance Section)
4. Properly dispose of used oil.

Oil capacity with filter	BX1800	BX2000
	1.9 L (2.0 U.S.qts.)	2.5 L (2.6 U.S.qts.)

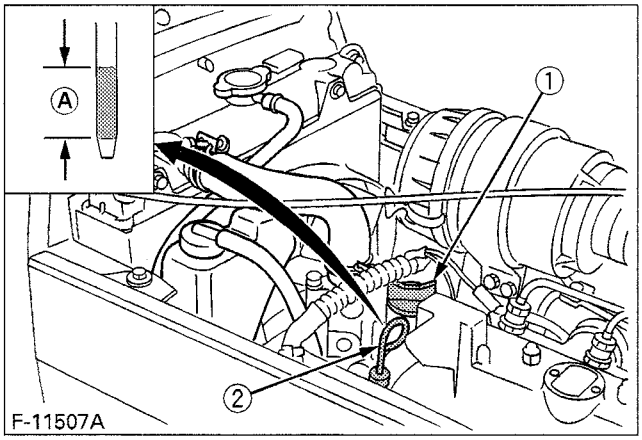

(1) Oil inlet (A) Oil level is acceptable within this range
(2) Dipstick

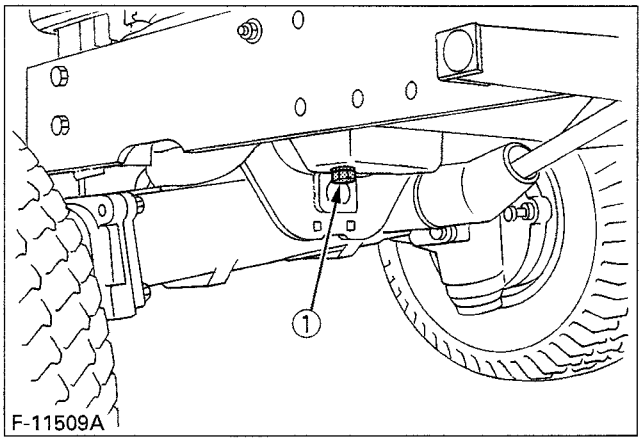

(1) Drain plug

Cleaning Air Cleaner Element

CAUTION
To avoid personal injury:
- **Be sure to stop the engine and remove the key before cleaning air cleaner element.**

1. Remove the air cleaner cover and the element.
2. Clean the element:
   1) When dry dust adheres to the element, blow compressed air from the inside, turning the element. Pressure of compressed air must be under 205kPa (2.1kgf/cm², 30psi).
   2) When carbon or oil adheres to the element, soak the element in detergent for 15 minutes then wash it several times in water, rinse with clean water and dry it naturally. After element is fully dried, inspect inside of the element with a light and check if it is damaged or not. (refering to the instructions on the label attached to the case.)
3. Replace air cleaner element:
   Once yearly or after every sixth cleaning, whichever comes first.

NOTE:
- Checked to see if the evacuator valve is blocked with dust.

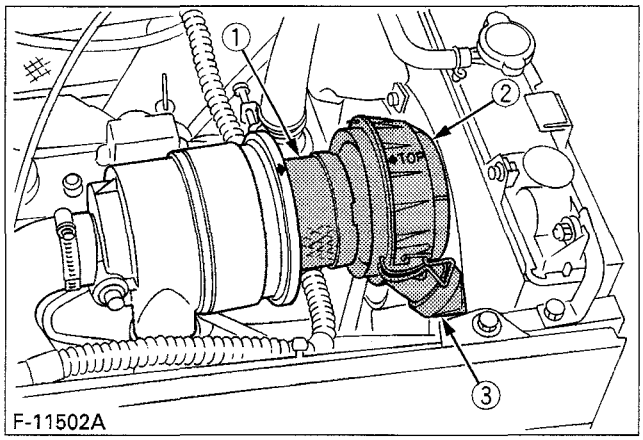

(1) Element
(2) Cover
(3) Evacuator valve

IMPORTANT:
- The air cleaner uses a dry element, never apply oil.
- Do not run the engine with filter element removed.
- Align the arrow marks when reinstalling the cover. If the cover is improperly fitted, dust passes by the baffle and directly adheres to the element.

◆ Evacuator Valve
Open the evacuator valve once a week under ordinary conditions - or daily when used in a dusty place - to get rid of large particles of dust and dirt.

Checking Fuel Lines and Fuel Filter

CAUTION
To avoid personal injury:
- **Stop the engine and remove the key before checking fuel lines and fuel filter.**
- **Never fail to check the fuel line periodically. The fuel line is subject to wear and aging. Fuel may leak out onto the running engine, causing a fire.**

The fuel line connections should be checked annually or every 100 service hours, whichever occurs first.
1. The fuel line is made of rubber and ages regardless of service period.
2. After inspection, if the fuel line and clamps are found damaged or deteriorated, replace them.
3. Check fuel filter, if it is clogged by debris or contaminated by water, replace it.

IMPORTANT:
- When the fuel line is disconnected for maintenance or repair, plug both ends of the fuel line with a clean plug of suitable size to prevent dust and dirt from entering. Particular care must be taken not to admit dust and dirt into the fuel system. Entrance of dust and dirt causes malfunction of the fuel pump.

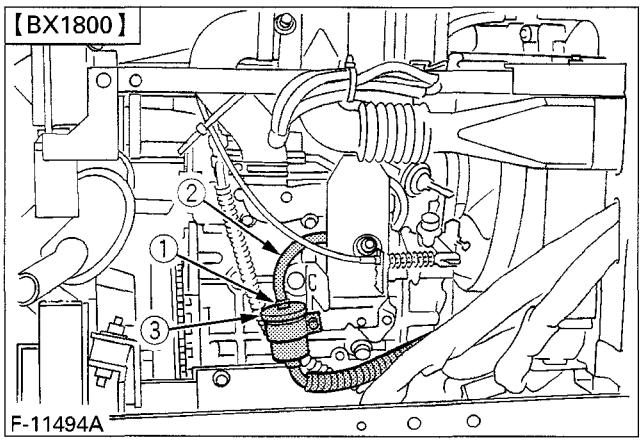

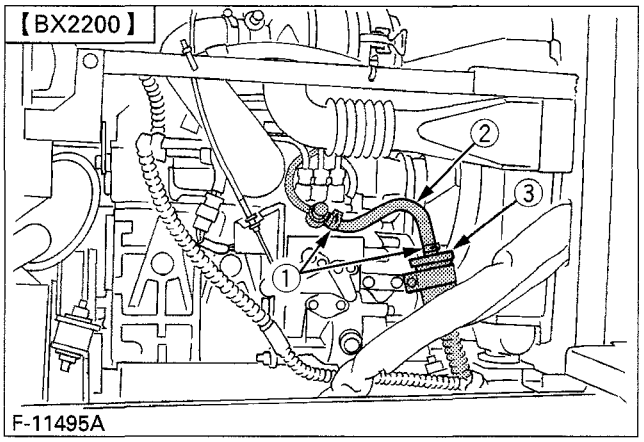

(1) Pipe clamps
(2) Fuel line
(3) Fuel filter

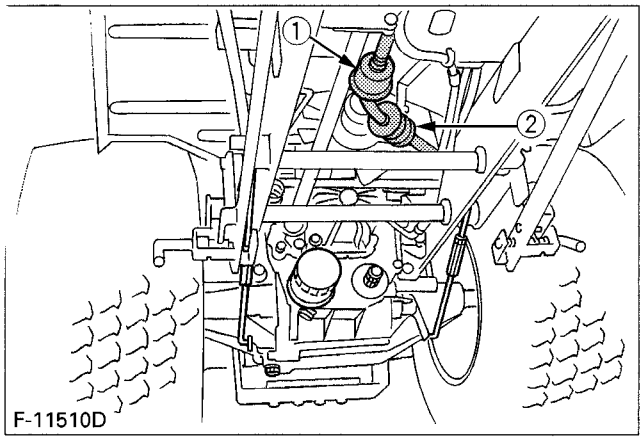

(1) Fuel pump
(2) Fuel filter

NOTE:
- If the fuel line is removed, be sure to properly bleed the fuel system.
  (See "Bleeding Fuel System" in service as required)

Adjusting Fan belt Tension

CAUTION
To avoid personal injury:
- **Be sure to stop the engine and remove the key before checking belt tension.**

Proper fan belt tension	A deflection of between 7 to 9 mm (1/4 to 3/8 in.) when the belt is pressed in the middle of the span.

1. Stop the engine and remove the key.
2. Apply moderate thumb pressure to belt between pulleys.
3. If tension is incorrect, loosen the alternator mounting bolts and, using a lever placed between the alternator and the engine block, pull the alternator out until the deflection of the belt falls within acceptable limits.
4. Replace fan belt if it is damaged.

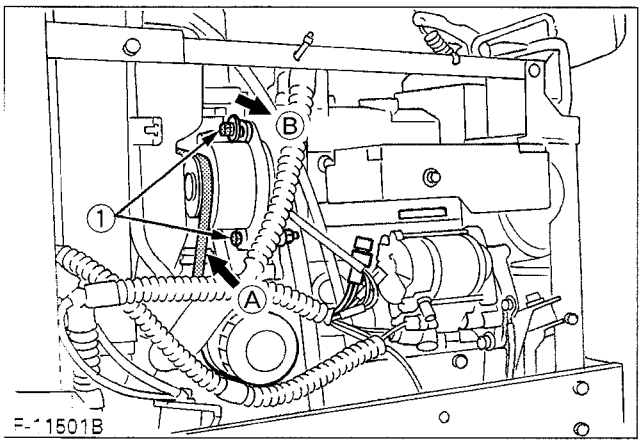

(1) Bolt
(A) Check the belt tension
(B) To tighten

Adjusting HST Neutral Spring (for Speed Control Pedal)

WARNING
To avoid personal injury:
- **Do not operate if tractor moves on level ground with foot off speed control pedal.**
- **If tractor moves on level ground with foot off the pedal, or, if the pedal is too slow in returning to neutral position when removing the foot from the pedal, consult your local KUBOTA Dealer.**

The HST neutral spring located under the R.H. step can adjust returning speed of speed control pedal. Consult your loal KUBOTA Dealer for service.

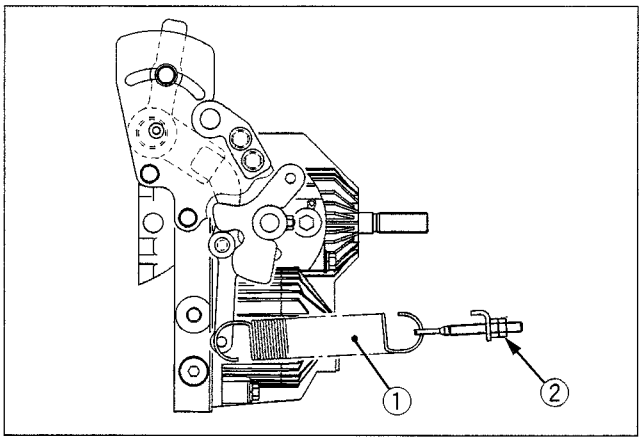

(1) HST neutral spring
(2) Adjusting nut

Adjusting Brake Pedal

CAUTION
To avoid personal injury:
- **Stop the engine, remove the key, lower the implement to the ground, and chock the wheels before checking brake pedal.**
- **Even if the brake pedal free travel is within the limitation, adjust the brake pedal following the procedure below.**
- **If you are not able to adjust, consult your local KUBOTA Dealer.**

Proper brake pedal free travel	20 to 30 mm (13/16 to 1-3/16in.) on the pedal

1. Release the parking brake.
2. Loosen the RH lock nut and extend the RH turnbuckle to the end of the thread.
3. Loosen the LH lock nut and turn the LH turnbuckle to adjust the LH rod length so that the brake pedal free travel is 20 mm (13/16 in.).
4. Retighten the LH lock nut.
5. Adjust the RH rod length so that the brake pedal free travel is 10 mm (7/16 in.).
6. Extend the RH turnbuckle one additional turn.
7. Retighten the RH lock nut.
8. Depress the brake pedal several times and make sure the brake pedal free travel is from 20 to 30 mm (13/16 to 1-3/16 in.).

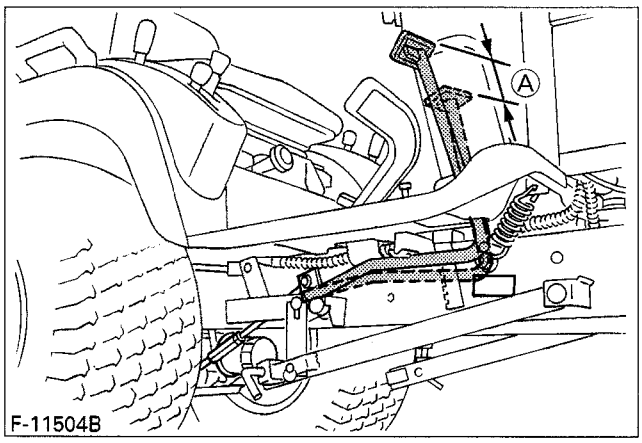

(A) *Free travel*

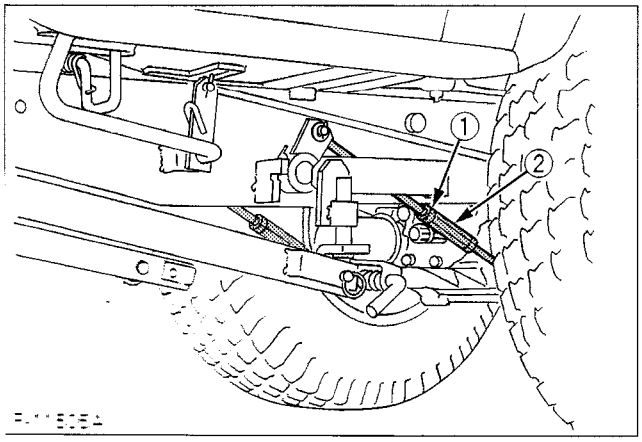

EVERY 200 HOURS

Replacing Engine Oil Filter

CAUTION
To avoid personal injury:
- **Be sure to stop the engine and remove the key before changing the oil filter cartridge.**
- **Allow engine to cool down sufficiently, oil can be hot and can burn.**

1. Remove the oil filter.
2. Put a film of clean engine oil on the rubber seal of the new filter.
3. Tighten the filter quickly until it contacts the mounting surface.
   Tighten filter by hand an additional 1/2 turn only.
4. After the new filter has been replaced, the engine oil normally decreases a little. Make sure that the engine oil does not leak through the seal and be sure to check the oil level on the dipstick. Then, replenish the engine oil up to the prescribed level.
5. Properly dispose of used oil.

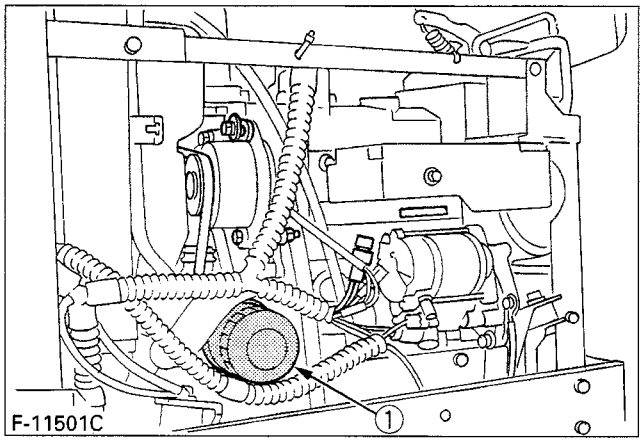

(1) Engine oil filter

IMPORTANT:
- To prevent serious damage to the engine, use only a KUBOTA genuine filter.

Checking Radiator Hose and Clamp

CAUTION
To avoid personal injury:
- **Be sure to stop the engine and remove the key before checking radiator hose and clamp.**

Check to see if radiator hoses are properly secured every 200 hours of operation or six months, whichever comes first.
1. If hose clamps are loose or water leaks, tighten bands securely.
2. Replace hoses and tighten hose clamps securely, if radiator hoses are swollen, hardened or cracked.
3. Properly dispose of used coolant.

Replace hoses and hose clamps every 2 years or earlier if checked and found that hoses are swollen, hardened or cracked.

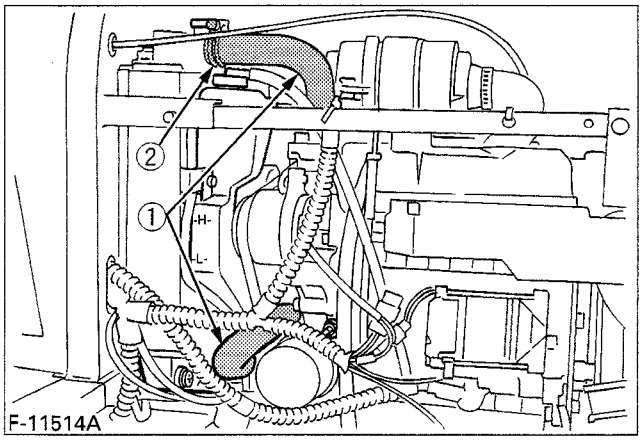

(1) Radiator hoses (2 pcs)
(2) Clamp bands (4 pcs)

◆ Precaution at Overheating

Take the following actions in the event the coolant temperature nears the boiling point, which is termed "Overheating".
1. Stop the machine operation in a safe place and keep the engine idling unloaded.
2. Don't stop the engine suddenly, but stop it after about 5 minutes of unloaded idling.
3. Keep yourself well away from the machine for an additional 10 minutes or until the steam has blown out.
4. Checking that there is no danger such as burn, get rid of the causes of overheating according to the manual, see "Troubleshooting" section, and then, start the engine again.

Adjusting Toe-in

1. Park tractor on a firm, flat and level place.
2. Turn steering wheel so front wheels are in the straight ahead position.
3. Lower the implement to the ground, lock the parking brake, stop the engine and remove the key.
4. Measure distance between tire beads at front of tire at hub height.
5. Measure distance between tire beads at rear of tire, hub height.
6. Front distance should be 1 to 10mm (1/16 to 3/8 in.) less than rear distance.
   If not, adjust tie rod length.

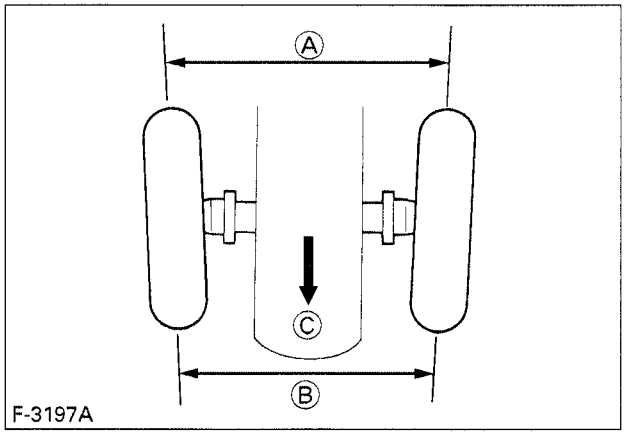

(A) Wheel - to - wheel distance at rear
(B) Wheel - to - wheel distance at front
(C) "FRONT"

◆ Adjusting procedure

1. Loosen the lock nut and turn the tie rod to adjust the rod length until the proper toe-in measurement is obtained.
2. Retighten the lock nut.

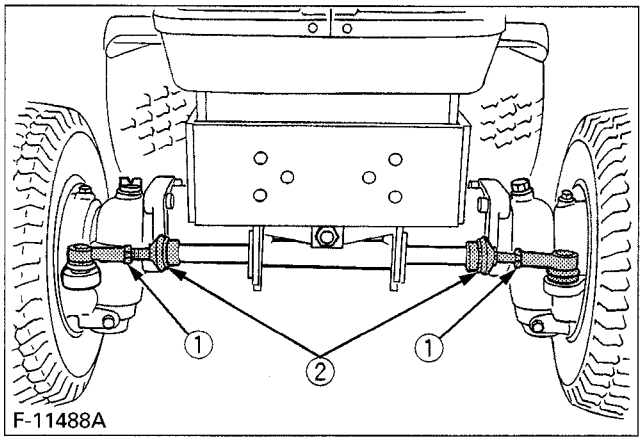

(1) Lock nuts
(2) Tie rod

Checking Intake Air Line

CAUTION
To avoid personal injury:
- **Be sure to stop the engine and remove the key before checking intake air line.**

1. Check to see that hoses and hose clamps are tight and not damaged.
2. If hoses and clamps are found to be worn or damaged, replace or repair them at once.

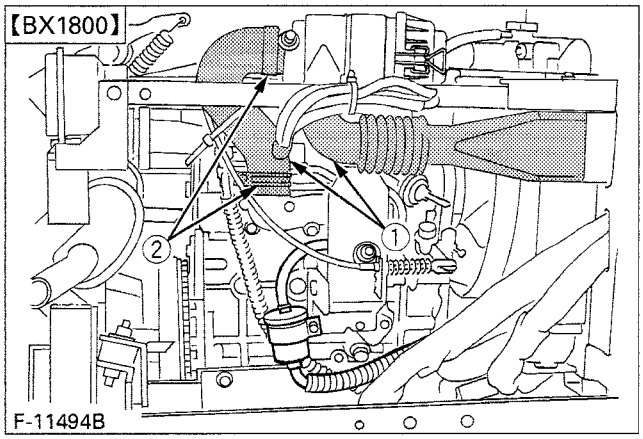

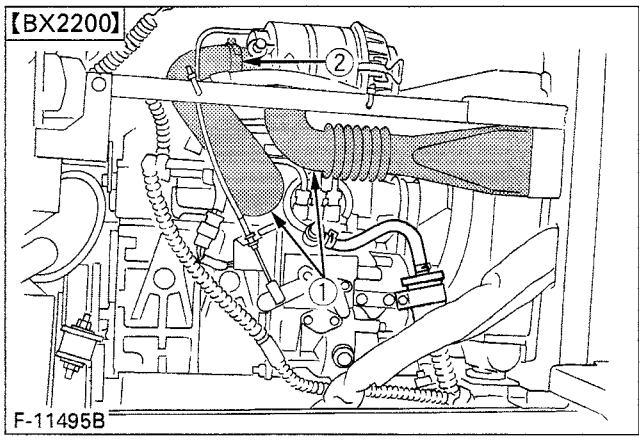

(1) Hose
(2) Hose clamp

Checking Power Steering Line

CAUTION
To avoid personal injury:
- **Be sure to stop the engine and remove the key before checking power steering line.**

1. Check to see that all lines are tight and not damaged.
2. If hoses are found to be worn or damaged, replace or repair them at once.

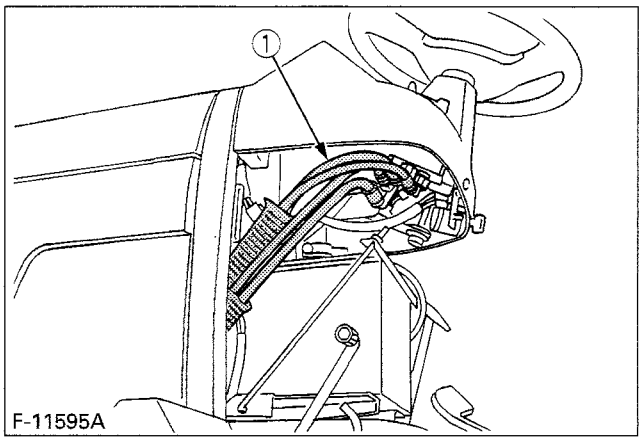

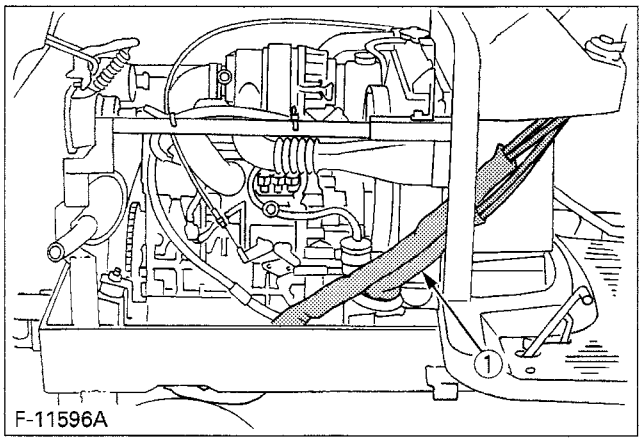

(1) Power steering pressure hoses

EVERY 300 HOURS

■ Changing Transmission Fluid

CAUTION
To avoid personal injury:
- **Allow engine to cool down sufficiently, oil can be hot and can burn.**

1. To drain the used oil, remove the drain plug at the bottom of the transmission case and drain the oil completely into the oil pan.
2. After draining reinstall the drain plug.
3. Clean the transmission strainer.
4. Fill with new KUBOTA SUPER UDT fluid up to the upper notch on the dipstick.
   (See "LUBRICANTS" and "DAILY CHECK" in Maintenance Section)
5. After running the engine for a few minutes, stop it and check the oil level again, add oil to prescribed level.
6. Properly dispose of used oil.

Oil capacity	10.1 L (2.7 U.S. gals.)

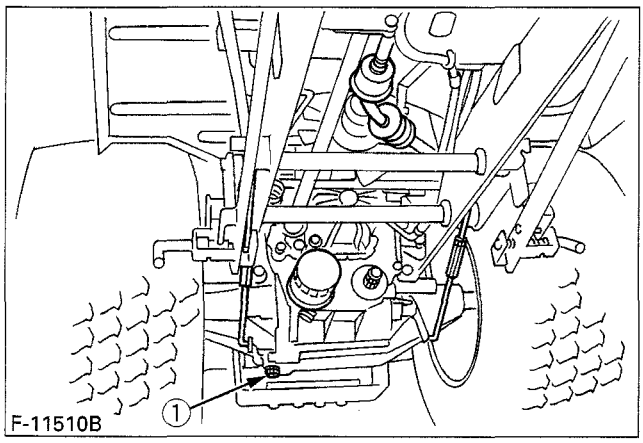

(1) Drain plug

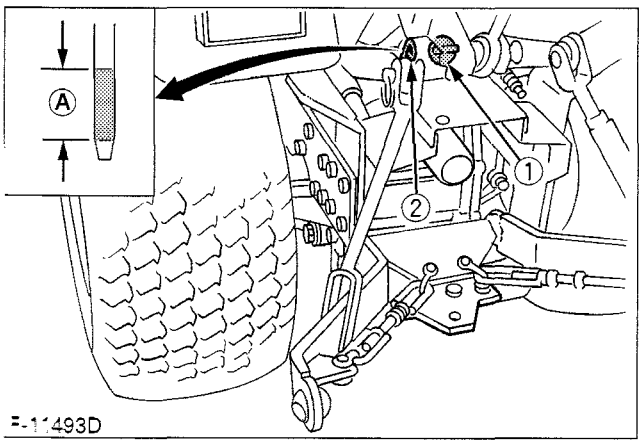

1. Oil inlet
2. Dipstick
(A) Oil level is acceptable within this range.

IMPORTANT:
- Do not operate the tractor immediately after changing the transmission fluid.
  Run the engine at medium speed for a few minutes to prevent damage to the transmission.

◆ Cleaning Transmission Strainer

When changing the transmission fluid, disassemble and rinse the strainer with nonflammable solvent to completely clean off filings.
When reassembling be careful not to damage the parts.

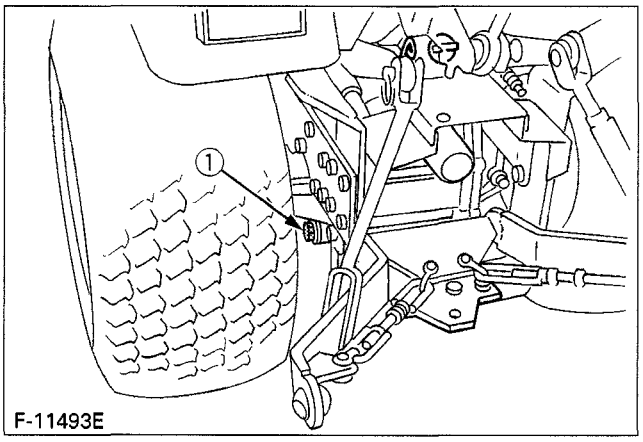

(1) Strainer

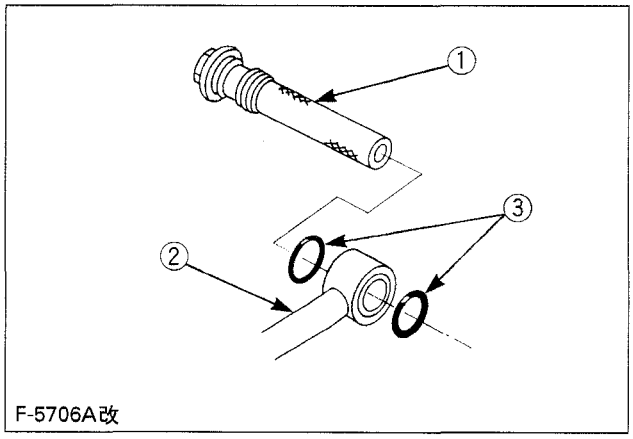

(1) Strainer
(2) Suction line
(3) O-ring

NOTE:
- Since the fine filings in the oil can damage the precision component parts of the hydraulic system, the end of the suction line is provided with an oil strainer.

Replacing Transmission Oil Filter

CAUTION
To avoid personal injury:
- **Allow engine to cool down sufficiently, oil can be hot and can burn.**

1. Remove the oil filter.
2. Put a film of clean transmission oil on rubber seal of new filter.
3. Tighten the filter quickly until it contacts the mounting surface.
   Tighten filter by hand an additional 1/2 turn only.
4. After the new filter has been replaced, the transmission fluid level will decrease a little. Make sure that the transmission fluid does not leak through the seal, and check the fluid level. Top up if necessary.
5. Properly dispose of used oil.

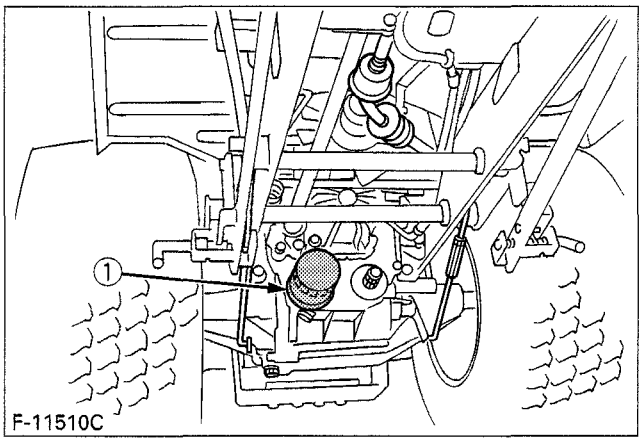

(1) Filter

IMPORTANT:
- To prevent serious damage to the hydraulic system, use only a KUBOTA genuine filter.

Changing Front Axle Case Oil

1. Park the machine on a firm, flat and level surface.
2. To drain the used oil, remove the right and left drain plugs and filling plug at the front axle case and drain the oil completely into the oil pan.
3. After draining reinstall the drain plugs.
4. Remove the right and left breather plugs.
5. Fill with new oil up to the upper notch on the dipstick.
   (See "LUBRICANTS" in Maintenance Section)
   IMPORTANT:
   - After ten minutes, check the oil level again; add oil to prescribed level.
6. After filling, reinstall the filling plug and breather plug.

Oil capacity	4.7 L (5.0 U.S.qts.)

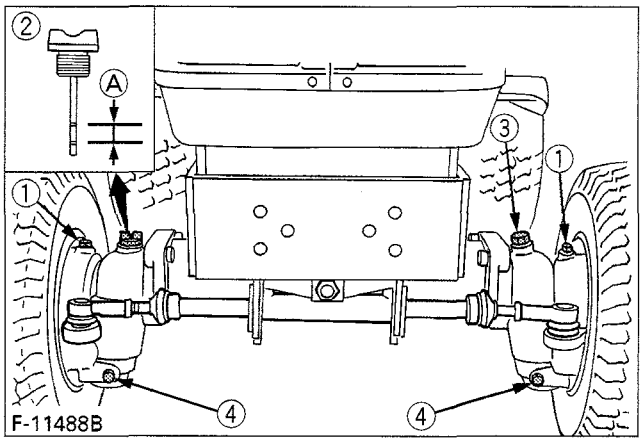

(1) Breather plug
(2) Filling plug with dipstick
(3) Filling plug
(4) Drain plug
(A) Oil level is acceptable within this range

EVERY 400 HOURS

Adjusting Front Axle Pivot

If the front axle pivot pin adjustment is not correct, front wheel vibration can occur causing vibration in the steering wheel.

◆ Adjusting procedure

Remove the split pin, tighten the adjusting nut (tightening torque 20 N•m, 2.0 kgf•m, 15 lbs.•ft), then make sure that one of the nut slots aligns with the split pin hole, tighten the nut slightly if necessary to align. Replace the split pin.

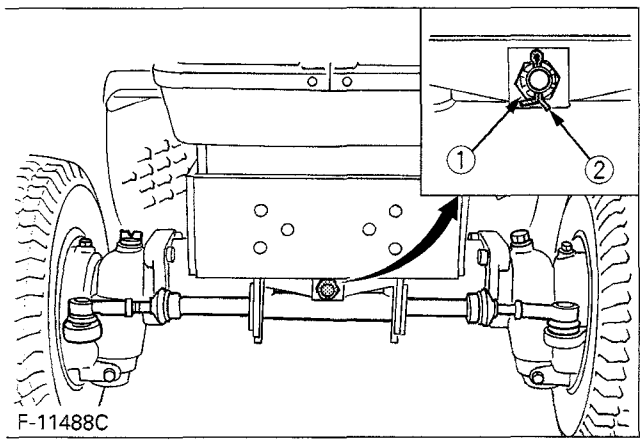

(1) Adjusting nut
(2) Split pin

EVERY 500 HOURS

Replacing Fuel Filter Element

Consult your local KUBOTA Dealer for this service.

EVERY 800 HOURS

Adjusting Engine Valve Clearance

Consult your local KUBOTA Dealer for this service.

EVERY 1500 HOURS

Checking Fuel Injection Nozzle Injection Pressure

Consult your local KUBOTA Dealer for this service.

EVERY 3000 HOURS

Checking Injection Pump

Consult your local KUBOTA Dealer for this service.

EVERY 1 YEAR

Replacing Air Cleaner Element

(See "Cleaning Air Cleaner Element" in every 100 hours maintenance.)

EVERY 2 YEARS

Flush Cooling System and Changing Coolant

CAUTION
To avoid personal injury:
- **Be sure to stop the engine and remove the key before checking coolant level.**
- **Do not remove the radiator cap while coolant is hot. When cool, slowly rotate cap to the first stop and allow sufficient time for excess pressure to escape before removing cap completely.**

1. Stop the engine, remove the key and let cool down.
2. To drain the coolant, open the radiator drain plug, and remove radiator cap. The radiator cap must be removed to completely drain the coolant.
3. After all coolant is drained, close the drain plug.
4. Fill with clean water and cooling system cleaner.
5. Follow directions of the cleaner instruction.
6. After flushing, fill with clean water and anti-freeze until the coolant level is just below the radiator cap. Install the radiator cap securely.
7. Fill with coolant up to the "H" mark on the recovery tank.
8. Start and operate the engine for few minutes.
9. Stop the engine, remove the key and let cool.
10. Check coolant level of recovery tank and add coolant if necessary.
11. Properly dispose of used coolant.

Coolant capacity (with recovery tank)	BX 1800	BX 2200
	2.9 L (3.1 U.S. qts.)	3.5 L (3.7 U.S. qts.)

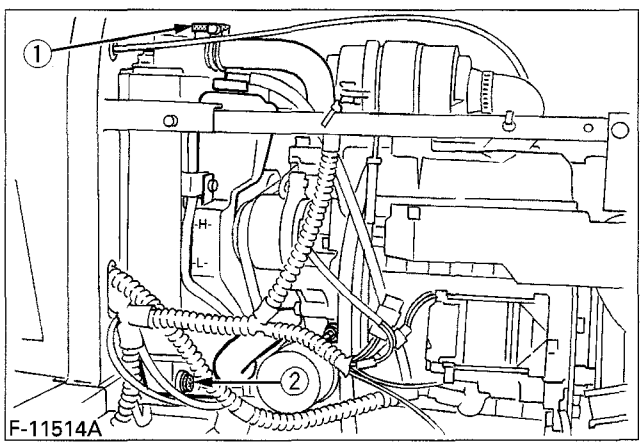

(1) Radiator cap
(2) Drain plug

IMPORTANT:
- Do not start engine without coolant.
- Use clean, fresh water and anti-freeze to fill the radiator and recovery tank.
- When the anti-freeze is mixed with water, the anti-freeze mixing ratio must be less than 50%.
- Securely tighten radiator cap. If the cap is loose or improperly fitted, water may leak out and the engine could overheat.

Anti-Freeze

If cooling water freezes, it can damage the cylinders and radiator. It is necessary, if the ambient temperature falls below 0℃ (32℉), to remove cooling water after operating or to add anti-freeze to it.

1. There are two types of anti-freeze available; use the permanent type (PT) for this engine.
2. Before adding anti-freeze for the first time, clean the radiator interior by pouring fresh water and draining it a few times.
3. The procedure for mixing of water and anti-freeze differs according to the make of the anti-freeze and the ambient temperature, basically it should be referred to SAE J1034 standard, more specifically also to SAE J814c.
4. Mix the anti-freeze with water, and then fill the radiator.

Vol % Anti-freeze	Freezing point		Boiling point*	
	°C	°F	°C	°F
40	- 24	- 12	106	222
50	- 37	- 34	108	226

* At 760mmHg pressure (atmospheric). A higher boiling point is obtained by using a radiator pressure cap which permits the development of pressure within the cooling system.

NOTE:
- The above data represents industry standards that necessitate a minimum glycol content in the concentrated anti-freeze.
- When the cooling water level drops due to evaporation, add water only. In case of leakage, add anti-freeze and water in the specified mixing ratio.
- Anti-freeze absorbs moisture. Keep unused anti-freeze in a tightly sealed container.
- Do not use radiator cleaning agents when anti-freeze has been added to the cooling water. (Anti-freeze contains an anti-corrosive agent, which will react with the radiator cleaning agent forming sludge which will affect the engine parts.)

Replacing Radiator Hose (Water pipes)

Replace the hoses and clamps.
(See " Checking Radiator Hose and Clamp" in every 200 hours maintenance.)

Replacing Power Steering Hose

Replace the hoses and clamps.
(See " Checking Power Steering Line" in every 200 hours maintenance.)

Replacing Fuel Hose

Replace the hoses and clamps.
(See " Checking Fuel Line" in every 200 hours maintenance.)

Replacing Intake Air Line

Consult your local KUBOTA Dealer for this service.
(See " Checking Intake Air Line" in every 200 hours maintenance.)

SERVICE AS REQUIRED

Bleeding Fuel System

Air must be removed:
1. When the fuel filter or lines are removed.
2. When tank is completely empty.
3. After the tractor has not been used for a long period of time.

◆ **Bleeding procedure is as follows:**
1. Fill the fuel tank with fuel.

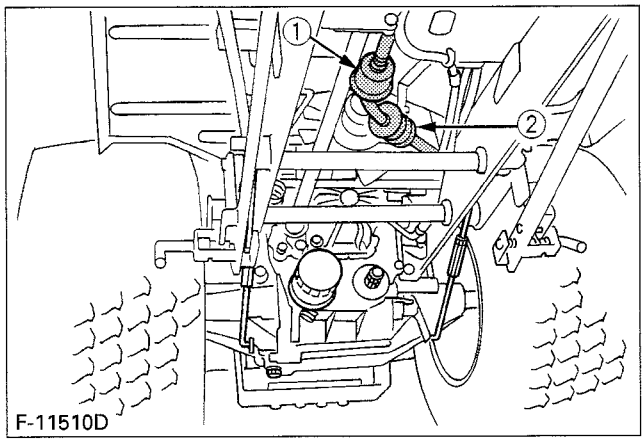

(1) Fuel pump
(2) Fuel filter

2. Turn the key switch to " ON" position for about 30 seconds. Doing so allows fuel pump to work and pump air out of the fuel system.
3. Start the engine and run for about 30 seconds, and then stop the engine.

Replacing Fuse

CAUTION
To avoid personal injury:
- **Be sure to stop the engine and remove the key before replacing fuse.**

The tractor electrical system is protected from potential damage by fuses.
A blown fuse indicates that there is an overload or short somewhere in the electrical system.
If any of the fuses should blow, replace with a new one of the same capacity.

IMPORTANT:
- Before replacing a blown fuse, determine why the fuse blew and make any necessary repairs. Failure to follow this procedure may result in serious damage to the tractor electrical system. Refer to the troubleshooting section of this manual or your local KUBOTA Dealer for specific information dealing with electrical problems.
  If any of them should blow, replace with a new one of the same capacity.

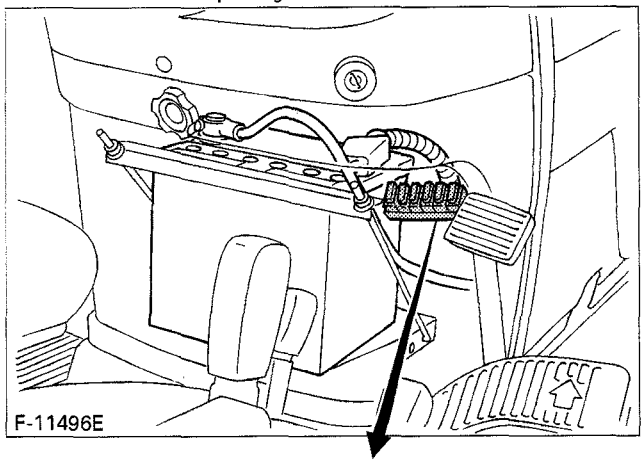

①	20A	SOLENOID (BX2200)	
②	15A	ACCESSORIES	
③	15A	HAZARD LAMP	
④	15A	SOLENOID (BX1800)	
	20A		(Spare)
	15A		(Spare)

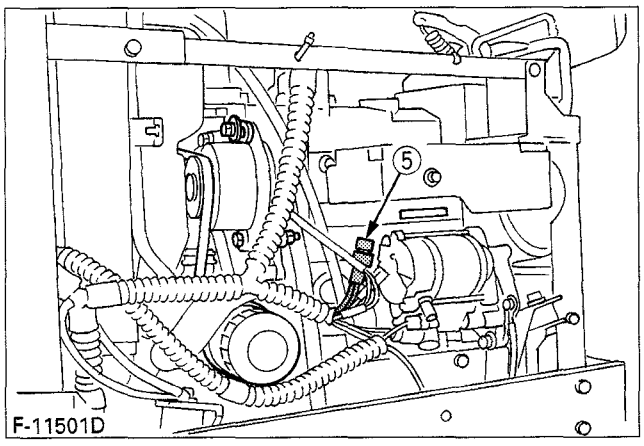

◆ **Protected circuit**

FUSE No.	CAPACITY (A)	Protected circuit
①	20	Key stop (BX2200)
②	15	Head lights
③	15	Hazard lights
④	15	Key stop (BX1800)
⑤	Slow blow Fuse (30A)	Check circuit against wrong battery connection

Replacing Light Bulb

1. Head lights :
   Take the bulb out of the light body and replace with a new one.
2. Other lights :
   Detach the lens and replace the bulb.

Light	Capacity
Headlights	24W
Tail light	3W
Hazard light	20W
Additional winker lamp	20W

STORAGE

CAUTION
To avoid personal injury:
- **Do not clean the machine with engine running.**
- **To avoid the danger of exhaust fume poisoning, do not operate the engine in a closed building without proper ventilation.**
- **When storing, remove the key from the key switch to avoid unauthorized persons from operating the tractor and getting injured.**

TRACTOR STORAGE

If you intend to store your tractor for an extended period of time, follow the procedures outlined below. These procedures will insure that the tractor is ready to operate with minimum preparation when it is removed from storage.

1. Check the bolts and nuts for looseness, and tighten if necessary.
2. Apply grease to tractor areas where bare metal will rust also to pivot areas.
3. Detach the weights from the tractor body.
4. Inflate the tires to a pressure a little higher than usual.
5. Change the engine oil and run the engine to circulate oil throughout the engine block and internal moving parts for about five minutes.
6. With all implements lowered to the ground, coat any exposed hydraulic cylinder piston rods with grease.
7. Remove the battery from the tractor. Store the battery following the battery storage procedures. (See "Battery condition" in every 100 hours in periodic service section.)
8. Keep the tractor in a dry place where the tractor is sheltered from the elements. Cover the tractor.
9. Store the tractor indoors in a dry area that is protected from sunlight and excessive heat. If the tractor must be stored outdoors, cover it with a waterproof tarpaulin.
   Jack the tractor up and place blocks under the front and rear axles so that all four tires are off the ground. Keep the tires out of direct sunlight and extreme heat.

IMPORTANT:
- When washing the tractor, be sure to stop the engine. Allow sufficient time for the engine to cool before washing.
- Cover the tractor after the muffler and the engine have cooled down.

REMOVING THE TRACTOR FROM STORAGE

1. Check the tire air pressure and inflate the tires if they are low.
2. Jack the tractor up and remove the support blocks from under the front and rear axles.
3. Install the battery. Before installing the battery, be sure it is fully charged.
4. Check the fanbelt tension.
5. Check all fluid levels (engine oil, transmission/hydraulic oil, engine coolant and any attached implements).
6. Start the engine. Observe all gauges. If all gauges are functioning properly and reading normal, move the tractor outside. Once outside, park the tractor and let the engine idle for at least five minutes. Shut the engine off and walk around tractor and make a visual inspection looking for evidence of oil or water leaks.
7. With the engine fully warmed up, release the parking brake and test the brakes for proper adjustment as you move forward. Adjust the brakes as necessary.

TROUBLESHOOTING

ENGINE TROUBLESHOOTING

If something is wrong with the engine, refer to the table below for the cause and its corrective measure.

Trouble		Cause	Countermeasure
Engine is difficult to start or won't start.		● No fuel flow.	● Check the fuel tank and the fuel filter. Replace filter if necessary.
		● Air or water is in the fuel system.	● Check to see if the fuel line coupler bolt and nut are tight. ● Bleed the fuel system (See "Bleeding Fuel system" in as required maintenance) ● Remove water from the system and replace the fuel filter.
		● In winter, oil viscosity increases, and engine revolution is slow.	● Use oils of different viscosities, depending on ambient temperatures. ● Use engine block heater. (Option)
		● Battery becomes weak and the engine does not turn over quick enough.	● Clean battery cables and terminals. ● Charge the battery. ● In cold weather, always remove the battery from the engine, charge and store it indoors. Install it on the tractor only when the tractor is going to be used.
Insufficient engine power.		● Insufficient or dirty fuel. ● The air cleaner is clogged.	● Check the fuel system. ● Clean or replace the element.
Engine stops suddenly.		● Insufficient fuel.	● Refuel. ● Bleed the fuel system if necessary.
Exhaust fumes are colored.	Black	● Fuel quality is poor. ● Too much oil. ● The air cleaner is clogged.	● Change the fuel and fuel filter. ● Check the proper amount of oil. ● Clean or replace the element.
	Blue white	● The inside of exhaust muffler is dumped with fuel. ● Injection nozzle trouble. ● Poor quality fuel.	● Heat the muffler by applying load to the engine. ● Check the injection nozzle. ● Change the fuel and fuel filter.
Engine overheats.		● Engine overloaded.	● Shift to lower gear or reduce load.
		● Low coolant level.	● Fill cooling system to the correct level; check radiator and hoses for loose connections or leaks.
		● Loose or defective fan belt.	● Adjust or replace fan belt.
		● Dirty radiator core or grille screens.	● Remove all trash.
		● Coolant flow route corroded.	● Flush cooling system.

If you have any questions, contact your local KUBOTA Dealer.

OPTIONS

Consult your local KUBOTA Dealer for further details.

- 18 x 8.5-8 Bar Tire
- 26 x 12.0-12 Bar Tire
- Grille guard
- Engine Block heater
  For extremely cold weather starting
- Rear Work Light
  High visibility for night work
- Front end weight
  For front ballast
- Rear wheel weight
- Sunshade for ROPS

Kubota

U.S.A. : **KUBOTA TRACTOR CORPORATION**
3401 Del Amo Blvd., Torrance, CA 90503, U.S.A.
Telephone : (310)370-3370
Western Division : 6665 E. Hardaway Rd., Stockton, CA 95215
Telephone : (209)931-5051
Central Division : 14855 FAA Blvd., Fort Worth, TX 76155
Telephone : (817)571-0900
Northern Division : 2626 Port Road, Columbus, OH 43217
Telephone : (614)492-1100
Southeast Division : 1025 Northbrook Parkway, Suwanee, GA 30024
Telephone : (770)995-8855

Canada : **KUBOTA CANADA LTD.**
5900 14th Avenue, Markham, Ontario, L3S 4K4, Canada
Telephone : (905)294-7477
Delta Distribution Center : 7979 82nd St, Delta B.C. V4G 1L7
Telephone : (604)940-6061
Drummondville Distribution Center : 5705 Place Kubota, Drummondville, Québec, J2B 6B4
Telephone : (819)478-7151

France : **KUBOTA EUROPE S.A.**
19-25, Rue Jules Vercruysse, Z.I. BP88, 95101 Argenteuil Cedex, France
Telephone : (33)1-3426-3434

Germany : **KUBOTA (DEUTSCHLAND) GmbH**
Senefelder Str. 3-5 63110 Rodgau /Nieder-Roden, Germany
Telephone : (49)6106-873-0

U.K. : **KUBOTA (U.K.) LTD.**
Dormer Road, Thame, Oxfordshire, OX9 3UN, U.K.
Telephone : (44)1844-214500

Australia : **KUBOTA TRACTOR AUSTRALIA PTY LTD.**
100 Keilor Park Drive, Tullamarine, Victoria 3043 Australia
Telephone : (61)-3-9279-2000

Malaysia : **SIME KUBOTA SDN. BHD.**
Lot pt 11101 Kompleks Sime Darby, Jalan Kewajipan,
Subang Jaya, 47600 Petaling Jaya, Selangor Darul Ehsan, West Malaysia
Telephone : (60)3-736-1388

Philippines : **KUBOTA AGRO-INDUSTRIAL MACHINERY PHILIPPINES, INC.**
155 Panay Avenue, South Triangle Homes, 1103 Quezon City, Philippines
Telephone : (63)2-9201071

Taiwan : **SHIN TAIWAN AGRICULTURAL MACHINERY CO., LTD.**
16, Fengping 2nd Rd, Taliao Shiang Kaohsiung 83107, Taiwan R.O.C.
Telephone : (886)7-702-2333

Brazil : **KUBOTA BRASIL LTDA.**
Rua Dona Maria Fidelis No.171, Diadema, São Paulo, Brazil
Telephone : (55)11-745-4744

Indonesia : **P.T. KUBOTA INDONESIA**
JALAN. Setyabudi 279, Semarang, Indonesia
Telephone : (62)-24-472849

Thailand : **THE SIAM KUBOTA INDUSTRY CO., LTD.**
101/19-24 Navanakorn, Tambol Klongneung, Amphur Klongluang, Pathumtani 12120, Thailand
Telephone : (66)2-529-0363

Egypt : **KUBOTA Corporation CAIRO LIAISON OFFICE**
Flat No.2,27th floor, Swiss Tower Building
3,Ibn Kasir Street, Cornish EL Nile, Giza, Egypt
Telephone : (20)2-338-3851

英語 (U.S.A)
Code No. K2561-T121-5

Printed in the U.S.A.

O.i.7.12.6.L

Foot and Hand Controls

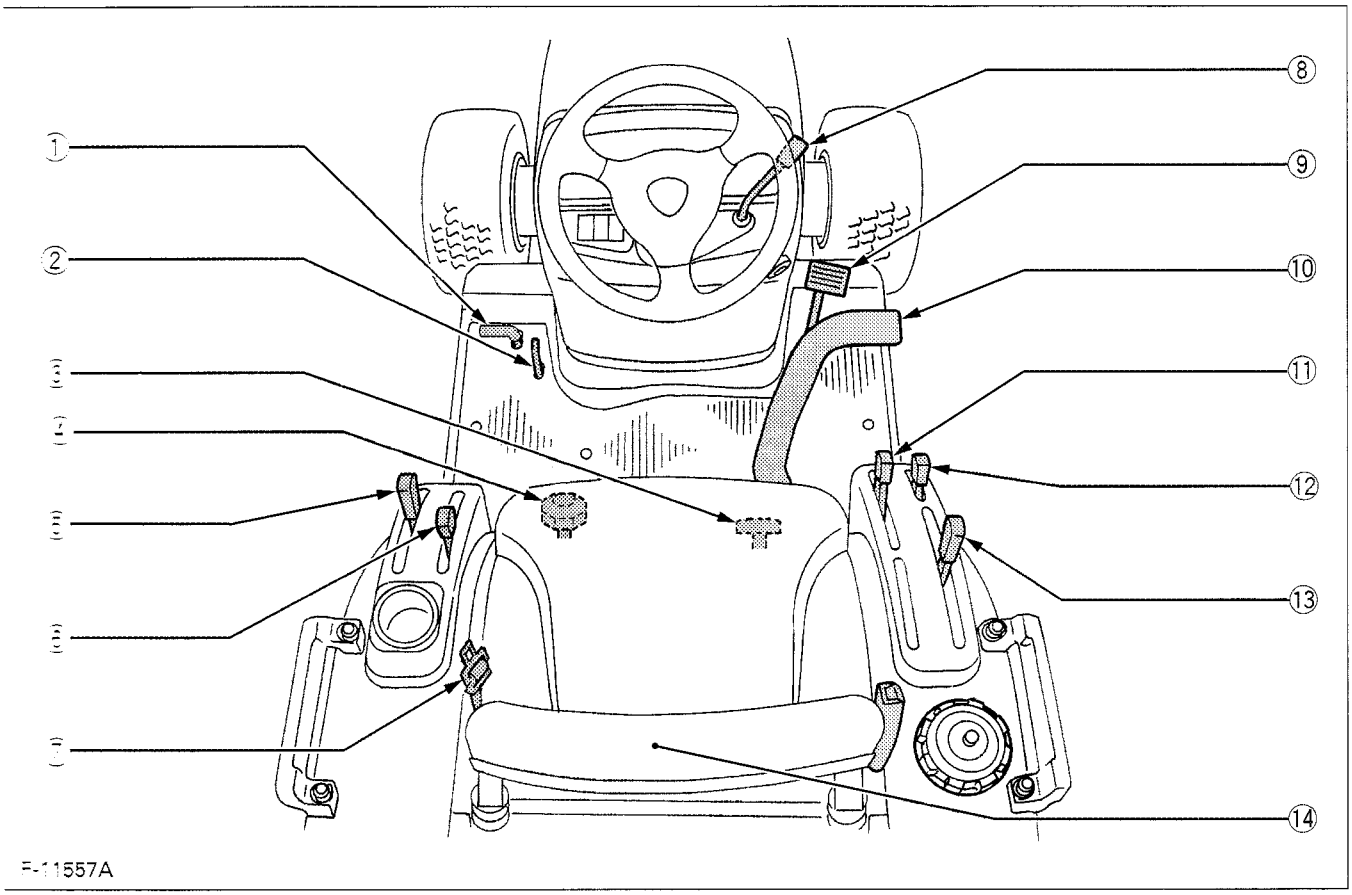

ILLUSTRATED CONTENTS

(1) Differential lock pedal 27
(2) Parking brake lock pedal 17,22,24,26
(3) 3-Point hitch lowering speed knob 32
(4) Cutting height control dial 33
(5) PTO select lever 28
(6) PTO clutch lever 17,29
(7) Seat belt 22
(8) Hand throttle lever 18,24
(9) Brake pedal 17,22,24,26
(10) Speed control pedal 17,24
(11)Hydraulic control lever 18,23
(12)Front wheel drive lever 23
(13)Range gear shift lever (Hi-Lo) 17,23
(14)Operator's seat 21

PRE-OPERATION CHECK

DAILY CHECK

To prevent trouble from occurring, it is important to know the condition of the tractor well. Check it before starting.

CAUTION
To avoid personal injury:
- **Be sure to check and service the tractor on a level surface with the engine shut off and the parking brake "ON" and implements lowered to the ground.**

Check item

- Walk around inspection
- Check engine oil level
- Check transmission oil level
- Check coolant level
- Clean grill and radiator screen
- Check air cleaner evacuator valve
  (When used in a dusty place)
- Check brake pedal
- Check indicators, gauges and meter
- Check lights
- Check wire harness
- Check seat belt and ROPS
- Refuel
  (See "DAILY CHECK" in periodic service section.)
- Care of danger, warning and caution labels
  (See "DANGER, WARNING AND CAUTION LABELS" in safe operation section.)

OPERATING THE ENGINE

CAUTION
To avoid personal injury:

- **Read "Safe Operation" in the front of this manual.**
- **Read the danger, warning and caution labels located on the tractor.**
- **To avoid the danger of exhaust fume poisoning, do not operate the engine in a closed building without proper ventilation.**
- **Never start engine while standing on ground. Start engine only from operator's seat.**
- **Make it a rule to set all shift levers to the "NEUTRAL" positions and to place PTO lever in "OFF" position before starting the engine.**

IMPORTANT:

- Do not use starting fluid or ether.
- To protect the battery and the starter, make sure that the starter is not continuously turned for more than 30 seconds.

STARTING THE ENGINE

1. Make sure the parking brake is set.

- To set the parking brake:
  1. Depress the brake pedal.
  2. Latch the brake pedal with the parking brake lock pedal.
- To release the parking brake, depress the brake pedal again.

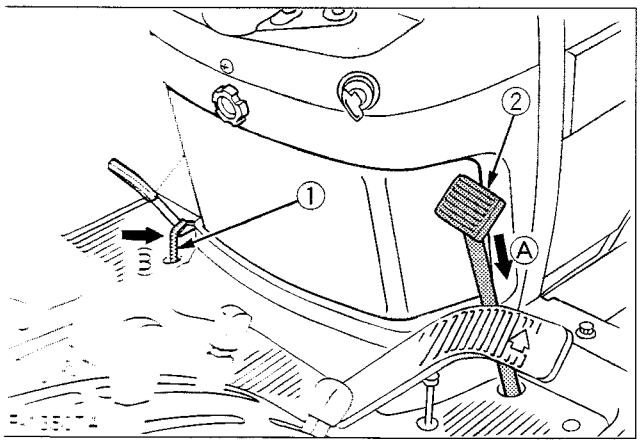

1. Parking brake lock pedal
2. Brake pedal

(A) "DEPRESS"
(B) PUSH FORWARD WHILE DEPRESSING ②

2. Place the PTO clutch lever in "OFF" position.

3. Place the speed control pedal in "NEUTRAL" position.
Place the range gear shift lever (Hi-Lo) in "NEUTRAL" position.

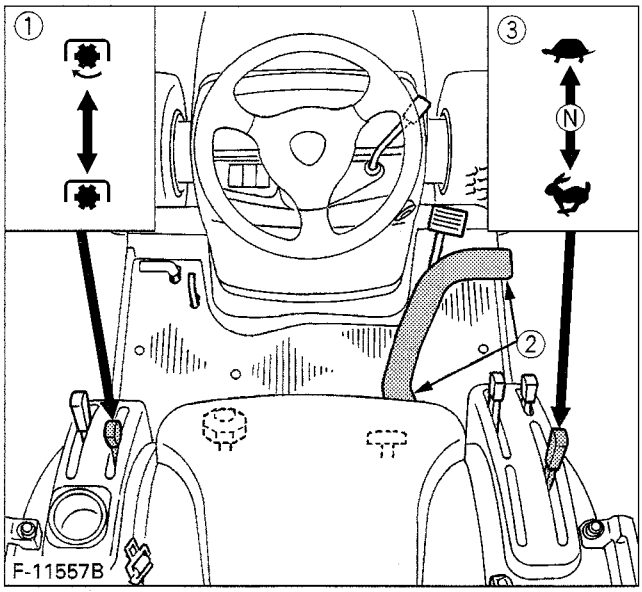

(1) PTO clutch lever
(2) Speed control pedal
(3) Range gear shift lever (Hi-Lo)

"ON"
"OFF"
"Hi"
(N) "NEUTRAL POSITION"
"Lo"

NOTE:

- The speed control pedal automatically return to neutral when the operator's foot is released from the pedal.

JUMP STARTING

CAUTION
To avoid personal injury:

- **Battery gases can explode. Keep cigarettes, sparks, and flames away from battery.**
- **If tractor battery is frozen, do not jump start engine.**
- **Do not connect other end of negative ⊖ jumper cable to negative ⊖ terminal of tractor battery.**

When jump starting engine, follow the instructions below to safely start the engine.

1. Bring helper vehicle with a battery of the same voltage as disabled tractor within easy cable reach. "THE VEHICLES MUST NOT TOUCH".
2. Engage the parking brakes of both vehicles and put the shift levers in neutral. Shut the engines off.
3. Put on safety goggles and rubber gloves.
4. Ensure the vent caps are securely in place. (if equipped)
5. Cover vent holes with damp rags. Do not allow the rag to touch the battery terminals.
6. Attach the red clamp to the positive (red, ⊕ or pos.) terminal of the dead battery and clamp the other end of the same cable to the positive (red, ⊕ or pos.) terminal of the helper battery.
7. Clamp the other cable to the negative (black, ⊖ or neg.) terminal of the helper battery.
8. Clamp the other end to the engine block or frame of the disabled tractor as far from the dead battery as possible.
9. Start the helper vehicle and let its engine run for a few moments. Start the disabled tractor.
10. Disconnect the jumper cables in the exact reverse order of attachment. (Steps 8, 7 and 6).
11. Remove and discard the damp rags.

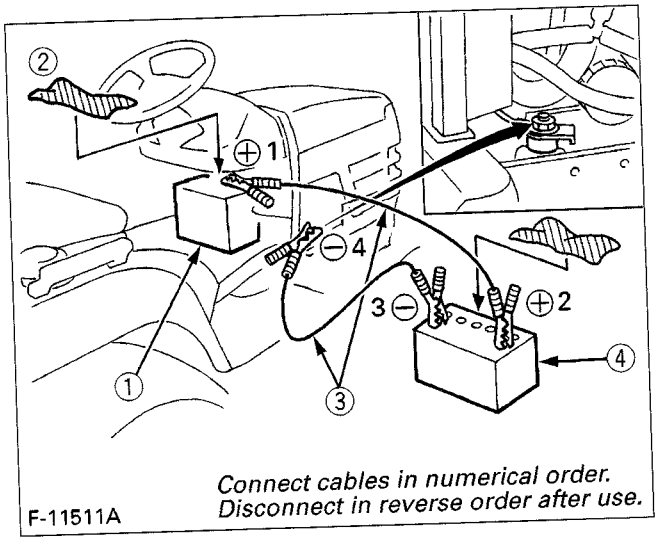

(1) Dead battery
(2) Lay a damp rag over the vent caps
(3) Jumper cables
(4) Helper battery

IMPORTANT:

- This machine has a 12volt negative ⊖ ground starting system.
- Use only same voltage for jump starting.
- Use of a higher voltage source on tractors electrical system could result in severe damage to tractors electrical system.
  Use only matching voltage source when "Jump starting" a low or dead battery condition.

OPERATING THE TRACTOR

OPERATING NEW TRACTOR

How a new tractor is handled and maintained determines the life of the tractor.
A new tractor just off the factory production line has been, of course, tested, but the various parts are not accustomed to each other, so care should be taken to operate the tractor for the first 50 hours at a slower speed and avoid excessive work or operation until the various parts become "broken-in.". The manner in which the tractor is handled during the "breaking-in" period greatly affects the life of your tractor. Therefore, to obtain the maximum performance and the longest life of the tractor, it is very important to properly break-in your tractor. In handling a new tractor, the following precautions should be observed.

■ Do not Operate the Tractor at Full Speed for the First 50 Hours.

- Do not start quickly nor apply the brakes suddenly.
- In winter, operate the tractor after fully warming up the engine.
- Do not run the engine at speeds faster than necessary.
- On rough roads, slow down to suitable speeds. Do not operate the tractor at fast speed.

The above precautions are not limited only to new tractors, but to all tractors. But it should be especially observed in the case of new tractors.

■ Changing Lubricating Oil for New Tractors

The lubricating oil is especially important in the case of a new tractor. The various parts are not "broken-in" and are not accustomed to each other; small metal grit may develop during the operation of the tractor; and this may wear out or damage the parts. Therefore, care should be taken to change the lubricating oil a little earlier than would ordinarily be required.
For further details of change interval hours, see "MAINTENANCE" section.

STARTING

1. Adjusting the Operator's Position.

■ Operator's Seat

CAUTION
To avoid personal injury:
- **Make sure that the seat is completely secured after each adjustment.**
- **Do not allow any person other than the driver to ride on the tractor.**

◆ Travel adjustment
Pull out the position adjust lever and slide the seat backward or forward, as required. The seat will lock in position when the lever is released.

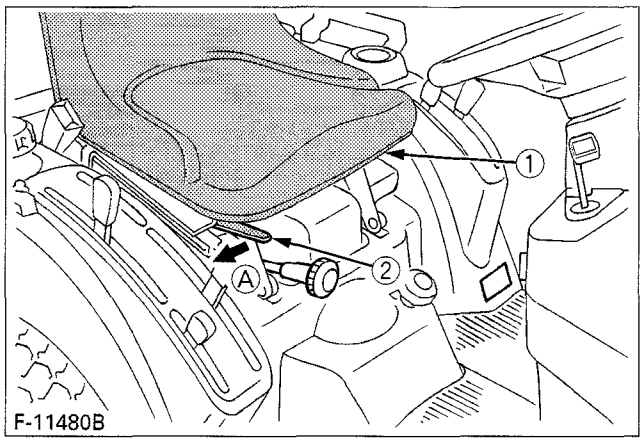

(1) Seat *(A) "PULL OUT"*
(2) Position adjust lever

IMPORTANT
- After adjusting the operator's seat , be sure to check that the seat is properly locked.

Seat Belt

CAUTION
To avoid personal injury:
- **Always use the seat belt when the ROPS is installed.**
  Do not use the seat belt if the tractor is not equipped with ROPS.

Adjust the seat belt for proper fit and connect to the buckle. The seat belt is auto-locking retractable type.

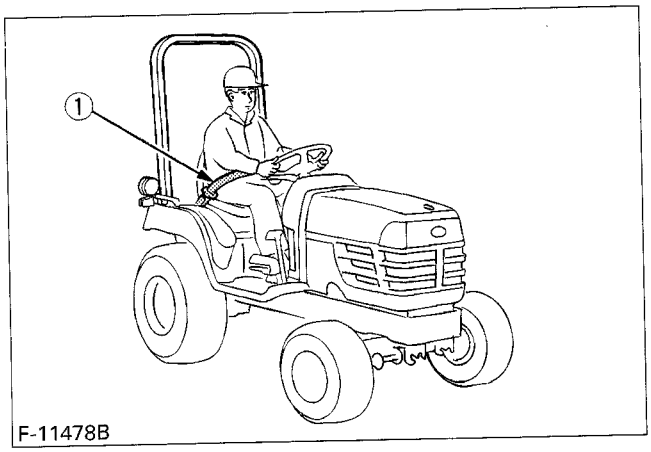

(1) Seat belt

2. Selecting Light Switch Positions.

Head Light Switch

(A) ····· Head lights ON.
(B) ····· Head lights OFF.

Hazard Light Switch

When hazard light switch is pushed down forward, the hazard lights flash along with the indicator on the instrument panel. Push the switch down backward to turn off the light.

(A) ····· Hazard lights ON.
(B) ····· Hazard lights OFF.

Turn Signal Light Switch

To indicate a right turn, push down forward.
To indicate a left turn, push down backward.
When the left or right turn signal is activated in combination with the hazard lights, the indicated turning light will flash and the other will stay on.

NOTE:
- Be sure to return switch to center position after turning.

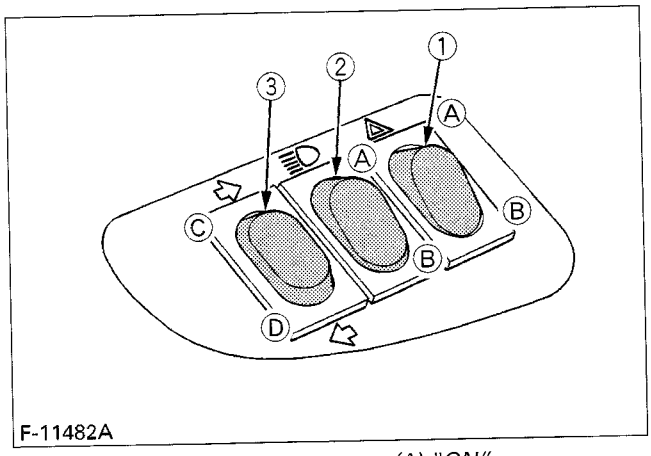

(1) Hazard light switch
(2) Head light switch
(3) Turn signal light switch
(A) "ON"
(B) "OFF"
(C) "RIGHT TURN"
(D) "LEFT TURN"

3. Checking the Brake Pedal.

Brake Pedal

Make sure to latch the brake pedal with the parking brake lock pedal.

CAUTION
To avoid personal injury:
- **An accident may occur if the tractor is suddenly braked, such as by heavy towed loads shifting forward or loss of control.**
- **The braking characteristics are different between two and four wheel drive. Be aware of the difference and use carefully.**
- **When driving on icy, wet or loose surfaces, make sure the tractor is correctly ballasted to avoid skidding and loss of steering control. Operate at reduced speed.**

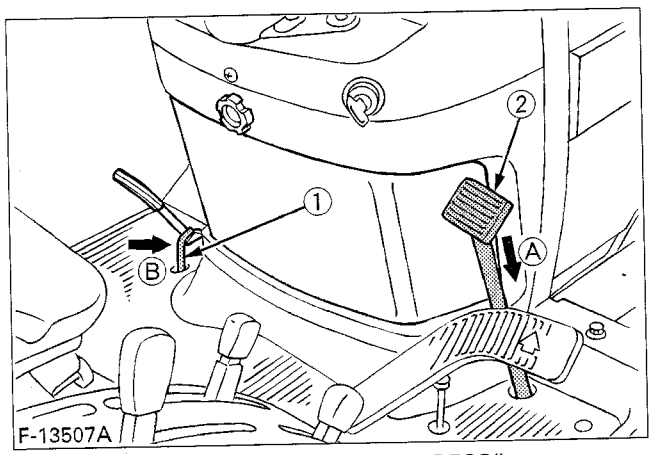

(1) Parking brake lock pedal
(2) Brake pedal
(A) "DEPRESS"
(B) "PUSH FORWARD WHILE DEPRESSING ②"

4. Raise the Implement. (see "HYDRAULIC UNIT" section)

Move the hydraulic control lever rearward.

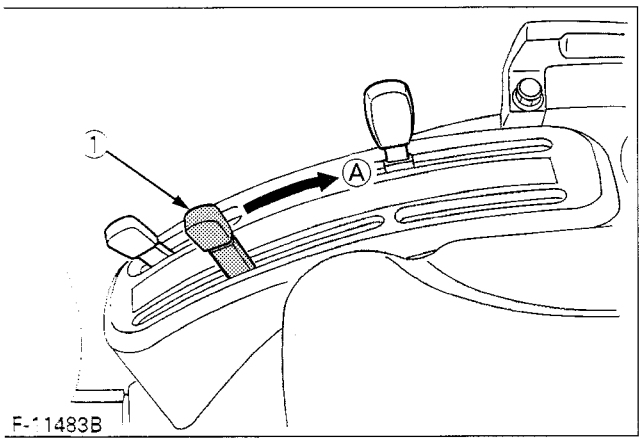

(1) Hydraulic control lever *(A) "UP"*

Hydraulic control lever is automatically returned to neutral position when the implement is raised at top position.

5. Selecting the Travel Speed.

Range Gear Shift Lever (Hi-Lo)

The range gear shift can only be shifted when tractor is completely stopped.

IMPORTANT:

Do not force the range gear shift lever.

- If it is difficult to shift the range shift lever into neutral position;
  1. Depress the brake pedal firmly for several seconds.
  2. Without reducing the brake pedal force, shift the range shift lever.
- If it is difficult to shift the range shift lever into "L" or "H" from neutral position;
  1. Slightly depress the speed control pedal to rotate the gears inside of transmission.
  2. Release the speed control pedal to neutral position.
  3. Shift the range shift lever.
- To avoid damage of transmission, stop tractor before shifting between ranges.

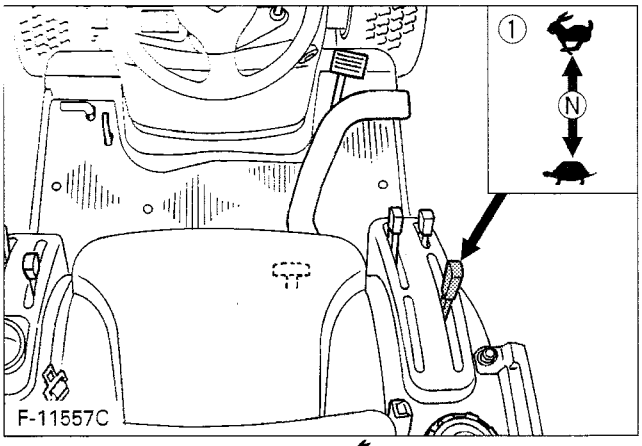

(1) Range gear shift lever (Hi-Lo) *"HIGH"* (N) *"NEUTRAL POSITION"* *"LOW"*

Front Wheel Drive Lever

CAUTION

To avoid personal injury:

- **Do not engage the front wheel drive when traveling at road speed.**
- **When driving on icy, wet or loose surfaces, make sure the tractor is correctly ballasted to avoid skidding and loss of steering control. Operate at reduced speed and engage front wheel drive.**
- **An accident may occur if the tractor is suddenly braked, such as by heavy towed loads shifting forward or loss of control.**
- **The braking characteristics are different between two and four wheel drive. Be aware of the difference and use carefully.**

Use the lever to engage the front wheels with the tractor stopped. Shift the lever to "ON" to engage the front wheel drive.

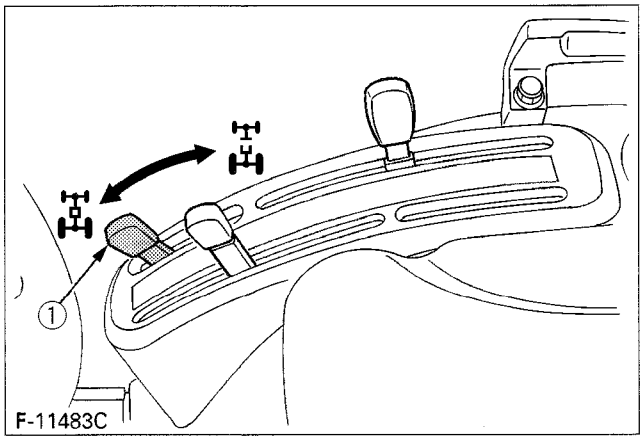

(1) Front wheel drive lever *"ON"* *"OFF"*

IMPORTANT:

- To avoid damage of transmission, when front wheel drive lever is not smoothly shifted, slightly step forward or rearward on speed control pedal.
- Tires will wear quickly if front wheel drive is engaged on paved roads.

◆ **Front wheel drive is effective for the following jobs:**

1. When greater pulling force is needed, such as working in a wet field, when pulling a trailer, or when working with a front-end loader.
2. When working in sandy soil.
3. When working on a hard soil where a rotary tiller might push the tractor forward.
4. Additional braking at reduced speeds.

6. Accelerate the Engine.

Hand Throttle Lever

Pulling the throttle lever back increases engine speed, and pushing it forward decreases engine speed.

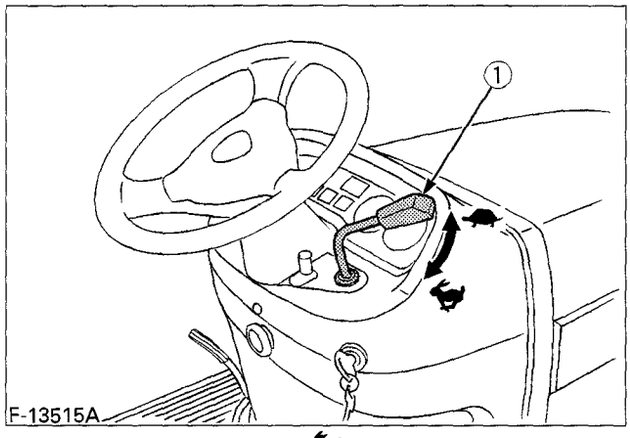

(1) Hand Throttle lever *"INCREASE"* *"DECREASE"*

7. Unlock the Parking Brake.

Parking Brake Pedal

To release the parking brake, depress the brake pedal again.

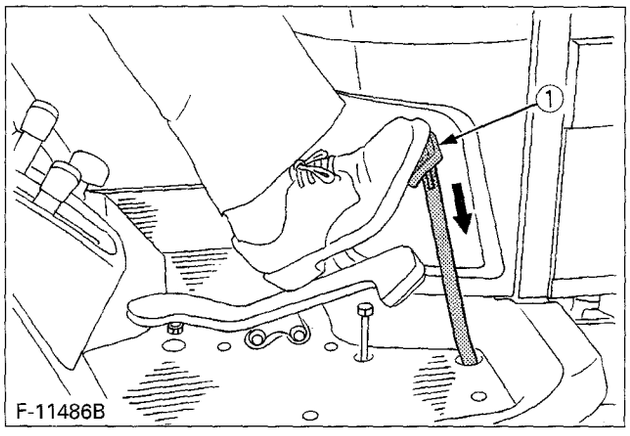

(1) Brake pedal

8. Depress the Speed Control Pedal.

Speed Control Pedal

WARNING
To avoid personal injury:
- **Do not operate if tractor moves on level ground with foot off Speed Control Pedal.**

Forward Pedal
Depress the forward pedal with the toe of your right foot to move forward.
Reverse Pedal
Depress the reverse pedal with the heel of your right foot to move backward.

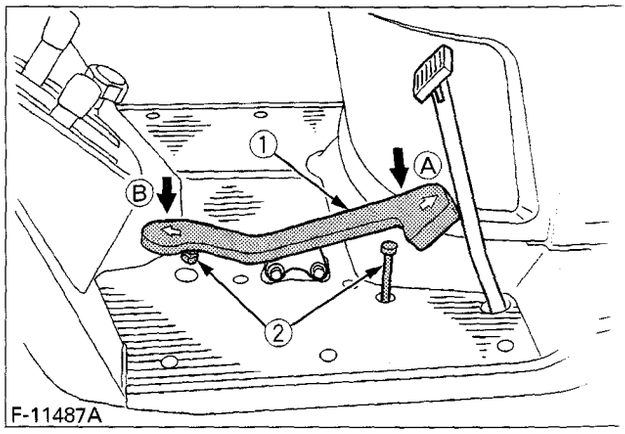

(1) Speed control pedal *(A) "FORWARD"*
(2) Stopper bolts *(B) "REVERSE"*

IMPORTANT:
- To prevent serious damage to the HST, do not adjust the stopper bolts.

STOPPING

Stopping

1. Slow the engine down.
2. Step on the brake pedal.
3. After the tractor has stopped, disengage the PTO, lower the implement to the ground, shift the transmission to neutral and set the parking brake.

CHECK DURING DRIVING

Immediately Stop the Engine if:

- The engine suddenly slows down or accelerates,
- Unusual noises suddenly are heard,
- Exhaust fumes suddenly become very dark,

While driving, make the following checks to see that all the parts are functioning normally.

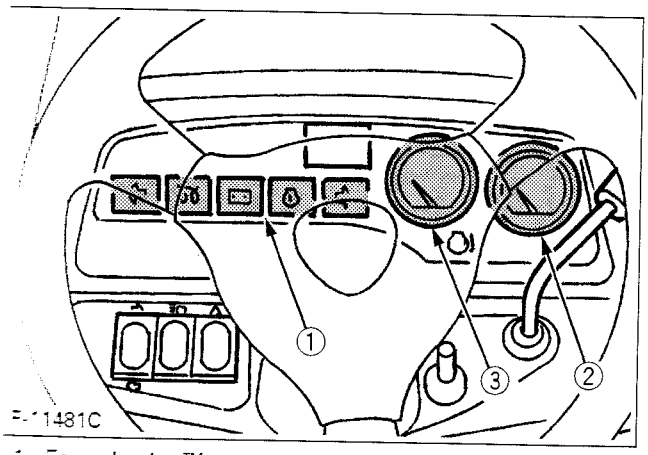

1. *Easy checker™*
2. *Fuel gauge*
3. *Coolant temperature gauge*

Easy Checker™

If the warning lamps in the Easy Checker™ come on during operation, immediately stop the engine, and find the cause as shown below.
Never operate the tractor while Easy Checker™ lamp is on.

Engine oil pressure
If the oil pressure in the engine goes below the prescribed level, the warning lamp in the Easy Checker™ will come on.
If this should happen during operation, and it does not go off when the engine is accelerated to more than 1000 rpm, check level of engine oil.
(See "Checking Engine Oil Level" in daily check in periodic service section.)

Electrical charge
If the alternator is not charging the battery, the warning lamp in the Easy Checker™ will come on.
If this should happen during operation, check the electrical charging system or consult your local KUBOTA Dealer.

NOTE:

- For checking and servicing of your tractor, consult your local KUBOTA Dealer for instructions.

Fuel Gauge

When the key switch is on, the fuel gauge indicates the fuel level.
Be careful not to empty the fuel tank. Otherwise air may enter the fuel system.
Should this happen, the system should be bled (See "Bleeding Fuel System" in as required in Periodic Service Section)

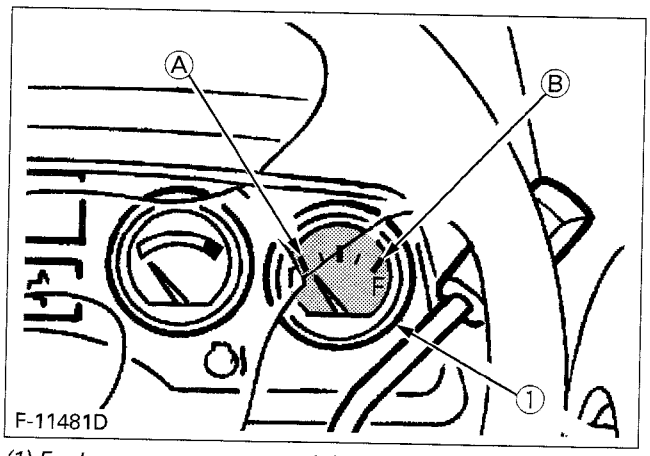

(1) Fuel gauge
(A) "EMPTY"
(B) "FULL"

Coolant Temperature Gauge

CAUTION
To avoid personal injury:
- **Do not remove radiator cap until coolant temperature is well below its boiling point. Then loosen cap slightly to the stop to relieve any pressure before removing cap completely.**

1. With the key switch at "ON", this gauge indicates the temperature of the coolant.
2. If the indicator reaches the "Hot" position (red zone), engine coolant is overheated. Check the tractor by referring to "Troubleshooting" section.

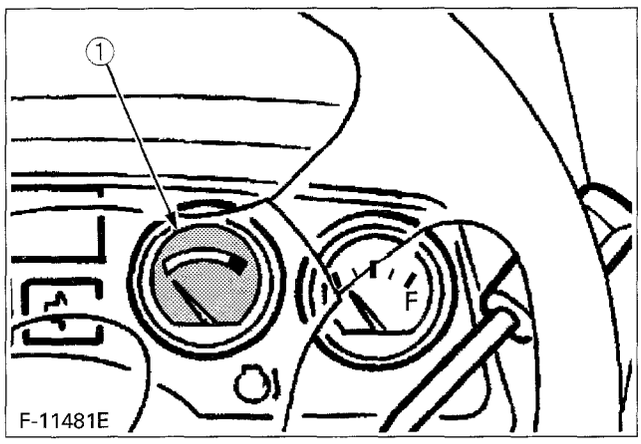

(1) Coolant temperature gauge

Hourmeter

The hourmeter indicates in five digits the hours the tractor has been used; the last digit indicates 1/10 of an hour.

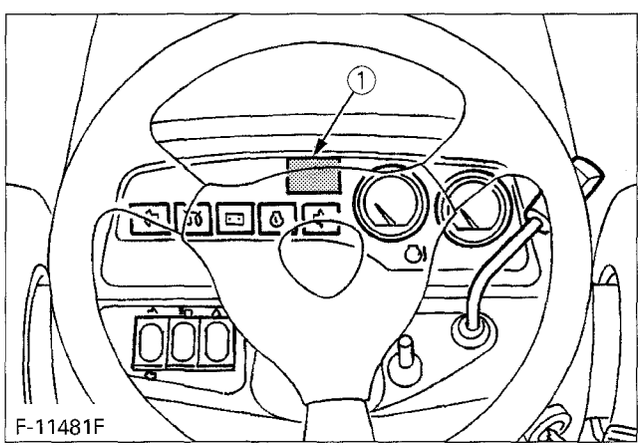

(1) Hours used

PARKING

Parking

CAUTION
To avoid personal injury:
- Always set the parking brake, stop the engine and remove the key before leaving the tractor seat.

1. When parking, be sure to set the parking brake. To set the parking brake;
   1) Depress the brake pedal.
   2) Latch the brake pedal with the parking brake lock pedal.

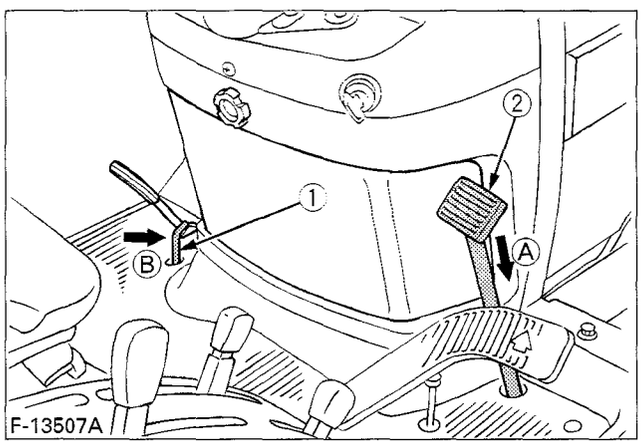

(1) Parking brake lock pedal *(A) "DEPRESS"*
(2) Brake pedal *(B) PUSH FORWARD WHILE DEPRESSING ②*

2. Before getting off the tractor, disengage the PTO, lower all implements to the ground, place all control levers in their neutral positions, set the parking brake, stop the engine and remove the key.
3. If it is necessary to park on an incline, be sure to chock the wheels to prevent accidental rolling of the machine.

OPERATING TECHNIQUES

Differential Lock

WARNING
To avoid personal injury due to loss of steering control:
- **Do not operate the tractor at high speed with differential lock engaged.**
- **Do not attempt to turn with the differential lock engaged.**
- **Be sure to release the differential lock before making a turn in field conditions.**

If one of the rear wheels should slip, step on the differential lock pedal. Both wheels will then turn together, reducing slippage.
Differential lock is maintained only while the pedal is depressed.

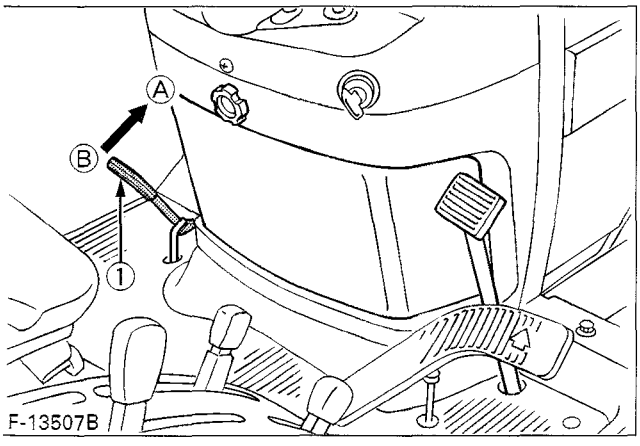

(1) Differential lock pedal *(A) Press to "ENGAGE"*
(B) Release to "DISENGAGE"

IMPORTANT:
- When using the differential lock, always slow the engine down.
- To prevent damage to power train, do not engage differential lock when one wheel is spinning and the other is completely stopped.
- If the differential lock cannot be released in the above manner, alternately step speed control pedal forward and backward slightly.

Operating the Tractor on a Road

CAUTION
To avoid personal injury:
- **When traveling on road with 3-point hitch mounted implement attached, be sure to have sufficient front weight on the tractor to maintain steering ability.**

Be sure SMV emblem and warning lamps are clean and visible. If towed or rear-mounted equipment obstructs these safety devices, install SMV emblem and warning lamps on equipment.
Consult your local KUBOTA Dealer for further details.

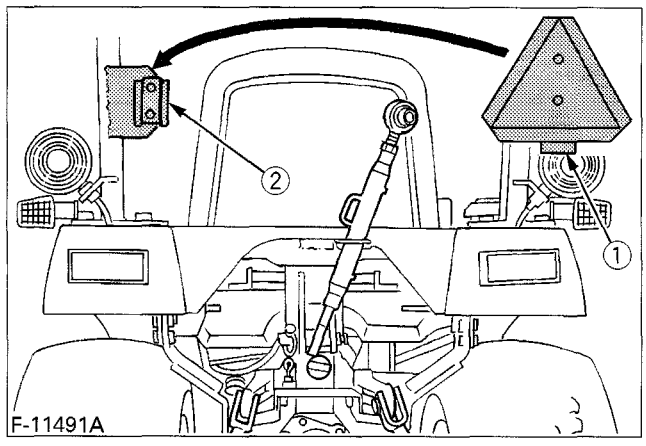

(1) SMV emblem
(2) Bracket

Operating on a Slopes and Rough Terrain

CAUTION
To avoid personal injury:
- **Always back up when going up a steep slope. Driving forward could cause the tractor to tip over backward. Stay off hills and slopes too steep for safe operation.**
- **Avoid changing gears when climbing or descending a slope.**
- **If operating on a slope, never disengage shift levers to neutral. Doing so could cause loss of control.**
- **Do not drive the tractor close to the edges of ditches or banks which may collapse under the weight of the tractor. Especially when the ground is loose or wet.**

1. Slow down for slopes, rough ground, and sharp turns, especially when transporting heavy, rear mounted equipment.
2. Before descending a slope, shift to a gear low enough to control speed without using brakes.

Directions for Use of Power Steering

1. Power steering is activated only while the engine is running. While the engine is stopped, the tractor functions in the same manner as tractors without power steering.
2. When the steering wheel is turned all the way to the stop, the relief valve is activated. Do not hold the steering wheel in this position for a long period of time.
3. Avoid turning the steering wheel while the tractor is stopped, or tires may wear out sooner.
4. The power steering mechanism makes the steering easier. Be careful when driving on a road at high speeds.

PTO

PTO OPERATION

WARNING
To avoid personal injury:
- **Before operation, be sure to select the correct PTO lever (mid, mid/rear, rear).**

CAUTION
To avoid personal injury:
- **Disengage PTO, stop engine, and allow all rotating components to come to a complete stop before connecting, disconnecting, adjusting, or cleaning any PTO driven equipment.**

PTO Select Lever

The tractor has a 540 rpm rear PTO speed and a 2500 rpm mid-PTO speed.

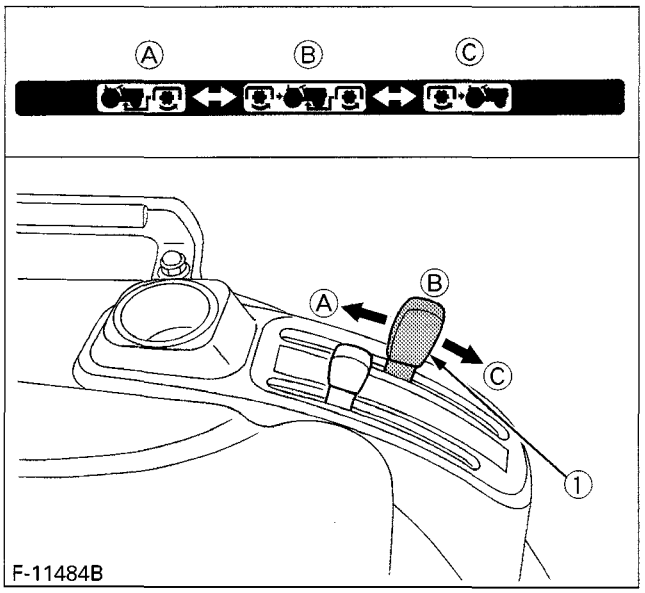

(1) PTO select lever

(A) Mid-PTO position
(B) Mid-Rear-PTO position
(C) Rear-PTO position

◆ Mid-PTO
To use Mid-PTO, shift the PTO select lever to Mid-PTO position and the PTO clutch lever to "ON" position.

◆ Mid-Rear PTO
To use mid and rear PTO at the same time, shift the PTO select lever to mid-rear PTO position and the PTO clutch lever to "ON" position.

◆ Rear PTO
To use rear PTO, shift the PTO select lever to rear PTO position and the PTO clutch lever to "ON" position.

IMPORTANT:
- To avoid shock loads to the PTO, reduce engine throttle from full to half speed by pushing up the engine throttle when engaging the PTO, then re-engage the engine to full.
- To avoid damage of transmission, when PTO select lever is not smoothly shifted, slightly shift PTO clutch lever.

◆ Mid-PTO
The Mid-PTO is available for KUBOTA approved implements.

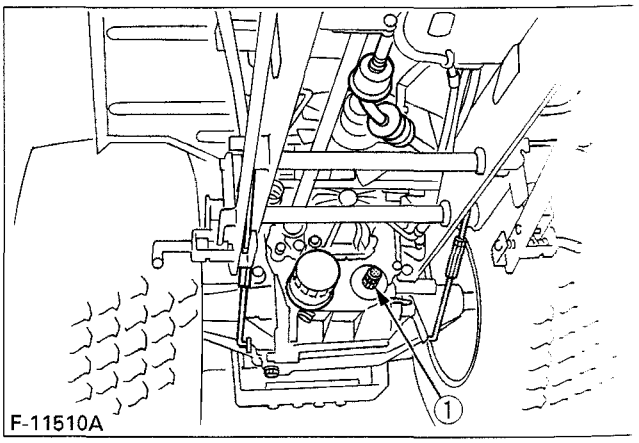

(1) Mid-PTO

PTO Clutch Lever

1. The PTO clutch lever engages or disengages the PTO clutch which gives the PTO independent control.
2. Shift the lever to "ON" to engage the PTO clutch. Shift the lever to "OFF" to disengage the PTO clutch.

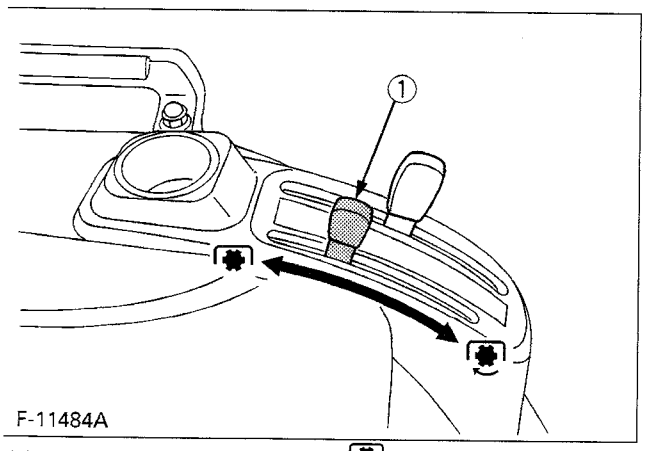

(1) PTO clutch lever

"ON" "ENGAGE"
"OFF" "DISENGAGE"

IMPORTANT:

- To avoid shock loads to the PTO, reduce engine throttle from full to half speed by pushing up on engine throttle when engaging the PTO, then re-engage the engine to full.
- To avoid damage to PTO clutch and implement, shift the PTO clutch lever slowly, when engaging the PTO clutch. Do not keep the PTO clutch lever half way.

NOTE:

- Tractor engine will not start if the PTO clutch lever is in the engaged "ON" position.

PTO Shaft Cover and Shaft Cap

Keep the PTO shaft cover in place at all times. Replace the PTO shaft cap when the PTO is not in use. Before connecting or disconnecting a drive shaft to PTO shaft, be sure engine is "OFF" and raise up the PTO shaft cover.
Afterward be sure to return the PTO shaft cover to the "NORMAL POSITION".

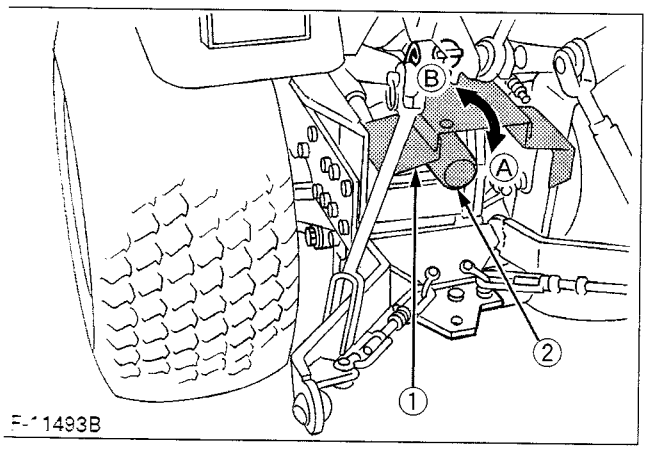

1 PTO shaft cover
2 PTO shaft cap

(A) "NORMAL POSITION"
(B) "RAISED POSITION"

PTO Drive Shaft

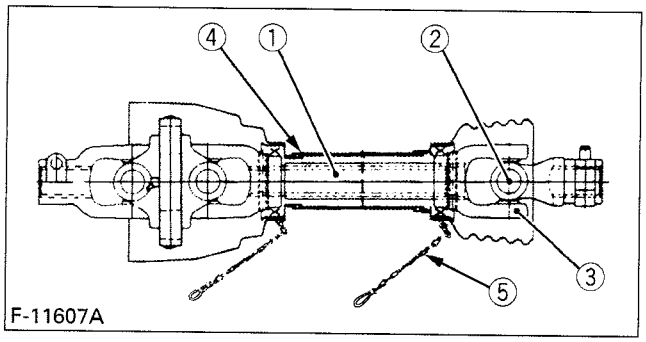

(1) Inner and outer sliding profile tubes
(2) Journal cross assy
(3) Fitting yoke
(4) Safety guard (In, Out)
(5) Chain

1. When using a PTO drive shaft, should read the operator's manuals of implement manufacturers before operating the implement.
   PTO drive shafts are designed for specific machines and power requirement.
2. To adjust the length of PTO drive shaft, refer the following instructions.
   - q To adjust the length, hold the half shafts next to each other in the shortest working position and mark them.
   - w Shorten inner and outer guard tubes equally.
   - e Shorten inner and outer sliding profiles tube by the same length as the guard tubes.
   - r Round off all sharp edges and remove burrs. Grease sliding profiles.

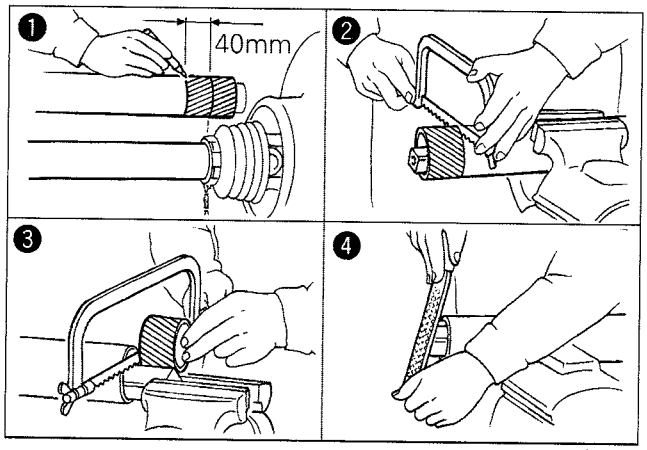

3. Ensure that the PTO drive shaft is securely connected at both ends before operating.

THREE-POINT HITCH & DRAWBAR

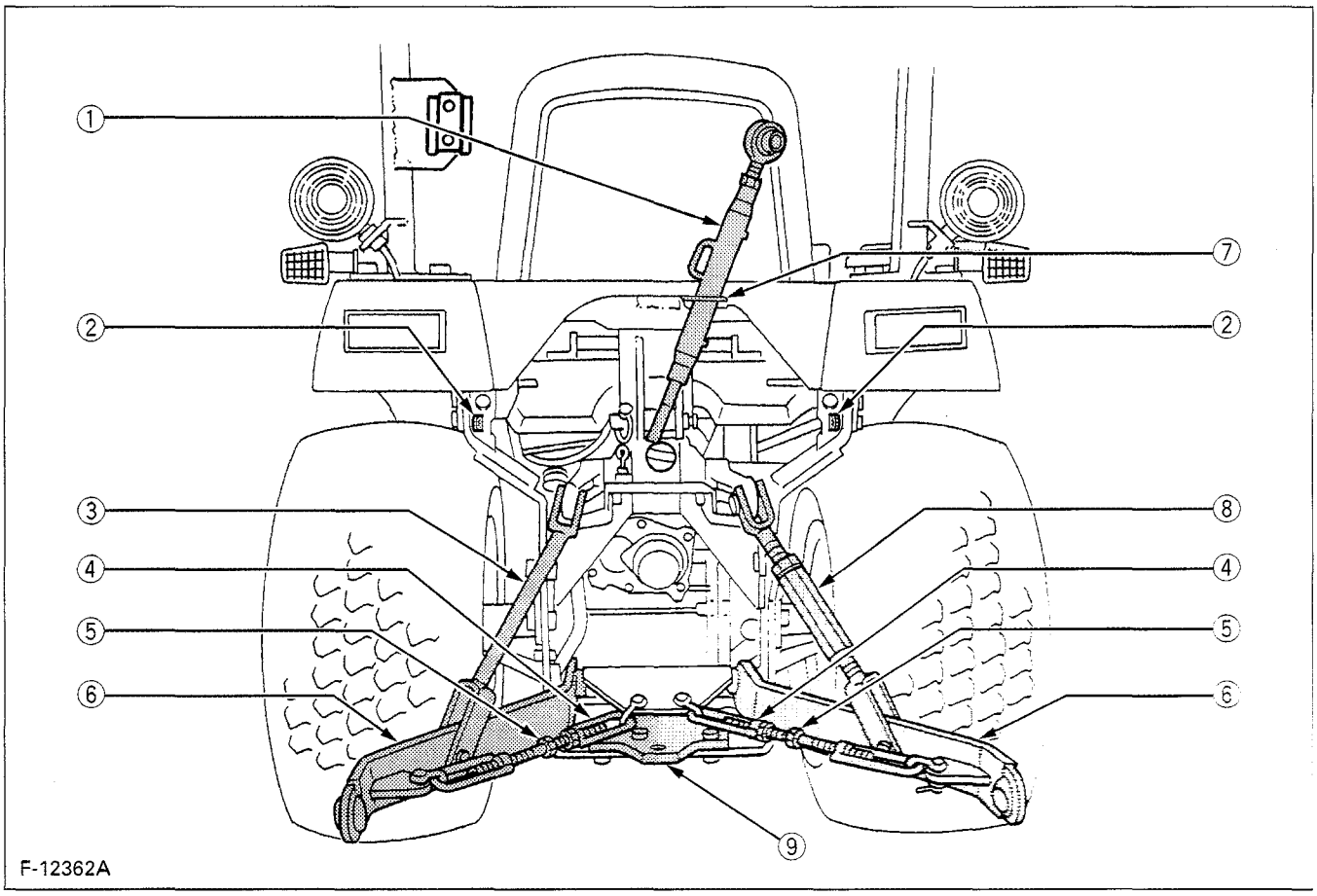

(1) Top link
(2) Holder plate
(3) Lifting rod (Left)
(4) Check chains
(5)Turnbuckle
(6) Lower link
(7)Top link holder
(8) Lifting rod (Right)
(9) Hitch

Use holder plate to hold lower link higher while mowing with mid-mount mower only over uneven terrain.

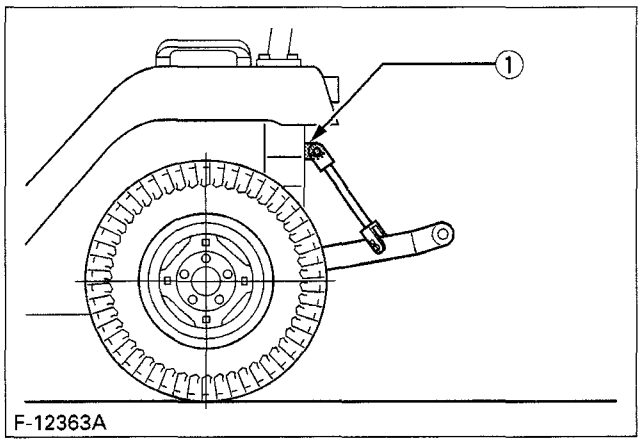

(1) Holder plate

3-POINT HITCH

Attaching and detaching implements

CAUTION
To avoid personal injury:
- Be sure to stop the engine and remove the key.
- Do not stand between tractor and implement unless parking brake is applied.
- Before attaching or detaching implement, locate the tractor and implement on a firm, flat and level surface.
- Whenever an implement or other attachment is connected to the tractor 3-point hitch, check full range of operation for interference, binding or PTO separation.

Lifting Rod (Right)

Level a 3-point mounted implement from side to side by turning the adjusting turnbuckle to shorten or lengthen the adjustable lifting rod with the implement on the ground.
After adjustment, tighten the lock nut securely.

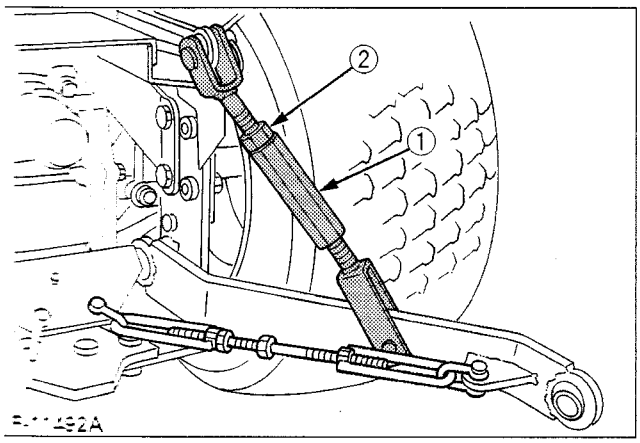

(1) Adjusting turnbuckle
(2) Lock nut

CAUTION
To avoid personal injury from separation:
- Do not extend lift rod beyond the edge of flat face on the threaded rod.

Top Link

1. Adjust the angle of the implement to the desired position by shortening or lengthening the top link.
2. The proper length of the top link varies according to the type of implement being used.

Check Chains

Adjust the turnbuckle to control horizontal sway of the implement.
After adjustment, retighten the lock nut.

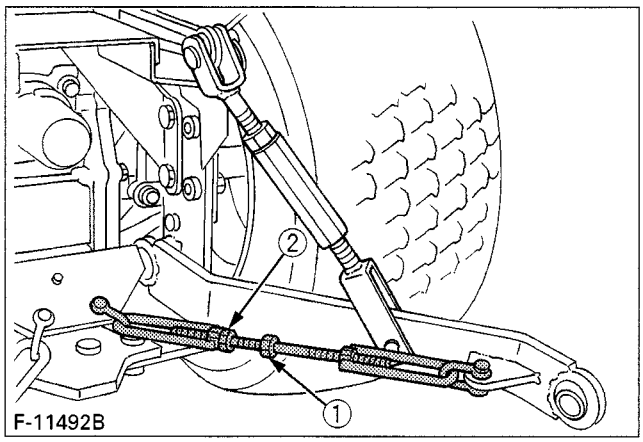

(1) Turnbuckle
(2) Lock nut

HITCH

WARNING
To avoid personal injury:
- Never pull from the top link, the rear axle or any point above the hitch. Doing so could cause the tractor to tip over rearward causing personal injury or death.

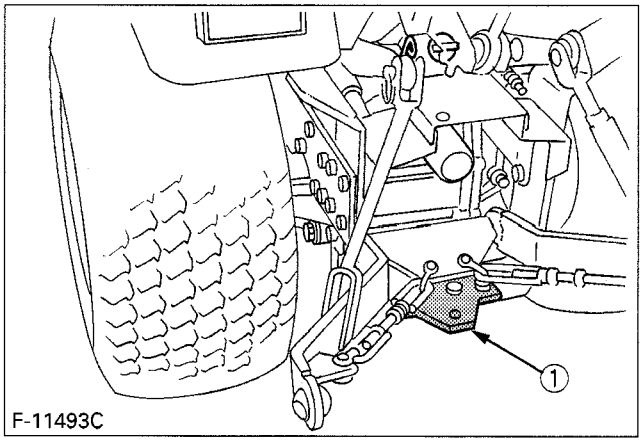

(1) Hitch

HYDRAULIC UNIT

3-POINT HITCH CONTROL SYSTEM

Hydraulic Control

Operating the hydraulic control lever actuates the hydraulic lift arm, which controls the elevation of 3-point hitch mounted implement.
To lower implement, move the hydraulic control lever forward; to raise it, move the hydraulic control lever rearward.
Hydraulic control lever is automatically returned to neutral position when the implement is raised at top position or down at lowest position.

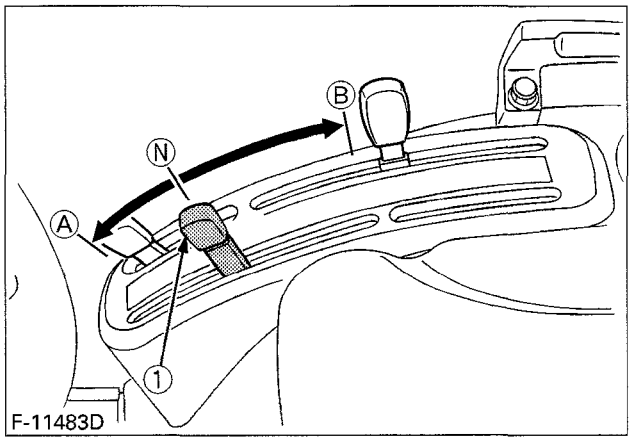

(1) Hydraulic control lever *(A) "DOWN"* *(N) "NEUTRAL"* *(B) "UP"*

IMPORTANT:

- If the 3-point hitch can not be raised by setting the hydraulic control lever to the UP position after long term storage or when changing the transmission oil, follow these air bleeding procedures.
  1. Stop the engine.
  2. Set the hydraulic control lever to the down position and start the engine.
  3. Operate the engine at low idle speed for at least 30 seconds to bleed air from the system.
- Do not operate until the engine is warmed up. If operation is attempted when the engine is still cold, the hydraulic system may be damaged.
- If noises are heard when implement is lifting after the hydraulic control lever has been activated, the hydraulic mechanism is not adjusted properly. Unless corrected the unit will be damaged. Contact your KUBOTA Dealer for adjustment.

Implement Lowering Limit

The implement lowering limit can be changed by shifting the locker.

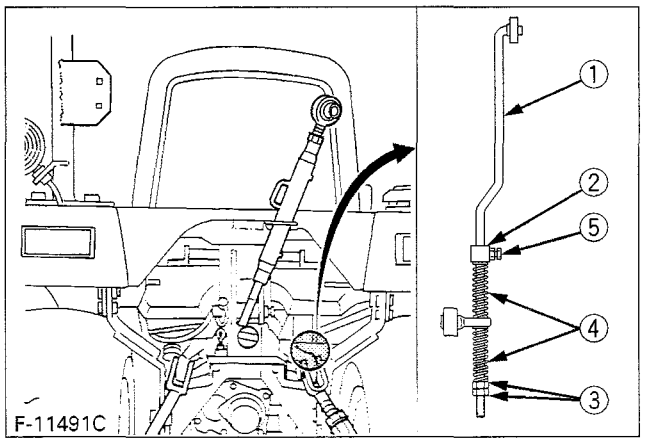

(1) Feedback rod *(2) Locker* *(3) Nuts* *(4) Spring* *(5) Bolt*

- **Lower Limit**
  The lower limit can be changed by adjusting the position of locker. Shifting the locker backward raises the lower limit and shifting it forward lowers the lower limit.

3-point Hitch Lowering Speed

CAUTION
To avoid personal injury:

- **Fast lowering speed may cause damage or injury. Lowering speed of implement should be adjusted to two or more seconds.**

The lowering speed of the 3-point hitch can be controlled by adjusting the 3-point lowering speed knob.

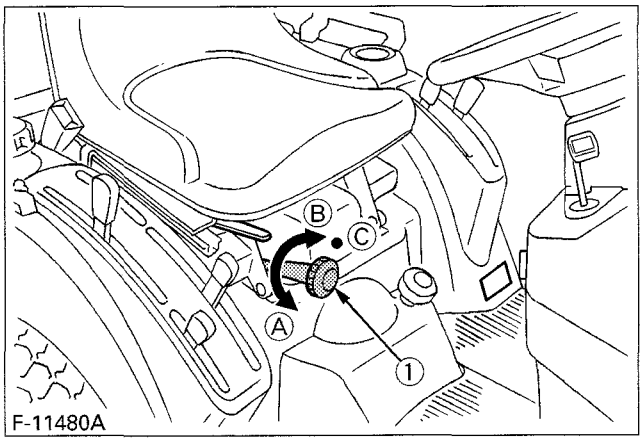

(1) 3-Point lowering speed knob *(A) "FAST"* *(B) "SLOW"* *(C) "LOCK"*

AUXILIARY HYDRAULICS

In the tractor hydraulic outlet is provided.

Hydraulic Outlet

Hydraulic outlet is useful when adding hydraulically operated equipment such as front end loader, front blade etc.

When implement is attached

1. Remove the block cover.
2. Attach the block outlet cover. (option)
   (The block outlet cover is standard part for KUBOTA Implement)
3. Route the implement inlet, outlet and return pipes (hoses) as shown in the illustration.

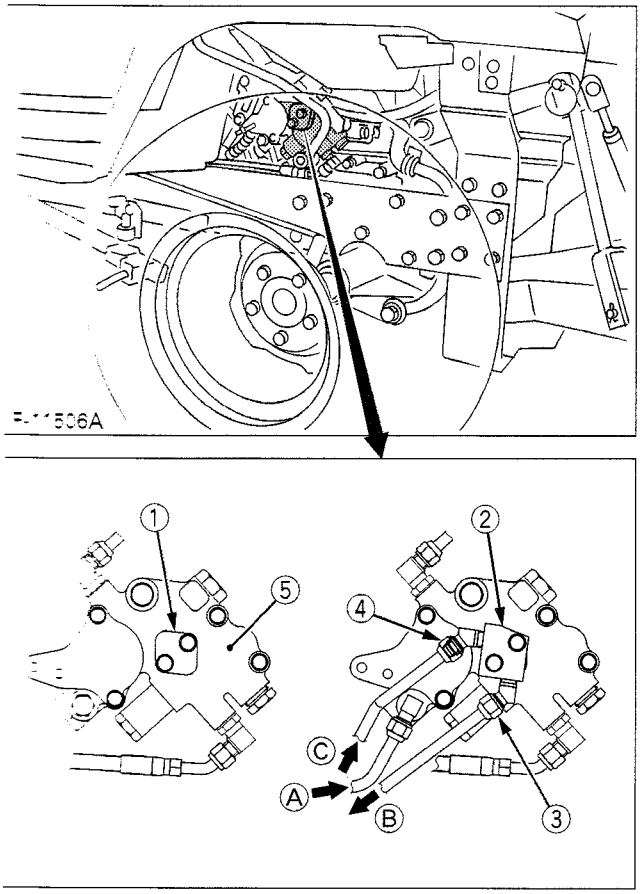

1. Block cover
2. Block outlet cover (option)
3. Outlet
4. Inlet
5. Hydraulic control valve

(A) Return port
(B) To implement (outlet)
Max. flow
17 L/min
(4.5 U.S.gals./min)
No relief valve in the hydraulic block.
(C) From implement (inlet)

IMPORTANT:

- For hydraulic outlet, be sure to use the control valve of the "Power beyond type" (with relief valve) and third line return to tank for the operation of hydraulic block.

MOWER LIFT LINKAGE SYSTEM

Cutting Height Control Dial

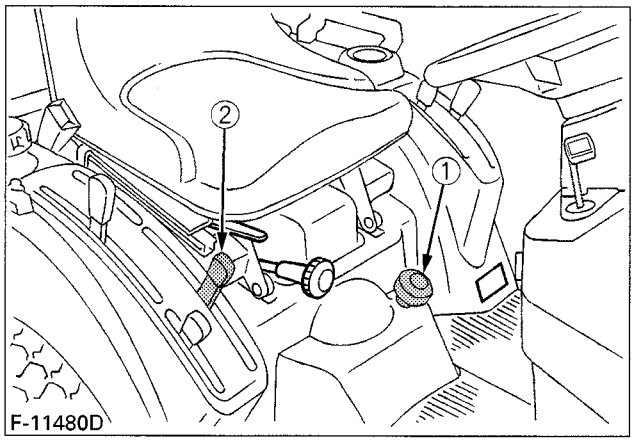

(1) Cutting height control dial
(2) Hydraulic control lever

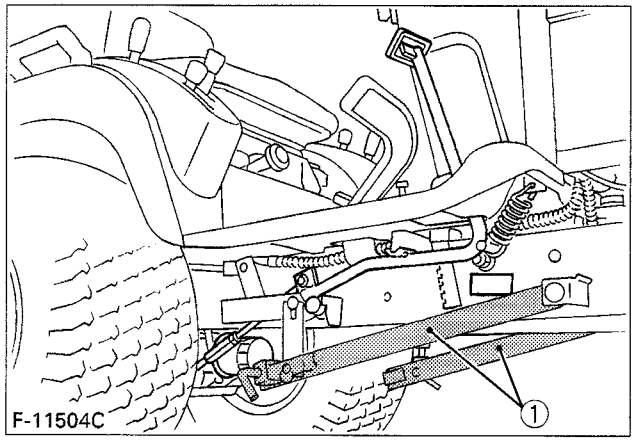

(1) Mower rear link

When mounting the Mid-mount mower, turn the cutting height control dial to the desired height.
For further details, refer to the operator's manual of ROTARY MOWER RCK60B-22BX, RCK54-22BX.

IMPORTANT:
When operating the tractor without Mid-mount mower:

1. Move the hydraulic lever rearward to raise the mower rear links to the highest position.
2. Set the cutting height control dial to "TOP" position.

If not do so, damage of the mower rear link can result.

Hydraulic Control Unit Use Reference Chart

In order to handle the hydraulics properly, the operator must be familiar with the following.
Though this information may not be applicable to all types of implements and soil conditions, it is useful for general conditions.

Implement	Soil condition	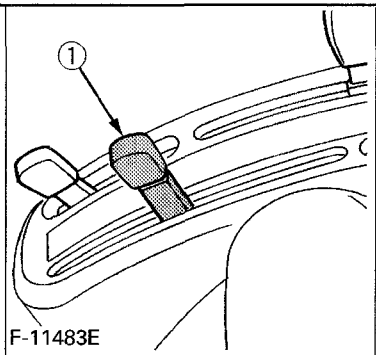 F-11483E (1) Hydraulic control lever	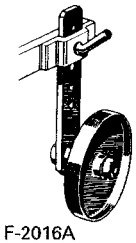 F-2016A Gauge wheel	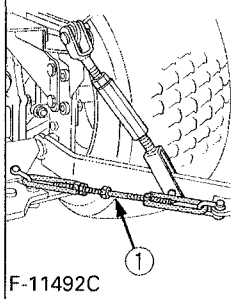 F-11492C (1) Check chains	Remarks
Moldboard plow	Light soil Medium soil heavy soil	Hydraulic control	YES/NO	Loose	Adjust t he check chá ns so that the implement can move 5 to 6 cm (2.0 to 2.4 in.) laterally. Check chains should be tight enough to prevent excessive implement movement when implement is in raised position.
Disc plow	—				
Harrower (spike, springtooth, disc type	—				
Sub-soiler.....					
Weeder, ridger	—		YES	Tighten	
Earthmove, digger scraper, manure fork rear carrier.....			YES/NO		For implements with gauge wheels, lower the position control lever all way.
Mower (mid-and rear-mount type) Hayrake. tedder.....					

TIRES, WHEELS AND BALLAST

TIRES

WARNING
To avoid personal injury:
- **Do not attempt to mount a tire on a rim. This should be done by a qualified person with the proper equipment.**
- **Always maintain the correct tire pressure.**
  Do not inflate tires above the recommended pressure shown in the operator's manual.

IMPORTANT:
- Do not use tires other than those approved by KUBOTA.
- When you intend to mount different size of tires from equipped ones, consult your dealer about front drive gear ratio for details.
  Excessive wear of tires may occur due to improper gear ratio.

Inflation Pressure

Though the tire pressure is factory-set to the prescribed level, it naturally drops slowly in the course of time. Thus, check it everyday and inflate as necessary.

	Tire sizes	Inflation Pressure
Rear	26x12.00-12 Turf	140kPa (1.4 kgf/cm^2,20 psi)
	26x12.00-12 Bar	140kPa (1.4 kgf/cm^2,20 psi)
Front	18x8.50-8 Turf	150kPa (1.5 kgf/cm^2,22psi)
	18x8.50-8 Bar	150kPa (1.5 kgf/cm^2,22psi)

NOTE:
- Maintain the maximum pressure in front tires, if using a front loader or when equipped with a full load of front weights.

WHEEL TREAD

CAUTION
To avoid personal injury:
- **Support tractor securely on stands before removing a wheel.**
- **Never operate tractor with a loose rim, wheel, or axle.**

Front Wheels

Front tread can not be adjusted.

IMPORTANT:
- Do not turn front discs to obtain wider tread.

Models	BX1800 • BX2200	
Tire	18 x 8.50 - 8 Turf	18 x 8.50 - 8 Bar
Tread	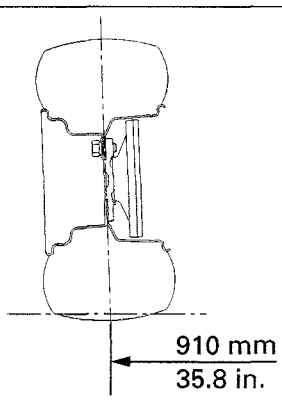	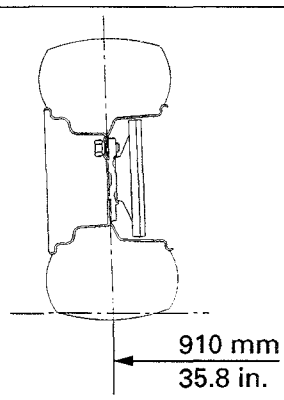

F-8440

Rear Wheels

Rear tread width can not be adjusted.

IMPORTANT:

- Do not turn rear discs to obtain wider tread.

Models	BX1800 • BX2200	
Tire	26 x 12.00 - 12 Turf	26 x 12.00 - 12 Bar
Tread	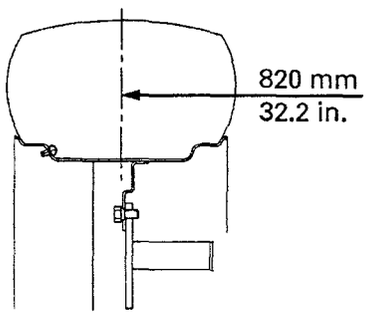	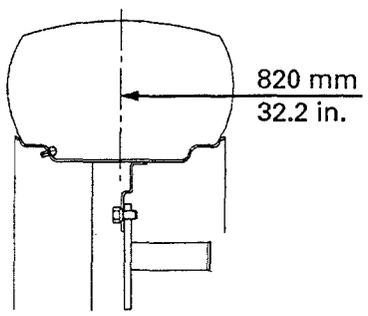

IMPORTANT:

- Always attach tires as shown in the drawings.
- If not attached as illustrated, transmission parts may be damaged.
- When re-fitting or adjusting a wheel, tighten the bolts to the following torques then recheck after driving the tractor 200m (200yards) and thereafter daily check service.

NOTE:

- Use the tapered bolts for wheels with beveled or tapered holes.

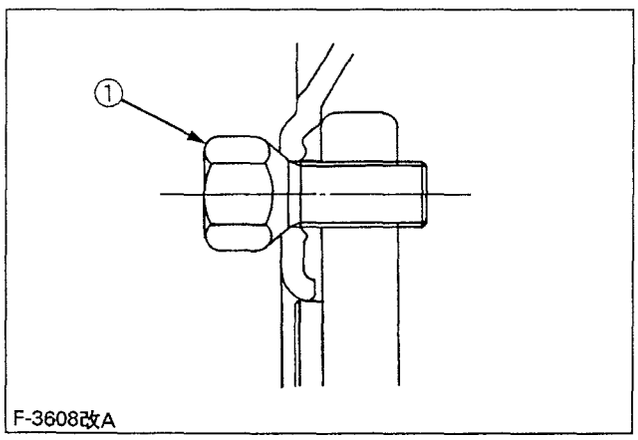

(1) *Bolt* *Front 149.2 to 179.0 N·m (15.2 to 18.3 kgf·m / 110 to 132 ft·lbs)*
Rear 108.5 to 130.2 N·m (11.1 to 13.3 kgf·m / 80 to 96 ft·lbs)

BALLAST

CAUTION
To avoid **personal injury:**

- **Additional ballast will be needed for transporting heavy implements. When the implement is raised, drive slowly over rough ground, regardless of how much ballast is used.**
- **Do not fill the front wheel with liquid to maintain steering control.**

Front Ballast

Add weights if needed for stability and improve traction.
Heavy pulling and heavy rear mounted implements tend to lift front wheels. Add enough ballast to maintain steering control and prevent tip over.
Remove weight when no longer needed.

◆ Front End Weights (option)

The front end weights can be attached to the bumper. See your implement operator's manual for required number of weights or consult your local KUBOTA Dealer to use.

NOTE:

- Besides the weight, a front weight bracket and mounting bolt kit(s) are required for mounting the weight.

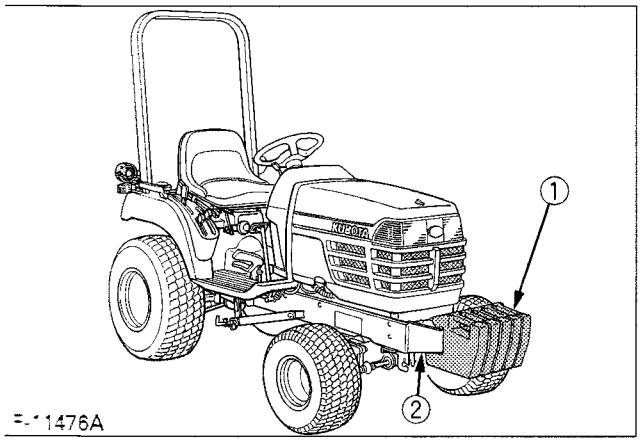

1 *Front end weights*
2 *Front weight bracket (option)*

IMPORTANT:

- Do not overload tires.
- Add no more weight than indicated in chart.

Maximum weight	125 kg (275 lbs.)

Rear Ballast

Add weight to rear wheels if needed to improve traction or for stability. The amount of rear ballast should be matched to job and the ballast should be removed when it is not needed.
The weight should be added to the tractor in the form of liquid ballast.

◆ Liquid Ballast in Rear Tires

Water and calcium chloride solution provides safe economical ballast. Used properly, it will not damage tires, tubes or rims. The addition of calcium chloride is recommended to prevent the water from freezing. Use of this method of weighting the wheels has the full approval of the tire companies. See your tire dealer for this service.

Liquid weight per tire (75 Percent filled)

Tire sizes	26 x 12.00-12
Slush free at -10°C (14°F) Solid at -30°C (-22°F) [Approx. 1 kg (2 lbs.) $CaCl_2$ per 4 L (1 gal) of water]	45 kg (99 lbs.)
Slush free at -24°C (-11°F) Solid at -47°C (-52°F) [Approx. 1.5 kg (3.5 lbs.) $CaCl_2$ per 4 L (1 gal) of water]	50 kg (110 lbs.)
Slush free at -47°C (-52°F) Solid at -52°C (-62°F) [Approx. 2.25 kg (5 lbs.) $CaCl_2$ per 4 L (1 gal) of water]	56 kg (123 lbs.)

IMPORTANT:

- Do not fill tires with water or solution more than 75% of full capacity (to the level of valve stem at 12 o'clock position).

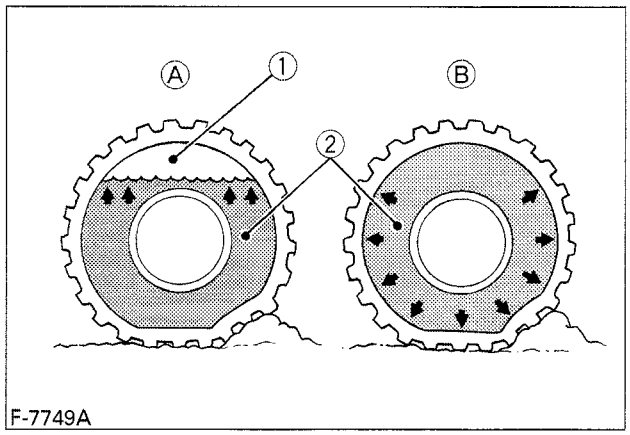

(1) Air
(2) Water

(A) Correct : 75% Full
Air compresses like a cushion
(B) Incorrect : 100% Full
Water can not be compressed

- To avoid damage of transmission, do not use rear wheel weights and liquid ballast at the same time.

MAINTENANCE

SERVICE INTERVALS

No.	Items	Period	Indication on hour meter														Since then	Reference page		
			50	100	150	200	250	300	350	400	450	500	550	600	650	700				
1	Engine oil	Change	◎	○		○		○		○		○		○		○	every 100 Hrs	47		
2	Engine oil filter	Replace	◎			○				○				○			every 200 Hrs	50		
3	Transmission oil filter	Replace	◎					○						○			every 300 Hrs	54		
4	Transmission fluid	Change	◎					○						○			every 300 Hrs	53		
5	Transmission strainer	Clean						○						○			every 300 Hrs	53		
6	Front axle case oil	Change						○						○			every 300 Hrs	54		
7	Front axle pivot	Adjust								○							every 400 Hrs	55		
8	Engine start system	Check	○	○	○	○	○	○	○	○	○	○	○	○	○	○	every 50 Hrs	44		
9	Greasing	—	○	○	○	○	○	○	○	○	○	○	○	○	○	○	every 50 Hrs	45		
10	Wheel bolt torque	Check	○	○	○	○	○	○	○	○	○	○	○	○	○	○	every 50 Hrs	45		
11	Battery condition	Check		○		○		○		○		○		○		○	every 100 Hrs	46	*5	
12	Air cleaner element	Clean		○		○		○		○		○		○		○	every 100 Hrs	48	*1	@
		Replace															every 1 year	55	*2	
13	Fuel filter	Check		○		○		○		○		○		○		○	every 100 Hrs	48		@
		Replace										○					every 500 Hrs	55		
14	Fan belt	Adjust		○		○		○		○		○		○		○	every 100 Hrs	49		
15	HST neutral spring	Adjust		○		○		○		○		○		○		○	every 100 Hrs	49		
16	Brake	Adjust		○		○		○		○		○		○		○	every 100 Hrs	50		
17	Radiator hose and clamp	Check				○				○				○			every 200 Hrs	51		
		Replace															every 2 years	56		
18	Power steering oil line	Check				○				○				○			every 200 Hrs	52		
		Replace															every 2 years	56		
19	Fuel line	Check		○		○		○		○		○		○		○	every 100 Hrs	48		@
		Replace															every 2 years	56		
20	Intake air line	Check				○				○				○			every 200 Hrs	52		@
		Replace															every 2 years	56	*3	
21	Toe-in	Adjust				○				○				○			every 200 Hrs	51		
22	Engine valve clearance	Adjust															every 800 Hrs	55	*4	
23	Fuel injection nozzle injection pressre	Check															every 1500Hrs	55	*4	@
24	Injection pump	Check															every 3000Hrs	55	*4	@
25	Cooling system	Flush															every 2 years	55		
26	Coolant	Change															every 2 years	55		
27	Fuel system	Bleed															Service as required	56		
28	Fuse	Replace																57		
29	Light bulb	Replace																57		

OPERATOR'S MANUAL

KUBOTA TRACTOR

MODELS BX1800·BX2200

F-11475

READ AND SAVE THIS MANUAL

Kubota

ABBREVIATION LIST

Abbreviations	Definitions
2WD	Two Wheel Drive
4WD	Four Wheel Drive
API	American Petroleum Institute
ASAE	American Society of Agricultural Engineers, USA
ASTM	American Society of Testing and Materials, USA
DIN	Deutsches Institut für Normung, GERMANY
DT	Dual Traction 【4WD】
fpm	Feet Per Minute
GST	Glide Shift Transmission
Hi-Lo	High Speed-Low Speed
HST	Hydrostatic Transmission
m/s	Meters Per Second
PTO	Power Take Off
RH/LH	Right-hand and left-hand sides are determined by facing in the direction of forward travel
ROPS	Roll-Over Protective Structures
rpm	Revolutions Per Minute
r/s	Revolutions Per Second
SAE	Society of Automotive Engineers, USA
SMV	Slow Moving Vehicle

California Proposition 65

⚠ WARNING ⚠

The engine exhaust from this product contains chemicals known to the State of California to cause cancer, birth defects or other reproductive harm.

UNIVERSAL SYMBOLS

As a guide to the operation of your tractor, various universal symbols have been utilized on the instruments and controls. The symbols are shown below with an indication of their meaning.

- Safety Alert Symbol
- Diesel Fuel
- Fuel-Level
- Hourmeter/Elapsed Operating Hours
- Engine Coolant-Temperature
- Diesel Preheat/Glow Plugs(Low Temperature Start Aid)
- Parking Brake
- Battery Charging Condition
- Engine Oil-Pressure
- Turn Signal
- Engine-Stop
- Diesel Preheat/Glow Plugs(Low Temperature Start Aid)
- Engine-Run
- Starter Control
- Power Take-Off Clutch Control-Off Position
- Power Take-Off Clutch Control-On Position
- Differential Lock
- Hydraulic Control-Raised Position
- Hydraulic Control-Lowered Position
- 3-Point Lowering Speed Control
- Remote Cylinder-Retract
- Remote Cylinder-Extend
- Hazard Warning Lights
- Headlight
- Four-Wheel Drive-On
- Four-Wheel Drive-Off
- Fast
- Slow
- Read Operator's Manual
- Engine Speed Control

FOREWORD

You are now the proud owner of a KUBOTA Tractor. This tractor is a product of KUBOTA quality engineering and manufacturing. It is made of fine materials and under a rigid quality control system. It will give you long, satisfactory service. To obtain the best use of your tractor, please read this manual carefully. It will help you become familiar with the operation of the tractor and contains many helpful hints about tractor maintenance. It is KUBOTA's policy to utilize as quickly as possible every advance in our research. The immediate use of new techniques in the manufacture of products may cause some small parts of this manual to be outdated. KUBOTA distributors and dealers will have the most up-to-date information. Please do not hesitate to consult with them.

⚠ SAFETY FIRST

This symbol, the industry's "Safety Alert Symbol", is used throughout this manual and on labels on the machine itself to warn of the possibility of personal injury. Read these instructions carefully. It is essential that you read the instructions and safety regulations before you attempt to assemble or use this unit.

⚠ **DANGER** :	Indicates an imminently hazardous situation which, if not avoided, will result in death or serious injury.
⚠ **WARNING** :	Indicates a potentially hazardous situation which, if not avoided, could result in death or serious injury.
⚠ **CAUTION**:	Indicates a potentially hazardous situation which, if not avoided, may result in minor or moderate injury.
IMPORTANT :	Indicates that equipment or property damage could result if instructions are not followed.
NOTE :	Gives helpful information.

CONTENTS

⚠ SAFE OPERATION 1

SERVICING OF TRACTOR 9

SPECIFICATIONS 10
SPECIFICATION TABLE 10
TRAVELING SPEEDS 11

IMPLEMENT LIMITATIONS 12

Operation Section

INSTRUMENT PANEL AND CONTROLS . 14

PRE-OPERATION CHECK 16
DAILY CHECK 16

OPERATING THE ENGINE 17
STARTING THE ENGINE 17
STOPPING THE ENGINE 19
WARMING UP 19
JUMP STARTING 20

OPERATING THE TRACTOR 21
OPERATING NEW TRACTOR 21
STARTING 21
STOPPING 25
CHECK DURING DRIVING 25
PARKING 26
OPERATING TECHNIQUES 27

PTO 28
PTO OPERATION 28

THREE-POINT HITCH & DRAWBAR 30
3-POINT HITCH 31
HITCH 31

HYDRAULIC UNIT 32
3-POINT HITCH CONTROL SYSTEM ... 32
AUXILIARY HYDRAULICS 33
MOWER LIFT LINKAGE SYSTEM 33

TIRES, WHEELS AND BALLAST 35
TIRES 35
WHEEL TREAD 35
BALLAST 37

Maintenance Section

MAINTENANCE 38
SERVICE INTERVALS 38
LUBRICANTS 39

PERIODIC SERVICE 40
HOW TO OPEN THE HOOD 40
DAILY CHECK 41
EVERY 50 HOURS 44
EVERY 100 HOURS 46
EVERY 200 HOURS 50
EVERY 300 HOURS 53
EVERY 400 HOURS 55
EVERY 500 HOURS 55
EVERY 800 HOURS 55
EVERY 1500 HOURS 55
EVERY 3000 HOURS 55
EVERY 1 YEAR 55
EVERY 2 YEARS 55
SERVICE AS REQUIRED 56

STORAGE 58
TRACTOR STORAGE 58
REMOVING THE TRACTOR FROM STORAGE 58

TROUBLESHOOTING 59
ENGINE TROUBLESHOOTING 59

OPTIONS 60

SAFE OPERATION

Careful operation is your best insurance against an accident.

Read and understand this section carefully before operating the tractor.

All operators, no matter how much experience they may have had, should read this and other related manuals before operating the tractor or any implement attached to it. It is the owner's obligation to instruct all operators in safe operation.

1. BEFORE OPERATING THE TRACTOR

1. Know your equipment and its limitations. Read this entire manual before attempting to start and operate the tractor.
2. Pay special attention to the danger, warning and caution labels on the tractor itself.
3. KUBOTA recommends the use of a Roll Over Protective Structures (ROPS) and seat belt in almost all applications. This combination will reduce the risk of serious injury or death, should the tractor be upset.
   If the ROPS is loosened or removed for any reason, make sure that all parts are reinstalled correctly before operating the tractor.
   Never modify or repair a ROPS because welding, bending, drilling, grinding, or cutting any portion may weaken the structure.
   A damaged ROPS structure must be replaced, not repaired or revised. If any structural member of the ROPS is damaged, replace the entire structure at your local KUBOTA Dealer.

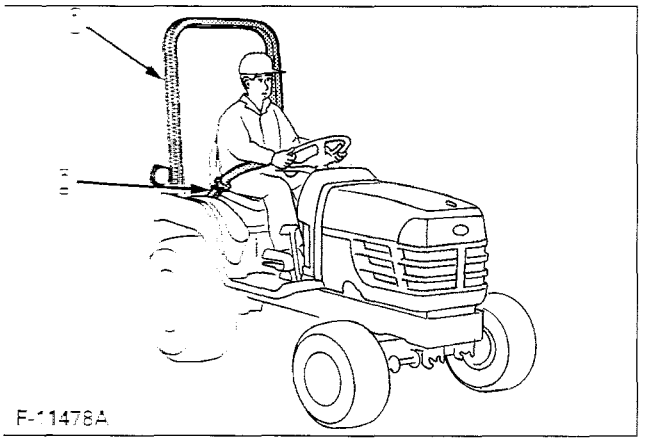

(1) ROPS
(2) Seat belt

4. Always use the seat belt if the tractor has a ROPS. Do not use it if there is no ROPS. Check the seat belt regularly and replace if frayed or damaged.
5. Do not operate tractor or any implement attached to it while under the influence of alcohol, medication, or other substances or while fatigued.
6. Carefully check the vicinity before operating tractor or any implement attached to it. Check for overhead clearance which may interfere with a ROPS. Do not allow any bystanders around or near tractor during operation.
7. Before allowing other people to use your tractor, explain how to operate and have them read this manual before operation.
8. Never wear loose, torn, or bulky clothing around tractor. It may catch on moving parts or controls, leading to the risk of accident. Use additional safety items, e.g. hard hat, safety boots or shoes, eye and hearing protection, gloves, etc., as appropriate or required.
9. Do not allow passengers to ride on any part of the tractor at anytime. The operator must remain in the tractor seat throughout operation.
10. Check brakes and other mechanical parts for improper adjustment and wear. Replace worn or damaged parts promptly. Check the tightness of all nuts and bolts regularly. (For further details, see Maintenance section.)
11. Keep your tractor clean. Dirt, grease, and trash accumulations contribute to fires and lead to personal injury.
12. Use only implements meeting the specifications listed under IMPLEMENT LIMITATIONS in this manual and use only implements approved by KUBOTA.
13. Use proper weights to front or rear of tractor to reduce the risk of upsets. When using the front loader, put the implement or ballast on 3-point hitch to improve stability. Follow the safe operating procedures specified in the attached manual to the equipment.
14. Do not modify the tractor. Unauthorized modification may affect the function of the tractor, which may result in personal injury.

2. OPERATING THE TRACTOR

1. Never start engine or operate levers from anywhere other than the seat.
2. Before starting the engine, make sure that all levers (including auxiliary control levers) are in their neutral positions, that the parking brake is engaged, and that the Power Take-Off (PTO) are disengaged.
   Fasten the seat belt if the tractor has a ROPS.
3. Do not start engine by shorting across starter terminals or bypassing the safety start switch. Machine may start in gear and move if normal starting circuitry is bypassed.
4. Pull only from the hitch. Never hitch to axle housing or any other point except hitch; such arrangements only increase the risk of serious personal injury or death due to a tractor upset.

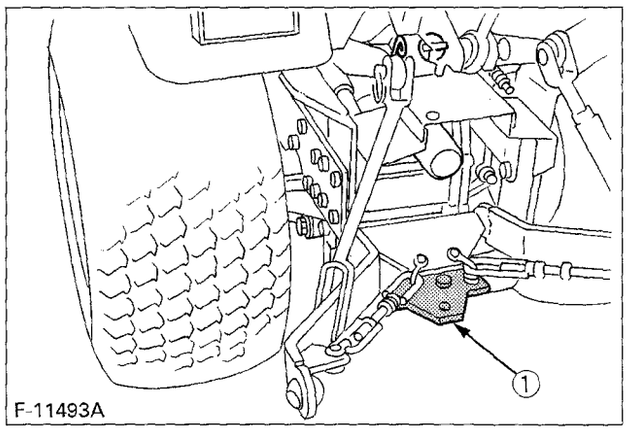

(1) Hitch

5. Do not operate or idle engine in a non-ventilated area.
   Carbon monoxide gas is colorless, odorless, and deadly.
6. Keep all shields and guards in place. Replace any that are missing or damaged.
7. Avoid sudden starts. To avoid upsets, slow down when turning, on uneven terrain, and before stopping.
8. The tractor cannot turn with the differential locked and attempting to do so could be dangerous.
9. Do not operate near ditches, holes, embankments, or other terrain features which may collapse under the tractor's weight. The risk of tractor upset is even higher when the ground is loose or wet.
10. Driving forward out of a ditch or mired condition or up a steep slope risks a tractor to be upset backward. Always back out of these situations. Extra caution is required with four-wheel drive models because their higher traction can give the operator false confidence in the tractor's ability to climb slopes.
11. To avoid upsets, always back up steep slopes. Stay off hills and slopes too steep for safe operation.
12. Watch where you are going at all times. Watch for and avoid obstacles. Be alert at row ends, near trees, and other obstructions.
13. When working in groups, always let the others know what you are going to do before you do it.
14. Never "freewheel". Shifting into neutral while descending a slope could lead to a loss of control.
15. Never try to get on or off a moving tractor.

3. DRIVING THE TRACTOR ON THE ROAD

1. Always slow the tractor down before turning. Turning at high speed may tip the tractor over.
2. Make sure that the Slow Moving Vehicle (SMV) sign is clean and visible. Use hazard lights as required.
3. When towing other equipment, place an SMV emblem on it as well.

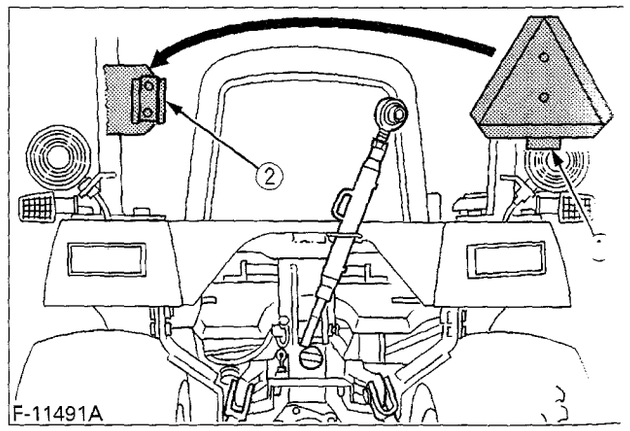

(1) SMV emblem
(2) Bracket

4. Observe all local traffic and safety regulations.
5. Turn the headlights on.
6. Drive at speeds that allow you to maintain control at all times.
7. Do not apply the differential lock while traveling at road speeds. The tractor may run out of control.
8. Avoid sudden motions of the steering wheel as they can lead to a dangerous loss of stability. The risk is especially great when the tractor is traveling at road speeds.
9. Do not operate an implement while the tractor is on the road. Lock the 3-point hitch in the raised position.

4. PARKING THE TRACTOR

1. Disengage the PTO, lower all implements, place all control levers in their neutral positions, set the parking brake, stop the engine and remove the key.

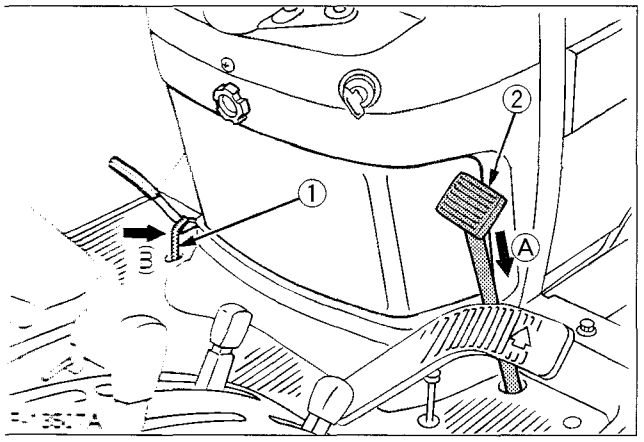

1 Parking brake lock
2 Brake pedal

(A) "DEPRESS"
(B) PUSH FORWARD WHILE DEPRESSING ②

2. Make sure that the tractor has come to a complete stop before dismounting.

5. OPERATING THE PTO

1. Wait until all moving components have completely stopped before getting off the tractor, connecting, disconnecting, adjusting, cleaning, or servicing any PTO driven equipment.
2. Keep the PTO shaft cover in place at all times. Replace the PTO shaft cap when the shaft is not in use.

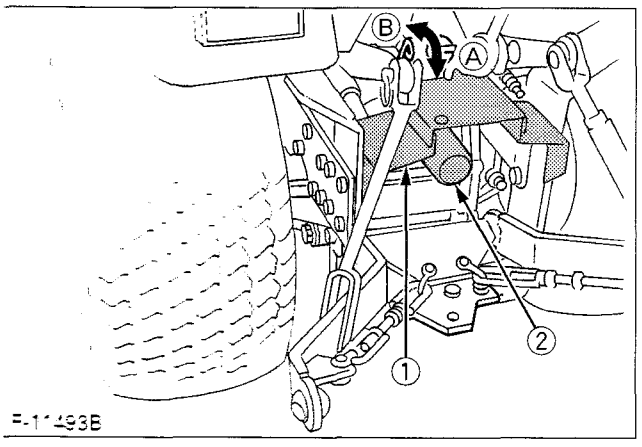

(1) PTO shaft cover
(2) PTO shaft cap

(A) "NORMAL POSITION"
(B) "RAISED POSITION"

3. Before installing or using PTO driven equipment, read the manufacturer's manual and review the safety labels attached to the equipment.
4. When operating stationary PTO driven equipment, always apply the tractor parking brake and place chocks behind and in front of the rear wheels. Stay clear of all rotating parts.

6. USING 3-POINT HITCH

1. Use the 3-point hitch only with equipment designed for 3-point hitch usage.
2. When using a 3-point hitch mounted implement, be sure to install the proper counterbalance weight on the front of the tractor.
3. When transporting on the road, set the 3-point hitch lowering speed knob in the "LOCK" position to hold the implement in the raised position.

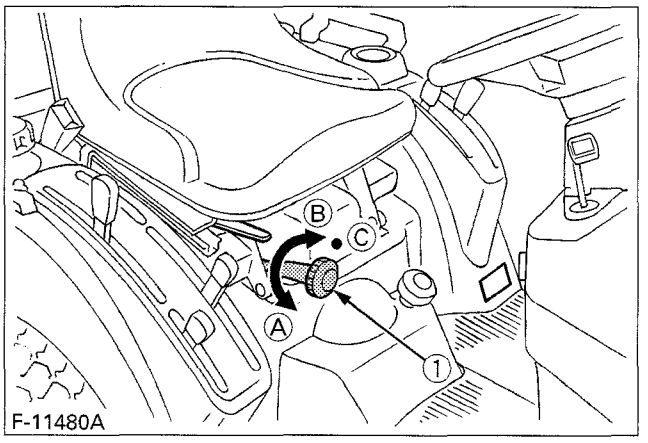

(1) 3-point hitch lowering speed knob

(A) "FAST"
(B) "SLOW"
(C) "LOCK"

7. SERVICING THE TRACTOR

Before servicing the tractor, park it on a firm, flat and level surface, set the parking brake, place the gear shift lever in neutral and stop the engine and remove the key.

1. Allow the tractor time to cool off before working on or near the engine, muffler, radiator, etc.
2. Always stop the engine and remove the key before refueling. Avoid spills and overfilling.
3. Do not smoke when working around battery or when refueling. Keep all sparks and flames away from battery and fuel tank. The battery presents an explosive hazard because it gives off hydrogen and oxygen ··· especially when recharging.
4. Before "jump starting" a dead battery, read and follow all of the instructions.
   (See "JUMP STARTING" in Operating the Engine Section)
5. Keep first aid kit and fire extinguisher handy at all times.
6. Do not remove radiator cap while coolant is hot. When cool, slowly rotate cap to the first stop and allow sufficient time for excess pressure to escape before removing the cap completely. If the tractor has a coolant recovery tank, add coolant there instead of to the radiator.
7. Disconnect the battery's ground cable before working on or near electric components.
8. Do not use or charge the refillable type battery if the fluid level is below the LOWER (lower limit level) mark. Otherwise, the battery component parts may prematurely deteriorate, which may shorten the battery's service life or cause an explosion. Check the fluid level regularly and add distilled water as required so that the fluid level is between the UPPER and LOWER levels.
9. To avoid sparks from an accidental short circuit, always disconnect the battery's ground cable ⊖ first and connect it last.

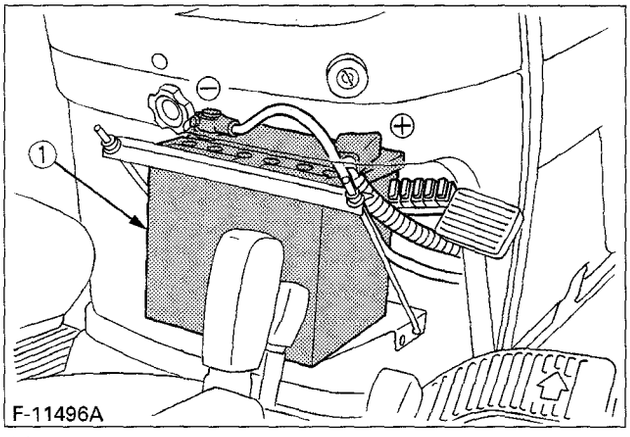

(1) Battery

10. Do not attempt to mount a tire on a rim. This should be done by a qualified person with the proper equipment.
11. Do not work under any hydraulically supported devices. They can settle, suddenly leak down or be accidentally lowered. If necessary to work under tractor or any machine elements for servicing or adjustment, securely support them with stands or suitable blocking beforehand.
12. Always maintain the correct tire pressure. Do not inflate tires above the recommended pressure shown in the operator's manual.

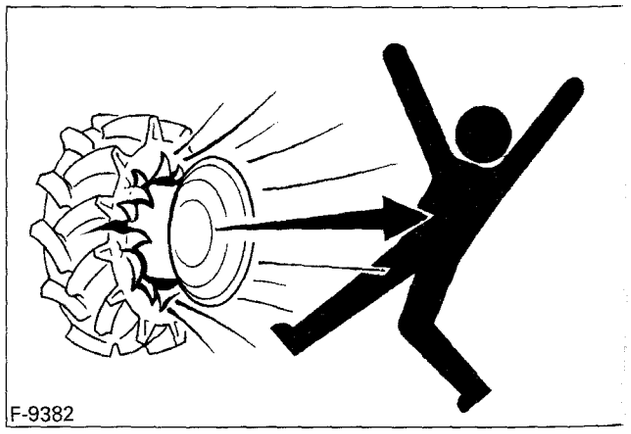

12. Securely support the tractor when changing wheels or the wheel tread width.
13. Make sure that wheel bolts have been tightened to the specified torque.
14. Escaping hydraulic fluid under pressure has sufficient force to penetrate skin, causing serious personal injury. Before disconnecting hydraulic lines, be sure to release all residual pressure. Before applying pressure to the hydraulic system, make sure that all connections are tight and that all lines, pipes, and hoses are free of damage.

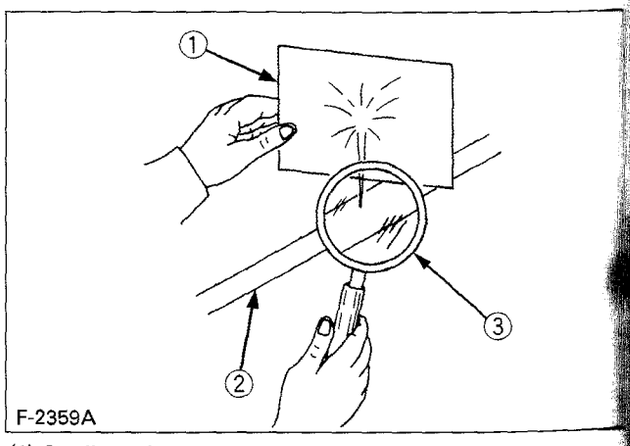

(1) Cardboard
(2) Hydraulic line
(3) Magnifying glass

Fluid escaping from pinholes may be invisible. Do not use hands to search for suspected leaks; use a piece of cardboard or wood, instead. Use of safety goggles or other eye protection is also highly recommended. If injured by escaping fluid, see a medical doctor at once. This fluid may produce gangrene or severe allergic reaction.

7. SERVICING THE TRACTOR

Before servicing the tractor, park it on a firm, flat and level surface, set the parking brake, place the gear shift lever in neutral and stop the engine and remove the key.

1. Allow the tractor time to cool off before working on or near the engine, muffler, radiator, etc.
2. Always stop the engine and remove the key before refueling. Avoid spills and overfilling.
3. Do not smoke when working around battery or when refueling. Keep all sparks and flames away from battery and fuel tank. The battery presents an explosive hazard because it gives off hydrogen and oxygen ··· especially when recharging.
4. Before "jump starting" a dead battery, read and follow all of the instructions.
   (See "JUMP STARTING" in Operating the Engine Section)
5. Keep first aid kit and fire extinguisher handy at all times.
6. Do not remove radiator cap while coolant is hot. When cool, slowly rotate cap to the first stop and allow sufficient time for excess pressure to escape before removing the cap completely. If the tractor has a coolant recovery tank, add coolant there instead of to the radiator.
7. Disconnect the battery's ground cable before working on or near electric components.
8. Do not use or charge the refillable type battery if the fluid level is below the LOWER (lower limit level) mark. Otherwise, the battery component parts may prematurely deteriorate, which may shorten the battery's service life or cause an explosion. Check the fluid level regularly and add distilled water as required so that the fluid level is between the UPPER and LOWER levels.
9. To avoid sparks from an accidental short circuit, always disconnect the battery's ground cable ⊖ first and connect it last.

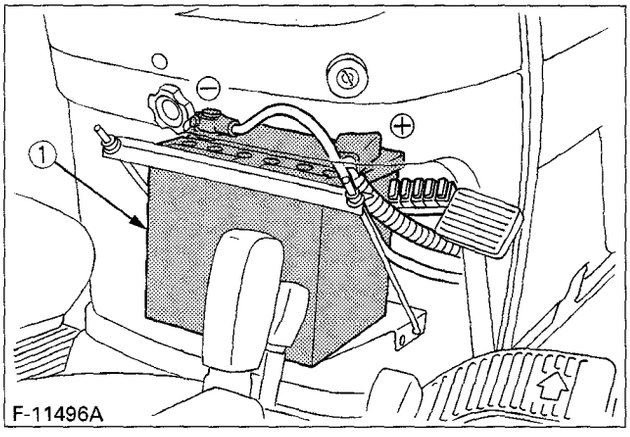

(1) Battery

10. Do not attempt to mount a tire on a rim. This should be done by a qualified person with the proper equipment.
11. Do not work under any hydraulically supported devices. They can settle, suddenly leak down or be accidentally lowered. If necessary to work under tractor or any machine elements for servicing or adjustment, securely support them with stands or suitable blocking beforehand.
12. Always maintain the correct tire pressure. Do not inflate tires above the recommended pressure shown in the operator's manual.

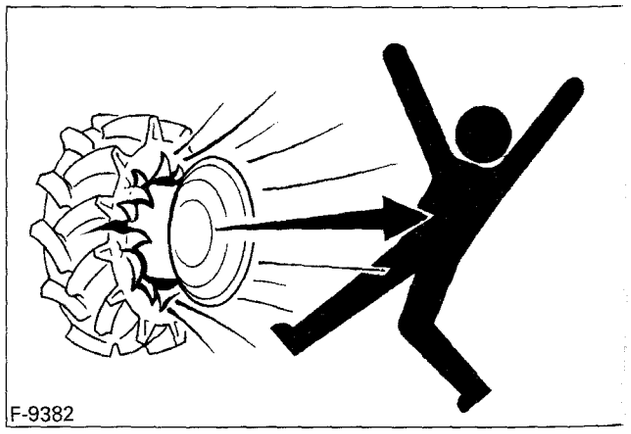

12. Securely support the tractor when changing wheels or the wheel tread width.
13. Make sure that wheel bolts have been tightened to the specified torque.
14. Escaping hydraulic fluid under pressure has sufficient force to penetrate skin, causing serious personal injury. Before disconnecting hydraulic lines, be sure to release all residual pressure. Before applying pressure to the hydraulic system, make sure that all connections are tight and that all lines, pipes, and hoses are free of damage.

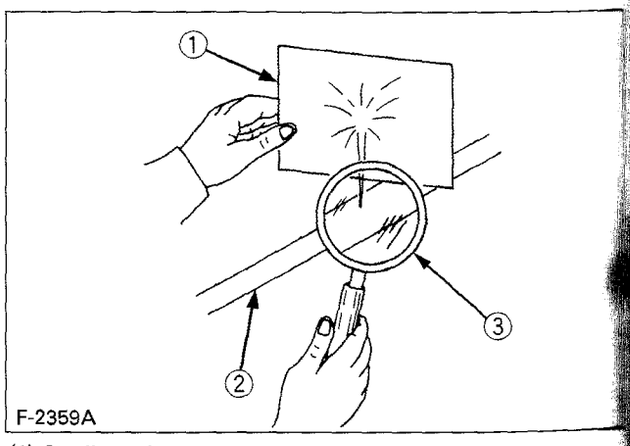

(1) Cardboard
(2) Hydraulic line
(3) Magnifying glass

Fluid escaping from pinholes may be invisible. Do not use hands to search for suspected leaks; use a piece of cardboard or wood, instead. Use of safety goggles or other eye protection is also highly recommended. If injured by escaping fluid, see a medical doctor at once. This fluid may produce gangrene or severe allergic reaction.

8. DANGER, WARNING AND CAUTION LABELS

(1) Part No. K2561-6557-1

⚠WARNING

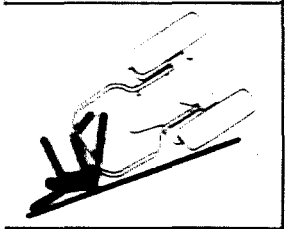

TO AVOID PERSONAL INJURY OR DEATH FROM ROLL-OVER:
- [illegible] recommends the use of a Roll-Over Protective Structure (ROPS) and seat belt in a major [illegible] modifications.
- Remove the ROPS only when [illegible] operation [illegible] presents [illegible] (Examples include work in [illegible] vineyards.) [illegible] REINSTALL IT BEFORE [illegible] TRACTOR IN OTHER APPLICATIONS.
- Never use just the seat belt in place of the ROPS. They must be used together. For further details, consult your Operator's Manual or your local dealer.

(2) Part No. K2561-6548-1

⚠CAUTION

TO AVOID PERSONAL INJURY:
1. Read and understand the operator's manual before operation.
2. Before starting the engine, make sure that everyone is at a safe distance from the tractor and that the PTO is OFF.
3. Do not allow passengers on the tractor at any time.
4. Before allowing other people to use the tractor, have them read the operator's manual.
5. Check the tightness of all nuts and bolts regularly.
6. Keep all shields in place and stay away from all moving parts.
7. Slow down for turns, or rough roads.
8. On public roads use SMV emblem and hazard lights, if required by local traffic and safety regulations.
9. Pull only from the hitch.
10. Before dismounting lower the implement, set the parking brake, stop the engine and remove the key.

(3) Part No. K2561-6556-1

⚠WARNING

TO AVOID PERSONAL INJURY:
1. Attach pulled or towed loads to the hitch only.
2. Use the 3-point hitch only with equipment designed for 3-point hitch usage.

(4) Part No. K2561-6552-2
Do not put hands under the rear fender.

⚠WARNING

TO AVOID PERSONAL INJURY:
KEEP HANDS AWAY FROM PINCH POINTS OF LIFT ARMS.

(6) Part No. K2561-6554-1

⚠WARNING

TO AVOID PERSONAL INJURY:
1. Keep PTO shield in place at all times.
2. Do not operate the PTO at speeds faster than the speed recommended by the implement manufacturer.
3. For trailing PTO-driven implements, set hitch at towing position. (see operator's manual)

(5) Part No. K2561-6549-1
Diesel fuel only | No fire

(7) Part No. K2561-6555-1

⚠CAUTION

TO AVOID PERSONAL INJURY FROM SEPARATION:

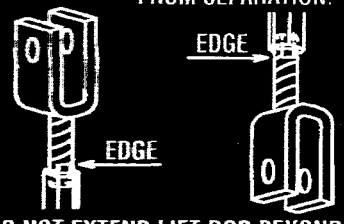

DO NOT EXTEND LIFT ROD BEYOND THE EDGE OF FLAT FACE ON THE THREADED ROD.

(8) Part No. 6C140-4746-1

⚠WARNING

TO AVOID PERSONAL INJURY:

Do not modify or repair a ROPS because welding, grinding, drilling or cutting any portion may weaken the structure.

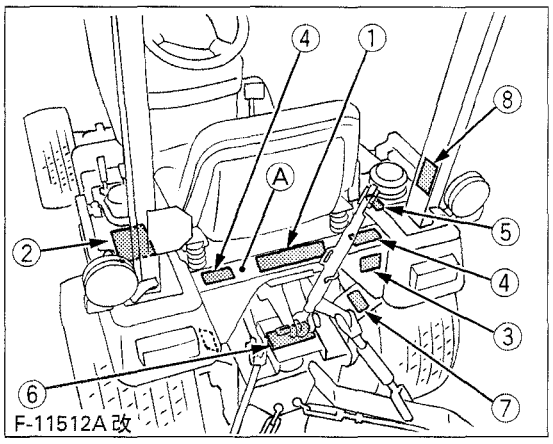

(A) Rear cover

(1) Part No. K2561-6541-1

⚠ DANGER

TO AVOID POSSIBLE INJURY OR DEATH FROM A MACHINE RUNAWAY:

1. Do not start engine by shorting across starter terminals or bypassing the safety start switch. Machine may start in gear and move if normal starting circuitry is bypassed.
2. Start engine only from operator's seat with transmission and PTO OFF. Never start engine while standing on the ground.

(2) Part No. K2561-6543-1
Stay clear of engine fan and fanbelt.

(3) Part No. K2561-6542-1
Do not touch hot surface like muffler, etc.

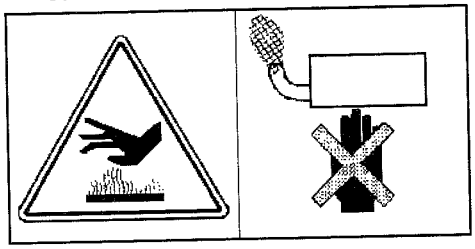

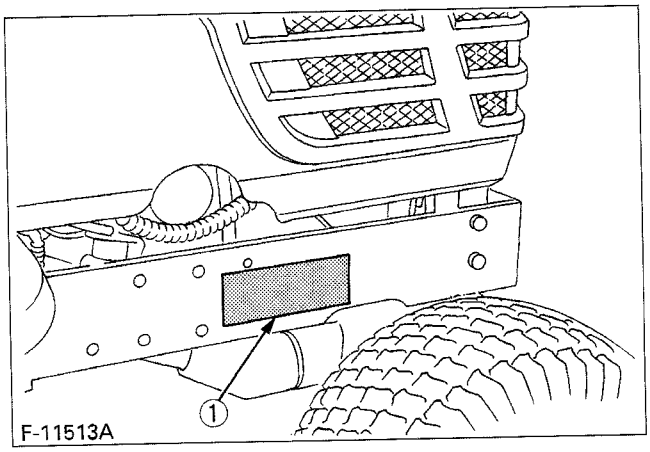

F-11513A

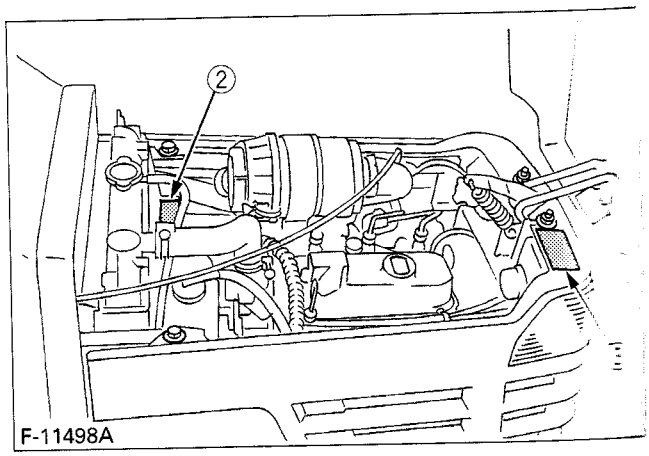

F-11498A

(1) Part No. K2561-6115-1

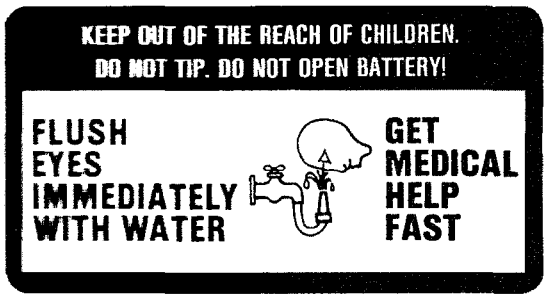

(2) Part No. K2561-6116-1

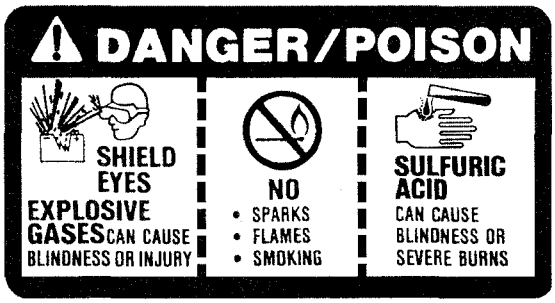

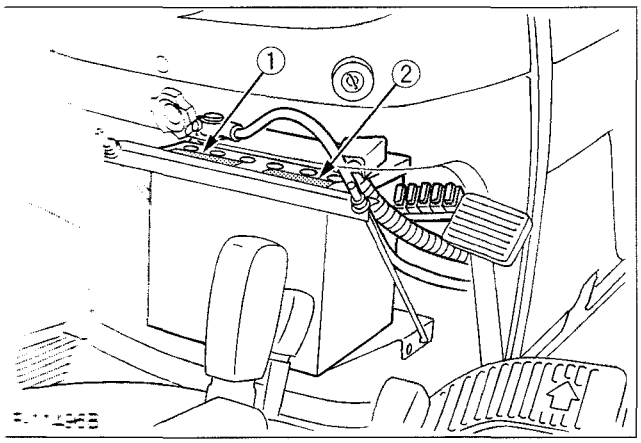

9. CARE OF DANGER, WARNING AND CAUTION LABELS

1. Keep danger, warning and caution labels clean and free from obstructing material.
2. Clean danger, warning and caution labels with soap and water, dry with a soft cloth.
3. Replace damaged or missing danger, warning and caution labels with new labels from your local KUBOTA Dealer.
4. If a component with danger, warning and caution label (s) affixed is replaced with new part, make sure new label (s) is (are) attached in the same location (s) as the replaced component.
5. Mount new danger, warning and caution labels by applying on a clean dry surface and pressing any bubbles to outside edge.

SERVICING OF TRACTOR

Your dealer is interested in your new tractor and has the desire to help you get the most value from it. After reading this manual thoroughly, you will find that you can do some of the regular maintenance yourself.
However, when in need of parts or major service, be sure to see your KUBOTA Dealer.
For service, contact the KUBOTA Dealership from which you purchased your tractor or your local KUBOTA Dealer.
When in need of parts, be prepared to give your dealer both the tractor and engine serial numbers.
Locate the serial numbers now and record them in the space provided.

	Type	Serial No.
Tractor	_____	_____
Engine	_____	_____

Date of Purchase _____

Name of Dealer _____
(To be filled in by purchaser)

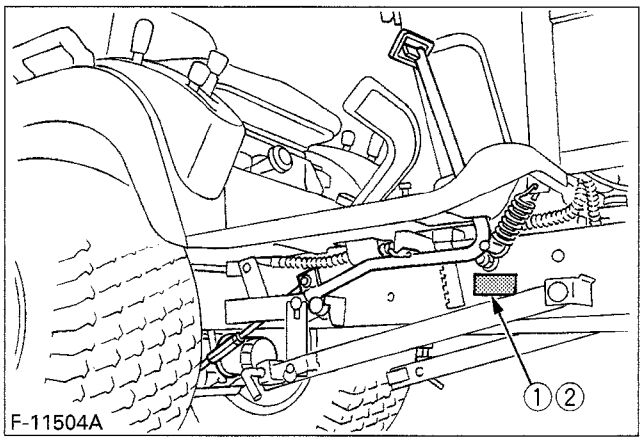

(1) Tractor identification plate
(2) Tractor serial number

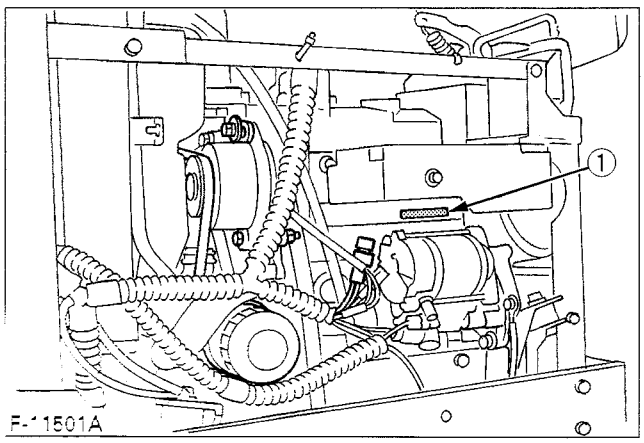

(1) Engine serial number

SPECIFICATIONS

SPECIFICATION TABLE

Model			BX1800	BX2200
PTO power		kW (HP)	10.2 (13.7) *	12.4 (16.7) *
Engine	Maker		KUBOTA	
	Model		D722-E-BX	D905-E-BX
	Type		Indirect Injection. Vertical, water-cooled, 4cycle diesel	
	Number of cylinders		3	
	Bore and stroke	mm (in.)	Ø67 x 68 (Ø2.64 x 2.68)	Ø72 x 73.6 (Ø2.83 x 2.90)
	Total displacement	cm³ (cu.in.)	719 (43.9)	898 (54.8)
	Engine gross power	kW (HP)	13.4 (18.0)	16.4 (22.0)
	Rated revolution	rpm	3200	
	Maximum torque	N·m(ft·lbs.)	41 (30.6)	55 (40.5)
	Battery		12V, RC : 62min, CCA : 435A 12V, RC : 111min, CCA : 490A	12V, RC : 80min, CCA : 535A 12V, RC : 90min, CCA : 550A
	Fuel		Diesel fuel No.2 [above –10°C (14°F)], Diesel fuel No.1 [below –10°C (14°F)]	
Capacities	Fuel tank	L (U.S.gals.)	21 (5.5)	
	Engine crankcase (with filter)	L (U.S.qts.)	1.9 (2.0)	2.5 (2.6)
	Engine coolant	L (U.S.qts.)	2.5 (2.6)	3.1 (3.3)
	Recovery tank	L (U.S.qts.)	0.4 (0.4)	
	Transmission case	L (U.S.gals.)	10.1 (2.7)	
Dimensions	Overall length (without 3P)	mm(in.)	2025 (79.7)	
	Overall length (with 3P)	mm(in.)	2340 (92.1)	
	Overall width (min.tread)	mm(in.)	1145 (45.1)	
	Overall height (with ROPS)	mm(in.)	1800 (70.9)	
	Overall height (Top of steering wheel)	mm(in.)	1200 (47.2)	
	Wheel base	mm(in.)	1400 (55.1)	
	Min. ground clearance	mm(in.)	170 (6.7)	
	Tread Front	mm(in.)	910 (35.8)	
	Tread Rear	mm(in.)	820 (32.2)	
Weight (with ROPS)		kg (lbs.)	570 (1255)	590 (1300)
Clutch			N/A	
Traveling system	Tires Front		18 x 8.50–8 (Turf)	
	Tires Rear		26 x 12.00–12 (Turf)	
	Steering		Hydrostatic type power steering	
	Transmission		Main:Hydrostatic transmission, High-Low gear shift (2 forward, 2 reverse)	
	Brake		Wet disk type	
	Min. turning radius	m(feet)	2.3 (7.5)	
Hydraulic unit	Hydraulic control system		Directional control, auto-return lever system	
	Pump capacity	L/min (gals/min)	21.0 (5.5)	
	Three point hitch		SAE Category I	
	Max. lift force At lift points	N(lbs.)	5390 (1210)**	
	Max. lift force 24in. behind lift points	N(lbs.)	3040 (680)**	
PTO	Rear-PTO		SAE 1–3/8, 6 splines	
	Revolution		1 speed (540 rpm at 3068 engine rpm)	
	Mid-PTO		USA No.5 (KUBOTA 10-tooth) involute spline	
	Revolution		1 speed (2500 rpm at 3125 engine rpm)	

NOTE: * Manufacturer's estimate The company reserves the right to change the specifications without notice.
**See and check IMPLEMENT LIMITATIONS.

TRAVELING SPEEDS

(At rated engine rpm)

Model		BX1800, BX2200	
Tire size (Rear)		26 x 12.00 - 12	
	Range gear shift lever	km / h	mph
Foward	Low	0 to 5.9	0 to 3.7
	High	0 to 13.0	0 to 8.1
Reverse	Low	0 to 4.5	0 to 2.8
	High	0 to 10.0	0 to 6.2

The company reserves the right to change the specifications without notice.

IMPLEMENT LIMITATIONS

The KUBOTA Tractor has been thoroughly tested for proper performance with implements sold or approved by KUBOTA. Use with implements which are not sold or approved by KUBOTA and which exceed the max. [illegible] specifications listed below, or which are otherwise unfit for use with the KUBOTA Tractor may result in malfunctions or failures of the tractor, damage to other property and injury to the operator or others. [illegible] malfunctions or failures of the tractor resulting from use with improper implements are not covered by the warranty.]

	Tread (max. width)		Lower link end max. loading weight W_0
	Front	Rear	
BX1800	910 mm (35.8 in.)	820 mm (32.2 in.)	550 kg (1210 lbs.
BX2200			

	Actual figures		
	Implement weight W_1 and / or size	Max. Hitch Load W_2	Trailer loading weight W_3 Max. capacity
BX1800	As in the following list (shown on the next page)	250 kg (550 lbs.)	800 kg (1765 lbs.
BX2200			

Lower link end max. loading weight.....The max.allowable load which can be put on the lower link end : W_0

Implement weight.....The implement's weight which can be put on the lower link : W_1

Max. hitch load.....W_2

Trailer loading weight.....The max. loading weight for trailer (without trailer's weight) : W_3

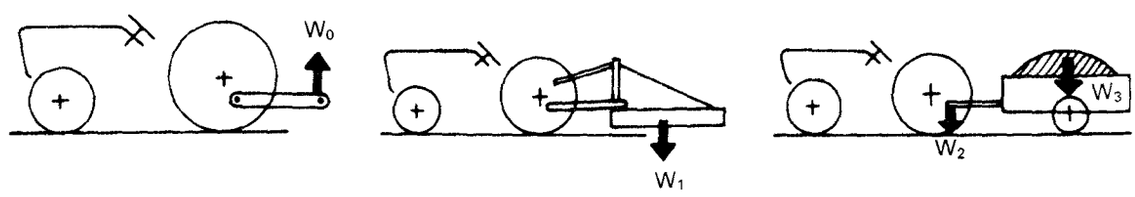

NOTE:

- Implement size may vary depending on soil operating conditions.

Implement		Remarks		BX1800	BX2200
Mower	Mid-mount	Max. cutting width Max. weight	cm(in.) kg(lbs.)	152 (60) 140 (300)	152 (60) 140 (300)
	Rotary-cutter (1 Blade)	Max. cutting width Max. weight	cm(in.) kg(lbs.)	107 (42) 140 (300)	107 (42) 140 (300)
	Rear-mount (2 or 3 Blade)	Max. cutting width Max. weight	cm(in.) kg(lbs.)	152 (60) 140 (300)	152 (60) 140 (300)
	Flail-mower	Max. cutting width	cm(in.)	107 (42)	107 (42)
	Sickle bar	Max. cutting width	cm(in.)	122 (48)	122 (48)
Rotary tiller		Max. tilling width Max. weight	cm(in.) kg(lbs.)	107 (42) 170 (375)	107 (42) 170 (375)
Bottom plow		Max. size	cm(in.)	30 (12) x 1	36 (14) x 1
Disc plow		Max. size	cm(in.)	56 (22) x 1	56 (22) x 1
Cultivator		Max. size	cm(in.)	122 (48) 1 Row	122 (48) 1 Row
Disc harrow		Max. harrowing width Max. weight	cm(in.) kg(lbs.)	122 (48) 120 (265)	137 (54) 140 (300)
Sprayer		Max. tank capacity	L(U.S.gals.)	150 (40)	150 (40)
Front blade		Max. cutting width Sub frame	cm(in.)	137 (54) Necessary	152 (60) Necessary
Rear blade		Max. cutting width Max. weight	cm(in.) kg(lbs.)	152 (60) 160 (350)	152 (60) 160 (350)
Front loader		Max. lifting capacity Max. width Sub frame	kg(lbs.) cm(in.)	210 (460) 122 (48) Necessary	210 (460) 122 (48) Necessary
Box blade		Max. cutting width Max. weight	cm(in.) kg(lbs.)	107 (42) 170 (375)	107 (42) 170 (375)
Snow blower (Front)		Max. working width Max. weight Sub frame	cm(in.) kg(lbs.)	127 (50) 160 (350) Necessary	127 (50) 160 (350) Necessary
Post hole digger		Digging depth	cm(in.)	114 (45)	114 (45)
Rotary broom		Cleaning width	cm(in.)	119 (47)	119 (47)
Trailer		Max. load capacity	kg(lbs.)	800 (1765)	800 (1765)

NOTE:

- The attachment size may vary depending on soil operating conditions.

INSTRUMENT PANEL AND CONTROLS

Instrument Panel, Switches and Hand Controls

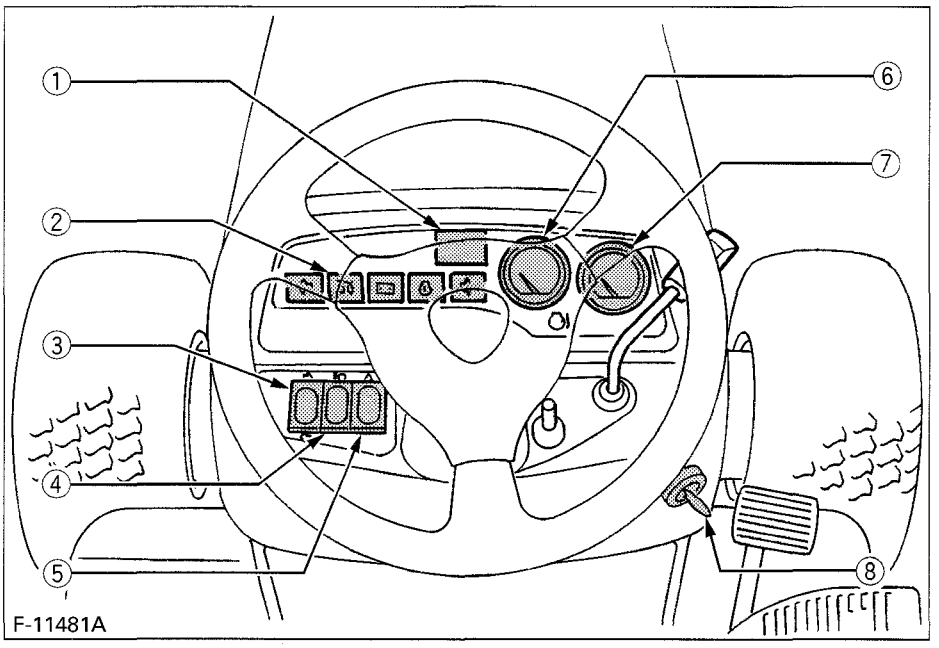

ILLUSTRATED CONTENTS

(1) Hourmeter 25
(2) Easy Checker™ 18 25
(3) Turn signal light switch 22
(4) Head light switch 22
(5) Hazard light switch 22
(6) Coolant temperature gauge 25 26
(7) Fuel gauge 25
(8) Key switch 18