https://truckmanualshub.com/

JLG®

An Oshkosh Corporation Company

Operation and Safety Manual

Original Instructions - Keep this manual with the machine at all times.

Boom Lift Models
E450A
E450AJ
M450AJ
S/N 0300189898
to Present

ANSI CE

3121647

January 5, 2015

https://truckmanualshub.com/

https://truckmanualshub.com/

FOREWORD

This manual is a very important tool! Keep it with the machine at all times.

The purpose of this manual is to provide owners, users, operators, lessors, and lessees with the precautions and operating procedures essential for the safe and proper machine operation for its intended purpose.

Due to continuous product improvements, JLG Industries, Inc. reserves the right to make specification changes without prior notification. Contact JLG Industries, Inc. for updated information.

https://truckmanualshub.com/

SAFETY ALERT SYMBOLS AND SAFETY SIGNAL WORDS

This is the Safety Alert Symbol. It is used to alert you to the potential personal injury hazards. Obey all safety messages that follow this symbol to avoid possible injury or death

DANGER

INDICATES AN IMMINENTLY HAZARDOUS SITUATION. IF NOT AVOIDED, WILL RESULT IN SERIOUS INJURY OR DEATH. THIS DECAL WILL HAVE A RED BACKGROUND.

WARNING

INDICATES A POTENTIALLY HAZARDOUS SITUATION. IF NOT AVOIDED, COULD RESULT IN SERIOUS INJURY OR DEATH. THIS DECAL WILL HAVE AN ORANGE BACKGROUND.

CAUTION

INDICATES A POTENTIALLY HAZARDOUS SITUATION. IF NOT AVOIDED, MAY RESULT IN MINOR OR MODERATE INJURY. IT MAY ALSO ALERT AGAINST UNSAFE PRACTICES. THIS DECAL WILL HAVE A YELLOW BACKGROUND.

NOTICE

INDICATES INFORMATION OR A COMPANY POLICY THAT RELATES DIRECTLY OR INDIRECTLY TO THE SAFETY OF PERSONNEL OR PROTECTION OF PROPERTY.

https://truckmanualshub.com/

⚠ WARNING

THIS PRODUCT MUST COMPLY WITH ALL SAFETY RELATED BULLETINS. CONTACT JLG INDUSTRIES, INC. OR THE LOCAL AUTHORIZED JLG REPRESENTATIVE FOR INFORMATION REGARDING SAFETY-RELATED BULLETINS WHICH MAY HAVE BEEN ISSUED FOR THIS PRODUCT.

NOTICE

JLG INDUSTRIES, INC. SENDS SAFETY RELATED BULLETINS TO THE OWNER OF RECORD OF THIS MACHINE. CONTACT JLG INDUSTRIES, INC. TO ENSURE THAT THE CURRENT OWNER RECORDS ARE UPDATED AND ACCURATE.

NOTICE

JLG INDUSTRIES, INC. MUST BE NOTIFIED IMMEDIATELY IN ALL INSTANCES WHERE JLG PRODUCTS HAVE BEEN INVOLVED IN AN ACCIDENT INVOLVING BODILY INJURY OR DEATH OF PERSONNEL OR WHEN SUBSTANTIAL DAMAGE HAS OCCURRED TO PERSONAL PROPERTY OR THE JLG PRODUCT.

For:

- Accident Reporting
- Product Safety Publications
- Current Owner Updates
- Questions Regarding Product Safety
- Standards and Regulations Compliance Information
- Questions Regarding Special Product Applications
- Questions Regarding Product Modifications

Contact:

Product Safety and Reliability Department
JLG Industries, Inc.
13224 Fountainhead Plaza
Hagerstown, MD 21742
USA

or Your Local JLG Office
(See addresses on inside of manual cover)

In USA:

Toll Free: 877-JLG-SAFE (877-554-7233)

Outside USA:

Phone: 240-420-2661
Fax: 301-745-3713
E-mail: ProductSafety@JLG.com

https://truckmanualshub.com/

REVISION LOG

Original Issue	- June 3, 2014
Revision	- October 1, 2014
Revision	- January 5, 2015

https://truckmanualshub.com/

SECTION - PARAGRAPH, SUBJECT — PAGE

SECTION - 1 - SAFETY PRECAUTIONS

1.1 GENERAL 1-1
1.2 PRE-OPERATION 1-1
Operator Training and Knowledge 1-1
Workplace Inspection 1-2
Machine Inspection 1-3
1.3 OPERATION 1-3
General 1-3
Trip and Fall Hazards 1-4
Electrocution Hazards 1-5
Tipping Hazards 1-7
Crushing and Collision Hazards 1-10
1.4 TOWING, LIFTING, AND HAULING 1-11
1.5 MAINTENANCE 1-11
Maintenance Hazards 1-11
Battery Hazards 1-13

SECTION - 2 - USER RESPONSIBILITIES, MACHINE PREPARATION, AND INSPECTION

2.1 PERSONNEL TRAINING 2-1
Operator Training 2-1
Training Supervision 2-1
Operator Responsibility 2-1
2.2 PREPARATION, INSPECTION, AND MAINTENANCE 2-2
Pre-Start Inspection 2-4
Function Check 2-5
SkyGuard Function Test 2-6
General 2-9

SECTION - 3 - MACHINE CONTROLS AND INDICATORS

3.1 GENERAL 3-1
3.2 CONTROLS AND INDICATORS 3-1
Ground Control Station 3-2
Platform Station 3-7
Platform Control Indicator Panel 3-14

SECTION - 4 - MACHINE OPERATION

4.1 DESCRIPTION 4-1
4.2 OPERATING CHARACTERISTICS AND LIMITATIONS 4-1
Capacities 4-1
Stability 4-2
4.3 MOTOR OPERATION 4-2
Power/Emergency Stop 4-2
Platform/Ground Select Switch 4-5
Motor Activation 4-5
4.4 TRAVELING (DRIVING) 4-5
Traveling Forward and Reverse 4-6
4.5 STEERING 4-8
4.6 PLATFORM 4-8
Loading From Ground Level 4-8
Loading From Positions Above Ground Level 4-8
Platform Level Adjustment 4-9

https://truckmanualshub.com/

SECTION - PARAGRAPH, SUBJECT **PAGE**

Platform Rotation 4-9
4.7 BOOM 4-9
Swinging the Boom 4-10
Raising and Lowering the Lower and Mid Boom . . . 4-10
Raising and Lowering the Upper Boom. 4-10
4.8 GENERATOR 4-10
Automatic Operating Mode. 4-10
Battery Only Operating Mode. 4-11
Manual (Charge) Operating Mode. 4-11
4.9 INVERTER 4-12
4.10 MACHINE FUNCTION SPEEDS. 4-12
4.11 MACHINE SAFETY SYSTEM OVERRIDE (MSSO) (CE ONLY). 4-12
4.12 SKYGUARD OPERATION 4-13
4.13 BOOM SYNCHRONIZING PROCEDURE 4-13
4.14 SHUT DOWN AND PARK. 4-14
4.15 MACHINE LIFTING AND TIE DOWN. 4-14
Lifting. 4-14
Tie Down. 4-14

SECTION - PARAGRAPH, SUBJECT **PAGE**

SECTION - 5 - EMERGENCY PROCEDURES

5.1 GENERAL 5-1
5.2 INCIDENT NOTIFICATION. 5-1
5.3 EMERGENCY OPERATION 5-1
Operator Unable to Control Machine. 5-1
Platform or Boom Caught Overhead 5-2
5.4 EMERGENCY TOWING PROCEDURES. 5-2
5.5 MANUAL DESCENT SYSTEM 5-2
5.6 MANUAL SWING OVERRIDE 5-2
5.7 MACHINE SAFETY SYSTEM OVERRIDE (MSSO) (CE ONLY). 5-3

https://truckmanualshub.com/

SECTION - PARAGRAPH, SUBJECT	PAGE
SECTION - 6 - GENERAL SPECIFICATIONS & OPERATOR MAINTENANCE	
6.1 INTRODUCTION	6-1
6.2 OPERATING SPECIFICATIONS	6-1
Capacities	6-2
Tires	6-3
Dimensional Data	6-3
Torque Specifications	6-4
Hydraulic Oil	6-4
Lubrication Specifications	6-5
Critical Stability Weights	6-5
Serial Number Locations	6-6
6.3 MAINTENANCE AND LUBRICATION	6-9
6.4 BATTERY MAINTENANCE AND CHARGING	6-15
Battery Maintenance, Quarterly	6-15
Optional On Board Generator	6-16
Battery Charging (On Board Charger)	6-16
6.5 TIRES & WHEELS	6-17
Tire Inflation	6-17
Tire Damage	6-17
Tire Replacement	6-17
Wheel Replacement	6-18
Wheel Installation	6-18
6.6 SUPPLEMENTAL INFORMATION	6-20
SECTION - 7 - INSPECTION AND REPAIR LOG	

https://truckmanualshub.com/

SECTION - PARAGRAPH, SUBJECT PAGE SECTION - PARAGRAPH, SUBJECT PAGE

This Page Left Blank Intentionally.

https://truckmanualshub.com/

FIGURE NUMBER - TITLE		PAGE
2-1.	Basic Nomenclature	2-7
2-2.	Daily Walk-Around Inspection - Sheet 1 of 3	2-8
2-3.	Daily Walk-Around Inspection - Sheet 2 of 3	2-9
2-4.	Daily Walk-Around Inspection - Sheet 3 of 3	2-10
3-1.	Ground Control Station	3-3
3-2.	Ground Control Station with Machine Safety System Override (MSSO) (CE Only)	3-4
3-3.	Platform Station	3-8
3-4.	Platform Control Indicator Panel	3-15
4-1.	Position of Least Forward Stability	4-3
4-2.	Position of Least Backward Stability	4-4
4-3.	Grade and Side Slopes	4-7
4-4.	Lifting Chart	4-15
4-5.	Decal Installation - Sheet 1 of 3	4-16
4-6.	Decal Installation - Sheet 2 of 3	4-17
4-7.	Decal Installation - Sheet 3 of 3	4-18
6-1.	Serial Number Locations	6-6
6-2.	E450 Maintenance & Lubrication Diagram	6-7
6-3.	M450 Maintenance & Lubrication Diagram	6-8

FIGURE NUMBER - TITLE	PAGE

https://truckmanualshub.com/

FIGURE NUMBER - TITLE	PAGE	FIGURE NUMBER - TITLE	PAGE

This Page Left Blank Intentionally.

https://truckmanualshub.com/

TABLE NUMBER - TITLE		PAGE
1-1	Minimum Approach Distances (M.A.D.)	1-6
1-2	Beaufort Scale (For Reference Only)	1-9
2-1	Inspection and Maintenance Table	2-3
3-1	Simultaneous Functions	3-13
4-1	Skyguard Function Table	4-13
4-2	E450A/E450AJ Decal Legend	4-19
4-3	M450AJ Decal Legend	4-25
6-1	Operating Specifications	6-1
6-2	Capacities	6-2
6-3	Tire Specifications	6-3
6-4	Dimensional Data	6-3
6-5	Torque Requirements	6-4
6-6	Hydraulic Oil	6-4
6-7	Mobil DTE 11M Specs	6-5
6-8	Critical Stability Weights	6-5
6-9	Lubrication Specifications	6-9
6-10	Wheel Torque Chart	6-19
7-1	Inspection and Repair Log	7-1

TABLE NUMBER - TITLE	PAGE

https://truckmanualshub.com/

TABLE NUMBER - TITLE **PAGE** **TABLE NUMBER - TITLE** **PAGE**

This Page Left Blank Intentionally.

https://truckmanualshub.com/

SECTION 1. SAFETY PRECAUTIONS

1.1 GENERAL

This section outlines the necessary precautions for proper and safe machine usage and maintenance. It is mandatory that a daily routine is established based on the content of this manual to promote proper machine usage. A maintenance program, using the information provided in this manual and the Service and Maintenance Manual, must also be established by a qualified person and must be followed to ensure that the machine is safe to operate.

The owner/user/operator/lessor/lessee of the machine must not accept operating responsibility until this manual has been read, training is accomplished, and operation of the machine has been completed under the supervision of an experienced and qualified operator.

This section contains the responsibilities of the owner, user, operator, lessor, and lessee concerning safety, training, inspection, maintenance, application, and operation. If there are any questions with regard to safety, training, inspection, maintenance, application, and operation, please contact JLG Industries, Inc. ("JLG").

⚠ WARNING

FAILURE TO COMPLY WITH THE SAFETY PRECAUTIONS LISTED IN THIS MANUAL COULD RESULT IN MACHINE DAMAGE, PROPERTY DAMAGE, PERSONAL INJURY OR DEATH.

1.2 PRE-OPERATION

Operator Training and Knowledge

- The Operation and Safety Manual must be read and understood in its entirety before operating the machine. For clarification, questions, or additional information regarding any portions of this manual, contact JLG Industries, Inc.

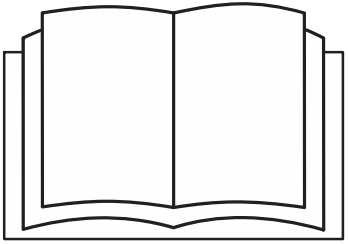

https://truckmanualshub.com/

- An operator must not accept operating responsibilities until adequate training has been given by competent and authorized persons.
- Allow only those authorized and qualified personnel to operate the machine who have demonstrated that they understand the safe and proper operation and maintenance of the unit.
- Read, understand, and obey all DANGERS, WARNINGS, CAUTIONS, and operating instructions on the machine and in this manual.
- Ensure that the machine is to be used in a manner which is within the scope of its intended application as determined by JLG.
- All operating personnel must be familiar with the emergency controls and emergency operation of the machine as specified in this manual.
- Read, understand, and obey all applicable employer, local, and governmental regulations as they pertain to your utilization and application of the machine.

Workplace Inspection

- Precautions to avoid all hazards in the work area must be taken by the user before and during operation of the machine.
- Do not operate or raise the platform from a position on trucks, trailers, railway cars, floating vessels, scaffolds or other equipment unless the application is approved in writing by JLG.
- Before operation, check work area for overhead hazards such as electric lines, bridge cranes, and other potential overhead obstructions.
- Check operating surfaces for holes, bumps, drop-offs, obstructions, debris, concealed holes, and other potential hazards.
- Check the work area for hazardous locations. Do not operate the machine in hazardous environments unless approved for that purpose by JLG.
- Ensure that the ground conditions are adequate to support the maximum tire load indicated on the tire load decals located on the chassis adjacent to each wheel. Do not travel on unsupported surfaces.

https://truckmanualshub.com/

Machine Inspection

- Do not operate this machine until the inspections and functional checks as specified in Section 2 of this manual have been performed.
- Do not operate this machine until it has been serviced and maintained according to the maintenance and inspection requirements as specified in the machine's Service and Maintenance Manual.
- Ensure all safety devices are operating properly. Modification of these devices is a safety violation.

⚠ WARNING

MODIFICATION OR ALTERATION OF AN AERIAL WORK PLATFORM SHALL BE MADE ONLY WITH PRIOR WRITTEN PERMISSION FROM THE MANUFACTURER.

- Do not operate any machine on which the safety or instruction placards or decals are missing or illegible.
- Check the machine for modifications to original components. Ensure that any modifications have been approved by JLG.
- Avoid accumulation of debris on platform floor. Keep mud, oil, grease, and other slippery substances from footwear and platform floor.

1.3 OPERATION

General

- Machine operation requires your full attention. Bring the machine to a full stop before using any device, i.e. cell phones, two-way radios, etc. that will distract your attention from safely operating the machine.
- Do not use the machine for any purpose other than positioning personnel, their tools, and equipment.
- Before operation, the user must be familiar with the machine capabilities and operating characteristics of all functions.
- Never operate a malfunctioning machine. If a malfunction occurs, shut down the machine. Remove the unit from service and notify the proper authorities.
- Do not remove, modify, or disable any safety devices.
- Never slam a control switch or lever through neutral to an opposite direction. Always return switch to neutral and stop before moving the switch to the next function. Operate controls with slow and even pressure.
- Do not allow personnel to tamper with or operate the machine from the ground with personnel in the platform, except in an emergency.

https://truckmanualshub.com/

- Do not carry materials directly on platform railing unless approved by JLG.
- When two or more persons are in the platform, the operator shall be responsible for all machine operations.
- Always ensure that power tools are properly stowed and never left hanging by their cord from the platform work area.
- When driving, always position boom over rear axle in line with the direction of travel. Remember, if boom is over the front axle, steer and drive functions will be reversed.
- Do not assist a stuck or disabled machine by pushing or pulling except by pulling at the chassis tie-down lugs.
- Fully lower platform and shut off all power before leaving machine.
- Remove all rings, watches, and jewelry when operating machine. Do not wear loose fitting clothing or long hair unrestrained which may become caught or entangled in equipment.
- Persons under the influence of drugs or alcohol or who are subject to seizures, dizziness or loss of physical control must not operate this machine.
- Hydraulic cylinders are subject to thermal expansion and contraction. This may result in changes to the boom and/or platform position while the machine is stationary. Factors affecting thermal movement can include the length of time the machine will remain stationary, hydraulic oil temperature, ambient air temperature, and boom and platform position.

Trip and Fall Hazards

- During operation, occupants in the platform must wear a full body harness with a lanyard attached to an authorized lanyard anchorage point. Attach only one (1) lanyard per lanyard anchorage point..

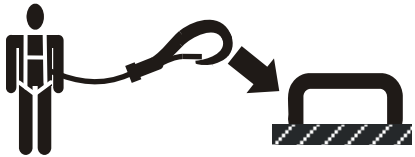

- Enter and exit only through gate area. Use extreme caution when entering or leaving platform. Ensure that the platform assembly is fully lowered. Face the machine when entering or leaving the platform. Always maintain “three point contact” with the machine, using two hands and one foot or two feet and one hand at all times during entry and exit.

https://truckmanualshub.com/

- Before operating the machine, make sure all gates are closed and fastened in their proper position.

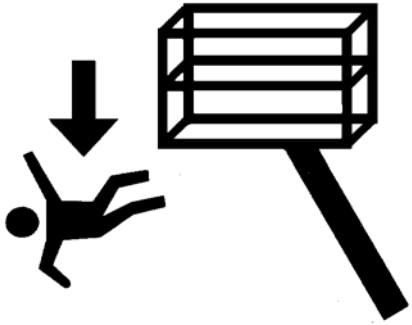

- Keep both feet firmly positioned on the platform floor at all times. Never position ladders, boxes, steps, planks, or similar items on unit to provide additional reach for any purpose.
- Keep oil, mud, and slippery substances cleaned from footwear and the platform floor.

Electrocution Hazards

- This machine is not insulated and does not provide protection from contact or proximity to electrical current.

https://truckmanualshub.com/

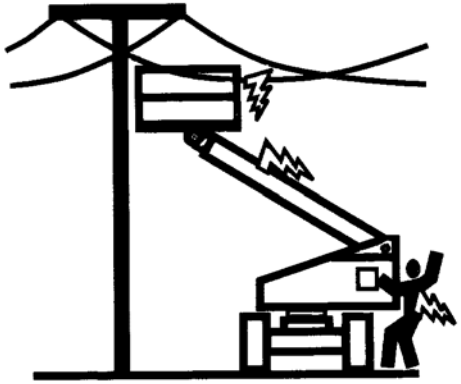

- Maintain distance from electrical lines, apparatus, or any energized (exposed or insulated) parts according to the Minimum Approach Distance (MAD) as shown in Table 1-1.
- Allow for machine movement and electrical line swaying.

Table 1-1. Minimum Approach Distances (M.A.D.)

Voltage Range (Phase to Phase)	MINIMUM APPROACH DISTANCE in Feet (Meters)
0 to 50 KV	10 (3)
Over 50KV to 200 KV	15 (5)
Over 200 KV to 350 KV	20 (6)
Over 350 KV to 500 KV	25 (8)
Over 500 KV to 750 KV	35 (11)
Over 750 KV to 1000 KV	45 (14)

NOTE: ***This requirement shall apply except where employer, local or governmental regulations are more stringent.***

- Maintain a clearance of at least 10 ft. (3m) between any part of the machine and its occupants, their tools, and their equipment from any electrical line or apparatus carrying up to 50,000 volts. One foot additional clearance is required for every additional 30,000 volts or less.

https://truckmanualshub.com/

- The minimum approach distance may be reduced if insulating barriers are installed to prevent contact, and the barriers are rated for the voltage of the line being guarded. These barriers shall not be part of (or attached to) the machine. The minimum approach distance shall be reduced to a distance within the designed working dimensions of the insulating barrier. This determination shall be made by a qualified person in accordance with the employer, local, or governmental requirements for work practices near energized equipment

DANGER

DO NOT MANEUVER MACHINE OR PERSONNEL INSIDE PROHIBITED ZONE (MAD). ASSUME ALL ELECTRICAL PARTS AND WIRING ARE ENERGIZED UNLESS KNOWN OTHERWISE.

Tipping Hazards

- The user must be familiar with the surface before driving. Do not exceed the allowable sideslope and grade while driving.

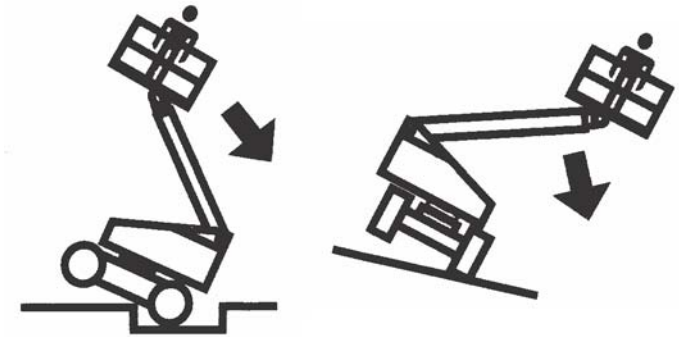

- Do not elevate platform or drive with platform elevated while on or near a sloping, uneven, or soft surface. Ensure machine is positioned on a firm, level and smooth surface before elevating platform or driving with the platform in the elevated position.
- Before driving on floors, bridges, trucks, and other surfaces, check allowable capacity of the surfaces.

https://truckmanualshub.com/

- Never exceed the maximum work load as specified on the platform. Keep all loads within the confines of the platform, unless authorized by JLG.
- Keep the chassis of the machine a minimum of 2 ft. (0.6m) from holes, bumps, drop-offs, obstructions, debris, concealed holes, and other potential hazards at the ground level.
- Do not push or pull any object with the boom.
- Never attempt to use the machine as a crane. Do not tie-off machine to any adjacent structure. Never attach wire, cable, or any similar items to platform.
- Do not operate the machine when wind conditions exceed 28 mph (12.5 m/s). Refer to Table 1-2, Beaufort Scale (For Reference Only).
- Do not increase the surface area of the platform or the load. Increase of the area exposed to the wind will decrease stability.
- Do not increase the platform size with unauthorized deck extensions or attachments.
- If boom assembly or platform is in a position that one or more wheels are off the ground, all persons must be removed before attempting to stabilize the machine. Use cranes, forklift trucks, or other appropriate equipment to stabilize machine.

https://truckmanualshub.com/

NOTICE

DO NOT OPERATE THE MACHINE WHEN WIND CONDITIONS EXCEED 28 MPH (12.5 M/S).

Table 1-2. Beaufort Scale (For Reference Only)

Beaufort Number	Wind Speed		Description	Land Conditions
	mph	m/s		
0	0	0-0.2	Calm	Calm. Smoke rises vertically
1	1-3	0.3-1.5	Light air	Wind motion visible in smoke
2	4-7	1.6-3.3	Light breeze	Wind felt on exposed skin. Leaves rustle
3	8-12	3.4-5.4	Gentle breeze	Leaves and smaller twigs in constant motion
4	13-18	5.5-7.9	Moderate breeze	Dust and loose paper raised. Small branches begin to move.
5	19-24	8.0-10.7	Fresh breeze	Smaller trees sway.
6	25-31	10.8-13.8	Strong breeze	Large branches in motion. Flags waving near horizontal. Umbrella use becomes difficult.
7	32-38	13.9-17.1	Near Gale/Moderate Gale	Whole trees in motion. Effort needed to walk against the wind.
8	39-46	17.2-20.7	Fresh Gale	Twigs broken from trees. Cars veer on road.
9	47-54	20.8-24.4	Strong Gale	Light structure damage.

https://truckmanualshub.com/

Crushing and Collision Hazards

- Approved head gear must be worn by all operating and ground personnel.
- Check work area for clearances overhead, on sides, and bottom of platform when lifting or lowering platform, and driving.

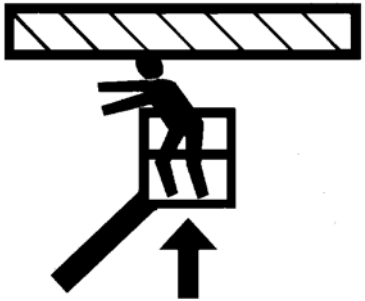

- During operation, keep all body parts inside platform railing.
- Use the boom functions, not the drive function, to position the platform close to obstacles.
- Always post a lookout when driving in areas where vision is obstructed.
- Keep non-operating personnel at least 6 ft. (1.8m) away from machine during all driving and swing operations.
- Under all travel conditions, the operator must limit travel speed according to conditions of ground surface, congestion, visibility, slope, location of personnel, and other factors which may cause collision or injury to personnel.
- Be aware of stopping distances in all drive speeds. When driving in high speed, switch to low speed before stopping. Travel grades in low speed only.
- Do not use high speed drive in restricted or close quarters or when driving in reverse.
- Exercise extreme caution at all times to prevent obstacles from striking or interfering with operating controls and persons in the platform.
- Be sure that operators of other overhead and floor level machines are aware of the aerial work platform's presence. Disconnect power to overhead cranes.
- Warn personnel not to work, stand, or walk under a raised boom or platform. Position barricades on floor if necessary.

https://truckmanualshub.com/

1.4 TOWING, LIFTING, AND HAULING

- Never allow personnel in platform while towing, lifting, or hauling.
- This machine should not be towed, except in the event of emergency, malfunction, power failure, or loading/unloading. Refer to the Emergency Procedures section of this manual for emergency towing procedures.
- Ensure boom is in the stowed position and the turntable locked prior to towing, lifting or hauling. The platform must be completely empty of tools.
- When lifting machine, lift only at designated areas of the machine. Lift the unit with equipment of adequate capacity.
- Refer to the Machine Operation section of this manual for lifting information.

1.5 MAINTENANCE

This sub-section contains general safety precautions which must be observed during maintenance of this machine. Additional precautions to be observed during machine maintenance are inserted at the appropriate points in this manual and in the Service and Maintenance Manual. It is of utmost importance that maintenance personnel pay strict attention to these precautions to avoid possible injury to personnel or damage to the machine or property. A maintenance program must be established by a qualified person and must be followed to ensure that the machine is safe.

Maintenance Hazards

- Shut off power to all controls and ensure that all moving parts are secured from inadvertent motion prior to performing any adjustments or repairs.
- Never work under an elevated platform until it has been fully lowered to the full down position, if possible, or otherwise supported and restrained from movement with appropriate safety props, blocking, or overhead supports.
- DO NOT attempt to repair or tighten any hydraulic hoses or fittings while the machine is powered on or when the hydraulic system is under pressure.
- Always relieve hydraulic pressure from all hydraulic circuits before loosening or removing hydraulic components.

https://truckmanualshub.com/

- DO NOT use your hand to check for leaks. Use a piece of cardboard or paper to search for leaks. Wear gloves to help protect hands from spraying fluid.

- Ensure replacement parts or components are identical or equivalent to original parts or components.
- Never attempt to move heavy parts without the aid of a mechanical device. Do not allow heavy objects to rest in an unstable position. Ensure adequate support is provided when raising components of the machine.
- Do not use machine as a ground for welding.
- When performing welding or metal cutting operations, precautions must be taken to protect the chassis from direct exposure to weld and metal cutting spatter.
- Do not refuel the machine with the engine running.
- Use only approved non-flammable cleaning solvents.
- Do not replace items critical to stability, such as batteries or solid tires, with items of different weight or specification. Do not modify unit in any way to affect stability.
- Refer to the Service and Maintenance Manual for the weights of critical stability items.

⚠ WARNING

MODIFICATION OR ALTERATION OF AN AERIAL WORK PLATFORM SHALL BE MADE ONLY WITH PRIOR WRITTEN PERMISSION FROM THE MANUFACTURER.

https://truckmanualshub.com/

Battery Hazards

- Always disconnect batteries when servicing electrical components or when performing welding on the machine.
- Do not allow smoking, open flame, or sparks near battery during charging or servicing.
- Do not contact tools or other metal objects across the battery terminals.
- Always wear hand, eye, and face protection when servicing batteries. Ensure that battery acid does not come in contact with skin or clothing.

CAUTION

BATTERY FLUID IS HIGHLY CORROSIVE. AVOID CONTACT WITH SKIN AND CLOTHING AT ALL TIMES. IMMEDIATELY RINSE ANY CONTACTED AREA WITH CLEAN WATER AND SEEK MEDICAL ATTENTION.

- Charge batteries only in a well ventilated area.
- Avoid overfilling the battery fluid level. Add distilled water to batteries only after the batteries are fully charged.

https://truckmanualshub.com/

NOTES:

https://truckmanualshub.com/

SECTION 2. USER RESPONSIBILITIES, MACHINE PREPARATION, AND INSPECTION

2.1 PERSONNEL TRAINING

The aerial platform is a personnel handling device; so it is necessary that it be operated and maintained only by trained personnel.

Persons under the influence of drugs or alcohol or who are subject to seizures, dizziness or loss of physical control must not operate this machine.

Operator Training

Operator training must cover:

1. Use and limitations of the controls in the platform and at the ground, emergency controls and safety systems.
2. Control labels, instructions, and warnings on the machine.
3. Rules of the employer and government regulations.
4. Use of approved fall protection device.
5. Enough knowledge of the mechanical operation of the machine to recognize a malfunction or potential malfunction.
6. The safest means to operate the machine where overhead obstructions, other moving equipment, and obstacles, depressions, holes, drop-offs.
7. Means to avoid the hazards of unprotected electrical conductors.
8. Specific job requirements or machine application.

Training Supervision

Training must be done under the supervision of a qualified person in an open area free of obstructions until the trainee has developed the ability to safely control and operate the machine.

Operator Responsibility

The operator must be instructed that he/she has the responsibility and authority to shut down the machine in case of a malfunction or other unsafe condition of either the machine or the job site.

https://truckmanualshub.com/

2.2 PREPARATION, INSPECTION, AND MAINTENANCE

The following table covers the periodic machine inspections and maintenance recommended by JLG Industries, Inc. Consult local regulations for further requirements for aerial work platforms. The frequency of inspections and maintenance must be increased as necessary when the machine is used in a harsh or hostile environment, if the machine is used with increased frequency, or if the machine is used in a severe manner.

NOTICE

JLG INDUSTRIES, INC. RECOGNIZES A FACTORY TRAINED SERVICE TECHNICIAN AS A PERSON WHO HAS SUCCESSFULLY COMPLETED THE JLG SERVICE TRAINING SCHOOL FOR THE SPECIFIC JLG PRODUCT MODEL.

https://truckmanualshub.com/

Table 2-1.Inspection and Maintenance Table

Type	Frequency	Primary Responsibility	Service Qualification	Reference
Pre-Start Inspection	Before using each day; or whenever there's an Operator change.	User or Operator	User or Operator	Operator and Safety Manual
Pre-Delivery Inspection (See Note)	Before each sale, lease, or rental delivery.	Owner, Dealer, or User	Qualified JLG Mechanic	Service and Maintenance Manual and applicable JLG inspection form
Frequent Inspection	In service for 3 months or 150 hours, whichever comes first; or Out of service for a period of more than 3 months; or Purchased used.	Owner, Dealer, or User	Qualified JLG Mechanic	Service and Maintenance Manual and applicable JLG inspection form
Annual Machine Inspection	Annually, no later than 13 months from the date of prior inspection.	Owner, Dealer, or User	Factory Trained Service Technician (Recommended)	Service and Maintenance Manual and applicable JLG inspection form
Preventative Maintenance	At intervals as specified in the Service and Maintenance Manual.	Owner, Dealer, or User	Qualified JLG Mechanic	Service and Maintenance Manual
NOTE: *Inspection forms are available from JLG. Use the Service and Maintenance Manual to perform inspections.*				

https://truckmanualshub.com/

Pre-Start Inspection

The Pre-Start Inspection should include each of the following:

1. **Cleanliness –** Check all surfaces for leakage (oil, fuel, or battery fluid) or foreign objects. Report any leakage to the proper maintenance personnel.
2. **Structure** - Inspect the machine structure for dents, damage, weld or parent metal cracks or other discrepancies.

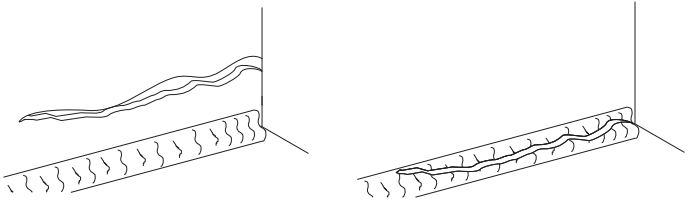

3. **Decals and Placards** – Check all for cleanliness and legibility. Make sure none of the decals and placards are missing. Make sure all illegible decals and placards are cleaned or replaced.
4. **Operators and Safety Manuals** – Make sure a copy of the Operator and Safety Manual, AEM Safety Manual (Domestic only), and ANSI Manual of Responsibilities (Domestic only) is enclosed in the weather resistant storage container.
5. **"Walk-Around" Inspection** – Refer to Figure 2-2. thru Figure 2-4.
6. **Battery –** Charge as required.
7. **Fuel** (Combustion Engine Powered Machines) – Add the proper fuel as necessary.
8. **Hydraulic Oil** – Check the hydraulic oil level. Ensure hydraulic oil is added as required.
9. **Function Check** – Once the "Walk-Around" Inspection is complete, perform a functional check of all systems in an area free of overhead and ground level obstructions. Refer to Section 4 for more specific instructions.

⚠ WARNING

IF THE MACHINE DOES NOT OPERATE PROPERLY, TURN OFF THE MACHINE IMMEDIATELY! REPORT THE PROBLEM TO THE PROPER MAINTENANCE PERSONNEL. DO NOT OPERATE THE MACHINE UNTIL IT IS DECLARED SAFE FOR OPERATION.

https://truckmanualshub.com/

Function Check

A functional check of all systems should be performed, once the walk-around inspection is complete, in an area free of overhead and ground level obstructions. First, using the ground controls, check all functions controlled by the ground controls. Next, using the platform controls, check all functions controlled by the platform controls.

⚠ WARNING

TO AVOID SERIOUS INJURY, DO NOT OPERATE MACHINE IF ANY CONTROL LEVERS OR TOGGLE SWITCHES CONTROLLING PLATFORM MOVEMENTS DO NOT RETURN TO THE OFF POSITION WHEN RELEASED.

⚠ WARNING

TO AVOID A COLLISION AND INJURY IF PLATFORM DOES NOT STOP WHEN A CONTROL SWITCH OR LEVER IS RELEASED, REMOVE FOOT FROM FOOTSWITCH OR USE EMERGENCY STOP TO STOP MACHINE.

1. Check boom limit switches. Raise and lower the Lower Boom. Check for smooth operation.

NOTE: *Perform checks from ground controls first, then from platform controls.*

2. Raise, extend, retract, and lower the Upper Boom. Check for smooth operation.
3. If tower boom does not rest on stop with machine in the stowed position, this indicates upright is out of plumb.
4. Telescope boom In and Out several cycles at various degrees of elevation lengths. Check for smooth telescope operation.
5. Swing turntable to Left and Right a minimum of 45 degrees. Check for smooth motion.
6. Check the chassis tilt indicator located on the platform control console by driving, with the machine in stowed position, up a suitable ramp of at least 6° slope. Check the tilt alarm, with the machine on the ramp, raise the upper boom until it is parallel with the chassis. DO NOT RAISE ABOVE THE PARALLEL POSITION. If the light does not illuminate, return the machine to a level surface, shut down the machine, and contact a qualified technician before resuming operation.

   For units equipped with optional tilt cutout, verify that the drive function is cutout when the boom is elevated and tilt alarm is activated.

⚠ WARNING

DO NOT DRIVE ON GRADES WHICH EXCEED THE RATED GRADEABILITY OF THE MACHINE AS INDICATED ON THE SERIAL NUMBER PLATE. DO NOT DRIVE ON SIDESLOPES WHICH EXCEED 5 DEGREES.

https://truckmanualshub.com/

7. Check that platform self-leveling system functions properly during raising and lowering of boom.
8. Check rotator for smooth operation and assure platform will rotate 75 degrees in both directions from centerline of boom.
9. Drive forward and reverse; check for proper operation.
10. Steer left and right; check for proper operation.
11. Footswitch.

WARNING

FOOTSWITCH MUST BE ADJUSTED SO THAT FUNCTIONS WILL OPERATE WHEN PEDAL IS APPROXIMATELY AT ITS CENTER OF TRAVEL. IF SWITCH OPERATES WITHIN LAST 1/4" (6 MM) OF TRAVEL, TOP OR BOTTOM, IT SHOULD BE ADJUSTED.

NOTICE

FOOTSWITCH MUST BE DEPRESSED PRIOR TO ACTIVATING ANY FUNCTION CONTROL, OTHERWISE THE FUNCTION WILL NOT WORK.

With footswitch depressed, operate LIFT and hold control. Remove foot from footswitch, motion should stop. If it does not, shut down machine and contact a qualified service technician.

12. Place the Ground/Platform Select switch to Ground. Platform controls should not operate.
13. Place Ground/Platform Select switch to Off. Platform/Ground controls should not operate.

https://truckmanualshub.com/

SkyGuard Function Test

From the Platform Console:

Test the SkyGuard feature by operating the telescope out functions and then activating the SkyGuard sensor. The telescope out function will stop and the telescope in function will operate for a short duration and the horn will sound until the SkyGuard sensor and footswitch are disengaged.

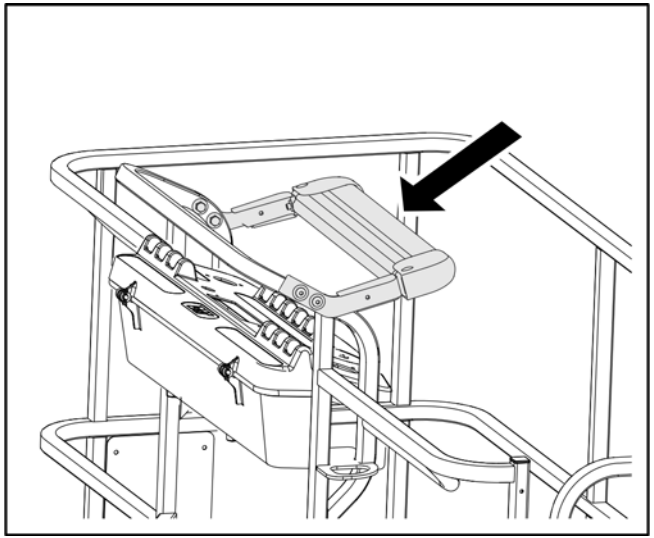

NOTE: *If the machine is equipped with both SkyGuard and Soft Touch, functions will not reverse, only stop.*

NOTE: *If equipped, ensure the blue beacon illuminates when SkyGuard is activated.*

Disengage the SkyGuard sensor, release controls, recycle the foot switch, make sure normal operation is available.

If SkyGuard remains activated after function reversal or cutout, depress and hold the SkyGuard Override Switch to allow normal use of machine functions until the SkyGuard sensor is disengaged.

https://truckmanualshub.com/

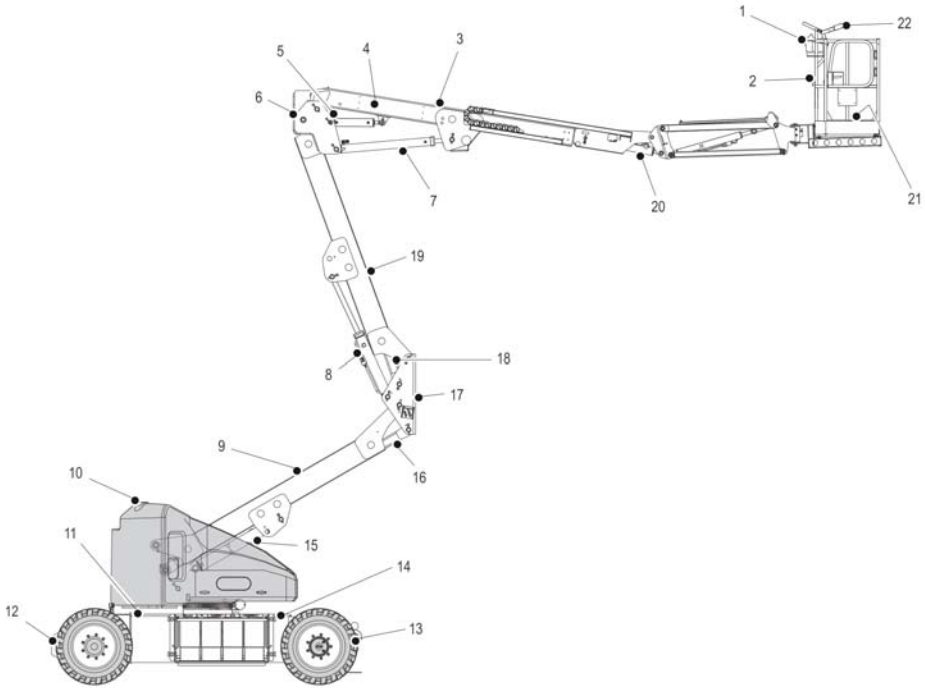

1. Platform Control Console
2. Platform
3. Upper Boom
4. Telescope Cylinder (inside)
5. Master Cylinder
6. Upper Upright
7. Upper Lift Cylinder
8. Mid Lift Cylinder
9. Lower Boom
10. Turntable
11. Frame
12. Steer Wheels
13. Drive Wheels
14. Battery Box
15. Lower Lift Cylinder
16. Lower Link
17. Lower Upright
18. Upper Link
19. Mid Boom
20. Slave Cylinder
21. Footswitch
22. SkyGuard (If Equipped)

Figure 2-1. Basic Nomenclature

https://truckmanualshub.com/

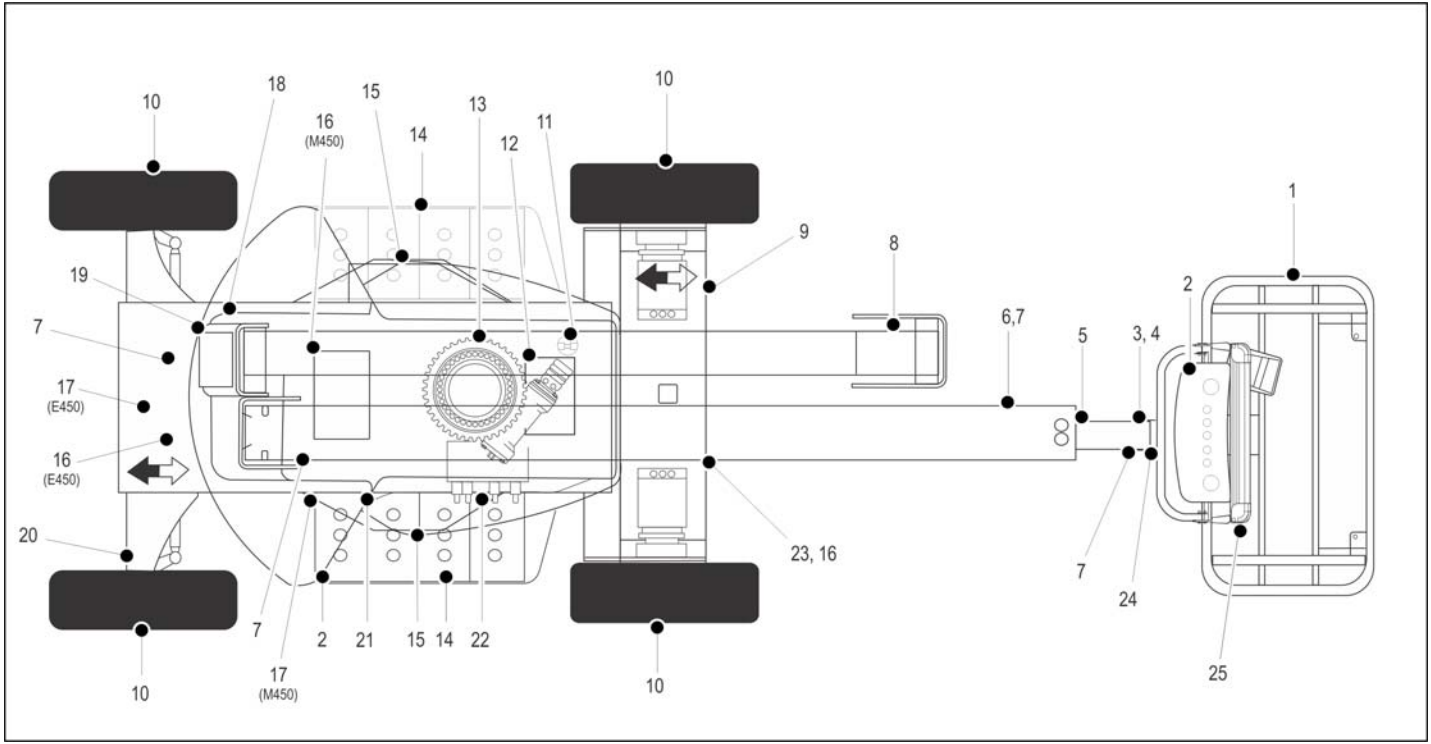

Figure 2-2. Daily Walk-Around Inspection - Sheet 1 of 3

https://truckmanualshub.com/

General

Begin the “Walk-Around Inspection” at Item 1, as noted on the diagram. Continue to the right (counterclockwise viewed from top) checking each item in sequence for the conditions listed in the “Walk-Around Inspection Checklist”.

WARNING

TO AVOID POSSIBLE INJURY BE SURE MACHINE POWER IS OFF DURING "WALK-AROUND INSPECTION".

NOTICE

DO NOT OVERLOOK VISUAL INSPECTION OF CHASSIS UNDERSIDE. CHECKING THIS AREA MAY RESULT IN DISCOVERY OF CONDITIONS WHICH COULD CAUSE EXTENSIVE MACHINE DAMAGE.

NOTE: *On each item, make sure there are no loose or missing parts, that they are securely fastened and that no visible damage exists in addition to any other criteria mentioned.*

1. Platform and Gate Assembly - Platform mounting pins secure. Footswitch in good working order; not modified, disabled or blocked; Bar slides freely.
2. Platform & Ground Control Console - Switches and levers return to neutral and are properly secured, decals/placards secure and legible, control marking legible.
3. Rotator - See Note.
4. Jib - See Note.
5. Jib Rotator - See Note.
6. Boom Sections - See Note.
7. All Hydraulic Cylinders - No visible damage; pivot pins and hydraulic hoses undamaged, not leaking.
8. Limit Switches - See Note.

Figure 2-3. Daily Walk-Around Inspection - Sheet 2 of 3

https://truckmanualshub.com/

9. Drive Axle and Motor - See Note.
10. Wheel/Tire Assembly - No loose or missing lug nuts. Inspect for worn tread, cuts, tears or other discrepancies. Inspect wheels for damage and corrosion.
11. Swing Motor and Worm Gear - See Note.
12. Hydraulic Pump and Reservoir - Properly secured; no visible damage or hydraulic leaks. Recommended hydraulic fluid level on dipstick (system shut down, boom in stowed position). Breather cap/dipstick secure and working.
13. Turntable Bearing - No loose or missing hardware; no visible damage; evidence of proper lubrication. No loose bolts or looseness between bearing and structure.
14. Battery Compartment Right Side - Batteries have proper electrolyte level; cables tight; no visible damage or corrosion.
15. Cowling and Latches - See Note.
16. Battery Charger - See Note.
17. Brake/Steer Valve - See Note.
18. Boom/Upright - No visible damage; All pins properly secured. Upright in vertical position. If Upright does not rest on stop with machine in the stowed position, this indicates upright is out of plumb.
19. Counterweight - See Note.
20. Tie Rod Ends and Steering Spindles - See Note. Tie rod end stubs locked.
21. Manual Descent Valve - See Note.
22. Control Valve - See Note.
23. Frame - See Note.
24. Platform Pivot Pins - Properly secured.
25. SkyGuard - See Inspection Note.

Figure 2-4. Daily Walk-Around Inspection - Sheet 3 of 3

https://truckmanualshub.com/

NOTES:

https://truckmanualshub.com/

SECTION 3. MACHINE CONTROLS AND INDICATORS

3.1 GENERAL

NOTICE

THE MANUFACTURER HAS NO DIRECT CONTROL OVER MACHINE APPLICATION AND OPERATION. THE USER AND OPERATOR ARE RESPONSIBLE FOR CONFORMING WITH GOOD SAFETY PRACTICES.

This section provides the necessary information needed to understand control functions.

3.2 CONTROLS AND INDICATORS

NOTE: *This machines is equipped with control panels that use symbols to indicate control functions. On ANSI machines, refer to decal located on the control box guard in front of the control box or by the ground controls for these symbols and the corresponding functions.*

NOTE: *The indicator panels use different shaped symbols to alert the operator to different types of operational situations that could arise. The meaning of those symbols are explained below.*

Indicates a potentially hazardous situation, which if not corrected, could result in serious injury or death. This indicator will be red.

Indicates an abnormal operating condition, which if not corrected, may result in machine interruption or damage. This indicator will be yellow.

Indicates important information regarding the operating condition, i.e. procedures essential for safe operation. This indicator will be green with the exception of the capacity indicator which will be green or yellow depending upon platform position.

https://truckmanualshub.com/

Ground Control Station

(See Figure 3-1. and Figure 3-2.)

NOTE: *When machine is shut down the Platform/Ground Select switch and Emergency Stop must be positioned to Off.*

NOTE: *The Function Enable switch must be held down in order to operate Telescope, Lower Lift, Swing, Main Lift, Jib Lift, Platform Level Override, and Platform Rotate functions.*

1. System Distress Indicator (If Equipped)

The system distress indicator lights to signify an abnormal condition for the generator engine (high oil temperature or low oil pressure) or, on electric machines, an electrical system fault.

NOTE: *The engine will automatically shut down under the following conditions:*

High Oil Temperature
Low Oil Pressure
Engine Overspeed
Overvoltage

2. Platform Overload (If equipped)

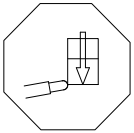

Indicates the platform has been overloaded.

3. Generator/Engine Start Button (If equipped)

The generator/engine start push-button switch allows the generator to be started manually to top-off the battery charge. The generator will start automatically when the batteries reach a low-charge state and the Generator Enable switch on the platform console is in the on position.

NOTE: *The engine will not start if the batteries are fully charged or if the Generator Enable switch on the platform console is not in the on position.*

4. Battery Indicator and Hourmeter

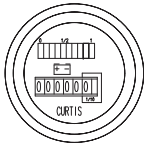

An hourmeter, installed in the upper portion of the Ground Control Box, registers the amount of machine operating time. The hourmeter registers up to 9,999.9 hours and cannot be reset.

https://truckmanualshub.com/

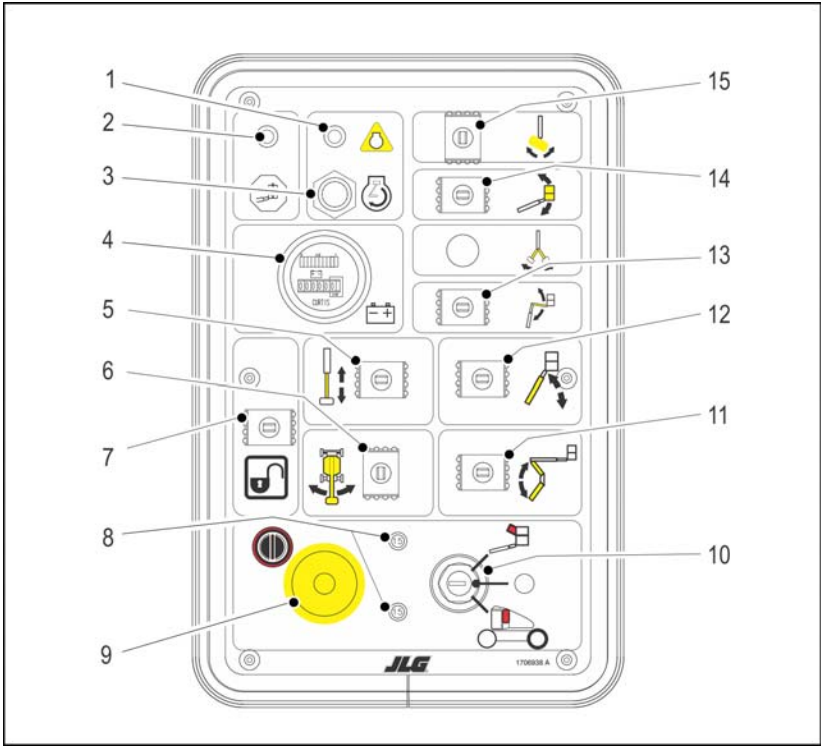

1. System Distress Indicator
2. Platform Overload Indicator
3. Engine/Generator Start Button
4. Battery Condition Indicator & Hourmeter
5. Telescope
6. Swing
7. Function Enable
8. Circuit Breakers
9. Emergency Stop
10. Platform/Ground Select
11. Lower/Mid Lift
12. Upper Boom Lift
13. Jib
14. Platform Leveling
15. Rotate

Figure 3-1. Ground Control Station

https://truckmanualshub.com/

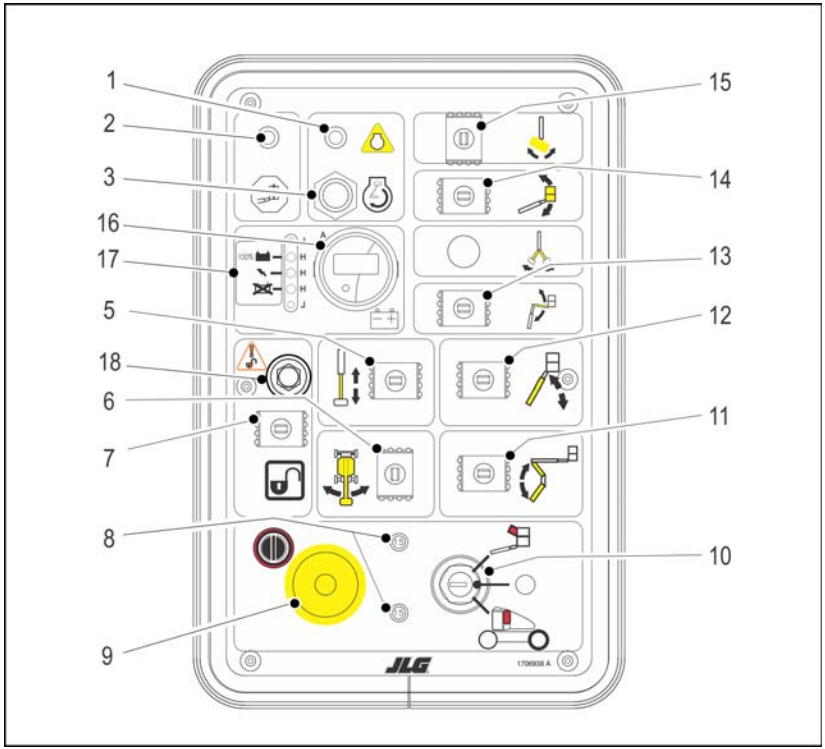

1. System Distress Indicator
2. Platform Overload Indicator
3. Engine/Generator Start Button
4. Not Used
5. Telescope
6. Swing
7. Function Enable
8. Circuit Breakers
9. Emergency Stop
10. Platform/Ground Select
11. Lower/Mid Lift
12. Upper Boom Lift
13. Jib
14. Platform Leveling
15. Rotate
16. Indicator Gauge
17. Charger Status
18. Machine Safety System Override (MSSO)

Figure 3-2. Ground Control Station with Machine Safety System Override (MSSO) (CE Only)

https://truckmanualshub.com/

5. Telescope

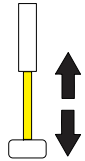

Provides for extension and retraction of Upper Boom when positioned to in or out.

6. Swing

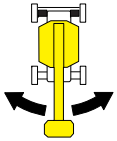

The Swing control switch provides 360 degrees non-continuous turntable rotation. To activate SWING, position switch to Left or Right.

7. Function Enable

The enable switch must be held "Down" to enable all boom controls when the engine is running.

8. Circuit Breakers

The circuit breakers open (pop out) to indicate a short or overload somewhere on the machine.

9. Power/Emergency Stop Switch

A two-position red mushroom shaped switch furnishes power to Platform/Ground Select switch when pulled out (on). When pushed in (off), power is shut off to the Platform/Ground Select switch.

10. Platform/Ground Select Switch

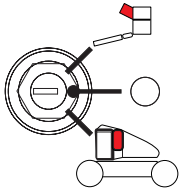

A three position, key operated switch supplies power to the platform control console when positioned to Platform. With the switch key in the Ground position, power is shut off to platform and only ground controls are operable.

NOTE: *With Platform/Ground Select switch in the center position, power is shut off to controls at both operating stations.*

https://truckmanualshub.com/

11. Lower/Mid Boom Lift

Provides for raising and lowering of Lower Boom when positioned to Up or Down.

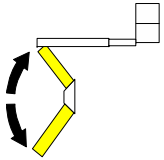

12. Upper Boom Lift

Provides for raising and lowering of Upper Boom when positioned to Up or Down.

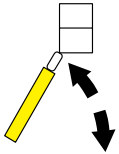

13. Jib (If equipped)

The Jib control switch provides raising and lowering of the jib when positioned up or down.

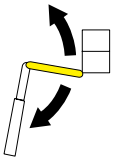

WARNING

ONLY USE THE PLATFORM LEVELING OVERRIDE FUNCTION FOR SLIGHT LEVELING OF THE PLATFORM. INCORRECT USE COULD CAUSE THE LOAD/OCCUPANT TO SHIFT OR FALL. FAILURE TO DO SO COULD RESULT IN DEATH OR SERIOUS INJURY.

14. Platform Leveling Override

A three position switch allows the operator to adjust the automatic self leveling system. This switch is used to adjust platform level in situations such as ascending/descending a grade.

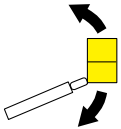

15. Rotate

A three position Rotate control switch permits rotation of the platform when positioned to left or right.

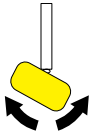

https://truckmanualshub.com/

16. Indicator Gauge

Registers the amount of time the machine has been in use, with functions operating. In the event of a fault, the hourmeter also displays the three digit fault code. Refer to the Service Manual for a listing of fault codes. Additionally, there is a small, red indicator light that will blink when there is a fault on the machine to draw operator attention to the display.

17. Charger Status

The Charger Status LEDs give a visual indicator of the status of the battery charger. The red LED indicates Charging Abnormal. The yellow LED indicates charging in progress. The green LED indicates charging is complete.

18. Machine Safety System Override (MSSO) (CE Only)

Provides emergency override of function controls that are locked out in the event of Load Sense System activation.

Platform Station

(See Figure 3-3.)

1. Posi-Track Control

Activating the Posi-Track switch allows the operator to engage positive traction for the time period pre-set in the controller. Posi-traction occurs by changing the drive motors from a series to parallel arrangement, causing available power to be distributed evenly between the two drive wheels. The control system may also engage the posi-track function automatically.

⚠ WARNING

ONLY USE THE PLATFORM LEVELING OVERRIDE FUNCTION FOR SLIGHT LEVELING OF THE PLATFORM. INCORRECT USE COULD CAUSE THE LOAD/OCCUPANT TO SHIFT OR FALL. FAILURE TO DO SO COULD RESULT IN DEATH OR SERIOUS INJURY.

2. Platform Leveling Override

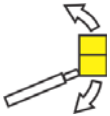

A three position switch allows the operator to adjust the automatic self leveling system. This switch is used to adjust platform level in situations such as ascending/descending a grade.

https://truckmanualshub.com/

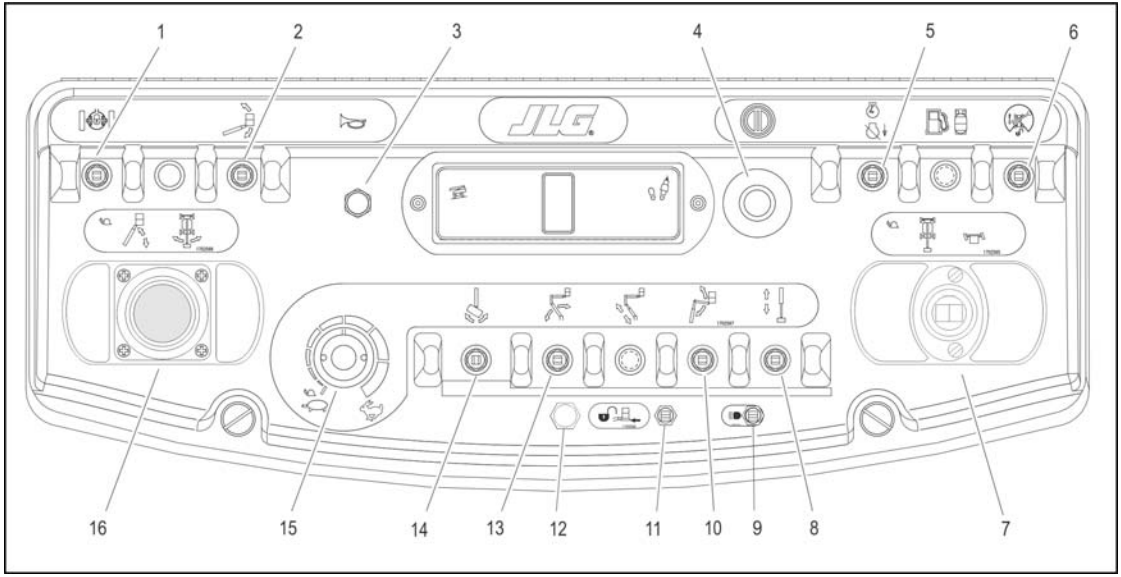

1. Posi-Track
2. Platform Leveling Override
3. Horn
4. Power/Emergency Stop
5. Generator Enable
6. Drive Orientation Override
7. Drive/Steer
8. Telescope
9. Lights
10. Jib
11. Soft Touch/SkyGuard Override
12. Soft Touch/SkyGuard Indicator
13. Lower Boom Lift
14. Platform Rotate
15. Function Speed
16. Main Lift/Swing

Figure 3-3. Platform Station

https://truckmanualshub.com/

3. Horn

A push-type Horn switch supplies electrical power to an audible warning device when pressed.

4. Power/Emergency Stop

A two-position red mushroom shaped switch furnishes power to Platform Controls when pulled out (on). When pushed in (off), power is shut off to the platform functions.

Within about 2 seconds of pulling the switch out, the machine will perform a diagnostic check of the various electrical circuits, and if everything is OK, the platform alarm will beep once. During this time the lights on the indicator panel will also blink once as a bulb check.

5. Generator Enable Control (If equipped)

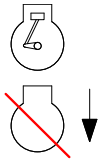

The Generator Enable control switch, when in the off position, allows the operator to prevent the generator engine from starting when using the machine indoors. When in the on position (and the ground Emergency Stop Switch on [pulled out]), the generator is enabled to automatically start when the batteries need charged.

6. Drive Orientation Override

When the boom is swung over the rear tires or further in either direction, the Drive Orientation indicator will illuminate when the drive function is selected. Push and release the switch, and within 3 seconds move the Drive/Steer control to activate drive or steer. Before driving, locate the black/white orientation arrows on both the chassis and the platform controls and match the control direction arrow to the intended direction of travel.

https://truckmanualshub.com/

NOTE: *To operate the Drive joystick, pull up on the locking ring below the handle.*

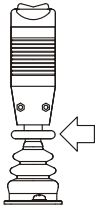

NOTE: *The Drive joystick is spring loaded and will automatically return to neutral (off) position when released.*

7. Drive/Steer

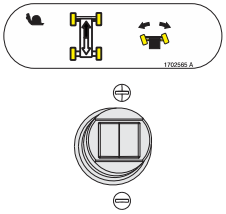

The Drive controller provides for driving either forward or backward when positioned to Forward or Reverse. The controller is 'ramped' to allow infinitely variable drive speed between fast and slow.

Positioning the steer control thumb operated switch Right or Left enables steering the machine to the right or left respectively.

NOTE: *When lower boom is raised above horizontal, or the upper boom is raised approximately 16 inches (40.64 cm) above boom rest, the high drive function will automatically switch to low drive. This also occurs when Function Speed Control is clicked on creep.*

⚠ WARNING

TO AVOID SERIOUS INJURY, DO NOT OPERATE MACHINE IF ANY CONTROL LEVERS OR TOGGLE SWITCHES CONTROLLING PLATFORM MOVEMENT DO NOT RETURN TO THE OFF OR NEUTRAL POSITION WHEN RELEASED.

8. Telescope Control

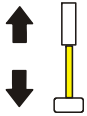

The Telescope control switch affords extension and retraction of the main boom when positioned to In or Out.

9. Lights (If Equipped)

This switch operates control console panel lights and head lights if the machine is so equipped.

10. Jib (If Equipped)

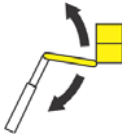

Push forward to lift up, pull back to lift down. Variable lift speed is using the Function Speed Control.

https://truckmanualshub.com/

11. Soft Touch/SkyGuard Override Switch (If equipped)

The machine can be equipped with one of three options. It may have Soft Touch, SkyGuard, or both Soft Touch and SkyGuard.

If equipped with Soft Touch, the switch enables the functions that were cut out by the Soft Touch system to operate again at creep speed, allowing the operator to move the platform away from the obstacle that caused the shutdown situation.

If equipped with SkyGuard, the switch enables functions cut out by the Skyguard system to be operated again, allowing the operator to resume use of machine functions.

If equipped with both Soft Touch and SkyGuard, the switch operates like described above and allows the operator to override the system that has experienced a cutout situation.

12. Soft Touch/SkyGuard Indicator (If Equipped)

Indicates the Soft Touch bumper is against an object or the SkyGuard sensor has been activated. All controls are cut out until the override button is pushed. For Soft Touch, controls are then active in the Creep Mode or for SkyGuard, controls will work normally.

13. Lower Boom Lift

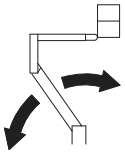

Provides for raising and lowering of Lower and Mid Boom when positioned to Up or Down. Upper lift will not function when operating lower lift.

14. Platform Rotate

The Platform Rotate control switch allows the operator to rotate the basket to the left or right when positioned to the desired direction.

https://truckmanualshub.com/

15. Function Speed Control

Adjusts speed of Boom and Swing Functions. Rotate counterclockwise for slower speed and clockwise for faster speed. To adjust Drive, Swing, and Main Lift to creep, turn knob fully counterclockwise until it clicks.

NOTE: *To operate the Main Boom Lift/Swing joystick, pull up on the locking ring below the handle.*

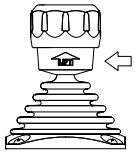

NOTE: *The Main Boom Lift/Swing joystick is spring loaded and will automatically return to neutral (off) position when released.*

16. Main Lift/Swing Controller

Provides main lift and swing. Push forward to lift up, pull backward to boom down. Move right to swing right, move left to swing left. Moving the joystick activates switches to provide the functions selected.

NOTE: *Lower lift will not function when operating main lift.*

https://truckmanualshub.com/

Table 3-1. Simultaneous Functions

If This Function is Selected:	These Functions Will Also Work at the Same Time:				
Drive and Steer		Swing	Lower Lift**	Upper Lift**	Telescope
Swing	Drive and Steer		Lower Lift**	Upper Lift**	Telescope
Lower Lift	Drive and Steer	Swing*		No	Telescope*
Upper Lift	Drive and Steer	Swing	No		Telescope
Telescope	Drive and Steer	Swing*	Lower Lift**	Upper Lift**	
Jib	Drive and Steer	Swing*	Lower Lift**	Upper Lift**	Telescope
Platform Rotate	Drive and Steer	No	No	No	No

Note: Boom functions may be slower when selected with another function than when operated individually, due to sharing of oil.

* These functions may move very slowly (or not at all) if the first function selected (Lower Lift or Swing) is being operated at full speed, due to sharing of oil.

** Lower Lift and Upper Lift will not function simultaneously. Upper Lift always prevails.

https://truckmanualshub.com/

Platform Control Indicator Panel

(See Figure 3-4., Platform Control Indicator Panel)

1. Tilt Alarm Warning Light and Alarm

This illuminator indicates that the chassis is on a slope. An alarm will also sound when the chassis is on a slope and the boom is above horizontal. If lit when boom is raised or extended, retract and lower to below horizontal then reposition machine so that it is level before continuing operation. If the boom is above horizontal and the machine is on a slope, the tilt alarm warning light will illuminate and an alarm will sound and Creep is automatically activated.

WARNING

IF TILT WARNING LIGHT IS ILLUMINATED WHEN BOOM IS RAISED OR EXTENDED, RETRACT AND LOWER TO BELOW HORIZONTAL THEN REPOSITION MACHINE SO THAT IT IS LEVEL BEFORE EXTENDING BOOM OR RAISING BOOM ABOVE HORIZONTAL.

2. Platform Overload (If equipped)

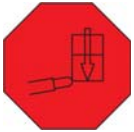

Indicates the platform has been overloaded.

https://truckmanualshub.com/

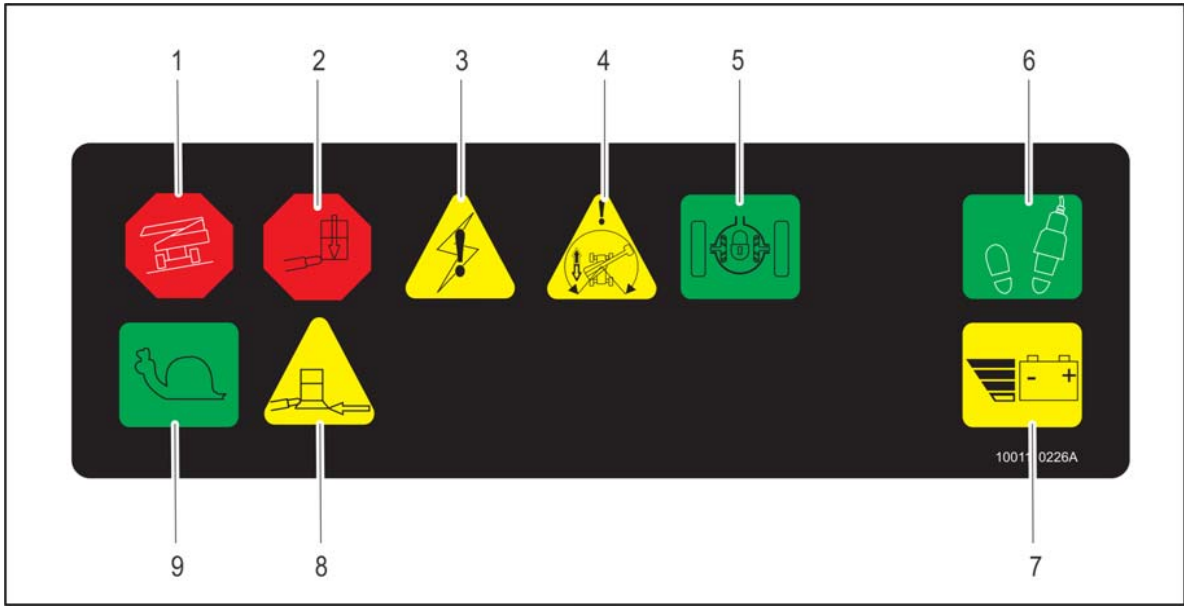

1. Tilt
2. Platform Overload
3. System Distress
4. Drive Orientation
5. Posi-Track
6. Footswitch Enable
7. Low Battery
8. Soft Touch
9. Creep Speed

Figure 3-4. Platform Control Indicator Panel

https://truckmanualshub.com/

3. System Distress Indicator

The system distress indicator lights to signify an abnormal condition for the generator engine (high oil temperature or low oil pressure) or, on all electric machines, an electrical system fault.

The four likely causes of a system fault are:

a. The seven second enable time has been allowed to lapse or a function was selected before depressing the footswitch. The system reads this condition as a fault, just as it would if the footswitch were jammed in the depressed position or a function switch were stuck in the on position. Re-depress the footswitch to power the controls and extinguish the light.

b. The maximum power limit has been reached and the machine is not moving. This could happen when the machine is stuck or when attempting to travel over rough terrain or on steep grades which exceed the rated gradeability of the machine. This condition is comparable to stalling the engine by asking it to provide more power than it was designed to do.

c. The batteries are nearly depleted, and should be charged very soon to prevent having the machine stop at an inconvenient place.

d. There is some other fault in one of the circuits. If so determine the cause by counting the flash code, a number of flashes followed by a pause followed by another number of flashes, and refer to the service manual.

NOTE: *The engine will automatically shut down under the following conditions:*

High Engine Oil Temperature
Low Engine Oil Pressure
Engine Overspeed
Generator Overvoltage

4. Drive Orientation Indicator

When the boom is swung beyond the rear drive tires or further in either direction, the Drive Orientation indicator will illuminate when the drive function is selected. This is a signal for the operator to verify that the drive control is being operated in the proper direction (i.e. controls reversed situations).

https://truckmanualshub.com/

5. Posi-Track Indicator

This indicator lights to show that posi-traction is operating.

6. Enable Indicator/Footswitch

To operate any function, the footswitch must be depressed and the function selected within seven seconds. The enable indicator shows that the controls are enabled. If a function is not selected within seven seconds, or if a seven second lapse between ending one function and beginning the next function, the enable light will go out and the footswitch must be released and depressed again to enable the controls.

Releasing the footswitch removes power from all controls and applies the drive brakes.

WARNING

TO AVOID SERIOUS INJURY, DO NOT REMOVE, MODIFY OR DISABLE THE FOOTSWITCH BY BLOCKING OR ANY OTHER MEANS.

WARNING

FOOTSWITCH MUST BE ADJUSTED IF FUNCTIONS ACTIVATE WHEN SWITCH ONLY OPERATES WITHIN LAST 1/4" OF TRAVEL, TOP OR BOTTOM.

7. Low Battery Indicator

Indicates the batteries are low and need to be charged.

https://truckmanualshub.com/

8. Soft Touch Indicator (If Equipped)

When illuminated (Yellow) the Soft Touch bumper is against an object. All controls are disabled until the override button is pushed, at which time controls are active in the Creep mode.

9. Creep Speed Indicator

When the Function Speed Control is turned to the creep position, the indicator acts as a reminder that all functions are set to the slowest speed.

https://truckmanualshub.com/

SECTION 4. MACHINE OPERATION

4.1 DESCRIPTION

This machine is a self-propelled hydraulic personnel lift equipped with a work platform on the end of an elevating and rotating boom.

The primary operator control station is in the platform. From this control station, the operator can drive and steer the machine in both forward and reverse directions. The operator can raise or lower the upper or lower boom or swing the boom to the left or right. Standard boom swing is 360 degree non-continuous left and right of the stowed position. The machine has a Ground Control Station which will override the Platform Control Station. Ground Controls operate Upper and Lower Boom Lift and Swing, and are to be used in an emergency to lower the platform to the ground should the operator in the platform be unable to do so.

4.2 OPERATING CHARACTERISTICS AND LIMITATIONS

Capacities

The boom can be raised above horizontal with or without any load in platform, if:

1. Machine is positioned on a smooth, firm and level surface.
2. Load is within manufacturers rated design capacity.
3. All machine systems are functioning properly.
4. Proper tire pressure.
5. Machine is as originally equipped from JLG.

https://truckmanualshub.com/

Stability

Machine stability is based on two positions which are called Forward and Backward stability. The machines position of least Forward stability is shown in Figure 4-1., Position of Least Forward Stability, and its position of least Backward stability is shown in Figure 4-2., Position of Least Backward Stability.

WARNING

TO AVOID FORWARD OR BACKWARD TIPPING, DO NOT OVERLOAD MACHINE OR OPERATE THE MACHINE ON AN OUT-OF-LEVEL SURFACE.

4.3 MOTOR OPERATION

Power/Emergency Stop

The Power/Emergency Stop switch, when pulled out (on), provides battery power for all machine functions. The switch should be pushed in (off) when recharging the batteries or parking the machine overnight.

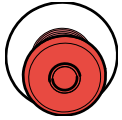

NOTE: *If equipped with the optional on-board generator, the Emergency Stop switch must be left on (pulled out) to allow for automatic charging of the batteries.*

Within about 2 seconds of pulling the switch out, the machine will perform a diagnostic check of the various electrical circuits, and if everything is OK, the platform alarm will beep once. During this time the lights on the indicator panel will also blink once as a bulb check.

https://truckmanualshub.com/

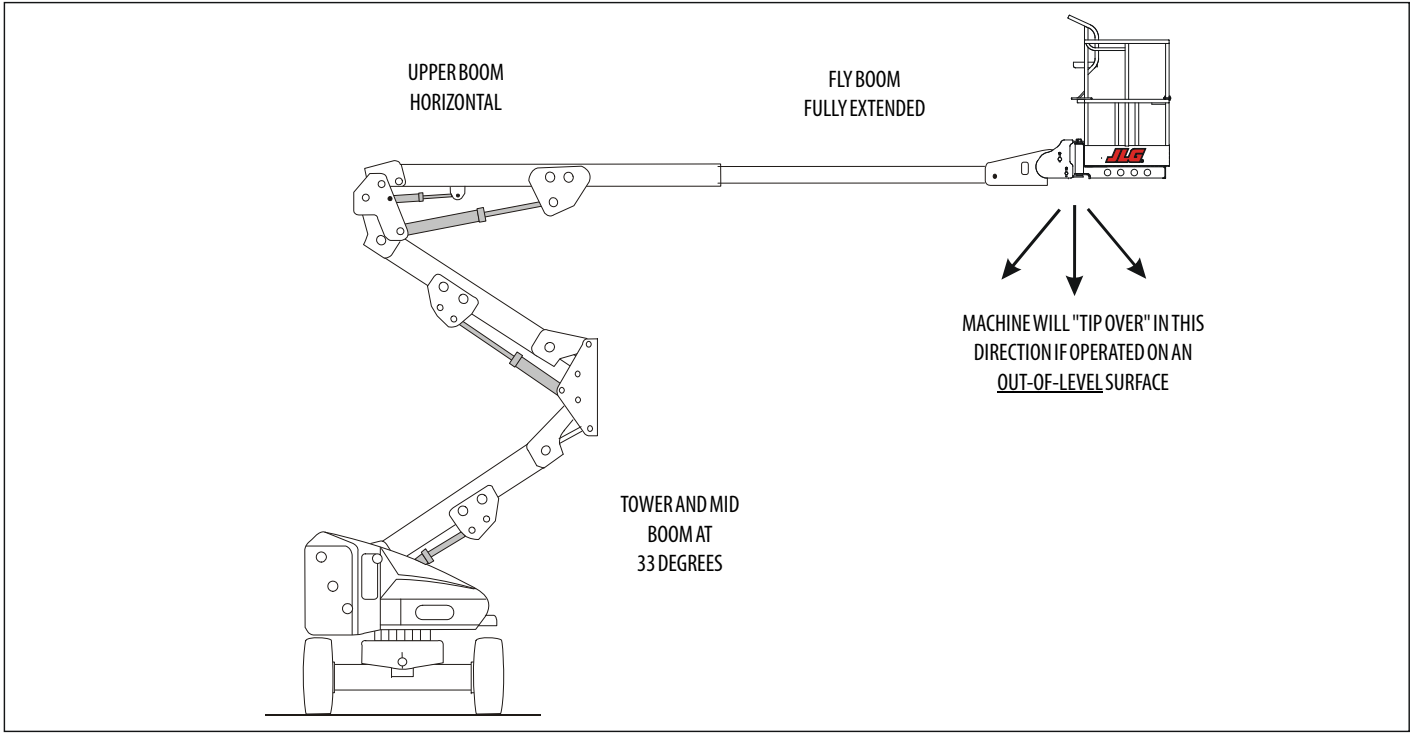

Figure 4-1. Position of Least Forward Stability

https://truckmanualshub.com/

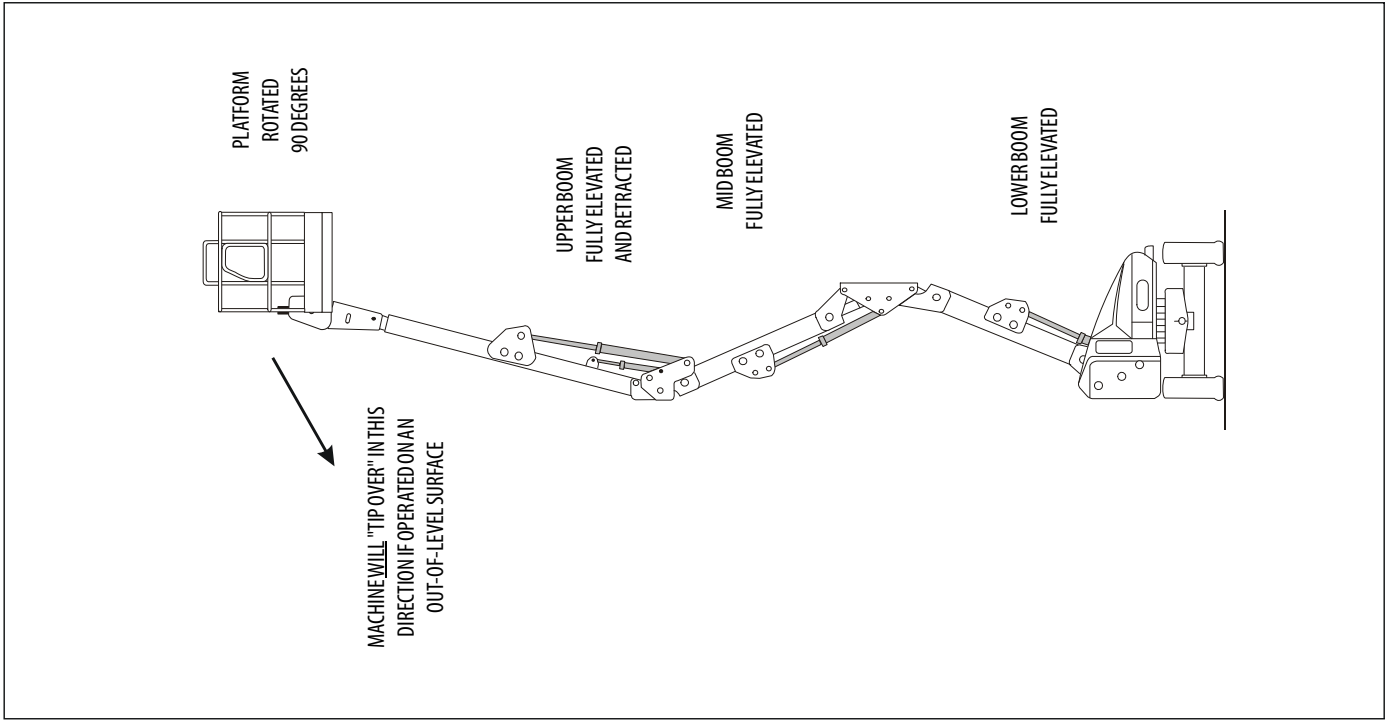

Figure 4-2. Position of Least Backward Stability

https://truckmanualshub.com/

Platform/Ground Select Switch

The Platform/Ground Select switch directs battery power to the desired control station when the Power/Emergency Stop switch is pulled out (on). With the switch held in the Ground position battery power is supplied to the ground control station. When the switch is in the Platform position, battery power is supplied to the platform control station.

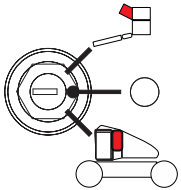

Motor Activation

NOTICE

FOOTSWITCH MUST BE DEPRESSED PRIOR TO ACTIVATING ANY FUNCTION, OTHERWISE FUNCTION WILL NOT OPERATE.

The motor becomes activated and operates the desired function when the Emergency Stop switch is pulled out (on), the Platform/Ground select switch is in the appropriate position and the Footswitch is depressed.

⚠ CAUTION

IF A MOTOR MALFUNCTION NECESSITATES UNSCHEDULED SHUTDOWN, DETERMINE AND CORRECT CAUSE BEFORE RESUMING ANY OPERATION.

4.4 TRAVELING (DRIVING)

NOTE: *For units equipped with optional tilt cutout, verify that the drive function is cut out when the boom is elevated and tilt alarm is activated.*

NOTE: *When lower boom is raised above horizontal, or the upper boom is raised approximately 16 inches (40.6 cm) above boom rest, the high drive function will automatically be in low drive.*

NOTICE

IF THE MACHINE IS OPERATED AT A VERY SLOW SPEED OR STALLED WHEN CLIMBING A GRADE OF 20% OR GREATER, DRIVE FUNCTION WILL STOP. REMOVE FOOT FROM FOOT-SWITCH, AND DEPRESS FOOTSWITCH TO RESET.

⚠ WARNING

DO NOT DRIVE WITH BOOM ABOVE HORIZONTAL EXCEPT ON A SMOOTH, FIRM AND LEVEL SURFACE.

TO AVOID LOSS OF TRAVEL CONTROL OR "TIP OVER" ON GRADES AND SIDE SLOPES, DO NOT DRIVE MACHINE ON GRADES EXCEEDING THOSE SPECIFIED ON THE SERIAL NUMBER PLATE.

DO NOT DRIVE ON SIDESLOPES WHICH EXCEED 5 DEGREES.
AVOID ANY TERRAIN FEATURES WHICH COULD CAUSE THE MACHINE TO TIP OVER.

https://truckmanualshub.com/

USE EXTREME CAUTION WHEN DRIVING IN REVERSE AND AT ALL TIMES WHEN DRIVING WITH PLATFORM ELEVATED AND WHEN DRIVING WITH ANY PART OF MACHINE WITHIN 6 FEET OF ANY OBSTRUCTION.

⚠ WARNING

BEFORE DRIVING, LOCATE THE BLACK/WHITE ORIENTATION ARROWS ON BOTH THE CHASSIS AND THE PLATFORM CONTROLS. MOVE THE DRIVE CONTROLS IN A DIRECTION MATCHING THE DIRECTIONAL ARROWS FOR THE INTENDED DIRECTION OF TRAVEL.

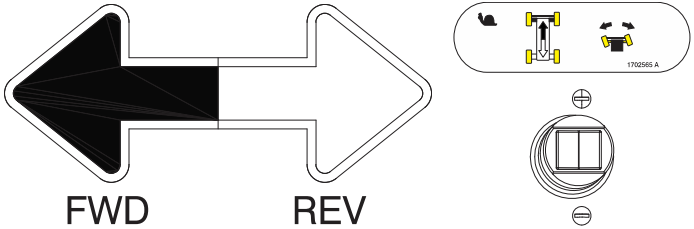

Traveling Forward and Reverse

NOTICE

FOOTSWITCH MUST BE DEPRESSED PRIOR TO ACTIVATING ANY FUNCTION, OTHERWISE FUNCTION WILL NOT OPERATE.

1. At Platform Controls, pull out Emergency Stop switch and activate footswitch.

2. Position Drive controller to Forward or Reverse as desired. Angle of controller will determine travel speed.

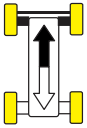

This machine is equipped with a Drive Orientation Indicator. The yellow light on the platform control console indicates that the boom is swung beyond the rear drive tires and the machine may Drive/Steer in the opposite direction from the movement of the controls. If the indicator is illuminated, operate the Drive function in the following manner:

https://truckmanualshub.com/

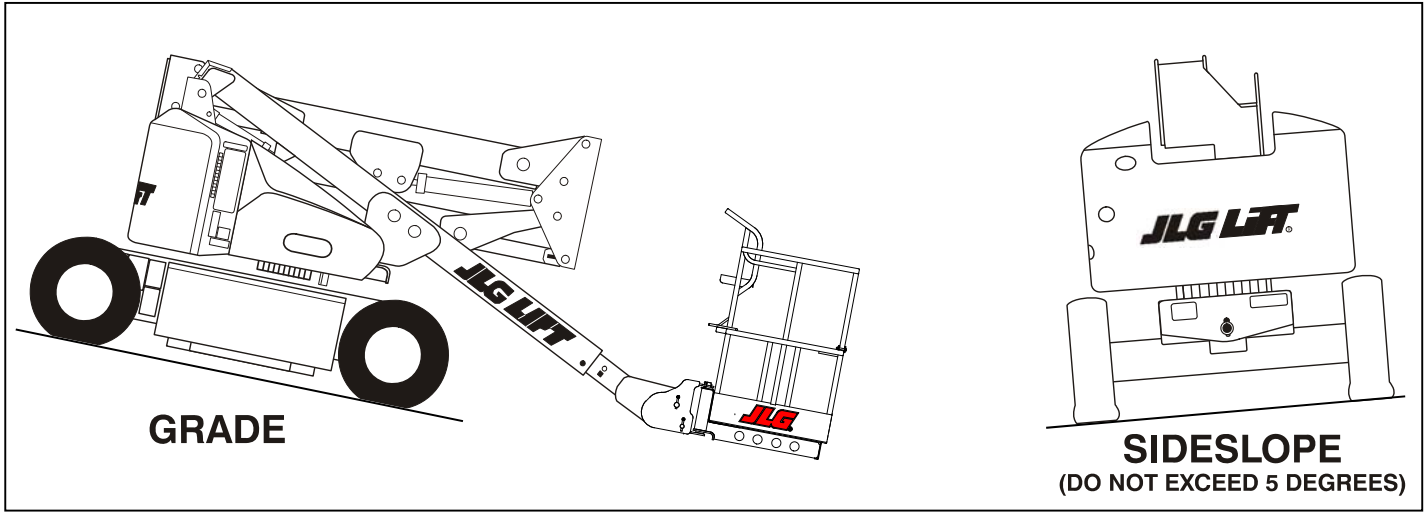

Figure 4-3. Grade and Side Slopes

https://truckmanualshub.com/

1. Match the black and white direction arrows on both platform control panel and the chassis to determine the direction the machine will travel.

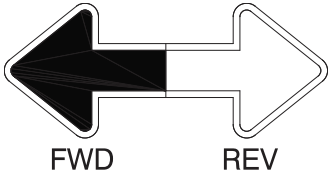

2. Push and release the Drive Orientation Override switch. Within 3 seconds, slowly move the Drive control toward the arrow matching the intended direction of machine travel. The indicator light will flash during the 3 second interval until the drive function is selected.

4.5 STEERING

Depress footswitch, position thumb switch on Drive/Steer controller to Right for steering right, or to Left for steering left.

4.6 PLATFORM

Loading From Ground Level

1. Position chassis on a smooth, firm and level surface.
2. If total load (personnel, tools and supplies) is 500 LB. (227 kg for ANSI markets and 230 kg for CE and Australia markets) or less, distribute load uniformly on platform floor and proceed to work position.

Loading From Positions Above Ground Level

Before loading weight to platform above ground level:

1. Determine what the total weight will be after additional weight is loaded (personnel, tools and supplies).
2. If total weight in platform will be 500 LBS. (227 kg for ANSI markets and 230 kg for CE and Australia markets) or less, proceed with adding weight.

https://truckmanualshub.com/

Platform Level Adjustment

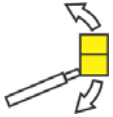

1. Depress footswitch. To raise platform, position Platform/Level control switch Up and hold until platform is level.
2. Depress footswitch. To lower platform, position Platform/Level control switch to Down and hold until platform is level.

WARNING

ONLY USE THE PLATFORM LEVELING OVERRIDE FUNCTION FOR SLIGHT LEVELING OF THE PLATFORM. INCORRECT USE COULD CAUSE THE LOAD/OCCUPANT TO SHIFT OR FALL. FAILURE TO DO SO COULD RESULT IN DEATH OR SERIOUS INJURY.

Platform Rotation

1. Depress footswitch. To rotate platform to the left, Platform Rotate control switch is positioned to the Left and held until desired position is reached.
2. Depress footswitch. To rotate platform to the right, Platform Rotate control switch is positioned to the Right and held until desired position is reached.

4.7 BOOM

WARNING

A RED TILT WARNING LIGHT IS LOCATED ON THE CONTROL CONSOLE WHICH LIGHTS WHEN THE CHASSIS IS ON A 5 DEGREE OR GREATER SLOPE. DO NOT SWING OR RAISE BOOM ABOVE HORIZONTAL WHEN LIGHT IS LIT OR AUDIBLE ALARM SOUNDS.

DO NOT DEPEND ON TILT ALARM AS A LEVEL INDICATOR FOR THE CHASSIS. TILT ALARM INDICATES CHASSIS IS ON A SEVERE SLOPE (5 DEGREE OR GREATER). CHASSIS MUST BE LEVEL BEFORE SWINGING, OR RAISING BOOM ABOVE HORIZONTAL.

TO AVOID TIP OVER IF RED TILT WARNING LIGHT LIGHTS WHEN BOOM IS RAISED ABOVE HORIZONTAL, LOWER PLATFORM TO GROUND LEVEL. THEN REPOSITION MACHINE SO THAT CHASSIS IS LEVEL BEFORE RAISING BOOM.

TRAVELING WITH BOOM BELOW HORIZONTAL IS PERMITTED ON GRADES NOT EXCEEDING THOSE SPECIFIED ON THE SERIAL NUMBER PLATE.

TO AVOID SERIOUS INJURY, DO NOT OPERATE MACHINERY IF ANY CONTROL LEVER OR TOGGLE SWITCH CONTROLLING PLATFORM MOVEMENT DOES NOT RETURN TO THE 'OFF' OR NEUTRAL POSITION WHEN RELEASED.

TO AVOID A COLLISION AND INJURY IF PLATFORM DOES NOT STOP WHEN A CONTROL SWITCH OR LEVER IS RELEASED, REMOVE FOOT FROM FOOTSWITCH OR USE EMERGENCY STOP SWITCH TO STOP THE MACHINE.

https://truckmanualshub.com/

Swinging the Boom

To swing boom, with footswitch activated, position Swing control switch to Right or Left for direction desired.

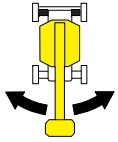

NOTICE

WHEN SWINGING THE BOOM MAKE SURE THERE IS AMPLE ROOM FOR THE BOOM TO CLEAR SURROUNDING WALLS, PARTITIONS AND EQUIPMENT.

Raising and Lowering the Lower and Mid Boom

To raise or lower the Lower and Mid Boom, with footswitch activated, position Lower Boom Lift switch to UP or DOWN as desired.

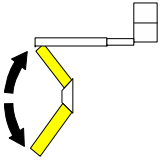

Raising and Lowering the Upper Boom

To raise or lower the Upper Boom, with footswitch activated, position Upper Boom Lift switch to UP or DOWN until desired height is reached.

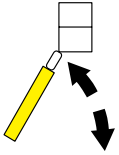

4.8 GENERATOR

The machine is equipped with an engine powered DC generator connected in parallel to the 48V DC battery bank.

Automatic Operating Mode

The generator will operate in automatic mode always when the following two conditions apply.

1. Ground Control Emergency Stop Switch is pulled out (on), **and**:

2. The Generator Enable switch on the platform control console is in the On or Enable position.

https://truckmanualshub.com/

When the above conditions apply, the generator's controller will monitor status of the batteries, will turn on automatically when the battery voltage drops as a result of discharge and will turn off when batteries are fully charged.

Battery Only Operating Mode

The machine will operate in the battery only mode when the following two conditions apply:

1. Ground Control Emergency Stop Switch is pulled out (on), **and**:

2. The switch on the platform control console is in the Off or Disable position.

In this mode the machine will operate as a conventional battery operated unit. The batteries can be used until they are fully discharged.

Manual (Charge) Operating Mode

The generator will operate in manual mode always when the following three conditions apply.

1. Ground Control Emergency Stop Switch is pulled out (on), **and**:

2. The switch on the platform control console is in the On or Enable position **and**:

3. The Manual Charge push button is activated.

Activation of the Manual Charge button will start the engine and initiate the charging cycle even if the batteries are charged above the level of automatic start. The operator can initiate the charge cycle to charge the batteries to the maximum level. The charging cycle will include finishing phase similar to conventional chargers.

https://truckmanualshub.com/

4.9 INVERTER

The inverter converts 48 VDC to 110 VAC to allow operation of power tools from the machine's batteries.

- The inverter is operational when the emergency stop switch is pulled out.
- The machine and inverter can be operated at the same time.
- The inverter will shut off at approximately 42 VDC and stay off until the emergency stop switch is recycled. It will operate again until voltage drops to 42 VDC.
- The machine will operate down to 36 VDC.
- The inverter will shut down if the high temperature light indicated overheating. It will automatically turn back on when cooled.
- The overload light indicates an output wiring short circuit or a load that is too large for the rating of the inverter.

4.10 MACHINE FUNCTION SPEEDS

The Function Speed Control affects the speed of boom functions Lower Lift, Telescope, and Rotate. Turn the control clockwise to increase function speed or counterclockwise to decrease function speed. When in the counterclockwise maximum position, all functions are placed in creep speed.

4.11 MACHINE SAFETY SYSTEM OVERRIDE (MSSO)(CE ONLY)

The Machine Safety System Override (MSSO) is used to override function controls for Emergency Platform Retrieval only. Refer to Section 5.7, Machine Safety System Override (MSSO)(CE Only)for operating procedures.

https://truckmanualshub.com/

4.12 SKYGUARD OPERATION

Skyguard is used to provide enhanced control panel protection. When the SkyGuard sensor is activated, functions that were in use at the time of actuation will reverse or cutout. The table below outlines these functions.

Table 4-1. Skyguard Function Table

Main Lift	Main Tele	Swing	Drive Forward		Drive Reverse		Platform Level	Platform Rotate	Jib Lift
R	C/R*	R	R	I	R	R	C	C	C
R = Indicates Reversal is Activated									
C = Indicates Cutout is Activated									
I = Input is Ignored									
Note: When Soft Touch is enabled with SkyGuard all functions are cut out only.									
* Reversal only applies to Main Tele Out. Main Tele In would be cut out									

4.13 BOOM SYNCHRONIZING PROCEDURE

NOTE: *If the Lower Boom assembly does not fully lower:*

1. Remove all personnel from the platform.
2. Pull the red knob located beside the main control valve.
3. From Ground Control, activate the lift control switch, raise Lower Boom 1.8 m (6 feet).
4. After raising Lower Boom, release the red knob.
5. Activate Lower Boom Down, fully lower boom.
6. Repeat step 1 thru 5 if necessary.

https://truckmanualshub.com/

4.14 SHUT DOWN AND PARK

NOTE: *When parking battery powered units overnight, batteries should be charged in accordance with instructions in Section 2 to ensure readiness for following workday.*

NOTE: *Electric machines are equipped with a static strap due to static electricity build-ups. Strap is located under rear of machine chassis.*

To shut down and park the machine, the procedures are as follows:

1. Drive machine to a reasonably well protected area.
2. Ensure boom is lowered over rear drive axle.
3. Shut down Emergency Stop at Platform Controls.
4. Shut down Emergency Stop at Ground Controls. Position Platform/Ground Select switch to center Off.
5. If necessary, cover Platform Controls to protect instruction placards, warning decals and operating controls from hostile environment.

4.15 MACHINE LIFTING AND TIE DOWN

See Figure 4-4.

Lifting

1. Refer to the Serial Number Plate, refer to the Specifications section of this manual, or weigh the individual unit to find out the Gross Vehicle Weight.
2. Place the boom in the stowed position.
3. Remove all loose items from the machine.
4. Attach lifting device and equipment only to the designated lifting points.
5. Properly adjust the rigging to prevent damage to the machine and so the machine remains level.

Tie Down

1. Place the boom in the stowed position.
2. Remove all loose items from the machine.
3. Secure the chassis and the platform using straps or chains of adequate strength.

https://truckmanualshub.com/

MODELS	"A" Dimension Steer Axle To Center of Gravity	Gross Weight Standard Machine
E450A	44 inches (1117 mm)	12,600 lbs (5715 kg)
E450AJ	46 inches (1168 mm)	14,300 lbs (6486 kg)
M450AJ	46 inches (1168 mm)	14,500 lbs (6577 kg)

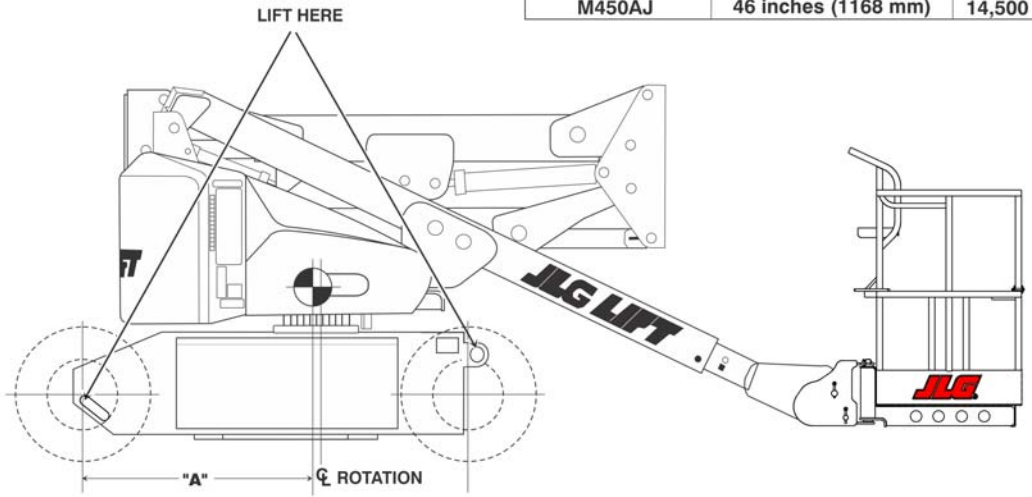

Figure 4-4. Lifting Chart

https://truckmanualshub.com/

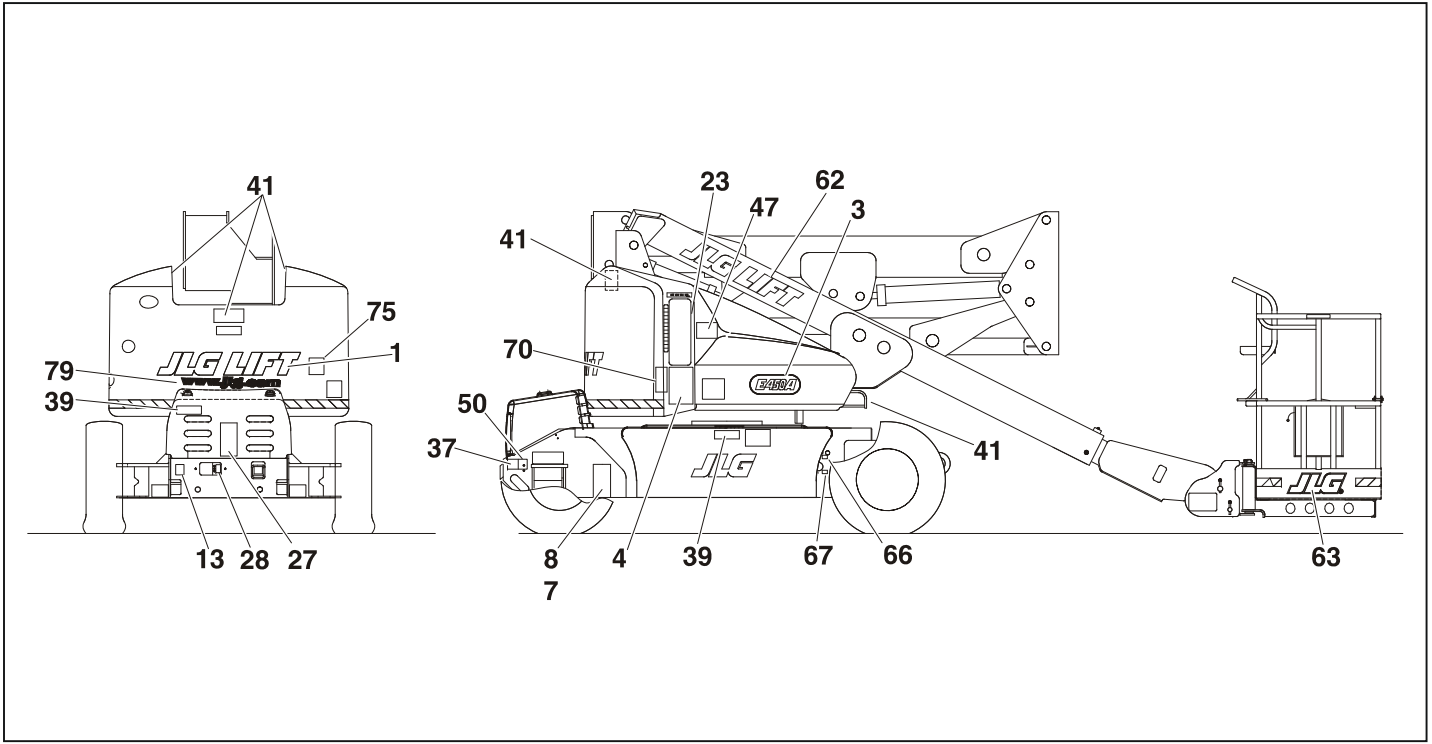

Figure 4-5. Decal Installation - Sheet 1 of 3

https://truckmanualshub.com/

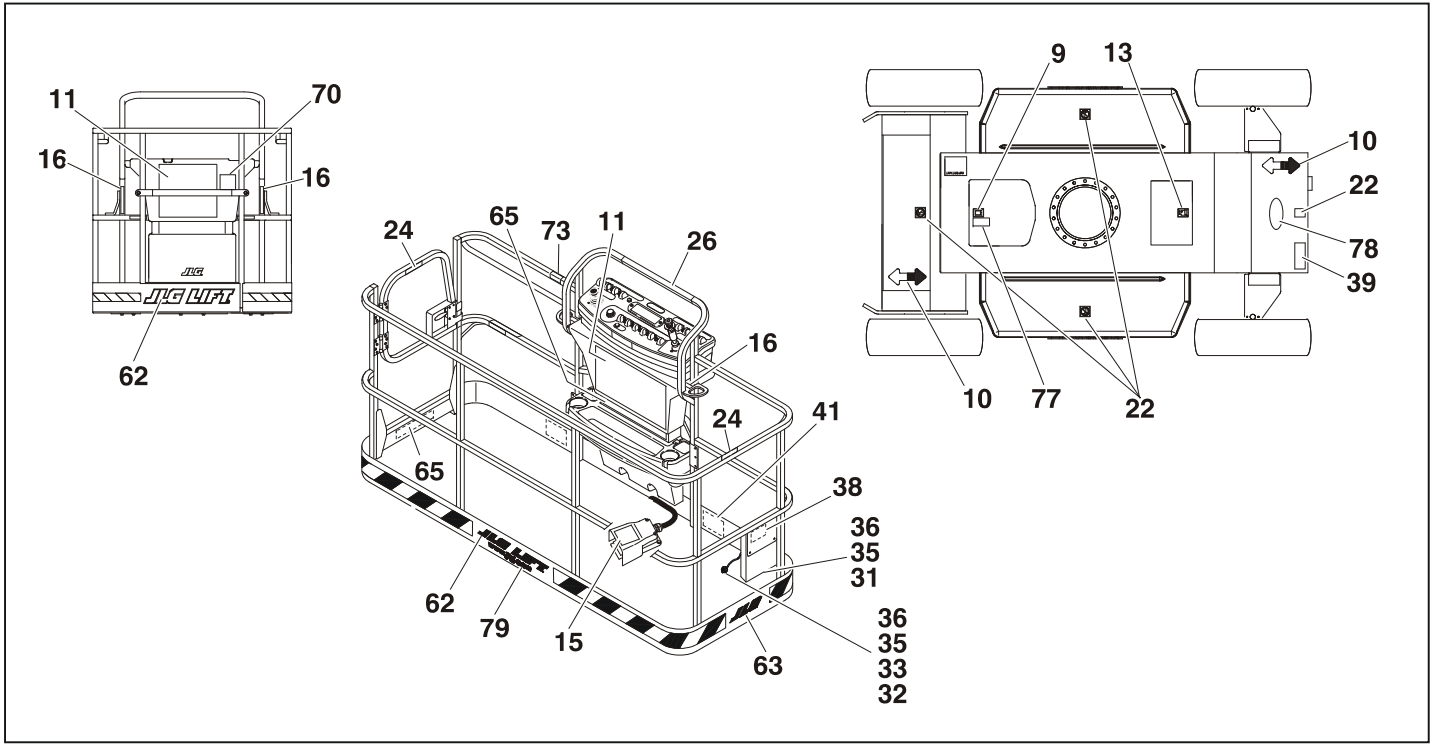

Figure 4-6. Decal Installation - Sheet 2 of 3

https://truckmanualshub.com/

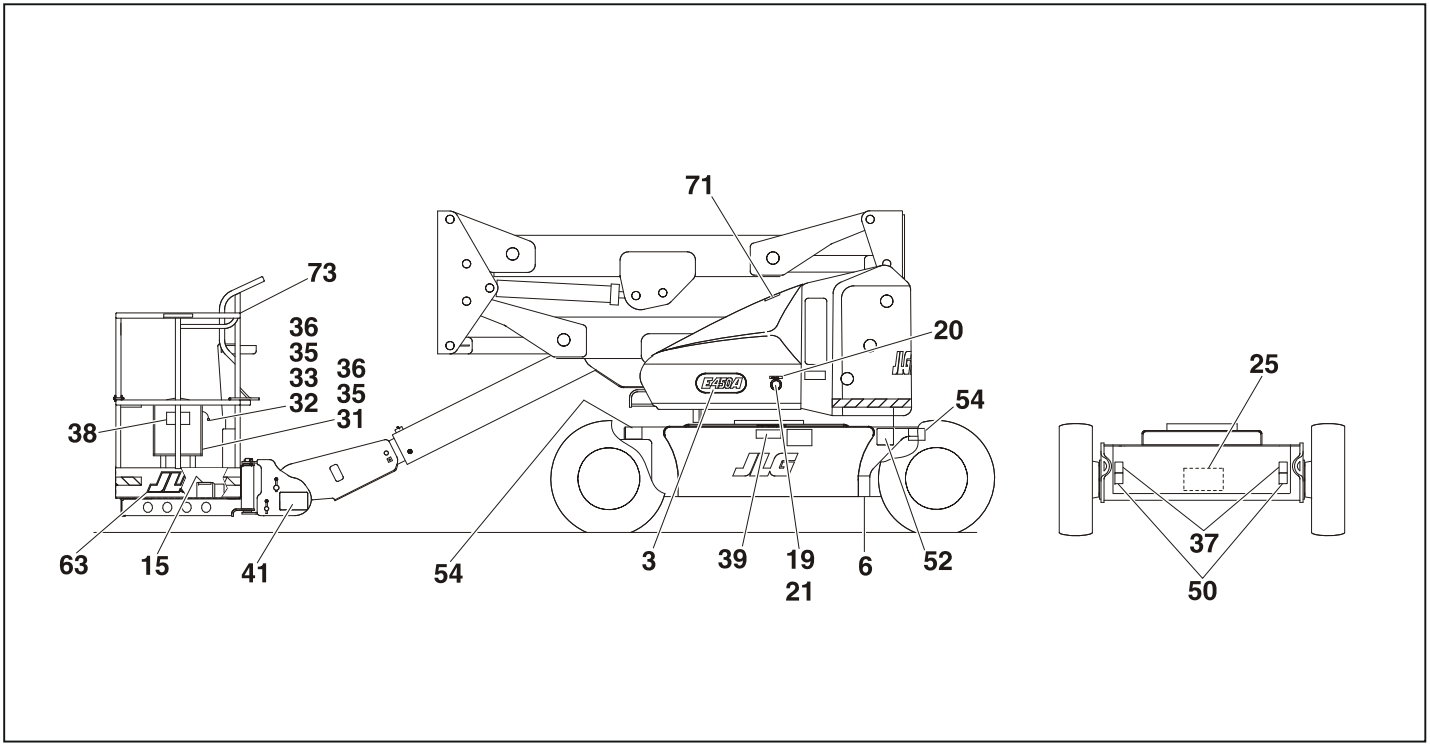

Figure 4-7. Decal Installation - Sheet 3 of 3

https://truckmanualshub.com/

Table 4-2. E450A/E450AJ Decal Legend

Item #	ANSI 0259301-B	CE/Ausl 0275070-7	Japanese 0259536-B	Korean 0259538-14	Eng/ Lat. Spanish 0259497-17	Eng/ CSA French 0259495-17	Chinese /Eng 0259540-14	Spa/ Portuguese 0259499-16
1	--	--	--	--	--	--	--	--
2	1703805	--	1703938	1703939	1703935	1703936	1703937	1703940
3	--	--	--	--	--	--	--	--
4	1703798	1705822	1703932	1703933	1703929	1703930	1703931	1703934
5	--	--	--	--	--	1705514	--	--
6	1001131269	--	--	--	--	--	--	--
7	1706948	--	1706948	1706948	1706948	1706948	1706948	1706948
8	--	--	--	--	--	--	--	--
9	1701504	1701504	1701504	1701504	1701504	1701504	1701504	1701504
10	1701642	1701642	1701642	1701642	1701642	1701642	1701642	1701642
11	1703797	1705921	1703926	1703927	1703923	1703924	1703925	1703928
12	--	--	--	--	--	--	--	--
13	1701644	1701644	1701644	1701644	1001104864	1701644	1701644	1701644
14	--	--	--	--	--	--	--	--

https://truckmanualshub.com/

Table 4-2. E450A/E450AJ Decal Legend

Item #	ANSI 0259301-B	CE/AusI 0275070-7	Japanese 0259536-B	Korean 0259538-14	Eng/ Lat. Spanish 0259497-17	Eng/ CSA French 0259495-17	Chinese /Eng 0259540-14	Spa/ Portuguese 0259499-16
15	--	1705828	1703980	1703981	1703983	1703984	1703982	1703985
16	1704277	1704277	1704277	1704277	1704277	1704277	1704277	1704277
17	--	--	--	--	--	1704006	--	1704008
18	--	--	--	--	--	--	--	--
19	--	--	--	--	--	--	--	--
20	--	--	--	--	3251243	3251243	--	3251243
21	--	--	--	--	--	--	--	--
22	1701691	1701691	1701691	1701691	1701691	1701691	1701691	1701691
23	1001104864	1001104864	1001104864	1001104864	1001104864	1001104864	1001104864	1001104864
24	1702868	--	--	--	1704001	1704000	--	1704002
25	1704254	1704254	1704254	1704254	1704254	1704254	1704254	1704254
26	1704253	--	1704253	--	1704253	1704253	--	1704253
27	1704446	1706378	1704417	1704418	1704454	1704452	1704419	1704453
28	1704431	1704431	1704431	1704431	1704431	1704431	1704431	1704431

https://truckmanualshub.com/

Table 4-2. E450A/E450AJ Decal Legend

Item #	ANSI 0259301-B	CE/Ausl 0275070-7	Japanese 0259536-B	Korean 0259538-14	Eng/ Lat. Spanish 0259497-17	Eng/ CSA French 0259495-17	Chinese /Eng 0259540-14	Spa/ Portuguese 0259499-16
29	--	--	--	--	--	--	--	--
30	--	--	--	--	--	--	--	--
31	--	--	--	--	--	--	--	--
32	--	--	--	--	--	--	--	--
33	--	--	--	--	--	--	--	--
34	--	--	--	--	--	--	--	--
35	--	--	--	--	--	--	--	--
36	--	--	--	--	--	--	--	--
37	1701500	1703811	1701500	1701500	1701500	1701500	1701500	1701500
38	1701509	1701509	1701509	1701509	1701509	1701509	1701509	1701509
39	1703813	1705670	1704342	1704343	1704339	1704340	1704344	1704341
40	3252347	--	--	--	--	--	--	--
41	1703804	1701518	1703950	1703951	1703947	1703948	1703949	1703952
42	--	--	--	--	--	--	--	--

https://truckmanualshub.com/

Table 4-2. E450A/E450AJ Decal Legend

Item #	ANSI 0259301-B	CE/Ausl 0275070-7	Japanese 0259536-B	Korean 0259538-14	Eng/ Lat. Spanish 0259497-17	Eng/ CSA French 0259495-17	Chinese /Eng 0259540-14	Spa/ Portuguese 0259499-16
43	--	--	--	--	--	--	--	--
44	--	--	--	--	--	--	--	--
45	--	--	--	--	--	--	--	--
46	--	--	--	--	--	--	--	--
47	1702265	1705977	1702271	1703987	1702265	1702265	1703988	1703991
48	--	--	--	--	--	--	--	--
49	--	--	--	--	--	--	--	--
50	1702300	1703814	1702300	1702300	1702300	1702300	1702300	1702300
51	--	--	--	--	--	--	--	--
52	--	--	1702631	1702631	--	--	1702631	1702631
53	1001121814	1705978	1001121821	1001121921	1001121818	1001121816	1001121823	1001121923
54	--	--	--	--	--	--	--	--
55	--	--	--	--	--	--	--	--
56	--	--	--	--	--	--	--	--

https://truckmanualshub.com/

Table 4-2. E450A/E450AJ Decal Legend

Item #	ANSI 0259301-B	CE/Ausl 0275070-7	Japanese 0259536-B	Korean 0259538-14	Eng/ Lat. Spanish 0259497-17	Eng/ CSA French 0259495-17	Chinese /Eng 0259540-14	Spa/ Portuguese 0259499-16
57	--	--	--	--	--	--	--	--
58	--	--	--	--	--	--	--	--
59	--	--	--	--	--	--	--	--
60	--	--	--	--	--	--	--	--
61	--	--	--	--	--	--	--	--
62	--	--	--	--	--	--	--	--
63	--	--	--	--	--	--	--	--
64	1706950	--	--	--	1706950	1704252	--	1706950
65	1001121801	1705978	1001121808	1001121918	1001121805	1001121803	1001121810	1001121920
66	1701502	1701502	1701502	1701502	1701502	1701502	1701502	1701502
67	1701503	1701503	1701503	1701503	1701503	1701503	1701503	1701503
68	--	--	--	--	--	--	--	--
69	--	--	--	--	--	--	--	--
70	--	--	--	--	--	--	--	--

https://truckmanualshub.com/

Table 4-2. E450A/E450AJ Decal Legend

Item #	ANSI 0259301-B	CE/AusI 0275070-7	Japanese 0259536-B	Korean 0259538-14	Eng/ Lat. Spanish 0259497-17	Eng/ CSA French 0259495-17	Chinese /Eng 0259540-14	Spa/ Portuguese 0259499-16
71	--	--	--	--	--	--	--	--
72	--	--	--	--	--	--	--	--
73	--	--	--	--	--	--	--	--
74	--	--	--	--	--	--	--	--
75	--	--	--	--	--	--	--	--
76	--	--	--	--	--	--	--	--
77	1704412	1704412	1704412	1704412	1704412	1704412	1704412	1704412
78	1704830	--	--	--	--	--	--	--
79	1704885	1704885	1704885	1704885	1704885	1704885	1704885	1704885
80	--	--	--	--	--	--	--	--
81	1705351	--	1705426	1705427	1705910	1705429	1705430	1001113680

https://truckmanualshub.com/

Table 4-3. M450AJ Decal Legend

Item #	ANSI 0258973-B	CE/AusI 0275069-8	Japanese 0259535-17	Korean 0259537-B	Eng/ Spanish 0259496-21	Eng/ French 0259494-21	Chinese 0259539-17	Spa/ Portuguese 0259498-19
1	--	--	--	--	--	--	--	--
2	1703805	--	1703938	1703939	1703935	1703936	1703937	1703940
3	--	--	--	--	--	--	--	--
4	1703798	1705822	1703932	1703933	1703929	1703930	1703931	1703934
5	--	--	--	--	--	1705514	--	--
6	1700584	--	--	--	--	--	--	--
7	1706948	--	1706948	1706948	1706948	1706948	1706948	1706948
8	--	--	--	--	--	--	--	--
9	1701504	1701504	1701504	1701504	1701504	1701504	1701504	1701504
10	1701642	1701642	1701642	1701642	1701642	1701642	1701642	1701642
11	1703797	1705921	1703926	1703927	1703923	1703924	1703925	1703928
12	--	--	--	--	--	--	--	--
13	1701644	1701644	1701644	1701644	1701644	1701644	1701644	1701644
14	--	--	--	--	--	--	--	--
15	--	1705828	1703980	1703981	1703983	1703984	1703982	1703985
16	1704277	1704277	1704277	1704277	1704277	1704277	1704277	1704277
17	--	--	--	--	--	1704006	--	1704008

https://truckmanualshub.com/

Table 4-3. M450AJ Decal Legend

Item #	ANSI 0258973-B	CE/Ausl 0275069-8	Japanese 0259535-17	Korean 0259537-B	Eng/ Spanish 0259496-21	Eng/ French 0259494-21	Chinese 0259539-17	Spa/ Portuguese 0259498-19
18	--	--	--	--	--	--	--	--
19	--	--	--	--	--	--	--	--
20	--	--	--	--	3251243	3251243	3251243	3251243
21	--	--	--	--	--	--	--	--
22	1701691	1701691	1701691	1701691	1701691	1701691	1701691	1701691
23	1001104864	1001104864	1001104864	1001104864	1001104864	1001104864	1001104864	1001104864
24	1702868	--	--	--	1704001	1704000	1704000	1704002
25	1704254	1704254	1704254	1704254	1704254	1704254	1704254	1704254
26	1704253	--	--	--	1704253	1704253	--	1704253
27	1704446	1706378	1704417	1704418	1704454	1704452	1704419	1704453
28	1704431	1704431	1704431	1704431	1704431	1704431	1704431	1704431
29	--	--	--	--	--	--	--	--
30	--	--	--	--	--	--	--	--
31	--	--	--	--	--	--	--	--
32	--	--	--	--	--	--	--	--
33	--	--	--	--	--	--	--	--
34	--	--	--	--	--	--	--	--
35	--	--	--	--	--	--	--	--

https://truckmanualshub.com/

Table 4-3. M450AJ Decal Legend

Item #	ANSI 0258973-B	CE/AusI 0275069-8	Japanese 0259535-17	Korean 0259537-B	Eng/ Spanish 0259496-21	Eng/ French 0259494-21	Chinese 0259539-17	Spa/ Portuguese 0259498-19
36	--	--	--	--	--	--	--	--
37	1701500	1703811	1701500	1701500	1701500	1701500	1701500	1701500
38	1701509	1701509	1701509	1701509	1701509	1701509	1701509	1701509
39	1703813	1705670	1704342	1704343	1704339	1704340	1704344	1704341
40	3252347	--	--	--	--	--	--	--
41	1703804	1701518	1703950	1703951	1703947	1703948	1703949	1703952
42	--	--	--	--	--	--	--	--
43	--	--	--	--	--	--	--	--
44	--	--	--	--	--	--	--	--
45	--	--	--	--	--	--	--	--
46	--	--	--	--	--	--	--	--
47	1702265	1705977	1702271	1703987	1702265	1702265	1703988	1703991
48	--	--	--	--	--	--	--	--
49	--	--	--	--	--	--	--	--
50	1702300	1703814	1702300	1702300	1702300	1702300	1702300	1702300
51	--	--	--	--	--	--	--	--
52	1702631	--	--	--	--	--	--	--
53	1001121814	1705978	1001121854	1001121921	1001121818	1707047	1001121823	1001121923

https://truckmanualshub.com/

Table 4-3. M450AJ Decal Legend

Item #	ANSI 0258973-B	CE/Ausl 0275069-8	Japanese 0259535-17	Korean 0259537-B	Eng/ Spanish 0259496-21	Eng/ French 0259494-21	Chinese 0259539-17	Spa/ Portuguese 0259498-19
54	--	--	--	--	--	--	--	--
55	--	--	--	--	--	--	--	--
56	--	--	--	--	--	--	--	--
57	--	--	--	--	--	--	--	--
58	--	--	--	--	--	--	--	--
59	--	--	--	--	--	--	--	--
60	--	--	--	--	--	--	--	--
61	--	--	--	--	--	--	--	--
62	--	--	--	--	--	--	--	--
63	--	--	--	--	--	--	--	--
64	1706950	--	--	--	1706950	1706950	--	1706950
65	1001121801	1705978	1001121808	1707058	1001121805	1707055	1001121810	1001121920
66	1701502	1701502	1701502	1701502	1701502	1701502	1701502	1701502
67	1701503	1701503	1701503	1701503	1701503	1701503	1701503	1701503
68	--	--	--	--	--	--	--	--
69	--	--	--	--	--	--	--	--
70	1704286	--	1001093687	1001093687	1704371	1001093687	1001093687	1001093687
71	--	--	--	--	--	--	--	--

https://truckmanualshub.com/

Table 4-3. M450AJ Decal Legend

Item #	ANSI 0258973-B	CE/AusI 0275069-8	Japanese 0259535-17	Korean 0259537-B	Eng/ Spanish 0259496-21	Eng/ French 0259494-21	Chinese 0259539-17	Spa/ Portuguese 0259498-19
72	--	--	--	--	--	--	--	--
73	1702962	--	--	--	--	--	--	--
74	--	--	--	--	--	--	--	--
75	--	--	1705084	1705084	--	--	--	--
76	--	--	--	--	--	--	--	--
77	1704412	1704412	1704412	1704412	1704412	1704412	1704412	1704412
78	1001121510	1001121510	1001121510	1001221510	1001121510	1001121510	1001121510	1001121510
79	1704885	1704885	1704885	1704885	1704885	1704885	1704885	1704885
80	--	--	--		--	--	--	--
81	1705351	--	1705426	1705427	1705910	--	1705430	1001113680

https://truckmanualshub.com/

NOTES:

https://truckmanualshub.com/

SECTION 5. EMERGENCY PROCEDURES

5.1 GENERAL

This section explains the steps to be taken in case of an emergency situation while operating.

5.2 INCIDENT NOTIFICATION

JLG Industries, Inc. must be notified immediately of any incident involving a JLG product. Even if no injury or property damage is evident, the factory should be contacted by telephone and provided with all necessary details.

In USA:
JLG Phone: 877-JLG-SAFE (554-7233)
(8am till 4:45pm EST)

Outside USA:
240-420-2661

E-mail:

ProductSafety@JLG.com

Failure to notify the manufacturer of an incident involving a JLG Industries product within 48 hours of such an occurrence may void any warranty consideration on that particular machine.

NOTICE

FOLLOWING ANY ACCIDENT, THOROUGHLY INSPECT THE MACHINE AND TEST ALL FUNCTIONS FIRST FROM THE GROUND CONTROLS, THEN FROM THE PLATFORM CONTROLS. DO NOT LIFT ABOVE 3 M (10 FT.) UNTIL YOU ARE SURE THAT ALL DAMAGE HAS BEEN REPAIRED, IF REQUIRED, AND THAT ALL CONTROLS ARE OPERATING CORRECTLY.

5.3 EMERGENCY OPERATION

Operator Unable to Control Machine

IF THE PLATFORM OPERATOR IS PINNED, TRAPPED OR UNABLE TO OPERATE OR CONTROL MACHINE:

1. Other personnel should operate the machine from ground controls only as required.
2. Other qualified personnel on the platform may use the platform controls. DO NOT CONTINUE OPERATION IF CONTROLS DO NOT FUNCTION PROPERLY.
3. Cranes, forklift trucks or other equipment can be used to remove platform occupants and stabilize motion of the machine.

https://truckmanualshub.com/

Platform or Boom Caught Overhead

If the platform or boom becomes jammed or snagged in overhead structures or equipment, rescue platform occupants prior to freeing the machine.

5.4 EMERGENCY TOWING PROCEDURES

Towing this machine is prohibited, unless properly equipped. However, provisions for moving the machine, in case of a malfunction or power failure, have been incorporated. The following procedures are to be used ONLY for emergency movement to a suitable maintenance area.

1. Chock wheels securely.
2. Disengage drive hubs by reversing disconnect caps.
3. Connect suitable equipment, remove chocks, and move machine.

After moving machine, complete the following procedures:

1. Position machine on a firm and level surface.
2. Chock wheels securely.
3. Engage drive hubs by reversing disconnect caps on hubs.
4. Remove chocks from wheels as needed.

5.5 MANUAL DESCENT SYSTEM

The manual descent system is used, in the event of total power failure, to lower the upper and lower booms using gravity. To operate the manual descent system, proceed as follows:

1. Locate manual descent knob on main valve and turn clockwise. Install handle into manual descent pump and lower the Mid and Lower Booms by pumping the handle until they are completely lowered.
2. Turn manual descent knob counterclockwise and lower the Upper (or main) Boom by pumping the handle until it is completely lowered. Return manual descent knob to center position and stow handle in bracket provided.

5.6 MANUAL SWING OVERRIDE

The manual swing override is used to manually swing boom and turntable assembly in the event of a total power failure when the platform is positioned over a structure or obstacle. To operate the manual swing override, proceed as follows:

1. Using a 7/8 inch socket and ratchet wrench, locate nut on swing worm gear on left side of machine.
2. Install wrench on nut and ratchet in the direction desired.

https://truckmanualshub.com/

5.7 MACHINE SAFETY SYSTEM OVERRIDE (MSSO)(CE ONLY)

The Machine Safety System Override (MSSO) is only to be used to retrieve an operator that is pinned, trapped, or unable to operate the machine and function controls are locked out from the platform due to a platform overload situation.

NOTE: *If the MSSO functionality is used, the fault indicator will flash and a fault code is set in the JLG Control System which must be reset by a qualified JLG Service Technician.*

NOTE: *No functional checks of the MSSO system are necessary. The JLG Control system will set a Diagnostic Trouble Code if the control switch is faulty.*

To operate the MSSO:

1. From the ground control console, place the Platform/ Ground Select switch in the Ground position.
2. Pull out the Power/Emergency Stop control.
3. Start the engine.
4. Press and hold the MSSO switch and the control switch for the desired function.

https://truckmanualshub.com/

NOTES:

https://truckmanualshub.com/

SECTION 6. GENERAL SPECIFICATIONS & OPERATOR MAINTENANCE

6.1 INTRODUCTION

This section of the manual provides additional necessary information to the operator for proper operation and maintenance of this machine.

The maintenance portion of this section is intended as information to assist the machine operator to perform daily maintenance tasks only, and does not replace the more thorough Preventive Maintenance and Inspection Schedule included in the Service and Maintenance Manual.

Other Publications Available:

Service and Maintenance Manual 3121648

Illustrated Parts Manual 3121649

6.2 OPERATING SPECIFICATIONS

Table 6-1. Operating Specifications

Maximum Work Load (Capacity) ANSI Markets Unrestricted:	 500 lb. (227 kg)
Maximum Work Load (Capacity) CE & Australia Markets Unrestricted:	 500 lb. (230 kg)
Travel Speed	3.2 mph (5.2 kph)
Maximum Travel Grade (Gradeablility	30%
Maximum Travel Grade (Side Slope)	5°
Maximum Height: (stowed) E450A E450AJ/M450AJ	 6 ft. 6.25 in. (1.9 m) 6 ft. 7 in. (2.0 m)
Maximum Horizontal Platform Reach E450A E450AJ/M450AJ	 23 ft. 1in.(7.0 m) 23 ft. 9 in. (7.24 m)
Turning Radius (Curb to Curb)	15 ft. 3 in. (4.65 m)
Turning Radius (inside)	2 ft. (0.61 m)

https://truckmanualshub.com/

Table 6-1. Operating Specifications

Maximum Tire Load: E450A M450AJ, E450AJ	 6100 lbs. (2,767 kg) 6900 lbs. (3,130 kg)
Ground Bearing Pressure E450A M450AJ, E450AJ	 64 psi (4.5 kg/cm^2) 75 psi (5.2 kg/cm^2)
System Voltage	48 volts
Battery Life per Charge	7 hours continuous
Battery Recharge Time Charger Generator	 17 hours from full discharge 6.2 hours
Gross Machine Weight (Platform Empty) E450A E450AJ/M450AJ	 13,100 lb. (5942 kg) 15,100 lb. (6804 kg)

Capacities

Table 6-2. Capacities

Generator Fuel Tank	4 Gallons (15.1 L)
Hydraulic Oil Tank	5 Gallons (19 L) w/ 10% air space
Hydraulic System (Including Tank)	9 Gallons (34.1 L)
Torque Hub, Drive*	25.5 ounces (0.75 L)
*Torque hubs should be one half full of lubricant.	

https://truckmanualshub.com/

Tires

Table 6-3. Tire Specifications

Size	IN240/55-17.5	IN240/55-17.5	26x7x20
Load Range	E	E	N/A
Ply Rating	10	10	N/A
Tire Pressure	90 psi (6.2 Bar)	Foam-Filled	Solid

Dimensional Data

Table 6-4. Dimensional Data

Machine Length (stowed) E450A M450AJ, E450AJ	 18 ft. 8.0 in. (5.69 m) 21 ft. 2 in. (6.45 m)
Up and Over Platform Height E450A M450AJ, E450AJ	 24 ft. 7 in. (7.49 m) 25 ft. 3 in. (7.7 m)
Horizontal Reach @ Maximum Up and Over E450A M450AJ, E450AJ	 23 ft. 1 in. (7.0 m) 23 ft. 9 in. (7.24 m)
Machine Width	5 ft. 9 in. (1.75 m)

Table 6-4. Dimensional Data

Wheel Base	6 ft. 7.0 in. (2.00 m)
Working Height	51 ft. 0 in. (15.54 m)
Platform Height	45 ft. 0 in. (13.72 m)
Track Width	5 ft. 0 in. (1.51 m)
Tail Swing (Any Position)	0
Ground Clearance E450A M450AJ, E450AJ	 8.5 in. (0.22 m) 8 in. (0.20 m)

https://truckmanualshub.com/

Torque Specifications

Table 6-5. Torque Requirements

Description	Torque Value	Interval Hours
Wheel Lugs	170 ft. lbs. (230 Nm)	150
Swing Bearing ((Loctite)	190 ft. lbs. (260 Nm)	50/600*

* Check swing bearing bolts for security after first 50 hours of operation and every 600 hours thereafter.

Hydraulic Oil

Table 6-6. Hydraulic Oil

Hydraulic System Operating Temperature Range	S.A.E. Viscosity Grade
+0° to + 180° F (-18° to +83° C)	10W
+0° to + 210° F (-18° to +99° C)	10W-20, 10W30
+50° to + 210° F (+10° to +99° C	20W-20

NOTE: *Hydraulic oils must have anti-wear qualities at least to API Service Classification GL-3, and sufficient chemical stability for mobile hydraulic system service.*

Aside from JLG recommendations, it is not advisable to mix oils of different brands or types, as they may not contain the same required additives or be of comparable viscosities. If use of hydraulic oil other than Mobil DTE 11M is desired, contact JLG Industries for proper recommendations.

https://truckmanualshub.com/

Lubrication Specifications

NOTE: *Refer to Figure 6-2., E450 Maintenance & Lubrication Diagram, for specific lubrication procedures.*

Table 6-7. Mobil DTE 11M Specs

ISO Viscosity Grade	#15
Gravity API	31.9
Pour Point, Max	-40°F (-40°C)
Flash Point, Min.	330°F (166°C)
Viscosity	
at 40° C	15 cSt
at 100° C	4.1 cSt
at 100° F	80 SUS
at 210° F	43 SUS
cp at -30° F	3.200
Viscosity Index	140

Critical Stability Weights

Table 6-8. Critical Stability Weights

Component	LB.	KG.
Counterweight	3850	1746
Tire & Wheel (foam-filled)	207	94
Platform (4ft [1.2 m])	90	41
Platform (5 ft [1.5 m])	100	45
Battery (each)	120	54

⚠ WARNING

DO NOT REPLACE ITEMS CRITICAL TO STABILITY WITH ITEMS OF DIFFERENT WEIGHT OR SPECIFICATION (FOR EXAMPLE: BATTERIES, FILLED TIRES, PLATFORM) DO NOT MODIFY UNIT IN ANY WAY TO AFFECT STABILITY.

https://truckmanualshub.com/

Serial Number Locations

For machine identification, a serial number plate is affixed to the left rear of frame, in front of left rear wheel. If the serial number plate is damaged or missing, the machine serial number is stamped on the top left side of the frame and the top left side of the turntable. In addition, the serial number is stamped on top of the end of the upper boom, mid boom, and lower boom at the left rear of the booms.

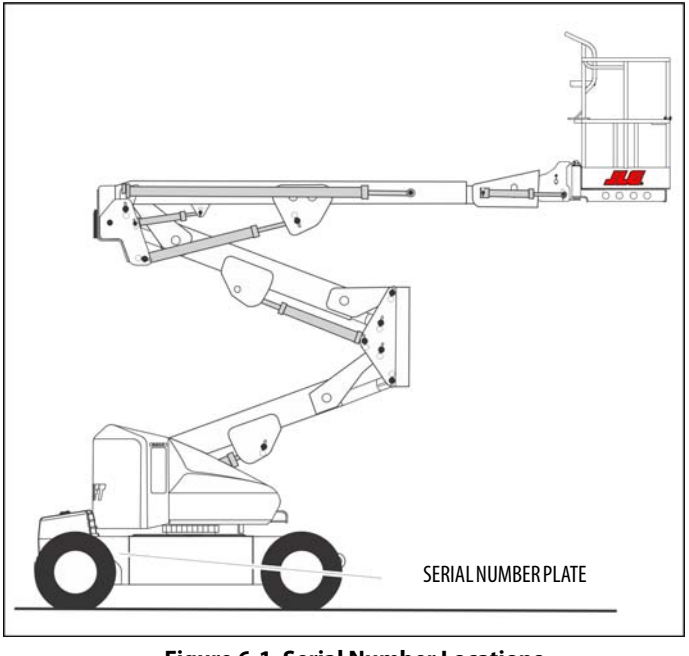

Figure 6-1. Serial Number Locations

https://truckmanualshub.com/

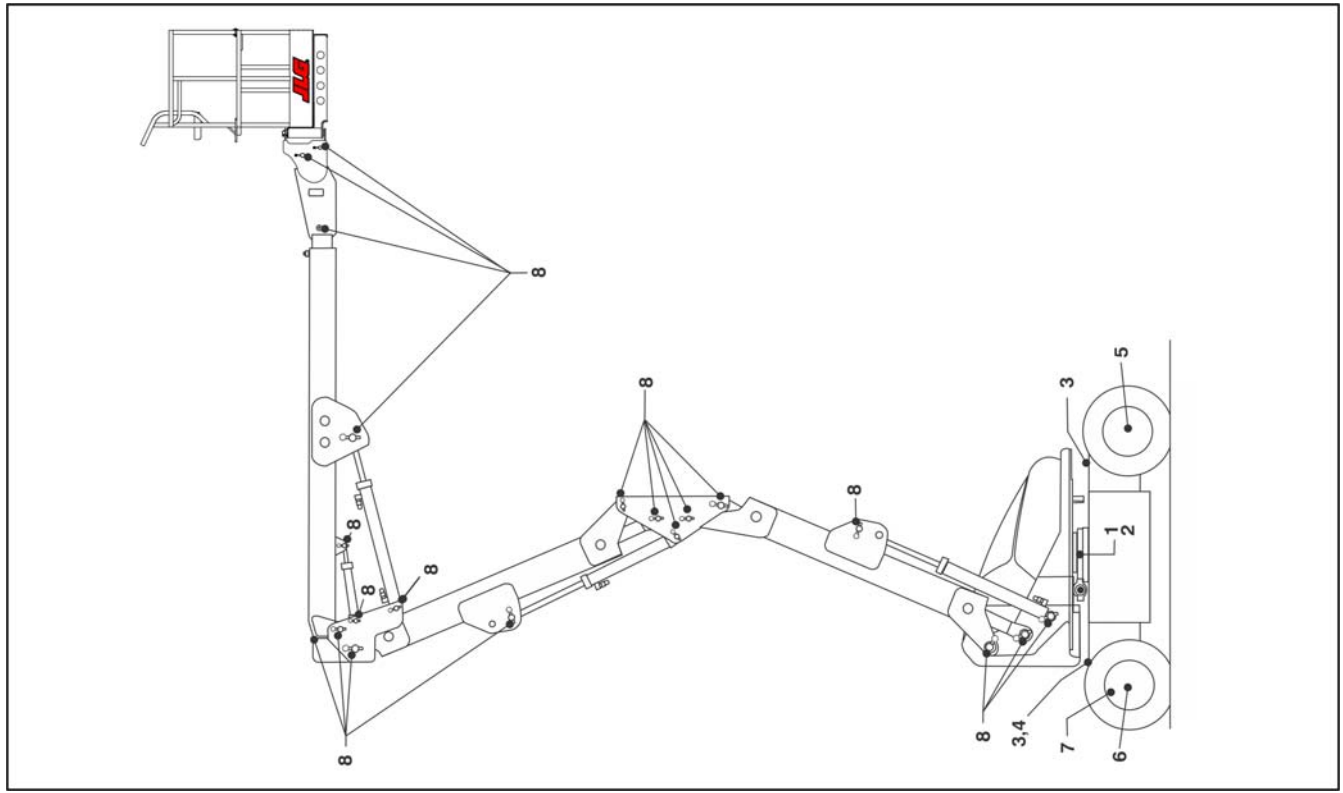

Figure 6-2. E450 Maintenance & Lubrication Diagram

https://truckmanualshub.com/

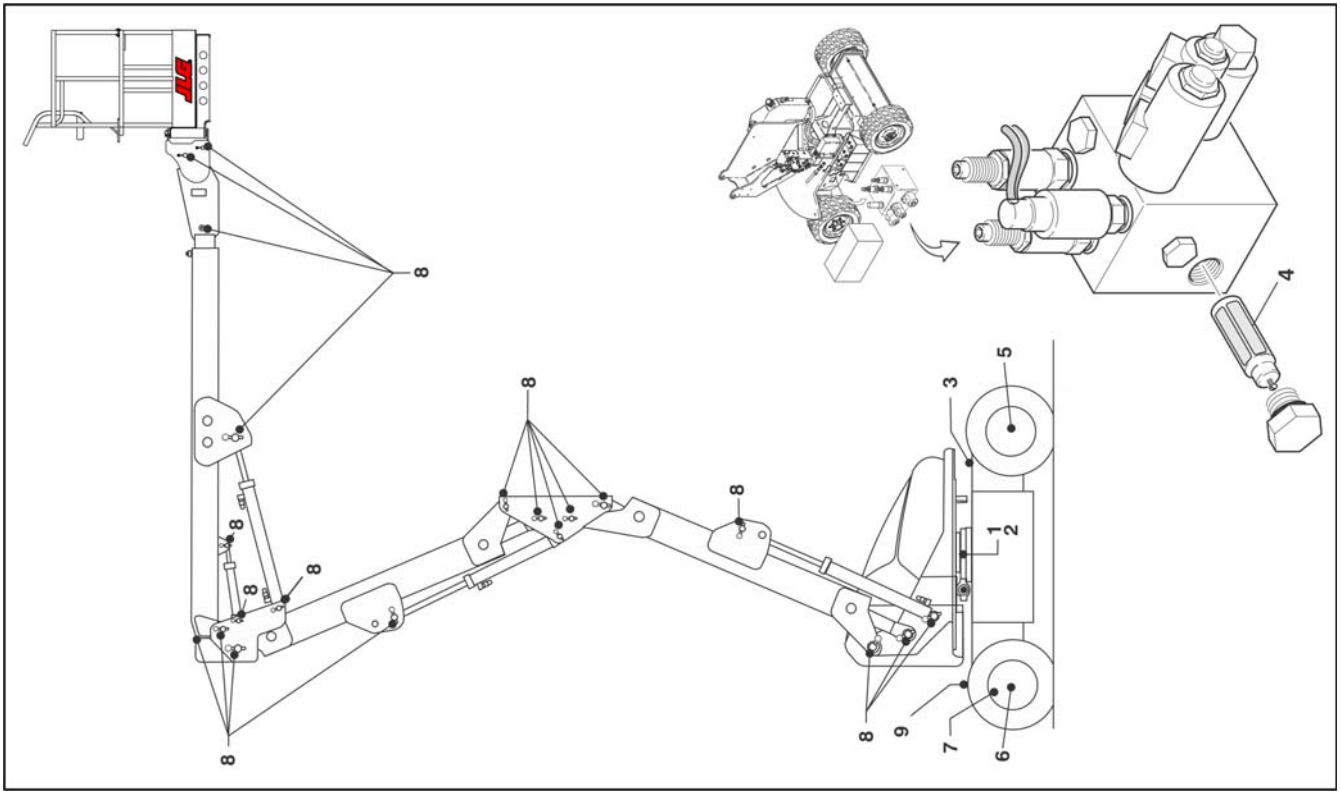

Figure 6-3. M450 Maintenance & Lubrication Diagram

https://truckmanualshub.com/

6.3 MAINTENANCE AND LUBRICATION

NOTE: *The following numbers correspond to those in Figure 6-2.and Figure 6-3.*

Table 6-9. Lubrication Specifications.

KEY	SPECIFICATIONS
MPG	Multipurpose Grease having a minimum dripping point of 350 degrees F. Excellent water resistance and adhesive qualities; and being of extreme pressure type (Timken OK 40 pounds minimum).
EPGL	Extreme Pressure Gear Lube (oil) meeting API Service Classification GL-5 or Mil-Spec Mil-L-2105.
HO	Hydraulic Oil. Mobil DTE-11M
OG*	Open Gear Lube - Tribol Molub-Alloy 936 Open Gear Compound. (JLG Part No. 3020027)
BG*	Bearing Grease (JLG Part No. 3020029) Mobilith SHA 460.
LL	Synthetic Lithium Lubricant, Gredag 741 Grease. (JLG Part No. 3020022)
EO	Engine (crankcase) Oil. Gas - API SF/SG class, MIL-L-2104. Diesel - API CC/CD class, MIL-L-2104B/MIL-L-2104C.
*MPG may be substituted for these lubricants, if necessary, but service intervals will be reduced.	

NOTICE

LUBRICATION INTERVALS ARE BASED ON MACHINE OPERATION UNDER NORMAL CONDITIONS. FOR MACHINES USED IN MULTI-SHIFT OPERATIONS AND/OR EXPOSED TO HOSTILE ENVIRONMENTS OR CONDITIONS, LUBRICATION FREQUENCIES MUST BE INCREASED ACCORDINGLY.

1. Swing Bearing

Lube Point(s) - 2 Grease Fittings
Capacity - A/R
Lube - MPG
Interval - Every 3 months or 150 hrs of operation
Comments - Remote Access (Optional)

https://truckmanualshub.com/

2. Swing Bearing/Worm Gear Teeth

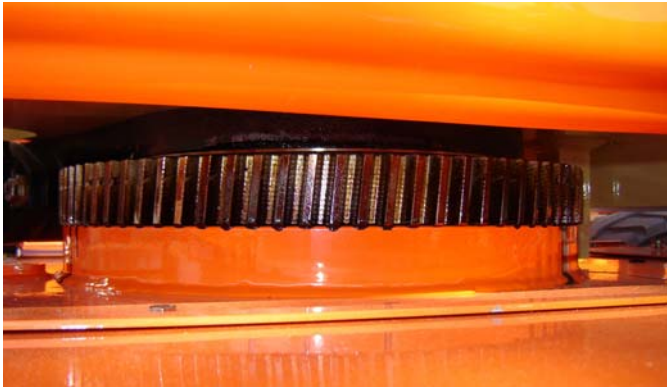

Lube Point(s) - Grease Fittings
Capacity - Spray On
Lube - OG or Mobiltac375NC
Interval - A/R
Comments - If necessary install grease fittings into worm gear housing and grease bearings.

NOTE: *OG will allow better cycle times than Mobiltac375NC, however Mobiltac375NC must be used in dusty environments. If the swing function becomes noisy and/or rough lubricate the bearing teeth.*

CAUTION

DO NOT OVERGREASE BEARINGS. OVERGREASING BEARINGS WILL RESULT IN BLOWING OUTER SEAL IN HOUSING.

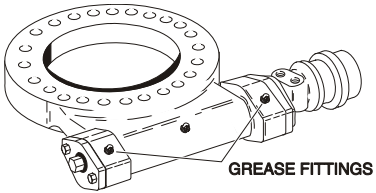

https://truckmanualshub.com/

3. Hydraulic Tank

Lube Point(s) - Fill Cap
Capacity - 4 Gal. (15.1 L)
Lube - HO
Interval - Check Level daily; Change every 2 years or 1200 hours of operation.
Comments - On new machines, those recently overhauled, or after changing hydraulic oil, operate all systems a minimum of two complete cycles and recheck oil level in reservoir.

https://truckmanualshub.com/

4. Hydraulic Return Filter

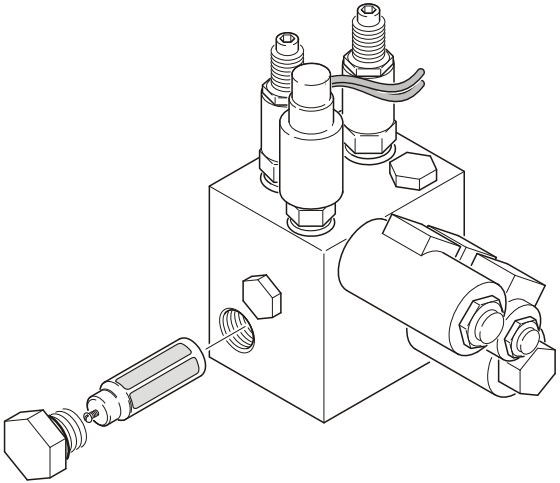

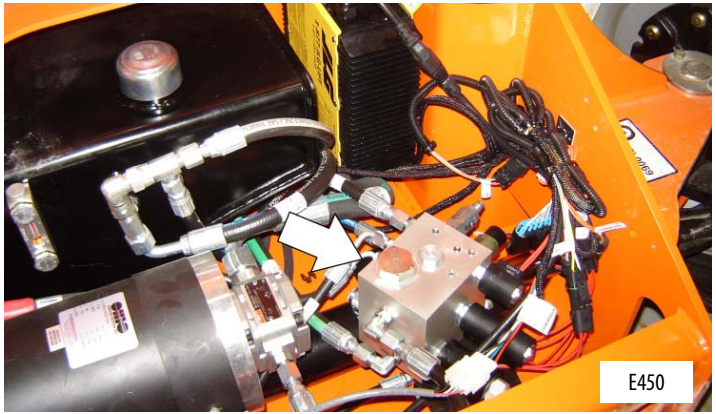

Interval - Change after first 50 hrs. and every 6 months or 300 hrs. thereafter.

Comments - Under certain conditions, it may be necessary to replace the hydraulic filter on a more frequent basis. A common symptom of a dirty filter is sluggishness experienced in hydraulic functions.

https://truckmanualshub.com/

5. Wheel Drive Hub

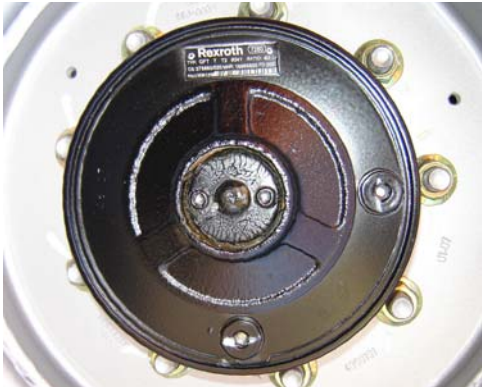

Lube Point(s) - Level/Fill Plug
Capacity - 17 oz. (1/2 Full)
Lube - EPGL
Interval - Check level every 3 months or 150 hrs of operation; change every 2 years or 1200 hours of operation

6. Wheel Bearings

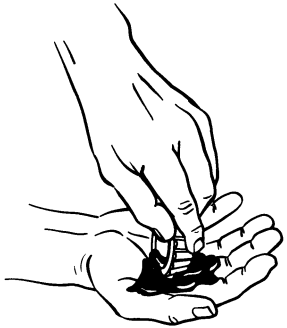

Lube Point(s) - Repack
Capacity - A/R
Lube - MPG
Interval - Every 2 years or 1200 hours of operation

7. Spindles/Bushing

Capacity - A/R
Lube - Lithium Lubricant
Interval - Every 2 years or 1200 hours of operation
Comments - At Spindle/Bushing Replacement; Coat I.D. of bushings prior to installing king pins.

https://truckmanualshub.com/

8. Boom Pivot Pins/Bushing

Capacity - A/R
Lube - Lithium Lubricant
Interval - Every 2 years or 1200 hours of operation
Comments - At boom pivot pins/bushing replacement; Coat I.D. of bushings prior to installing pivot pins.

9. Engine

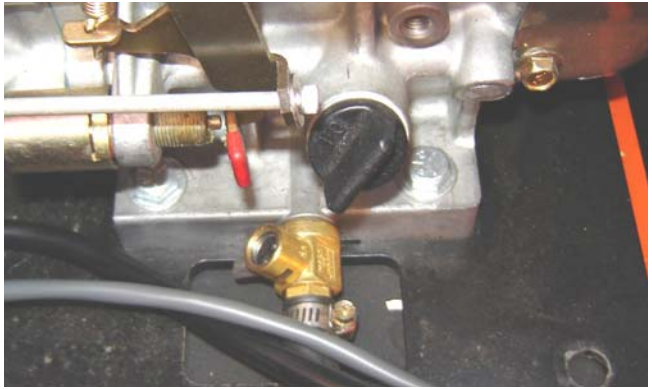

Lube Point(s) - Fill Cap
Capacity - Refer to Engine Manual
Lube - EO
Interval - 3 Months or 150 hours of operation
Comments - Check level daily/Change in accordance with engine manual.

https://truckmanualshub.com/

6.4 BATTERY MAINTENANCE AND CHARGING

Battery Maintenance, Quarterly

1. Open battery compartment cover to allow access to battery terminals and vent caps.

CAUTION

WHEN ADDING WATER TO BATTERIES, ADD WATER UNTIL ELECTROLYTE COVERS PLATES. DO NOT CHARGE BATTERIES UNLESS ELECTROLYTE COVERS THE PLATES.

NOTE: *When adding distilled water to batteries, non-metallic containers and/or funnels must be used.*

To avoid electrolyte overflow, add distilled water to batteries after charging.

When adding water to the battery, fill only to level indicated.

2. Remove all vent caps and inspect electrolyte level of each cell. Electrolyte level should be to the ring approximately one inch from top of battery. Fill batteries with distilled water only. Replace and secure all vent caps.
3. Remove battery cables from each battery post one at a time, negative first. Clean cables with acid neutralizing solution (e.g. baking soda and water or ammonia) and wire brush. Replace cables and/or cable clamp bolts as required.
4. Clean battery post with wire brush then re-connect cable to post. Coat non-contact surfaces with mineral grease or petroleum jelly.
5. When all cables and terminal posts have been cleaned, ensure all cables are properly positioned and do not get pinched. Close battery compartment cover.
6. Start hydraulic system and ensure that it functions properly.

https://truckmanualshub.com/

Optional On Board Generator

WARNING

EXHAUST GAS HAZARD. RUN THE GENERATOR IN A WELL VENTILATED AREA ONLY.

NOTICE

WHEN THE GENERATOR ENABLE CONTROL LOCATED IN THE PLATFORM CONTROL BOX IS IN THE ON POSITION AND THE GROUND EMERGENCY STOP SWITCH IN ON (PULLED OUT), THE GENERATOR WILL START AUTOMATICALLY WHEN THE BATTERIES REACH A LOW-CHARGE STATE AUTOMATICALLY CHARGING THE BATTERIES.

NOTE: *The engine will automatically shut down under the following conditions:*

High Engine Oil Temperature
Low Engine Oil Pressure
Engine Overspeed
Generator Overvoltage

WARNING

TO AVOID INJURY FROM AN EXPLOSION, DO NOT SMOKE OR ALLOW SPARKS OR A FLAME NEAR BATTERY DURING SERVICING. ALWAYS WEAR EYE AND HAND PROTECTION WHEN SERVICING BATTERIES.

Battery Charging (On Board Charger)

1. For maximum battery life:
   - **a.** Avoid completely discharging the batteries.
   - **b.** Fully charge the batteries each day the machine is used.
   - **c.** Charge the batteries at available times between charging.
   - **d.** If applicable, be sure the battery fluid covers the battery plates before charging, but to avoid overflow, do not top off the fluid level until charging.
2. To charge the batteries, connect the charger to an appropriate volt source with a 15 amp minimum capacity.
3. The charge cycle is complete when the green 100% charge light on the battery charger comes on.

https://truckmanualshub.com/

6.5 TIRES & WHEELS

Tire Inflation

The air pressure for pneumatic tires must be equal to the air pressure that is stenciled on the side of the JLG product or rim decal for safe and proper operational characteristics.

Tire Damage

For pneumatic tires, JLG Industries, Inc. recommends that when any cut, rip, or tear is discovered that exposes sidewall or tread area cords in the tire, measures must be taken to remove the JLG product from service immediately. Arrangements must be made for replacement of the tire or tire assembly.

For polyurethane foam filled tires, JLG Industries, Inc. recommends that when any of the following are discovered, measures must be taken to remove the JLG product from service immediately and arrangements must be made for replacement of the tire or tire assembly.

- a smooth, even cut through the cord plies which exceeds 3 inches (7.5 cm) in total length
- any tears or rips (ragged edges) in the cord plies which exceeds 1 inch (2.5 cm) in any direction
- any punctures which exceed 1 inch in diameter
- any damage to the bead area cords of the tire

If a tire is damaged but is within the above noted criteria, the tire must be inspected on a daily basis to insure the damage has not propagated beyond the allowable criteria.

Tire Replacement

JLG recommends a replacement tire be the same size, ply and brand as originally installed on the machine. Please refer to the JLG Parts Manual for the part number of the approved tires for a particular machine model. If not using a JLG approved replacement tire, we recommend that replacement tires have the following characteristics:

- Equal or greater ply/load rating and size of original
- Tire tread contact width equal or greater than original
- Wheel diameter, width, and offset dimensions equal to the original
- Approved for the application by the tire manufacturer (including inflation pressure and maximum tire load)

Unless specifically approved by JLG Industries Inc. do not replace a foam filled or ballast filled tire assembly with a pneumatic tire. When selecting and installing a replacement tire, ensure that all tires are inflated to the pressure recommended by JLG. Due to size variations between tire brands, both tires on the same axle should be the same.

https://truckmanualshub.com/

Wheel Replacement

The rims installed on each product model have been designed for stability requirements which consist of track width, tire pressure, and load capacity. Size changes such as rim width, center piece location, larger or smaller diameter, etc., without written factory recommendations, may result in an unsafe condition regarding stability.

Wheel Installation

It is extremely important to apply and maintain proper wheel mounting torque.

WARNING

WHEEL NUTS MUST BE INSTALLED AND MAINTAINED AT THE PROPER TORQUE TO PREVENT LOOSE WHEELS, BROKEN STUDS, AND POSSIBLE DANGEROUS SEPARATION OF WHEEL FROM THE AXLE. BE SURE TO USE ONLY THE NUTS MATCHED TO THE CONE ANGLE OF THE WHEEL.

Tighten the lug nuts to the proper torque to prevent wheels from coming loose. Use a torque wrench to tighten the fasteners. If you do not have a torque wrench, tighten the fasteners with a lug wrench, then immediately have a service garage or dealer tighten the lug nuts to the proper torque. Over-tightening will result in breaking the studs or permanently deforming the mounting stud holes in the wheels. The proper procedure for attaching wheels is as follows:

1. Start all nuts by hand to prevent cross threading. DO NOT use a lubricant on threads or nuts.

https://truckmanualshub.com/

2. Tighten nuts in the following sequence:

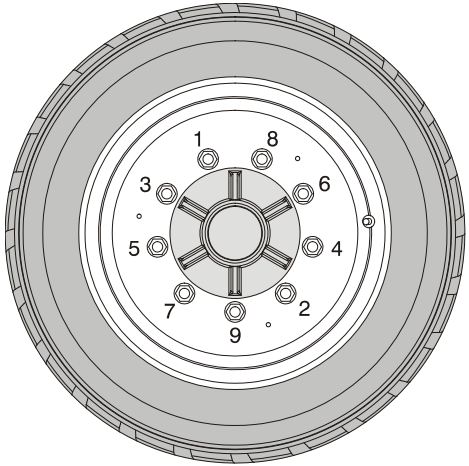

3. The tightening of the nuts should be done in stages. Following the recommended sequence, tighten nuts per wheel torque chart.

Table 6-10. Wheel Torque Chart

TORQUE SEQUENCE		
1st Stage	2nd Stage	3rd Stage
40 ft. lbs. (55 Nm)	100 ft. lbs. (130 Nm)	170 ft. lbs. (255 Nm)

4. Wheel nuts should be torqued after first 50 hours of operation and after each wheel removal. Check torque every 3 months or 150 hours of operation.

https://truckmanualshub.com/

6.6 SUPPLEMENTAL INFORMATION

The following information is provided in accordance with the requirements of the European Machinery Directive 2006/42/EC and is only applicable to CE machines.

For electric powered machines, the equivalent continuous A-Weighted sound pressure level at the work platform is less than 70dB(A)

For combustion engine powered machines, guaranteed Sound Power Level (LWA) per European Directive 2000/14/EC (Noise Emission in the Environment by Equipment for Use Outdoors) based on test methods in accordance with Annex III, Part B, Method 1 and 0 of the directive, is 104 dB.

The vibration total value to which the hand-arm system is subjected does not exceed 2,5 m/s^2. The highest root mean square value of weighted acceleration to which the whole body is subjected does not exceed 0,5 m/s^2.

https://truckmanualshub.com/

SECTION 7. INSPECTION AND REPAIR LOG

Machine Serial Number _____

Table 7-1. Inspection and Repair Log

Date	Comments

https://truckmanualshub.com/

Table 7-1. Inspection and Repair Log

Date	Comments

An Oshkosh Corporation Company

TRANSFER OF OWNERSHIP

To Product Owner:

If you now own but ARE NOT the original purchaser of the product covered by this manual, we would like to know who you are. For the purpose of receiving safety-related bulletins, it is very important to keep JLG Industries, Inc. updated with the current ownership of all JLG products. JLG maintains owner information for each JLG product and uses this information in cases where owner notification is necessary.

Please use this form to provide JLG with updated information with regard to the current ownership of JLG products. Please return completed form to the JLG Product Safety & Reliability Department via facsimile or mail to address as specified below.

Thank You,
Product Safety & Reliability Department
JLG Industries, Inc.
13224 Fountainhead Plaza
Hagerstown, MD 21742
USA
Telephone: +1-717-485-6591
Fax: +1-301-745-3713

https://truckmanualshub.com/

NOTE: Leased or rented units should not be included on this form.

Mfg. Model: _____

Serial Number: _____

Previous Owner: _____

Address: _____

_____

Country: _____ **Telephone: (_____)** _____

Date of Transfer: _____

Current Owner: _____

Address: _____

_____

Country: _____ **Telephone: (_____)** _____

Who in your organization should we notify?

Name: _____

Title:_____

https://truckmanualshub.com/

https://truckmanualshub.com/

WARNING:

The engine exhaust from this product contains chemicals known to the State of California to cause cancer, birth defects, or other reproductive harm.

1702961

PROPOSITION 65 WARNING

- **Battery posts, terminals and related accessories contain lead and lead compounds, chemicals known to the State of California to cause cancer and reproductive harm.**
- **Batteries also contain other chemicals known to the State of California to cause cancer.**
- **Wash hands after handling.**

An Oshkosh Corporation Company

Corporate Office
JLG Industries, Inc.
1 JLG Drive
McConnellsburg PA. 17233-9533
USA
(717) 485-5161
(717) 485-6417

https://truckmanualshub.com/

3121647

JLG Worldwide Locations

JLG Industries (Australia)
P.O. Box 5119
11 Bolwarra Road
Port Macquarie
N.S.W. 2444
Australia
+61 2 65 811111
+61 2 65813058

JLG Latino Americana Ltda.
Rua Eng. Carlos Stevenson,
80-Suite 71
13092-310 Campinas-SP
Brazil
+55 19 3295 0407
+55 19 3295 1025

JLG Industries (UK) Ltd
Bentley House
Bentley Avenue
Middleton
Greater Manchester
M24 2GP - England
+44 (0)161 654 1000
+44 (0)161 654 1001

JLG France SAS
Z.I. de Baulieu
47400 Fauillet
France
+33 (0)5 53 88 31 70
+33 (0)5 53 88 31 79

JLG Deutschland GmbH
Max-Planck-Str. 21
D - 27721 Ritterhude - Ihlpohl
Germany
+49 (0)421 69 350 20
+49 (0)421 69 350 45

JLG Equipment Services Ltd.
Rm 1107 Landmark North
39 Lung Sum Avenue
Sheung Shui N. T.
Hong Kong
(852) 2639 5783
(852) 2639 5797

JLG Industries (Italia) s.r.l.
Via Po. 22
20010 Pregnana Milanese - MI
Italy
+39 029 359 5210
+39 029 359 5845

Oshkosh-JLG Singapore Technology
Equipment Pte Ltd
29 Tuas Ave 4,
Jurong Industrial Estate
Singapore, 639379
+65-6591 9030
+65-6591 9031

Oshkosh-JLG (Tianjin) Equipment
Technology., Ltd
Pudong Kerry Parkside
Room 3705
1155 Fang Dian Road
Pudong, Shanghai 201204
+0086 21 60311575
+0086 21 60311599

Plataformas Elevadoras
JLG Iberica, S.L.
Trapadella, 2
P.I. Castellbisbal Sur
08755 Castellbisbal, Barcelona
Spain
+34 93 772 4700
+34 93 771 1762

JLG Sverige AB
Enkopingsvagen 150
Box 704
SE - 176 27 Jarfalla
Sweden
+46 (0)850 659 500
+46 (0)850 659 534

www.jlg.com