https://truckmanualshub.com/

Technical data
Hydraulic lift crane

LR 1200
Litronic®

Complies with ANSI B 30.5

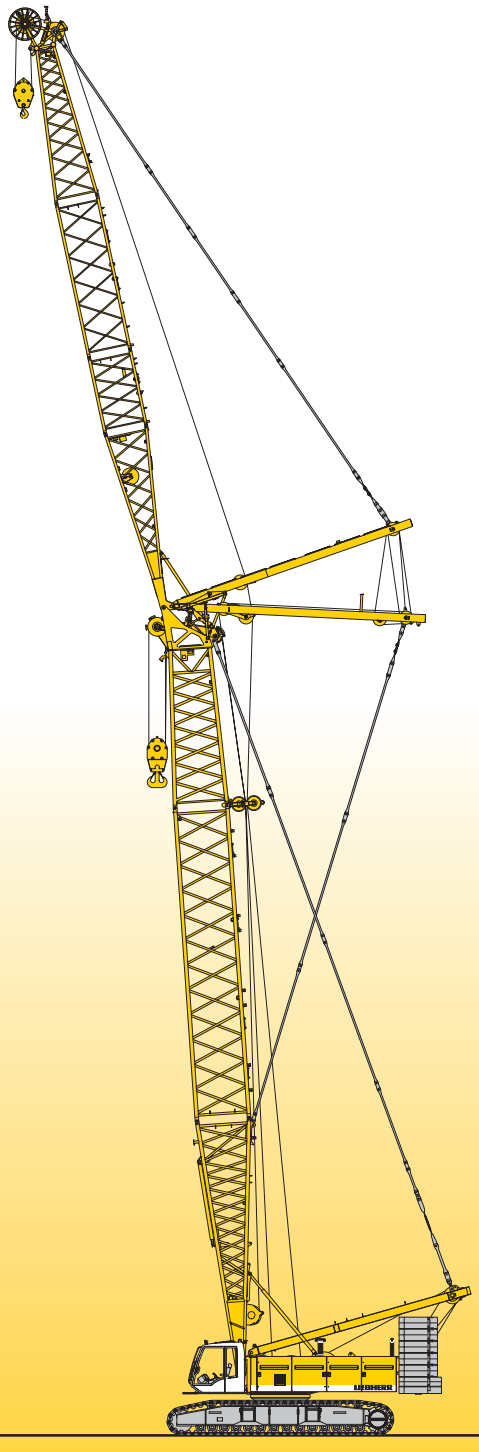

LIEBHERR

https://truckmanualshub.com/

Dimensions

Basic machine with undercarriage

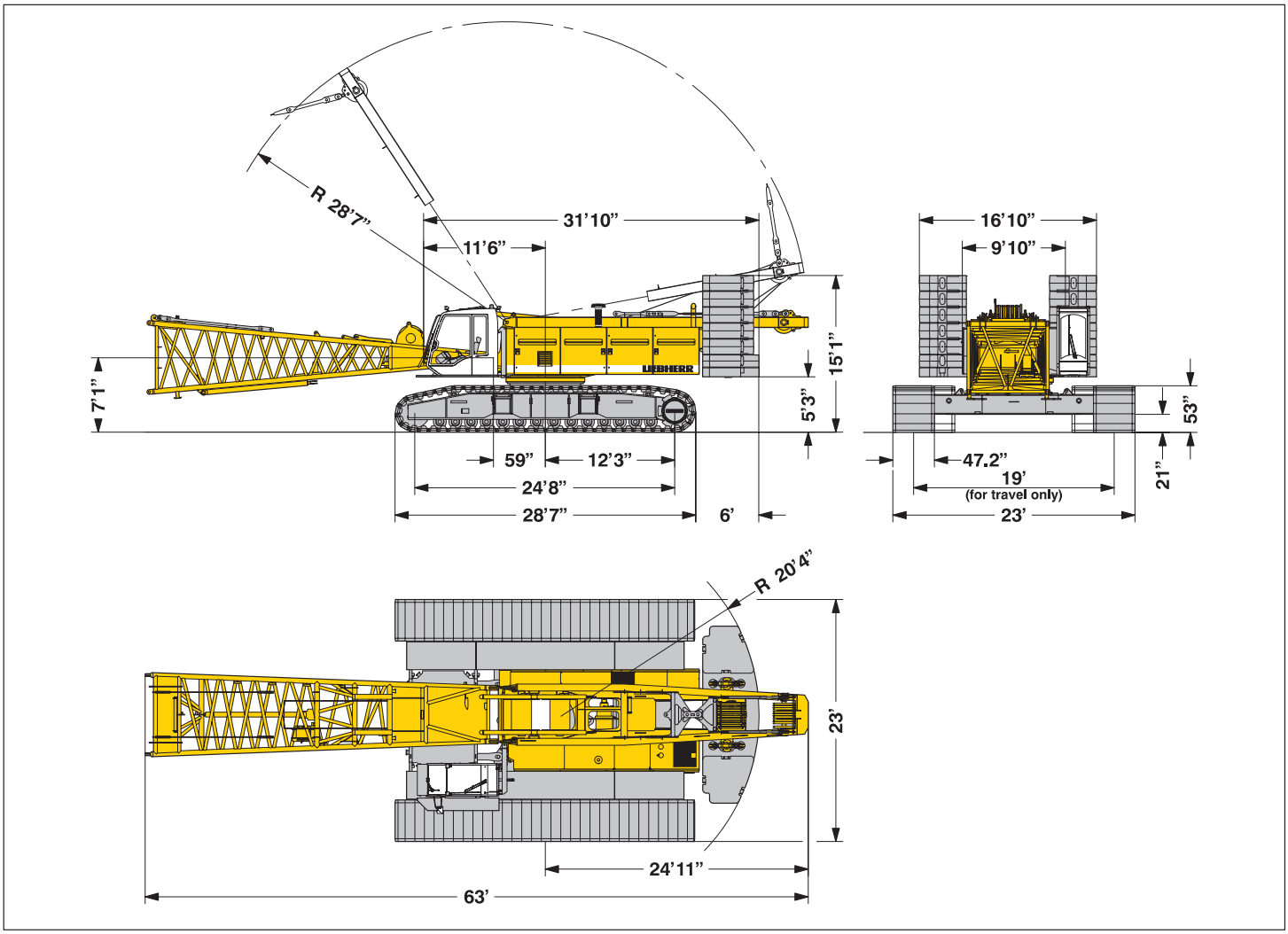

Operating weight

The operating weight includes the basic machine with crawlers, 2 main winches 26,500 lbs including wire ropes (853 ft and 1624 ft) and 66 ft main boom, consisting of A–frame, boom foot (33 ft), boom head (23 ft), boom extension (10 ft), 178,600 lbs basic counterweight, 79,400 lbs carbody counterweight and 551,100 lbs hook block.

Total weight ——— approx. 463,000 lbs

Ground pressure

Ground bearing pressure ——— 16.5 PSI

Equipment

Main boom (No. 2320.xx) max. length ——— 292 ft
High reach (No. 2320.xx and 1916.xx) ——— 384 ft
Luffing jib (No. 1916.xx) max. length ——— 312 ft
Max. combination ——— boom 174 ft and luffing jib 312 ft
Fixed jib (No. 1008.xx) ——— 36 ft – 85 ft
Auxiliary jib 53,000 lbs lifting capacity (optional 79,100 lbs)

Remarks

1. The lifting capacities stated are valid for lifting operation only (corres–ponds with crane classification according to F.E.M. 1.001, crane group A1)
2. Crane standing on firm, horizontal ground.
3. The weight of the lifting device (hoisting ropes, hook block, shackle etc.) must be deducted from the gross lifting capacity to obtain a net lifting value.
4. Additional equipment on boom (e.g. boom walkways, auxiliary jib) must be deducted to get the net lifting capacity.
5. For max. wind speed please refer to lift chart in operator's cab or manual.
6. Working radii are measured from centre of swing and under load.
7. The lifting capacities are valid for 360 degrees of swing.
8. Calculation of stability under load is based on 75% tipping load, ANSI B 30.5 and ISO 4305 Table 2.
9. The structures are calculated according to F.E.M. 1.001 – 1998 (EN 13001–2 / 2004) and tested according to SAE J 987.

https://truckmanualshub.com/

Transport dimensions and weights

Basic machine and boom (No. 2320.xx)

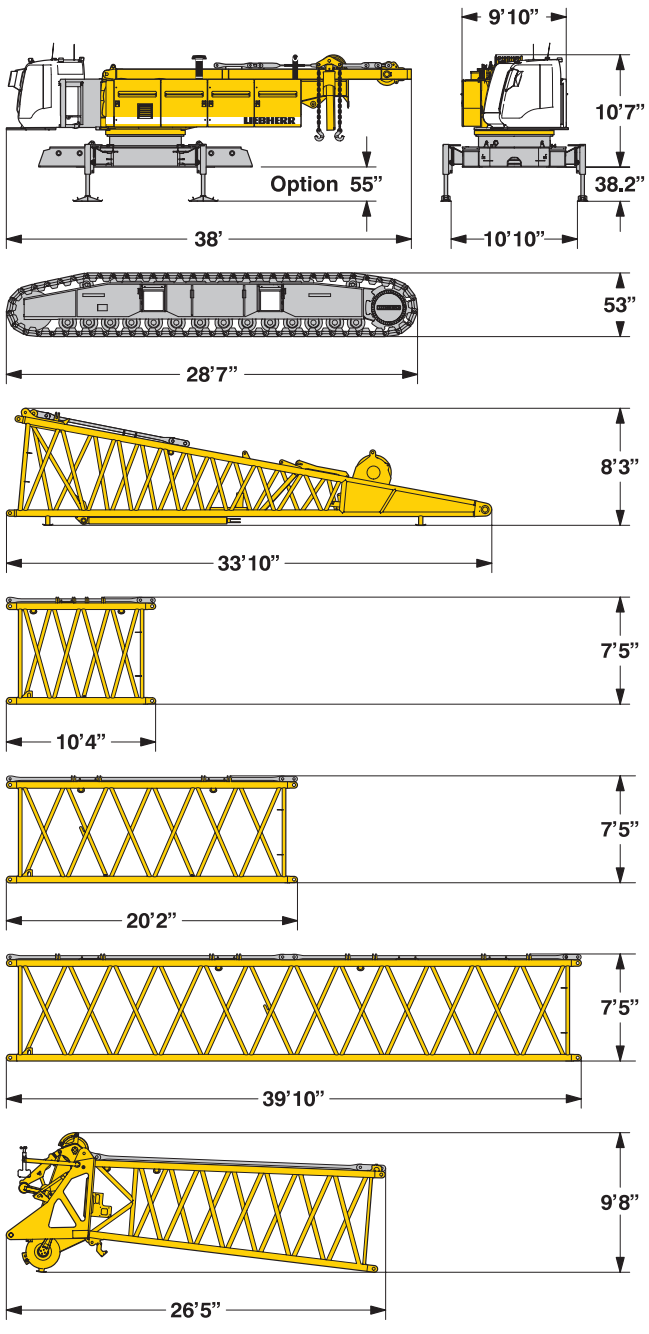

Transport option

*) Including pendant straps

Basic machine

with A–frame, 2x 26,500 lbs crane winches including wire ropes (total hoist ropes 247,700 ft), without crawlers, boom foot, basic counterweight and carbody counterweight

Width	10’
Weight in lbs	89,950

Crawler 2x

Flat track shoes	47.2”
Width	47.2”
Weight in lbs	43,650

Boom foot (No. 2320.25)

Width	8’
Weight in lbs with luffing winch*	12,346
Weight in lbs without luffing winch*	8,820

Boom section (No. 2320.23) 10 ft

Width	8’
Weight in lbs*	2,030

Boom section (No. 2320.20) 20 ft

Width	8’
Weight in lbs*	2,830

Boom section (No. 2320.20) 40 ft

Width	8’
Weight in lbs*	5,200

Boom head (No. 2320.23)

Width	8’
Weight in lbs*	9,500

Boom transport option

No. 2320.xx/1916.xxx	40’ /40’	20’ / 20’	10’ /10’
Length	40’2”	20’6”	10’8”
Weight in lbs*	7,960	4,350	3,240

https://truckmanualshub.com/

Transport dimensions and weights

Luffing jib (No. 1916.xx)

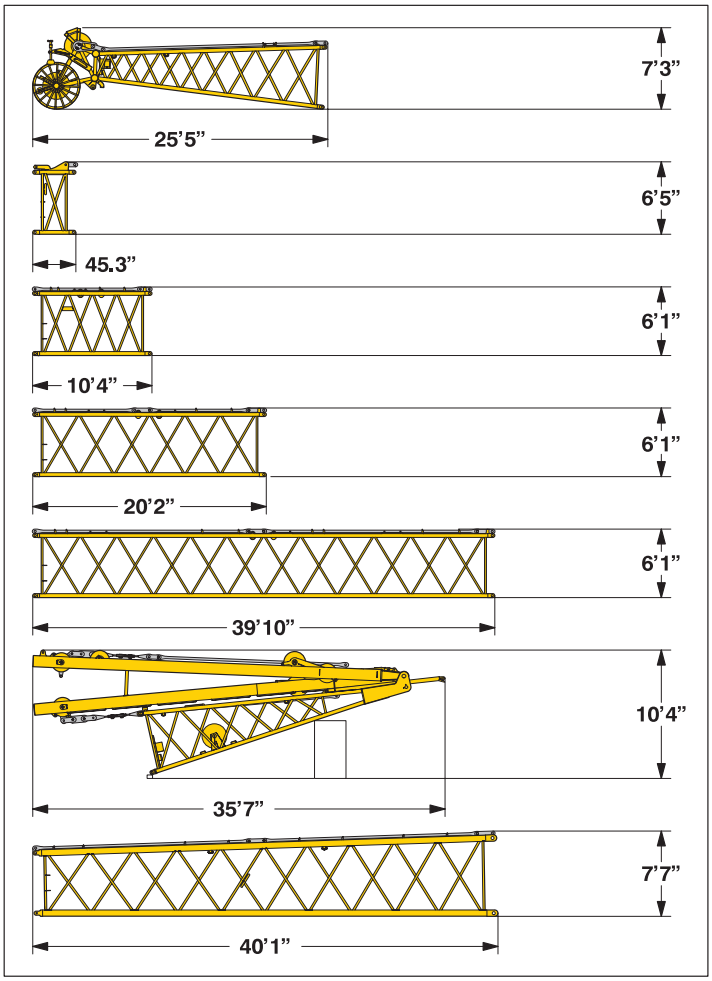

Luffing jib head (No. 1916.21)

Width	6’9”
Weight in lbs*	3,400

L – boom jib section (No. 1916.22) 3 ft

Width	6’9”
Weight in lbs*	1,000

Luffing jib section (No. 1916.18) 10 ft

Width	6’9”
Weight in lbs*	1,210

Luffing jib section (No. 1916.18) 20 ft

Width	6’9”
Weight in lbs*	1,520

Luffing jib section (No. 1916.18) 40 ft

Width	6’9”
Weight in lbs*	2,760

Luffing jib foot with A-frames (No. 1916.22)

Width	6’9”
Weight in lbs*	14,110

L – boom section tapered (No. 2320/1916.20) 40 ft

Width	7’11”
Weight in lbs*	5,810

Fixed jib (No. 1008.xx)

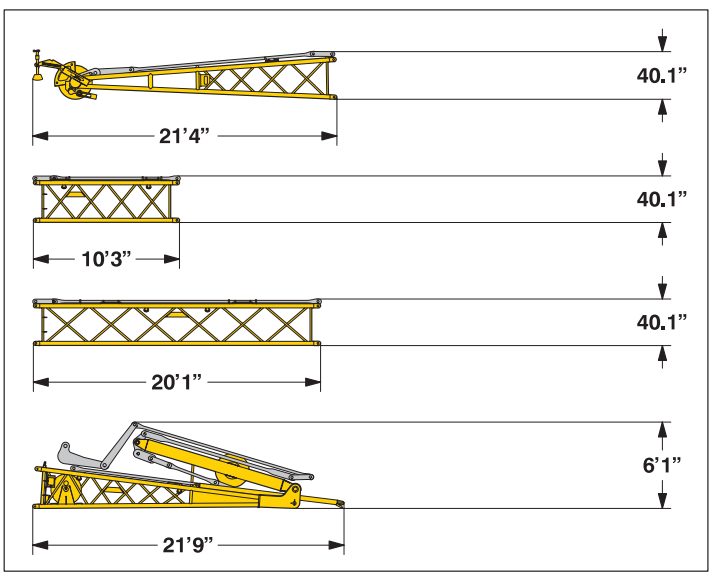

Fixed jib head (No. 1008.20)

Width	45”
Weight in lbs*	2,060

Fixed jib section (No. 1008.17) 10 ft

Width	43.3”
Weight in lbs*	660

Fixed jib section (No. 1008.17) 20 ft

Width	43.3”
Weight in lbs*	1,010

Fixed jib foot with A-frame (No. 1008.20)

Width	59”
Weight in lbs*	4,300

*) Including pendant straps

https://truckmanualshub.com/

Transport dimensions and weights

Counterweights

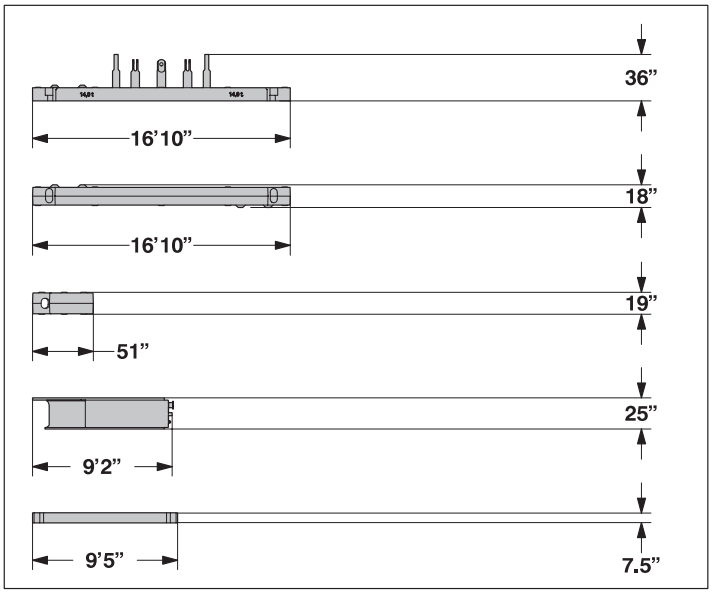

Counterweight	1x
Width	5’5”
Weight in lbs	31,970

Counterweight	1x
Width	5’5”
Weight in lbs	35,940

Counterweight	10x
Width	54”
Weight in lbs	11,250

Carbody counterweight	2x
Width	11’
Weight in lbs	21,600

Carbody counterweight	2x
Width	6’9”
Weight in lbs	18,300

Mid fall (option)

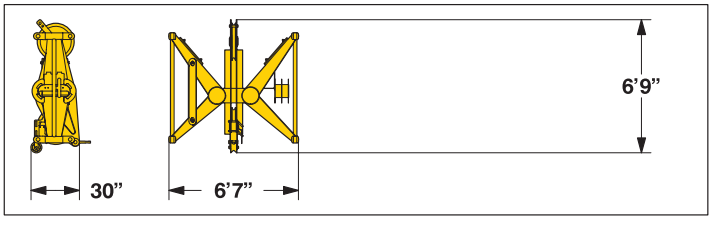

Mid fall section (No. 1916.32)	1.64 ft
Width	30”
Weight in lbs	1,600

Hooks

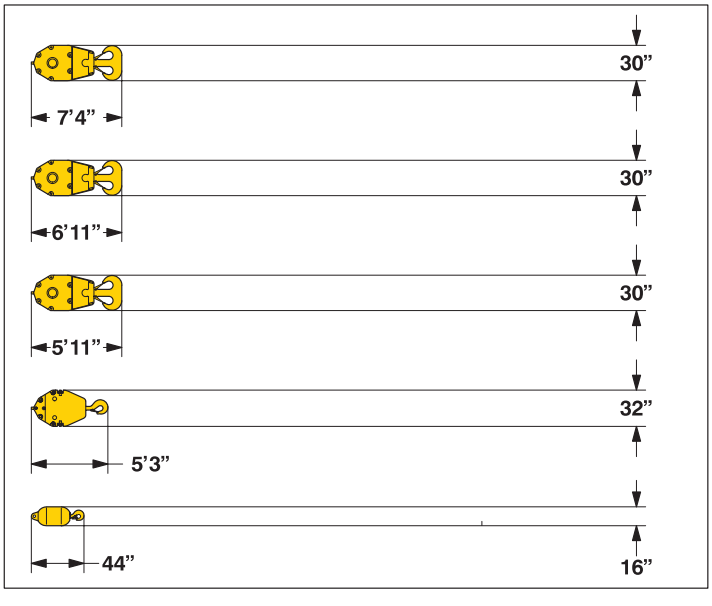

551,200 lbs hook block – 11 sheaves		
Width	41”	49”
Weight in lbs	5,070	7,050

353,000 lbs hook block – 7 sheaves			
Width	25”	30”	35”
Weight in lbs	3,300	4,960	6,610

220,500 lbs hook block – 5 sheaves			
Width	21”	25”	30”
Weight in lbs	2,900	4,000	5,070

88,200 lbs hook block – 1 sheave			
Width	12”	16”	20”
Weight in lbs	1,500	2,450	3,300

27,600 lbs single hook	
Width	16”
Weight in lbs	1,300

https://truckmanualshub.com/

Technical description

Engine

PPower rating according to ISO 9249, 270 kW (362 hp) at 2000 rpm
Engine type ——— Liebherr D 936 L A6
Fuel tank ——— 219 gal capacity with continuous level indicator and reserve warning
Engine complies with NRMM exhaust certification EPA / CARB Tier 3 and 97/68 EC Stage III

Hydraulic system

A double axial displacement pump supplies the open loop hydraulic system, allowing all functions to be operated simultaneously. To minimize peak pressure an automatic working pressure cut–off is integrated in the pump. All filters are electronically monitored.
The use of synthetic environmentally friendly (biodegradable) oils is possible.
Working pressure ——— max. 5076 PSI
Oil tank capacity ——— 172 gal

Luffing jib winch

Line pull ——— max. 23,150 lbs
Rope diameter ——— 20 mm
Jib luffing ——— 51 sec. from 15° to 78°

Boom winch

Line pull ——— max. 47,850 lbs
Rope diameter ——— 24 mm
Boom up ——— 130 sec. from 15° to 86°

Swing

Consists of rollerbearing with external teeth, swing drive with fixed axial piston hydraulic motor, spring loaded and hydraulically released multi–disc holding brake, planetary gearbox and pinion.
Both swing modes are possible – speed control or free swing.
A multi–disc holding brake acts automatically at zero swing motion.
Swing speed from 0 – 3 rpm continuously variable.

Main winches

Line pull (1st layer) ——— max. 38,600 lbs
Line pull (7th layer) ——— 26,500 lbs
Rope diameter ——— 26 mm
Drum diameter ——— 23 inch
Rope speed ft/min ——— 0 – 446
Rope capacity in 7 layers ——— 1600 ft
The winches are outstanding in their compact design and easy assembly.
Propulsion is via a planetary gearbox in an oil bath.
Load support by the hydraulic system; additional safety factor provided by a spring loaded, multi–disc holding brake.
The main winches use pressure controlled, variable flow hydraulic motors. This system features sensors that automatically adjust oil flow to provide max. winch speed depending on load.
Option – winch with freefall system:
Clutch and braking functions on the freefall system are provided by a compact designed, low wear and maintenance free multi–disc brake.

Crawlers

Propulsion through axial piston motor, hydraulically released spring loaded multi–disc brake, crawler tracks, hydraulic chain tensioning device.
Flat track shoes ——— 47.2 inch
Drive speed ——— 0 – 1 mph

Control

The control system – developed and manufactured by Liebherr – is designed to withstand extreme environmental conditions such as temperature, vibration and electromagnetic interference and to meet all requirements that are needed in heavy duty crane operation.
Complete machine operating data are shown on a high resolution display. Standard operational information is displayed by means of graphical symbols, fault indications are displayed in plain text (more than 15 languages available).
The cranes are equipped with proportional control for all main movements, which can be carried out simultaneously.
The crane is operated with 2 multi–directional joysticks, the right for winch I and boom, the left for winch II and swing control.
Option:
Bi–directional double T–levers for simultaneous boom and luffing jib operation.
The crawlers are activated by the two central foot pedals. Additionally, hand levers can be attached to the pedals.
Remote control for assembly of counterweight and boom hinge pins.

Noise emission

Noise emissions correspond with 2000/14/EC directive on noise emission by equipment used outdoors.

https://truckmanualshub.com/

Boom combinations

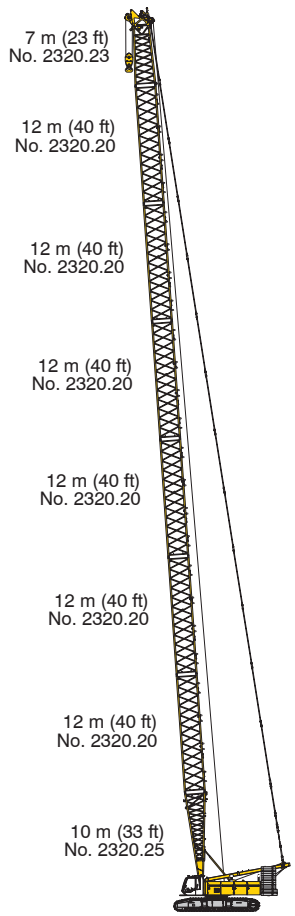

Main boom No. 2320.xx	292 ft

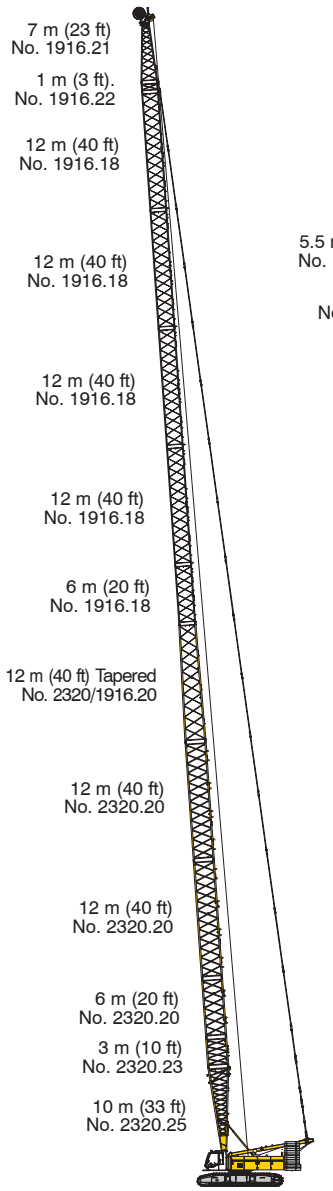

Max. combination	384 ft
Main boom No. 2320.xx	141 ft
Tapered No. 2320/1916.xx	40 ft
Luffing jib No. 1916.xx	203 ft

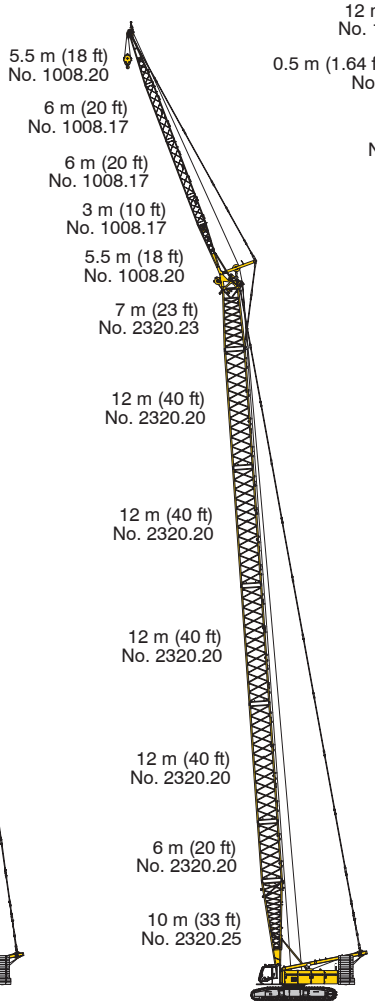

Max. combination	318 ft
Main boom No. 2320.xx	233 ft
Fixed jib No. 1008.xx	85 ft

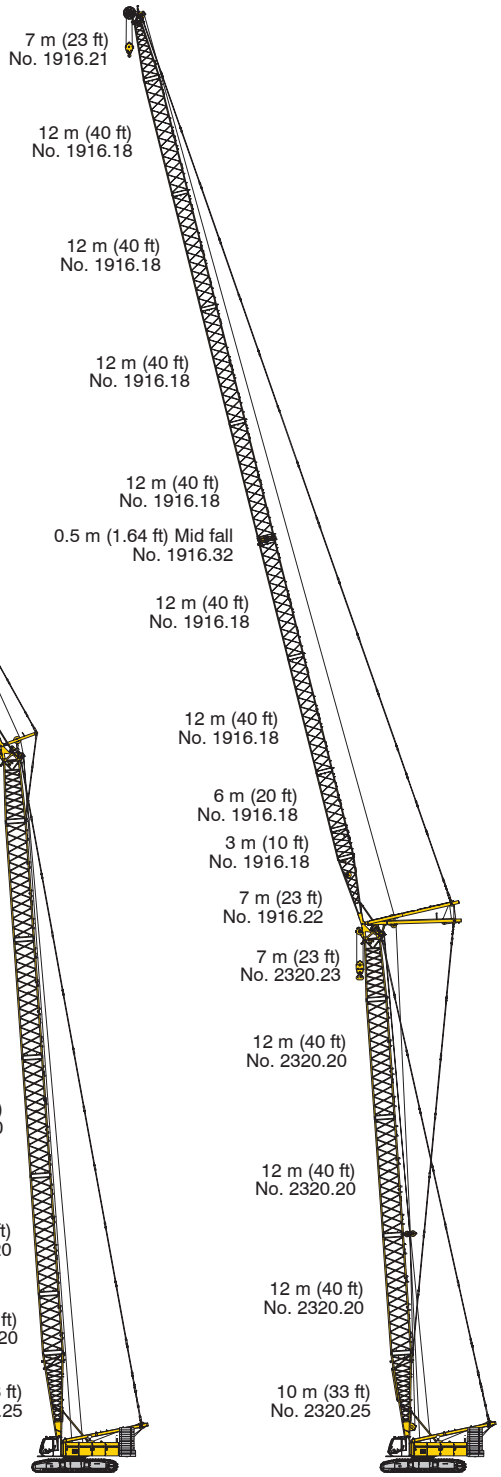

Max. combination	486 ft
Main boom No. 2320.xx	174 ft
Luffing jib No. 1916.xx	312 ft
Main boom No. 2320.xx	184 ft
Luffing jib No. 1916.xx	262 ft

https://truckmanualshub.com/

Self assembly system

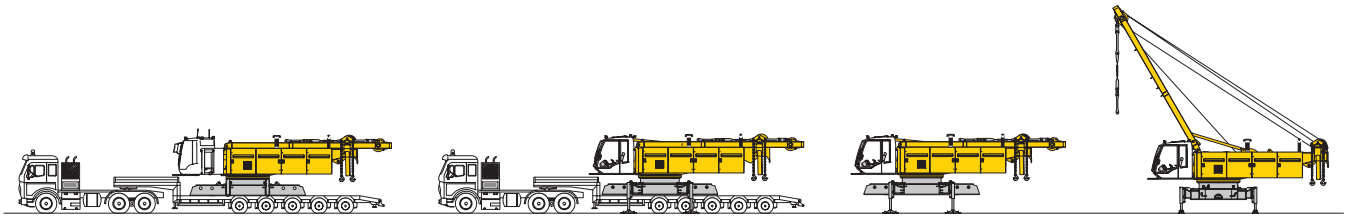

Unloading of basic machine

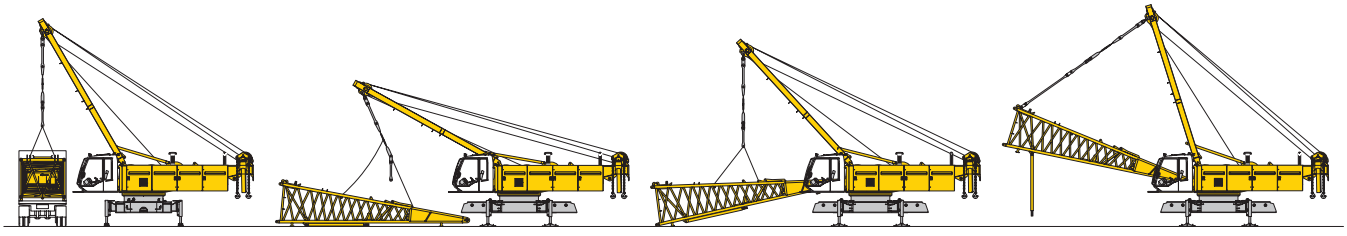

Unloading and assembly of boom foot

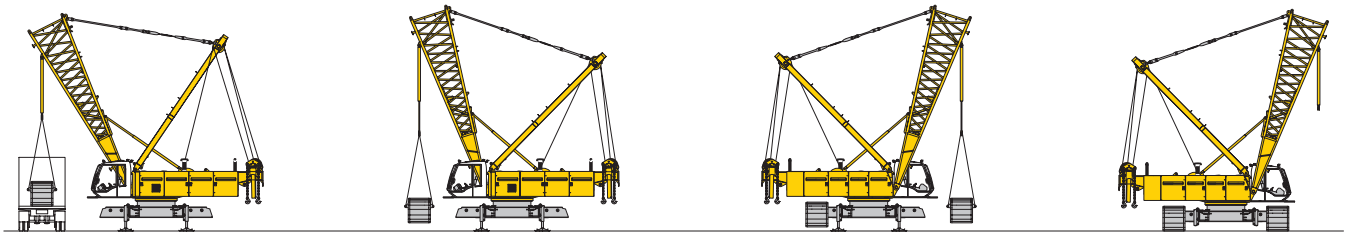

Unloading and assembly of crawlers

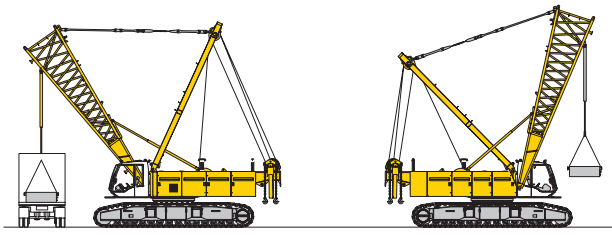

Unloading and assembly of carbody counterweight

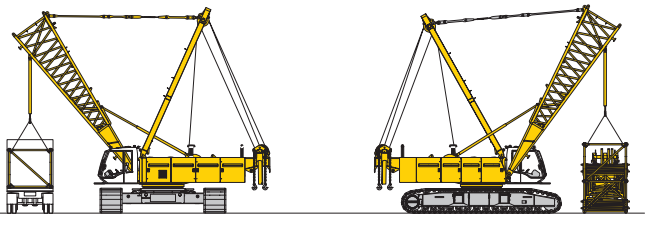

Unloading and assembly of boom

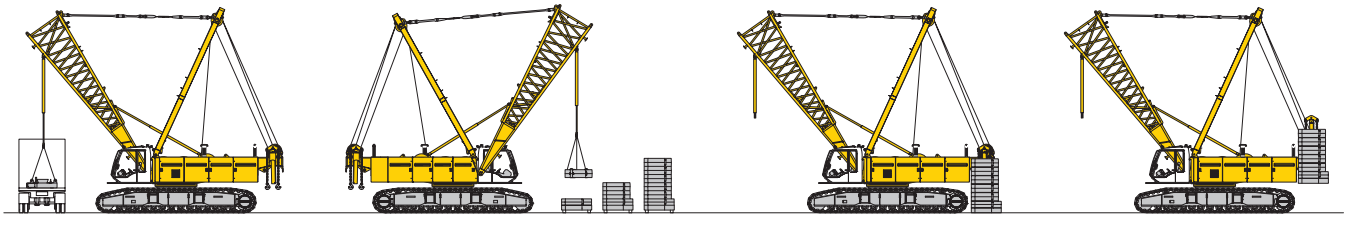

Unloading and assembly of counterweight

https://truckmanualshub.com/

Erecting of main boom to working position

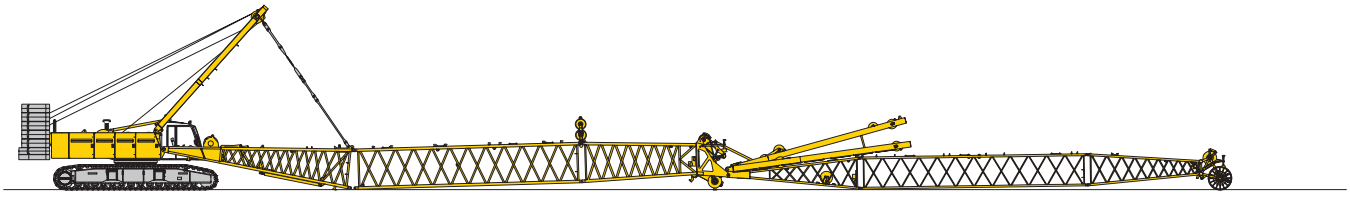

Assembly of boom

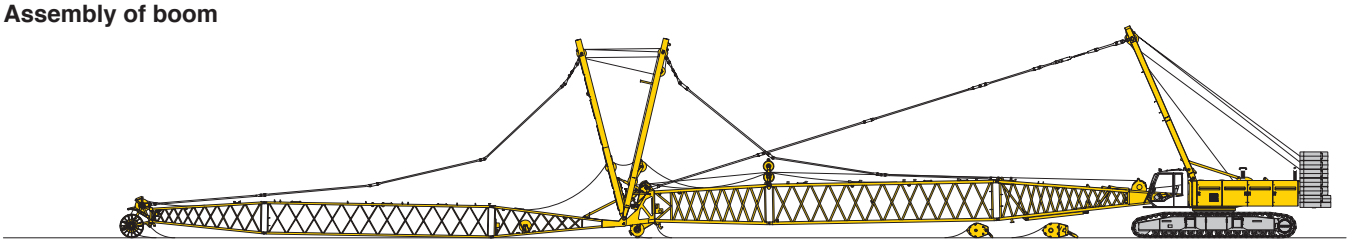

Reeving of hoist and luffing jib ropes

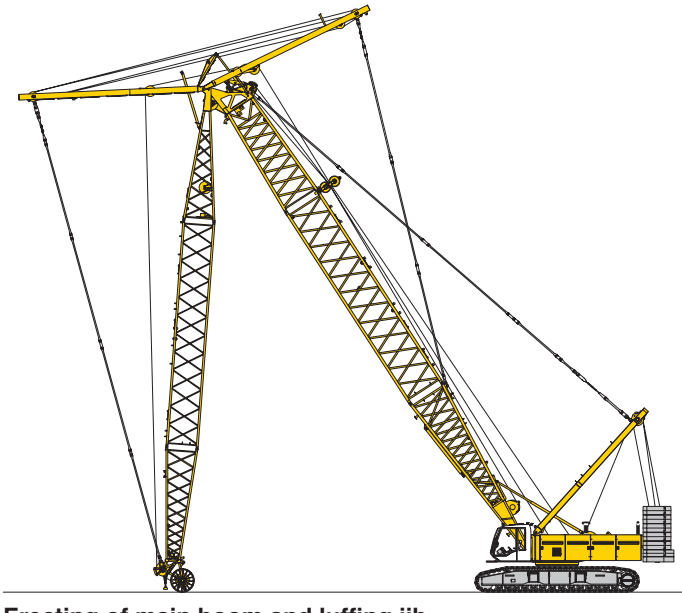

Erecting of main boom and luffing jib

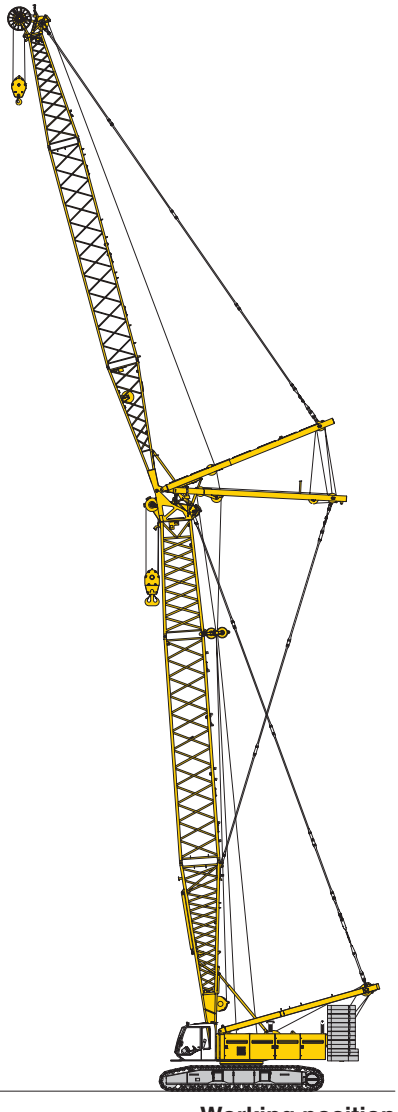

Working position

https://truckmanualshub.com/

Working range – main boom (No. 2320.xx) 86° – 15°

178,600 lbs counterweight and 79,400 lbs carbody counterweight

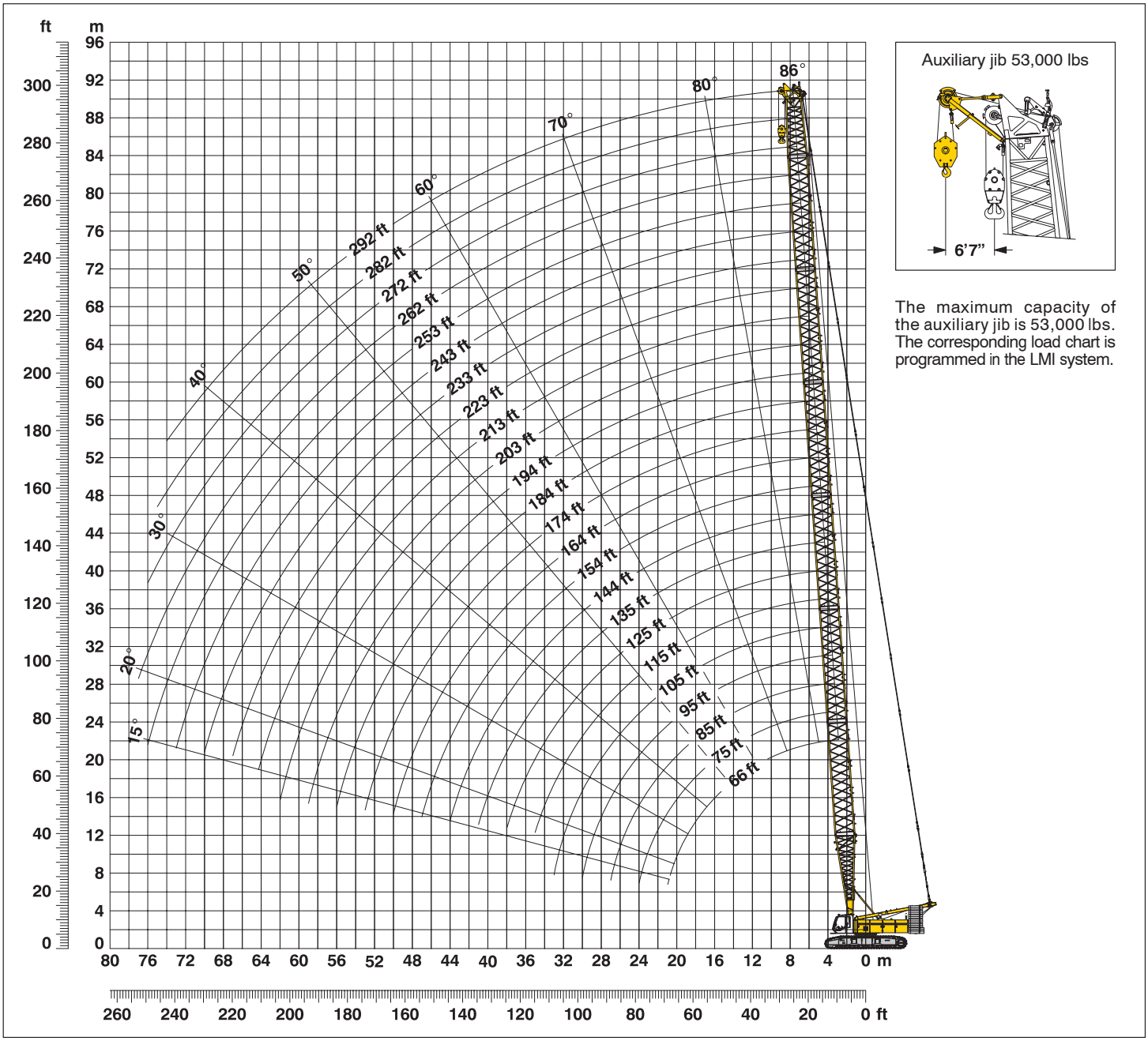

The maximum capacity of the auxiliary jib is 53,000 lbs. The corresponding load chart is programmed in the LMI system.

Main boom configuration (Table1 – No. 2320.xx)

Configuration for boom lengths (66 ft – 292 ft)

	Length	Amount of boom extensions																							
Boom foot	33 ft	1	1	1	1	1	1	1	1	1	1	1	1	1	1	1	1	1	1	1	1	1	1	1	1
Boom insert	10 ft*	1		1		1		1		1		1		1		1		1		1		1		1	
Boom insert	20 ft*		1	1			1	1			1	1			1	1			1	1			1	1	
Boom insert	40 ft*				1	1	1	1	2	2	2	2	3	3	3	3	4	4	4	4	5	5	5	5	6
Boom head	23 ft	1	1	1	1	1	1	1	1	1	1	1	1	1	1	1	1	1	1	1	1	1	1	1	1
Boom length in (ft)		66	75	85	95	105	115	125	135	144	154	164	174	184	194	203	213	223	233	243	253	262	272	282	292

*Actual lengths of boom sections are metric (e.g. 3 m, 6 m, 12 m). The figures shown above are approximate conversions to feet.

https://truckmanualshub.com/

Lift chart for main boom (No. 2320.xx)

178,600 lbs counterweight and 79,400 lbs carbody counterweight

Capacities in 1000 lbs for boom lengths (66 ft – 292 ft) – with 26,500 lbs winches

	Boom length in (ft)													
	66	85	105	125	144	164	184	203	223	243	262	282	292	
Radius (ft)	lbs	lbs	lbs	lbs	lbs	lbs	lbs	lbs	lbs	lbs	lbs	lbs	lbs	Radius (ft)
20.3						209.7								20.3
25				270.3	235.8	199.0	181.2	150.2	121.9					25
30	262.9	263.4	264.0	245.1	214.6	187.9	173.8	146.0	119.9	105.1	88.0	73.0	65.1	30
40	176.5	176.6	176.6	176.3	172.0	164.9	165.6	138.4	113.2	101.4	86.1	71.4	63.7	40
50	129.7	129.8	129.7	129.2	129.1	128.6	125.8	126.5	107.4	97.6	82.9	68.8	61.7	50
60	101.4	101.6	101.6	101.2	100.8	100.3	99.8	99.2	98.7	92.9	80.5	66.5	59.7	60
65	91.0	91.3	91.3	90.9	90.5	90.0	89.5	88.9	88.4	87.7	77.2	65.3	58.9	65
80		69.2	69.3	68.8	68.5	67.9	67.4	66.7	66.2	65.5	64.9	61.0	54.7	80
85		63.6	63.9	63.4	63.1	62.5	62.0	61.3	60.7	60.1	59.4	58.8	53.6	85
100			51.1	50.8	50.4	49.8	49.3	48.6	48.0	47.3	46.7	46.0	45.7	100
105			26.6	47.5	47.1	46.5	46.0	45.3	44.7	44.0	43.4	42.6	42.4	105
110				44.4	44.1	43.5	43.0	42.3	41.7	41.0	40.3	39.6	39.3	110
120				39.2	38.9	38.3	37.8	37.1	36.5	35.8	35.1	34.4	34.1	120
140					30.8	30.3	29.8	29.1	28.5	27.8	27.1	26.4	26.2	140
160						24.4	24.0	23.3	22.7	22.0	21.3	20.6	20.3	160
180							19.3	18.7	18.1	17.4	16.8	16.0	15.7	180
200								15.0	14.5	13.8	13.2	12.4	12.1	200
215									12.2	11.6	10.9	10.2	9.9	215
235										8.9	8.4	7.6	7.3	235
255											6.2	5.5	5.2	255
275												3.6	3.3	275
285													2.5	285

Lift chart for main boom (No. 2320.xx)

156,100 lbs counterweight and 79,400 lbs carbody counterweight

Capacities in 1000 lbs for boom lengths (66 ft – 292 ft) – with 26,500 lbs winches

	Boom length in (ft)													
	66	85	105	125	144	164	184	203	223	243	262	282	292	
Radius (ft)	lbs	lbs	lbs	lbs	lbs	lbs	lbs	lbs	lbs	lbs	lbs	lbs	lbs	Radius (ft)
13.4	550.0*													13.4
15	484.9	367.7												15
20	410.1	355.9	341.1	303.0	254.7	209.7								20
25	318.5	333.1	306.8	270.3	235.8	199.0	181.2	150.2	121.9					25
30	247.0	247.2	245.5	245.1	214.6	187.9	173.8	146.0	119.9	105.1	88.0	73.0	65.1	30
40	161.2	161.3	161.4	161.1	160.9	160.5	160.2	138.4	113.2	101.4	86.1	71.4	63.7	40
50	118.2	118.3	118.3	117.9	117.6	117.1	116.7	116.2	107.4	97.6	82.9	68.8	61.7	50
60	92.2	92.4	92.4	92.0	91.7	91.1	90.7	90.1	89.6	89.0	80.5	66.5	59.7	60
65	82.7	83.0	83.0	82.6	82.2	81.6	81.2	80.6	80.0	79.4	77.2	65.3	58.9	65
80		62.6	62.7	62.3	61.9	61.3	60.8	60.2	59.6	59.0	58.4	57.4	54.7	80
85		57.5	57.8	57.3	57.0	56.4	55.9	55.2	54.6	54.0	53.3	52.7	51.2	85
100			46.0	45.7	45.4	44.8	44.2	43.6	43.0	42.3	41.6	40.9	40.6	100
105			26.6	42.6	42.3	41.7	41.2	40.5	39.9	39.2	38.5	37.8	37.6	105
120				35.0	34.7	34.2	33.6	32.9	32.3	31.6	31.0	30.2	30.0	120
140					27.3	26.8	26.4	25.7	25.1	24.4	23.7	23.0	22.7	140
160						21.3	20.9	20.2	19.6	18.9	18.3	17.5	17.2	160
180							16.6	16.0	15.5	14.7	14.1	13.3	13.0	180
200								12.6	12.1	11.4	10.8	10.0	9.7	200
215									10.0	9.3	8.7	7.9	7.7	215
235										6.9	6.3	5.6	5.3	235
255											4.3	3.6	3.3	255
270												2.3	2.0	270

Above lift chart is for reference only. For actual lift duty please refer to lift chart in operator's cab or manual.
*) Requires special boom

https://truckmanualshub.com/

L – boom high reach (No.2320 / 1916.xx) 217 ft – 384 ft

Working range 84° – 15°

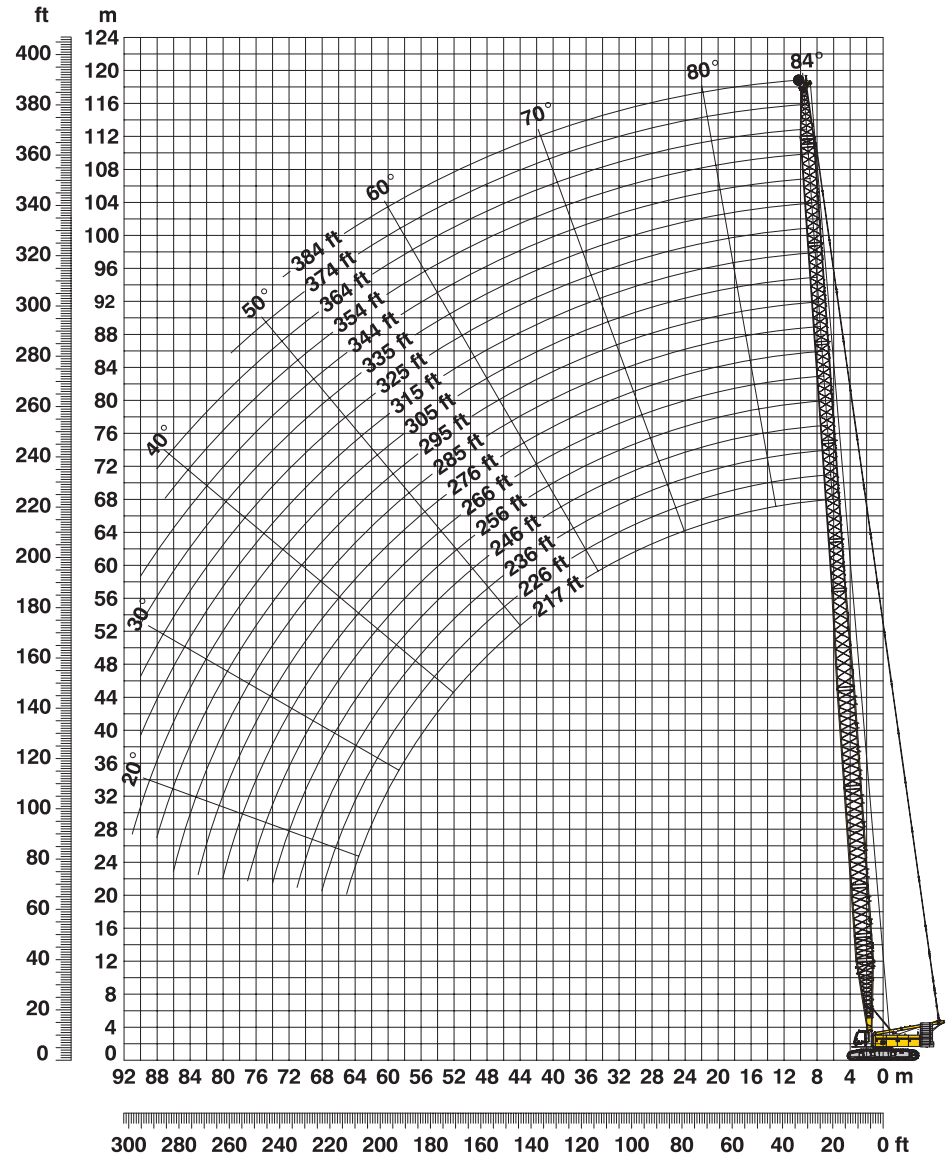

L – boom configuration with 141 ft main boom (No. 2320.xx / No. 1916.xx)

Configuration for L – boom lengths (217 ft – 384 ft)

	Length	Amount of boom and luffing jib extensions																	
Boom foot	33 ft	1	1	1	1	1	1	1	1	1	1	1	1	1	1	1	1	1	1
Boom insert	10 ft*	1	1	1	1	1	1	1	1	1	1	1	1	1	1	1	1	1	1
Boom insert	20 ft*	1	1	1	1	1	1	1	1	1	1	1	1	1	1	1	1	1	1
Boom insert	40 ft*	2	2	2	2	2	2	2	2	2	2	2	2	2	2	2	2	2	2
Tapered	40 ft*	1	1	1	1	1	1	1	1	1	1	1	1	1	1	1	1	1	1
Luffing insert	10 ft*	1		1		1		1		1		1		1		1		1	
Luffing insert	20 ft*		1	1			1	1			1	1			1	1			1
Luffing insert	40 ft*				1	1	1	1	2	2	2	2	3	3	3	3	4	4	4
Luffing jib head	26 ft*	1	1	1	1	1	1	1	1	1	1	1	1	1	1	1	1	1	1
Max. L – boom length (ft)		217	226	236	246	256	266	276	285	295	305	315	325	335	344	354	364	374	384

*Actual lengths of boom sections are metric (e.g. 3 m, 6 m, 8 m, 10 m, 12 m). The figures shown above are approximate conversions to feet.

https://truckmanualshub.com/

Lift chart for L – boom (No. 2320 /1916.xx)

Main boom length 141 ft

Capacities in 1000 lbs
178,600 lbs counterweight and 79,400 lbs carbody counterweight

	Boom length in (ft)					
	217	246	295	325	354	384
Radius (ft)	lbs	lbs	lbs	lbs	lbs	lbs
29.3	129.7					
30	129.6					
35	128.9	92.3				
40	124.2	89.6	58.5			
45	117.9	86.8	56.5	42.5	33.4	
50	105.7	84.4	53.9	40.9	32.2	22.5
60	88.4	79.9	48.9	37.9	29.7	21.2
80	65.2	61.0	41.6	32.4	24.3	18.7
100	49.0	47.5	36.2	28.0	21.5	16.4
120	40.5	39.2	32.0	24.0	19.2	14.6
140	32.6	32.4	28.3	21.5	17.2	12.9
160	26.7	26.6	25.3	19.3	15.4	11.7
170	24.4	24.3	23.4	18.5	14.6	11.0
180	22.3	22.2	21.3	17.2	14.0	10.4
190	20.4	20.3	19.4	16.1	13.3	9.9
200	18.7	18.6	17.7	15.1	12.4	9.5
210	17.1	17.1	16.2	14.4	11.6	8.8
220		15.7	14.8	13.5	10.9	8.2
230		14.4	13.6	12.7	10.4	7.6
240		13.2	12.4	12.0	9.7	7.2
250			11.4	11.0	9.0	6.7
260			10.4	10.0	8.5	6.0
270			9.5	9.1	8.0	5.4
280			8.6	8.3	7.2	4.9
285			8.2	7.9	6.7	4.7
290				7.5	6.2	4.5
300				6.6	5.2	3.9
310				5.7	4.3	3.2
315				5.3	3.9	2.8
320					3.5	2.5
330					2.7	
335					2.3	

Main boom length 180 ft

Capacities in 1000 lbs
178,600 lbs counterweight and 79,400 lbs carbody counterweight

	Boom length in (ft)					
	256	295	315	335	354	374
Radius (ft)	lbs	lbs	lbs	lbs	lbs	lbs
33.5	96.0					
35	95.2					
40	92.9	66.5	57.5			
45	89.8	64.8	56.9	46.4	39.4	
50	87.7	62.8	55.5	45.3	38.2	32.0
60	82.6	59.7	51.4	41.9	35.5	29.8
80	63.7	53.6	45.4	36.5	30.9	24.7
100	47.4	47.2	40.6	32.1	27.3	21.9
120	38.9	37.5	34.7	28.7	23.7	19.9
140	31.2	29.9	29.1	25.5	21.4	17.8
150	28.0	27.1	24.5	23.6	20.5	17.0
160	25.4	25.0	23.6	22.1	19.2	16.2
170	23.0	22.6	22.2	20.9	18.1	15.3
180	20.9	20.5	20.1	19.5	17.2	14.6
190	19.0	18.6	18.2	18.0	16.3	13.9
200	17.4	16.9	16.5	16.3	15.0	13.2
210	15.8	15.4	15.0	14.8	13.9	12.1
220	14.5	14.0	13.6	13.4	12.9	11.2
230	13.2	12.8	12.4	12.2	11.8	10.5
240	12.0	11.6	11.2	11.0	10.6	9.8
250	10.9	10.5	10.2	10.0	9.3	8.5
260		9.6	9.2	9.0	8.2	7.2
270		8.7	8.2	7.9	7.2	6.0
280		7.7	7.2	6.8	6.2	5.0
285		7.2	6.8	6.4	5.6	4.6
290			6.3	5.9	5.1	4.2
300			5.4	5.1	4.1	3.4
305			4.9	4.7	3.7	3.0
310				4.3	3.3	2.6
320				3.4	2.6	2.3
325				3.0	2.3	
330					2.1	

Above lift chart is for reference only. For actual lift duty please refer to lift chart in operator's cab or manual.

L – boom configuration with 180 ft main boom (No. 2320.xx / No. 1916.xx)

Configuration for L – boom lengths (256 ft – 374 ft)

	Length	Amount of boom and luffing jib extensions												
Boom foot	33 ft	1	1	1	1	1	1	1	1	1	1	1	1	1
Boom insert	10 ft*	1	1	1	1	1	1	1	1	1	1	1	1	1
Boom insert	20 ft*	1	1	1	1	1	1	1	1	1	1	1	1	1
Boom insert	40 ft*	3	3	3	3	3	3	3	3	3	3	3	3	3
Tapered	40 ft*	1	1	1	1	1	1	1	1	1	1	1	1	1
Luffing insert	10 ft*	1		1		1		1		1		1		1
Luffing insert	20 ft*		1	1			1	1			1	1		
Luffing insert	40 ft*				1	1	1	1	2	2	2	2	3	3
Luffing jib head	26 ft*	1	1	1	1	1	1	1	1	1	1	1	1	1
Max. L – boom length (ft)		256	266	276	285	295	305	315	325	335	344	354	364	374

*Actual lengths of boom sections are metric (e.g. 3 m, 6 m, 8 m, 10 m, 12 m). The figures shown above are approximate conversions to feet.

https://truckmanualshub.com/

Working range – luffing jib (No. 1916.xx) 78° - 15°

Main boom 88° – 45°

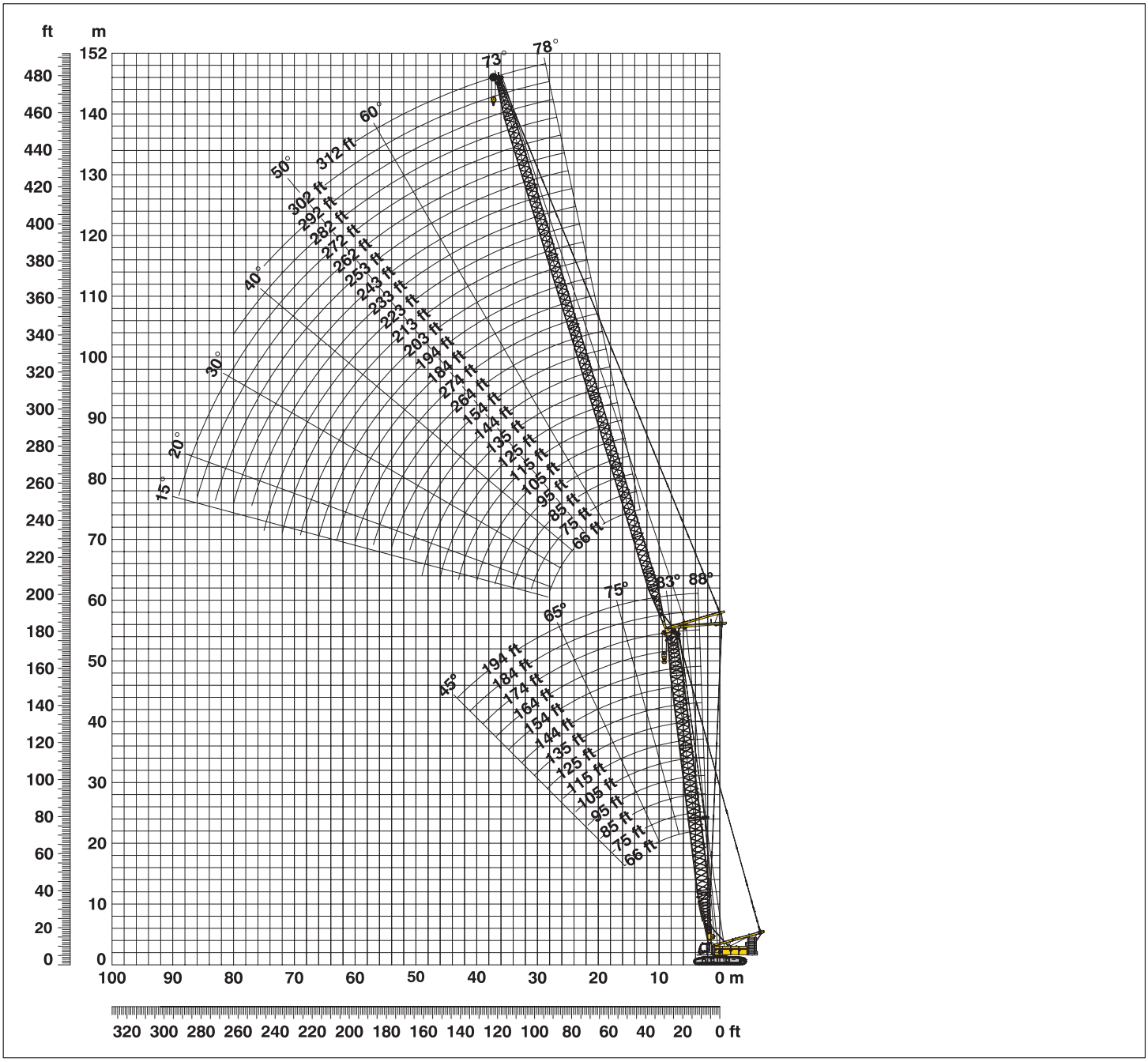

Boom configuration for main boom lengths (66 ft – 194 ft) – see table 1 on page 10

Jib configuration for jib lengths (66 ft – 312 ft)

	Length	Amount of luffing jib extensions																								
Luffing jib foot	23 ft	1	1	1	1	1	1	1	1	1	1	1	1	1	1	1	1	1	1	1	1	1	1	1	1	1
Luffing jib insert	10 ft*		1		1		1		1		1		1		1		1		1		1		1		1		1
Luffing jib insert	20 ft*	1	1			1	1			1	1			1	1			1	1			1	1			1	1
Luffing jib insert	40 ft*			1	1	1	1	2	2	2	2	3	3	3	3	4	4	4	4	5	5	5	5	6	6	6	6
Luffing jib head	23 ft	1	1	1	1	1	1	1	1	1	1	1	1	1	1	1	1	1	1	1	1	1	1	1	1	1	1
Luffing jib length (ft)		66	75	85	95	105	115	125	135	144	154	164	174	184	194	203	213	223	233	243	253	262	272	282	292	302	312

*Actual lengths of boom sections are metric (e.g. 3 m, 6 m, 12 m). The figures shown above are approximate conversions to feet.

https://truckmanualshub.com/

Lift chart – tower crane (No. 1916.xx)

Main boom angle 88°

Main boom 66 ft

	Jib length in (ft)							
	66	95	135	174	203	233	272	312
Radius (ft)	lbs	lbs	lbs	lbs	lbs	lbs	lbs	lbs
31.8		155.8						
35	155.8	153.3						
40	154.6	143.0	102.9					
50	122.2	119.9	95.8	72.4				
55	115.2	110.6	90.9	70.7	53.0			
65	96.3	89.5	81.5	67.4	51.9	41.0		
70	69.7	82.2	74.4	65.9	51.0	40.1	27.9	
80		71.2	68.0	60.9	48.8	38.5	26.8	17.2
100		45.0	51.5	49.8	45.3	35.6	23.6	15.9
140			26.6	33.5	31.9	28.9	20.4	13.3
175				21.6	25.0	24.0	18.1	11.5
205					16.9	19.3	16.1	10.1
235						12.1	14.2	8.7
270							8.1	7.3
280								6.4
310								3.6

Main boom 115 ft

	Jib length in (ft)							
	66	95	135	174	203	233	272	312
Radius (ft)	lbs	lbs	lbs	lbs	lbs	lbs	lbs	lbs
27.4	155.8							
35	140.4	123.4						
45	119.3	107.1	79.1					
50	109.2	100.3	79.1	53.0				
60	94.5	88.9	76.3	53.0	44.8			
65	88.5	83.2	73.3	53.0	44.2	34.3		
75	74.3	74.5	66.8	53.0	43.2	33.5	23.6	
80		70.4	64.2	52.0	42.7	33.2	23.2	15.5
100		57.3	54.2	47.9	40.4	31.6	21.5	15.0
140			37.7	36.7	33.5	28.0	18.8	12.6
180				25.7	24.8	23.7	16.7	10.7
205					21.4	21.3	15.7	9.7
235						16.4	14.6	8.5
275							10.6	7.1
280								7.0
310								5.8

Main boom 144 ft

	Jib length in (ft)							
	66	95	135	174	203	233	272	312
Radius (ft)	lbs	lbs	lbs	lbs	lbs	lbs	lbs	lbs
28.4	126.7							
35	119.6	100.4						
45	107.1	93.2	71.3					
55	95.8	85.2	68.6	49.8				
60	91.3	82.1	67.0	49.0	38.4			
65	87.0	76.3	65.3	48.4	38.0	30.1		
75	75.9	72.1	61.1	46.9	37.0	29.6	21.1	
80		69.2	59.6	46.2	36.5	29.3	21.0	14.4
100		59.0	52.1	43.1	34.5	27.9	19.9	13.5
140			38.5	35.9	30.6	24.6	17.7	11.5
180				27.1	24.8	21.9	15.9	9.9
205					21.5	20.2	15.0	9.0
235						16.5	14.0	7.9
275							11.1	6.7
300								6.0
310								5.7

Main boom 174 ft

	Jib length in (ft)							
	66	95	135	174	203	233	272	312
Radius (ft)	lbs	lbs	lbs	lbs	lbs	lbs	lbs	lbs
29.4	100.3							
40	92.1	77.3						
45	87.6	74.9	53.0					
55	80.8	69.5	52.8	41.2				
60	77.4	67.3	52.2	40.6	32.8			
65	74.7	65.0	51.7	40.0	32.5	25.8		
75	70.9	60.9	49.7	38.7	31.6	25.0	18.2	
85		57.4	47.6	37.3	30.7	24.4	17.9	12.2
100		53.5	44.1	35.4	29.2	23.5	17.3	11.8
140			37.0	30.1	23.3	21.0	15.5	10.3
180				26.7	20.4	18.6	14.0	8.9
205					19.2	17.2	13.2	8.2
235						15.9	12.2	7.3
275							10.9	6.2
300								5.5
310								5.3

Main boom 184 ft

	Jib length in (ft)							
	66	95	115	135	174	203	233	262
Radius (ft)	lbs	lbs	lbs	lbs	lbs	lbs	lbs	lbs
29.8	97.8							
40	90.5	74.5	63.9					
45	86.7	72.4	63.0	53.0				
55	79.7	68.0	60.1	51.0	38.4			
60	76.3	66.1	58.5	49.7	38.2	30.0		
65	73.1	63.9	56.9	48.8	37.9	29.9	25.0	
75	68.3	59.9	53.9	46.9	36.9	29.7	24.2	19.5
100		51.0	46.5	42.0	33.9	28.1	22.7	18.5
120			42.4	38.0	31.0	25.8	21.4	17.6
140				35.4	28.6	23.3	20.2	16.7
180					22.3	19.7	17.9	15.0
205						18.4	16.6	13.9
220							16.0	13.2
235							15.5	12.6
240								12.5
265								11.9

Main boom 194 ft

	Jib length in (ft)							
	66	95	115	135	174	203		
Radius (ft)	lbs	lbs	lbs	lbs	lbs	lbs		
30.1	87.3							
40	81.1	66.8						
45	76.7	65.0	53.0	49.0				
55	71.7	61.3	51.9	47.5	36.3			
60	69.4	59.5	51.2	46.3	35.8	29.1		
65	67.0	57.6	50.4	45.5	35.3	28.9		
75	63.7	54.2	48.5	43.2	34.0	28.1		
80		51.5	47.0	42.4	33.5	27.6		
100		47.9	42.5	38.4	31.1	25.7		
120			39.5	34.9	28.5	24.1		
140				32.7	24.0	22.4		
160					22.4	20.4		
180					20.8	18.4		
190						17.8		
200						17.4		
205						17.2		

Capacities in 1000 lbs with luffing jib (No. 1916.xx) 178,600 lbs counterweight + 79,400 lbs carbody counterweight. Above lift chart is for reference only. For actual lift duty and complete chart with all available configurations please refer to lift chart in operator's cab or manual.

https://truckmanualshub.com/

Lift chart – luffing jib (No. 1916.xx)

Main boom angle 83°

Main boom 66 ft

	Jib length in (ft)							
	66	95	135	174	203	233	272	312
Radius (ft)	lbs	lbs	lbs	lbs	lbs	lbs	lbs	lbs
37	155.8							
50	136.6	136.1						
60	108.4	107.9	92.9					
70	89.5	89.1	84.5	67.4				
75	82.1	81.9	79.7	66.3				
80		75.7	74.4	64.4	50.0			
90		65.6	64.8	60.4	48.1	37.8		
100		57.6	57.0	56.1	46.3	36.4	24.0	
105		47.7	53.7	50.8	45.5	35.8	23.7	
110			49.3	48.1	44.8	35.0	23.2	15.9
140			35.5	36.6	34.8	30.7	20.7	13.7
180				22.9	25.8	24.1	18.2	11.6
210					18.5	20.0	16.4	10.2
235						14.6	15.0	9.1
275							9.2	7.5
315								4.6

Main boom 115 ft

	Jib length in (ft)							
	66	95	135	174	203	233	272	312
Radius (ft)	lbs	lbs	lbs	lbs	lbs	lbs	lbs	lbs
43	144.1							
55	118.8	109.5						
65	96.4	95.0	78.9					
75	80.8	80.3	75.5	53.0				
85	69.1	68.9	68.1	53.0	44.0			
95		60.2	59.4	51.9	43.0	33.2		
105		53.3	52.5	50.5	41.7	32.4	21.6	
110		50.3	49.6	48.6	41.0	32.0	21.5	
115			46.9	46.0	40.4	31.5	21.2	14.3
150			33.6	32.8	32.1	28.4	18.8	12.3
190				23.9	23.3	22.5	16.8	10.6
215					19.4	18.7	15.8	9.7
245						15.2	14.3	8.5
285							10.7	7.3
300								6.7
320								6.0

Main boom 144 ft

	Jib length in (ft)							
	66	95	135	174	203	233	272	312
Radius (ft)	lbs	lbs	lbs	lbs	lbs	lbs	lbs	lbs
46.6	114.5							
60	100.9	90.3						
70	86.8	83.3	68.9					
80	73.6	73.1	65.2	49.5				
85	68.3	67.9	62.9	49.2				
90		63.4	61.1	48.6	38.0			
100		55.7	54.9	46.9	37.4	29.5		
110		49.6	48.8	45.4	36.5	29.0	19.9	
115		26.6	46.2	44.4	36.0	28.7	19.8	
120			43.8	42.8	35.6	28.4	19.5	12.8
150			33.0	32.2	31.5	25.7	17.8	11.6
190				23.4	22.8	22.0	16.0	10.0
220					18.4	17.6	15.0	9.0
245						14.8	13.9	8.1
285							10.4	6.9
325								5.8

Main boom 174 ft

	Jib length in (ft)							
	66	95	135	174	203	233	272	312
Radius (ft)	lbs	lbs	lbs	lbs	lbs	lbs	lbs	lbs
50.2	92.2							
60	85.7	73.6						
85	67.3	62.7	51.8	40.3				
90	62.7	61.0	50.5	39.8				
95		58.3	49.5	39.1	32.2			
100		54.8	48.2	38.5	31.8	25.3		
115		46.1	44.8	37.1	30.5	24.1	17.2	
120		43.7	43.0	36.3	30.1	23.8	17.1	
125			40.8	35.5	29.8	23.4	16.9	11.2
160			26.6	28.9	26.9	21.2	15.4	10.1
195				22.1	21.1	19.3	14.2	9.0
225					17.3	16.6	13.2	8.2
250						13.9	12.5	7.4
290							9.6	6.3
320								5.6
330								5.3

Main boom 184 ft

	Jib length in (ft)							
	66	95	115	135	174	203	233	262
Radius (ft)	lbs	lbs	lbs	lbs	lbs	lbs	lbs	lbs
51.4	91.0							
65	82.6	70.8						
70	77.3	68.7	61.6					
75	75.3	66.5	60.1	52.3				
85	66.9	61.8	57.0	50.6	38.4			
95	26.6	57.7	53.4	48.6	37.7	30.9		
105		51.3	50.1	45.9	36.7	30.3	23.9	
110		48.4	48.0	44.6	36.2	30.0	23.7	18.9
120		43.4	43.1	42.4	35.1	29.0	23.1	18.4
140			35.4	35.2	32.5	27.4	21.9	17.4
160				29.5	28.7	25.4	20.6	16.7
180					24.0	22.2	19.6	15.8
195					21.9	20.1	18.5	15.3
225						17.1	16.4	13.9
255							13.3	12.6
285								10.1

Main boom 194 ft

	Jib length in (ft)							
	66	95	115	135	174	203		
Radius (ft)	lbs	lbs	lbs	lbs	lbs	lbs		
52.6	80.7							
65	73.9	64.0						
70	71.1	62.2	52.8					
75	69.0	60.0	52.7	46.8				
85	64.8	56.5	50.9	45.8	35.3			
95	57.9	53.6	48.4	44.1	34.4	28.4		
100		51.2	47.2	43.3	33.8	28.1		
120		43.2	42.8	39.4	31.8	26.0		
130			38.7	37.4	30.8	25.6		
140			35.2	34.9	29.9	24.9		
150				31.9	28.8	24.2		
160				29.3	27.7	23.7		
180					22.6	20.9		
200					20.9	18.5		
220						17.5		
225						17.0		

Capacities in 1000 lbs with luffing jib (No. 1916.xx) 178,600 lbs counterweight + 79,400 lbs carbody counterweight. Above lift chart is for reference only. For actual lift duty and complete chart with all available configurations please refer to lift chart in operator's cab or manual.

https://truckmanualshub.com/

Lift chart – luffing jib (No. 1916.xx)

Main boom angle 75°

Main boom 66 ft

	Jib length in (ft)							
	66	95	135	174	203	233	272	312
Radius (ft)	lbs	lbs	lbs	lbs	lbs	lbs	lbs	lbs
54.7	117.7							
70	86.5	85.9						
85	68.1	67.7	66.8					
105		52.3	51.5	50.5				
115		26.6	46.1	45.1	44.3			
130			39.5	38.6	37.9	33.4		
145			34.4	33.5	32.8	31.8	20.6	
150			32.9	32.1	31.4	30.5	20.4	
160				29.5	28.8	27.9	19.7	12.8
190				23.4	22.8	21.9	18.0	11.6
220					18.3	17.6	16.4	10.1
245						14.7	13.8	9.0
260							12.4	8.4
285							10.3	7.5
300								6.7
320								5.6

Main boom 115 ft

	Jib length in (ft)							
	66	95	135	174	203	233	272	312
Radius (ft)	lbs	lbs	lbs	lbs	lbs	lbs	lbs	lbs
67.5	86.1							
80	69.9	69.1						
100	53.1	52.6	51.5					
115		44.3	43.3	42.2				
130		26.6	37.2	36.1	35.3			
140			33.8	32.8	32.0	29.9		
155			29.7	28.7	27.9	26.9	19.3	
165			27.3	26.4	25.7	24.7	18.5	
175				24.4	23.7	22.7	18.0	11.5
200				20.2	19.5	18.6	16.8	10.7
205				19.5	18.8	17.9	16.6	10.5
230					15.7	14.9	13.9	9.5
260						12.0	11.0	8.5
300							8.1	7.1
320								6.0
335								5.2

Main boom 144 ft

	Jib length in (ft)							
	66	95	135	174	203	233	272	312
Radius (ft)	lbs	lbs	lbs	lbs	lbs	lbs	lbs	lbs
75.1	72.7							
90	58.3	57.4						
105	48.2	47.5	46.3					
125		38.3	37.3	36.1				
135		34.7	33.8	32.6	31.8			
150			29.5	28.4	27.6	25.9		
165			26.1	25.0	24.3	23.3	17.4	
175			24.1	23.1	22.3	21.4	17.2	
180				22.2	21.5	20.5	17.0	10.9
210				17.7	17.1	16.2	15.0	9.9
240					13.8	12.9	11.8	8.9
265						10.8	9.7	8.1
280							8.6	7.2
305							7.0	5.8
320								5.1
345								4.0

Main boom 174 ft

	Jib length in (ft)							
	66	95	135	174	203	233	272	312
Radius (ft)	lbs	lbs	lbs	lbs	lbs	lbs	lbs	lbs
82.7	61.7							
100	49.0	48.1						
115	26.6	40.5	39.2					
130		34.7	33.6	32.3				
140		31.6	30.6	29.3				
145			29.2	28.0	27.1			
155			26.8	25.6	24.8	21.8		
175			22.8	21.7	20.9	19.6	14.7	
180			21.9	20.8	20.1	18.8	14.7	
190				19.3	18.5	17.4	14.4	9.1
215				16.0	15.3	14.3	12.4	8.7
245					12.3	11.4	9.8	7.8
275						9.1	7.8	5.9
310							5.9	4.1
320								3.7
350								2.6

Main boom 184 ft

	Jib length in (ft)							
	66	95	115	135	174	203	233	262
Radius (ft)	lbs	lbs	lbs	lbs	lbs	lbs	lbs	lbs
85.3	58.5							
100	48.1	47.2						
110	42.8	42.0	41.3					
115	40.5	39.7	39.0	38.4				
135		32.5	31.9	31.4	30.1			
145		29.6	29.1	28.6	27.4	26.3		
160			25.6	25.2	24.0	23.1	20.9	
165			24.5	24.1	23.0	22.2	20.3	
170				23.2	22.1	21.2	19.5	15.9
185				20.6	19.6	18.8	17.3	15.6
220					15.0	14.3	13.3	11.8
250						11.5	10.6	9.4
280							8.4	7.5
305								6.2

Main boom 194 ft

	Jib length in (ft)							
	66	95	115	135	174	203		
Radius (ft)	lbs	lbs	lbs	lbs	lbs	lbs		
87.8	55.4							
105	44.6	43.6						
110	42.1	41.2	40.4					
120	37.6	36.9	36.3	35.7				
135		31.9	31.2	30.7	29.4			
150		26.6	27.3	26.8	25.6	24.2		
160			25.1	24.6	23.4	22.2		
170			23.0	22.7	21.5	20.5		
180				20.9	19.8	19.0		
185				20.1	19.1	18.3		
200					17.0	16.2		
225					14.1	13.4		
240						12.0		
255						10.7		

Capacities in 1000 lbs with luffing jib (No. 1916.xx) 178,600 lbs counterweight + 79,400 lbs carbody counterweight. Above lift chart is for reference only. For actual lift duty and complete chart with all available configurations please refer to lift chart in operator's cab or manual.

https://truckmanualshub.com/

Lift chart – luffing jib (No. 1916.xx)

Main boom angle 65°

Main boom 66 ft

	Jib length in (ft)							
	66	95	135	174	203	233	272	312
Radius (ft)	lbs	lbs	lbs	lbs	lbs	lbs	lbs	lbs
75.4	75.7							
95	57.0	56.5						
115		44.7	43.7					
125		40.2	39.4					
140			34.1	33.1				
155			29.9	29.0	28.2			
165			26.6	26.6	26.0			
175				24.6	23.9	23.0		
195				21.2	20.5	19.6	18.0	
200				20.4	19.8	18.9	17.7	
220					17.1	16.3	15.2	10.3
230					15.9	15.1	14.1	10.0
260						12.2	11.2	8.9
295							8.6	7.6
320								6.1
335								5.3

Main boom 115 ft

	Jib length in (ft)							
	66	95	135	174	203	233	272	312
Radius (ft)	lbs	lbs	lbs	lbs	lbs	lbs	lbs	lbs
96.2	51.1							
115	41.0	40.2						
120	26.6	38.2						
140		31.4	30.3					
145		30.0	29.0					
160			25.5	24.3				
180			21.7	20.7	19.8			
185			20.9	19.9	19.1			
195				18.4	17.6	16.6		
215				15.9	15.1	14.2	12.9	
225				14.8	14.1	13.1	11.9	
240					12.6	11.7	10.5	8.9
250					11.7	10.8	9.7	8.1
280						8.6	7.5	6.1
320							5.3	4.1
355								2.6

Main boom 144 ft

	Jib length in (ft)							
	66	95	135	174	203	233	272	312
Radius (ft)	lbs	lbs	lbs	lbs	lbs	lbs	lbs	lbs
108.7	40.8							
130	32.6	31.8						
150		26.5	25.3					
160		24.3	23.2					
175			20.5	19.3				
190			18.3	17.1	16.2			
200			16.9	15.8	15.0			
205				15.2	14.4	13.3		
230				12.6	11.9	10.8	9.1	
235				12.2	11.4	10.4	8.7	
250					10.2	9.2	7.6	5.6
265					9.1	8.2	6.7	4.7
295						6.3	5.0	3.2
320							4.0	2.1
330							3.5	

Main boom 174 ft

	Jib length in (ft)							
	66	95	135	174	203	233	272	312
Radius (ft)	lbs	lbs	lbs	lbs	lbs	lbs	lbs	lbs
121.2	32.6							
140	27.1	26.2						
165		21.0	19.8					
170		20.2	19.0					
185			16.8	15.5				
205			14.4	13.2	12.3			
210			13.8	12.7	11.8			
220				11.7	10.9	9.1		
240				10.1	9.3	7.7	5.6	
245				9.7	8.9	7.4	5.3	
265					7.6	6.2	4.2	2.2
275					6.9	5.7	3.7	
300						4.6	2.7	
305						4.4	2.5	
315							2.1	

Main boom 184 ft

	Jib length in (ft)							
	66	95	115	135	174	203	233	262
Radius (ft)	lbs	lbs	lbs	lbs	lbs	lbs	lbs	lbs
125.3	30.1							
145	24.9	24.0						
150	23.8	22.9						
155		22.0	21.2					
165		20.2	19.5	18.8				
175		18.5	17.9	17.4				
190			15.9	15.4	14.1			
195			15.3	14.8	13.5			
205				13.7	12.5	11.1		
215				12.7	11.5	10.3		
225					10.6	9.5	7.7	
240					9.4	8.5	6.8	5.3
250					8.7	7.9	6.2	4.8
280						6.1	4.7	3.3
310							3.5	2.1

Main boom 194 ft

	Jib length in (ft)							
	66	95	115	135	174	203		
Radius (ft)	lbs	lbs	lbs	lbs	lbs	lbs		
129.5	27.8							
150	22.9	22.0						
160		20.2	19.4					
170		18.5	17.8	17.2				
180		17.0	16.4	15.9				
195			14.6	14.1	12.5			
200			14.0	13.5	12.1			
210				12.5	11.2	9.7		
215				12.0	10.8	9.3		
220					10.4	8.9		
240					8.8	7.6		
255					7.8	6.7		
260						6.5		
280						5.5		
285						5.3		

Capacities in 1000 lbs with luffing jib (No. 1916.xx) 178,600 lbs counterweight + 79,400 lbs carbody counterweight. Above lift chart is for reference only. For actual lift duty and complete chart with all available configurations please refer to lift chart in operator's cab or manual.

https://truckmanualshub.com/

Lift chart – luffing jib (No. 1916.xx)

Main boom angle 45°

Main boom 66 ft

	Jib length in (ft)							
	66	95	135	174	203	233	272	312
Radius (ft)	lbs	lbs	lbs	lbs	lbs	lbs	lbs	lbs
109.8	44.0							
115	41.5							
134		33.7						
145		26.6						
170			23.9					
180			22.1					
200				18.1				
220				15.6				
225					14.4			
250					12.0	11.1		
275						9.2		
280							7.8	
315							5.7	4.7
355								2.8

Main boom 115 ft

	Jib length in (ft)						
	66	95	135	174	203	233	272
Radius (ft)	lbs	lbs	lbs	lbs	lbs	lbs	lbs
144.6	25.7						
150	24.5						
170		19.9					
180		18.3					
205			14.1				
215			13.1				
235				10.1			
255				8.7			
260					7.6		
280					6.4		
290						4.9	
310						3.9	
315							2.3
320							2.1

Main boom 144 ft

	Jib length in (ft)				
	66	95	135	174	203
Radius (ft)	lbs	lbs	lbs	lbs	lbs
165.5	18.0				
170	17.3				
190		13.8			
200		12.8			
225			9.4		
235			8.7		
255				6.1	
275				5.1	
280					4.0
305					3.0

Main boom 174 ft

	Jib length in (ft)							
	66	95	135	174	203	233	272	312
Radius (ft)	lbs	lbs	lbs	lbs	lbs	lbs	lbs	lbs
186.4	11.9							
190	11.5							
215		8.4						
220		8.1						
245			5.3					
250			5.0					
255			4.8					
260			4.5					
280				2.1				
0								

Main boom 184 ft

	Jib length in (ft)				
	66	95	115	135	
Radius (ft)	lbs	lbs	lbs	lbs	
193.3	10.0				
200	9.4				
220		7.0			
225		6.7			
235			5.4		
245			4.8		
250				4.0	
265				3.4	

Main boom 194 ft

	Jib length in (ft)					
	66	95	115	135	174	203
Radius (ft)	lbs	lbs	lbs	lbs	lbs	lbs
200.3	8.3					
205	8.0					
225		5.6				
235		5.1				
245			3.8			
255			3.4			
260				2.4		
270				2.0		

Capacities in 1000 lbs with luffing jib (No. 1916.xx) 178,600 lbs counterweight + 79,400 lbs carbody counterweight. Above lift chart is for reference only. For actual lift duty and complete chart with all available configurations please refer to lift chart in operator's cab or manual.

https://truckmanualshub.com/

Working range – fixed jib (No. 1008.xx) 15° and 30°

Main boom 88°– 30°

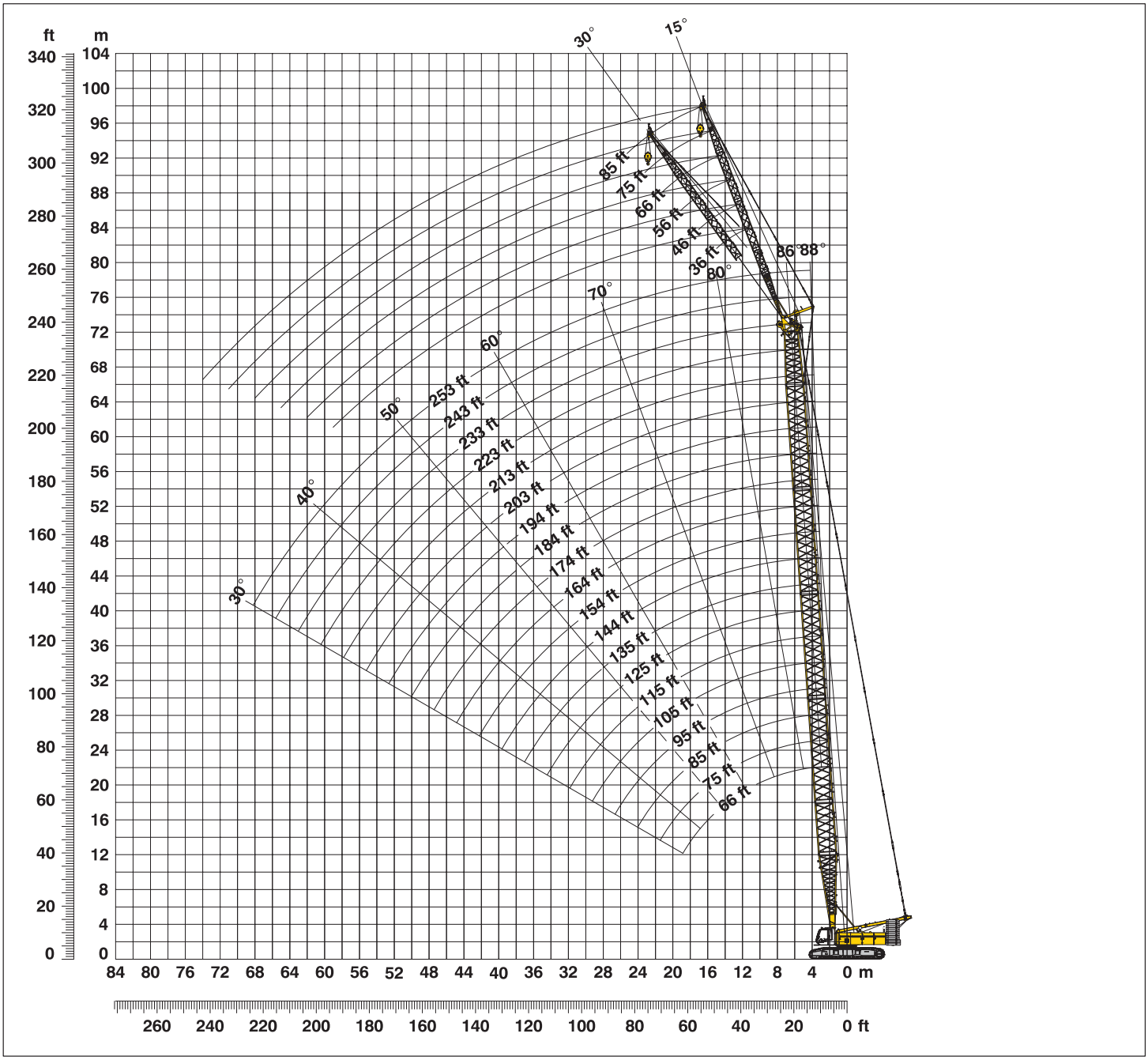

Boom configuration for boom lengths (66 ft – 253 ft) – see table 1 on page 10

Fixed jib configuration for fixed jib lengths (36 ft – 85 ft)

	Length	Amount of fixed jib extensions					
Fixed jib foot	18 ft	1	1	1	1	1	1
Fixed jib insert	10 ft*		1		1		1
Fixed jib insert	20 ft*			1	1	2	2
Fixed jib head	18 ft	1	1	1	1	1	1
Fixed jib length (ft)		36	46	56	66	75	85

*Actual lengths of boom sections are metric (e.g. 3 m, 6 m). The figures shown above are approximate conversions to feet.

https://truckmanualshub.com/

Lift chart – fixed jib (No. 1008.xx)

Offset 15°

Main boom 66 ft

	Fixed jib length in (ft)			
	36	46	66	85
Radius (ft)	lbs	lbs	lbs	lbs
30	79.1			
35	79.1	77.4		
40	79.1	75.1	66.3	51.2
50	78.9	69.2	58.0	47.5
60	77.9	64.2	49.3	41.3
70	71.7	60.0	45.4	36.3
80	63.4	53.8	40.2	32.6
90	57.5	49.4	36.4	29.1
95	55.0	47.6	34.6	27.7
105		43.6	31.6	26.2
125			27.4	22.5
145				19.8

Main boom 95 ft

	Fixed jib length in (ft)			
	36	46	66	85
Radius (ft)	lbs	lbs	lbs	lbs
30	79.1	79.1		
35	79.1	79.1	68.8	
40	79.1	77.1	67.1	50.7
60	78.9	68.4	55.1	43.5
80	69.8	60.7	45.2	35.2
90	59.6	57.0	40.9	32.3
100	51.6	50.5	37.6	29.5
110	45.2	45.8	34.8	27.2
120	39.8	40.5	32.3	26.3
130		36.0	30.4	24.5
150			27.3	21.9
170				19.7

Main boom 125 ft

	Fixed jib length in (ft)			
	36	46	66	85
Radius (ft)	lbs	lbs	lbs	lbs
25	79.1	79.1		
35	79.1	79.1	69.4	
40	79.1	79.1	68.5	49.5
60	79.1	72.2	58.7	44.9
80	68.7	65.7	48.5	37.7
100	50.5	51.1	42.3	32.1
120	38.8	39.4	36.9	27.7
140	30.6	31.1	32.2	25.5
150	26.6	27.9	28.9	24.1
160		25.1	26.1	22.8
180			21.3	20.9
200				18.2

Main boom 154 ft

	Fixed jib length in (ft)			
	36	46	66	85
Radius (ft)	lbs	lbs	lbs	lbs
21.6	79.1			
30	79.1	79.1		
40	79.1	78.5	66.4	
45	79.1	78.1	65.1	47.5
80	67.8	67.5	50.4	39.3
120	37.8	38.4	39.2	29.9
140	29.7	30.2	31.2	26.6
160	23.8	24.2	25.2	25.0
170	21.3	21.7	22.6	23.4
180		19.5	20.4	21.1
200			16.6	17.3
220				14.1

Main boom 184 ft

	Fixed jib length in (ft)			
	36	46	66	85
Radius (ft)	lbs	lbs	lbs	lbs
22.6	79.1			
30	79.1	78.9		
35	79.1	78.3	65.2	
45	79.1	76.9	63.7	45.7
80	66.8	67.7	54.2	39.7
120	36.7	37.3	38.5	31.5
160	22.7	23.2	24.1	24.9
180	18.0	18.5	19.3	20.1
200	14.3	14.7	15.6	16.3
205		13.9	14.7	15.4
225			11.7	12.4
245				9.9

Main boom 203 ft

	Fixed jib length in (ft)			
	36	46	66	85
Radius (ft)	lbs	lbs	lbs	lbs
23.3	79.1			
30	79.1	77.0		
35	79.1	76.6	62.0	
45	79.1	75.4	61.0	44.0
60	79.1	73.2	58.4	42.4
100	47.7	48.4	48.1	36.4
140	27.8	28.3	29.4	29.2
180	17.3	17.7	18.6	19.3
215	11.2	11.6	12.4	13.1
225		10.2	11.0	11.7
245			8.5	9.2
265				7.0

Main boom 223 ft

	Fixed jib length in (ft)			
	36	46	66	85
Radius (ft)	lbs	lbs	lbs	lbs
24	79.1			
30	79.1	74.7		
40	78.5	73.5	58.5	
45	77.9	72.3	57.7	42.1
80	65.6	65.0	50.4	38.8
120	35.3	35.9	37.1	32.9
160	21.2	21.7	22.7	23.5
200	12.9	13.3	14.1	14.8
235	7.9	8.3	9.1	9.7
245		7.1	7.9	8.5
265			5.7	6.4
285				4.5

Main boom 243 ft

	Fixed jib length in (ft)			
	36	46	56	66
Radius (ft)	lbs	lbs	lbs	lbs
24.7	75.0			
30	74.7	68.1		
35	73.1	67.7	61.3	
40	71.8	66.7	60.9	53.9
120	34.5	35.2	35.9	36.4
160	20.4	20.9	21.5	21.9
200	12.1	12.5	13.0	13.4
240	6.6	6.9	7.4	7.7
250	5.5	5.8	6.2	6.6
260		4.8	5.2	5.5
270			4.2	4.5
280				3.6

Main boom 253 ft

	Fixed jib length in (ft)			
	36	46		
Radius (ft)	lbs	lbs		
25	70.1			
30	70.0	63.0		
40	66.9	61.8		
80	57.9	53.3		
120	34.2	34.9		
160	20.1	20.6		
180	15.5	15.9		
200	11.8	12.2		
220	8.8	9.2		
240	6.3	6.7		
255	4.7	5.0		
265		4.0		

Capacities in 1000 lbs with fixed jib (No. 1008.xx) 178,600 lbs counterweight + 79,400 lbs carbody counterweight. Above lift chart is for reference only. For actual lift duty and complete chart with all available configurations please refer to lift chart in operator's cab or manual.

https://truckmanualshub.com/

Lift chart – fixed jib (No. 1008.xx)

Offset 30°

Main boom 66 ft

	Fixed jib length in (ft)			
	36	46	66	85
Radius (ft)	lbs	lbs	lbs	lbs
40	74.4	62.0		
50	65.4	55.0	40.7	
60	58.3	49.6	36.0	28.9
70	53.0	45.4	32.4	26.6
80	49.5	41.6	29.7	24.8
90	46.9	38.5	27.3	22.6
100	26.6	36.4	26.4	20.8
110		26.6	24.9	19.3
120			23.9	18.1
130			23.2	17.1
140				16.4
150				16.0

Main boom 95 ft

	Fixed jib length in (ft)			
	36	46	66	85
Radius (ft)	lbs	lbs	lbs	lbs
35	79.1			
40	78.8	62.8		
50	70.9	58.0	41.3	
60	63.8	52.2	37.6	29.3
80	54.2	45.8	31.6	25.5
90	51.5	42.6	29.6	24.1
100	48.9	40.2	27.6	22.2
110	45.6	38.0	26.6	20.9
120	40.1	36.5	25.8	19.6
130		35.4	24.7	18.6
150			23.4	16.9
170				16.2

Main boom 125 ft

	Fixed jib length in (ft)			
	36	46	66	85
Radius (ft)	lbs	lbs	lbs	lbs
30	79.1			
40	79.1	64.9		
50	74.1	62.0	42.7	
60	68.3	56.6	39.1	29.2
80	58.9	49.8	34.0	26.3
100	51.2	44.5	30.1	23.5
120	39.3	40.0	27.0	20.9
140	30.9	31.6	25.6	18.9
150	27.5	28.2	25.0	18.1
160		25.3	24.4	17.4
180			21.5	16.4
200				16.0

Main boom 154 ft

	Fixed jib length in (ft)			
	36	46	66	85
Radius (ft)	lbs	lbs	lbs	lbs
30.3	79.1			
40	78.9	63.7		
50	77.2	60.8	42.0	
65	69.1	55.0	37.7	28.5
80	62.3	50.6	34.3	26.6
120	38.5	39.3	28.0	21.5
140	30.1	30.8	26.6	19.6
160	24.1	24.7	25.2	18.2
175	20.3	20.9	22.0	17.2
185		18.7	19.8	16.7
205			15.9	16.0
225				13.6

Main boom 184 ft

	Fixed jib length in (ft)			
	36	46	66	85
Radius (ft)	lbs	lbs	lbs	lbs
31.3	79.1			
40	79.1	65.3		
50	77.6	63.1	42.3	
65	70.8	58.1	39.0	28.7
80	64.8	53.4	35.7	26.6
120	37.5	38.4	29.7	22.6
160	23.1	23.7	25.0	19.2
180	18.3	18.9	20.0	18.1
200	14.5	15.0	16.0	17.0
210		13.3	14.3	15.2
230			11.2	12.2
250				9.5

Main boom 203 ft

	Fixed jib length in (ft)			
	36	46	66	85
Radius (ft)	lbs	lbs	lbs	lbs
32	79.1			
40	79.1	64.9		
55	76.2	61.6	41.6	
65	71.7	58.8	39.2	28.5
100	48.9	49.1	33.1	25.1
140	28.5	29.2	28.2	21.2
180	17.7	18.2	19.4	18.6
200	13.8	14.3	15.4	16.4
215	11.4	11.9	12.9	13.8
225		10.4	11.4	12.3
245			8.7	9.6
265				7.2

Main boom 223 ft

	Fixed jib length in (ft)			
	36	46	66	85
Radius (ft)	lbs	lbs	lbs	lbs
32.7	76.5			
40	76.2	62.4		
55	72.1	59.8	41.6	
65	68.6	57.1	39.4	28.2
100	48.4	48.3	33.5	25.4
140	27.9	28.6	28.8	21.6
180	17.0	17.6	18.8	19.0
220	10.1	10.6	11.6	12.5
235	8.1	8.5	9.5	10.3
245		7.3	8.2	9.0
265			5.9	6.7
285				4.6

Main boom 243 ft

	Fixed jib length in (ft)			
	36	46	56	66
Radius (ft)	lbs	lbs	lbs	lbs
33.4	68.9			
40	68.6	58.4		
50	66.7	57.3	49.4	
55	65.1	56.4	48.1	41.2
100	47.7	46.3	39.4	33.8
140	27.2	28.0	28.8	29.3
180	16.3	16.9	17.6	18.1
220	9.4	9.9	10.4	10.9
250	5.6	6.0	6.5	6.9
260		4.9	5.4	5.8
270			4.4	4.7
280				3.7

Main boom 253 ft

	Fixed jib length in (ft)			
	36	46		
Radius (ft)	lbs	lbs		
33.7	65.6			
40	65.4	55.8		
60	60.8	52.0		
100	47.5	44.9		
140	26.9	27.7		
160	20.8	21.5		
180	16.1	16.7		
200	12.2	12.8		
220	9.1	9.6		
240	6.5	7.0		
260	4.3	4.7		
270		3.7		

Capacities in 1000 lbs with fixed jib (No. 1008.xx) 178,600 lbs counterweight + 79,400 lbs carbody counterweight. Above lift chart is for reference only. For actual lift duty and complete chart with all available configurations please refer to lift chart in operator's cab or manual.

https://truckmanualshub.com/

Notice

https://truckmanualshub.com/

LR 1200 – 10223039 – 02/2008 Subject to change without notice.

Liebherr–Werk Nenzing GmbH
P.O. Box 10, A–6710 Nenzing/Austria
Tel.: +43 50809 41 – 473
Fax: +43 50809 41 – 499
crawler.crane@liebherr.com
www.liebherr.com