https://truckmanualshub.com/

CLAAS

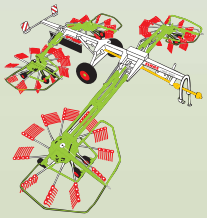

Liner 3000 with Communicator

Technical Systems

Electric System / Hydraulic System

SERVICE & PARTS

https://truckmanualshub.com/

https://truckmanualshub.com/

Contents
Electric System

CCU – Claas Control Unit ZE-2

Pin assignment in modules ZE-10

01a - Main power supply- Circuit diagram **with** „Basic tractor equipment“ retrofit kit (ISO socket) 01a-2

01b - Main power supply- Circuit diagram **without** „Basic tractor equipment“ retrofit kit (2-pin power supply socket) 01b-2

05a - Terminal 05a-2

06a - CAN bus, power supply of modules Circuit diagram **with** „Basic tractor equipment“ retrofit kit (ISO socket) 06a-2

06b - CAN bus, power supply of modules Circuit diagram **without** „Basic tractor equipment“ retrofit kit (2-pin power supply socket) 06b-2

07a - Chassis transport and working position 07a-2

08a - Turning area circuit 08a-2

10a - Raking height adjustment 10a-2

11a - Raising and lowering the rotor arms 11a-2

13a - Adjusting the front rotor working width 13a-2

26a - Machine monitoring 26a-2

Index Index-3

https://truckmanualshub.com/

https://truckmanualshub.com/

CCU – Claas Control Unit

https://truckmanualshub.com/

CCU – Claas Control Unit

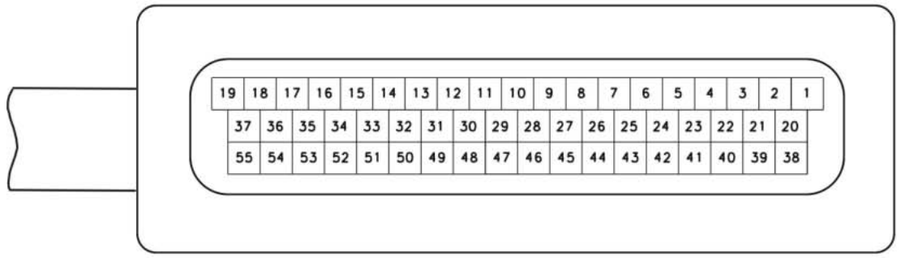

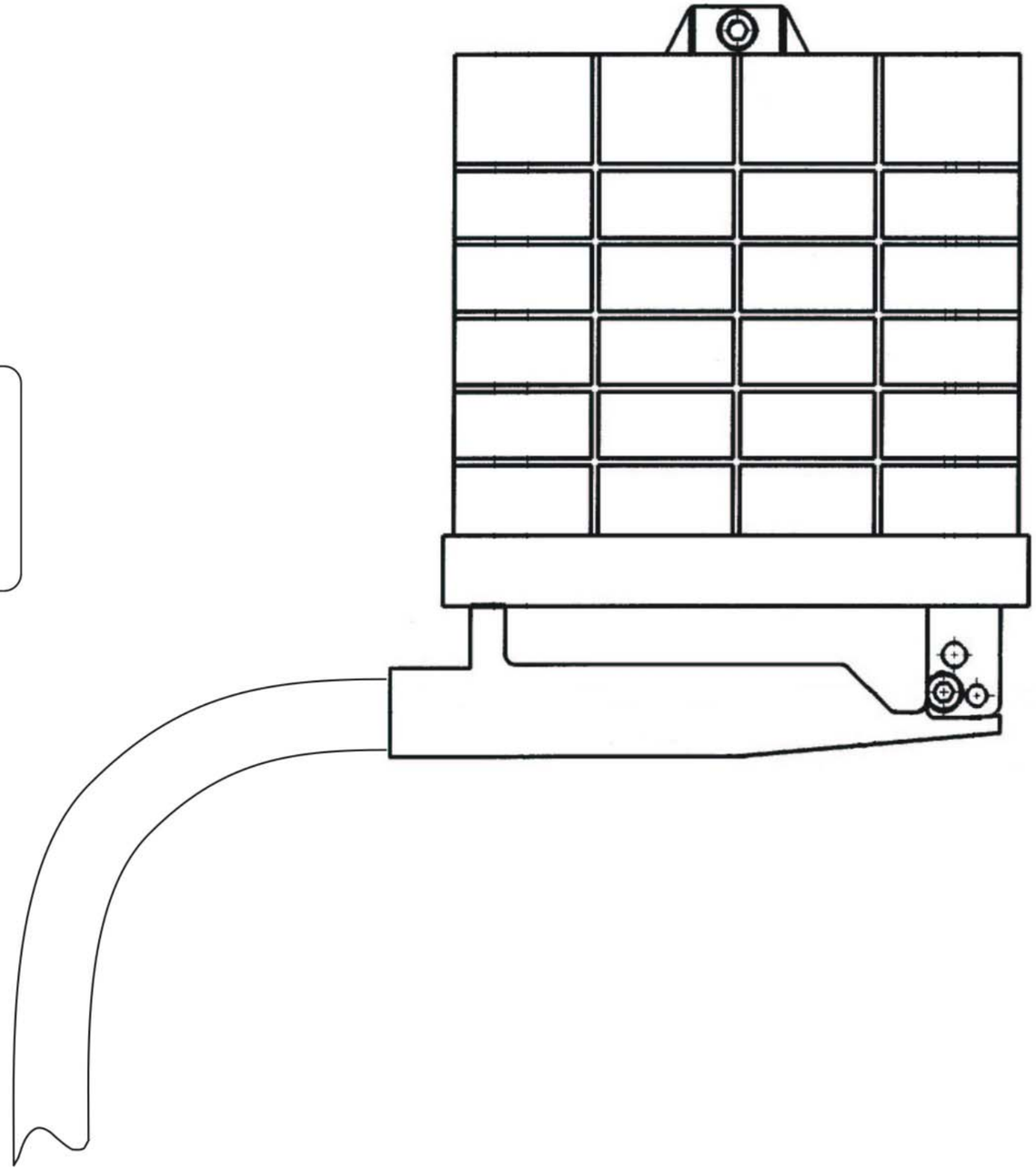

https://truckmanualshub.com/

Key to diagram: A20 CCU Module

https://truckmanualshub.com/

https://truckmanualshub.com/

Pin assignment in modules

https://truckmanualshub.com/

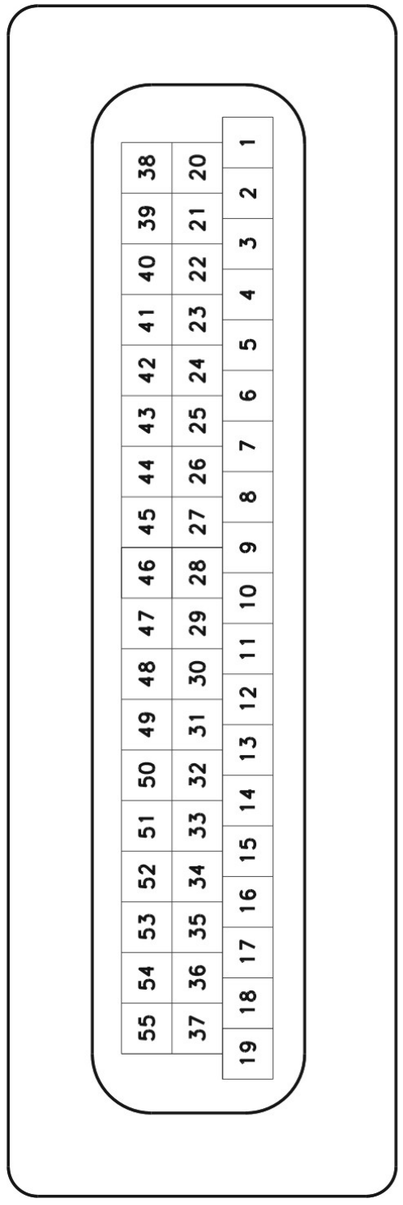

A20 CCU

https://truckmanualshub.com/

A20 CCU module

Pin	Function	Component	Measuring variable	Direction	Circuit diagram no.
1	Power earth	31	Earth	Input	6
2	Wheel revolution connector	-	-	-	8
3	Not used	-	-	-	-
4	Offset correction of rotor position sensors	V16-2	5 V	Output	8
5	Electronics plus	+30/E	12 V	Input	6
6	Not used	-	-	-	-
7	Not used	-	-	-	-
8	Temperature connector	-	-	-	26
9	Not used	-	-	-	-
10	Not used	-	-	-	-
11	Not used	-	-	-	-
12	Power supply of rotor position sensors	B121	12 V	Output	8
13	Signal input	B121-1	PWM. 5-95%	Input	8
14	Signal input	B121-3	PWM. 5-95%	Input	8
15	Not used	-	-	-	-
16	Not used	-	-	-	-
17	CAN low	-	-	-	6
18	Not used	-	-	-	-
19	Electronics earth XD pin 7	32	Earth	Input	5
20	Drive speed	B9	Earth frequency	Input	8
21	Chassis position	Z99	Earth	Input	7
22	Lower rotor height adjustment	V16-1	5 V	Output	10
23	Switch on electronic unit	+15/T12	12 V	Input	6 and 1
24	Diagnosis plug XD pin 1	XD	Boot signal	Input	5
25	Not used	-	-	-	-
26	Not used	-	-	-	-
27	Not used	-	-	-	-
28	Not used	-	-	-	-
29	Not used	-	-	-	-
30	Not used	-	-	-	-
31	Temperature connector	-	-	-	26
32	Signal input	B121-2	PWM. 5-95%	Input	8
33	Signal input	B121-4	PWM. 5-95%	Input	8
34	Not used	-	-	-	-
35	Not used	-	-	-	-
36	CAN high	-	-	-	6
37	Not used	-	-	-	-
38	Power plus	+30/P	12 V	Input	7, 10, 11, 13
39	Power plus	+30/P	12 V	Input	7, 10, 11, 13
40	Electronics plus	+30/E	12 V	Input	6

https://truckmanualshub.com/

A20 CCU module

Pin	Function	Component	Measuring variable	Direction	Circuit diagram no.
41	Raise rotor height adjustment	Y157	12 V	Output	10
42	Increase working width	Y162	12 V	Output	13
43	Decrease working width	Y163	12 V	Output	13
44	Lower chassis	Y159	12 V	Output	7
45	Raise chassis	Y158	12 V	Output	7
46	Raise rear right rotor	Y160	12 V PWM	Output	11
47	Raise rear left rotor	Y161	12 V PWM	Output	11
48	Lower rear right rotor	Y169	12 V PWM	Output	11
49	Lower rear left rotor	Y168	12 V PWM	Output	11
50	CAN bus socket (7-pin) XD pin 2 serial interface	XD	Data	-	5
51	CAN bus socket (7-pin) XD pin 3 serial interface	XD	Data	-	5
52	Lower front left rotor	Y166	12 V PWM	Output	11
53	Lower front right rotor	Y164	12 V PWM	Output	11
54	Raise front left rotor	Y167	12 V PWM	Output	11
55	Raise front right rotor	Y165	12 V PWM	Output	11

Circuit diagram assignment
of fuses and relays

Component	Designation	Circuit Diagram
F1.1	5 A fuse	1a, 1b
F1.2	25 A fuse	1a, 1b
F2	1A fuse (basic tractor equipment)	1a
F3	60 A fuse (basic tractor equipment)	1a
F4	25 A fuse (basic tractor equipment)	1a
V16-1	Amplifier	10
V16-2	Amplifier	8

https://truckmanualshub.com/

1a
Main power supply

Liner 3000 with Communicator

Circuit diagram **with** „Basic tractor equipment“ retrofit kit (ISO socket)

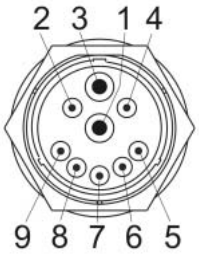

est 0110

https://truckmanualshub.com/

01a - Main power supply -
Circuit diagram **with** „Basic tractor equipment“ retrofit kit (ISO socket)

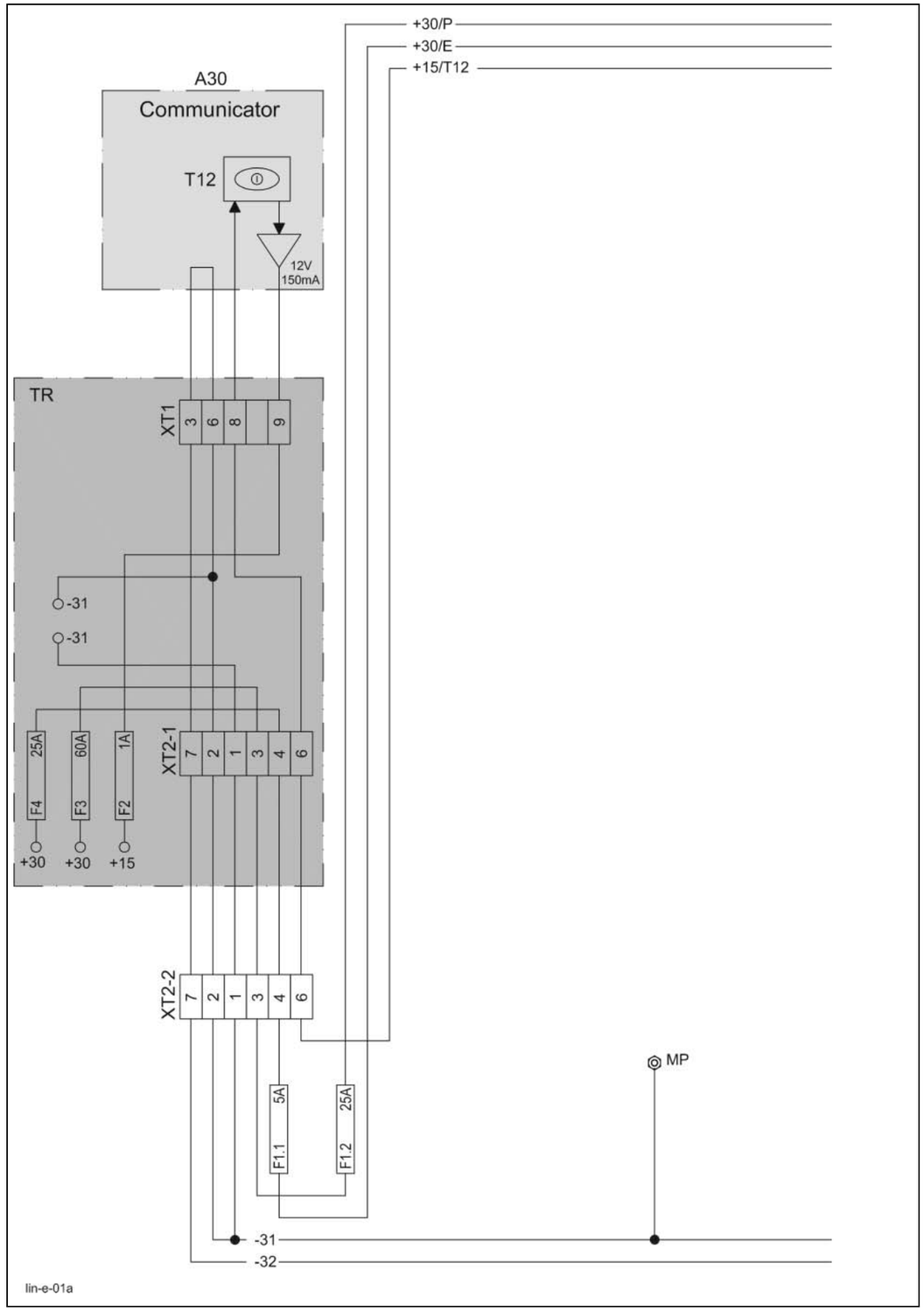

Key to diagram:

A30	Terminal
F2	1 A fuse
F3	60 A fuse
F4	25 A fuse
F1.1	5 A fuse
F1.2	25 A fuse
MP	Earth point
TR	Basic tractor equipment (tractor retrofit kit according to ISO standard)
T12	Main switch
XT1	Terminal connector
XT2-1	Tractor connector, 9-pin (acc. to ISO standard)
XT2-2	Implement connector, 9-pin (acc. to ISO standard)
+30/P	Potential, power plus
+30/E	Potential, electronics plus
-31	Potential, power earth
-32	Potential, electronics earth

https://truckmanualshub.com/

Description of function:

TR Basic tractor equipment	Before using the implement, the basic tractor equipment wiring loom must be fitted. The tractor is now equipped with a standardized (ISO) socket. Please refer to the Operator's Manual for further information.
Main power supply	Power supply from the tractor is via the (ISO) socket connector XT1-1, XT1-2.
Potential + 30/P	The potential + 30/P (battery power plus) is safeguarded with 25 A by fuse F1.2 at the implement.
Potential + 30/E	The potential + 30/E (battery electronic plus) is safeguarded with 5 A by fuse F1.1 at the implement.
Potential + 15/T12	This potential is switched by the tractor potential 15 (ignition plus) and by the main switch T12 at terminal A30 and serves for switching on the electronic unit. **Note:** When switching the ignition off, the electronic unit of the implement is also shut down.

https://truckmanualshub.com/

Connector pin definition:

Connector XT1

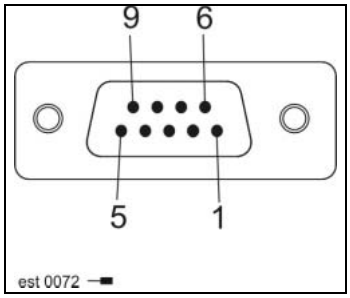

Socket XT1

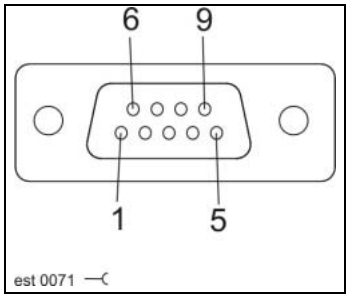

Connector XT2-1 XT2-2

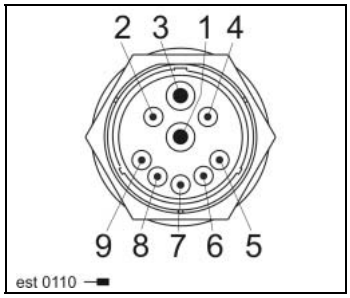

https://truckmanualshub.com/

1b
Main power supply

Liner 3000 with Communicator

Circuit diagram **without**
„Basic tractor equipment“ retrofit kit
(2-pin power supply socket)

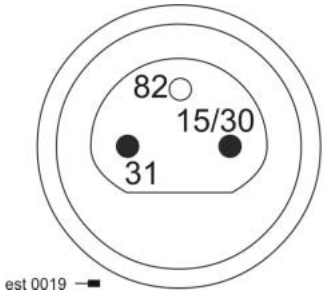

https://truckmanualshub.com/

01b - Main power supply-
Circuit diagram **without** „Basic tractor equipment“ retrofit kit (2-pin power supply socket)

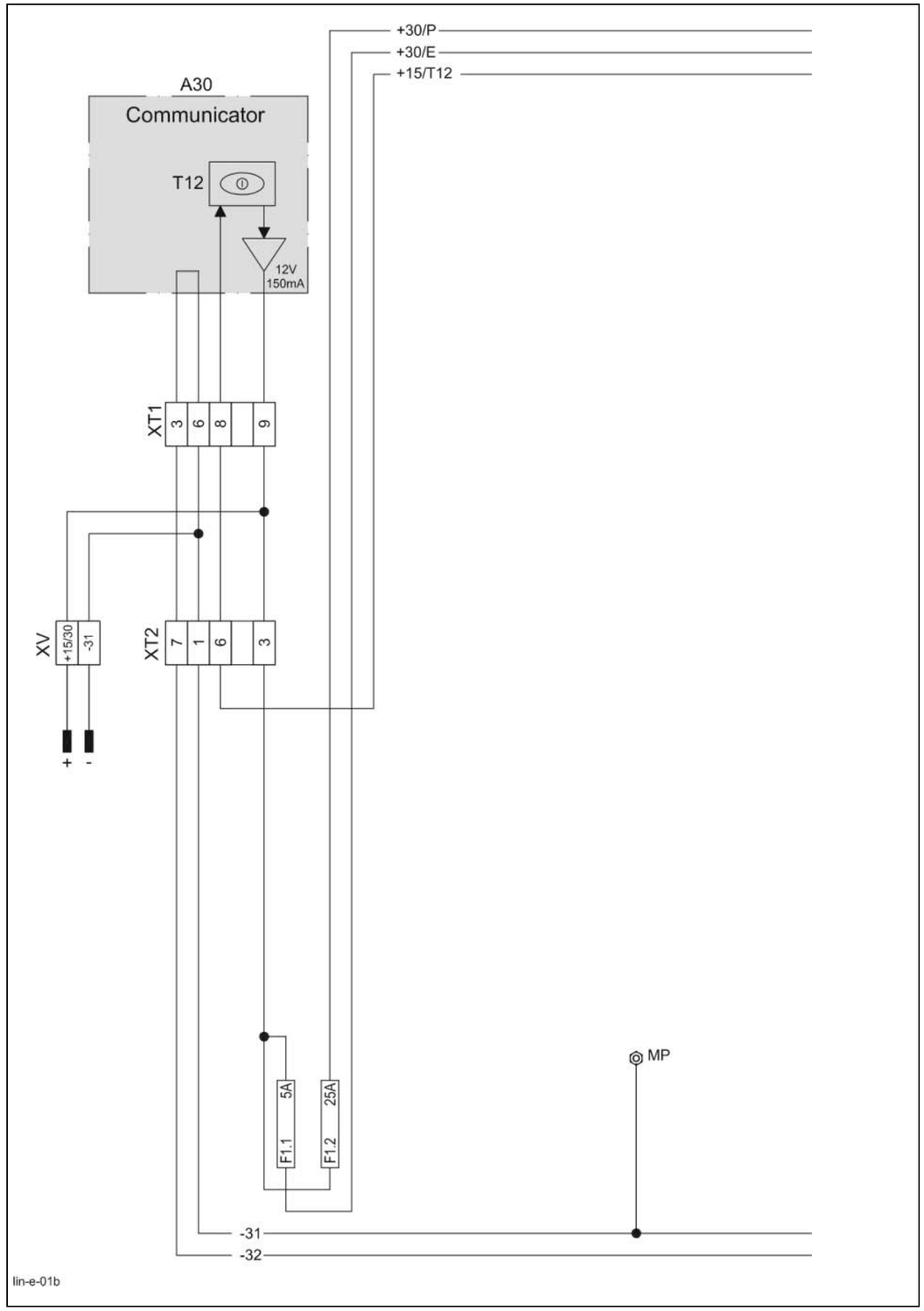

Key to diagram:

A30	Terminal
F1.1	5 A fuse
F1.2	25 A fuse
MP	Earth point
T12	Main switch
XT1	Terminal connector
XT2	Implement connector, 9-pin (acc. to ISO standard)
XV	Power supply connector
+30/P	Potential, power plus
+30/E	Potential, electronics plus
-31	Potential, power earth
-32	Potential, electronics earth

https://truckmanualshub.com/

Description of function:

Main power supply	Power supply from the tractor is via the XV connector.
Potential + 30/P	The potential + 30/P (battery power plus) is safeguarded with 25 A by fuse F1.2 at the implement.
Potential + 30/E	The potential + 30/E (battery electronic plus) is safeguarded with 5 A by fuse F1.1 at the implement.
Potential + 15/T12	This potential is switched the main switch T12 at terminal A30 and serves for switching on the electronic unit.

Note: To avoid tractor battery discharge during extended breaks, the electronic unit of the implement should be shut down using the main switch T12 on terminal A30.

https://truckmanualshub.com/

Connector pin definition:

Connector XT1

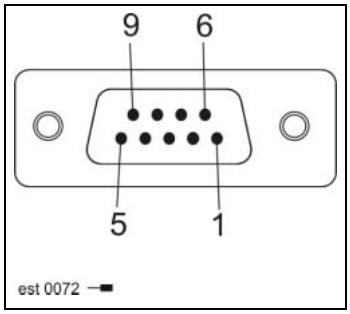

Socket XT1

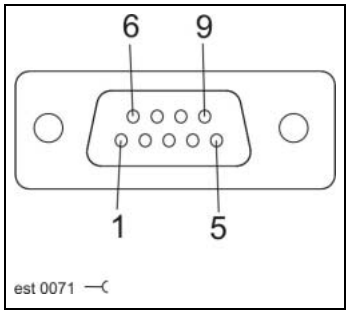

Connector XT2

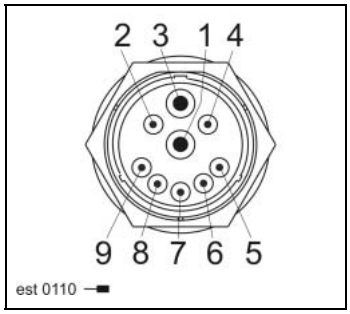

Connector XV

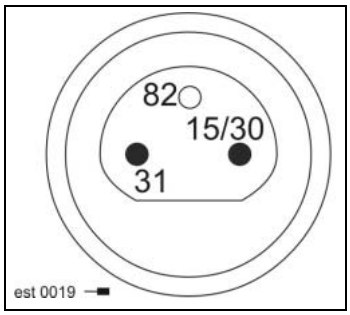

https://truckmanualshub.com/

5a

Terminal

Liner 3000 with Communicator

https://truckmanualshub.com/

05a - Terminal

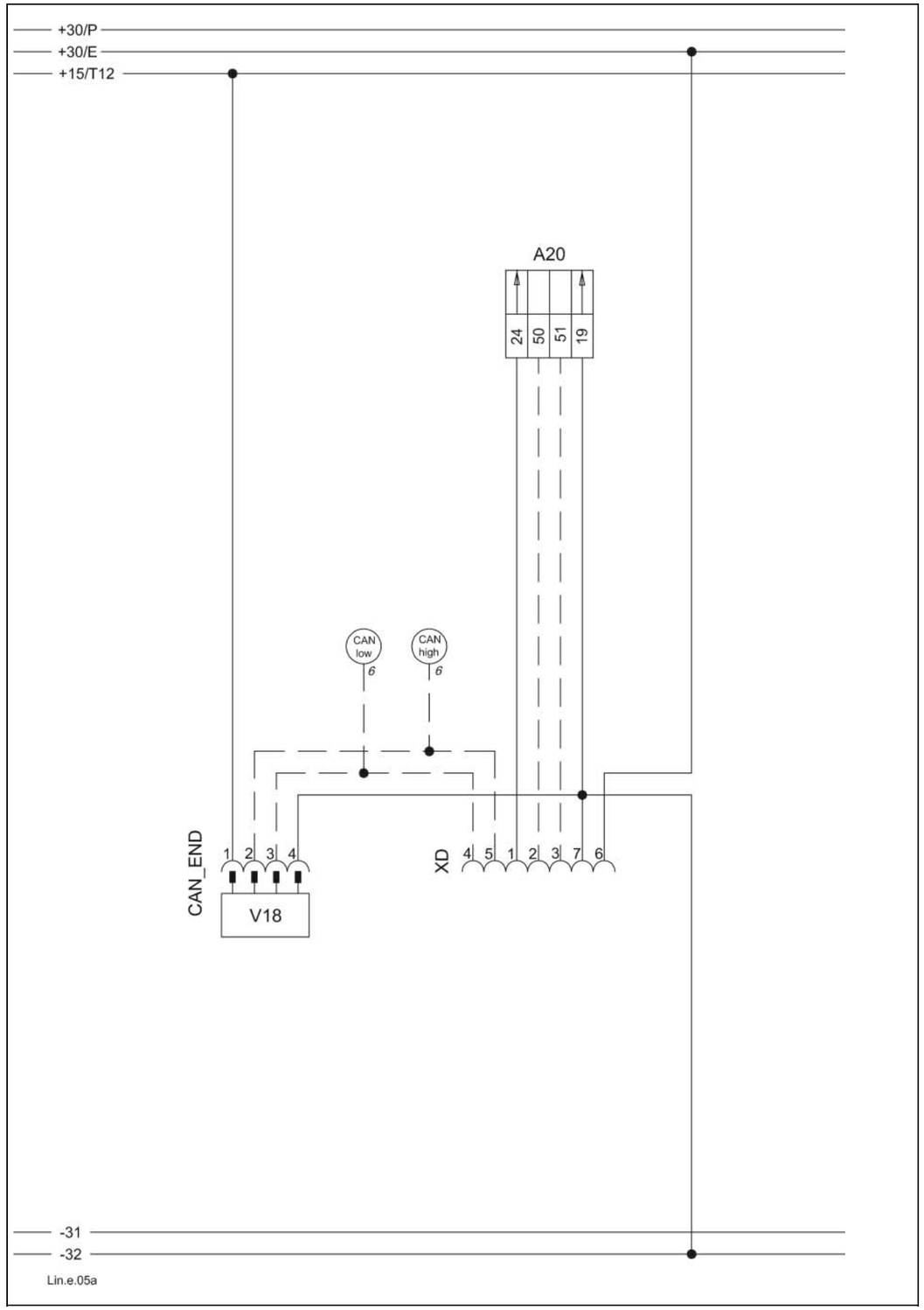

Key to diagram:

A20	CCU module
CAN_END	Wiring loom connector
V18	Active CAN bus termination
XD	CAN bus socket (7-pin)

https://truckmanualshub.com/

Description of function:

Terminal	The XD connector serves for diagnosis with the CDS CLAAS Diagnosis system.

https://truckmanualshub.com/

Connector pin definition:

Connector CAN_END

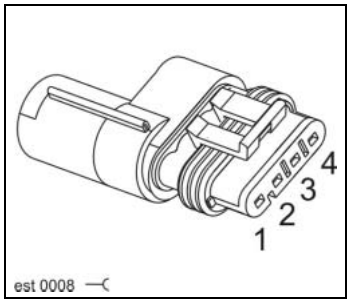

Socket XD

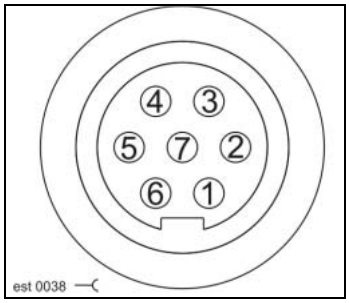

https://truckmanualshub.com/

6a

CAN bus, power supply of modules

Liner 3000 with Communicator

Circuit diagram **with**
„Basic tractor equipment“ retrofit kit
(ISO socket)

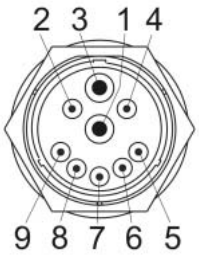

https://truckmanualshub.com/

06a - CAN bus, power supply of modules
Circuit diagram **with** „Basic tractor equipment“ retrofit kit (ISO socket)

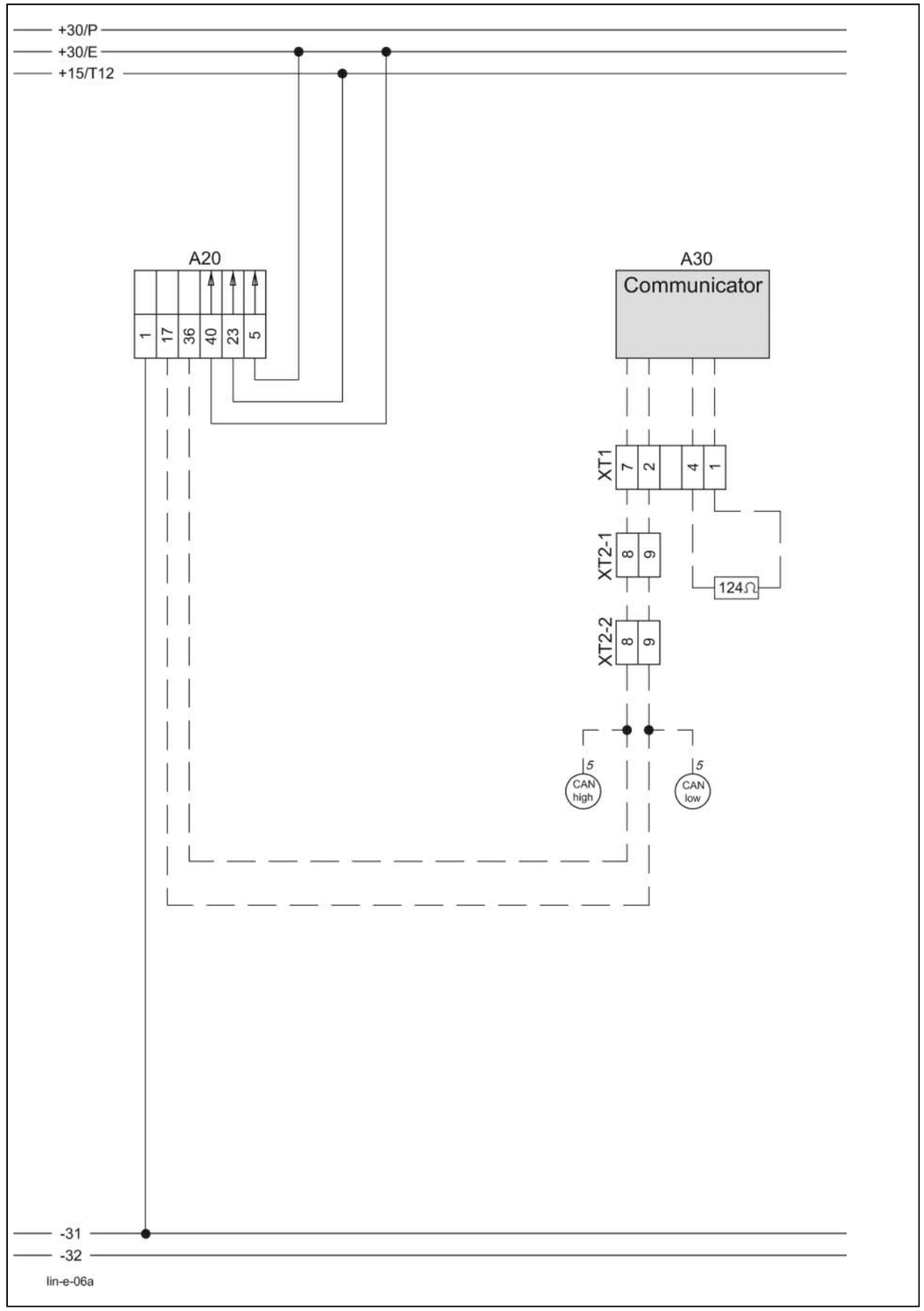

Key to diagram:

A20	CCU module
A30	Terminal
XT1	Terminal connector
XT2-1	Tractor connector, 9-pin (acc. to ISO standard)
XT2-2	Implement connector, 9-pin (acc. to ISO standard)

https://truckmanualshub.com/

Description of function:

The performance data (operating hours, ...) are stored in module A 20. Communication of the module with the CCT terminal A30 is via the CAN bus.

https://truckmanualshub.com/

Connector pin definition:

Connector XT1

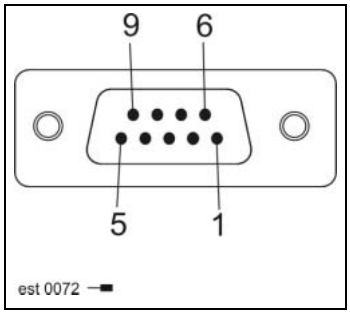

Socket XT1

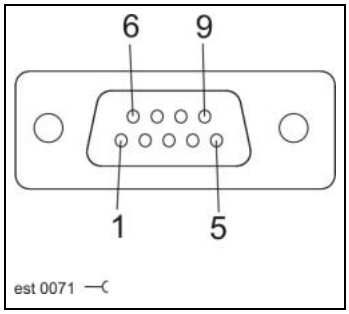

Connector XT2-1, XT2-2

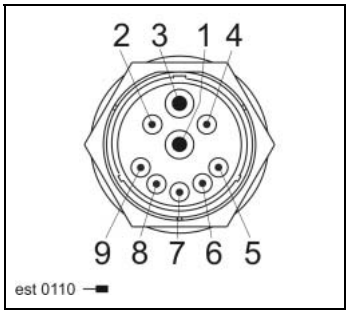

https://truckmanualshub.com/

6b

CAN bus, power supply of modules

Liner 3000 with Communicator

Circuit diagram **without**
„Basic tractor equipment“ retrofit kit
(2-pin power supply socket)

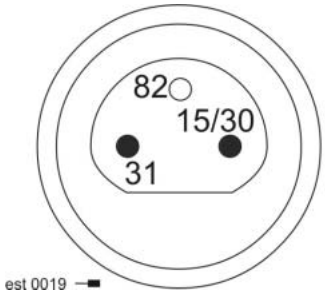

https://truckmanualshub.com/

06b - CAN bus, power supply of modules
Circuit diagram **without** „Basic tractor equipment“ retrofit kit (2-pin power supply socket)

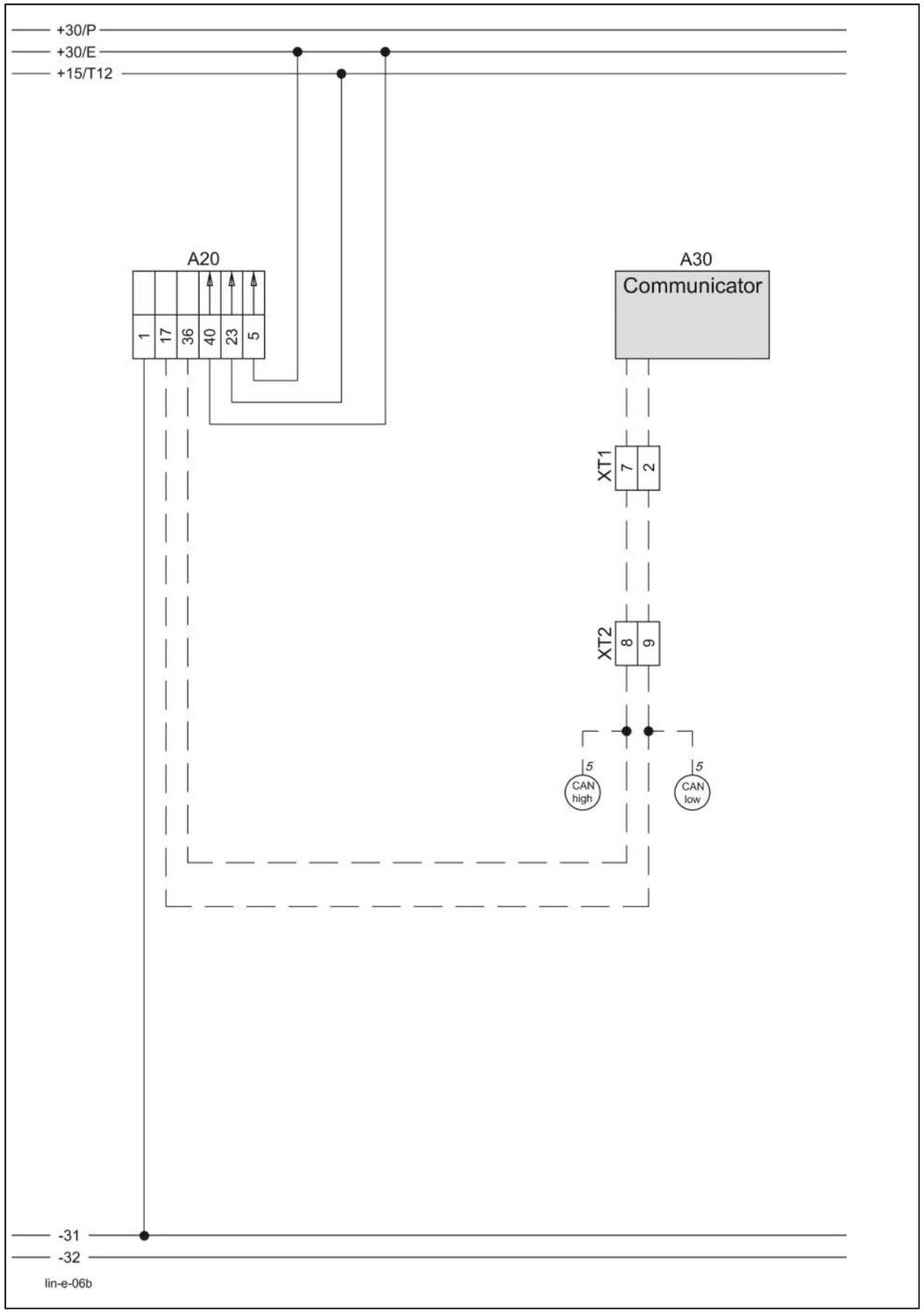

Key to diagram:

A20	CCU module
A30	Terminal
XT1	Terminal connector
XT2	Tractor connector, 9-pin (acc. to ISO standard)

https://truckmanualshub.com/

Description of function:

The performance data (operating hours, ...) are stored in module A 20. Communication of the module with the CCT terminal A30 is via the CAN bus.

https://truckmanualshub.com/

Connector pin definition:

Connector XT1

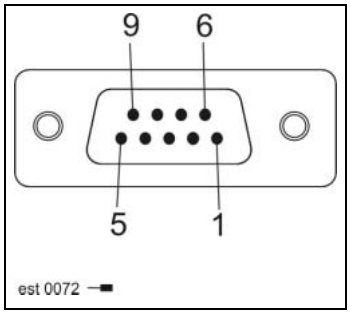

Socket XT1

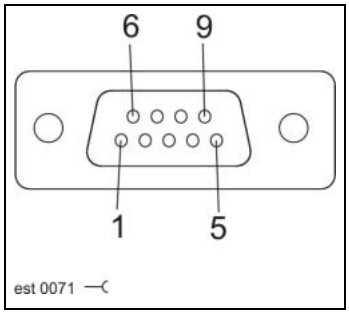

Connector XT2

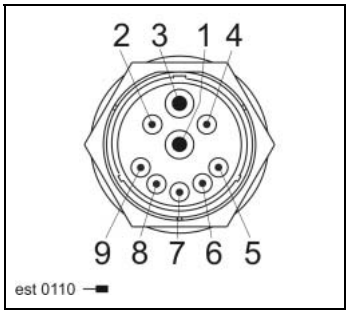

https://truckmanualshub.com/

7a

Chassis transport and working position

Liner 3000 with Communicator

https://truckmanualshub.com/

07a - Chassis transport and working position

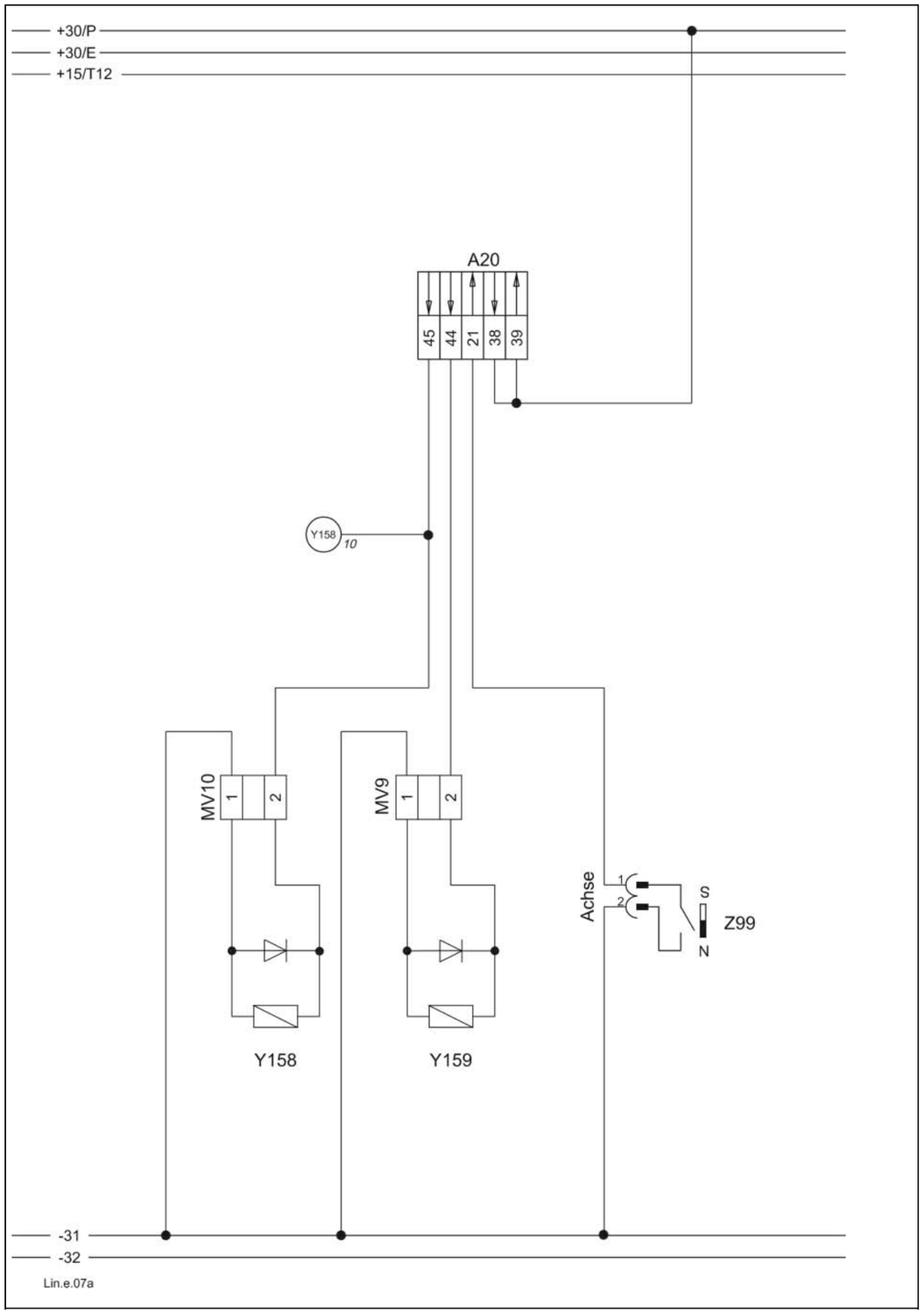

Key to diagram:

A20	CCU module
Axle	Wiring loom connector
MV9	Wiring loom connector
MV10	Wiring loom connector
Y158	Raise chassis solenoid coil
Y159	Lower chassis solenoid coil
Z99	Chassis position actual value switch

Measured value table:

Item	Component	Measured value	Remark
Y158 Y159	Solenoid coil	3.8 A 3.2 Ω	See inscription
Z99	Chassis position actual value switch	1 – 0 (Earth signal)	Reed contact

https://truckmanualshub.com/

Description of function:

	Module A 20 actuates the corresponding solenoid coils Y 158 and Y159 for raising and lowering the chassis. This is done automatically with the program "Approach working position / Transport position" or using the "Manual operation" function. Working position = chassis raised Transport position = chassis lowered.
Secondary chassis raise	When the turning area circuit is running, the Chassis raise solenoid coil (Y158) is actuated for 2 seconds in parallel with lowering of the rotors. This keeps the chassis from lowering when in the working position due to a possible leak.
Chassis position	The chassis position switch (Z99) transmits a signal to the electronic unit when the chassis is raised. If the chassis position is not detected in the "Approach working position" and "Reset basic values" programs, the automatic functions are aborted.
Adjustment of sensors	The chassis position switch (Z99) is set to a clearance of 4 mm from the signal magnet with the chassis raised. In this position, the signal magnet and the sensor should not be centred opposite each other, but slightly offset.

https://truckmanualshub.com/

Connector pin definition:

Socket MV9, MV10

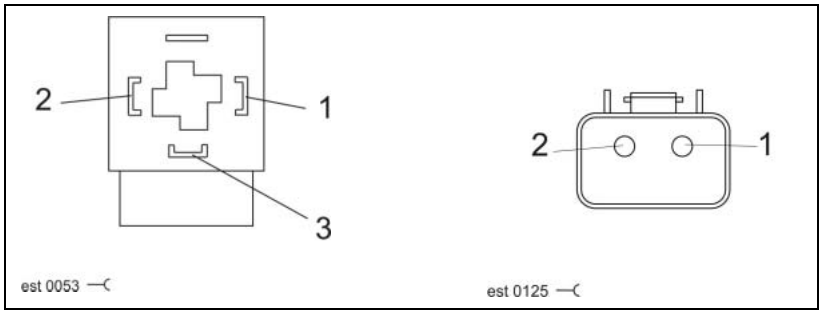

Axle connector

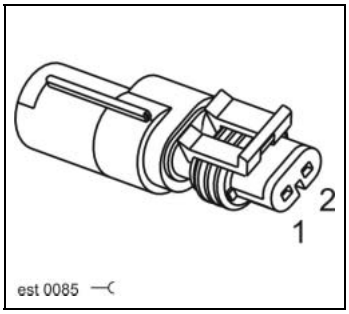

https://truckmanualshub.com/

8a

Turning area circuit

Liner 3000 with Communicator

https://truckmanualshub.com/

08a - Turning area circuit

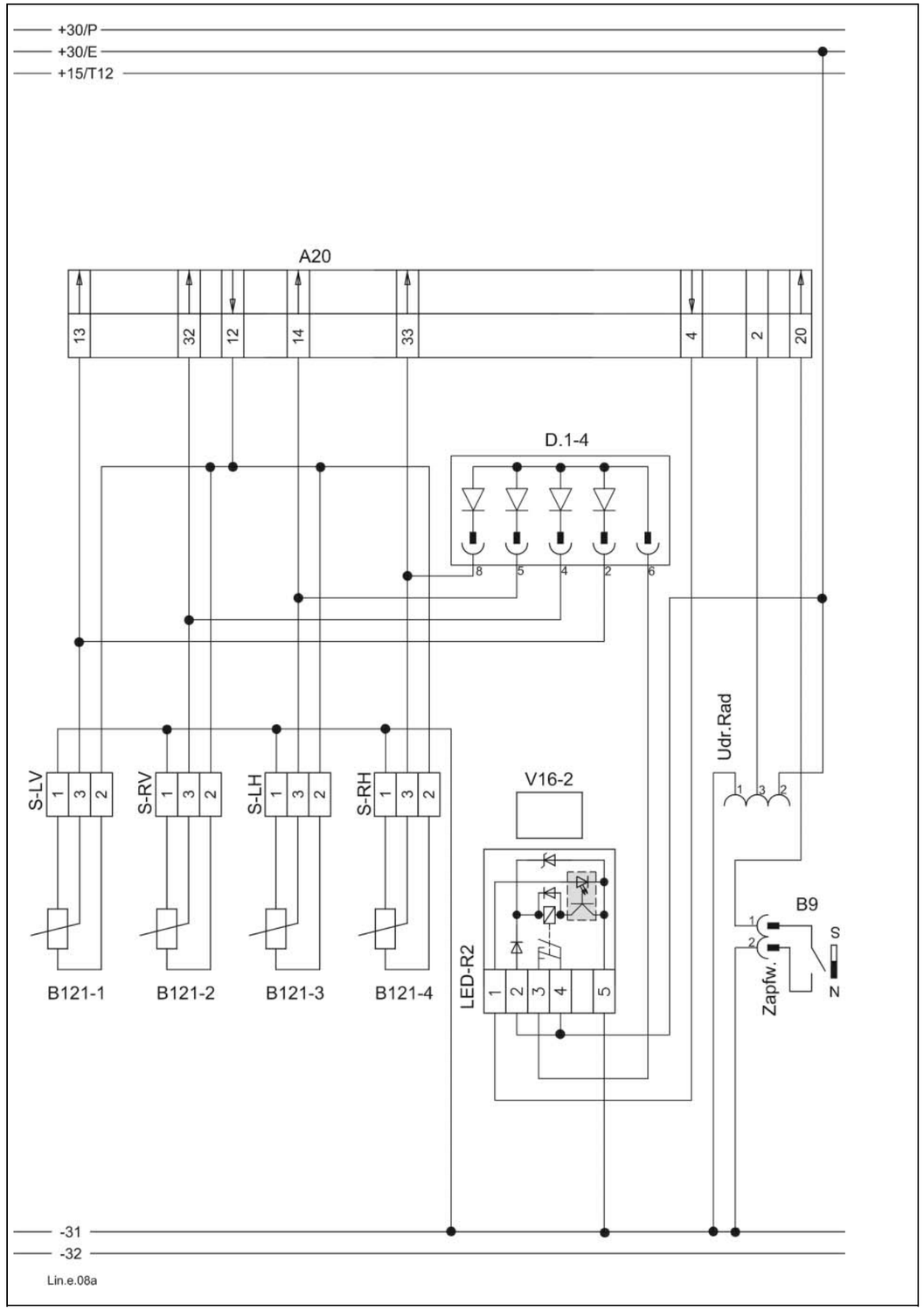

Key to diagram:

A20	CCU Module
B9	Drive speed sensor
B121-1	Rotor position sensor, front left
B121-2	Rotor position sensor, front right
B121-3	Rotor position sensor, rear left
B121-4	Rotor position sensor, rear right
D1-4	Diode component
V16-2	Amplifier
S-LV	Wiring loom connector
S-RV	Wiring loom connector
S-LH	Wiring loom connector
S-RH	Wiring loom connector
Wheel rev.	Wiring loom connector

Measured value table:

Item	Component	Measured value	Remark
B121	Rotor position sensors	Approx. 5% PWM signal	Cylinder retracted
B121	Rotor position sensors	Approx. 95% PWM signal	Cylinder extended
B6	Drive sensor	1 – 0 earth signal	Metal is detected by sensor or not.

https://truckmanualshub.com/

Description of function:

To control the automatic functions, the electronic unit monitors:
- the drive speed
- the position of the rotor arms' hydraulic cylinders

Rotor position sensors B121

The rotor position sensors are integrated in the hydraulic cylinders as contactless position measuring sensors.
A spindle with a steep thread inside the hydraulic cylinders rotates a signal generator.
The angle of rotation between the retracted and the extended cylinder position is < 360°.
The signal generator emits a magnetic field to the sensor electronic unit located opposite of it. The position of the magnetic field which corresponds to the hydraulic cylinder position is detected by the sensor electronic unit.
The sensor electronic unit transmits a pulse-width modulated signal (PWM, corresponding to the hydraulic cylinder position) to module A 20.
With the hydraulic cylinder retracted, this signal is 5% and with the cylinder extended, it is 95% PWM.

See also the Technical Systems / Hydraulic system documentation.

Offset of rotor position sensors B 121

The position "Hydraulic cylinder retracted" must be programmed in the sensor electronic unit (= sensor offset).
This programming changes when the ram rod of a hydraulic cylinder is rotated, e.g. during service work.

For offset programming, the sensor signal output must be connected to the 12 V sensor supply voltage for at least 2 seconds.
The CCU module carries out this offset programming during each basic initialisation. This is done by the diode component D.1-4 and amplifier V16-2.

This is detected at terminal A30. When the basic initialisation is carried out, a cylinder position of 100% and then of 5% is displayed for a short time when in transport position (cylinder retracted).

When a hydraulic cylinder position which is illogical to the electronic unit is detected, e.g. due to service work, an error is reported.
In order to remove the error, the operator may move to transport position or carry out a basic initialisation.

The PWM signal from sensors B121 is also displayed as cylinder position on terminal A30. This involves slight deviations:
90% signal change = 100% change of display on terminal A30.

Approach transport position program

If the drive sensor B9 detects a signal change (universal drive shaft is rotating), approaching the transport position in automatic mode is not possible.

Adjustment of drive sensor B9

Sensor B9 is set to a clearance of 3-4 mm from the outside profile of the drive shaft.

https://truckmanualshub.com/

Connector pin definition:

Connector B9

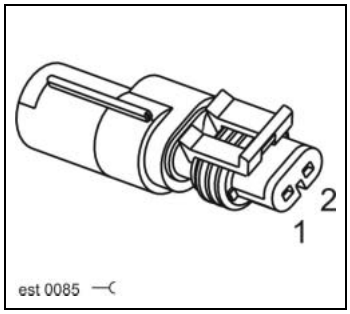

Socket B121, wheel rev.

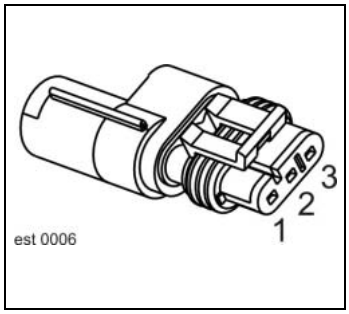

Relay socket V16-2

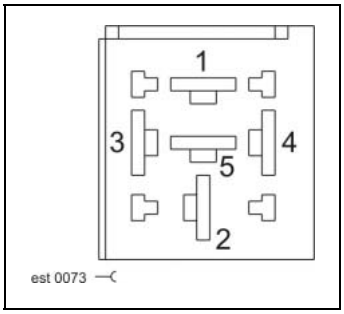

https://truckmanualshub.com/

10a

Raking height adjustment

Liner 3000 with Communicator

https://truckmanualshub.com/

10a - Raking height adjustment

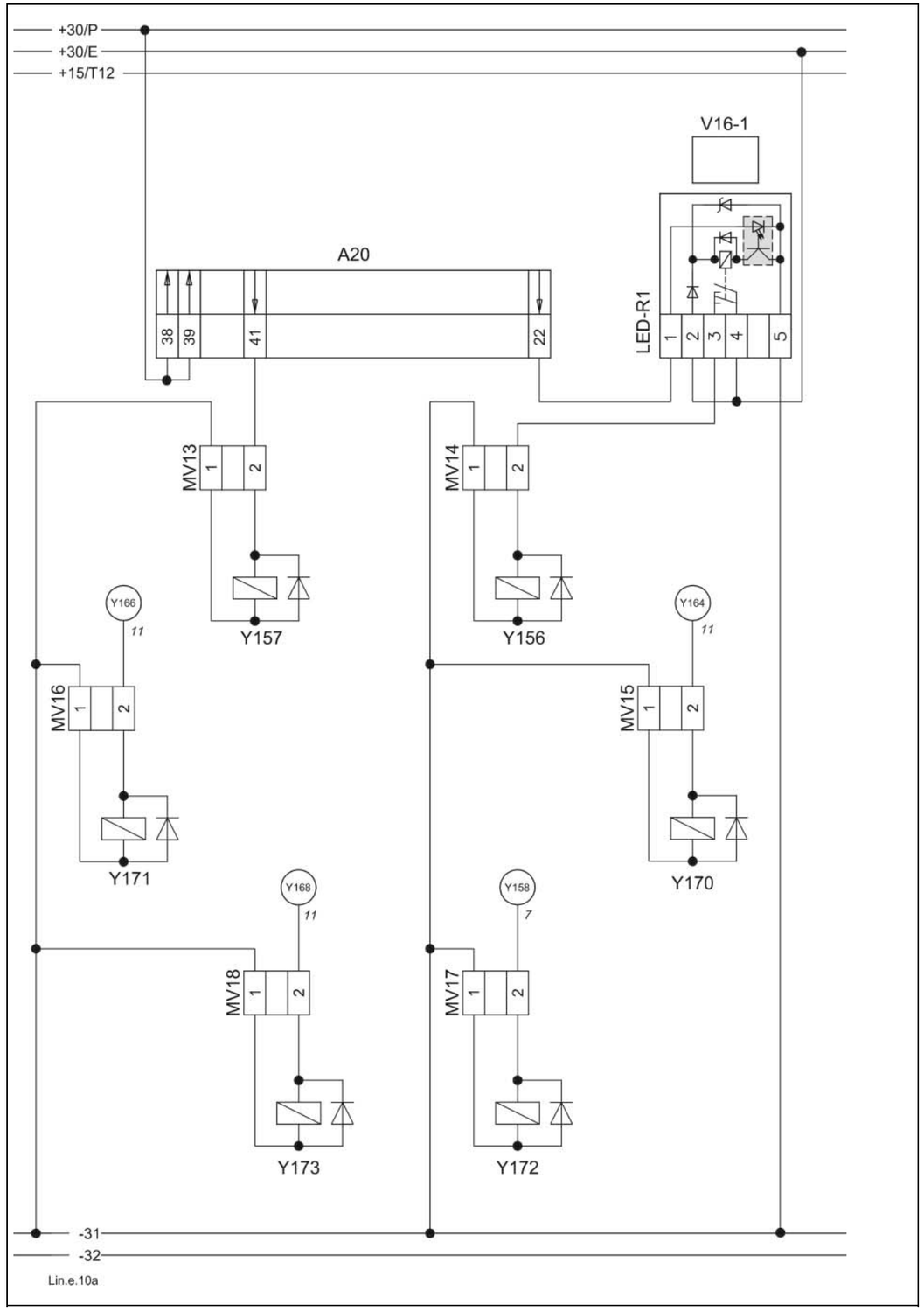

Key to diagram:

A20	CCU module
V16-1	Amplifier
Y156	Lower rotor height solenoid coil
Y157	Raise rotor height solenoid coil
Y158	Raise chassis solenoid coil
Y164	Lower front right rotor solenoid coil
Y166	Lower front left rotor solenoid coil
Y168	Lower rear left rotor solenoid coil
Y170	Front right height blocking valve solenoid coil
Y171	Front left height blocking valve solenoid coil
Y172	Rear right height blocking valve solenoid coil
Y173	Rear left height blocking valve solenoid coil
MV13	Wiring loom connector
MV14	Wiring loom connector
MV15	Wiring loom connector
MV16	Wiring loom connector
MV17	Wiring loom connector
MV18	Wiring loom connector

Measured value table:

Item	Component	Measured value	Remark
Y156 Y157 Y158 Y164 Y166 Y168 Y170 Y171 Y172 Y173	Solenoid coil	3.8 A 3.2 Ω	See inscription

https://truckmanualshub.com/

Description of function:

	To adjust the raking height, the module A 20 actuates the corresponding solenoid coils.
Lower rotor height adjustment	The rotor height adjustment solenoid coil (Y 156) is actuated by amplifier V16-1.
Parallel functions for rotor height adjustment	To actuate the height blocking valves (Y170-173), the corresponding functions "Lower rotors" or "Raise chassis" are actuated in parallel.

https://truckmanualshub.com/

Connector pin definition:

Socket Y156-173

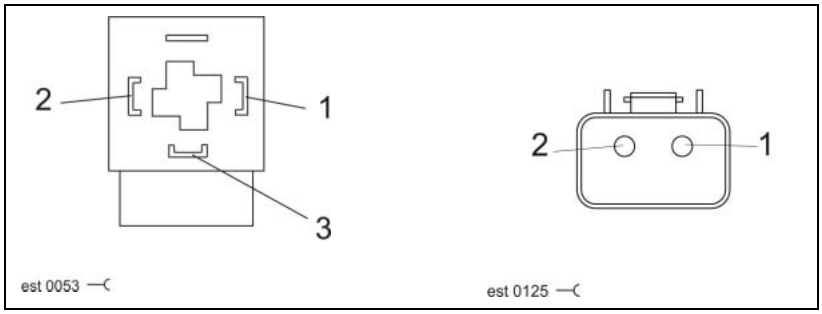

Relay socket V16-1

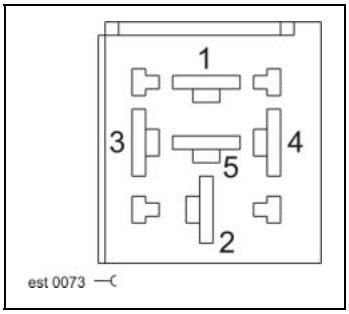

https://truckmanualshub.com/

11a

Raising and lowering the rotor arms

Liner 3000 with Communicator

https://truckmanualshub.com/

11a - Raising and lowering the rotor arms

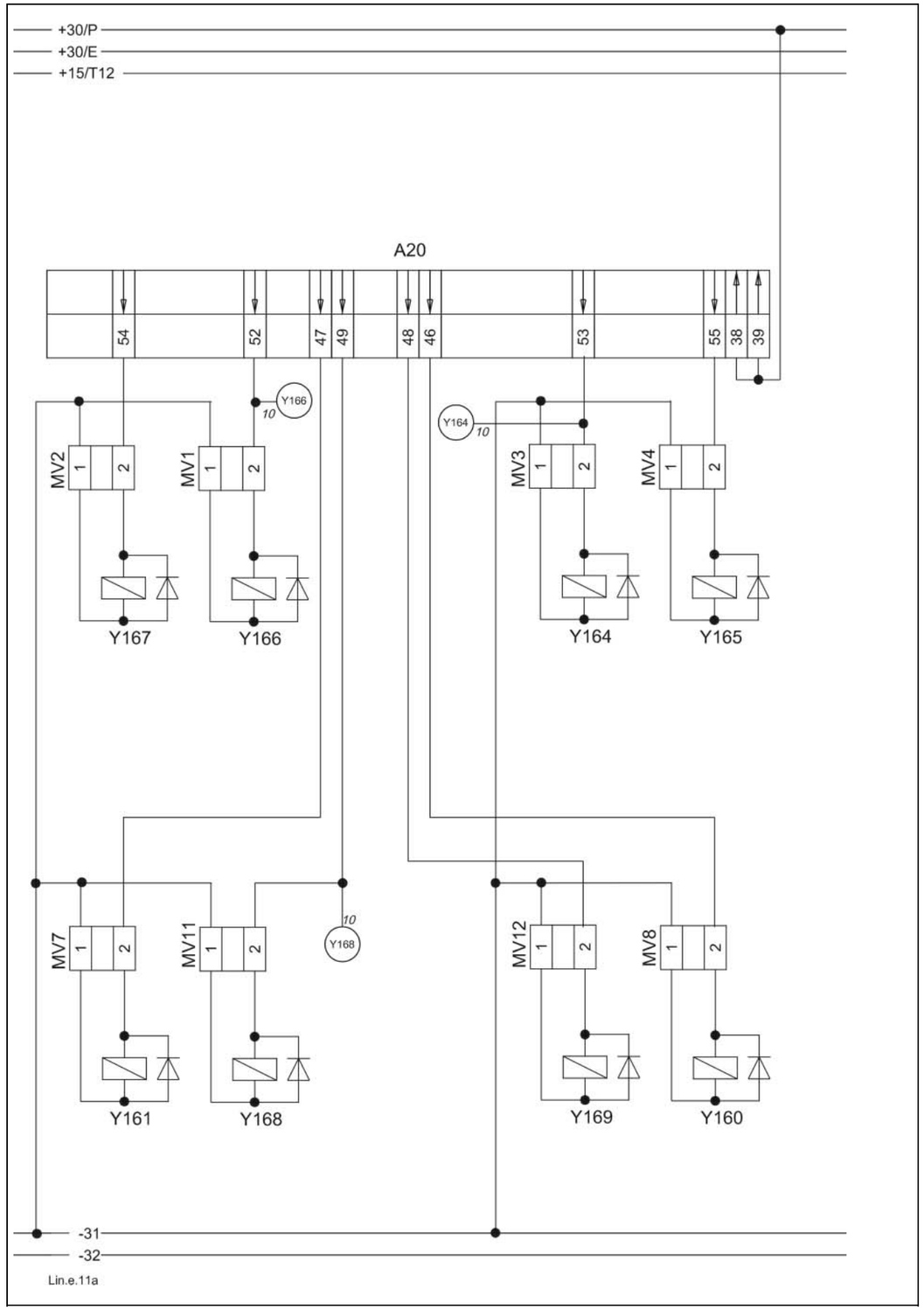

Key to diagram:

A20	CCU module
Y160	Raise rear right rotor solenoid coil
Y161	Raise rear left rotor solenoid coil
Y164	Lower front right rotor solenoid coil
Y165	Raise front right rotor solenoid coil
Y166	Lower front left rotor solenoid coil
Y167	Raise front left rotor solenoid coil
Y168	Lower rear left rotor solenoid coil
Y169	Lower rear right rotor solenoid coil
MV1	Wiring loom connector
MV2	Wiring loom connector
MV3	Wiring loom connector
MV4	Wiring loom connector
MV7	Wiring loom connector
MV8	Wiring loom connector
MV11	Wiring loom connector
MV12	Wiring loom connector

Measured value table:

Item	Component	Measured value	Remark
Y160	Solenoid coil	3.8 A	See inscription
Y161		3.2 Ω	
Y164			
Y165			
Y166			
Y167			
Y168			
Y169			

https://truckmanualshub.com/

Description of function:

To adjust the rotor height, the module A 20 actuates the solenoid coils according to the "Turning area function" programming or according to the operator's wish.

Turning area function

In the turning area function, the raising height and the time delay for raising and lowering of the front and rear rotor arms can be programmed.

https://truckmanualshub.com/

Connector pin definition:

Connector Y160-169

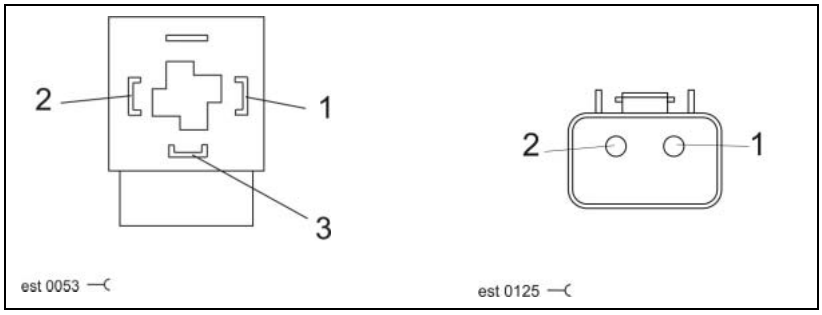

https://truckmanualshub.com/

13a

Adjusting the front rotor working width

Liner 3000 with Communicator

https://truckmanualshub.com/

13a - Adjusting the front rotor working width

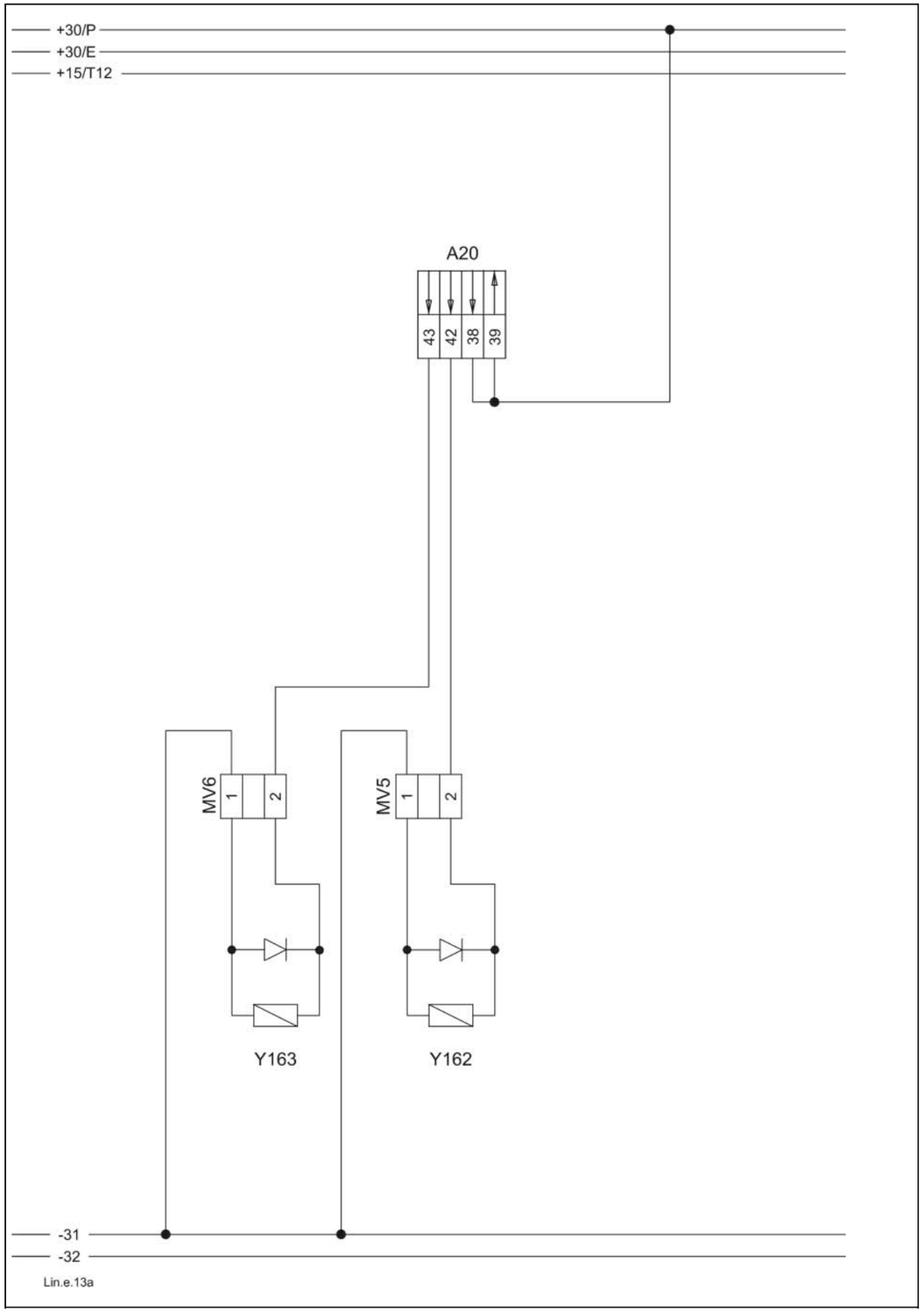

Key to diagram:

A20	CCU module
Y162	Increase working width solenoid coil
Y163	Decrease working width solenoid coil
MV5	Wiring loom connector
MV6	Wiring loom connector

Measured value table:

Item	Component	Measured value	Remark
Y162 Y163	Solenoid coil	3.8 A 3.2 Ω	See inscription

https://truckmanualshub.com/

Description of function:

To adjust the front rotor working width, the module A 20 actuates the solenoid coils (Y162, Y163) according to the operator's wish.

https://truckmanualshub.com/

Connector pin definition:

Connector Y162, 163

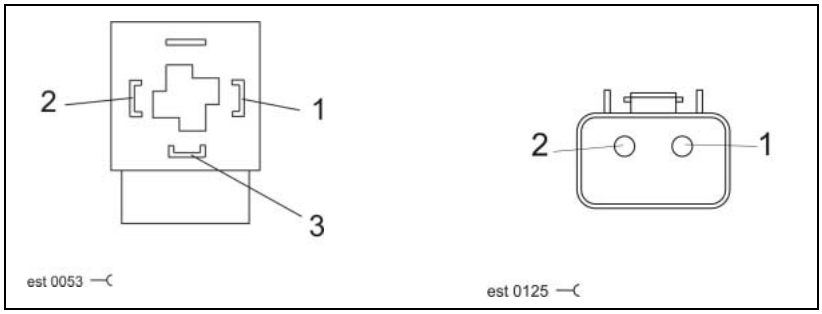

https://truckmanualshub.com/

26a

Machine monitoring

Liner 3000 with Communicator

https://truckmanualshub.com/

26a - Machine monitorino

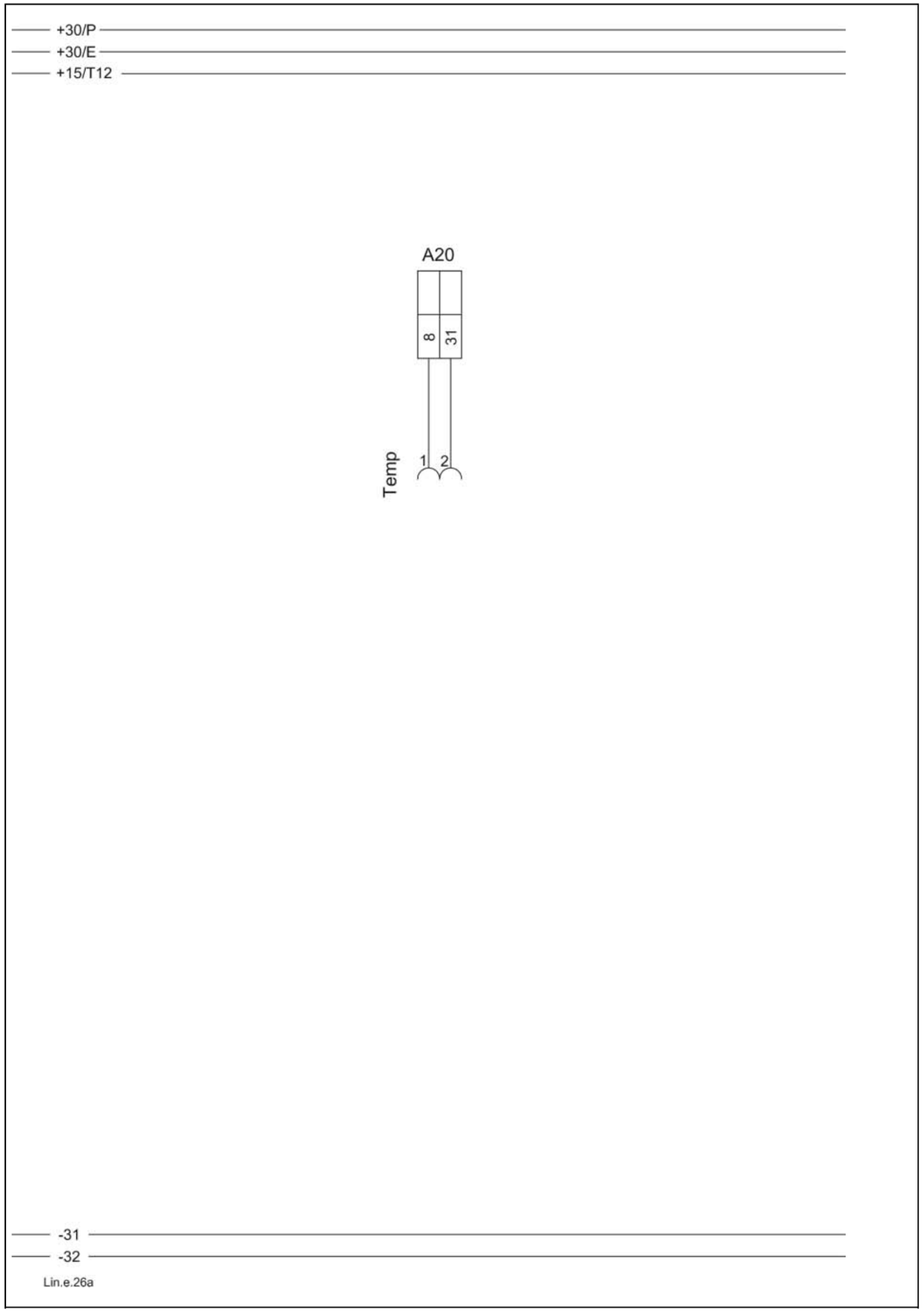

Key to diagram:

A20	CCU module
Temp	Wiring loom connector

https://truckmanualshub.com/

Description of function: None

https://truckmanualshub.com/

Connector pin definition:

Temp connector

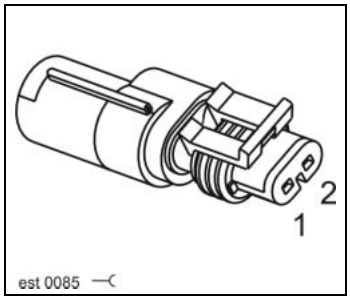

https://truckmanualshub.com/

Index

https://truckmanualshub.com/

https://truckmanualshub.com/

Index:

A	Amplifier	8a, 10a
C	CAN bus	5°, 6°, 6b
	CAN bus socket (7-pin)	5a
	CCU module	E-2
	Chassis position switch	7a
D	Drive speed	8a
E	Earth point	1a
F	Fuse	1a, 1b
H	Height blocking valves	10a
I	Increase / decrease working width	13a
L	Lower chassis	7a
M	Main switch	1a
P	Potential	1a
R	Raise chassis	7a
	Rotor, front, raise / lower	11a
	Rotor height adjustment	11a
	Rotor position	8a
	Rotor, rear, raise / lower	11a
	Rotor, rear right, lower	11a
T	Terminal	1a
	Tractor, basic equipment	1a

https://truckmanualshub.com/

https://truckmanualshub.com/

CLAAS

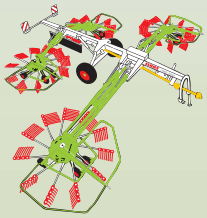

Liner 3000 with Communicator

Technical Systems

Hydraulic System

SERVICE & PARTS

https://truckmanualshub.com/

https://truckmanualshub.com/

Contents
Hydraulic System

Chapter 1 Overall hydraulic system.....1-1

Chapter 2 Individual functions 2-1

https://truckmanualshub.com/

https://truckmanualshub.com/

Chapter 1
Overall hydraulic system

1.1 Overall hydraulic system circuit diagram, up to serial no. 14
Connection to tractor hydraulic system.....1-4

1.2 Overall hydraulic system circuit diagram, from serial no. 15
Connection to tractor hydraulic system.....1-9

1.3 Valve block, up to serial no. 14.....1-15

1.4 Valve block, from serial no. 15.....1-18

1.5 Valve block 1-22

https://truckmanualshub.com/

https://truckmanualshub.com/

1.1

Overall hydraulic system circuit diagram

- up to serial no. 14

https://truckmanualshub.com/

1.1 Overall hydraulic system circuit diagram, up to serial no. 14
Connection to tractor hydraulic system

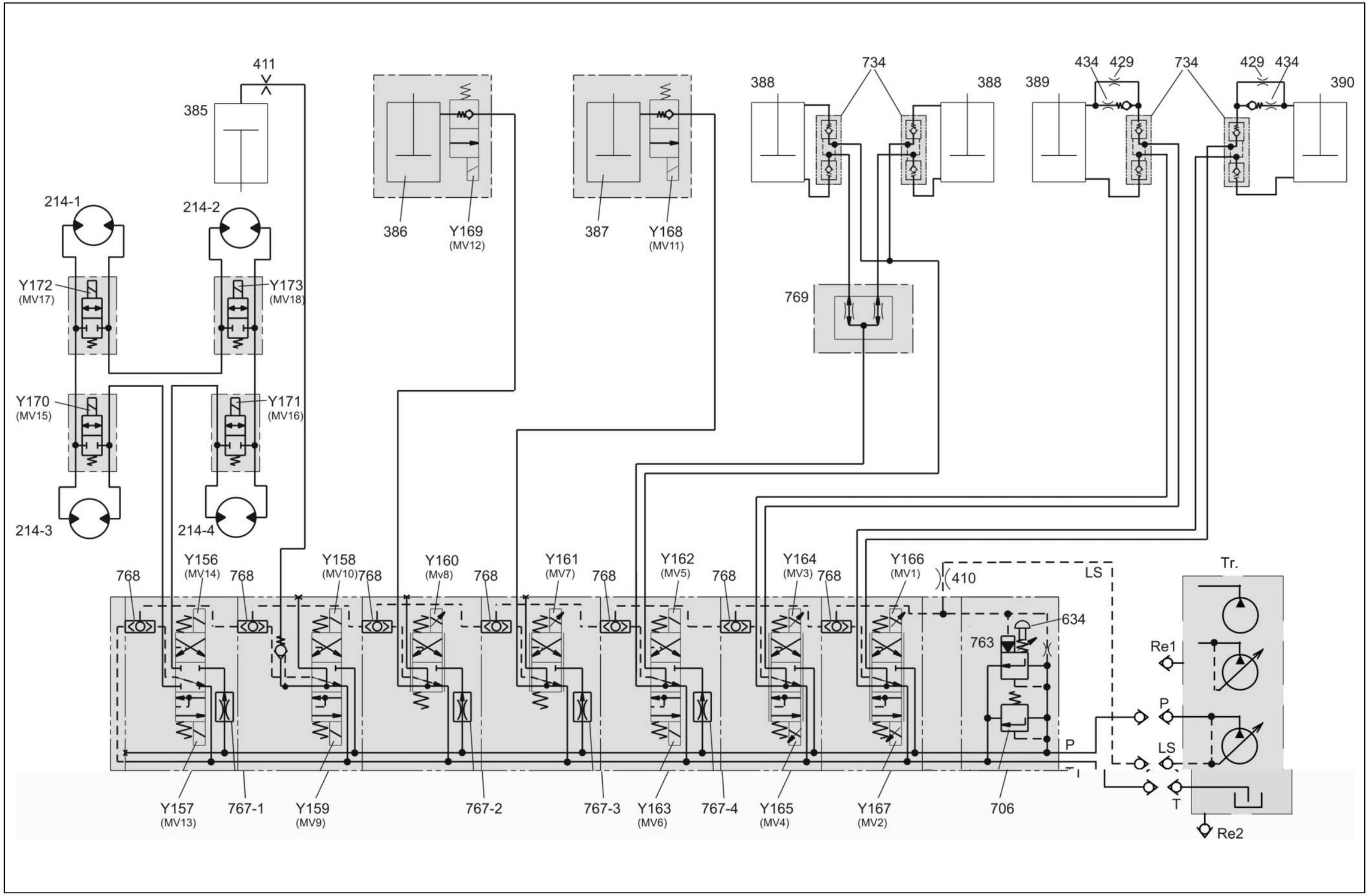

https://truckmanualshub.com/

Key to diagram:

214-1	Rear right rotor hydraulic motor
214-2	Rear left rotor hydraulic motor
214-3	Front right rotor hydraulic motor
214-4	Front left rotor hydraulic motor
385	Chassis hydraulic cylinder
386	Rear right rotor hydraulic cylinder
387	Rear left rotor hydraulic cylinder
388	Front swath width hydraulic cylinder
389	Front right rotor hydraulic cylinder
390	Front left rotor hydraulic cylinder
410	Orifice plate Ø 1.5 mm
411	Orifice plate Ø 1.8 mm
429	Restrictor Ø 1.5 mm
434	Restrictor Ø 3.0 mm
634	System screw (handwheel)
706	Pressure relief valve 180^{+10} bar
734	Lock-up valve unit
763	Input pressure balance
767-1	Flow controller 6l/min ± 0.5 l
767-2	Flow controller 10l/min ± 1.0 l
767-3	Flow controller 10l/min ± 1.0 l
767-4	Flow controller 20l/min ± 0.5 l
768	LS signal shuttle valve
769	Flow divider
Y156 (MV14)	Lower rotor height solenoid valve
Y157 (MV13)	Raise rotor height solenoid valve
Y158 (MV10)	Raise chassis solenoid valve
Y159 (MV9)	Lower chassis solenoid valve
Y160 (MV8)	Raise rear right rotor solenoid valve
Y161 (MV7)	Raise rear left rotor solenoid valve
Y162 (MV5)	Increase working width solenoid valve
Y163 (MV6)	Decrease working width solenoid valve
Y164 (MV3)	Lower front right rotor solenoid valve
Y165 (MV4)	Raise front right rotor solenoid valve
Y166 (MV1)	Lower front left rotor solenoid valve
Y167 (MV2)	Raise front left rotor solenoid valve
Y168 (MV11)	Lower rear left rotor solenoid valve
Y169 (MV12)	Lower rear right rotor solenoid valve
Y170 (MV15)	Front right height blocking valve solenoid valve
Y171 (MV16)	Front left height blocking valve solenoid valve
Y172 (MV17)	Rear right height blocking valve solenoid valve
Y173 (MV18)	Rear left height blocking valve solenoid valve
LS	Load sensing port
Re1	Remote port 1
Re2	Remote port 2
P	Pump
T	Tank
Tr	Tractor

https://truckmanualshub.com/

Connection to tractor hydraulic system

The attachment can be connected to any tractor hydraulic system available on the market.

Connection to tractors with constant-flow hydraulic system or load-sensing system

The quick release coupling 801-2 is connected to a control unit port of the tractor with adjustable oil flow.
This control unit provides oil supply for the attachment and is adjusted to a constant volume flow of Q_{max} = 50 l/min.

The **system screw (handwheel) 634 is turned out up to the stop** so that the input pressure balance 763 is operative.

The quick release coupling 801-3 is in general connected to the pressureless return line T of the tractor.
If a pressureless return line is not allowed in continuous operation (e.g. because lubrication of the tractor gearbox is not guaranteed), a double-acting control unit can be used for supplying oil to the attachment.
In this case, the quick release coupling 801-2 is connected to port A (feed) and quick release coupling 801-3 to port B (return) of the corresponding tractor control valve.
Adjust the volume flow to Q_{max} = 50 l/min; please refer also to the tractor's Operating Manual, e.g. "Continuous operation of hydraulic motors".

The quick release coupling 801-4 (LS, working hydraulics signal) is not used with this connection option.

If the tractor is not provided with a flow-adjustable control unit, the volume flow must not exceed 50 l/min.

Connection to tractors with constant-pressure hydraulic system

The quick release coupling 801-2 is connected to a control unit port of the tractor with adjustable oil flow.
This control unit provides oil supply for the attachment and is adjusted to an oil flow of approx. Q_{max} = 50 l/min.

The **system screw (handwheel) 634 is turned in up to the stop** so that the input pressure balance 763 is blocked.
The tractor's hydraulic pump is shut down when the system pressure has been reached.

The quick release coupling 801-3 is connected to port T (pressureless return line) of the tractor.

The quick release coupling 801-4 (LS, working hydraulics signal) is not used with this connection option.

Important! The pressure relief valve 706 must be set approx. 20 bar higher than the tractor's pressure protection (oil will heat up!). Block pressure relief valve 706 if necessary.

https://truckmanualshub.com/

Connection to tractors with load-sensing system and a Power Beyond port

The quick release coupling 801-2 is connected directly to the pump via the Power Beyond port P.

The quick release coupling 801-3 is connected to port T (pressureless return line) of the tractor.

The quick release coupling 801-4 (LS, working hydraulics signal) is connected to the tractor's "LS signal" port when using this connection option.

The **system screw (handwheel) 634 is turned in up to the stop** so that the input pressure balance 763 is blocked.
The tractor's hydraulic pump regulates as a function of the attachment's load signal.

Test points/Characteristics

When no function is active on the attachment, the attachment must not load the tractor hydraulically
(The tractor engine speed must not be reduced).
The allowed temperature of the tractor's hydraulic system must not be exceeded; see also the Operator's Manual of the tractor.

Important! The pressure relief valve 706 must be set approx. 20 bar higher than the tractor's pressure protection (oil will heat up!). Block pressure relief valve 706 if necessary.

https://truckmanualshub.com/

1.2

Overall hydraulic system circuit diagram

- from serial no. 15

https://truckmanualshub.com/

1.2 Overall hydraulic system circuit diagram, from serial no. 15
Connection to tractor hydraulic system

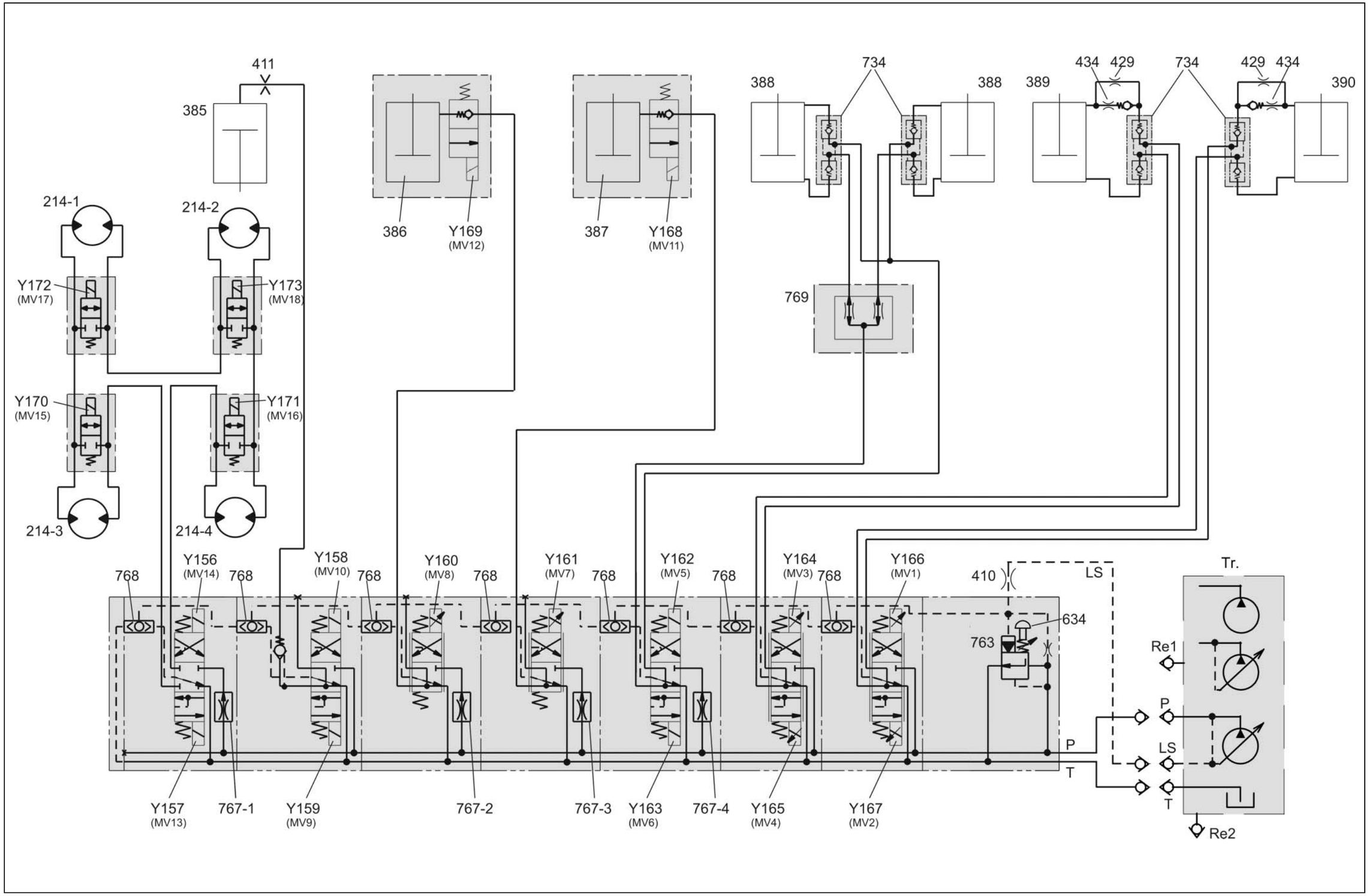

https://truckmanualshub.com/

https://truckmanualshub.com/

Key to diagram:

214-1	Rear right rotor hydraulic motor
214-2	Rear left rotor hydraulic motor
214-3	Front right rotor hydraulic motor
214-4	Front left rotor hydraulic motor
385	Chassis hydraulic cylinder
386	Rear right rotor hydraulic cylinder
387	Rear left rotor hydraulic cylinder
388	Front swath width hydraulic cylinder
389	Front right rotor hydraulic cylinder
390	Front left rotor hydraulic cylinder
410	Orifice plate Ø 1.5 mm
411	Orifice plate Ø 1.8 mm
429	Restrictor Ø 1.5 mm
434	Restrictor Ø 3.0 mm
634	System screw (handwheel)
734	Lock-up valve unit
763	Input pressure balance
767-1	Flow controller 6l/min ± 0.5 l
767-2	Flow controller 10l/min ± 1.0 l
767-3	Flow controller 10l/min ± 1.0 l
767-4	Flow controller 20l/min ± 0.5 l
768	LS signal shuttle valve
769	Flow divider
Y156 (MV14)	Lower rotor height solenoid valve
Y157 (MV13)	Raise rotor height solenoid valve
Y158 (MV10)	Raise chassis solenoid valve
Y159 (MV9)	Lower chassis solenoid valve
Y160 (MV8)	Raise rear right rotor solenoid valve
Y161 (MV7)	Raise rear left rotor solenoid valve
Y162 (MV5)	Increase working width solenoid valve
Y163 (MV6)	Decrease working width solenoid valve
Y164 (MV3)	Lower front right rotor solenoid valve
Y165 (MV4)	Raise front right rotor solenoid valve
Y166 (MV1)	Lower front left rotor solenoid valve
Y167 (MV2)	Raise front left rotor solenoid valve
Y168 (MV11)	Lower rear left rotor solenoid valve
Y169 (MV12)	Lower rear right rotor solenoid valve
Y170 (MV15)	Front right height blocking valve solenoid valve
Y171 (MV16)	Front left height blocking valve solenoid valve
Y172 (MV17)	Rear right height blocking valve solenoid valve
Y173 (MV18)	Rear left height blocking valve solenoid valve
LS	Load sensing port
Re1	Remote port 1
Re2	Remote port 2
P	Pump
T	Tank
Tr	Tractor

https://truckmanualshub.com/

Connection to tractor hydraulic system

The attachment can be connected to any tractor hydraulic system available on the market.

Connection to tractors with constant-flow hydraulic system or load-sensing system

The quick release coupling 801-2 is connected to a control unit port of the tractor with adjustable oil flow.
This control unit provides oil supply for the attachment and is adjusted to a constant volume flow of Q_{max} = 50 l/min.

The **system screw (handwheel) 634 is turned out up to the stop** so that the input pressure balance 763 is operative.

The quick release coupling 801-3 is in general connected to the pressureless return line T of the tractor.
If a pressureless return line is not allowed in continuous operation (e.g. because lubrication of the tractor gearbox is not guaranteed), a double-acting control unit can be used for supplying oil to the attachment.
In this case, the quick release coupling 801-2 is connected to port A (feed) and quick release coupling 801-3 to port B (return) of the corresponding tractor control valve.
Adjust the volume flow to Q_{max} = 50 l/min; please refer also to the tractor's Operating Manual, e.g. "Continuous operation of hydraulic motors".

The quick release coupling 801-4 (LS, working hydraulics signal) is not used with this connection option.

If the tractor is not provided with a flow-adjustable control unit, the volume flow must not exceed 50 l/min.

Connection to tractors with constant-pressure hydraulic system

The quick release coupling 801-2 is connected to a control unit port of the tractor with adjustable oil flow.
This control unit provides oil supply for the attachment and is adjusted to an oil flow of approx. Q_{max} = 50 l/min.

The **system screw (handwheel) 634 is turned in up to the stop** so that the input pressure balance 763 is blocked.
The tractor's hydraulic pump is shut down when the system pressure has been reached.

The quick release coupling 801-3 is connected to port T (pressureless return line) of the tractor.

The quick release coupling 801-4 (LS, working hydraulics signal) is not used with this connection option.

Important! The pressure relief valve 706 must be set approx. 20 bar higher than the tractor's pressure protection (oil will heat up!). Block pressure relief valve 706 if necessary.

https://truckmanualshub.com/

Connection to tractors with load-sensing system and a Power Beyond port

The quick release coupling 801-2 is connected directly to the pump via the Power Beyond port P.

The quick release coupling 801-3 is connected to port T (pressureless return line) of the tractor.

The quick release coupling 801-4 (LS, working hydraulics signal) is connected to the tractor's "LS signal" port when using this connection option.

The **system screw (handwheel) 634 is turned in up to the stop** so that the input pressure balance 763 is blocked.
The tractor's hydraulic pump regulates as a function of the attachment's load signal.

Test points/Characteristics

When no function is active on the attachment, the attachment must not load the tractor hydraulically
(The tractor engine speed must not be reduced).
The allowed temperature of the tractor's hydraulic system must not be exceeded; see also the Operator's Manual of the tractor.

Important! The pressure relief valve 706 must be set approx. 20 bar higher than the tractor's pressure protection (oil will heat up!). Block pressure relief valve 706 if necessary.

https://truckmanualshub.com/

1.3

Valve block

- up to serial no. 14

https://truckmanualshub.com/

1.3 Valve block, up to serial no. 14

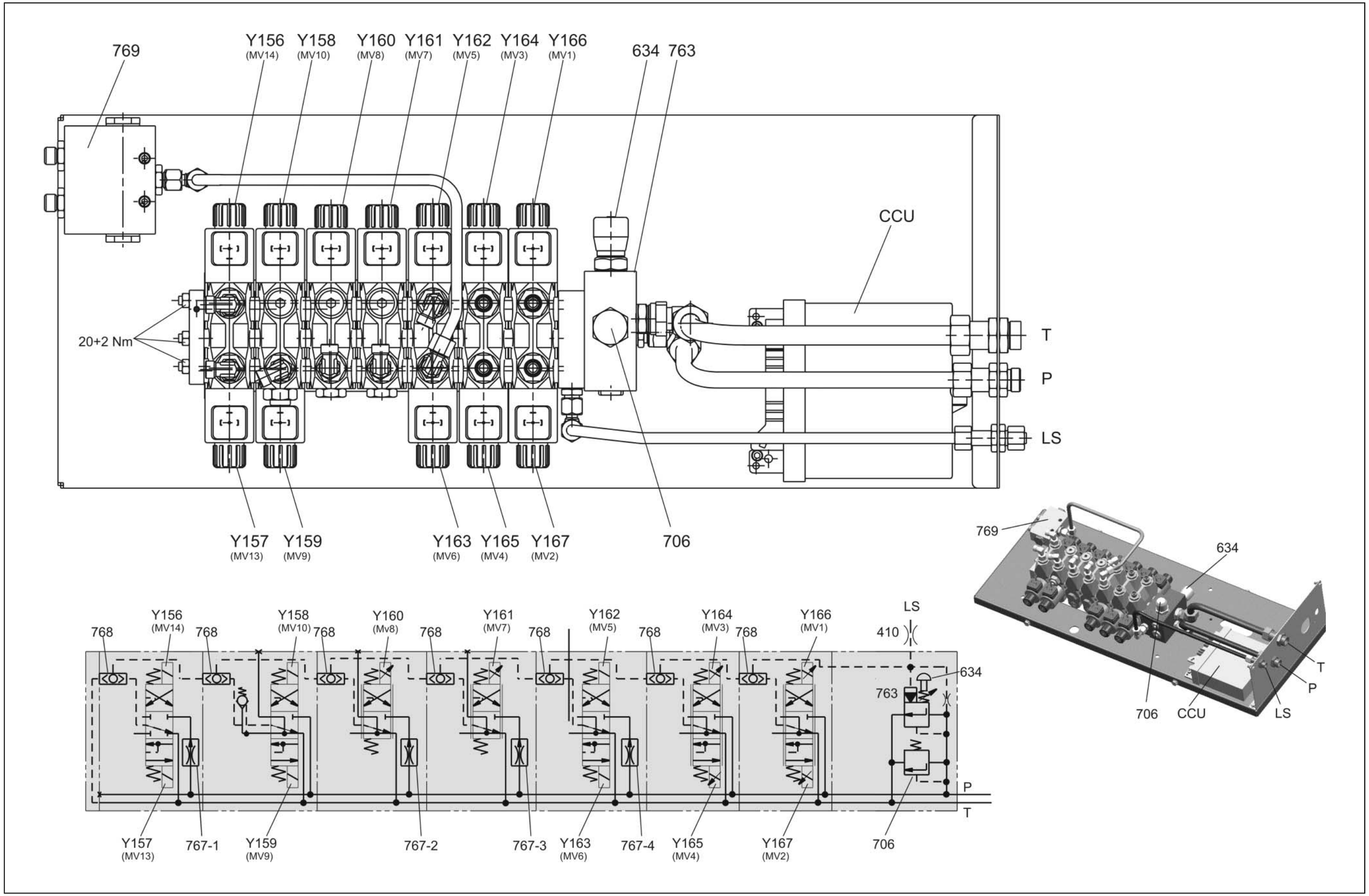

https://truckmanualshub.com/

Key to diagram:

214-1	Rear right rotor hydraulic motor
214-2	Rear left rotor hydraulic motor
214-3	Front right rotor hydraulic motor
214-4	Front left rotor hydraulic motor
385	Chassis hydraulic cylinder
386	Rear right rotor hydraulic cylinder
387	Rear left rotor hydraulic cylinder
388	Front swath width hydraulic cylinder
389	Front right rotor hydraulic cylinder
390	Front left rotor hydraulic cylinder
410	Orifice plate Ø 1.5mm
429	Restrictor Ø 1.5mm
434	Restrictor Ø 3.0mm
634	System screw
706	Pressure relief valve .....180^{+10} bar
734	Lock-up valve unit
763	Input pressure balance
767-1	Flow controller 6l/min ± 0.5 l
767-2	Flow controller 10l/min ± 1.0l
767-3	Flow controller 10l/min ± 1.0l
767-4	Flow controller 20l/min ± 0.5 l
768	LS signal shuttle valve
769	Flow divider
Y156 (MV14)	Lower rotor height solenoid valve
Y157 (MV13)	Raise rotor height solenoid valve
Y158 (MV10)	Raise chassis solenoid valve
Y159 (MV9)	Lower chassis solenoid valve
Y160 (MV8)	Raise rear right rotor solenoid valve
Y161 (MV7)	Raise rear left rotor solenoid valve
Y162 (MV5)	Increase working width solenoid valve
Y163 (MV6)	Decrease working width solenoid valve
Y164 (MV3)	Lower front right rotor solenoid valve
Y165 (MV4)	Raise front right rotor solenoid valve
Y166 (MV1)	Lower front left rotor solenoid valve
Y167 (MV2)	Raise front left rotor solenoid valve
Y168 (MV11)	Lower rear left rotor solenoid valve
Y169 (MV12)	Lower rear right rotor solenoid valve
Y170 (MV15)	Front right height blocking valve solenoid valve
Y171 (MV16)	Front left height blocking valve solenoid valve
Y172 (MV17)	Rear right height blocking valve solenoid valve
Y173 (MV18)	Rear left height blocking valve solenoid valve
CCU	CLAAS Control Unit
LS	Load sensing port
Re1	Remote port 1
Re2	Remote port 2
P	Pump
T	Tank
Tr	Tractor

https://truckmanualshub.com/

1.4

Valve block

- from serial no. 15

https://truckmanualshub.com/

1.4 Valve block, from serial no. 15

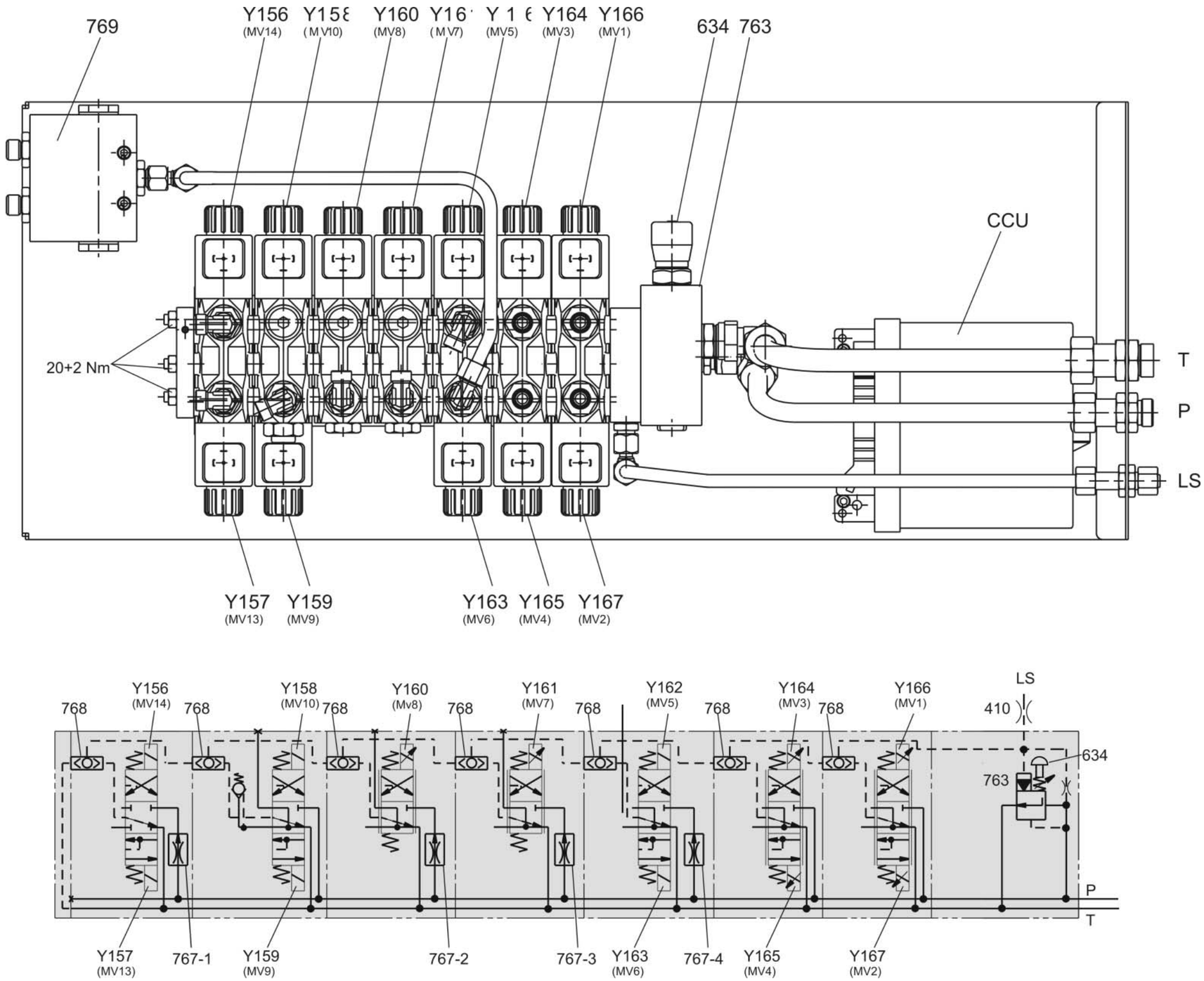

https://truckmanualshub.com/

Key to diagram:

214-1	Rear right rotor hydraulic motor
214-2	Rear left rotor hydraulic motor
214-3	Front right rotor hydraulic motor
214-4	Front left rotor hydraulic motor
385	Chassis hydraulic cylinder
386	Rear right rotor hydraulic cylinder
387	Rear left rotor hydraulic cylinder
388	Front swath width hydraulic cylinder
389	Front right rotor hydraulic cylinder
390	Front left rotor hydraulic cylinder
410	Orifice plate Ø 1.5 mm
429	Restrictor Ø 1.5 mm
434	Restrictor Ø 3.0 mm
634	System screw
734	Lock-up valve unit
763	Input pressure balance
767-1	Flow controller 6l/min ± 0.5 l
767-2	Flow controller 10l/min ± 1.0 l
767-3	Flow controller 10l/min ± 1.0 l
767-4	Flow controller 20l/min ± 0.5 l
768	LS signal shuttle valve
769	Flow divider
Y156 (MV14)	Lower rotor height solenoid valve
Y157 (MV13)	Raise rotor height solenoid valve
Y158 (MV10)	Raise chassis solenoid valve
Y159 (MV9)	Lower chassis solenoid valve
Y160 (MV8)	Raise rear right rotor solenoid valve
Y161 (MV7)	Raise rear left rotor solenoid valve
Y162 (MV5)	Increase working width solenoid valve
Y163 (MV6)	Decrease working width solenoid valve
Y164 (MV3)	Lower front right rotor solenoid valve
Y165 (MV4)	Raise front right rotor solenoid valve
Y166 (MV1)	Lower front left rotor solenoid valve
Y167 (MV2)	Raise front left rotor solenoid valve
Y168 (MV11)	Lower rear left rotor solenoid valve
Y169 (MV12)	Lower rear right rotor solenoid valve
Y170 (MV15)	Front right height blocking valve solenoid valve
Y171 (MV16)	Front left height blocking valve solenoid valve
Y172 (MV17)	Rear right height blocking valve solenoid valve
Y173 (MV18)	Rear left height blocking valve solenoid valve
CCU	CLAAS Control Unit
LS	Load sensing port
Re1	Remote port 1
Re2	Remote port 2
P	Pump
T	Tank
Tr	Tractor

https://truckmanualshub.com/

https://truckmanualshub.com/

1.5

Valve block

Solenoid coils with plug (German).

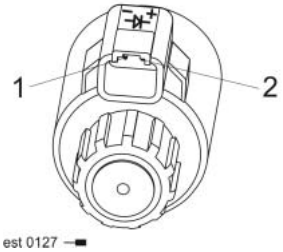

LS port in the input pressure balance block

https://truckmanualshub.com/

1.5 Valve block
with LS port in the input pressure balance block (763)

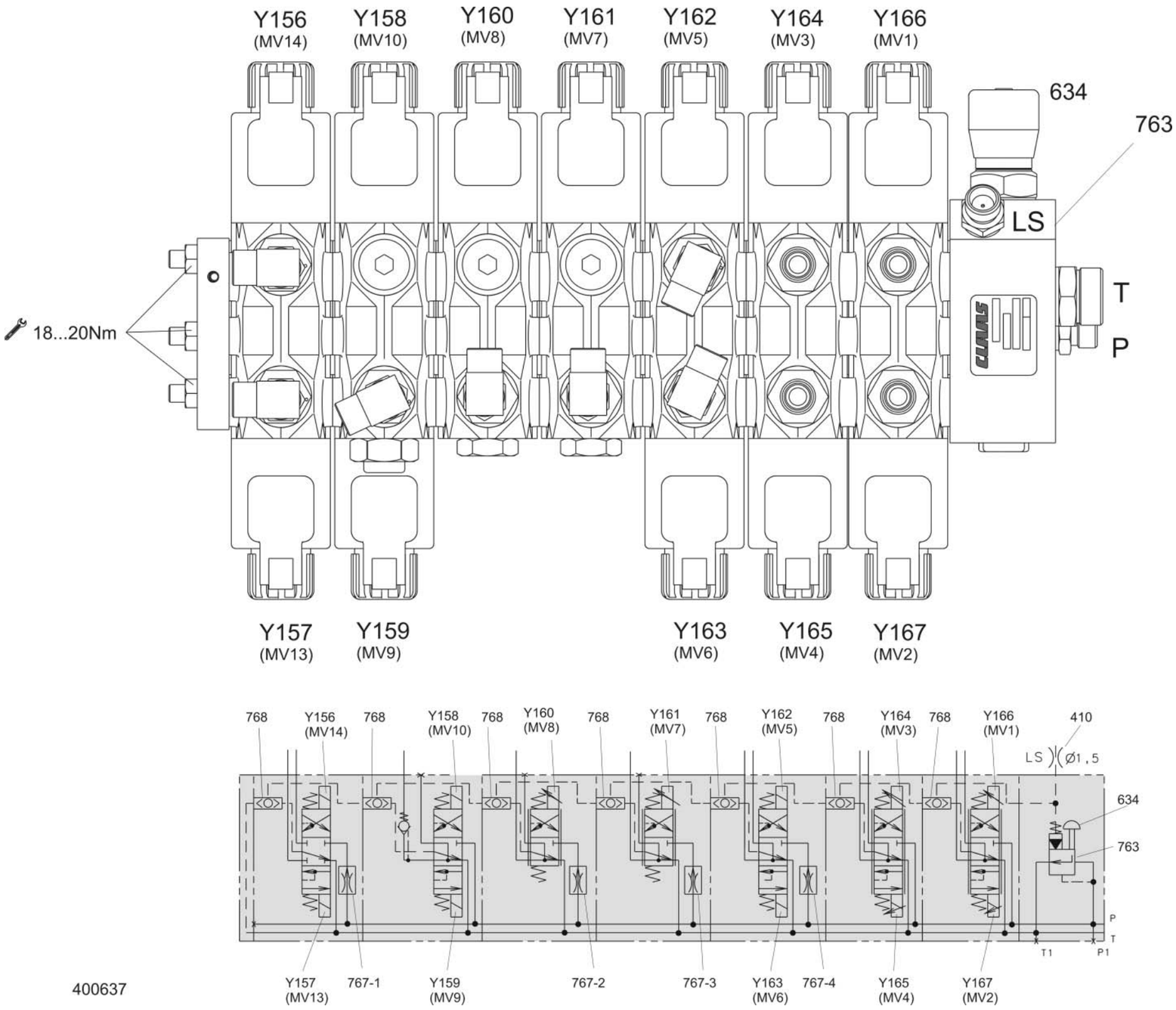

https://truckmanualshub.com/

Key to diagram:

410	Orifice plate Ø 1.5 mm
634	System screw
763	Input pressure balance
767-1	Flow controller 6 l/min ± 1.0 l
767-2	Flow controller 10 l/min ± 1.0 l
767-3	Flow controller 10 l/min ± 1.0 l
767-4	Flow controller 20 l/min ± 1.0 l
768	LS signal shuttle valve
Y156 (MV14)	Lower rotor height solenoid valve
Y157 (MV13)	Raise rotor height solenoid valve
Y158 (MV10)	Raise chassis solenoid valve
Y159 (MV9)	Lower chassis solenoid valve
Y160 (MV8)	Raise rear right rotor solenoid valve
Y161 (MV7)	Raise rear left rotor solenoid valve
Y162 (MV5)	Increase working width solenoid valve
Y163 (MV6)	Decrease working width solenoid valve
Y164 (MV3)	Lower front right rotor solenoid valve
Y165 (MV4)	Raise front right rotor solenoid valve
Y166 (MV1)	Lower front left rotor solenoid valve
Y167 (MV2)	Raise front left rotor solenoid valve
LS	Load sensing port
P	Pump
T	Tank

https://truckmanualshub.com/

https://truckmanualshub.com/

Chapter 2 Individual functions

2.1 Input pressure balance, system screw and pressure relief valve 2-2

2.2 Raising/lowering front rotors 2-4

2.3 Increasing/reducing the working width 2-6

2.4 Raising the rear rotor 2-8

2.5 Raising/lowering the chassis 2-10

2.6 Raising/lowering the rotor height adjustment 2-12

2.7 Hydraulic cylinder 2-14

2.8 Flow divider 2-16

https://truckmanualshub.com/

2.1 Input pressure balance, system screw and pressure relief valve

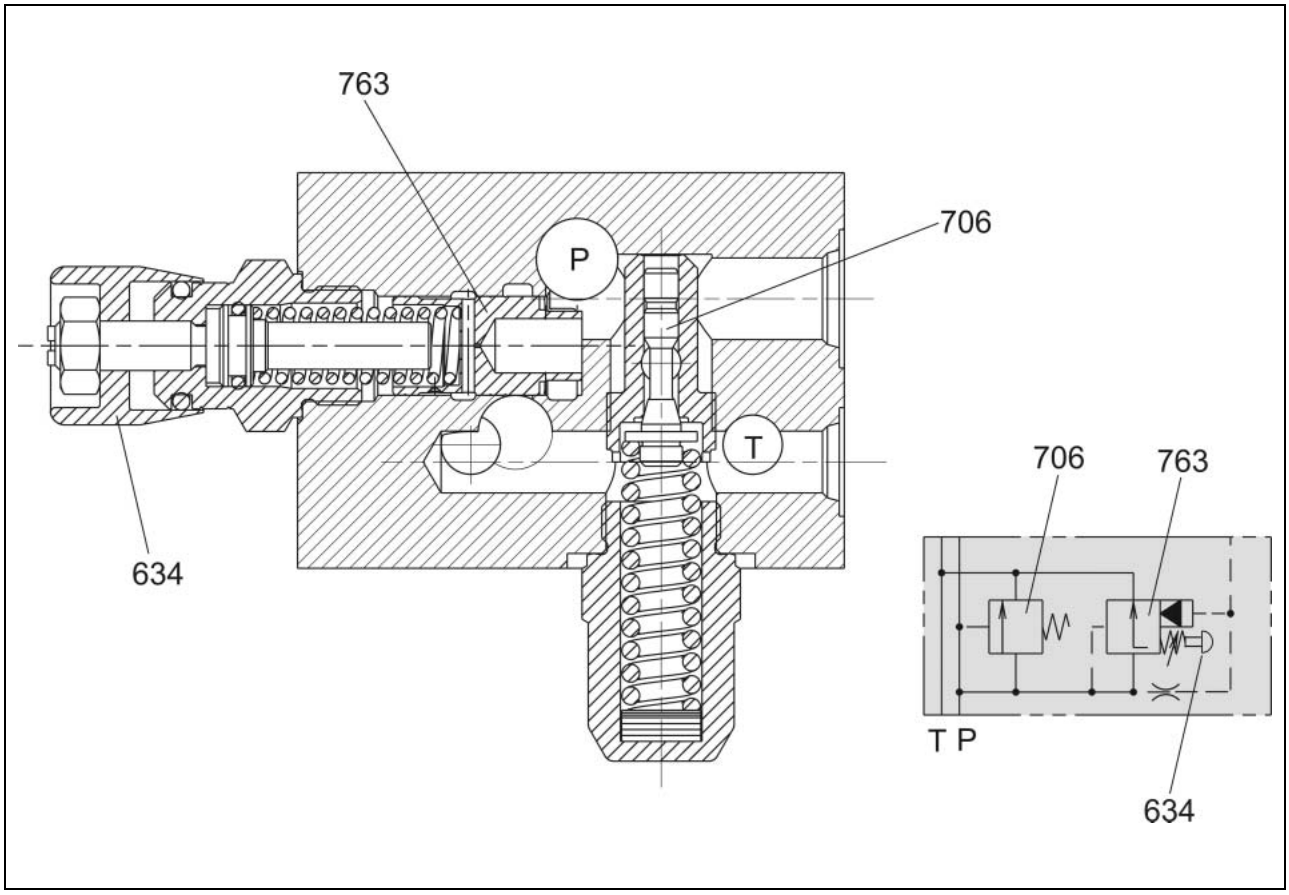

Key to diagram:

634	System screw
706	Pressure relief valve 180^{+10} bar
763	Input pressure balance
P	Pump
T	Tank

Note: The pressure relief valve (706) is built in only up to serial no. 15.

https://truckmanualshub.com/

Description of function:

No volume flow is flowing	The pressure spring pushes the control piston of the input pressure balance (763) to its stop. The connection from P to T is closed.
Volume flow is flowing – no solenoid valve is actuated	Volume flow is supplied via channel P and flows to each of the downstream control units. Since no solenoid valve has been actuated, each spool blocks the volume flow. This builds up pressure which acts on the left-hand end of the input pressure balance (763) control piston and pushes it against the pressure spring. This opens the connection from P to T. At the same time, a partial volume flow flows via the orifice plate (in the control piston) into the spring space of the control piston. The spring space is not pressurized since it is connected to the channel (LS). A fixed pressure difference is established at the control piston.
One solenoid valve is actuated	When a downstream solenoid valve is actuated, volume flow flows via channel P and the spool into the cylinder(s). The load pressure built up now is directed into the spring space of the input pressure balance (763) control piston via the LS channel. The pressure build-up controls the control piston so that the connection from P to T is partly closed. This closing is necessary to make volume flow available for actuating the cylinder(s). However, the control piston is displaced to the left only until the fixed pressure difference is re-established. A partial volume flow will continue to flow into the tank. When the cylinders are at their stop position, the pressure rises and is available in the spring space of the input pressure balance (763) control piston via the LS channel and presses the control piston to its stop. The pressure in channel P opens the pressure control valve (706).

https://truckmanualshub.com/

2.2 Raising/lowering front rotors

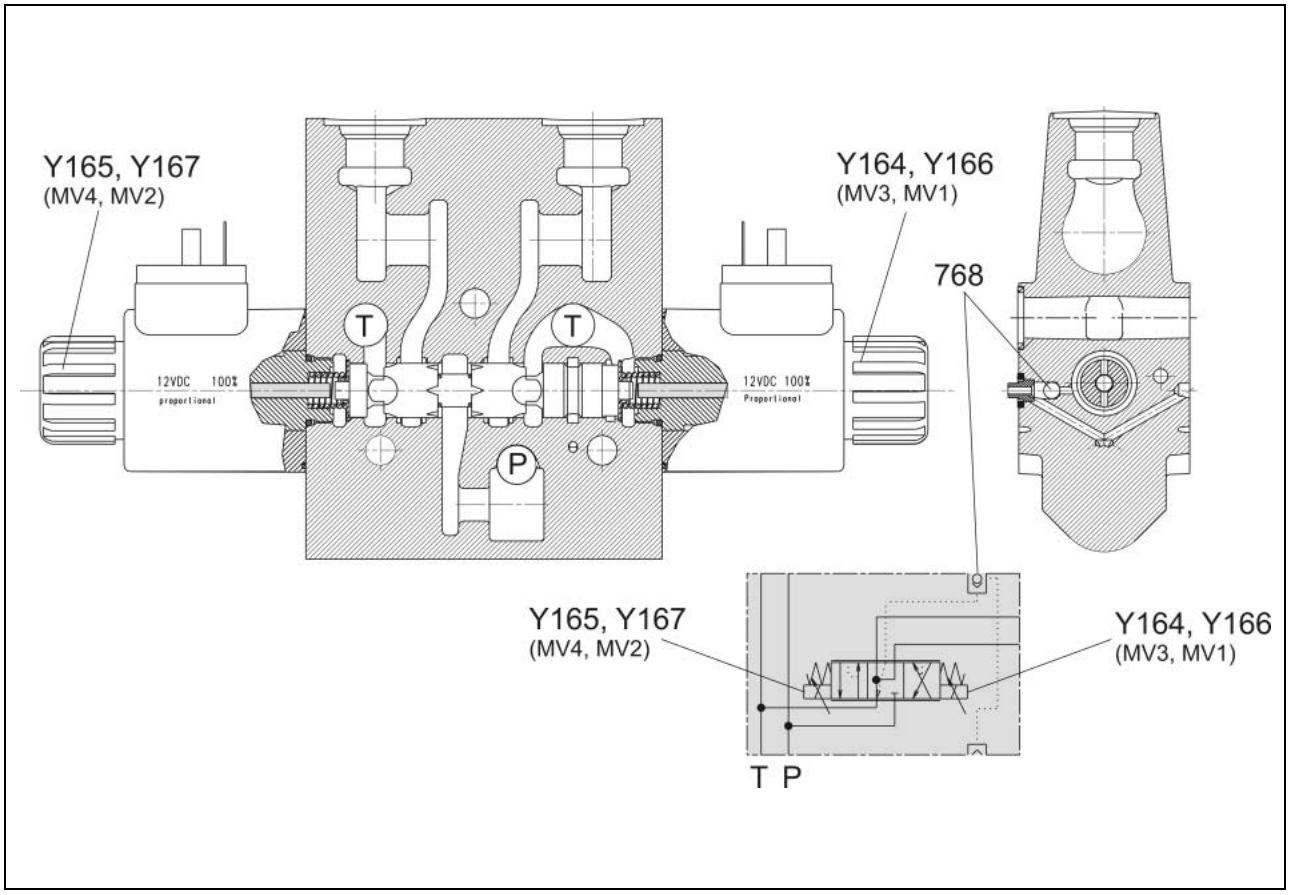

Key to diagram:

Y164 (MV3)	Lower front right rotor solenoid valve
Y165 (MV4)	Raise front right rotor solenoid valve
Y166 (MV1)	Lower front left rotor solenoid valve
Y167 (MV2)	Raise front left rotor solenoid valve
768	LS signal shuttle valve
P	Pump
T	Tank

https://truckmanualshub.com/

Description of function:

No volume flow flowing, the solenoid valves are not actuated	Due to the two face-end pressure springs, the spool is positioned so that port P is blocked (see diagram).
Solenoid coil is active	The solenoid coil is actuated proportionally by the CCU (CLAAS Control Unit). The spool can be positioned in any position, depending on this actuation. The active solenoid coil actuates the spool against the face-end pressure spring. Volume flow flows from channel (P) via the spool to the consumer port. At the same time, the volume flow from the other consumer port flows into the tank (T) via the spool.

https://truckmanualshub.com/

2.3 Increasing/reducing the working width

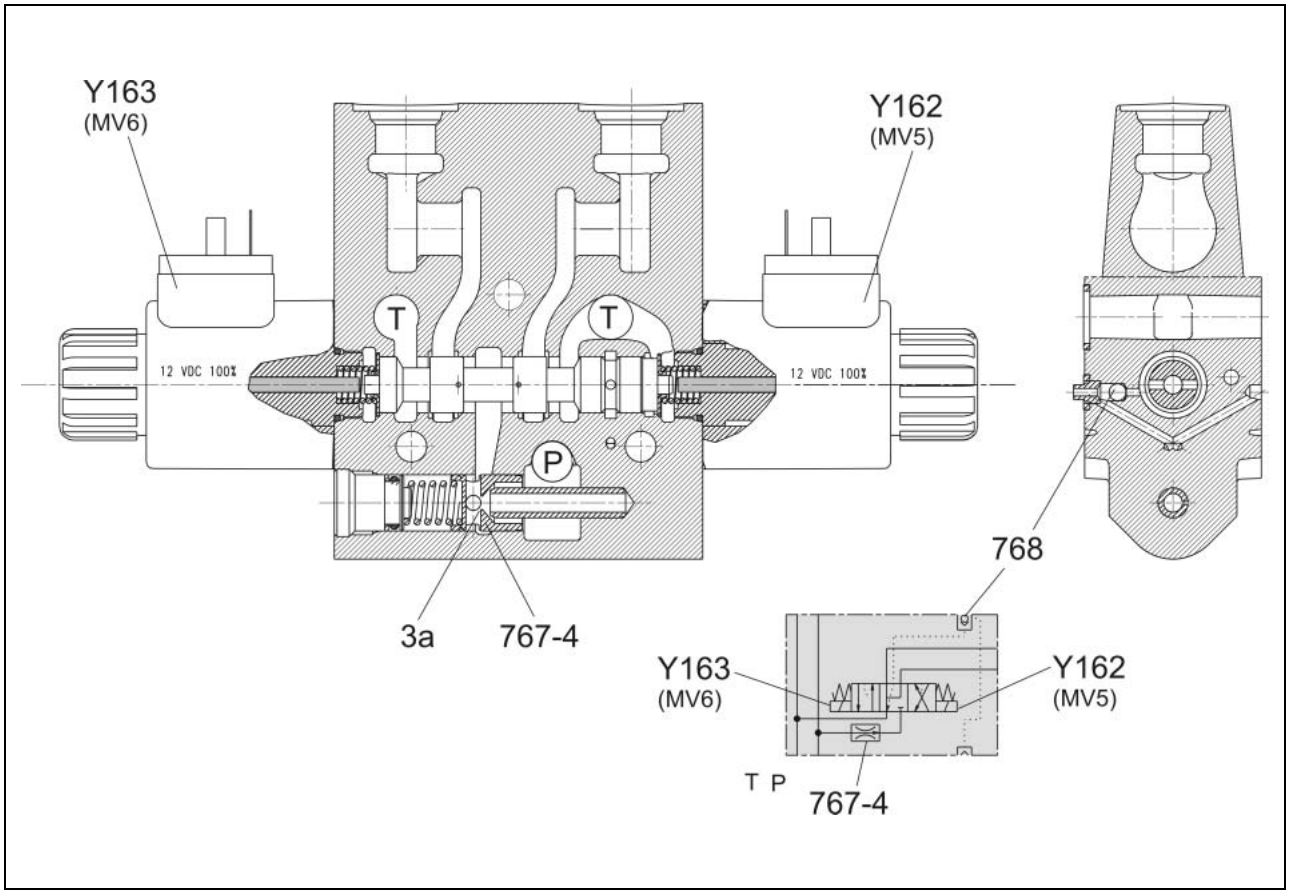

Key to diagram:

Y162 (MV5)	Increase working width solenoid valve
Y163 (MV6)	Decrease working width solenoid valve
767-4	Flow controller 20l/min ± 0.5 l
768	LS signal shuttle valve
3a	Orifice plate

https://truckmanualshub.com/

Description of function:

No volume flow flowing, the solenoid valve is not actuated	Due to the two face-end pressure springs, the spool is positioned so that the ports P and the consumer ports are blocked (see diagram).
Oil supply is available, but the control unit is not yet actuated	The volume flow enters the control unit via channel P. It flows to the spool through the orifice plate of flow controller (767-4). Since the spool prevents continued flow, a pressure is built up which acts on the right-hand face end of flow controller (767-4) and also in the spring space. Now equal forces act on the flow controller (767-4) and the pressure spring pushes it to its stop position.
Example: Solenoid valve (Y162) is actuated	The solenoid coil (Y162) actuates the spool to the left against the pressure spring. The connection from the pump (P) to the left-hand consumer port and the connection of the right-hand consumer port to the tank (T) are opened. In this position, the flow controller (767-4) controls the volume flow to 20l/min ± 0.5 l. This happens even when the load pressure of the consumer changes.
Control behaviour of the flow controller	When volume flow flows through the flow controller (767-4), different pressures result: - The pump pressure acts upstream of the orifice plate (3a) - The load pressure acts downstream of the orifice plate (3a) Since the pressure downstream of the orifice plate is lower than the pressure upstream of the orifice plate, a pressure difference results. The flow controller keeps this pressure difference constant even when the load pressure of the consumer (in the spring space) changes. At a constant pressure difference, the volume flow to the consumer is also constant.

https://truckmanualshub.com/

2.4 Raising the rear rotor

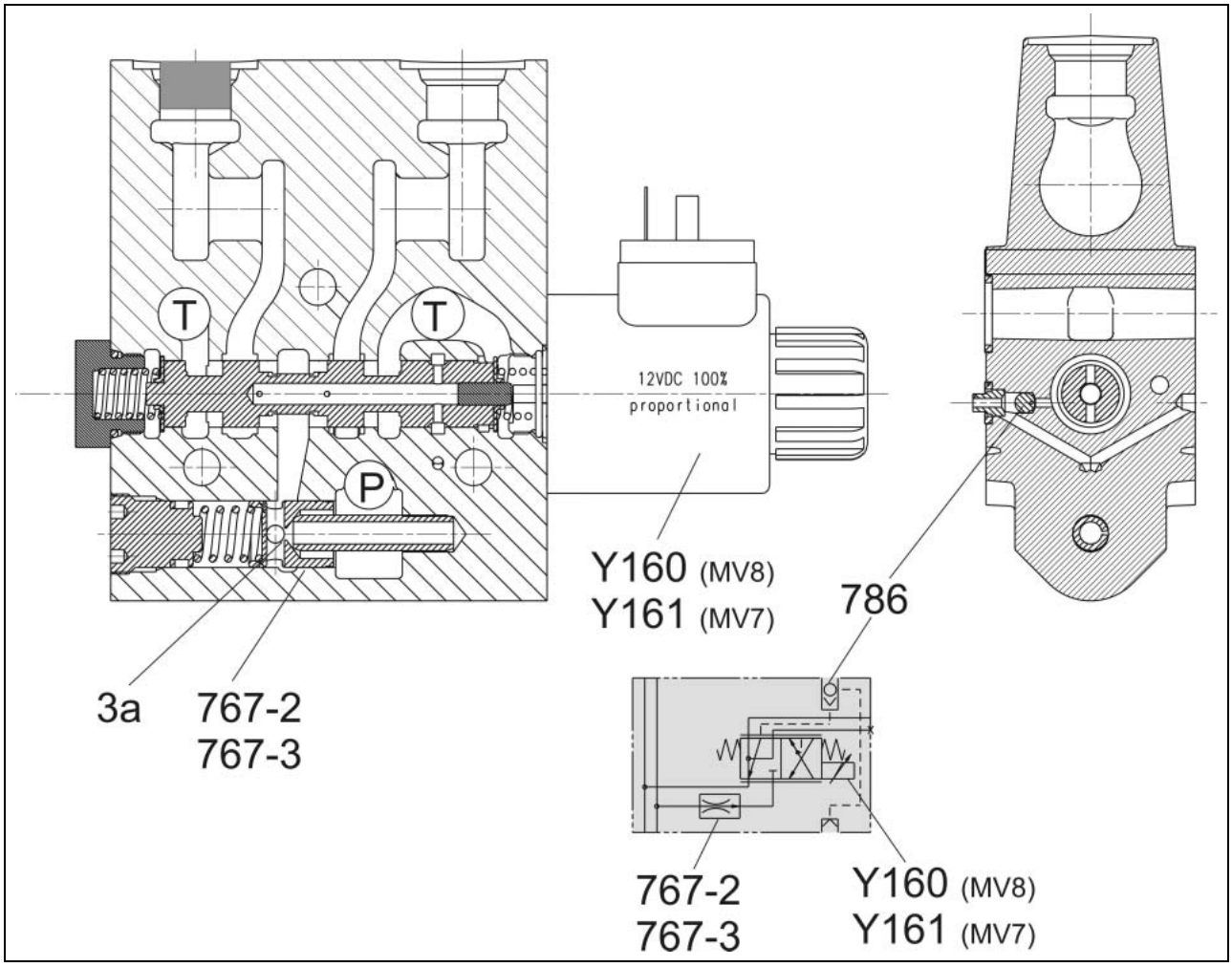

Key to diagram:

Y160 (MV8)	Raise rear right rotor solenoid valve
Y161 (MV7)	Raise rear left rotor solenoid valve
767-2, -3	Flow controller 10l/min ± 1
768	LS signal shuttle valve
3a	Orifice plate

https://truckmanualshub.com/

Description of function:

No volume flow flowing, the solenoid valve is not actuated	Due to the two face-end pressure springs, the spool is positioned so that port (P) is blocked and the consumer port is connected to the tank (T) (see diagram).
Oil supply is available, but the control unit is not yet actuated	The volume flow enters the control unit via channel P. It flows to the spool through the orifice plate (3a) of flow controller (767-2. -3). Since the spool prevents continued flow, a pressure is built up which acts on the right-hand face end of flow controller (767-2. -3) and also in the spring space. Now equal forces act on the flow controller (767-2. -3) and the pressure spring pushes it to its stop position.
Solenoid valve is actuated	The solenoid coil (Y160, Y161) actuates the spool to the left against the pressure spring. This opens the connection from the pump (P) to the consumer port. In this position, the flow controller (767-4) controls the volume flow to 10l/min ± 1 l. This happens even when the load pressure of the consumer changes.
Control behaviour of the flow controller	When volume flow flows through the flow controller (767-2. -3), different pressures result: - The pump pressure acts upstream of the orifice plate (3a) - The load pressure acts downstream of the orifice plate (3a) Since the pressure downstream of the orifice plate is lower than the pressure upstream of the orifice plate, a pressure difference results. The flow controller keeps this pressure difference constant even when the load pressure of the consumer (in the spring space) changes. At a constant pressure difference, the volume flow to the consumer is also constant.

https://truckmanualshub.com/

2.5 Raising/lowering the chassis

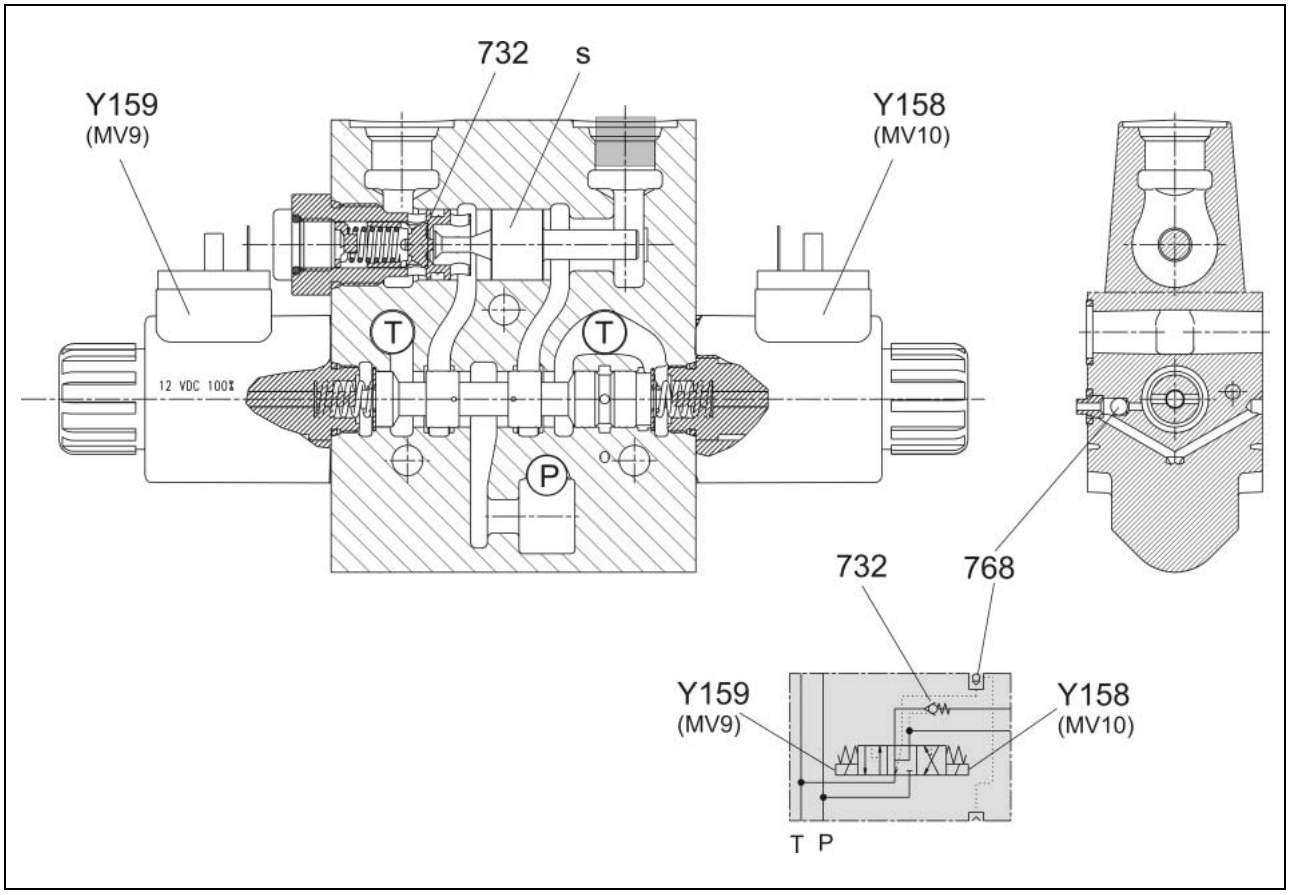

Key to diagram:

Y158 (MV10)	Raise chassis solenoid valve
Y159 (MV9)	Lower chassis solenoid valve
732	Non-return valve
768	LS signal shuttle valve
s	Ram

https://truckmanualshub.com/

Description of function:

No volume flow flowing, the solenoid valves are not actuated	Due to the two face-end pressure springs, the spool is positioned so that port P is blocked (see diagram). The consumer port is blocked by the non-return valve (732).
Solenoid coil (Y158) is active	The solenoid coil (Y158) is actuated by the CCU (CLAAS Control Unit). The active solenoid coil (Y158) actuates the spool to the left against the face-end pressure spring. Volume flow flows from channel (P) via the spool, opens the non-return valve (732) and reaches the left-hand consumer port.
Solenoid coil (Y159) is active	The solenoid coil (Y159) is actuated by the CCU (CLAAS Control Unit). The active solenoid coil (Y159) actuates the spool to the right against the face-end pressure spring. Volume flow flows from channel (P) via the spool to the closed consumer port. The pressure which now builds up opens the non-return valve (732) via the ram (s). The left-hand consumer port is now connected to the tank (T) via the opened non-return valve and the spool.

https://truckmanualshub.com/

2.6 Raising/lowering the rotor height adjustment

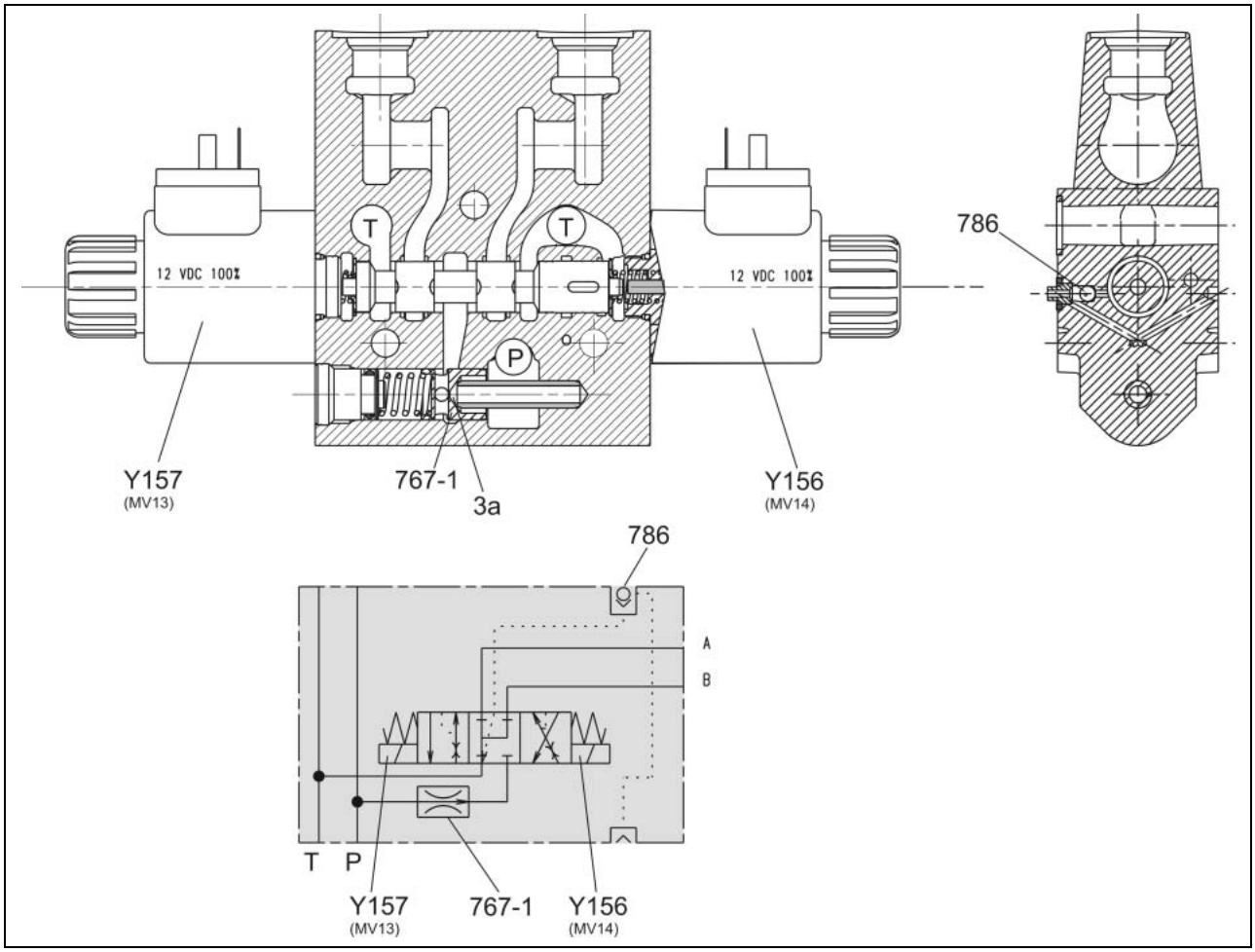

Key to diagram:

Y156 (MV14)	Lower rotor height solenoid valve
Y157 (MV13)	Raise rotor height solenoid valve
767-1	Flow controller 6l/min ± 0.5 l
768	LS signal shuttle valve
3a	Orifice plate

https://truckmanualshub.com/

Description of function:

No volume flow flowing, the solenoid valve is not actuated	Due to the two face-end pressure springs, the spool is positioned so that port P is blocked and the consumer ports are connected to the tank (T) (see diagram).
Oil supply is available, but the control unit is not yet actuated	The volume flow enters the control unit via channel P. It flows to the spool through the orifice plate (3a) of flow controller (767-1). Since the spool prevents continued flow, a pressure is built up which acts on the right-hand face end of flow controller (767-1) and also in the spring space. Now equal forces act on the flow controller (767-1) and the pressure spring pushes it to its stop position.
Example: Solenoid valve (Y156) is actuated	The solenoid coil (Y156) actuates the spool to the left against the pressure spring. The connection from the pump (P) to the left-hand consumer port and the connection of the right-hand consumer port to the tank (T) are opened. In this position, the flow controller (767-1) controls the volume flow to 6l/min ± 0.5 l. This happens even when the load pressure of the consumer changes.
Control behaviour of the flow controller	When volume flow flows through the flow controller (767-1), different pressures result: - The pump pressure acts upstream of the orifice plate (3a) - The load pressure acts downstream of the orifice plate (3a) Since the pressure downstream of the orifice plate is lower than the pressure upstream of the orifice plate, a pressure difference results. The flow controller keeps this pressure difference constant even when the load pressure of the consumer (in the spring space) changes. At a constant pressure difference, the volume flow to the consumer is also constant.

https://truckmanualshub.com/

2.7 Hydraulic cylinder

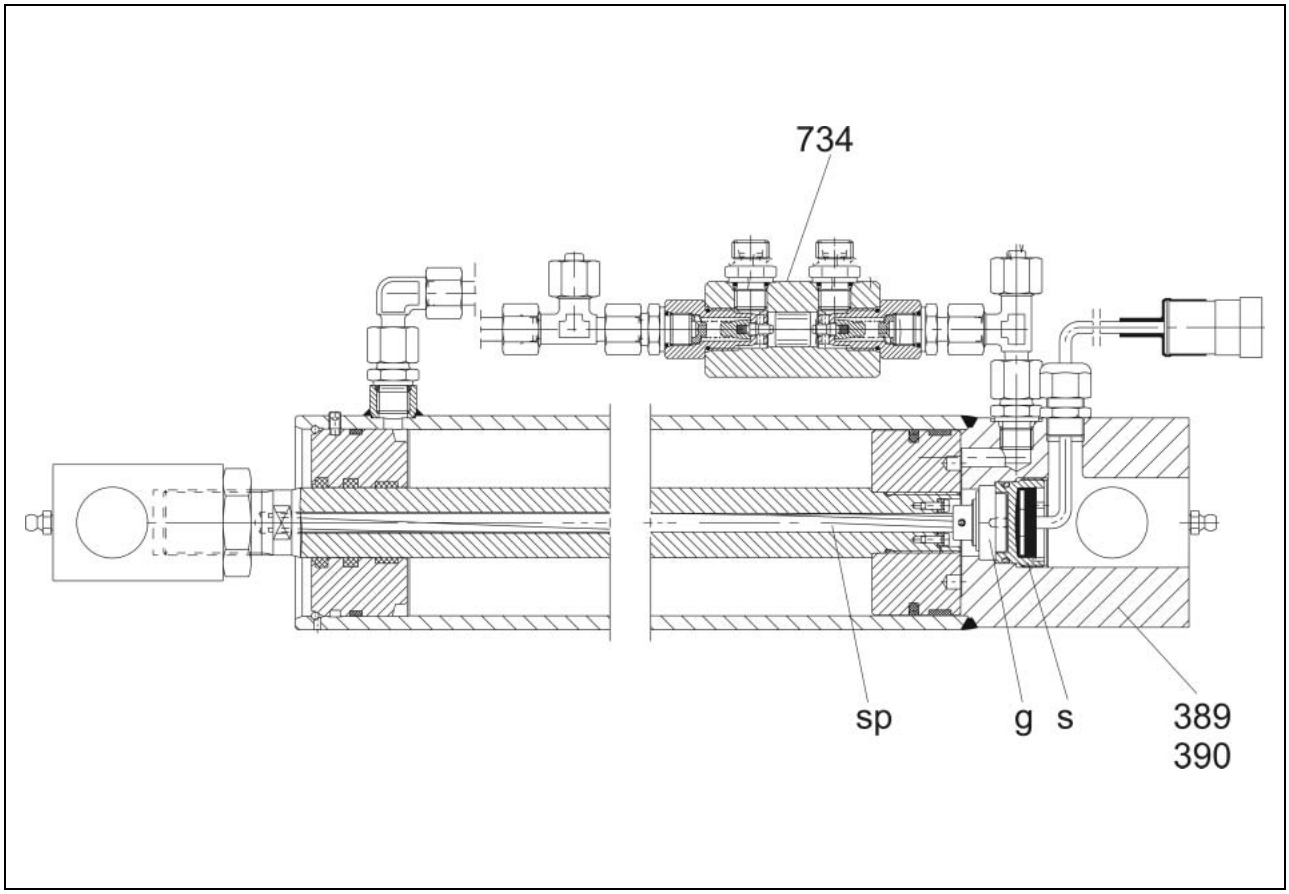

Key to diagram:

389	Front right rotor hydraulic cylinder
390	Front left rotor hydraulic cylinder
734	Lock-up valve unit
g	Signal generator
s	Sensor
sp	Spindle

https://truckmanualshub.com/

Description of function:

The rotor position sensor (s) is integrated in the hydraulic cylinders.
A spindle (sp) with a steep thread rotates a signal generator (g).
The angle of rotation between the retracted and the extended cylinder position is < 360°.
In the signal generator (g), magnets are mounted at the face end which emit a magnetic field to the sensor (s) located opposite of them.
The position of the magnetic field which corresponds to the hydraulic cylinder position is detected by the sensor electronic unit.
The sensor (s) transmits a pulse-width modulated signal (PWM, corresponding to the hydraulic cylinder position) to module A 20.
With the hydraulic cylinder retracted, this signal is 5% and with the cylinder extended, it is 95% PWM.

Please refer to the Technical Systems / Electric system documentation for further information.

https://truckmanualshub.com/

2.8 Flow divider

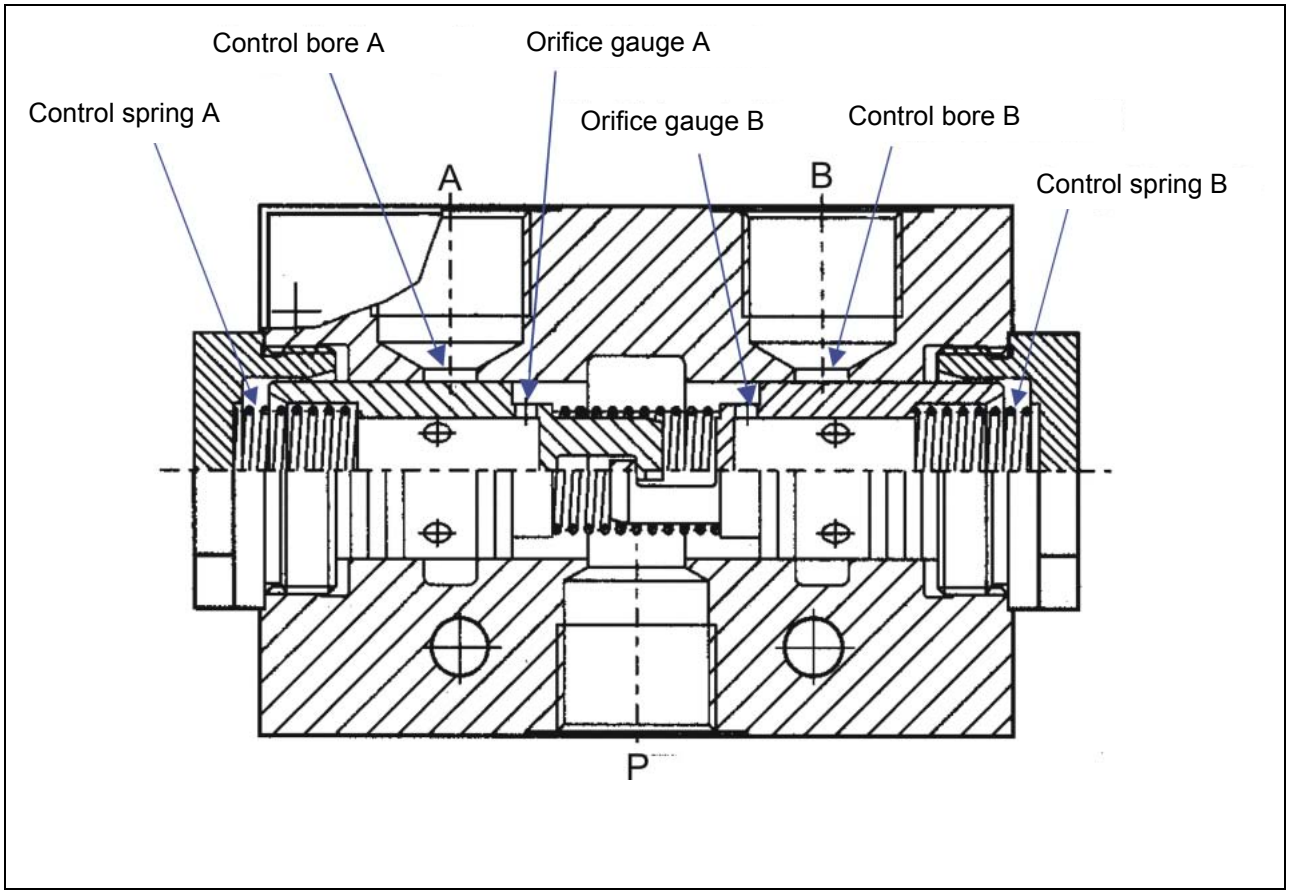

Key to diagram:	769	Flow divider
	A	Consumer port
	B	Consumer port
	P	Pump port

https://truckmanualshub.com/

Description of function:

The flow divider divides the supplied volume flow (port P) into 2 volume flows (ports A and B).
These volume flows remain constant even when the consumer loads change.
This makes the velocities of both consumers constant.

The oil flows from P via the orifice gauges A and B to the consumer ports A and B.
The supplied oil flow must be large enough so that the pressure difference exerts a sufficient force on the individual pistons which is greater than the forces exerted by the control springs.
The higher consumer pressure in A or B pushes the control pistons, which must be considered as one single unit when the force is sufficient, against the control spring located opposite.
The associated control bore creates a ram pressure at the control edge until the pressure of the higher-load consumer is reached. Now there is the same pressure in the two control chambers which is higher than the supply pressure P by the control spring amount.
Now, the same differential pressure is also available at the orifice gauges, thus making the oil flows constant.
When the flows are opposite (combined flows), the piston halves are loaded with the pressure force and displaced against the central spring.
The control process is the same, but in opposite direction.

https://truckmanualshub.com/

https://truckmanualshub.com/

Following the policy of the CLAAS KGaA mbH to improve their products as technical developments continue, CLAAS reserve the right to make alterations which must not necessarily correspond to text and illustrations contained in this publication, and without incurring obligation to alter any machines previously delivered.

Technical data, dimensions and weights are given as an indication only. Responsibility for errors or omissions not accepted.

Reproduction or translation of this publication, in whole or part, is not permitted without the written consent of the CLAAS KGaA mbH.

All rights under the provision of the Copyright Act reserved.

CLAAS KGaA mbH
33426 Harsewinkel
Germany

Our contribution to the environment: CLAAS have printed this manual on 100 % chlorine free paper.

https://truckmanualshub.com/

CLAAS KGaA mbH
Postfach 1163
33426 Harsewinkel
Tel. +49 (0)5247 12-0
www.claas.com

299 936.0
SYS - LINER 3000
EN - 02.04 - BEV - NF
Printed in Germany