https://www.pdfmanual4trucks.com/

OPERATING INSTRUCTIONS

Contents

Controls and indicators 21
Multi-function dial 22
Right console 24
Left multi-function lever 27
Right multi-function lever 27
Boom function control joystick 28
Controls for hazard warning lights and rotating beacon 28
Longitudinal stability indicator 29
Control for the cant correction (CDL) device 30
Transversal inclinometer 30
CDL middle position indicator 30
Ignition Switch 31
Steering wheel 31
Steering wheel tilt adjustment 31
Pedals 32
Handbrake 32
Reservoir for windscreen washer liquid 32
Cab heating and defogging control 33
Hydraulic system 33
Batch of data sheets 33
Rear window 33
Fire Extinguisher Location 33
Door 34
Left window 34
Circuit breaker 35

Daily Inspection 35

Preparation Before Operation 36
Operation and Maintenance Manual 36
Tanking on diesel fuel 36
Adjusting the seat 36

Driving the machine 37
Starting 37
Driving 37
Stopping 37

https://www.pdfmanual4trucks.com/

Handling loads 38
Longitudinal stability indicator 38
Load charts 38
Picking up a load from the ground 39
Placing a load on the ground 39
Picking up a raised load 40
Placing a raised load 41

Recovery and transport of the machine 42
Towing the machine 42
Hoisting the machine 43
Securing the machine 44

Driving on public roads 46
Warning 46
Driving in some countries 46

Controls and indicators

The main controls and indicators are shown in the figure below.

Figure 1

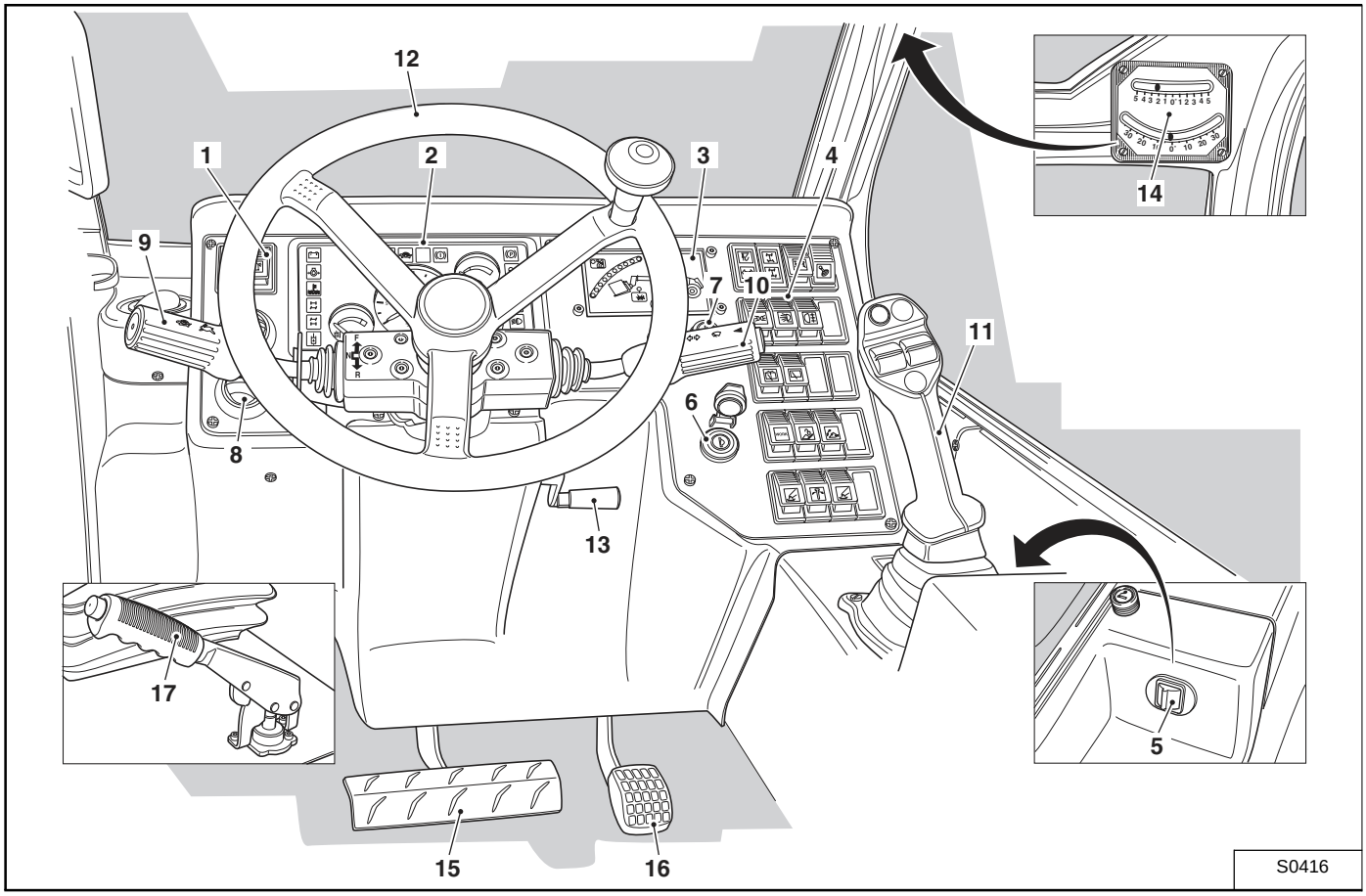

Reference	Designation	See
1	Controls for the hazard warning light and rotating beacon	p. 28
2	Multi-function dial	p. 22
3	Longitudinal stability indicator	p. 29
4	Right console	p. 24
5	Control for the Cant Correction device (CDL)	p. 30
6	Ignition Switch	p. 31
7	Switch to deactivate the Aggravating Movements Arrester (AMA) system.	p. 88
8	Cab heating and defogging control	p. 33
9	Left multi-function lever	p. 27
10	Right multi-function lever	p. 27
11	Boom function control joystick	p. 28
12	Steering wheel	p. 31
13	Steering wheel tilt adjustment	p. 31
14	Transversal inclinometer	p. 30
15	Brake and slow advance pedal	p. 32
16	Accelerator pedal	p. 32
17	Handbrake	p. 32

https://www.pdfmanual4trucks.com/

Multi-function dial

The multi-function dial comprises 16 lights and 5 indicators. The indicator lights are only visible when they are on. The indicators are lit when the side-lights are on.

Figure 2

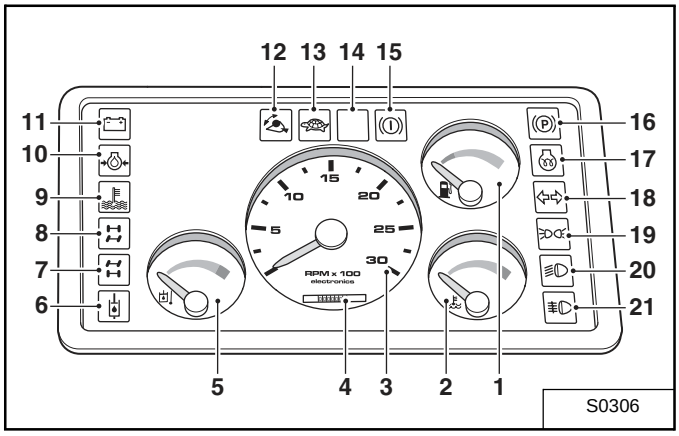

Reference	Icon	Description	Function
1		**Fuel gauge**	Shows the fuel level.
2		**Engine coolant temperature gauge**	Shows the temperature of the engine coolant in the thermostat box. The beginning of the red zone corresponds to a temperature of 103℃. **If the meter hand reaches the red zone, turn off the engine off immediately and find out the reasons for this abnormal operating temperature. Consult your Bobcat dealer.**
3		**RPM counter**	Shows the diesel engine's RPM.
4		**Hour meter**	Shows the total operating hours of the machine. Use this indicator for planning and carrying out maintenance operations.
5		**Hydraulic oil temperature gauge**	Shows the temperature of hydraulic oil in the tank. The beginning of the red zone corresponds to a temperature of 95℃. **If the meter hand reaches the red zone, turn off the engine immediately and find out the reasons for this abnormal operating temperature. Consult your Bobcat dealer.**
6	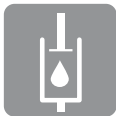	**Hydraulic oil temperature indicator light**	Red indicator light with symbol. Lights up when the oil temperature in the tank reaches 95℃. **If this indicator light lights up, turn off the engine immediately and find out the reasons for this abnormal operating temperature. Consult your Bobcat dealer.**
7		**Rear wheel alignment indicator light**	Green indicator light with symbol. Lights up when the rear wheels are parallel to the machine's longitudinal axis.
8		**Front wheel alignment indicator light**	Green indicator light with symbol. Lights up when the front wheels are parallel to the machine's longitudinal axis.
9		**Engine coolant temperature indicator light**	Red indicator light with symbol. Lights up when the coolant temperature in the thermostat box reaches 103℃. **If this indicator light lights up, turn the engine off immediately and find out the reasons for this abnormal operating temperature. Consult your Bobcat dealer.**
10		**Engine oil pressure indicator light**	Red indicator light with symbol. Lights up when the lubricating oil pressure in the engine's oil gallery is 0.6 bar. Under normal operation, this indicator light must be: • off when the engine is running; • on whenever the ignition switch is on "RUN", "PREHEAT"or "START" and until the engine runs on its own. **If this indicator light lights up, turn the off engine immediately and find out the reasons for this abnormal operating pressure. Consult your Bobcat dealer.**

https://www.pdfmanual4trucks.com/

Reference	Icon	Description	Function
11		**Charge indicator light**	Red indicator light with symbol. Lights up when the alternator is not charging the battery. Under normal operation, this indicator light must be: • off when the engine is running; • on whenever the ignition switch is on “RUN”, “PREHEAT” or “START” and until the engine runs on its own. **If this indicator light lights up, turn off the engine immediately and find out the reasons for this abnormal operating condition. Consult your Bobcat dealer.**
12		**Boom head hydraulic function indicator light**	Blue indicator light with symbol. Lights up when the holding function of the boom head hydraulics is activated.
13		**On-site speed indicator light**	Green indicator light with symbol. Lights up when on-site speed is selected.
14		**Not used**	–
15		**Not used**	–
16		**Handbrake indicator light**	Red indicator light with symbol. This indicator must be: • off when the handbrake lever is fully down. • on when the handbrake lever is pulled up.
17		**Glowplug indicator light**	Yellow indicator light with symbol. Lights up when the ignition switch is in the “PREHEAT” position.
18		**Direction indicator light**	Green indicator light with symbol. Lights up when the right or left indicators are on.
19		**Side-light indicator light**	Green indicator light with symbol. Lights up when the side-lights are on. The indicator light stays on when the headlamps are on.
20		**Headlamp indicator light**	Green indicator light with symbol. Lights up when the headlamps are on.
21		**Full-beam indicator light**	Blue indicator light with symbol. Lights up when full beams are on.

https://www.pdfmanual4trucks.com/

Right console

Figure 3

The right console comprises 2 indicators and 13 switches with indicator lights.

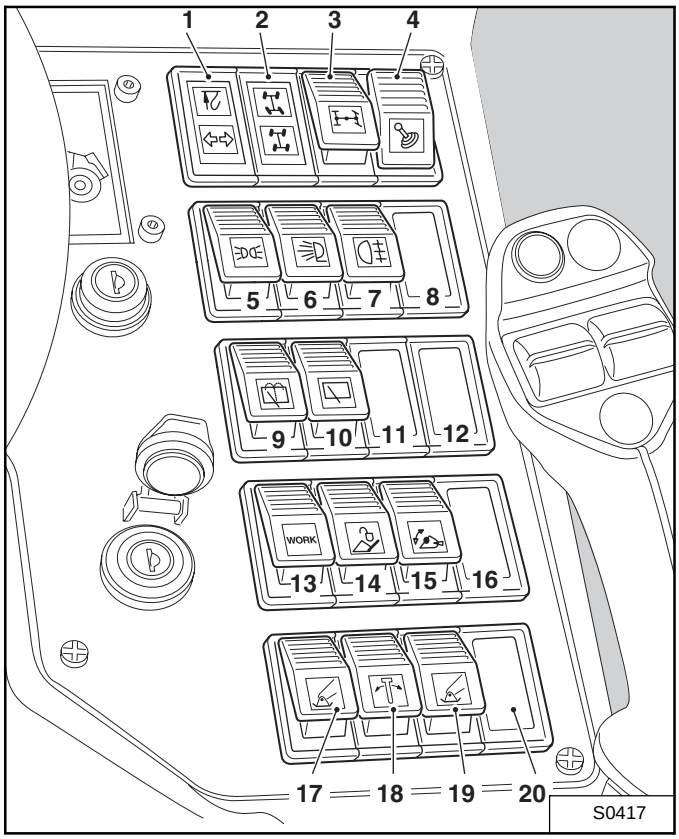

Reference	Icon	Description	Function
1		**Trailer turn indicator**	The lower green light flashes when the trailer's turn indicators are activated. **The upper red indicator light is not used on this model.**
2	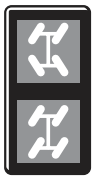	**Steering mode indicator**	Green indicator lights with symbols: • upper part on: 4-wheel steering mode selected. • lower part on: crab steering mode selected. • upper and lower part off: 2-wheel steering mode (front wheels) selected.
3	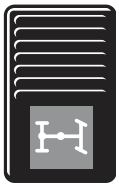	**Steering mode**	With green indicator light and symbol. 3-position toggle switch: • down position: crab steering mode selected. This mode is used in narrow areas, to move away from buildings or to reposition the machine. • central position: 2-wheel steering mode (front wheels) selected. This mode is used when driving at higher speeds. • up position: 4-wheel steering mode selected. This is the mode used under most circumstances. **Before changing the steering mode, return all 4 wheels parallel to the longitudinal axis of the machine. The correct positions are indicated by indicator lights in the multi-function dial.** **Select the steering mode best suited to the operations to be carried out.** **Only change the steering mode when the machine is immobilised.**
4		**Hydraulics control lockout**	With green indicator light and symbol. 2-position toggle switch: • down position: activates the boom's hydraulic functions. In this position, the indicator light is lit. • up position: deactivates the boom's hydraulic functions. Used to deactivate all functions of the hydraulic control lever (joystick) during travel on the road. In this position, the indicator light is not lit.

Reference	Icon	Description	Function
5		**Headlamps**	With green indicator light and symbol. 3-position toggle switch: • down position: turns on the headlamps. The indicator light is lit. • central position: turns on the side-lights. The indicator light is lit. • up position: turns off all lights. The indicator light is not lit.
6		**Front and rear work lights**	With green indicator light and symbol. 2-position toggle switch: • down position: turns on the work lights. The control switch for the road lights should be in the central or down position. • up position: turns off the work lights.
7		**Rear fog lights**	With green indicator light and symbol. 2-position toggle switch: • down position: turns on the fog lights. • up position: turns off the fog lights.
8		**Fan rotation reversing switch (optional)**	Push the switch to reverse the airflow through the radiator for cleaning purposes.
9		**Rear windscreen washer/wiper**	With green indicator light and symbol. 2-position toggle switch: • down position: turns on the rear window washer. The switch returns to the center position when released. • central position: activates the windscreen wiper. • up position: deactivates the windscreen wiper.
10		**Roof windscreen wiper (optional)**	With green indicator light and symbol. 2-position toggle switch: • down position: activates the roof windscreen wiper. • up position: deactivates the roof windscreen wiper.
11		**Rear hydraulic connection (option)**	2-position toggle switch with stable central position: • down position: activates a constant flow to the rear hydraulic connector. • central position: deactivates a constant flow to the rear hydraulic connector. • up position: activates a constant flow in the opposite direction to the rear hydraulic connector.
12		**Raise or lower hydraulic hook (option)**	2-position toggle switch with stable central position: • down position: lowers the rear hydraulic hook. • central position: deactivates a constant flow to the rear hydraulic hook. • up position: raises the rear hydraulic hook.
13		**Transmission mode**	With green indicator light and symbol. 2-position toggle switch: • down position: changes to work mode (progressive acceleration). • up position: changes to driving mode. **The mode can be changed when the machine is in motion.**
14		**Boom head hydraulics**	With red indicator light and symbol. Switch with 2 stable positions and unstable down position: • up position: activates the boom head hydraulic function (indicator light is lit). • middle position: deactivates the boom head hydraulic function (indicator light is not lit). • down position (unstable position): relieve the hydraulic pressure at the boom head.

https://www.pdfmanual4trucks.com/

Reference	Icon	Description	Function
15		**Boom head hydraulics holding pressure**	With blue indicator light and symbol. 3-position toggle switch: • down position: activates the constant flow to the boom head hydraulics in one direction (indicator light is lit). (For example to drive a sweeper.) • central position: deactivates the constant flow to boom head hydraulic (indicator light is not lit). • up position: activates the constant flow to the boom head hydraulics in the opposite direction (indicator light is lit).
16		**Control of the second hydraulic function at the boom head (option)**	With green indicator. 2-position toggle switch: • down position: allows the control of the second hydraulics function at the boom head by the joystick (for constant flow, the “Boom Head Hydraulics” switch must be in the down position). • up position: deactivates the function (the “Boom Head Hydraulics” switch must be in the down position).
17	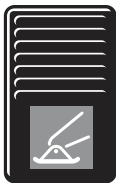	**Left stabiliser control (T35120SL only)**	With green indicator light and symbol. 3-position switch: • stable central position: left stabiliser stopped. • up position (unstable position): raising of the left stabiliser. • down position (unstable position): lowering of the left stabiliser.
18		**Lockout of the CDL and stabiliser controls (T35120SL only)**	With green indicator. 2-position toggle switch: • up position: the CDL and stabiliser controls are inactive. • down position: the CDL and stabiliser controls are active.
19	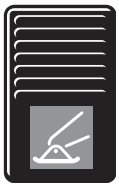	**Right stabiliser control (T35120SL only)**	With green indicator light and symbol. 3-position switch: • stable central position: right stabiliser stopped. • up position (unstable position): raising of the right stabiliser. • down position (unstable position): lowering of the right stabiliser.
20		**Not used.**	–

https://www.pdfmanual4trucks.com/

Left multi-function lever

This lever has two functions:

- selection of travel direction,
- selection of travel speed.

Figure 4

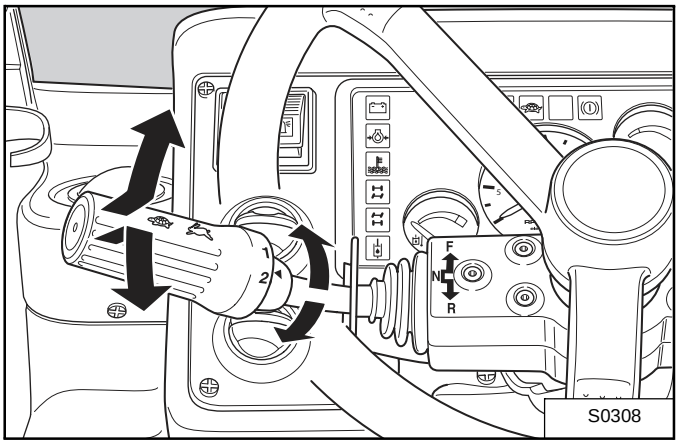

Travel Direction

To select the travel direction:

- Forward travel: pull the lever up, then push it forward.
- Reverse travel: pull the lever up, than pull it back. A warning horn (optional) sounds when reverse travel is selected.

WARNING

Changing the travel direction while moving can cause loss of stability. Stop the machine before reversing the travel direction.

Travel Speed

To select the travel speed:

- “On-site” speed: turn the lever to position 1 (e.g. during manoeuvres on the work area.
- “Road” speed: turn the lever to position 2 (e.g. for movements between working areas).

IMPORTANT

It is possible to change from one speed to another without stopping the machine.

Right multi-function lever

This lever has four functions:

- windscreen wiper control,
- controlling the windscreen washer,
- lights control,
- horn control.

Figure 5

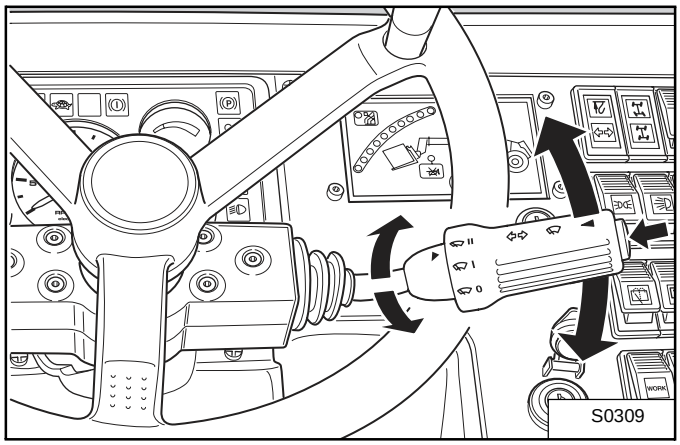

Windscreen wiper

The windscreen wiper control has three positions. Turn the lever to select:

- stop,
- slow sweep,
- fast sweep.

Windscreen washer

Push the lever in to release the washer liquid.

Lights

To control the lights:

- When the light switch is on (headlamps position), push the lever forward to change to full beams. Pull it back to the central position to change back to headlamps.
- When the lighting switch is off, pull the lever towards you to flash the headlamps.

Road horn

Press the button at the end of the lever to sound the horn.

https://www.pdfmanual4trucks.com/

Boom function control joystick

Figure 6

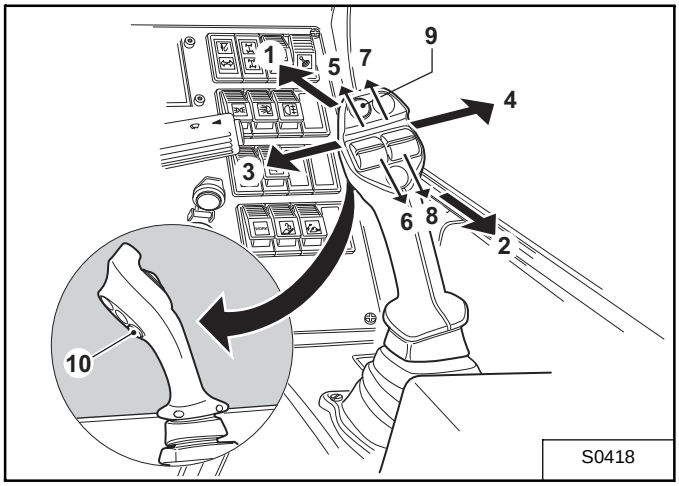

The multi-function joystick controls all the boom functions by moving the joystick and/or controlling the thumb wheels or switches.

All these controls return to neutral when released and can, unless otherwise indicated, be activated at the same time.

Reference	Description	Function
1	**Joystick pushed forwards**	To lower the boom at a speed proportional to the tilt of the lever.
2	**Joystick pulled backwards**	To raise the boom at a speed proportional to the tilt of the lever.
3	**Joystick tilted to the left**	To tilt the attachment backwards at a speed proportional to the tilt of the lever.
4	**Joystick tilted to the right**	To tilt the attachment forwards at a speed proportional to the tilt of the lever.
5	**Left thumb wheel activated forwards**	To extend the telescope at a speed proportional to the action on the thumb wheel.
6	**Left thumb wheel activated backwards**	To retract the telescope at a speed proportional to the action on the thumb wheel.
7	**Right thumb wheel activated forwards**	Proportional control of the hydraulic connection located at the front of the boom head.
8	**Right thumb wheel activated backwards**	Proportional control of the hydraulic connection located at the back of the boom head.
9	**Switch to activate the boom head hydraulic functions**	To activate the hydraulic function on the boom head. Activation is only possible when switches 14 and 15 (see the console on p. 24) are activated.
10	**Switch to activate/ deactivate the second hydraulic function at the front of the boom head (option)**	To activate the second hydraulic fucntion on the boom head (momentarily). The function is deactivated when the switch is released.

Controls for hazard warning lights and rotating beacon

Figure 7

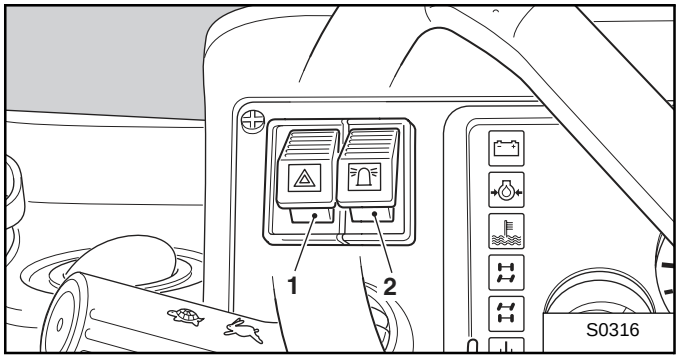

Reference	Icon	Description and function
1		**Hazard warning lights control** With red indicator light and symbol. 2-position toggle switch: • down position: hazard warning lights on. • up position: hazard warning lights off.
2	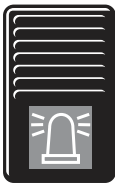	**Rotating beacon control** With yellow indicator light and symbol. 2-position toggle switch: • down position: rotating beacon on. • up position: beacon off.

Longitudinal stability indicator

Figure 8

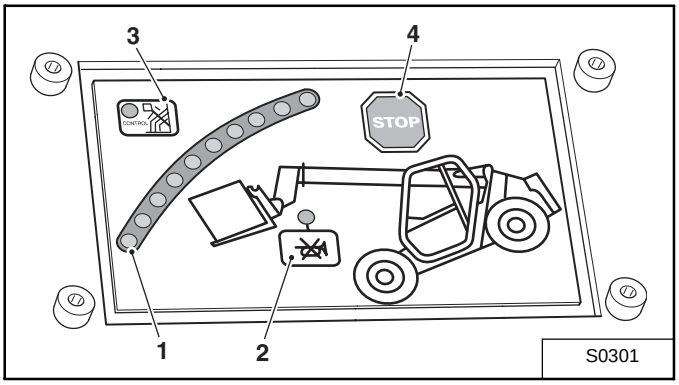

WARNING

Never raise a load when the telescopic handler is in any of the following conditions:

- **the steering wheels are in the outermost position,**
- **the rear axle is cant in its outermost position.**

These conditions may result in a wrong indication of the Longitudinal Stability Indicator (LSI).

Reference	Icon	Description and function
1	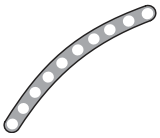	**Indicator lights to indicate the machine's level of longitudinal stability** • Green indicator lights (5x): gradually light up whenever the handled load is up to 61% of load which tends to cause the machine to tilt forwards. • Orange indicator lights (3x): gradually light up whenever the handled load is between 63% and 68% of load which tends to cause the machine to tilt forwards. • Red indicator lights (2x): gradually light up whenever the handled load is more than 71% of load which tends to cause the machine to tilt forwards. **When performing handling work, pay attention to the information provided by the indicator lights above and take the necessary action.**
2		**Button to turn off the machine's longitudinal stability indicator warning horn** With red indicator light and symbol. • The warning horn is activated whenever the first red indicator light for the machine's longitudinal stability level comes on (when the handled load is at approximately 69% of load). • The button is used to turn off the warning horn. • The red indicator light comes on whenever the warning horn is deactivated by the button. **The indicator light MUST be off when handling work is being performed.**

Reference	Icon	Description and function
3		**Yellow indicator light** Indicates that the machine is under control of the AMA. The AMA only becomes active after a certain angle.
4		**Aggravating Movements Arrester indicator light** With red indicator light and symbol. Lights up when the last red indicator light comes on (when the handled load is at approximately 76% of load). When the Aggravating Movements Arrester (AMA) system (option) is installed, it prohibits all aggravating movements: • lowering of the boom • extending the telescope • raising the stabilisers • forward or backward tilt of the forks or attachment • hydraulic function located on the back of the boom head

https://www.pdfmanual4trucks.com/

Control for the cant correction (CDL) device

Figure 9

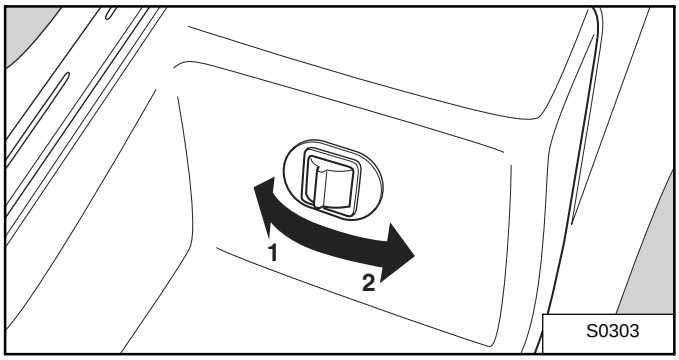

Reference	Icon	Function
–		**Cant correction device control** The control returns to neutral when released. • pushed towards the right (1): correction of cant towards the right at a proportional speed. • pushed towards the left (2): correction of cant towards the left at a proportional speed. **Possible correction of cant: 6°to the left and 6°to the right.** **Use this control on its own, do not activate any other control at the same time.**

WARNING

Do not use the CDL function when the load is raised. Correct the cant before lifting the load. Operate the control slowly and smoothly. Observe the inclinometer to determine when the chassis is level. Any movement or stopping of the chassis that is too sudden could cause the boom to swing. The risk of overturning is greater when the boom is raised or deployed.

Transversal inclinometer

The lateral inclinometer is installed in the upper right corner of the cab. It indicates the angle of tilt (in degrees) of the chassis with reference to the horizontal.

Figure 10

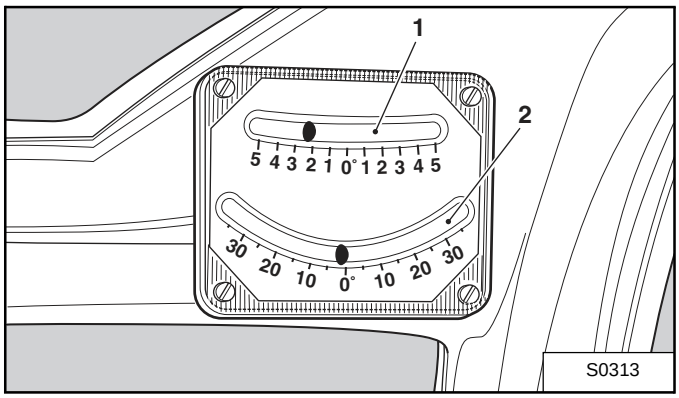

Reference	Description	Function
1	**Fine scale**	Graduated degree by degree, from 0 to 5°to the right and to the left.
2	**Large scale**	Graduated in 5 degree increments, from 0 to 30°to the right and to the left.

WARNING

When carrying out handling work, carefully monitor this inclinometer and adopt the necessary measures.

CDL middle position indicator

Figure 11

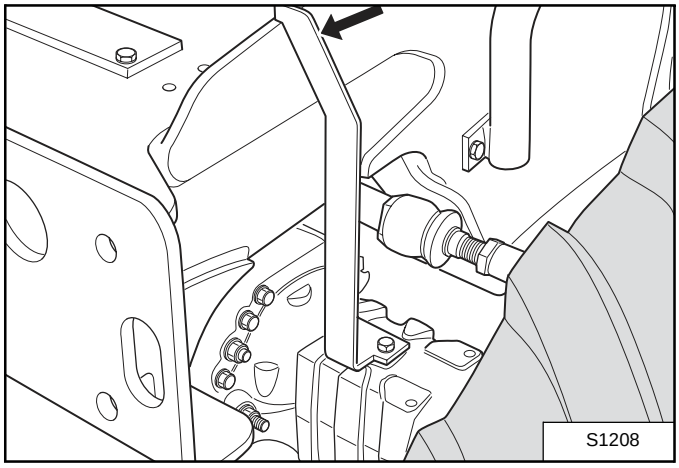

This visual indicator indicates that the adjustment by the CDL is in the middle position of travel when the bar is in line with the chassis **[Figure 31]**.

https://www.pdfmanual4trucks.com/

Ignition Switch

Figure 12

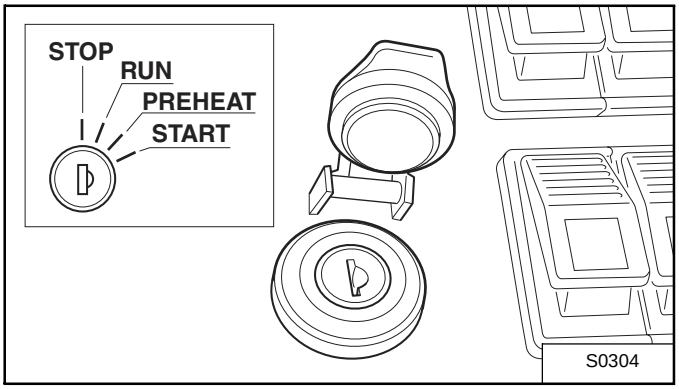

Position	Function
STOP	Off position (stable position).
RUN	Ignition position (stable position).
PREHEAT	Glowplug preheating position (unstable position: the switch returns to the “RUN” position as soon as the key is released).
START	Start-up position (unstable position: the switch returns to the “RUN” position as soon as the key is released).

IMPORTANT

To insert or remove the key, the switch must be in the “STOP” position.

Steering wheel

Turn the steering wheel clockwise to steer the machine to the right.

Turn the steering wheel counterclockwise to steer the machine to the left.

Steering wheel tilt adjustment

Figure 13

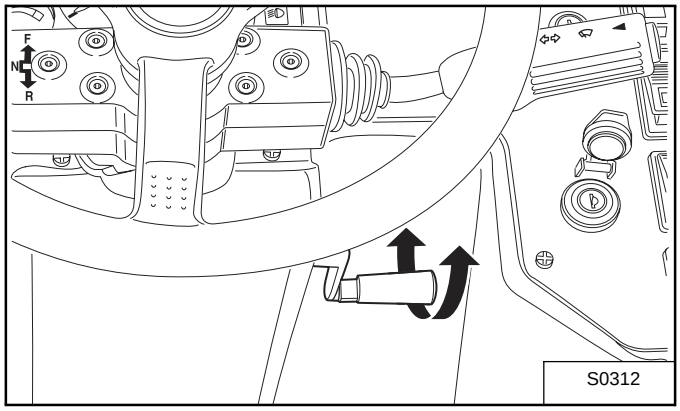

Pull the lever towards you to adjust the steering wheel.

After adjusting the wheel to the desired position, push the lever back to lock the wheel in the adjusted position.

WARNING

Never drive or operate the machine if the console is not properly locked.

Never tilt the console when the machine is in motion.

https://www.pdfmanual4trucks.com/

Pedals

Figure 14

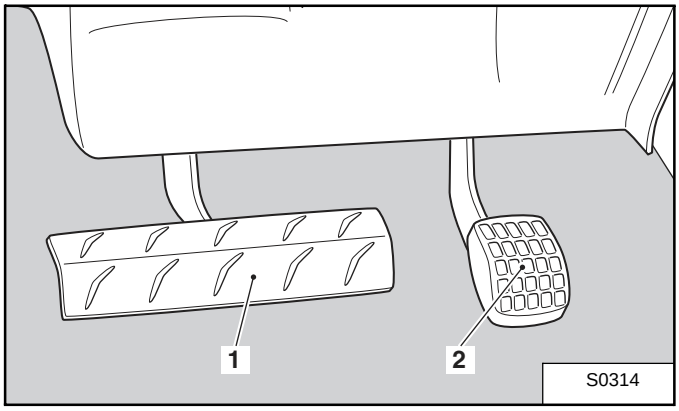

Ref.	Description	Function
1	**Brake pedal**	This pedal fulfils the function of service brake: • Press the pedal to gradually slow down the machine until it stops. • Release the pedal to gradually decrease the brake action until it cancels out. • In the beginning, braking is hydrostatic. When the diesel engine is in continuous mode, the machine's travel speed is reduced until it stops, in proportion to the action on the pedal. • On the rest of the stroke, braking is mechanical (with the brake discs).
2	**Accelerator pedal**	The travel speed directly depends on the engine speed. • To increase speed: press the pedal to increase the diesel engine speed to the maximum. • To decrease speed: Release the pedal to reduce the diesel engine speed.

Handbrake

This lever has two functions:

- handbrake control.
- control of the emergency brake, in case of failure of the service brake.

Figure 15

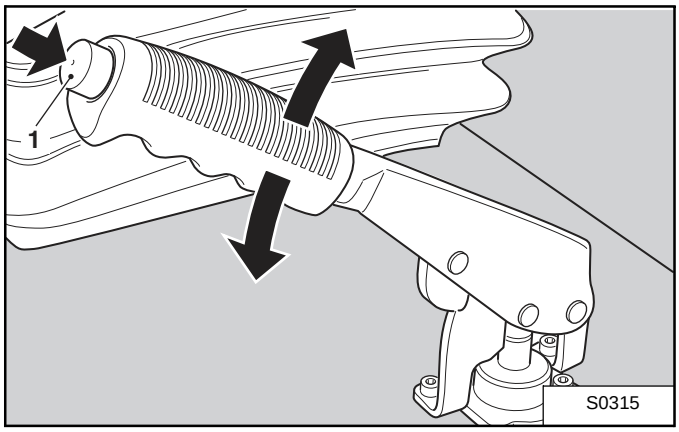

To apply the brake, pull the lever of the handbrake upwards until it locks.

To release the brake, pull the lever upwards, push the button (1) to release the lock. Lower the lever all the way down.

Reservoir for windscreen washer liquid

The fill plug for the windscreen washer liquid reservoir is located under the handbrake lever **[Figure 36]**.

Figure 16

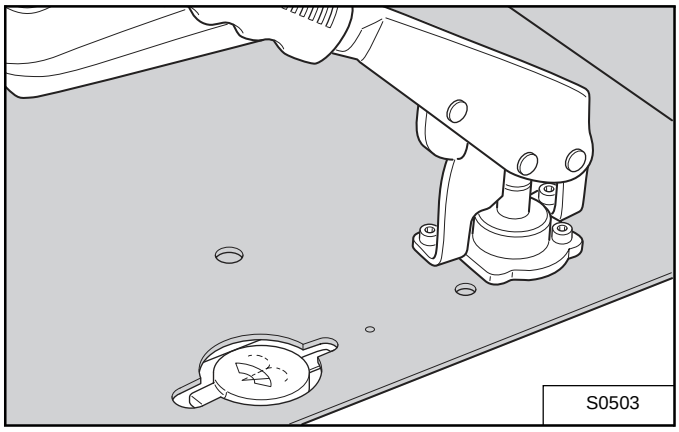

Cab heating and defogging control

Figure 17

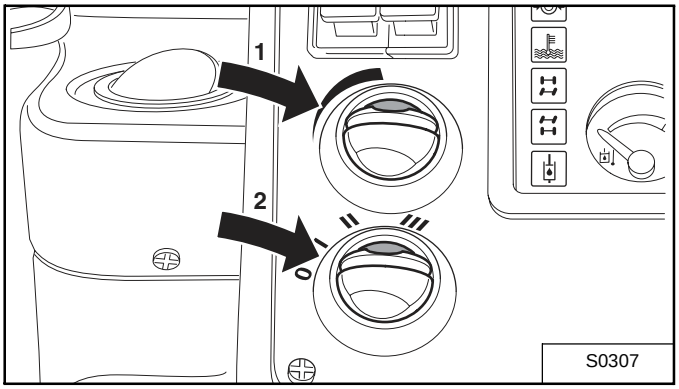

Reference	Description	Function
1	**Temperature adjustment**	• To increase temperature: turn clockwise to increase the temperature in the cab. • To decrease temperature: turn counterclockwise to lower the temperature in the cab.
2	**Fan control**	Turn the switch clockwise to increase the fan speed. • O: fan stopped. • I: slow speed. • II: medium speed. • III: high speed.

Hydraulic system

WARNING

Diesel fuel or hydraulic fluid under pressure can penetrate skin or eyes, causing serious injury or death. Fluid leaks under pressure may not be visible. Use a piece of cardboard or wood to find leaks. Do not use your bare hand. Wear safety goggles. If fluid enters skin or eyes, get immediate medical attention from a physician familiar with this injury.

WARNING

AVOID BURNS

Hydraulic fluid, tubes, fittings and quick couplers can get hot when running machine and attachments. Be careful when connecting and disconnecting quick couplers.

Batch of data sheets

Figure 18

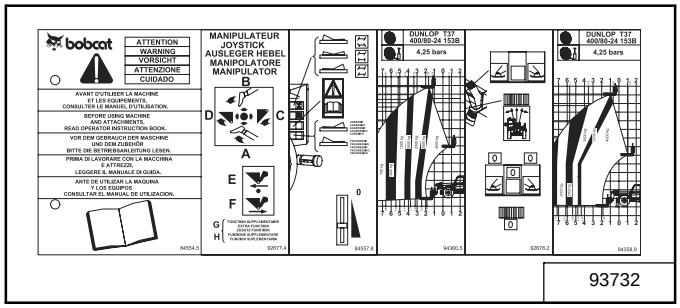

The data sheets in this batch list some instructions that also appear in this manual, and include the load charts.

Rear window

This window can open 90°.

WARNING

This window can be used as an emergency exit; do not block its opening control mechanism or limit its features.

Fire Extinguisher Location

Attachment points for the fire extinguisher support device are provided on the right hand side of the rear panel in the cab.

Figure 19

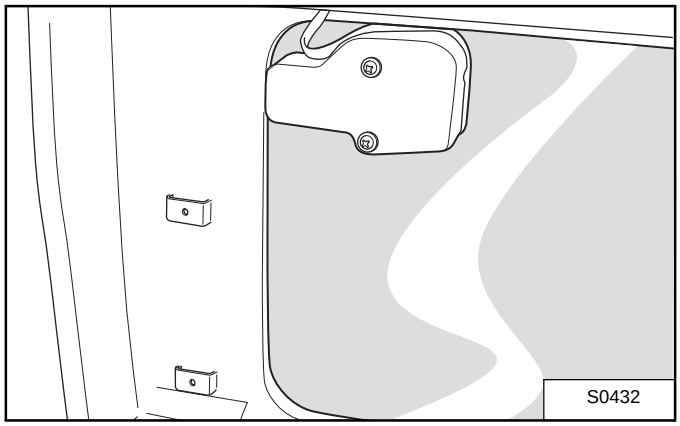

https://www.pdfmanual4trucks.com/

Door

To open the door from the outside: pull the handle **[Figure 40]**. The door can be locked with the ignition key.

Figure 20

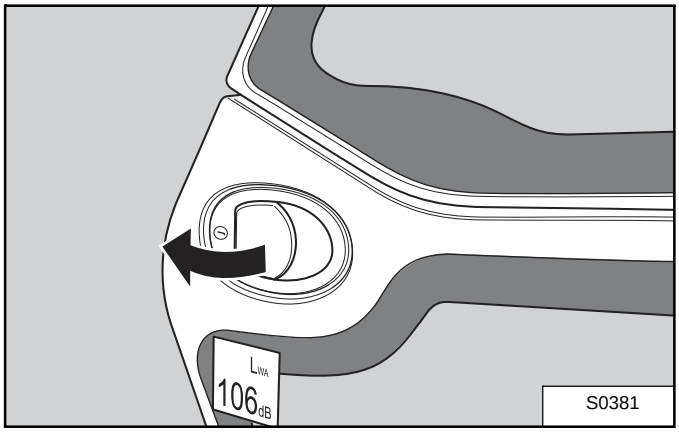

To open the door from the inside: squeeze the handle **[Figure 41]**.

Figure 21

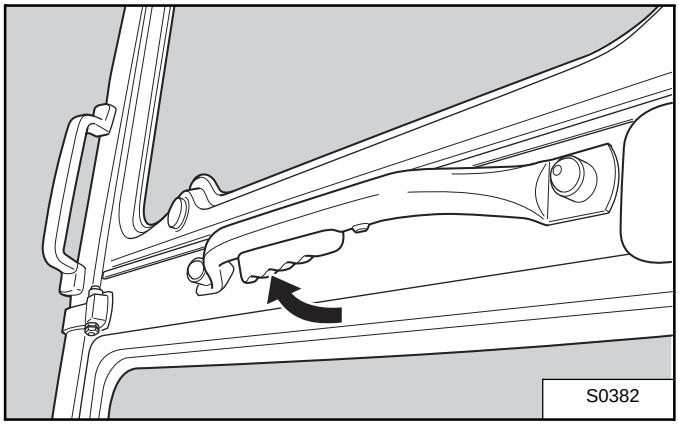

Left window

This window is located on the door of the cab and opens 180°.

Opening or closing the window: turn the lever up or down **[Figure 42]**.

Figure 22

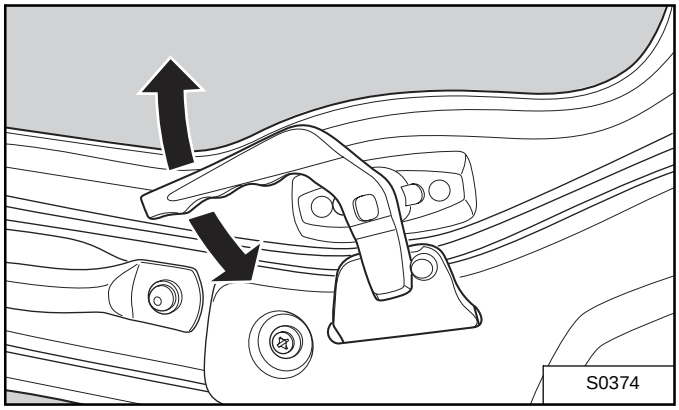

To lock in open position: engage and lock the latch **[Figure 43]**.

Figure 23

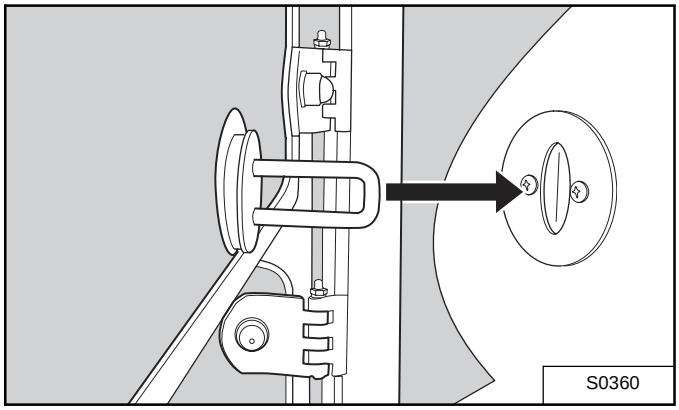

To unlock: pull the lever inside the cab **[Figure 44]**.

Figure 24

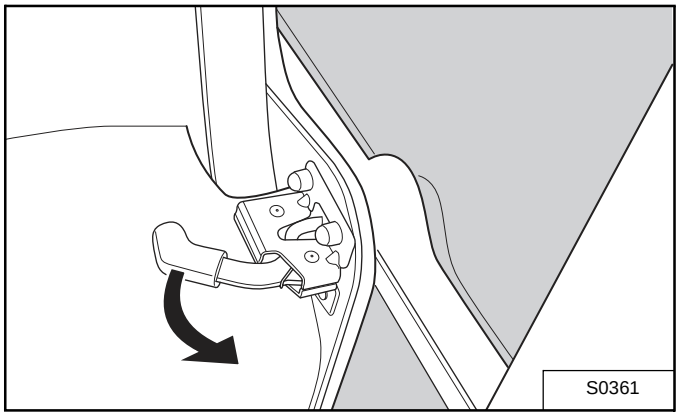

https://www.pdfmanual4trucks.com/

Circuit breaker

The circuit breaker (rotary switch with key) is located behind the cab on the left side of the frame. It disconnects the electrical circuit from the positive battery terminal.

Figure 25

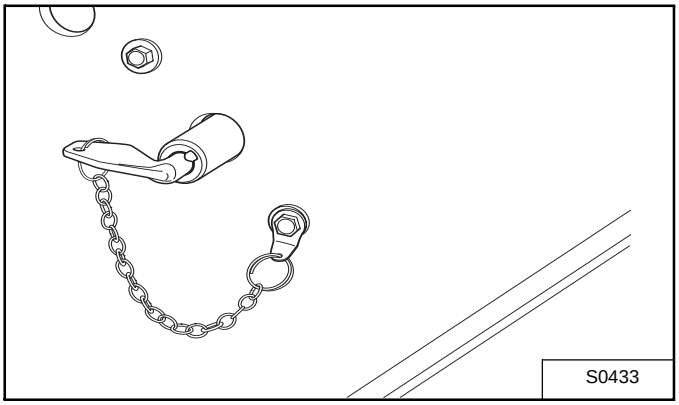

To close the circuit: insert the key in the switch then turn clockwise until indexing.

To open the circuit: turn the key counterclockwise then remove it from the switch.

WARNING

It is recommended to open the circuit when the machine is stopped for a long period.

When the engine is running, only open the circuit when absolutely necessary.

Daily Inspection

- Engine's lubricant level
- Hydraulic fluid level
- Engine coolant level
- Engine coolant system, check system for damage or leaks
- Engine oil filter, check air system for damage or leaks
- Tyres, check for wear, damage, tyre pressure
- Operator cab and cab mounting hardware
- Closing and locking of all covers

WARNING

If the telescopic handler is new, carry out the specific checks described in the Maintenance section before using the machine for the first time.

WARNING

Operator must have instructions before running the machine. Untrained operators can cause injury or death.

Note: Fluids such as engine oil, hydraulic fluid, coolant, etc. must be disposed of in an environmentally safe manner. Some regulations require that certain spills and leaks on the ground must be cleaned in a specific manner. See local, state and federal regulations for correct disposal.

https://www.pdfmanual4trucks.com/

Preparation Before Operation

Operation and Maintenance Manual

A net to hold documents is provided behind the seat. Make sure the Operation and Maintenance Manual are stored there.

Figure 26

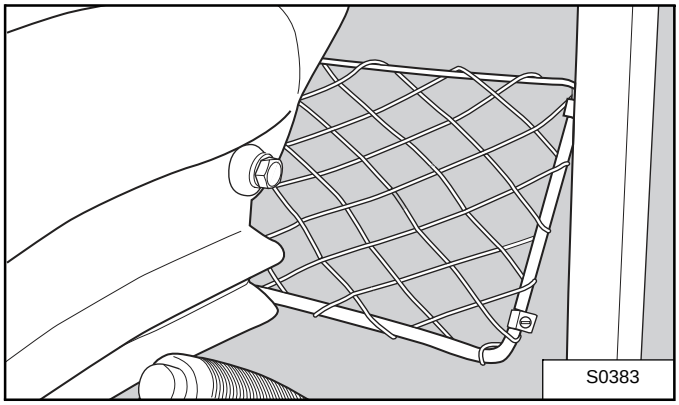

WARNING

Operator must have instructions before running the machine. Untrained operators can cause injury or death.

Tanking on diesel fuel

1. Unscrew the plug **[Figure 47]**.

Figure 27

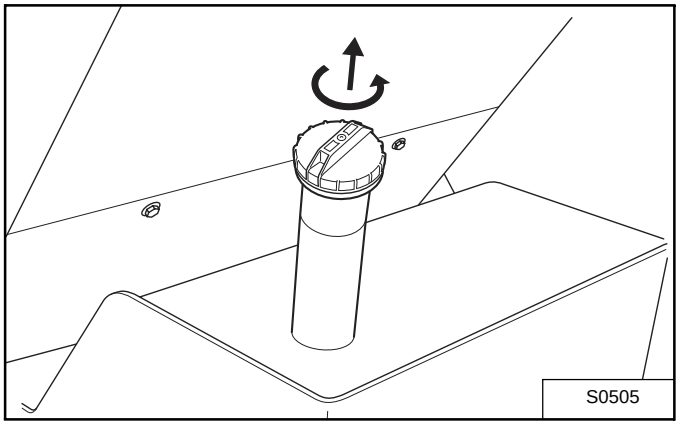

2. Fill with diesel fuel.

Note: tank capacity 140 litres.

Adjusting the seat

Driving comfort is an essential factor of safety.

WARNING

Fasten your seat belt.

Adjust the seat so that you can reach and operate all the controls easily.

Four different types of adjustment allow optimal driving comfort.

Figure 28

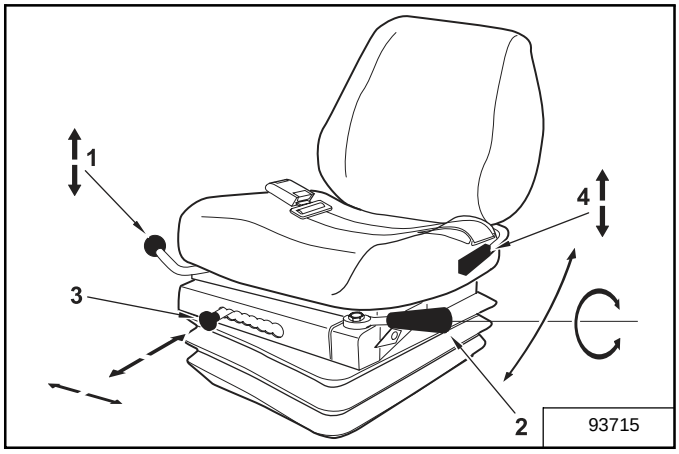

Reference	Description	Adjustment
1	**Adjusting the length of the seat**	Pull the lever to the left. Slide the seat to the required position. Release the lever. Lock in the nearest notch.
2	**Adjusting the suspension**	Turn the lever handle so that: • The “+” sign is visible on top to obtain a firmer suspension • The “-” sign is visible on top to obtain a more flexible suspension Move the lever until you achieve the required adjustment.
3	**Adjusting the height of the seat**	Pull the button forwards. Slide it to the left to raise the seat. Slide it to the right to lower the seat. Release the button. Lock in the nearest notch.
4	**Adjusting the tilt of the back rest**	Pull the lever up. Tilt the back rest to the required position. Release the lever. Lock in the nearest notch.

https://www.pdfmanual4trucks.com/

Driving the machine

Starting

WARNING

Fasten your seat belt.

1. Make sure that the selection of travel direction lever is in neutral position.
2. Turn the ignition switch to the “RUN” position to turn on the electric circuit.

Figure 29

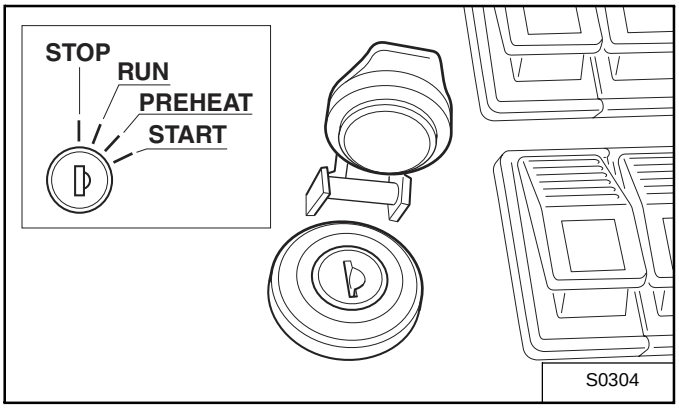

3. Check the fuel level.
4. Turn the start switch to the “PREHEAT” position and hold it in this position for 15 seconds to preheat the engine to the proper temperature.
5. Hold the accelerator pedal half way down, then turn the switch to the “START” position. Hold the switch in this position until the engine runs on its own, then release the key switch. It should return to the “RUN” position.

IMPORTANT

- When the handbrake is released, the engine cannot be started unless the transmission is in neutral.
- Do not leave the switch in the “START” position for more than thirty seconds. Remember to preheat before restarting.

WARNING

Do not try to start the engine by pulling or pushing the machine.

6. Release the accelerator pedal and let the engine idle.

WARNING

Avoid high rpm and fluctuations when the engine is in cold state.

When the operating temperatures are not stabilised, only increase the engine speed gradually.

Driving

1. Raise the forks or attachment approximately 300 to 500 mm above ground-level.
2. Select the required steering mode.
3. Engage the gear lever in the required direction.
4. Select the required mode of transmission.
5. Check axle alignment.
6. Release the handbrake and accelerate gradually until the machine moves.

Note: Always bear in mind that the steering system is assisted and therefore sensitive: turn gradually, not sharply.

Note: Observe the driving instructions and any instructions in force on the site.

Stopping

1. Stop the machine on flat ground or where the incline does not exceed 12%.
2. Make sure that the machine does not stop in a position where it hinders access to buildings or installations, causes an obstacle to the circulation of other vehicles and where it is not placed less than 1 m from a traffic path.
3. Release the accelerator pedal and stop the machine.
4. Put the gear lever into neutral.
5. Put on the handbrake.
6. Ensure that the telescope is fully retracted.
7. Lower the boom so that the forks or attachment are flat on the ground.
8. Stop all active controls.
9. Turn off the engine by turning the key switch to the “STOP” position.

WARNING

Do not accelerate just before turning off the engine.

https://www.pdfmanual4trucks.com/

10. Remove the key from the ignition.

11. Close all the windows.

12. After getting out of the cab, lock the door.

13. Make sure all covers are properly closed and locked.

WARNING

Before leaving the site, check that you have fully performed all machine stopping operations properly for your own safety and that of others.

WARNING

Never leave the machine when the engine is running or when the boom is not lowered so that the forks or attachment are in contact with the ground.

Handling loads

Longitudinal stability indicator

Always check the state of the longitudinal stability indicators during handling or lifting operations.

WARNING

The alarm must be made active before carrying out handling work (see “Longitudinal stability indicator” on page 29).

WARNING

The operator should perform periodic inspections to check correct operation of the indicator lights.

WARNING

Stop controlling the following aggravating movements for the stability of the machine:

- **extending the telescopic boom,**
- **lowering the boom,**

as soon as any of the following conditions occurs:

- **the amber longitudinal stability indicator light is lit,**
- **the alarm is triggered again,**
- **the red indicator light is lit.**

As soon as the amber longitudinal stability indicator lights light up or the alarm is triggered, and at the latest when the red indicator lights come on, take the following steps:

1. Ensure that the boom is fully retracted.

2. Lower the boom.

3. Resume the manoeuvre in conditions that are more favourable to the stability of the machine.

Load charts

Before starting a load handling manoeuvre, check the load chart that corresponds with the tyres fitted on the machine. This load chart is part of the data sheets located in the cab.

Check that the load being handled and the considered reaches during the manoeuvre do not exceed machine capacities.

WARNING

Always follow the load chart indications.

WARNING

Never leave the machine when the engine is running or when the boom is not lowered so that the forks or attachment are in contact with the ground.

Picking up a load from the ground

1. Move the machine perpendicular to the load with the telescopic boom fully retracted and the forks parallel to the ground.

Figure 30

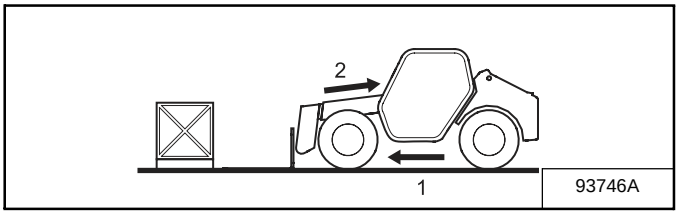

2. Adjust the fork clearance and their centring in relation to the load.

Figure 31

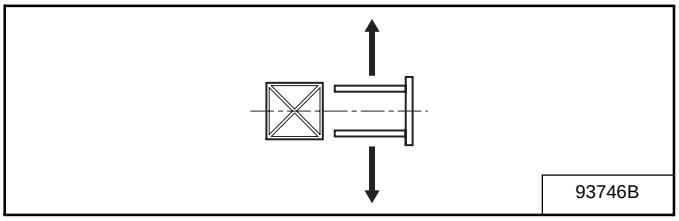

3. Adjust the height of the forks so that they can slide under the load.

Figure 32

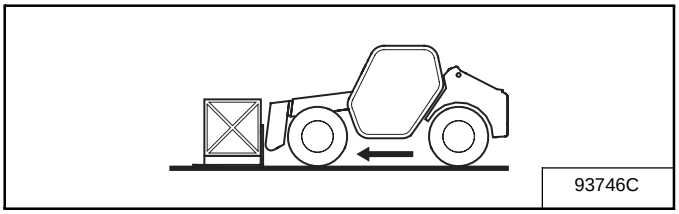

4. Move the machine forward or extend the telescope to bring the heel of the forks in contact with the load.
5. Engage the handbrake and put the gear lever into neutral.
6. Raise the boom so that the load is approximately 300 to 500 mm above ground-level, tilt the forks fully backwards and retract the telescope fully. The machine is then in transport position.

Figure 33

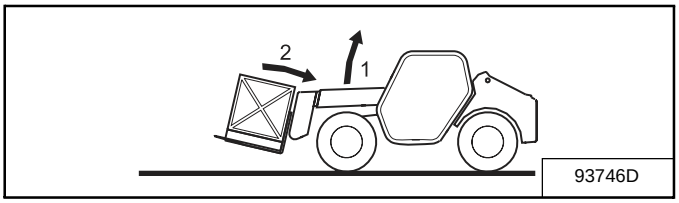

Placing a load on the ground

1. Move the load into the position where it is to be placed.

Figure 34

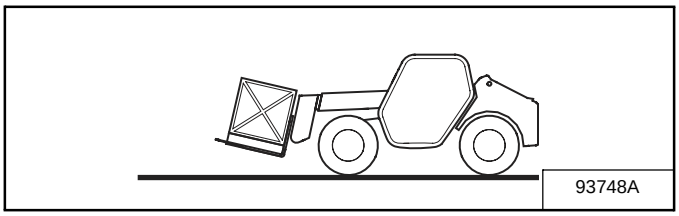

2. Tilt the forks into a position parallel to the ground.

Figure 35

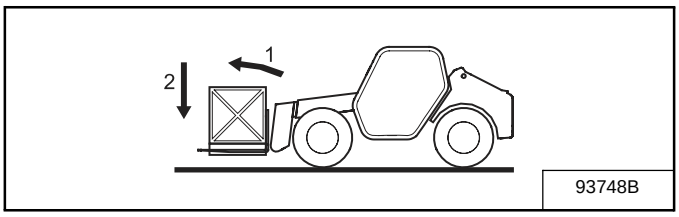

3. Lower the load until it is resting on the ground and the forks are no longer in contact with the load.

Figure 36

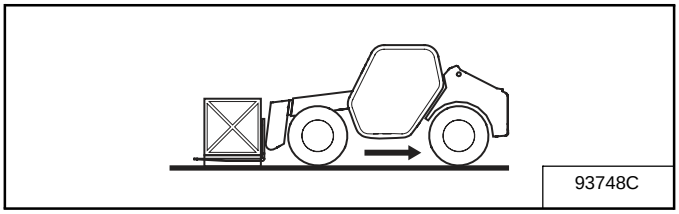

4. Move the machine back in order to release the forks from the load completely.
5. Return the boom and the forks to the transport position.

Figure 37

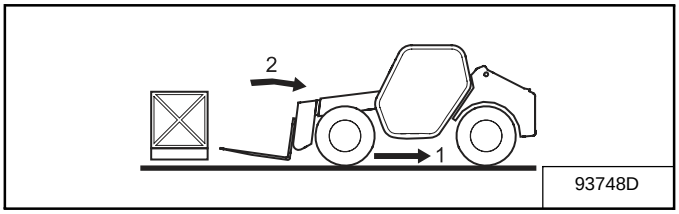

https://www.pdfmanual4trucks.com/

Picking up a raised load

WARNING

All boom movement or machine displacement manoeuvres with a raised load must be carried out with the greatest care and as slowly as possible.

1. Before starting this manoeuvre, make sure that the forks can easily slide under the load and that their clearance and centring in relation to the load is correct.
2. Move the machine perpendicular to the load (1) with the forks horizontal at the height of the load (2).

Figure 38

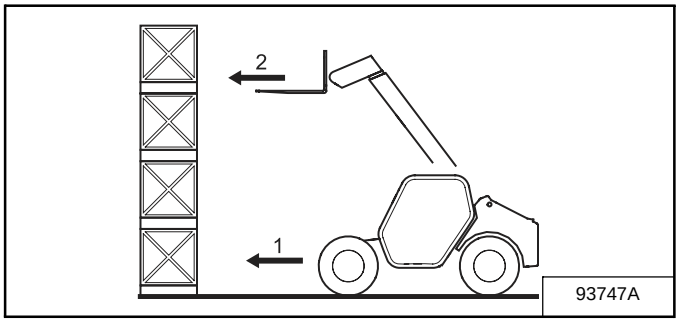

WARNING

Make sure you leave the necessary distance to slide the forks entirely under the load, between the front of the machine and the pile of loads, using only the minimum length of the telescopic boom.

3. Move the machine forward as slowly as possible until the heel of the forks is in contact with the load.

Figure 39

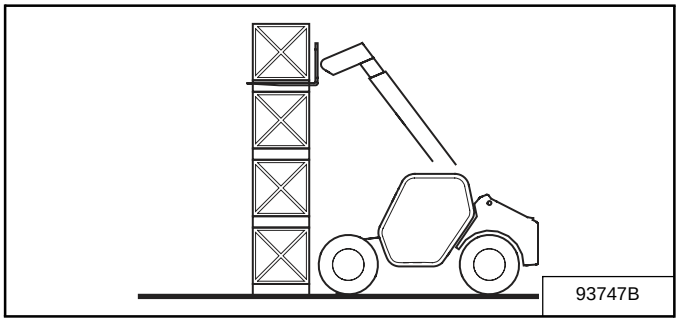

WARNING

Do not knock against the load with the forks or the stack with the machine.

4. Engage the handbrake and put the gear lever into neutral.
5. Raise the boom slightly and tilt forks partially backwards to stabilise the load.

Figure 40

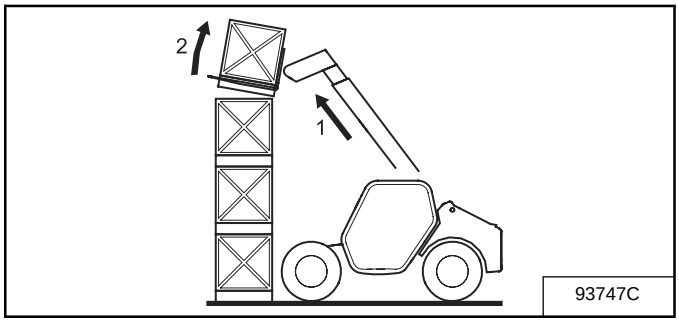

6. Put the gear lever into reverse and release the handbrake.
7. Move the machine back as slowly as possible so as to release the load on top of the stack, in such a way that the boom can be lowered without the load touching the pile.

Figure 41

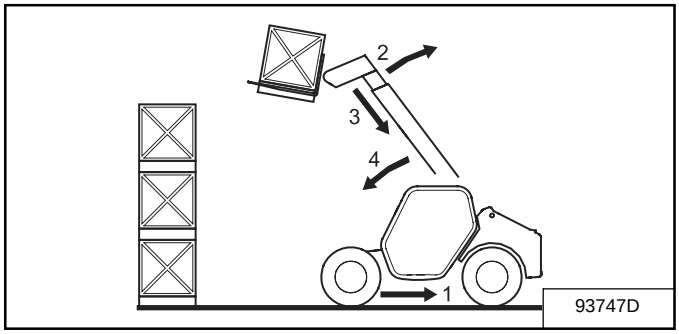

8. Retract the telescopic boom fully.
9. Lower the boom until the load is approximately 300 to 500 mm above ground-level then tilt the forks fully backwards. The machine is then in transport position.

https://www.pdfmanual4trucks.com/

Placing a raised load

WARNING

All boom movement or machine displacement manoeuvres with a raised load must be carried out with the greatest care and as slowly as possible.

1. With the machine in transport position, move the load closer to the stack and into the position where it is to be placed.

Figure 42

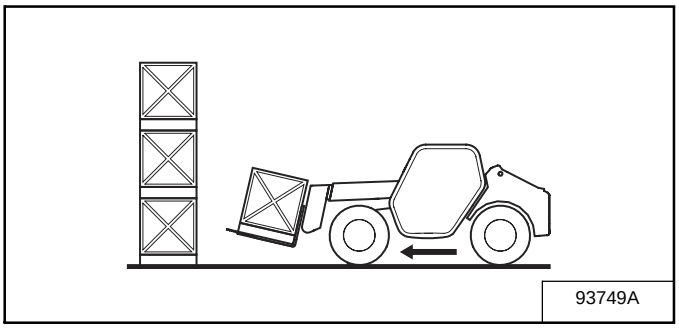

2. Raise the telescopic boom, then extend it to move the load above the stacking. If necessary, move the machine forward.

Figure 43

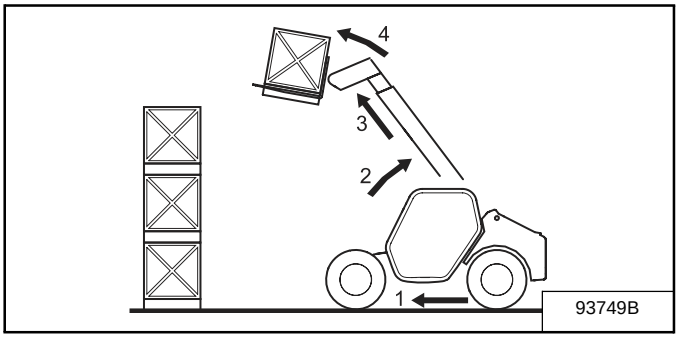

3. Engage the handbrake and put the gear lever into neutral.
4. Tilt the load into a horizontal position.
5. Place the load down on the stack by lowering the boom and retracting the telescope.

Figure 44

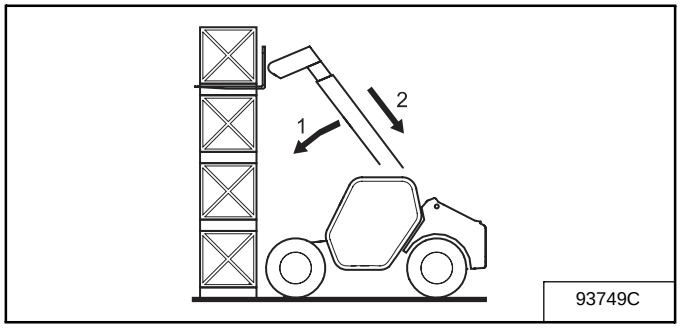

6. Once the load has been placed down, release the forks so that they are no longer in contact with the load using short, successive boom-lowering and telescope-retraction manoeuvres.
7. Release the forks from beneath the load using short, successive boom-lowering and telescope-retraction manoeuvres or by moving the machine back.
8. Return the boom and the forks to transport position.

Figure 45

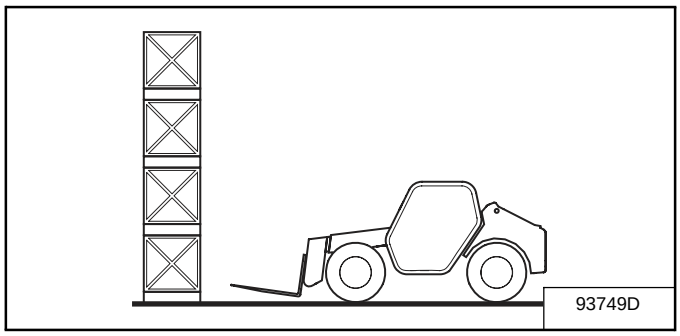

https://www.pdfmanual4trucks.com/

Recovery and transport of the machine

The recovery and transport of the machine comprehends the following three main actions:

- Towing the machine
- Hoisting the machine
- Securing the machine

Each topic is explained in detail below.

Towing the machine

Preparing for towing

The machine must be prepared before towing.

WARNING

- **Before towing, the machine must be immobilised using chocks in front of the wheels or any other means independent of the machine. Do not apply the handbrake.**
- **After this operation, the handbrake will not work and it will no longer be possible to lock the machine with the hydrostatic transmission.**

Disengaging the hydrostatic transmission

It is impossible for oil to circulate in a hydrostatic transmission in a closed circuit when the machine is not running, this operation involves making oil circulation possible:

IMPORTANT

When the transmission disengagement with valve is installed, see p. 89.

- There are two identical multi-function valves on the hydrostatic transmission pump.

Figure 46

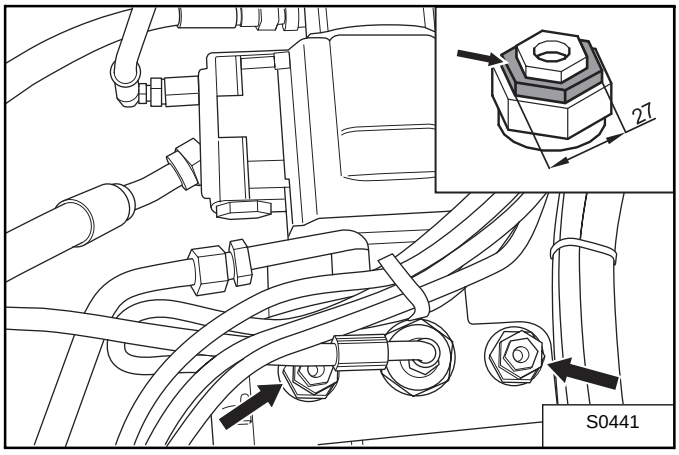

- Each valve has three 6-sided nuts of different sizes.
- Unscrew the middle screw of each valve 2.5 turns.

Releasing the handbrake

As the machine's brakes are tightened by lack of hydraulic pressure (= handbraked position), this operation involves releasing the brakes mechanically.
Only the front axle has brakes.

The following procedure describes how to untighten the brakes.

- Release the handbrake. This will open the hydraulic circuit. It is not possible to manually release the brakes when the hydraulic circuit is closed.
- At each end of the central part of the front axle are two screws (see **[Figure 67]**). When screwed in, these screws will remove the spring pressure that block the brake disks.
  [Figure 68] shows the function of such a screw inside the axle.
  The work will first be carried out on the two screws on one side of the front axle then on the other side:
  - Loosen the locking nuts of the screws and create some clearance for the screws.
  - Gradually screw (quarter turn by quarter turn) each of the two screws alternatively until they bite.
  - Repeat the above steps on the other side of the front axle.

Figure 47

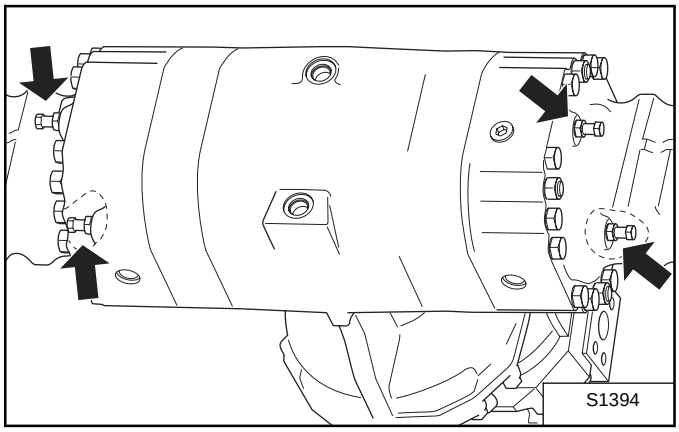

Figure 48

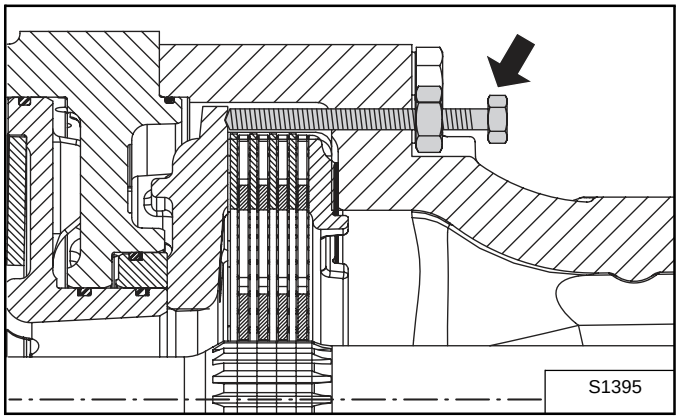

The brakes are now released for towing the vehicle.

IMPORTANT

The vehicle will not be able to brake until the screws are returned to their original position.

Hooking the machine

Use the front (**[Figure 75]** and **[Figure 76]**) or rear **[Figure 77]** stowing pins or the rear trailer hooking device (if the machine has one) to hook the machine to the towing vehicle. Using rigid connectors (attachment bar) is better than flexible devices (cables).

WARNING

Before towing the machine, make sure the tow vehicle has:

- **sufficient power to tow the machine;**
- **adequate braking facility to stop and block the position of the unit.**

Towing

When towing:

- The handbrake (which also acts as emergency brake) does not work.
- Steering remains functional but not assisted. The effort required to turn the steering wheel is significantly higher than for normal operation.
- Turn on the hazard warning lights.

Where this towing is to be carried out on public roads, comply with the Highway Code.

WARNING

The machine must be towed:

- **at a maximum speed of 5 km/h,**
- **over very short distances so that it can be loaded onto a trailer,**
- **with means appropriate to its weight and size.**

After towing

Return the functions altered for towing to their original state by carrying out the reverse operations:

- Tighten the middle nut on each of the two transmission pump's multi-function valves.
- Mechanically release the handbrake to return it to working order.

WARNING

Do not forget to carry out these two operations to avoid any risk of accident that might be caused by incorrect operation of the machine after its start-up.

Hoisting the machine

WARNING

Before carrying out the hoisting operation, make sure, that in relation to the machine mass and dimensions:

- **The used handling equipment is suitable.**
- **The used slings, swing bars, shackles and other equipment are suitable.**

This operation should be carried out on the machine when there are no attachments. Before this operation, lower the boom position, return the wheels to the aligned position and stop the machine. Then take into account:

1. The position of the machine's centre of gravity.
   - For the T35120SL telescopic handler **[Figure 69]**.

Figure 49

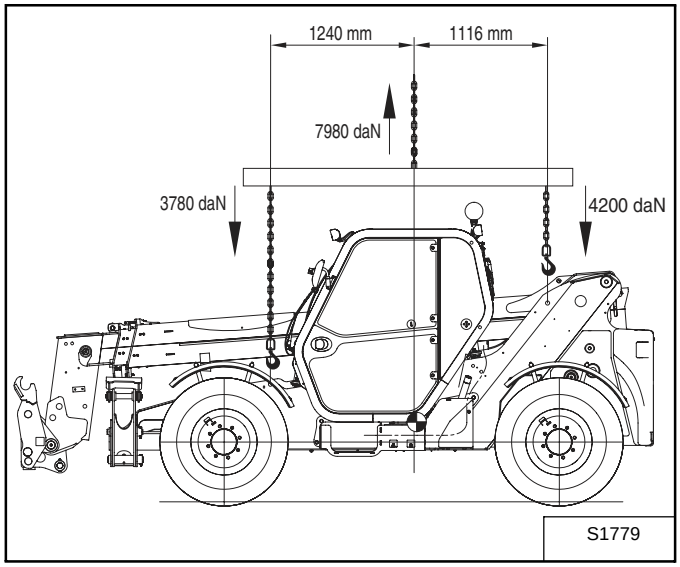

   - For the T35120L telescopic handler **[Figure 70]**.

Figure 50

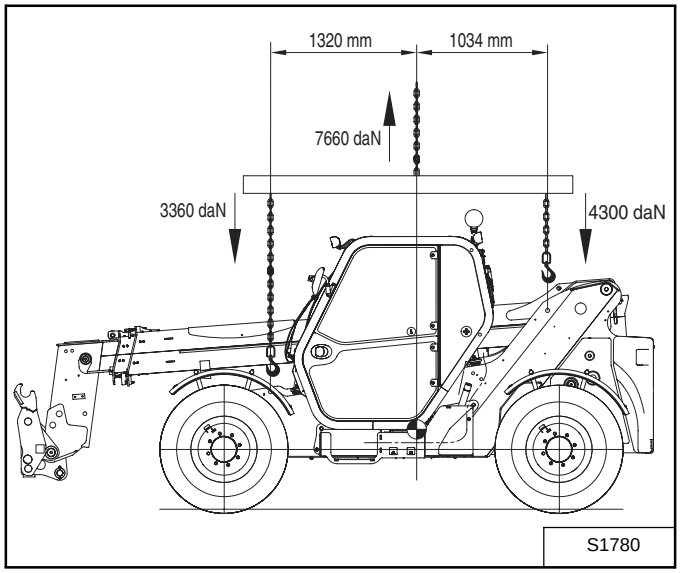

https://www.pdfmanual4trucks.com/

2. The position of the front slinging points **[Figure 71]**.

Figure 51

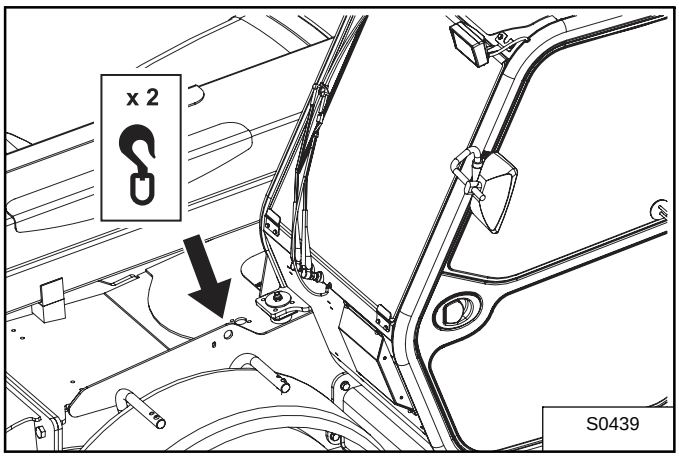

3. The position of the rear slinging points **[Figure 72]**.

Figure 52

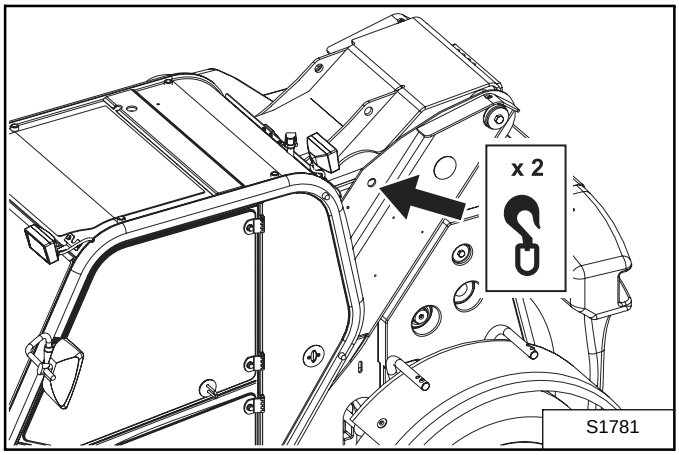

Securing the machine

WARNING

Before loading the machine on the trailer, make sure that:

- **All safety instructions for the trailer are complied with.**
- **The driver of the trailer has been informed of the dimensions and weights of the machine.**
- **The trailer platform is big enough and has sufficient capacity to transport the machine.**
- **The admissible pressure on the trailer platform is compatible with the machine.**

To transport the machine onto a trailer, the following steps must be taken:

1. Load the machine onto the trailer in accordance with its loading requirements in terms of position and distribution of mass.

2. Stop the machine.

3. Attach chocks to the floor of the trailer in front of and behind each of the machine's wheels **[Figure 73]**.

Figure 53

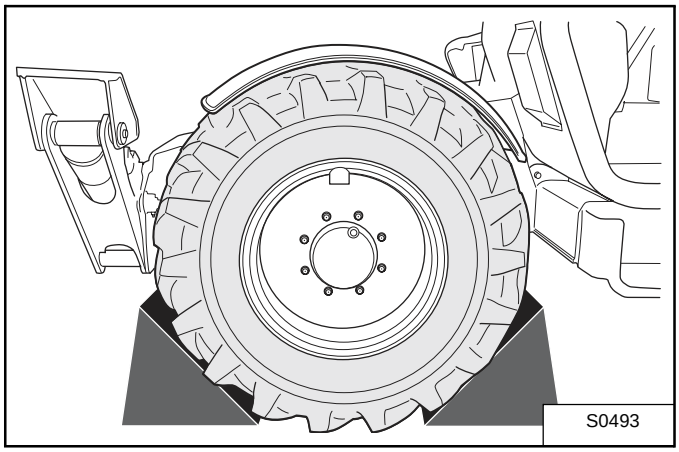

4. Attach chocks to the floor of the trailer against the inner face of each wheel **[Figure 74]**.

https://www.pdfmanual4trucks.com/

Figure 54

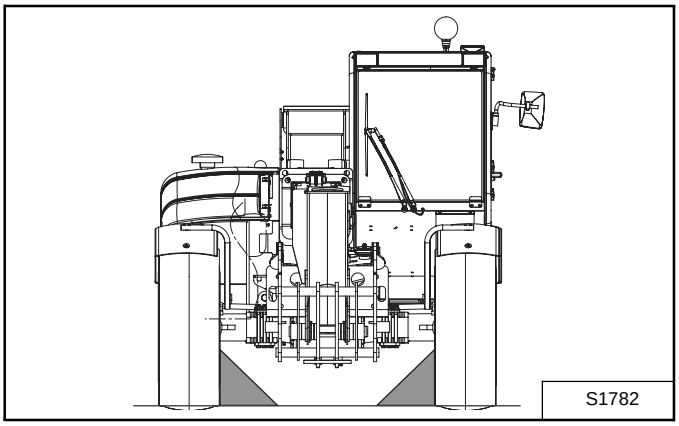

5. Stow the machine on the trailer using the front stowing pins.

- For the T35120SL telescopic handler **[Figure 75]**.

Figure 55

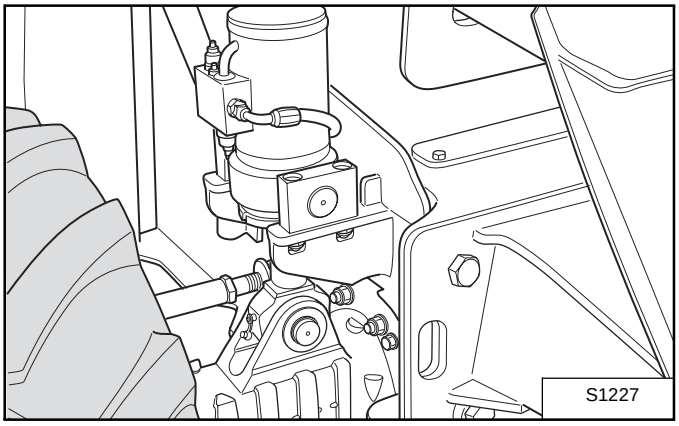

- For the T35120L telescopic handler **[Figure 76]**.

Figure 56

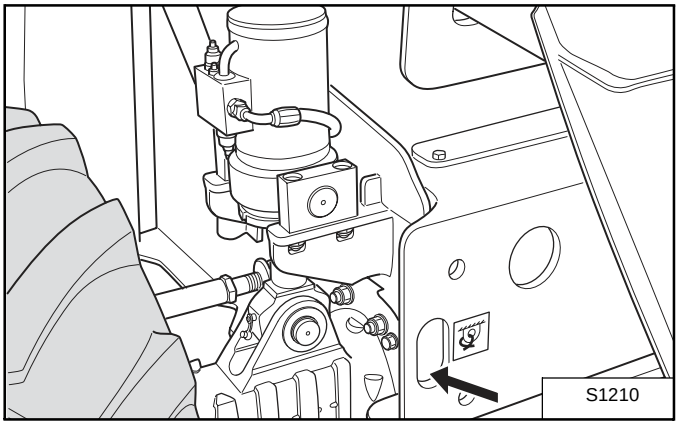

6. Stow the machine on the trailer using the tie down positions **[Figure 77]**.

Figure 57

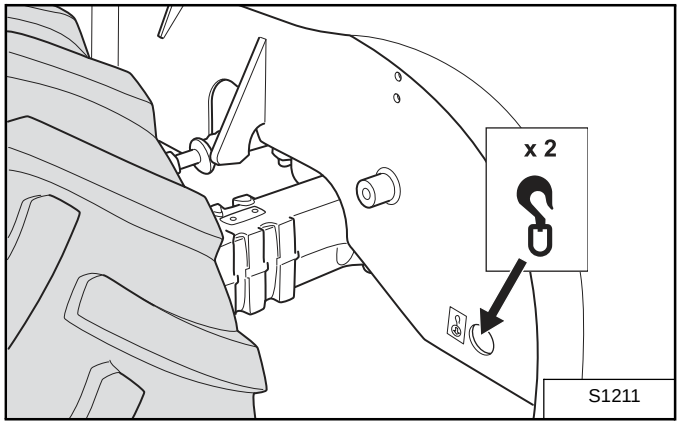

https://www.pdfmanual4trucks.com/

Driving on public roads

Warning

The driver must respect the Highway Code when driving the machine on a public road.

Before driving the machine on a public road:

1. Install the rotating beacon and make sure that it is working properly.
2. Make sure that the lights and signals are in good condition, are clean and are working properly.
3. Make sure that the windows are clean and that the windscreen washer and wiper are working properly.
4. Make sure that the tyres are properly inflated and that they are not covered with mud, stones or any other impurity.
5. Check the fuel level.
6. Check if the rear view mirrors are correctly adjusted.
7. Move the boom to transport position:
   - boom fully retracted
   - attachment tilted fully backwards
   - attachment 300 mm above ground-level
8. Place the CDL in the center-of-travel position.

WARNING

The transport of loads on public roads is prohibited. Attachments that can be fitted to the machine must:

- **either be fitted with appropriate signs and safety devices**
- **or be removed from the machine**

Driving in some countries

Before marketing this machine in some countries, Bobcat had to obtain road approval so that it can be driven on public roads. New machines are therefore fitted with special devices and attachments. Make sure you use them or install them before driving on a public road. Take care also to keep them in good working order. Driving on public roads also imposes certain conditions on the machine. Please contact us for further details, if necessary.

https://www.pdfmanual4trucks.com/

PREVENTIVE MAINTENANCE

Contents

Maintenance Safety 49

Maintenance interval 50

Operator Cab 51
- ROPS/FOPS Protection 51
- Removing dust/replacing the cab filter 51

Engine cover 51

Air filter maintenance 52
- Cleaning the air filter’s main cartridge 52
- Replacing the air filter’s main cartridge 52
- Replacing the air filter’s safety cartridge 52

Fuel system 53
- Fuel Specifications 53
- Filling The Fuel Tank 53
- Replacing the fuel filter cartridge 53

Lubrication circuit 54
- Checking and topping up engine oil 54
- Oil Chart 54
- Draining and changing oil and filter 54

Engine Cooling System 55
- Checking the cooling fluid level 55
- Checking the cooling fluid 56

Adjusting The Alternator Belt 56

Electrical System 57
- Description 57
- Checking the battery fluid level 57
- Checking the condition of fuses, diodes and relays 57
- Checking the working order of controls, lighting and signalling 57
- Checking the condition of electric connections 57
- Fuses, diodes and relay drawing 58

https://www.pdfmanual4trucks.com/

Hydraulic/Hydrostatic System 60
Checking the oil level 60
Topping up the oil 60
Draining and changing the hydraulic oil 60
Replacing the hydraulic oil tank vent valve 61
Checking the tightness of pipes and hydraulic connections 61
Replacing the hydraulic filter 61

Mechanical transmission 62
Checking the condition of tyres 62
Checking the tyre pressure 62
Checking the tightness of wheel nuts 62
Checking the vent valves cleanliness on both axles 62
Lubricating the rear axle rolling element bearings 62
Lubricating the axle steering pivots 62
Checking the front axle central casing oil level 63
Checking the front axle reducer box oil level 63
Checking the rear axle central casing oil level 64
Checking the gear reducer oil level on both axles 64
Draining and changing the front axle central casing oil 64
Draining and changing the front axle reducer box oil 65
Draining and changing the rear axle central casing oil 65
Draining and changing the gear reducer oil on both axles 65

Structure 66
Checking the tension of the telescoping chains 66
Checking the wear of telescoping chains 67

Lubricating the machine 68
Lubrication plan T35120SL (with stabilisers) and T35120L 68

https://www.pdfmanual4trucks.com/

Maintenance Safety

WARNING

Instructions are necessary before operating or servicing the machine. Read and understand the Operation & Maintenance Manual and machine signs (decals). Follow warnings and instructions in this manual when making repairs, adjustments or servicing. Check for correct operation after adjustments, repairs or service. Untrained operators and failure to follow instructions can cause injury or death.

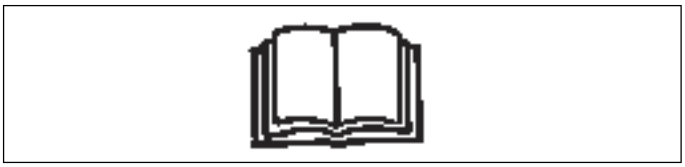

Never service the Bobcat telescopic handler without instructions.

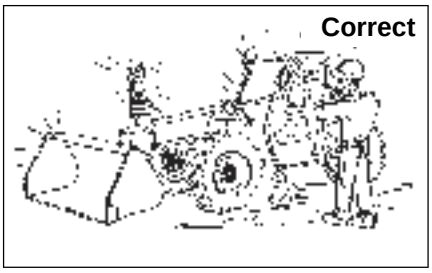

Your telescopic handler requires daily cleaning and maintenance.

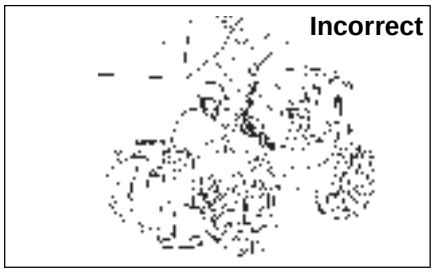

Disconnecting or loosening any hydraulic tubeline, hose, fitting, defective component or part can cause lift arms to drop. Do not go under lift arms when raised unless supported by an approved lift arm support device. Replace if damaged.

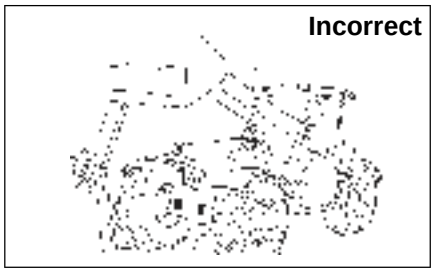

Never work on telescopic handler with lift arms up unless lift arms are held by an approved lift arm support device. Replace if damaged

Never modify equipment or add attachments not approved by Bobcat.

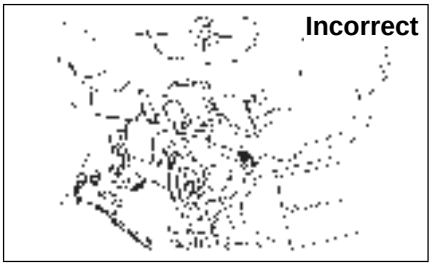

Ensure proper ventilation when welding or grinding painted parts.

Wear eye protection to guard from battery acid, compressed springs, fluids under pressure and flying debris when engines are running or tools are used. Use eye protection approved for type of welding.

Keep body, jewelry and clothing away from moving parts, electrical contact, hot parts and exhaust.

Wear eye protection to guard from battery acid, compressed springs, fluids under pressure and flying debris when engines are running or tools are used. Use eye protection approved for type of welding.

Lead-acid batteries produce flammable and explosive gases.

Keep arcs, sparks, flames and lighted tobacco away from batteries.

Batteries contain acid which burns eyes or skin on contact. Wear protective clothing. If acid contacts body, flush well with water. In case of eye contact, flush well and get immediate medical assistance.

Maintenance procedures which are given in the Operation & Maintenance Manual can be performed by the owner/operator without any specific technical training. Maintenance procedures which are **not** in this manual must be performed **ONLY BY QUALIFIED BOBCAT SERVICE PERSONNEL. Always use genuine Bobcat replacement parts.**

https://www.pdfmanual4trucks.com/

Maintenance interval

Maintenance operations should be carried out according to the intervals defined in the table below.

WARNING

Depending on the working conditions under which you operate the machine, the recommended interval must be reduced in order to keep the machine properly maintained and to prevent possible damage, malfunctions or accidents. These conditions are (non-exhaustive list) in particular: dusty environment, humid atmosphere, muddy environment, abrasive environment.

Operation	Page	Hours					
		10	50	200	500	800 (4)	1000 (5)
Diesel engine							
Cleaning the air filter's main cartridge (6)	p. 52						
Replacing the air filter's main cartridge (6)	p. 52						
Replacing the air filter's safety cartridge (6)	p. 52						
Checking the cooling fluid level	p. 55						
Checking the cooling fluid	p. 56						
Checking the radiators are clean	–						
Checking the engine oil level	p. 54						
Draining and changing oil and filter of the engine	p. 54						
Replacing the lubricating oil filter cartridge	p. 55						
Checking the state and tension of the alternator belt (2)	p. 56						
Replacing the fuel filter cartridge (7)	p. 53						
Hydraulic system							
Checking the hydraulic oil level	p. 60						
Draining and changing the hydraulic oil	p. 60						
Replacing the hydraulic filter cartridge	p. 61						
Replacing the hydraulic oil tank vent valve	p. 61						
Checking the tightness of hydraulic lines and connections	p. 61						
Mechanical transmission							
Checking the condition of tyres	p. 62						
Checking the tyre pressure	p. 62						
Checking the tightness of wheel nuts (1)	p. 62						
Checking the vent valves on the two axles are clean	p. 62						
Lubricating the rear axle rolling element bearings	p. 62						
Lubricating the axle steering pivots	p. 62						
Checking the oil level in the front axle central casing	p. 63			monthly			
Checking the oil level in the reducer box	p. 63			monthly			
Checking the oil level in the rear axle central casing	p. 64			monthly			
Checking the oil level on both axles' gear reducers	p. 64						
Draining and changing the oil in the front axle central casing (3)	p. 64						
Draining and changing the oil in the reducer box (3)	p. 65						
Draining and changing the oil on the rear axle central casing (3)	p. 65						
Draining and changing the oil on two axles gear reducers (3)	p. 65						
Structure							
Cleaning dust out of the cab filter	p. 51						
Replacing the cab filter	p. 51						
Lubricating the hinge pins	p. 68						
Lubricating the boom's guide rail shoes	p. 68						
Checking the tightness of screws and bolts	–						
Checking wear on the boom's guide rail shoes	–						
Checking wear on flanges and hinge pins	–						
Electrical system							
Checking the battery fluid level	p. 57						
Checking the condition of fuses, diodes and relays	p. 57						
Checking the working order of controls, lighting and signalling	p. 57						
Checking the working order of indicator lights, indicators and controls	p. 57						
Checking the condition of electric connections	p. 57						

(1) Check wheel nut torque every 8 hours for the first 24 hours.
(2) First maintenance after 50 hours then according to the table.
(3) Replace the first time after 100 hrs, then according to the table.
(4) Or every 12 months.
(5) Or every 12 months.
(6) Frequency may vary in certain dusty environments.
(7) To be replaced after 250 hours if the fuel filter bowl is badly fouled.

https://www.pdfmanual4trucks.com/

Operator Cab

ROPS/FOPS Protection

The Bobcat telescopic handler has a ROPS/ FOPS operator cab as standard equipment to protect the operator from rollover and falling objects. Check with your dealer if the operator cab has been damaged.

ROPS/FOPS: Roll Over protective Structure per SAE J1040 and ISO 3471, and Falling Object Protective Structure per SAE J1043 and ISO 3449, Level I.

WARNING

Never modify the operator cab by welding, grinding, drilling holes or adding attachments unless instructed to do so by Bobcat. Changes to the cab can cause loss of operator protection from rollover and falling objects, and result in injury or death.

Removing dust/replacing the cab filter

Proceed as follows to remove dust:

1. Unscrew the 4 attachment screws and remove the assembly from the filter.
2. Unscrew the two attachment screws from both sides of the filter.

Figure 1

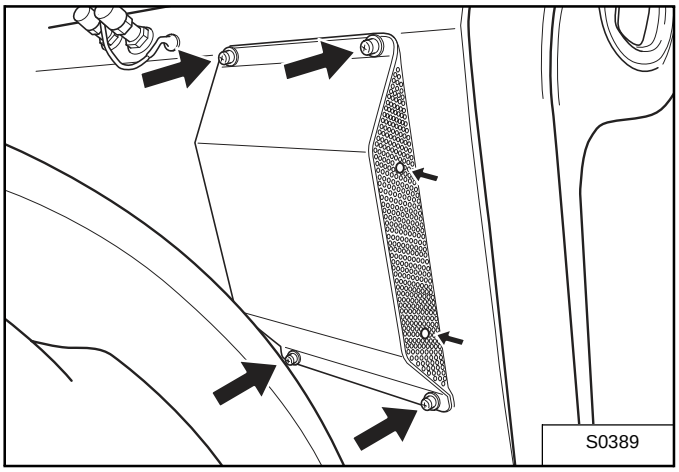

3. Remove the second screen and the filter from both sides.
4. Flush the dust from the filter with water.
5. Replace the filter, if necessary.

Engine cover

1. Release the engine cover latch and lift the engine cover to access the engine.

Figure 2

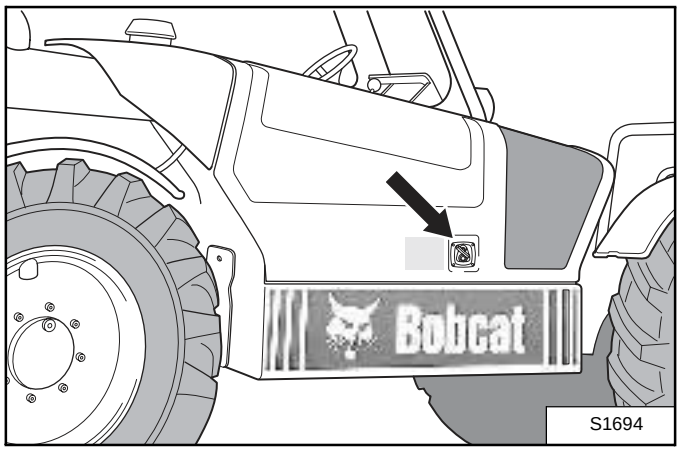

https://www.pdfmanual4trucks.com/

Air filter maintenance

See “Maintenance interval” on page 50 for the correct frequency of maintenance work.

Irrespective of the intervals in the “Maintenance interval” on page 50, the machine is provided with an indicator **[Figure 80]** to determine the condition of the air filter. When the piston in the indicator reaches the red zone, maintenance of the filter is required. Press the yellow button after the maintenance to reset the piston.

Figure 3

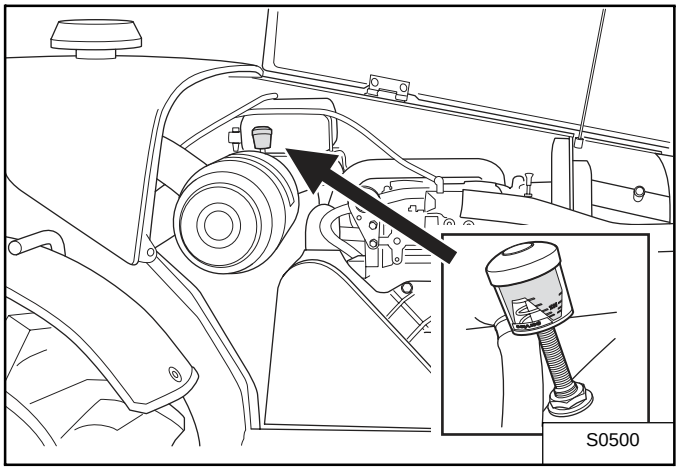

Cleaning the air filter’s main cartridge

1. Remove the cover from the air filter **[Figure 81]** and take out the main cartridge.

Figure 4

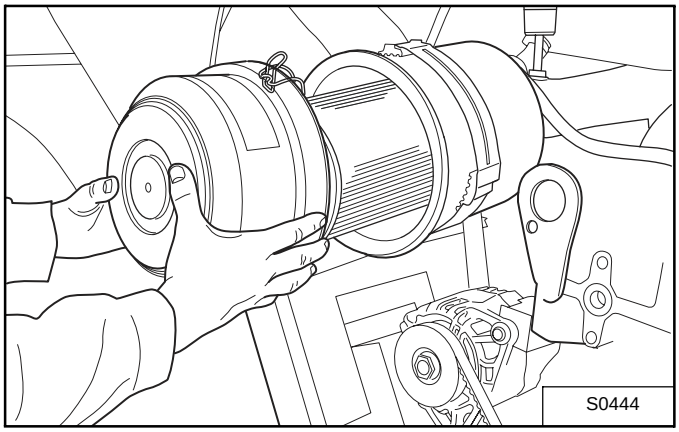

IMPORTANT

The filter element is fragile. In the event of accidental damage to the cartridge during this operation, it must be replaced.

2. Clean the cartridge by blowing compressed air from the inside to the outside of the cartridge **[Figure 83]**.

Figure 5

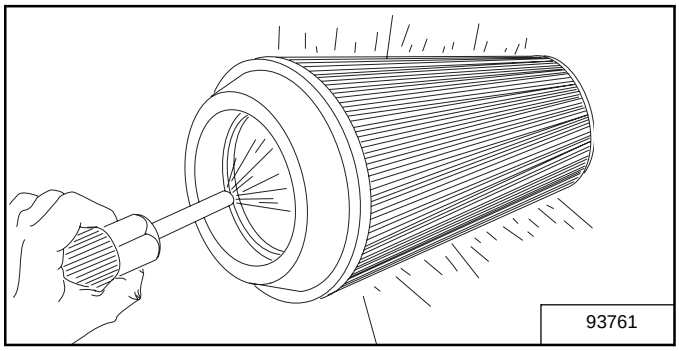

3. Replace the cartridge and the cover.

Replacing the air filter’s main cartridge

1. Remove the air filter cover **[Figure 81]**.
2. Remove the main cartridge **[Figure 81]**.
3. Change the old cartridge by a new one, including the cover.

Replacing the air filter’s safety cartridge

IMPORTANT

The interval of this operation is made to coincide with the replacement of the air filter main cartridge.

1. Remove the air filter cover **[Figure 81]**.
2. Remove the main cartridge **[Figure 81]**.
3. Remove the standby cartridge.

Figure 6

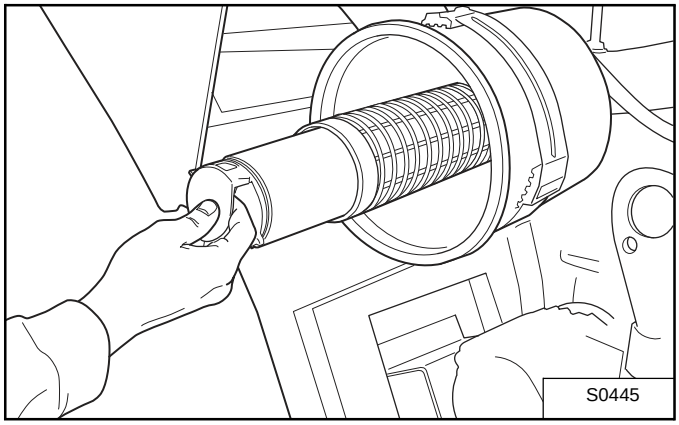

4. Replace the new cartridges and the cover.

https://www.pdfmanual4trucks.com/

Fuel system

Fuel Specifications

Use only high quality No.1 or No.2 diesel fuel.

The following table presents suggested blending guideline which should prevent fuel gelling under cold temperatures:

Temperature	No. 2	No. 1
Above +15°F (- 9°C)	100%	0%
Down to -20°F (-29°C)	50%	50%
Below -20°F (-29°C)	0%	100%

WARNING

Always clean up fuel or oil leaks. Keep fuel and oil away from sources of heat, flames, sparks and lighted cigarettes. Failure to use care around combustibles can cause explosion or fire which can result in injury or death.

Filling The Fuel Tank

Use a clean, approved safety container to add fuel of the correct specification. Only add fuel in an well ventilated area. Avoid open flames or sparks. Do not smoke when filling.

Replacing the fuel filter cartridge

See “Maintenance interval” on page 50 for the correct service interval for replacing the diesel fuel filter.

1. Unscrew the cartridge.

Figure 7

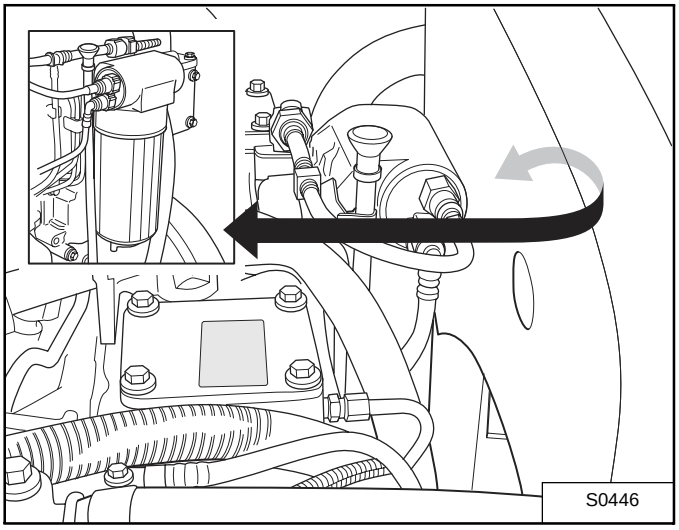

2. Collect the fuel which runs out.

3. Screw and tighten the new cartridge by hand.

https://www.pdfmanual4trucks.com/

Lubrication circuit

Checking and topping up engine oil

Check engine oil level every day before starting the engine.

1. Remove the gauge (with the yellow plug) to check the oil level. The level should be between the two reference marks **[Figure 85]**.

Figure 8

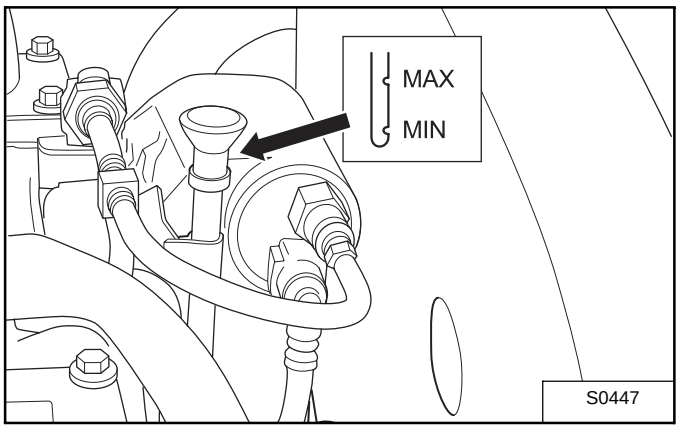

2. Top up if necessary. To top up, unscrew the plug on the upper valve cover **[Figure 86]**.

Figure 9

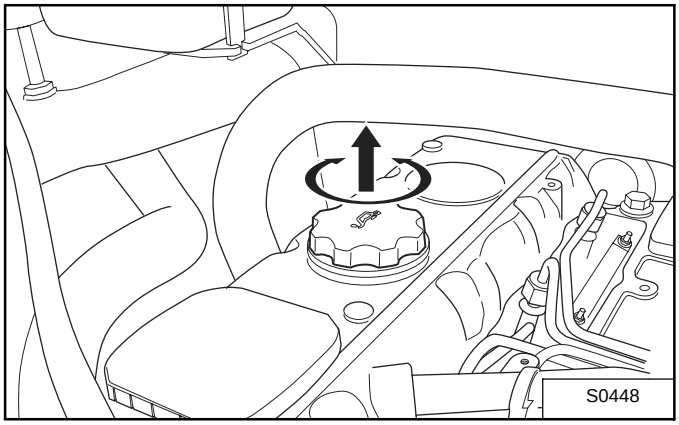

3. Check to see if the level is correct.

IMPORTANT

Use a good quality motor oil that meets the correct API CD Service Classification or better (“Oil Chart” on page 54).

Oil Chart

Figure 10

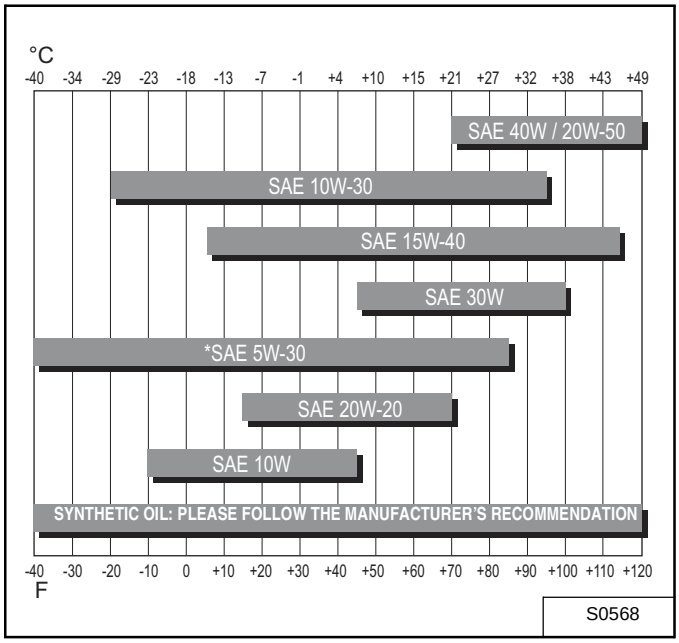

Draining and changing oil and filter

See “Maintenance interval” on page 50 for the service interval for replacing engine oil and filter.

Draining and changing the lubricating oil

Carry out this operation on flat ground and preferably when the engine is hot. The oil will flow better.

1. Remove the cover at the back of the engine compartment.
2. Guide the drain hose to the collecting container **[Figure 88]**.

Figure 11

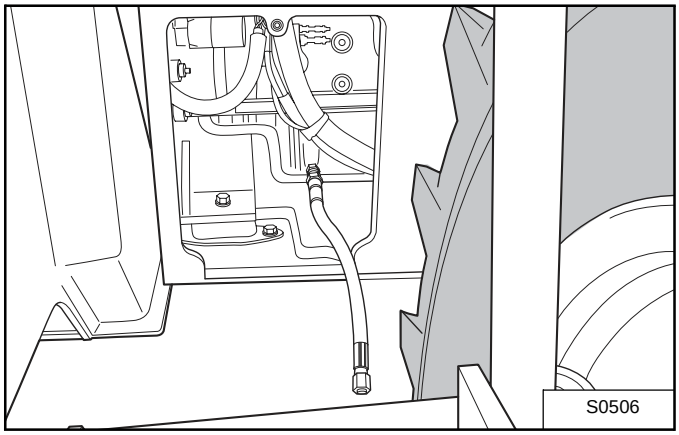

3. Unscrew the drain plug located at the end of the hose.
4. Collect the drained oil.
5. Screw the plug back onto the hose.

https://www.pdfmanual4trucks.com/

6. Put the hose back in its proper place.
7. Fill with new oil up to the correct level (see “Checking and topping up engine oil” on page 54).
8. Observe the level.
9. Start the engine and let it run at idle speed.
10. Wait until the oil pressure indicator light goes out.
11. Turn off the engine.
12. Check and add more oil if required.

WARNING

Do not start the engine without oil or let it run at idle speed if the oil pressure indicator light does not go out 5 seconds after starting.

Replacing the lubricating oil filter cartridge

IMPORTANT

The interval of this operation is made to coincide with the draining and changing of the lubricating oil.

See “Draining and changing the lubricating oil” on page 54.

Carry out this operation whilst draining the oil.

1. Unscrew the cartridge.

Figure 12

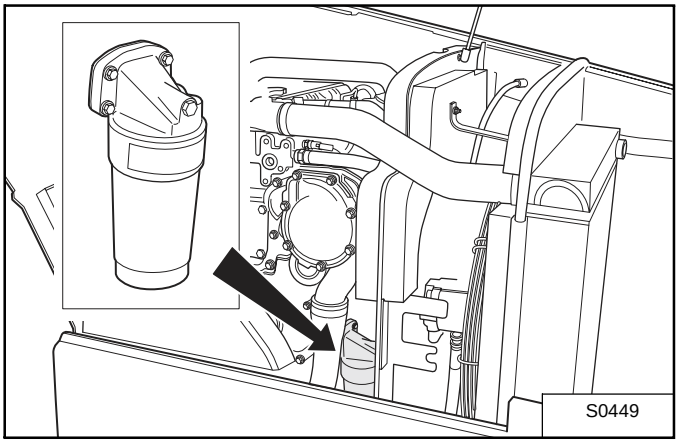

2. Collect the oil which runs out.
3. Cover the new cartridge's seal with new oil.
4. Screw and tighten the new cartridge by hand.

Engine Cooling System

Check the cooling system every day to prevent overheating, loss of performance or engine damage.

Checking the cooling fluid level

Carry out this operation on flat ground.

1. Find the MAX-MIN mark on the surge tank.

Figure 13

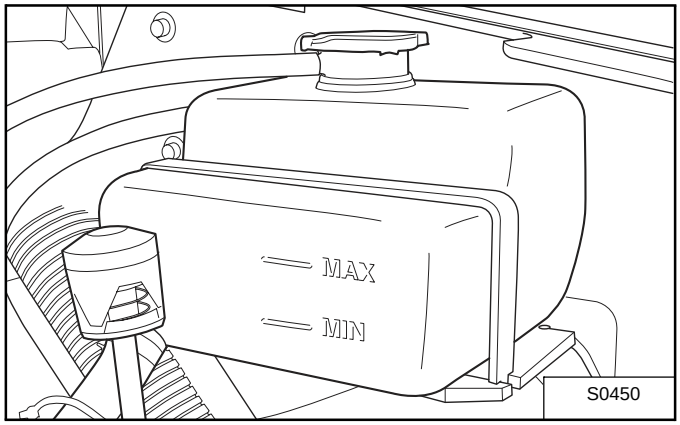

2. The fluid level must be between the two reference marks at all times.

WARNING

If fluid must be added, never open the surge tank plug when the cooling fluid is hotter than 20°C.

https://www.pdfmanual4trucks.com/

Checking the cooling fluid

1. Take a sample of the fluid.
2. Check its concentration.
   The factory concentration is 50%, protection up to -30°C.
3. Increase the proportions of antifreeze as required.

WARNING

AVOID ENGINE DAMAGE

Always use the correct ratio of water to antifreeze.

Too much antifreeze reduces cooling system efficiency and may cause serious premature engine damage.

Too little antifreeze reduces the additives which protect the internal engine components, reduces the boiling point and freeze protection of the system.

Always add a premixed solution. Adding full strength concentrated coolant can cause serious premature engine damage.

Adjusting The Alternator Belt

This tension is measured on the strand between the crankshaft and the alternator.

Figure 14

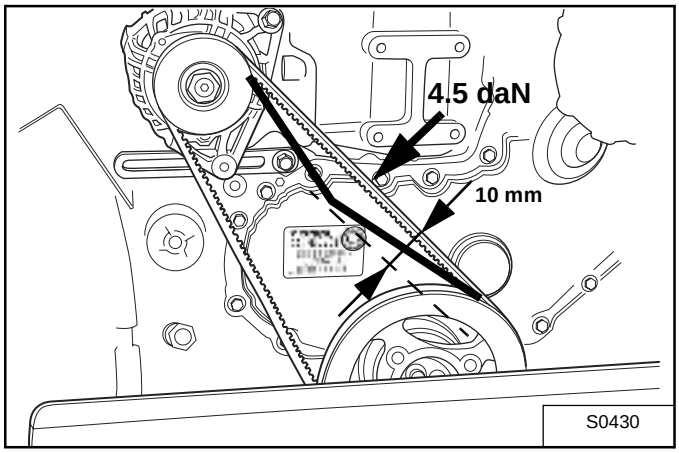

Its correct value is 35.5 daN, i.e. a 10-mm deflection measured in the centre of the strand when a force of 4.5 daN is applied to this point (the equivalent of a moderate effort applied with the thumb).

Electrical System

Description

The telescopic handler has a 12 volt, negative ground alternator charging system.

The electrical system is protected by fuses located in the cab on the right hand side console and those located in the engine compartment. The fuses will protect the electrical system when there is an electrical overload. The reason for the overload must be found before starting the engine again.

Checking the battery fluid level

Figure 15

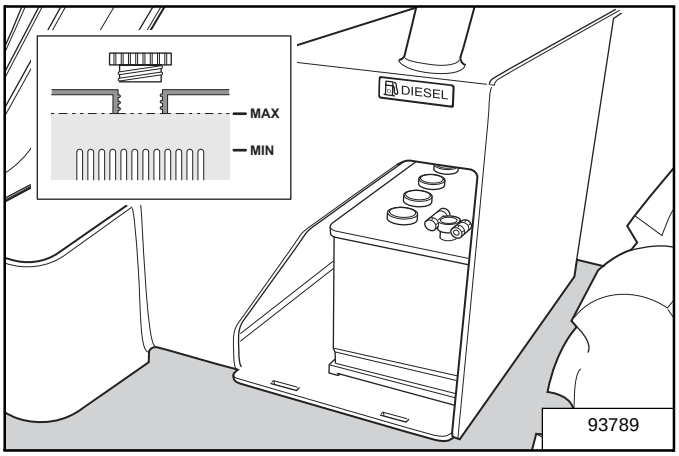

1. Use the cab key to open the battery compartment.
2. Unscrew and remove the caps from the battery cells.
3. Use a small mirror and an electric torch, or remove the battery from the compartment to check the level of the liquid.
4. Top up if necessary by adding distilled water up to the lower edge of the inner tube (see detail on **[Figure 92]**).

IMPORTANT

Use only distilled water to top up the fluid level.

The level of liquid should not exceed the top of the internal elements.

WARNING

The battery contains acid.

Checking the condition of fuses, diodes and relays

The purpose of this operation is to keep the machine properly maintained and to prevent possible damage or accidents. **See "Fuses, diodes and relay drawing" on page 58.**

WARNING

Replace any faulty fuse, diode or relay immediately even if the function that it protects does not seem important. This applies even over and above the recommended frequency.

The fuse box is located beside the seat, under the cover indicated on **[Figure 93]**.

Figure 16

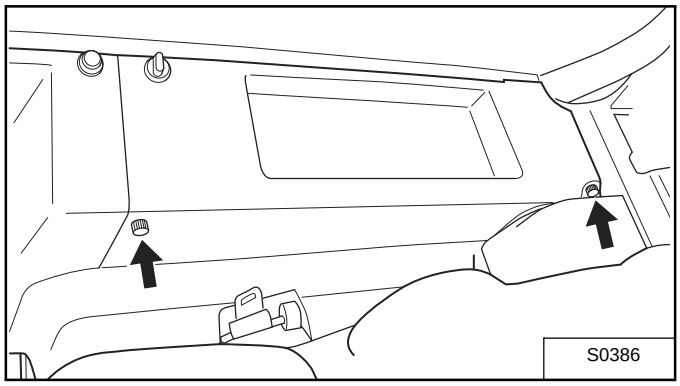

The two fuses and relay for engine preheating and starting are located in the engine compartment, as indicated in the lower part of **[Figure 94]**.

Checking the working order of controls, lighting and signalling

The purpose of this operation is to keep the machine properly maintained and to prevent possible damage or accidents.

WARNING

Replace or repair immediately any faulty component even if its function does not seem "important". This applies even over and above the recommended frequency.

Checking the condition of electric connections

The purpose of this operation is to keep the machine properly maintained and to prevent possible damage or accidents.

https://www.pdfmanual4trucks.com/

Fuses, diodes and relay drawing

Figure 17

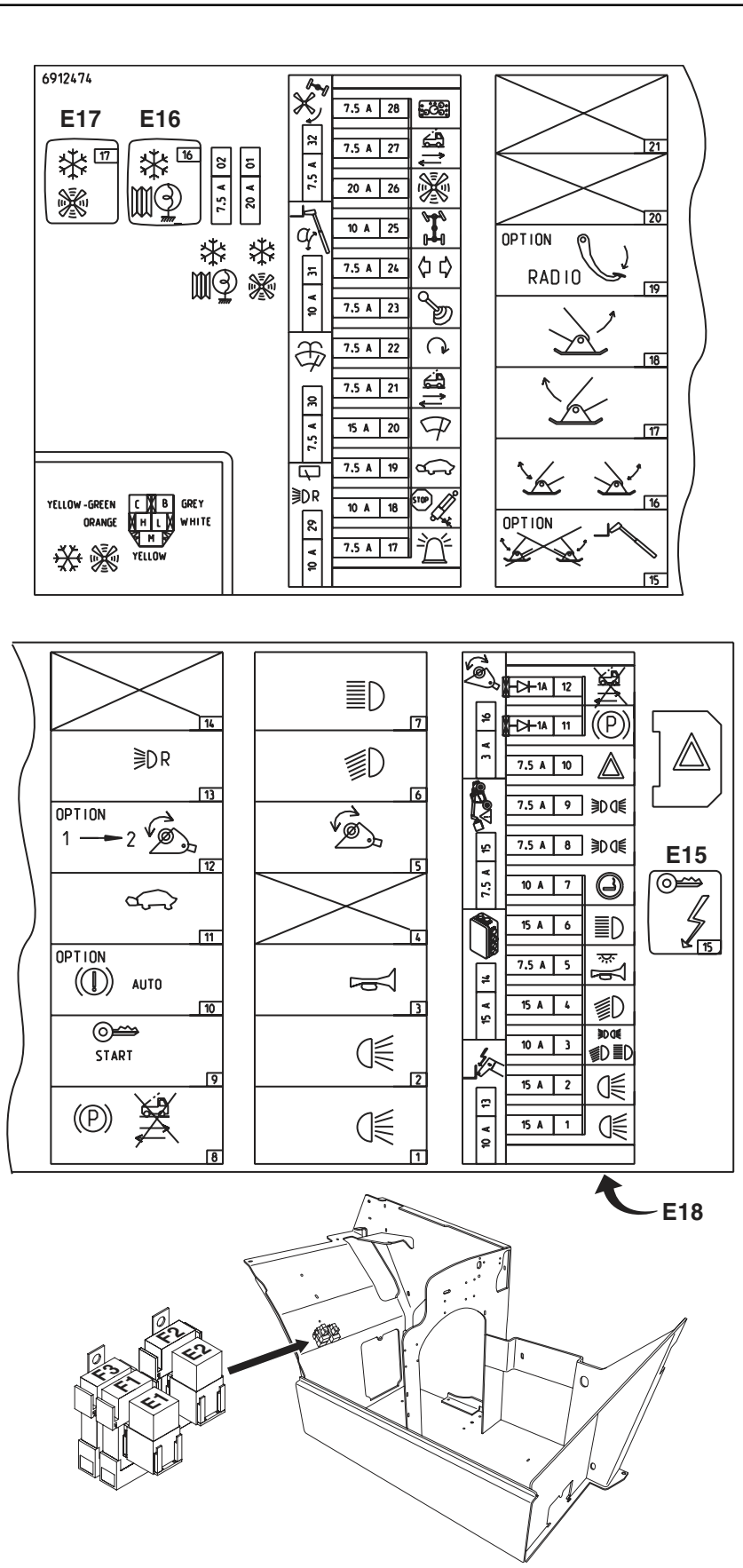

S0401

Fuses and diodes

[Figure 94]

Reference	Gauge	Function protected
1	**15 A**	Front work lights
2	**15 A**	Rear work lights
3	**10 A**	Lighting and full-beam control
4	**15 A**	Headlamps
5	**7.5 A**	Road alarm and ceiling light
6	**15 A**	Full-beam
7	**10 A**	Cigarette lighter
8	**7.5 A**	Left side-lights
9	**7.5 A**	Right side-lights
10	**7.5 A**	Hazard warning lights
11	**DIODE 1 A**	Parking brake
12	**DIODE 1 A**	Advance safety if parking brake tight
13	**10 A**	Second hydraulic function on boom (option)
14	**15 A**	Joystick control box
15	**7.5 A**	Stability indicator and fuel pump
16	**3 A**	Hydraulic function on boom
17	**7.5 A**	Rotating beacon (option)
18	**10 A**	Brake lights, rear hydraulic options, stop lights
19	**7.5 A**	Slow travel speed
20	**15 A**	Front wiper
21	**7.5 A**	Transmission control box supply
22	**7.5 A**	Engine cutoff
23	**7.5 A**	Joystick supply
24	**7.5 A**	Direction indicators
25	**10 A**	Steering mode control
26	**20 A**	Heating fan
27	**7.5 A**	Direction of travel
28	**7.5 A**	Instrument panel supply
29	**10 A**	Reversing light and roof windscreen wiper (option)
30	**7.5 A**	Rear windscreen wiper: Rear windscreen and roof washer
31	**10 A**	Boom angle measurement
32	**7.5 A**	Fan direction reversing (option) correction
01	**20 A**	Air conditioning fan (option)
02	**7.5 A**	Air conditioning compressor (option)
F01	**50 A**	permanent line (+)
F02	**40 A**	Permanent line (+) by contact key
F03	**70 A**	Glow plugs

Relays

[Figure 94]

Reference	Function performed
1	Front work lights
2	Rear work lights
3	Road horn
4	Blue lights (option)
5	Hydraulic function on boom
6	Headlamps
7	Full-beam
8	Advance safety if parking brake tight
9	Starting safety if transmission is in gear
10	Not used
11	Slow travel speed
12	Second hydraulic function on boom
13	Backup lights / backup alarm
14	Not used
15	Prevent raising of the stabilisers
16	Stabilisers
17	Raise left stabiliser
18	Raise right stabiliser
19	Radio control for acceleration of the engine
20	Not used
21	Not used
E01	Glowplugs
E02	Starter control
E15	12V power relay after contact
E16	Air conditioning compressor (option)
E17	Air conditioning fan (option)
E18	Center for the directional signals (located beneath the fuse box)

https://www.pdfmanual4trucks.com/

Hydraulic/Hydrostatic System

Checking the oil level

For each preventive maintenance operation on the hydraulic/hydrostatic system, make sure that:

- each operation is performed on flat ground,
- both stabilisers are fully raised (T35120SL only),
- the boom is fully lowered,
- the boom is fully retracted (telescoping),
- the hook-up is tilted fully backwards.

IMPORTANT

Use only recommended fluid in the hydraulic/hydrostatic system.

See “Lubricants, fuel and fluids” on page IV.

The level indicator is located on the front side of the hydraulic tank. When the oil is at ambiant temperature and all cylinders are retracted, the oil level must be between the two reference marks **[Figure 95]**.

Figure 18

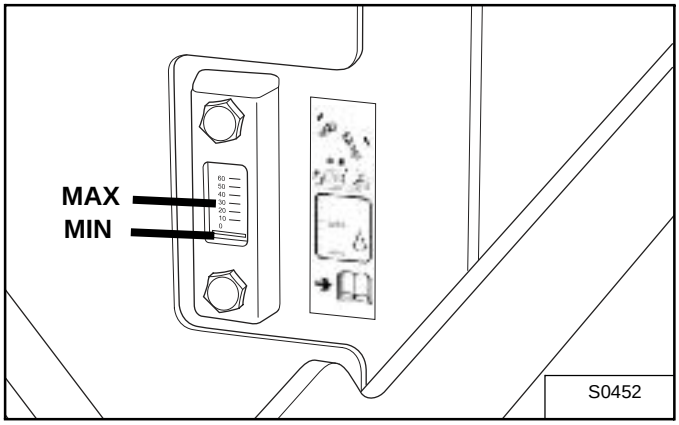

WARNING

The oil level should not exceed the reference marks.

Topping up the oil

1. Unscrew the plug (with vent valve on top) by hand **[Figure 96]**.

Figure 19

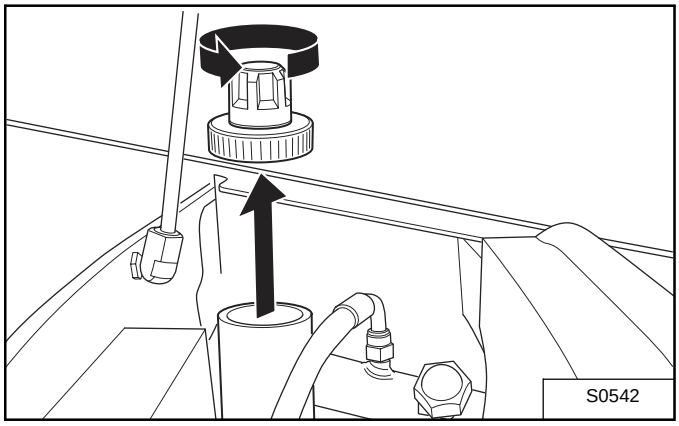

2. Top up the oil.
3. Screw the plug back in by hand.

WARNING

Be careful to keep impurities from getting into the hydraulic/hydrostatic system.

Draining and changing the hydraulic oil

See “Maintenance interval” on page 50 for the service interval for replacing the oil. Also replace the oil if it becomes contaminated or after a major repair.

1. The drain plug is located at the front, on the lower side of the tank.

Figure 20

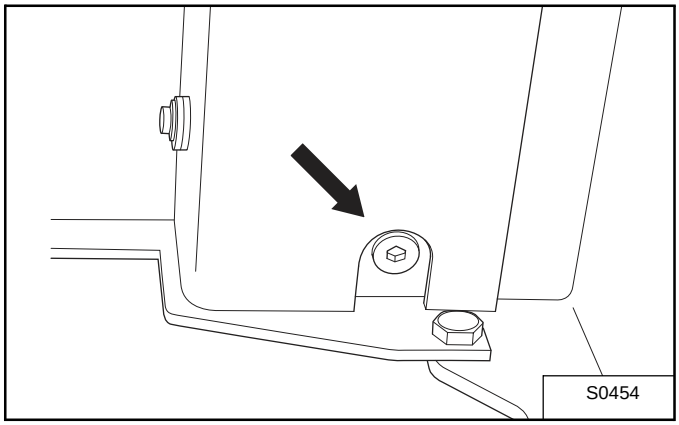

2. Open the filler plug.
3. Open the drain plug and collect the oil.
4. Inspect the seal and replace if necessary.
5. Close drain plug.

https://www.pdfmanual4trucks.com/

6. Fill with oil up to the maximum level (see “Checking the oil level” on page 60).
7. Close the filler plug.

WARNING

Only fill with oil that is:

- **recommended**
- **clean and unpolluted**

Replacing the hydraulic oil tank vent valve

1. Unscrew the vent valve **[Figure 98]**.

Figure 21

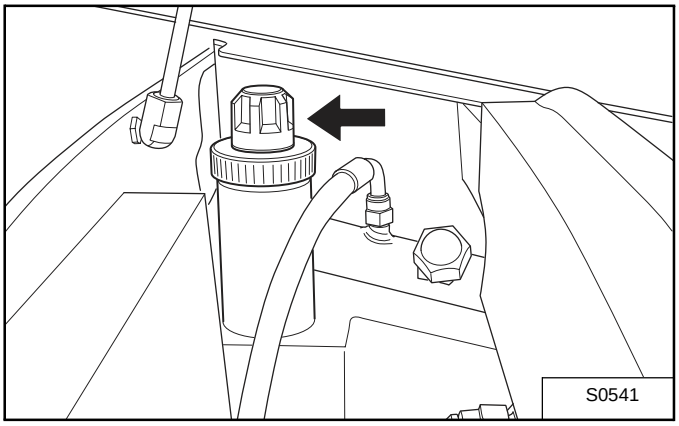

2. Screw in the new vent valve by hand.

Checking the tightness of pipes and hydraulic connections

The purpose of this operation is to keep the machine properly maintained and to prevent possible damage or accidents.

WARNING

Immediately repair any leakages (or deterioration) that may occur including on parts which do not seem important. This applies even over and above the recommended frequency.

Replacing the hydraulic filter

See “Maintenance interval” on page 50 for the correct service interval for replacing the hydraulic filter.

1. Unscrew the plug by hand **[Figure 99]**.

Figure 22

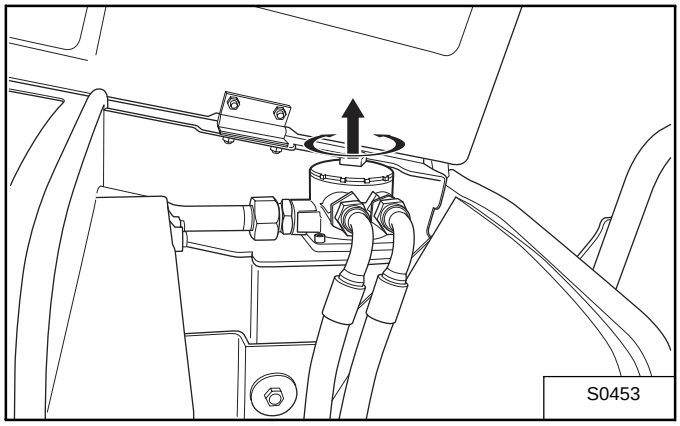

2. Remove the cartridge from the filter **[Figure 100]**.

Figure 23

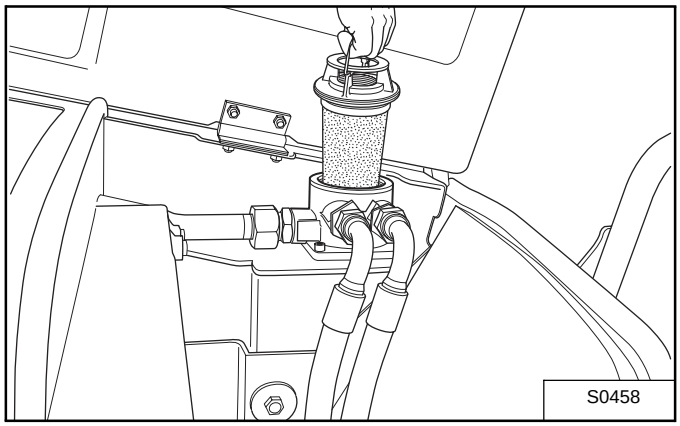

WARNING

Be careful to keep impurities from getting into the hydraulic/hydrostatic system.

3. Put the new cartridge in.
4. Top up the oil if necessary.
5. Inspect the seal and replace if necessary.
6. Replace the plug.

https://www.pdfmanual4trucks.com/

Mechanical transmission

Checking the condition of tyres

The purpose of this operation is to prevent any incident or accident that may occur during use of the machine and that could cause the partial or total destruction of the tyres.

Checking the tyre pressure

Carry out this check on cold tyres.

Make sure that the pressure for the 4 tyres is identical:

Brand	Dimensions	Pression (bar)
DUNLOP (standard)	400/70 - 20 T37 150B	4.00 bar
TITAN (option)	400/70 - 20 150B	4.00 bar
DUNLOP (option)	400/80 - 24 T37 156B	4.25 bar
DUNLOP (option)	405/70 - 20 SPT9	5.50 bar
BFGOODRICH (option)	400/70 - 20	4.10 bar

Checking the tightness of wheel nuts

Tightening torque: 30 daNm

Checking the vent valves cleanliness on both axles

1. These vent valves must be clean, without soil, cement or any other obstacle that hinders their operation.
2. On the front axle: 1 vent valve **[Figure 101]**.

Figure 24

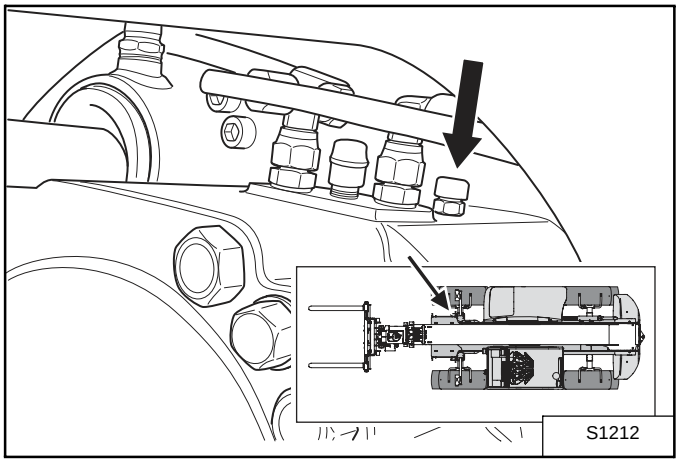

3. On the rear axle: 1 vent valve **[Figure 102]**.

Figure 25

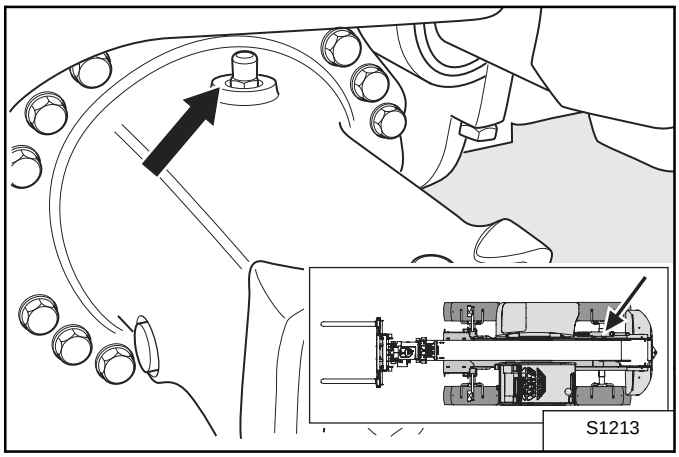

WARNING

If the vent valves on the front axle are stopped or blocked, this can cause the brakes to fail.

Lubricating the rear axle rolling element bearings

1. See “Lubricating the machine” on page 68.

Lubricating the axle steering pivots

1. See “Lubricating the machine” on page 68.

Checking the front axle central casing oil level

Carry out this operation on flat ground.

1. On the front axle: 2 oil level plugs **[Figure 103]**.

Figure 26

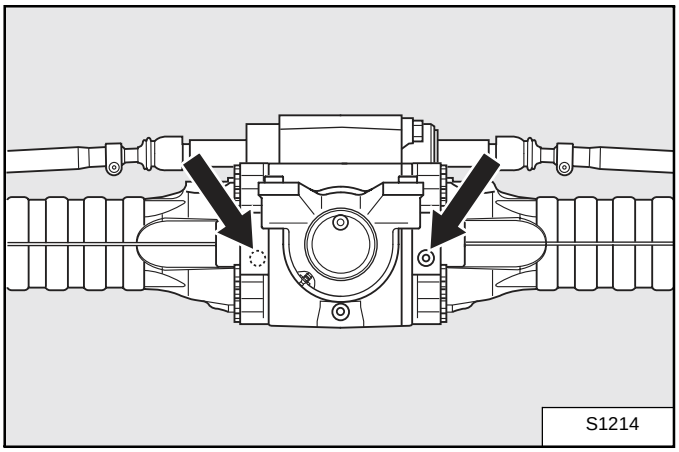

- **[Figure 104]** shows the front axle viewed from the front side.

Figure 27

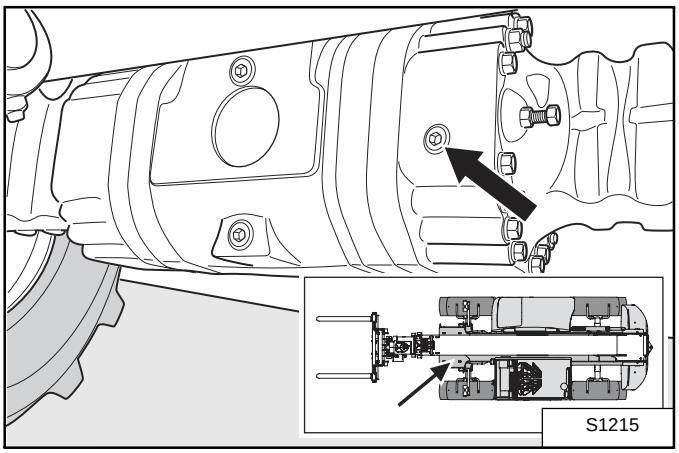

- **[Figure 105]** shows the front axle viewed from the back side.

Figure 28

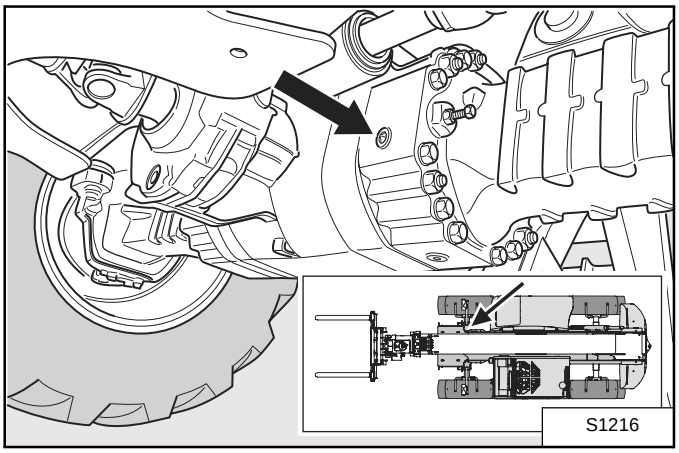

2. Unscrew the level plug **[Figure 104]** and **[Figure 105]**.
3. The oil level must be level with the opening.
4. Add oil if necessary through the oil filling plug **[Figure 106]**.

Figure 29

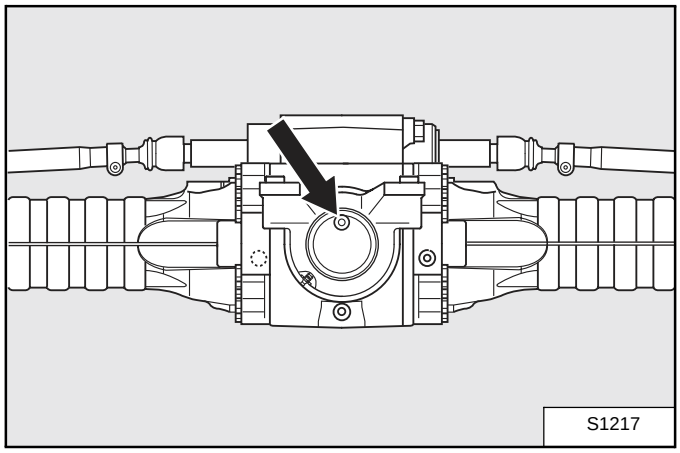

5. Inspect all seals and replace if necessary.
6. Screw back all plugs.

Checking the front axle reducer box oil level

Carry out this operation on flat ground.

1. On the reducer box: 1 oil level plug **[Figure 108]**.

Figure 30

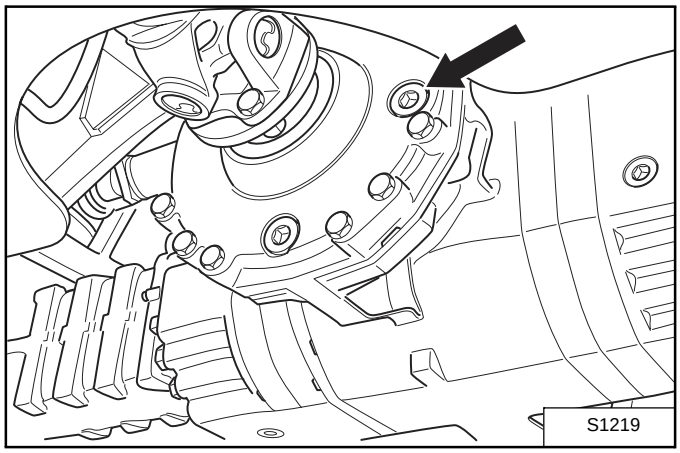

2. Unscrew the level plug **[Figure 108]**.
3. The oil level must be level with the opening.
4. Add oil if necessary
5. Inspect the seal and replace if necessary.
6. Screw back the plug.

https://www.pdfmanual4trucks.com/

Checking the rear axle central casing oil level

Carry out this operation on flat ground.

1. On the back axle: 1 oil level plug **[Figure 108]**.

Figure 31

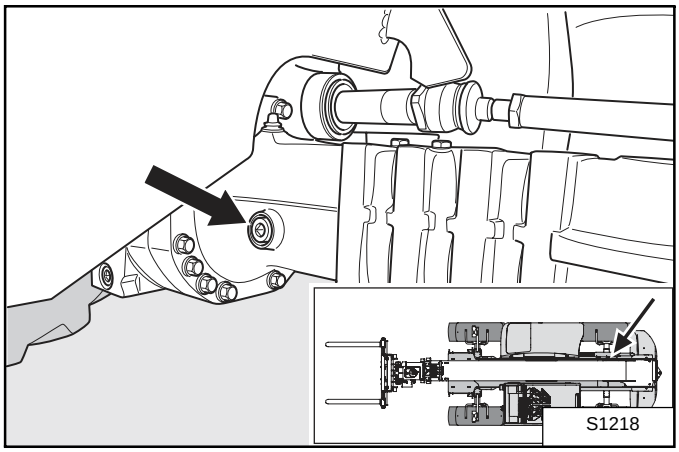

2. Unscrew the level plug **[Figure 108]**.
3. The oil level must be level with the opening.
4. Add oil if necessary
5. Inspect the seal and replace if necessary.
6. Screw back the plug.

Checking the gear reducer oil level on both axles

Carry out this operation on flat ground.

1. Direct the gear reducer so that the plug is horizontal with the axis of the gear reducer.

Figure 32

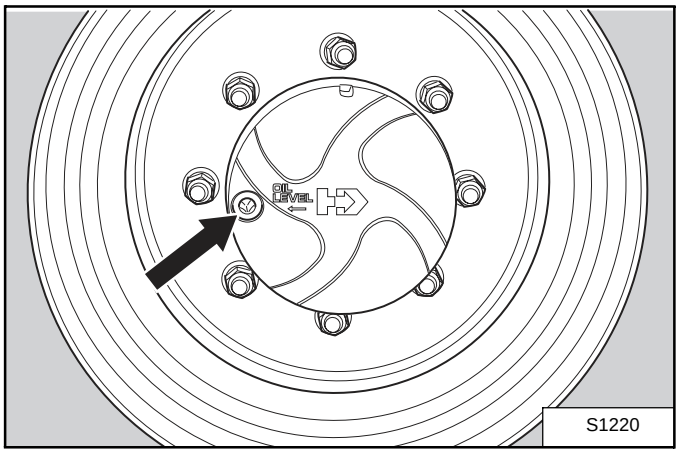

2. Unscrew the plug.
3. The oil level must be level with the opening.
4. Add oil if necessary.
5. Inspect the seal and replace if necessary.
6. Screw back the plug.

Draining and changing the front axle central casing oil

Carry out this operation on flat ground.

1. On the front axle: 3 oil draining plugs **[Figure 110]**.

Figure 33

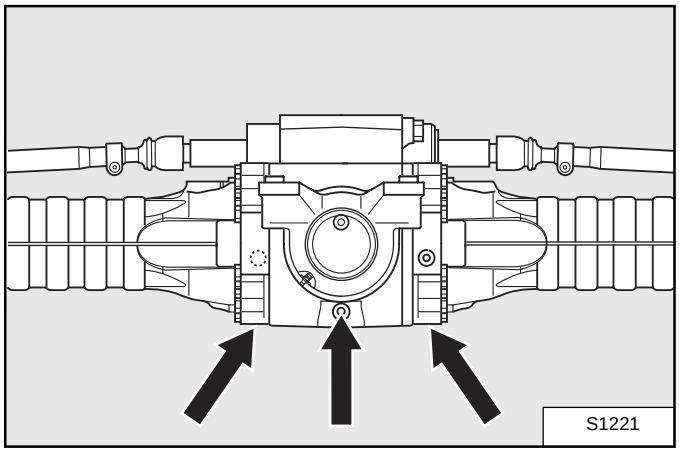

2. Unscrew each drain plug **[Figure 111]**.

Figure 34

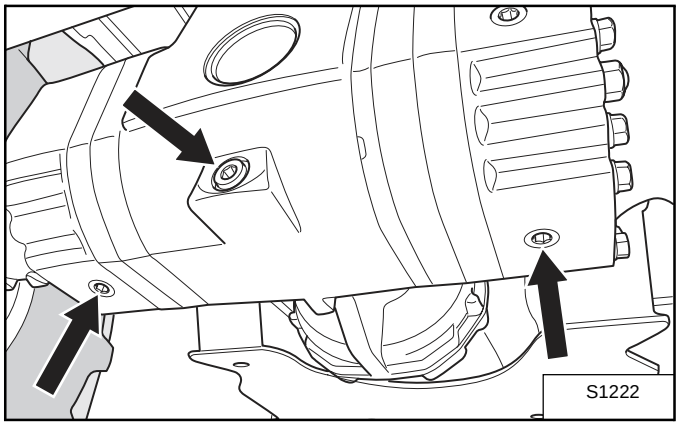

3. Collect the oil.
4. Inspect all seals and replace if necessary.
5. Screw back all plugs.
6. Fill with oil through the oil filling plug **[Figure 112]**.

Figure 35

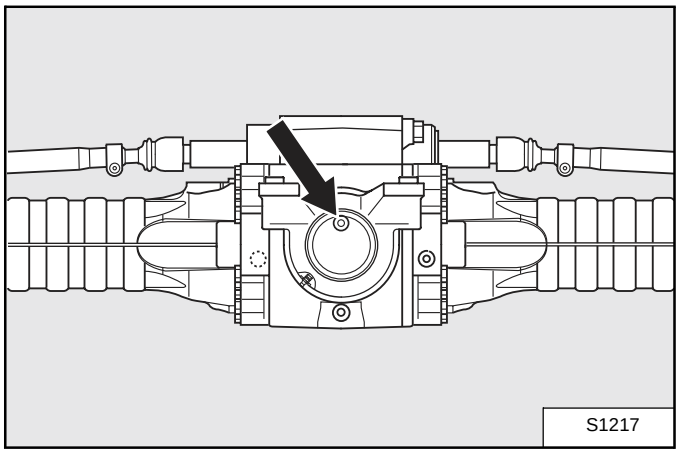

https://www.pdfmanual4trucks.com/

Draining and changing the front axle reducer box oil

Carry out this operation on flat ground.

1. Unscrew the drain plug.

Figure 36

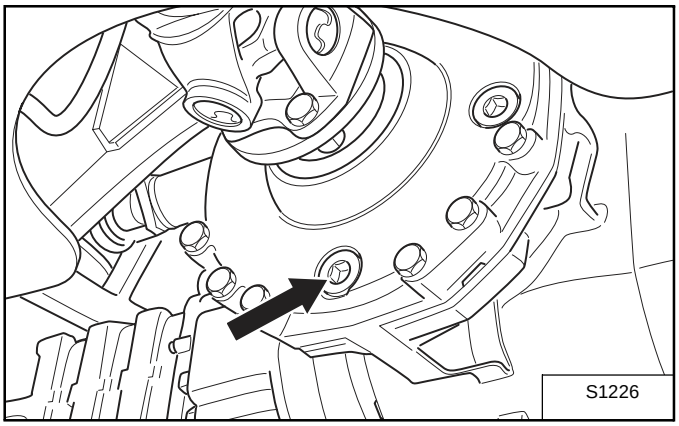

2. Collect the oil.
3. Inspect the seal and replace if necessary.
4. Screw back the plug.
5. Fill with oil through the oil check orifice.

Draining and changing the rear axle central casing oil

Carry out this operation on flat ground.

1. Unscrew the drain plug.

Figure 37

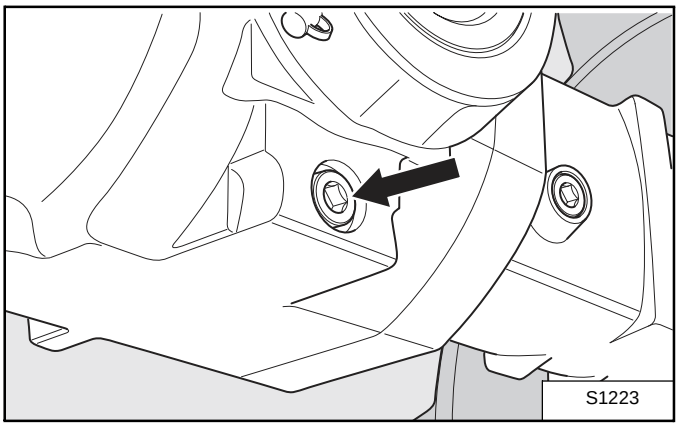

2. Collect the oil.
3. Inspect the seal and replace if necessary.
4. Screw back the plug.
5. Fill with oil through the oil check orifice.

Draining and changing the gear reducer oil on both axles

Carry out this operation on flat ground.

1. Orient the gear reducer so that the plug is in a low position.

Figure 38

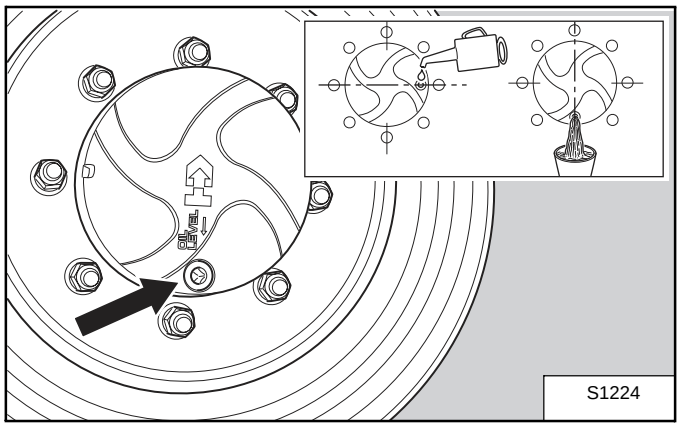

2. Unscrew the plug.
3. Collect the oil.
4. Orient the gear reducer so that the plug is horizontal with the axis of the gear reducer.
5. Fill with oil.
6. Inspect the seal and replace if necessary.
7. Screw back the plug.

https://www.pdfmanual4trucks.com/

Structure

Checking the tension of the telescoping chains

1. Position the arms against the stops.

Return chains:

2. Unscrew the locknuts (1) and (2) **[Figure 116]**.
3. Check the tightness of the tension screw at the bottom of the boom (3) **[Figure 116]**. The correct torque is 30 Nm.
4. Progressively tighten each screw (3) and (4) **[Figure 116]** making sure to keep the tensioner perfectly parallel to the belt of the element.

Figure 39

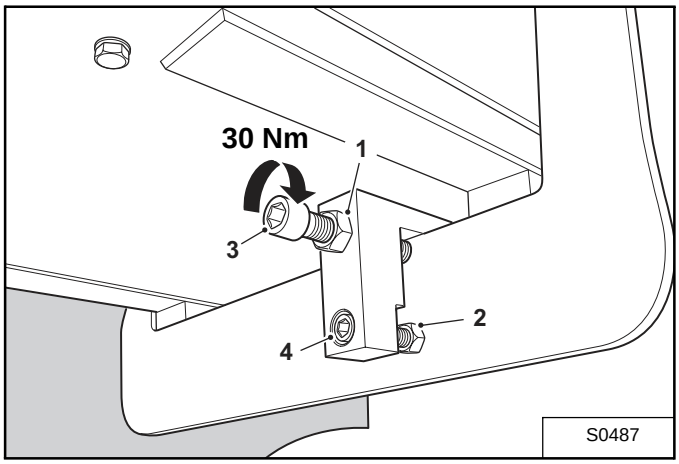

5. Re-tighten the lock-nuts.

Extension chains

6. Unscrew the locknuts.
7. Check the tightness of the tension screw on top of the boom **[Figure 117]**. The correct torque is 18 Nm. **Each bolt is gradually tightened.**

Figure 40

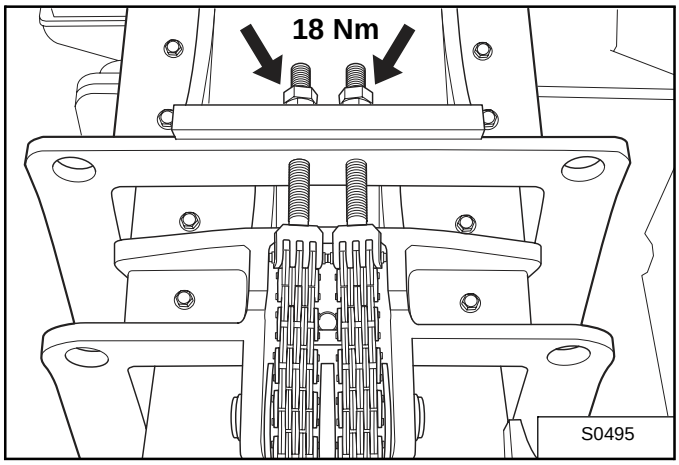

8. Extend and retract the telescope equipment after each adjustment.
9. Re-tighten the lock-nuts.

IMPORTANT

The nuts should screw freely onto the tensioners.

Screws and nuts must be lubricated. Lubricate as needed.

We recommend you contact your Bobcat dealer when adjusting or removing chain links.

https://www.pdfmanual4trucks.com/

Checking the wear of telescoping chains

1. Measure the extender chains (external).
2. Take the measurement when the boom is completely deployed (telescoped) in the horizontal position.
3. Measure the length L on 11 pins and the exterior of the link pin using a slide caliper.

Figure 41

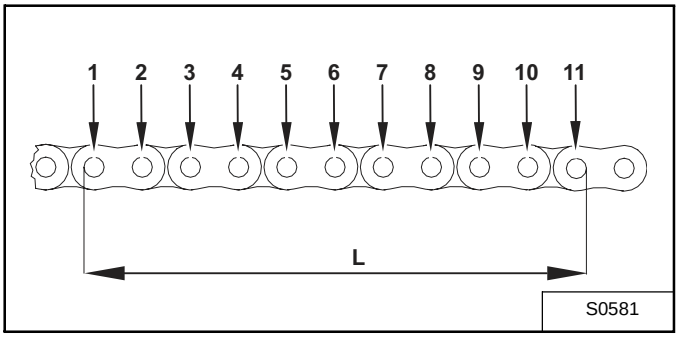

WARNING

The measurement must be taken as shown in the diagram, at the outside of the pins of the chain.

4. The wear is considered normal as long as L is less than 169.50 mm.
5. If L is equal to or more than that value, the chains, pins, rollers, tension rods and attachment screws MUST be replaced.

IMPORTANT

- We recommend you contact your Bobcat dealer when replacing chains, rollers and axes.
- Each time you measure L, write down the date it is checked and the number of hours on the machine.

https://www.pdfmanual4trucks.com/

Lubricating the machine

Lubricate the telescopic handler as specified in “Maintenance interval” on page 50 for the best performance of the machine.

Record the operating hours each time you lubricate the telescopic handler.

Always use a good quality lithium-based, multi-purpose grease. Apply sufficiant grease when lubricating.

Lubrication plan T35120SL (with stabilisers) and T35120L
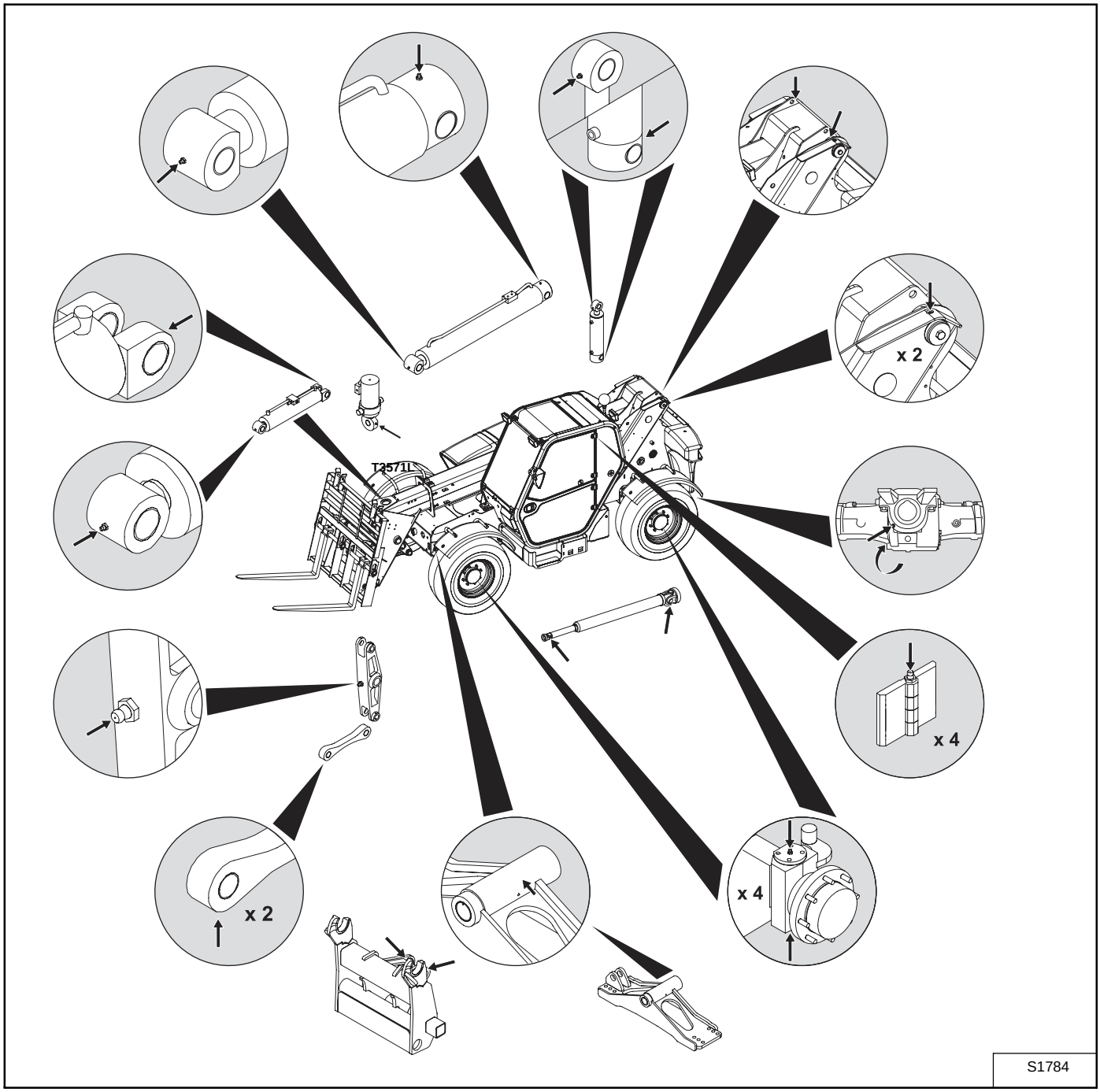
Figure 42