https://truckmanualshub.com/

CANTER (EURO 4)

For Colombia

Pub.No.00ELT0085, MARCH 2015

Shop Manual

4M5 diesel engine

All for you

FUSO

MITSUBISHI FUSO TRUCK & BUS CORPORATION

https://truckmanualshub.com/

CANTER

(EURO 4)

For Colombia

Shop Manual

4M5 diesel engine

FOREWORD

This Shop Manual is published for the information and guidance of personnel responsible for maintenance of Mitsubishi Fuso CANTER series truck, and includes procedures for adjustment and maintenance services.
We earnestly look forward to seeing that this manual is made full use of in order to perform correct services with no wastage.

For more details, please consult your nearest authorized Mitsubishi Fuso dealer or distributors.
Kindly note that the specifications and maintenance service figures are subject to change without prior notice in line with improvement which will be effected from time to time in the future.

MARCH 2015

Applicable models (engine)
4M50T5

GROUP INDEX

GENERAL 00
ENGINE 11
LUBRICATION 12
FUEL AND ENGINE CONTROL 13
ENGINE CONTROL SYSTEM 13E
COOLING 14
INTAKE AND EXHAUST 15
TURBOCHARGER CONTROL SYSTEM 15E
EMISSION CONTROL 17
EXHAUST GAS RECIRCULATION SYSTEM AND DIESEL PARTICULATE FILTER 17E

©2015 Mitsubishi Fuso Truck & Bus Corporation Printed in Japan

https://truckmanualshub.com/

This Shop Manual contains the information classified into the following groups.
If any system or equipment has two or more variations with significantly different construction, the variations are handled as different groups. These groups are identified by different alphabets preceded by the same number.

1. ENGINE volume (Pub.No. 00ELT0085)

Group No.	Group subject
00	GENERAL
11	ENGINE
12	LUBRICATION
13	FUEL AND ENGINE CONTROL
13E	ENGINE CONTROL SYSTEM
14	COOLING
15	INTAKE AND EXHAUST
15E	TURBOCHARGER CONTROL SYSTEM
17	EMISSION CONTROL
17E	EXHAUST GAS RECIRCULATION SYSTEM AND DIESEL PARTICULATE FILTER

2. CHASSIS volume (Pub.No. 00ELT0086)

Group No.	Group subject
00	GENERAL
21	CLUTCH
22	MANUAL TRANSMISSION
25	PROPELLER SHAFT
26	FRONT AXLE
27	REAR AXLE
31	WHEEL, TIRE
33	FRONT SUSPENSION
34	REAR SUSPENSION
35	BRAKE
36	PARKING BRAKE
37	STEERING
41	BUMPER AND FRAME
42	CAB MOUNTING, TILT
43	DOOR
51	EXTERIOR
52	INTERIOR
55	HEATER, VENTILATION

3. ELECTRICAL volume (Pub.No. 00ELT0087)

Group No.	Group subject
54	ELECTRICAL

https://truckmanualshub.com/

GROUP 00 GENERAL

VEHICLE MODEL CODING SYSTEM 00-2

EQUIPMENT TYPE CODES LIST 00-3

POWER TRAIN TABLE 00-4

HOW TO READ THIS MANUAL 00-6

CHASSIS NUMBER, ENGINE NUMBER AND
VEHICLE IDENTIFICATION NUMBER 00-14

PRECAUTIONS FOR MAINTENANCE OPERATION
1. General Precautions 00-16
2. Handling of Battery 00-19
3. Handling of Sensors, Relays and Electronic Control Units 00-19
4. Handling Precautions for Electric Circuits 00-20
5. Service Precautions for Alternators 00-23
6. Intermittent Faults 00-24
7. Precautions for Arc Welding 00-25
8. Precautions When Repainting 00-25

JACKING UP THE VEHICLE 00-26

DIAGNOSIS CODES
1. Diagnosis Codes 00-28
2. Access and Clearing of Stored Diagnosis Code 00-28

TABLE OF STANDARD TIGHTENING TORQUES
1. Tightening Torques 00-32
2. Table of Standard Tightening Torque 00-32

https://truckmanualshub.com/

VEHICLE MODEL CODING SYSTEM

① ② ③ ④ ⑤ ⑥ ⑦ ⑧ ⑨ ⑩ ⑪

F E 8 5 D E □ □ □ □ □

1	Basic vehicle type	F	Cab-over engine truck
2	Load capacity, drive system	E	2 ton class and over, 4 × 2
3	Cab type	8	Wide cab
4	Vehicle variations, Suspension	5	Rigid axle Light duty vehicle (G.V.M. 7000 kg or more)
5	Engine	D	4M50T
6	Wheelbase	E	3350 mm
		G	3850 mm
		H	4710 mm
7	Chassis arrangement for use	None	Standard use
		Z	Wide frame
	Rear tire arrangement, Payload	6	Rear double Payload 3000 kg to 4000 kg
8	Vehicle specification	S	With turbocharger
9	Steering position	L	Left-hand drive vehicle

https://truckmanualshub.com/

Component	Name plate marking						Code description
Engine							
4M50T5	4	M	5	0	T	5	
							Power version number Turbocharged Order of development within same series Order of development among different series Diesel engine No. of cylinders (4)
Clutch							
C5W33	C	5	W	33			
							Disc OD Facing material (W: Woven) Load capacity (in tonnes) of main model Initial letter of the clutch
Transmission							
M035S6	M	035	S	6			
							Forward speeds Type of mesh (S: Synchromesh) Load capacity (in tonnes) of main model Initial letter of the transmission
Propeller shaft							
P3	P	3					
							Load capacity (in tonnes) of main model Initial letter of the propeller shaft
Front axle							
F350T	F	350	T				
							Vehicle type (T: Truck) Load capacity of main model Initial letter of the front axle
Rear axle							
R035T	R	03	5	T			
							Vehicle type (T: Truck) Order of development within same series Load capacity (in tonnes) of main model Initial letter of the rear axle
Reduction and differential							
D035H	D	03	5	H			
							Tooth profile (H: Hypoid gear) Order of development within same series Load capacity (in tonnes) of main model Initial letter of the reduction & differential

POWER TRAIN TABLE

https://truckmanualshub.com/

Vehicle model	Engine	Clutch	Transmission	Propeller shaft	Rear axle	Reduction & Differential
FE85DE6SLGP	4M50T5	C5W33	M036S6	P3	R035T	D035H
FE85DG6SLGP	4M50T5	C5W33	M036S6	P3	R035T	D035H
FE85DHZSLGP	4M50T5	C5W33	M036S6	P3	R035T	D035H

https://truckmanualshub.com/

M E M O

https://truckmanualshub.com/

HOW TO READ THIS MANUAL

This manual consists of the following parts:
- Specifications
- Structure and Operation
- Troubleshooting
- Circuits
- Electrical Equipment Installation Positions
- Inspection of Electrical Equipment
- On-vehicle Inspection and Adjustment
- Service procedures
- Connector configuration chart

On-vehicle Inspection and Adjustment
- Procedures for inspection and adjustment of individual parts and assemblies as mounted on the vehicle are described including specific items to check and adjust. Specified or otherwise, inspection should be performed for looseness, play, backlash, crack, damage, etc.

Service procedures
- Procedures for servicing components and parts off the vehicle are described centering on key points in their removal, installation, disassembly, reassembly, inspection, etc.

Inspection
- Check items subject to “acceptable/unacceptable” judgement on the basis of service standards are all given.
- Some routine visual checks and cleaning of some reused parts are not described but must always be included in actual service work.

Caution
- This service manual contains important cautionary instructions and supplementary information under the following four headings which identify the nature of the instructions and information:

DANGER ⚠	Precautions that should be taken in handling potentially dangerous substances such as battery fluid and coolant additives.
WARNING ⚠	Precautionary instructions, which, if not observed, could result in serious injury or death.
CAUTION ⚠	Precautionary instructions, which, if not observed, could result in damage to or destruction of equipment or parts.
NOTE	Suggestions or supplementary information for more efficient use of equipment or better understanding.

Terms and Units
- Front and rear
  The forward running direction of the vehicle is referred to as the front and the reverse running direction is referred to as the rear.

- Left and right
  Left hand side and right hand side, when facing the forward running direction of the vehicle, are respectively left and right.

Standard value
- Standard value dimensions in designs indicating: the design dimensions of individual parts, the standard clearance between two parts when assembled, and the standard value for an assembly part, as the case may be.

Limit
- When the value of a part exceeds this, it is no longer serviceable in respect of performance and strength and must be replaced or repaired.

Tightening torque

- Values are directly specified for out-of-standard tightening torques for bolts and nuts.
- Where there is no specified figure for tightening torque, follow the table covering standard tightening torques. (Values for standard tightening torques are based on thread size and material.)
- When the item is to be tightened in a wet state, “wet” is indicated. Where there is no indication, read it as dry.

Units

- Tightening torques and other parameters are given in SI* units with metric units added in brackets { }.

***SI: Le Système International d’Unités**

Example: 390 N·m {40 kgf·m}

Metric unit
SI unit

Unit		SI unit {metric unit}	Conversion factor
Force		N {kgf}	9.80665 N {1 kgf}
Moment of force		N·m {kgf·m}	9.80665 N·m {1 kgf·m}
Pressure	Positive pressure	kPa {kgf/cm^2}	98.0665 kPa {1 kgf/cm^2}
	Vacuum pressure	kPa {mmHg}	0.133322 kPa {1 mmHg}
		Pa {mmH$_2$O}	9.80665 Pa {1 mmH$_2$O}
Volume		dm^3 {L}	1 dm^3 {1 L}
Heat quantity		J {kcal}	4186.05 J {1 kcal}
Heat flow		W {kcal/h}	1.16279 W {1 kcal/h}
Power		kW {PS}	0.7355 kW {1 PS}

https://truckmanualshub.com/

Illustrated Parts Breakdown and Service Procedures

Symbol	Denotation	Application	Remarks
Ta	Tightening torque	Parts not tightened to standard torques (standard torques specified where necessary for servicing)	Specified values shown in table See Table of Standard Tightening Torques for parts for which no tightening torques are specified.
P	Locating pin	Parts to be positioned for installation	
⊗	Non-reusable parts	Parts not to be reused	
a	Lubricant and/or sealant	Parts to be coated with lubricant or sealant for assembly or installation	Necessary lubricant and/or sealant, quantity required, etc. are specified in table.
a	Special tool	Parts for which special tools are required for service operation	Tool name/shape and part number are shown in table.
*a	Associated part	Parts associated with those removed/disassembled for servicing	

Denotes that tightening torque is specified.

WHEEL HUB AND BRAKE DRUM

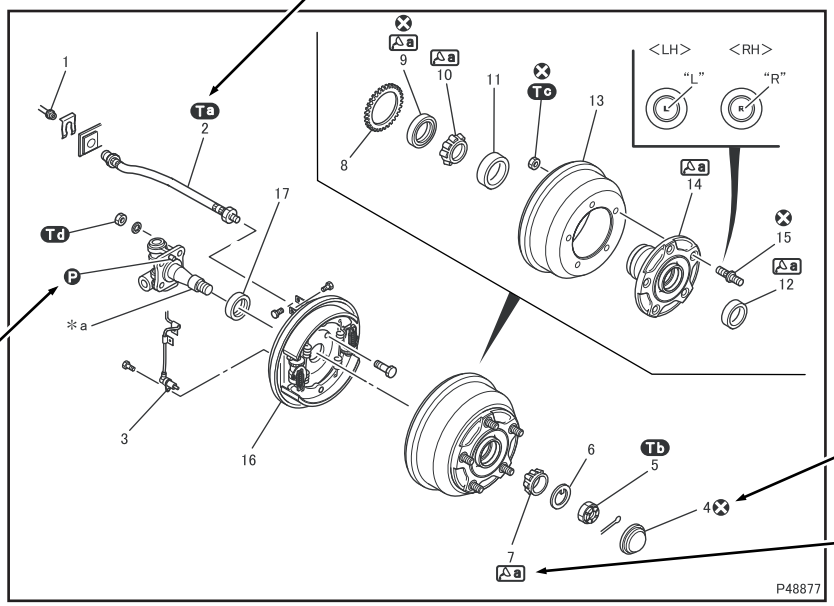

Indicates position of locating pin.

Identifies non-reusable parts.

Denotes that coating with lubricant or sealant is required.

● Disassembly sequence

1 Brake pipe
2 Brake hose
3 Wheel speed sensor
4 Hub cap
5 Lock nut
6 Lock washer
7 Outer bearing inner race
8 Anti-lock brake system rotor
9 Oil seal
10 Inner bearing inner race
11 Inner bearing outer race
12 Outer bearing outer race
13 Brake drum
14 Wheel hub
15 Hub bolt
16 Front drum brake (See Gr35A.)
17 Spacer

*a : Knuckle
P : Locating pin
⊗ : Non-reusable parts

● Assembly sequence

Follow the disassembly sequence in reverse.

Service standards (unit : mm)

Location	Maintenance item		Standard value	Limit	Remedy
7, 10, 11, 12	Starting torque of wheel hub bearing (tangential force at hub bolt position with oil seal fitted in)		1 to 3.5 N·m {0.10 to 0.35 kgf·m} (tangential force:8.8 to 28.4 N {0.9 to 2.9 kgf})	–	Adjust or replace
14	Brake drum	Inside diameter	320	322	Repair or replace
		Cylindricality	0.05	0.20	

These location numbers correspond with disassembly sequence numbers.

P58289E

"Wet" is indicated when part is to be tightened with oil or grease applied to its threaded section.

Tightening torque (unit: N·m{kgf·m})

Mark	Part to be tightened	Tightening torque	Remarks
Ta	Brake force tightening	13 to 17{1.3 to 1.7}	–
Tb	Lock nut	113 ± 15{11.5 ± 1.5}	Wet
Tc	Nut (brake drum and wheel hub mounting)	343 ± 39{35 ± 4}	–
Td	Nut (front drum brake mounting)	118 ± 20{12 ± 2}	–

Lubricant and/or sealant

Mark	Point of application	Specified lubricant and/or sealant	Quantity
La	Between rolls of outer bearing inner race and inner bearing inner race	Mitsubishi wheel bearing grease	As required
	Inside wheel hub		395 ± 40 g

Special tools (unit: mm)

Mark	Tool name and shape	Part No.	Application
Ca	Hub Cap Wrench A: 0.5°, B: 78° 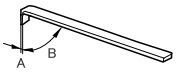 P49261	MB999108	Removal of hub cap
Cb	Oil Seal Installer A: φ84, B: φ70 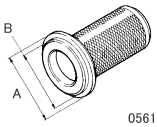 05619	MB999097	Installation of oil seal

Identification marks for special tools are the same as used in the text.

◆ Removal procedure

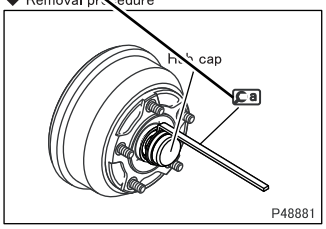

P48881

■Removal: Hub cap

◆Installation procedure◆

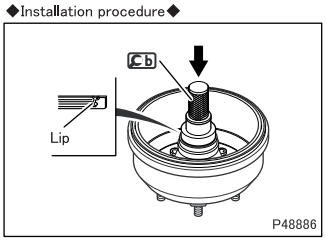

P48886

■Installation: Oil seal
Apply grease to the lip of the oil seal, then fit the oil seal onto the wheel hub in the illustrated direction.

P58290E

https://truckmanualshub.com/

How to Read Circuits (Electrical)

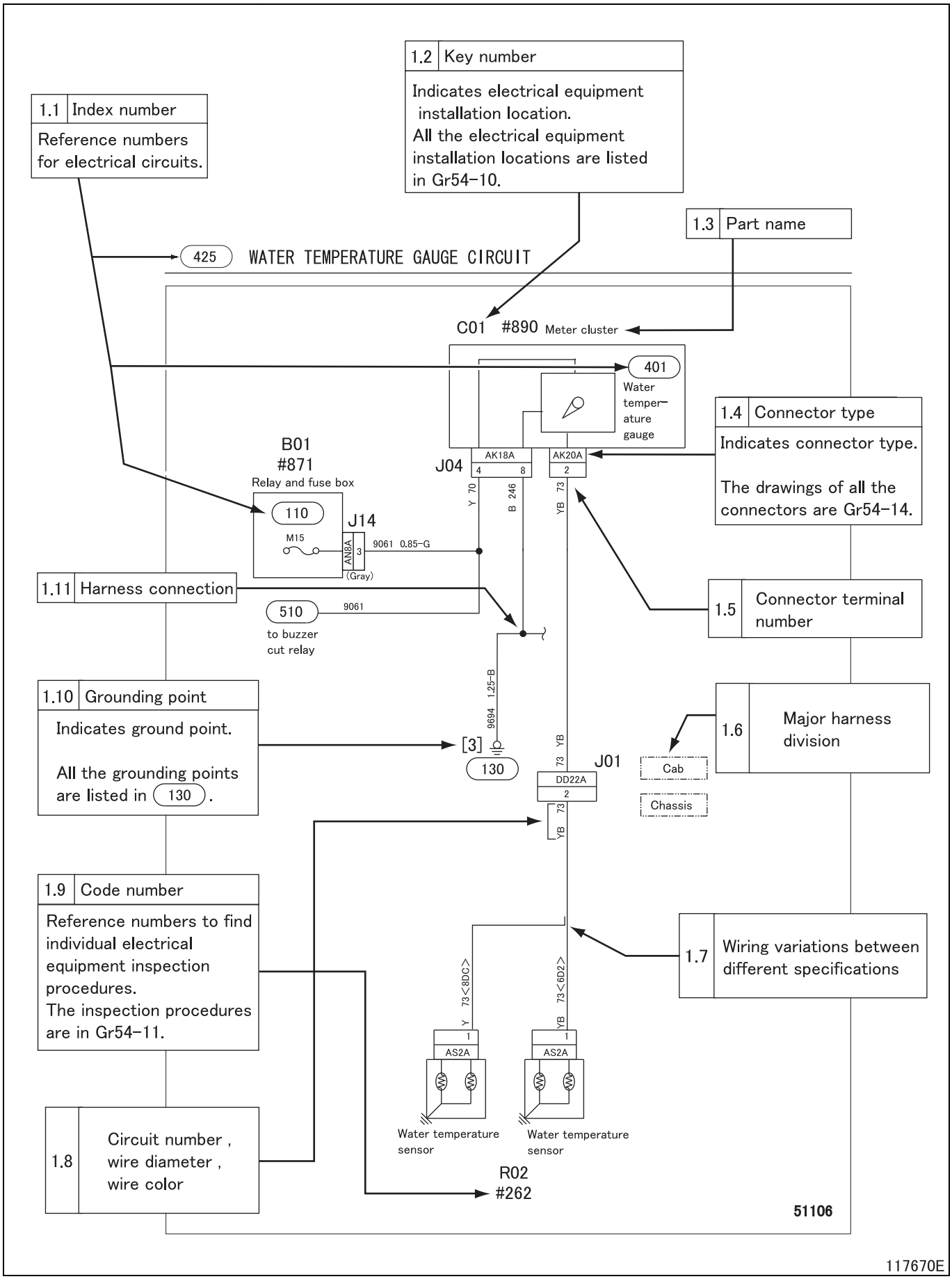

1.1 Index number: (100) to (999)

- Index numbers are used as reference numbers for electrical circuits. Each electrical circuit has been assigned its own index number.

1.2 Key number: A01 to Z99

- Key numbers indicate electrical equipment installation locations. The installation location of an electrical equipment can be easily found using its key number shown in a circuit diagram.
  All of the electrical equipment installation locations are listed in Gr54-10.

1.3 Part name

1.4 Connector type (type indication)

- A list of the connectors used is included in Gr54-14.

1.5 Connector terminal number

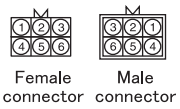

Connector terminal numbering starts with the upper left corner for female connectors and with the upper right corner for male connectors.

P50678E

1.6 Major harness division

- Major harness divisions are shown.

1.7 Wiring variations between different specifications

- Variations in wiring/circuit between different vehicle specifications are clearly indicated as shown.

1.8 Circuit number, wire diameter, wire color

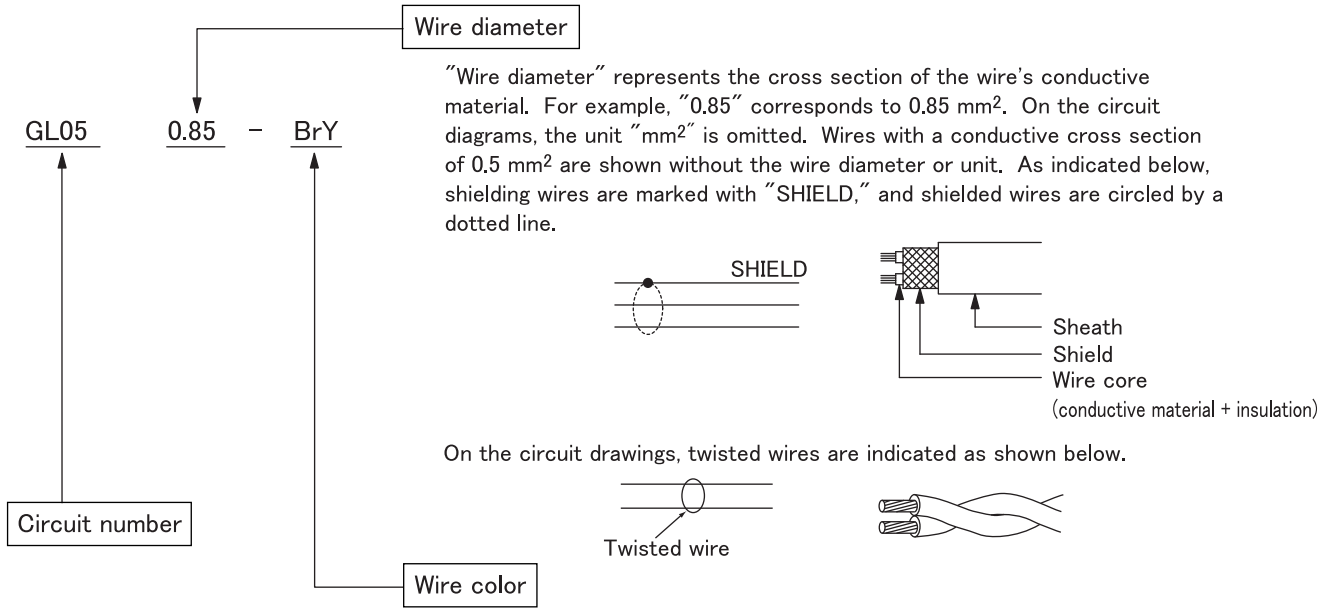

P50680E

1.9 Code number: #001 to #999

- Code numbers are reference numbers to find individual electrical equipment inspection procedures. The inspection procedure for an electrical equipment can be found using its code number shown in a circuit diagram.

1.10 Grounding point: [1] to [99]

- Locations where wires are grounded to the vehicle. All of the grounding points are listed in (130).

1.11 Harness connection

- The arrow in the wiring diagram indicates where harnesses are connected, and NOT the flow of electricity.

https://truckmanualshub.com/

Wire color

Wire color		Base color + tracer											
B	Black	BW	Black/ white	BY	Black/ yellow	BR	Black/red	BG	Black/ green	BL	Black/ blue	BO	Black/ orange
		BP	Black/ pink	BV	Black/ violet	B Br	Black/ brown						
Br	Brown	BrW	Brown/ white	BrB	Brown/ black	BrY	Brown/ yellow	BrR	Brown/ red	BrG	Brown/ green	BrL	Brown/ blue
		BrGr	Brown/ gray	BrV	Brown/ Violet								
G	Green	GW	Green/ white	GR	Green/ red	GY	Green/ yellow	GB	Green/ black	GL	Green/ blue	GO	Green/ orange
		GGr	Green/ gray	GBr	Green/ brown	GV	Green/ violet						
Gr, Gy	Gray	GrL, GyL	Gray/ blue	GrR, GyR	Gray/ red	GrB, GyB	Gray/ black	GrG, GyG	Gray/ green	GrW, GyW	Gray/ white	GrY	Gray/ yellow
		GrG	Gray/ green	GrBr	Gray/ brown								
L	Blue	LW	Blue/ white	LR	Blue/red	LY	Blue/ yellow	LB	Blue/ black	LO	Blue/ orange	LG	Blue/ green
		LGr	Blue/gray	LBr	Blue/ brown								
Lg	Light green	LgR	Light green/ red	LgY	Light green/ yellow	LgB	Light green/ black	LgW	Light green/ white				
O	Orange	OL	Orange/ blue	OB	Orange/ black	OG	Orange/ green						
P	Pink	PB	Pink/ black	PG	Pink/ green	PL	Pink/ blue	PW	Pink/ white	PGr	Pink/gray	PV	Pink/ violet
Pu	Purple												
R	Red	RW	Red/ white	RB	Red/ black	RY	Red/ yellow	RG	Red/ green	RL	Red/blue	RO	Red/ orange
		RBr	Red/ brown	Rgr	Red/ Gray								
Sb	Sky blue												
V	Violet	VY	Violet/yel-low	VW	Violet/ white	VR	Violet/red	VG	Violet/ green	VGr	Violet/ gray	VB	Violet/ black
W	White	WR	White/ red	WB	White/ black	WL	White/ blue	WG	White/ green	WO	White/ orange	WV	White/ violet
		WBr	White/ brown	WY	White/ yellow								
Y	Yellow	YR	Yellow/ red	YB	Yellow/ black	YG	Yellow/ green	YL	Yellow/ blue	YW	Yellow/ white	YO	Yellow/ orange
		YP	Yellow/ pink	YV	Yellow/ violet	YGr	Yellow/ gray	YBr	Yellow/ brown				

https://truckmanualshub.com/

M E M O

https://truckmanualshub.com/

CHASSIS NUMBER, ENGINE NUMBER AND VIHICLE IDENTIFICATION NUMBER

- Serial chassis and engine numbers are assigned to the vehicles and engines in manufacturing sequence. Every vehicle and engine has its own number. These numbers are required for registration and related inspection of the vehicle.

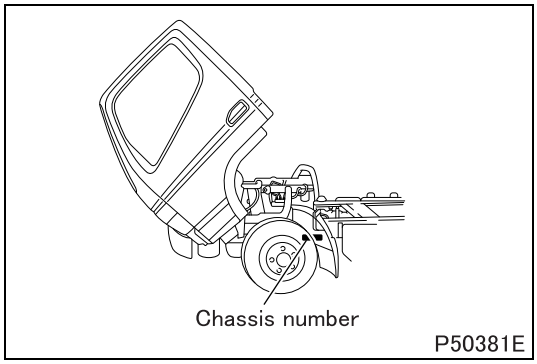

Chassis number

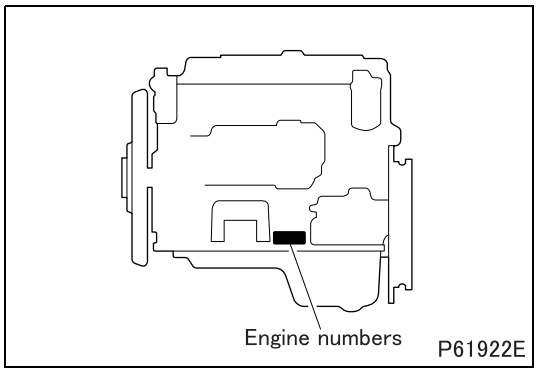

Engine number

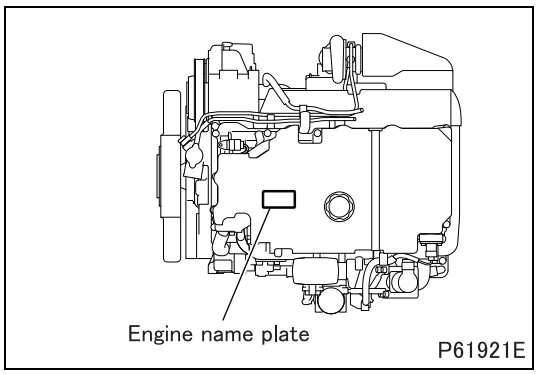

- An engine name plate indicates the following item.
  - Engine model

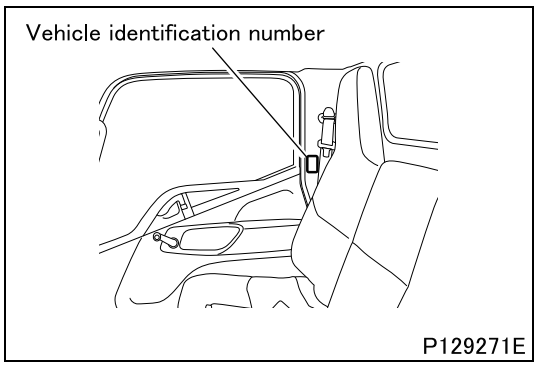

Vehicle identification number (V.I.N.)

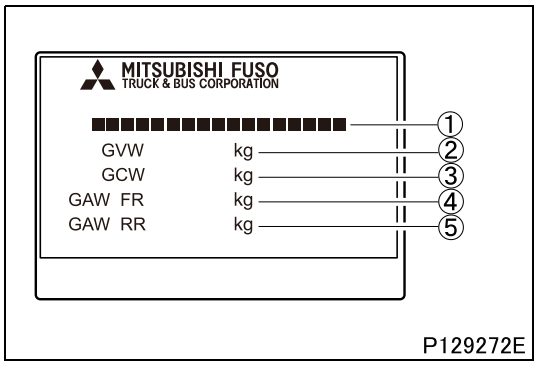

The nameplate shows the following.

① Vehicle identification number (VIN)
② Maximum permitted laden mass of the vehicle
③ Maximum permitted laden mass of the combination
④ Maximum permitted load mass for 1st axle
⑤ Maximum permitted load mass for 2nd axle

The meanings of VIN are listed below.

Example: J L C B C E 6 J ■ F K ■■■■■■

(1) (2) (3) (4) (5) (6) (7) (8) (9) (10) (11) (12)

(1) Geographic area
J: Asia (Japan)
(2) Country
L: Japan
(3) Manufacture
C: Mitsubishi Fuso Truck & Bus
(4) GVW & Brake type
B: 3.5 t < GVW ≦ 12 t/Hydraulic
(5) Model
C: FE84P
D: FE85P
1: FE85D
(6) Series (wheel base)
E: 3.2 to 3.49 m
G: 3.8 to 4.09 m
H: 4.1 to 4.39 m
(7) Cab type
6: Cab over
(8) Engine type
J: 3.907 L, Diesel
3: 4.899 L, Diesel
(9) Check digit
(10) Model year
F: 15M/Y
G: 16M/Y
•
•
(11) Plant
K: Kawasaki
(12) Plant Sequential Number

https://truckmanualshub.com/

PRECAUTIONS FOR MAINTENANCE OPERATION

1. General Precautions

- Before performing service operations, inquire into the customer's complaints and ascertain the condition by checking the total distance traveled, the conditions under which the vehicle is operated, and other relevant factors on the vehicle. And note the necessary information. This information will help you to service the vehicle efficiently.
- Check the location of the fault, and identify its cause. Based on your findings, determine whether parts must be removed or disassembled. Then, follow the service procedure given in this manual.

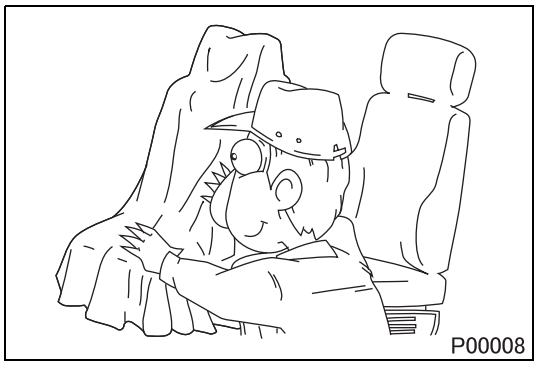

- Perform service operations on a level surface. Before starting, take the following preparatory steps:
  - To prevent soiling and damage, place covers over the seats, trim and floor in the cab and over the paintwork of the body.

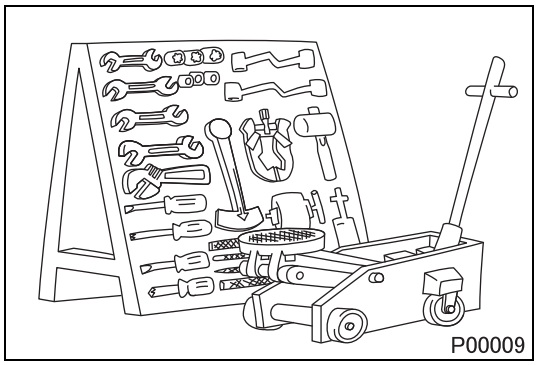

- Prepare all the general and special tools necessary for the job.

WARNING ⚠

- **Special tools must be used wherever specified in this manual. Do not attempt to use other tools since they could cause injuries and/or vehicle damage.**

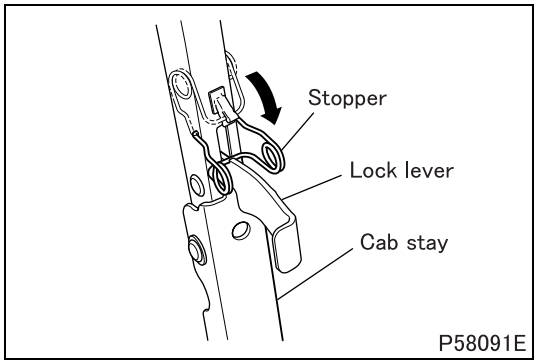

- After manually tilting the cab, be sure to engage the stopper with the lock lever to secure the cab stay in a rigid state.

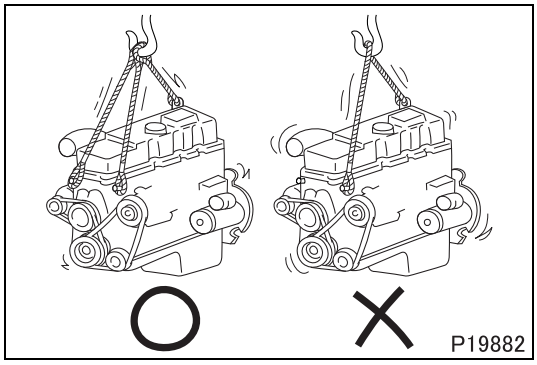

- Take extreme care when removing/installing heavy items such as engine, transmission and axle. When lifting heavy items using a cable etc., observe the following precautions.
  - Identify the weight of the item being lifted. Use the cable that is strong enough to support the weight.

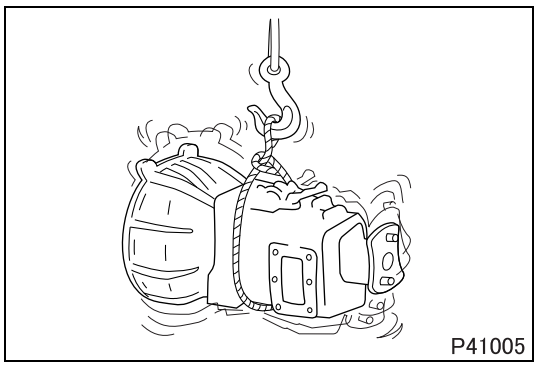

- If lifting eyes are not provided on the item being lifted, tie a cable around the item taking into account the item's center of gravity.

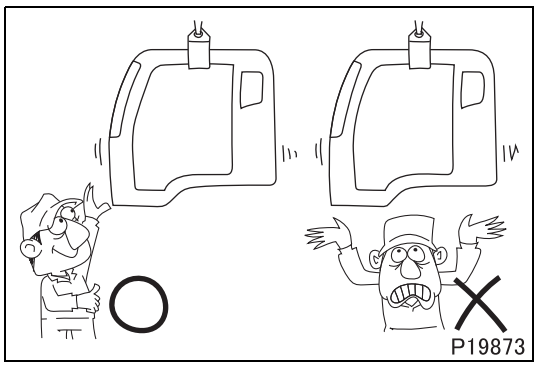

- Do not allow anyone to pass or stay under a lifted item which may possibly fall.

- Never work in shoes that have oily soles.
  When working with a partner or in a group, use pre-arranged signals and pay constant attention to safety. Be careful not to touch switches and levers unintentionally.

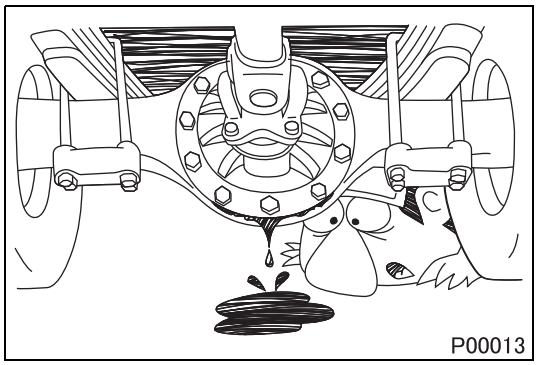

- Inspect for oil leakage etc. before washing the vehicle. If the order is reversed, any oil leakage or fault that may exist could go unnoticed during inspection.

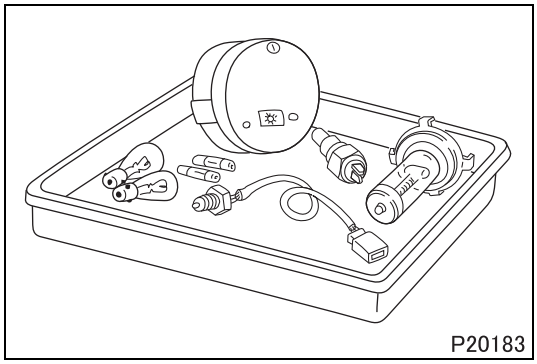

- Prepare replacement parts ready for installation.

https://truckmanualshub.com/

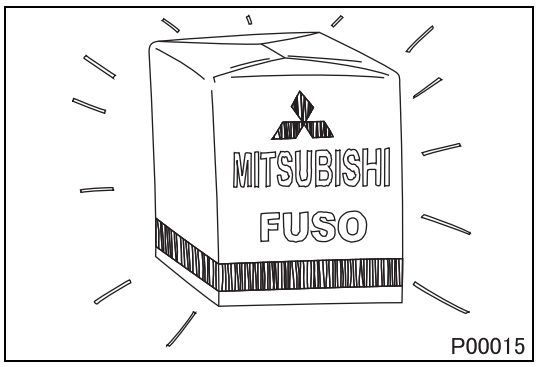

- Oil seals, packings, O-rings and other rubber parts, gaskets, and split pins must be replaced with new ones after removal. Use only genuine MITSUBISHI replacement parts.

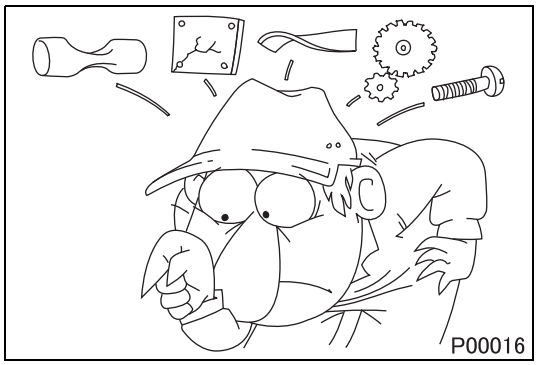

- When disassembling parts, visually check them for wear, cracks, damage, deformation, deterioration, rust, corrosion, defective rotation, fatigue, clogging and any other possible defect.

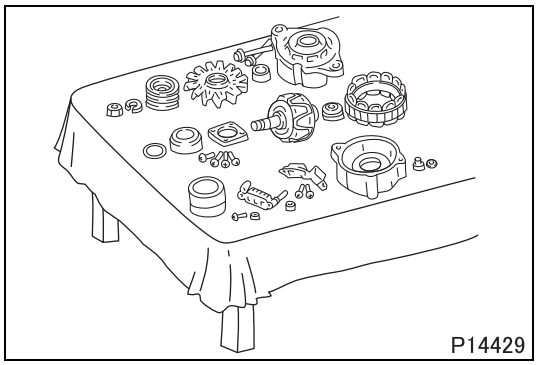

- To facilitate correct reassembly of parts, make alignment marks on them before disassembly and arrange disassembled parts neatly. Make punch marks and other alignment marks where they will not detract from parts' functionality and appearance.
- After removing parts from the vehicle, cover the area to keep it free of dust.

CAUTION ⚠

- **Be careful not to mix up identical parts, similar parts and parts that have left/right alignments.**
- **Keep new replacement parts and original (removed) parts separately.**

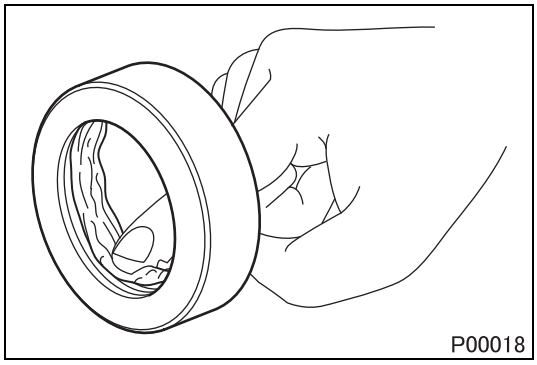

- Apply the specified oil or grease to U-seals, oil seals, dust seals and bearings before reassembly.
- Always use the specified oils and greases when performing inspection or replacement. Immediately wipe away any excess oil or grease with a rag.

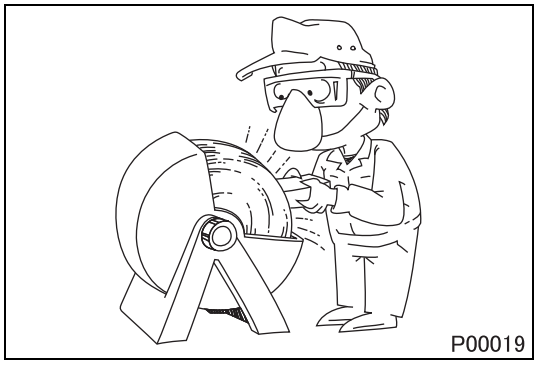

- Wear safety goggles when using a grinder or welder. Wear gloves when necessary, and watch out for sharp edges and other items that might wound your hands.

2. Handling of Battery

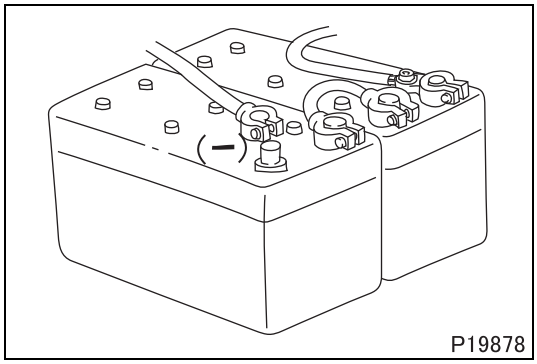

2.1 Handling of battery cable

- Before working on the electrical system, disconnect the (–) battery cable to prevent short circuits.

CAUTION ⚠

- **Make sure that the starter switch and lighting switches are OFF before disconnecting or connecting battery cable. (Semiconductor components may otherwise be damaged.)**
- **Disconnect the (–) battery cable, then insulate the (–) terminal of the battery and (–) battery cable with insulating tape or the like.**
- **If the (–) battery cable is not disconnected, battery voltage will remain constantly applied to the B terminal, inviting danger of electric shock.**

3. Handling of Sensors, Relays and Electronic Control Units

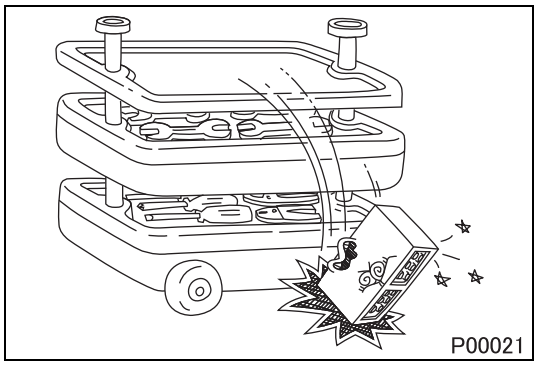

- Carefully handle sensors relays, and other items that are sensitive to shock and heat. Do not remove or paint the cover of any control unit.

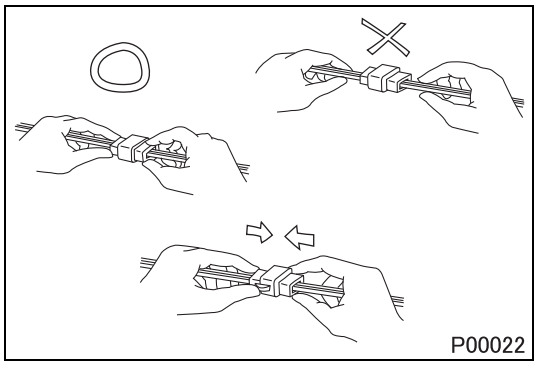

- When separating connectors, grasp the connectors themselves rather than the harnesses.
- To separate locking connectors, first push them in the direction of the arrows. To reconnect locking connectors, push them together until they click.

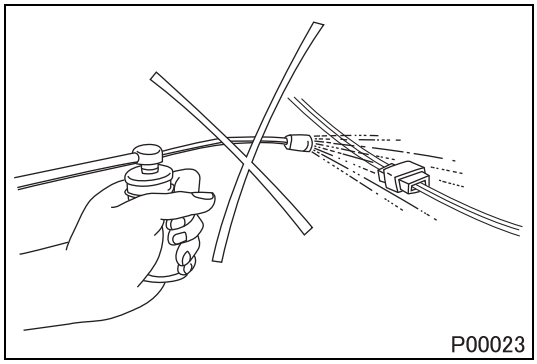

- Before washing the vehicle, cover electrical parts to keep them dry. (Use plastic sheets or equivalent.) Keep water away from harness connectors and sensors and immediately wipe off any water that gets on them.

https://truckmanualshub.com/

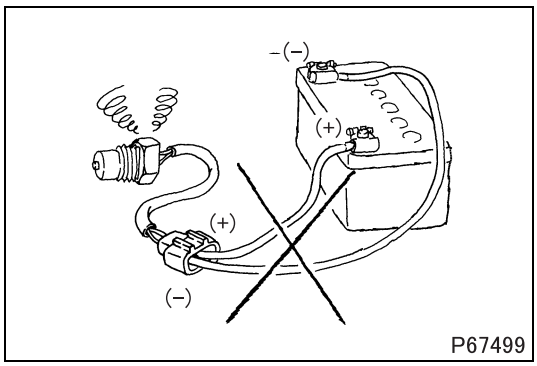

- When applying a voltage to a part for inspection purposes, check that the (+) and (–) cables are connected properly then gradually increase the voltage from zero. Do not exceed the specified voltage.
  Remember that control units and sensors do not necessarily operate on the battery voltage.

4. Handling Precautions for Electric Circuits

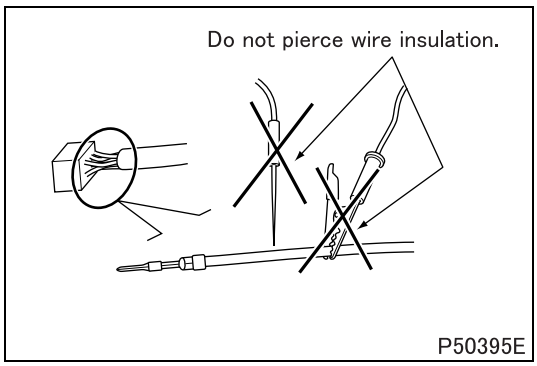

CAUTION ⚠

- **Do not pierce wire insulation with test probes or alligator clips when performing electrical inspections. Doing so can, particularly with the chassis harness, hasten corrosion.**

4.1 Inspection of harnesses

(1) Inspections with connectors fitted together

(1.1) Waterproof connectors

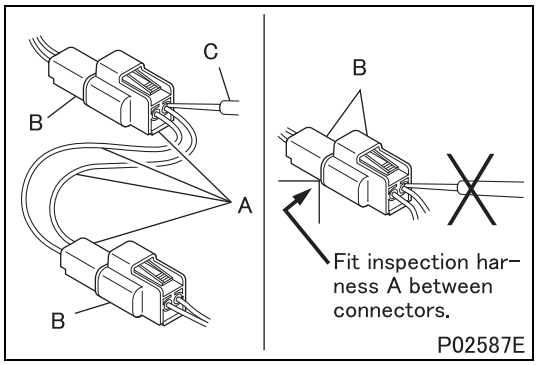

- Connect an inspection harness and connector A between the connectors B of the circuit to be inspected. Perform the inspection by applying a test probe C to the connectors of the inspection harness. Do not insert the test probe C into the wire-entry sides of the waterproof connectors since this would damage their waterproof seals and lead to rust.

(1.2) Non-waterproof connectors

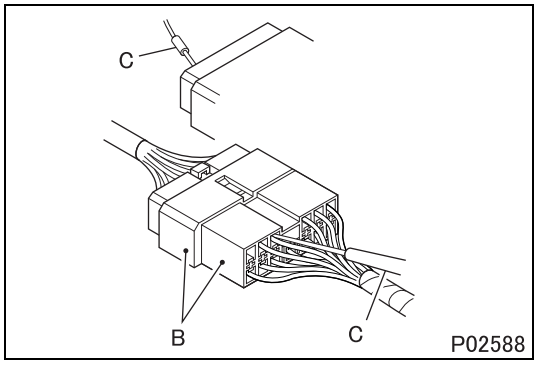

- Perform the inspection by inserting a test probe C into the wire-entry sides of the connectors. An extra-narrow probe is required for control unit connectors, which are smaller than other types of connector. Do not force a regular-size probe into control unit connectors since this would cause damage.

(2) Inspections with connectors separated

(2.1) Inspections on female terminals

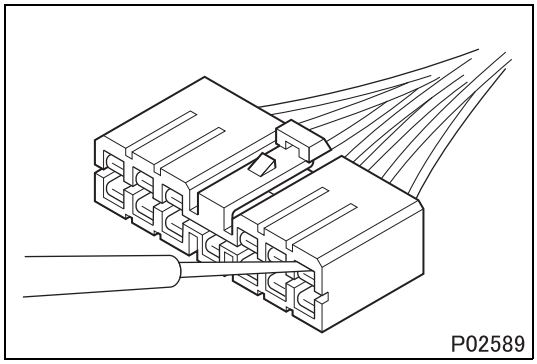

- Perform the inspection by carefully inserting a test probe into the terminals. Do not force the test probe into the terminals since this could deform them and cause poor connections.

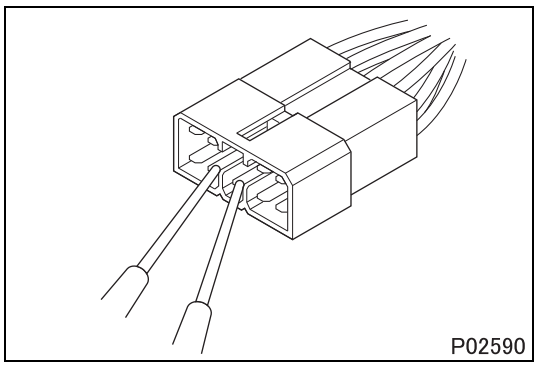
P02590

(2.2) Inspections on male terminals

- Perform the inspection by applying test probes directly to the pins.

CAUTION ⚠

- **Be careful not to short-circuit pins together with the test probes. With control unit connectors, short-circuiting of pins can cause damage to the control unit's internal circuitry.**

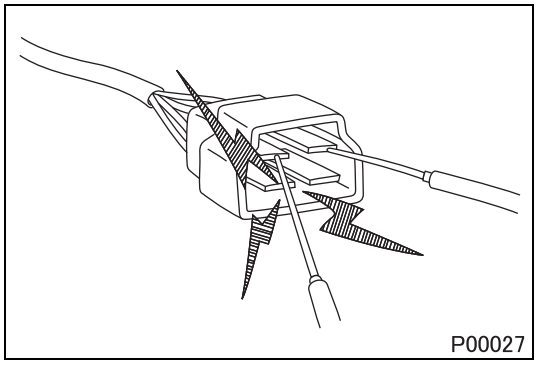
P00027

- When using a multimeter to check continuity, do not allow the test probes to touch the wrong terminals.

4.2 Inspection of connectors

(1) Visual inspection

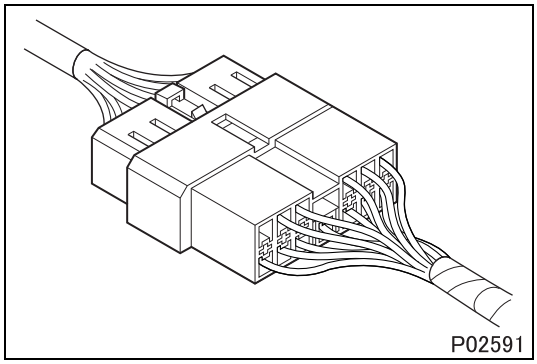
P02591

- Check that the connectors are fitted together securely.

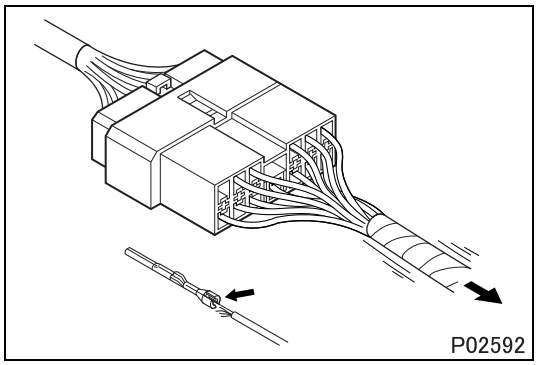
P02592

- Check whether wires have been separated from their terminals due to pulling of the harness.

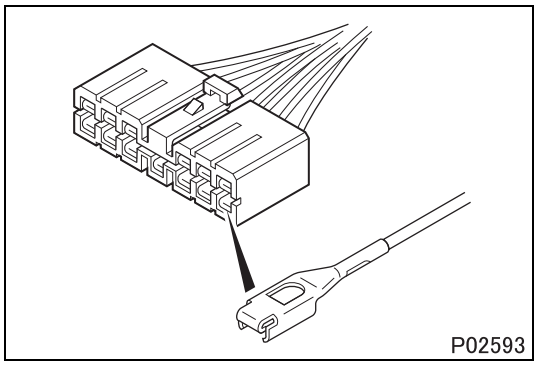
P02593

- Check that male and female terminals fit together tightly.

https://truckmanualshub.com/

- Check for defective connections caused by loose terminals, by rust on terminals, or by contamination of terminals by foreign substances.

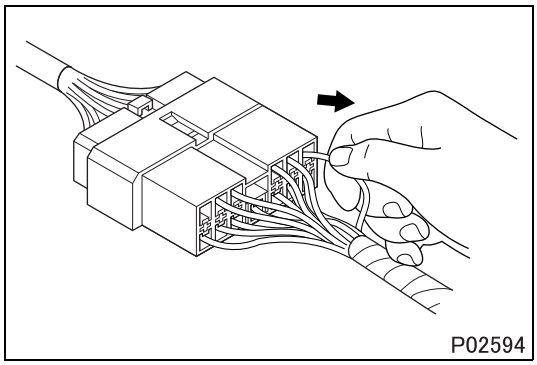

(2) Checking for loose terminals

- If connector terminal retainers become damaged, male and female terminals may not mate with each other when the connector bodies are fitted together. To check for such terminals, gently pull each wire and see whether any terminals slip out of their connector housings.

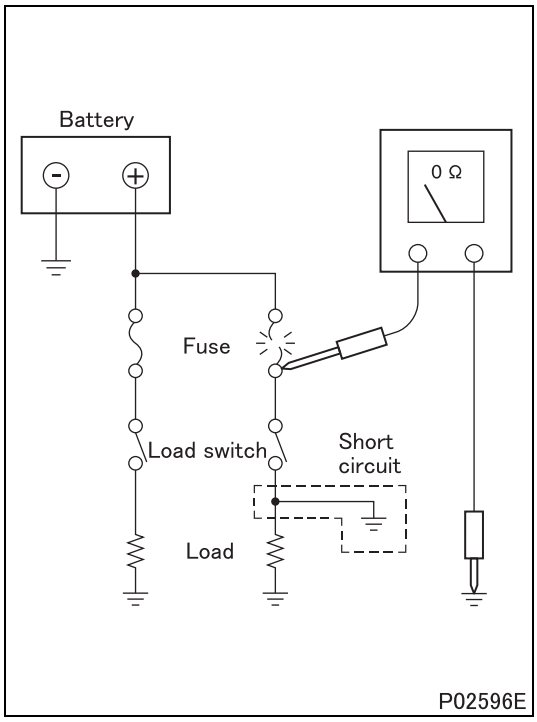

4.3 Inspections when a fuse blows

- Remove the fuse, then measure the resistance between ground and the fuse's load side.
  Next, close the switch of each circuit connected to the fuse. If the resistance measurement between any switch and ground is zero, there is a short circuit between the switch and the load. If the resistance measurement is not zero, the circuit is not currently short-circuited; the fuse probably blew due to a momentary short circuit.

- The main causes of short circuits are as follows:
  - Harnesses trapped between chassis parts
  - Harness insulation damage due to friction or heat
  - Moisture in connectors or circuitry
  - Human error (accidental short-circuiting of components)

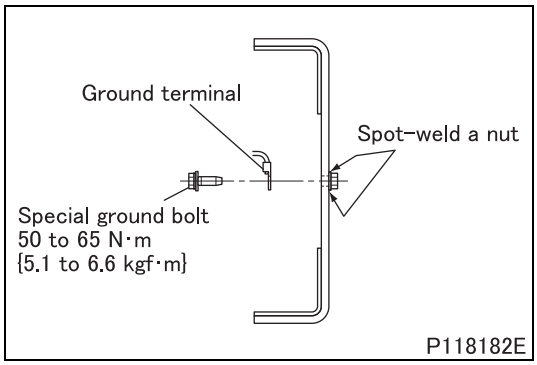

4.4 Inspection of chassis ground

- A special ground bolt is used to tighten a ground terminal. When servicing the ground point, be sure to follow the procedures described below:
  - When reinstalling the ground bolt
    Tighten the ground bolt to the specified torque.
  - When relocating the ground point
    A special ground bolt must be used. Spot-weld a nut to a frame and tighten the ground bolt to the specified torque. Be sure to apply touch-up paint to the welded point.

5. Service Precautions for Alternators

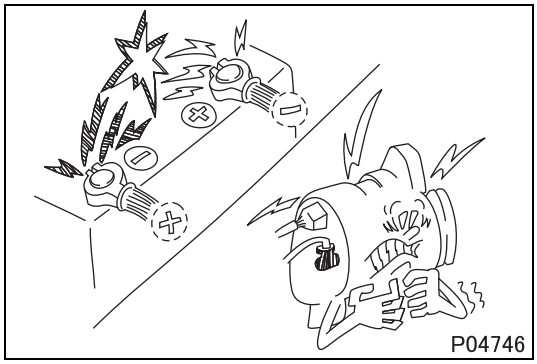

- When servicing alternators, observe the following precautions:
  - Never reverse the polarity of battery connections.
    If the polarity of the battery connections were to be reversed, a large current would flow from the battery to the alternator, damaging the diodes and regulator.

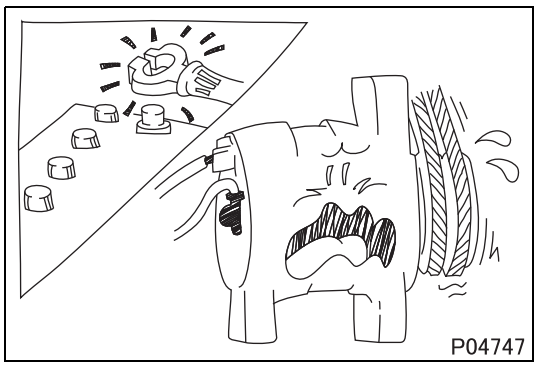

- Never disconnect the battery cables with the engine running.
  Disconnection of the battery cables during engine operation would cause a surge voltage, leading to deterioration of the diodes and regulator.

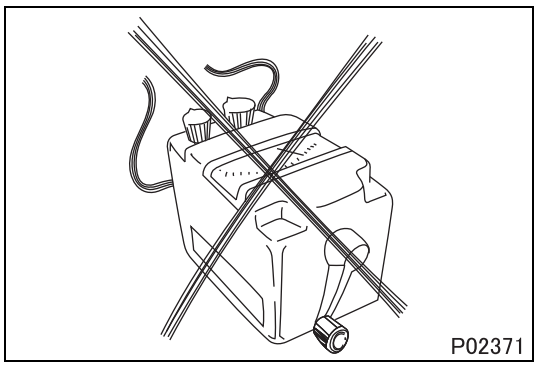

- Never perform inspections using a high-voltage multimeter.
  The use of a high-voltage multimeter could damage the diodes and regulator.

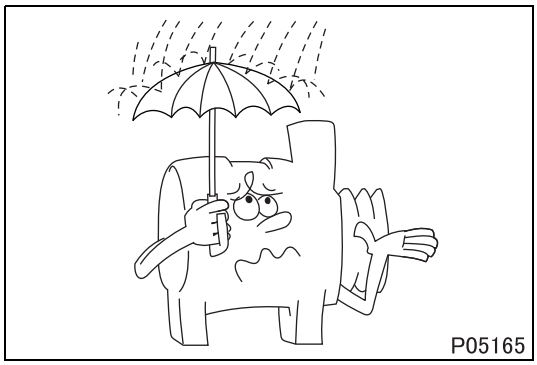

- Keep alternators dry.
  Water on alternators can cause internal short circuits and damage.

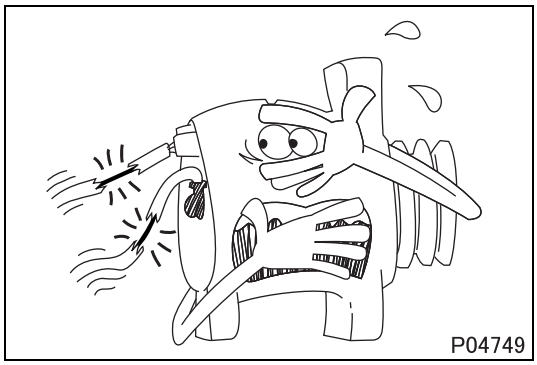

- Never operate an alternator with the B and L terminals short-circuited. Operation with the B and L terminals connected together would damage the diode trio.

https://truckmanualshub.com/

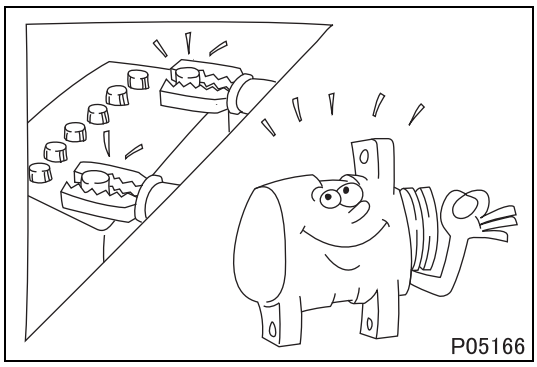

- Disconnect the battery cables before quick-charging the battery with a quick charger.
  Unless the battery cables are disconnected, quick-charging can damage the diodes and regulator.

6. Intermittent Faults

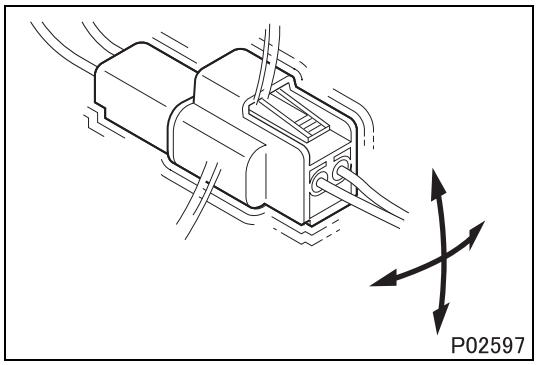

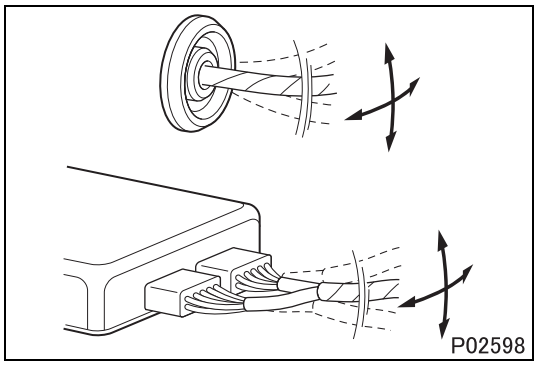

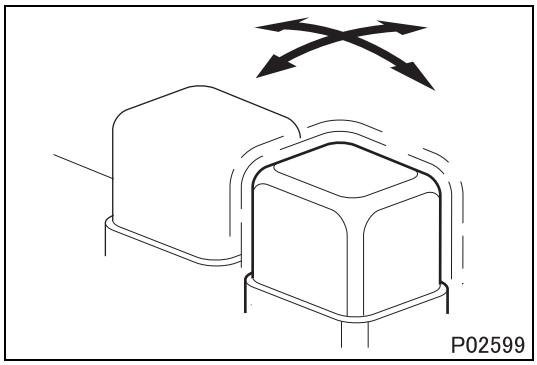

- An intermittent fault typically occurs only under certain operating conditions. Once these conditions have been identified, the cause of the intermittent fault can be ascertained easily. First, ask the customer about the vehicle operating conditions and weather conditions under which the fault occurs. Also ask about the frequency with which the fault occurs and about the fault symptoms. Then, reproduce the fault based on this information.
  In accordance with the conditions under which the fault occurs, determine whether the fault is caused by vibration, heat or other factors. if vibration is a possible factor, see if the fault can be reproduced by performing the following checks on individual connectors and other parts:
  - Gently move connectors up and down and to left and right.
  - Gently move wiring harnesses up and down and to left and right.
  - Gently wiggle sensors and other devices by hand.
  - Gently wiggle wiring harnesses on suspension systems and other moving parts.

- Connectors and other parts to be checked are those included or given as likely fault locations in inspection procedures corresponding to diagnosis codes and/or fault symptoms.

7. Precautions for Arc Welding

- When arc welding is performed, current from the welder flows to ground via the vehicle's metal parts. Unless appropriate steps are taken, this current can damage control units, other electrical devices and wiring harnesses. And any electrical device near the point on the vehicle to which the (–) cable of the welder is connected, might be largely damaged.

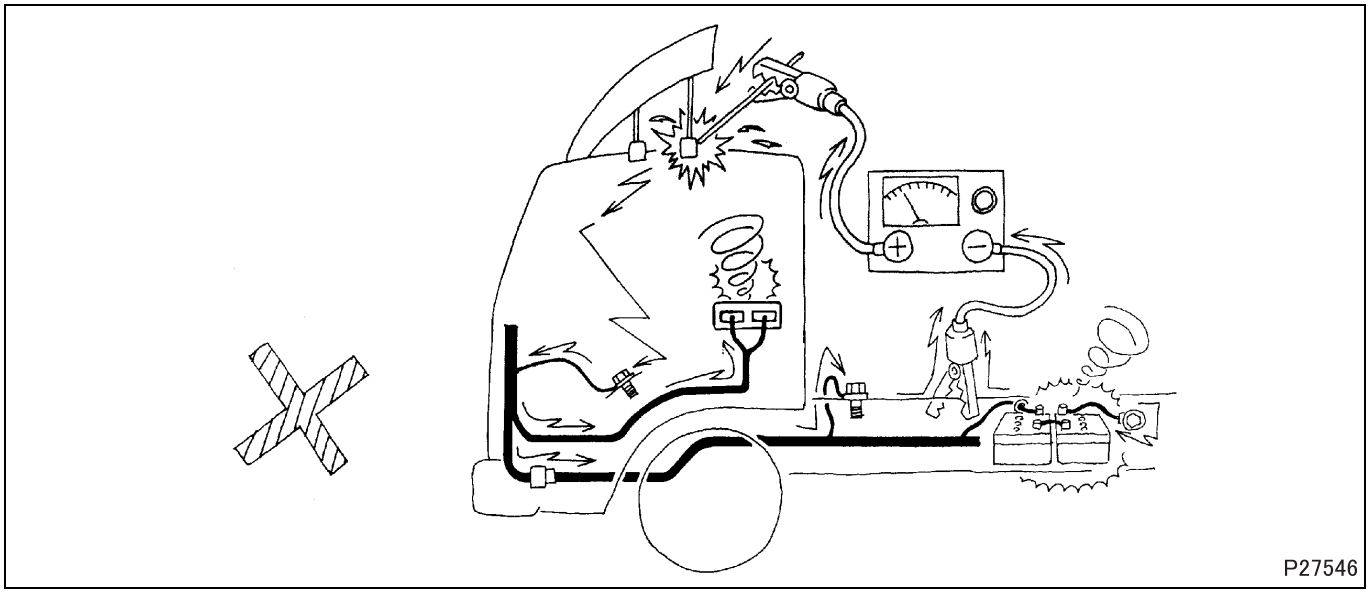

- Current flows backward as shown below.

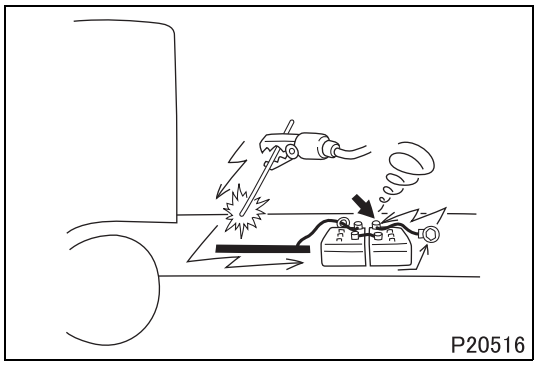

7.1 From battery (–) cable

To prevent damage to the battery and to electrical devices that are connected directly to the battery, it is essential to disconnect the battery's (–) cable.

7.2 Procedure

- Turn the starter switch to the LOCK position.
- Disconnect the battery's (–) cable.
- Cover all parts of the vehicle that may be damaged by welding sparks.
- Connect the welder's (–) cable to the vehicle as close as possible to the area being welded. Do not connect the welder's (–) cable to the cab if the frame is being welded, and vice versa.
- Set the welding current in accordance with the part being welded.

8. Precautions When Repainting

- When repainting, cover the following electronic control components with a masking material. If paint get on these components, functional reliability could be deteriorated as a result of the poor connection of connectors, internal circuit failure caused by heat build-up due to poor heat dissipation, erroneous sensor values due to clogged ventilation holes.
  - Engine electronic control unit and other electronic control units
  - Sensors

https://truckmanualshub.com/

JACKING UP THE VEHICLE

<Front of Vehicle>

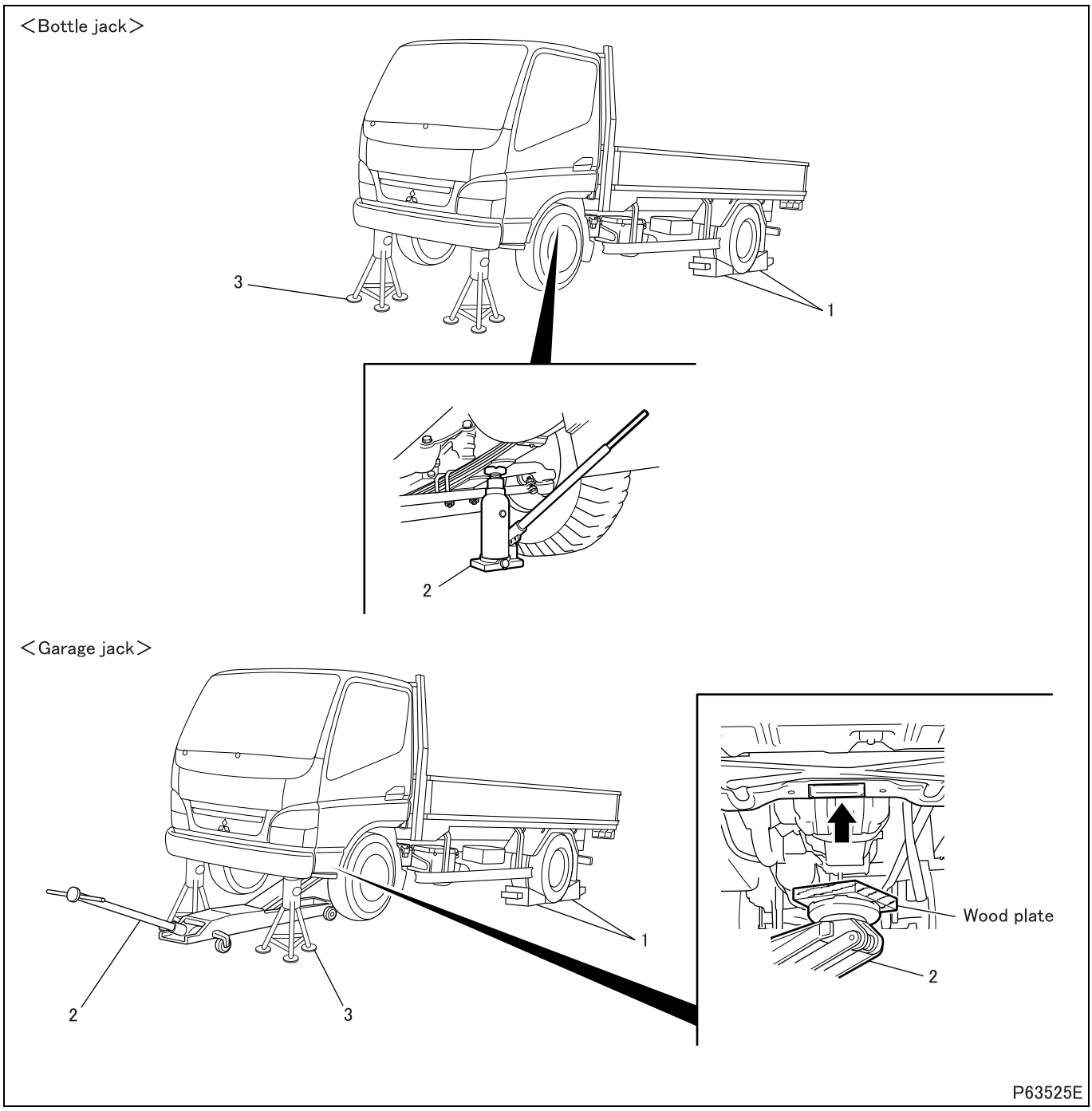

Jacking up procedure

1. Place chocks against the rear wheels.
2. Jack up the front of the vehicle with a bottle jack or garage jack.
3. Support the front of the vehicle frame on jack stands.

WARNING ⚠

- **Chock the wheels firmly to prevent the vehicle from rolling away.**
- **Do not attempt to remove the chocks until the operation is completed.**
- **It is extremely dangerous to support the vehicle with only bottle jack or garage jack. Be sure to additionally support the front of the vehicle frame on jack stands.**
- **Never attempt to remove the bottle jack, garage jack, or jack stands until the operation is completed.**

<Rear of Vehicle>

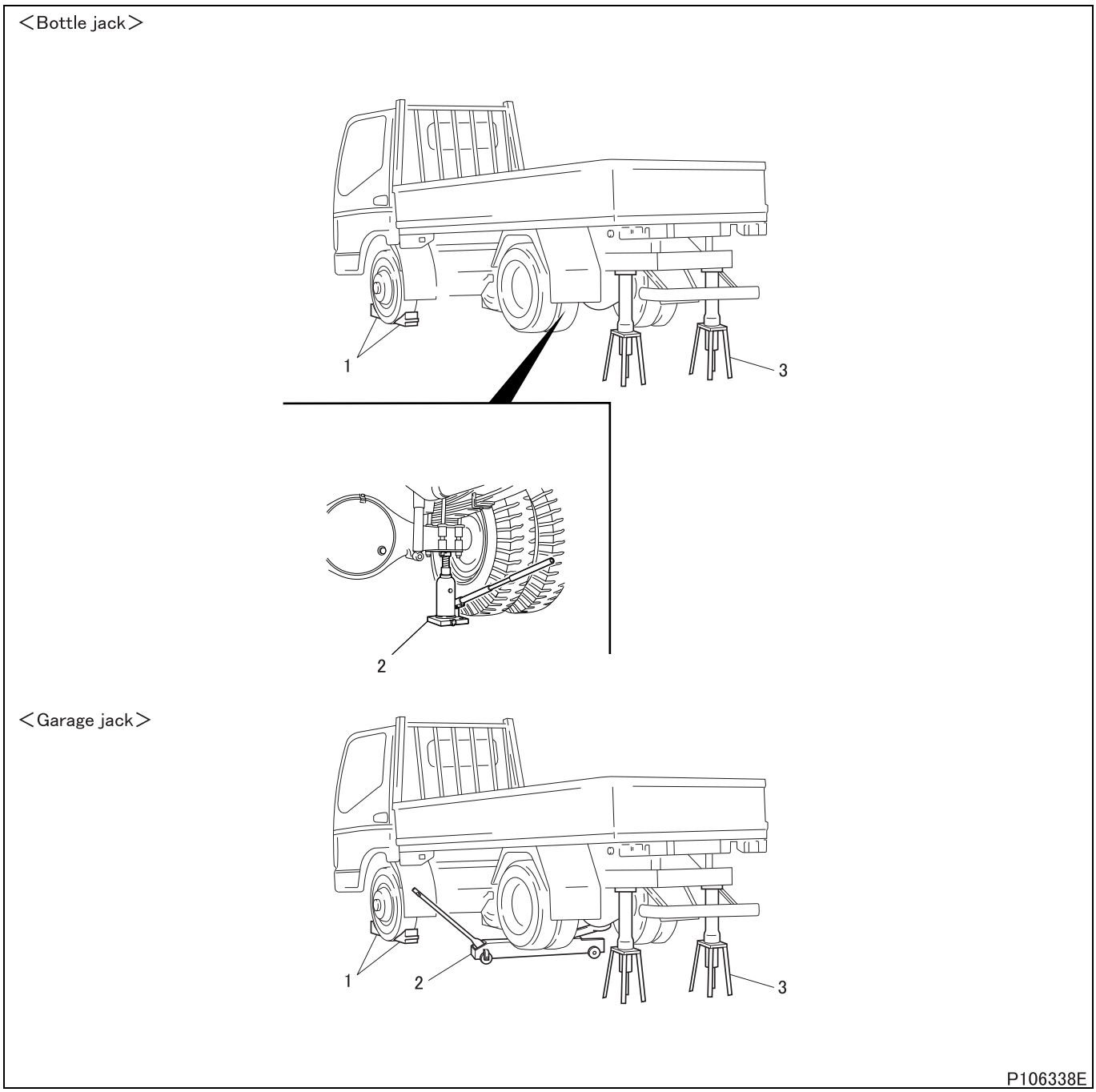

Jacking up procedure

1 Place chocks against the rear wheels.
2 Jack up the rear of the vehicle using a bottle jack or garage jack as illustrated above.
3 Support the vehicle frame on jack stands on both sides.

WARNING ⚠

- **Chock the wheels firmly to prevent the vehicle from rolling away.**
- **Do not attempt to remove the chocks until the operation is completed.**
- **It is extremely dangerous to support the vehicle with only bottle jack or garage jack. Be sure to additionally support the vehicle frame on jack stands on both sides.**
- **Never attempt to remove the bottle jack, garage jack, or jack stands until the operation is completed.**

https://truckmanualshub.com/

1. Diagnosis Codes

- The diagnosis code indicates the faulty location(s) of the vehicle.
- Reading the diagnosis code(s) and performing the corresponding remedy (troubleshooting) repairs the faulty location(s).
- Diagnosis codes can be displayed in the following two methods. Select either of them according to the system to be diagnosed.
  - Using a Multi-Use Tester
  - Flashing of a warning lamp on meter cluster
- The table below indicates the systems for which diagnosis codes can be displayed and the methods usable for individual systems.

1.1 Systems and diagnosis code displaying methods

Warning lamp	System		Diagnosis code displaying methods		Reference Gr
			Multi-Use Tester	Flashing of warning lamp	
	Engine control system	Common rail	O	O	13E
		Turbocharger control function			15E
		Exhaust gas recirculation control function			17E
		Preheating control, starter continuous energizing preventing function			54

1.2 Types of diagnosis codes

(1) Present diagnosis code

- Fault developed in the vehicle after the starter switch is set to ON is indicated by corresponding diagnosis code.
- The fault warning lamp is lit at the same time.

(2) Past diagnosis code

- Past fault developed in the vehicle is indicated by corresponding diagnosis code stored in the memory of the electronic control unit.
- With the vehicle restored to its normal condition or the starter switch turned from OFF to ON after inspection or repair against present diagnosis codes, the present diagnosis code is stored as past diagnosis codes in the memory of the electronic control unit.
- The warning lamp is not lit because the indicated fault is not present one.

2. Access and Clearing of Stored Diagnosis Code

2.1 Using Multi-Use Tester

(1) Connecting Multi-Use Tester

Special tools

Mark	Tool name and shape	Part No.	Application
a	Multi-Use Tester-III SOFTWARE DISC 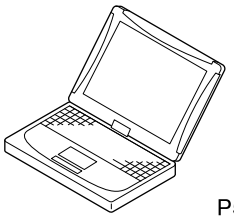 P57295	FMS-E14-1 or higher (Multi-Use Tester-III version)	Data transmission between V.C.I and PC
b	V.C.I. 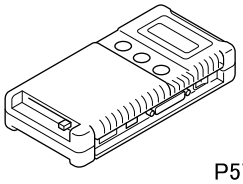 P57296	MH062927	Data transmission between electronic control unit and PC

Mark	Tool name and shape	Part No.	Application
c	Multi-Use Tester harness E A: For inspection and drive recorder B: For drive recorder C: Drive recorder harness D: Cigar plug harness 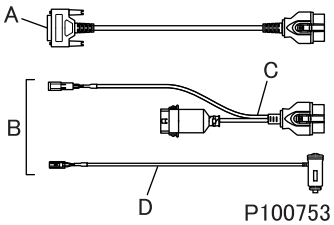 P100753	MH063659 A: MH063661 B: MH063663 C: MH063665 D: MH063666	Power supply to V.C.I. and communication with electronic control unit
d	Multi-Use Tester test harness D (used for extension) 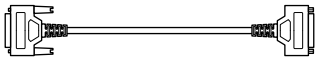 P57299	MH062951	Multi-Use Tester test harness E extension
e	USB cable P57300	MH063668	Communication between V.C.I. and PC

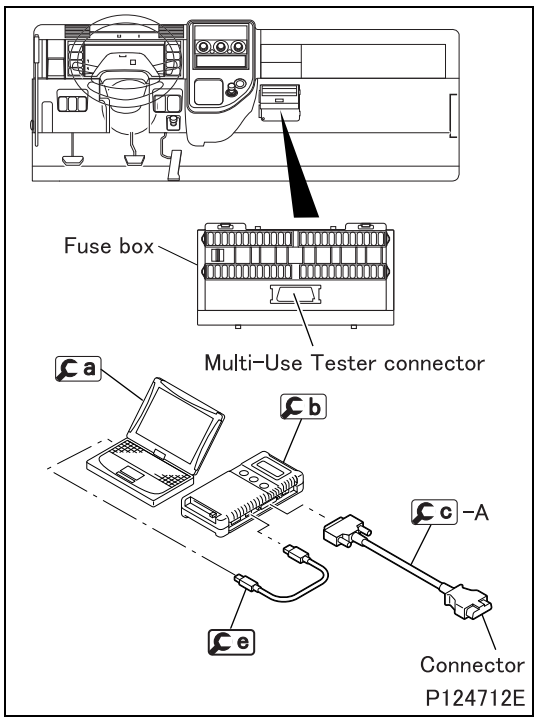

<Preparation for system inspection>

- Move the starter switch to the LOCK position.
- Connect a installed PC, b, c-A and e as illustrated.
- Connect the Multi-Use Tester connector on the vehicle with the connector of c-A.

https://truckmanualshub.com/

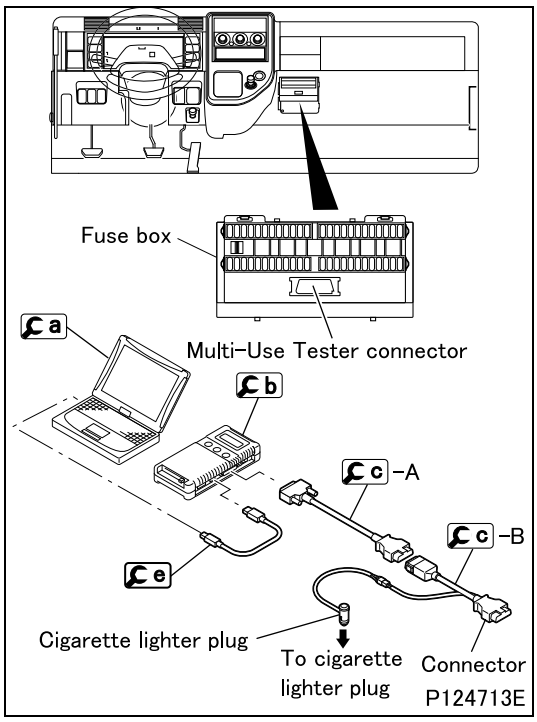

<Preparation for inspection using the drive recorder function>

- Move the starter switch to the LOCK position.
- Connect a installed PC, b, c-A, c-B, c-C, c-D and e as illustrated.
- Connect the Multi-Use Tester connector on the vehicle with the connector of c-B.

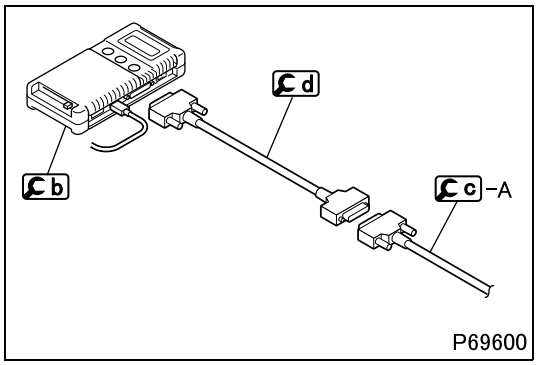

<To extend the cable>

- Use d to extend the cable if c-A is not long enough such as when using Multi-Use Tester outside the vehicle.

(2) Access of diagnosis code

- Set the starter switch to ON.
- Operate the Multi-Use Tester for a display of necessary diagnosis code stored in the memory of the electronic control unit and identify the location of the fault.

(3) Clearing of diagnosis code

- Set the starter switch to ON (the engine not to be started).
- Operate the Multi-Use Tester to delete all the diagnosis codes stored in the memory of the electronic control unit.

2.2 Use of Blinking Warning Lamp for Diagnosis Code

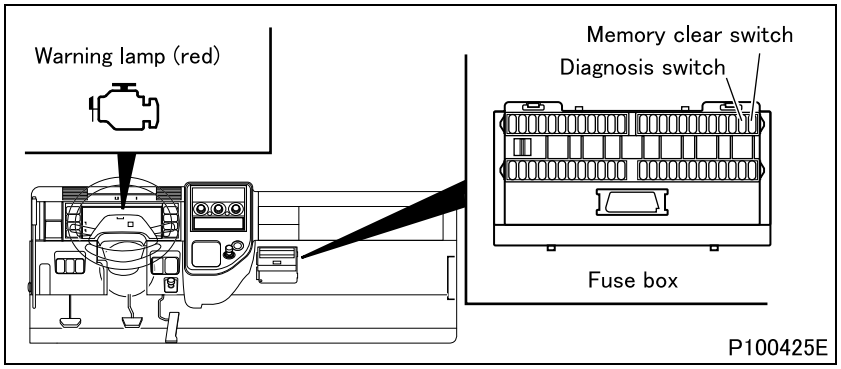

- Using the diagnosis and memory clear switches, display diagnosis codes.

CAUTION ⚠

- **Opening the memory clear switch followed by its reconnection will erase the stored diagnosis codes from the memory. To avoid inadvertently erasing necessary codes, be sure to read well the procedure described below before handling diagnosis codes.**

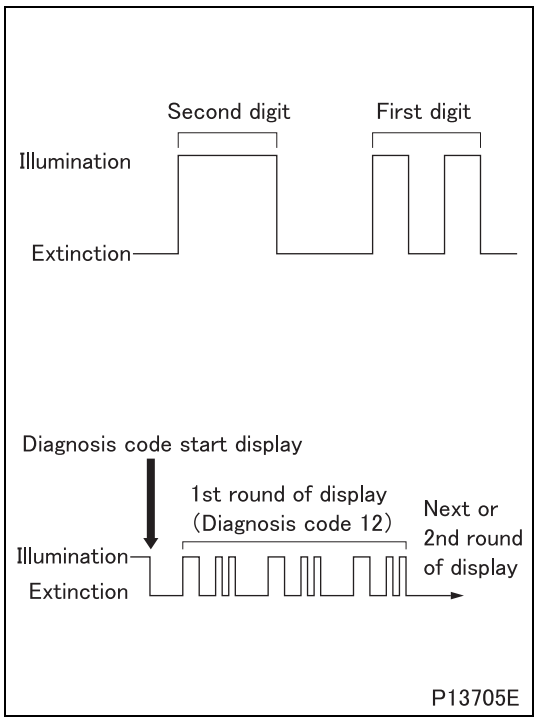

(1) Reading diagnosis codes

- To read a diagnosis code, observe how may times the warning lamp flashes and how long each illumination lasts.
- The duration of illumination differs between the first and second digits.
  - Second digit: 1.2 sec.
  - First digit: 0.4 sec.
- A diagnosis code consists of the flashing of second digit and the flashing of first digit in that order. If a diagnosis code has “0” in the second digit, only the first digit will be displayed.
- The diagnosis code 01 will be displayed if the system is normal.
- The same diagnosis code will be displayed 3 times in a row before moving to the display of the next code.
- After the last diagnosis code is displayed, the first code will be displayed again 3 times in a row and then the subsequent codes. This will be repeated.

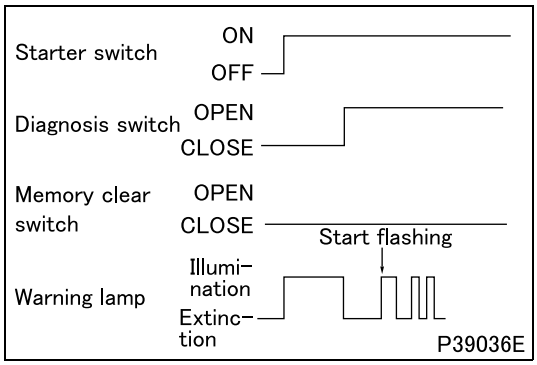

(2) Present diagnosis codes

- Turn the starter switch ON.
- Remove the diagnosis switch.
- Present diagnosis codes will be displayed by flashing of the warning lamp.
- When the diagnosis switch is connected, electronic control unit will stop (terminate) displaying diagnosis codes.

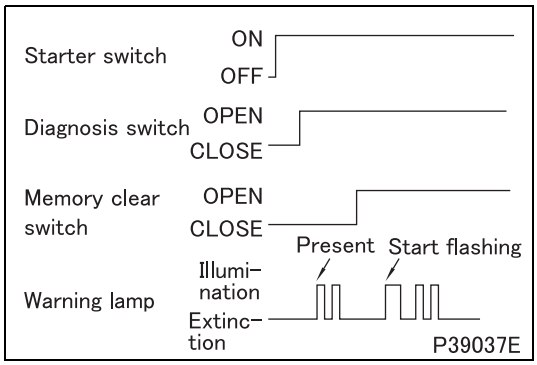

(3) Present and past diagnosis codes

- Turn the starter switch to the ON position.
- Open the diagnosis switch.
- Present diagnosis codes will be displayed by flashing of the warning lamp.
- Open the memory clear switch.
- Present and past diagnosis codes will be displayed by flashing of the warning lamp.
- Turn the starter switch to the OFF position and connect the memory clear switch and diagnosis switch to terminate the diagnosis code displaying mode.

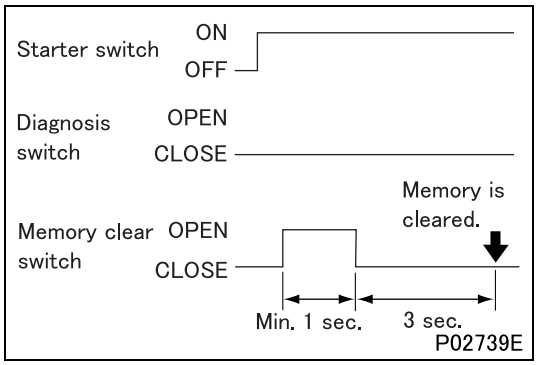

(4) Erasing diagnosis codes

- Turn the starter switch to the ON position (do not start the engine).
- Open the memory clear switch and reconnect it; all diagnosis codes stored in electronic control unit memory will be erased.
  To cancel diagnosis code erasure after opening the memory clear switch, turn the starter switch to the OFF position and then reconnect the memory clear switch.

https://truckmanualshub.com/

TABLE OF STANDARD TIGHTENING TORQUES

1. Tightening Torques

- Tightening torques are roughly classified into the following two categories:

Tightening torque	Definition	Availability of torque specifications in text	How to determine tightening torque
Standard tightening torque	Tightening torque determined according to thread size and material of bolts and nuts	None	Locate a bolt or nut corresponding to actual part in the following standard tightening torque table.
Specified tightening torque	Tightening torque of bolts and nuts other than those defined in “Standard tightening torque”, or that of bolts and nuts not identified in the following tables	Provided	Tightening torque is shown in the text.

- Fasteners used in a location denoted by “wet” should always be tightened in a wet condition (lubricated with engine oil or grease). Any other fasteners than those so specified should be tightened in a dry condition.

2. Table of Standard Tightening Torque

- Threads and bearing surfaces shall be dry (tightened in a dry condition).
- If the mating nut and bolt (or stud bolt) are different in level of strength, tighten them to the torque specified for the bolt.
- Automotive screws refer to coarse screw thread with nominal diameter of 3 to 8 mm or fine screw thread with nominal diameter of 10 mm or larger.

(1) Hexagon head bolts and stud bolts (Unit: N·m {kgf·m})

		Strength					
		4T		7T		8T	
		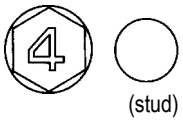 (stud)		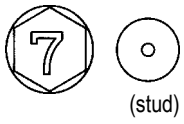 (stud)		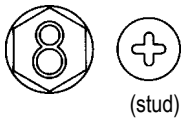 (stud)	
		Automotive screw thread	Coarse screw thread	Automotive screw thread	Coarse screw thread	Automotive screw thread	Coarse screw thread
Nominal diameter mm	**M5**	2 to 3 {0.2 to 0.3}	–	4 to 6 {0.4 to 0.6}	–	5 to 7 {0.5 to 0.7}	–
	M6	4 to 6 {0.4 to 0.6}	–	7 to 10 {0.7 to 1.0}	–	8 to 12 {0.8 to 1.2}	–
	M8	9 to 13 {0.9 to 1.3}	–	16 to 24 {1.6 to 2.4}	–	19 to 28 {1.9 to 2.9}	–
	M10	18 to 27 {1.8 to 2.8}	17 to 25 {1.7 to 2.5}	34 to 50 {3.5 to 5.1}	32 to 48 {3.3 to 4.9}	45 to 60 {4.6 to 6.1}	37 to 55 {3.8 to 5.6}
	M12	34 to 50 {3.5 to 5.1}	31 to 45 {3.2 to 4.6}	70 to 90 {7.1 to 9.2}	65 to 85 {6.6 to 8.7}	80 to 105 {8.2 to 11}	75 to 95 {7.6 to 9.7}
	M14	60 to 80 {6.1 to 8.2}	55 to 75 {5.6 to 7.6}	110 to 150 {11 to 15}	100 to 140 {10 to 14}	130 to 170 {13 to 17}	120 to 160 {12 to 16}
	M16	90 to 120 {9.2 to 12}	90 to 110 {9 to 11}	170 to 220 {17 to 22}	160 to 210 {16 to 21}	200 to 260 {20 to 27}	190 to 240 {19 to 24}
	M18	130 to 170 {13 to 17}	120 to 150 {12 to 15}	250 to 330 {25 to 34}	220 to 290 {22 to 30}	290 to 380 {30 to 39}	250 to 340 {25 to 35}
	M20	180 to 240 {18 to 24}	170 to 220 {17 to 22}	340 to 460 {35 to 47}	310 to 410 {32 to 42}	400 to 530 {41 to 54}	360 to 480 {37 to 49}
	M22	250 to 330 {25 to 34}	230 to 300 {23 to 31}	460 to 620 {47 to 63}	420 to 560 {43 to 57}	540 to 720 {55 to 73}	490 to 650 {50 to 66}
	M24	320 to 430 {33 to 44}	290 to 380 {30 to 39}	600 to 810 {61 to 83}	540 to 720 {55 to 73}	700 to 940 {71 to 96}	620 to 830 {63 to 85}

		Strength	
		8.8 (Nut 4T)	8.8 (Nut 6T)
		Automotive screw thread	
Nominal diameter mm	**M10**	18 to 27 {1.8 to 2.8}	45 to 60 {4.6 to 6.1}
	M12	34 to 50 {3.5. to 5.1}	80 to 105 {8.2 to 11}
	M14	60 to 80 {6.1 to 8.2}	130 to 170 {13 to 17}

(2) Hexagon flange bolts (Unit: N·m {kgf·m})

		Strength					
		4T		7T		8T	
			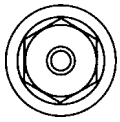		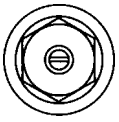		
		Automotive screw thread	Coarse screw thread	Automotive screw thread	Coarse screw thread	Automotive screw thread	Coarse screw thread
Nominal diameter mm	**M6**	4 to 6 {0.4 to 0.6}	–	8 to 12 {0.8 to 1.2}	–	10 to 14 {1.0 to 1.4}	–
	M8	10 to 15 {1.0 to 1.5}	–	19 to 28 {1.9 to 2.9}	–	22 to 33 {2.2 to 3.4}	–
	M10	21 to 31 {2.1 to 3.2}	20 to 29 {2.0 to 3.0}	45 to 55 {4.6 to 5.6}	37 to 54 {3.8 to 5.5}	50 to 65 {5.1 to 6.6}	50 to 60 {5.1 to 6.1}
	M12	38 to 56 {3.9 to 5.7}	35 to 51 {3.6 to 5.2}	80 to 105 {8.2 to 11}	70 to 95 {7.1 to 9.7}	90 to 120 {9.2 to 12}	85 to 110 {8.7 to 11}

		Strength	
		8.8 (Nut 4T)	8.8
		Automotive screw thread	
Nominal diameter mm	**M10**	21 to 31 {2.1 to 3.2}	50 to 65 {5.1 to 6.6}
	M12	38 to 56 {3.9 to 5.7}	90 to 120 {9.2 to 12}

https://truckmanualshub.com/

(3) Hexagon nuts (Unit: N·m {kgf·m})

		Strength					
		4T		6T (Bolt 7T)		6T (Bolt 8T)	
		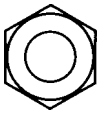		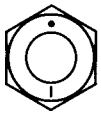		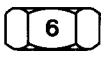	
		Automotive screw thread	Coarse screw thread	Automotive screw thread	Coarse screw thread	Automotive screw thread	Coarse screw thread
Nominal diameter mm	**M5**	2 to 3 {0.2 to 0.3}	–	4 to 6 {0.4 to 0.6}	–	5 to 7 {0.5 to 0.7}	–
	M6	4 to 6 {0.4 to 0.6}	–	7 to 10 {0.7 to 1.0}	–	8 to 12 {0.8 to 1.2}	–
	M8	9 to 13 {0.9 to 1.3}	–	16 to 24 {1.6 to 2.4}	–	19 to 28 {1.9 to 2.9}	–
	M10	18 to 27 {1.8 to 2.8}	17 to 25 {1.7 to 2.5}	34 to 50 {3.5 to 5.1}	32 to 48 {3.3 to 4.9}	45 to 60 {4.6 to 6.1}	37 to 55 {3.8 to 5.6}
	M12	34 to 50 {3.5 to 5.1}	31 to 45 {3.2 to 4.6}	70 to 90 {7.1 to 9.2}	65 to 85 {6.6 to 8.7}	80 to 105 {8.2 to 11}	75 to 95 {7.6 to 9.7}
	M14	60 to 80 {6.1 to 8.2}	55 to 75 {5.6 to 7.6}	110 to 150 {11 to 15}	100 to 140 {10 to 14}	130 to 170 {13 to 17}	120 to 160 {12 to 16}
	M16	90 to 120 {9.2 to 12}	90 to 110 {9 to 11}	170 to 220 {17 to 22}	160 to 210 {16 to 21}	200 to 260 {20 to 27}	190 to 240 {19 to 24}
	M18	130 to 170 {13 to 17}	120 to 150 {12 to 15}	250 to 330 {25 to 34}	220 to 290 {22 to 30}	290 to 380 {30 to 39}	250 to 340 {25 to 35}
	M20	180 to 240 {18 to 24}	170 to 220 {17 to 22}	340 to 460 {35 to 47}	310 to 410 {32 to 42}	400 to 530 {41 to 54}	360 to 480 {37 to 49}
	M22	250 to 330 {25 to 34}	230 to 300 {23 to 31}	460 to 620 {47 to 63}	420 to 560 {43 to 57}	540 to 720 {55 to 73}	490 to 650 {50 to 66}
	M24	320 to 430 {33 to 44}	290 to 380 {30 to 39}	600 to 810 {61 to 83}	540 to 720 {55 to 73}	700 to 940 {71 to 96}	620 to 830 {63 to 85}

(4) Hexagon flange nuts (Unit: N·m {kgf·m})

		Strength	
		4T	
		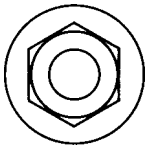	
		Automotive screw thread	Coarse screw thread
Nominal diameter mm	**M6**	4 to 6 {0.4 to 0.6}	–
	M8	10 to 15 {1.0 to 1.5}	–
	M10	21 to 31 {2.1 to 3.2}	20 to 29 {2.0 to 3.0}
	M12	38 to 56 {3.9 to 5.7}	35 to 51 {3.6 to 5.2}

(5) Tightening torques of general flare nuts (Unit: N·m {kgf·m})

Pipe diameter mm	ϕ4.76	ϕ6.35	ϕ8	ϕ10	ϕ12	ϕ15
Tightening torque	17 {1.7}	25 {2.6}	39 {4.0}	59 {6.0}	88 {9.0}	98 {10}

(6) Tightening torques of nylon tubes for general air piping (DIN) (Unit: N·m {kgf·m})

Nominal diameter × wall thickness mm	6 × 1	10 × 1.25	12 × 1.5	15 × 1.5
Tightening torque	20^{+6}_{0} {$2.0^{+0.6}_{0}$}	34^{+10}_{0} {$3.5^{+1.0}_{0}$}	49^{+10}_{0} {$5.0^{+1.0}_{0}$}	54^{+5}_{0} {$5.5^{+0.5}_{0}$}

(7) Tightening torques of nylon tubes for general air piping (SAE) (Unit: N·m {kgf·m})

Nominal diameter in.	1/4	3/8	1/2	5/8
Tightening torque	13^{+4}_{0} {$1.3^{+0.4}_{0}$}	29^{+5}_{0} {$3.0^{+0.5}_{0}$}	49^{+5}_{0} {$5.0^{+0.5}_{0}$}	64^{+5}_{0} {$6.5^{+0.5}_{0}$}

https://truckmanualshub.com/

GROUP 11 ENGINE

SPECIFICATIONS 11-2

STRUCTURE AND OPERATION
1. Exploded View 11-3
2. Cylinder Head, Cylinder Head Gasket, Camshaft and Camshaft Frame 11-4
3. Valve Mechanism 11-5
4. Connecting Rod 11-6
5. Piston 11-6
6. Timing Gears 11-7
7. Flywheel 11-7
8. Balance Shafts 11-8
9. Crankcase and Main Bearings 11-9
10. Oil Seals 11-11

TROUBLESHOOTING 11-12

ON-VEHICLE INSPECTION AND ADJUSTMENT
1. Measuring Compression Pressure 11-14
2. Inspection and Adjustment of Valve Clearances 11-16

ENGINE REMOVAL AND INSTALLATION 11-18

ROCKER COVER 11-22

ROCKERS AND CAMSHAFTS 11-24

CYLINDER HEAD AND VALVE MECHANISM 11-36

PISTONS, CONNECTING ROD AND CYLINDER LINERS 11-50

FLYWHEEL 11-64

FRONT CASE 11-68

TIMING GEARS AND BALANCE SHAFTS 11-72

CRANKSHAFT AND CRANKCASE 11-80

BALANCE SHAFT BUSHINGS 11-88

https://truckmanualshub.com/

Item		Specifications
Engine model		4M50T5
Type		4-cylinder, in-line, water-cooled, 4-cycle diesel engine
Combustion chamber		Direct injection type
Valve mechanism		Double overhead camshaft (DOHC)
Maximum output	kW {PS} / rpm	132 {180} / 2700
Maximum torque	N·m {kgf·m} / rpm	530 {54} / 1600
Bore × stroke	mm	ϕ114 × 120
Total displacement	cm^3 {L}	4899 {4.899}
Compression ratio		17.0

https://truckmanualshub.com/

1. Exploded View

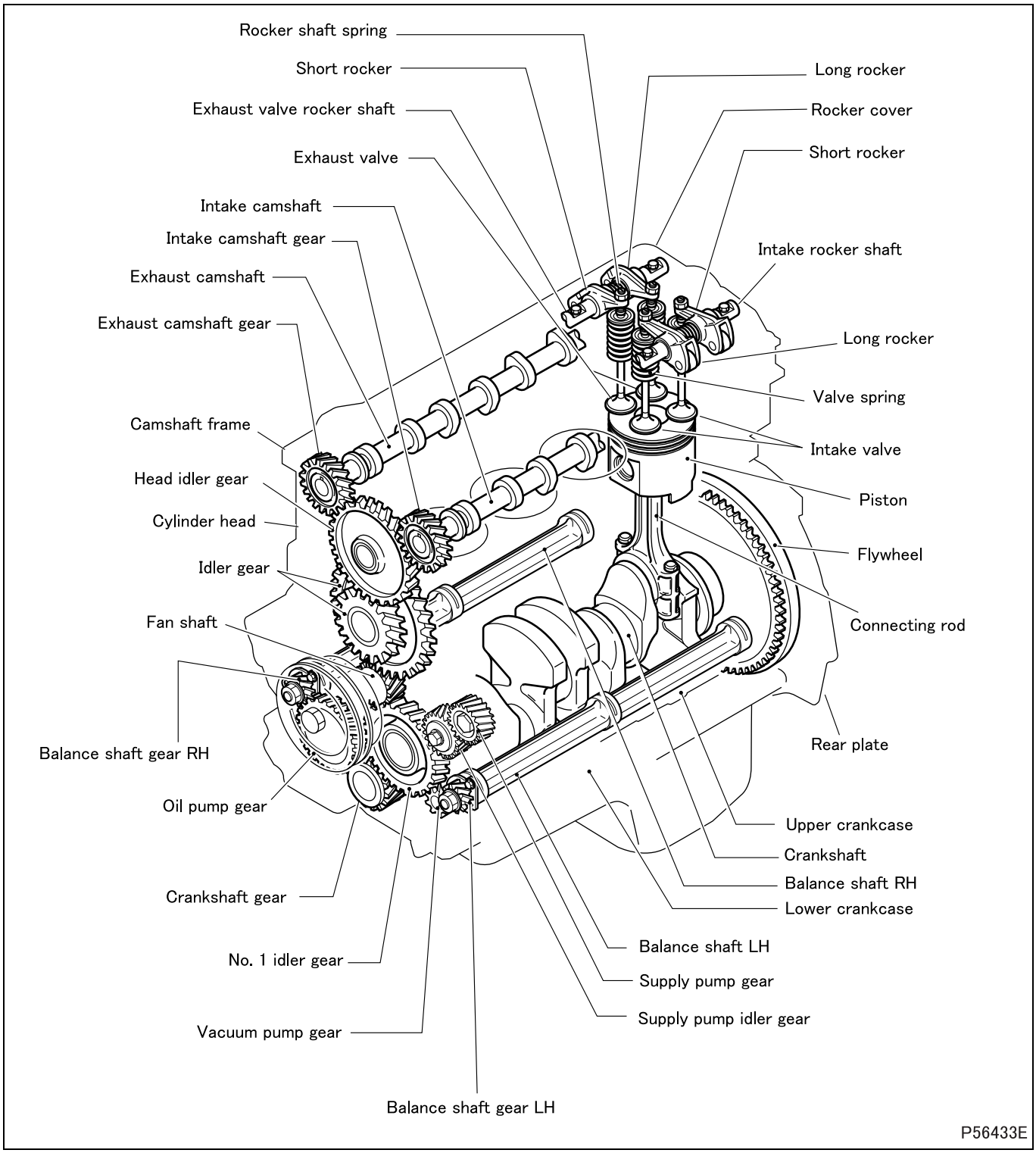

https://truckmanualshub.com/

2. Cylinder Head, Cylinder Head Gasket, Camshaft and Camshaft Frame

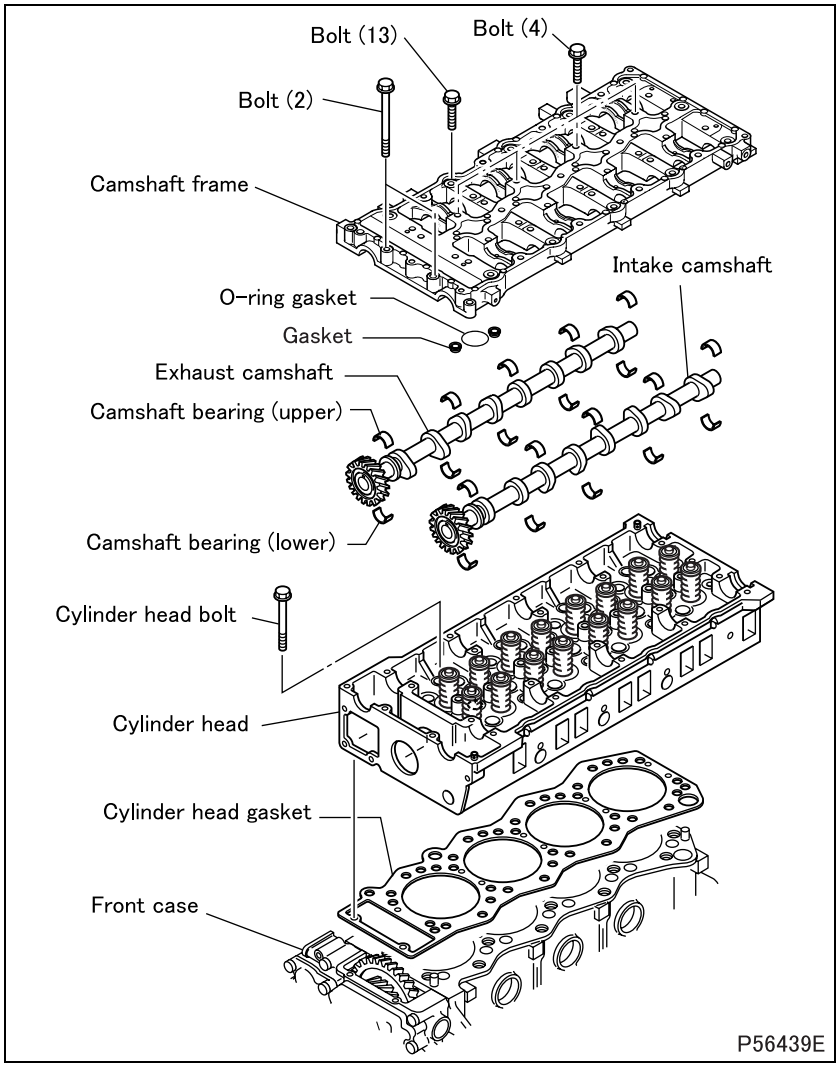

- The camshaft is supported at its journals from below by the cylinder head and retained from above by the camshaft frame.
- The upper and lower camshaft bearings are identical, but cannot be interchanged when they are reinstalled.
- The exhaust camshaft and the intake camshaft have identical gears but different cams.
- The thirteen shortest bolts and four shorter bolts fasten the camshaft frame onto the cylinder head.
- The two long bolts fasten the camshaft frame to the front case.

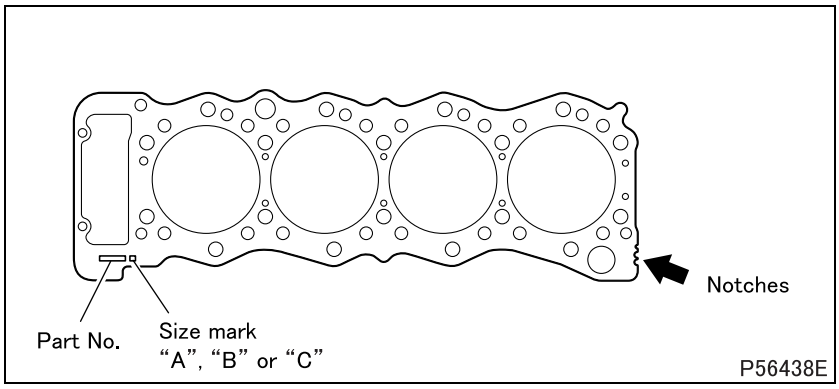

2.1 Cylinder head gasket

- Select and use a cylinder head gasket of a thickness that can accommodate the piston projection.
- The size (thickness) class of the gasket can be identified by the shape of the notches and size mark cut on the edge of each gasket.

3. Valve Mechanism

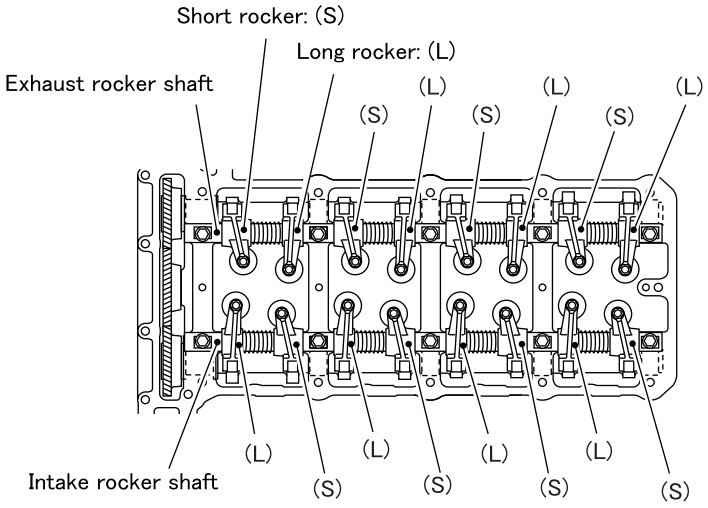

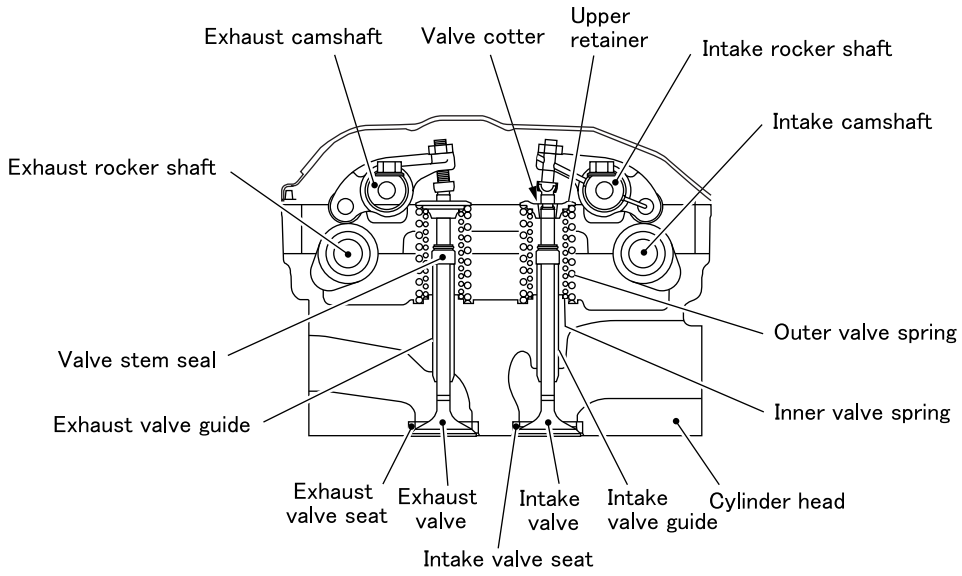

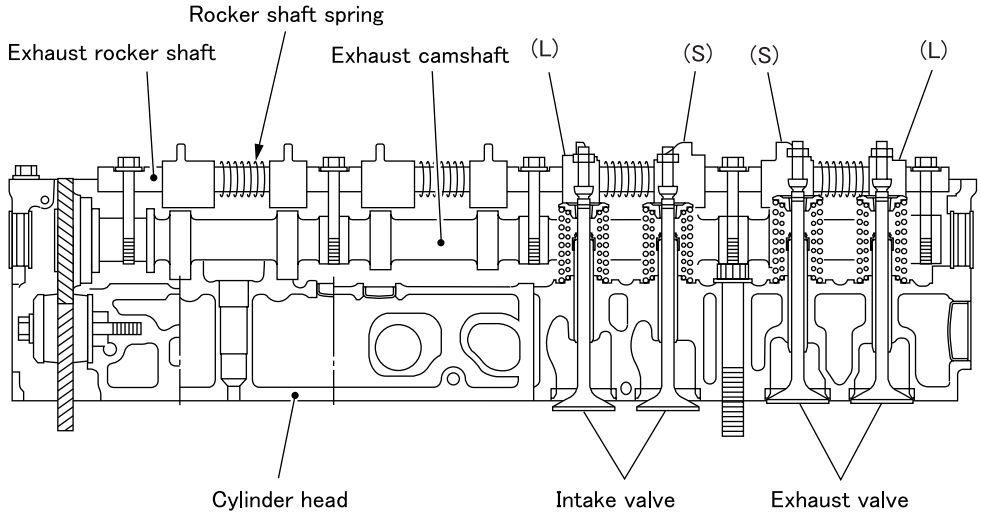

P102370E

- The short rockers and the long rockers are installed differently, as shown in the illustration.
- Each valve has an inner valve spring and an outer valve spring.

https://truckmanualshub.com/

4. Connecting Rod

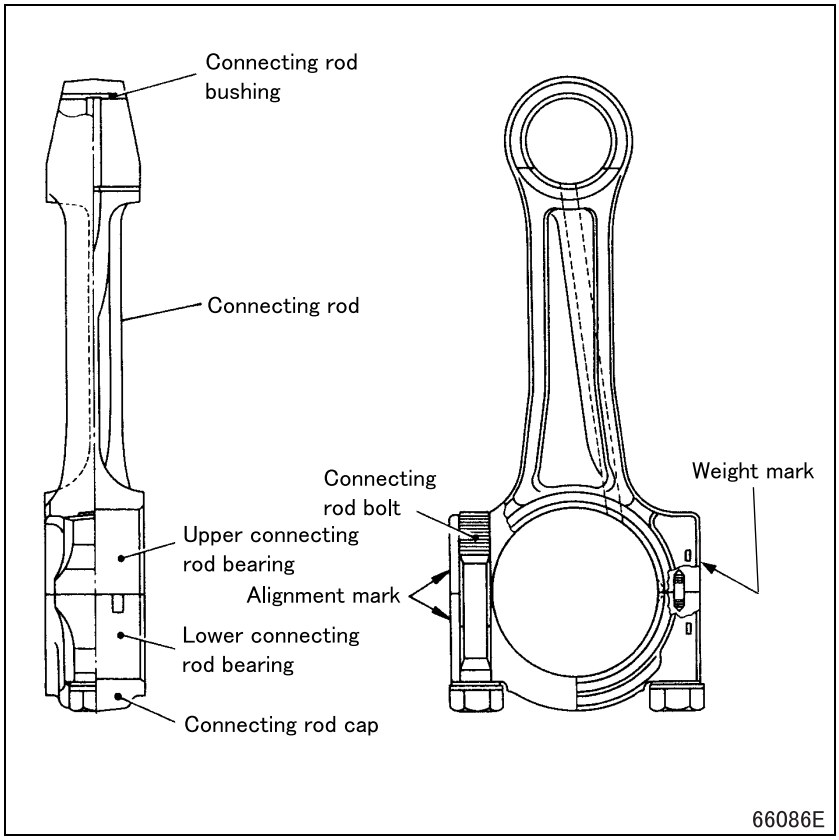

Weight mark:
"C" to "G"
(with "G" as the maximum)

5. Piston

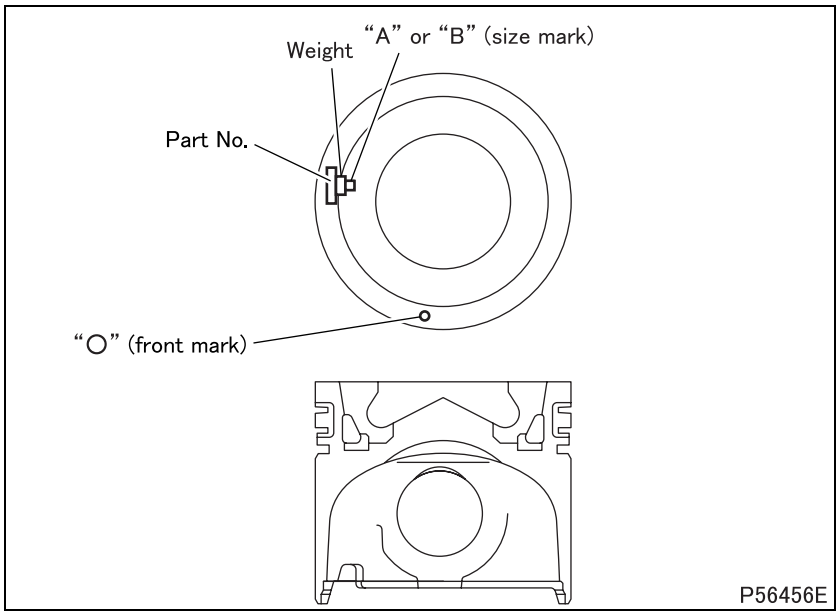

- Each piston must be mated with a cylinder in the upper crankcase that has the same size mark as the piston. The pistons are marked with either "A" or "B", where "B" stands for the larger and "A" for the smaller of the two available diameters.
- The pistons have been made lightweight by use of a special aluminum alloy, as well as by the reduction of their height.

6. Timing Gears

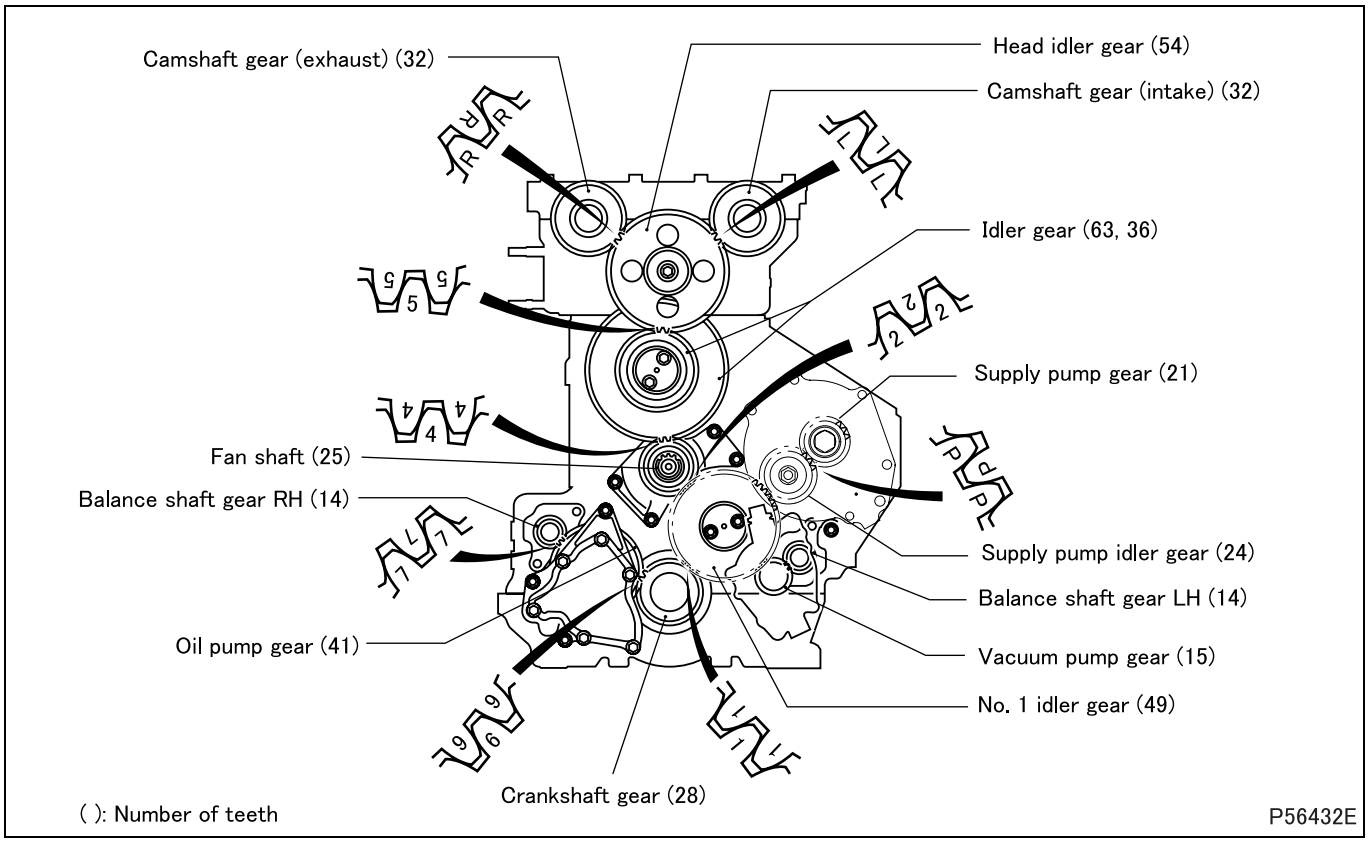

- All gears, except the vacuum pump gear, each has timing mark(s) to ensure correct engagement during assembly.

7. Flywheel

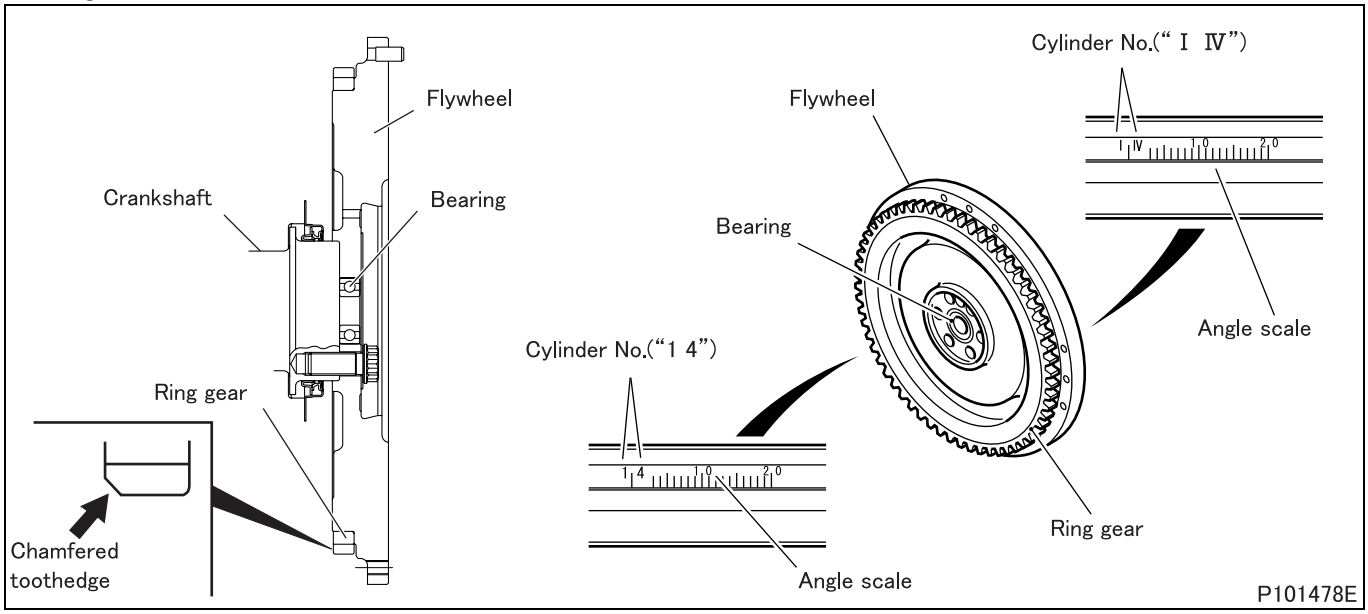

- One side of each flywheel ring gear tooth is chamfered to facilitate the engagement of the starter pinion.

https://truckmanualshub.com/

8. Balance Shafts

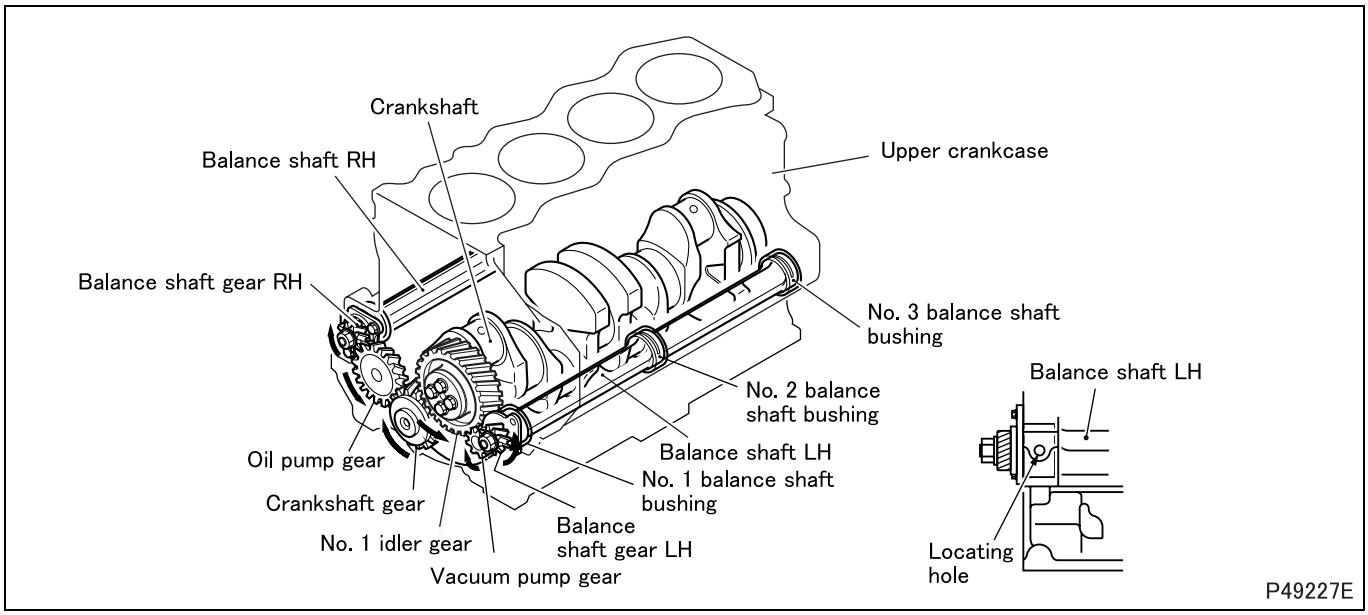

- The balance shaft RH and balance shaft LH are mounted in the upper crankcase on the right and left sides of the crankshaft. The balance shafts reduce the vibration of the engine caused by the rotation of the crankshaft.
- The balance shaft RH and balance shaft LH are both driven by timing gears. Each balance shaft is held in the upper crankcase by way of three balance shaft bushings.
- The balance shaft LH has a locating hole to enable correct installation.

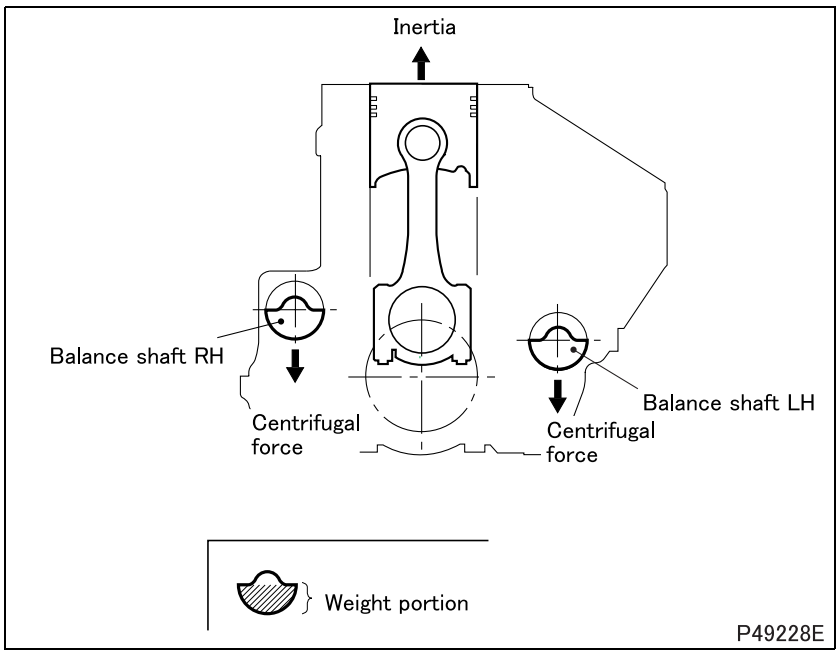

8.1 Reduction of vertical vibration (secondary vibration element)

- When the piston moves up and down, vertical vibrations are generated at the top dead center (TDC) and bottom dead center (BDC) due to inertia.
- The balance shaft LH and the balance shaft RH rotate so that their weight portions are at the bottom positions when a piston is at TDC and at the top positions when the piston is at BDC, i.e., the weight portions are always on the opposite side to the piston head.
- This creates centrifugal forces in the balance shaft RH and balance shaft LH, the total of which is equal in amount to the inertia force that the piston creates when it is at TDC or BDC. These centrifugal forces in the balance shafts cancel out the inertia forces resulting from piston's movements and reduce the amount of vertical vibration.
- The balance shafts also reduce the moment created around the crankshaft (which constitutes secondary vibration elements) when the engine is running in the middle-to-high speed range.

https://truckmanualshub.com/

9. Crankcase and Main Bearings

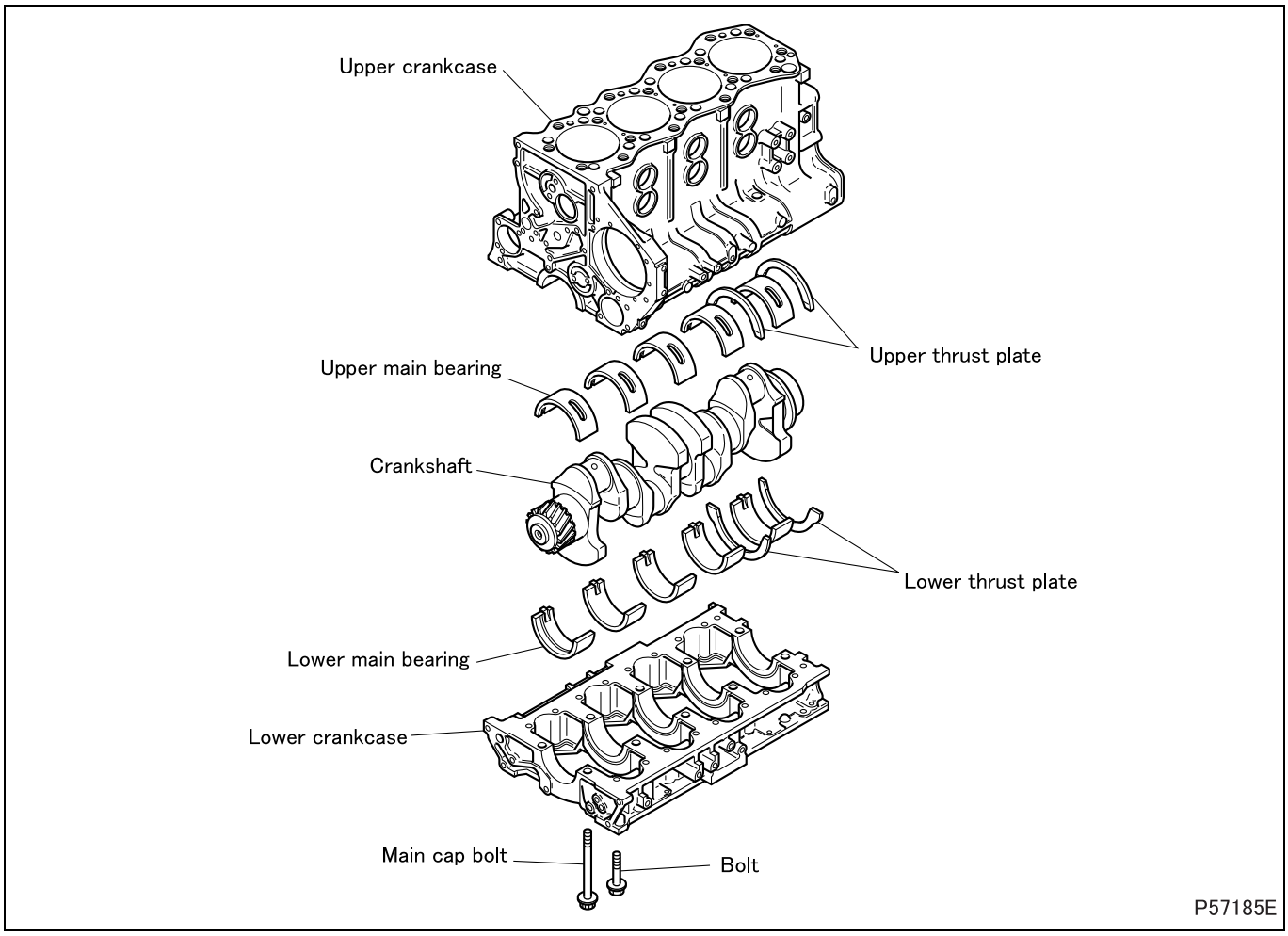

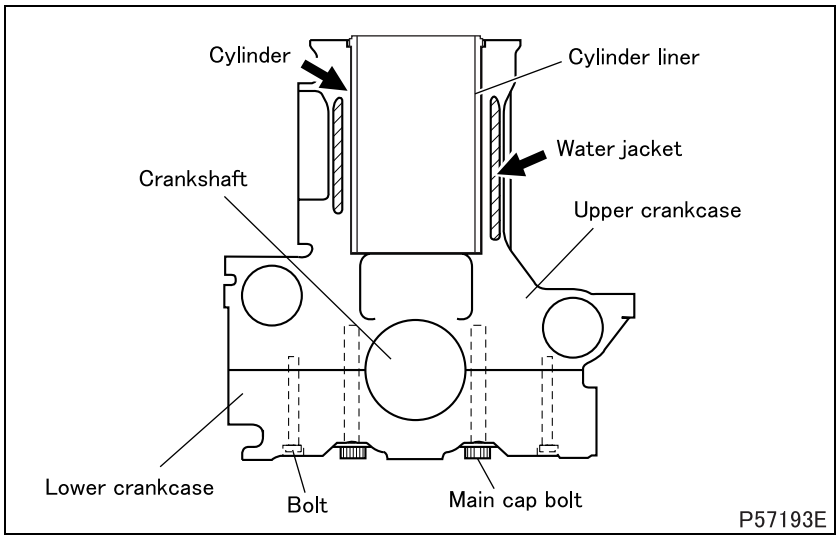

9.1 Crankcase

- The crankcase is a two-piece type consisting of an upper crankcase and a lower crankcase, which hold the crankshaft in between.
- Cylinder liners are inserted into the cylinder bores in the upper crankcase.
- An water jacket is formed in the walls of these cylinders to cool them down.
- The main cap bolts and the bolts that fasten the upper and lower crankcases together are tightened using a special method.

https://truckmanualshub.com/

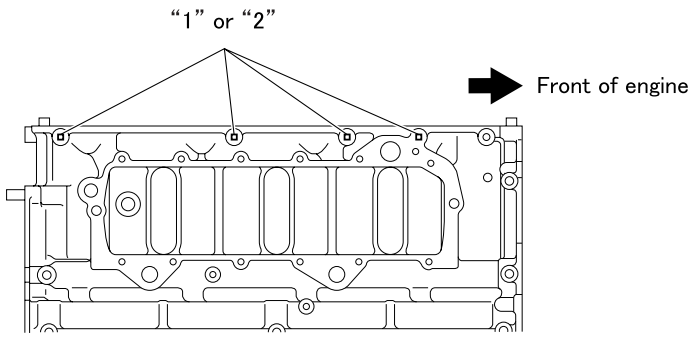

- The upper crankcase is marked with a size mark ("1" or "2") to be used as a reference in selecting cylinder liners.
- The first to forth size marks from the front of the engine correspond to the No. 1 to No. 4 cylinders.

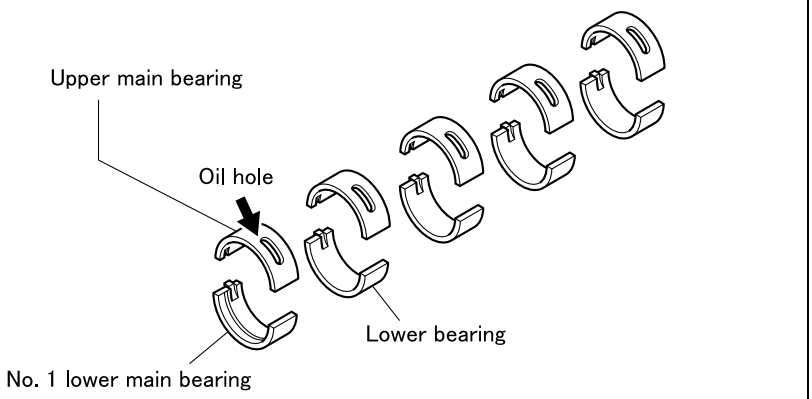

9.2 Main bearing

- The upper main bearings have oil holes through which engine oil is supplied to the crankshaft journals.
- An oil groove is provided in the No. 1 lower bearing.

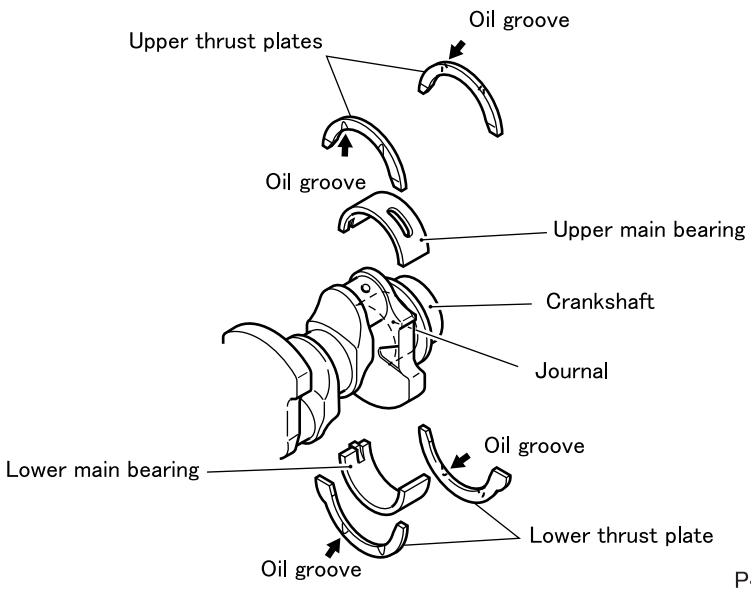

9.3 Thrust plates

- Two upper and lower thrust plate pairs are installed on both sides of the upper and lower main bearings at the rearmost journal of the crankshaft.
- Select the thrust plates of a thickness that can accommodate the crankshaft end play. The thrust plates each have two oil grooves, which assures their minimum friction against the crankshaft journal.

https://truckmanualshub.com/

10. Oil Seals

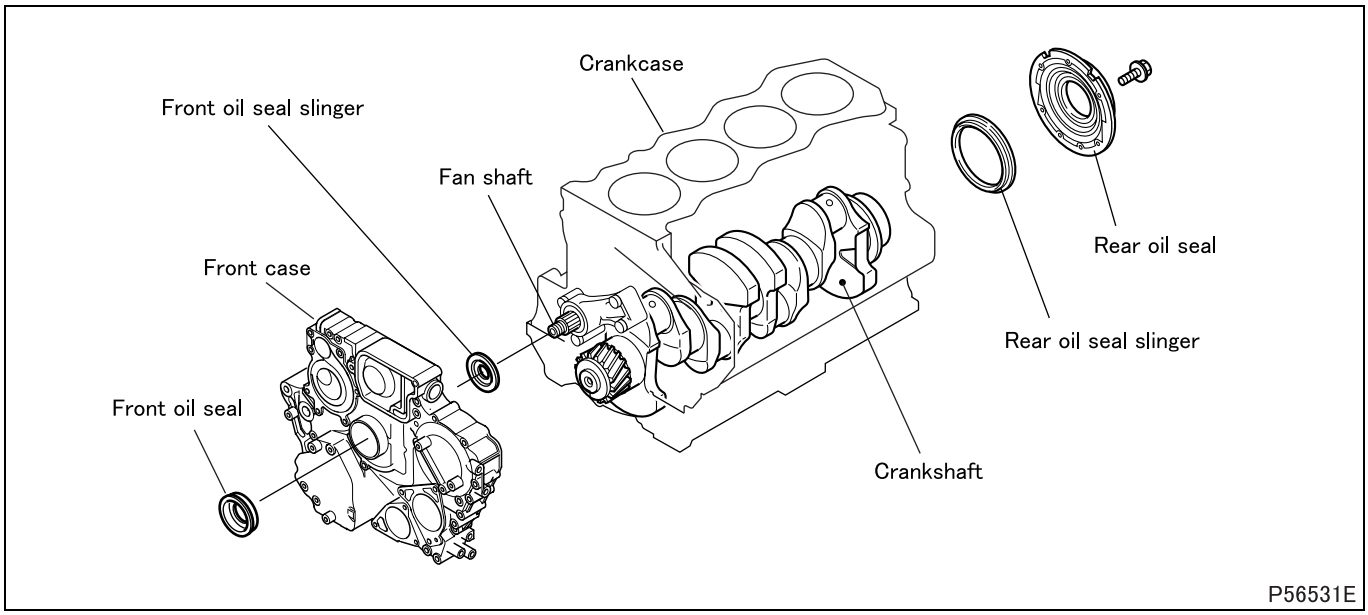

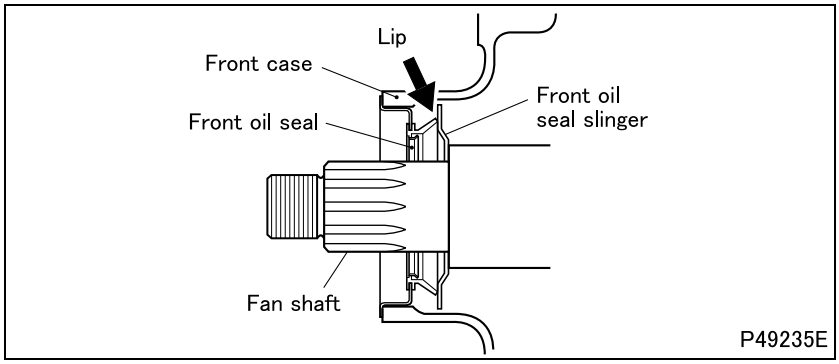

10.1Front oil seal

- The front oil seal is fitted in the front case, and prevents oil from leaking by contact of its lip with the front oil seal slinger.
- The front oil seal slinger is press-fitted onto the fan shaft.

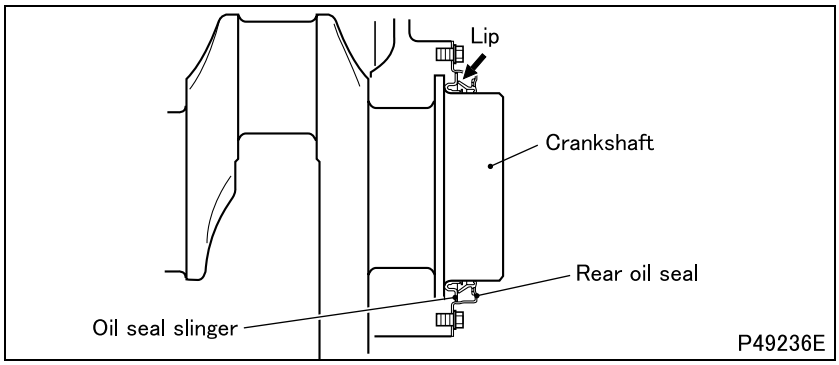

10.2Rear oil seal

- The rear oil seal is fitted in the crank-case assembly, and prevents oil from leaking by contact of its lip with the rear oil seal slinger.
- The rear oil seal slinger is press-fitted onto the rear end of the crankshaft.

https://truckmanualshub.com/

Possible causes \ Symptoms		Low power output	Abnormal engine noise	Reference Gr
Cylinder head and valve mechanism	Incorrect valve clearance	O	O	
	Defective cylinder head gasket	O	O	
	Worn valve and valve seat; carbon deposits	O	O	
	Weakened valve spring	O	O	
	Defective rocker shaft and camshaft frame		O	
	Poor lubrication of rocker shaft and camshaft frame		O	
Timing gears	Incorrect backlash in timing gears		O	
	Poor lubrication of timing gears and idler shaft		O	
Camshaft	Excessive end play in camshaft		O	
	Worn camshaft		O	
Pistons and connecting rods	Worn/damaged piston ring groove(s)	O	O	
	Worn/damaged piston ring(s)	O	O	
	Worn piston pin and connecting rod small end		O	
Crankshaft	Excessive end play in crankshaft		O	
	Incorrectly fitted crankshaft		O	
	Worn/damaged crankshaft pins and connecting rod bearings		O	
	Worn/damaged crankshaft journals and main bearings		O	
Fuel system	Defective supply pump	O	O	Gr13E
	Faulty fuel spray from injector	O	O	Gr13A
	Air- or water-trapped in fuel system	O		
	Irregular fuel (kerosene, heavy oil, bio-fuel, etc.) is used	O		
Cooling system	Malfunctioning cooling system components	O		Gr14
	Loose/damaged belts		O	
Intake and exhaust system	Clogged air cleaner	O	O	Gr15
	Malfunctioning turbocharger	O	O	
	Clogged muffler	O	O	
Incorrect oil viscosity		O		Gr12
Incorrectly fitted piping and hoses			O	
Defective/incorrectly fitted alternator and other auxiliaries			O	

https://truckmanualshub.com/

M E M O

https://truckmanualshub.com/

ON-VEHICLE INSPECTION AND ADJUSTMENT

1. Measuring Compression Pressure

Service standards

Location	Maintenance item		Standard value	Limit	Remedy
–	Compression pressure	Each cylinder (at 250 rpm)	3100 kPa {32 kgf/cm^2}	2400 kPa {24 kgf/cm^2}	Inspect
		Cylinder-to-cylinder pressure difference	–	500 kPa {5 kgf/cm^2} or less	Inspect

Special tools (Unit: mm)

Mark	Tool name and shape	Part No.	Application
a	Compression gauge adapter A: M14 × 1.5, B: 58, C: ϕ7.2 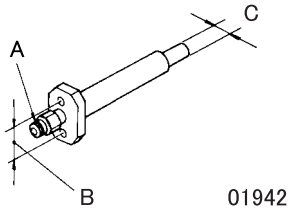	MH063853	Measuring compression pressure

- A drop in compression pressure can be used as a guide to determine when the engine should be overhauled.
- Measure the compression pressure at regular intervals. Keeping track of its transitions can provide a useful tool for troubleshooting. On new vehicles and vehicles with newly replaced parts, the compression pressure will be somewhat higher depending on the break-in condition of piston rings, valve seats, etc., but this will return to normal as the parts wear down.
- Before the compression measurement, confirm that the engine oil, starter, and battery are in normal condition.
- Place the vehicle in the following conditions.
  - Warm up the engine until the coolant temperature reaches approximately 80 to 90°C.
  - Turn off the lights and auxiliaries.
  - Place the transmission in neutral.
  - Place the steering wheel in the straight-ahead position.

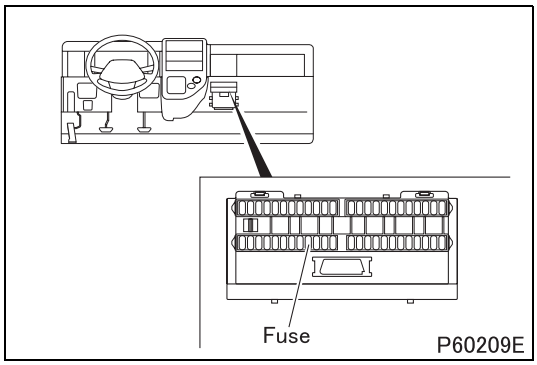

- Remove the fuse (M9) to prevent fuel from being injected when the engine is cranked by the starter.

CAUTION ⚠

- **When cranking the engine, never shut off the power to the engine electronic control unit by disconnecting the engine electronic control unit connector or the like.**
- **If the engine is cranked while shutting off the power to the engine electronic control unit, the electronic control unit cannot control the supply pump and this may cause failure to the pump.**

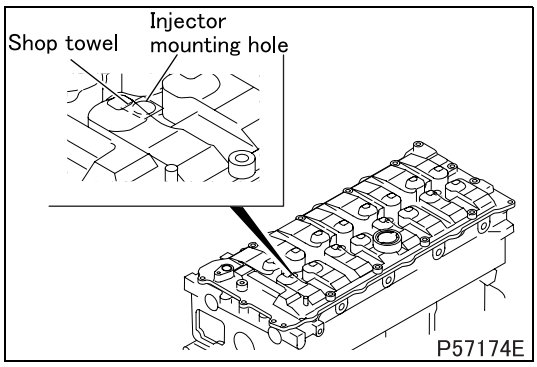

- Disconnect the injector connector and remove all injectors.
- Cover the injector mounting holes with shop towels. After cranking the engine by the starter, check that no foreign substances are deposited on the shop towels.
- If there are deposits (such as engine oil or coolant) on the shop towels, the following may be the cause:
  - Deposits of engine oil alone can mean a defective piston ring seal; the piston rings must be inspected.
  - Deposits of both engine oil and coolant can mean cracks in the cylinders; the crankcase must be replaced.

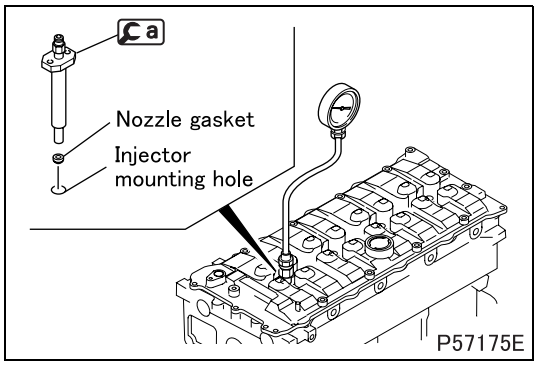

WARNING ⚠

- **When coolant and engine oil deposits are evident, cranking the engine could be dangerous as these substances, heated to high temperatures, will blow out from the injector mounting holes. Make sure to stay away from the injector mounting holes when the engine is being cranked.**

- Attach the gasket and a to one of the injector mounting holes. Then, connect a compression gauge to a.
- Crank the engine and measure the compression pressure for all the cylinders one after another. Determine the compression pressure difference between the cylinders.
- If the compression pressure is below the limit or the cylinder-to-cylinder pressure differences is not within the limit, pour a small amount of engine oil into the corresponding injector mounting hole and remeasure the compression pressure.
  - If the compression pressure increases, the piston rings and cylinder surfaces may be badly worn or otherwise damaged.
  - If the compression pressure remains unchanged, there may be seizure in the valves, the valves may be incorrectly seated or the cylinder head gasket may be defective.
- Install the injector after inspection. (See Gr13.)

https://truckmanualshub.com/

2. Inspection and Adjustment of Valve Clearances

Service standards (Unit: mm)

Location	Maintenance item		Standard value	Limit	Remedy
–	Valve clearance (when cold)	Intake valve	0.4	–	Adjust
		Exhaust valve	0.5	–	

Tightening torque (Unit: N·m {kgf·m})

Mark	Parts to be tightened	Tightening torque	Remarks
–	Lock nut (adjusting screw stopping)	20.6 {2.1}	–

Special tools

Mark	Tool name and shape	Part No.	Application
a	Cranking handle 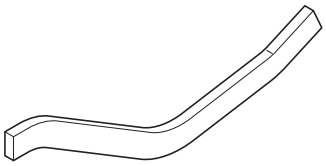 P58299	MH063704	Turning the fan pulley

- Valve clearances should be checked and adjusted as follows while the engine is still cold.

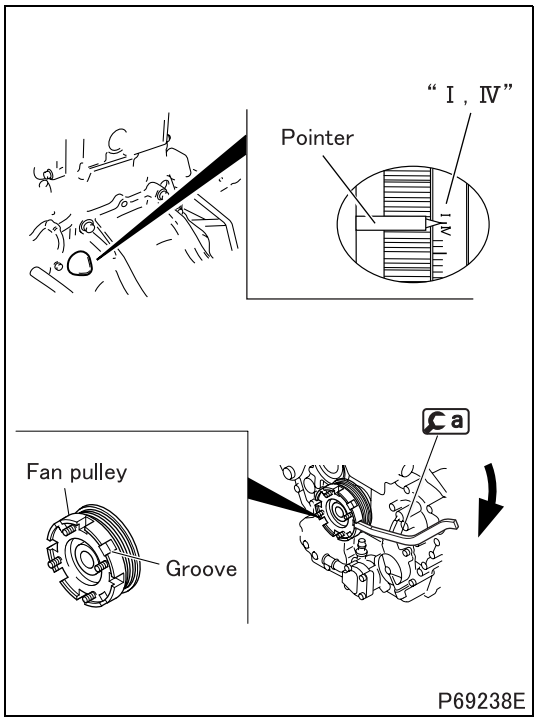

[Inspection]

- Remove the rocker cover.
- Bring the No. 1 or No. 4 cylinder piston to the top dead center (TDC) on the compression stroke by the following procedure:
  - Hook a onto the grooves in the fan pulley.
  - Turn the fan pulley in the illustrated direction to align the pointer with the "Ⅰ, Ⅳ" or "1" to "4" mark on the flywheel.
  - This will place either the No. 1 or No. 4 cylinder piston at TDC on the compression stroke. The cylinder in which the rocker arms for both the intake and exhaust valves can be pushed down by hand by the valve clearance amounts has its piston at TDC. Rotate the engine by one full turn to switch the TDCs of the No. 1 and No. 4 cylinder pistons.

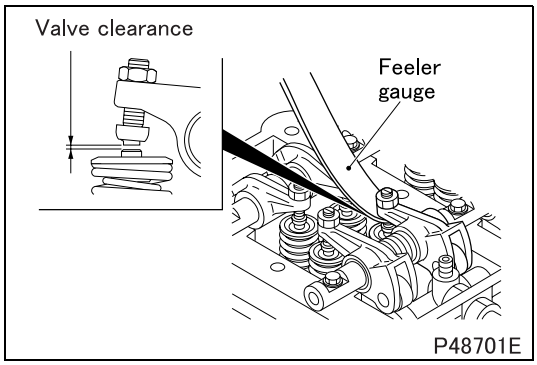

- With the No. 1 or No. 4 cylinder piston at TDC, measure the clearance of the valves marked with a circle in the table below.

Cylinder No.	1		2		3		4	
Valve	IN	EX	IN	EX	IN	EX	IN	EX
No. 1 cylinder piston at TDC on compression stroke	O	O	O	–	–	O	–	–
No. 4 cylinder piston at TDC on compression stroke	–	–	–	O	O	–	O	O

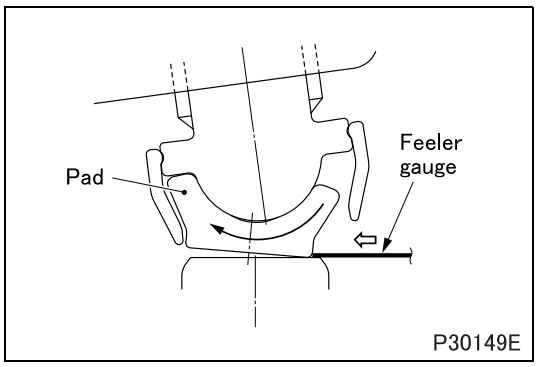

- The feeler gauge cannot be inserted under the adjusting screw pad without carrying out the above step, as the pad will block the feeler gauge as shown in the illustration.

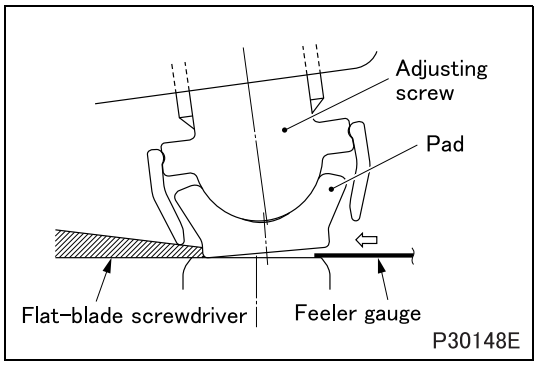

- To insert the feeler gauge under the adjusting screw pad, push the pad at the bottom on one side with a flat-blade screwdriver or a similar tool. Insert the feeler gauge into the small space created under the other side of the pad, as shown in the illustration.
- The feeler gauge must have a slight drag when taking measurements.
- If the feeler gauge can be moved without any resistance, the measurement will be incorrect.
- If the measurements are not within the standard value range, adjust the value clearance by the following procedures.

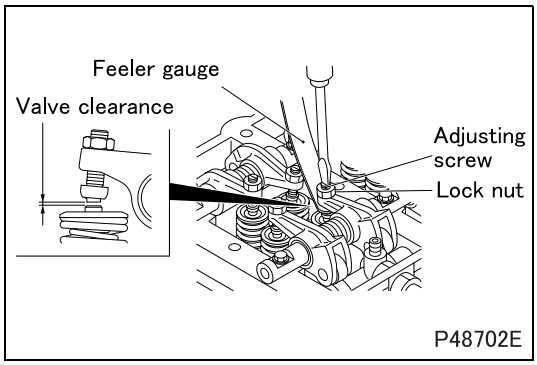

[Adjustment]

- Adjust the valve clearance by loosening the lock nut and rotating the adjusting screw so that the feeler gauge can only be moved with a slight drag.
- After the adjustment, hold the adjusting screw in place with a screwdriver and tighten the lock nut to the specified torque.
- Recheck the valve clearance with the feeler gauge, and readjust if the measurements are not within the specified value range.

https://truckmanualshub.com/

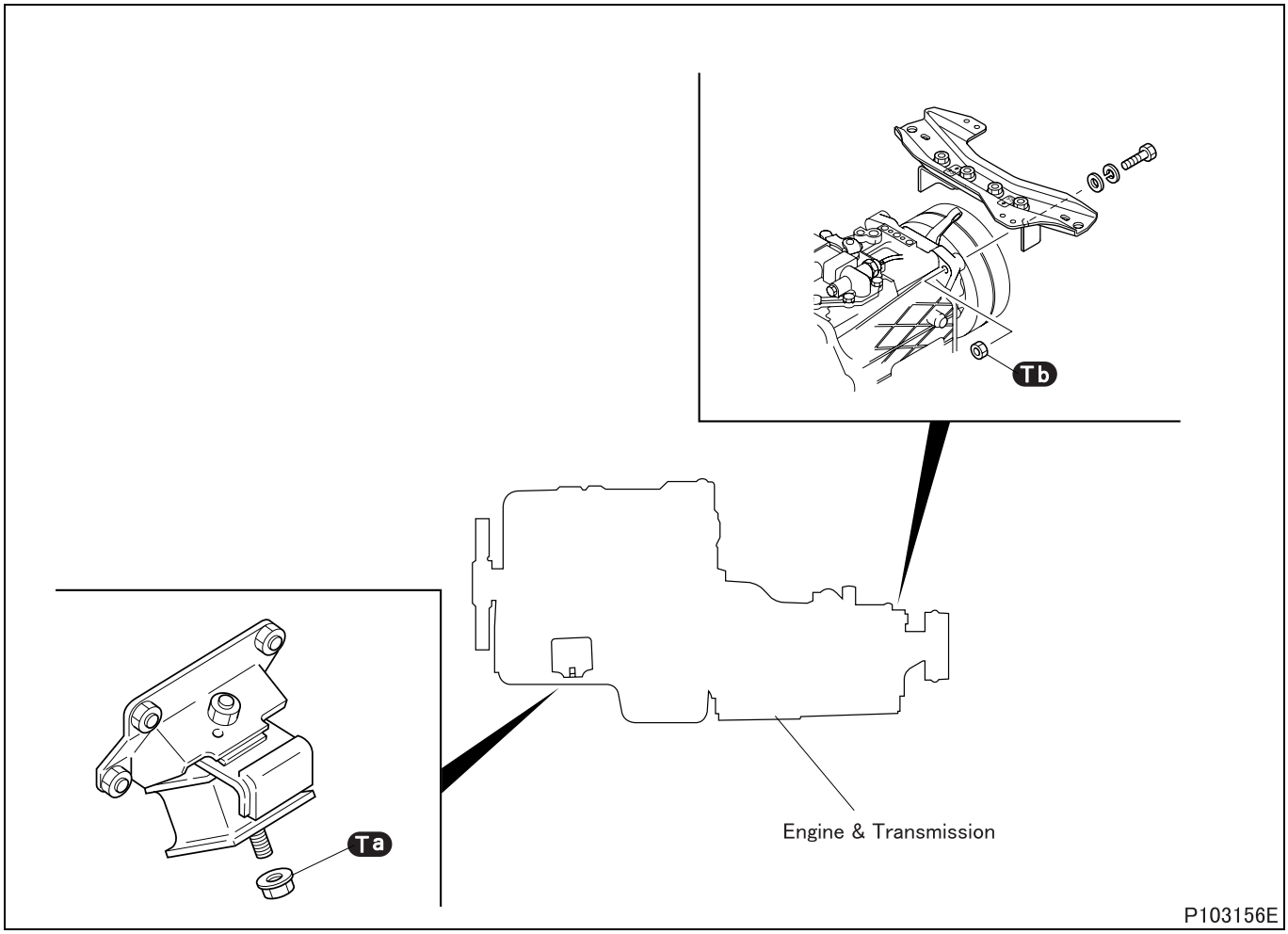

CAUTION ⚠

- **Only use hoisting equipment appropriate for the engine and transmission weight (approximately 600 kg).**

Tightening torque (Unit: N·m {kgf·m})

Mark	Parts to be tightened	Tightening torque	Remarks
Ta	Bolt (front mounting installation)	69 to 88 {7 to 9}	–
Tb	Nut (rear mounting installation)	130 to 170 {13 to 17}	–

Special tools

Mark	Tool name and shape	Part No.	Application
a	Engine front hanger 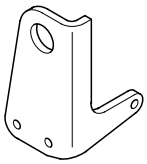 P57188	MH063636	Removal and installation of engine
b	Flange bolt 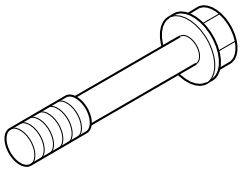 P29984	MF140429 MF140433 MF140421	Installation of engine front hanger
c	Engine rear hanger 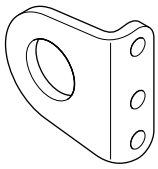 P58957	MH063711	Removal and installation of engine

◆Work before removal◆

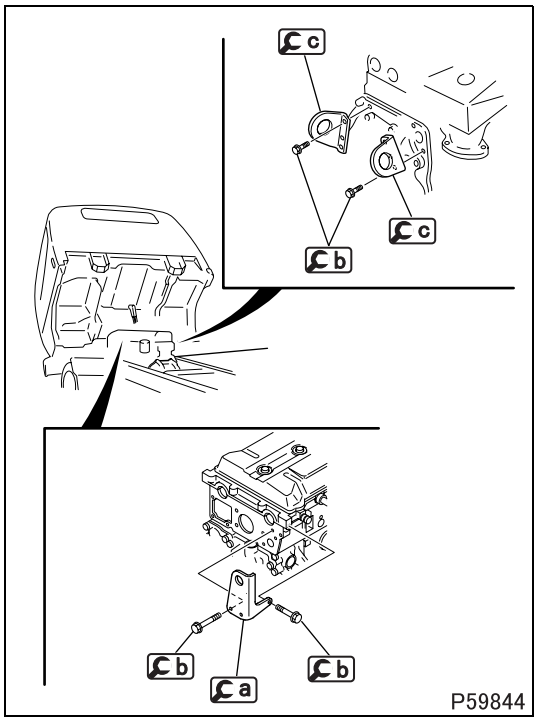

■ **Preparing for engine removal: Installation of engine front hanger and flange bolt**

- Install a, b and c on the engine.

https://truckmanualshub.com/

◆Removal procedure◆

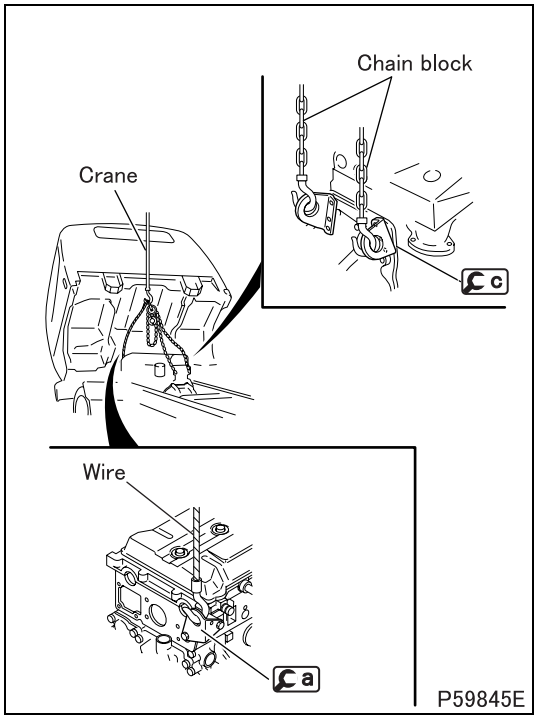

■ **Removal: Engine and transmission**

- Hook the wire rope on a and hitch the chain block to c. Then, pull all the slack out of the slings by a crane.

CAUTION ⚠

- **The slings must be strong enough to hang the engine and transmission assembly (weighing approximately 600 kg).**
- **Be sure to keep the slings away from the exhaust gas recirculation pipes.**

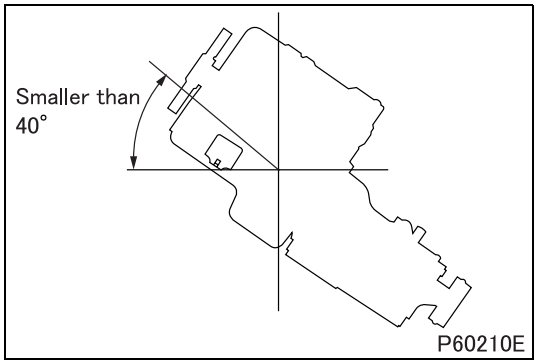

- Make sure that all harnesses and pipes are disconnected.
- Lift the engine and transmission assembly slowing. Take care not to bump the assembly against the frame and cab.

CAUTION ⚠

- **When lifting the engine and transmission assembly, do not incline it larger than 40°.**

https://truckmanualshub.com/

M E M O

https://truckmanualshub.com/

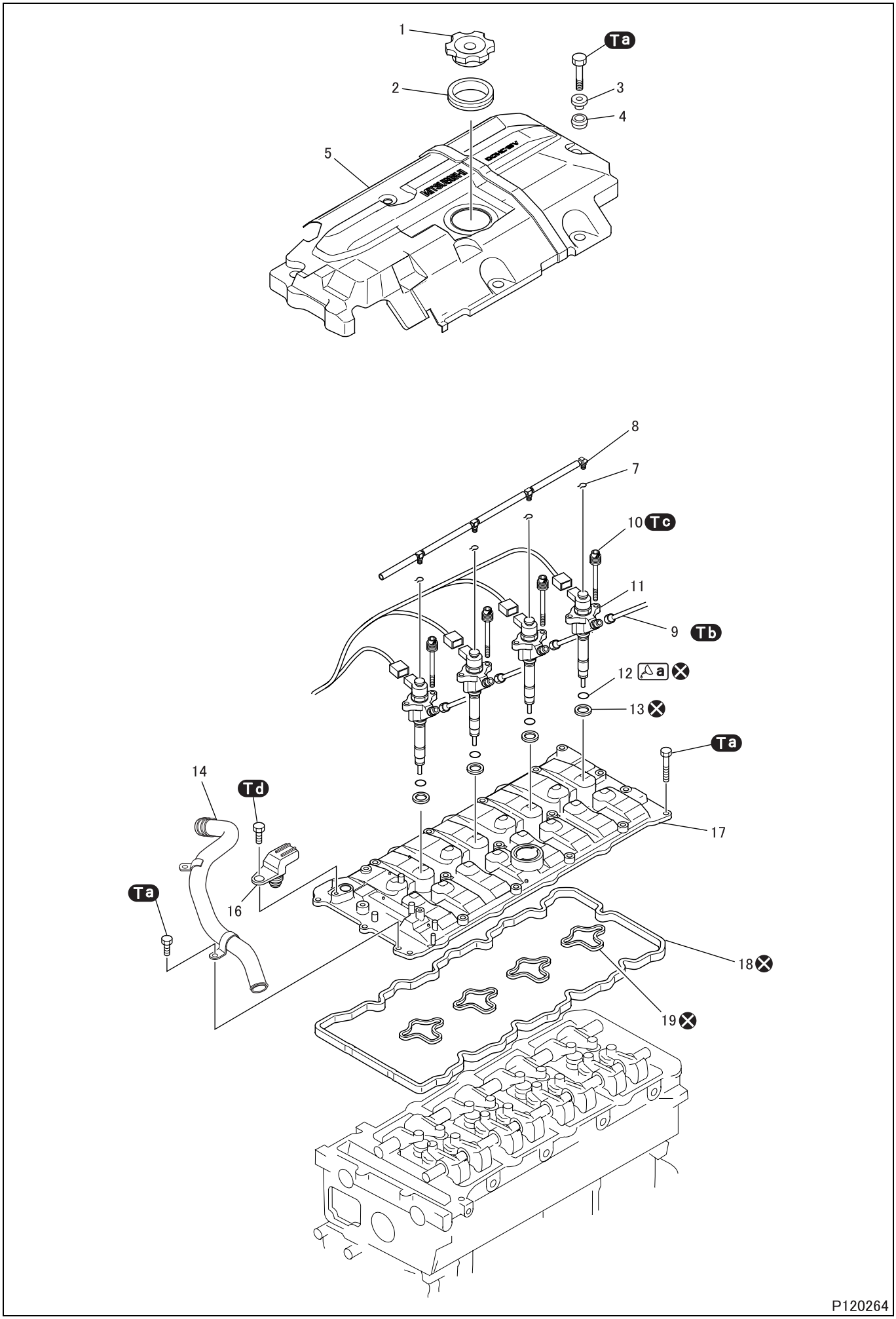

● **Disassembly sequence**

1 Oil filler cap
2 Grommet
3 Spacer
4 Insulator
5 Cover
6 –
7 Snap ring
8 Fuel return hose
9 Injection pipe
10 Bolt (with hexagonal hole)
11 Injector
12 O-ring
13 Tip gasket
14 PCV pipe
15 –
16 Cylinder sensor
17 Rocker cover
18 Rocker cover gasket A
19 Rocker cover gasket B

⊗: Non-reusable parts
PCV: Positive Crankcase Ventilation

WARNING ⚠

- **Fuel is highly combustible. Keep fire and heat away.**
- **Wipe off the leaked fuel. It may cause a fire.**

CAUTION ⚠

- **Be careful not to hit the injectors with a tool or any other hard object during removal.**
- **Do not allow dust to enter the injectors or injection pipes. Otherwise, faulty injection may result.**

- After confirming that no water, oil or any other substance is accumulated in the injector mounting hole, remove the injector.

● **Assembly sequence**

Follow the disassembly sequence in reverse.

CAUTION ⚠

- **Be sure to tighten the injector mounting bolts to the specified torque. If they are over-tightened, the injectors may be deformed, resulting in faulty injection.**

Tightening torque (Unit: N·m {kgf·m})

Mark	Parts to be tightened	Tightening torque	Remarks
Ta	Bolt (cover installation)	23.2 {2.4}	–
	Bolt (rocker cover installation)		
	Bolt (PCV pipe installation)		
Tb	Injection pipe (union nut installation)	30.4 to 35 {3.1 to 3.6}	–
Tc	Bolt (injector installation)	5.2 to 7.2 {0.53 to 0.73}	–
Td	Bolt (cylinder sensor installation)	8 {0.82}	–

Lubricant and/or sealant

Mark	Points of application	Specified lubricant and/or sealant	Quantity
a	O-ring	Engine oil	As required

https://truckmanualshub.com/

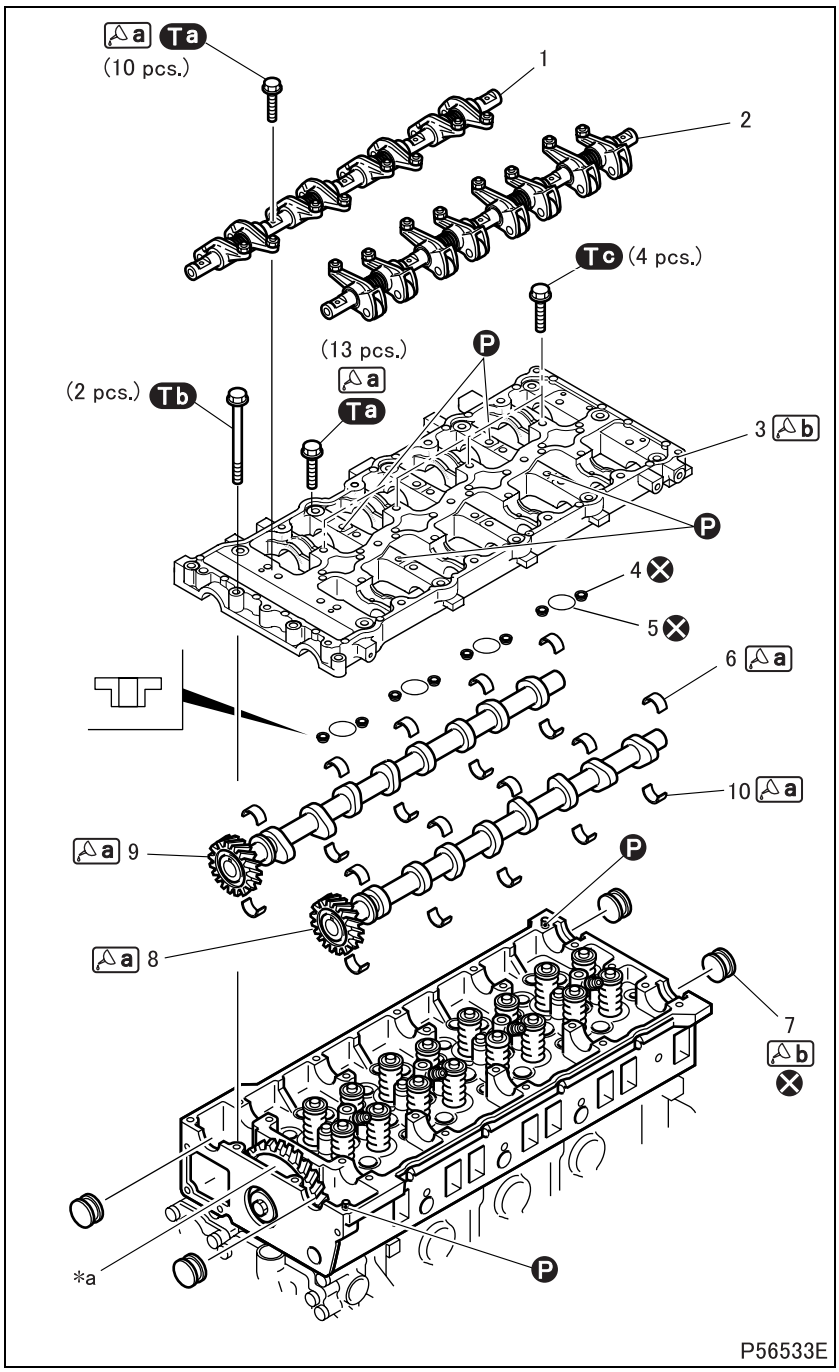

● **Disassembly sequence**

1 Exhaust rocker shaft (See later sections.)
2 Intake rocker shaft (See later sections.)
3 Camshaft frame
4 Gasket
5 O-ring
6 Upper camshaft bearing
7 Packing
8 Intake camshaft (See later sections.)
9 Exhaust camshaft (See later sections.)
10 Lower camshaft bearing

***a**: Head idler gear
Ⓟ: Locating pin
⊗: Non-reusable parts

CAUTION ⚠

- **The camshaft frame and cylinder head are manufactured as a matched set. Never replace the camshaft frame or the cylinder head individually.**
- **Do not change the upper and lower camshaft bearing combinations. Do not interchange the position of an upper and lower camshaft bearing set with that of another.**

● **Assembly sequence**

Follow the disassembly sequence in reverse.

Service standards (Unit: mm)

Location	Maintenance item	Standard value	Limit	Remedy
–	Head idler gear-to-camshaft gear backlash	0.080 to 0.126	0.3	Replace
–	Camshaft end play	0.10 to 0.20	0.3	Replace
6, 8, 10	Camshaft bearing-to-intake camshaft clearance	0.07 to 0.12	0.16	Replace
6, 9, 10	Camshaft bearing-to-exhaust camshaft clearance	0.07 to 0.12	0.16	Replace
6, 10	Camshaft bearing span (when free)	–	35.5	Replace

Tightening torque (Unit: N·m {kgf·m})

Mark	Parts to be tightened	Tightening torque	Remarks
Ta	Bolt (rocker shaft installation: 10 places)	27 {2.8}	Wet
	Bolt (camshaft frame installation: 13 places)		
Tb	Bolt (camshaft installation: 2 places)	23.5 {2.4}	–
Tc	Bolt (camshaft frame installation: 4 places)	23.2 {2.4}	–

Lubricant and/or sealant

Mark	Points of application	Specified lubricant and/or sealant	Quantity
a	Bolt threads and seat	Engine oil	As required
	Camshaft bearing inner surface		
	Camshaft journals and cams		
b	Cylinder head mounting surface of camshaft frame	ThreeBond 1217H	As required
	Entire periphery of packing		

Special tools

Mark	Tool name and shape	Part No.	Application
Ca	Rocker shaft set tool 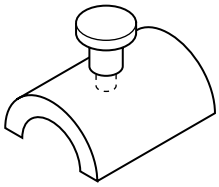 P103819	MH063861	Installation of rocker shaft

◆Work before removal◆

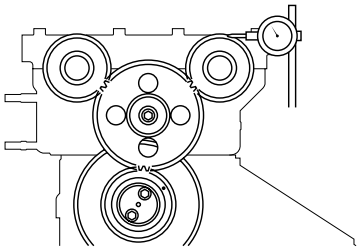
P56523

■ **Inspection: Head idler gear-to-camshaft gear backlash**

- Measure the backlash at three or more locations for each pair of gears.
- If any of the measurements exceeds the specified limit, replace the defective part(s).

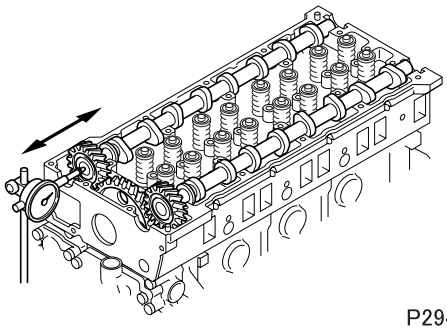
P29438

■ **Inspection: Camshaft end play**

- If the end play exceeds the specified limit, replace the defective part(s).

https://truckmanualshub.com/

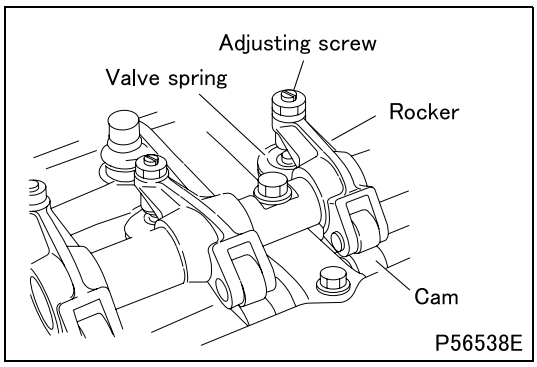

■ **Releasing valve spring tension**

- Before removing the bolts in the next process, loosen the adjusting screws on the rockers whose valve springs are compressed (due to the cams lifting these rockers). This operation is necessary to release the tension in the valve springs, thus preventing other parts from undue forces when the bolts are removed.

◆Removal procedure◆

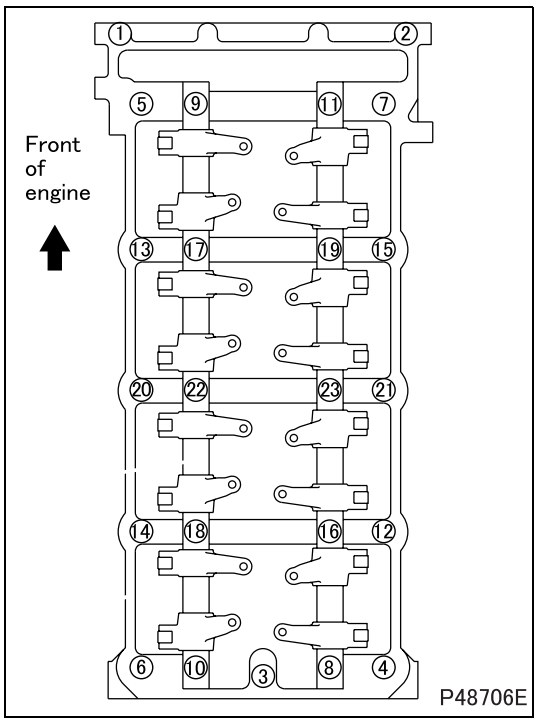

■ **Removal: Rocker shafts and camshaft frame**

- Loosen the rocker shaft installation bolts (10 places) and the camshaft frame installation bolts (13 places) in several passes in the order indicated in the illustration (1 to 23). Then, remove the rocker shafts and the camshaft frame.

◆Inspection procedure◆

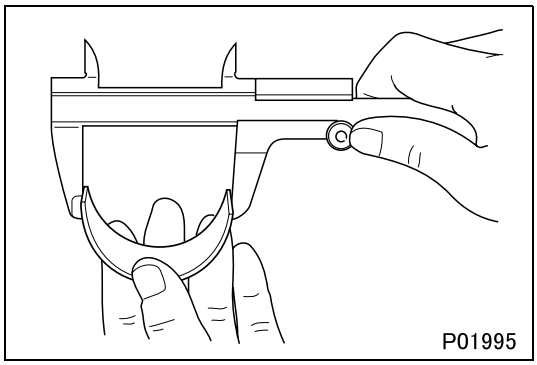

■ **Inspection: Camshaft bearing free span**

CAUTION ⚠

- **Do not force the bearings open.**

- If the measurement is less than the limit, replace upper and lower bearings as a set.

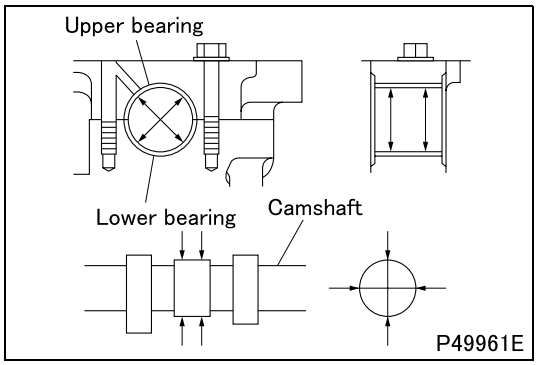

■ **Inspection: Camshaft bearing-to-camshaft clearance**

- If the measurement is not within the standard value range, replace the defective part(s).

◆Installation procedure◆

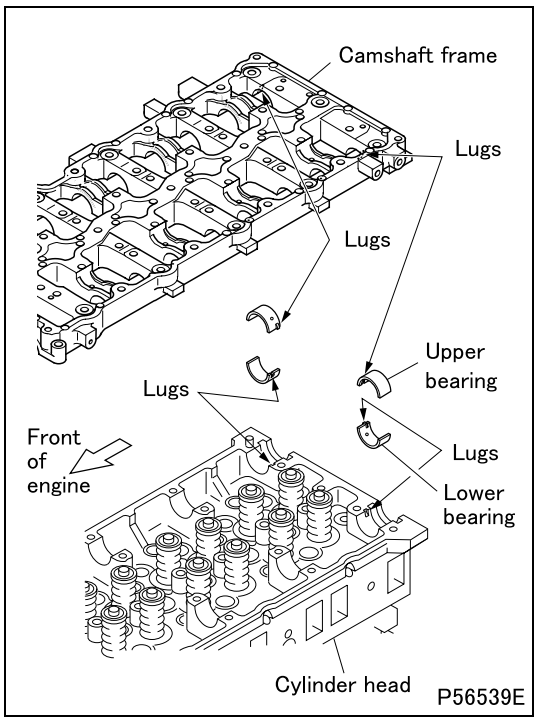

■ Installation: Camshaft

- Install the upper camshaft bearing on the camshaft frame and the lower camshaft bearing on the cylinder head by fitting their lugs into the notches in the camshaft frame and cylinder head.

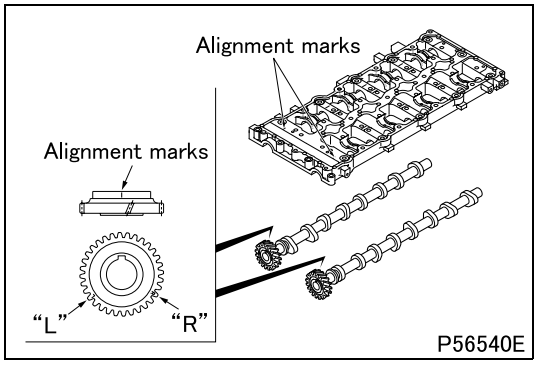

- Place the No. 1 cylinder piston at the top dead center on the compression stroke.
- Align the mating marks on the camshaft gears with those on the camshaft frame when installing the camshafts.

NOTE

- **Each camshaft gear also has mating mark "L" or "R" for alignment with the head idler gear. This mark may not be exactly aligned with that on the head idler gear, as the position that the head idler gear takes when it is installed may make it impossible to align them. Such a misalignment does not lead to any undesirable consequences.**

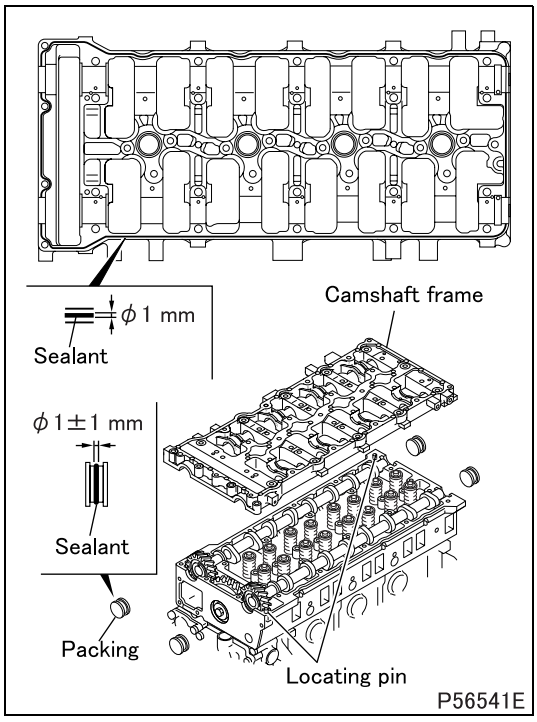

■ Installation: Rocker shafts and camshaft frame

- Clean the sealant application surfaces on each part.
- Apply sealant to the entire periphery of the four packings evenly and without any breaks.
- Apply sealant to the camshaft frame evenly and without any breaks.
- Mount the camshaft frame and packing on the cylinder head within three minutes of applying the sealant, being careful not to dislodge the sealant in the process.

CAUTION ⚠

- **Do not run the engine within one hour of installing the rocker shafts and camshaft frame.**

https://truckmanualshub.com/

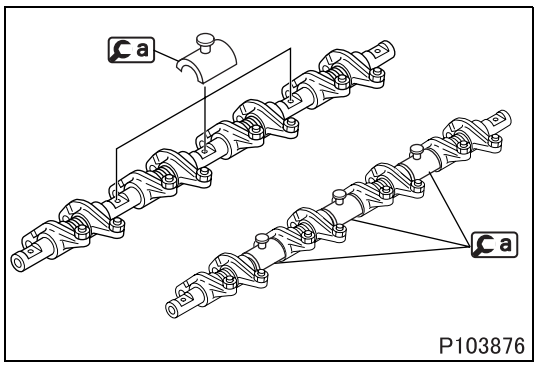

- Install a on the rocker shafts to prevent the rocker arms from moving away from each other.

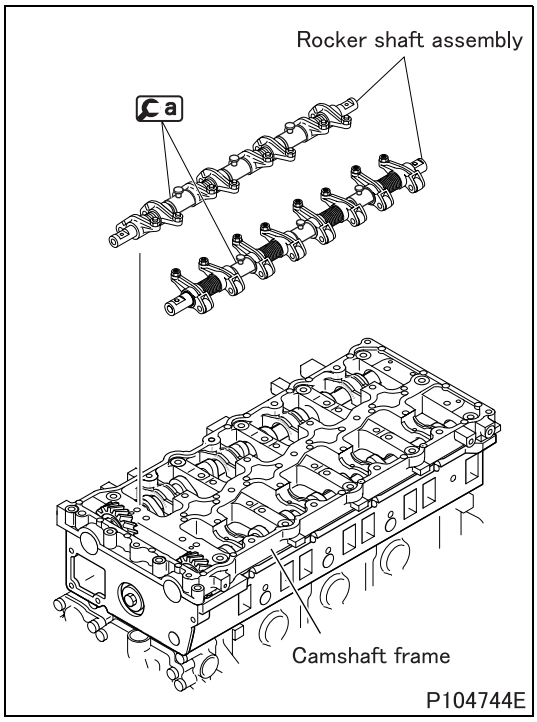

- Set the rocker shafts to the camshaft frame and then remove a .

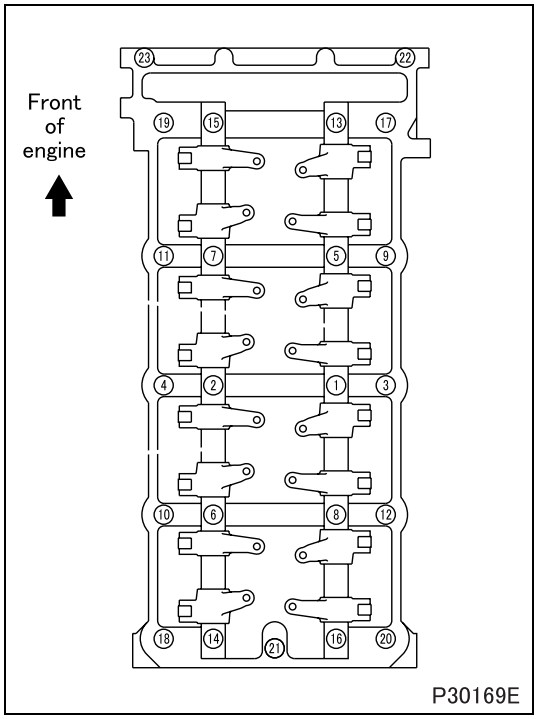

- Tighten the bolts (1 to 23) to the specified torque in the order indicated in the illustration.

CAUTION ⚠

- **Reapply sealant to the areas specified above if any of the bolts is loosened or removed after the rocker shafts and camshaft frame are installed.**

https://truckmanualshub.com/

M E M O

https://truckmanualshub.com/

Rocker Shafts and Rockers

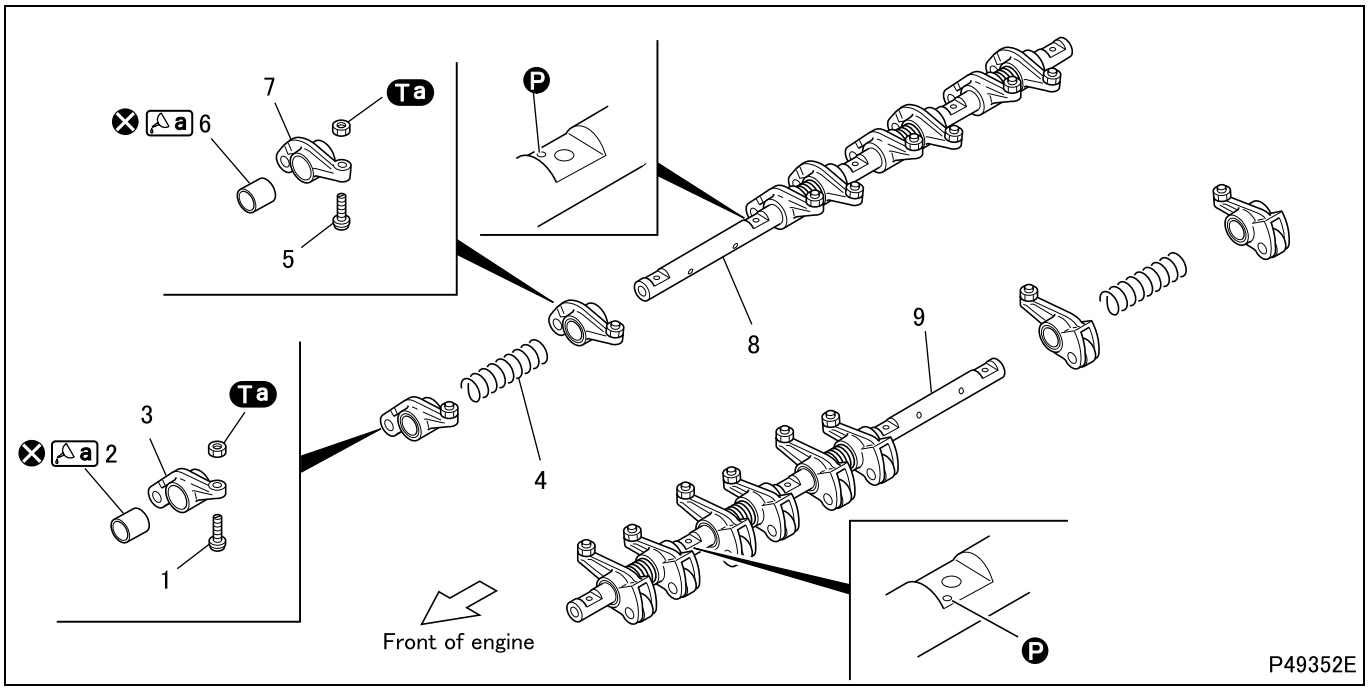

● **Disassembly sequence**

1 Adjusting screw
2 Rocker bushing
3 Short rocker
4 Rocker shaft spring
5 Adjusting screw
6 Rocker bushing
7 Long rocker
8 Exhaust rocker shaft
9 Intake rocker shaft

Ⓟ: Hole for camshaft frame locating pin
⊗: Non-reusable parts

- Although the above illustration includes only the construction of the rockers on the exhaust rocker shaft, the rockers on the intake rocker shaft also has the same construction.

● **Assembly sequence**

Follow the disassembly sequence in reverse.

CAUTION ⚠

- **The short rockers and long rockers must be installed alternately. Be aware that the order of installation for the intake rockers is different from the order of installation for the exhaust rockers.**

Service standards (Unit: mm)

Location	Maintenance item	Standard value	Limit	Remedy
2, 6, 8, 9	Rocker bushing-to-rocker shaft clearance	0.01 to 0.08	0.12	Replace
3, 7	Rocker (roller) radial play	0.038 to 0.100	–	Replace

Tightening torque (Unit: N·m {kgf·m})

Mark	Parts to be tightened	Tightening torque	Remarks
Ta	Lock nut (adjusting screw stopping)	20.6 {2.1}	–

Lubricant and/or sealant

Mark	Points of application	Specified lubricant and/or sealant	Quantity
a	Rocker bushing inner surface	Engine oil	As required

Special tools (Unit: mm)

Mark	Tool name and shape	Part No.	Application
a	Rocker bushing puller A: ϕ24.5, B: ϕ22 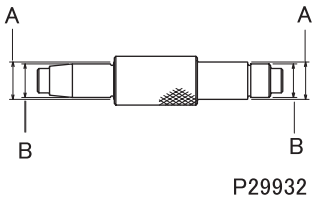	MH062536	Removal and installation of rocker bushing

◆Inspection procedure◆

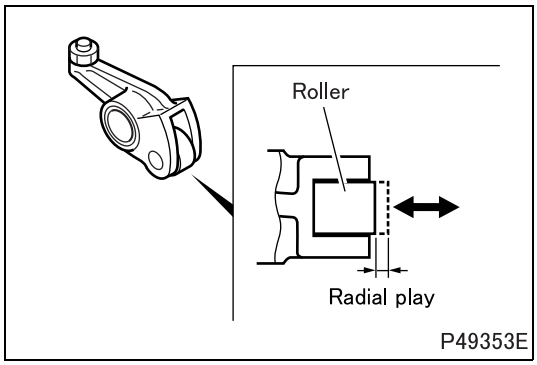

■ Inspection: Rocker (roller) radial clearance

- Replace the rocker if the radial play measurement is not within the standard value range.

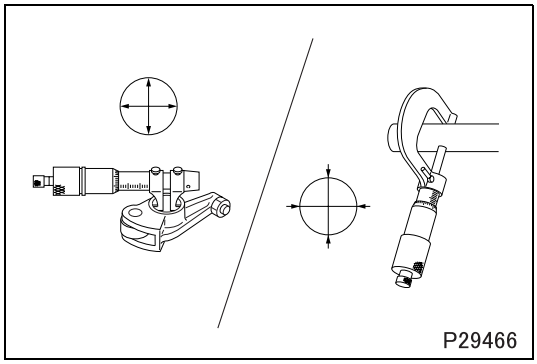

■ Inspection: Rocker bushing-to-rocker shaft clearance

- Replace the bushing if the measurement exceeds the specified limit.

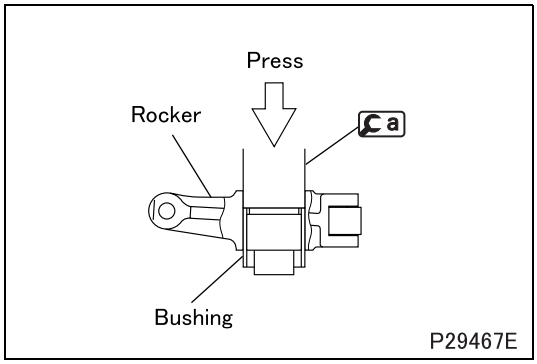

Replacement of rocker bushing
[Removal]

https://truckmanualshub.com/

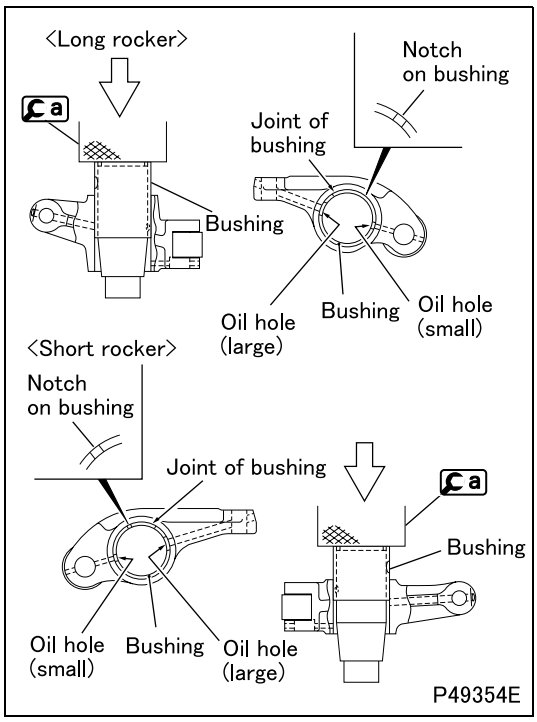

[Installation]

- Press-fit each rocker bushing in the rocker with its ends facing in the illustrated directions.

https://truckmanualshub.com/

M E M O

https://truckmanualshub.com/

Camshafts

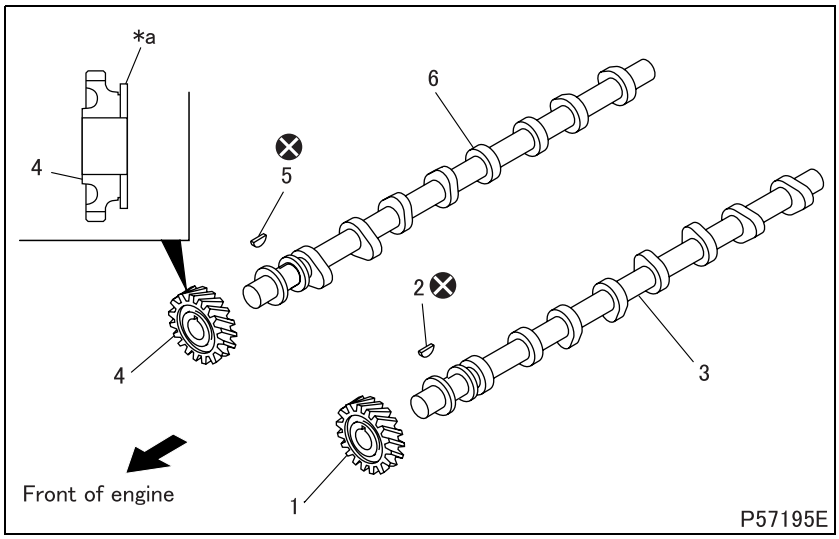

● **Disassembly sequence**

1 Intake camshaft gear
2 Key
3 Intake camshaft
4 Exhaust camshaft gear
5 Key
6 Exhaust camshaft

***a**: Sensor plate
⊗: Non-reusable parts

● **Assembly sequence**

Follow the disassembly sequence in reverse.

CAUTION ⚠

- **The exhaust camshaft gear has the sensor plate. Do not mistake it for the intake camshaft gear. If the gears are incorrectly installed, engine malfunction will occur.**

Service standards (Unit: mm)

Location	Maintenance item			Standard value	Limit	Remedy
1, 3, 4, 6	Camshaft gear-to-camshaft interference			0.007 to 0.041	–	Replace
3	Intake camshaft	Cam lift	Cams for long rockers Lobe height: 42.219 Base circle diameter: 35.009	7.21	7.16	Replace
			Cams for short rockers Lobe height:44.281 Base circle diameter: 35.012	9.269	9.219	
		Bend		0.01	0.03	Replace
6	Exhaust camshaft	Cam lift	Cams for long rockers Lobe height: 42.279 Base circle diameter: 35.095	7.184	7.134	Replace
			Cams for short rockers Lobe height: 44.359 Base circle diameter: 35.117	9.242	9.192	
		Bend		0.01	0.03	Replace

◆Removal procedure◆

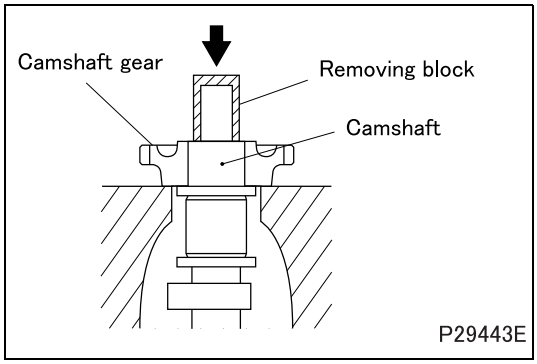

■ **Removal: Camshaft gears**

- Remove the camshaft gear by pushing on the camshaft using a press.

CAUTION ⚠

- **Do not use a hammer to remove the camshaft gear. Be sure to use a press for this purpose.**

◆Inspection procedure◆

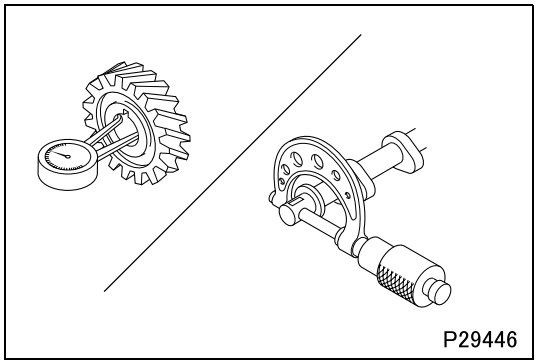

■ **Inspection: Camshaft gear-to-camshaft interference**

- If the measurement is not within the standard value range, replace the defective part(s).

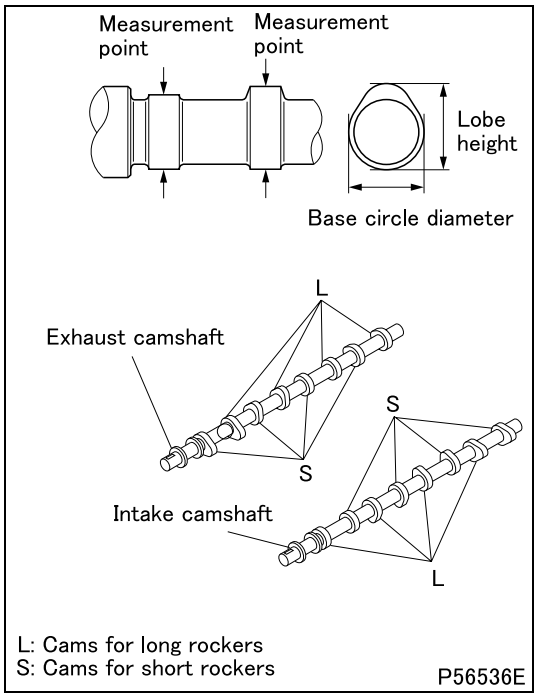

■ **Inspection: Camshaft**

(1) Cam lift

- Replace the camshaft if the difference between the cam lobe height and base circle diameter measurements is less than the specified limit.
- The cams for the long rockers (L) are different from the cams for the short rockers (S).

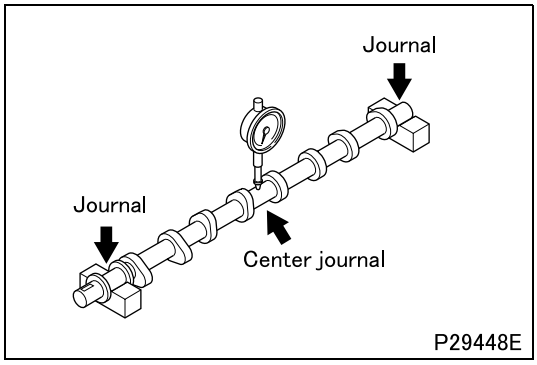

(2) Bend

- Place supports under the journals at the ends of the camshaft and measure the bend of the camshaft at the central journal.
- The amount of camshaft bend is obtained by giving the camshaft one turn and dividing the dial gauge reading by two.
- If the measurement exceeds the specified limit, replace the camshaft.

◆Installation procedure◆

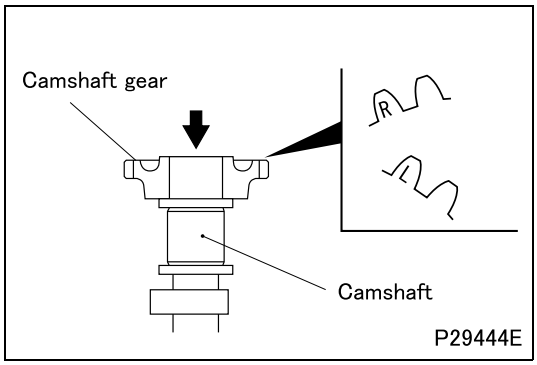

■ **Installation: Camshaft gears**

- Heat the camshaft gears to approximately 150°C with a gas burner.

WARNING ⚠

- **You may burn yourself if you touch the heated gear.**

- Install the camshaft gear on the camshaft with a mating mark (“R” or “L”) facing in the illustrated direction.
- Press the gear until its end comes in close contact with the flange on the camshaft.

https://truckmanualshub.com/

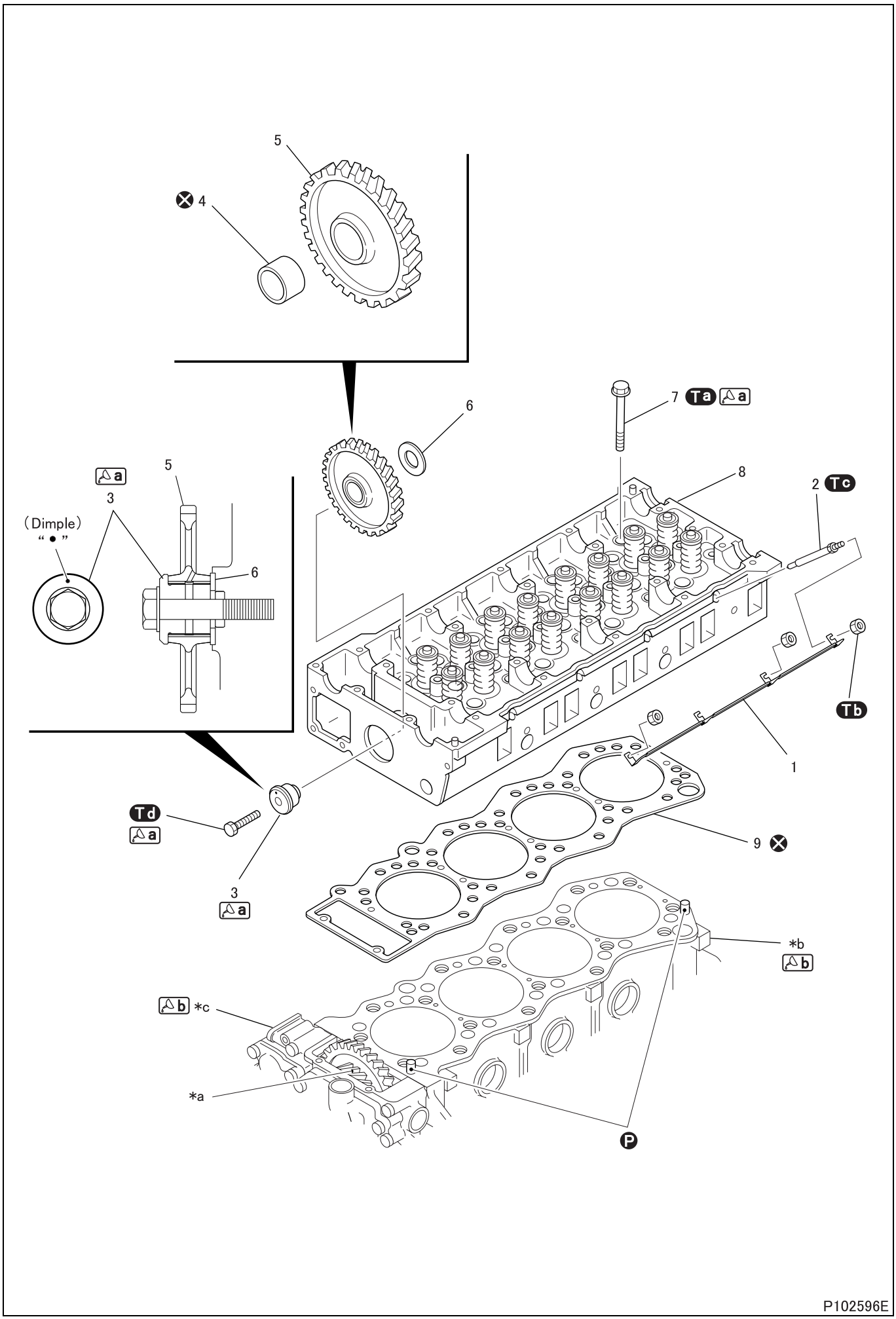

● **Disassembly sequence**

1 Connection plates
2 Glow plug
3 Head idler shaft
4 Head idler gear bushing
5 Head idler gear
6 Thrust plate
7 Cylinder head bolt
8 Cylinder head (See later sections.)
9 Cylinder head gasket

***a**: Idler gear
***b**: Upper crankcase
***c**: Front case
Ⓟ: Locating pin
⊗: Non-reusable parts

CAUTION ⚠

- **Be careful not to damage the glow plugs and injectors when placing the cylinder head on the worktable, as they are protruding out of the bottom of the cylinder head.**

● **Assembly sequence**

Follow the disassembly sequence in reverse.

CAUTION ⚠

- **The cylinder head bolts are tightened using the torque-turned method. Any cylinder head bolt that has three marks indicating that the bolt has been tightened three times already must be replaced with a new one.**
- **Do not forget to install the thrust plate.**

Service standards (Unit: mm)

Location	Maintenance item	Standard value	Limit	Remedy
–	Head idler gear end play	0.1 to 0.2	0.3	Replace
3, 4	Head idler shaft-to-head idler gear bushing clearance	0.01 to 0.05	0.1	Replace
5, *a	Head idler gear-to-idler gear backlash	0.103 to 0.158	0.3	Replace

Tightening torque (Unit: N·m {kgf·m})

Mark	Parts to be tightened	Tightening torque	Remarks
Ta	Cylinder head bolt	147 {15} + 90°	• Wet • Reusable up to 3 times
Tb	Nut (connection plate installation)	1.0 to 1.5 {0.1 to 0.15}	–
Tc	Glow plug	19.6 to 24.5 {2 to 2.5}	–
Td	Bolt (head idler shaft installation)	54.9 {5.6}	Wet

Lubricant and/or sealant

Mark	Points of application	Specified lubricant and/or sealant	Quantity
a	Bolt (head idler gear installation) threads and seating surface under head	Engine oil	As required
	Head idler shaft outer peripheral surface		
	Cylinder head bolt threads		
b	Top surfaces of joints between upper crankcase and front case	ThreeBond 1207C	As required

https://truckmanualshub.com/

Special tools (Unit: mm)

Mark	Tool name and shape	Part No.	Application
a	Idler gear bushing puller A: ϕ32, B: ϕ35 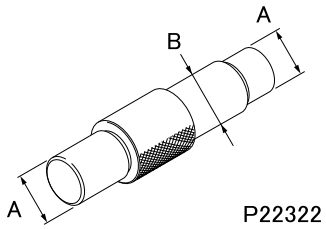 	MH061779	Removal and installation of idler gear bushing

◆Work before removal◆

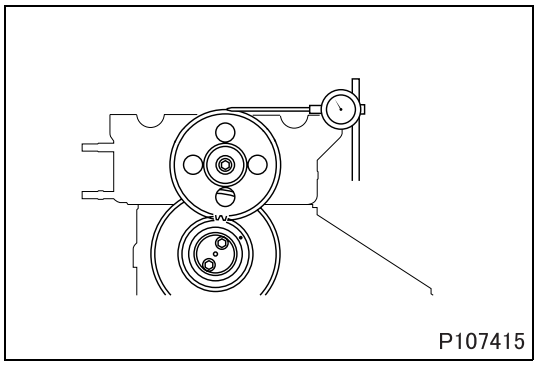

■ **Inspection: Head idler gear-to-idler gear backlash**

- If the measurement exceeds the specified limit, replace the defective part(s).

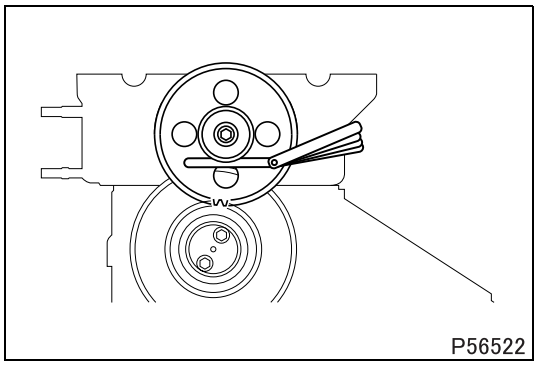

■ **Inspection: Head idler gear end play**

- If the measurement exceeds the specified limit, replace the defective part(s).

◆Removal procedure◆

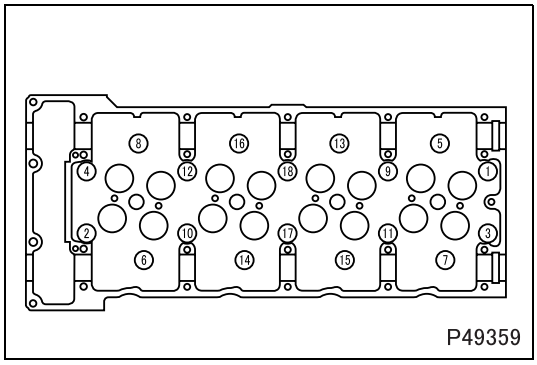

■ **Removal: Cylinder head**

- Loosen the cylinder head bolts (1 to 18) in several passes in the order indicated in the illustration and remove the cylinder head.

■ **Removal: Cylinder head gasket**

CAUTION ⚠

- **When removing the cylinder head gasket, be careful not to scratch the cylinder head, the upper crankcase and the front case.**

◆Inspection procedure◆

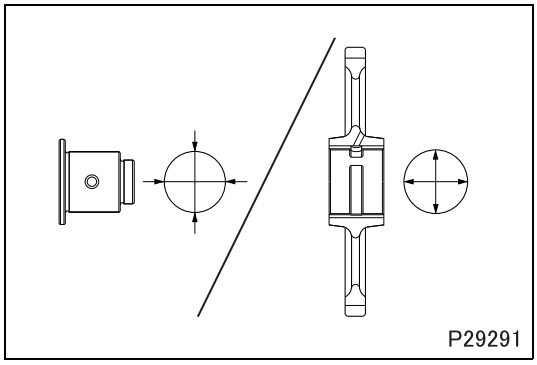

■ **Inspection: Head idler shaft-to-head idler gear bushing clearance**

- Replace the bushing if the measurement exceeds the specified limit.

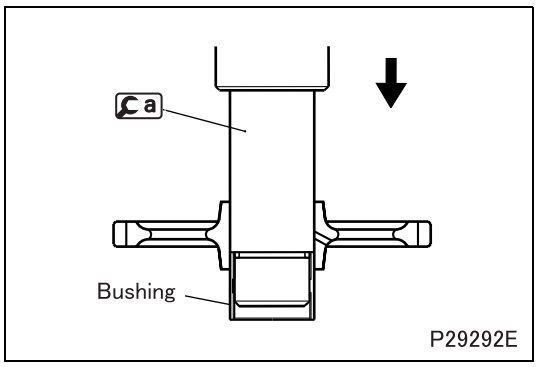

Replacement of head idler gear bushing
[Removal]

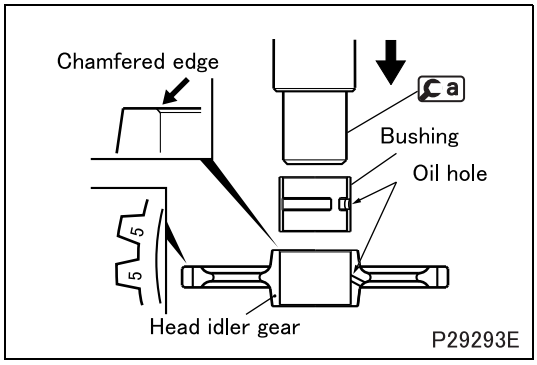

[Installation]

- Position the bushing on the head idler gear with their ends facing the illustrated directions and their oil holes on the same line.
- Using a, press the bushing into the head idler gear until it is flush with the lower edge of the chamfer on the head idler gear.
- Remeasure the clearance between the bushing and head idler shaft.
- Ream the bushing if the measurement is less than the standard value.

◆Installation procedure◆

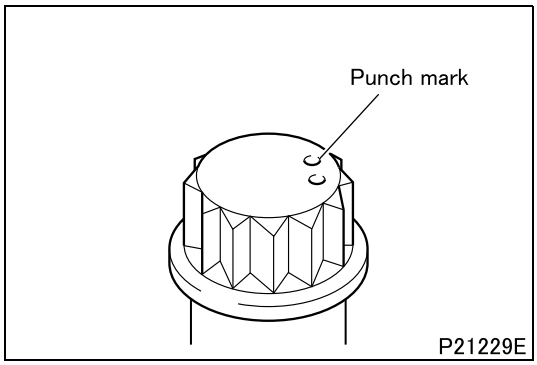

■ **Installation: Cylinder head**

CAUTION ⚠

- **Before fitting the cylinder head bolts, check the punch marks on each bolt's head. Do not use the bolt if there are three punch marks.**
- **The punch marks indicate the number of times each bolt has been tightened using the torque-turn tightening method. Any bolt that already has three punch marks must be replaced.**

https://truckmanualshub.com/

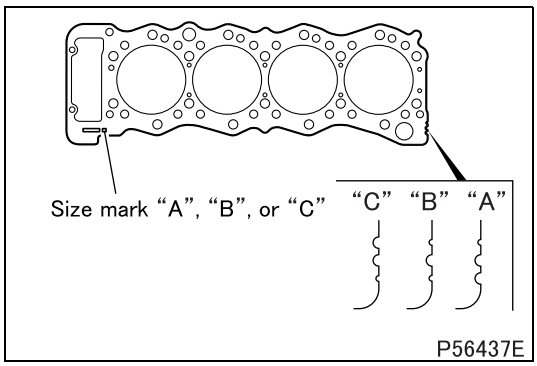

- The cylinder head gasket comes in three sizes. Choose the gasket appropriate for the cylinder head by the following procedure.
  - Measure the amount of piston projection for every cylinder. (See "PISTONS, CONNECTING RODS AND CYLINDER LINERS" section.)
  - Select a cylinder head gasket with the appropriate thickness for the average of the piston projection measurements from the table below.
  - If any of the piston projection measurements is more than 0.05 mm larger than the average value, then use the gasket one class higher than that class (A→B, B→C).

Unit: mm

Piston projection	Cylinder head gasket	
	Size	Thickness when tightened
–0.088 to –0.027	"A"	0.75 ± 0.04
–0.027 to 0.033	"B"	0.80 ± 0.04
0.033 to 0.094	"C"	0.85 ± 0.04

- The size class of the cylinder head gasket can be determined from the size mark or the shape of the notches cut on the gasket edge.

CAUTION ⚠

- **Replacement of the piston or connecting rod alters the piston projection. Always measure the amount of piston projection after either or both of them are replaced.**

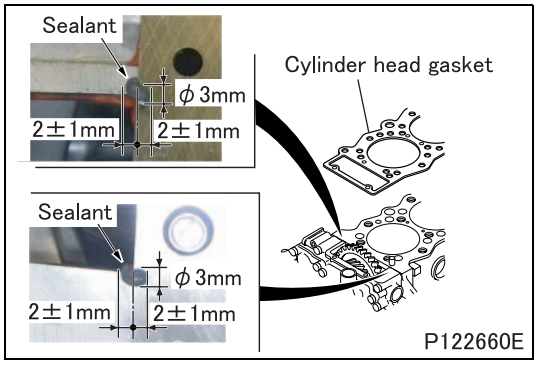

- Clean the sealant application surfaces of each part.
- Apply sealant to the top surfaces of the joints between the upper crankcase and front case (at two places).
- Install the cylinder head and its gasket on the upper crankcase within three minutes of applying the sealant, being careful not to dislodge the sealant.

CAUTION ⚠

- **Be careful not to damage the cylinder head gasket. Otherwise, coolant or oil may leak out, or engine power reduction due to noise may result.**
- **Do not run the engine within one hour of mounting the cylinderhead. If any cylinder head bolts are loosened or removed, be sure to reapply sealant to the surfaces specified above.**

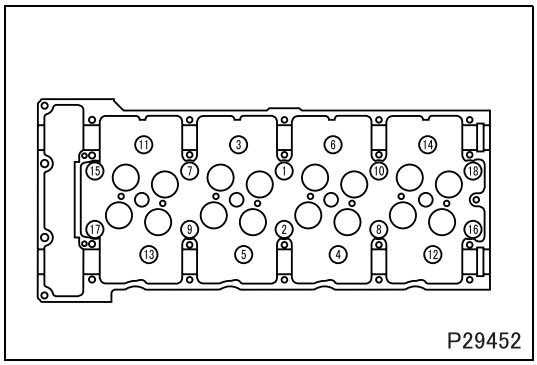

- Tighten the cylinder head bolts (1 to 18) to a torque of 147 N·m {15 kgf·m} (wet) in the order indicated in the illustration. Then, tighten them further by 90° in the same order.
- After tightening each bolt, make a punch mark on the head of the bolt to indicate the number of times that it has been used.

CAUTION ⚠

- **Cylinder head bolts that have been tightened using the torque-turn method must never be additionally tightened after the final angular tightening.**

https://truckmanualshub.com/

M E M O

https://truckmanualshub.com/

Cylinder Head

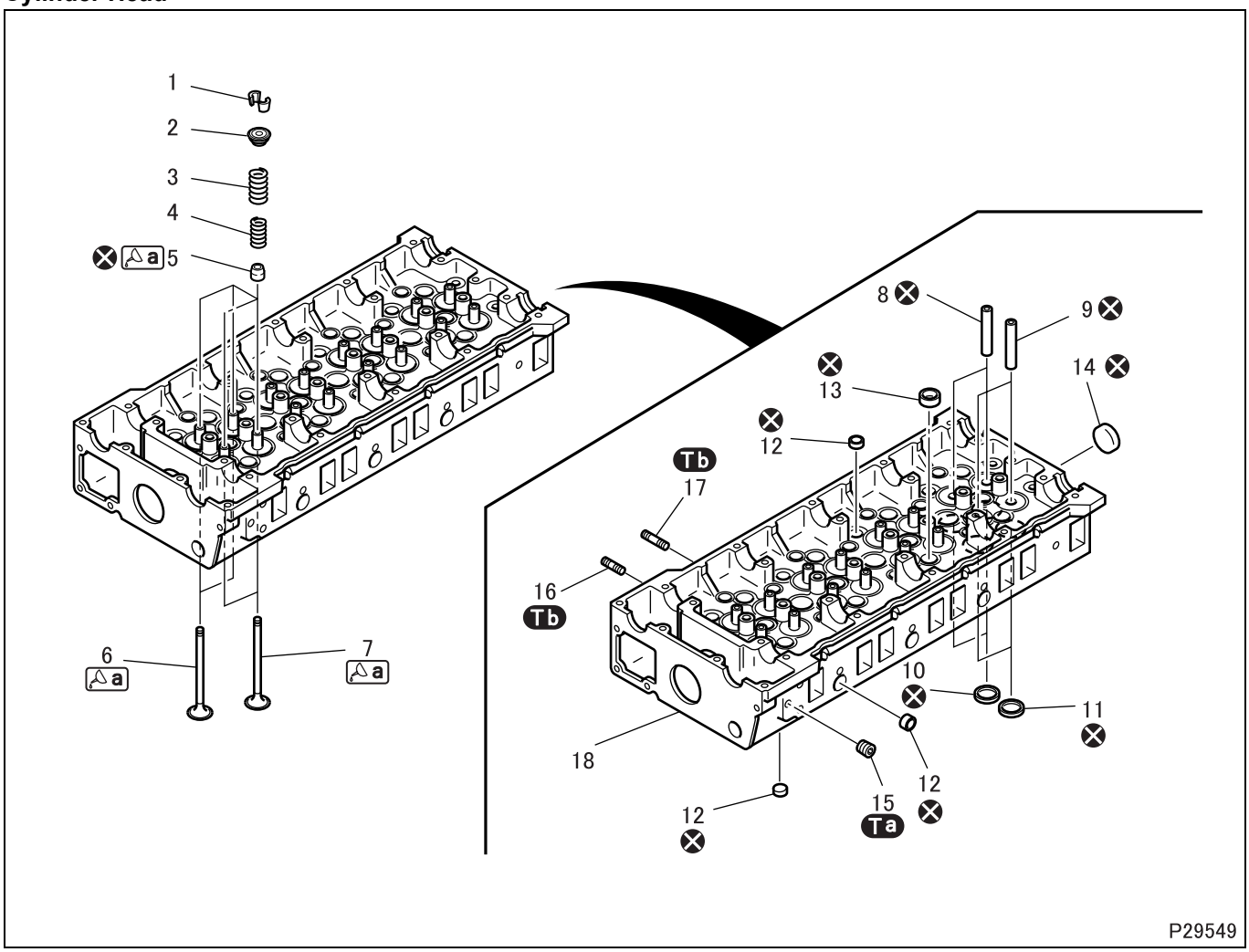

● Disassembly sequence

1 Valve cotter
2 Upper retainer
3 Outer valve spring
4 Inner valve spring
5 Valve stem seal
6 Exhaust valve
7 Intake valve
8 Exhaust valve guide
9 Intake valve guide
10 Exhaust valve seat
11 Intake valve seat
12 Sealing cap (diameter: 22 mm)
13 Sealing cap (diameter: 30 mm)
14 Sealing cap (diameter: 40 mm)
15 Tapered plug
16 Stud (short)
17 Stud (long)
18 Cylinder head

⊗: Non-reusable parts

● Assembly sequence

Follow the disassembly sequence in reverse.

CAUTION ⚠

- **When an intake valve or exhaust valve have been removed, make sure to replace the valve stem seal.**

Service standards (Unit: mm)

Location	Maintenance item		Standard value	Limit	Remedy
3	Outer valve spring	Free length	87.8	83.4	Replace
		Installed load (57 in installed length)	360 ± 18 N {36.7 ± 1.8 kgf}	–	
		Squareness	–	2.0	
4	Inner valve spring	Free length	78.8	74.9	Replace
		Installed load (52.3 in installed length)	168 ± 8.3 N {17.1 ± 0.85 kgf}	2.0	
		Squareness	–	–	
6	Exhaust valve	Stem outside diameter	$\phi 8\ ^{-0.060}_{-0.075}$	ϕ7.85	Replace
		Sinkage from cylinder head bottom surface	1.5 ± 0.25	2.0	Replace
		Valve margin	1.5	1.2	Replace
		Seat angle	45° ± 15'	–	Reface
6, 8	Exhaust valve stem-to-valve guide clearance		0.07 to 0.10	0.2	Replace
7	Intake valve	Stem outside diameter	$\phi 8\ ^{-0.025}_{-0.040}$	ϕ7.85	Replace
		Sinkage from cylinder head bottom surface	1.5 ± 0.25	2.0	Replace
		Valve margin	1.5	1.2	Replace
		Seat angle	45° ± 15'	–	Reface
7, 9	Intake valve stem-to-valve guide clearance		0.03 to 0.06	0.2	Replace
10	Exhaust valve seat width		2.5 ± 0.2	3.5	Replace
11	Intake valve seat width		2 ± 0.2	2.8	Replace
18	Cylinder head	Bottom surface distortion	0.05	0.2	Correct or replace
		Height from top surface to bottom surface	107 ± 0.05	106.5	Replace
		Valve seat hole diameter	$\phi 38\ ^{+0.025}_{0}$	–	

Tightening torque (Unit: N·m {kgf·m})

Mark	Parts to be tightened	Tightening torque	Remarks
Ta	Tapered plug	14 {1.4}	–
Tb	Stud	20 {2.0}	–

Lubricant and/or sealant

Mark	Points of application	Specified lubricant and/or sealant	Quantity
a	Lip of valve stem seal	Engine oil	As required
	Valve stem and valve end		

https://truckmanualshub.com/

Special tools (Unit: mm)

Mark	Tool name and shape		Part No.	Application
a	Valve lifter	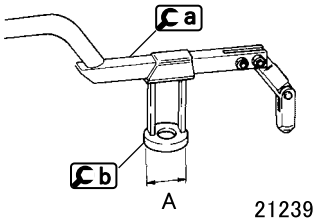	MH061668	Removal and installation of valve cotters
b	Valve lifter seat A: ϕ38		MH061772	
c	Valve lifter hook	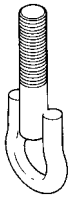	MH061679	
d	Valve stem seal installer A: ϕ26.5, B: ϕ14.7, C: ϕ8	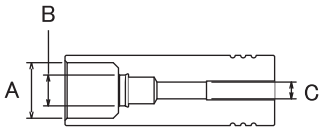	MH063607	Installation of valve stem seals
e	Valve lapper	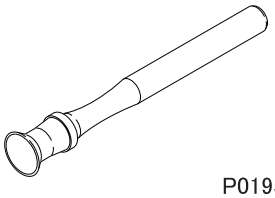	30091-07500	Lapping valves and valve seats
f	Valve guide remover A: ϕ8, B: ϕ12	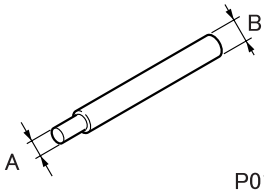	31391-10500	Removal of valve guides
g	Valve guide installer A: ϕ25.5, B: ϕ13, C: 29	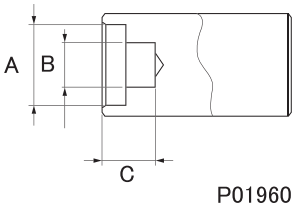	MH063604	Installation of valve guides
h	Caulking tool body A: ϕ8	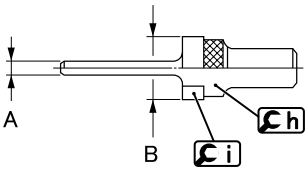	31391-13100	Installation of valve seat
i	Installer ring B: ϕ38		MH063605	

◆Removal procedure◆

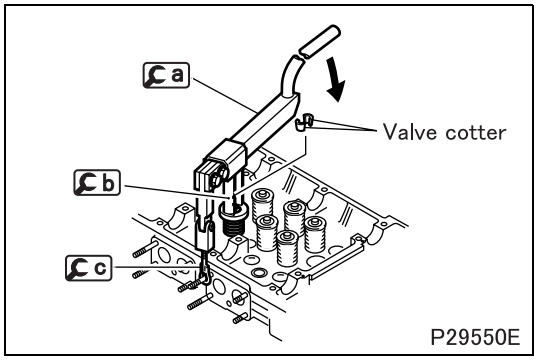

■ **Removal: Valve cotters**

- Remove the valve cotters by evenly compressing the valve springs.

◆Inspection procedure◆

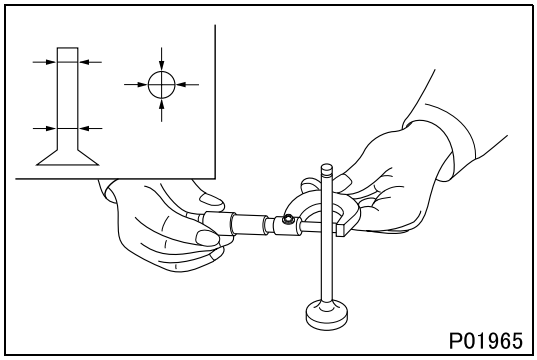

■ **Inspection: Valves**

- If the valve has been replaced with a new one due to the result of the following inspections, make sure to lap the valve and valve seat.

(1) Stem outside diameter

- Replace the valve if the stem's outside diameter is below the limit or is severely worn.

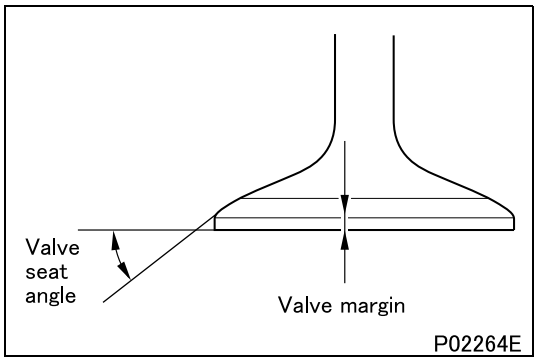

(2) Valve seat angle

- Reface the valve if the measured value is not within the standard value range.

(3) Valve margin

- Replace the valve if the measured value exceeds the specified limit.

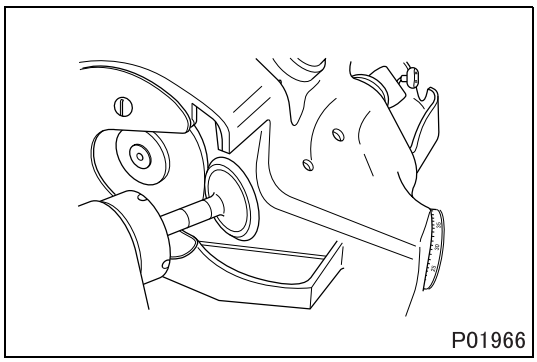

Refacing

- Limit grinding to a necessary minimum.
- If the valve margin is below the limit after grinding, replace the valve.
- After grinding, make sure to lap the valve and valve seat.

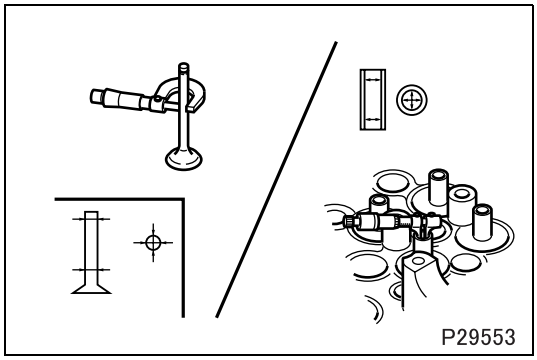

■ **Inspection: Valve stem-to-valve guide clearance**

- If the clearance exceeds the specified limit, replace the defective part(s).

https://truckmanualshub.com/

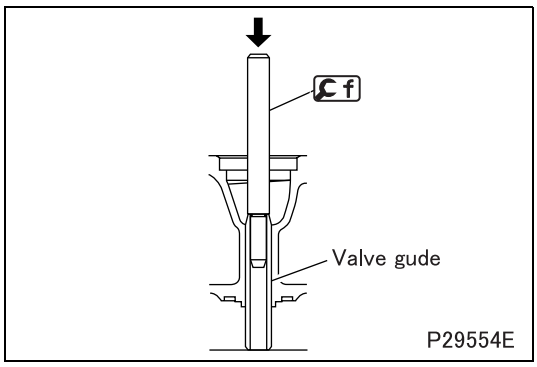

Replacement of valve guides
[Removal]

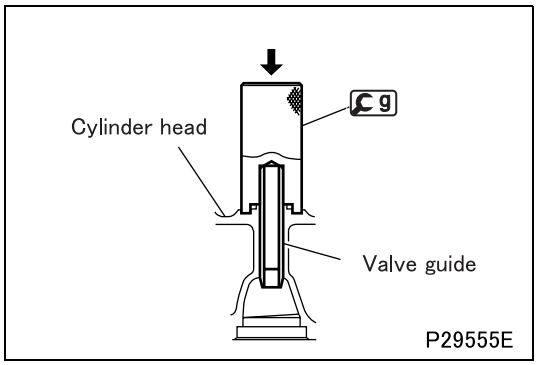

[Installation]

- Install the valve guide until g sits snugly on the cylinder head.

CAUTION ⚠

- **The valve guides have a specified amount of depth. Make sure to use g to achieve the specified depth.**
- **Exhaust valve guides are longer than intake valve guides. Make sure to install the correct type of guide in each location.**

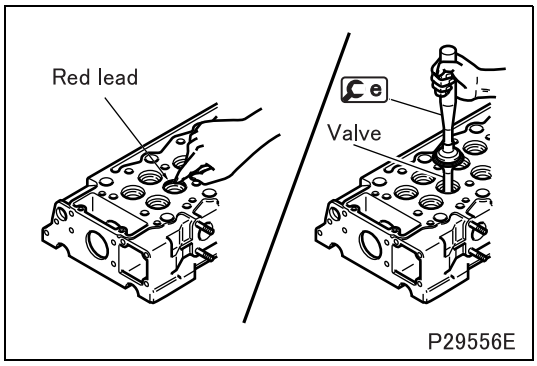

■ **Inspection: Contact between valve and valve seat**

- Before starting inspection, check that the valve and valve guide are intact.
- Apply an even coat of red lead to the valve contact surface of the valve seat.
- Strike the valve once against the valve seat. Do not rotate the valve during this operation.

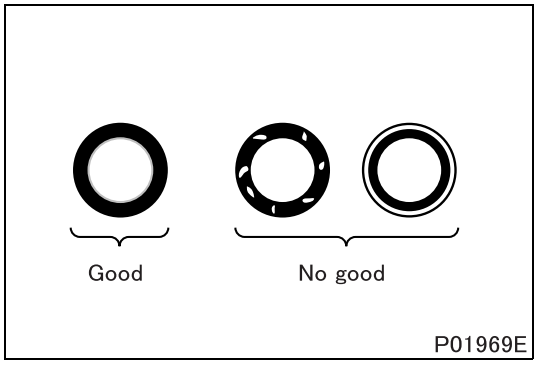

- If the red lead deposited on the valve indicates a poor contact pattern, take either of the following corrective actions.

	Corrective action
Minor defect	Lapping
Serious defect	Reface or replace valve and valve seat

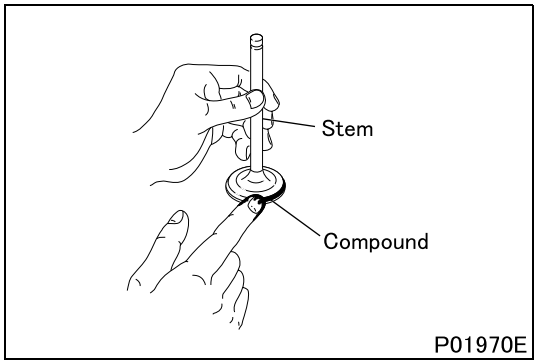

Lapping

- Perform lapping according to the following procedure.
- Apply a thin coat of lapping compound to the seat contact surface of the valve.

CAUTION ⚠

- **Do not put any compound on the stem of the valve.**
- **Start with an intermediate-grit compound (120 to 150 grit) and finish with a fine-grit compound (200 grit or more).**
- **Adding a small amount of engine oil to the lapping compound can facilitate even application.**

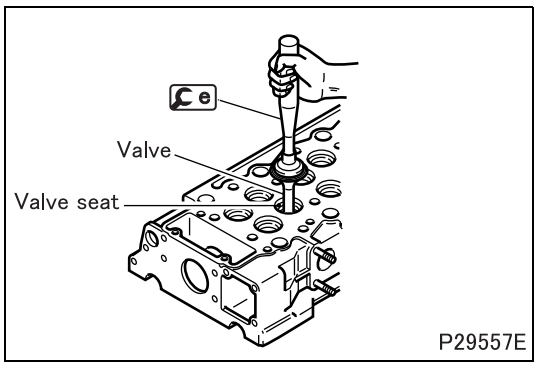

- Strike the valve several times against the valve seat while rotating the valve a little at a time.
- Wash away the compound with diesel fuel.
- Apply engine oil to the valve contact surface of the valve seat and rub in the valve and seat well.
- Inspect the contact pattern of the valve and valve seat again.
- If the contact pattern is still defective, replace the valve seat.

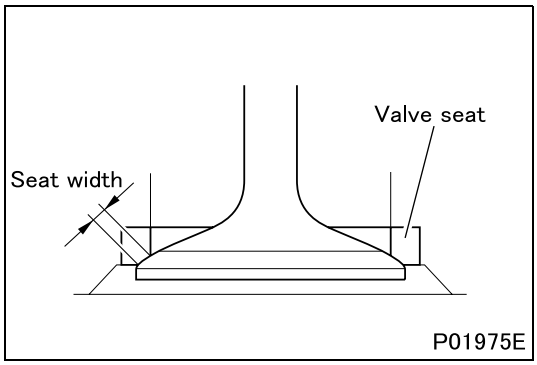

■ Inspection: Valve seats

- If a valve is corrected or replaced with a new one as a result of the following inspection, make sure to lap the valve seat and valve.

(1) Valve seat width

- If the measurement exceeds the limit, reface or replace the valve seat.

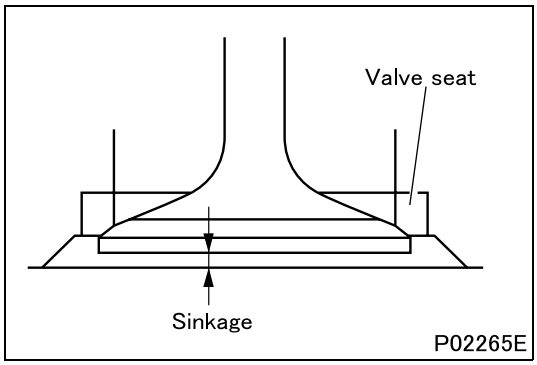

(2) Valve sinkage from cylinder head bottom surface

- Measure the sinkage with the valve seat in intimate contact.
- If the measurement exceeds the limit, adjust or replace the defective part(s).

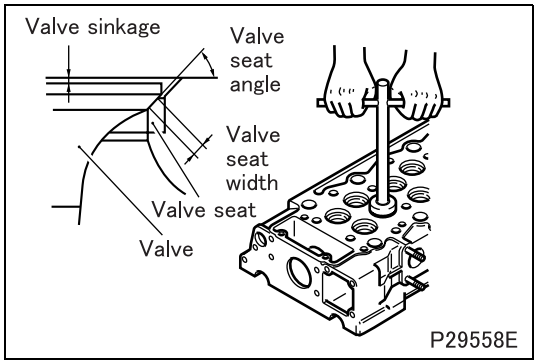

Refacing the valve seat

- Grind the valve seat using a valve seat cutter or valve seat grinder.
- After grinding, place a piece of sandpaper approximately #400 between the cutter and valve seat and grind the valve seat lightly.
- Use a 15° or 75° cutter to cut the valve seat to a width within the standard range. If the valve seat cannot be refaced, replace the valve seat.

CAUTION ⚠

- **Make sure that the valve seat refacing does not cause the valve sinkage to exceed the specified limit.**

- After refacing, lap the valve and valve seat.

https://truckmanualshub.com/

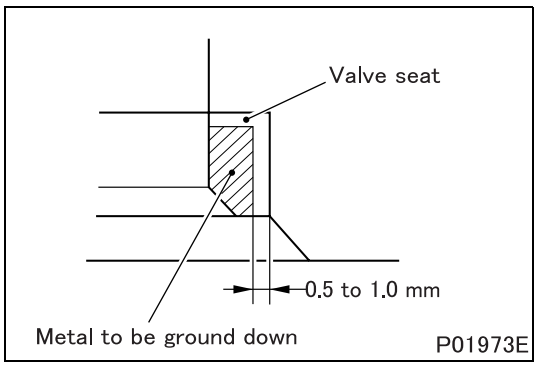

Replacement of valve seat

[Removal]

- The valve seats are installed by expansion fitting. To remove a valve seat, grind inside the metal stock to reduce the wall thickness, then remove the valve seat at room temperature.

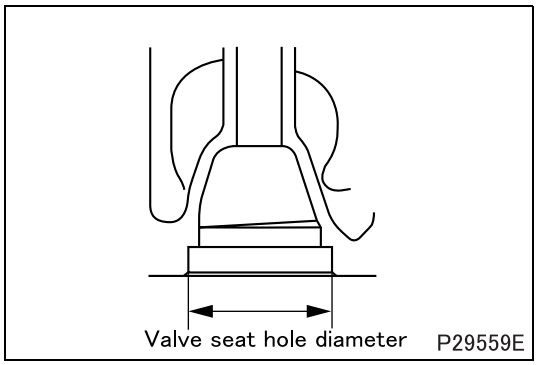

[Inspection]

- Check that the diameter of the valve seat hole in the cylinder head conform with the standard value.
- Replace the cylinder head if the measurement deviates from the standard value.

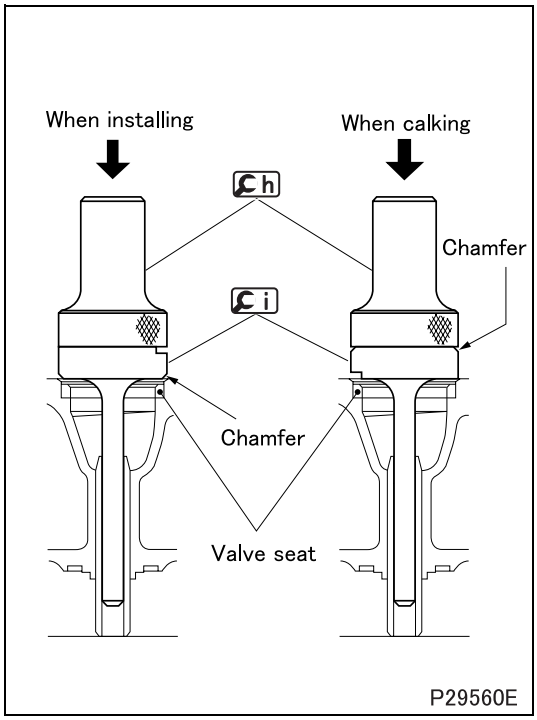

[Installation]

- Chill the valve seat thoroughly by immersing in it in liquid nitrogen.
- Install the valve seat in the cylinder head using Ch and Ci, with the chamfered edge of Ci toward the valve seat.
- Turn Ci over so that its chamfered edge is toward Ch, and calk the valve seat.
- Lap the valve seat and valve.

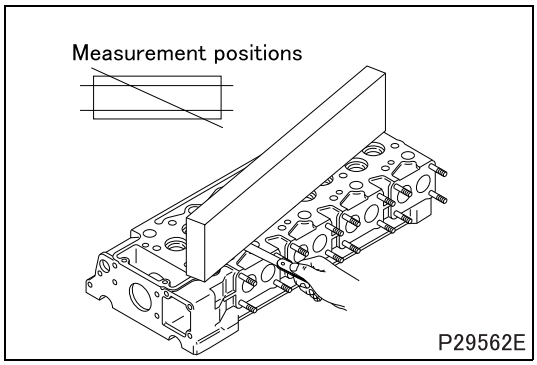

■ **Inspection: Cylinder head bottom surface distortion**

- If the distortion exceeds the specified limit, rectify it using a surface grinder.

CAUTION ⚠

- **When griding the cylinder head bottom surface, make sure that the height of the cylinder head (from the top surface to the bottom surface) is not reduced to a valve below the specified limit.**

◆Installation procedure◆

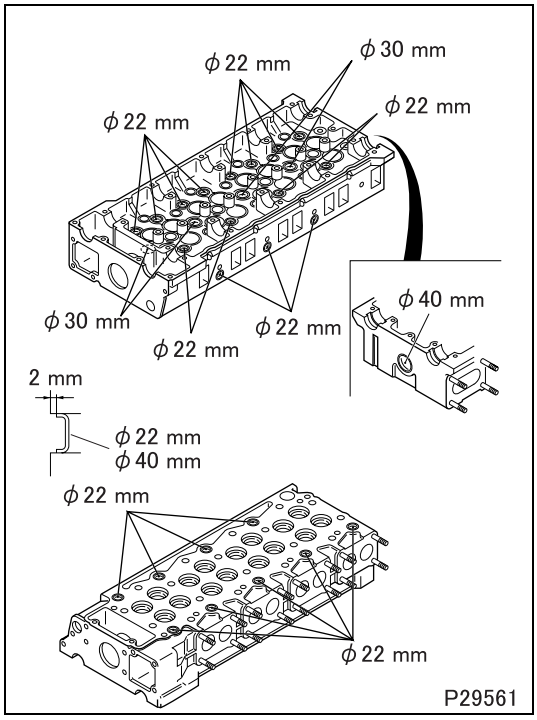

■Installation: Sealing caps

- Drive the sealing caps into the cylinder head to the specified depth.

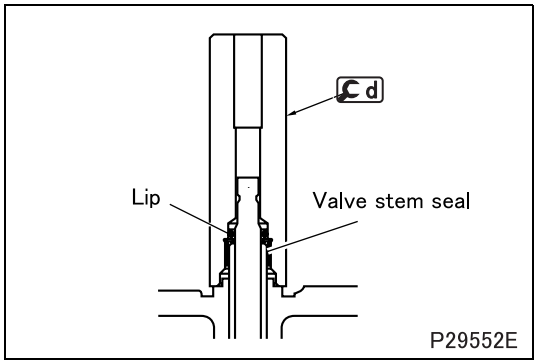

■Installation: Valve stem seal

- Apply engine oil to the lip of the valve stem seal.
- Install the valve stem seal until d sits snugly on the cylinder head.

CAUTION ⚠

- **After installing the valve stem seal, check that its spring is not deformed or damaged.**

■Installation: Valve cotter

- To install the valve cotter, follow the removal procedure. (See "■ **Removal: Valve cotters**".)

https://truckmanualshub.com/

PISTONS, CONNECTING ROD AND CYLINDER LINERS

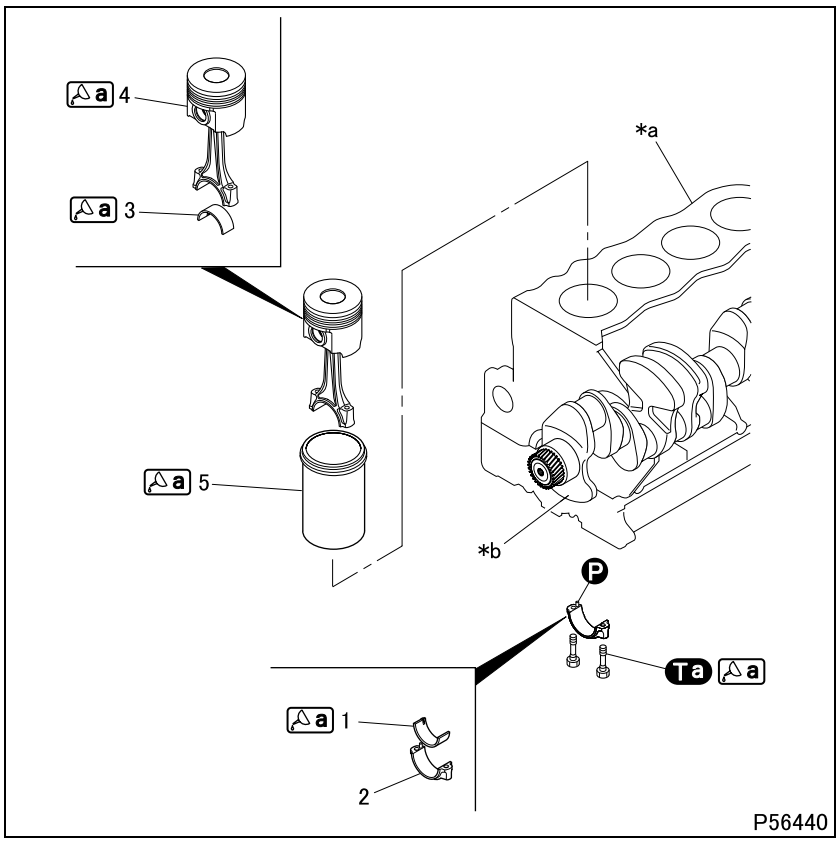

● **Disassembly sequence**

1 Lower connecting rod bearing
2 Connecting rod cap
3 Upper connecting rod bearing
4 Piston and connecting rod (See later sections.)
5 Cylinder liner

***a**: Upper crankcase
***b**: Crankshaft
P: Locating pin

● **Assembly sequence**

Follow the disassembly sequence in reverse.

Service standards (Unit: mm)

Location	Maintenance item		Standard value	Limit	Remedy
–	Piston projection from upper crankcase top surface (average value)		–0.088 to 0.094	–	Replace
–	Connecting rod end play		0.15 to 0.45	0.6	Replace
1, 3	Connecting rod bearing span when free		–	69.5	Replace
1, 3, *b	Connecting rod bearing-to-crankshaft oil clearance		0.034 to 0.093	0.2	
4, 5	Piston-to-cylinder liner clearance		0.181 to 0.201	–	Replace
5	Cylinder liner	Flange projection above crankcase top surface	0.01 to 0.07	–	Replace
		Bore diameter	ϕ114 to 114.02	ϕ114.25	
		Difference in flange projection from neighboring cylinder liner	0.04 or less	–	

Tightening torque (Unit: N·m {kgf·m})

Mark	Parts to be tightened	Tightening torque	Remarks
Ta	Bolt (connecting rod cap installation)	29 {3.0} + 90°	Wet

Lubricant and/or sealant

Mark	Points of application	Specified lubricant and/or sealant	Quantity
a	Bolt threads	Engine oil	As required
	Connecting rod bearing inside surface		
	Upper crankcase contact surface of cylinder liner		
	Piston outside surface		
	Cylinder liner wall surface		

Special tools (Unit: mm)

Mark	Tool name and shape		Part No.	Application
a	Piston guide clamp	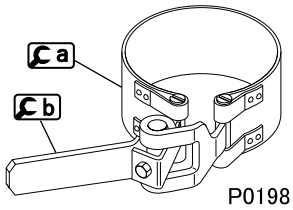 P01981	MH063432	Installation of piston and connecting rod assembly
b	Piston guide lever		MH061658	
c	Cylinder liner extractor	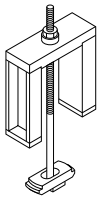 P30008	MH062537	Removal of cylinder liner
d	Cylinder liner installer A: ϕ113.5	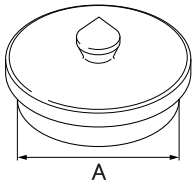 P30010	MH063606	Installation of cylinder liner
e	Adapter	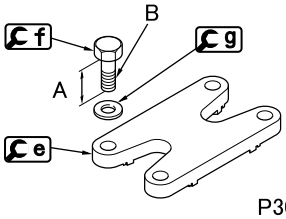 P30009	MH063433	Measurement of cylinder liner flange projection above upper crankcase top surface and difference in flange projection between neighboring cylinder liners
f	Bolt A: 40 B: M14 × 2		MF130625	
g	Washer		MH005012	

◆Work before removal◆

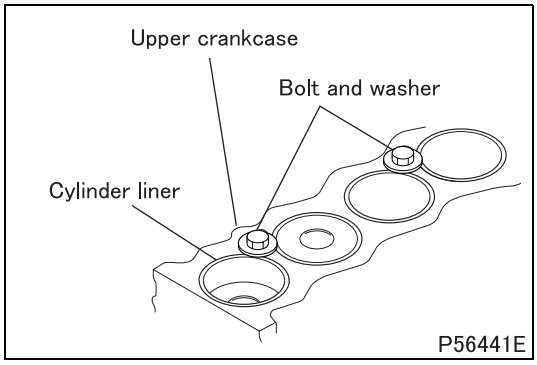

■ Retaining cylinder liners

- The cylinder liners slips out of the upper crankcase easily when the upper crankcase is turned over or the crankshaft is rotated with pistons inside liners. To prevent this from happening, retain the flange of each cylinder liner in position with a bolt and washer.

https://truckmanualshub.com/

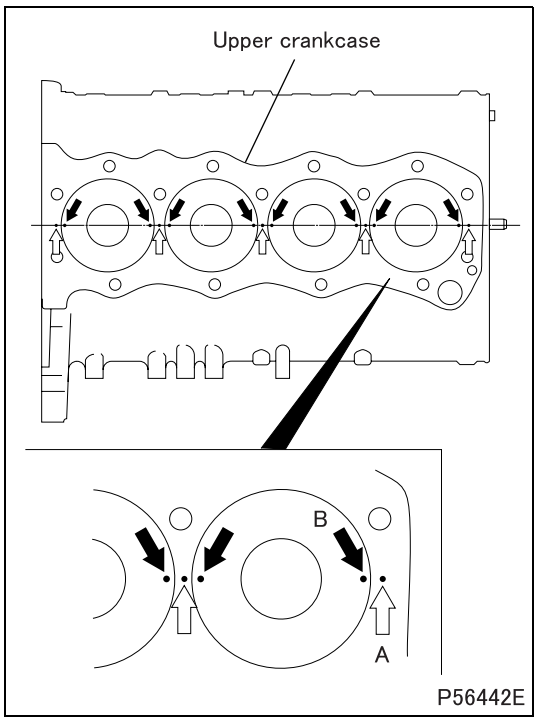

■ **Inspection: Piston projection from upper crankcase top surface**

CAUTION ⚠

- **The amount of piston projection affects engine performance and must therefore be inspected without fail.**

- Set the piston at the top dead center.
- Mark reference points A (five points in total) on the top surface of the upper crankcase as shown in the illustration. Using each of the marks as a zero point, measure the amount of piston projection relative to the zero point (height of measurement point B – height of reference point A).
- Make the measurements at the two measurement points B for each cylinder (eight points in total) using the reference point A nearest to each measurement point, and calculate the average value of all the measurements.
- If the average value is out of the standard value range, check the clearances between all relevant parts.
- Select and use a cylinder head gasket that can accommodate the average piston projection (average value of the eight measurements). (See the CYLINDER HEAD section.)

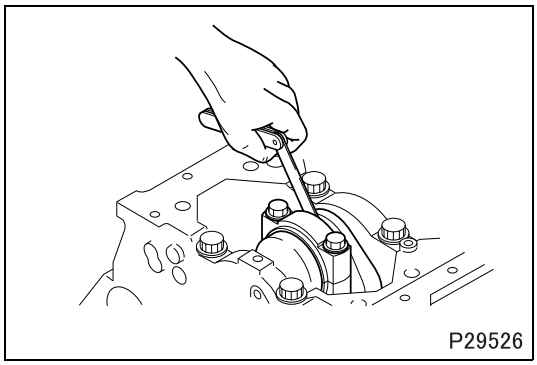

■ **Inspection: Connecting rod end play**

- Measure the end play for every connecting rod.
- If any measurement exceeds the specified limit, replace the defective part(s).

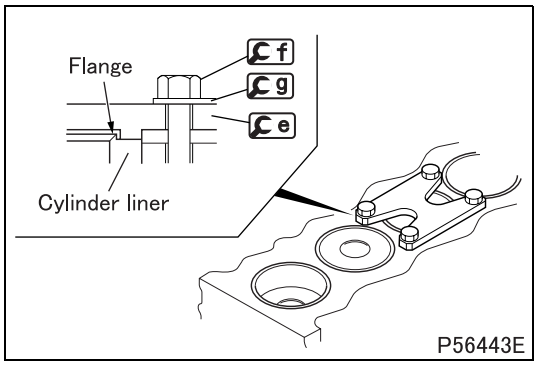

■ **Inspection: Difference in flange projection between neighboring cylinder liners**

- Install e on the upper crankcase so that it is not lying on top of any part of the flanges. Tighten f to a torque of 49 N·m {5 kgf·m}.

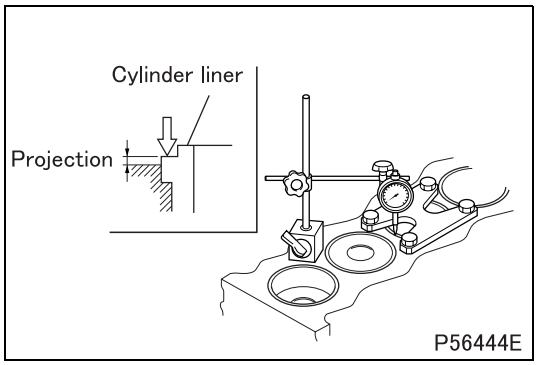

- Measure the amount of projection of the cylinder liner flange above the upper crankcase top surface.
- If the measurement is not within the standard value range, inspect the state of installation of the cylinder liner and then replace the defective part(s).

CAUTION ⚠

- **Insufficient projection of the flange can lead to a reduced pressure around the bore of the cylinder head gasket, causing gas leakage.**

◆Inspection procedure◆

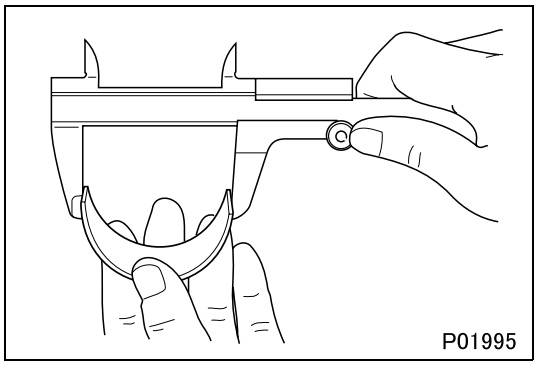

■ Inspection: Connecting rod bearing span when free

CAUTION ⚠

- **Do not attempt to manually expand the bearings.**

- If the measurement is less than the limit, replace upper and lower bearings as a set.

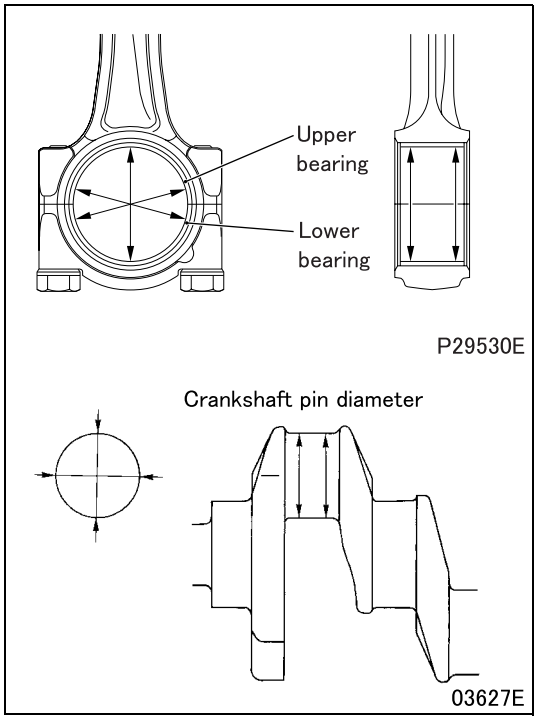

■ Inspection: Connecting rod bearing-to-crankshaft oil clearance

- Fit the lower bearing to the connecting rod cap and the upper bearing to the connecting rod, then tighten the bolts to a torque of 29 N·m {3.0 kgf·m}.
- Measure the inside diameter of the bearing and the diameter of the crankshaft pin.
- If the clearance exceeds the limit, replace the defective part(s).
- If a bearing has to be replaced with an undersized one, machine the crankshaft pin to the specified undersize diameter. (See the CRANKSHAFT section.)

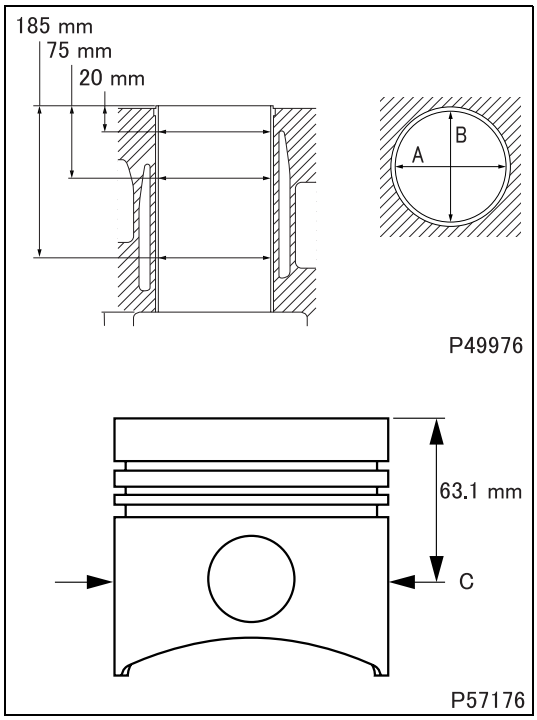

■ Inspection: Piston-to-cylinder liner clearance

- If the measurement is not within the standard value range, replace the defective part(s).
  - A: Cylinder bore measurement (in direction of crankshaft axis)
  - B: Cylinder bore measurement (in direction perpendicular to crankshaft axis)
  - C: Piston diameter measurement (in direction perpendicular to piston pin hole)

https://truckmanualshub.com/

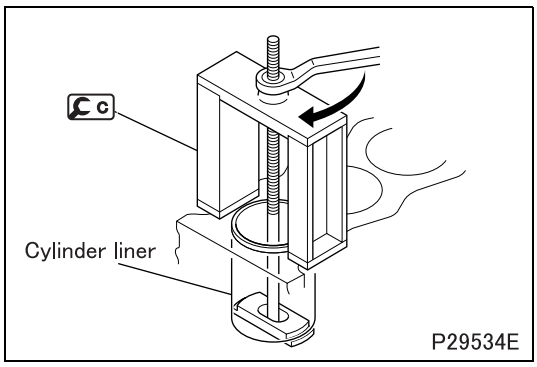

Replacement of cylinder liner
[Removal]

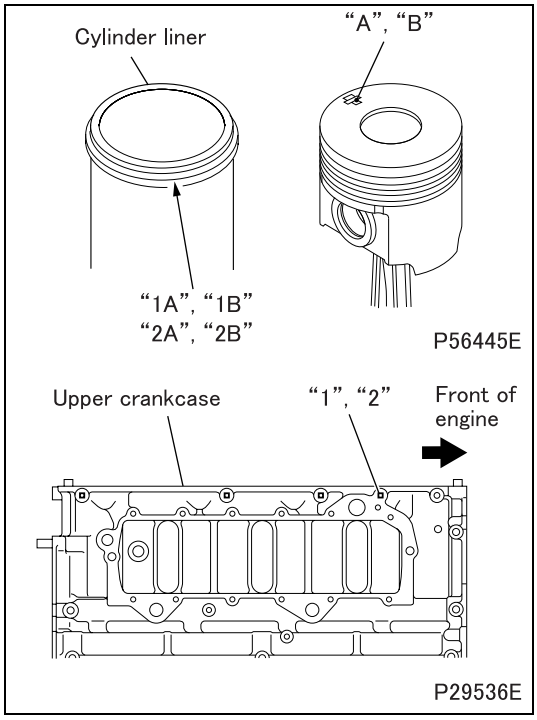

[Installation]

- When replacing cylinder liners, select the cylinder liners which correspond to the size marks on the crankcase and the piston.

Upper crankcase size mark	Cylinder liner size mark	Piston size mark
"1"	"1A"	"A"
	"1B"	
	"2A"	
"2"	"2B"	"B"

CAUTION ⚠

- **Make sure to use pistons and cylinder liners of the same size. Failure to do so may result in seizures in the engine.**

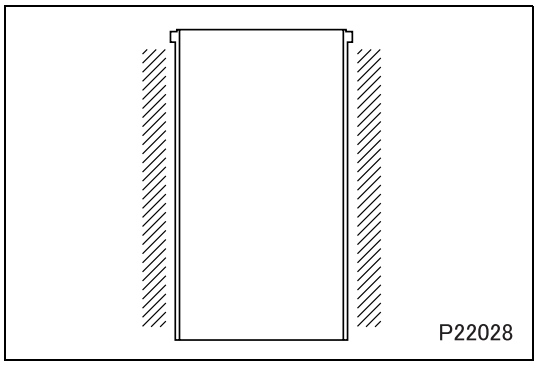

- Apply a thin coat of engine oil to the surfaces surrounding the cylinder liner of the upper crankcase (the shaded areas in the illustration).

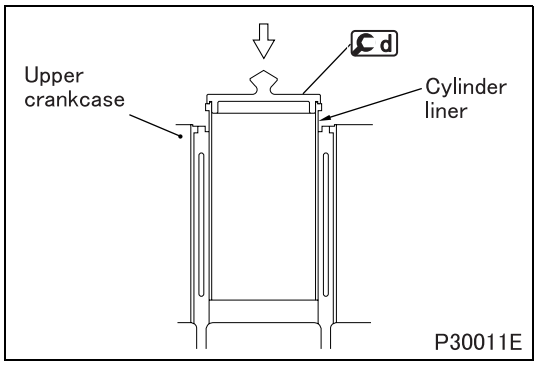

- Insert the cylinder liner into the upper crankcase by pushing down on d by hand slowly and evenly.

CAUTION ⚠

- **Handle the cylinder liner extremely carefully, as its wall is relatively thin and can be easily damaged.**

◆Installation procedure◆

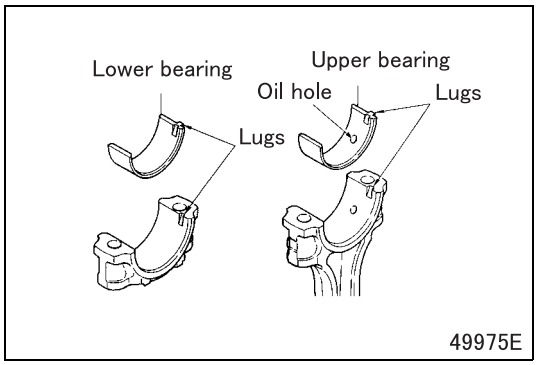

■ Installation: Connecting rod bearings

CAUTION ⚠

- **Do not reverse the positions of the lower bearing and the upper bearing (with oil hole) when installing, as this may cause seizure in the engine.**

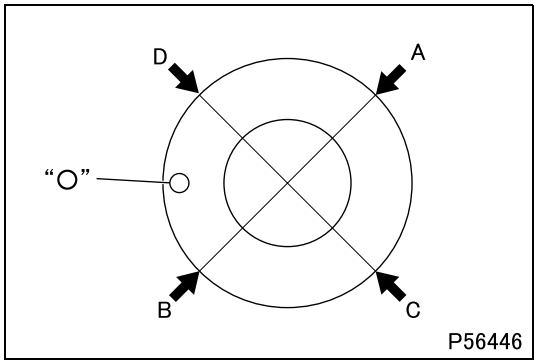

■ Installation: Piston and connecting rod

- Check that the piston ring end gaps are in their correct positions.
  A: 1st compression ring gap
  B: 2nd compression ring gap
  C: Oil ring gap
  D: Oil ring expander spring gap

"○": Front mark on piston

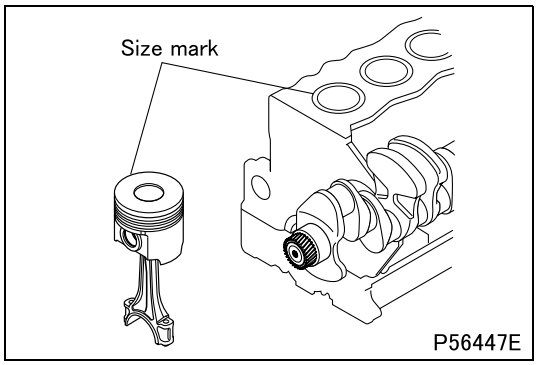

- Check that the pistons and the cylinder liners have identical size marks ("A" or "B").
- Install the pistons in the cylinder liners. Be careful not to scratch the inner surface of the liner and the crankshaft pins.

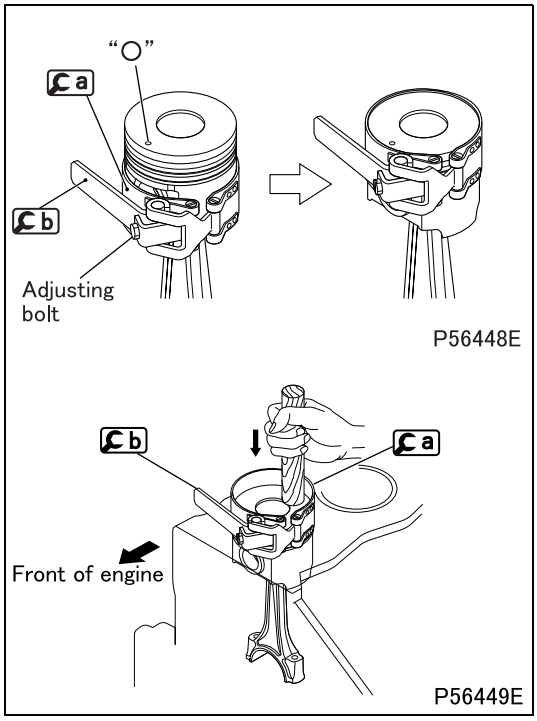

- Face the front mark "○" of the piston toward the front of the engine.
- Using the adjusting bolt of b, adjust the inside diameter of a such that it matches the piston's skirt diameter.
- Remove the tools from the piston and apply engine oil to the following parts before reinstalling the tools around the piston rings:
  - Outside surface of piston
  - Inside surface of a
  - Inside surface of cylinder liner

https://truckmanualshub.com/

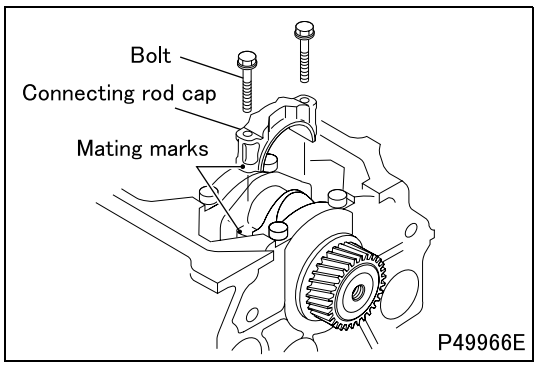

- After installing the piston and connecting rod assembly, align the mating marks on the connecting rod and connecting rod cap and tighten the bolts alternately in the following manner.
  - First tighten the bolt to a torque of 29 N·m {3.0 kgf·m}.
  - Tighten the bolt further by turning it clockwise by 90°.

https://truckmanualshub.com/

M E M O

https://truckmanualshub.com/

PISTONS, CONNECTING ROD AND CYLINDER LINERS

Piston and Connecting Rod

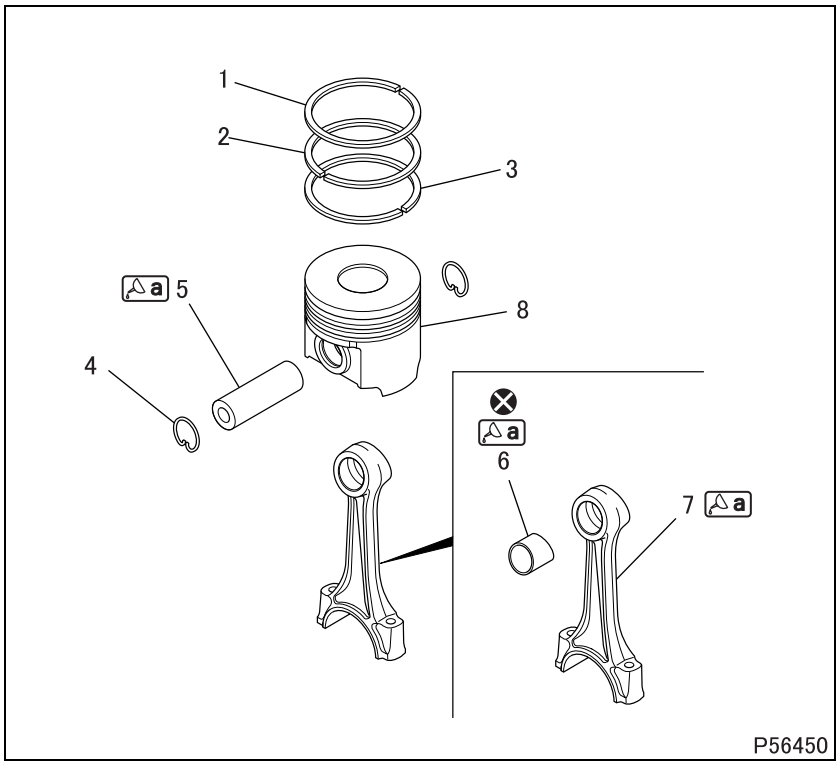

● **Disassembly sequence**

1 1st compression ring
2 2nd compression ring
3 Oil ring
4 Snap ring
5 Piston pin
6 Connecting rod bushing
7 Connecting rod
8 Piston

⊗: Non-reusable parts

● **Assembly sequence**

Follow the disassembly sequence in reverse.

Service standards (Unit: mm)

Location	Maintenance item		Standard value	Limit	Remedy
1 to 3	Piston ring end gap	1st compression ring	0.3 to 0.45	1.5	Replace
		2nd compression ring	0.4 to 0.55		
		Oil ring	0.3 to 0.5		
1 to 3, 8	Piston ring side clearance in piston groove	1st compression ring	0.02 to 0.10	0.2	Replace
		2nd compression ring	0.065 to 0.105	0.15	
		Oil ring	0.025 to 0.065		
5, 6	Piston pin-to-connecting rod bushing clearance		0.020 to 0.055	0.1	Replace
5, 8	Piston pin-to-piston clearance		0.004 to 0.022	0.05	Replace
7	Connecting rod	Bend	–	0.05	Replace
		Twist	–	0.1	

Lubricant and/or sealant

Mark	Points of application	Specified lubricant and/or sealant	Quantity
a	Piston pin outside surface	Engine oil	As required
	Connecting rod bushing outside surface		
	Connecting rod bushing fitting surface of connecting rod		

Special tools

Mark	Tool name and shape	Part No.	Application
a	Piston ring tool 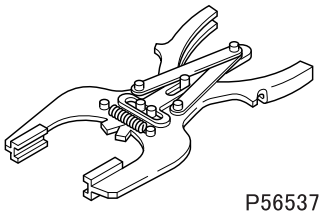 P56537	MH060014	Removal and installation of piston rings
b	Connecting rod bushing puller kit 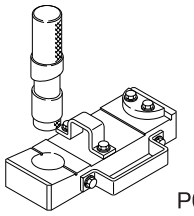 P02015	MH062225	Removal and installation of connecting rod bushings

◆Removal procedure◆

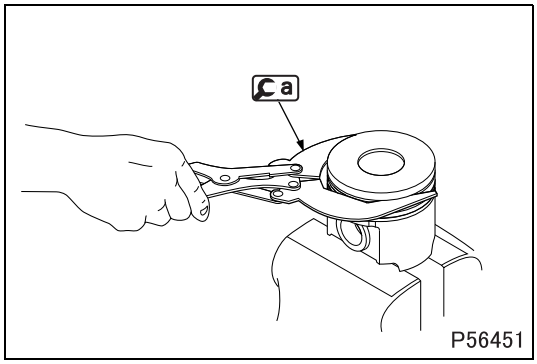

■ **Removal: Piston ring**

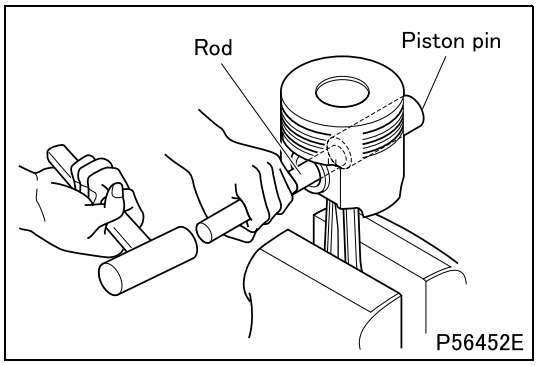

■ **Removal: Piston pin**

- Remove the piston pin by striking it with a rod and hammer.
- If the piston pin is difficult to remove, first heat the piston in hot water or with a piston heater.

◆Inspection procedure◆

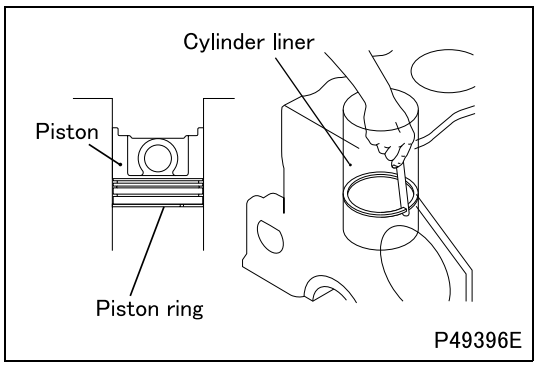

■ **Inspection: Piston ring end gap**

- Using the crown of a piston, push the piston ring horizontally into a cylinder in the cylinder liner until it reaches the lower part of the cylinder liner, where there is relatively small wear.
- Taking care not to move the piston ring, measure the end gap.
- If any of the rings has a gap exceeding the specified limit, replace all the piston rings as a set.

https://truckmanualshub.com/

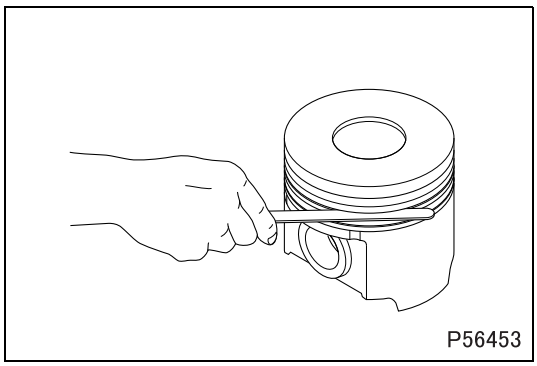

■ **Inspection: Piston ring side clearance in piston groove**

- Remove any carbon deposits from the ring groove in the piston before measurement.
- Measure the side clearance of each ring around the piston's entire periphery.
- If any of the measurements exceeds the specified limit, replace the defective part(s). If any of the piston rings is defective, replace all the rings on the piston as a set.

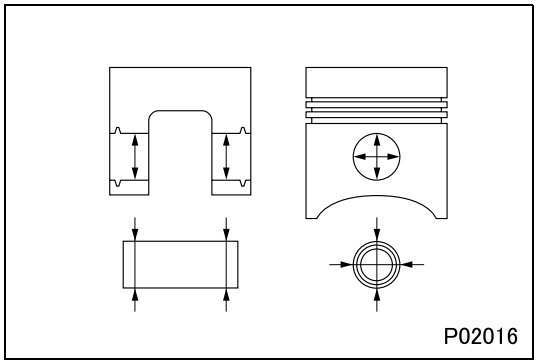

■ **Inspection: Piston pin-to-piston clearance**

- If the measurement exceeds the specified limit, replace the defective part(s).

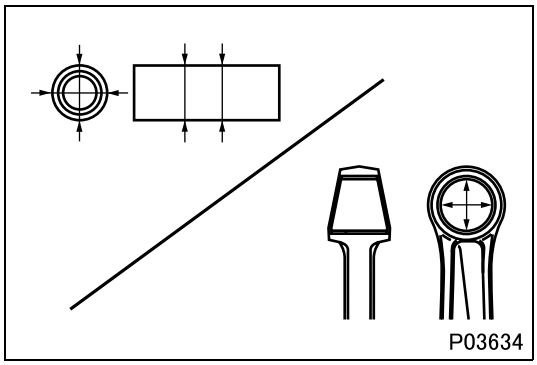

■ **Inspection: Piston pin-to-connecting rod bushing clearance**

- If any of the measurements exceeds the specified limit, replace the bushing.

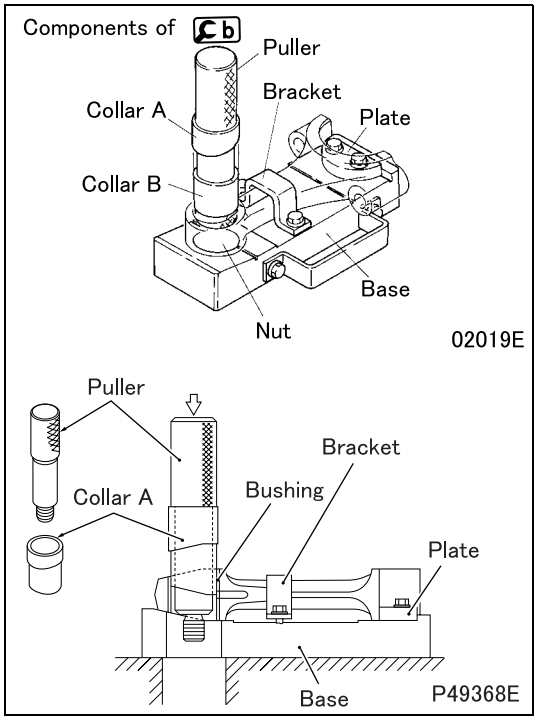

Replacement of connecting rod bushing

- Replace the connecting rod bushing using Cb.

[Removal]

- Remove the upper bearing (if fitted) from the big end of the connecting rod.
- Mount the connecting rod on the base and lock it in position with the bracket and plate.
- Fit collar A over the puller with its ends facing in the illustrated directions. Then, slowly apply a pressure of approximately 49 kN {5000 kgf} to the puller with a press to force out the connecting rod bushing.

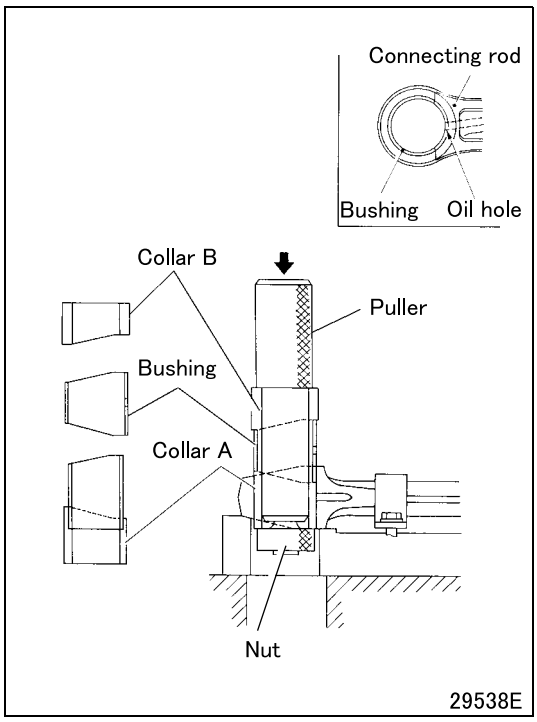

[Installation]

- Apply engine oil to the outside surface of the connecting rod bushing and the bushing fitting surface of the connecting rod.
- Fit collar B, the bushing, and collar A over the puller in the illustrated directions and lock this arrangement together with the nut.
- Align the oil holes in the connecting rod bushing and the connecting rod. Then, use a press to slowly apply a pressure of approximately 49 kN {5000 kgf} to the puller until the bushing is forced into place.
- After press-fitting the connecting rod bushing, measure the clearance between the piston pin and connecting rod bushing.
- If the measurement is less than the standard clearance range, ream the bushing.

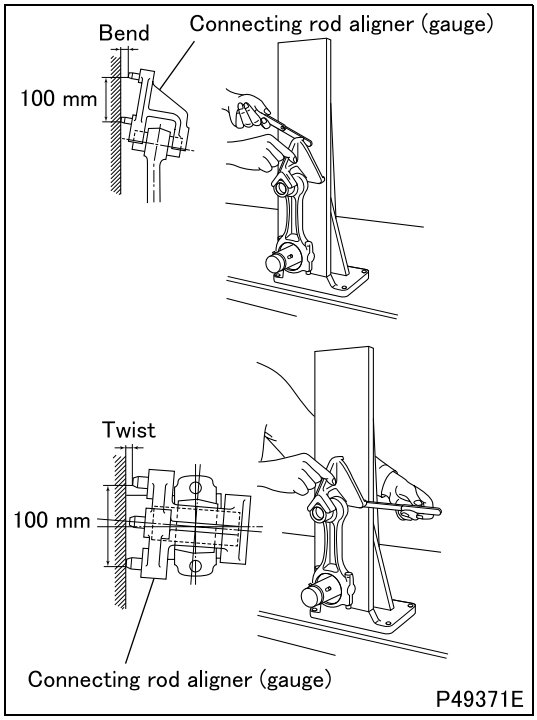

■Inspection: Connecting rod bend and twist

- Mount the connecting rod on the connecting rod aligner. Also mount the connecting rod bearings, piston pin, and connecting rod cap to create the same conditions as are expected when the connecting rod is mounted on a crankshaft. Tighten the bolts of the connecting rod bearing cap to a torque of 29 N·m {3.0 kgf·m}.
- Measure the extent of bend and twist in the connecting rod.
- If either measurement exceeds the specified limit, replace the connecting rod.

https://truckmanualshub.com/

◆Installation procedure◆

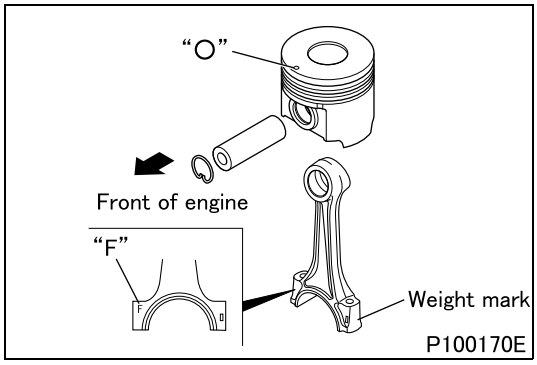

■ Installation: Piston and connecting rod

- Install pistons and connecting rods as follows when replacing them.
  - All connecting rods used in the same engine must be of the same weight size mark.
    Weight mark: "C" to "G"
- Apply engine oil to the piston pin, and assemble the piston and connecting rod with their marks facing in the illustrated directions.

"○": Front mark on piston
"F": Front mark on connecting rod

- If the piston pin is difficult to insert, heat the piston in hot water or with a piston heater

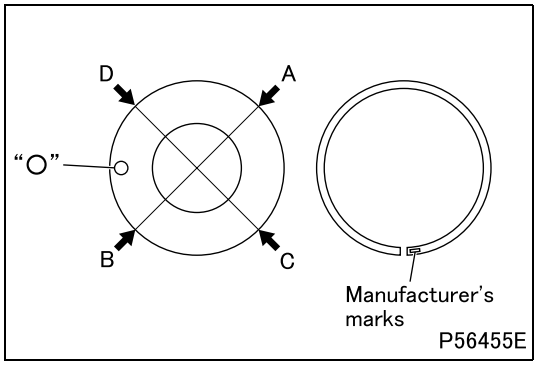

■ Installation: Piston rings

- With the manufacturer's marks (found near the piston ring end gaps) facing up, install the piston rings so that the end gap of each ring is positioned as illustrated.

A: 1st compression ring end gap
B: 2nd compression ring end gap
C: Oil ring end gap
D: Oil ring's expander spring end gap
"○": Front mark on piston

The manufacturer's marks are present only on the 1st and 2nd compression rings.

https://truckmanualshub.com/

M E M O

https://truckmanualshub.com/

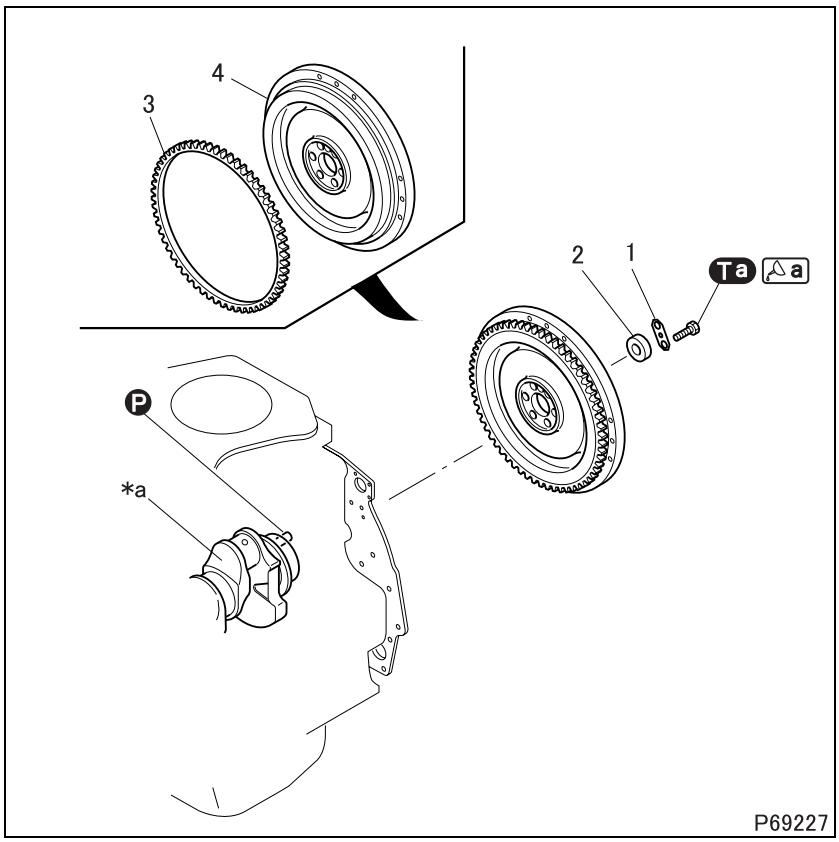

● **Disassembly sequence**

1 Plate
2 Bearing
3 Ring gear
4 Flywheel

***a**: Crankshaft
P: Locating pin

● **Assembly sequence**

Follow the disassembly sequence in reverse.

Service standards (Unit: mm)

Location	Maintenance item		Standard value	Limit	Remedy
4	Flywheel	Friction surface runout (when fitted)	–	0.2	Rectify or replace
		Friction surface height	19.5	18.5	Replace
		Friction surface distortion	0.05	0.2	Rectify or replace
		Friction surface parallelism	0.1 or less	–	

Tightening torque (Unit: N·m {kgf·m})

Mark	Parts to be tightened	Tightening torque	Remarks
Ta	Bolt (flywheel assembly installation)	58 {5.9} + 40°	Wet

Lubricant and/or sealant

Mark	Points of application	Specified lubricant and/or sealant	Quantity
a	Bolt threads	Engine oil	As required

Special tools (Unit: mm)

Mark	Tool name and shape	Part No.	Application
a	Socket wrench 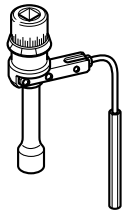 P01984	MH062183	Installation of flywheel assembly
b	Magnet base 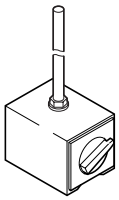 P00471	MH062356	

◆Work before removal◆

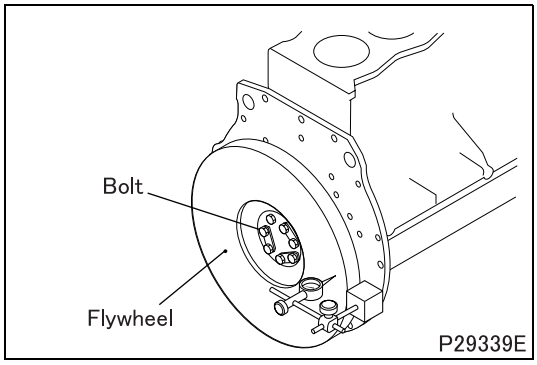

■ **Inspection: Flywheel friction surface runout**

- If the runout exceeds the specified limit, check that the bolts are tightened correctly and that there are no abnormalities on the crankshaft mounting surface, then rectify or replace the flywheel.

◆Inspection procedure◆

■ **Inspection: Ring gear**

- Check the ring gear of the flywheel by watching and touching. If there is damage or abnormal wear on it, replace the ring gear following the procedure below.

[Removal]

- Heat the ring gear evenly with a gas burner or the like until it reaches approximately 200°C, then remove it from the flywheel assembly.

WARNING ⚠

- **Never touch the heated ring gear, otherwise you may burn yourself.**

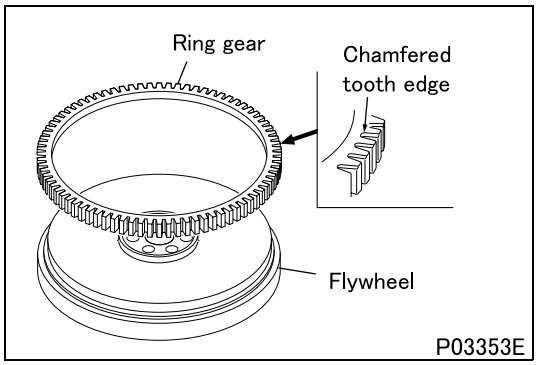

[Installation]

- Heat the ring gear evenly with a gas burner or the like until it reaches approximately 200°C.

WARNING ⚠

- **Never touch the heated ring gear, otherwise you may burn yourself.**

- Fit the ring gear with the side having non-chamfered tooth edges toward the flywheel.

https://truckmanualshub.com/

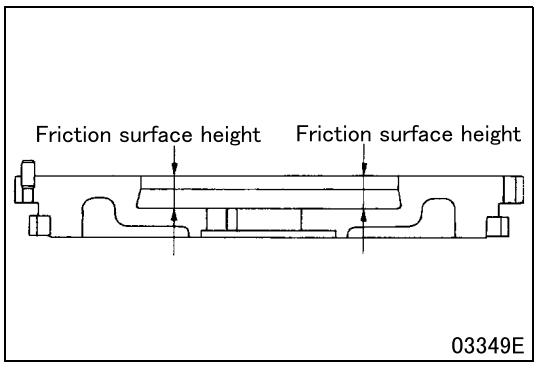

■ **Inspection: Flywheel**

(1) Friction surface height

- If the height is below the specified limit, replace the flywheel.

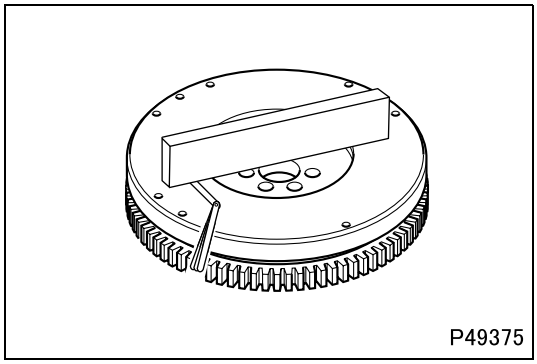

(2) Friction surface distortion

- If the measured amount of distortion is above the specified limit, rectify or replace the flywheel assembly.

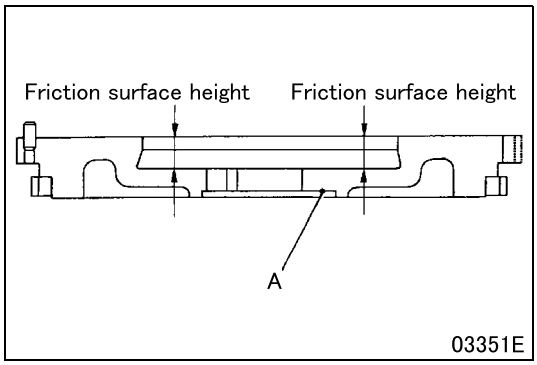

Rectification of friction surface

- Rectify the friction surface so that its height is not below the specified limit, and it is parallel with surface A with an error not exceeding 0.1 mm.

◆Installation procedure◆

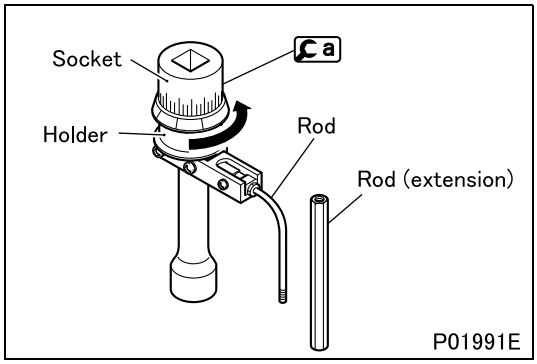

■ **Installation: Flywheel**

- Tighten all the bolts to 58 N·m {5.9 kgf·m} and then additionally tighten them by the following procedure.
- Rotate the holder of a counterclockwise to pretension the internal spring.

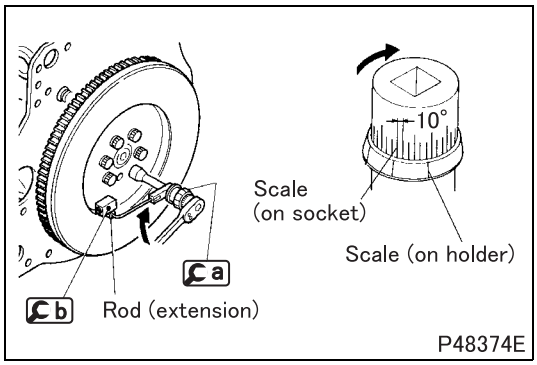

- Fit a on the bolt and set b so that the rod (extension) is held pressed against it by the spring force.
- Align a scale mark on the socket with a scale mark on the holder. (This point will be the point of reference, or the 0° point.)
- Starting with this point of reference, turn the socket clockwise with a wrench by 40° (one graduation on the socket scale represents 10°).

https://truckmanualshub.com/

M E M O

https://truckmanualshub.com/

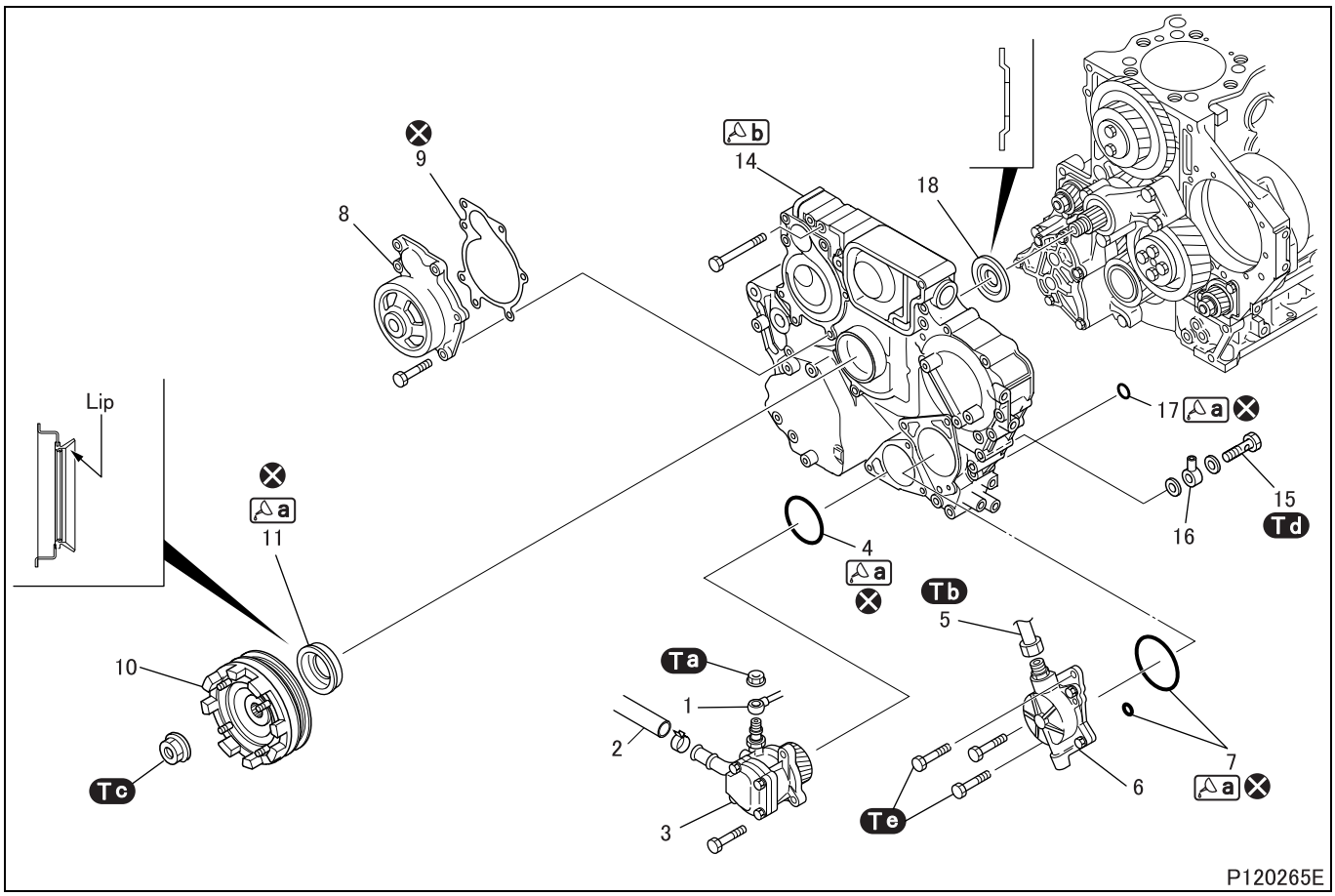

● **Disassembly sequence**

1 Power steering oil pipe
2 Power steering oil hose
3 Power steering oil pump (See Gr37.)
4 O-ring
5 Vacuum pipe
6 Vacuum pump (See Gr35.)
7 O-ring
8 Water pump (See Gr14.)
9 Gasket
10 Fan pulley
11 Front oil seal
12 –
13 –
14 Front case
15 Eyebolt
16 Oil jet
17 O-ring
18 Front oil seal slinger

⊗: Non-reusable parts

CAUTION ⚠

- **Do not remove the front oil seal unless defects are evident.**

● **Assembly sequence**

Follow the disassembly sequence in reverse.

Tightening torque (Unit: N·m {kgf·m})

Mark	Parts to be tightened	Tightening torque	Remarks
Ta	Nut (power steering oil pipe installation)	29.4 to 39.2 {3 to 4}	–
Tb	Vacuum pipe	29.4 {3.0}	–
Tc	Nut (fan pulley installation)	373 {38}	–
Td	Eyebolt (oil jet installation)	10 {1.0}	–
Te	Bolt (vacuum pump installation)	24 {2.4}	–

Lubricant and/or sealant

Mark	Points of application	Specified lubricant and/or sealant	Quantity
a	O-ring	Engine oil	As required
	Front oil seal lip		
b	Front case installation surfaces	ThreeBond 1207C or D	As required

Special tools (Unit: mm)

Mark	Tool name and shape	Part No.	Application
a	Holding bar A: 114, B: ϕ9 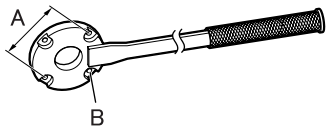 P69433	MH062970	Holding of fan pulley

◆Removal procedure◆

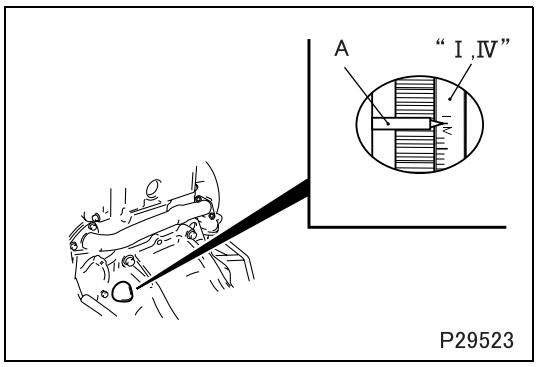

■ **Removal: Vacuum pump**

- The vacuum pump also serves for positioning the balance shaft LH. Therefore, before removing the vacuum pump, hold the balance shaft in position by the following procedure.
- Align the pointer A to between the inscribed lines (Ⅰ and Ⅳ or 1 and 4) on the flywheel. (Place No. 1 cylinder piston at the top dead center on compression stroke.)

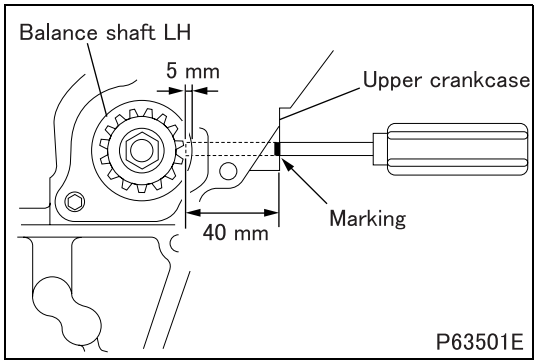

- Remove the upper crankcase plug.
- Mark a screwdriver or the like (ϕ4.5 mm or less) at a point 40 mm apart from its tip.
- Insert the screwdriver or the like (ϕ4.5 mm or less) into the plug hole until it lightly touches the balance shaft LH.

CAUTION ⚠

- **Do not press the screwdriver hard against the balance shaft LH, as this may damage No. 1 journal of the balance shaft.**

- Put the tip of the screwdriver or the like into the shaft supporting hole at No. 1 journal of the balance shaft.
- This insertion depth of the screwdriver or the like into the shaft supporting hole should be 5 mm.
- Remove the vacuum pump with the screwdriver or the like inserted in the hole.

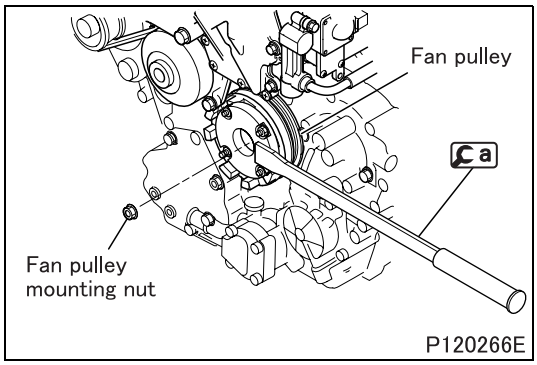

■ **Installation: Fan pulley**

- Put a in position on the studs of the fan pulley and fix the tool by using nuts.
- Loosen the fan pulley mounting nut while holding a.

https://truckmanualshub.com/

◆Installation procedure◆

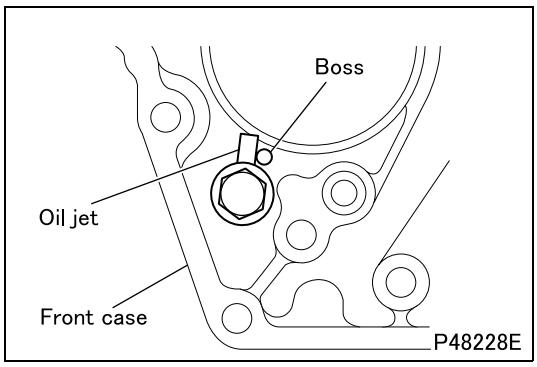

■ Installation: Oil jet

- When installed, the oil jet must be in contact with the front case and its nozzle must face in the illustrated direction.

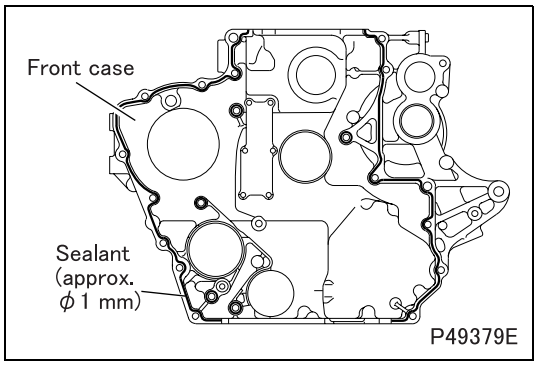

■ Installation: Front case

- Clean the sealant application surfaces of each part.
- Apply evenly thick beads of sealant to the upper crankcase mounting surface of the front case without any breaks.
- Mount the front case within three minutes of applying the sealant, being careful not to dislodge the sealant.

CAUTION ⚠

- **Do not run the engine within one hour of installing the front case.**
- **If the front case mounting bolts are loosened or removed, be sure to reapply sealant to the front case.**

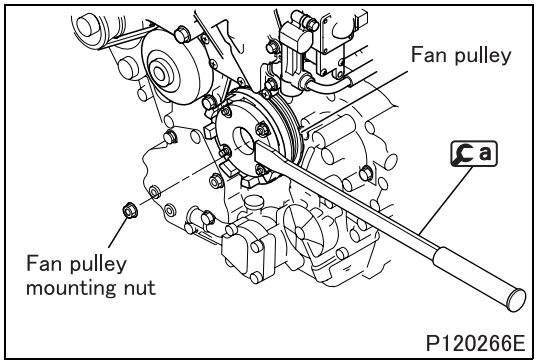

■ Installation: Fan pulley

- Put a in position on the studs of the fan pulley and fix the tool by using nuts.
- Tighten the fan pulley mounting nut to the specified torque while holding a.

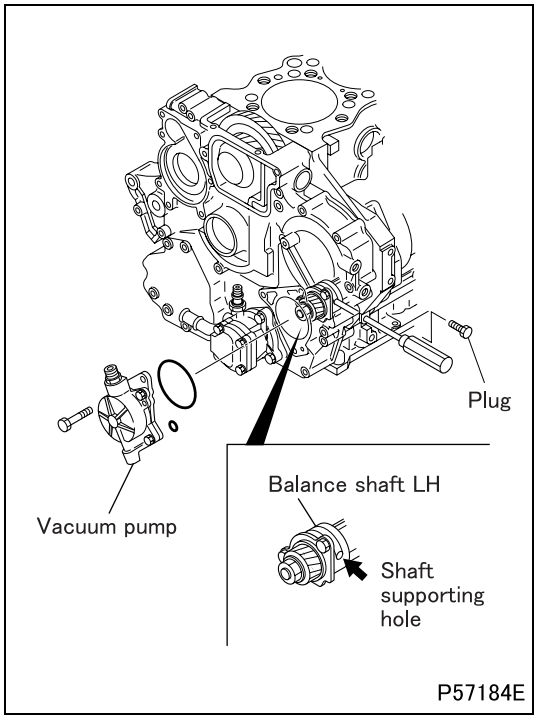

■ Installation: Vacuum pump

- The vacuum pump also serves as an element holding the balance shaft LH in place. Therefore, before installing the vacuum pump, hold the balance shaft LH in the correct position by the following procedure.
  - Place the No. 1 cylinder piston at the top dead center on compression stroke.
  - Remove the upper crankcase plug.
  - Insert a screwdriver or a similar tool into the plug hole until it lightly touches the balance shaft LH.

CAUTION ⚠

- **Do not press the screwdriver strongly against the balance shaft LH, as this may damage the No. 1 journal of the balance shaft.**

  - Turn the balance shaft LH slowly until the screwdriver aligns with the shaft support hole at the No. 1 journal and insert the screwdriver into the hole.
- Install the vacuum pump.
- After installing the vacuum pump, remove the screwdriver and reinstall the plug.

https://truckmanualshub.com/

M E M O

https://truckmanualshub.com/

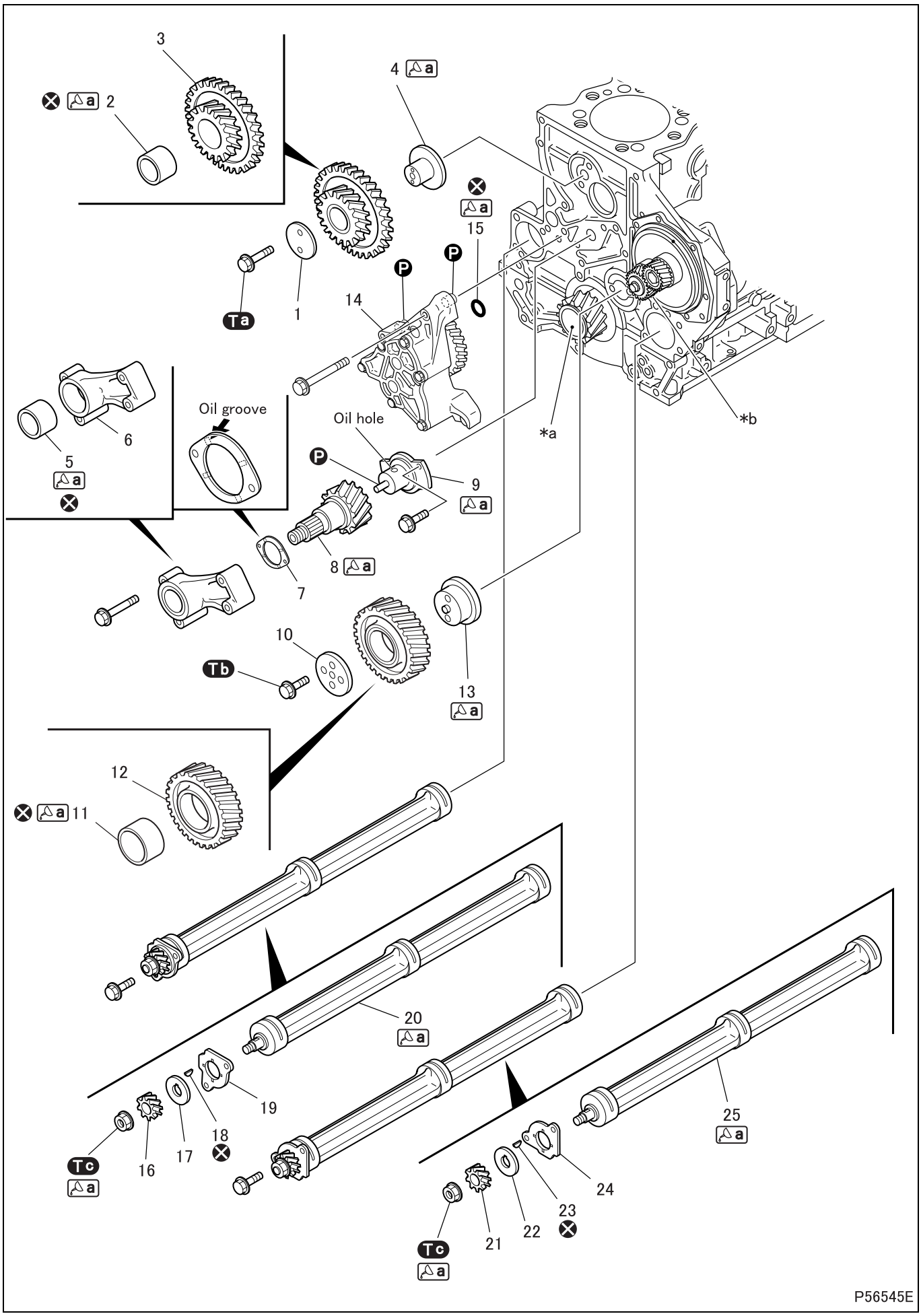

● Disassembly sequence

1 Thrust plate
2 Idler gear bushing
3 Idler gear
4 Idler shaft
5 Fan shaft case bushing
6 Fan shaft case
7 Thrust plate
8 Fan shaft
9 Fan gear shaft
10 Thrust plate
11 No. 1 idler gear bushing
12 No. 1 idler gear
13 No. 1 idler shaft
14 Oil pump (See Gr12.)
15 O-ring
16 Balance shaft gear RH
17 Thrust spacer
18 Key
19 Thrust plate
20 Balance shaft RH
21 Balance shaft gear LH
22 Thrust spacer
23 Key
24 Thrust plate
25 Balance shaft LH

***a**: Crankshaft gear
***b**: Supply pump idler gear
Ⓟ: Locating pin
⊗: Non-reusable parts

● Assembly sequence

Follow the disassembly sequence in reverse.

Service standards (Unit: mm)

Location	Maintenance item		Standard value	Limit	Remedy
–	Backlash between gears	Idler gear and fan shaft	0.09 to 0.14	0.3	Replace
		Fan shaft and No. 1 idler gear	0.06 to 0.10	0.3	
		No. 1 idler gear and crankshaft gear	0.11 to 0.13	0.3	
		No. 1 idler gear and supply pump idler gear	0.12 to 0.15	0.3	
		Oil pump gear and crankshaft gear	0.12 to 0.15	0.3	
		Oil pump gear and balance shaft gear RH	0.19 to 0.22	0.3	
–	End play of gears and shafts	Idler gear	0.10 to 0.20	0.3	Replace
		Fan shaft	0.07 to 0.19	0.3	
		No. 1 idler gear	0.15 to 0.25	0.3	
		Balance shaft RH	0.1 to 0.2	0.3	
		Balance shaft LH	0.1 to 0.2	0.3	
2, 4	Idler gear bushing-to-idler shaft clearance		0.02 to 0.06	0.1	Replace
5, 8	Fan shaft case bushing-to-fan shaft clearance		0.03 to 0.07	0.1	Replace
8, 9	Fan shaft-to-fan gear shaft clearance		0.01 to 0.05	0.1	Replace
11, 13	No. 1 idler gear bushing-to-No. 1 idler shaft clearance		0.03 to 0.07	0.1	Replace
20	Balance shaft RH bend		0.025	0.05	Replace
25	Balance shaft LH bend		0.025	0.05	Replace

Tightening torque (Unit: N·m {kgf·m})

Mark	Parts to be tightened	Tightening torque	Remarks
Ta	Bolt (idler shaft installation)	32.3 {3.3}	–
Tb	Bolt (No. 1 idler shaft installation)	53.9 {5.5}	–
Tc	Nut (balance shaft gear installation)	96.1 {9.8}	Wet

Lubricant and/or sealant

Mark	Points of application	Specified lubricant and/or sealant	Quantity
a	Inner surface of every bushing	Engine oil	As required
	Outside surface of every shaft		
	O-rings		
	Nut threads		
	Balance shaft journals		

https://truckmanualshub.com/

Special tools (Unit: mm)

Mark	Tool name and shape	Part No.	Application
a	Idler gear bushing puller A: ϕ46.5, B: ϕ50 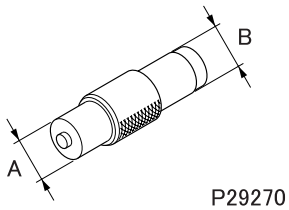	MH062540	Removal and installation of idler gear bushing
b	Idler gear bushing puller A: ϕ37, B: ϕ40 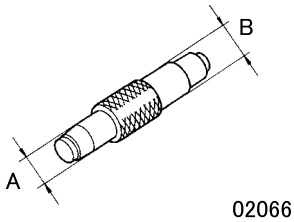	MH062601	Removal and installation of fan shaft case bushing
c	Idler gear bushing puller A: ϕ54.5, B: ϕ58 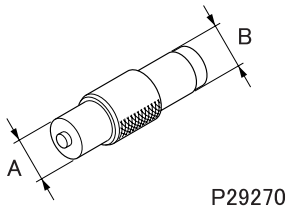	MH062541	Removal and installation of No. 1 idler gear bushing

◆Work before removal◆

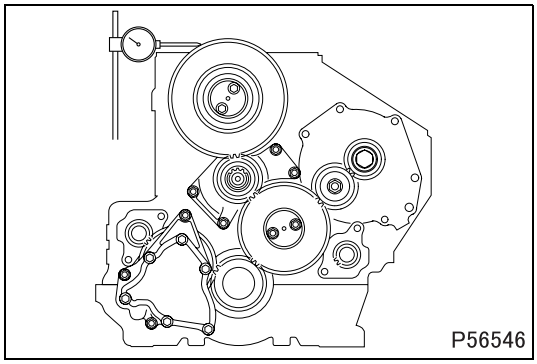

■ **Inspection: Backlash between gears**

- For each pair of gears, measure the backlash at more than three teeth.
- If any of the measurements exceeds the specified limit, replace the defective part(s).

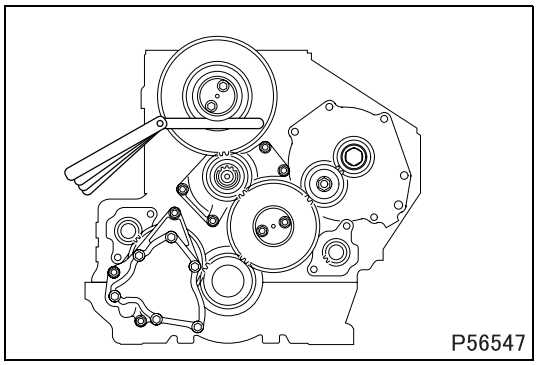

■ **Inspection: End play of gears and shafts**

- If the measurement exceeds the specified limit, replace the defective part(s).

◆Removal procedure◆

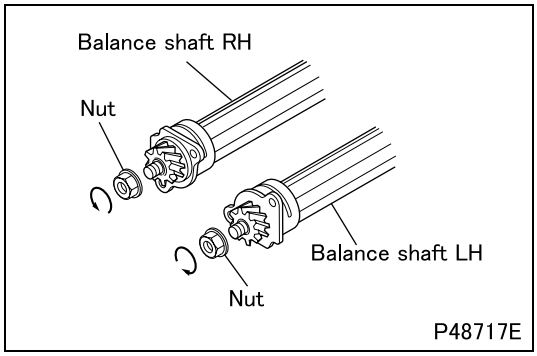

■ **Removal: Balance shaft**

- Remove the balance shaft RH by turning its nut counterclockwise, and the balance shaft LH by turning its nut clockwise.

◆Inspection procedure◆

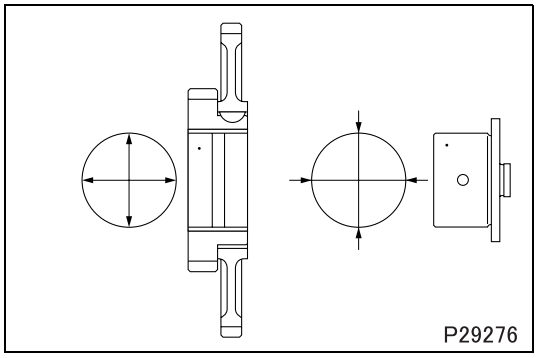

■ Inspection: Idler gear bushing-to-idler shaft clearance

- If the measurement exceeds the specified limit, replace the bushing.

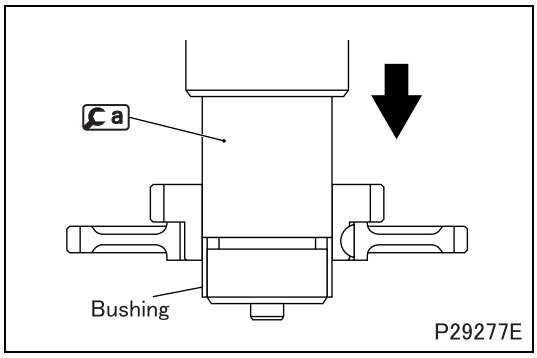

Replacement of idler gear bushing
[Removal]

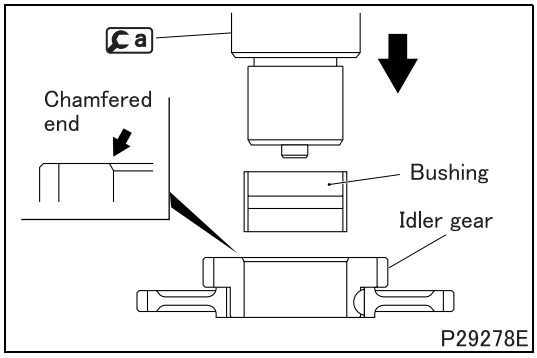

[Installation]

- Place the idler gear with its ends facing as illustrated.
- Press-fit the idler gear bushing until a sits snugly on the chamfered end of the idler gear.
- After press-fitting the bushing, measure the clearance.
- If the measurement is less than the minimum of the standard value range, ream the idler gear bushing until the clearance falls within the standard value range.

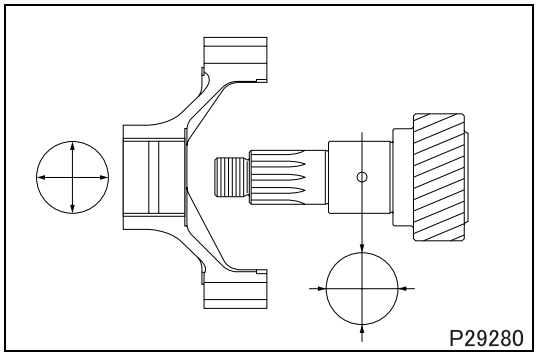

■ Inspection: Fan shaft case bushing-to-fan shaft clearance

- Replace the fan shaft case bushing if the measurement exceeds the specified limit.

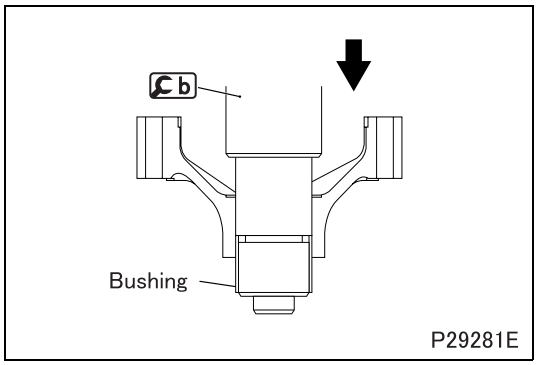

Replacement of fan shaft case bushing
[Removal]

https://truckmanualshub.com/

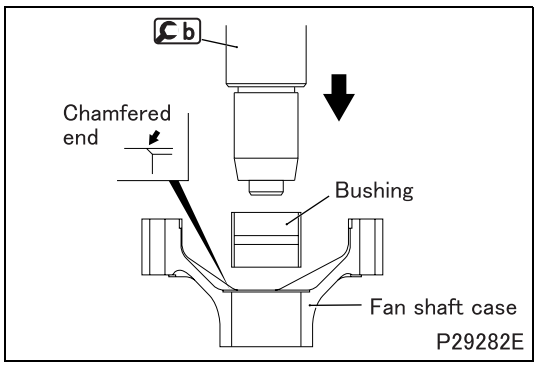

[Installation]

- Position the fan shaft case with its ends facing in the illustrated directions.
- Press in the bushing until b rests snugly on the chamfered end of the fan shaft case.
- After press-fitting the bushing, remeasure the clearance between it and the fan shaft.
- Ream the bushing if the measurement is below the standard value range.

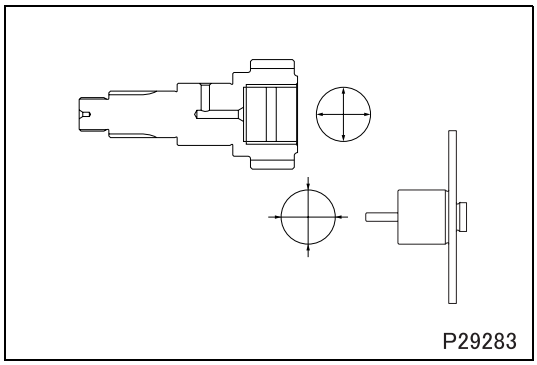

■ **Inspection: Fan shaft-to-fan gear shaft clearance**

- Replace the fan shaft if the measurement exceeds the specified limit.

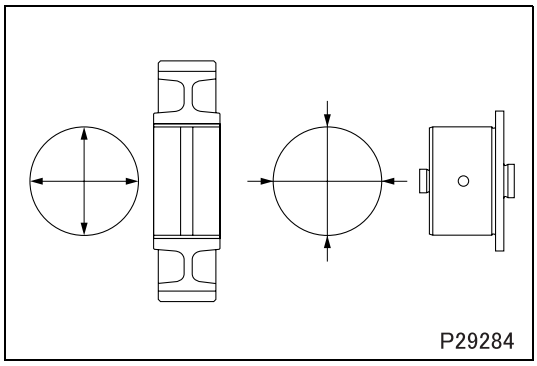

■ **Inspection: No. 1 idler gear bushing-to-No. 1 idler shaft clearance**

- Replace the bushing if the measurement exceeds the specified limit.

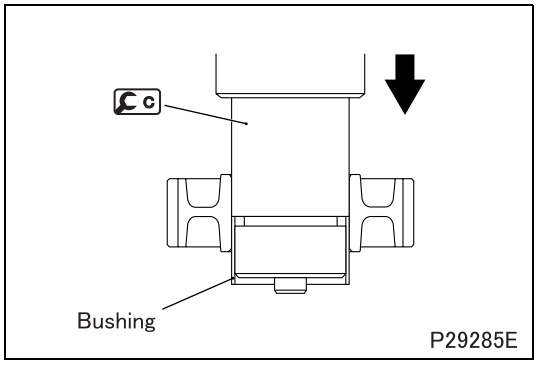

Replacement of No. 1 idler gear bushing
[Removal]

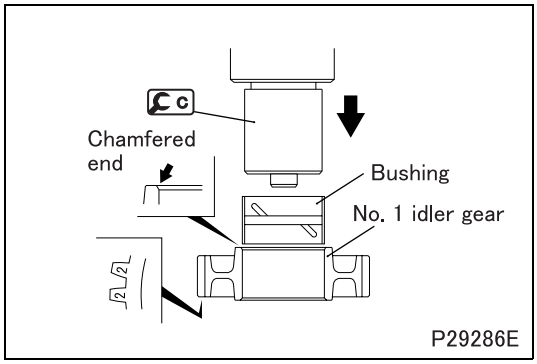

[Installation]

- Position the No. 1 idler gear with its ends facing in the illustrated directions.
- Press in the gear bushing until c sits snugly on the chamfered end of the No. 1 idler gear.
- After press-fitting the bushing, remeasure the clearance between it and the No. 1 idler shaft.
- Ream the busing if the measurement is below the standard value range.

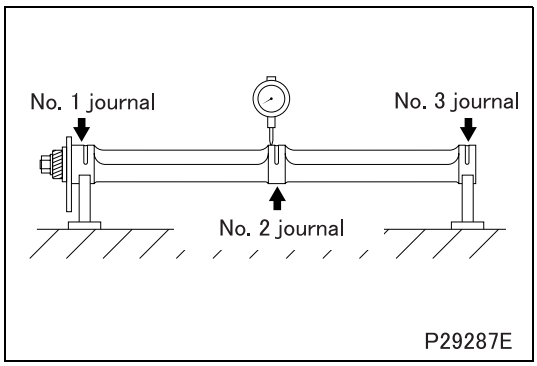

■ **Inspection: Balance shaft bend**

- Place supports under the No. 1 and No. 3 journals of the balance shaft and measure the bend of the balance shaft at the No. 2 journal.
- The amount of balance shaft bend is obtained by giving the balance shaft one turn and dividing the dial gauge reading by two.
- If the measurement exceeds the specified limit, replace the balance shaft.

◆Installation procedure◆

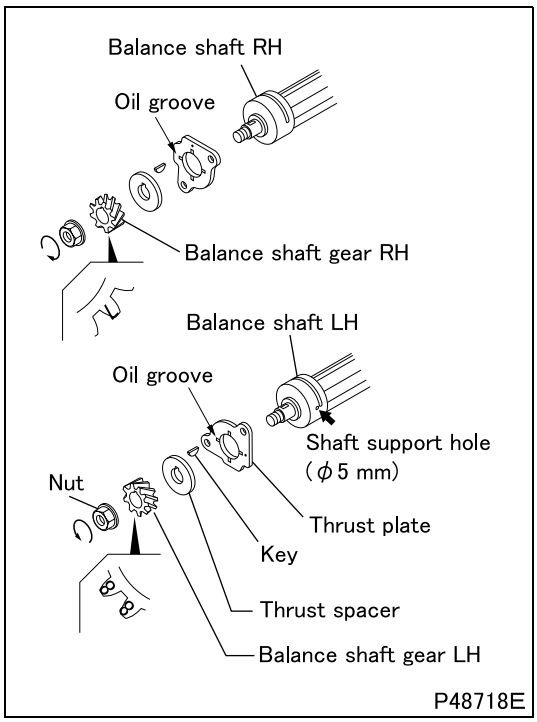

■ **Installation: Balance shafts**

- Install all the indicated parts on each balance shaft with their ends facing in the illustrated directions.
- Tighten the nut for the balance shaft RH by turning it clockwise, and the nut for the balance shaft LH by turning it counterclockwise.

- Install the assembled balancer shafts, RH and LH, to the crankcase in the following ways. Procedures for RH and LH shafts are different.
  - Balancer shaft RH: No special positioning or the like is required. Just install the shaft to the crankcase. (Adjustment of balancer shaft timing will be performed when installing the oil pump.)
  - Balancer shaft LH: The gear of the balancer shaft LH is engaged with the vacuum pump gear after installing the front case. At that moment, the balancer shaft cannot be rotated and therefore the shaft timing cannot be adjusted. For this reason, the position of the balancer shaft LH must be fixed when installing the shaft. Insert the balancer shaft LH into the crankcase and then do as follows:
  - Remove the plug on the upper crankcase.
  - Prepare a Philips screwdriver with 4.5 mm or smaller shaft diameter. Mark the point 40 mm from the tip of the shaft.
  - Insert the screwdriver into the plug hole until it lightly contacts the balancer shaft.

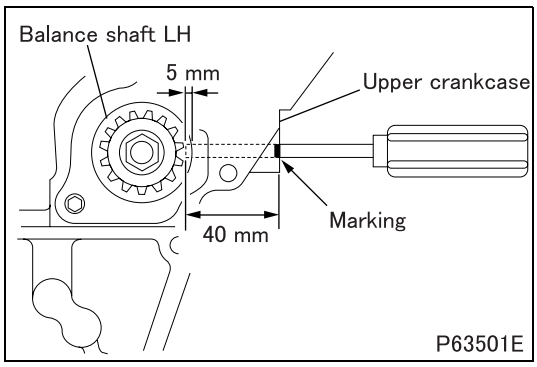

CAUTION ⚠

- **Do not apply heavy force on the screwdriver. Doing so may damage the No. 1 journal of the balancer shaft LH.**

https://truckmanualshub.com/

- Turn the balancer shaft LH while applying light force on the screwdriver. The screwdriver will enter into the shaft locking hole and the balancer shaft will be locked.
- When the screwdriver enters into the locking hole, it will sink by 5 mm.
- Keep the balancer shaft LH locked until the vacuum pump is installed.

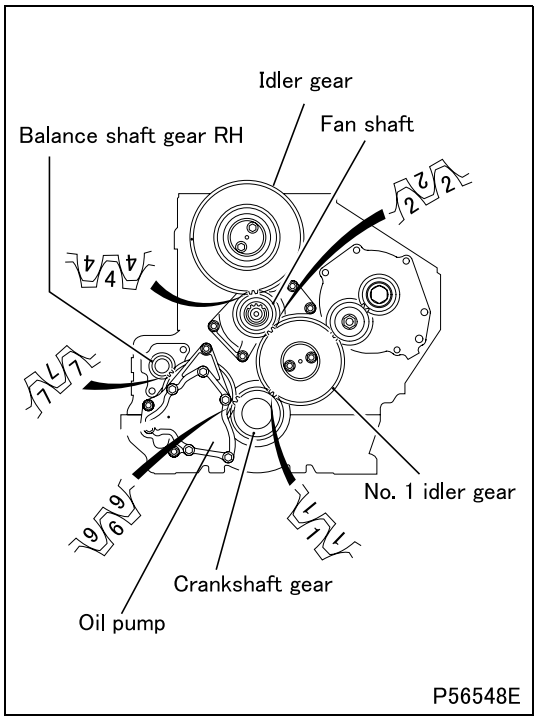

■ **Installation: Timing gears**

- Install the oil pump gear by aligning mating mark “6” with that on the crankshaft gear, and mating mark “7” with that on the balance shaft gear RH.
- Install the No. 1 idler gear by aligning mating mark “1” with that on the crankshaft gear.
- Install the fan shaft by aligning mating mark “2” with that on the No. 1 idler gear.
- Install the idler gear by aligning mating mark “4” with that on the fan shaft.

https://truckmanualshub.com/

M E M O

https://truckmanualshub.com/

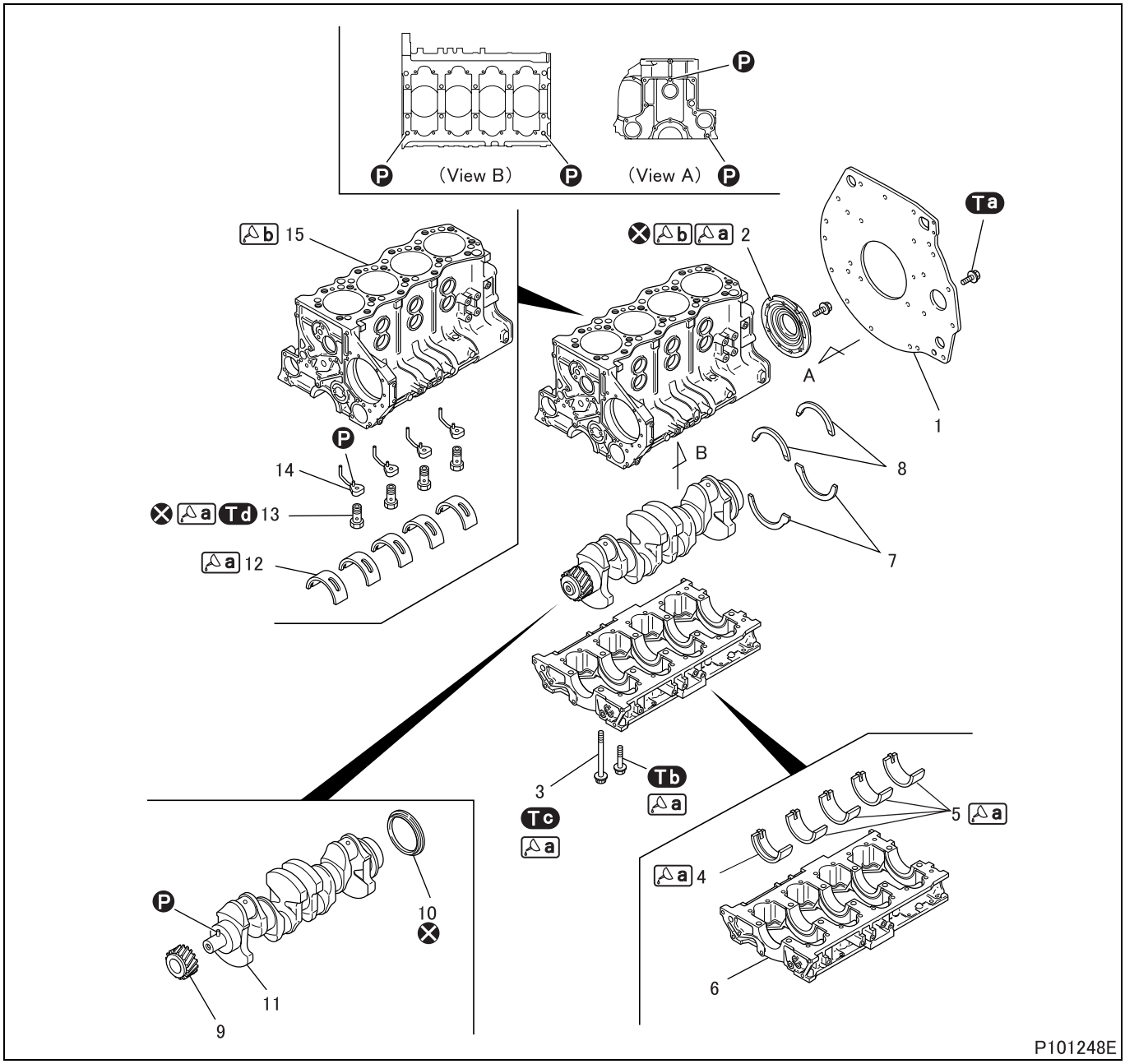

● **Disassembly sequence**

1	Rear plate	**7**	Lower thrust plate	**13**	Check valve
2	Rear oil seal	**8**	Upper thrust plate	**14**	Oil jet
3	Main bearing cap bolt	**9**	Crankshaft gear	**15**	Upper crankcase
4	No. 1 Lower main bearing	**10**	Rear oil seal slinger		
5	Lower main bearing	**11**	Crankshaft	Ⓟ:	Locating pin
6	Lower crankcase	**12**	Upper main bearing	⊗:	Non-reusable parts

CAUTION ⚠

- **The lower crankcase and the upper crankcase are machined as a matched set, and cannot be replaced individually.**

● **Assembly sequence**

Follow the disassembly sequence in reverse.

CAUTION ⚠

- **The main bearing cap bolts are tightened using the torque-turn tightening method. Any bolt that has three punch marks must be replaced.**
- **Do not overtighten the check valve. If it is tightened to a torque exceeding the specification, the check valve may malfunction, resulting in seizures in the engine.**
- **The No. 1 lower bearing has a oil groove. Be sure to install it in the correct position, otherwise a crankshaft seizure may result.**

Service standards (Unit: mm)

Location	Maintenance item			Standard value	Limit	Remedy
–	Crankshaft end play			0.10 to 0.28	0.4	Replace thrust plate
4, 5, 11, 12	Main bearing-to-crankshaft oil clearance		All except No. 3	0.038 to 0.1	0.15	Replace
			No. 3	0.058 to 0.12		
4, 5, 12	Main bearing span when free			–	91.5	
11	Crankshaft	Bend		0.02 or less	0.05	Replace
		Pins and journals	Out-of-roundness	0.01 or less	0.03	Rectify or replace
			Taper	0.006 or less	–	
		Center-to-center distance between the journal and pin		60 ± 0.05	–	Replace
		Journal width	No. 1	33.5	–	
			No. 2 to 4	35	–	
			No. 5	$35^{+0.039}_{0}$	–	
		Pin width		$41^{+0.12}_{0}$	–	
		Fillet		R4	–	
15	Upper crankcase	Distortion of top surface		0.07 or less	0.2	Rectify or replace
		Cylinder block	Roundness	0.005 or less	–	Replace
			Cylindricity	0.015 or less	–	

Tightening torque (Unit: N·m {kgf·m})

Mark	Parts to be tightened	Tightening torque	Remarks
Ta	Bolt (rear plate installation)	64 {6.5}	–
Tb	Bolt (lower crankcase installation)	23.5 {2.4}	Wet
Tc	Main cap bolt (lower crankcase installation)	50 {5.1} +90°	• Wet • Reusable up to 3 times
Td	Check valve	29 {3.0}	Wet

Lubricant and/or sealant

Mark	Points of application	Specified lubricant and/or sealant	Quantity
a	Rear oil seal lip	Engine oil	As required
	Bolt and main bearing cap bolt threads and seating surface of head		
	Main bearing inside surface		
	Check valve threads		
b	Upper and lower crankcase mating surface of rear oil seal	ThreeBond 1217H	As required
	Lower crankcase mounting surface of upper crankcase		

https://truckmanualshub.com/

Special tools (Unit: mm)

Mark	Tool name and shape	Part No.	Application
a	Gear puller 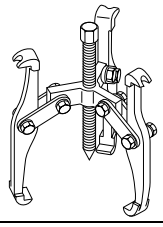 P02065	MH061326	Removal of crankshaft gear
b	Rear oil seal slinger installer A: ϕ103, B: ϕ100, C: ϕ15 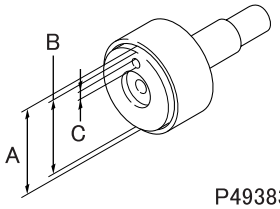 P49383	MH062677	Installation of rear oil seal slinger

◆Work before removal◆

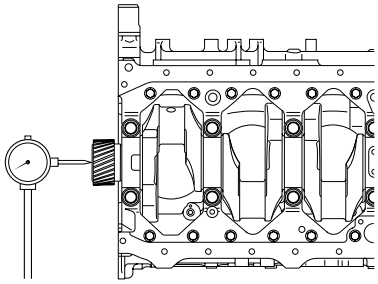
P29413

■ **Inspection: Crankshaft end play**

- If the measurement exceeds the specified limit, replace the thrust plates with oversize ones.
- Available oversizes:
  +0.15 mm, +0.30 mm, +0.45 mm
- Replace the crankshaft if the end play is too large to adjust using oversize thrust plates.

◆Removal procedure◆

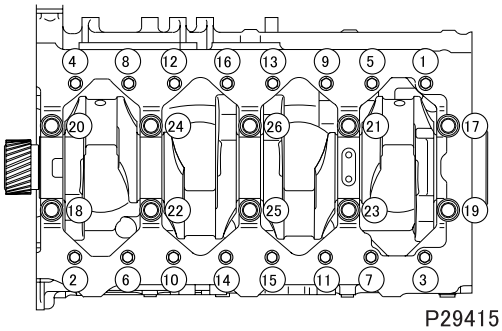

P29415

■ **Removal: Lower crankcase**

- Loosen the bolts in several passes in the order indicated in the illustration (1 to 16).
- After loosening the bolts, loosen the main cap bolts in several passes in the order indicated in the illustration (17 to 26), then remove the main cap bolts.

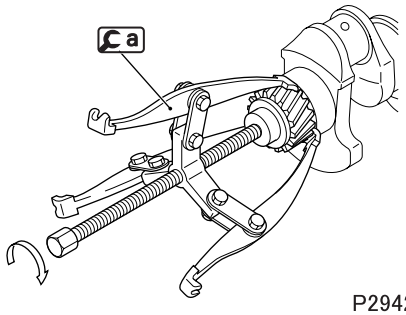

P29422

■ **Removal: Crankshaft gear**

CAUTION ⚠

- **Do not tap off the crankshaft gear as this can damage it.**

■ **Removal: Rear oil seal slinger**

- Taking care not to damage the crankshaft, split the rear oil seal slinger using a chisel or a similar tool.

◆Inspection procedure◆

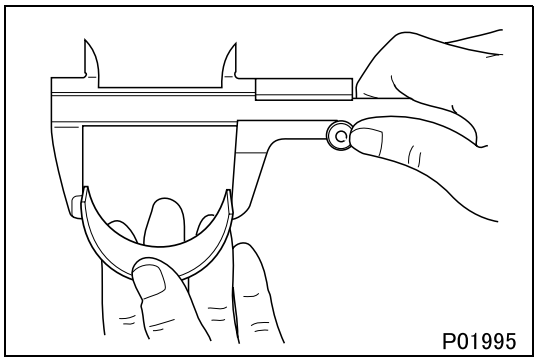

■ Inspection: Main bearing span when free

CAUTION ⚠

- **Do not attempt to manually expand the bearings.**

- If the measurement is less than the limit, replace upper and lower bearings as a set.

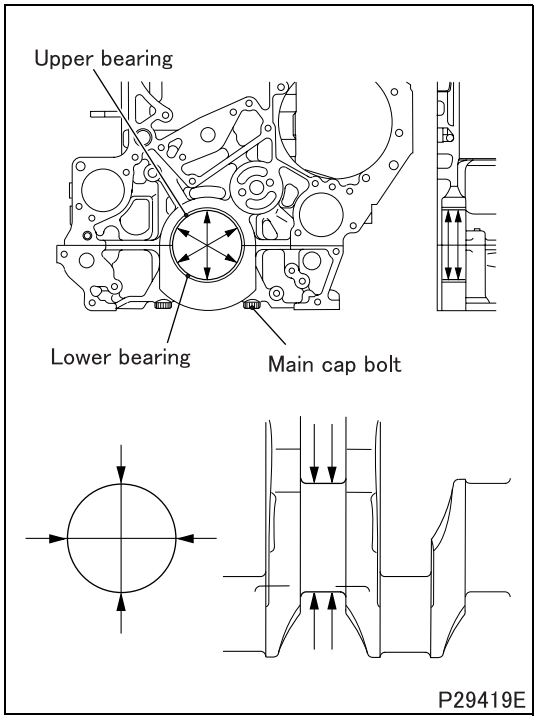

■ Inspection: Main bearing-to-crankshaft oil clearance

- Fit the upper bearing into the upper crankcase and the lower bearing into the lower crankcase.
- Tighten the main bearing cap bolts to a torque of 49 N·m {5.0 kgf·m}.
- Measure the inside diameter of the main bearing and the diameter of the corresponding crankshaft journal.
- If the difference between the measurements exceeds the specified limit, machine the crankshaft journal to one of the specified undersize dimensions indicated on the next page.

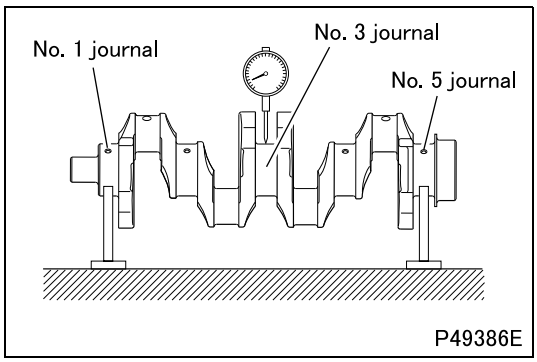

■ Inspection: Crankshaft

(1) Bend

- Support the crankshaft at its No. 1 journal and No. 5 journal. Measure the extent of bending in the crankshaft at the center of the No. 3 journal.
- The amount of crankshaft bend is obtained by giving the crankshaft one turn and dividing the dial gauge reading by two.
- If the measurement exceeds the specified limit, replace the crankshaft.

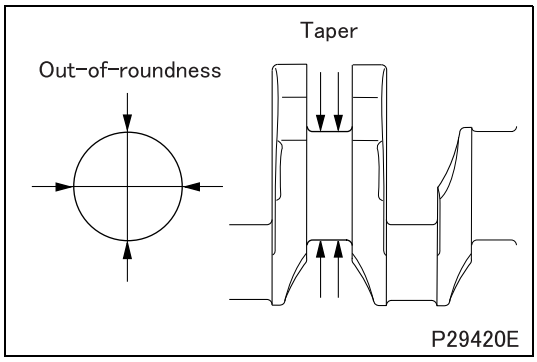

(2) Out-of-roundness and taper of crankshaft journals and pins

- If any of the measurements exceeds the specified limits, grind the crankshaft journal(s) and/or pin(s) to undersize(s) or replace the crankshaft.

https://truckmanualshub.com/

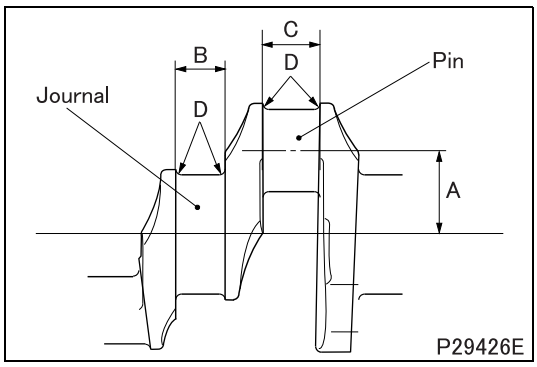

Grinding of crankshaft

CAUTION ⚠

- **If the crankshaft is ground to an undersize, the main bearings must be replaced with the undersize ones of the corresponding undersize.**

- See the table of the service standards for the dimension of each part, and collect the parts as follows.
- Do not change the center-to-center distance A between the journal and pin.
  A: 60 ± 0.05 mm
- Do not change the journal width B and the pin width C.
  B: 33.5 mm (No. 1 journal)
  35 mm (No. 2 to No. 4 journals)
  $35^{+0.039}_{0}$ mm (No. 5 journal)
  C: $41^{+0.2}_{0}$ mm (No. 5 journal)
- Finish the fillets D smoothly.
  D: R4 mm
- Carry out a magnetic inspection to check for cracks possibly caused by grinding. Also, check that the harness of the surface has not dropped below Shore hardness number (Hs) 75.
- Replace the crankshaft if defects are evident.

Crankshaft undersize dimensions (Unit: mm)

		Undersizes			
		0.25	0.50	0.75	1.00
Finished journal diameter	No. 1, 2, 4, 5	85.68 to 85.70	85.43 to 85.45	85.18 to 85.20	84.93 to 84.95
	No. 3	85.66 to 85.68	85.41 to 85.43	85.16 to 85.18	84.91 to 84.93
Finished pin diameter		64.69 to 64.71	64.44 to 64.46	64.19 to 64.21	63.94 to 63.96
Out-of-roundness		0.01 or less			
Taper		0.006 or less			

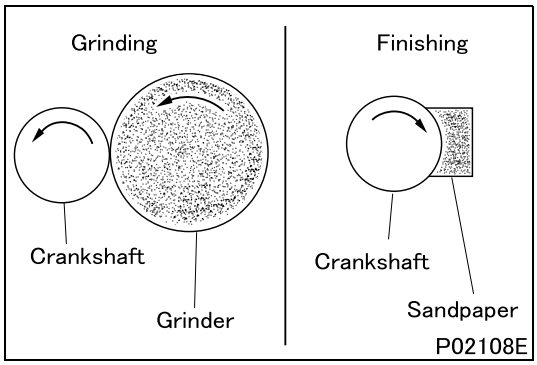

- When grinding, turn both the crankshaft and the grinder counterclockwise as viewed from the crankshaft front end.
- When finishing the crankshaft with whetstone or sandpaper, rotate the crankshaft clockwise.

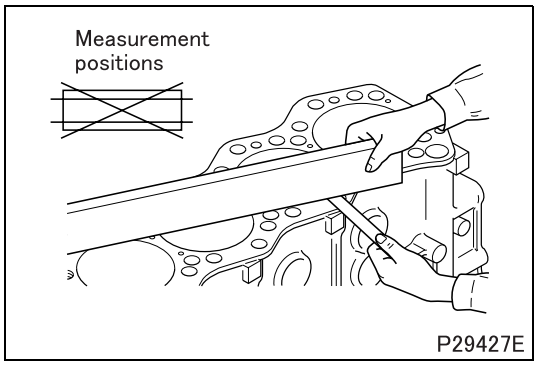

■ Inspection: Distortion of upper crankcase top surface

- If the measurement exceeds the specified limit, grind the crankcase top surface with a surface grinder.
- Limit the amount of removed metal to make sure that the amount of piston projection above the crankcase top surface stays within the standard value range. (See the PISTON AND CONNECTING ROD section.)

◆Installation procedure◆

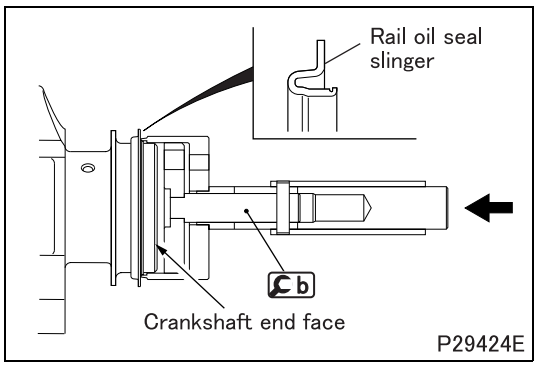

■ Installation: Rear oil seal slinger

- Press in the rear oil seal slinger until b sits snugly on the crankshaft end surface.

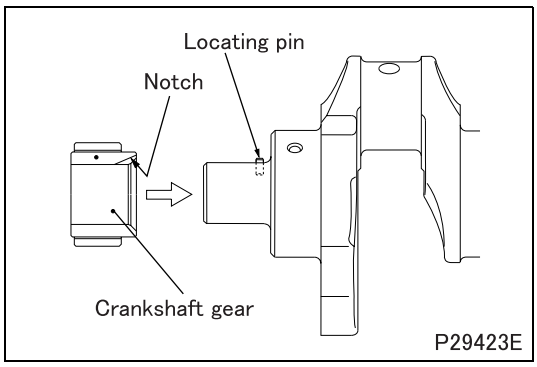

■ Installation: Crankshaft gear

- Heat the crankshaft gear to approximately 150°C with a gas burner or the like.

CAUTION ⚠

- **Be careful not to get burned.**

- Align the locating pin in the crankshaft with the slot in the crankshaft gear. Drive the gear into position by lightly striking its end face with a plastic hammer.

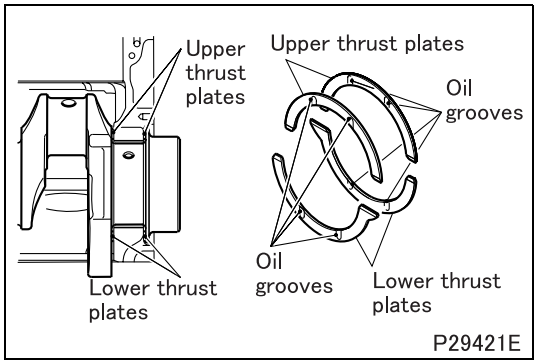

■ Installation: Thrust plate

- Install the thrust plates on both sides of the rearmost main bearings with the oil grooves on the inner plates facing inward and those on the outer plates outward as shown in the illustration.

CAUTION ⚠

- **Be sure to orient the oil grooves as indicated above, otherwise seizures may occur in the engine.**

- Use oversize thrust plates when adjusting the crankshaft end play. The upper and lower thrust plates on the same side must be of the same size. The thrust plates on one side may differ in size from those on the other side.

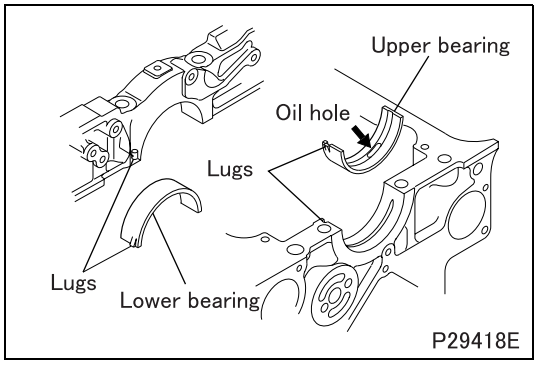

■ Installation: Main bearings

- Install the main bearings with their lugs aligned as shown in the illustration. When the crankshaft journals have been ground to an undersize, use undersize main bearings.
  Available main bearing undersizes:
  0.25 mm, 0.50 mm, 0.75 mm, 1.00 mm

CAUTION ⚠

- **The upper main bearing has an oil hole. The lower main bearing has no oil hole. Do not confuse the upper and lower bearings, as this can cause seizure in the engine.**

https://truckmanualshub.com/

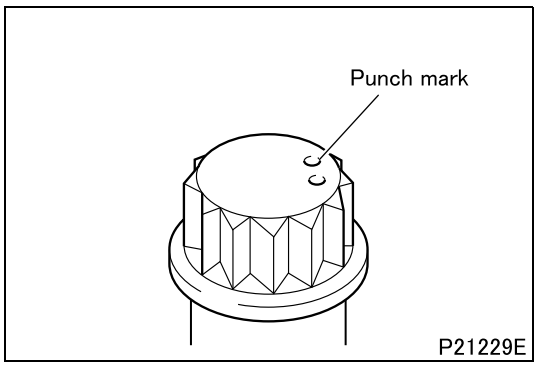

■ **Installation: Lower crankcase**

CAUTION ⚠

- **Before installing the main bearing cap bolts, check the number of punch marks on the head of each bolt. (A bolt with two or less marks is reusable.)**
- **The number of punch marks corresponds with the number of times the main cap bolt has been tightened using the torque-turn tightening method. Any bolt that has three marks (i.e. that has been used three times) must be replaced.**

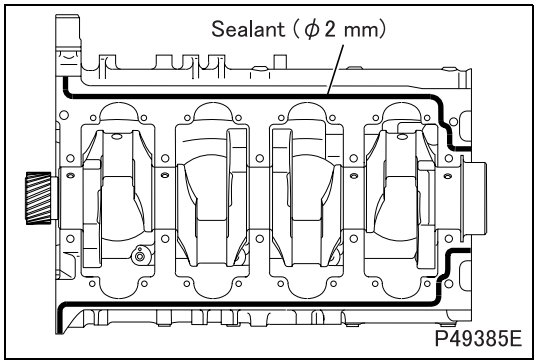

- Clean all sealant application surfaces.
- Apply evenly thick beads of sealant to the upper crankcase without any breaks as shown in the illustration.
- Install the lower crankcase within three minutes of applying the sealant, being careful not to dislodge the sealant.

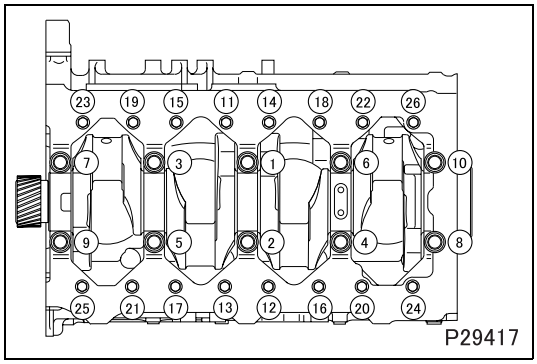

- Apply engine oil to the main cap bolt threads and seating surfaces of the bolt heads, then tighten them to a torque of 49 N·m {5.0 kgf·m} in the order indicated in the illustration (1 to 10).
- Tighten each main cap bolt further by 90° in the same order.
- Finally, tighten each bolt to the specified torque in the order indicated in the illustration (11 to 26).

CAUTION ⚠

- **After installing the bolts, wait at least an hour before starting the engine.**
- **Apply new beads of sealant whenever the main cap bolts have been loosened or removed.**

- After tightening the bolts using the above torque-turn tightening method, make a punch mark on the head of each bolt to indicate the number of times that it has been used.

CAUTION ⚠

- **The bolts that have been tightened using the torque-turn method must never be additionally tightened after the final angular tightening.**

- After installing the main bearing caps, rotate the crankshaft by hand. If it cannot be rotated smoothly, inspect the main bearing caps for correct installation.

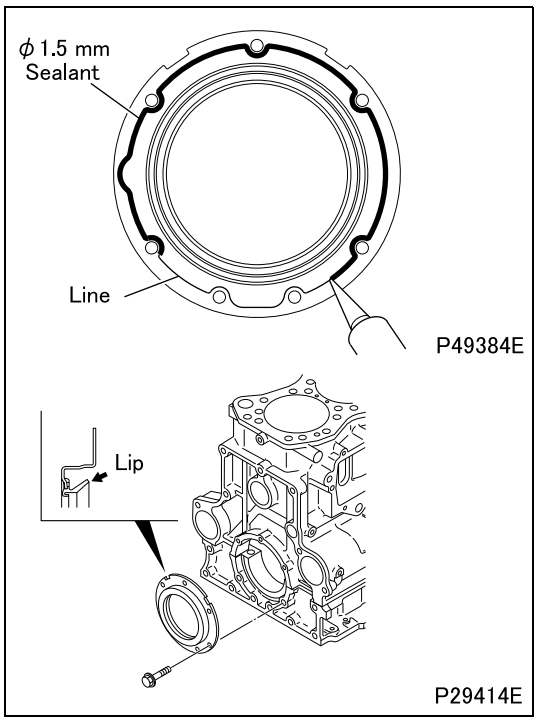

■ **Installation: Rear oil seal**

- Apply engine oil to the lip of the rear oil seal.
- Clean the seal surface of the crankshaft.
- Apply a bead of sealant along the line on the rear oil seal evenly without any breaks.
- Install the rear oil seal within three minutes after applying the sealant. Be careful not to let the applied sealant slip out of place during installation.

CAUTION ⚠

- **After fitting the rear oil seal, wait at least an hour before starting the engine.**
- **Apply a new bead of sealant whenever the mounting bolts of the rear oil seal have been loosened.**

https://truckmanualshub.com/

BALANCE SHAFT BUSHINGS

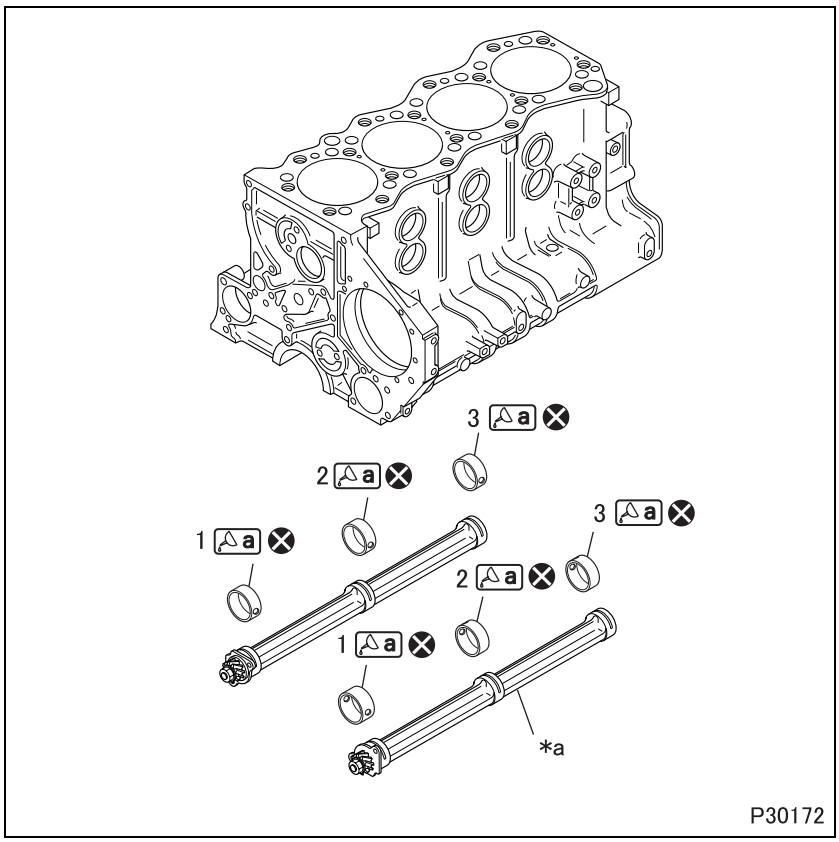

● **Disassembly sequence**

1 No. 1 balance shaft bushing
2 No. 2 balance shaft bushing
3 No. 3 balance shaft bushing

***a**: Balance shaft
⊗: Non-reusable parts

● **Assembly sequence**

Follow the disassembly sequence in reverse.

Service standards (Unit: mm)

Location	Maintenance item		Standard value	Limit	Remedy
1 to 3, *a	Balance shaft-to-balance shaft bushing clearance	No. 1	0.055 to 0.099	0.15	Replace
		No. 2	0.075 to 0.119		
		No. 3	0.055 to 0.099		

Lubricant and/or sealant

Mark	Points of application	Specified lubricant and/or sealant	Quantity
a	Balance shaft bushing inner surface	Engine oil	As required

Special tools

Mark	Tool name and shape	Part No.	Application
a	Balance shaft bushing installer and extractor 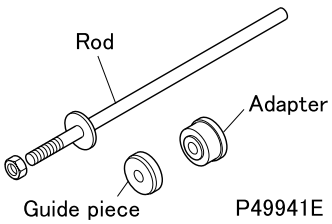	MH062782	Removal and installation of balance shaft bushing

◆Inspection procedure◆

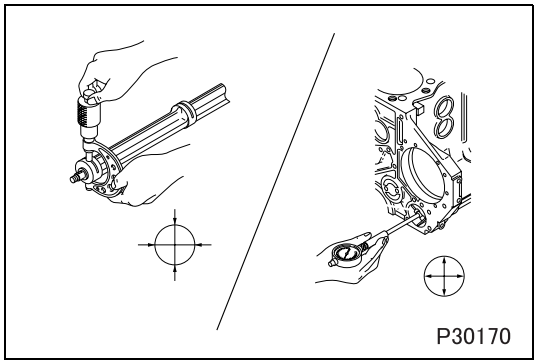

■ **Inspection: Balance shaft-to-balance shaft bushing clearance**

- Replace the bushing if the measurement exceeds the specified limit.

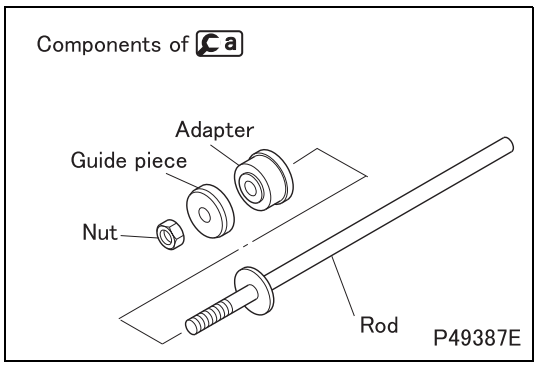

Replacement of balance shaft bushing

- Replace the bushing using ca.

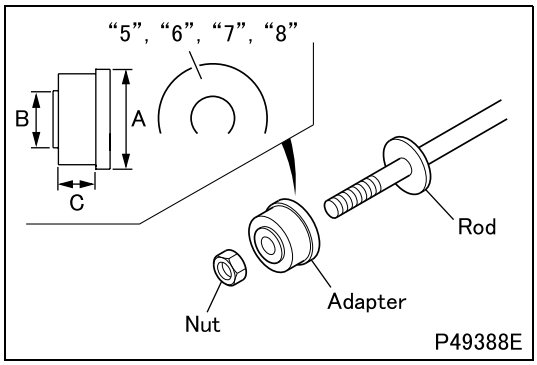

[Removal]

- To remove the bushings, use the rod fitted with an adapter corresponding to the size of each bushing.

Unit: mm

Bushing		Adapter			
		Identification mark	A	B	C
No. 1	Left	"5"	ϕ55.25	ϕ 51.5	26.5
	Right	"6"			21.5
No. 2		"7"	ϕ 55	ϕ 51	
No. 3		"8"	ϕ 54.75	ϕ 50.5	

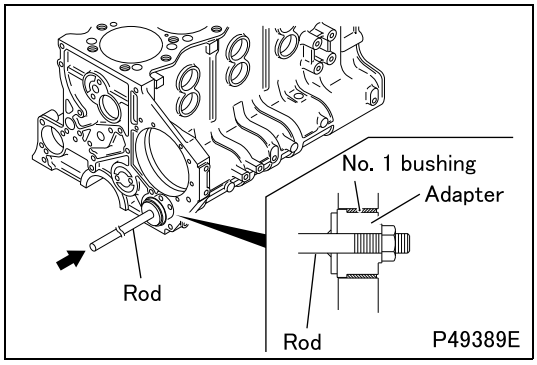

- Remove the No. 1 bushing by tapping on the rod from the front of the engine.

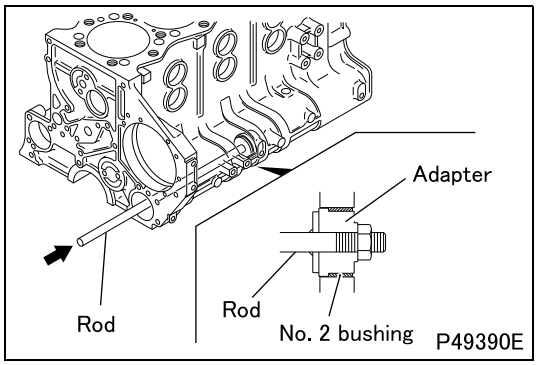

- Remove the No. 2 bushing by tapping on the rod from the front of the engine.

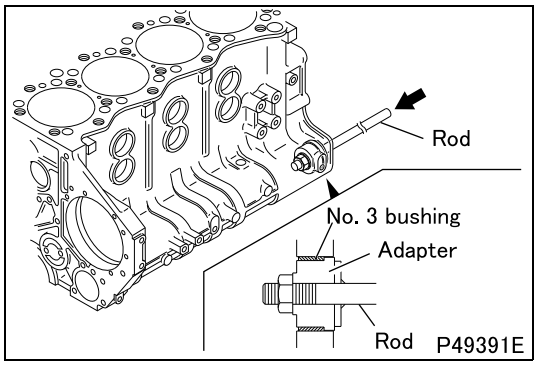

- Remove the No. 3 bushing by tapping on the rod from the back of the engine.

https://truckmanualshub.com/

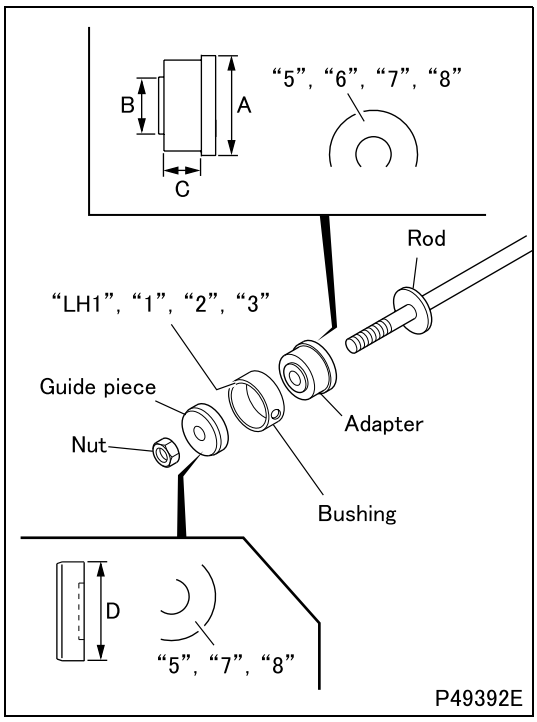

[Installation]

- To install the bushings, use the rod fitted with an adapter corresponding to the size of each bushing. Each bushing has an identification mark. These identification marks are used to distinguish between the No. 1, No. 2 and No. 3 bushings. If the identification mark is not clear, measure the outside diameter of the bushing and use the measurement as a means of identification.

Unit: mm

Bushing				Adapter				Guide piece	
		Identification mark	Outside diameter	Identification mark	A	B	C	Identification mark	D
No. 1	Left	"LH1"	ϕ 55.25	"5"	ϕ 55.25	ϕ 51.5	26.5	"5"	ϕ 55.25
	Right	"1"	ϕ 55.25	"6"			21.5	"6"	
No. 2		"2"	ϕ55	"7"	ϕ55	ϕ51		"7"	ϕ55
No. 3		"3"	ϕ 54.75	"8"	ϕ 54.75	ϕ 50.5		"8"	ϕ 54.75

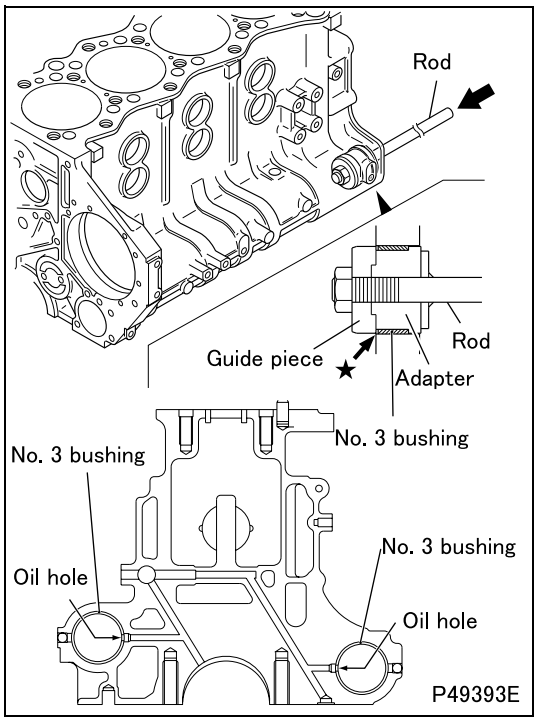

- Align the oil hole in the No. 3 bushing with the oil hole in the upper crankcase.
- Force the No. 3 bushing into the upper crankcase as deep as the ★ mark in the illustration by tapping on the rod from the rear of the engine.

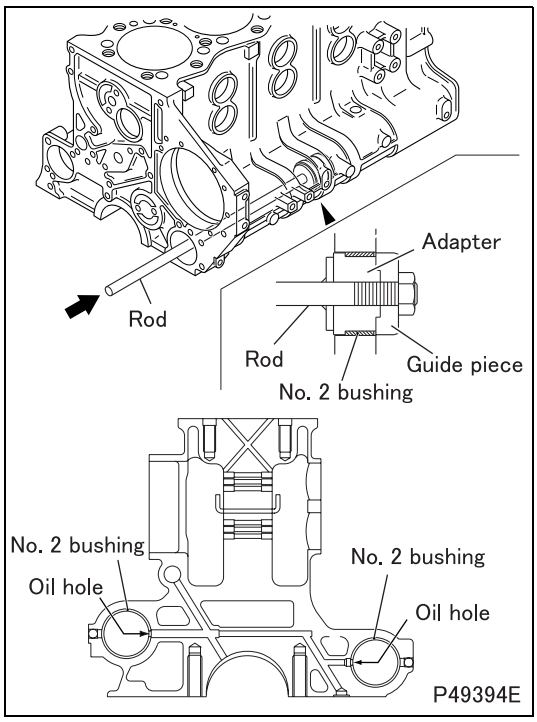

- Align the oil hole in the No. 2 bushing with the oil hole in the upper crankcase.
- Force the No. 2 bushing into the upper crankcase to the illustrated position by tapping on the rod from the front of the engine.

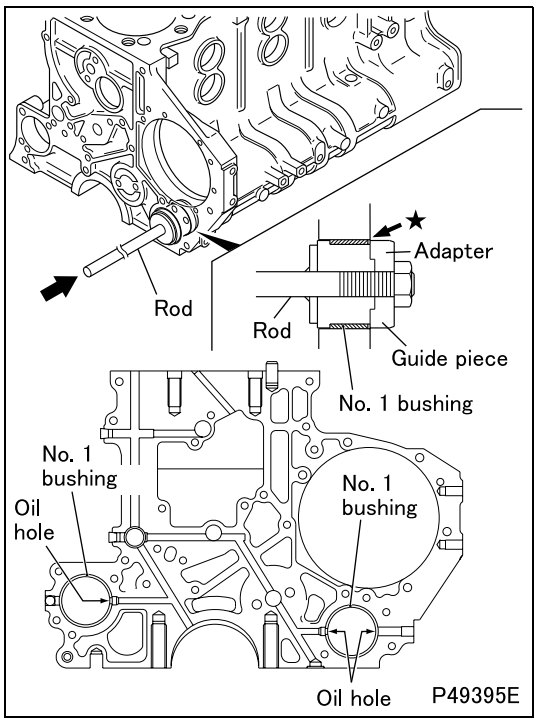

- Align the oil hole(s) in the No. 1 bushing with the oil hole(s) in the upper crankcase.
- Force the No. 1 bushing into the upper crankcase as deep as the ★ mark in the illustration by tapping on the rod from the front of the engine.

CAUTION ⚠

- **The left and right No. 1 bushings are different from each other, and should not be installed in reverse positions.**
- **The left No. 1 bushing has two oil holes, whereas the right No. 1 bushing has only one oil hole.**

https://truckmanualshub.com/

GROUP 12 LUBRICATION

SPECIFICATIONS 12-2

STRUCTURE AND OPERATION
1. Lubrication System 12-3
2. Oil Pump 12-4
3. Oil Cooler 12-5
4. Oil Filter 12-6
5. Lubrication of Engine Components 12-7

TROUBLESHOOTING 12-10

ON-VEHICLE INSPECTION AND ADJUSTMENT
1. Oil Filter Replacement 12-12
2. Engine Oil Replacement 12-14
3. Oil Pressure Measurement 12-15

OIL PAN, OIL STRAINER AND OIL JETS 12-16

OIL PUMP 12-18

OIL FILTER 12-22

OIL COOLER 12-24

https://truckmanualshub.com/

Item			Specifications
Method of lubrication			Forced lubrication by oil pump
Engine oil	Grade		API classification CD, CE, CF-4, CH-4
	Quantity dm^3{L}	Oil pan	Approx. 8 {8}
		Oil filter	Approx. 1 {1}
Oil cooler	Model		Shell and plate type (multiple-plate type)
	Bypass valve opening pressure kPa {kgf/cm^2}		390 ± 29 {4.0 ± 0.3}
Oil filter	Model		Spin-on filter paper type
	Regulator valve opening pressure kPa {kgf/cm^2}		600^{+100}_{0} {6^{+1}_{0}}

https://truckmanualshub.com/

1. Lubrication System

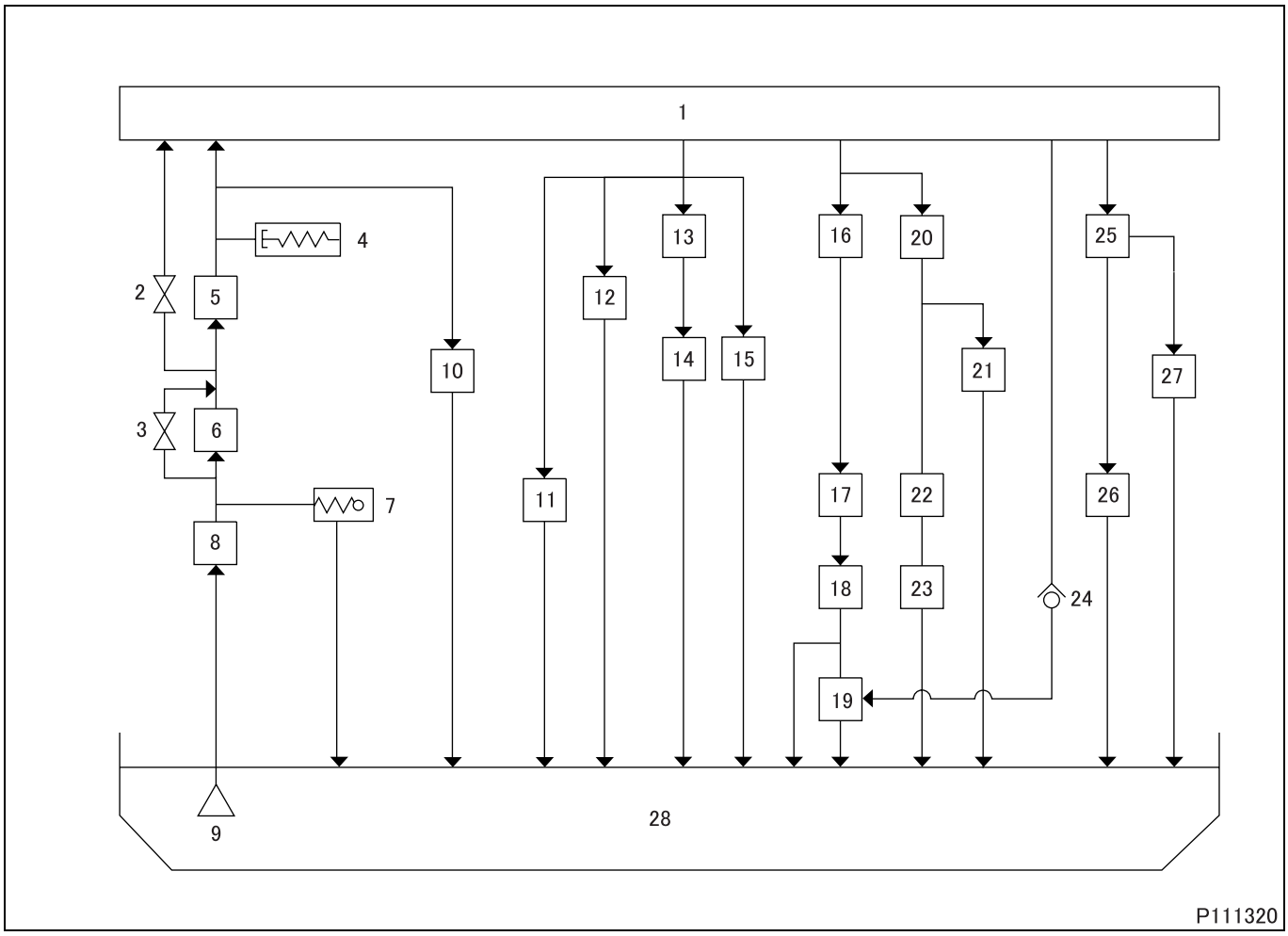

1 Main oil gallery
2 Bypass valve
3 Bypass valve
4 Engine oil pressure switch
5 Oil cooler
6 Full-flow filter element
7 Regulator valve
8 Oil pump
9 Oil strainer
10 Turbo charger
11 Oil jet for gear
12 Vacuum pump
13 Idler bushing
14 Timing gear
15 Balance shaft bushing LH
16 Crankshaft main bearing
17 Connecting rod bearing
18 Connecting rod bushing
19 Piston
20 Balance shaft bushing RH
21 Supply pump gear bushing
22 Supply pump idler gear bushing
23 Supply pump idler gear shaft
24 Check valve for oil jet
25 Rocker bushing
26 Camshaft bushing
27 Rocker roller
28 Oil pan

https://truckmanualshub.com/

2. Oil Pump

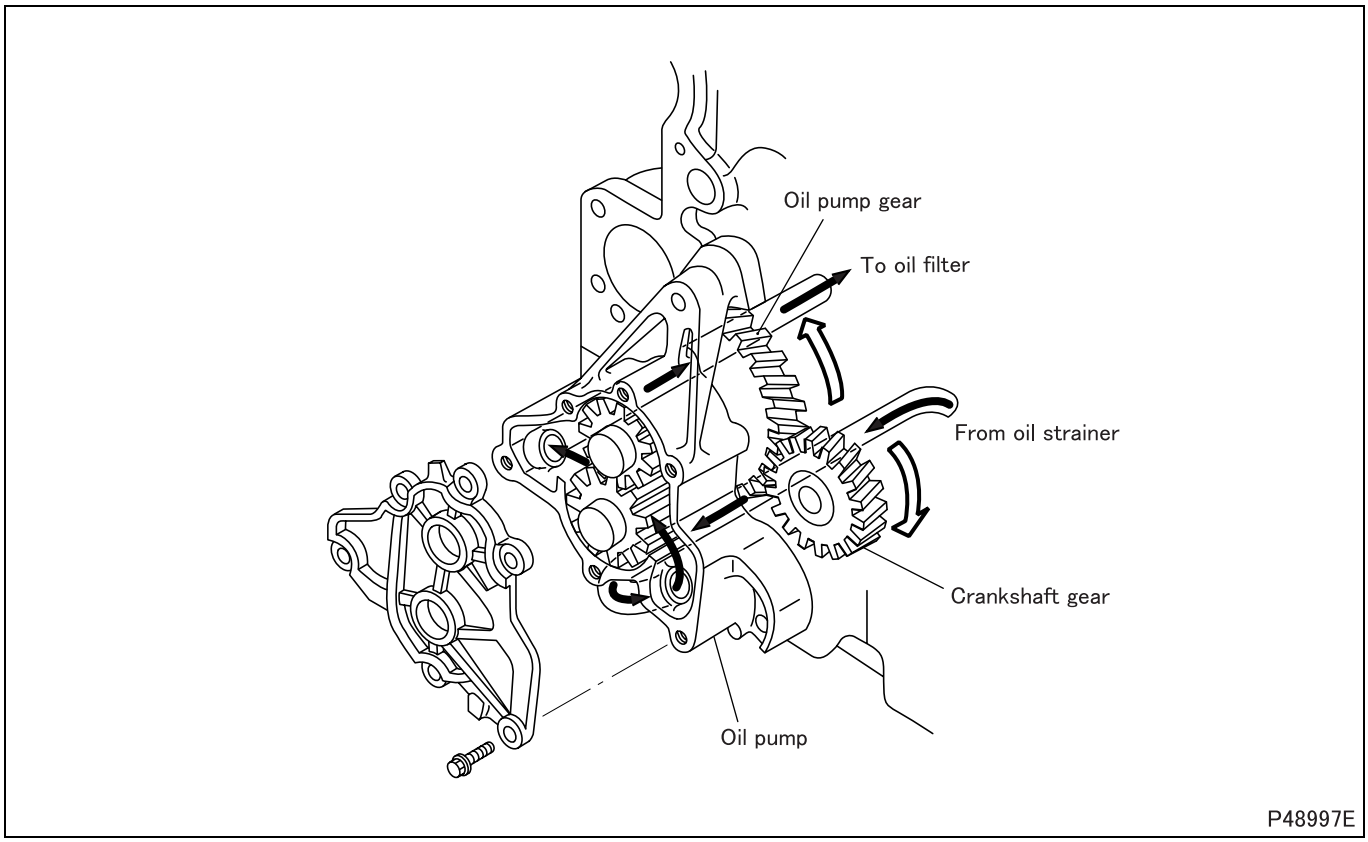

- This engine uses a gear-type oil pump driven by the rotation of the crankshaft transmitted through the engagement of the crankshaft gear and the oil pump gear.

https://truckmanualshub.com/

3. Oil Cooler

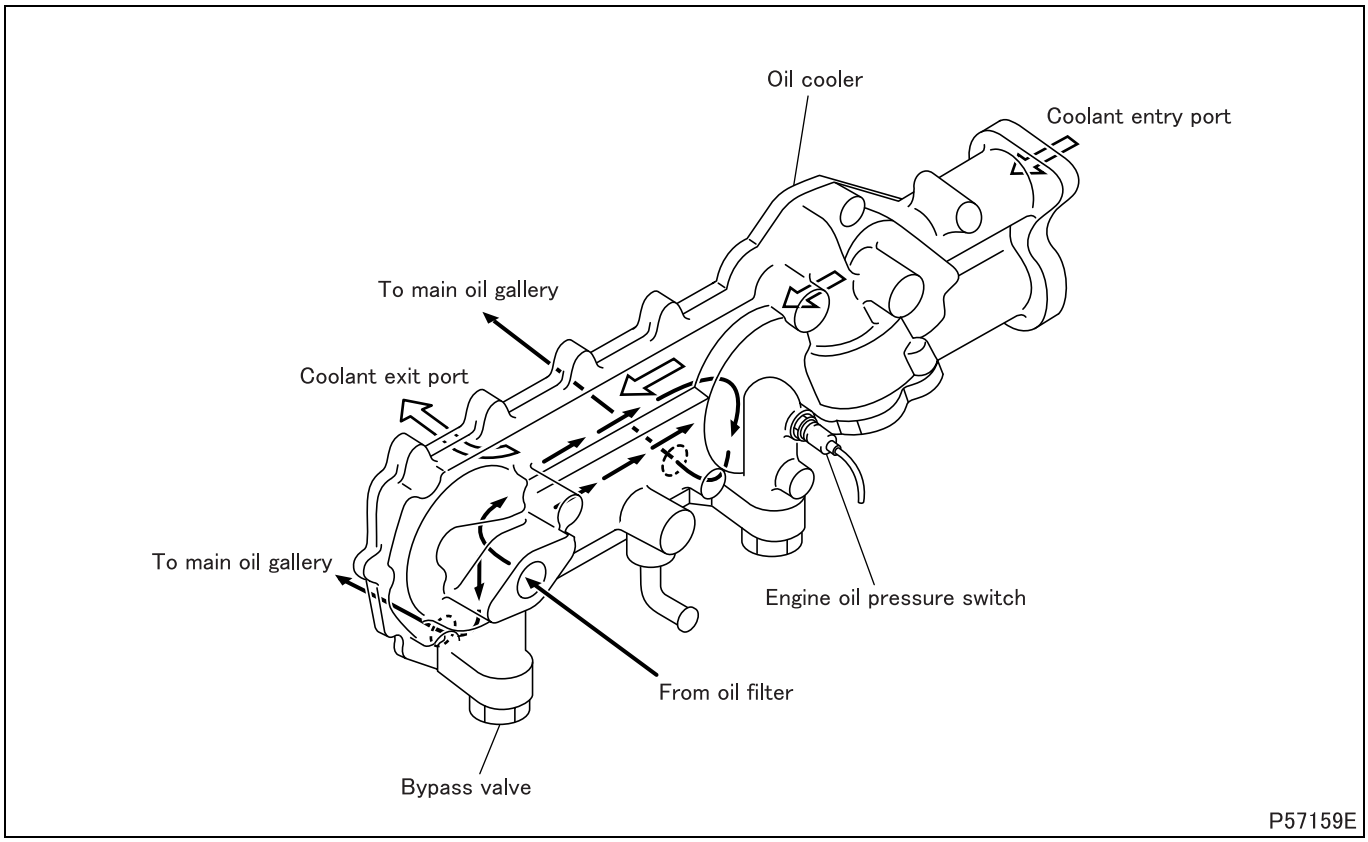

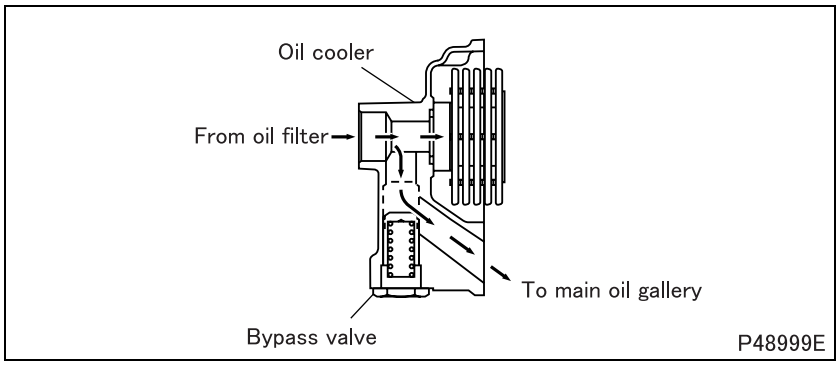

3.1 Bypass valve

- When the engine oil is cool and its viscosity is high, or when the oil cooler element becomes clogged and restricts the flow of the engine oil, the bypass valve opens to let the engine oil bypass the oil cooler and flow directly to the main oil gallery.

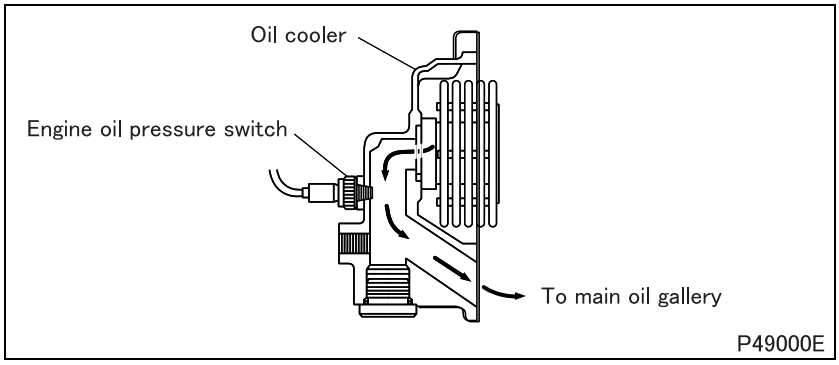

3.2 Engine oil pressure switch

- When the pressure of the engine oil to the main oil gallery drops below the specified level, an electrical contact inside the engine oil pressure switch closes.
- This causes a warning lamp on the meter cluster to illuminate and notify the operator of the excessive pressure drop.

https://truckmanualshub.com/

4. Oil Filter

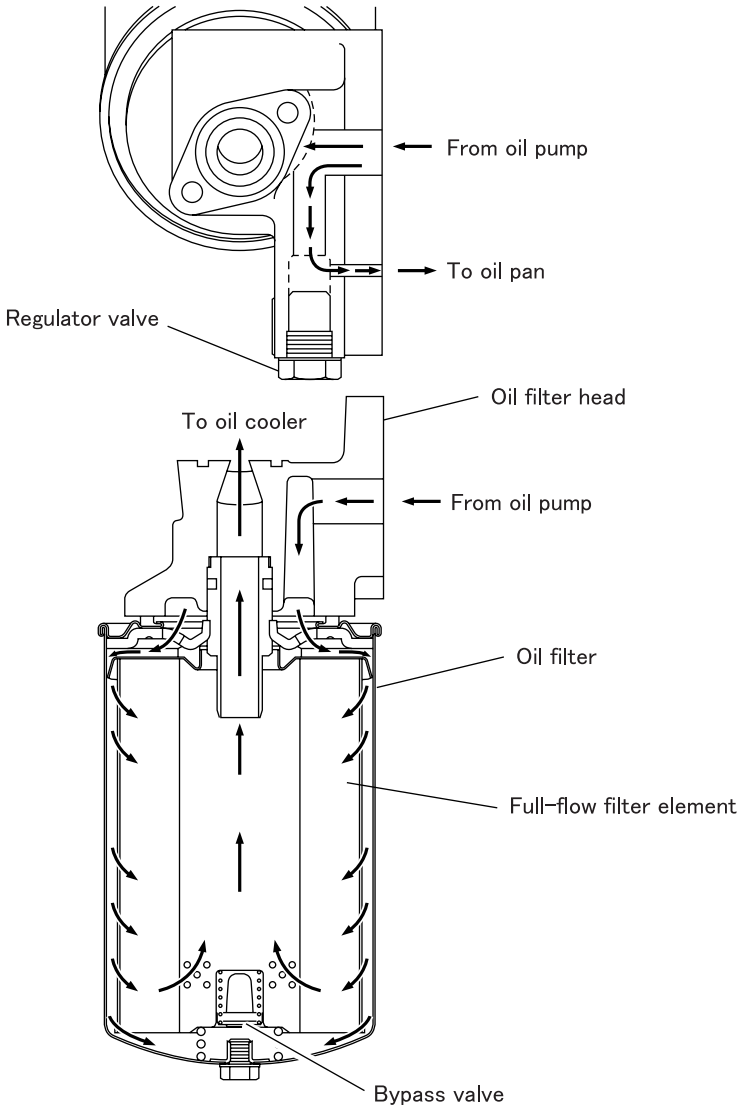

- The oil filter used in this engine is a spin-on, paper-filter type.
- A bypass valve is installed in the lower part of the oil filter. When the filter elements are clogged, this valve opens to let the engine oil bypass the filter elements and flow directly to the oil cooler, thereby preventing seizures in the engine.
- A regulator valve is installed on the oil filter head. When the oil pressure in the main oil gallery exceeds the specified level, the regulator valve opens to adjust the oil pressure by returning part of the engine oil to the oil pan.

5. Lubrication of Engine Components

- The engine oil in the main oil gallery lubricates the engine components in the following ways.

5.1 Main bearing and connecting rod bearing

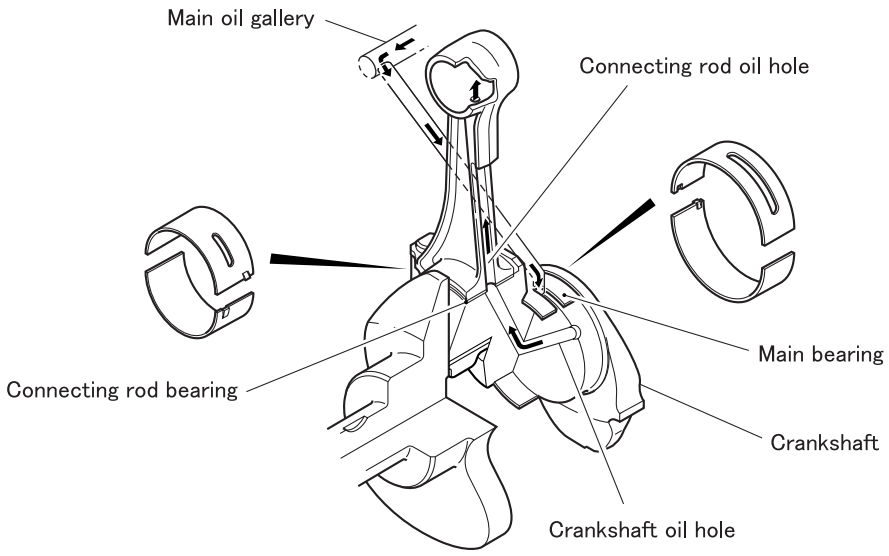

- Engine oil supplied through an oil passage in the crankshaft lubricates the big end (connecting rod bearing) of each connecting rod. Simultaneously, engine oil supplied through an oil passage in the connecting rod lubricates the connecting rod's small end.

5.2 Timing gears

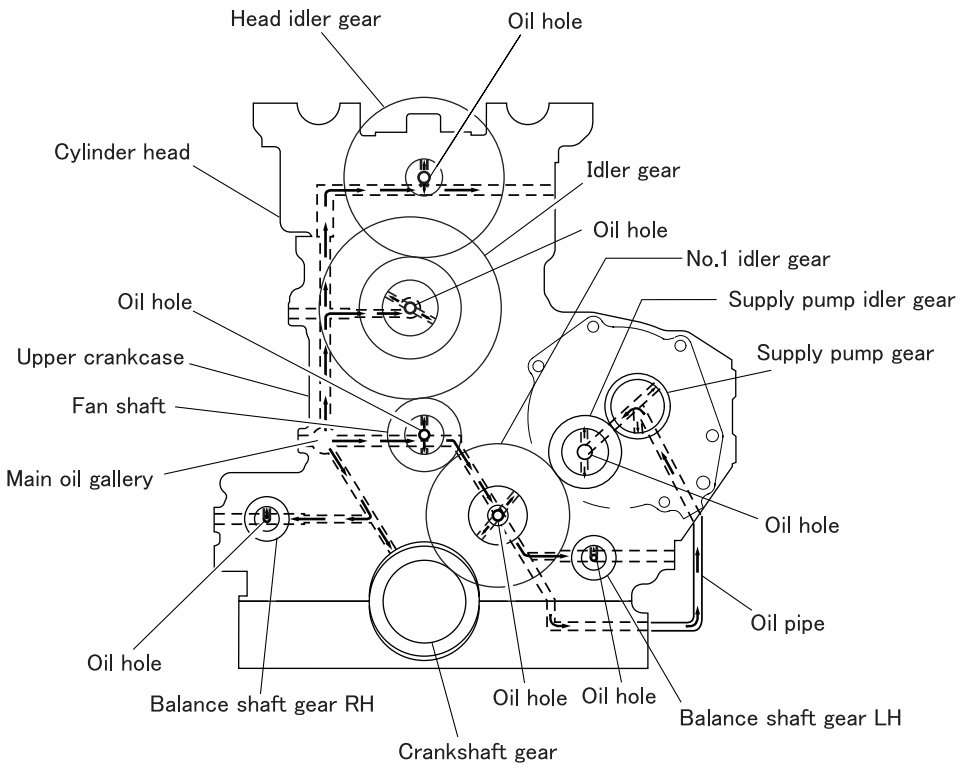

https://truckmanualshub.com/

5.3 Valve mechanism

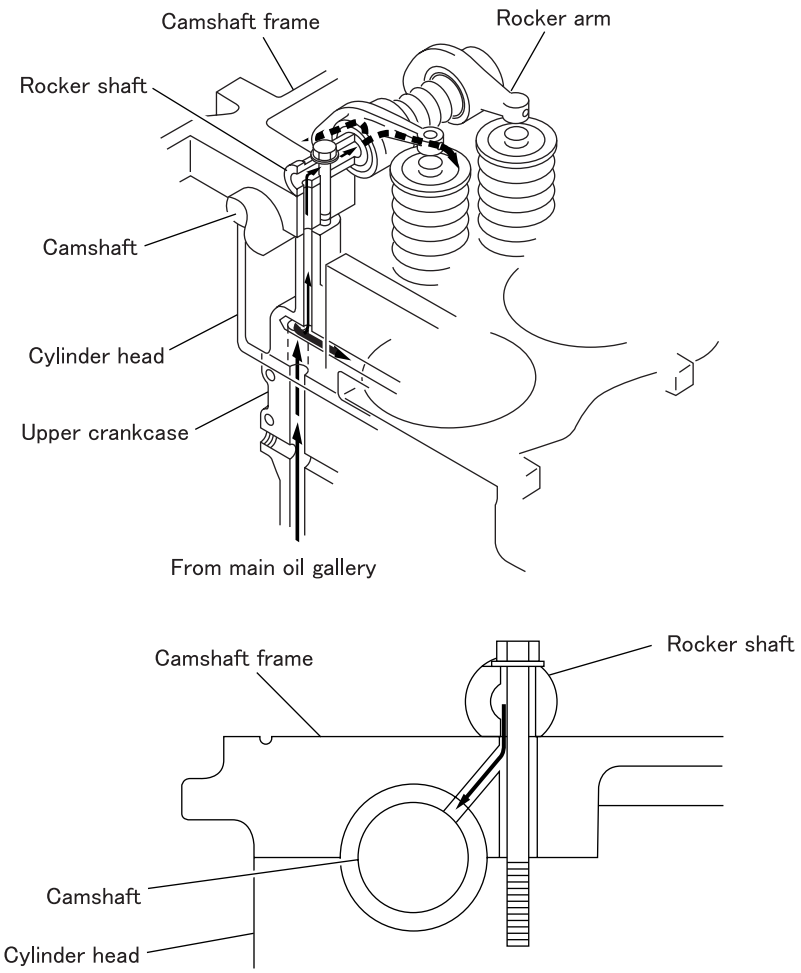

P49003E

- The engine oil flows from the main oil gallery to the rocker shaft through the oil passages in the upper crankcase, cylinder head, and camshaft frame.
- The engine oil in the rocker shaft lubricates the rocker arms and camshaft, then returns to the oil pan.

5.4 Check valves and oil jets

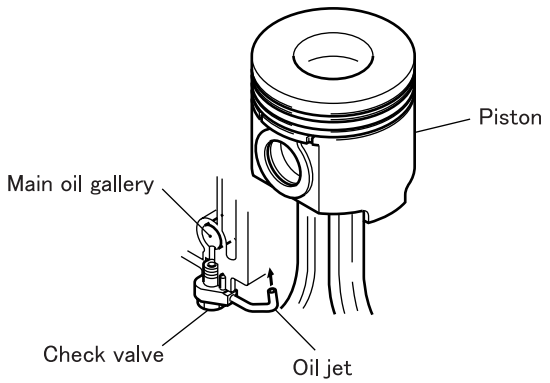

P56457E

- An oil jet is fitted in the lower part of the main oil gallery for each cylinder.
- Engine oil is sprayed out of the oil jet into the piston to cool the piston.
- Each oil jet is fitted with a check valve that opens and closes at predetermined oil pressure levels. At low engine speeds, the check valve closes to maintain the required volume of oil in the lubrication system and prevent reductions in oil pressure.

https://truckmanualshub.com/

5.5 Vacuum pump

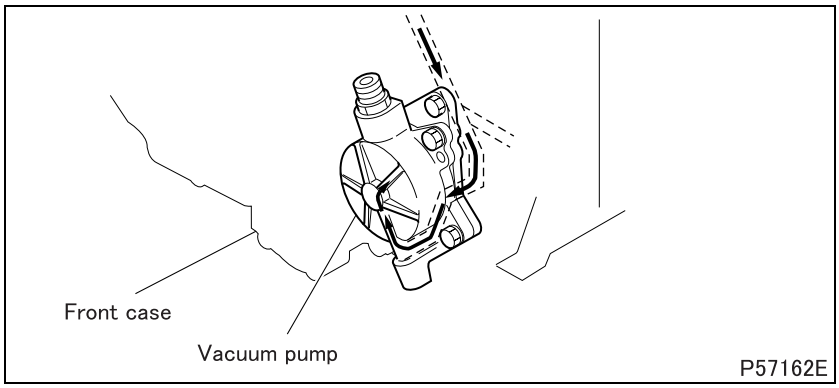

- Engine oil flows through the oil passages in the front case to the vacuum pump.
- The oil in the pump lubricates the vanes, and then is discharged into the front case from the air discharge port of the vacuum pump along with air, and returns to the oil pan.

5.6 Turbocharger

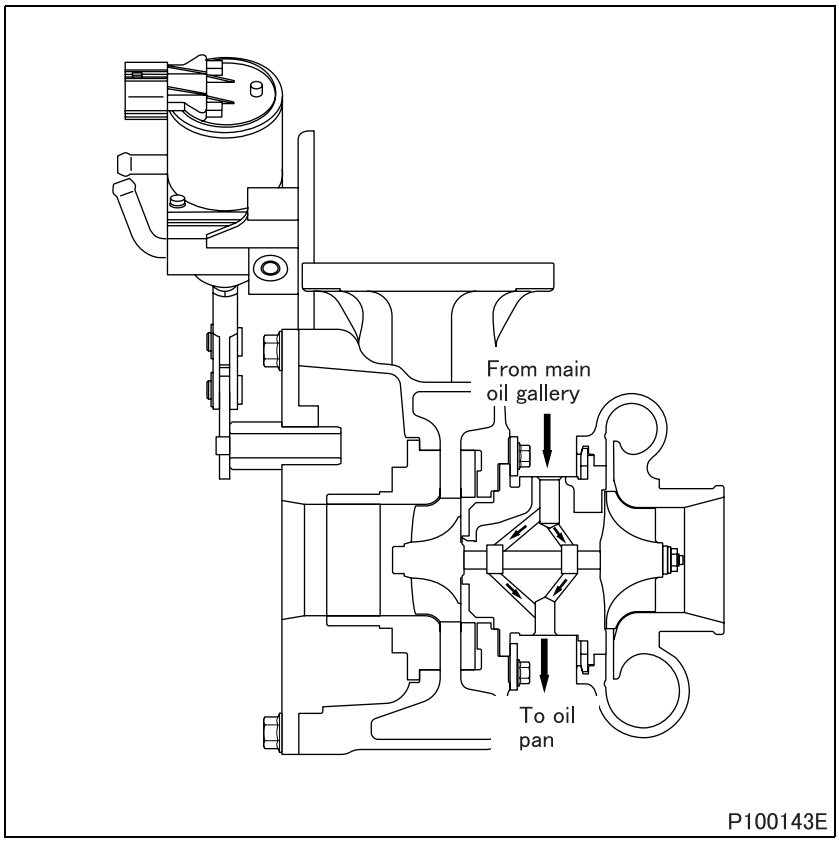

- Engine oil is fed to the bearing housing from the main oil gallery through the oil pipe to lubricate the inside of the turbocharger.
- The piston rings, which are installed on both sides of the turbine wheel shaft, serve as oil seals.

https://truckmanualshub.com/

Possible causes \ Symptoms		Engine is difficult to start	Overheating	Low oil pressure	Excessive oil consumption (oil leakage)	Reference Gr
Oil cooler	Incorrectly mounted element		O	O	O	
	Defective gasket		O	O	O	
	Defective O-ring		O	O	O	
	Clogged element		O	O		
	Damaged element		O	O	O	
	Weakened bypass valve spring		O			
Oil pump	Malfunctioning oil pump		O	O		
	Interference between oil pump gear and oil pump case and/or cover	O		O		
Oil filter	Incorrect installation				O	
	Clogged element		O	O		
	Defective gasket			O		
Weakened regulator valve spring				O		
Incorrectly mounted and/or clogged oil strainer			O	O		
Defective fan shaft front oil seal					O	Gr11
Defective crankshaft rear oil seal					O	
Incorrectly mounted front case					O	
Defective piston cooling oil jet(s)			O	O		
Incorrectly mounted gear lubrication oil jet				O		
Oil working its way up into combustion chamber(s) through piston rings					O	
Oil working its way down into combustion chamber(s) through valves					O	
Too high oil viscosity		O				
Poor oil quality			O			
Deterioration of oil			O			
Excess of oil					O	
Fuel mixed with oil			O			

https://truckmanualshub.com/

M E M O

https://truckmanualshub.com/

1. Oil Filter Replacement

Tightening torque (Unit: N·m {kgf·m})

Mark	Parts to be tightened	Tightening torque	Remarks
–	Drain plug	9.8 ± 1.96 {1.0 ± 0.2}	–

Lubricant and/or sealant

Mark	Points of application	Specified lubricant and/or sealant	Quantity
–	Oil filter	Engine oil (API classification CD, CE, CF-4, CH-4)	Approx. 1 dm^3 {1 L}
–	Oil filter gasket	Engine oil	As required

Special tools

Mark	Tool name and shape	Part No.	Application
a	Oil filter element socket 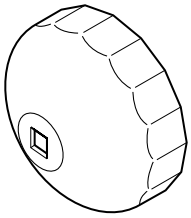 P08550	MH061566	Removal of oil filter

WARNING ⚠

- **Wipe up any spilled engine oil, as it can cause fires.**
- **To avoid any risk of burns, take care not to touch the engine oil when the engine is hot.**

CAUTION ⚠

- **Make sure not to put any engine oil on the Belt when working on the oil filter. Belts soiled with oil or grease may easily slip, resulting in deteriorated performance of the cooling system.**

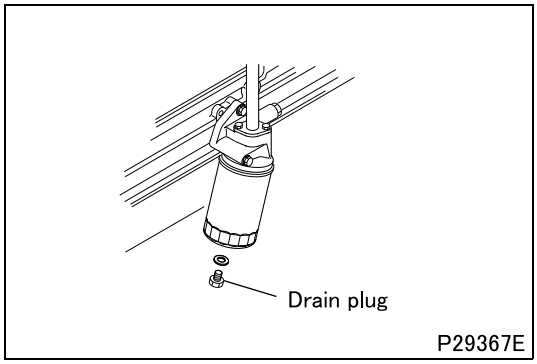

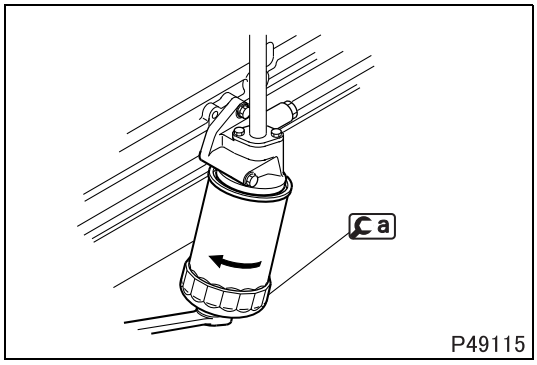

[Removal]

- Remove the drain plug and drain the oil out of the oil filter.

https://truckmanualshub.com/

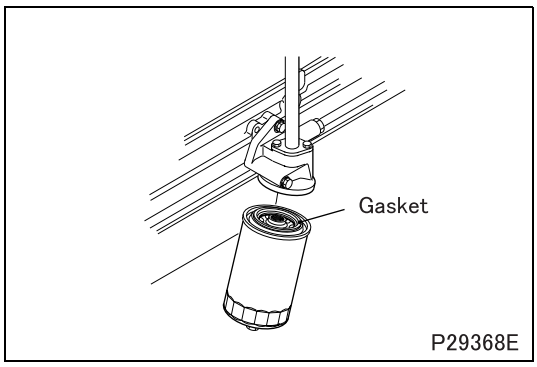

[Installation]

- Clean the oil filter mounting surfaces of the oil filter head.
- Apply a thin coat of engine oil on the oil filter gasket.
- Screw in the oil filter by hand until the gasket touches the oil filter head. Then, tighten the filter by turning it further by three quarters (3/4) of a turn.
- After installing the oil filter, start the engine and check that there are no oil leaks.
- Remove and reinstall the oil filter if it is leaky.
- Add a specified amount of engine oil.
- Run the engine for 1 minute or longer to fill the oil filter with the engine oil.
- Stop the engine and check the engine oil level. (See later section.)

https://truckmanualshub.com/

2. Engine Oil Replacement

Tightening torque (Unit: N·m {kgf·m})

Mark	Parts to be tightened	Tightening torque	Remarks
–	Drain plug (oil filter)	9.8 ± 1.96 {1.0 ± 0.2}	–
–	Drain plug (oil pan)	34.3 to 43.1 {3.5 to 4.4}	–

Lubricant and/or sealant

Mark	Points of application	Specified lubricant and/or sealant	Quantity
–	Oil filter	Engine oil (API classification CD, CE, CF-4, CH-4)	Approx. 1 dm^3 {1 L}
	Oil pan		Approx. 8 dm^3 {8 L}

WARNING ⚠

- **Wipe up any spilled engine oil, as it can cause fires.**
- **To avoid any risk of burns, take care not to touch the engine oil when the engine is hot.**

CAUTION ⚠

- **Make sure not to put any engine oil on the Belt during engine oil replacement. Belts soiled with oil or grease may easily slip, resulting in deteriorated performance of the cooling system.**

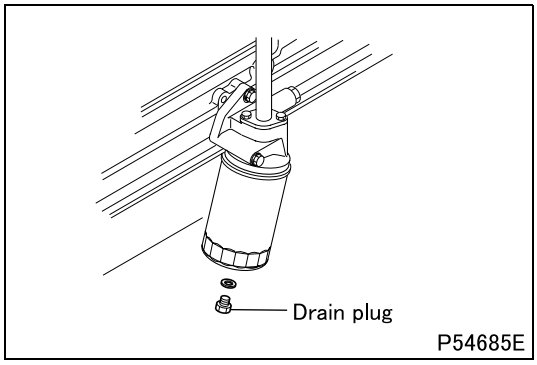

[Draining]

- Before draining out the engine oil, warm up the engine until the water temperature gauge pointer begins to move.
- Remove the filler cap.
- Remove the drain plugs of the oil filter and oil pan to drain out the engine oil, for 5 minutes or longer.

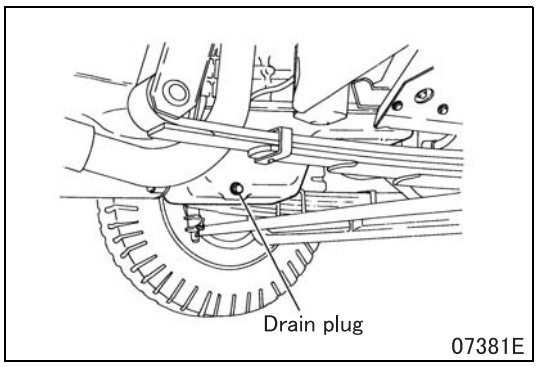

[Refilling]

- Tighten the drain plug to the specified torque, then pour a specified amount of new engine oil into the engine.
- Run the engine for 1 minute or longer to fill the oil filter with the engine oil.
- Stop the engine and check the oil level.

CAUTION ⚠

- **If the specified quantity is exceeded as a result of addition of oil, increased oil consumption and/or deteriorated crankcase emission control system function may result.**

3. Oil Pressure Measurement

Service standards

Location	Maintenance item		Standard value	Limit	Remedy
–	Oil pressure (oil temperature at 70 to 90°C)	No-load minimum speed	195 kPa {2.0 kgf/cm^2}	98 kPa {1.0 kgf/cm^2}	Inspect
		No-load maximum speed	295 to 490 kPa {3 to 5 kgf/cm^2}	195 kPa {2.0 kgf/cm^2}	

Tightening torque (Unit: N·m {kgf·m})

Mark	Parts to be tightened	Tightening torque	Remarks
–	Engine oil pressure switch	12 {1.2}	• Sealant • With cold engine

Lubricant and/or sealant

Mark	Points of application	Specified lubricant and/or sealant	Quantity
–	Engine oil pressure switch threads	ThreeBond 1215	As required

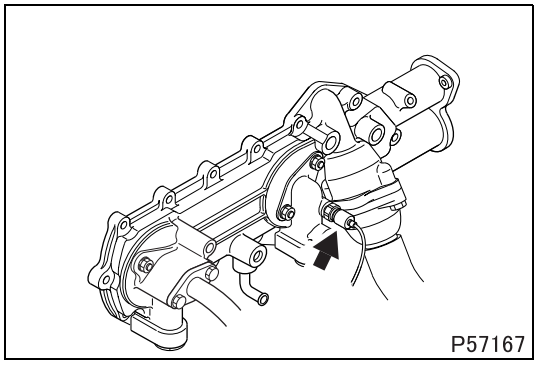

- Remove the engine oil pressure switch.

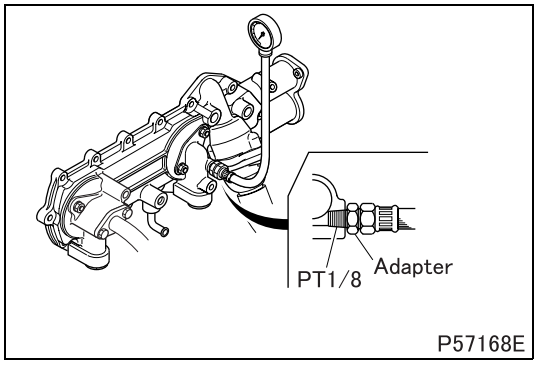

- Using an adapter, connect an oil pressure gauge to the engine oil pressure switch mounting hole.
- Warm up the engine until the oil temperature reaches 70 to 90°C.
- Measure the oil pressure while running the engine at a minimum speed and then at maximum speed, both under no load.
- If the measurements are below the specified limits, overhaul the lubrication system.
- After taking the measurements, install the engine oil pressure switch using the following procedure:
  - Cool the engine adequately so that the engine oil pressure switch can be tightened with an accurate tightening torque.
  - Apply sealant to the threaded portion of the engine oil pressure switch.
  - Tighten the engine oil pressure switch to the specified torque.

https://truckmanualshub.com/

OIL PAN, OIL STRAINER AND OIL JETS

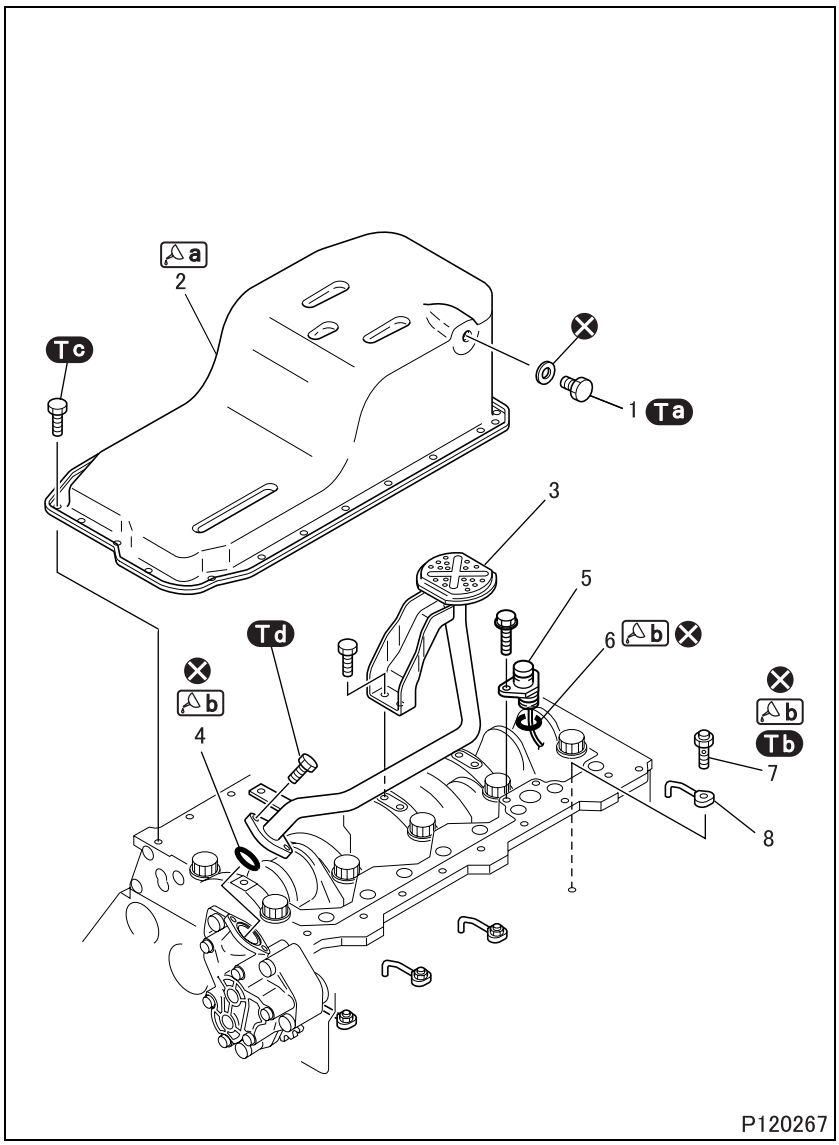

● **Disassembly sequence**

1 Drain plug
2 Oil pan
3 Oil strainer
4 O-ring
5 Oil level sensor
6 O-ring
7 Check valve
8 Oil jet

⊗: Non-reusable parts

● **Assembly sequence**

Follow the disassembly sequence in reverse.

CAUTION ⚠

- **Make sure to tighten the check valve only to the specified torque. Overtightening it can cause defective operation, resulting in engine seizure.**

Tightening torque (Unit: N·m {kgf·m})

Mark	Parts to be tightened	Tightening torque	Remarks
Ta	Drain plug	34.3 to 43.1 {3.5 to 4.4}	–
Tb	Check valve	29.4 {3.0}	Wet
Tc	Bolt (oil pan mounting)	23.5 {2.4}	–
Td	Bolt (oil strainer mounting)	24 {2.5}	–

Lubricant and/or sealant

Mark	Points of application	Specified lubricant and/or sealant	Quantity
a	Crankcase mounting surface of oil pan	ThreeBond 1217H	As required
b	O-ring	Engine oil	As required
	Check valve threads		

◆Installation procedure◆

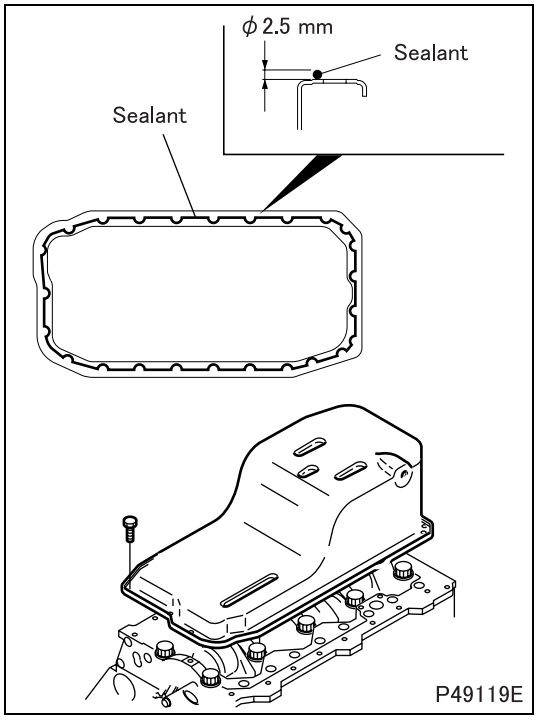

■ Installation: Oil pan

- Clean the mating surfaces of each part.
- Apply a bead of sealant to the mating surface of the oil pan evenly and without any breaks as shown in the illustration.
- Mount the oil pan within three minutes of applying the sealant. Make sure that the sealant stays in place.

CAUTION ⚠

- **Do not start the engine less than an hour after installation.**
- **If the oil pan mounting bolts were loosened or removed, be sure to reapply sealant.**

https://truckmanualshub.com/

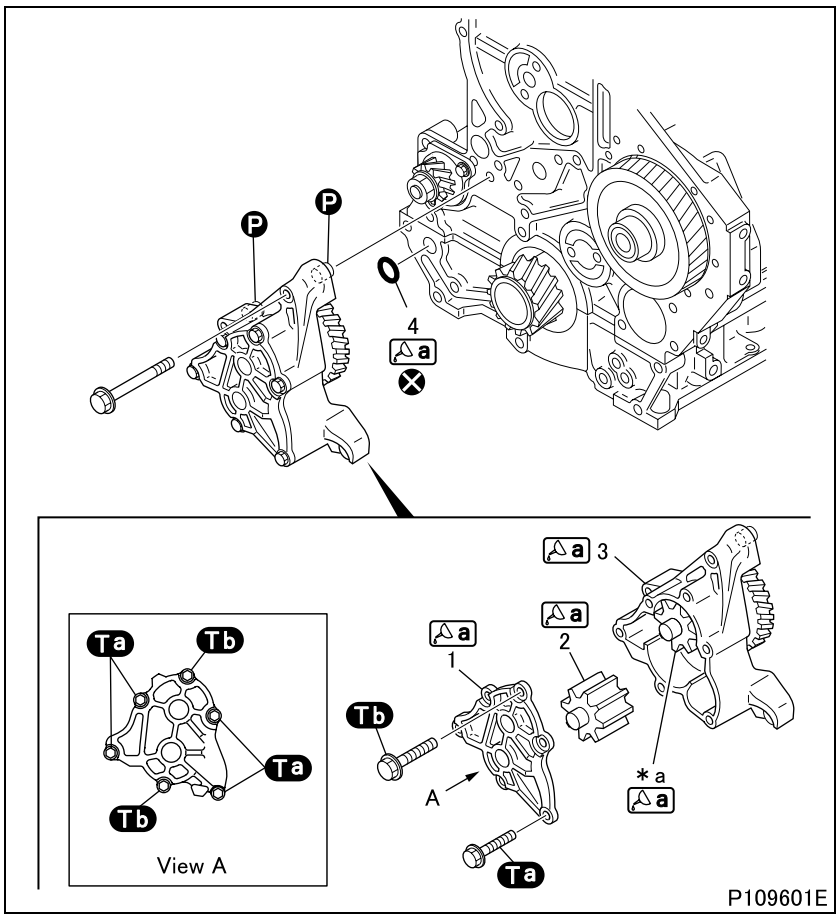

● **Disassembly sequence**

1 Oil pump cover
2 Driven gear
3 Gear and case
4 O-ring

***a**: Drive gear
Ⓟ: Locating pin
⊗: Non-reusable parts

● **Assembly sequence**

Follow the disassembly procedure in reverse.

Service standards (Unit: mm)

Location	Maintenance item	Standard value	Limit	Remedy
1, 2	Oil pump cover-to-driven gear shaft clearance	0.04 to 0.075	0.15	Replace
1, *a	Oil pump cover-to-drive gear shaft clearance	0.04 to 0.075	0.15	Replace
2, 3	Gear and case-to-driven gear shaft clearance	0.04 to 0.075	0.15	Replace
2, 3, *a	Sinkage of each gear from gear and case end surface	0.05 to 0.11	0.15	Replace
	Gear and case-to-tooth tip clearance for each gear	0.13 to 0.22	0.23	Replace

Tightening torque (Unit: N·m {kgf·m})

Mark	Parts to be tightened	Tightening torque	Remarks
Ta	Bolt (oil pump cover mounting)	8.2 ± 2.46 {0.8 ± 0.25}	–
Tb	Bolt (oil pump cover mounting)	9.8 ± 2 {1.0 ± 0.2}	–

Lubricant and/or sealant

Mark	Points of application	Specified lubricant and/or sealant	Quantity
a	Sliding parts of oil pump	Engine oil	As required
	O-ring		

Special tools (Unit: mm)

Mark	Tool name and shape	Part No.	Application
a	Pump cover pin A: $\phi 7^{0}_{-0.14}$, B: 20 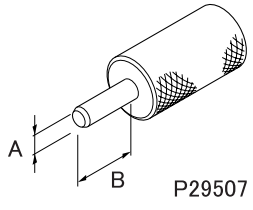 	MH063431	Installation of oil pump cover

◆Inspection procedure◆

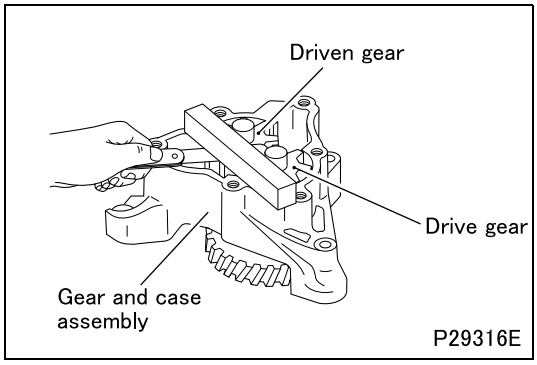

■ **Inspection: Driven gear, drive gear and gear and case**

- Carry out the following inspection. Replace the oil pump if any defects are found.

(1) Sinkage of each gear from gear and case end surface

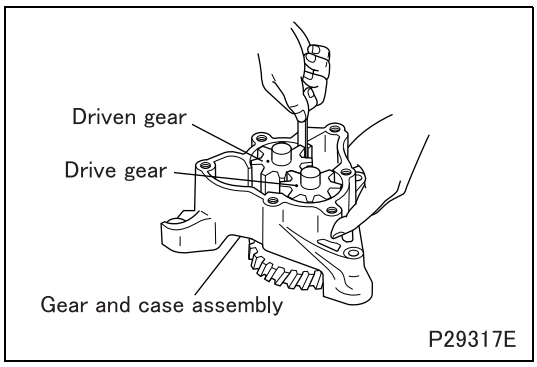

(2) Gear and case-to-tooth tip clearance for each gear

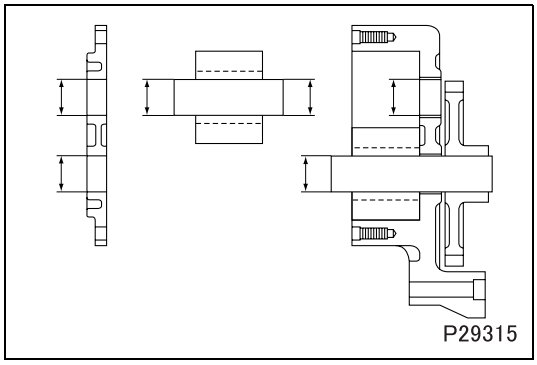

■ **Inspection: Oil pump cover, driven gear, drive gear and gear and case**

- Measure the clearance between each gear's shaft and the oil pump cover, as well as between each gear's shaft and the gear and case.
- If the measurements are not within the standard value range, replace the oil pump.

◆Installation procedure◆

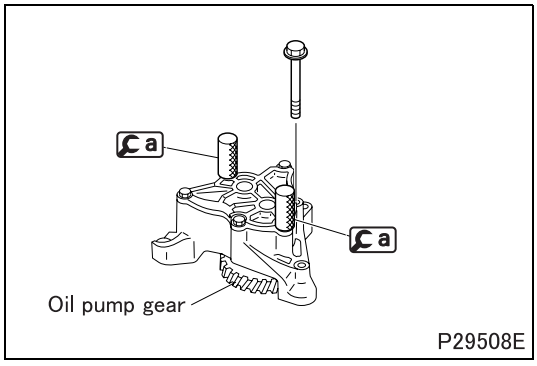

■ **Installation: Oil pump cover and gear and case**

- Apply engine oil to each component.
- Hold the oil pump cover in place on the gear and case by fitting two a s in the illustrated locations.
- Install a bolt into an empty bolt hole and tighten it to the specified torque.
- Remove the two a s. Install the rest of the bolts and tighten them to the specified torque.
- After installing all the bolts, turn the oil pump gear by hand and check that it rotates smoothly.
- Disassemble and reassemble the oil pump cover and gear and case if the oil pump gear does not rotate smoothly.

https://truckmanualshub.com/

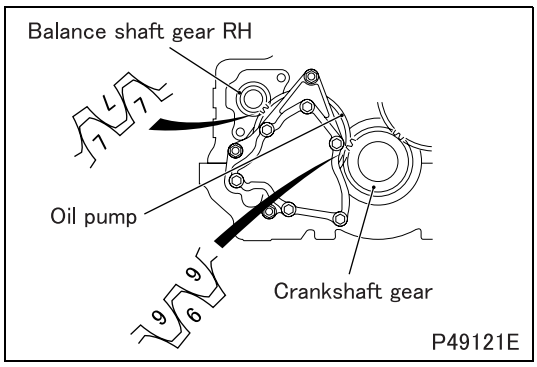

■ **Installation: Oil pump**

- Place the No.1 cylinder piston at top dead center to bring the crankshaft gear to an appropriate position.
- Inject approximately 5 cm^3 {5 mL} of engine oil.
- Align the mating mark "**6**" on the crankshaft gear and the mating mark "**7**" on the balance shaft gear RH with the corresponding mating marks on the oil pump gear, and then install the oil pump gear.

https://truckmanualshub.com/

M E M O

OIL FILTER

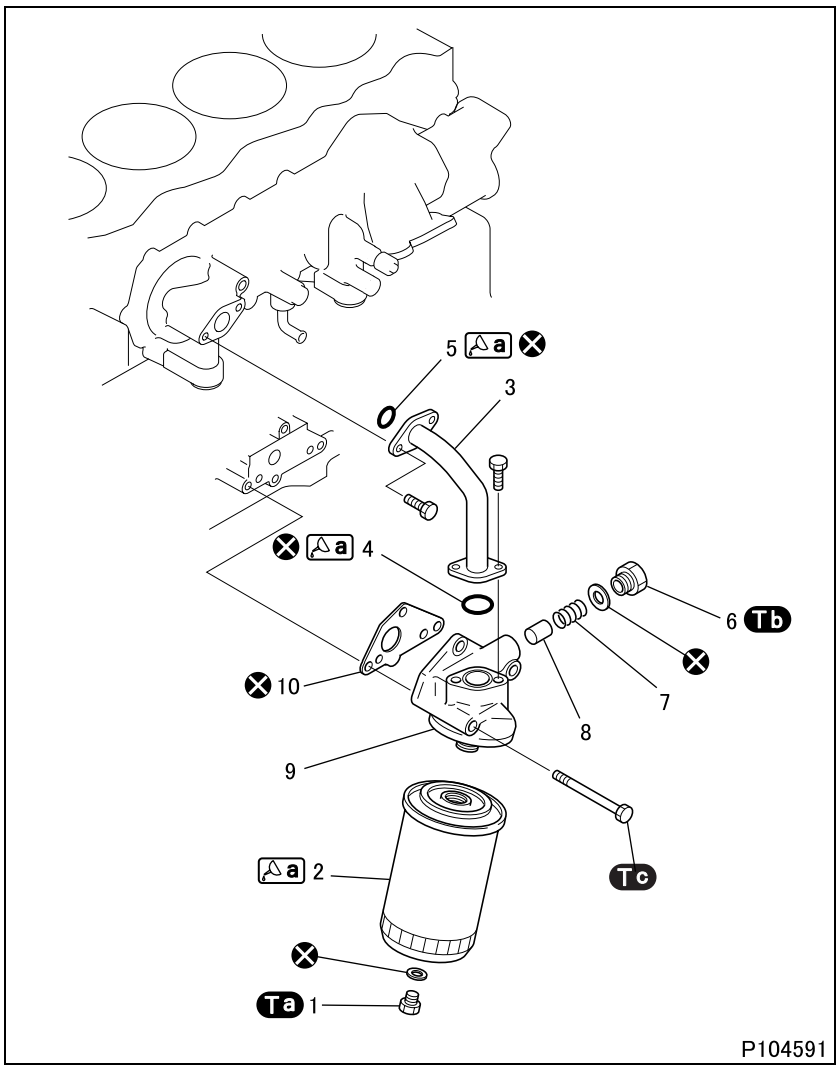

● **Disassembly sequence**

1 Drain plug
2 Oil filter
3 Oil pipe
4 O-ring
5 O-ring
6 Plug
7 Regulator valve spring
8 Regulator valve
9 Oil filter head
10 Gasket

⊗: Non-reusable parts

● **Assembly sequence**

Follow the disassembly sequence in reverse.

WARNING ⚠

- **Wipe up any spilled engine oil, as it can cause fires.**
- **To avoid any risk of burns, take care not to touch the engine oil when the engine is hot.**

CAUTION ⚠

- **Make sure not to put any engine oil on the Belt when working on the oil cooler and oil filter. Belts soiled with oil or grease may easily slip, resulting in deteriorated performance of the cooling system.**
- **Make sure to install the gasket in the correct position so that it does not cover up the oil hole.**

Service standards (Unit: mm)

Location	Maintenance item	Standard value	Limit	Remedy
7	Load of installed regulator valve spring (installed length: $39^{+0.3}_{0}$)	93.5 ± 0.5 N {9.5 ± 0.05 kgf}	–	Replace

Tightening torque (Unit: N·m {kgf·m})

Mark	Parts to be tightened	Tightening torque	Remarks
Ta	Drain plug	9.8 ± 1.96 {1.0 ± 0.2}	–
Tb	Plug (regulator valve mounting)	60 {6.0}	–
Tc	Bolt (oil filter head mounting)	44.1 {4.5}	–

Lubricant and/or sealant

Mark	Points of application	Specified lubricant and/or sealant	Quantity
a	Oil filter gasket	Engine oil	As required
	O-ring		

Special tools

Mark	Tool name and shape	Part No.	Application
a	Oil filter element socket 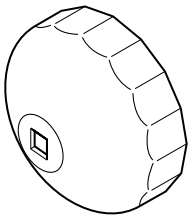 P08550	MH061566	Removal of oil filter

◆Removal procedure◆

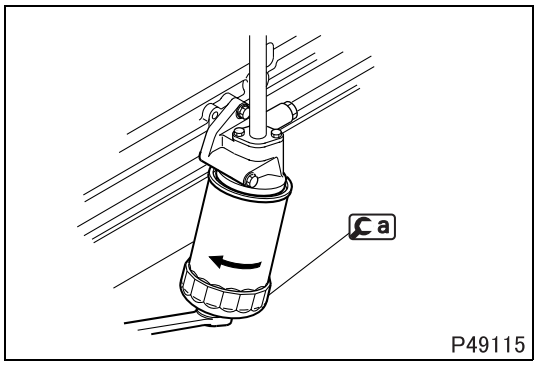

■ **Removal: Oil filter**

◆Installation procedure◆

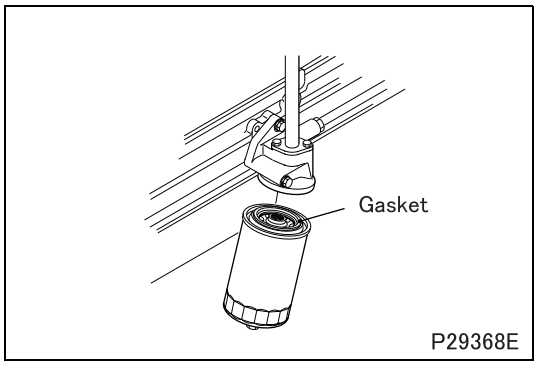

■ **Installation: Oil filter**

- Clean the oil filter mounting surface of the oil filter head.
- Apply a thin coat of engine oil on the oil filter gasket.
- Screw in the oil filter by hand until the gasket touches the oil filter head. Then, tighten the filter by turning it further by three quarters (3/4) of a turn.
- After installing the oil filter, start the engine and check that there are no oil leaks from the gasket.
- Remove and reinstall the oil filter if it is leaky.
- Add a specified amount of engine oil.
- Run the engine for 1 minute or longer to fill the oil filter with the engine oil.
- Stop the engine and check the engine oil level.
- Add engine oil if necessary.

OIL COOLER

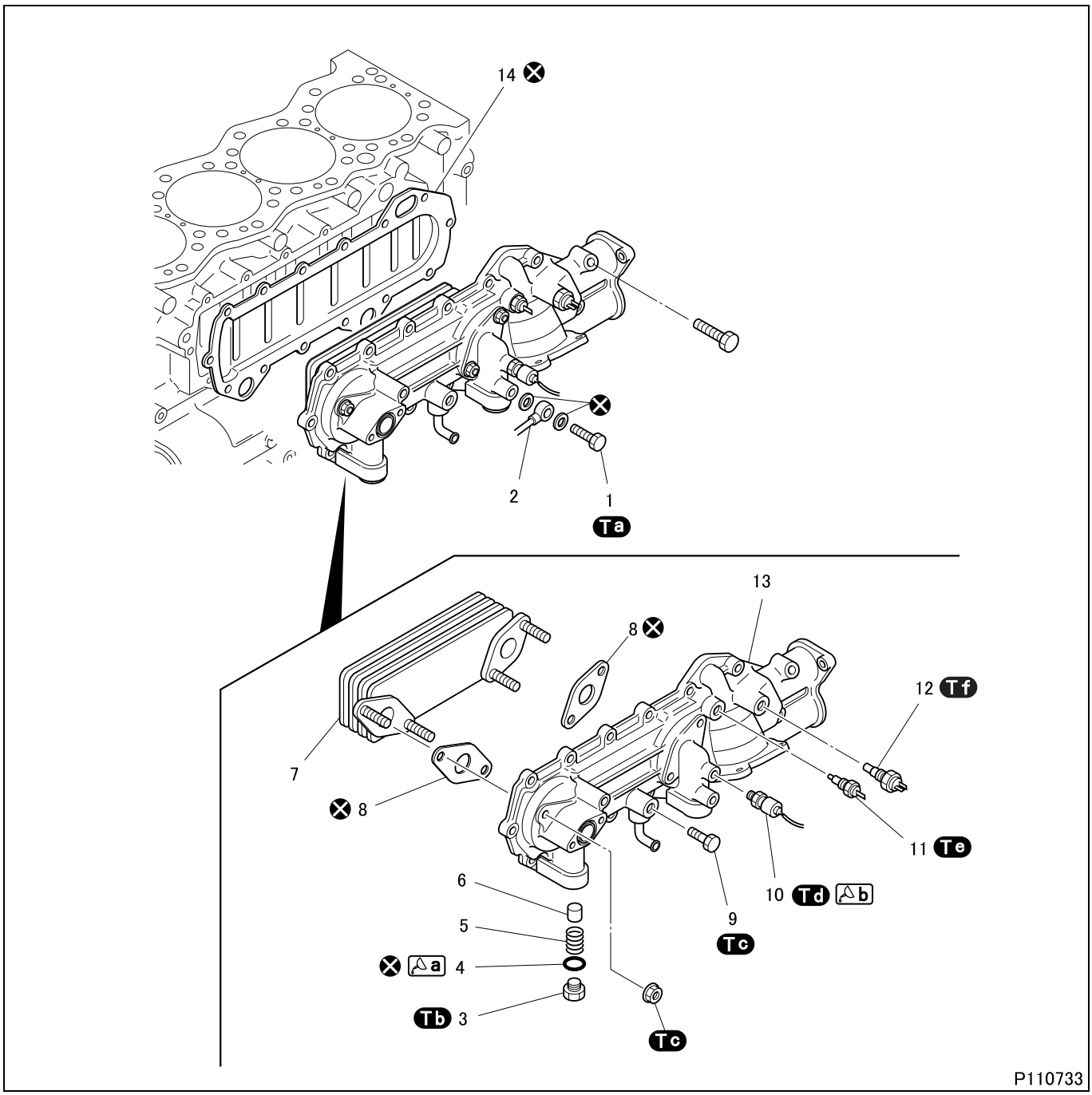

● Disassembly sequence

1 Eyebolt
2 Oil pipe
3 Plug
4 O-ring
5 Bypass valve spring
6 Bypass valve
7 Oil cooler element
8 Gasket
9 Water drain plug
10 Engine oil pressure switch
11 Coolant temperature sensor (for water temperature gage)
12 Coolant temperature sensor (for engine control)
13 Oil cooler body
14 Gasket

⊗: Non-reusable parts

● Assembly sequence

Follow the disassembly sequence in reverse.

Service standards (Unit: mm)

Location	Maintenance item	Standard value	Limit	Remedy
6	Load of bypass valve spring (installed length: $48^{0}_{-0.5}$)	95.3 ± 4.9 N {9.7 ± 0.5 kgf}	–	Replace
8	Air leakage from oil cooler element (air pressure: 980 kPa {10 kgf/cm^2} for 15 seconds)	0 cm^3 {0 mL}	–	Replace

Tightening torque (Unit: N·m {kgf·m})

Mark	Parts to be tightened	Tightening torque	Remarks
Ta	Eyebolt (oil pipe mounting)	21.6 {2.2}	–
Tb	Plug	34.3 ± 4.9 {3.5 ± 0.5}	–
Tc	Nut (oil cooler element mounting)	25 ± 5 {2.5 ± 0.5}	–
	Water drain plug		
Td	Engine oil pressure switch	12 {1.2}	• Sealant • With cold engine
Te	Coolant temperature sensor (for water temperature gage)	35 {3.6}	–
Tf	Coolant temperature sensor (for engine control)	34 {3.5}	

Lubricant and/or sealant

Mark	Points of application	Specified lubricant and/or sealant	Quantity
a	O-ring	Engine oil	As required
b	Engine oil pressure switch threads	ThreeBond 1215	As required

◆Inspection procedure◆

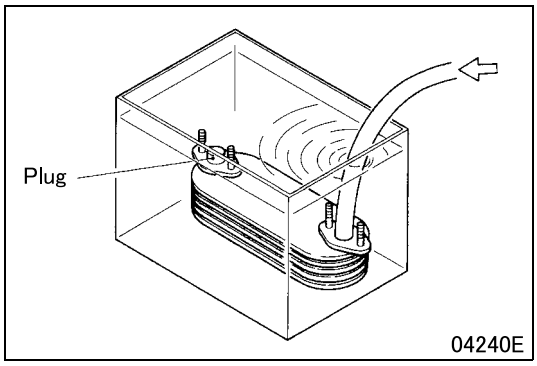

■ Inspection: Oil cooler element

- Plug the outlet of the oil cooler element and connect a hose to the engine oil inlet port. Then, immerse the oil cooler element in a tank of water.
- Apply an air pressure of 980 kPa {10 kgf/cm^2} for 15 seconds through the hose, and check for any air leaks.
- Replace the element if it leaks air.

https://truckmanualshub.com/

GROUP 13
FUEL AND ENGINE CONTROL

SPECIFICATIONS 13-2

STRUCTURE AND OPERATION
1. Fuel System (Flow of Fuel) 13-3
2. Engine Control 13-4
3. Fuel Filter 13-5

TROUBLESHOOTING 13-6

ON-VEHICLE INSPECTION AND ADJUSTMENT
1. Inspecting and Adjusting No-load Minimum and Maximum Speeds 13-8
2. Air-bleeding of Fuel System 13-9
3. Fuel Filter Replacement 13-10

FUEL TANK 13-12

SPARE FUEL TANK 13-14

FUEL FILTER 13-16

ENGINE CONTROL 13-20

COMMON RAIL 13-24

SUPPLY PUMP 13-28

INJECTOR 13-32

https://truckmanualshub.com/

Item			Specifications
Supply pump	Manufacturer		Bosch
	Supply pump type		CP3.3 NH
	Control system		Electronically-controlled pump
	Model		Radial, 3-cylinder
	Feed pump type		External gear type
	MPROP (rail pressure control valve)	Model	MPROP
		Rated voltage V	24
	Max. common rail pressure MPa {kgf/cm^2}		180 {1840}
Common rail	Manufacturer		Bosch
	Common rail capacity cm^3 {ml}		18.7 {18.7}
	Pressure limiting valve opening pressure MPa {kgf/cm^2}		210 to 220 {2141 to 2243}
	Common rail pressure sensor supply voltage V		5
Injectors	Manufacturer		Bosch
	Control system		Electrical
	Max. operating pressure MPa {kgf/cm^2}		180 {1840}
	Min. operating pressure MPa {kgf/cm^2}		25 {255}
Engine electronic control unit	Manufacturer		Bosch
	Rated voltage V		24

https://truckmanualshub.com/

1. Fuel System (Flow of Fuel)

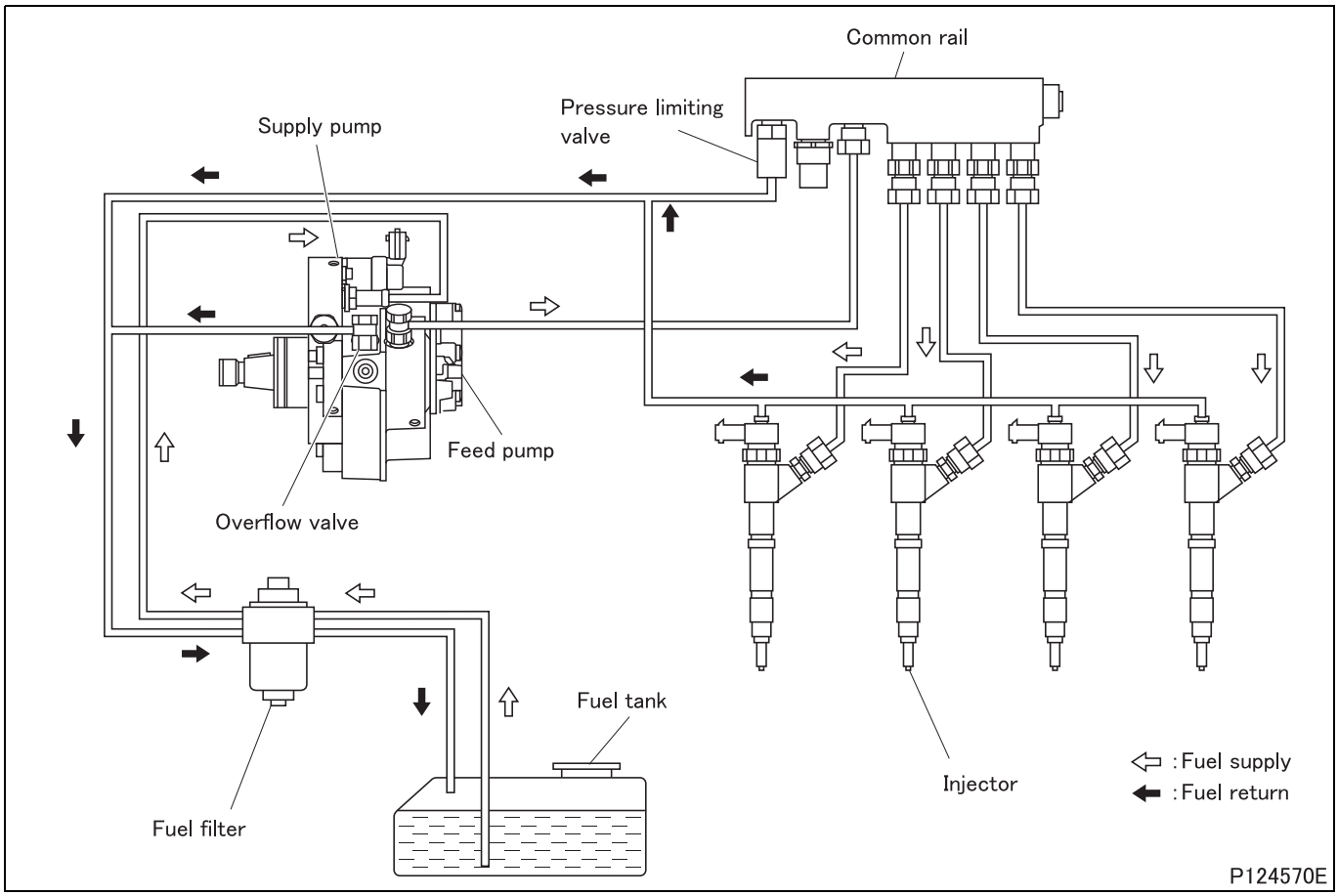

- The feed pump, which is driven by the camshaft inside the supply pump, draws up the fuel from inside the fuel tank and sends it through the fuel filter, where dust and other impurities in the fuel are filtered out.
- The filtered fuel is then sent to the supply pump, where it is compressed. The compressed fuel is accumulated in the common rail for a time, then sprayed out through the injection nozzles into the combustion chamber.
- The excess fuel from the injectors returns to the fuel tank through the fuel return hose.
- When the internal fuel pressure of the common rail exceeds the limit, the pressure limiting valve opens to allow part of the fuel to return to the fuel tank.
- When the internal fuel pressure of the supply pump exceeds the limit, the overflow valve opens to allow part of the fuel to return to the fuel tank.

https://truckmanualshub.com/

2. Engine Control

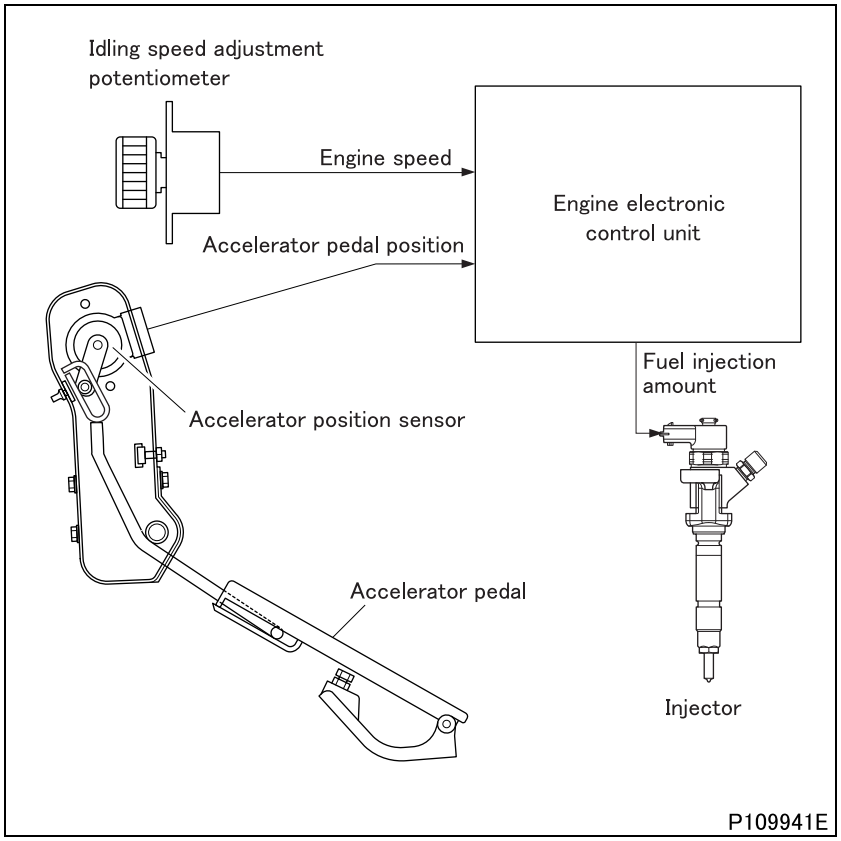

- The engine is electronically controlled by the engine electronic control unit.
- By processing accelerator pedal position data from the accelerator position sensor, the engine electronic control unit controls the injectors for optimum fuel injection.

3. Fuel Filter

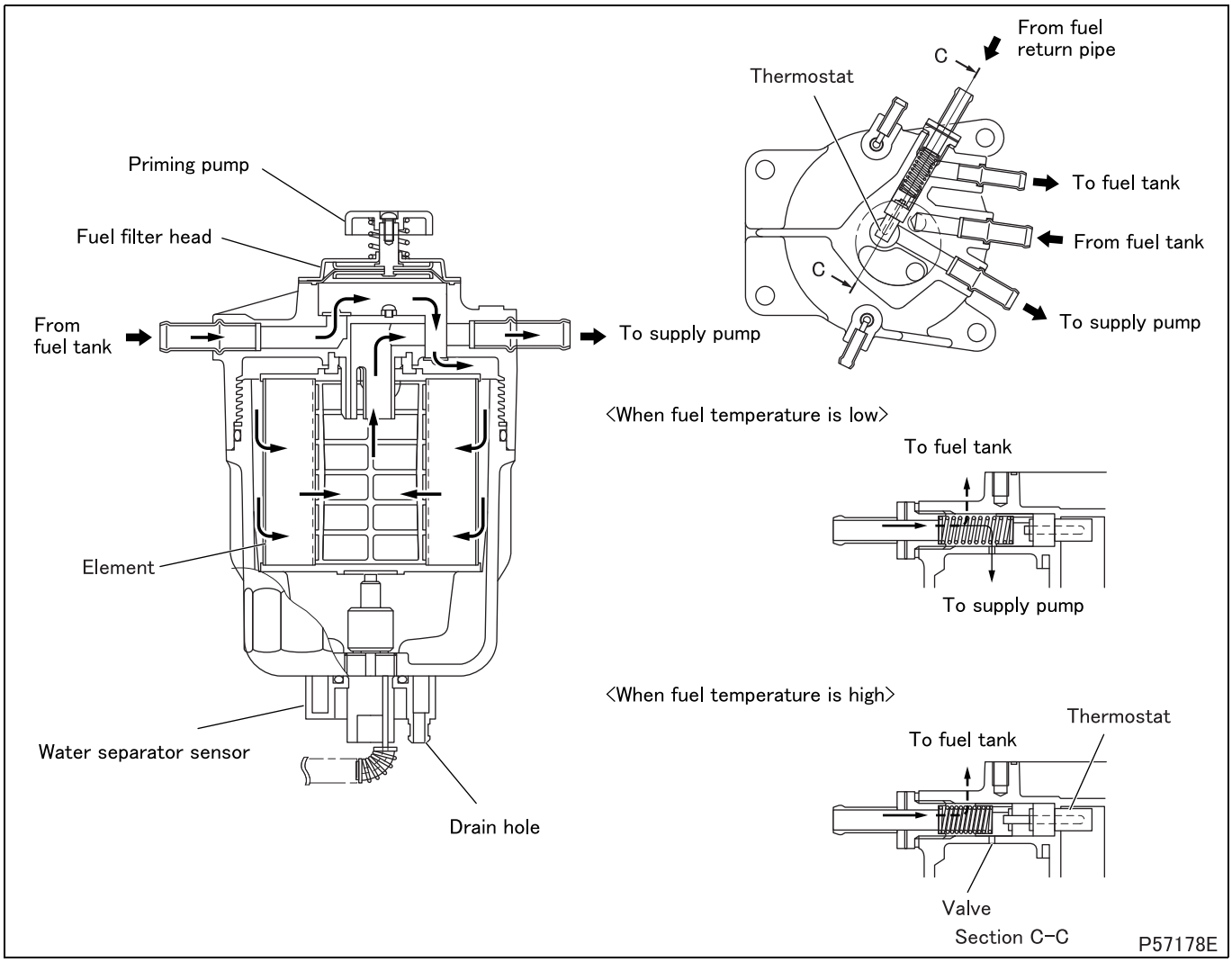

- The fuel filter, which also serves as a water separator, removes impurities in the fuel through the filter element and also separates water from fuel.
- The water that has been separated from the fuel collects at the bottom of the fuel filter. A water separator sensor is installed in the fuel filter, which activates the warning lamp on the meter cluster when the water reaches a certain level.
- The water can be drained through the drain hole by loosening the water separator sensor.
- A priming pump is provided at the fuel filter head. The priming pump is used for air-bleeding the fuel system.
- When the fuel temperature rises, the thermostat swells and the valve of the fuel filter head is closed. The high-temperature fuel entirely returns to the fuel tank through the fuel return pipe.
- When the fuel temperature lowers, the thermostat does not swell and the valve to the fuel filter remains open. The high-temperature fuel returning through the fuel return pipe is let through the valve to mix into the fuel around the element. The fuel around the element is warmed as a result and wax in it (precipitated when the fuel temperature is low) is dissolved to prevent clogging of the element.

https://truckmanualshub.com/

Possible causes \ Symptoms		Engine refuses to start	Engine is difficult to start	Engine knocks	Engine output is unstable	Engine output is insufficient	Engine maximum speed is too high	Engine is idling unstably	Engine stops soon after starting	Engine does not reach maximum speed	Engine does not stop	Fuel supply is insufficient	warning lamp illuminates	Reference Gr
Electronic control fuel system faulty													O	Gr13E
Supply pump	Feed pump check valve faulty		O			O			O		O			*
	Defective feed pump		O			O			O		O			*
	Defective sealing supply pump overflow valve		O			O			O		O			*
	Open or short circuit failure, poor contact of supply pump magnetic valve		O			O			O		O		O	*
	Defective supply pump magnetic valve, defective base supply pump		O			O			O		O			*
Incorrect injector fuel injection	Open or short circuit failure, poor contact of injector magnetic valve		O	O		O					O		O	*
	Defective injector, defective injector magnetic valve, defective nozzle		O	O		O					O			*
Clogged fuel filter		O			O			O	O					
No fuel in fuel tank		O												
Clogged fuel pipe and/or leaky pipe joints		O												
Air or water in fuel system		O			O			O	O					
Use of low quality fuel			O	O		O		O						
Open or short circuit failure, poor contact of common rail pressure sensor, defective sensor		O	O		O	O			O				O	*
Fuel leakage from high pressure joint			O	O	O	O					O			*
Engine control	Poorly adjusted accelerator pedal stopper bolt					O				O				
	Defective accelerator position sensor												O	
Cracked fuel pipe and/or hose												O		

*: Contact a Bosch service station for repair.

Possible causes \ Symptoms	Engine refuses to start	Engine is difficult to start	Engine knocks	Engine output is unstable	Engine output is insufficient	Engine maximum speed is too high	Engine is idling unstably	Engine stops soon after starting	Engine does not reach maximum speed	Engine does not stop	Fuel supply is insufficient	warning lamp illuminates	Reference Gr
Oil viscosity unsuitable		O					O						Gr12
Valve clearance incorrect		O					O						Gr11
Defective cylinder head gasket		O					O						
Wear of and/or carbon deposits on valve and valve seat		O					O						
Distorted valve springs		O					O						
Worn or damaged piston rings		O					O						
Worn or damaged piston ring groove		O											
Worn piston and/or cylinder liner		O					O						
Poorly functioning cooling system		O					O						Gr14
Defective starter switch	O	O											Gr54
Defective glow plug		O											
Open-circuited, short-circuited or poorly connected engine speed sensor and/or cylinder recognition sensor	O	O										O	Gr13E
Open-circuited, short-circuited or poorly connected boost pressure sensor			O	O	O				O			O	
Open-circuited, short-circuited or poorly connected coolant temperature sensor	O	O										O	
Poorly connected injection rate adjusting resistor			O		O							O	
Open-circuited, short-circuited or poorly connected idling adjustment control			O				O					O	
Blown fuse	O	O						O				O	Gr54

https://truckmanualshub.com/

ON-VEHICLE INSPECTION AND ADJUSTMENT

1. Inspecting and Adjusting No-load Minimum and Maximum Speeds

Service standards

Location	Maintenance item	Standard value	Limit	Remedy
–	Minimum no-load speed (idling speed)	650 ± 25 rpm	–	Adjust
–	Maximum no-load speed	3100 ± 50 rpm	–	Adjust

[Work before inspection and adjustment]

- Before starting the inspection and adjustment, carry out the following preparatory steps:
- Warm up the engine until the engine coolant temperature is approximately 80 to 95°C; (Check by the service data “32: Water temperature” of the Multi-Use Tester.)
- Turn off all lamps and accessories;
- Put the transmission in neutral;
- Set the steering wheel at the straight-ahead position; and
- Attach a tachometer.

[Inspection]

(1) No-load minimum speed

- Without depressing the accelerator pedal, measure the engine speed.
- If the measurement is not within the standard value range, inspect the accelerator position sensor and accelerator switch. (See Gr13E.)
- If no defects are evident during the above inspection, check the diagnosis code in the engine electronic control unit or the fuel system.

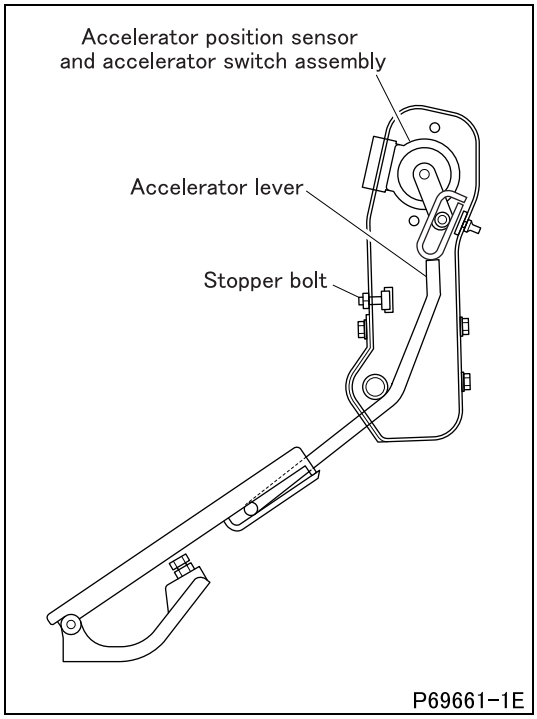

(2) No-load maximum speed

- Depress the accelerator pedal as far as it will go.
- With the accelerator pedal touching the stopper bolt, measure the engine speed.
- If the measurement is not within the standard value range, inspect the accelerator position sensor and accelerator switch. (See Gr13E.)
- If no defects are evident during the above inspection, check the diagnosis code in the engine electronic control unit or the fuel system.

https://truckmanualshub.com/

2. Air-bleeding of Fuel System

Tightening torque (Unit: N·m {kgf·m})

Mark	Parts to be tightened	Tightening torque	Remarks
–	Plug	10 ± 2 {1 ± 0.2}	–

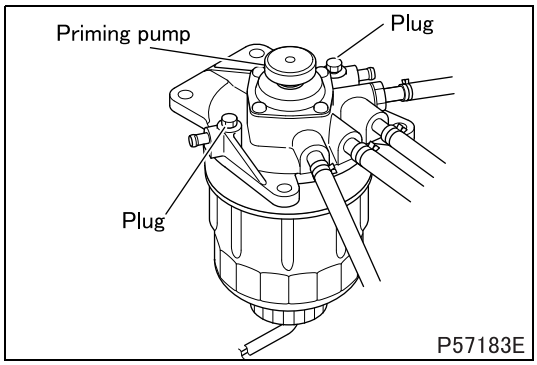

- Loosen one of the air vent plugs on the fuel filter.
- Move the priming pump up and down to pump out the fuel.
- Continue operating the priming pump until the fuel flowing out of the plug is free of air bubbles.
- When no more air bubbles are evident, tighten the air vent plug to the specified torque.
- Feed the fuel some more by operating the priming pump further until a strong resistance is felt.
- When the fuel temperature is low, you may not feel the resistance. Be sure to operate the priming pump several times even in such a case.
- Wipe up any spilled fuel and start the engine.
- Check that there is no fuel leakage.

WARNING ⚠

- **Fuel is highly flammable. Keep it away from flames and sources of heat.**
- **To avoid risk of fire, wipe up any spilled fuel.**

https://truckmanualshub.com/

3. Fuel Filter Replacement

Tightening torque (Unit: N·m {kgf·m})

Mark	Parts to be tightened	Tightening torque	Remarks
–	Water separator sensor	5 ± 1 {0.5 ± 0.1}	–
–	Case	30 ± 2 {3.1 ± 0.2}	–

Lubricant and/or sealant

Mark	Points of application	Specified lubricant and/or sealant	Quantity
–	O-ring	Engine oil	As required

Special tools

Mark	Tool name and shape	Part No.	Application
a	Filter wrench 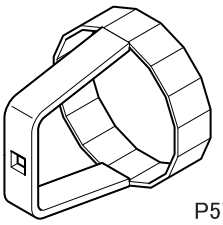 P57179	MH063203	Removal and installation of case

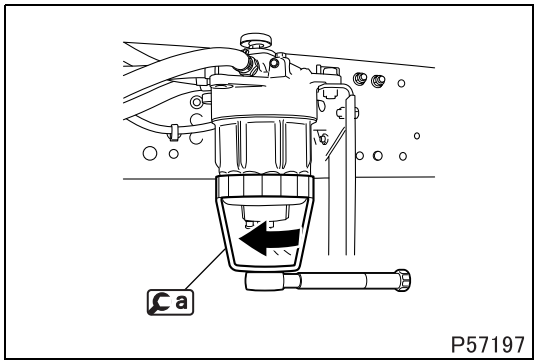

[Removal]

- Loosen the water separator sensor and drain fuel from the case.
- Remove the case using a.

WARNING ⚠

- **Fuel is highly flammable. Keep it away from flames and sources of heat.**
- **To avoid risk of fire, wipe up any spilled fuel.**

CAUTION ⚠

- **Be careful not to damage the case.**

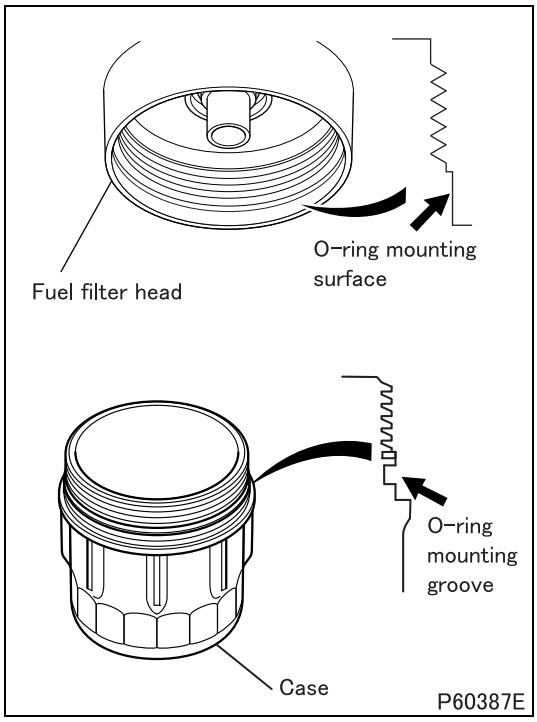

[Installation]

- Clean the O-ring mounting surface of the fuel filter head and the O-ring groove of the case.

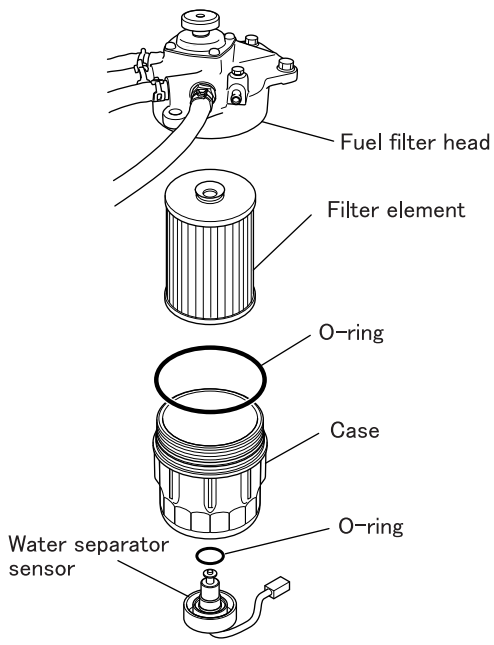

P57199E

- Replace the filter element and O-ring with new one.
- Apply a thin coat of engine oil to the O-ring, and install it on the case and water separator sensor.

CAUTION ⚠

- **Be sure to use only genuine MITSUBISHI filter elements. The use of non-genuine fuel filters can cause engine failure.**
- **Prevent fine dust particles from entering the fuel filter and fuel hose, as they can cause problems such as faulty fuel injection.**

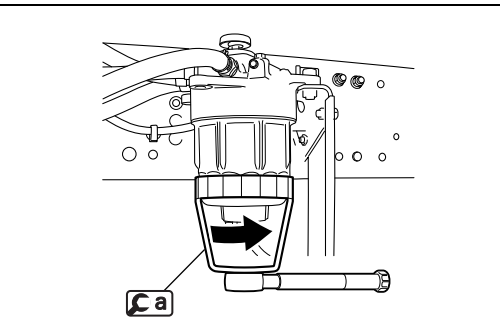

P57200

- Use a to tighten the case to the specified torque.
- Install the water separator sensor, and then air-bleed the fuel system.
- Start the engine, and check that there is no fuel leakage.
- Reinstall the fuel filter if there is any leakage.

FUEL TANK

<170L>

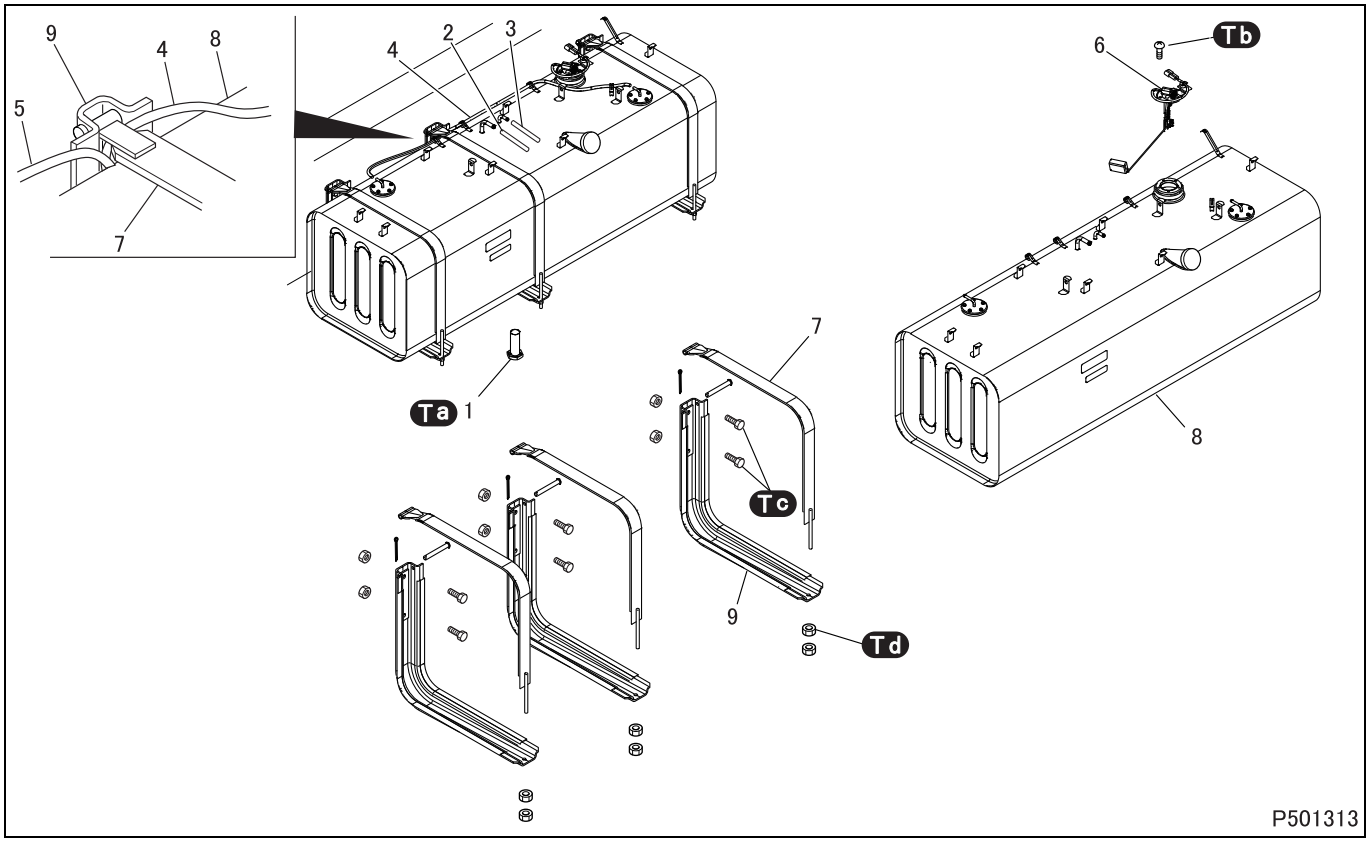

● Removal sequence

1 Drain plug
2 Suction hose
3 Return hose
4 Air vent tube
5 Air vent tube
6 Fuel level sensor
7 Fuel tank band
8 Fuel tank
9 Fuel tank bracket

● Installation sequence

Follow the removal sequence in reverse.

DANGER ⚠

- **Do not allow any flames or sources of heat near the fuel tank, as it may explode.**

WARNING ⚠

- **Fuel is highly flammable. Keep it away from flames and sources of heat.**
- **To avoid risk of fire, wipe up any spilled fuel.**

- Insert the air vent tube into fuel tank bracket, while taking care not to pinch or crush with the fuel tank band.

Tightening torque (Unit: N·m {kgf·m})

Mark	Parts to be tightened	Tightening torque	Remarks
Ta	Drain plug	19.6 ± 4.9 {2.0 ± 0.5}	–
Tb	Screw (fuel level sensor mounting)	0.96 to 1.47 {0.10 to 0.15}	–
Tc	Bolt (fuel tank bracket mounting)	70 to 90 {7.1 to 9.1}	–
Td	Nut (fuel tank band mounting)	6.9 to 9.8 {0.7 to 1.0}	–

<100L>

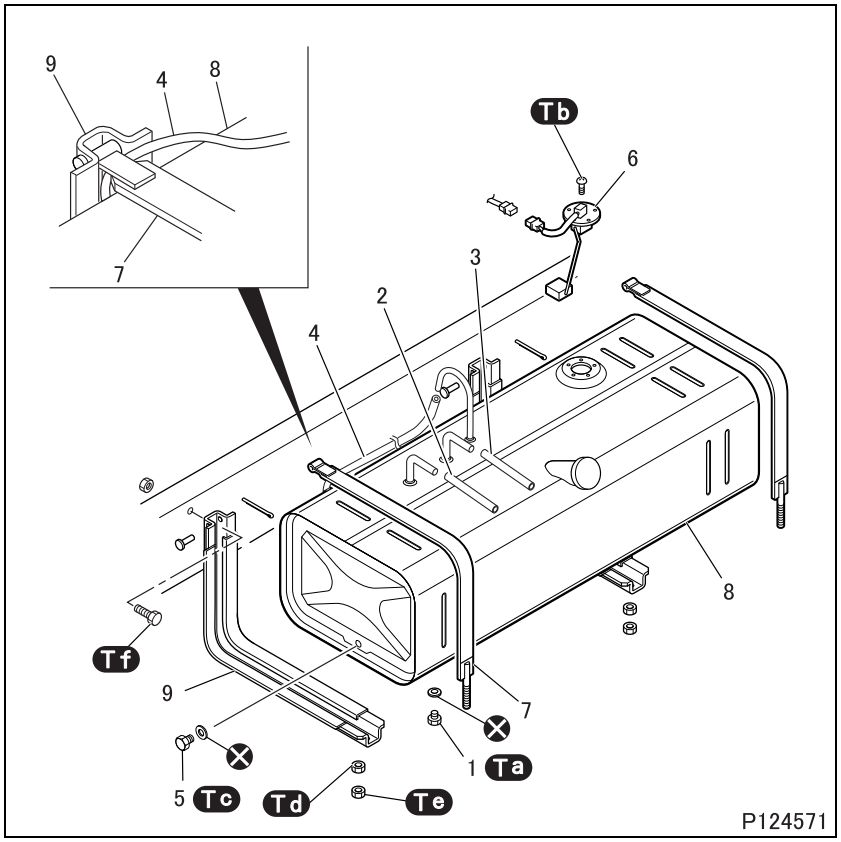

● Removal sequence

1 Drain plug
2 Suction hose
3 Return hose
4 Air vent tube
5 Plug <Without spare fuel tank>
6 Fuel level sensor
7 Fuel tank band
8 Fuel tank
9 Fuel tank bracket

⊗: Non-reusable parts

● Installation sequence

Follow the removal sequence in reverse.

DANGER ⚠

- **Do not allow any flames or sources of heat near the fuel tank, as it may explode.**

WARNING ⚠

- **Fuel is highly flammable. Keep it away from flames and sources of heat.**
- **To avoid risk of fire, wipe up any spilled fuel.**

- Insert the air vent tube into fuel tank bracket, while taking care not to pinch or crush with the fuel tank band.

Tightening torque (Unit: N·m {kgf·m})

Mark	Parts to be tightened	Tightening torque	Remarks
Ta	Drain plug	19.6 ± 4.9 {2.0 ± 0.5}	–
Tb	Screw (fuel level sensor mounting)	0.96 to 1.47 {0.10 to 0.15}	–
Tc	Bolt (fuel tank bracket mounting)	70 to 90 {7.1 to 9.1}	–
Td	Nut (fuel tank band mounting)	6.9 to 9.8 {0.7 to 1.0}	–
Te	Lock nut (fuel tank band mounting)	9 to 14 {0.9 to 1.4}	–
Tf	Bolt (fuel tank bracket mounting)	70 to 90 {7.1 to 9.1}	–

https://truckmanualshub.com/

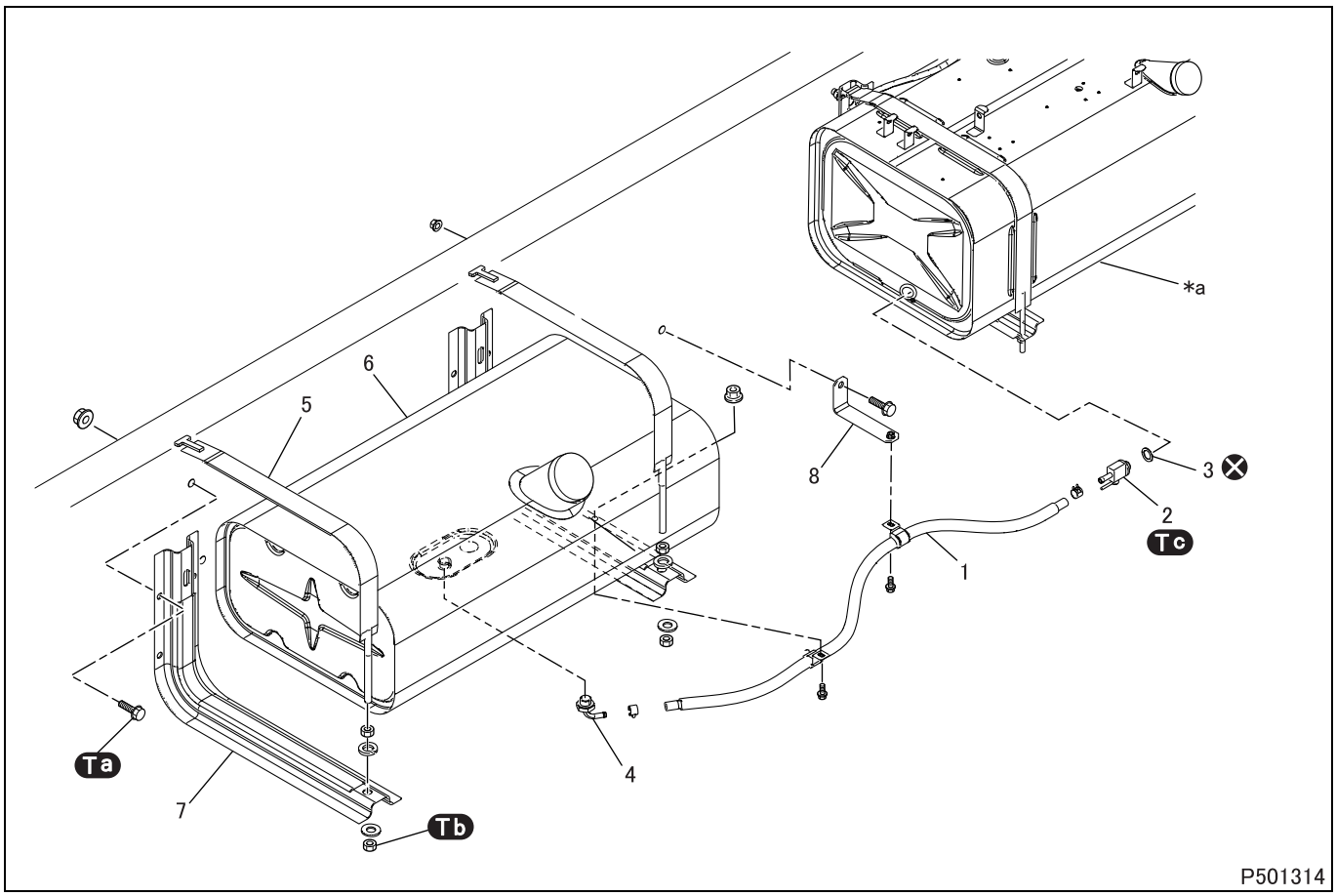

● **Removal sequence**

1 Fuel hose
2 Fuel cock
3 Gasket
4 Connector
5 Fuel tank band
6 Fuel tank
7 Fuel tank bracket
8 Fuel hose bracket

***a**: Main fuel tank
⊗: Non-reusable parts

● **Installation sequence**

Follow the removal sequence in reverse.

DANGER ⚠

- **Do not allow any flames or sources of heat near the fuel tank, as it may explode.**

WARNING ⚠

- **Fuel is highly flammable. Keep it away from flames and sources of heat.**
- **To avoid risk of fire, wipe up any spilled fuel.**

Tightening torque (Unit: N·m {kgf·m})

Mark	Parts to be tightened	Tightening torque	Remarks
Ta	Bolt (fuel tank bracket mounting)	70 to 90 {7.1 to 9.1}	–
Tb	Nut (fuel tank band mounting)	6.9 to 9.8 {0.7 to 1.0}	–
Tc	Fuel cock	15 to 25 {1.5 to 2.5}	–

https://truckmanualshub.com/

M E M O

FUEL FILTER

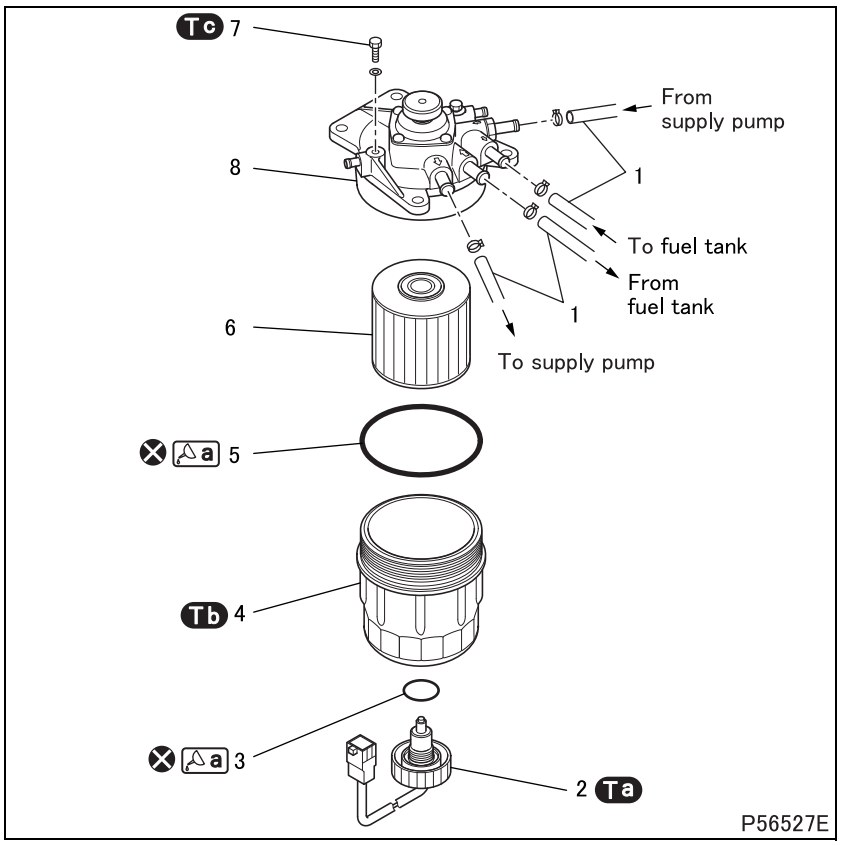

● Disassembly sequence

1 Fuel hose
2 Water separator sensor
3 O-ring
4 Case
5 O-ring
6 Filter element
7 Plug
8 Fuel filter head

⊗: Non-reusable parts

● Assembly sequence

Follow the disassembly sequence in reverse.

WARNING ⚠

- **Fuel is highly flammable. Keep it away from flames and sources of heat.**
- **To avoid risk of fire, wipe up any spilled fuel.**

CAUTION ⚠

- **Be careful not to damage the case.**

Tightening torque (Unit: N·m {kgf·m})

Mark	Parts to be tightened	Tightening torque	Remarks
Ta	Water separator sensor	5 ± 1 {0.5 ± 0.1}	–
Tb	Case	30 ± 2 {3.1 ± 0.2}	–
Tc	Plug	10 ± 2 {1 ± 0.2}	–

Lubricant and/or sealant

Mark	Points of application	Specified lubricant and/or sealant	Quantity
a	O-ring	Engine oil	As required

Special tools

Mark	Tool name and shape	Part No.	Application
a	Filter wrench 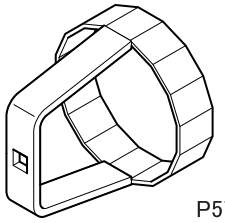 P57179	MH063203	Removal and installation of case

◆Removal procedure◆

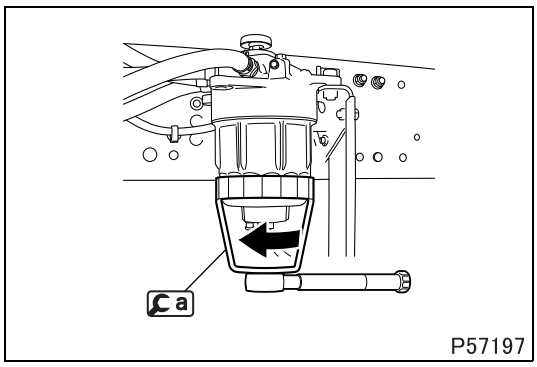

■ Removal: Case

- Loosen the water separator sensor and drain fuel from the case.
- Remove the case using a.

◆Installation procedure◆

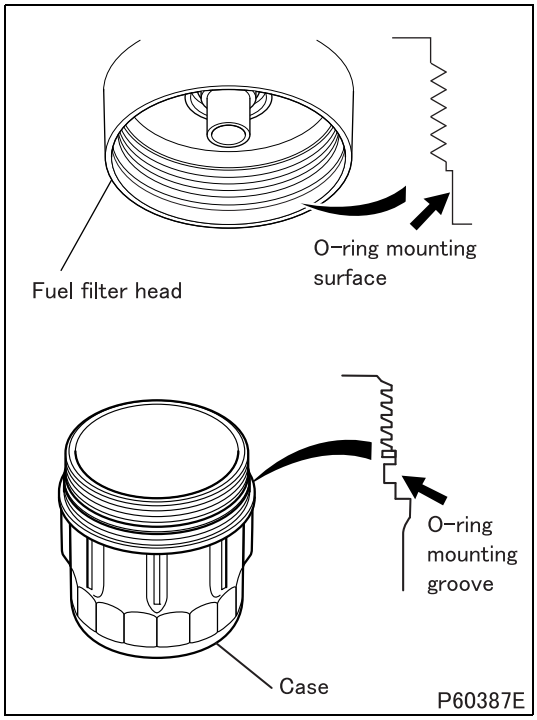

■ Installation: Case

- Clean the O-ring mounting surface of the fuel filter head and the O-ring groove of the case.

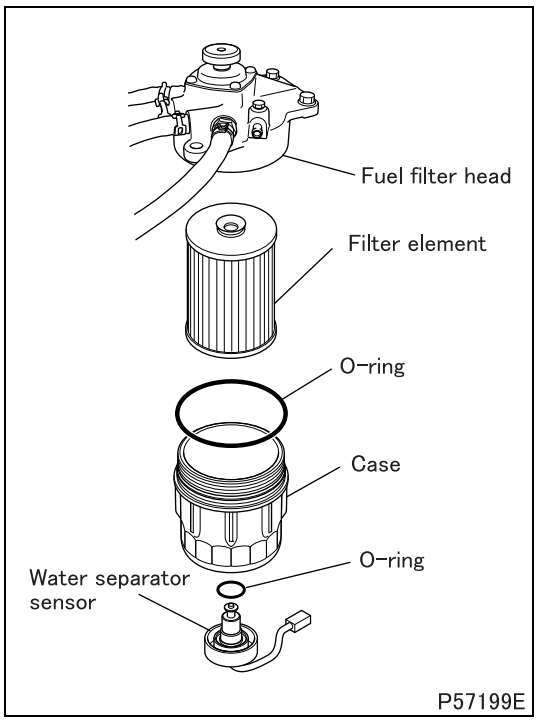

- Replace the filter element and O-ring with new one.
- Apply a thin coat of engine oil to the O-ring, and install it on the case and water separator sensor.

CAUTION ⚠

- **Be sure to use only genuine MITSUBISHI filter elements. The use of non-genuine fuel filters can cause engine failure.**
- **Prevent fine dust particles from entering the fuel filter and fuel pipe, as they can cause problems such as faulty fuel injection.**

https://truckmanualshub.com/

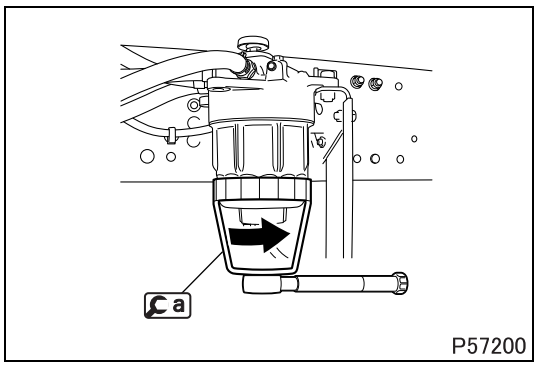

- Use a to tighten the case to the specified torque.
- Install the water separator sensor, and then air-bleed the fuel system.
- Start the engine, and check that there is no fuel leakage.
- Reinstall the fuel filter if there is any leakage.

https://truckmanualshub.com/

M E M O

https://truckmanualshub.com/

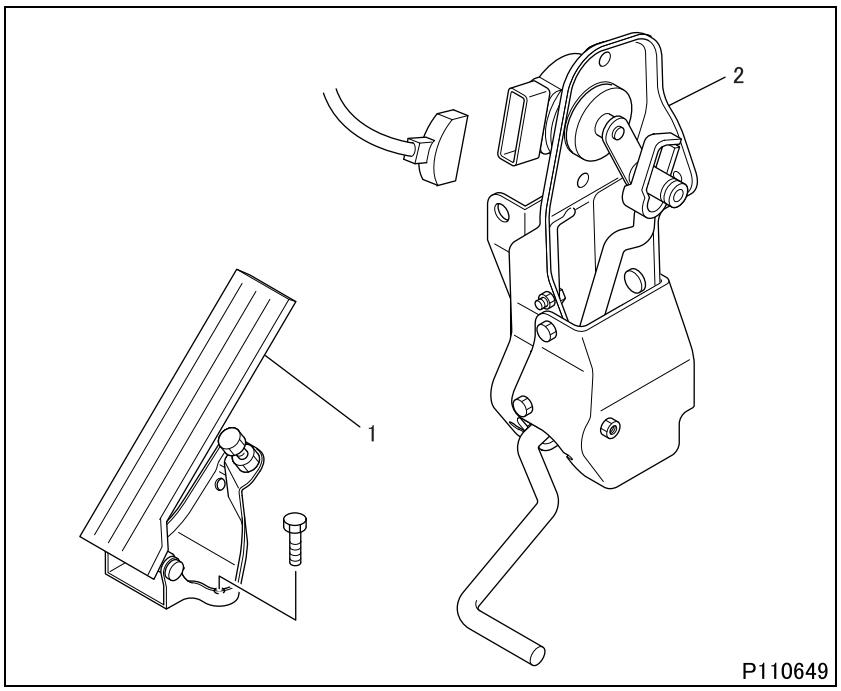

● **Removal sequence**

1. Accelerator pedal (See later sections.)
2. Accelerator link (See later sections.)

● **Installation sequence**

Follow the removal sequence in reverse.

◆Removal procedure◆

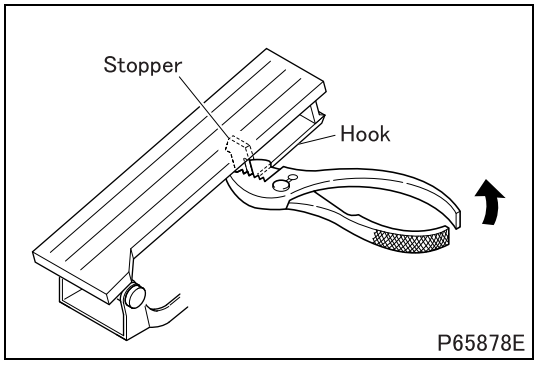

■ **Removal: Accelerator pedal**

- Using pliers, pinch the hook of the stopper on the accelerator pedal. Separate the stopper from the pedal while turning the hook by about 15 degrees.

CAUTION ⚠

- **Do not yank on the stopper, as this may damage it.**

◆Installation procedure◆

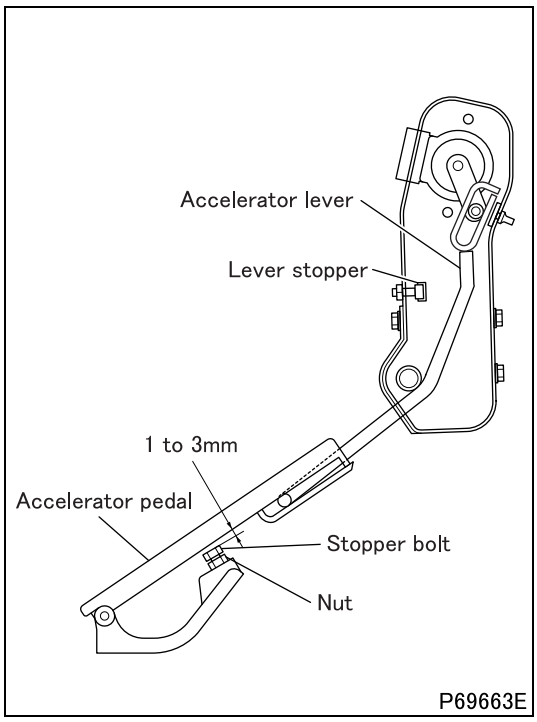

■ **Installation: Accelerator pedal**

- Depress the accelerator pedal until the accelerator lever touches the accelerator link stopper bolt.
- Check that the clearance between the stopper and the stopper bolt contact surface of the pedal is as indicated in the illustration.
- If the clearance is not within the indicated value range, adjust the stopper bolt and lock it with the nut.

https://truckmanualshub.com/

Accelerator Pedal

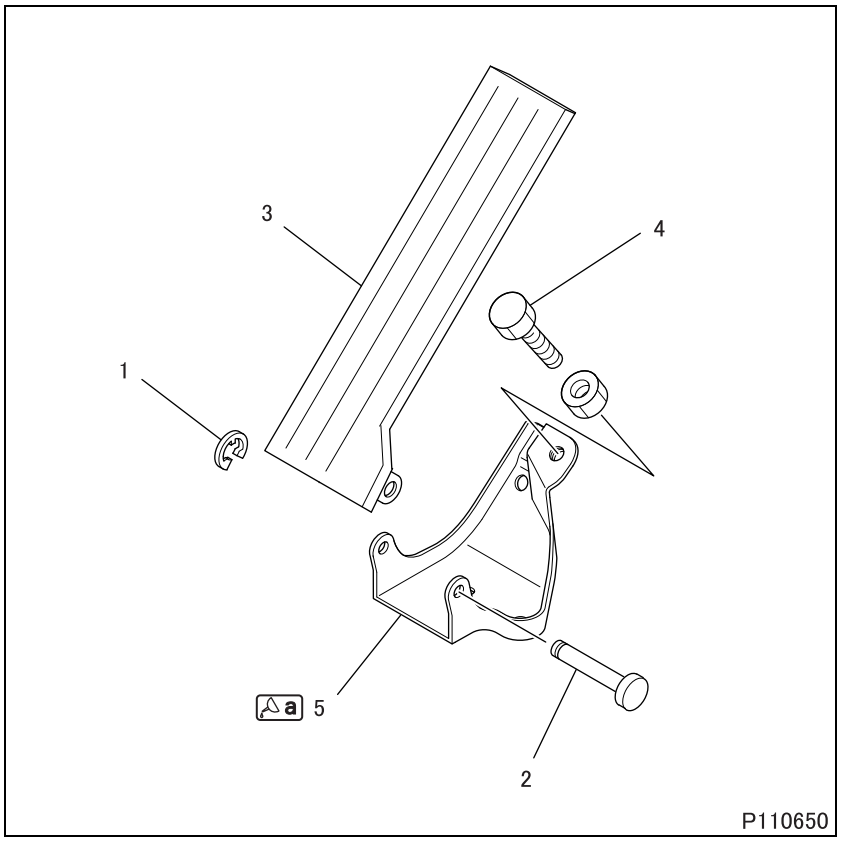

● Disassembly sequence

1 E-ring
2 Clevis pin
3 Accelerator pedal
4 Stopper bolt
5 Accelerator pedal bracket

● Assembly sequence

Follow the disassembly sequence in reverse.

Lubricant and/or sealant

Mark	Points of application	Specified lubricant and/or sealant	Quantity
a	Accelerator pedal and bracket contact surfaces	Chassis grease [NLGI No. 1 (Li soap)]	As required

https://truckmanualshub.com/

Accelerator Linkage

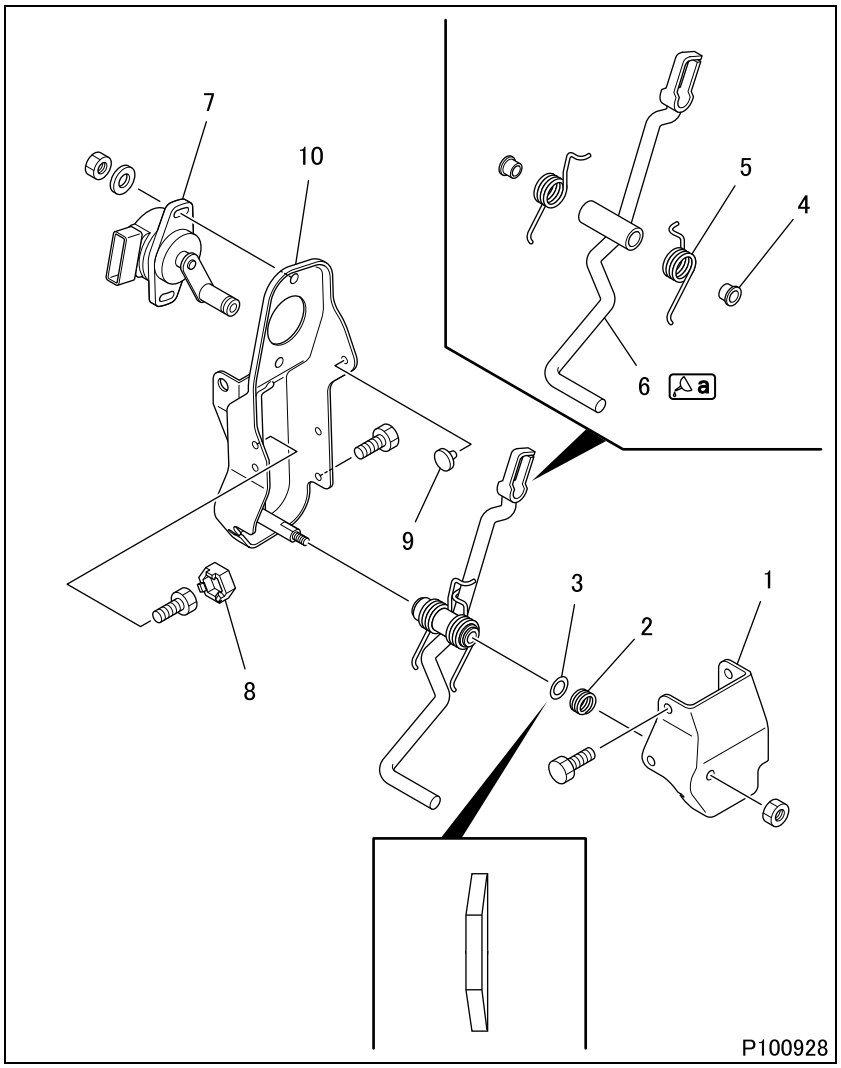

● **Disassembly sequence**

1 Cover
2 Spring
3 Washer
4 Bushing
5 Return spring
6 Accelerator lever
7 Accelerator position sensor and accelerator switch assembly
8 Lever stopper
9 Rubber stopper
10 Accelerator link bracket

● **Assembly sequence**

Follow the disassembly sequence in reverse.

NOTE

- **Perform the inspection and adjustment of the accelerator position sensor. (See Gr13E.)**

Lubricant and/or sealant

Mark	Points of application	Specified lubricant and/or sealant	Quantity
a	Accelerator lever and return spring sliding surface	Chassis grease [NLGI No. 1 (Li soap)]	As required

https://truckmanualshub.com/

M E M O

https://truckmanualshub.com/

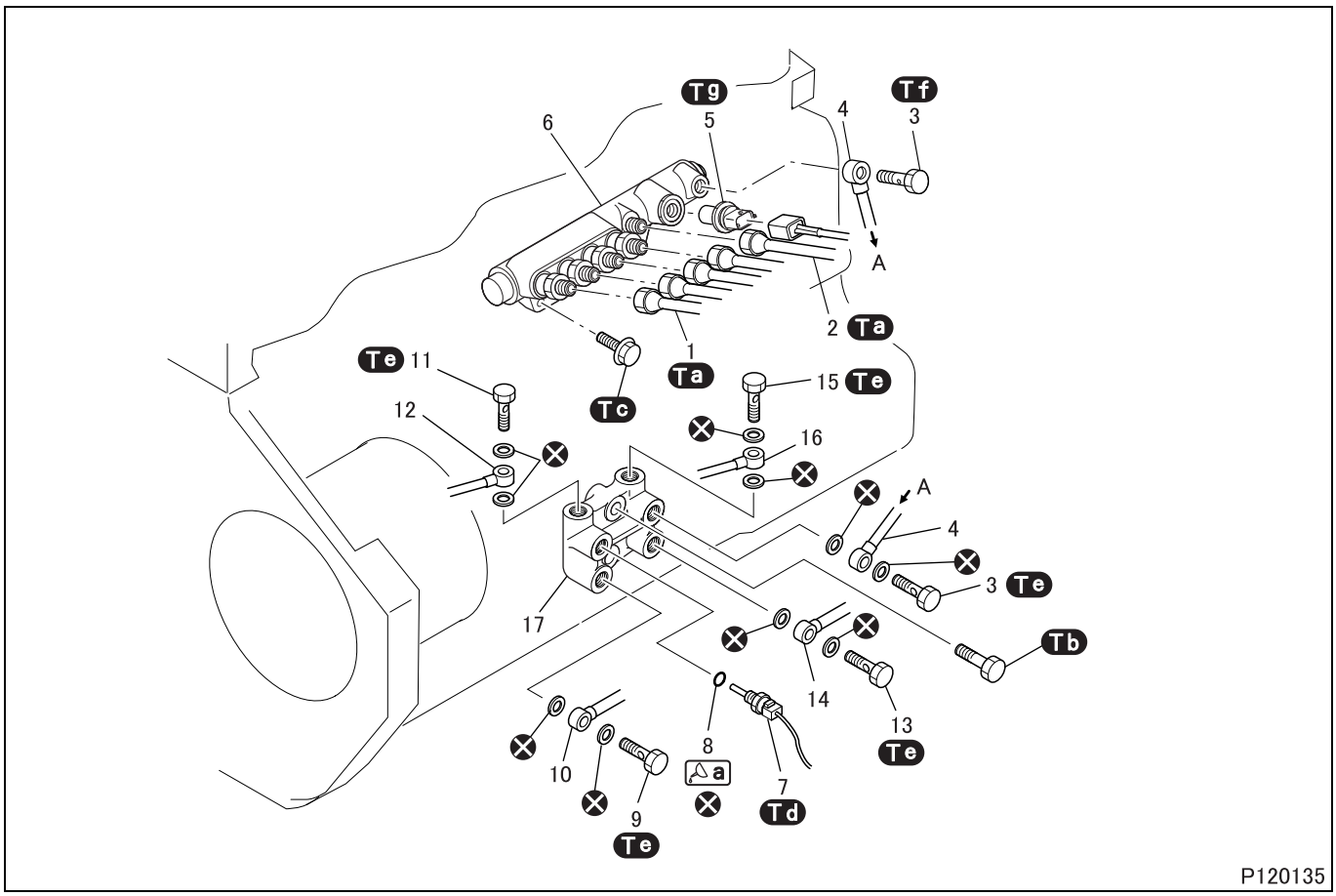

● Disassembly sequence

1 Injection pipe
2 Fuel pipe
3 Eyebolt
4 Fuel return pipe B
5 Fuel pressure sensor (See Gr13E.)
6 Common rail
7 Fuel temperature sensor
8 O-ring
9 Eyebolt
10 Fuel suction pipe B
11 Eyebolt
12 Fuel suction pipe A
13 Eyebolt
14 Fuel return pipe A
15 Eyebolt
16 Fuel return pipe C
17 Adaptor

⊗: Non-reusable parts

WARNING ⚠

- **Fuel is highly flammable. Do not handle it near flames or heat.**
- **Spilled fuel may catch fire and therefore, must be wiped off completely.**

CAUTION ⚠

- **If dust enters the common rail, the engine performance will be greatly affected. To prevent it, be sure to cover up openings left after pipes and other parts are removed. Also, wash eyebolts, gaskets, etc. in light oil to clear of dirt.**

- Contact Bosch service station for any service needs of the common rail.

● Assembly sequence

Follow the disassembly sequence in reverse.

Tightening torque (Unit: N·m {kgf·m})

Location	Parts to be tightened	Tightening torque	Remarks
Ta	Injection pipe	40.5 ± 2.5 {4.1 ± 0.25}	–
	Fuel pipe		
Tb	Bolt (adaptor mounting)	44.5 {4.5}	–
Tc	Bolt (common rail mounting)	23.2 {2.4}	–
Td	Fuel temperature sensor	17.6 to 21.5 {1.8 to 2.2}	–
Te	Eyebolt (fuel suction pipe mounting)	39.2 {4.0}	–
	Eyebolt (fuel return pipe mounting)		
Tf	Eyebolt (fuel return pipe mounting)	25 to 29 {2.6 to 3.0}	–
Tg	Fuel pressure sensor	95 ± 5 {9.7 ± 0.5}	–

Lubricant and/or sealant

Mark	Points of application	Specified lubricant and/or sealant	Quantity
a	O-ring	Engine oil	As required

Special tools (Unit: mm)

Mark	Tool name and shape	Part No.	Application
a	Socket wrench A: 17 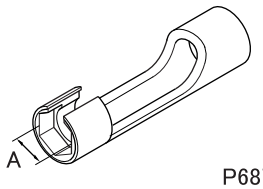 P68771	MH063020	Removal and Installation of injection pipe and fuel pipe

◆Removal procedure◆

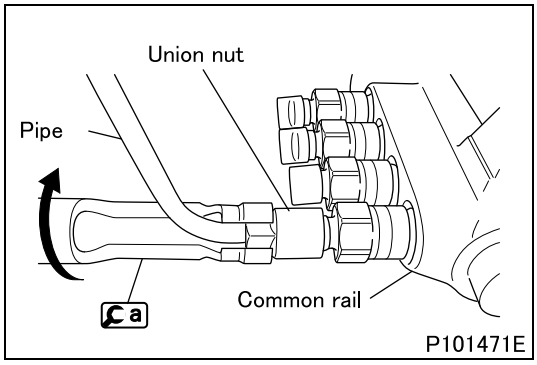

■ **Removal: Injection pipe and fuel pipe**

- Position a on the pipe and then loosen the union nut.

https://truckmanualshub.com/

◆Installation procedure◆

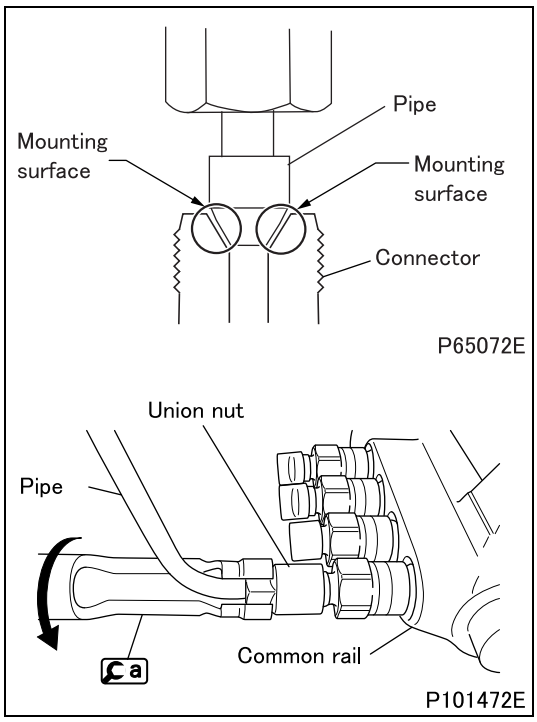

■Installation: Injection pipe and fuel pipe

- Ensure that the pipe and mounting surfaces of the connector are flat and free from damage.
- Bring the pipe into intimate contact with mounting surfaces of the connector evenly, and temporarily tighten it without applying an excessive force.
- After temporary tightening, position the torque wrench on a and then tighten them to the specified torque.

◆Inspection after installation◆

■Fuel pressure sensor

- Start the engine and ensure that there is no fuel leakage from the fuel pressure sensor.
- Perform the actuator test (B2: Fuel Leak Check) with Multi-Use Tester and ensure that there is no fuel leakage from the fuel system (pipes or hoses).
- If there is fuel leakage, reinstall pipes or hoses correctly.

https://truckmanualshub.com/

M E M O

https://truckmanualshub.com/

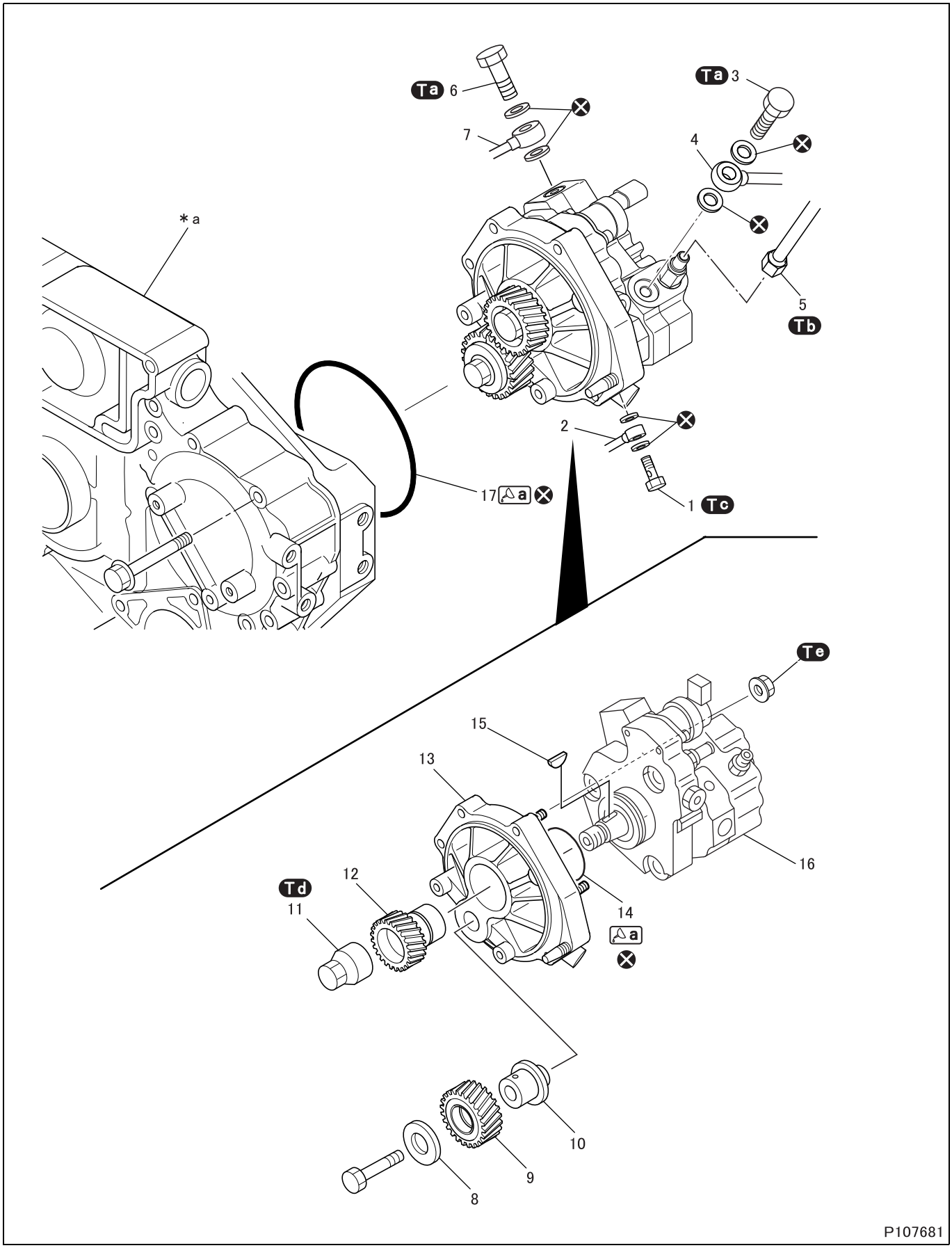

● **Removal sequence**

1 Eyebolt
2 Oil pipe
3 Eyebolt
4 Fuel return pipe C
5 Fuel pipe
6 Eyebolt (with gauze filter)
7 Fuel suction pipe A
8 Thrust plate
9 No. 2 idler gear
10 No. 2 idler shaft
11 Nut
12 Supply pump gear
13 Flange plate
14 O-ring
15 Key
16 Supply pump
17 O-ring

*a: Front case
⊗: Non-reusable parts

WARNING ⚠

- **Fuel is highly flammable. Do not handle it near flames or heat.**
- **Spilled fuel may catch fire and therefore, must be wiped off completely.**

CAUTION ⚠

- **Dirt and dust in the supply pump assembly can seriously detract from engine performance. To prevent this from happening, fully cover all open joints after removing any pipes or hoses.**

- Contact Bosch service station for any service needs of the supply pump.

● **Installation sequence**

Follow the removal sequence in reverse.

CAUTION ⚠

- **To start the engine, be sure to connect the connector of the MPROP (rail pressure control valve) to the engine harness. If the engine is started without connecting the MPROP connector, the engine electronic control unit cannot control the supply pump and the fault of the engine may result.**

Tightening torque (Unit: N·m {kgf·m})

Mark	Parts to be tightened	Tightening torque	Remarks
Ta	Eyebolt (fuel return pipe C mounting)	25 {2.6}	–
	Eyebolt (fuel section pipe A mounting)		
Tb	Fuel pipe	40.5 ± 2.5 {4.1 ± 0.25}	–
Tc	Eyebolt (oil pipe mounting)	21 {2.14}	–
Td	Nut (supply pump gear mounting)	105 {11}	–
Te	Nut (supply pump mounting)	26.5 {2.7}	–

Lubricant and/or sealant

Mark	Points of application	Specified lubricant and/or sealant	Quantity
a	O-ring	Engine oil	As required

Special tools

Mark	Tool name and shape	Part No.	Application
a	Cranking handle 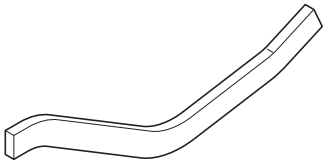 P58299	MH063704	Rotating the fan pulley

https://truckmanualshub.com/

◆Installation procedure◆

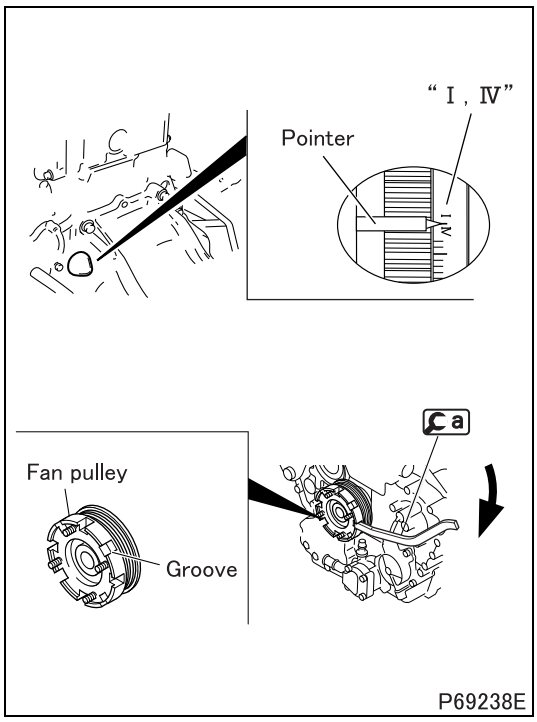

■Installation: Supply pump

- Remove the rocker cover.
- Bring the No. 1 cylinder piston to the top dead center (TDC) on the compression stroke by the following procedure:
- Hook a on a groove in the fan pulley.
- Turn the fan pulley in the illustrated direction so that the pointer is aligned with the "I, IV" or "1" to "4" mark on the inscribed scale on the flywheel.
- This will place either the No. 1 or No. 4 cylinder piston at TDC on the compression stroke. The cylinder in which the rocker arms for both the intake and exhaust valves can be pushed down by hand by the valve clearance amounts has its piston at TDC. Rotate the engine by one full turn to switch the TDCs of the No. 1 and No. 4 cylinder pistons.

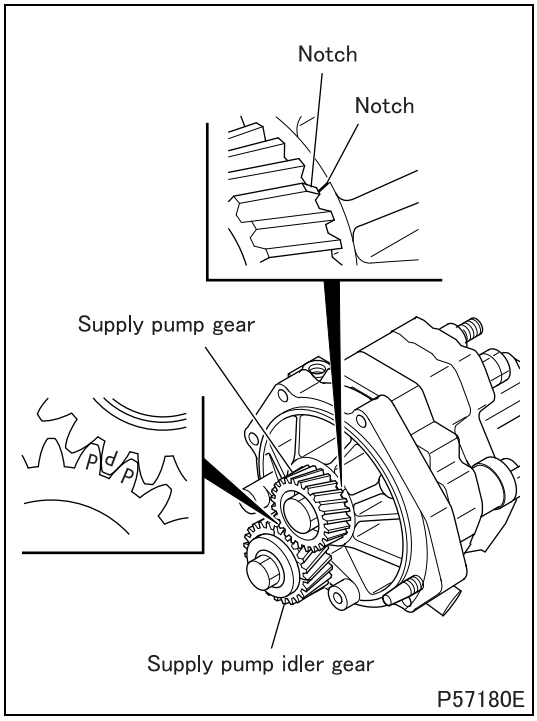

- Align the match mark "P" on the supply pump idler gear with that of the supply pump gear.
- Align the notch on the flange plate with the notch on the supply pump gear.
- Check that the notch on the flange plate and the notch on the supply pump gear are correctly aligned, and then push the supply pump.

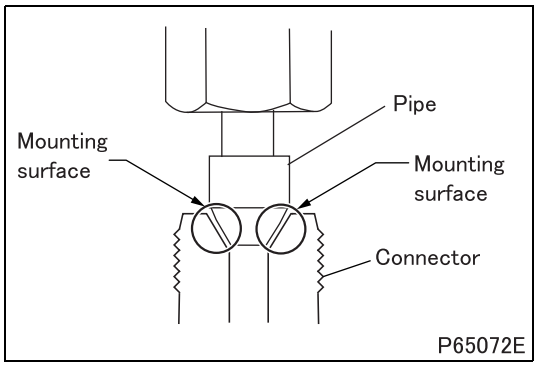

■Installation: Fuel pipe

- Ensure that the pipe and mounting surfaces of the connector are flat and free from damage.
- Bring the pipe into intimate contact with mounting surfaces of the connector evenly, and temporarily tighten it without applying an excessive force.
- Tighten it to the specified torque after temporary tightening.

https://truckmanualshub.com/

M E M O

https://truckmanualshub.com/

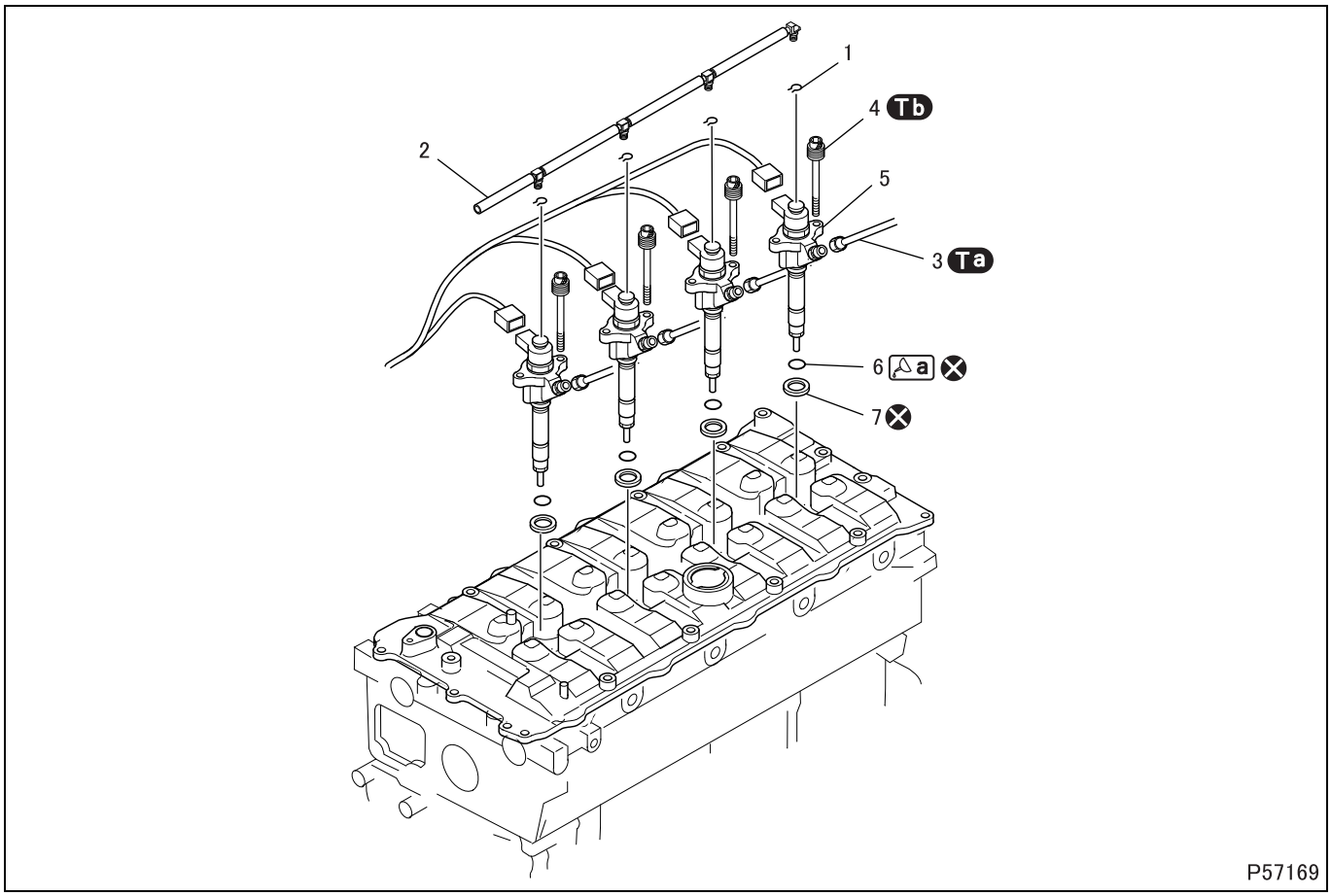

● **Disassembly sequence**

1 Snap ring
2 Fuel return hose
3 Injection pipe
4 Bolt (with hexagonal hole)
5 Injector
6 O-ring
7 Nozzle tip gasket

⊗: Non-reusable parts

WARNING ⚠

- **Fuel is highly flammable. Wipe up spilled fuel to avoid the risk of fire.**
- **Spilled fuel may catch fire and therefore, must be wiped off completely.**

CAUTION ⚠

- **When removing the injectors, take care not to strike them with the too, etc.**
- **To prevent an injection failure or any other trouble, make sure that no dust enters the injectors and injection pipes.**

- Ensure that no water, oil, etc. is collected around the injection mounting position and then remove the injector.
- Contact Bosch service station for any service needs of the injector.

● **Assembly sequence**

Follow the disassembly sequence in reverse.

CAUTION ⚠

- **When removing the injectors, take care not to strike them with the tool, etc.**
- **The injector mounting bolts must always be tightened to the specified torque. Overtightening them could result in a deformed injector and consequently defective fuel injection.**

Tightening torque (Unit: N·m {kgf·m})

Mark	Parts to be tightened	Tightening torque	Remarks
Ta	Injection pipe	40.5 ± 2.5 {4.1 ± 0.25}	–
Tb	Bolt (injector mounting)	5.2 to 7.2 {0.53 to 0.73}	–

Lubricant and/or sealant

Mark	Points of application	Specified lubricant and/or sealant	Quantity
a	O-ring	Engine oil	As required

Special tools (Unit: mm)

Mark	Tool name and shape	Part No.	Application
a	Socket wrench A: 17 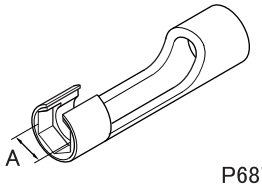 	MH063020	Removal and Installation of injection pipe

◆Removal procedure◆

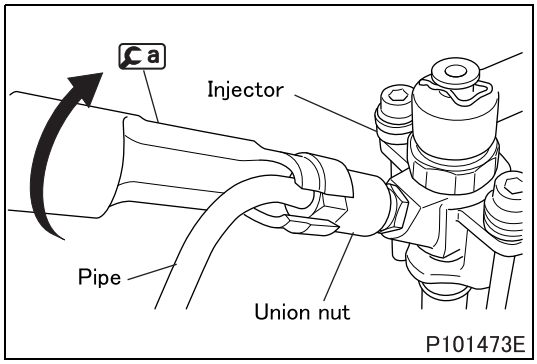

■ Removal: Injection pipe

- Position a on the pipe and then loosen the union nut.

◆Installation procedure◆

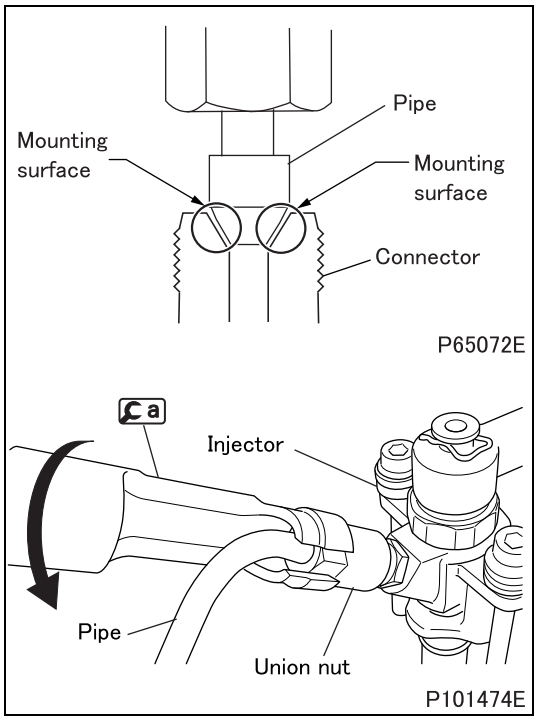

■ Installation: Injection pipe

- Ensure that the pipe and mounting surfaces of the connector are flat and free from damage.
- Bring the pipe into intimate contact with mounting surfaces of the connector evenly, and temporarily tighten it without applying an excessive force.
- After temporary tightening, position the torque wrench on a and then tighten them to the specified torque.

https://truckmanualshub.com/

GROUP 13E
ENGINE CONTROL SYSTEM

SPECIFICATIONS ..... **(See Gr13.)**

STRUCTURE AND OPERATION
1. **Overview** **13E-2**
2. **Electronic Control System** **13E-11**
3. **Electronic Control Unit Connection Diagram** **13E-16**

TROUBLESHOOTING
1. **Inspections Based on Diagnosis Codes** **13E-18**
2. **Multi-Use Tester Service Data** **13E-52**
3. **Actuator Test Using Multi-Use Tester** **13E-55**
4. **Work When Replacing the Engine Electronic Control Unit** **13E-57**
5. **Electronic Control Unit Input/Output Table** **13E-61**

INSPECTION OF ELECTRICAL PARTS ..... **(See Gr54.)**

INSTALLED LOCATIONS OF PARTS ..... **(See Gr54.)**

ELECTRIC CIRCUIT DIAGRAM ..... **(See Gr54.)**

https://truckmanualshub.com/

1. Overview

- In the common rail system, an electronic control unit monitors various aspects of the engine (engine speed, throttle opening, coolant temperature, etc.) using information from sensors. In accordance with these data, the electronic control unit effects control over the fuel injection quantity, fuel injection timing, and fuel injection pressure in order to optimize the engine's operation.
- The electronic control unit has a diagnosis function that enables it to recognize abnormalities in the common rail system's major components and alert the driver to them.
- The common rail system consists mainly of an electronically controlled supply pump; injectors; a common rail; and the electronic control unit and sensors that are used to control the other components.

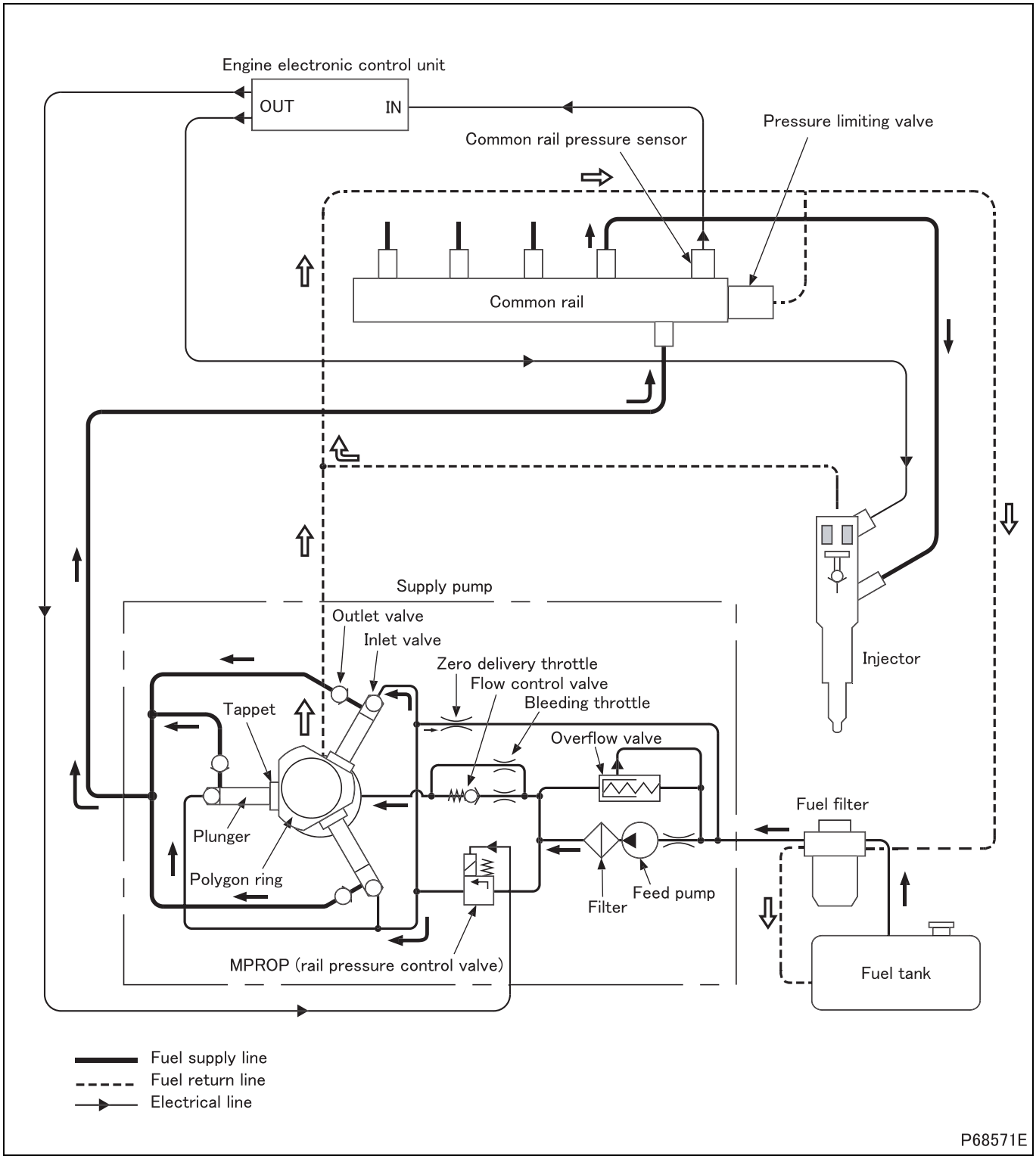

- When the engine is cranked by means of the starter switch, the feed pump (this is located inside the supply pump) simultaneously draws fuel from the fuel tank and feeds it via the fuel filter to the MPROP (rail pressure control valve). A quantity of fuel metered by the MPROP is supplied via the inlet valves to the plunger chambers.
- The fuel in the plunger chambers is pressurized. The outlet valves are then opened, and the fuel is fed under pressure to the common rail.
- The pressurized fuel is held in the common rail and then uniformly fed to the injectors.
- In response to signals from the engine electronic control unit, a magnetic valve in each injector causes the injector to inject fuel into the relevant combustion chamber at the optimal timing and in the optimal quantity.

https://truckmanualshub.com/

1.1 Supply pump

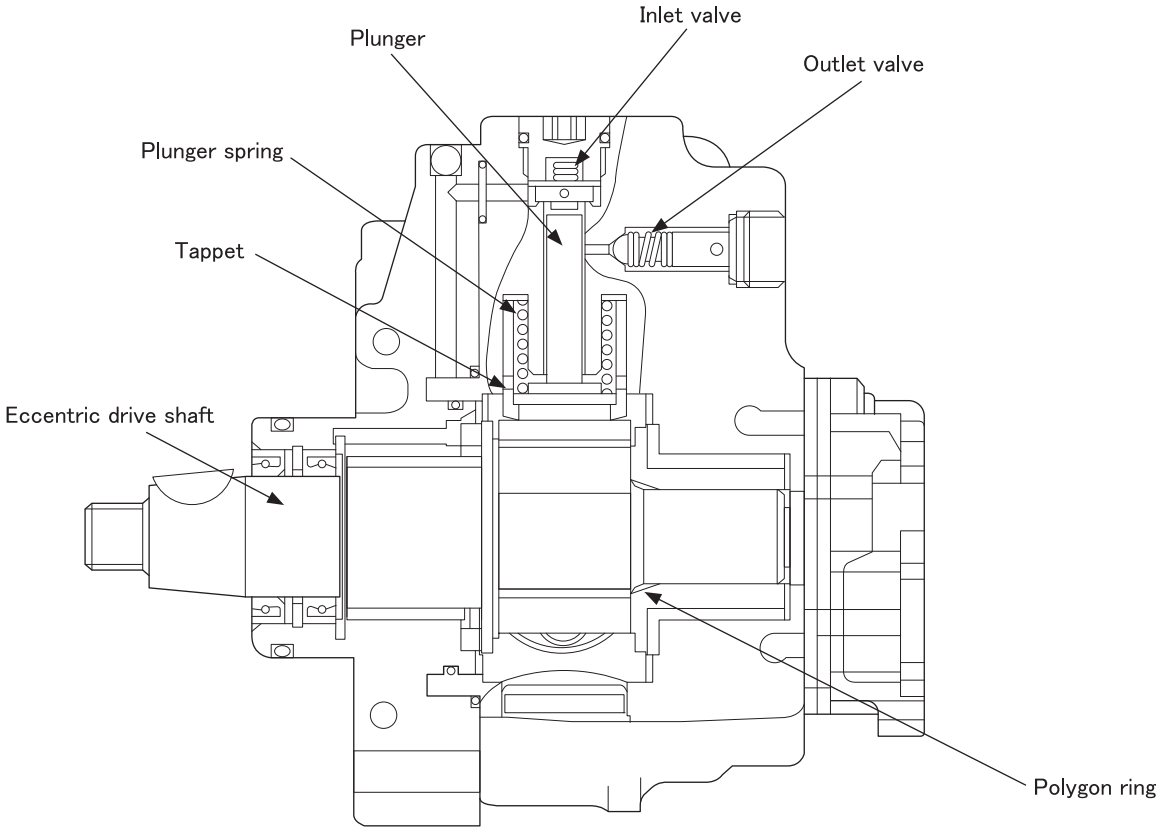

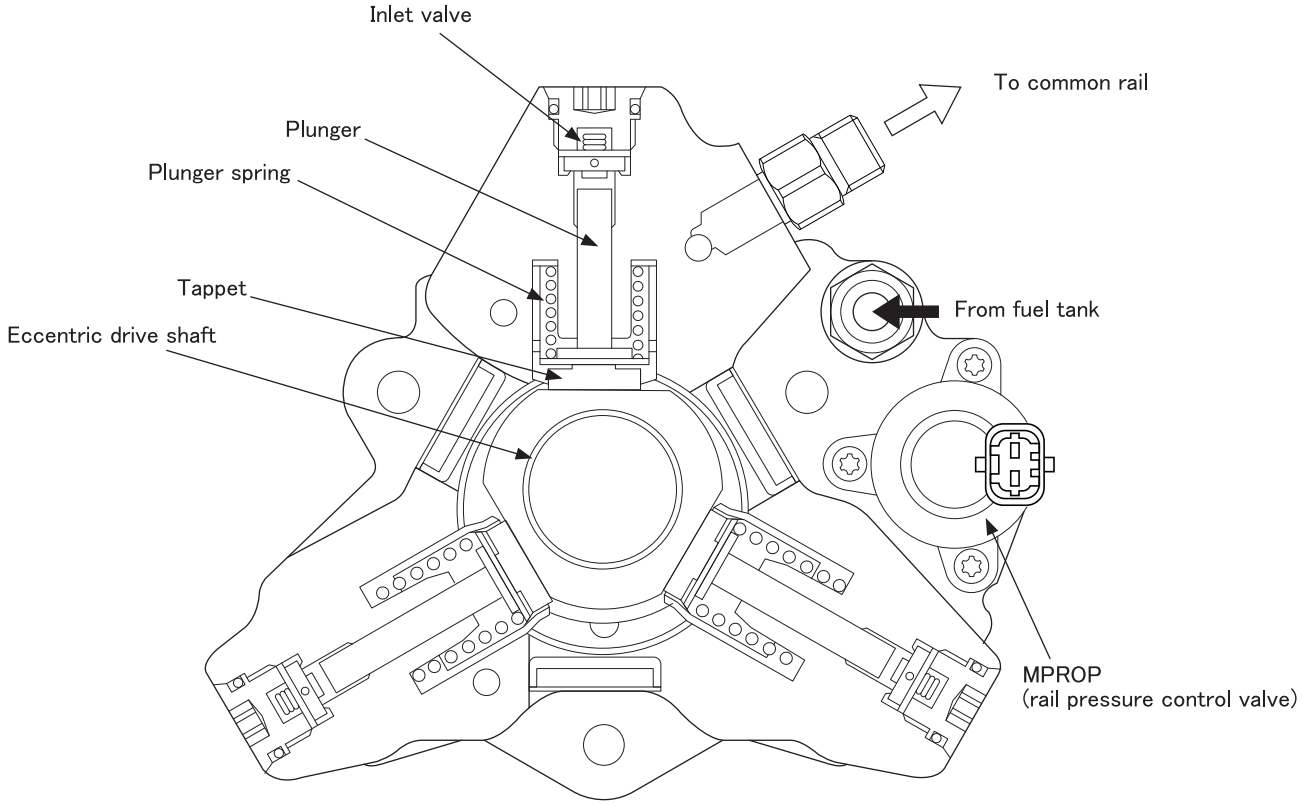

P68999E

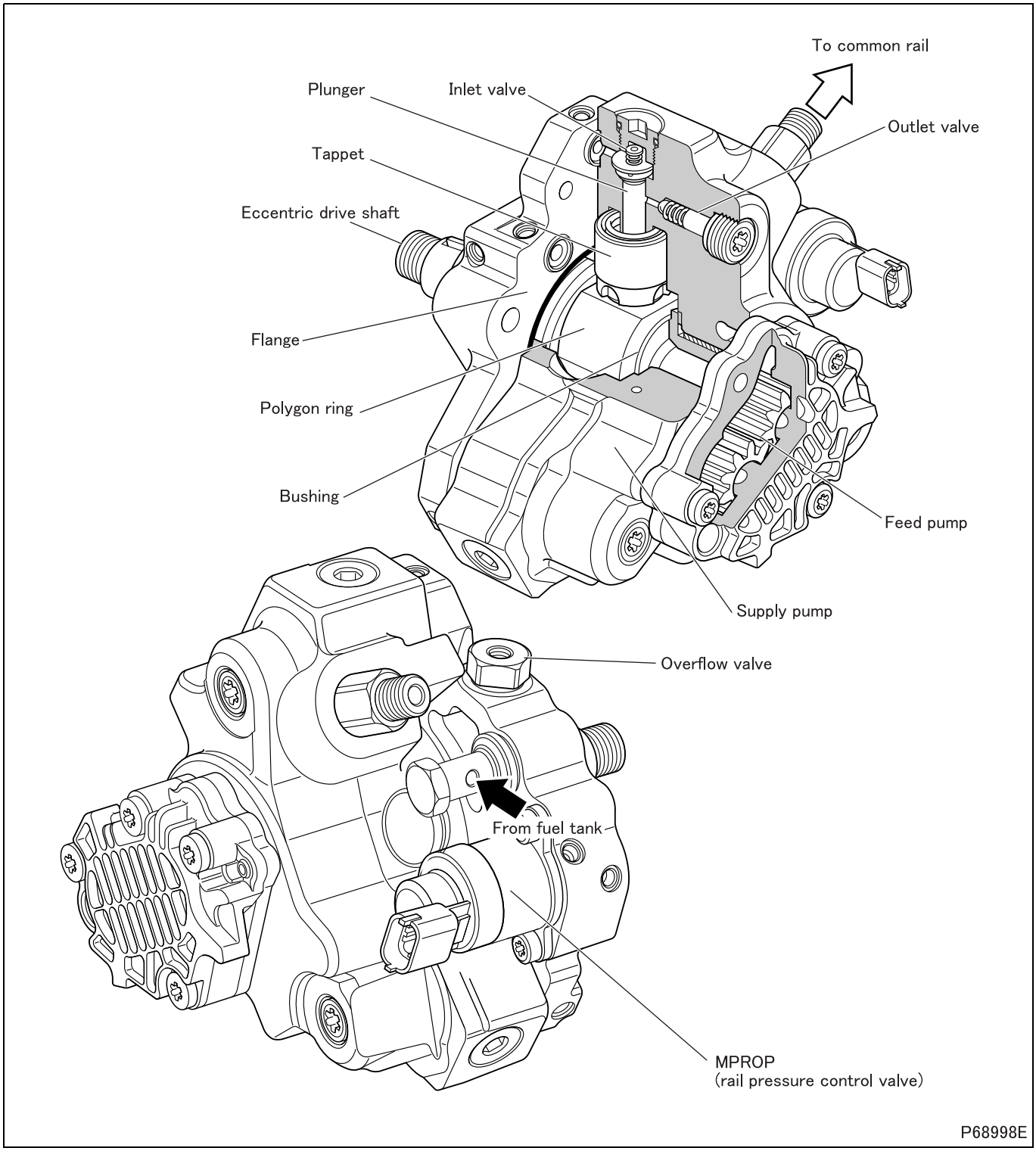

CAUTION ⚠

- **Be sure to connect the MPROP (rail pressure control valve) connector to the engine harness before starting the engine. If the engine were started with the MPROP connector not connected, control of the supply pump by the engine electronic control unit would not be possible and a fault would ensue.**

- The supply pump pressurizes fuel and supplies it in a highly pressurized state.
- Fuel drawn from the fuel tank by the feed pump is not supplied directly to the plungers. It is supplied first to the MPROP (rail pressure control valve), which controls the amount of fuel reaching the plungers.
- If the fuel pressure exceeds a certain level, the overflow valve returns fuel to the inlet side of the feed pump. This operation keeps the pressure of the fuel fed to MPROP, constant.
- Rotation of the eccentric drive shaft causes (via the tappets) up-down movement of the plungers. Fuel in the plunger chambers is thus highly pressurized.

https://truckmanualshub.com/

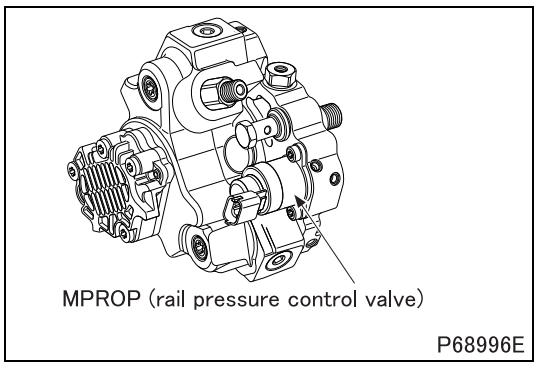

(1) MPROP (rail pressure control valve)

- The MPROP receives fuel from the feed pump and feeds fuel toward the plungers of the supply pump in such a quantity that the fuel pressure corresponds to that required by the engine electronic control unit.
- When the MPROP is not operating, i.e., when current is not flowing, fuel flows at its maximum rate. When current flows, the piston in the MPROP is pressed down such that fuel is not fed toward the plungers.
- The engine electronic control unit controls the ratio of current-off time (duty ratio).

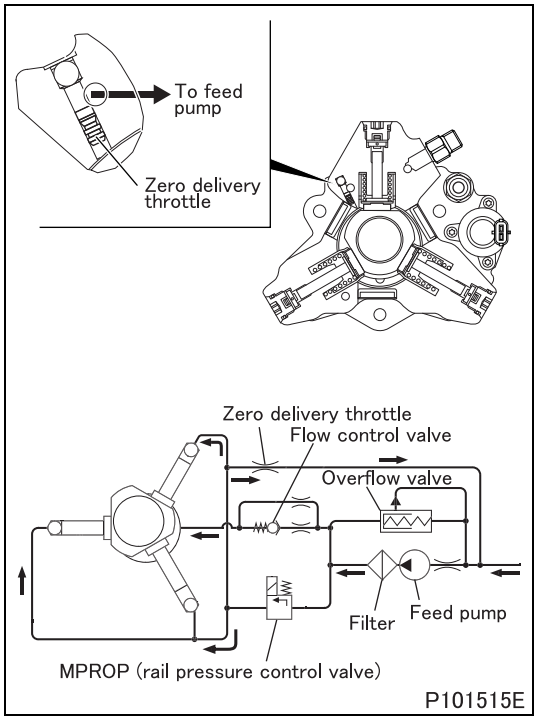

(2) Zero delivery throttle

- A small amount of fuel can flow through the MPROP (rail pressure control valve) to the plunger even when the MPROP reduces fuel flow to the fullest extent. To stop the fuel feed to the plunger, the zero delivery throttle is opened to return fuel to the feed pump, causing the fuel flow for the plunger to reach zero.

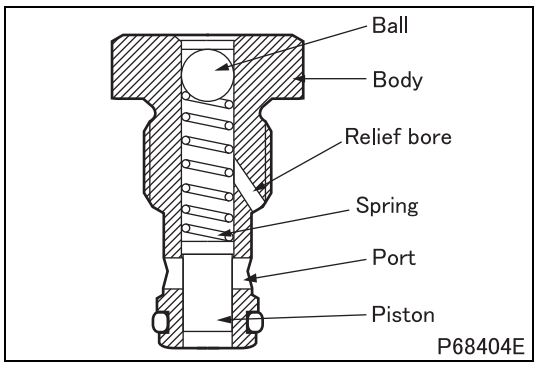

(3) Overflow valve

- The overflow valve opens when the pressure of the fuel sent from the feed pump exceeds the predetermined level to return the excess fuel to the inlet side of the feed pump. The fuel which has overflowed enters into the eccentric drive shaft chamber to lubricate the parts in the chamber.

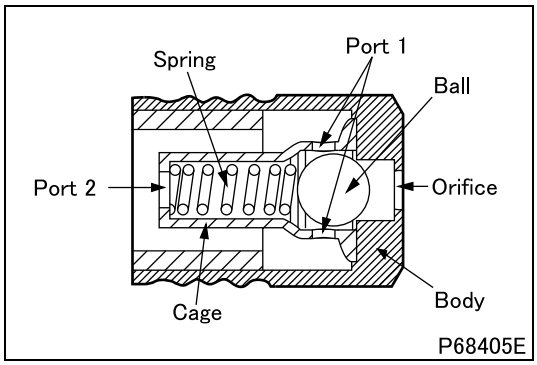

(4) Flow control valve

- The flow control valve diverts the excess of fuel sent from the feed pump into the eccentric drive shaft chamber for the part lubrication.

1.2 Common rail

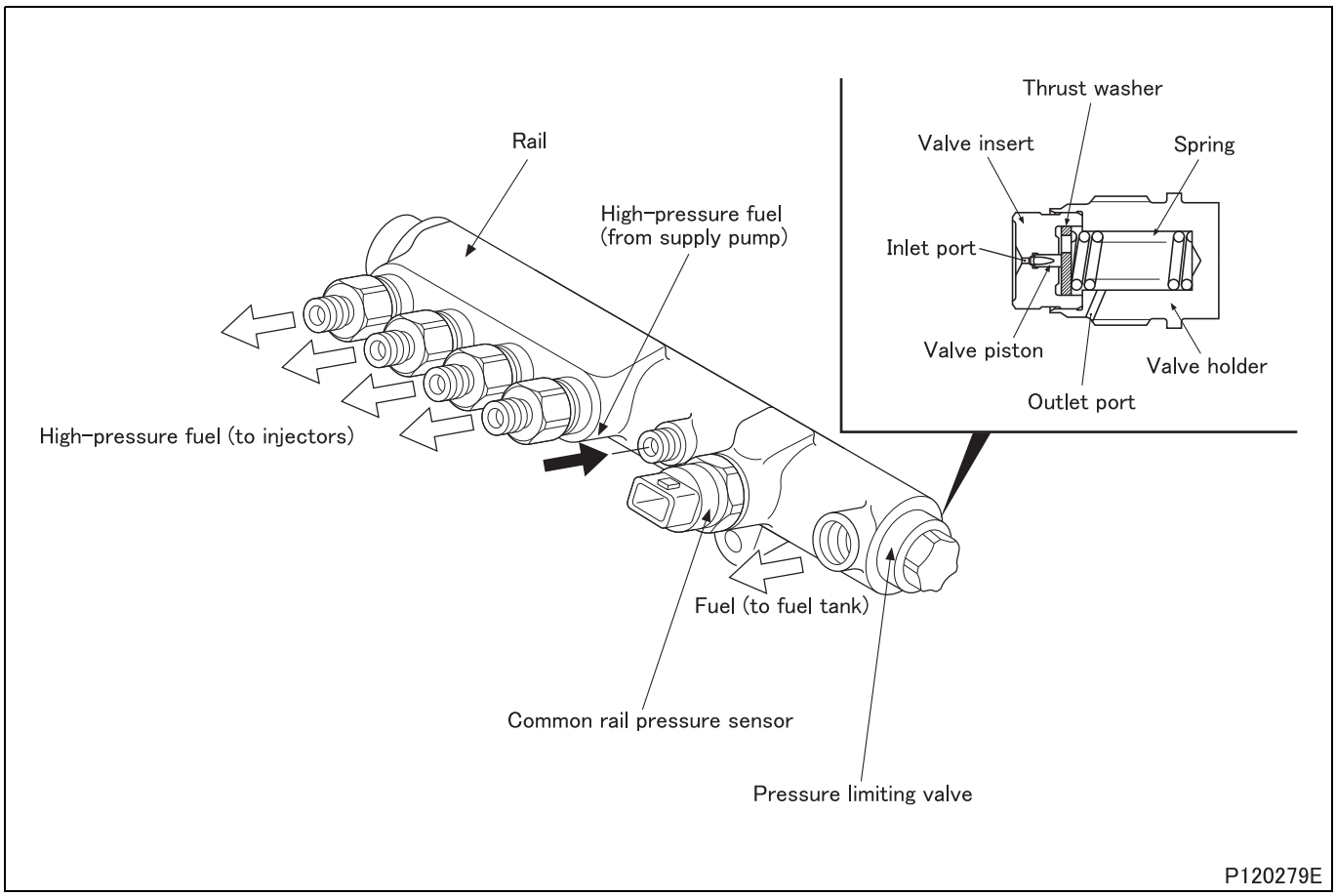

- The common rail distributes to the injectors high-pressure fuel that has been fed from the supply pump.
- Each flow limiter prevents an abnormal outflow of fuel. It does so by blocking the fuel passage in the event of fuel leakage from the injection pipe or excessive injection of fuel from the injector.
- The common rail pressure sensor is used in feedback control. It senses the fuel pressure inside the common rail and feeds a corresponding signal to the electronic control unit.
- If the fuel pressure in the common rail exceeds a certain, set level, the valve piston in the pressure limiting valve pushes and compresses the spring such that fuel is able to escape. The pressure limiting valve thus prevents the fuel pressure from becoming higher than the set pressure.

https://truckmanualshub.com/

1.3 Injector

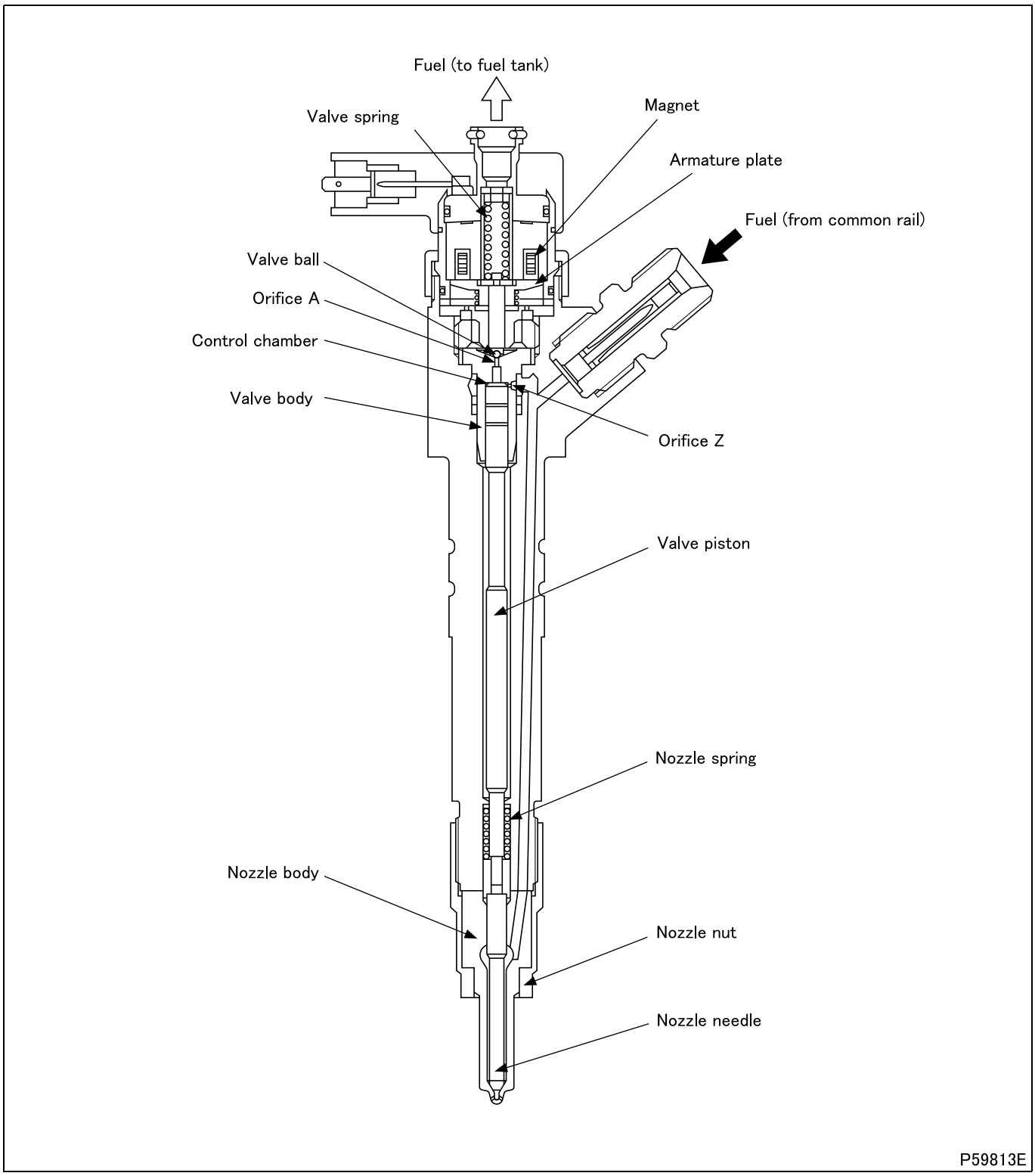

- In accordance with electrical signals from the engine electronic control unit, each injector supplies high-pressure fuel from the common rail to the relevant combustion chamber of the engine at the optimal timing and in the optimal quantity.
- The injector is divided into the control section and the injector section.
  - The control section consists of the control chamber, magnet, valve spring, armature plate, valve ball, valve body, valve piston, orifice A, and orifice Z. The valve piston is located between the control section and the injection section.
  - The injection section consists of the nozzle body, nozzle needle, nozzle spring, and nozzle nut.

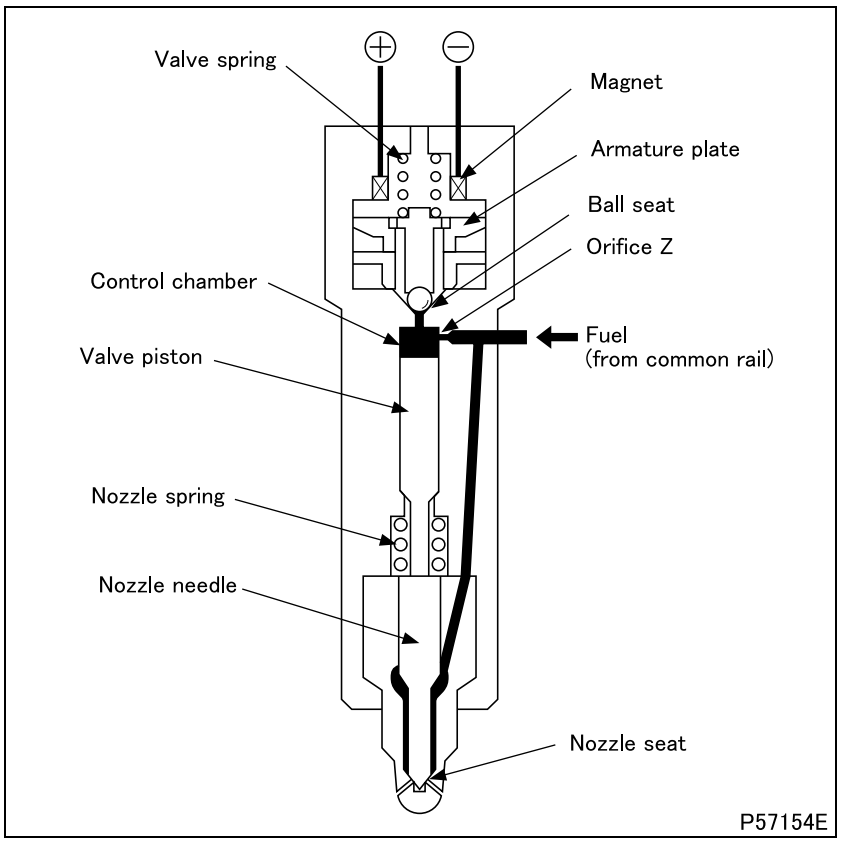

(5) Operation

(5.1) Injection not taking place

- With the magnet not energized, the armature plate is pushed up by the valve spring such that the ball seat is closed.
- The high-pressure fuel acts upon the control chamber via orifice Z. The same pressure acts upon the nozzle needle.
- The fuel pressure acting on the nozzle needle cannot overcome the valve piston and nozzle spring, so the nozzle needle stays in its downward-pushed position and injection does not take place.

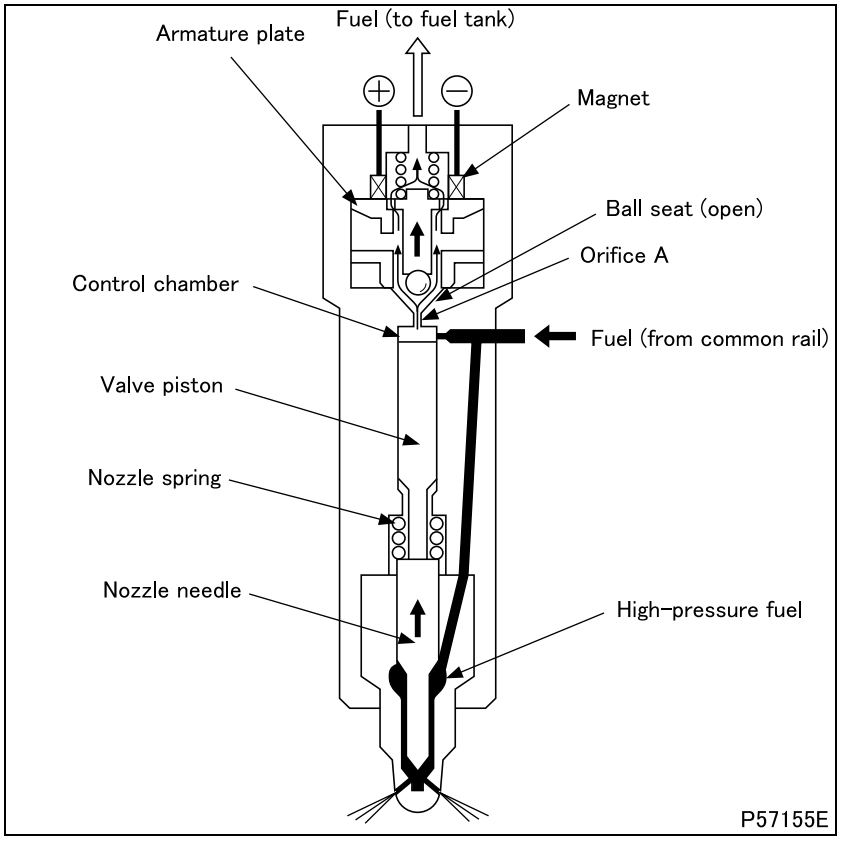

(5.2) Start of injection

- When the magnet is energized, the resulting electromagnetic force draws the armature plate upward, causing the ball seat to open.
- Fuel in the control chamber passes through the ball seat and orifice A and flows to the fuel tank.
- With the pressure in the control chamber reduced, the fuel acting on the nozzle needle overcomes the valve piston and nozzle spring, pushing up the nozzle needle such that injection starts.
- If the magnet remains energized, the injection rate reaches its maximum level.

https://truckmanualshub.com/

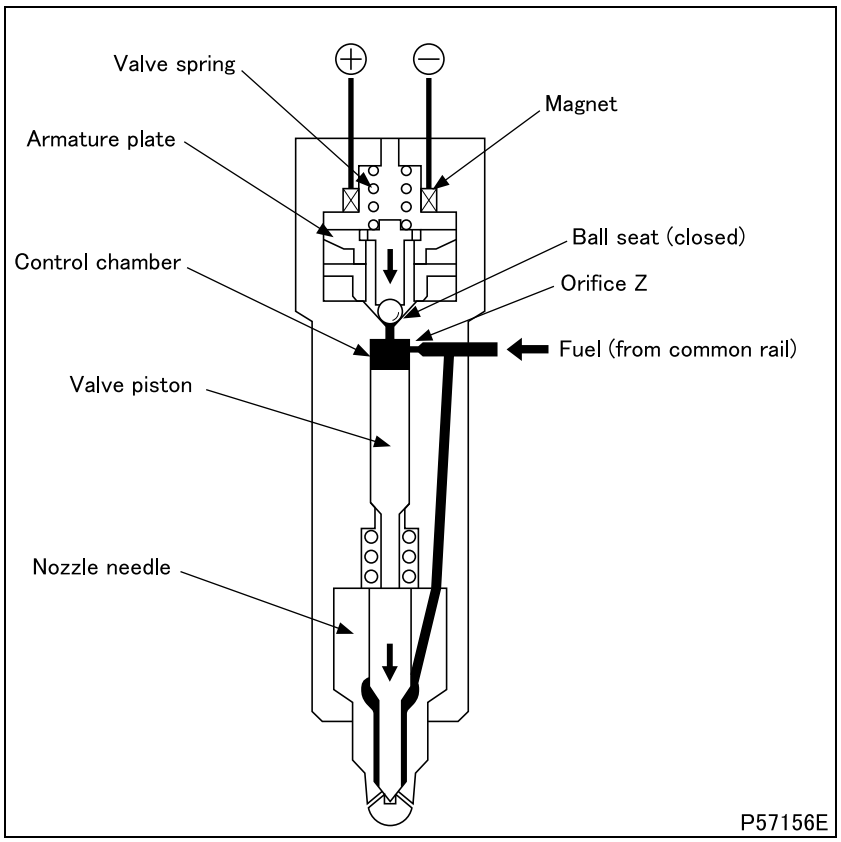

(5.3) End of injection

- When energization of the magnet is stopped, the armature plate is pushed downward by the valve spring such that the ball seat closes. At this time, fuel flows into the control chamber via orifice Z, pushing down the valve piston and nozzle needle such that injection finishes.

2. Electronic Control System

2.1 System block diagram

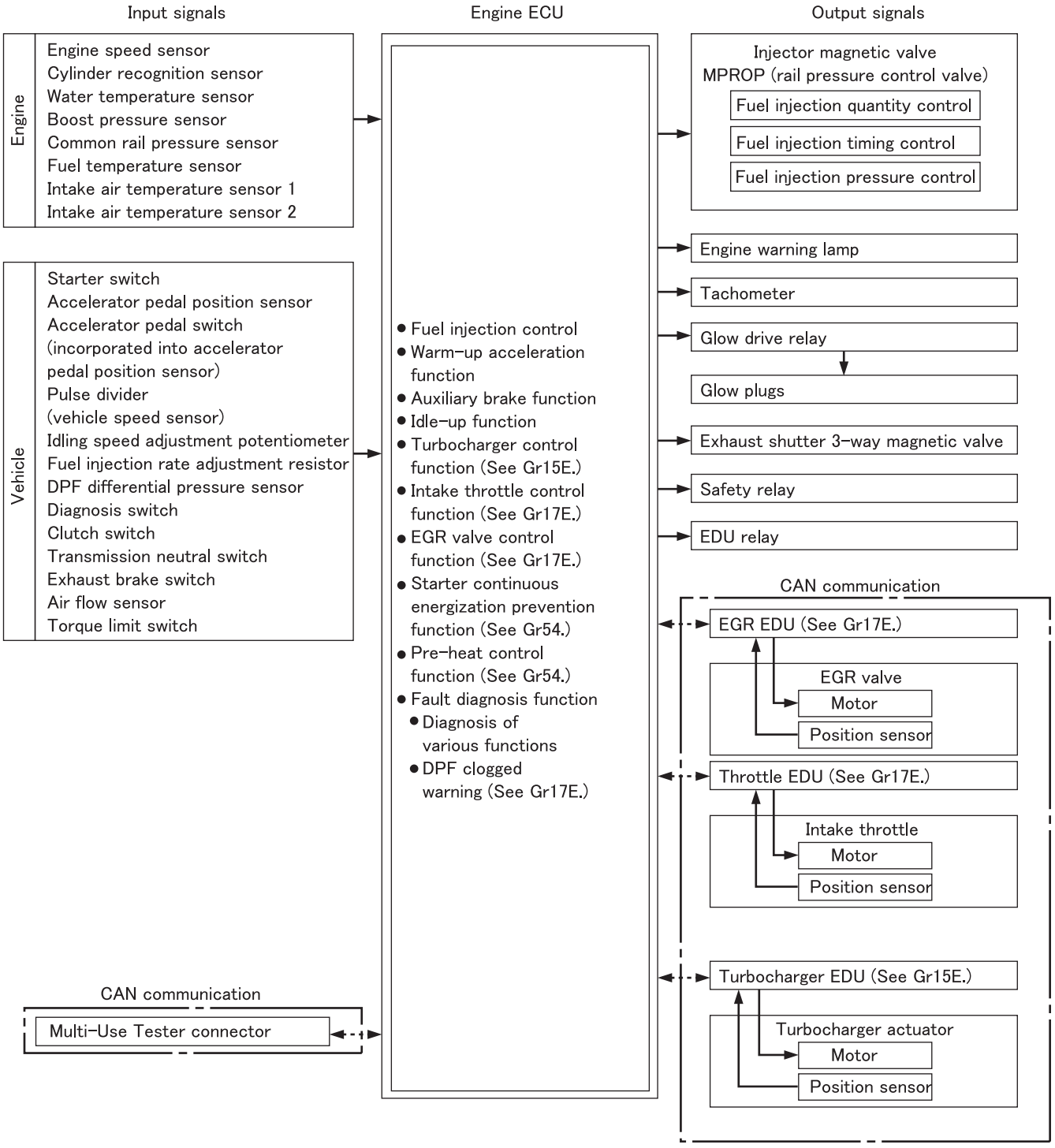

CAN: Controller area network
ECU: Electronic control unit
EGR: Exhaust gas recirculation
EDU: Electronic drive unit
DPF: Diesel Particulate Filter

P124576E

https://truckmanualshub.com/

Part	Main function/operation
Engine speed sensor	Sensing of engine speed
Cylinder recognition sensor	Cylinder recognition
Water temperature sensor	Sensing of coolant temperature
Boost pressure sensor	Sensing of boost pressure
Common rail pressure sensor	Sensing of common rail pressure
Fuel temperature sensor	Sensing of fuel temperature
Intake air temperature sensor 1	Sensing of intake air temperature
Intake air temperature sensor 2	Sensing of boost air temperature
Starter switch	Senses that the engine is in starting condition with the starter switch in START position.
Accelerator pedal position sensor	Sensing of extent of accelerator pedal depression
Accelerator pedal switch (incorporated into accelerator pedal position sensor)	Sensing of released/depressed condition of accelerator pedal (ON with pedal released)
Pulse divider (vehicle speed sensor)	Sensing of vehicle speed
Idling speed adjustment potentiometer	Acceleration of warm-up
Fuel injection rate adjustment resistor	Correction of fuel injection rate
DPF differential pressure sensor	Detection of pressure differential between DPF inlet pressure and atmospheric pressure
Diagnosis switch	Output of diagnosis codes
Clutch switch	Sensing of released/depressed condition of clutch pedal (OFF with pedal released)
Transmission neutral switch	Detection of transmission neutral condition (OFF with transmission in neutral)
Exhaust brake switch	Exhaust brake ON/OFF control
Air flow sensor	Sensing of intake air flow rate
Torque limit switch	Detection of 1st and reverse positions
Injector magnetic valve	Control of fuel injection rate, fuel injection quantity, and fuel injection timing
MPROP (rail pressure control valve)	Control of fuel injection pressure
Engine warning lamp	Indication of system abnormalities
Tachometer	Indication of engine speed (in meter cluster)
Glow drive relay	ON/OFF control of glow plugs
Exhaust shutter 3-way magnetic valve	ON/OFF control of exhaust shutter valve
Safety relay	Control of starter continuous energization prevention function
EDU relay	Switching ON/OFF supply of power to exhaust gas recirculation electronic drive unit, throttle and turbocharger electronic drive unit
CAN communication (EGR EDU, Throttle EDU, Turbocharger EDU)	Engine data recognized by the engine electronic control unit are outputted to the CAN bus to enable systems to obtain data that they need for control. Each electronic drive unit issues signals to the engine electronic control unit via the CAN bus to enable it to effect engine control appropriate for each type of system control.
CAN communication (Multi-Use Tester)	Allowing the service personnel to read or erase diagnosis codes and obtain the electronic control unit and vehicle data using a scan tool.

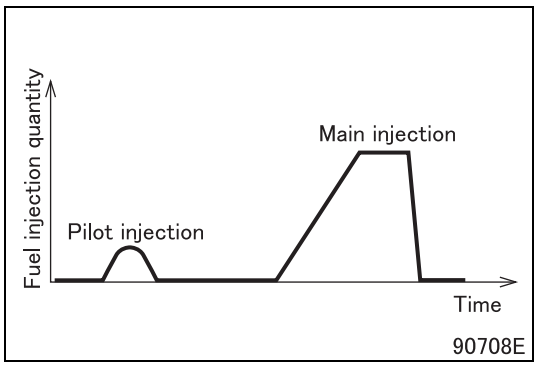

2.2 Fuel injection control

(1) Pilot injection

- Pilot injection entails the injection of an extremely small amount of fuel ahead of the main injection.
- Pilot injection suppresses heat generation early in the injection cycle and thus suppresses NOx generation and noise at the start of combustion.

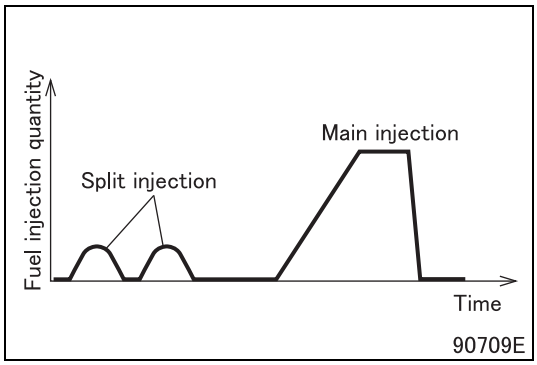

(2) Split injection control

- Split injection entails the injection of an extremely small amount of fuel two or more times ahead of the main injection.
- Split injection increases the fuel's combustibility and thus enhances the engine's cold startability.

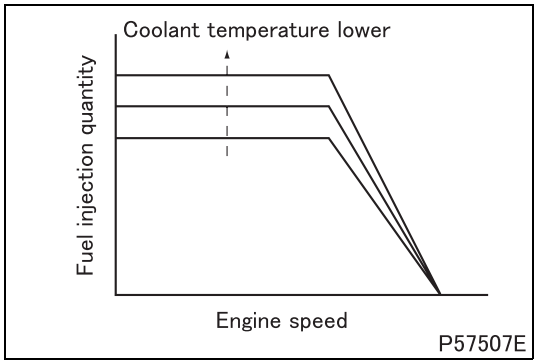

2.3 Fuel injection quantity control

(1) Fuel injection quantity during engine startup

- During engine startup, the fuel injection quantity is determined in accordance with the engine speed and coolant temperature.

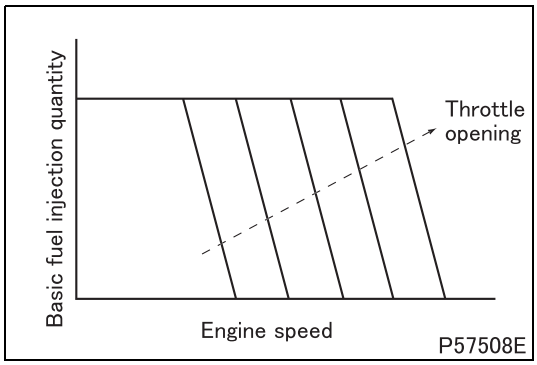

(2) Basic fuel injection quantity

- The basic fuel injection quantity is determined in accordance with the engine speed and throttle opening.

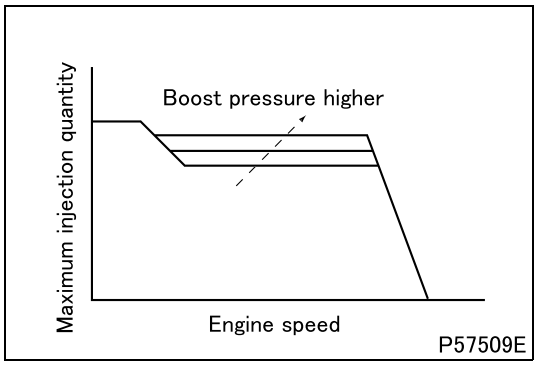

(3) Maximum injection quantity

- The maximum injection quantity is calculated from the engine speed and boost pressure.

https://truckmanualshub.com/

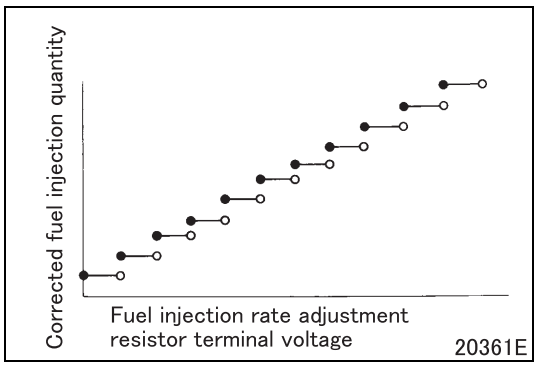

(4) Fuel injection rate adjustment resistor correction amount

- To limit inconsistency in the injection quantity, the injection quantity is corrected by the fuel injection rate adjustment resistor.

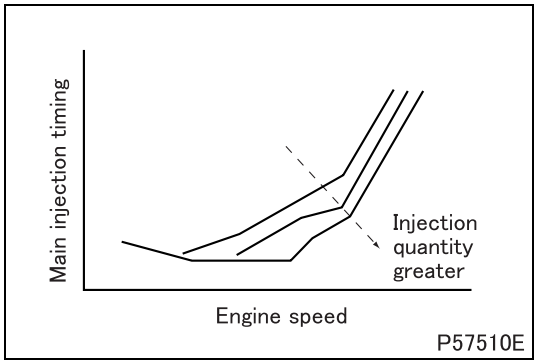

2.4 Fuel injection timing control

(1) Main injection timing

- The main injection timing is calculated from the fuel injection quantity and engine speed.

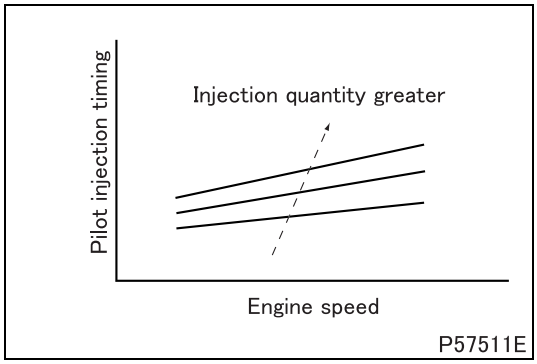

(2) Pilot injection timing (pilot interval)

- The pilot injection timing is calculated from the fuel injection quantity and engine speed.

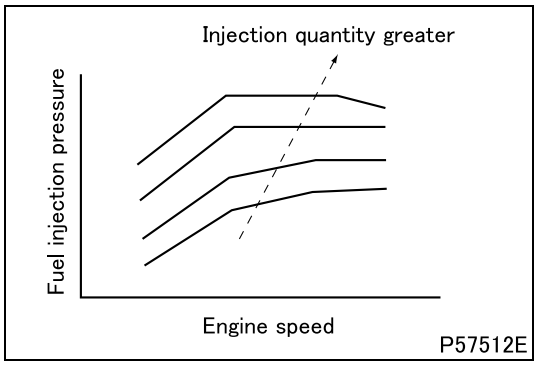

2.5 Fuel injection pressure control

- The fuel injection pressure is calculated from the fuel injection quantity and engine speed.

2.6 Warm-up acceleration function

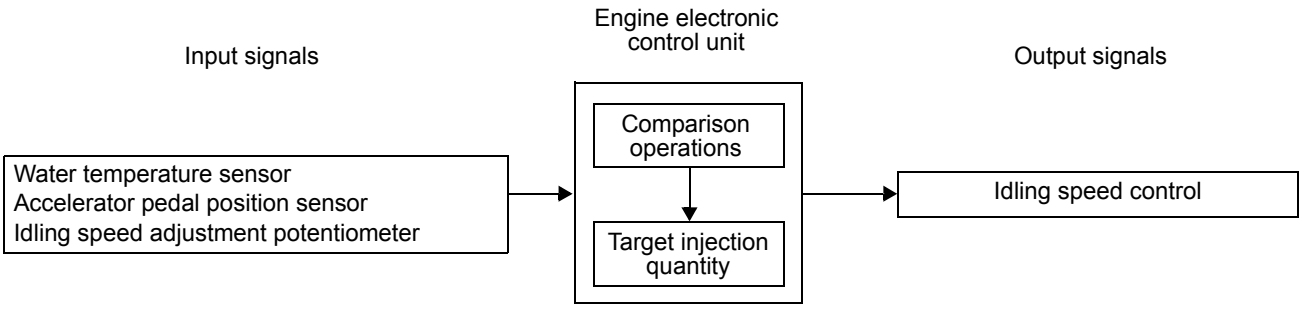

- The warm-up acceleration function accelerates engine warm-up by varying the engine's idling speed in accordance with the engine's coolant temperature. It can operate either automatically or manually. Selection is made using the idling speed adjustment potentiometer.

2.7 Auxiliary brake function

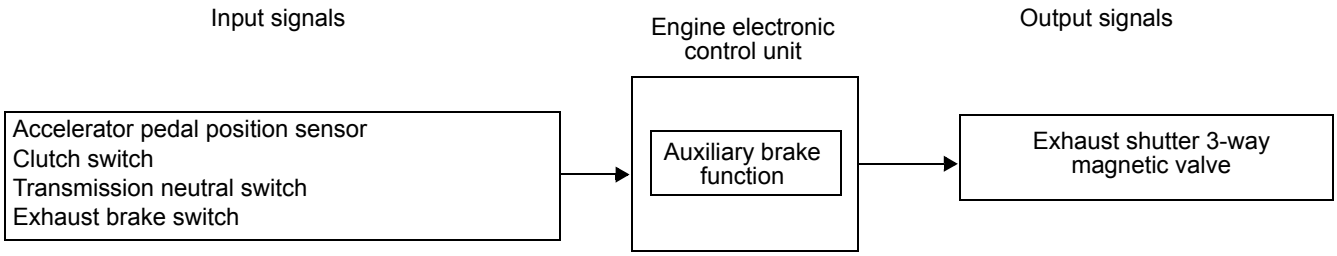

- The auxiliary brake function activates or deactivates the exhaust shutter 3-way magnetic valve according to the vehicle condition to control the exhaust brake.

2.8 Idle-up function

- The idle-up function increases the engine idling speed when a load is applied to the engine by other system (such as air conditioner) or when the warm-up acceleration function are activated.

2.9 Fault diagnosis function

- The sensors and other components are continuously monitored for faults. In the event that a component is found faulty, an indication is made in the meter cluster to alert the driver, the fault location is memorized in the form of a diagnosis code, and the control during fault is initiated.
- While the control during fault is taking place, the system's functionality is limited to ensure vehicle and driver safety. It is possible to read the memorized diagnosis code using a Multi-Use Tester or from flashing of the warning lamp.
- The control during fault recovers by servicing the faults. However, for some diagnosis codes, the warning lamp stays illuminated until the normal signals are input for several times.
- Diagnosis codes shown by the Multi-Use Tester and those indicated by flashing of the warning lamp are different.
- The Multi-Use Tester is capable of showing more detailed diagnosis codes.

https://truckmanualshub.com/

3. Electronic Control Unit Connection Diagram

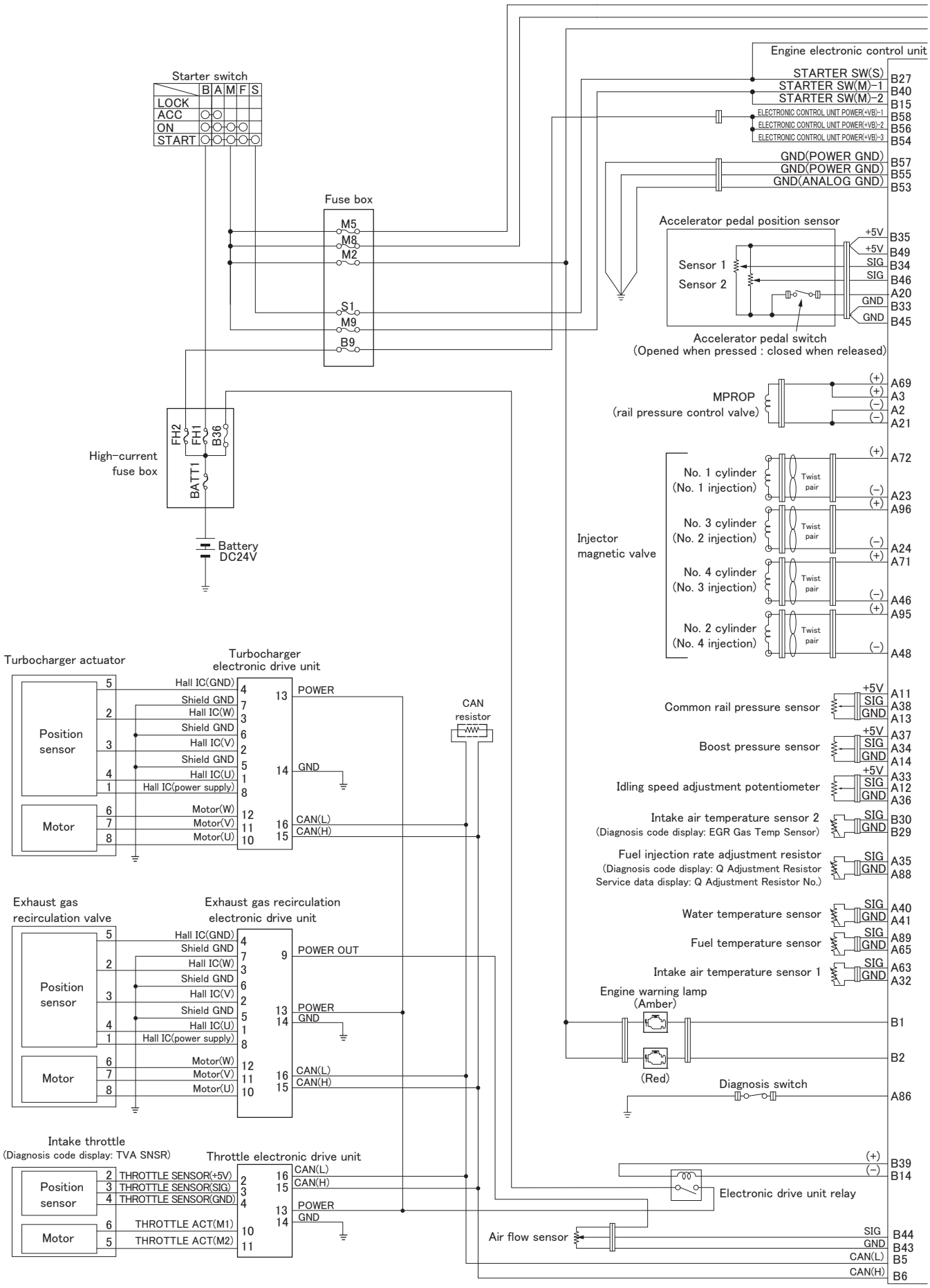

C10044-ECU-13E-1

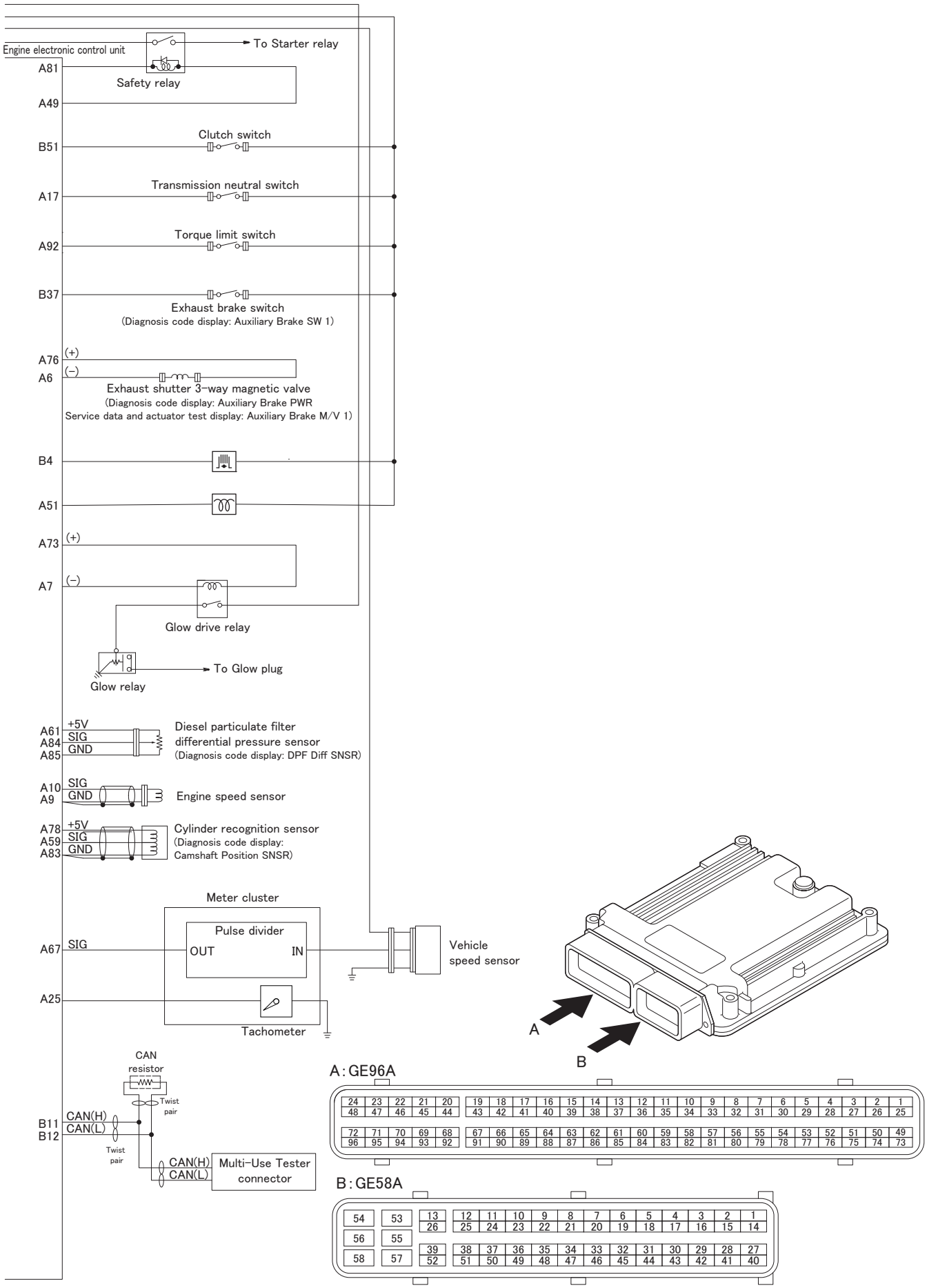

C10044-ECU-13E-2

https://truckmanualshub.com/

1. Inspections Based on Diagnosis Codes

1.1 Diagnosis code list

- Diagnosis codes shown by the Multi-Use Tester and those indicated by flashing of the warning lamp are different.
- The Multi-Use Tester is capable of showing more detailed diagnosis codes.
- The control during fault recovers by servicing the faults. However, for some diagnosis codes, the warning lamp stays illuminated until the normal signals are input for several times.

Multi-Use Tester indication		Warning lamp indication			Remarks
Code	Message	Flashes	Orange	Red	
P0016	Ne SNSR Offset/Backup Mode	14	O	O	
P0045	VGT Actuator (Open)	51	O	–	
P0046	VGT Actuator (Performance)	51	O	–	
P0047	VGT Actuator (Low)	51	O	–	
P0069	Boost Press SNSR (Correlation)	32	O	–	
P0087	CRS (Too Low)	22	O	O	
		36	O	–	
P0088	CRS (Too High)	23	O	O	
P0089	MPROP (Over Load)	63	O	–	
P0090	MPROP (Open Circuit)	63	O	–	
P0091	MPROP (Low)	63	O	–	
P0092	MPROP (High)	63	O	–	
P0093	CRS (Fuel Leak)	22	O	O	
P0101	Airflow Sensor (Plausibility)	17	O	–	
P0102	Airflow Sensor (Low)	17	O	–	
P0103	Airflow Sensor (High)	17	O	–	
P0112	INT Air Temp. SNSR (Low)	44	O	–	
P0113	INT Air Temp. SNSR (High)	44	O	–	
P0116	Water Temp SNSR (Plausibility)	21	O	–	
P0117	Water Temp SNSR (Low)	21	O	–	
P0118	Water Temp SNSR (High)	21	O	–	
P0120	TVA SNSR	28	O	–	
P0148	CRS (Fuel Delivery)	22, 23	O	O	
		36	O	–	
P0182	Fuel Temp. Sensor (inlet) Low	41	–	–	
P0183	Fuel Temp. Sensor (inlet) High	41	–	–	
P0191	CRS Pressure SNSR (Plausibility)	11	O	–	
P0192	CRS Pressure SNSR (Low)	11	O	–	
P0193	CRS Pressure SNSR (High)	11	O	–	
P0201	Injector M/V-Cylinder 1 (Load)	37	O	–	
P0202	Injector M/V-Cylinder 2 (Load)	38	O	–	
P0203	Injector M/V-Cylinder 3 (Load)	39	O	–	
P0204	Injector M/V-Cylinder 4 (Load)	8	O	–	
P0219	Engine Overrunning	7	–	O	
P0234	Over Boost	54	O	–	
P0236	Boost Press SNSR (Plausi)	54	O	–	
P0237	Boost Press SNSR (Low)	32	O	–	
P0238	Boost Press SNSR (High)	32	O	–	
P0261	Injector #1-A (Low)	37	O	–	
P0262	Injector #1-A (High)	37	O	–	
P0264	Injector #2-A (Low)	38	O	–	
P0265	Injector #2-A (High)	38	O	–	

Multi-Use Tester indication		Warning lamp indication			Remarks
Code	Message	Flashes	Orange	Red	
P0267	Injector #3-A (Low)	39	O	–	
P0268	Injector #3-A (High)	39	O	–	
P0270	Injector #4-A (Low)	8	O	–	
P0271	Injector #4-A (High)	8	O	–	
P0335	Engine Revolution SNSR	15	O	–	
P0339	Engine Revolution SNSR (Plausi)	15	O	O	
P0340	Camshaft Position SNSR	12	O	–	
P0344	Camshaft Position SNSR (Plausi)	12	O	–	
P0380	Relay for Glow Relay	26	–	–	
P0381	Glow Lamp	89	–	–	
P0401	EGR Flow (Insufficient)	2	O	–	
P0402	EGR Flow (Excessive)	2	O	–	
P0403	EGR1 (Actuator Circuit)	67	O	–	
P0404	EGR System	2	O	–	
P0409	EGR1 (Position Sensor)	67	O	–	
P040C	EGR Gas Temp Sensor (Low)	9	O	–	
P040D	EGR Gas Temp Sensor (High)	9	O	–	
P0475	Exhaust Brake PWR (Open)	93	O	–	
P0476	Exhaust Brake PWR (Performance)	93	O	–	
P0477	Exhaust Brake PWR (Low)	93	O	–	
P0478	Exhaust Brake PWR (High)	93	O	–	
P0500	Vehicle Speed Sensor	25	O	–	
P0508	Idle Volume & Idle Acc (Low)	31	–	–	
P0509	Idle Volume & Idle Acc (High)	31	–	–	
P0562	Power Supply Voltage (Low)	33	O	–	
P0563	Power Supply Voltage (High)	33	O	–	
P0600	CAN Communication	64	–	O	
		73	O	–	
P0607	ECU System	33	O	O	
P060B	A/D Converter	33	O	O	
		63	O	–	
P0615	Starter Safety Relay (Over Load)	48	–	O	
P0616	Starter Safety Relay (Low)	48	–	O	
P0617	Starter Safety Relay (High)	48	–	O	
P061B	ECU Performance (Calc)	33	O	–	
P061C	ECU Performance (Ne)	33	O	–	
P062D	Injector Bank 1	82	O	–	
P062E	Injector Bank 2	82	O	–	
P062F	ECU System (EEPROM)	33	O	–	
P0642	Sensor Supply Voltage 1 (Low)	81	O	–	
P0643	Sensor Supply Voltage 1 (High)	81	O	–	
P0650	MIL	3	–	–	
P0652	Sensor Supply Voltage 2 (Low)	81	O	–	
P0653	Sensor Supply Voltage 2 (High)	81	O	–	
P0657	M/V Voltage (Low)	79	O	–	
P0685	EDU Relay (Open)	84	O	–	
P0686	EDU Relay (Low)	84	O	–	
P0687	EDU Relay (High)	84	O	–	

https://truckmanualshub.com/

Multi-Use Tester indication		Warning lamp indication			Remarks
Code	Message	Flashes	Orange	Red	
P0698	Sensor Supply Voltage 3 (Low)	81	O	–	
P0699	Sensor Supply Voltage 3 (High)	81	O	–	
P1171	Q Adjustment Resistor (Low)	34	O	–	
P1172	Q Adjustment Resistor (High)	34	O	–	
P1C01	Inter Cooler Performance	27	O	–	
P1C11	Injector #1-A (Plausibility)	37	O	–	
P1C12	Injector #2-A (Plausibility)	38	O	–	
P1C13	Injector #3-A (Plausibility)	39	O	–	
P1C14	Injector #4-A (Plausibility)	8	O	–	
P2002	DPF MFF	55	O	–	
P2100	TVA (Open)	28	O	–	
P2101	TVA (System)	28	O	–	
P2102	TVA (Short)	28	O	–	
P2120	Acc Switch	65	–	–	
P2122	Acc Sensor 1 (Low)	24	O	–	
P2123	Acc Sensor 1 (High)	24	O	–	
P2127	Acc Sensor 2 (Low)	16	O	–	
P2128	Acc Sensor 2 (High)	16	O	–	
P2135	TVA SNSR (Voltage)	28	O	–	
P2138	Acc Sensor Correlation	24, 58	O	–	
P2147	Injector Bank 1 (Low)	82	O	–	
P2148	Injector Bank 1 (High)	82	O	–	
P2150	Injector Bank 2 (Low)	82	O	–	
P2151	Injector Bank 2 (High)	82	O	–	
P2199	EGR Temp Sensor (Correlation)	9	O	–	
P2227	Atm Press SNSR (Plausibility)	19	O	–	
P2228	Atm Press SNSR (Low)	19	O	–	
P2229	Atm Press SNSR (High)	19	O	–	
P2263	VGT System	51, 54	O	–	
P2279	Intake Pipe Leak	27	O	–	
P2413	EGR System	67	O	–	
P242F	DPF MFF (Accumulation)	55	O	–	
P2453	DPF Diff SNSR (Plausi) & MFF	97	O	–	
P2454	DPF Diff SNSR (Low) & MFF	97	O	–	
P2455	DPF Diff SNSR (High) & MFF	97	O	–	
P2457	EGR Cooler Performance	2	O	–	
P2562	VGT Position Sensor	51	O	–	
P2670	MPROP Voltage (Low)	36	O	–	

1.2 Diagnosis code generation conditions and inspection items

P0016: Ne SNSR Offset/Backup Mode (warning lamp flashes: 14)

Generation condition	There is too large difference between engine speed sensor signal and cylinder recognition sensor signal.
Recoverability	System recovers if any valid signal is input when starter switch is turned from OFF to ON (the warning lamp does not go out unless 3 consecutive valid signals are input).
Control effected by electronic control unit	Engine is stopped.
Possible causes	• Open-circuit or short-circuit of harness between engine electronic control unit and engine speed sensor • Open-circuit or short-circuit of harness between engine electronic control unit and cylinder recognition sensor • Malfunction of each connector • Malfunction of engine speed sensor • Malfunction of cylinder recognition sensor • Malfunction of engine electronic control unit

P0045: VGT Actuator (Open) (warning lamp flashes: 51)

Generation condition	Open turbocharger actuator circuit
Recoverability	System recovers if any valid signal is input when starter switch is turned from OFF to ON (the warning lamp does not go out unless 3 consecutive valid signals are input).
Control effected by electronic control unit	• Injection quantity is limited. • Exhaust gas recirculation control is stopped. • Throttle control is stopped. • Turbocharger control is stopped.
Possible causes	• Open-circuit or short-circuit of harness between electronic drive unit and turbocharger actuator • Malfunction of each connector • Malfunction of motor (built in turbocharger actuator) • Malfunction of position sensor (built in turbocharger actuator) • Malfunction of electronic drive unit • Malfunction of electronic drive unit relay

P0046: VGT Actuator (Performance) (warning lamp flashes: 51)

Generation condition	Turbocharger actuator circuit is locked.
Recoverability	System recovers if any valid signal is input when starter switch is turned from OFF to ON (the warning lamp does not go out unless 3 consecutive valid signals are input).
Control effected by electronic control unit	• Injection quantity is limited. • Exhaust gas recirculation control is stopped. • Throttle control is stopped. • Turbocharger control is stopped.
Possible causes	• Open-circuit or short-circuit of harness between electronic drive unit and turbocharger actuator • Malfunction of each connector • Malfunction of motor (built in turbocharger actuator) • Malfunction of position sensor (built in turbocharger actuator) • Malfunction of electronic drive unit • Malfunction of electronic drive unit relay

https://truckmanualshub.com/

P0047: VGT Actuator (Low) (warning lamp flashes: 51)

Generation condition	Turbocharger actuator circuit is shorted to ground.
Recoverability	System recovers if any valid signal is input when starter switch is turned from OFF to ON (the warning lamp does not go out unless 3 consecutive valid signals are input).
Control effected by electronic control unit	• Injection quantity is limited. • Exhaust gas recirculation control is stopped. • Throttle control is stopped. • Turbocharger control is stopped.
Possible causes	• Open-circuit or short-circuit of harness between electronic drive unit and turbocharger actuator • Malfunction of each connector • Malfunction of motor (built in turbocharger actuator) • Malfunction of position sensor (built in turbocharger actuator) • Malfunction of electronic drive unit • Malfunction of electronic drive unit relay

P0069: Boost Press SNSR (Correlation) (warning lamp flashes: 32)

Generation condition	Engine electronic control unit has judged boost pressure sensor abnormal as a result of comparison with conditions of other sensors.
Recoverability	System recovers if any valid signal is input when starter switch is turned from OFF to ON (the warning lamp does not go out unless 3 consecutive valid signals are input).
Control effected by electronic control unit	• Injection quantity is limited. • Exhaust gas recirculation control is stopped. • Throttle control is stopped.
Possible causes	• Open-circuit or short-circuit of harness between engine electronic control unit and Boost pressure sensor • Malfunction of each connector • Malfunction of Boost pressure sensor • Malfunction of engine electronic control unit

P0087: CRS (Too Low) (warning lamp flashes: 22, 36)

Generation condition	Common rail pressure too low
Recoverability	System recovers if any valid signal is input when starter switch is turned from OFF to ON (the warning lamp does not go out unless 3 consecutive valid signals are input).
Control effected by electronic control unit	• Injection quantity is limited. • Exhaust gas recirculation control is stopped. • Throttle control is stopped.
Possible causes	• Malfunction of supply pump • Malfunction of pressure limiter • Injector not airtight • Clogged fuel system

P0088: CRS (Too High) (warning lamp flashes: 23)

Generation condition	Common rail pressure too high
Recoverability	System recovers if any valid signal is input when starter switch is turned from OFF to ON (the warning lamp does not go out unless 3 consecutive valid signals are input).
Control effected by electronic control unit	• Injection quantity is limited. • Exhaust gas recirculation control is stopped. • Throttle control is stopped.
Possible causes	• Malfunction of supply pump

P0089: MPROP (Over Load) (warning lamp flashes: 63)

Generation condition	MPROP (rail pressure control valve) circuit is overloaded.
Recoverability	System recovers if any valid signal is input when starter switch is turned from OFF to ON (the warning lamp does not go out unless 3 consecutive valid signals are input).
Control effected by electronic control unit	• Injection quantity is limited. • Exhaust gas recirculation control is stopped. • Throttle control is stopped.
Possible causes	• Open-circuit or short-circuit of harness between engine electronic control unit and MPROP (rail pressure control valve) • Malfunction of each connector • Malfunction of MPROP (rail pressure control valve) • Malfunction of engine electronic control unit

P0090: MPROP (Open Circuit) (warning lamp flashes: 63)

Generation condition	MPROP (rail pressure control valve) circuit open-circuited.
Recoverability	System recovers if any valid signal is input when starter switch is turned from OFF to ON (the warning lamp does not go out unless 3 consecutive valid signals are input).
Control effected by electronic control unit	• Injection quantity is limited. • Exhaust gas recirculation control is stopped. • Throttle control is stopped.
Possible causes	• Open-circuit or short-circuit of harness between engine electronic control unit and MPROP (rail pressure control valve) • Malfunction of each connector • Malfunction of MPROP (rail pressure control valve) • Malfunction of engine electronic control unit

P0091: MPROP (Low) (warning lamp flashes: 63)

Generation condition	MPROP (rail pressure control valve) circuit shorted to ground.
Recoverability	System recovers if any valid signal is input when starter switch is turned from OFF to ON (the warning lamp does not go out unless 3 consecutive valid signals are input).
Control effected by electronic control unit	• Injection quantity is limited. • Exhaust gas recirculation control is stopped. • Throttle control is stopped.
Possible causes	• Open-circuit or short-circuit of harness between engine electronic control unit and MPROP (rail pressure control valve) • Malfunction of each connector • Malfunction of MPROP (rail pressure control valve) • Malfunction of engine electronic control unit

P0092: MPROP (High) (warning lamp flashes: 63)

Generation condition	MPROP (rail pressure control valve) circuit shorted to power supply.
Recoverability	System recovers if any valid signal is input when starter switch is turned from OFF to ON (the warning lamp does not go out unless 3 consecutive valid signals are input).
Control effected by electronic control unit	• Injection quantity is limited. • Exhaust gas recirculation control is stopped. • Throttle control is stopped.
Possible causes	• Open-circuit or short-circuit of harness between engine electronic control unit and MPROP (rail pressure control valve) • Malfunction of each connector • Malfunction of MPROP (rail pressure control valve) • Malfunction of engine electronic control unit

https://truckmanualshub.com/

P0093: CRS (Fuel Leak) (warning lamp flashes: 22)

Generation condition	Fuel system is leaking (significant leakage).
Recoverability	System recovers if any valid signal is input when starter switch is turned from OFF to ON (the warning lamp does not go out unless 3 consecutive valid signals are input).
Control effected by electronic control unit	Engine stops.
Possible causes	• Malfunction of supply pump • Malfunction of pressure limiter • Airtight malfunction of injector • Clogging of fuel system

P0101: Airflow Sensor (Plausibility) (warning lamp flashes: 17)

Generation condition	Engine electronic control unit has judged air flow sensor abnormal as a result of comparison with conditions of other sensors.
Recoverability	System recovers if any valid signal is input when starter switch is turned from OFF to ON (the warning lamp does not go out unless 3 consecutive valid signals are input).
Control effected by electronic control unit	• Carries out control using a backup value (airflow rate equivalent to rate for low idle speed operation). • Injection quantity is limited. • Exhaust gas recirculation control is stopped. • Throttle control is stopped
Possible causes	• Open-circuit or short-circuit of harness between engine electronic control unit and Air flow sensor • Malfunction of each connector • Malfunction of air flow sensor • Malfunction of engine electronic control unit

P0102: Airflow Sensor (Low) (warning lamp flashes: 17)

Generation condition	Airflow sensor voltage is lower than specified value.
Recoverability	System recovers if any valid signal is input when starter switch is turned from OFF to ON (the warning lamp does not go out unless 3 consecutive valid signals are input).
Control effected by electronic control unit	• Carries out control using a backup value (airflow rate equivalent to rate for low idle speed operation). • Injection quantity is limited. • Exhaust gas recirculation control is stopped. • Throttle control is stopped.
Possible causes	• Open-circuit or short-circuit of harness between engine electronic control unit and air flow sensor • Malfunction of each connector • Malfunction of air flow sensor • Malfunction of engine electronic control unit

P0103: Airflow Sensor (High) (warning lamp flashes: 17)

Generation condition	Airflow sensor voltage is higher than specified value.
Recoverability	System recovers if any valid signal is input when starter switch is turned from OFF to ON (the warning lamp does not go out unless 3 consecutive valid signals are input).
Control effected by electronic control unit	• Carries out control using a backup value (airflow rate equivalent to rate for low idle speed operation). • Injection quantity is limited. • Exhaust gas recirculation control is stopped. • Throttle control is stopped.
Possible causes	• Open-circuit or short-circuit of harness between engine electronic control unit and air flow sensor • Malfunction of each connector • Malfunction of air flow sensor • Malfunction of engine electronic control unit

P0112: INT Air Temp. SNSR (Low) (warning lamp flashes: 44)

Generation condition	Intake air temperature sensor 1 voltage is at or below the specified value (0.15 V).
Recoverability	System recovers if any valid signal is input when starter switch is turned from OFF to ON (the warning lamp does not go out unless 3 consecutive valid signals are input).
Control effected by electronic control unit	• Backup value (25°C) is used. • Injection quantity is limited. • Exhaust gas recirculation control is stopped. • Throttle control is stopped.
Possible causes	• Open-circuit or short-circuit of harness between engine electronic control unit and intake air temperature sensor 1 • Malfunction of each connector • Malfunction of intake air temperature sensor 1 • Malfunction of engine electronic control unit

P0113: INT Air Temp. SNSR (High) (warning lamp flashes: 44)

Generation condition	Intake air temperature sensor 1 voltage is at or above the specified value (4.87 V).
Recoverability	System recovers if any valid signal is input when starter switch is turned from OFF to ON (the warning lamp does not go out unless 3 consecutive valid signals are input).
Control effected by electronic control unit	• Backup value (25°C) is used. • Injection quantity is limited. • Exhaust gas recirculation control is stopped. • Throttle control is stopped.
Possible causes	• Open-circuit or short-circuit of harness between engine electronic control unit and intake air temperature sensor 1 • Malfunction of each connector • Malfunction of intake air temperature sensor 1 • Malfunction of engine electronic control unit

P0116: Water Temp SNSR (Plausibility) (warning lamp flashes: 21)

Generation condition	Engine electronic control unit has judged water temperature sensor abnormal as a result of comparison with conditions of other sensors.
Recoverability	System recovers if any valid signal is input when starter switch is turned from OFF to ON (the warning lamp does not go out unless 3 consecutive valid signals are input).
Control effected by electronic control unit	• Backup value (80°C) is used. • Injection quantity is limited. • Exhaust gas recirculation control is stopped. • Throttle control is stopped.
Possible causes	• Open-circuit or short-circuit of harness between engine electronic control unit and water temperature sensor • Malfunction of each connector • Malfunction of water temperature sensor • Malfunction of engine electronic control unit

P0117: Water Temp SNSR (Low) (warning lamp flashes: 21)

Generation condition	Water temperature sensor voltage is at or below the specified value (0.2 V).
Recoverability	System recovers if any valid signal is input when starter switch is turned from OFF to ON (the warning lamp does not go out unless 3 consecutive valid signals are input).
Control effected by electronic control unit	• Backup value (80°C) is used. • Injection quantity is limited. • Exhaust gas recirculation control is stopped. • Throttle control is stopped.
Possible causes	• Open-circuit or short-circuit of harness between engine electronic control unit and water temperature sensor • Malfunction of each connector • Malfunction of water temperature sensor • Malfunction of engine electronic control unit

https://truckmanualshub.com/

P0118: Water Temp SNSR (High) (warning lamp flashes: 21)

Generation condition	Water temperature sensor voltage is at or above the specified value (4.8 V).
Recoverability	System recovers if any valid signal is input when starter switch is turned from OFF to ON (the warning lamp does not go out unless 3 consecutive valid signals are input).
Control effected by electronic control unit	• Backup value (80°C) is used. • Injection quantity is limited. • Exhaust gas recirculation control is stopped. • Throttle control is stopped.
Possible causes	• Open-circuit or short-circuit of harness between engine electronic control unit and water temperature sensor • Malfunction of each connector • Malfunction of water temperature sensor • Malfunction of engine electronic control unit

P0120: TVA SNSR (warning lamp flashes: 28)

Generation condition	Throttle electronic drive unit judges throttle position sensor faulty.
Recoverability	System recovers if any valid signal is input when starter switch is turned from OFF to ON (the warning lamp does not go out unless 3 consecutive valid signals are input).
Control effected by electronic control unit	• Injection quantity is limited. • Exhaust gas recirculation control is stopped. • Throttle control is stopped.
Possible causes	• Open-circuit or short-circuit of harness between electronic drive unit and intake throttle • Malfunction of each connector • Malfunction of motor (built in intake throttle) • Malfunction of throttle position sensor (built in intake throttle) • Malfunction of electronic drive unit • Malfunction of electronic drive unit relay

P0148: CRS (Fuel Delivery) (warning lamp flashes: 22, 23, 36)

Generation condition	Leakage (large amount of leakage) was found in the fuel system.
Recoverability	System recovers if any valid signal is input when starter switch is turned from OFF to ON (the warning lamp does not go out unless 3 consecutive valid signals are input).
Control effected by electronic control unit	Engine stops.
Possible causes	• Malfunction of supply pump • Malfunction of pressure limiter • Airtight malfunction of injector • Clogging of fuel system

P0182: Fuel Temp. Sensor (inlet) (Low) (warning lamp flashes: 41)

Generation condition	Fuel temperature sensor voltage is at or below the specified value (0.15 V).
Recoverability	System recovers if signal becomes normal with starter switch in ON position.
Control effected by electronic control unit	Engine is controlled using backup value (40°C).
Possible causes	• Open-circuit or short-circuit of harness between engine electronic control unit and fuel temperature sensor • Malfunction of each connector • Malfunction of fuel temperature sensor • Malfunction of engine electronic control unit

P0183: Fuel Temp. Sensor (inlet) (High) (warning lamp flashes: 41)

Generation condition	Fuel temperature sensor voltage is at or above the specified value (4.8 V).
Recoverability	System recovers if signal becomes normal with starter switch in ON position.
Control effected by electronic control unit	Engine is controlled using backup value (40°C).
Possible causes	• Open-circuit or short-circuit of harness between engine electronic control unit and fuel temperature sensor • Malfunction of each connector • Malfunction of fuel temperature sensor • Malfunction of engine electronic control unit

P0191: CRS Pressure SNSR (Plausibility) (warning lamp flashes: 11)

Generation condition	Engine electronic control unit has judged that common rail pressure sensor was faulty.
Recoverability	System recovers if any valid signal is input when starter switch is turned from OFF to ON (the warning lamp does not go out unless 3 consecutive valid signals are input).
Control effected by electronic control unit	• Injection quantity is limited. • Exhaust gas recirculation control is stopped. • Throttle control is stopped.
Possible causes	• Open-circuit or short-circuit of harness between engine electronic control unit and common rail pressure sensor • Malfunction of each connector • Malfunction of common rail pressure sensor • Malfunction of engine electronic control unit

P0192: CRS Pressure SNSR (Low) (warning lamp flashes: 11)

Generation condition	Common rail pressure sensor voltage is at or below the specified value (0.2 V).
Recoverability	System recovers if any valid signal is input when starter switch is turned from OFF to ON (the warning lamp does not go out unless 3 consecutive valid signals are input).
Control effected by electronic control unit	• Injection quantity is limited. • Exhaust gas recirculation control is stopped. • Throttle control is stopped.
Possible causes	• Open-circuit or short-circuit of harness between engine electronic control unit and common rail pressure sensor • Malfunction of each connector • Malfunction of common rail pressure sensor • Malfunction of engine electronic control unit

P0193: CRS Pressure SNSR (High) (warning lamp flashes: 11)

Generation condition	Common rail pressure sensor voltage is at or above the specified value (4.8 V).
Recoverability	System recovers if any valid signal is input when starter switch is turned from OFF to ON (the warning lamp does not go out unless 3 consecutive valid signals are input).
Control effected by electronic control unit	• Injection quantity is limited. • Exhaust gas recirculation control is stopped. • Throttle control is stopped.
Possible causes	• Open-circuit or short-circuit of harness between engine electronic control unit and common rail pressure sensor • Malfunction of each connector • Malfunction of common rail pressure sensor • Malfunction of engine electronic control unit

P0201: Injector M/V-Cylinder 1 (Load) (warning lamp flashes: 37)

Generation condition	Injector magnetic valve (No. 1 cylinder) circuit shorted or open-circuited.
Recoverability	System recovers if any valid signal is input when starter switch is turned from OFF to ON (the warning lamp does not go out unless 3 consecutive valid signals are input).
Control effected by electronic control unit	• Injection quantity is limited. • Exhaust gas recirculation control is stopped. • Throttle control is stopped.
Possible causes	• Open-circuited or short-circuited harness between engine electronic control unit and injector magnetic valve (No. 1 cylinder) • Malfunction of each connector • Malfunction of injector magnetic valve (No. 1 cylinder) • Malfunction of engine electronic control unit

https://truckmanualshub.com/

P0202: Injector M/V-Cylinder 2 (Load) (warning lamp flashes: 38)

Generation condition	Injector magnetic valve (No. 2 cylinder) circuit shorted or open-circuited.
Recoverability	System recovers if any valid signal is input when starter switch is turned from OFF to ON (the warning lamp does not go out unless 3 consecutive valid signals are input).
Control effected by electronic control unit	• Injection quantity is limited. • Exhaust gas recirculation control is stopped. • Throttle control is stopped.
Possible causes	• Open-circuited or short-circuited harness between engine electronic control unit and injector magnetic valve (No. 2 cylinder) • Malfunction of each connector • Malfunction of injector magnetic valve (No. 2 cylinder) • Malfunction of engine electronic control unit

P0203: Injector M/V-Cylinder 3 (Load) (warning lamp flashes: 39)

Generation condition	Injector magnetic valve (No. 3 cylinder) circuit shorted or open-circuited.
Recoverability	System recovers if any valid signal is input when starter switch is turned from OFF to ON (the warning lamp does not go out unless 3 consecutive valid signals are input).
Control effected by electronic control unit	• Injection quantity is limited. • Exhaust gas recirculation control is stopped. • Throttle control is stopped.
Possible causes	• Open-circuited or short-circuited harness between engine electronic control unit and injector magnetic valve (No. 3 cylinder) • Malfunction of each connector • Malfunction of injector magnetic valve (No. 3 cylinder) • Malfunction of engine electronic control unit

P0204: Injector M/V-Cylinder 4 (Load) (warning lamp flashes: 8)

Generation condition	Injector magnetic valve (No. 4 cylinder) circuit shorted or open-circuited.
Recoverability	System recovers if any valid signal is input when starter switch is turned from OFF to ON (the warning lamp does not go out unless 3 consecutive valid signals are input).
Control effected by electronic control unit	• Injection quantity is limited. • Exhaust gas recirculation control is stopped. • Throttle control is stopped.
Possible causes	• Open-circuited or short-circuited harness between engine electronic control unit and injector magnetic valve (No. 4 cylinder) • Malfunction of each connector • Malfunction of injector magnetic valve (No. 4 cylinder) • Malfunction of engine electronic control unit

P0219: Engine Overrunning (warning lamp flashes: 7)

Generation condition	Engine speed is higher than specification (3,700 rpm).
Recoverability	System recovers if any valid signal is input when starter switch is turned from OFF to ON (the warning lamp does not go out unless 3 consecutive valid signals are input).
Control effected by electronic control unit	• Injection quantity is limited. • Exhaust gas recirculation control is stopped. • Throttle control is stopped. • Turbocharger control is stopped. • Fuel injection is stopped.
Possible causes	• Mistake of shifting

P0234: Over Boost (warning lamp flashes: 54)

Generation condition	Boost pressure is more than a regulated value the engine running.
Recoverability	System recovers if any valid signal is input when starter switch is turned from OFF to ON (the warning lamp does not go out unless 3 consecutive valid signals are input).
Control effected by electronic control unit	• Injection quantity is limited. • Exhaust gas recirculation control is stopped. • Throttle control is stopped. • Turbocharger control is stopped.
Possible causes	• Mechanical failure of turbocharger

P0236: Boost Press SNSR (Plausi) (warning lamp flashes: 54)

Generation condition	Engine electronic control unit has judged that boost pressure sensor was faulty
Recoverability	System recovers if any valid signal is input when starter switch is turned from OFF to ON (the warning lamp does not go out unless 3 consecutive valid signals are input).
Control effected by electronic control unit	• Injection quantity is limited. • Exhaust gas recirculation control is stopped. • Throttle control is stopped.
Possible causes	• Open-circuit or short-circuit of harness between engine electronic control unit and Boost pressure sensor • Malfunction of each connector • Malfunction of Boost pressure sensor • Malfunction of engine electronic control unit

P0237: Boost Press SNSR (Low) (warning lamp flashes: 32)

Generation condition	Boost pressure sensor voltage is at or below the specified value (0.3 V).
Recoverability	System recovers if any valid signal is input when starter switch is turned from OFF to ON (the warning lamp does not go out unless 3 consecutive valid signals are input).
Control effected by electronic control unit	• Injection quantity is limited. • Exhaust gas recirculation control is stopped. • Throttle control is stopped.
Possible causes	• Open-circuit or short-circuit of harness between engine electronic control unit and boost pressure sensor • Malfunction of each connector • Malfunction of boost pressure sensor • Malfunction of engine electronic control unit

P0238: Boost Press SNSR (High) (warning lamp flashes: 32)

Generation condition	Boost pressure sensor voltage is at or above the specified value (4.8 V).
Recoverability	System recovers if any valid signal is input when starter switch is turned from OFF to ON (the warning lamp does not go out unless 3 consecutive valid signals are input).
Control effected by electronic control unit	• Injection quantity is limited. • Exhaust gas recirculation control is stopped. • Throttle control is stopped.
Possible causes	• Open-circuit or short-circuit of harness between engine electronic control unit and boost pressure sensor • Malfunction of each connector • Malfunction of boost pressure sensor • Malfunction of engine electronic control unit

https://truckmanualshub.com/

P0261: Injector #1-A (Low) (warning lamp flashes: 37)

Generation condition	Injector magnetic valve (No. 1 cylinder) circuit shorted to ground.
Recoverability	System recovers if any valid signal is input when starter switch is turned from OFF to ON (the warning lamp does not go out unless 3 consecutive valid signals are input).
Control effected by electronic control unit	• Injection quantity is limited. • Outputs injection control fault signal through CAN bus. • Injector magnetic valves (No. 1 and No. 4 cylinders) are stopped. • Exhaust gas recirculation control is stopped. • Throttle control is stopped.
Possible causes	• Open-circuited or short-circuited harness between engine electronic control unit and injector magnetic valve (No. 1 cylinder) • Malfunction of each connector • Malfunction of injector magnetic valve (No. 1 cylinder) • Malfunction of engine electronic control unit

P0262: Injector #1-A (High) (warning lamp flashes: 37)

Generation condition	Injector magnetic valve (No. 1 cylinder) circuit shorted to power supply.
Recoverability	System recovers if any valid signal is input when starter switch is turned from OFF to ON (the warning lamp does not go out unless 3 consecutive valid signals are input).
Control effected by electronic control unit	• Injection quantity is limited. • Outputs injection control fault signal through CAN bus. • Injector magnetic valves (No. 1 and No. 4 cylinders) are stopped. • Exhaust gas recirculation control is stopped. • Throttle control is stopped.
Possible causes	• Open-circuited or short-circuited harness between engine electronic control unit and injector magnetic valve (No. 1 cylinder) • Malfunction of each connector • Malfunction of injector magnetic valve (No. 1 cylinder) • Malfunction of engine electronic control unit

P0264: Injector #2-A (Low) (warning lamp flashes: 38)

Generation condition	Injector magnetic valve (No. 2 cylinder) circuit shorted to ground.
Recoverability	System recovers if any valid signal is input when starter switch is turned from OFF to ON (the warning lamp does not go out unless 3 consecutive valid signals are input).
Control effected by electronic control unit	• Injection quantity is limited. • Outputs injection control fault signal through CAN bus. • Injector magnetic valves (No. 2 and No. 3 cylinders) are stopped. • Exhaust gas recirculation control is stopped. • Throttle control is stopped.
Possible causes	• Open-circuited or short-circuited harness between engine electronic control unit and injector magnetic valve (No. 2 cylinder) • Malfunction of each connector • Malfunction of injector magnetic valve (No. 2 cylinder) • Malfunction of engine electronic control unit

P0265: Injector #2-A (High) (warning lamp flashes: 38)

Generation condition	Injector magnetic valve (No. 2 cylinder) circuit shorted to power supply.
Recoverability	System recovers if any valid signal is input when starter switch is turned from OFF to ON (the warning lamp does not go out unless 3 consecutive valid signals are input).
Control effected by electronic control unit	• Injection quantity is limited. • Outputs injection control fault signal through CAN bus. • Injector magnetic valves (No. 2 and No. 3 cylinders) are stopped. • Exhaust gas recirculation control is stopped. • Throttle control is stopped.
Possible causes	• Open-circuited or short-circuited harness between engine electronic control unit and injector magnetic valve (No. 2 cylinder) • Malfunction of each connector • Malfunction of injector magnetic valve (No. 2 cylinder) • Malfunction of engine electronic control unit

P0267: Injector #3-A (Low) (warning lamp flashes: 39)

Generation condition	Injector magnetic valve (No. 3 cylinder) circuit shorted to ground.
Recoverability	System recovers if any valid signal is input when starter switch is turned from OFF to ON (the warning lamp does not go out unless 3 consecutive valid signals are input).
Control effected by electronic control unit	• Injection quantity is limited. • Outputs injection control fault signal through CAN bus. • Injector magnetic valves (No. 2 and No. 3 cylinders) are stopped. • Exhaust gas recirculation control is stopped. • Throttle control is stopped.
Possible causes	• Open-circuited or short-circuited harness between engine electronic control unit and injector magnetic valve (No. 3 cylinder) • Malfunction of each connector • Malfunction of injector magnetic valve (No. 3 cylinder) • Malfunction of engine electronic control unit

P0268: Injector #3-A (High) (warning lamp flashes: 39)

Generation condition	Injector magnetic valve (No. 3 cylinder) circuit shorted to power supply.
Recoverability	System recovers if any valid signal is input when starter switch is turned from OFF to ON (the warning lamp does not go out unless 3 consecutive valid signals are input).
Control effected by electronic control unit	• Injection quantity is limited. • Outputs injection control fault signal through CAN bus. • Injector magnetic valves (No. 2 and No. 3 cylinders) are stopped. • Exhaust gas recirculation control is stopped. • Throttle control is stopped.
Possible causes	• Open-circuited or short-circuited harness between engine electronic control unit and injector magnetic valve (No. 3 cylinder) • Malfunction of each connector • Malfunction of injector magnetic valve (No. 3 cylinder) • Malfunction of engine electronic control unit

P0270: Injector #4-A (Low) (warning lamp flashes: 8)

Generation condition	Injector magnetic valve (No. 4 cylinder) circuit shorted to ground.
Recoverability	System recovers if any valid signal is input when starter switch is turned from OFF to ON (the warning lamp does not go out unless 3 consecutive valid signals are input).
Control effected by electronic control unit	• Injection quantity is limited. • Outputs injection control fault signal through CAN bus. • Injector magnetic valves (No. 1 and No. 4 cylinders) are stopped. • Exhaust gas recirculation control is stopped. • Throttle control is stopped.
Possible causes	• Open-circuited or short-circuited harness between engine electronic control unit and injector magnetic valve (No. 4 cylinder) • Malfunction of each connector • Malfunction of injector magnetic valve (No. 4 cylinder) • Malfunction of engine electronic control unit

P0271: Injector #4-A (High) (warning lamp flashes: 8)

Generation condition	Injector magnetic valve (No. 4 cylinder) circuit shorted to power supply.
Recoverability	System recovers if any valid signal is input when starter switch is turned from OFF to ON (the warning lamp does not go out unless 3 consecutive valid signals are input).
Control effected by electronic control unit	• Injection quantity is limited. • Outputs injection control fault signal through CAN bus. • Injector magnetic valves (No. 1 and No. 4 cylinders) are stopped. • Exhaust gas recirculation control is stopped. • Throttle control is stopped.
Possible causes	• Open-circuited or short-circuited harness between engine electronic control unit and injector magnetic valve (No. 4 cylinder) • Malfunction of each connector • Malfunction of injector magnetic valve (No. 4 cylinder) • Malfunction of engine electronic control unit

https://truckmanualshub.com/

P0335: Engine Revolution SNSR (warning lamp flashes: 15)

Generation condition	No engine speed sensor signals are received.
Recoverability	System recovers if any valid signal is input when starter switch is turned from OFF to ON (the warning lamp does not go out unless 3 consecutive valid signals are input).
Control effected by electronic control unit	• Control is carried out using cylinder recognition sensors. • Injection quantity is limited.
Possible causes	• Open-circuited or short-circuited harness between engine electronic control unit and engine speed sensor • Malfunction of each connector • Malfunction of engine speed sensor • Malfunction of engine electronic control unit

P0339: Engine Revolution SNSR (Plausi) (warning lamp flashes: 15)

Generation condition	Engine speed sensor signal indicates too high speeds (6,000 rpm or higher).
Recoverability	System recovers if any valid signal is input when starter switch is turned from OFF to ON (the warning lamp does not go out unless 3 consecutive valid signals are input).
Control effected by electronic control unit	• Control is carried out using cylinder recognition sensors. • Injection quantity is limited.
Possible causes	• Open-circuited or short-circuited harness between engine electronic control unit and engine speed sensor • Malfunction of each connector • Malfunction of engine speed sensor • Malfunction of engine electronic control unit

P0340: Camshaft Position SNSR (warning lamp flashes: 12)

Generation condition	No cylinder recognition sensor signals are received.
Recoverability	System recovers if any valid signal is input when starter switch is turned from OFF to ON (the warning lamp does not go out unless 3 consecutive valid signals are input).
Control effected by electronic control unit	• Control is carried out using engine speed sensors. • Injection quantity is limited.
Possible causes	• Open-circuit or short-circuit of harness between engine electronic control unit and cylinder recognition sensor • Malfunction of each connector • Malfunction of cylinder recognition sensor • Malfunction of engine electronic control unit

P0344: Camshaft Position SNSR (Plausi) (warning lamp flashes: 12)

Generation condition	Cylinder recognition sensor signals are irregular (due to too large inconsistency in angular recognition between camshaft and crankshaft).
Recoverability	System recovers if any valid signal is input when starter switch is turned from OFF to ON (the warning lamp does not go out unless 3 consecutive valid signals are input).
Control effected by electronic control unit	• Control is carried out using engine speed sensors. • Injection quantity is limited.
Possible causes	• Open-circuit or short-circuit of harness between engine electronic control unit and cylinder recognition sensor • Malfunction of each connector • Malfunction of cylinder recognition sensor • Malfunction of engine electronic control unit

P0380: Relay for Glow Relay (warning lamp flashes: 26)

Generation conditions	Glow drive relay short or open circuit, or overload
Recoverability	System recovers if signal becomes with starter switch ON position.
Control effected by electronic control unit	• Suspend glow control
Possible causes	• Open-circuited or short-circuited harness between engine electronic control unit and glow drive relay • Malfunction of each connector • Malfunction of glow drive relay • Malfunction of engine electronic control unit

P0381: Glow Lamp (warning lamp flashes: 89)

Generation conditions	Glow indicator lamp short or open circuit, or overload
Recoverability	System recovers if signal becomes with starter switch ON position.
Control effected by electronic control unit	• Normal control
Possible causes	• Open-circuited or short-circuited harness between engine electronic control unit and meter cluster (glow indicator lamp) • Malfunction of each connector • Malfunction of meter cluster (glow indicator lamp) • Malfunction of engine electronic control unit

P0401: EGR Flow (Insufficient) (warning lamp flashes: 2)

Generation conditions	Exhaust gas recirculation flow rate is excessively low.
Recoverability	System recovers if any valid signal is input when starter switch is turned from OFF to ON (the warning lamp does not go out unless 3 consecutive valid signals are input).
Control effected by electronic control unit	• Injection quantity is limited. • Exhaust gas recirculation control is stopped. • Throttle control is stopped.
Possible causes	• Open-circuit or short-circuit of harness between engine electronic control unit and Exhaust gas recirculation valve • Malfunction of each connector • Malfunction of Exhaust gas recirculation valve • Malfunction of engine electronic control unit

P0402: EGR Flow (Excessive) (warning lamp flashes: 2)

Generation conditions	Exhaust gas recirculation flow rate is excessively high.
Recoverability	System recovers if any valid signal is input when starter switch is turned from OFF to ON (the warning lamp does not go out unless 3 consecutive valid signals are input).
Control effected by electronic control unit	• Injection quantity is limited. • Exhaust gas recirculation control is stopped. • Throttle control is stopped.
Possible causes	• Open-circuit or short-circuit of harness between engine electronic control unit and Exhaust gas recirculation valve • Malfunction of each connector • Malfunction of Exhaust gas recirculation valve • Malfunction of engine electronic control unit

https://truckmanualshub.com/

P0403: EGR 1 (Actuator Circuit) (warning lamp flashes: 67)

Generation condition	Exhaust gas recirculation electronic drive unit has judged that exhaust gas recirculation valve motor was faulty.
Recoverability	System recovers if any valid signal is input when starter switch is turned from OFF to ON (the warning lamp does not go out unless 3 consecutive valid signals are input).
Control effected by electronic control unit	• Injection quantity is limited. • Exhaust gas recirculation control is stopped. • Throttle control is stopped. • Turbocharger control is stopped.
Possible causes	• Open-circuited or short-circuited harness between electronic drive unit and exhaust gas recirculation valve • Malfunction of each connector • Malfunction of motor (built in exhaust gas recirculation valve) • Malfunction of position sensor (built in exhaust gas recirculation valve) • Malfunction of electronic drive unit • Malfunction of electronic drive unit relay

P0404: EGR System (warning lamp flashes: 2)

Generation condition	Motor abnormality (permanent)
Recoverability	System recovers (power is re-supplied to electronic control unit) if signal becomes normal when starter switch is turned OFF → ON.
Control effected by electronic control unit	Engine output lowered.
Possible causes	• Failure of exhaust gas recirculation system

P0409: EGR 1 (Position Sensor) (warning lamp flashes: 67)

Generation condition	Exhaust gas recirculation electronic drive unit judges exhaust gas recirculation position sensor faulty.
Recoverability	System recovers if any valid signal is input when starter switch is turned from OFF to ON (the warning lamp does not go out unless 3 consecutive valid signals are input).
Control effected by electronic control unit	• Injection quantity is limited. • Exhaust gas recirculation control is stopped. • Throttle control is stopped. • Turbocharger control is stopped.
Possible causes	• Open-circuited or short-circuited harness between electronic drive unit and exhaust gas recirculation valve • Malfunction of each connector • Malfunction of motor (built in exhaust gas recirculation valve) • Malfunction of position sensor (built in exhaust gas recirculation valve) • Malfunction of electronic drive unit • Malfunction of electronic drive unit relay

P040C: EGR Gas Temp Sensor (Low) (warning lamp flashes: 9)

Generation condition	Intake air temperature sensor 2 voltage is at or below the specified value (0.15 V).
Recoverability	System recovers if any valid signal is input when starter switch is turned from OFF to ON (the warning lamp does not go out unless 3 consecutive valid signals are input).
Control effected by electronic control unit	• Injection quantity is limited. • Exhaust gas recirculation control is stopped. • Throttle control is stopped.
Possible causes	• Open-circuit or short-circuit of harness between engine electronic control unit and intake air temperature sensor 2 • Malfunction of each connector • Malfunction of intake air temperature sensor 2 • Malfunction of engine electronic control unit

P040D: EGR Gas Temp Sensor (High) (warning lamp flashes: 9)

Generation condition	Intake air temperature sensor 2 voltage is at or above the specified value (4.8 V).
Recoverability	System recovers if any valid signal is input when starter switch is turned from OFF to ON (the warning lamp does not go out unless 3 consecutive valid signals are input).
Control effected by electronic control unit	• Injection quantity is limited. • Exhaust gas recirculation control is stopped. • Throttle control is stopped.
Possible causes	• Open-circuit or short-circuit of harness between engine electronic control unit and intake air temperature sensor 2 • Malfunction of each connector • Malfunction of intake air temperature sensor 2 • Malfunction of engine electronic control unit

P0475: Exhaust Brake PWR (Open) (warning lamp flashes: 93)

Generation condition	Exhaust shutter 3-way magnetic valve circuit is open.
Recoverability	System recovers if any valid signal is input when starter switch is turned from OFF to ON (the warning lamp does not extinguish unless 3 consecutive valid signals are input).
Control effected by electronic control unit	• Control of auxiliary brake function is deactivated. • White smoke reduction control is deactivated if idling condition is held for an extended period of time.
Possible causes	• Open-circuited or short-circuited harness between engine electronic control unit and exhaust shutter 3-way magnetic valve • Malfunction of each connector • Malfunction of exhaust shutter 3-way magnetic valve • Malfunction of engine electronic control unit

P0476: Exhaust Brake PWR (Performance) (warning lamp flashes: 93)

Generation condition	Exhaust shutter 3-way magnetic valve circuit is overloaded.
Recoverability	System recovers if any valid signal is input when starter switch is turned from OFF to ON (the warning lamp does not extinguish unless 3 consecutive valid signals are input).
Control effected by electronic control unit	• Control of auxiliary brake function is deactivated. • White smoke reduction control is deactivated if idling condition is held for an extended period of time.
Possible causes	• Short-circuited harness between engine electronic control unit and exhaust shutter 3-way magnetic valve • Malfunction of each connector • Malfunction of exhaust shuttter 3-way magnetic valve • Malfunction of engine electronic control unit

P0477: Exhaust Brake PWR (Low) (warning lamp flashes: 93)

Generation condition	Exhaust shutter 3-way magnetic valve circuit is shorted to ground.
Recoverability	System recovers if any valid signal is input when starter switch is turned from OFF to ON (the warning lamp does not extinguish unless 3 consecutive valid signals are input).
Control effected by electronic control unit	• Control of auxiliary brake function is deactivated. • White smoke reduction control is deactivated if idling condition is held for an extended period of time.
Possible causes	• Open-circuited or short-circuited harness between engine electronic control unit and exhaust shutter 3-way magnetic valve • Malfunction of each connector • Malfunction of exhaust shutter 3-way magnetic valve • Malfunction of engine electronic control unit

https://truckmanualshub.com/

P0478: Exhaust Brake PWR (High) (warning lamp flashes: 93)

Generation condition	Exhaust shutter 3-way magnetic valve circuit is shorted to power supply.
Recoverability	System recovers if any valid signal is input when starter switch is turned from OFF to ON (the warning lamp does not extinguish unless 3 consecutive valid signals are input).
Control effected by electronic control unit	• Control of auxiliary brake function is deactivated. • White smoke reduction control is deactivated if idling condition is held for an extended period of time.
Possible causes	• Short-circuited harness between engine electronic control unit and exhaust shutter 3-way magnetic valve • Malfunction of each connector • Malfunction of exhaust shutter 3-way magnetic valve • Malfunction of engine electronic control unit

P0500: Vehicle Speed Sensor (warning lamp flashes: 25)

Generation condition	No vehicle speed sensor signals are received.
Recoverability	System recovers if any valid signal is input when starter switch is turned from OFF to ON (the warning lamp does not go out unless 3 consecutive valid signals are input).
Control effected by electronic control unit	Engine speed is limited.
Possible causes	• Open-circuited or short-circuited harness between engine electronic control unit and pulse divider (built in meter cluster) • Malfunction of each connector • Malfunction of pulse divider (built in meter cluster) • Malfunction of engine electronic control unit

P0508: Idle Volume & Idle Acc (Low) (warning lamp flashes: 31)

Generation condition	Idling speed adjustment potentiometer voltage is at or below the specified value (0.7 V).
Recoverability	System recovers if any valid signal is input when starter switch is turned from OFF to ON (the warning lamp does not go out unless 3 consecutive valid signals are input).
Control effected by electronic control unit	Engine idling speed control is fixed to automatic control.
Possible causes	• Open-circuited or short-circuited harness between engine electronic control unit and idling speed adjustment potentiometer • Malfunction of each connector • Malfunction of idling speed adjustment potentiometer • Malfunction of engine electronic control unit

P0509: Idle Volume & Idle Acc (High) (warning lamp flashes: 31)

Generation condition	Idling speed adjustment potentiometer voltage is at or above the specified value (4.6 V).
Recoverability	System recovers if any valid signal is input when starter switch is turned from OFF to ON (the warning lamp does not go out unless 3 consecutive valid signals are input).
Control effected by electronic control unit	Engine idling speed control is fixed to automatic control.
Possible causes	• Open-circuited or short-circuited harness between engine electronic control unit and idling speed adjustment potentiometer • Malfunction of each connector • Malfunction of idling speed adjustment potentiometer • Malfunction of engine electronic control unit

P0562: Power Supply Voltage (Low) (warning lamp flashes: 33)

Generation condition	Battery voltage is too low.
Recoverability	System recovers if any valid signal is input when starter switch is turned from OFF to ON (the warning lamp does not go out unless 3 consecutive valid signals are input).
Control effected by electronic control unit	Control of engine is stopped.
Possible causes	• Malfunction of electronic control unit (Replacement of electronic control unit)

P0563: Power Supply Voltage (High) (warning lamp flashes: 33)

Generation condition	Battery voltage is too high.
Recoverability	System recovers if any valid signal is input when starter switch is turned from OFF to ON (the warning lamp does not go out unless 3 consecutive valid signals are input).
Control effected by electronic control unit	Control of engine is stopped.
Possible causes	• Malfunction of electronic control unit (Replacement of electronic control unit)

P0600: CAN Communication (warning lamp flashes: 64, 73)

Generation condition	Abnormal CAN bus communications between engine electronic control unit and malfunction vehicle control unit or between engine electronic control unit and any of electronic drive units (exhaust gas recirculation, intake throttle and turbocharger units).
Recoverability	System recovers if any valid signal is input when starter switch is turned from OFF to ON (the warning lamp does not go out unless 3 consecutive valid signals are input).
Control effected by electronic control unit	• Injection quantity is limited. • Exhaust gas recirculation control is stopped. • Throttle control is stopped. • Turbocharger control is stopped.
Possible causes	• Open-circuit or short-circuit of harness between engine electronic control unit and each of electronic drive units (exhaust gas recirculation, throttle and turbocharger) • Malfunction of each connector • Malfunction of engine electronic control unit • Malfunction of each of electronic drive units (exhaust gas recirculation, throttle and turbocharger)

P0607: ECU System (warning lamp flashes: 33)

Generation condition	• System is overloaded. • Data processing time of engine electronic control unit has exceeded time-out period.
Recoverability	System recovers if any valid signal is input when starter switch is turned from OFF to ON (the warning lamp does not go out unless 3 consecutive valid signals are input).
Control effected by electronic control unit	Engine is stopped.
Possible causes	• Malfunction of engine electronic control unit (Replacement of engine electronic control unit)

P060B: A/D Converter (warning lamp flashes: 33, 63)

Generation condition	Voltage after conversion inside engine electronic control unit is higher than specification (5 V).
Recoverability	System recovers if any valid signal is input when starter switch is turned from OFF to ON (the warning lamp does not go out unless 3 consecutive valid signals are input).
Control effected by electronic control unit	• Engine is stopped. • Engine speed is limited. • Turbocharger target opening value is replaced by a backup value. • Exhaust gas recirculation control is stopped. • Throttle control is stopped.
Possible causes	• Malfunction of engine electronic control unit (Replacement of engine electronic control unit)

https://truckmanualshub.com/

P0615: Starter Safety Relay (Over Load) (warning lamp flashes: 48)

Generation conditions	Safety relay overload
Recoverability	System recovers if signal becomes with starter switch ON position.
Control effected by electronic control unit	• Normal control
Possible causes	• Short-circuited harness between engine electronic control unit and safety relay • Malfunction of each connector • Malfunction of safety relay • Malfunction of engine electronic control unit

P0616: Starter Safety Relay (Low) (warning lamp flashes: 48)

Generation conditions	Safety relay ground short or open circuit
Recoverability	System recovers if signal becomes with starter switch ON position.
Control effected by electronic control unit	• Normal control
Possible causes	• Open-circuited or short-circuited harness between engine electronic control unit and safety relay • Malfunction of each connector • Malfunction of safety relay • Malfunction of engine electronic control unit

P0617: Starter Safety Relay (High) (warning lamp flashes: 48)

Generation conditions	Safety relay Battery short or open circuit
Recoverability	System recovers if signal becomes with starter switch ON position.
Control effected by electronic control unit	• Normal control
Possible causes	• Open-circuited or short-circuited harness between engine electronic control unit and safety relay • Malfunction of each connector • Malfunction of safety relay • Malfunction of engine electronic control unit

P061B: ECU Performance (Calc) (warning lamp flashes: 33)

Generation condition	Abnormal condition has occurred in arithmetic processing inside engine electronic control unit.
Recoverability	System recovers if any valid signal is input with starter switch in ON position.
Control effected by electronic control unit	No particular control takes place.
Possible causes	• Malfunction of engine electronic control unit (Replacement of engine electronic control unit)

P061C: ECU Performance (Ne) (warning lamp flashes: 33)

Generation condition	Abnormal condition has occurred in engine speed processing inside engine electronic control unit.
Recoverability	System recovers if any valid signal is input with starter switch in ON position.
Control effected by electronic control unit	No particular control takes place.
Possible causes	• Malfunction of engine electronic control unit (Replacement of engine electronic control unit)

P062D: Injector Bank 1 (warning lamp flashes: 82)

Generation condition	Injector magnetic valve (for No. 1 and No. 4 cylinders) has stopped functioning temporarily.
Recoverability	System recovers if any valid signal is input when starter switch is turned from OFF to ON (the warning lamp does not extinguish unless 3 consecutive valid signals are input).
Control effected by electronic control unit	• Fuel injection amount is limited to a default value. • Occurrence of abnormal injection control is communicated through CAN. • Injector magnetic valve (for No. 1 and No. 4 cylinders) is deactivated. • Exhaust gas recirculation control is deactivated. • Throttle control is deactivated.
Possible causes	• Open-circuited or short-circuited harness between engine electronic control unit and injector magnetic valve (cylinder 1, 4) • Malfunction of each connector • Malfunction of injector magnetic valve (cylinder 1, 4) • Malfunction of engine electronic control unit

P062E: Injector Bank 2 (warning lamp flashes: 82)

Generation condition	Injector magnetic valve (for No. 2 and No. 3 cylinders) has stopped functioning temporarily.
Recoverability	System recovers if any valid signal is input when starter switch is turned from OFF to ON (the warning lamp does not extinguish unless 3 consecutive valid signals are input).
Control effected by electronic control unit	• Fuel injection amount is limited to a default value. • Occurrence of abnormal injection control is communicated through CAN. • Injector magnetic valve (for No. 2 and No. 3 cylinders) is deactivated. • Exhaust gas recirculation control is deactivated. • Throttle control is deactivated.
Possible causes	• Open-circuited or short-circuited harness between engine electronic control unit and injector magnetic valve (cylinder 2, 3) • Malfunction of each connector • Malfunction of injector magnetic valve (cylinder 2, 3) • Malfunction of engine electronic control unit

P062F: ECU System (EEPROM) (warning lamp flashes: 33)

Generation condition	Some error has occurred in reading or writing process.
Recoverability	System recovers if any valid signal is input when starter switch is turned from OFF to ON (the warning lamp does not extinguish unless 3 consecutive valid signals are input).
Control effected by electronic control unit	No particular control takes place.
Possible causes	• Malfunction of engine electronic control unit (Replacement of engine electronic control unit)

P0642: Sensor Supply Voltage 1 (Low) (warning lamp flashes: 81)

Generation condition	Engine electronic control unit internal voltage (sensor supply voltage 1) is lower than specification.
Recoverability	System recovers if any valid signal is input when starter switch is turned from OFF to ON (the warning lamp does not go out unless 3 consecutive valid signals are input).
Control effected by electronic control unit	Effects no special control.
Possible causes	• Open-circuited or short-circuited harness between engine electronic control unit and idling speed adjustment potentiometer • Open-circuited or short-circuited harness between engine electronic control unit and accelerator pedal position sensor 1 • Open-circuited or short-circuited harness between engine electronic control unit and intake air temperature sensor 1 • Malfunction of each connector • Malfunction of idling speed adjustment potentiometer • Malfunction of accelerator pedal position sensor 1 • Malfunction of intake air temperature sensor 1 • Malfunction of engine electronic control unit

https://truckmanualshub.com/

P0643: Sensor Supply Voltage 1 (High) (warning lamp flashes: 81)

Generation condition	Engine electronic control unit internal voltage (sensor supply voltage 1) is higher than specification.
Recoverability	System recovers if any valid signal is input when starter switch is turned from OFF to ON (the warning lamp does not go out unless 3 consecutive valid signals are input).
Control effected by electronic control unit	Effects no special control.
Possible causes	• Open-circuited or short-circuited harness between engine electronic control unit and idling speed adjustment potentiometer • Open-circuited or short-circuited harness between engine electronic control unit and accelerator pedal position sensor 1 • Open-circuited or short-circuited harness between engine electronic control unit and intake air temperature sensor 1 • Malfunction of each connector • Malfunction of idling speed adjustment potentiometer • Malfunction of accelerator pedal position sensor 1 • Malfunction of intake air temperature sensor 1 • Malfunction of engine electronic control unit

P0650: MIL (warning lamp flashes: 3)

Generation condition	Engine warning lamp (orange) circuit shorted, open-circuited, or overloaded
Recoverability	System recovers if signal becomes normal with starter switch in ON position.
Control effected by electronic control unit	Effects no special control.
Possible causes	• Open-circuited or short-circuited harness between engine electronic control unit and meter cluster • Malfunction of each connector • Malfunction of meter cluster • Malfunction of engine electronic control unit

P0652: Sensor Supply Voltage 2 (Low) (warning lamp flashes: 81)

Generation condition	Engine electronic control unit internal voltage (sensor supply voltage 2) is lower than specification.
Recoverability	System recovers if any valid signal is input when starter switch is turned from OFF to ON (the warning lamp does not go out unless 3 consecutive valid signals are input).
Control effected by electronic control unit	• Output to sensor is stopped if voltage is lower than 3.5 V. • Output level is lowered if voltage is higher than 3.5 V.
Possible causes	• Open-circuited or short-circuited harness between engine electronic control unit and boost pressure sensor • Open-circuited or short-circuited harness between engine electronic control unit and accelerator pedal position sensor 2 • Open-circuited or short-circuited harness between engine electronic control unit and fuel temperature sensor • Malfunction of each connector • Malfunction of boost pressure sensor • Malfunction of accelerator pedal position sensor 2 • Malfunction of fuel temperature sensor • Malfunction of engine electronic control unit

P0653: Sensor Supply Voltage 2 (High) (warning lamp flashes: 81)

Generation condition	Engine electronic control unit internal voltage (sensor supply voltage 2) is higher than specification.
Recoverability	System recovers if any valid signal is input when starter switch is turned from OFF to ON (the warning lamp does not go out unless 3 consecutive valid signals are input).
Control effected by electronic control unit	• Output to sensor is stopped if voltage is lower than 3.5 V. • Output level is lowered if voltage is higher than 3.5 V.
Possible causes	• Open-circuited or short-circuited harness between engine electronic control unit and boost pressure sensor • Open-circuited or short-circuited harness between engine electronic control unit and accelerator pedal position sensor 2 • Open-circuited or short-circuited harness between engine electronic control unit and fuel temperature sensor • Malfunction of each connector • Malfunction of boost pressure sensor • Malfunction of accelerator pedal position sensor 2 • Malfunction of fuel temperature sensor • Malfunction of engine electronic control unit

P0657: M/V Voltage (Low) (warning lamp flashes: 79)

Generation condition	Exhaust shutter 3-way magnetic valve circuit shorted to ground.
Recoverability	System recovers if any valid signal is input when starter switch is turned from OFF to ON (the warning lamp does not go out unless 3 consecutive valid signals are input).
Control effected by electronic control unit	Control of auxiliary braking function is stopped.
Possible causes	• Open-circuited or short-circuited harness between engine electronic control unit and exhaust shutter 3-way magnetic valve • Malfunction of each connector • Malfunction of exhaust shutter 3-way magnetic valve • Malfunction of engine electronic control unit

P0685: EDU Relay (Open) (warning lamp flashes: 84)

Generation condition	Electronic drive unit relay open-circuited.
Recoverability	System recovers if any valid signal is input when starter switch is turned from OFF to ON (the warning lamp does not go out unless 3 consecutive valid signals are input).
Control effected by electronic control unit	• Injection quantity is limited. • Turbocharger target opening value is replaced by a backup value. • Exhaust gas recirculation control is stopped. • Throttle control is stopped.
Possible causes	• Open-circuited or short-circuited harness between engine electronic control unit and electronic drive unit relay • Malfunction of each connector • Malfunction of electronic drive unit relay • Malfunction of engine electronic control unit

P0686: EDU Relay (Low) (warning lamp flashes: 84)

Generation condition	Electronic drive unit relay circuit shorted to ground.
Recoverability	System recovers if any valid signal is input when starter switch is turned from OFF to ON (the warning lamp does not go out unless 3 consecutive valid signals are input).
Control effected by electronic control unit	• Injection quantity is limited. • Turbocharger target opening value is replaced by a backup value. • Exhaust gas recirculation control is stopped. • Throttle control is stopped.
Possible causes	• Open-circuited or short-circuited harness between engine electronic control unit and electronic drive unit relay • Malfunction of each connector • Malfunction of electronic drive unit relay • Malfunction of engine electronic control unit

https://truckmanualshub.com/

P0687: EDU Relay (High) (warning lamp flashes: 84)

Generation condition	Electronic drive unit relay circuit shorted to power source.
Recoverability	System recovers if any valid signal is input when starter switch is turned from OFF to ON (the warning lamp does not go out unless 3 consecutive valid signals are input).
Control effected by electronic control unit	• Injection quantity is limited. • Turbocharger target opening value is replaced by a backup value. • Exhaust gas recirculation control is stopped. • Throttle control is stopped.
Possible causes	• Open-circuited or short-circuited harness between engine electronic control unit and electronic drive unit relay • Malfunction of each connector • Malfunction of electronic drive unit relay • Malfunction of engine electronic control unit

P0698: Sensor Supply Voltage 3 (Low) (warning lamp flashes: 81)

Generation condition	Engine electronic control unit internal voltage (sensor supply voltage 3) is lower than specification.
Recoverability	System recovers if any valid signal is input when starter switch is turned from OFF to ON (the warning lamp does not go out unless 3 consecutive valid signals are input).
Control effected by electronic control unit	Effects no special control.
Possible causes	• Open-circuited or short-circuited harness between engine electronic control unit and common rail pressure sensor • Open-circuited or short-circuited harness between engine electronic control unit and diesel particulate filter pressure sensor • Open-circuited or short-circuited harness between engine electronic control unit and intake air temperature sensor 2 • Malfunction of each connector • Malfunction of common rail pressure sensor • Malfunction of diesel particulate filter differential pressure sensor • Malfunction of intake air temperature sensor 2 • Malfunction of engine electronic control unit

P0699: Sensor Supply Voltage 3 (High) (warning lamp flashes: 81)

Generation condition	Engine electronic control unit internal voltage (sensor supply voltage 3) is higher than specification.
Recoverability	System recovers if any valid signal is input when starter switch is turned from OFF to ON (the warning lamp does not go out unless 3 consecutive valid signals are input).
Control effected by electronic control unit	Effects no special control.
Possible causes	• Open-circuited or short-circuited harness between engine electronic control unit and common rail pressure sensor • Open-circuited or short-circuited harness between engine electronic control unit and diesel particulate filter pressure sensor • Open-circuited or short-circuited harness between engine electronic control unit and intake air temperature sensor 2 • Malfunction of each connector • Malfunction of common rail pressure sensor • Malfunction of diesel particulate filter differential pressure sensor • Malfunction of intake air temperature sensor 2 • Malfunction of engine electronic control unit

P1171: Q Adjustment Resistor (Low) (warning lamp flashes: 34)

Generation condition	Voltage of fuel injection rate adjustment resistor is too low (below 0.2 V).
Recoverability	System recovers if any valid signal is input when starter switch is turned from OFF to ON (the warning lamp does not extinguish unless 3 consecutive valid signals are input).
Control effected by electronic control unit	Control is made using a backup value (No. 1).
Possible causes	• Open-circuited or short-circuited harness between engine electronic control unit and fuel injection rate adjustment resistor • Malfunction of each connector • Malfunction of fuel injection rate adjustment resistor • Malfunction of engine electronic control unit

P1172: Q Adjustment Resistor (High) (warning lamp flashes: 34)

Generation condition	Voltage of fuel injection rate adjustment resistor is too high (above 4.8 V).
Recoverability	System recovers if any valid signal is input when starter switch is turned from OFF to ON (the warning lamp does not extinguish unless 3 consecutive valid signals are input).
Control effected by electronic control unit	Control is made using a backup value (No. 1).
Possible causes	• Open-circuited or short-circuited harness between engine electronic control unit and fuel injection rate adjustment resistor • Malfunction of each connector • Malfunction of fuel injection rate adjustment resistor • Malfunction of engine electronic control unit

P1C01: Inter Cooler Performance (warning lamp flashes: 27)

Generation condition	The electronic control unit has judged that the intercooler was not operating properly, based on the diagnostic results of the intake system.
Recoverability	System recovers if any valid signal is input when starter switch is turned from OFF to ON (the warning lamp does not go out unless 3 consecutive valid signals are input).
Control effected by electronic control unit	• Injection quantity is limited. • Exhaust gas recirculation control is stopped. • Throttle control is stopped.
Possible causes	• Foreign substances deposited on intercooler front core • Intercooler air leakage • Air inlet hose/air inlet pipe fitted poorly

P1C11: Injector #1-A (Plausibility) (warning lamp flashes: 37)

Generation condition	The engine electronic control unit has judged that injector magnetic valve (for No. 1 cylinder) was faulty in comparison with the condition of other injector magnetic valves.
Recoverability	System recovers if any valid signal is input when starter switch is turned from OFF to ON (the warning lamp does not extinguish unless 3 consecutive valid signals are input).
Control effected by electronic control unit	• Fuel injection amount is limited to a default value. • Occurrence of abnormal injection control is communicated through CAN. • Injector magnetic valve (for No. 1 and No. 4 cylinders) is deactivated. • Exhaust gas recirculation control is deactivated. • Throttle control is deactivated.
Possible causes	• Open-circuited or short-circuited harness between engine electronic control unit and injector magnetic valve (No. 1 cylinder) • Malfunction of each connector • Malfunction of injector magnetic valve (No. 1 cylinder) • Malfunction of engine electronic control unit

P1C12: Injector #2-A (Plausibility) (warning lamp flashes: 38)

Generation condition	The engine electronic control unit has judged that injector magnetic valve (for No. 2 cylinder) was faulty in comparison with the condition of other injector magnetic valves.
Recoverability	System recovers if any valid signal is input when starter switch is turned from OFF to ON (the warning lamp does not extinguish unless 3 consecutive valid signals are input).
Control effected by electronic control unit	• Fuel injection amount is limited to a default value. • Occurrence of abnormal injection control is communicated through CAN. • Injector magnetic valve (for No. 2 and No. 3 cylinders) is deactivated. • Exhaust gas recirculation control is deactivated. • Throttle control is deactivated.
Possible causes	• Open-circuited or short-circuited harness between engine electronic control unit and injector magnetic valve (No. 2 cylinder) • Malfunction of each connector • Malfunction of injector magnetic valve (No. 2 cylinder) • Malfunction of engine electronic control unit

https://truckmanualshub.com/

P1C13: Injector #3-A (Plausibility) (warning lamp flashes: 39)

Generation condition	The engine electronic control unit has judged that injector magnetic valve (for No. 3 cylinder) was faulty in comparison with the condition of other injector magnetic valves.
Recoverability	System recovers if any valid signal is input when starter switch is turned from OFF to ON (the warning lamp does not extinguish unless 3 consecutive valid signals are input).
Control effected by electronic control unit	• Fuel injection amount is limited to a default value. • Occurrence of abnormal injection control is communicated through CAN. • Injector magnetic valve (for No. 2 and No. 3 cylinders) is deactivated. • Exhaust gas recirculation control is deactivated. • Throttle control is deactivated.
Possible causes	• Open-circuited or short-circuited harness between engine electronic control unit and injector magnetic valve (No. 3 cylinder) • Malfunction of each connector • Malfunction of injector magnetic valve (No. 3 cylinder) • Malfunction of engine electronic control unit

P1C14: Injector #4-A (Plausibility) (warning lamp flashes: 8)

Generation condition	The engine electronic control unit has judged that injector magnetic valve (for No. 4 cylinder) was faulty in comparison with the condition of other injector magnetic valves.
Recoverability	System recovers if any valid signal is input when starter switch is turned from OFF to ON (the warning lamp does not extinguish unless 3 consecutive valid signals are input).
Control effected by electronic control unit	• Fuel injection amount is limited to a default value. • Occurrence of abnormal injection control is communicated through CAN. • Injector magnetic valve (for No. 1 and No. 4 cylinders) is deactivated. • Exhaust gas recirculation control is deactivated. • Throttle control is deactivated.
Possible causes	• Open-circuited or short-circuited harness between engine electronic control unit and injector magnetic valve (No. 4 cylinder) • Malfunction of each connector • Malfunction of injector magnetic valve (No. 4 cylinder) • Malfunction of engine electronic control unit

P2002: DPF MFF (warning lamp flashes: 55)

Generation condition	Diesel particulate filter differential pressure is determined to exceed the programmed value.
Recoverability	System recovers if any valid signal is input when starter switch is turned from OFF to ON (the warning lamp does not go out unless 3 consecutive valid signals are input).
Control effected by electronic control unit	Injection quantity is limited.
Possible causes	• Clogged diesel particulate filter

P2100: TVA (Open) (warning lamp flashes: 28)

Generation condition	Throttle electronic drive unit judges intake throttle open-circuited.
Recoverability	System recovers if any valid signal is input when starter switch is turned from OFF to ON (the warning lamp does not go out unless 3 consecutive valid signals are input).
Control effected by electronic control unit	• Injection quantity is limited. • Exhaust gas recirculation control is stopped. • Throttle control is stopped.
Possible causes	• Open-circuited or short-circuited harness between electronic drive unit and intake throttle • Malfunction of each connector • Malfunction of motor (built in intake throttle) • Malfunction of throttle position sensor (built in intake throttle) • Malfunction of electronic drive unit • Malfunction of electronic drive unit relay

P2101: TVA (System) (warning lamp flashes: 28)

Generation condition	The throttle electronic drive unit has judged that the power supply to intake throttle was faulty or the throttle position sensor was faulty.
Recoverability	System recovers if any valid signal is input when starter switch is turned from OFF to ON (the warning lamp does not go out unless 3 consecutive valid signals are input).
Control effected by electronic control unit	• Injection quantity is limited. • Exhaust gas recirculation control is stopped. • Throttle control is stopped.
Possible causes	• Open-circuited or short-circuited harness between electronic drive unit and intake throttle • Malfunction of each connector • Malfunction of motor (built in intake throttle) • Malfunction of throttle position sensor (built in intake throttle) • Malfunction of electronic drive unit • Malfunction of electronic drive unit relay

P2102: TVA (Short) (warning lamp flashes: 28)

Generation condition	Throttle electronic drive unit judges intake throttle shorted.
Recoverability	System recovers if any valid signal is input when starter switch is turned from OFF to ON (the warning lamp does not go out unless 3 consecutive valid signals are input).
Control effected by electronic control unit	• Injection quantity is limited. • Exhaust gas recirculation control is stopped. • Throttle control is stopped.
Possible causes	• Open-circuited or short-circuited harness between electronic drive unit and intake throttle • Malfunction of motor (built in intake throttle) • Malfunction of throttle position sensor (built in intake throttle) • Malfunction of electronic drive unit • Malfunction of electronic drive unit relay

P2120: Acc Switch (warning lamp flashes: 65)

Generation condition	Accelerator pedal switch signal is abnormal when compared with outputs of accelerator pedal position sensors 1 and 2.
Recoverability	System recovers if signal becomes normal with starter switch in ON position.
Control effected by electronic control unit	Effects no special control.
Possible causes	• Open-circuited or short-circuited harness between engine electronic control unit and accelerator pedal switch • Malfunction of each connector • Malfunction of accelerator pedal switch • Malfunction of engine electronic control unit

P2122: Acc Sensor 1 (Low) (warning lamp flashes: 24)

Generation condition	Accelerator pedal position sensor 1 voltage is at or below the specified value (0.49 V).
Recoverability	System recovers if any valid signal is input when starter switch is turned from OFF to ON (the warning lamp does not go out unless 3 consecutive valid signals are input).
Control effected by electronic control unit	Control is carried out using output from accelerator pedal position sensor 2.
Possible causes	• Open-circuit or short-circuit of harness between engine electronic control unit and accelerator pedal position sensor 1 • Malfunction of each connector • Malfunction of accelerator pedal position sensor 1 • Malfunction of engine electronic control unit

https://truckmanualshub.com/

P2123: Acc Sensor 1 (High) (warning lamp flashes: 24)

Generation condition	Accelerator pedal position sensor 1 voltage is at or above the specified value (4.7 V).
Recoverability	System recovers if any valid signal is input when starter switch is turned from OFF to ON (the warning lamp does not go out unless 3 consecutive valid signals are input).
Control effected by electronic control unit	Control is carried out using output from accelerator pedal position sensor 2.
Possible causes	• Open-circuit or short-circuit of harness between engine electronic control unit and accelerator pedal position sensor 1 • Malfunction of each connector • Malfunction of accelerator pedal position sensor 1 • Malfunction of engine electronic control unit

P2127: Acc Sensor 2 (Low) (warning lamp flashes: 16)

Generation condition	Accelerator pedal position sensor 2 voltage is at or below the specified value (0.49 V).
Recoverability	System recovers if any valid signal is input when starter switch is turned from OFF to ON (the warning lamp does not go out unless 3 consecutive valid signals are input).
Control effected by electronic control unit	Control is carried out using output from accelerator pedal position sensor 1.
Possible causes	• Open-circuit or short-circuit of harness between engine electronic control unit and accelerator pedal position sensor 2 • Malfunction of each connector • Malfunction of accelerator pedal position sensor 2 • Malfunction of engine electronic control unit

P2128: Acc Sensor 2 (High) (warning lamp flashes: 16)

Generation condition	Accelerator pedal position sensor 2 voltage is at or above the specified value (4.7 V).
Recoverability	System recovers if any valid signal is input when starter switch is turned from OFF to ON (the warning lamp does not go out unless 3 consecutive valid signals are input).
Control effected by electronic control unit	Control is carried out using output from accelerator pedal position sensor 1.
Possible causes	• Open-circuit or short-circuit of harness between engine electronic control unit and accelerator pedal position sensor 2 • Malfunction of each connector • Malfunction of accelerator pedal position sensor 2 • Malfunction of engine electronic control unit

P2135: TVA SNSR (Voltage) (warning lamp flashes: 28)

Generation condition	Throttle electronic drive unit judges throttle position sensor power abnormal.
Recoverability	System recovers if any valid signal is input when starter switch is turned from OFF to ON (the warning lamp does not go out unless 3 consecutive valid signals are input).
Control effected by electronic control unit	• Injection quantity is limited. • Exhaust gas recirculation control is stopped. • Throttle control is stopped.
Possible causes	• Open-circuited or short-circuited harness between electronic drive unit and intake throttle • Malfunction of each connector • Malfunction of motor (built in intake throttle) • Malfunction of throttle position sensor (built in intake throttle) • Malfunction of electronic drive unit • Malfunction of electronic drive unit relay

P2138: Acc Sensor Correlation (warning lamp flashes: 24, 58)

Generation condition	Output voltages from accelerator pedal position sensors 1 and 2 are out of specified range or result of comparison between two voltages deviates from specification.
Recoverability	System recovers if any valid signal is input when starter switch is turned from OFF to ON (the warning lamp does not go out unless 3 consecutive valid signals are input).
Control effected by electronic control unit	Effects no special control.
Possible causes	• Open-circuit or short-circuit of harness between engine electronic control unit and accelerator pedal position sensor • Malfunction of each connector • Malfunction of accelerator pedal position sensor • Malfunction of engine electronic control unit

P2147: Injector Bank 1 (Low) (warning lamp flashes: 82)

Generation condition	Injector magnetic valve (No. 1 and No. 4 cylinder) circuit shorted to ground.
Recoverability	System recovers if any valid signal is input when starter switch is turned from OFF to ON (the warning lamp does not go out unless 3 consecutive valid signals are input).
Control effected by electronic control unit	• Injection quantity is limited. • Outputs injection control fault signal through CAN bus. • Injector magnetic valves (No. 1 and No. 4 cylinders) are stopped. • Exhaust gas recirculation control is stopped. • Throttle control is stopped.
Possible causes	• Open-circuited or short-circuited harness between engine electronic control unit and injector magnetic valve (cylinder 1, 4) • Malfunction of each connector • Malfunction of injector magnetic valve (cylinder 1, 4) • Malfunction of engine electronic control unit

P2148: Injector Bank 1 (High) (warning lamp flashes: 82)

Generation condition	Injector magnetic valve (No. 1 and No. 4 cylinder) circuit shorted to power supply.
Recoverability	System recovers if any valid signal is input when starter switch is turned from OFF to ON (the warning lamp does not go out unless 3 consecutive valid signals are input).
Control effected by electronic control unit	• Injection quantity is limited. • Outputs injection control fault signal through CAN bus. • Injector magnetic valves (No. 1 and No. 4 cylinders) are stopped. • Exhaust gas recirculation control is stopped. • Throttle control is stopped.
Possible causes	• Open-circuited or short-circuited harness between engine electronic control unit and injector magnetic valve (cylinder 1, 4) • Malfunction of each connector • Malfunction of injector magnetic valve (cylinder 1, 4) • Malfunction of engine electronic control unit

P2150: Injector Bank 2 (Low) (warning lamp flashes: 82)

Generation condition	Injector magnetic valve (No. 2 and No. 3 cylinder) circuit shorted to ground.
Recoverability	System recovers if any valid signal is input when starter switch is turned from OFF to ON (the warning lamp does not go out unless 3 consecutive valid signals are input).
Control effected by electronic control unit	• Injection quantity is limited. • Outputs injection control fault signal through CAN bus. • Injector magnetic valves (No. 2 and No. 3 cylinders) are stopped. • Exhaust gas recirculation control is stopped. • Throttle control is stopped.
Possible causes	• Open-circuited or short-circuited harness between engine electronic control unit and injector magnetic valve (cylinder 2, 3) • Malfunction of each connector • Malfunction of injector magnetic valve (cylinder 2, 3) • Malfunction of engine electronic control unit

https://truckmanualshub.com/

P2151: Injector Bank 2 (High) (warning lamp flashes: 82)

Generation condition	Injector magnetic valve (No. 2 and No. 3 cylinder) circuit shorted to power supply.
Recoverability	System recovers if any valid signal is input when starter switch is turned from OFF to ON (the warning lamp does not go out unless 3 consecutive valid signals are input).
Control effected by electronic control unit	• Injection quantity is limited. • Outputs injection control fault signal through CAN bus. • Injector magnetic valves (No. 2 and No. 3 cylinders) are stopped. • Exhaust gas recirculation control is stopped. • Throttle control is stopped.
Possible causes	• Open-circuited or short-circuited harness between engine electronic control unit and injector magnetic valve (cylinder 2, 3) • Malfunction of each connector • Malfunction of injector magnetic valve (cylinder 2, 3) • Malfunction of engine electronic control unit

P2199: EGR Temp Sensor (Correlation) (warning lamp flashes: 9)

Generation condition	The exhaust gas recirculation temperature sensor was judged faulty based on the diagnostic results obtained by comparing boost temperature sensor and intake air temperature sensor outputs.
Recoverability	System recovers if any valid signal is input when starter switch is turned from OFF to ON (the warning lamp does not go out unless 3 consecutive valid signals are input).
Control effected by electronic control unit	• Injection quantity is limited. • Exhaust gas recirculation control is stopped. • Throttle control is stopped.
Possible causes	• Open-circuit or short-circuit of harness between engine electronic control unit and Intake air temperature sensor • Open-circuit or short-circuit of harness between engine electronic control unit and Boost air temperature sensor • Malfunction of each connector • Malfunction of Intake air temperature sensor • Malfunction of Boost air temperature sensor • Malfunction of engine electronic control unit

P2227: Atm Press SNSR (Plausibility) (warning lamp flashes: 19)

Generation condition	The engine electronic control unit has judged that the atmospheric pressure sensor
Recoverability	System recovers if any valid signal is input when starter switch is turned from OFF to ON (the warning lamp does not go out unless 3 consecutive valid signals are input).
Control effected by electronic control unit	• Injection quantity is limited. • Exhaust gas recirculation control is stopped. • Throttle control is stopped.
Possible causes	• Malfunction of atmospheric pressure sensor (inside engine electronic control unit) • Malfunction of Boost pressure sensor • Malfunction of engine electronic control unit

P2228: Atm Press SNSR (Low) (warning lamp flashes: 19)

Generation condition	Voltage of atmospheric pressure sensor (inside engine electronic control unit) is lower than specification (0.19 V).
Recoverability	System recovers if any valid signal is input when starter switch is turned from OFF to ON (the warning lamp does not go out unless 3 consecutive valid signals are input).
Control effected by electronic control unit	• Injection quantity is limited. • Exhaust gas recirculation control is stopped. • Throttle control is stopped.
Possible causes	• Malfunction of atmospheric pressure sensor • Malfunction of engine electronic control unit

P2229: Atm Press SNSR (High) (warning lamp flashes: 19)

Generation condition	Voltage of atmospheric pressure sensor (inside engine electronic control unit) is higher than specification (4.7 V).
Recoverability	System recovers if any valid signal is input when starter switch is turned from OFF to ON (the warning lamp does not go out unless 3 consecutive valid signals are input).
Control effected by electronic control unit	• Injection quantity is limited. • Exhaust gas recirculation control is stopped. • Throttle control is stopped.
Possible causes	• Malfunction of atmospheric pressure sensor • Malfunction of engine electronic control unit

P2263: VGT System (warning lamp flashes: 51, 54)

Generation condition	Turbocharger system is abnormal.
Recoverability	System recovers if any valid signal is input when starter switch is turned from OFF to ON (the warning lamp does not go out unless 3 consecutive valid signals are input).
Control effected by electronic control unit	• Fuel injection rate is limited. • Turbocharger target opening value is replaced by a backup value. • Exhaust gas recirculation control is stopped. • Intake throttle control is stopped.
Possible causes	• Open-circuit or short-circuit of harness between electronic drive unit and turbocharger actuator • Malfunction of each connector • Malfunction of motor (built in turbocharger actuator) • Malfunction of position sensor (built in turbocharger actuator) • Malfunction of electronic drive unit • Malfunction of electronic drive unit relay

P2279: Intake Pipe Leak (warning lamp flashes: 27)

Generation condition	Air leakage occurs in intake air system.
Recoverability	System recovers if any valid signal is input when starter switch is turned from OFF to ON (the warning lamp does not go out unless 3 consecutive valid signals are input).
Control effected by electronic control unit	• Injection quantity is limited. • Exhaust gas recirculation control is stopped. • Throttle control is stopped.
Possible causes	• Foreign substances deposited on intercooler front core • Intercooler air leakage • Air inlet hose/air inlet pipe fitted poorly

P2413: EGR System (warning lamp flashes: 67)

Generation condition	Exhaust gas recirculation system abnormal
Recoverability	System recovers if any valid signal is input when starter switch is turned from OFF to ON (the warning lamp does not go out unless 3 consecutive valid signals are input).
Control effected by electronic control unit	• Injection quantity is limited. • Turbocharger target opening value is replaced by a backup value. • Exhaust gas recirculation control is stopped. • Throttle control is stopped.
Possible causes	• Open-circuit or short-circuit of harness between electronic drive unit and exhaust gas recirculation valve • Malfunction of each connector • Malfunction of motor (built in exhaust gas recirculation valve) • Malfunction of position sensor (built in exhaust gas recirculation valve) • Malfunction of electronic drive unit • Malfunction of electronic drive unit relay

https://truckmanualshub.com/

P242F: DPF MFF (Accumulation) (warning lamp flashes: 55)

Generation condition	The voltage of diesel particulate filter pressure sensor is excessively high.
Recoverability	System recovers if any valid signal is input when starter switch is turned from OFF to ON (the warning lamp does not go out unless 3 consecutive valid signals are input).
Control effected by electronic control unit	Injection quantity is limited.
Possible causes	• Clogged diesel particulate filter

P2453: DPF Diff SNSR (Plausi) & MFF (warning lamp flashes: 97)

Generation condition	Output of diesel particulate filter pressure after start of engine is too low (vacuum).
Recoverability	System recovers if any valid signal is input when starter switch is turned from OFF to ON (the warning lamp does not go out unless 3 consecutive valid signals are input).
Control effected by electronic control unit	Injection quantity is limited.
Possible causes	• Open-circuit or short-circuit of harness between engine electronic control unit and diesel particulate filter pressure sensor • Malfunction of each connector • Malfunction of diesel particulate filter differential pressure sensor • Malfunction of engine electronic control unit • Dissolution, blockage, and damage of diesel particulate filter

P2454: DPF Diff SNSR (Low) & MFF (warning lamp flashes: 97)

Generation condition	Diesel particulate filter pressure sensor circuit shorted to ground.
Recoverability	System recovers if any valid signal is input when starter switch is turned from OFF to ON (the warning lamp does not go out unless 3 consecutive valid signals are input).
Control effected by electronic control unit	Injection quantity is limited.
Possible causes	• Open-circuit or short-circuit of harness between engine electronic control unit and diesel particulate filter pressure sensor • Malfunction of each connector • Malfunction of diesel particulate filter differential pressure sensor • Malfunction of engine electronic control unit

P2455: DPF Diff SNSR (High) & MFF (warning lamp flashes: 97)

Generation condition	Diesel particulate filter differential pressure sensor circuit shorted to power source.
Recoverability	System recovers if any valid signal is input when starter switch is turned from OFF to ON (the warning lamp does not go out unless 3 consecutive valid signals are input).
Control effected by electronic control unit	Injection quantity is limited.
Possible causes	• Open-circuit or short-circuit of harness between engine electronic control unit and diesel particulate filter pressure sensor • Malfunction of each connector • Malfunction of diesel particulate filter differential pressure sensor • Malfunction of engine electronic control unit

P2457: EGR Cooler Performance (warning lamp flashes: 2)

Generation condition	Engine electronic control unit has judged operation of exhaust gas recirculation cooler abnormal as a result of diagnosis of exhaust gas recirculation system.
Recoverability	System recovers if any valid signal is input when starter switch is turned from OFF to ON (the warning lamp does not go out unless 3 consecutive valid signals are input).
Control effected by electronic control unit	• Injection quantity is limited. • Exhaust gas recirculation control is stopped. • Throttle control is stopped.
Possible causes	• Malfunction of Exhaust gas recirculation system.

P2562: VGT Position Sensor (warning lamp flashes: 51)

Generation condition	Turbocharger electronic drive unit determines the turbocharger position sensor to be faulty.
Recoverability	System recovers if any valid signal is input when starter switch is turned from OFF to ON (the warning lamp does not go out unless 3 consecutive valid signals are input).
Control effected by electronic control unit	• Fuel injection rate is limited. • Turbocharger target opening value is replaced by a backup value. • Exhaust gas recirculation control is stopped. • Intake throttle control is stopped.
Possible causes	• Open-circuit or short-circuit of harness between engine electronic drive unit and turbocharger actuator • Malfunction of each connector • Malfunction of motor (built in turbocharger actuator) • Malfunction of position sensor (built in turbocharger actuator) • Malfunction of electronic drive unit • Malfunction of engine electronic drive unit relay

P2670: MPROP Voltage (Low) (warning lamp flashes: 36)

Generation condition	Diagnosis code is generated under either of the following conditions. (1) MPROP (rail pressure control valve) circuit shorted to ground. (2) Engine electronic control unit has received too low (0 V) return voltage from MPROP (rail pressure control valve).
Recoverability	System recovers if any valid signal is input when starter switch is turned from OFF to ON (the warning lamp does not go out unless 3 consecutive valid signals are input).

Control effected by electronic control unit	• In the case of above problem (1)
	  • Injection quantity is limited.
	  • Exhaust gas recirculation control is stopped.
	  • Throttle control is stopped.
	• In the case of above problem (2)
	  • Injection quantity is fixed to current quantity.

Possible causes	• Malfunction of supply pump • Malfunction of pressure limiter • Injector not airtight • Plugged fuel system

https://truckmanualshub.com/

2. Multi-Use Tester Service Data

- It is possible to see service data and actuator tests simultaneously.

No.	Item	Data	Inspection condition	Requirement
01	Engine Revolution	■■■■.rpm	Racing (engine running)	Value corresponds to tachometer indication.
02	LOAD Value	■■■.■ %	Starter switch in ON position	0 %
0A	Reference Injection Quantity	■■■.■ %	Starter switch in ON position	0 %
20	Atmospheric Pressure	■■■.■ kPa	Altitude: 0 m	101 kPa
			Altitude: 600 m	95 kPa
21	Boost Pressure	■■■.■ kPa	Starter switch ON (engine stopped)	Agrees with atmospheric pressure.
			Accelerator pedal pressed after start of engine	Gradually increases.
22	Difference pressure across DPF	■■■.■ kPa	Idling	0 kPa
30	Intake Air Temp. (upper stream)	■■■.■ °C	On a cold engine	Equal to ambient temperature
31	Intake Air Temp. (downstream)	■■■.■ °C	On a cold engine	Equal to ambient temperature
32	Water Temperature	■■■.■ °C	Engine cold	Value corresponds to ambient temperature.
			Engine in process of warming up	Value gradually increases.
			Engine stopped after warming up	Value gradually decreases.
33	Fuel Temperature (inlet)	■■■.■ °C	Engine cold	Value corresponds to ambient temperature.
			Engine in process of warming up	Value gradually increases.
			Engine stopped after warming up	Value gradually decreases.
40	Accel Pedal Sensor Voltage 1	■.■■■ V	Accelerator pedal gradually pressed from released position	0.85 to 4.15 V
41	Accel Pedal Sensor Voltage 2	■.■■■ V	Accelerator pedal gradually pressed from released position	0.85 to 4.15 V
42	Accel Pedal Position (unfiltered)	■■■.■ %	Accelerator pedal not pressed	0 %
			Accelerator pedal gradually pressed	Value gradually increases.
			Accelerator pedal fully pressed	100 %
43	Accel Pedal Position (filtered)	■■■.■ %	Accelerator pedal not pressed	0 %
			Accelerator pedal gradually pressed	Value gradually increases.
			Accelerator pedal fully pressed	100 %
50	Target EGR Valve Position	■■■.■ %	Idling	0%
51	Actual EGR Valve Position	■■■.■ %	Idling	0%
		[Actuator test] A0: EGR 1		
52	Target Intake Throttle Position	■■■.■ %	Idling	90%
53	Actual Intake Throttle Position	■■■.■ %	Idling	90%
		[Actuator test] A3: Intake Throttle 1		
54	Target VGT Position	■■■.■ %	Starter switch ON	10%
55	Actual VGT Position	■■■.■ %	Starter switch ON	10%
		[Actuator test] A4: VGT 1, A5: EGR, ETV, VGT		
60	Air mass flow	■■■.■ g/s	Accelerator pedal is pressed gradually.	Flow rate to be increased accordingly
80	Power Supply Voltage	■■.■■ V	Starter switch ON	Value matches battery voltage.
81	Idle Volume Voltage	■.■■■ V	SLOW to FAST	1 to 3 V
82	Q Adjustment Resistor No. (Part name: Fuel injection rate adjustment resistor)	1/2/3/4/5/6/7/8/9/10/11/NON	–	Number matches number marked on fuel injection rate adjustment resistor.
90	Vehicle Speed	■■■■.km/h	Vehicle in motion	Value corresponds to speedometer indication.

No.	Item	Data	Inspection condition	Requirement
A0	Starter SW (S)	ON/OFF	Engine cranked by means of starter switch.	ON
			Starter switch in position except START	OFF
A1	Starter SW (M)	ON/OFF	Starter switch in ON position	ON
			Starter switch in position except ON	OFF
A2	Accel SW	ON/OFF	Accelerator pedal not pressed	ON
			Accelerator pedal pressed	OFF
A4	Auxiliary Brake SW 1 (Part name: Exhaust brake switch)	ON/OFF	Combination switch ON	ON
			Combination switch OFF	OFF
A5	Clutch SW	ON/OFF	Clutch pedal pressed	ON
			Clutch pedal not pressed	OFF
B0	Neutral SW	ON/OFF	Transmission in neutral	ON
			Transmission not in neutral	OFF
B1	Idle Up Cancel SW	ON/OFF	–	ON
			Continuously	OFF
C1	Diagnosis SW	ON/OFF	Diagnosis switch OFF (fuse fitted)	ON
			Diagnosis switch ON (fuse removed)	OFF
C2	Auxiliary Brake M/V 1 (Part name: Exhaust shutter 3-way magnetic valve)	ON/OFF	Exhaust brake operating	ON
			Exhaust brake not operating	OFF
			[Actuator test] AA: Auxiliary Brake M/V 1	
D0	Auxiliary Brake Indicator Lamp	ON/OFF	Exhaust brake operating	ON
			Exhaust brake not operating	OFF
			[Actuator test] AB: Auxiliary Brake Indicator Lamp	
D1	Glow Relay	ON/OFF	With engine coolant temperature at 60°C or less, turn starter switch OFF and ON. Inspect immediately after turning starter switch ON.	ON
			With engine coolant temperature at 60°C or more.	OFF
			With engine coolant temperature at 60°C or less, turn starter switch OFF and ON. Inspect about 192 seconds after turning starter switch ON.	
			[Actuator test] AC: Relay for Glow Relay	
D2	Glow Relay Indicator Lamp	ON/OFF	With engine coolant temperature at 0°C or less, turn starter switch OFF and ON. Inspect immediately after turning starter switch ON.	ON
			With engine coolant temperature at 0°C or more.	OFF
			With engine coolant temperature at 0°C or less, turn starter switch OFF and ON. Inspect about 8 seconds after turning starter switch ON.	
			[Actuator test] AD: Glow Indicator Lamp	
D3	Starter Safety Relay	ON/OFF	Carry out the actuator test “AE - Starter Safety Relay” using Multi-Use Tester. The relay should be ON.	ON
			When not testing	OFF
			[Actuator test] AE: Starter Safety Relay	
D4	EDU Power Relay	ON/OFF	Starter switch ON	ON
			Starter switch OFF	OFF
		[Actuator test] AF: EDU Relay		

https://truckmanualshub.com/

No.	Item	Data	Inspection condition	Requirement
E0	MIL	ON/OFF	Starter switch ON (engine not started)	ON
			No error after engine startup	OFF
			[Actuator test] B0: MIL	
E1	Diagnosis Lamp	ON/OFF	Starter switch ON (engine not started)	ON
			No error after engine startup	OFF
			[Actuator test] B1: Diagnosis Lamp	

3. Actuator Test Using Multi-Use Tester

- It is possible to see service data and actuator tests simultaneously.

No.	Item	Explanation	Confirmation method
A0	EGR 1	Maintain exhaust gas recirculation valve opening indicated by Multi-Use Tester during engine operation. [Can be executed when the following conditions are satisfied] • Vehicle: stationary (vehicle speed 0 km/h) • Starter switch: ON (engine started) • Transmission: neutral • Diagnosis switch: OFF (with fuse removed)	Check that the exhaust gas recirculation valve opening is changed. [Service data] 51: Actual EGR Valve Position
A3	Intake Throttle 1	Maintain intake throttle opening indicated by Multi-Use Tester during engine operation. [Can be executed when the following conditions are satisfied] • Vehicle: stationary (vehicle speed 0 km/h) • Starter switch: ON (engine started) • Transmission: neutral • Diagnosis switch: OFF (with fuse removed)	Check that the throttle opening is changed. [Service data] 53: Actual Intake Throttle Position
A4	VGT 1	Maintain turbocharger throttle opening indicated by Multi-Use Tester during engine operation. [Can be executed when the following conditions are satisfied] • Vehicle: stationary (vehicle speed 0 km/h) • Starter switch: ON (engine started) • Transmission: neutral • Diagnosis switch: OFF (with fuse removed) **NOTE** • **Adjust turbocharger throttle opening within the range from 15% to 80%.**	See “Measurement and Adjustment of Turbocharger Boost Pressure”. [Service data] 54: Target VGT Position 55: Actual VGT Position
A5	EGR, ETV, VGT	Maintain exhaust gas recirculation, intake throttle and turbocharger throttle opening indicated by Multi-Use Tester during engine operation or stop. [Can be executed when the following conditions are satisfied] • Vehicle: stationary (vehicle speed 0 km/h) • Starter switch: ON (engine started) • Transmission: neutral • Diagnosis switch: OFF (with fuse removed) **NOTE** • **If the actuator test is to be continued with the engine stationary, turn the starter switch OFF after starting the engine, and then turn the starter switch ON again within 15 seconds.**	Check that the valve opening of each device is changed. [Service data] 51: Actual EGR Valve Position 53: Actual Intake Throttle Position 54: Target VGT Position 55: Actual VGT Position
AA	Auxiliary Brake M/V 1 (Part name: Exhaust shutter 3-way magnetic valve)	Exhaust shutter 3-way magnetic valve drive signal [Can be executed when the following conditions are satisfied] • Vehicle: stationary (vehicle speed 0 km/h) • Starter switch: ON • Engine: stopped	Operating sound of magnetic valve [Service data] C2: Auxiliary Brake Indicator Lamp
AB	Auxiliary Brake Indicator Lamp	Exhaust brake indicator lamp drive signal [Can be executed when the following conditions are satisfied] • Vehicle: stationary (vehicle speed 0 km/h) • Starter switch: ON • Engine: stopped	ON/OFF condition of indicator lamp [Service data] D0: Auxiliary Brake Indicator Lamp
AC	Relay for Glow Relay	Glow drive relay drive signal 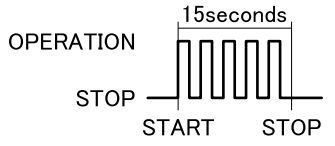 P107050E	Actuation noise should be heard. [Service data] D1: Glow Relay
AD	Glow Indicator Lamp	Glow indicator lamp illumination signal 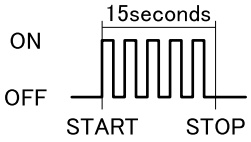 P107051E	Actuation noise should be heard. [Service data] D2: Glow Relay Indicator Lamp

https://truckmanualshub.com/

No.	Item	Explanation	Confirmation method
AE	Starter Safety Relay	Starter safety relay drive signal 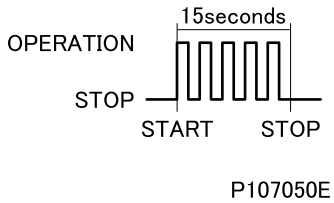 	Actuation noise should be heard. [Service data] D3: Starter Safety Relay
AF	EDU Relay	Electronic drive unit relay drive signal (Errors related to exhaust gas recirculation and to the intake throttle can be detected when this actuator test is executed.)	Operating sound of relay [Service data] D4: EDU Power Relay
B0	MIL	Engine warning lamp (orange) drive signal [Can be executed when the following conditions are satisfied] • Vehicle: stationary (vehicle speed 0 km/h) • Transmission: Neutral • Engine: stopped	ON/OFF condition of warning lamp (orange) [Service data] E0: MIL
B1	Diagnosis Lamp	Engine warning lamp (red) drive signal [Can be executed when the following conditions are satisfied] • Vehicle: stationary (vehicle speed 0 km/h) • Transmission: Neutral • Engine: stopped	ON/OFF condition of warning lamp (red) [Service data] E1: Diagnosis Lamp
B2	Fuel Leak Check	Rail pressure increased on a constant slope (for 6 seconds) [Can be executed when the following conditions are satisfied] • Vehicle: stationary (vehicle speed 0 km/h) • Transmission: Neutral • Diagnosis switch: OFF (with fuse removed)	Check that no fuel leaks from fuel system.
BB	Injector Test 1	Selected injector magnetic valve forcibly deactivated [Can be executed when the following conditions are satisfied] • Vehicle: stationary (vehicle speed 0 km/h) • Engine speed: Below 1500 rpm • Transmission: Neutral • No active diagnosis code generated	Check that injector magnet valve for No. 1 cylinder stops operating.
BC	Injector Test 2		Check that injector magnet valve for No. 4 cylinder stops operating.
BD	Injector Test 3		Check that injector magnet valve for No. 2 cylinder stops operating.
BE	Injector Test 4		Check that injector magnet valve for No. 3 cylinder stops operating.

4. Work When Replacing the Engine Electronic Control Unit

- A vehicle identification number (VIN) must be written (registered) to the engine electronic control unit after:
  - The current engine electronic control unit is replaced with a new one.
  - The current engine electronic control unit is replaced with one that has been used on another vehicle.

Writing a VIN (entire flow)

Connect the Multi-Use Tester (See Gr00).
↓
Turn the starter switch ON (the engine remains stopped).
↓
Confirm the VIN on the vehicle nameplate (See Gr00).
↓
Enter the VIN in the “VIN Writing” window of the Multi-Use Tester to write it to the engine electronic control unit.
↓
View the “VIN Information” window of the Multi-Use Tester to confirm the VIN written to the engine electronic control unit.
↓
Check the diagnosis code that is currently recorded, and delete it.
↓
Disconnect the Multi-Use Tester.

4.1 Procedure for writing a VIN

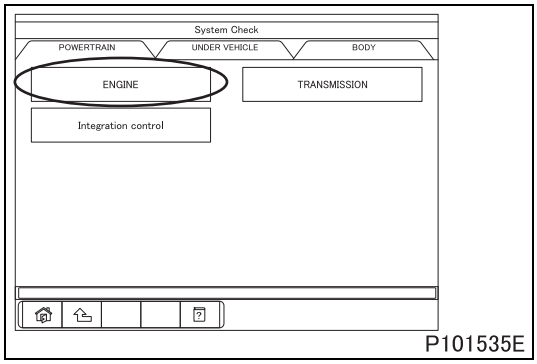

P101535E

(1) System check

- Select “POWERTRAIN” from the system check menu. After a while, a menu related to POWERTRAIN/ENGINE appears.
- Select “ENGINE.”

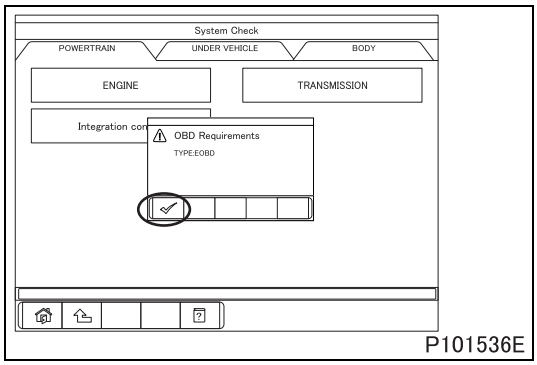

P101536E

- OBD requirements are automatically detected. Confirm that “TYPE: EOBD” is detected.
- Click the OK button.

https://truckmanualshub.com/

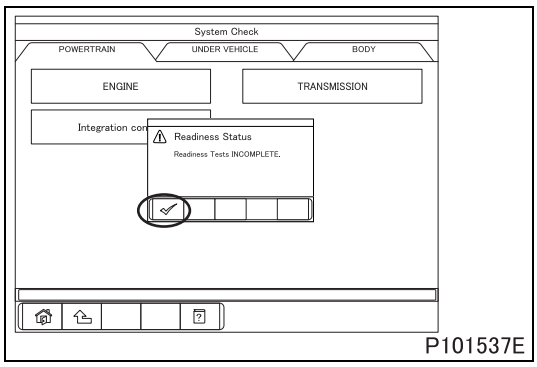

P101537E

- A system test automatically starts and “INCOMPLETE” is indicated. This raises no problem because VIN writing is incomplete at this stage. Click the OK button.

(2) Writing a VIN

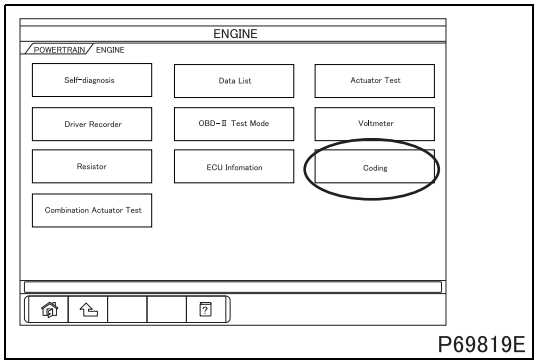

P69819E

[ENGINE menu] window

- Select “Coding”.

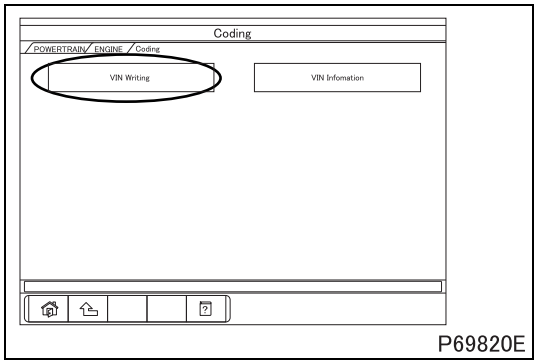

P69820E

[Coding] window

- Select “VIN Writing”.

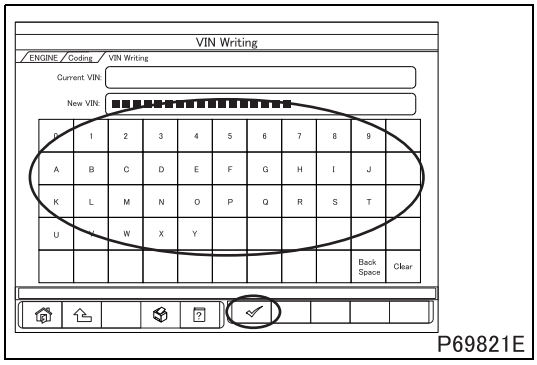

P69821E

[VIN Writing] window

- Enter the VIN (17 digits), which has been confirmed from the vehicle nameplate.
  (If a VIN was entered previously, the VIN entered currently is displayed in the “Current VIN”.)
- Click the OK button.

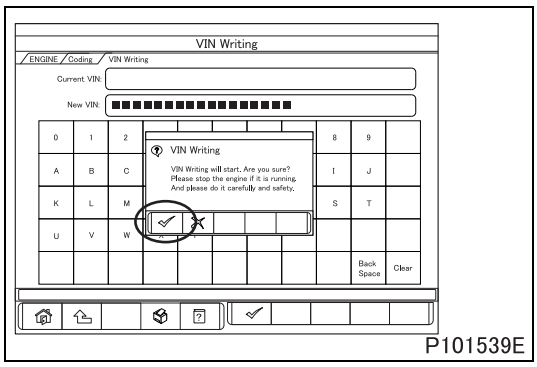

P101539E

[Confirmation of VIN writing] window

- Click the OK button to start writing the VIN to the engine electronic control unit.

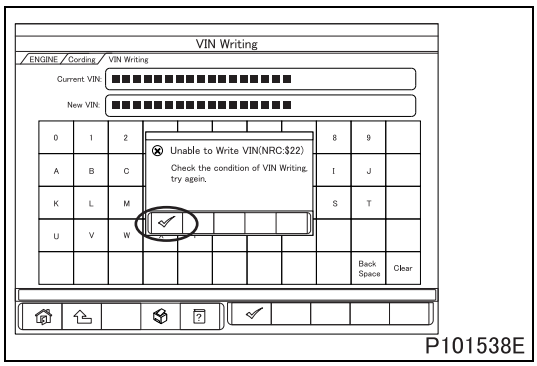

P101538E

[Write error] window

- An error is displayed if a VIN is entered while the engine is on or the transmission is set at a position except Neutral. If so, stop the engine or set the transmission to the Neutral position, and restart from the beginning.

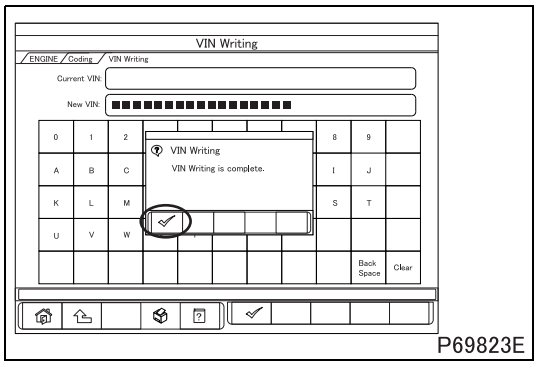

P69823E

[Completion of VIN writing] window

- Click the OK button.

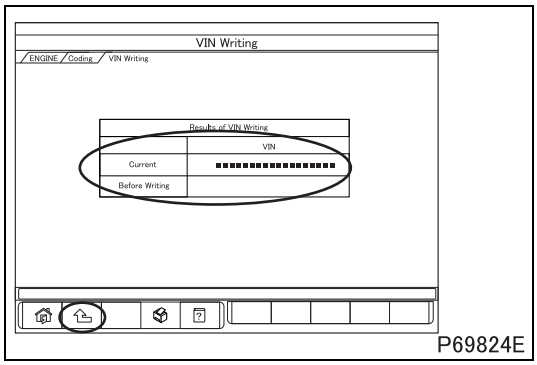

P69824E

[Result of VIN writing] window

- The VIN that was written to the engine electronic control unit is displayed. Confirm that the VIN is the right one.
- If the right VIN is displayed, click the Back button and confirm VIN information in step (3).
- If a wrong VIN is displayed, click the Back button and perform VIN writing in step (2) again.

(3) VIN confirmation

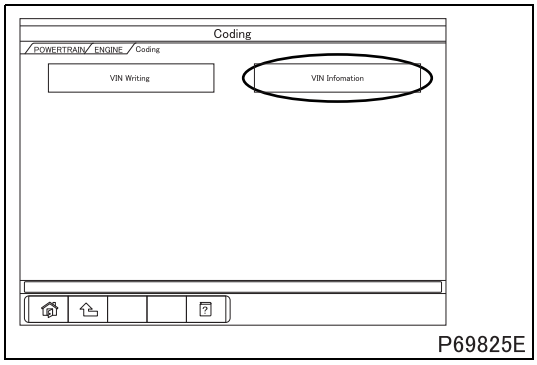

P69825E

[Coding] window

- Select “VIN Information.”

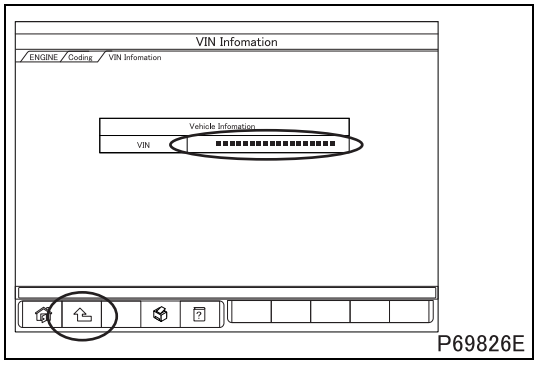

P69826E

[VIN Information] window

- Confirm that the displayed VIN is the right one, and click the Back button.

https://truckmanualshub.com/

(4) Confirming and deleting the diagnosis code (memory clear)

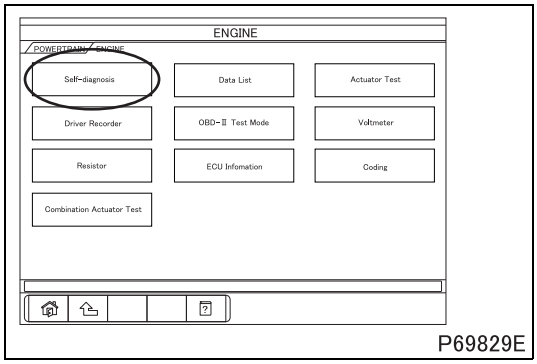

P69829E

[ENGINE menu] window

- Select “Self-diagnosis.”

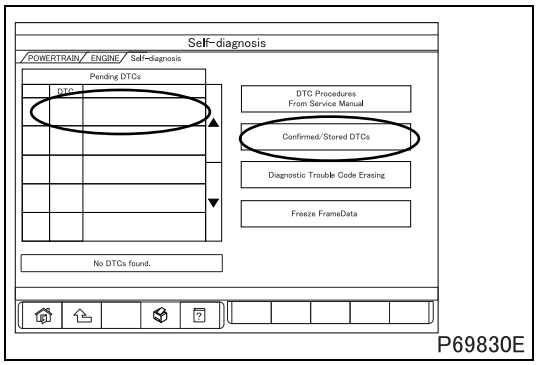

P69830E

[Self-diagnostic] window

- Check the “Pending DTC” field for generation of a diagnosis code.
- Click the “Confirmed/Stored DTCs” button.

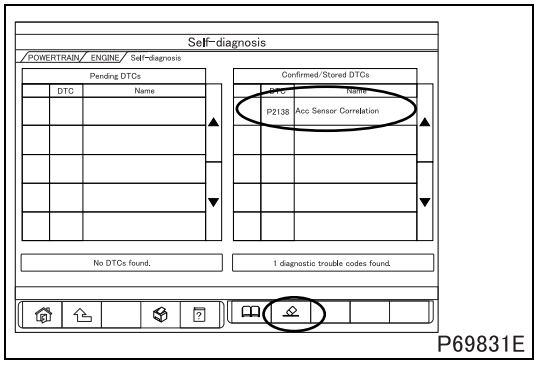

P69831E

- Check the “Confirmed/Stored DTCs” field for generation of a diagnosis code.
- If a diagnosis code is generated in either “Pending DTC” or “Confirmed/Stored DTCs,” click the Delete button to erase the diagnosis code.

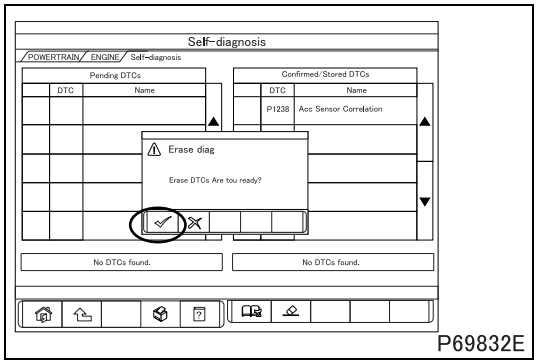

P69832E

[Erase diagnosis code] window

- Click the OK button to start deleting the diagnosis code.

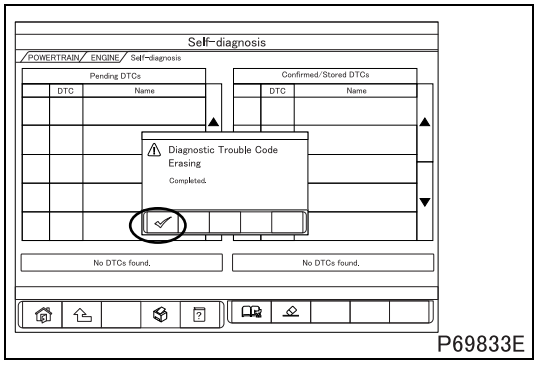

P69833E

[Diagnosis code erasing complete] window

- Click the OK button.

5. Electronic Control Unit Input/Output Table

- For terminal locations of each signal and ground. See the Electronic control unit connection diagram.

Hardware to be connected	Terminal	Input/Output	Voltage or waveform
Water temperature sensor	A40-A41	Input	[Conditions] • Starter switch OFF • Disconnect connector. Perform inspection on vehicle-side connector. [Requirements] • 20°C: 2.45 ± 0.14 kΩ • 80°C: 0.32 kΩ (reference value) • 110°C: 147.1 ± 2 kΩ
Accelerator pedal position sensor 1	B34-B33 B34-B45	Input	[Conditions] • Starter switch ON • Vehicle-side harness connected (Perform inspection on back of connector.) [Requirements] • With accelerator pedal not pressed: 0.85 ± 0.1 V • With accelerator pedal pressed: 4.15 ± 0.1 V
Accelerator pedal position sensor 2	B46-B33 B46-B45	Input	
Fuel temperature sensor	A89-A65	Input	[Conditions] • Starter switch OFF • Disconnect connector. Perform inspection on vehicle-side connector. [Requirements] • 20°C: $2.45^{+0.14}_{-0.13}$ kΩ • 80°C: 0.318 ± 0.008 kΩ • 110°C: 0.1417 ± 0.0018 kΩ
Injector magnetic valve (No. 1 cylinder)	A72-A23	Output	[Conditions] • Starter switch OFF • Disconnect connector. Perform inspection on vehicle-side connector. [Requirements] • 0.255 ± 0.04 Ω
Injector magnetic valve (No. 2 cylinder)	A95-A48	Output	
Injector magnetic valve (No. 3 cylinder)	A96-A24	Output	
Injector magnetic valve (No. 4 cylinder)	A71-A46	Output	
Engine speed sensor	A10-A9	Input	[Conditions] • Starter switch OFF • Disconnect connector. Perform inspection on vehicle-side connector. [Requirements] • 860 ± 86 Ω (20°C)
Cylinder recognition sensor	A78-A83	Input	[Conditions] • Starter switch OFF • Disconnect connector. Perform inspection on vehicle-side connector. [Requirements] • 200 to 1800 Ω
Vehicle speed sensor	A67-chassis ground	Input	[Conditions] • Starter switch ON • Vehicle-side harness connected (Perform inspection on back of connector.) • Turn wheels slowly using chassis dynamometer. [Requirements] • High pulse voltage:Approx. 8 ± 1 V • Low pulse voltage: 0.5 V or lower
Idling speed adjustment potentiometer	A12-A36	Input	[Conditions] • Starter switch ON • Vehicle-side harness connected (Perform inspection on back of connector.) [Requirements] • AUTO position: 4.0 ± 0.1 V • SLOW position: 3.0 ± 0.1 V • FAST position: 1.0 ± 0.1 V

https://truckmanualshub.com/

Hardware to be connected	Terminal	Input/Output	Voltage or waveform
Accelerator pedal switch	A20-B33 A20-B45	Output	[Conditions] • Starter switch ON • Vehicle-side harness connected (Perform inspection on back of connector.) [Requirements] • With accelerator pedal pressed: 0 V • With accelerator pedal not pressed: 5 V
Fuel injection rate adjustment resistor	A35-A88	Input	[Conditions] • Starter switch OFF • Disconnect connector. Perform inspection on vehicle-side connector. [Requirements] • No. 1 resistor: 270 ± 13.5 Ω • No. 2 resistor: 510 ± 25.5 Ω • No. 3 resistor: 820 ± 41 Ω • No. 4 resistor: 1300 ± 65 Ω • No. 5 resistor: 2000 ± 100 Ω • No. 6 resistor: 3300 ± 165 Ω • No. 7 resistor: 5600 ± 280 Ω • No. 8 resistor: 15000 ± 750 Ω • No. 9 resistor: 390 ± 19.5 Ω • No. 10 resistor: 4300 ± 215 Ω • No. 11 resistor: 9100 ± 455 Ω
MPROP (rail pressure control valve)	A69-A21 A69-A2 A3-A21 A3-A2	Output	[Conditions] • Starter switch OFF • Disconnect connector. Perform inspection on vehicle-side connector. [Requirements] • 2.6 to 3.15 Ω
Exhaust shutter 3-way magnetic valve	A76-A6	Output	[Conditions] • Starter switch ON • Vehicle-side harness connected (Perform inspection on back of connector.) [Requirements] • With exhaust brake operating: Corresponding to battery voltage • With exhaust brake not operating: 0 V
Intake air temperature sensor 1	A63-A32	Input	[Conditions] • Starter switch OFF • Disconnect connector. Perform inspection on vehicle-side connector. [Requirements] • 50°C: $2.20^{+0.405}_{-0.334}$ kΩ • 100°C: $0.51^{+0.071}_{-0.061}$ kΩ • 150°C: $0.16^{+0.018}_{-0.016}$ kΩ
Intake air temperature sensor 2	A29-B30	Input	[Conditions] • Starter switch OFF • Disconnect connector. Perform inspection on vehicle-side connector. [Requirements] • 0°C: $162.3^{+48.8}_{-36.5}$ kΩ • 20°C: $61.47^{+15.99}_{-12.35}$ kΩ • 80°C: $6.120^{+1.095}_{-0.907}$ kΩ
Diesel particulate filter differential pressure sensor	A61-A85 A84-A85	Input	[Conditions] • Starter switch ON • Vehicle-side harness connected (Perform inspection on back of connector.) [Requirements] <Power supply voltage> • 5 V <Output voltage> • 1 to 4.5 V

Hardware to be connected	Terminal	Input/Output	Voltage or waveform
Electronic drive unit relay	B39-B14	Output	[Conditions] • Starter switch ON • Vehicle-side harness connected (Perform inspection on back of connector.) [Requirements] • With relay operating: Corresponding to battery voltage • With relay not operating: 0 V
Safety relay voltage	A81-A49	Output	[Conditions] • Keep the vehicle harnesses connected to the electronic control unit connector halves. (Inspection is made at the back of the vehicle connectors.) [Normal status] • Relay ON: 12 V • Relay OFF: 0 V
Glow drive relay	A73-A7	Output	[Conditions] • Keep the vehicle harnesses connected to the electronic control unit connector halves. (Inspection is made at the back of the vehicle connectors.) • Carry out the actuator test “AC - Relay for Glow Relay” using Multi-Use Tester. [Normal status] • Battery voltage
Glow indicator lamp	A51-ground	Input	[Conditions] • Keep the vehicle harnesses connected to the electronic control unit connector halves. (Inspection is made at the back of the vehicle connectors.) • Carry out the actuator test “AD - Glow Indicator Lamp” using Multi-Use Tester. [Normal status] • The glow indicator lamp should illuminate.

https://truckmanualshub.com/

GROUP 14 COOLING

SPECIFICATIONS 14-2

STRUCTURE AND OPERATION
1. Cooling System (Flow of Coolant) 14-4
2. Thermostat 14-5
3. Water Pump 14-5

TROUBLESHOOTING 14-6

ON-VEHICLE INSPECTION AND ADJUSTMENT
1. Inspection and Adjustment of Belt Tension 14-8
2. Inspection of Cracks or Damage of the Belt 14-12
3. Coolant Replacement and Cleaning of Cooling System 14-13
4. Air Bleeding of Cooling System 14-15
5. Air/Gas Leakage Test 14-15

DISCONNECTION AND CONNECTION OF HOSES AND PIPES... 14-16

RADIATOR 14-20

COOLING FAN, BELT AND WATER PUMP 14-22

TENSION PULLEY 14-25

THERMOSTAT 14-26

PRESSURE CAP AND WATER OUTLET CASE 14-28

https://truckmanualshub.com/

Item	Specifications
Cooling system	Forced water circulation system
Water pump	Belt-driven involute type
Thermostat	Wax pellet, bottom bypass type (with jiggle valve)
Automatic cooling fan coupling	Continuous control type
Radiator	Tube and corrugated fin type
Coolant capacity dm^3 {L}	16 {16}

https://truckmanualshub.com/

M E M O

https://truckmanualshub.com/

1. Cooling System (Flow of Coolant)

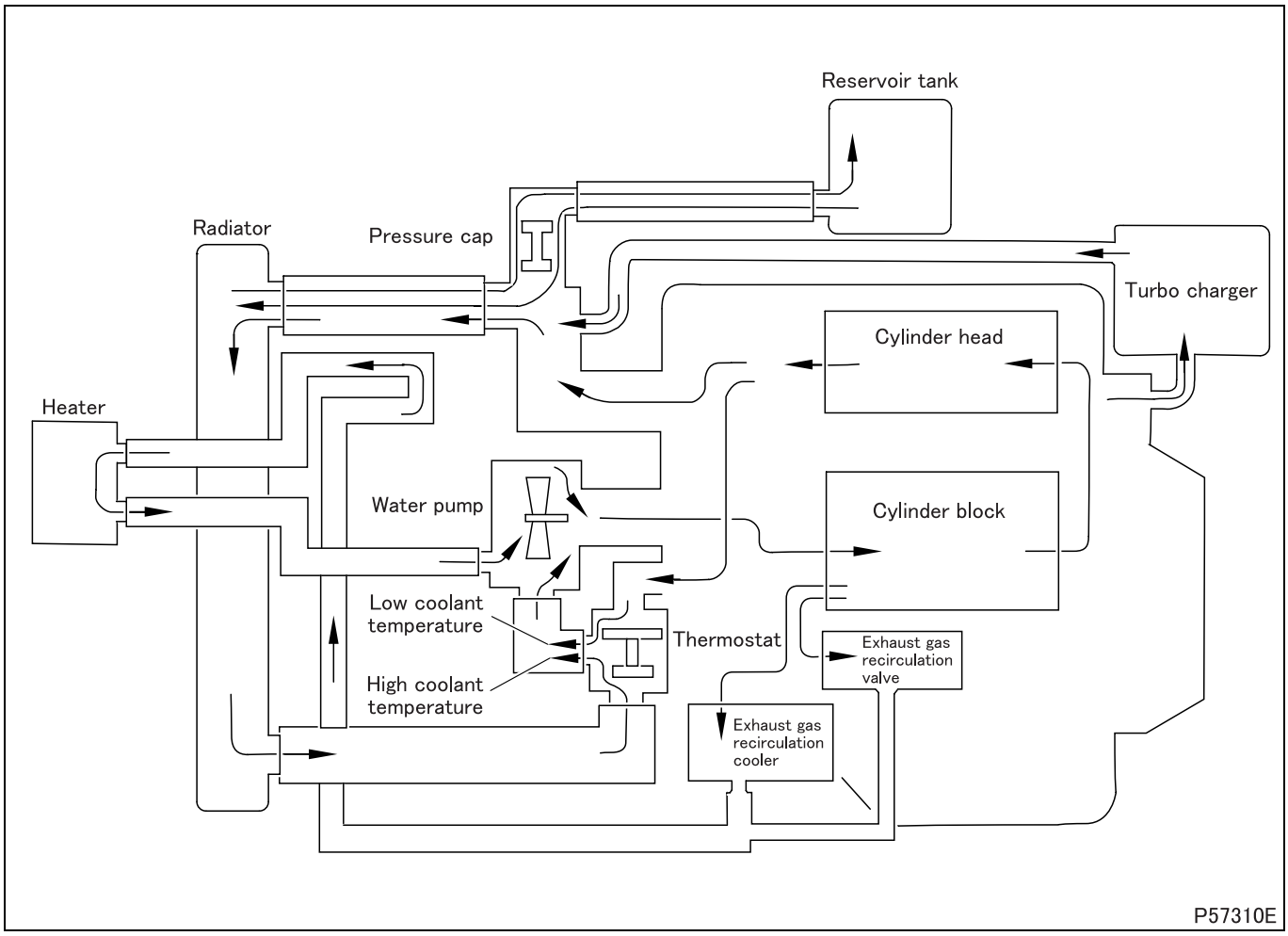

2. Thermostat

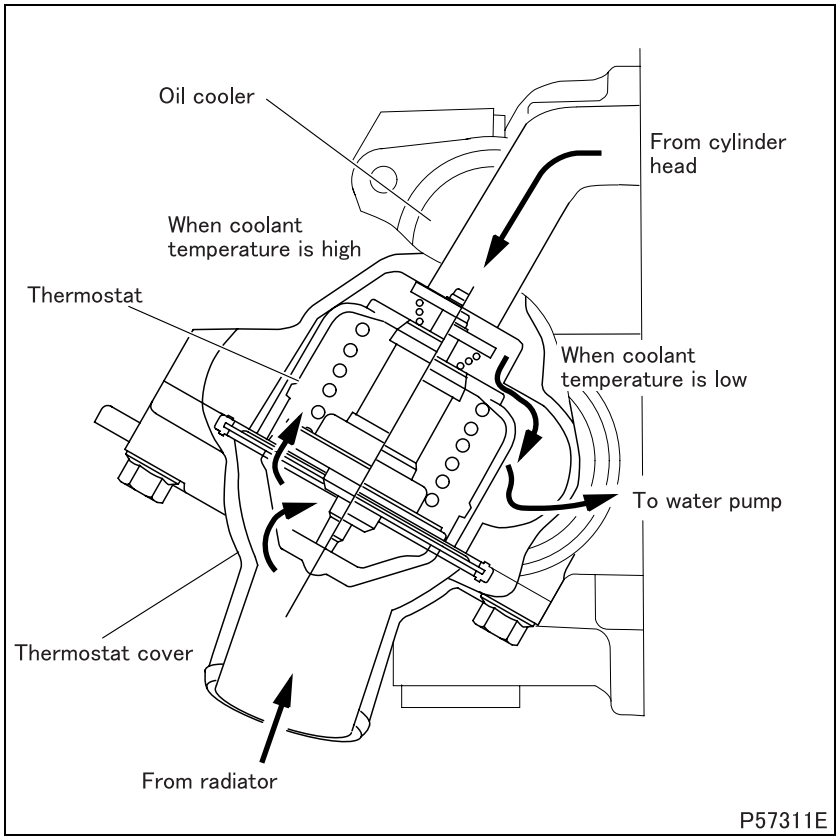

- It is a bottom bypass type that uses a wax-filled pellet as its flow-regulating element. When the wax is heated, it melts from solid to liquid, changing its total volume. This allows the valve to open or close in accordance with the coolant temperature, regulating and adjusting the flow of coolant to the radiator and to the cylinder head (bypassing the radiator).

3. Water Pump

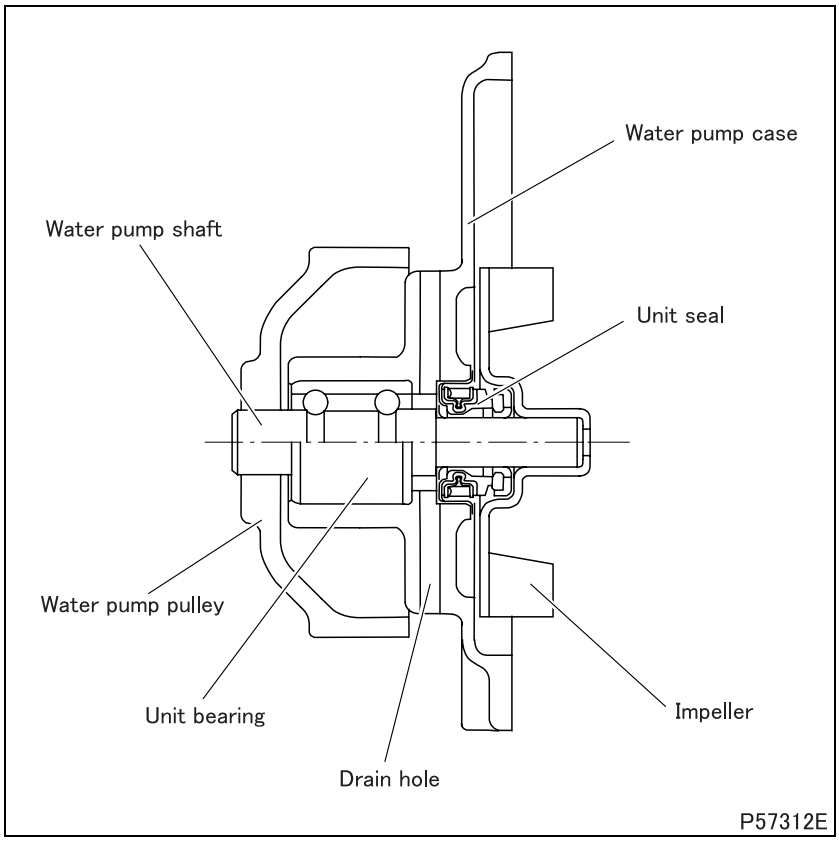

- The water pump has a drain hole to prevent coolant from entering the unit bearing in the case of defect of the unit seal.

https://truckmanualshub.com/

Possible causes \ Symptoms		Overheating (poor cooling)	Overcooling	Abnormal noise	Excessive coolant loss	Reference Gr
Belt	Loose or damaged	O		O		
	Excessive tension			O		
	Oil on belt	O				
Water pump	Incorrectly mounted water pump	O			O	
	Defective gasket	O			O	
	Defective unit bearing	O		O		
	Defective impeller	O				
	Defective unit seal	O			O	
	Too loose fit of unit bearing on flange and impeller	O		O		
Thermostat	Incorrectly mounted case	O			O	
	Valve opening temperature too high (valve remains closed)	O				
	Valve opening temperature too low (valve remains open)		O			
Radiator	Clogged core	O				
	Cracked core and/or separation in welds	O			O	
	Cracks in upper tank and/or lower tank	O			O	
	Poor clinching of upper tank and/or lower tank	O			O	
	Defective packing of upper tank and/or lower tank	O			O	
Automatic cooling fan coupling	Defective bearing	O		O		
	Damaged bimetal	O				
	Contaminated bimetal	O	O			
	Silicone oil leakage	O		O		
Cylinder head	Incorrectly mounted cylinder head	O			O	Gr11
	Defective gasket	O			O	
Oil cooler	Incorrectly mounted oil cooler	O			O	Gr12
	Defective gasket	O			O	
	Leakage from coolant temperature sensor	O			O	
Exhaust gas recirculation system	Poor installation of exhaust gas recirculation cooler bracket	O			O	Gr17
	Poor installation of exhaust gas recirculation cooler	O			O	
	Poor installation of connectors	O			O	
	Poor installation of adapter	O			O	
	Damaged O-rings	O			O	

Possible causes \ Symptoms		Overheating (poor cooling)	Overcooling	Abnormal noise	Excessive coolant loss	Reference Gr
Breather cover	Poor installation of breather cover	O			O	Gr17
	Poor installation of gaskets	O			O	
	Damaged O-rings	O			O	
Tension pulley	Poor installation of bearing	O		O		
Poorly airtight pressure cap		O				
Insufficient coolant amount		O				
Clogged or scaled coolant passage		O				
Incorrectly connected hoses		O			O	
Poor installation of pipes		O			O	
Excessively low exterior temperature			O			

https://truckmanualshub.com/

ON-VEHICLE INSPECTION AND ADJUSTMENT

1. Inspection and Adjustment of Belt Tension

CAUTION ⚠

- **Make sure that there is no oil or grease on the belts. Belts soiled with oil or grease may easily slip, resulting in deteriorated performance of the cooling system.**

Service standards (Unit: mm)

Location	Maintenance item				Standard value	Limit	Remedy
–	Belt tension	When new	When belt tension gauge is used	Deflection	8 to 10	–	Adjust
			When sonic belt tension gauge is used	Tension	598 to 872 N		
		When reused	When belt tension gauge is used	Deflection	10 to 12		
			When sonic belt tension gauge is used	Tension	412 to 578 N		

Special tools

Mark	Tool name and shape	Part No.	Application
a	Belt tension gauge P03612	MH062345	Measurement of tension of belt
b	Sonic belt tension gauge 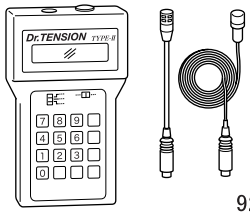 92054	ME357715	

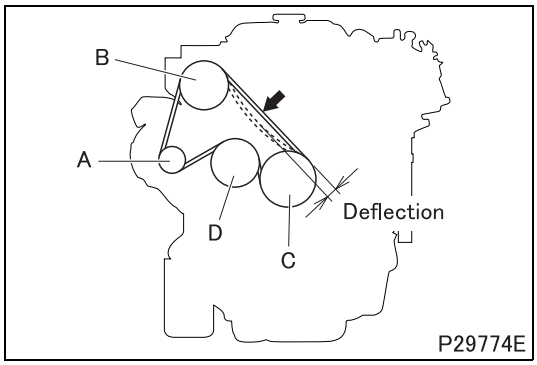

[Inspection]

1.1 Measurement by belt tension gauge

- Press each belt at a central portion between pulleys with a force of approximately 98 N {10 kgf} as shown in the illustration and measure the amount of deflection of the belt.
  A: Alternator pulley
  B: Tension pulley
  C: Fan pulley
  D: Water pump pulley

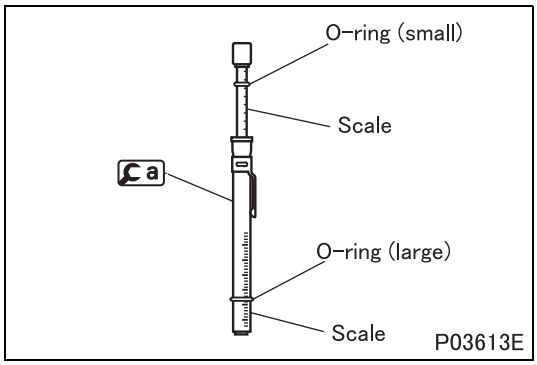

- Place the small O-ring on a at the scale mark corresponding to 98 N {10 kgf} (press force).
- Place the large O-ring on a at the scale mark corresponding to the maximum permissible deflection value specified for the belt.

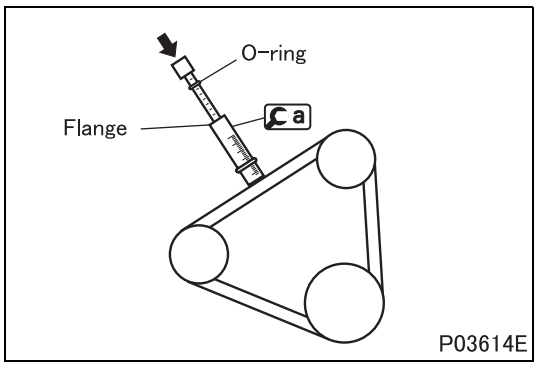

- Place a at a central portion between pulleys of the belt and push the handle (indicated by the arrow in the illustration) until the O-ring touches the flange.

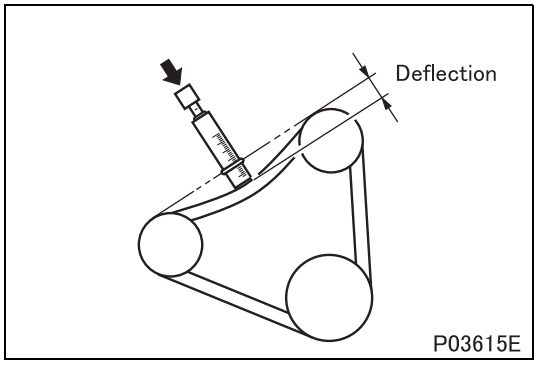

- Measure the amount of deflection of the belt.
- If the measured value deviates from the standard value range, adjust the tension of the belt as follows.

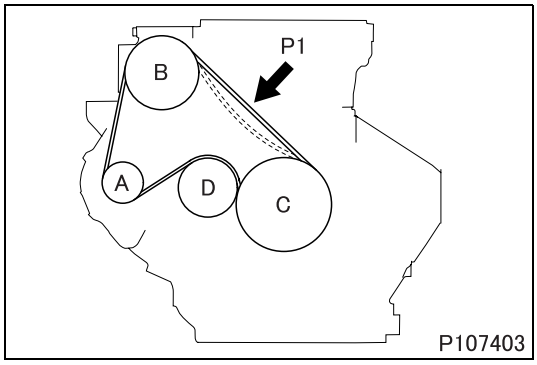

1.2 Measurement using sonic belt tension gauge

- Direct the sensor microphone of b to the position shown in the drawing and measure the belt tension.
- For the operation of the sonic belt tension gauge, refer to the instruction manual of the sonic belt tension gauge.
  A: Alternator pulley
  B: Tension pulley (without air conditioner)
  C: Fan pulley
  D: Water pump pulley
  P1: Measuring point on the belt

CAUTION ⚠

- **If the surface temperature of the belt is high, the tension becomes higher. For the correct measurement, measure the tension with the belt surface temperature being similar to the room temperature.**

- Turn on b and set the sensitivity of its sensor microphone.
  ON (低: means “low”): Measuring in noisy environment, or outdoors in heavy wind
  ON (高: means “high”): Measuring in silent environment, or measuring a hard-to-vibrate belt

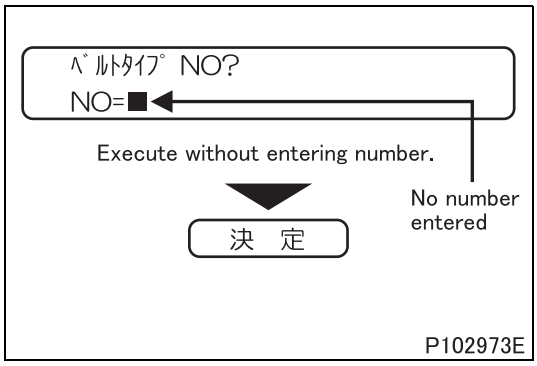

- Press “決定 (means “execute”)” key with no belt type number entered.

https://truckmanualshub.com/

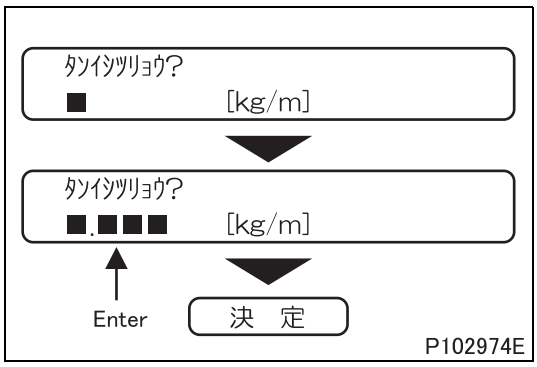

- Enter the unit mass of the belt and push “決定 (means “execute”)”.

Measuring point on the belt	Unit mass of the belt
P1	0.016 kg/m

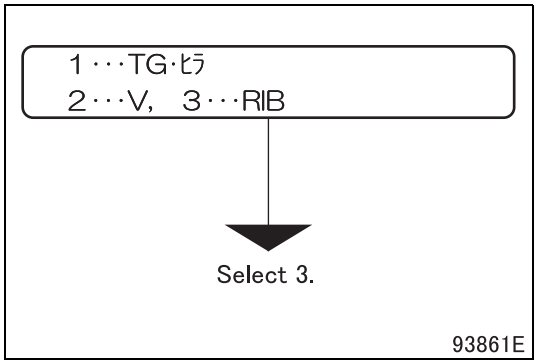

- Select the type of the belt. (Select “3” for ribbed belt.)

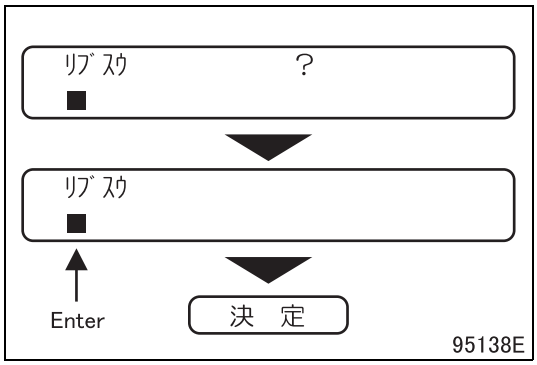

- Enter the number of ribs and push “決定 (means “execute”)”.

Measuring point on the belt	Number of ribs
P1	6

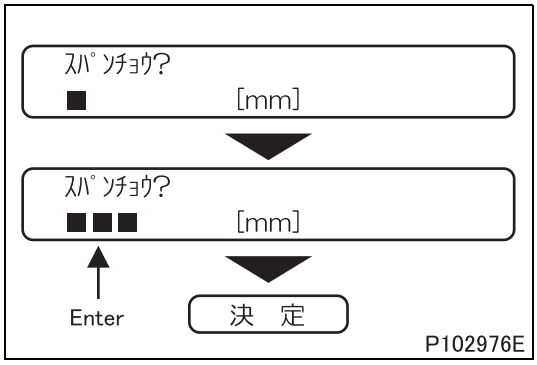

- Enter the length of span and push “決定 (means “execute”)”.

Measuring point on the belt	Length of span
P1	317 mm

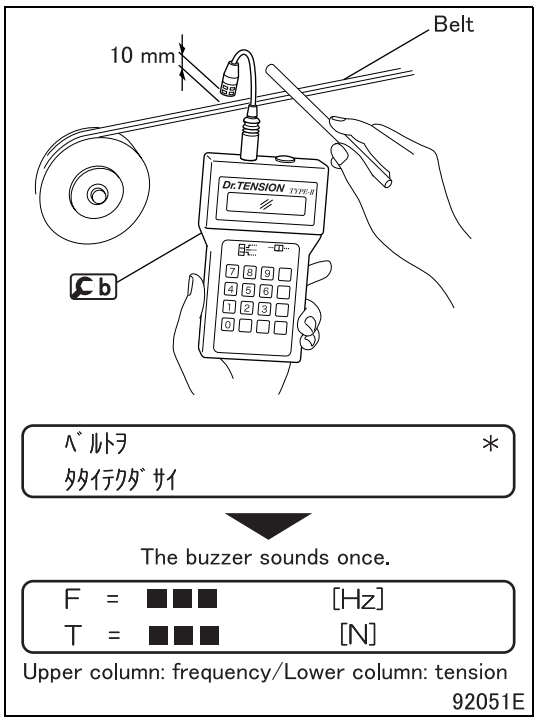

- Set the sensor microphone of b approx. 10 mm above the belt, at the middle position between pulleys.
- Tap the belt lightly with a grip of a screwdriver to vibrate the belt.
- Measure the tension a few times and calculate the average value.
- If the average value is out of the standard value, adjust the belt tension.

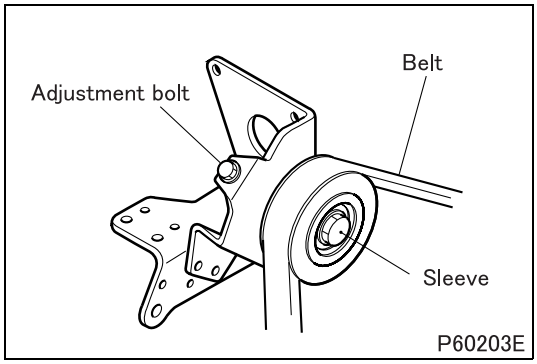

[Adjustment]

- Loosen the tension pulley mounting sleeve and turn in or out the adjustment bolt to adjust the tension of the belt.
- After the adjustment is completed, retighten the mounting sleeve firmly.

CAUTION ⚠

- **Excessive tension in the belt may damage not only the belt itself but also the bearings of the related components.**

https://truckmanualshub.com/

2. Inspection of Cracks or Damage of the Belt

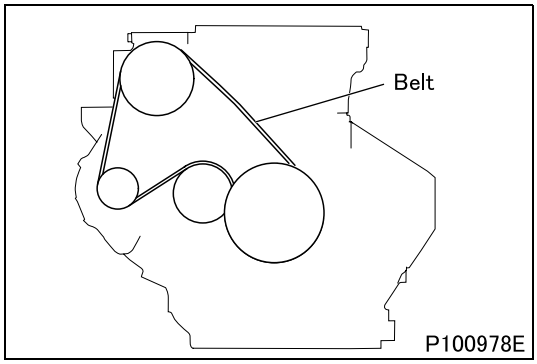

- Visually check the belts for possible cracks and damage.
- If any faults are found, replace the belts.

Belt condition	Remaining service life (reference)
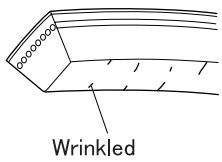 P69698E	• The driving distance over the which the belt can still be used is at least as long as that over which the belt has been used since the vehicle was new or since the belt was replaced (whichever is more recent).
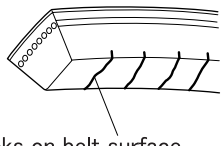 P69699E	• The driving distance over the which the belt can still be used is about half of that over which the belt has been used since the vehicle was new or since the belt was replaced (whichever is more recent).
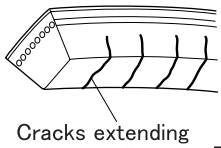 P69700E	• The driving distance over the which the belt can still be used is about a quarter of that over which the belt has been used since the vehicle was new or since the belt was replaced (whichever is more recent).
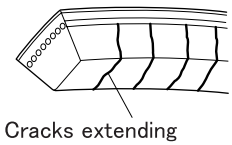 P69701E 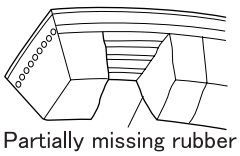 P69702E	• The belt has reached the end of its service life and must be replaced.

3. Coolant Replacement and Cleaning of Cooling System

Tightening torque (Unit: N·m {kgf·m})

Mark	Parts to be tightened	Tightening torque	Remarks
–	Radiator drain cock	2.0 {0.2}	–
–	Water drain plug	25 ± 5 {2.5 ± 0.5}	–

- Using the radiator for extended periods of time without cleaning can increase chance of rust and scale formation, which may cause engine overheating. The cooling system must be cleaned periodically.

3.1 Draining of coolant

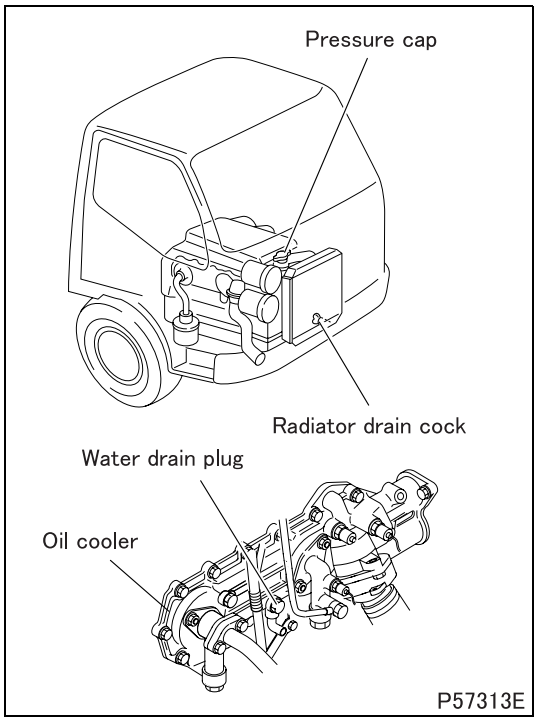

- Drain the coolant when it is sufficiently cold. Before draining the coolant, wrap the pressure cap with shop towel and slowly loosen the cap to reduce the pressure in the cooling system. Remember to drain the coolant in the reservoir tank as well.

WARNING ⚠

- **If the pressure cap is opened when the coolant is hot, the hot coolant will gush out and you may get seriously scalded.**

3.2 Cleaning procedure

- Keep the coolant temperature at approximately 90°C so that the thermostat valve remains open and the coolant continues to circulate in the radiator.
- For the sake of convenience you can raise the coolant temperature quickly by covering the front of the radiator with corrugated cardboard or something similar.
- Set the temperature adjusting lever of the heater controller at maximum so that the coolant can circulate freely in the heater piping area.
- In cases where a great amount of rust has accumulated it often happens that as a result of cleaning the radiator starts leaking. Conduct a thorough check for leakage after cleaning.
- Soft water to be used should have the following properties.

CAUTION ⚠

- **Do not use hard water as it causes scale and rust.**

Required properties of soft water

Total hardness	300 ppm or less
Sulfate SO_4^{-}	100 ppm or less
Chloride Cl^{-}	100 ppm or less
Total dissolved solids	500 ppm or less
pH	6 to 8

https://truckmanualshub.com/

- Select an appropriate cleaning method according to the condition of the cooling system as shown below.

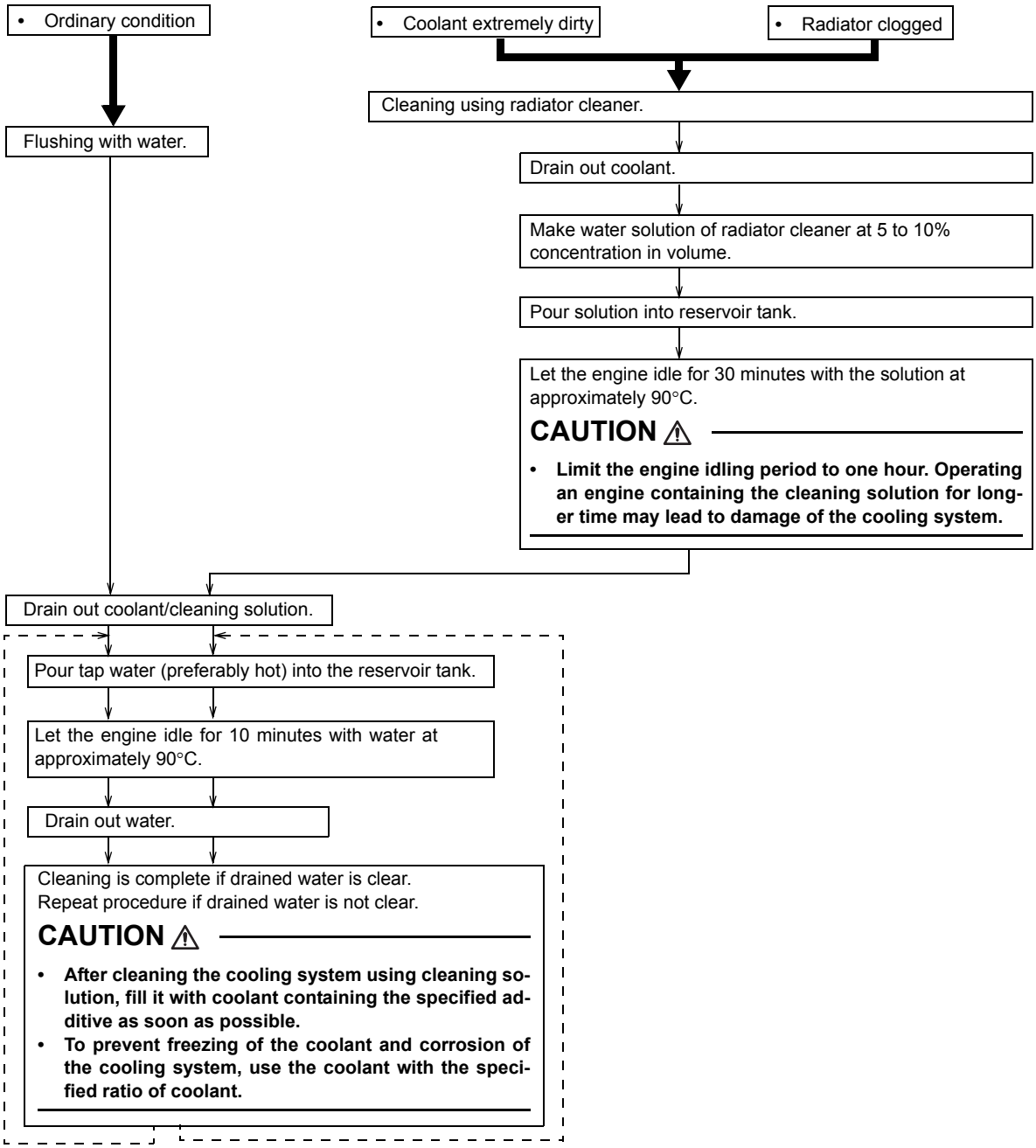

WARNING ⚠

- **If you accidentally splash coolant in your eyes, wash it out immediately with water and seek medical attention.**

CAUTION ⚠

- **Coolant is flammable. Keep them away from heat and flames.**

https://truckmanualshub.com/

4. Air Bleeding of Cooling System

- With the pressure cap removed and the coolant temperature at 90°C, let the engine idle in order to bleed air completely out of the cooling system.
- After air bleeding is completed, refill the reservoir tank with coolant as needed.

5. Air/Gas Leakage Test

- Presence of air or exhaust gas in coolant accelerates corrosion of the cooling system components. To prevent this, carry out air/gas leakage tests in accordance with the following procedure.
- Remove the pressure cap.

WARNING ⚠

- **If the engine is hot, boiling coolant may spurt out from the filler port when the pressure cap is loosened. To avoid a scold, make sure to remove the pressure cap only when the coolant is cold.**

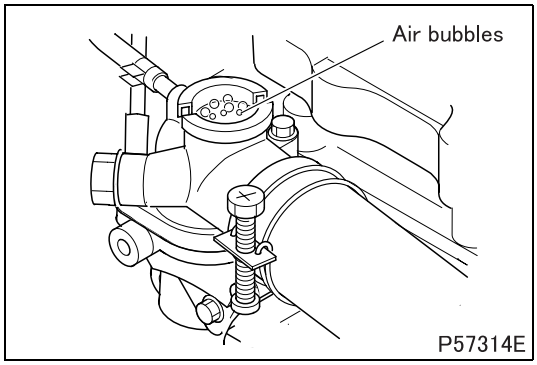

- Run the engine until the coolant temperature rises to approximately 90°C.
- If air bubbles appear continuously through the filler port, there is air or exhaust gas penetrating into the cooling system.
- Presence of air in coolant can be an indication of loose cylinder head bolts, loose water pump mounting bolts, loose hose connections, and/or a damaged hose.
- Presence of exhaust gas in coolant can be an indication of a damaged cylinder head gasket and/or cracks in the cylinder head.

https://truckmanualshub.com/

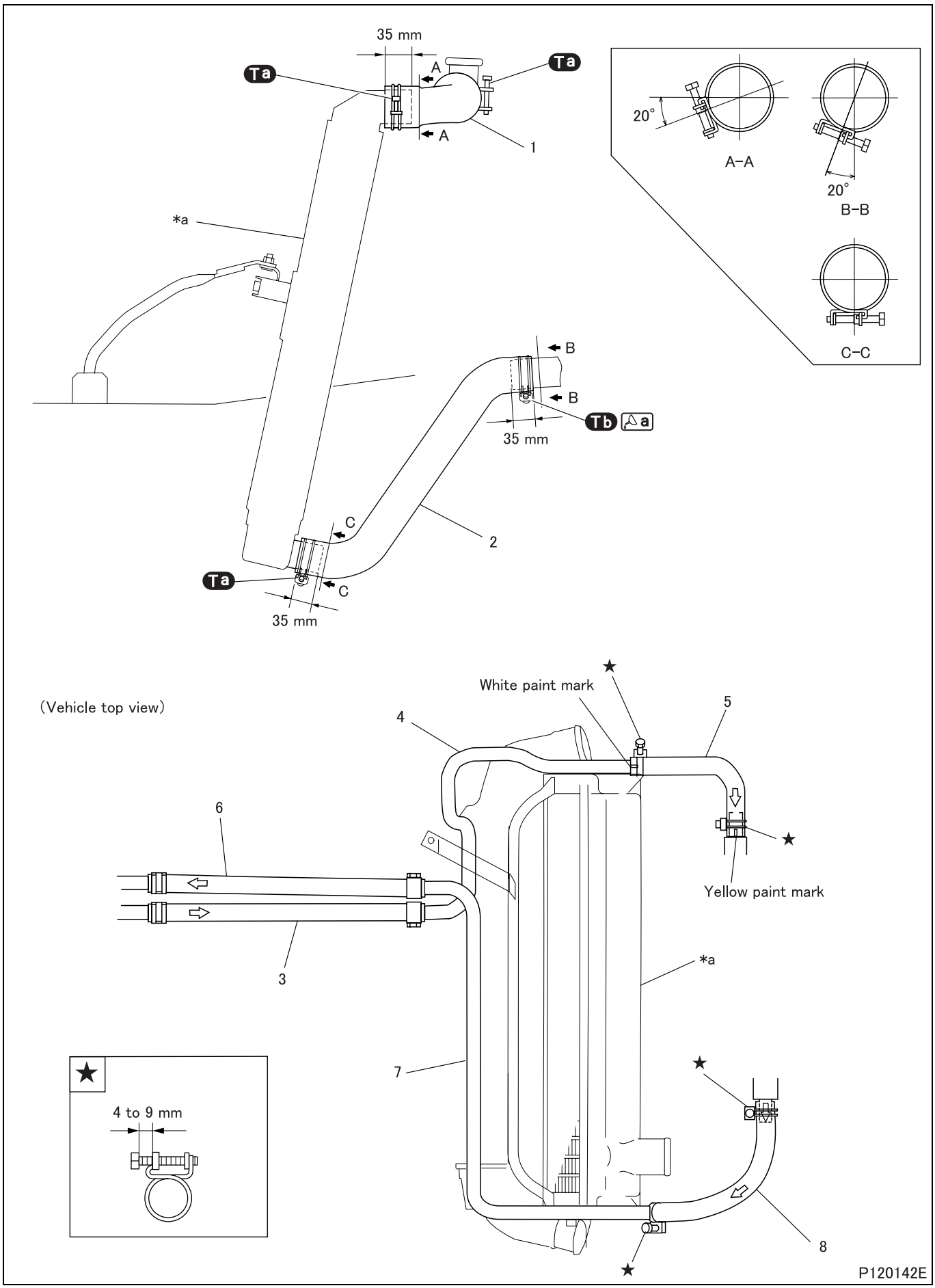

<Engine left side view>

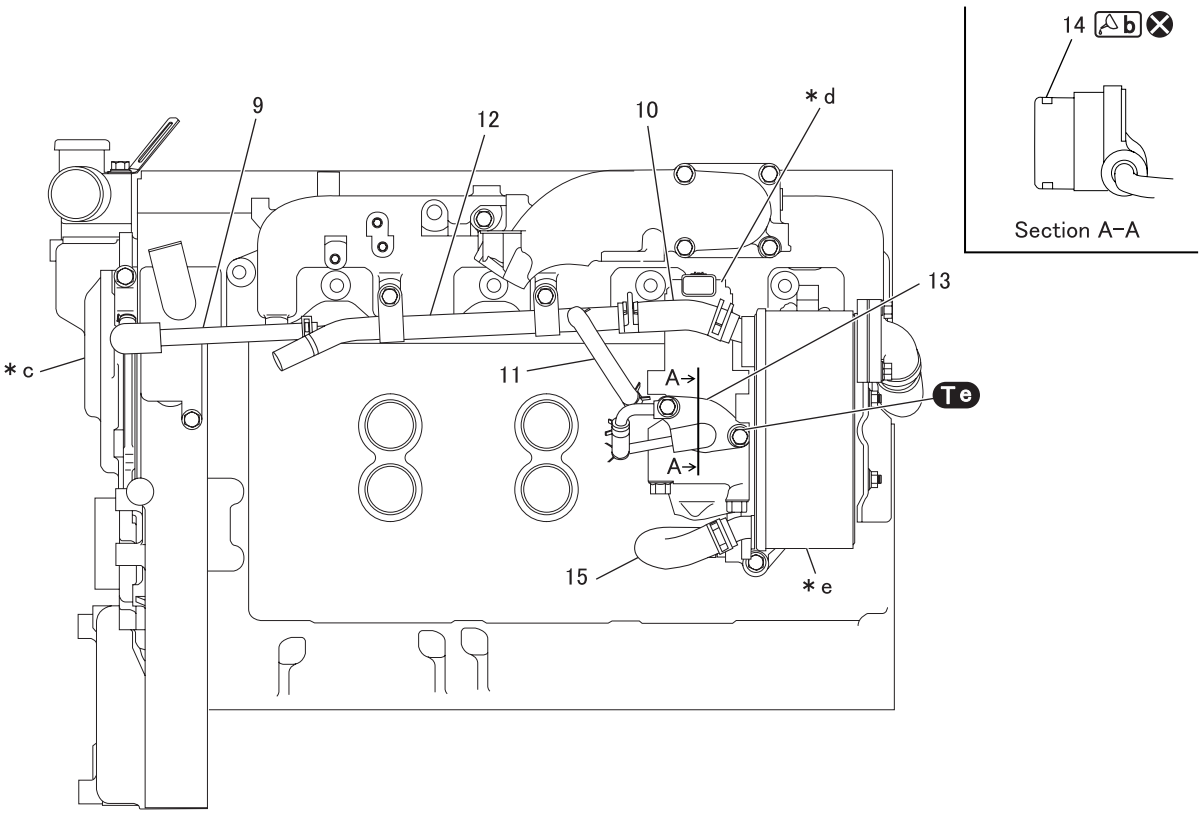

<Engine right side view>

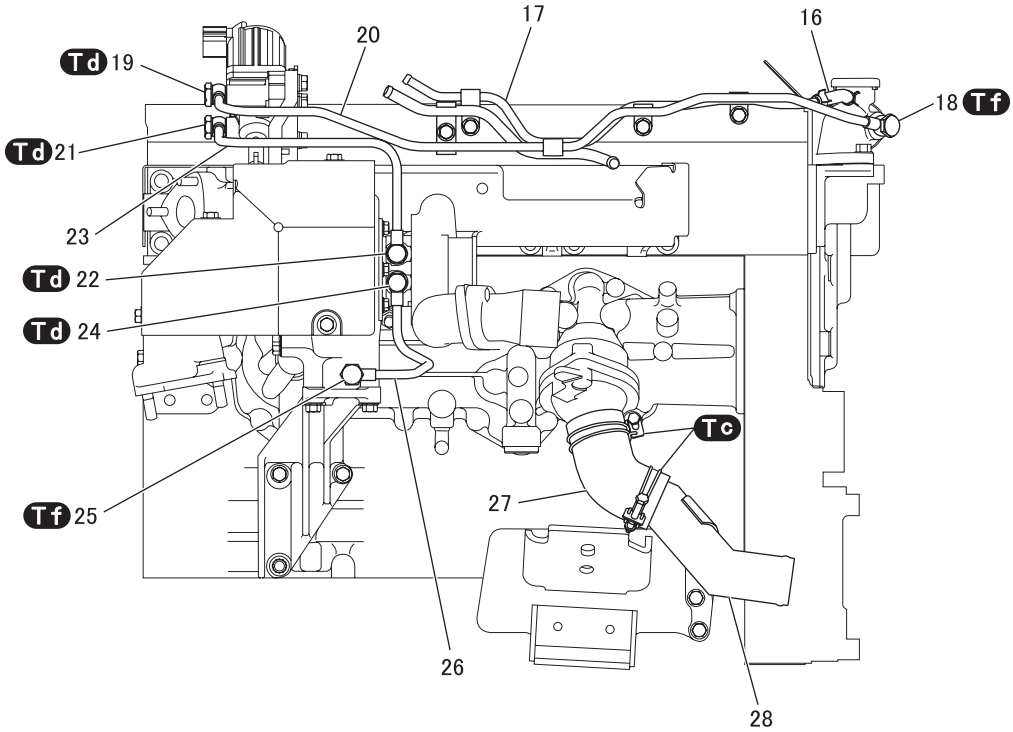

P69278E

https://truckmanualshub.com/

DISCONNECTION AND CONNECTION OF HOSES AND PIPES

● Removal sequence

1 Upper radiator hose
2 Lower radiator hose
3 Heater hose
4 Heater pipe
5 Heater hose
6 Heater hose
7 Heater pipe
8 Heater hose
9 Water hose
10 Water hose
11 Water hose
12 Water hose
13 Adapter
14 O-ring
15 Water hose
16 Water hose
17 Water pipe
18 Eyebolt
19 Eyebolt
20 Water pipe
21 Eyebolt
22 Eyebolt
23 Water pipe
24 Eyebolt
25 Eyebolt
26 Water pipe
27 Radiator pipe
28 Radiator hose

***a**: Radiator
***b**: Thermostat cover
***c**: Breather cover
***d**: Exhaust gas recirculation valve
***e**: Exhaust gas recirculation cooler

⊗: Non-reusable parts

● Installation sequence

Follow the removal sequence in reverse.

CAUTION ⚠

- **Install each hose clamp to the angle indicated in the illustration so that sufficient clearance is assured between the hose clamp and its surrounding parts.**

Tightening torque (Unit: N·m {kgf·m})

Mark	Parts to be tightened	Tightening torque	Remarks
Ta	Clamp	3.0 to 4.5 {0.3 to 0.5}	–
Tb	Clamp	1.5 to 2.0 {0.15 to 0.2}	Wet
Tc	Clamp	4 {0.4}	–
Td	Eyebolt (water pipe mounting)	26 {2.7}	–
Te	Bolt (adapter mounting)	23.2 {2.4}	–
Tf	Eyebolt (water pipe mounting)	25.5 {2.6}	–

Lubricant and/or sealant

Mark	Points of application	Specified lubricant and/or sealant	Quantity
a	Clamp screw threads	Engine oil	As required
b	O-ring	Soapy water	As required

◆Installation procedure◆

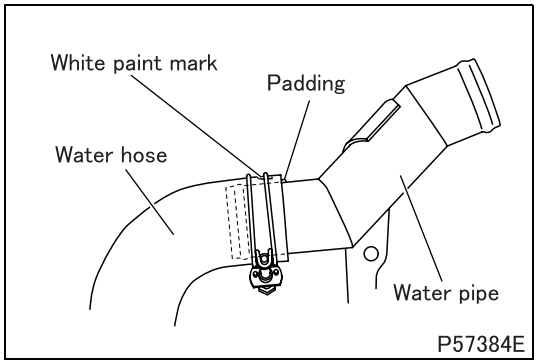

■ Installation: Water hose

- Install the water hose with the white mark on its end aligned with the padding on the water pipe.

https://truckmanualshub.com/

M E M O

https://truckmanualshub.com/

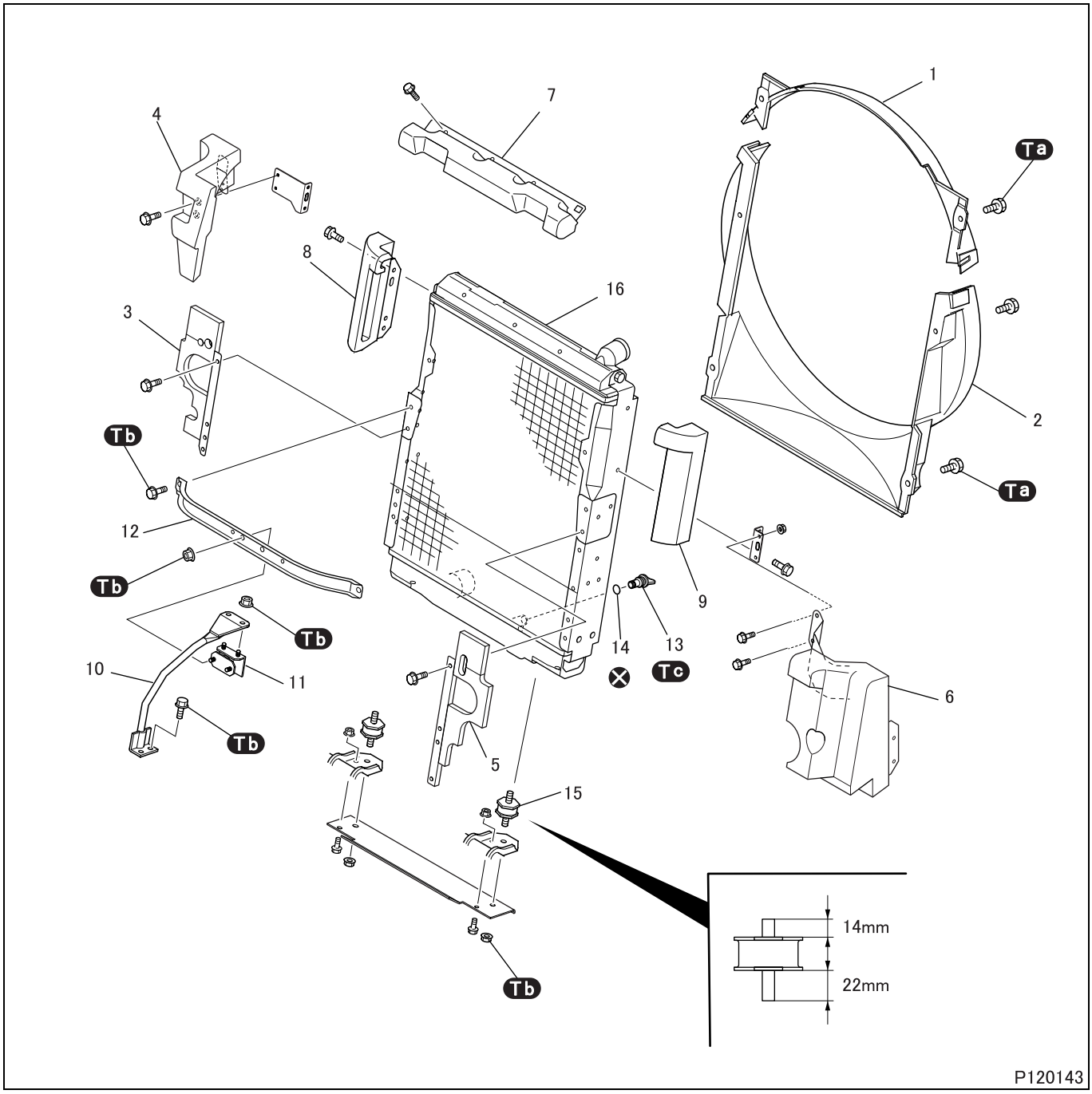

● Removal sequence

1	Upper shroud	**7**	Baffle plate upper	**13**	Radiator drain cock
2	Lower shroud	**8**	Baffle plate RH	**14**	O-ring
3	Baffle plate RH	**9**	Baffle plate LH	**15**	Radiator support cushion
4	Baffle plate RH	**10**	Support rod	**16**	Radiator
5	Baffle plate LH	**11**	Support cushion		
6	Baffle plate LH	**12**	Upper support	⊗:	Non-reusable parts

● Installation sequence

Follow the removal sequence in reverse.

- See the previous section “DISCONNECTION AND CONNECTION OF HOSES AND PIPES” for the correct insertion depth of radiator hoses into the radiator as well as the correct tightening torque of clamps.

Service standards

Location	Maintenance item	Standard value	Limit	Remedy
–	Air leakage from radiator (air pressure 177 kPa {1.77 kgf/cm^2})	0 cm^3 {0 mL}	–	Repair or replace

Tightening torque (Unit: N·m {kgf·m})

Mark	Parts to be tightened	Tightening torque	Remarks
Ta	Bolt (upper shroud mounting)	5 to 7 {0.5 to 0.7}	–
	Bolt (lower shroud mounting)		
Tb	Bolt (support rod mounting)	12 to 15 {1.18 to 1.47}	–
	Nut (radiator support cushion mounting)		
	Bolt (upper support mounting)		
	Nut (support cushion mounting)		
Tc	Radiator drain cock	2.0 {0.2}	–

◆Inspection before removal◆

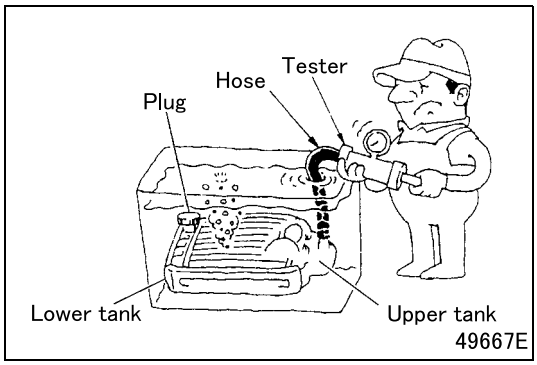

■ Inspection: Radiator air leakage

- Connect a hose and radiator cap tester to the upper tank.
- Plug the lower tank and put the entire radiator into a tank filled with water.
- Use the radiator cap tester to apply an air pressure of 177 kPa {1.77 kgf/cm^2} and check for air leakage.
- If air leakage is found, repair or replace the radiator.

https://truckmanualshub.com/

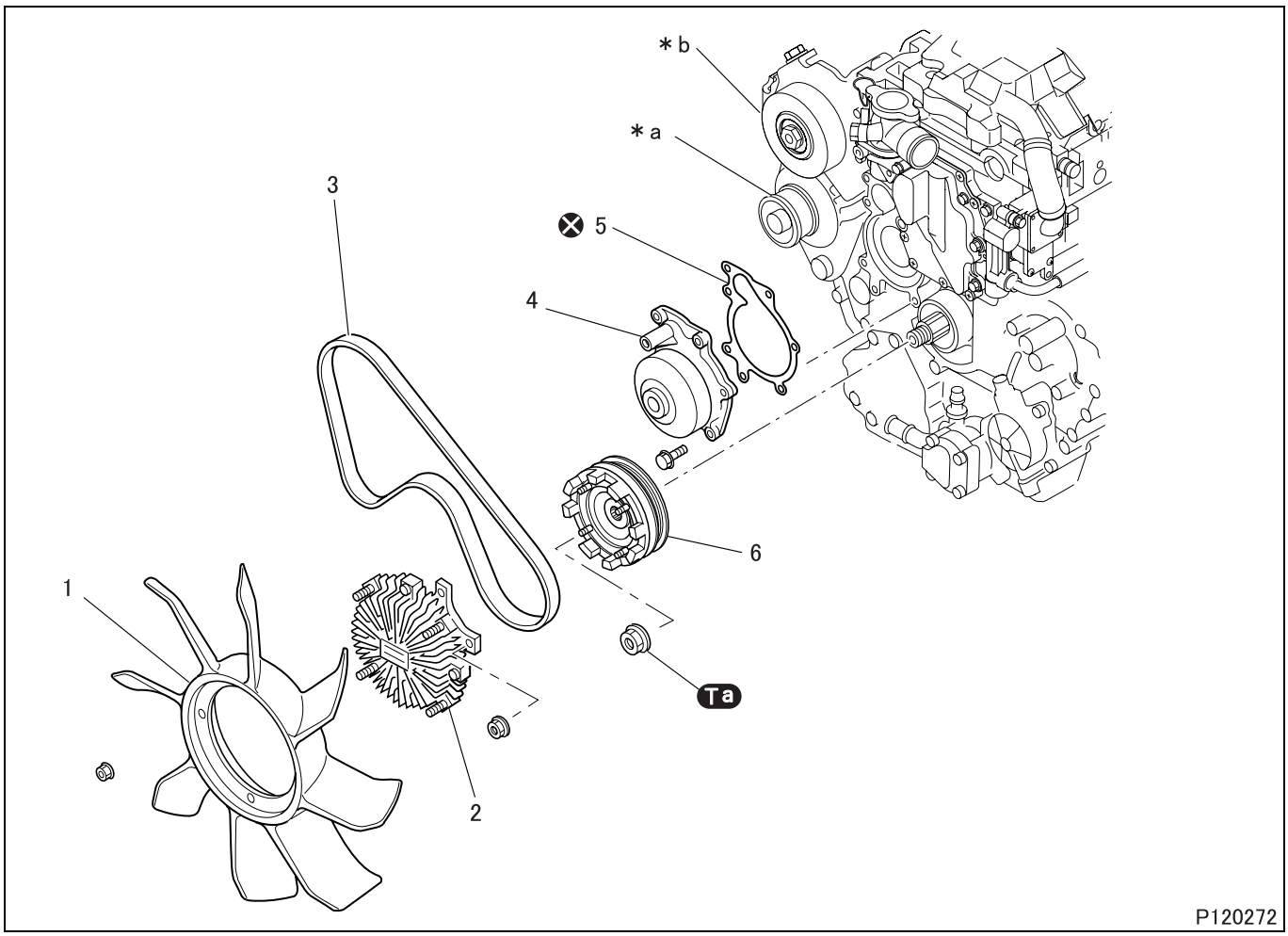

● **Removal sequence**

1 Cooling fan
2 Automatic cooling fan coupling
3 Belt
4 Water pump
5 Gasket
6 Fan pulley

***a**: Alternator
***b**: Tension pulley
⊗: Non-reusable parts

- The automatic cooling fan coupling and the water pump cannot be disassembled. It must be replaced if defective.

● **Installation sequence**

Follow the removal sequence in reverse.

CAUTION ⚠

- **Make sure that there is no oil or grease on the belts. Belts soiled with oil or grease may easily slip, resulting in deteriorated performance of the cooling system.**

- After installation, check and adjust the belt tension. (See “ON-VEHICLE INSPECTION AND ADJUSTMENT”.)

Tightening torque (Unit: N·m {kgf·m})

Mark	Parts to be tightened	Tightening torque	Remarks
Ta	Nut (fan pulley mounting)	373 {38}	–

Special tools (Unit: mm)

Mark	Tool name and shape	Part No.	Application
a	Holding bar A: 114, B: ϕ9 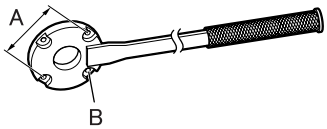 P69433	MH062970	Holding of fan pulley

◆Inspection and cleaning procedure◆

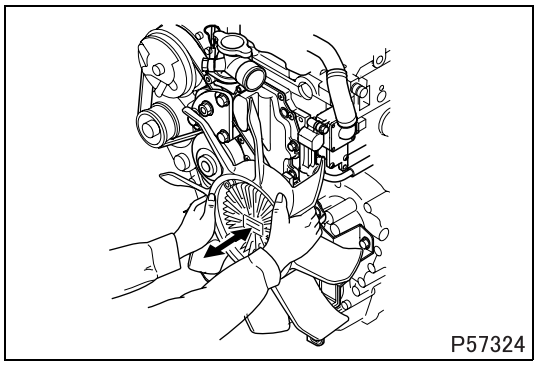

■ **Inspection: Automatic cooling fan coupling**

- Make an inspection of the following points. Replace the automatic cooling fan coupling if defective.
  Check that:
  - the hydraulic oil sealed inside the coupling is not leaking;
  - the coupling does not make any abnormal noise or rotate unevenly due to defects in the inside bearing when rotated manually; and
  - the automatic cooling fan coupling does not move too much when pushed and pulled in the axial directions when the engine is cold.

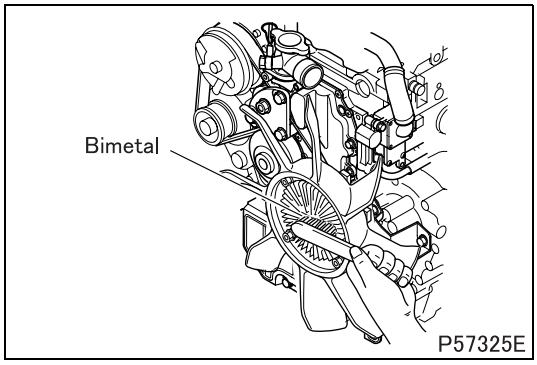

■ **Cleaning: Automatic cooling fan coupling**

- When removing foreign matter from the bimetal, be careful not to press too hard against the bimetal.

CAUTION ⚠

- **Be careful not to deform the bimetal.**

◆Removal procedure◆

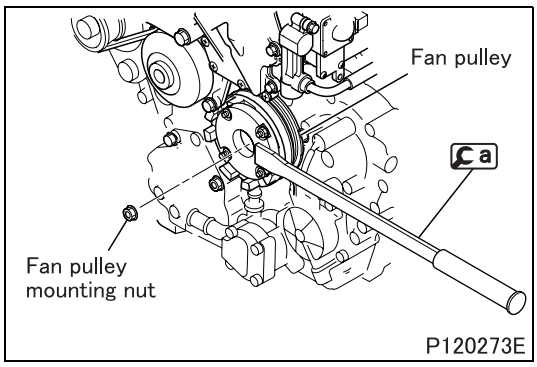

■ **Removal: Fan pulley**

- Put a in position on the studs of the fan pulley and fix the tool by using nuts.
- While holding a, loosen the fan pulley mounting nut.

https://truckmanualshub.com/

◆Installation procedure◆

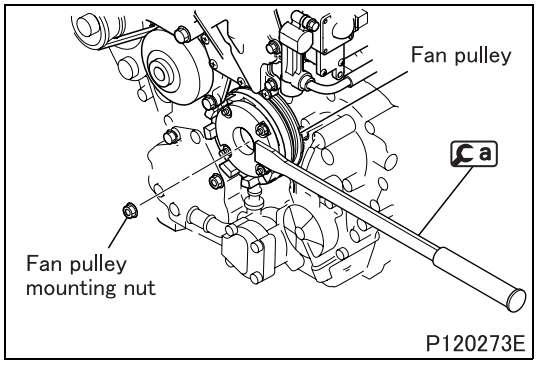

■ Installation: Fan pulley

- Put a in position on the studs of the fan pulley and fix the tool by using nuts.
- Tighten the fan pulley mounting nut to the specified torque while holding a.

https://truckmanualshub.com/

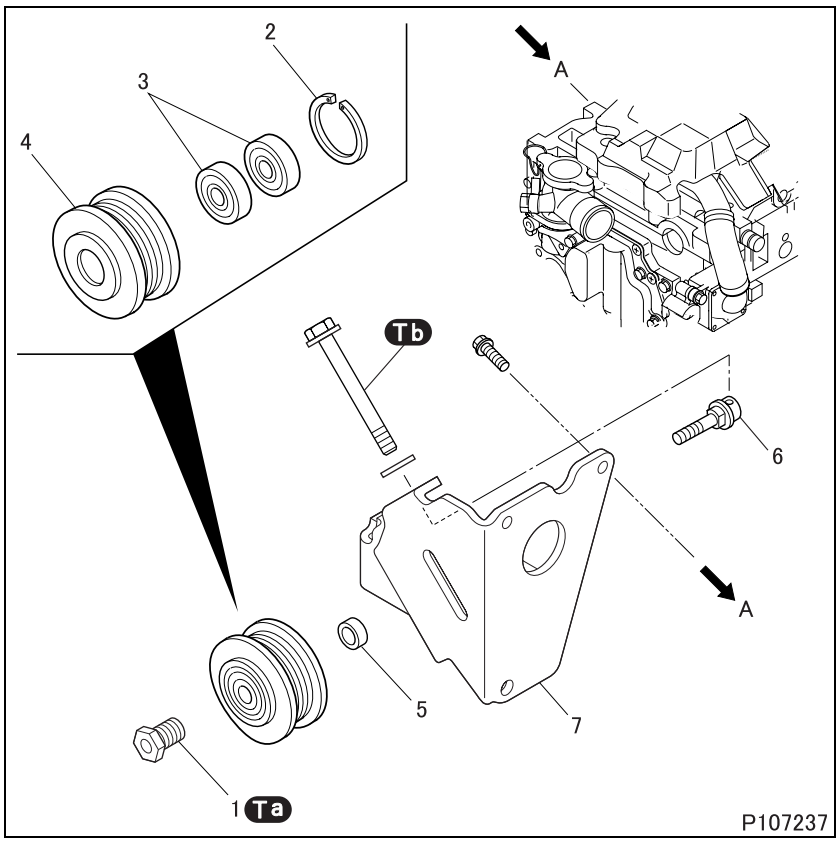

● **Disassembly sequence**

1 Sleeve
2 Snap ring
3 Bearing
4 Tension pulley
5 Spacer
6 Shaft
7 Tension pulley bracket

● **Assembly sequence**

Follow the disassembly sequence in reverse.

Tightening torque (Unit: N·m {kgf·m})

Mark	Parts to be tightened	Tightening torque	Remarks
Ta	Sleeve	15 {1.5}	–
Tb	Bolt (fixing of shaft)		

https://truckmanualshub.com/

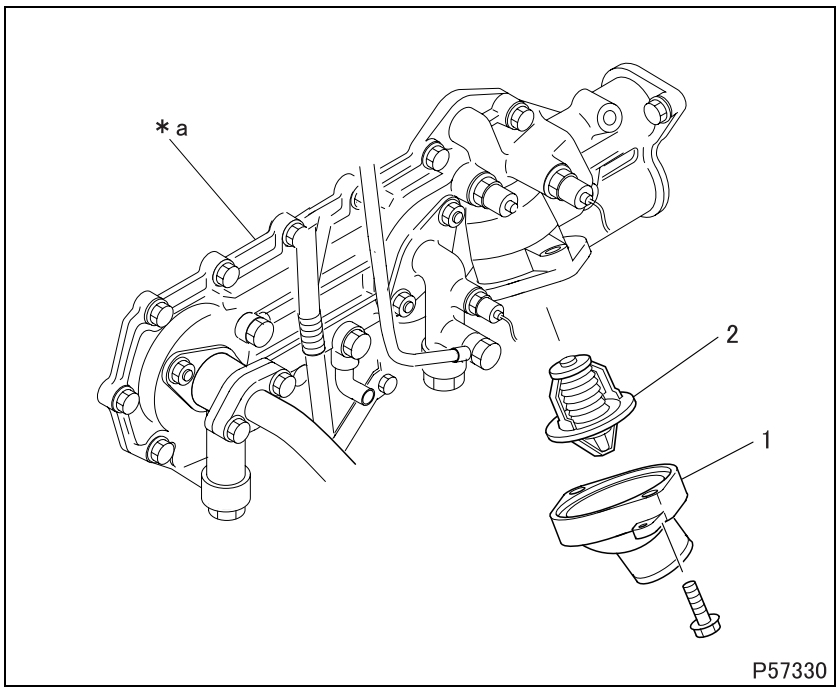

● **Disassembly sequence**

1 Thermostat cover
2 Thermostat

***a**: Oil cooler

● **Assembly sequence**

Follow the disassembly sequence in reverse.

Service standards (Unit: mm)

Location	Maintenance item		Standard value	Limit	Remedy
2	Thermostat	Valve opening temperature	82 ± 2°C	–	Replace
		Valve lift at 95°C	10 or more		

◆Inspection procedure◆

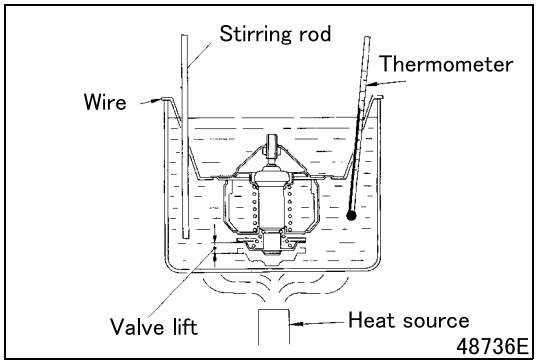

■ **Inspection: Thermostat**

- Stir the water using a stirring rod to maintain an even water temperature in the container, then conduct the tests indicated below.
- If the measured values deviate from the standard value ranges, replace the thermostat.

(1) Valve opening temperature

- Hold the thermostat with wire to keep it away from the heat source.
- Heat the water gradually to the valve opening temperature.
- Maintain this temperature for five minutes and make sure that the valve is completely open.
- Make sure that the valve closes completely when the water temperature drops below 65°C.

(2) Valve lift

- Raise the water temperature to 95°C to fully open the valve. Keep this condition for 5 minutes and then measure the valve lift.

◆Installation procedure◆

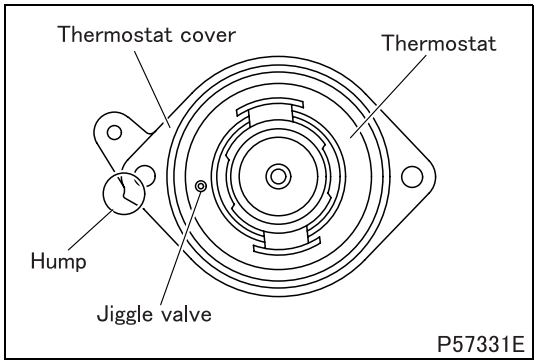

■ **Installation: Thermostat**

- Mount the thermostat on the thermostat cover in the illustrated direction.

https://truckmanualshub.com/

M E M O

https://truckmanualshub.com/

PRESSURE CAP AND WATER OUTLET CASE

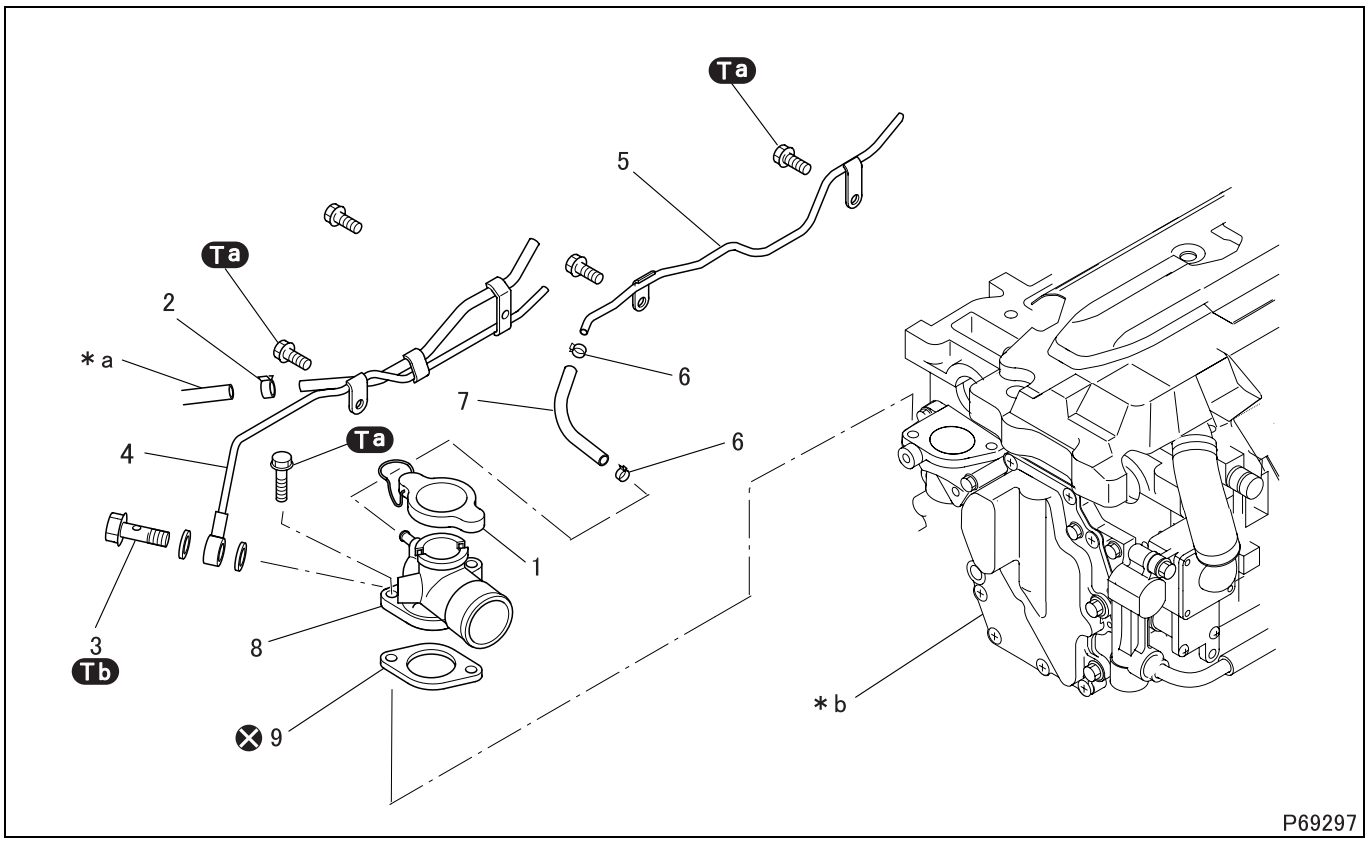

● **Disassembly sequence**

1 Pressure cap
2 Clip
3 Eyebolt
4 Water pipe
5 Water pipe
6 Clip
7 Water hose
8 Water outlet case
9 Gasket

***a**: Vacuum hose
***b**: Breather cover
⊗: Non-reusable parts

● **Assembly sequence**

Follow the disassembly sequence in reverse.

Service standards

Location	Maintenance item	Standard value	Limit	Remedy
1	Pressure cap valve opening pressure	110 ± 15 kPa {1.1 ± 0.15 kgf/cm^3}	–	Replace

Tightening torque (Unit: N·m {kgf·m})

Mark	Parts to be tightened	Tightening torque	Remarks
Ta	Bolt (water pipe mounting)	23.2 {2.4}	–
	Bolt (water outlet pipe mounting)		
Tb	Eyebolt (water pipe mounting)	25.5 {2.6}	–

◆Inspection procedure◆

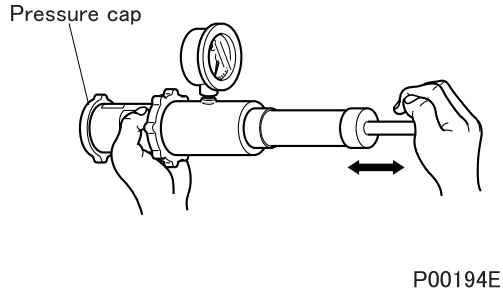

■ Inspection: Pressure cap

(1) Pressure valve opening pressure

- Replace the pressure cap if the measured value deviates from the standard value range.

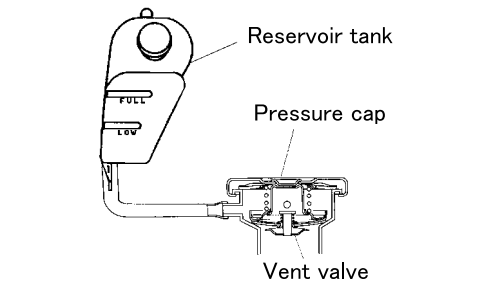

(2) Inspection of vent valve

- Before starting the inspection, check the level of coolant in the reservoir tank.
- Run the engine at full speed. Stop the engine when the level of coolant in the reservoir tank noticeably rises.
- Wait until the coolant temperature drops to the ambient temperature. Then, check if the coolant in the reservoir tank has returned to the same level as that confirmed before the engine was started.
- If the coolant has failed to return to its original level, the vent valve is defective. In this case, replace the pressure cap.

CAUTION ⚠

- **Be aware that removing the pressure cap before the coolant cools down to the ambient temperature will result in loss of vacuum in the radiator, which disables the coolant from being returned to the reservoir tank.**

https://truckmanualshub.com/

GROUP 15 INTAKE AND EXHAUST

SPECIFICATIONS 15-2

STRUCTURE AND OPERATION
1. Air Cleaner 15-2
2. Turbocharger 15-3
3. Exhaust Shutter Valve 15-4
4. Diesel Particulate Filter 15-4

TROUBLESHOOTING 15-5

ON-VEHICLE INSPECTION AND ADJUSTMENT
1. Measurement and Adjustment of Turbocharger Boost Pressure 15-6
2. Cleaning and Inspection of Air Cleaner Element 15-12
3. Check for Looseness in Intake Manifold Mounting Bolts and Nuts 15-12
4. Check for Cracks and Gas Leakage in Exhaust Manifold 15-12
5. Check for Cracks and Gas Leakage in Turbocharger 15-12
6. Loose Turbocharger 15-13

AIR DUCT AND AIR CLEANER 15-14

TURBOCHARGER 15-18

INTERCOOLER 15-24

INTAKE MANIFOLD 15-28

EXHAUST MANIFOLD 15-30

EXHAUST PIPE 15-31

DIESEL PARTICULATE FILTER 15-34

https://truckmanualshub.com/

SPECIFICATIONS

Item		Specifications
Air cleaner element type		Filter paper type
Turbocharger	Model	TD04
	Manufacturer	Mitsubishi Heavy Industries, Ltd.
	Cooling system	Water-cooled
Intercooler type		Tube and corrugated fin air cooled type
Diesel particulate filter type		Continuous regeneration type (PM-CAT)

STRUCTURE AND OPERATION

1. Air Cleaner

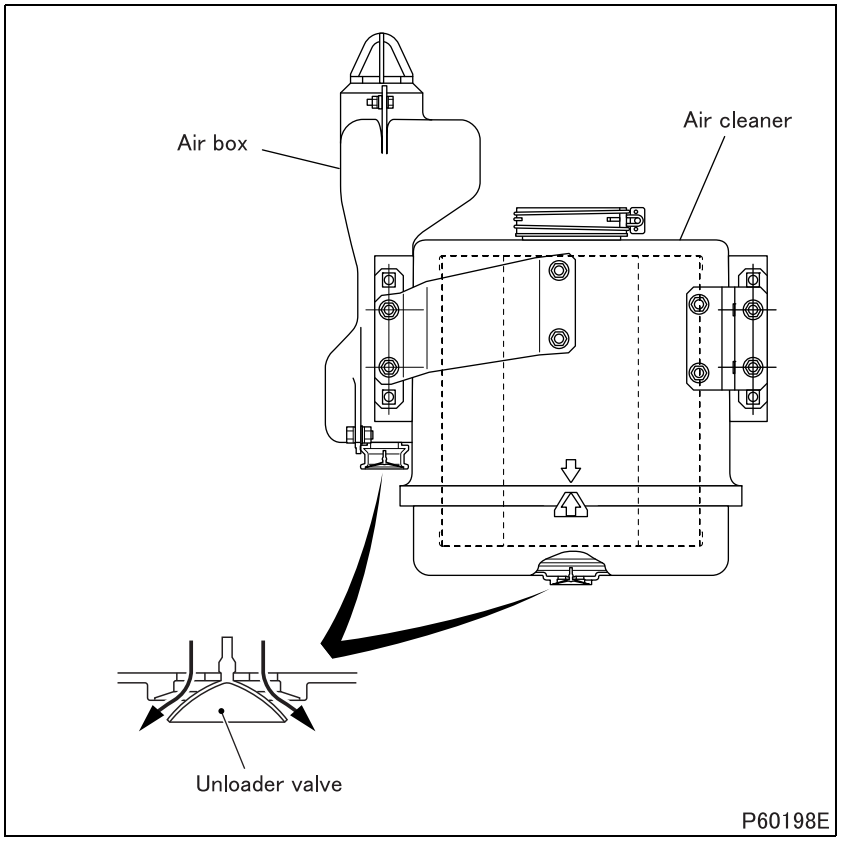

- The air cleaner is a single element type.
- When the engine slows down below the predetermined speed, the level of vacuum changes and causes the unloader valve to vibrate. Vibration of the unloader valve allows the air cleaner to automatically discharge any water and dust that has accumulated in its inside.

https://truckmanualshub.com/

2. Turbocharger

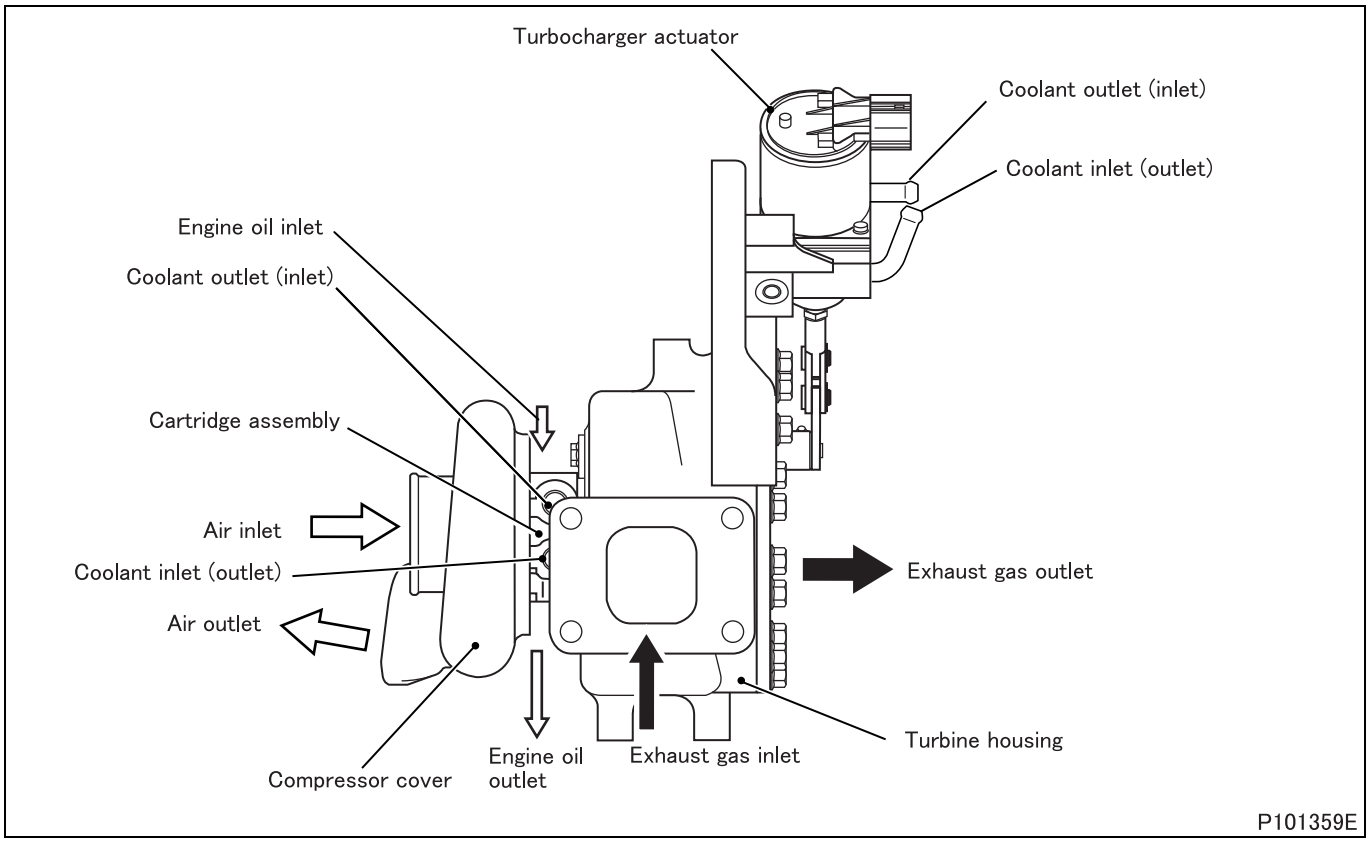

- TD04 model is equipped with turbocharger, which is a variable nozzle vane type turbocharger with adjustable, heat-resistive alloy turbine vanes provided at the turbine exhaust gas inlet port.

https://truckmanualshub.com/

3. Exhaust Shutter Valve

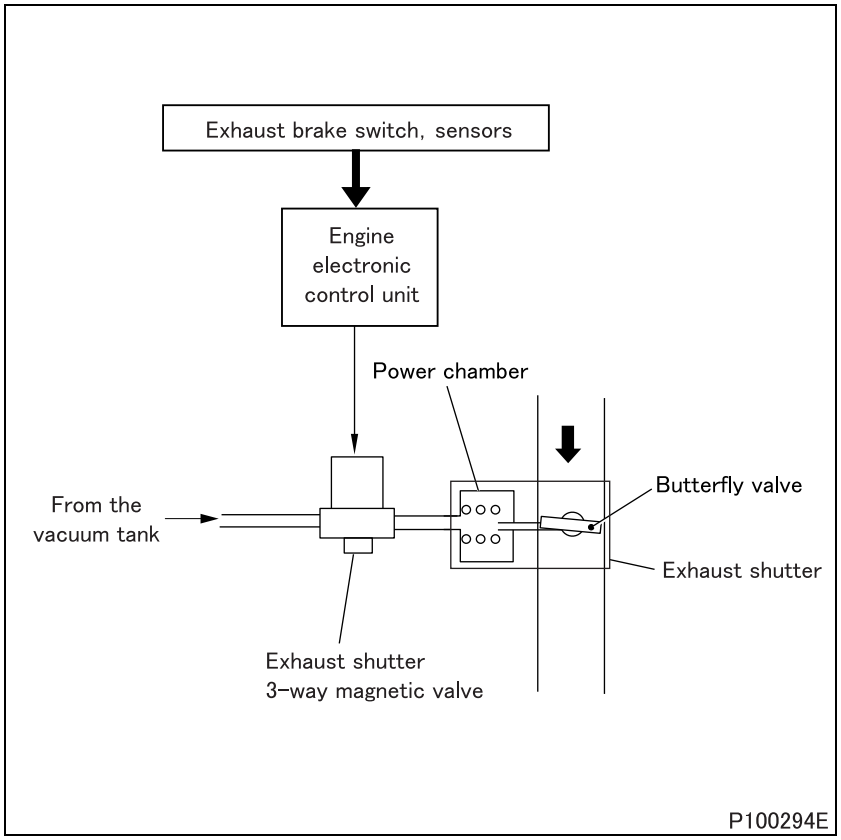

- When a driver turns on the exhaust brake switch, the engine electronic control unit sends a signal to the exhaust shutter 3-way magnetic valve.
  This turns on the exhaust shutter 3-way magnetic valve, and the valve applies the vacuum pressure from the vacuum tank to the exhaust shutter valve to activate the exhaust shutter valve.

4. Diesel Particulate Filter

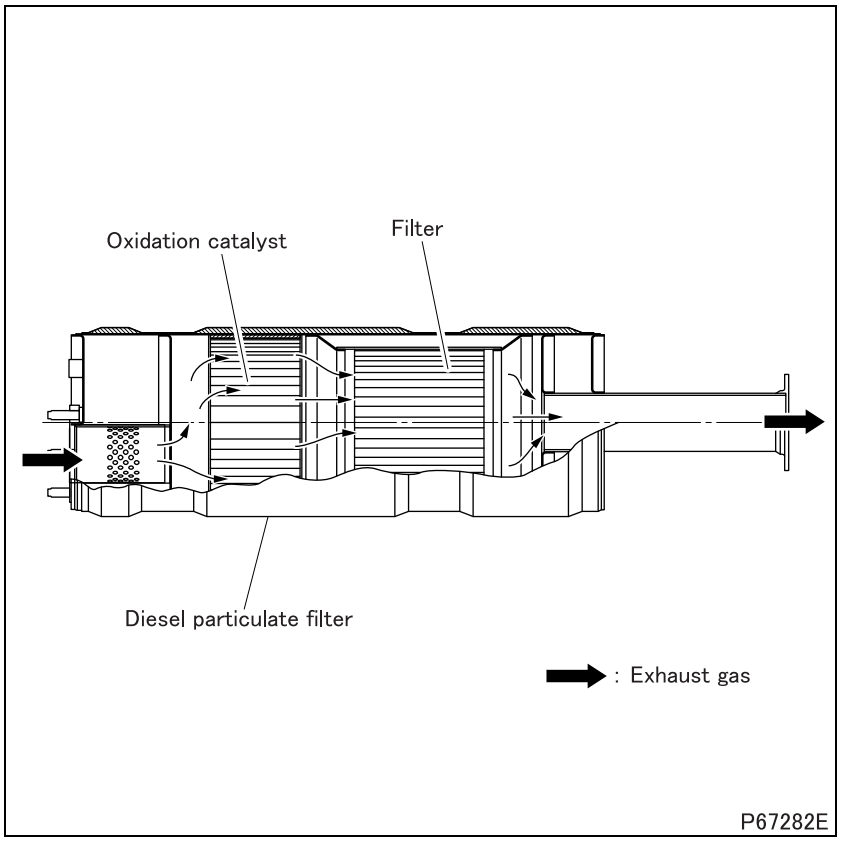

- The diesel particulate filter consists of the following 2 sections: an oxidation catalyst and a metal filter.
  - The oxidation catalyst oxidizes PM (particulate matter) contained in the exhaust gas and the metal filter captures the residual PM and makes it burn for removal from exhaust gas.
- The size of the filtration openings has been optimized to eliminate the deposit of ash (product of combustion) generated in the engine. The filter requires no maintenance, including periodical cleaning.

https://truckmanualshub.com/

Possible causes	Symptoms	Engine hard to start	Black exhaust gas	White exhaust gas	Poor engine power	Excess oil consumption	Abnormal noise or vibration in intake/ exhaust system	Exhaust brake not effective	Exhaust brake does not disengage	Reference Gr
Air cleaner	Clogged air cleaner element	O	O		O					
Turbocharger	Defective cartridge assembly		O	O	O	O	O			
	Compressor cover fitted poorly		O		O	O	O			
Intercooler	Foreign substances deposited on intercooler front core				O					
Throttle actuator	Butterfly valve does not open		O	O	O					Gr13E
	Butterfly valve malfunction		O	O	O					
Front pipe/diesel particulate filter/tail pipe deformed							O			
Front pipe/diesel particulate filter/tail pipe fitted poorly							O			
Incorrect valve clearances			O							Gr11
Head gasket defective			O							
Wear/carbon deposits on valves and valve seats			O							
Valve spring weakened			O							
Piston rings worn/damaged				O		O				
Piston ring grooves worn/damaged				O		O				
Cooling system malfunctioning			O							Gr14
Engine oil quantity excessive				O						Gr12
Major moving parts seized			O							Gr11
Uneven or excessive fuel injection			O							Gr13E
Vacuum system	Insufficient vacuum							O		Gr35
	Collapsed piping							O		
Faulty 3-way magnet valve								O	O	Gr54
Exhaust shutter valve	Faulty valve							O	O	
	Stuck valve shaft							O	O	
	Faulty valve chamber							O		
Faulty electric system								O	O	Gr54

https://truckmanualshub.com/

ON-VEHICLE INSPECTION AND ADJUSTMENT

1. Measurement and Adjustment of Turbocharger Boost Pressure

CAUTION ⚠

- **If boost pressure exceeds the standard value, the engine may malfunction or break down. Boost pressure must be within the specified range.**

Service standards

Location	Maintenance item	Standard value	Limit	Remedy
–	Boost pressure	147 to 185 kPa	–	Inspect or adjust

1.1 Preparation

- Shift the transmission to neutral.
- Hold the steering wheel in neutral position.
- Turn off lamps and accessory devices not to increase the engine speed.
- Connect the Multi-Use Tester. (See Gr00.)
- If any fault exists (corresponding diagnosis code is issued), rectify it.
- Warm up the engine until the engine coolant has been heated to more than 60°C. (Determine coolant temperature from service data [32: Water temperature].)
- Check that the non-load minimum speed (idling speed) is as specified. (See Gr13.)

1.2 Measurement and correction of boost pressure

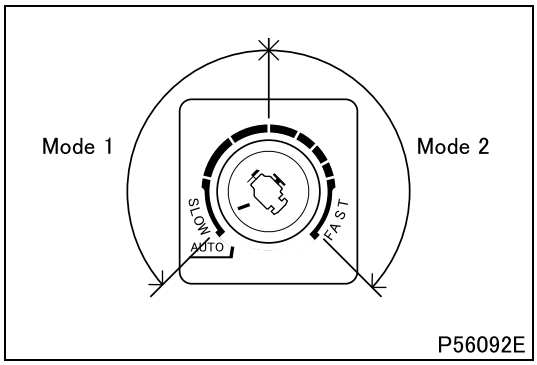

- Set the diagnosis switch to OFF (disconnect the fuse). (See Gr00.)
- Turn the idle adjust dial to any position within the illustrated range of Mode 1.
- Select [A4: VGT1] in [Actuator Test] of the Multi-Use Tester. Set [Target Value] to 80% and execute.
- When [A4: VGT1] is executed, the engine speed should be automatically increased to 2500 rpm.
- Maintain the state of [Target Value] having been executed (for 5 to 15 minutes) until boost pressure is stabilized.
- Measure the following items from among [Service Data].
  20: Atmospheric pressure (measured atmospheric pressure)
  21: Boost pressure (measured boost pressure)
  30: Intake air temperature (upper stream) (measured air temperature)
  After the measurements, set the diagnosis switch to ON (connect the fuse).
- Obtain boost pressure correction value respectively by calculating above Service Data.

[Calculation of intake air temperature correction value]

Intake air temperature correction value = –0.3976 (Measured boost temperature –25)

[Calculation of atmospheric pressure correction value]

Atmospheric temperature correction value = Measured atmospheric temperature –100

https://truckmanualshub.com/

[Calculation of boost pressure correction value]

- Obtain the boost pressure correction value using the following equation.
  Boost pressure correction value = Measured boost pressure – intake air temperature correction value – atmospheric temperature correction value
- If boost pressure correction value deviates from the standard value, adjust the turbocharger.

WARNING ⚠

- **The turbocharger is hot for a while after the engine is stopped. Take care not to burn yourself during adjustment work.**

https://truckmanualshub.com/

1.3 Turbocharger adjustments

- Follow the flow chart below when adjustments become necessary on the turbocharger.

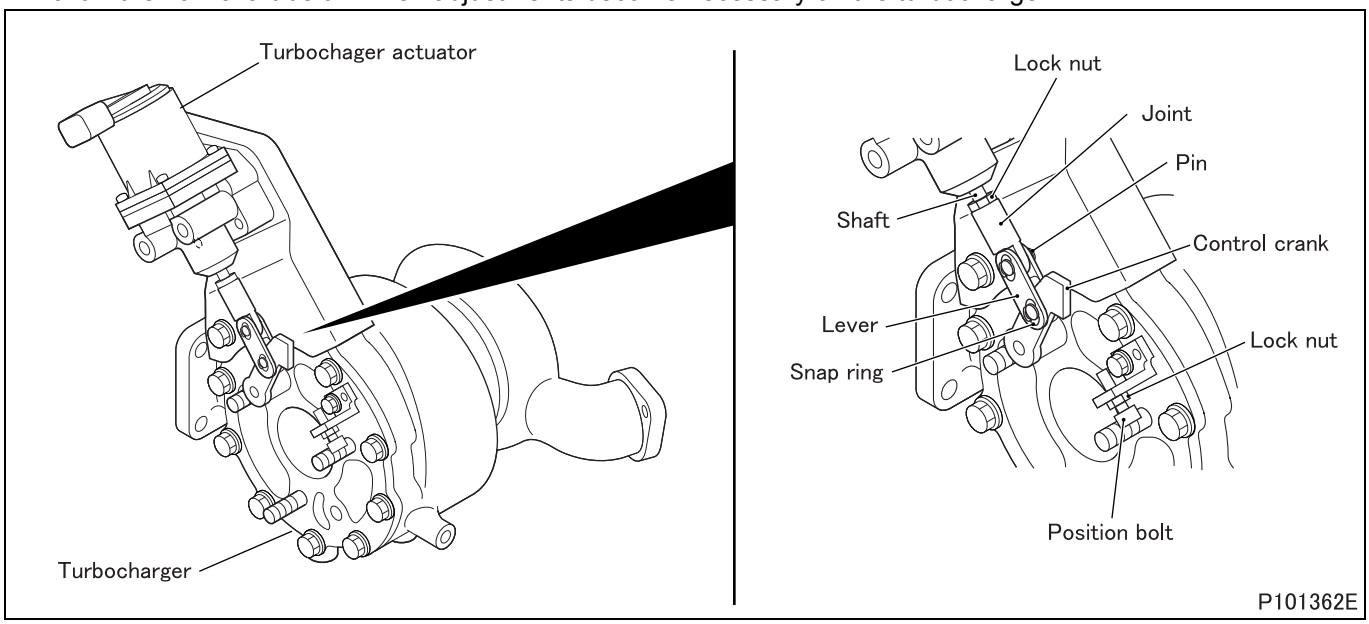

<Inspection and adjustment sequence>

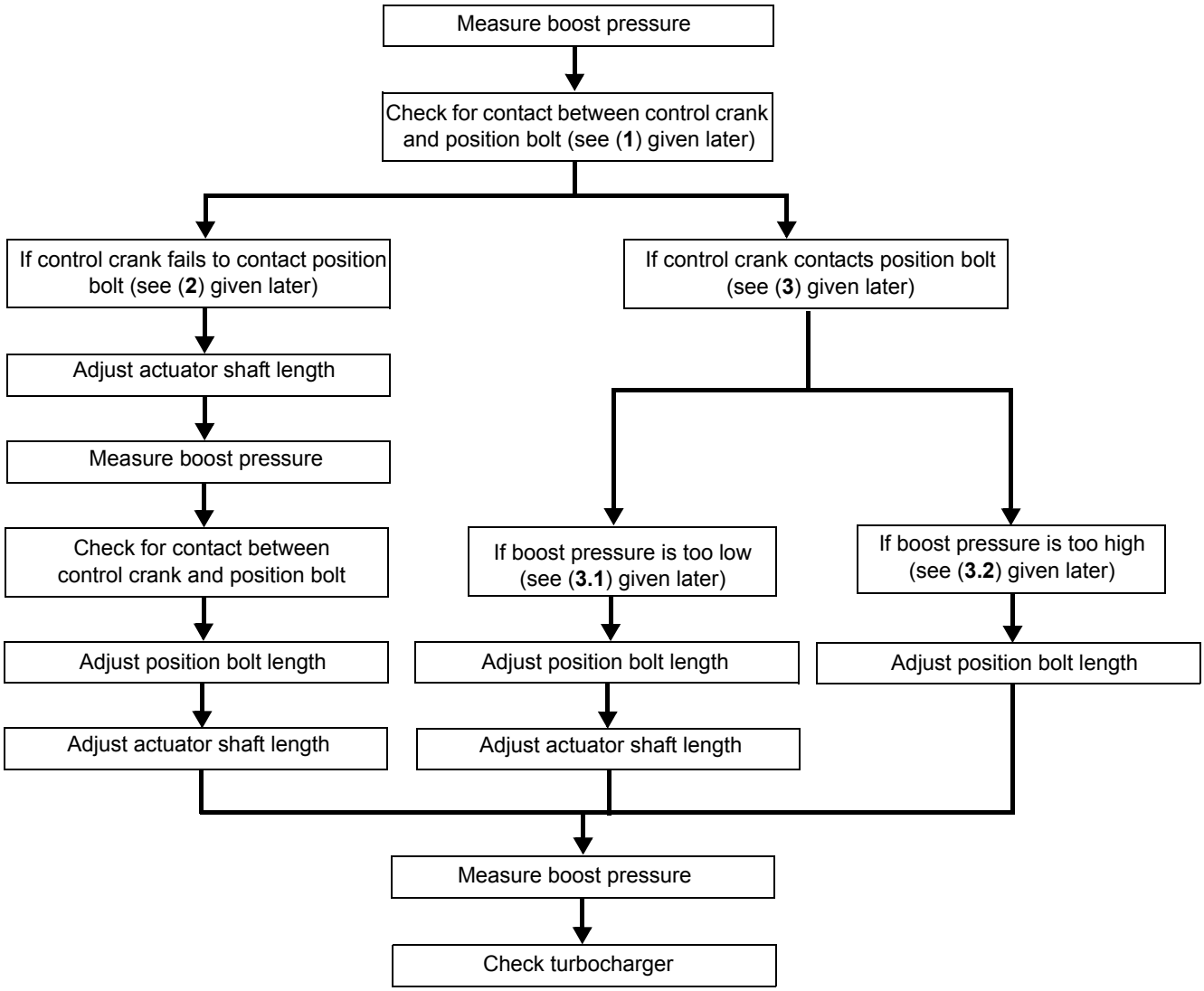

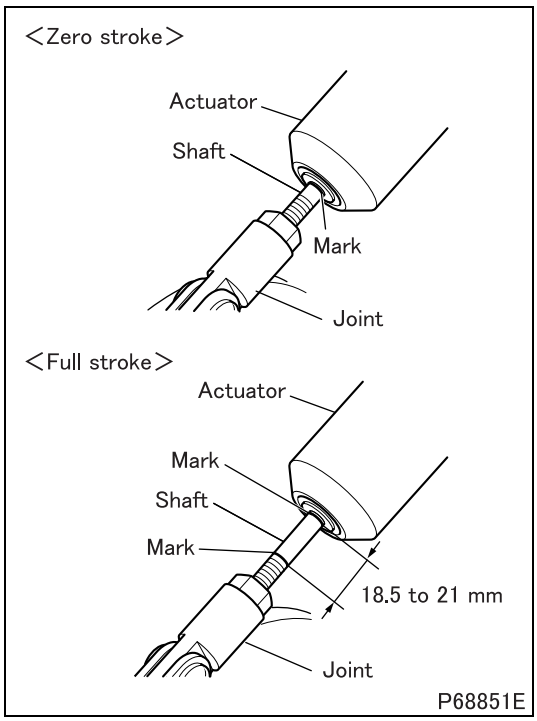

(1) Checking contact between control crank and position bolt

- Start the engine.
- Stop the engine. Set the starter switch to the [ON] position within 40 seconds.
- Select [A5: EGR, ETV, VGT] from [Actuator Test] on the Multi-Use Tester screen. Set [Target Value] at 100% and have it executed. The actuator shaft will be put into a full-stroke state.
- With the actuator shaft maintained in this state, check for contact between the control crank and position bolt.

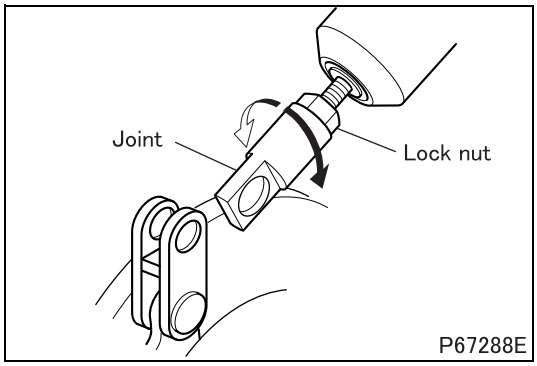

(2) If control crank fails to contact position bolt

<Actuator shaft length adjustment>

- Remove snap rings and pins on the actuator side of the shaft.
- Loosen the lock nut. Turning the joint part, extend the shaft until the control crank contacts the position bolt.
  Adjusting guide: Shaft length changes by 1 mm with one turn of the joint.
- After the adjustment, reinstall the snap rings and pins, and tighten the lock nut.

NOTE

- **If proper control crank-to-position bolt contact cannot be achieved despite full shaft extension, replace the lever and pins.**

- Measure boost pressure again.
- If boost pressure is out of the standard value, make readjustment as follows.

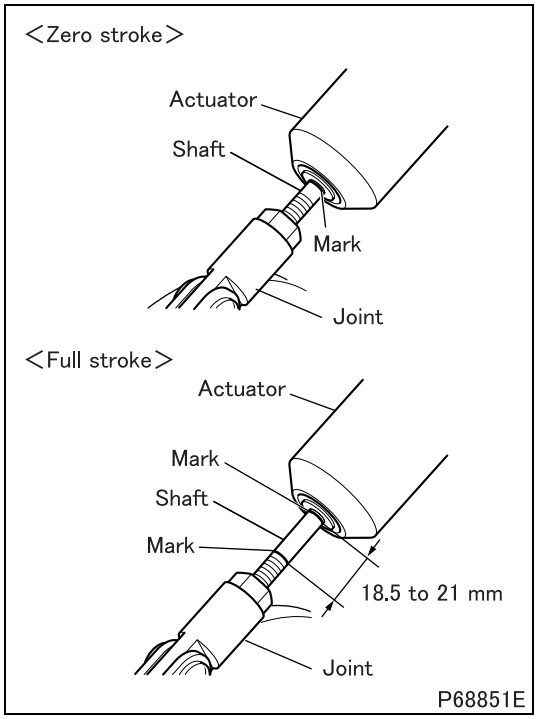

<Checking contact between control crank and position bolt>

- Start the engine.
- Stop the engine. Set the starter switch to the [ON] position within 40 seconds.
- Select [A5: EGR, ETV, VGT] from [Actuator Test] on the Multi-Use Tester screen. Set [Target Value] at 100% and have it executed. The actuator shaft will be put into a full-stroke state.
- With the actuator shaft maintained in this state, check for contact between the control crank and position bolt.
  If proper contact is still to be achieved, adjust the actuator shaft length all over again.

https://truckmanualshub.com/

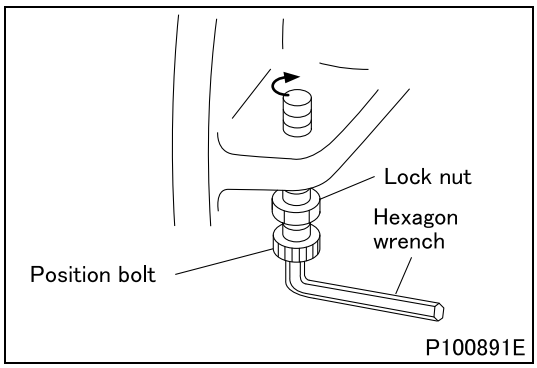

<Position bolt length adjustment>

- Loosen the lock nut.
- Using a hexagon wrench, turn the position bolt in illustrated directions to bring it into a position clear of the control crank.
  Adjusting guide: With the engine running at 2500 rpm, one full turn of the position bolt increases boost pressure by approximately 3 kPa.
- After the adjustment, tighten the lock nut.
- Then, proceed to the actuator shaft length adjustment.

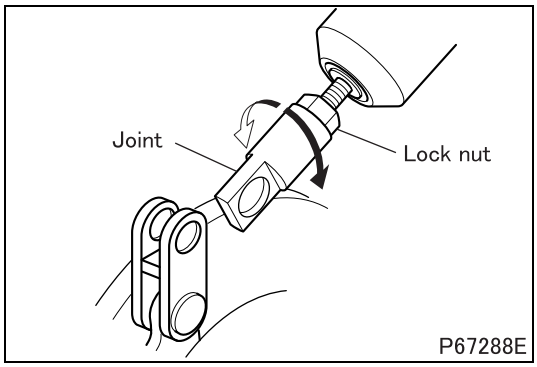

<Actuator shaft length adjustment>

- Remove snap rings and pins on the actuator side of the shaft.
- Loosen the lock nut. Turning the joint part, extend the shaft until the control crank contacts the position bolt.
  Adjusting guide: Shaft length changes by 1 mm with one turn of the joint.
- After the adjustment, reinstall the snap rings and pins, and tighten the lock nut.

NOTE

- **If proper control crank-to-position bolt contact cannot be achieved despite full shaft extension, replace the lever and pins.**

- Measure boost pressure again.
- If boost pressure is out of the standard value, check the turbocharger. (See later section.)

(3) If the control crank contacts the position bolt

(3.1) If boost pressure is too low

<Position bolt length adjustment>

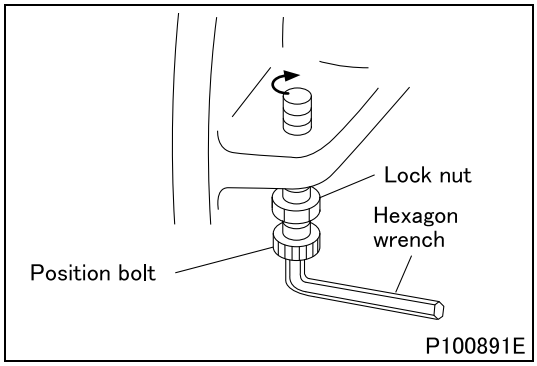

- Loosen the lock nut.
- Using a hexagon wrench, turn the position bolt in illustrated directions to bring it into a position clear of the control crank.
  Adjusting guide: With the engine running at 2500 rpm, one full turn of the position bolt increases boost pressure by approximately 3 kPa.
- After the adjustment, tighten the lock nut.
- Then, proceed to the actuator shaft length adjustment.

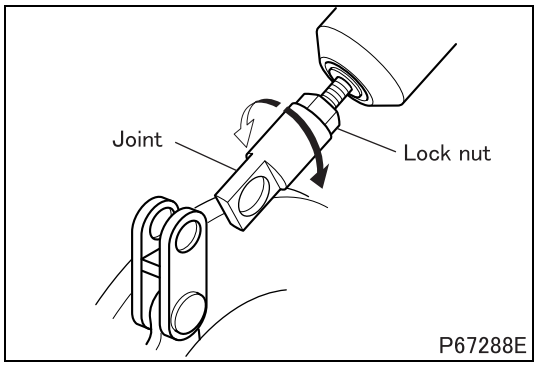

<Actuator shaft length adjustment>

- Remove snap rings and pins on the actuator side of the shaft.
- Loosen the lock nut. Turning the joint part, extend the shaft until the control crank contacts the position bolt.
  Adjusting guide: Shaft length changes by 1 mm with one turn of the joint.
- After the adjustment, reinstall the snap rings and pins, and tighten the lock nut.

NOTE

- **If proper control crank-to-position bolt contact cannot be achieved despite full shaft extension, replace the lever and pins.**

- Measure boost pressure again.
- If boost pressure is out of the standard value, check the turbocharger. (See later section.)

(3.2) If boost pressure is too high

<Position bolt length adjustment>

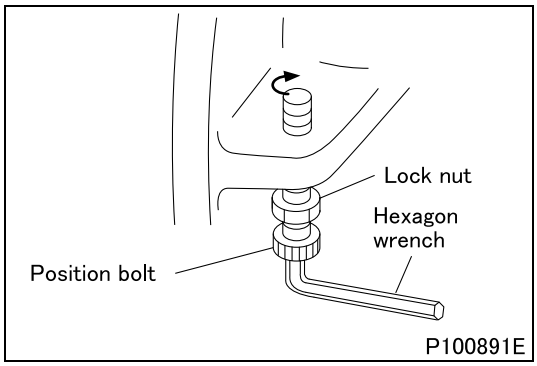

- Loosen the lock nut.
- Using a hexagon wrench, turn the position bolt in illustrated directions to bring it into a position clear of the control crank.
  (Turn the starter switch ON. If the engine warning lamp stays off for more than 30 seconds, it is in normal condition.)
  Adjusting guide: With the engine running at 2500 rpm, one full turn of the position bolt increases boost pressure by approximately 3 kPa.
- After the adjustment, tighten the lock nut.
- Measure boost pressure again.
- If boost pressure is out of the standard value, check the turbocharger. (See later section.)

CAUTION ⚠

- **If shaft stroke is out of specified standard value (18.5 to 21 mm), the engine electronic control unit detects it as a turbocharger adjustment error (common rail system diagnosis code P2263: VGT System) and indicates it through engine warning lamp. In such a case, check the turbocharger for responsible fault.**
  Delete the diagnosis code appearing on the Multi-Use Tester screen because it is otherwise memorized in the engine electronic control unit. (See Gr00.)

https://truckmanualshub.com/

2. Cleaning and Inspection of Air Cleaner Element

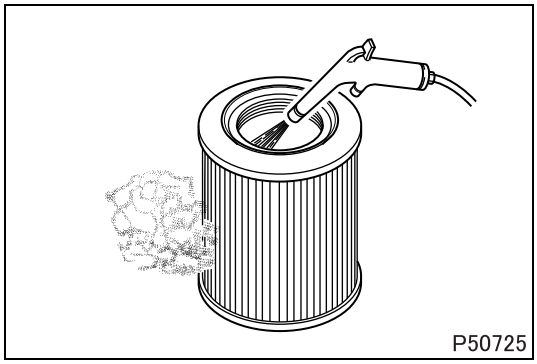

[Cleaning]

- Blow a jet of compressed air at a pressure not higher than 685 kPa {7 kgf/cm^2} against the inside surfaces of the element.
- Move the compressed air jet up and down along all pleats of the filter paper element.

CAUTION ⚠

- **For the frequency and timing of cleaning, see the relevant instruction manual. More frequent cleaning than necessary may damage the element, causing dust and foreign matter to be sucked into the engine.**
- **Do not strike the element or hit it against another object to remove dust.**
- **Do not blow compressed air against outside surfaces of the element.**

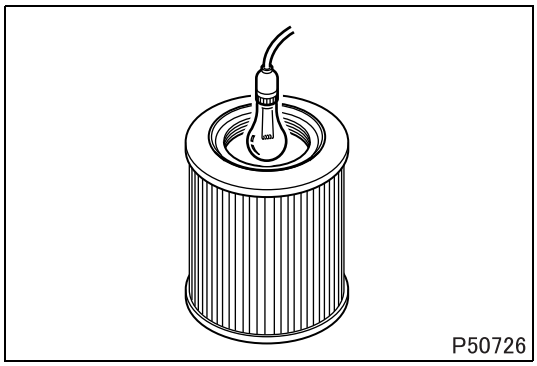

[Inspection]

- Shine some electric light inside the element.
- Replace the element if thin spots or broken parts are evident in the filter paper, or if the packing at the top of the element is damaged.
  Also replace the element if the dust on the element is damp with oily smoke or soot, regardless of the replacement schedule.

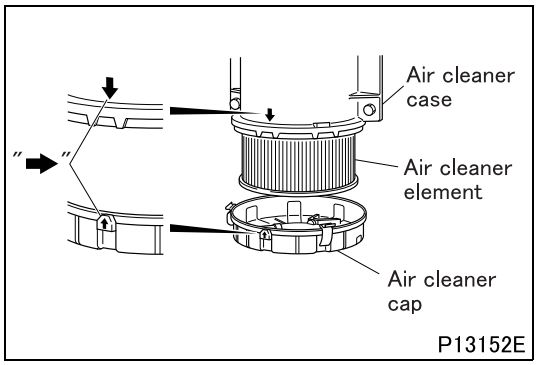

[Installation]

➡ : Alignment mark

3. Check for Looseness in Intake Manifold Mounting Bolts and Nuts

- Check for looseness in the intake manifold and air inlet pipe mounting bolts and nuts. If there is looseness, tighten the bolts and nuts to the specified torque. (See “INTAKE MANIFOLD”.)

4. Check for Cracks and Gas Leakage in Exhaust Manifold

- Inspect the exhaust manifold visually. If there is any trace of gas leakage or cracks, replace the exhaust manifold. (See “EXHAUST MANIFOLD”.)
- Check for looseness in the exhaust manifold mounting nuts. If there is looseness, tighten the nuts to the specified torque. (See “EXHAUST MANIFOLD”.)

5. Check for Cracks and Gas Leakage in Turbocharger

- Inspect the turbocharger visually. If there is any trace of gas leakage or cracks, replace the turbocharger. (See “TURBOCHARGER”.)
- Check for looseness in the turbocharger mounting bolts and nuts. If there is looseness, tighten the bolts and nuts to the specified torque. (See “TURBOCHARGER”.)

6. Loose Turbocharger

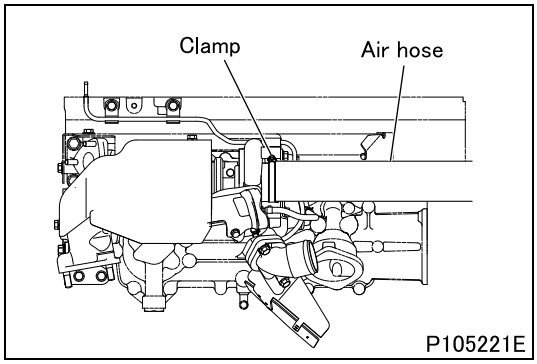

- Remove the bolts, loosen the clamp securing the air hose and turbocharger and remove the air hose.

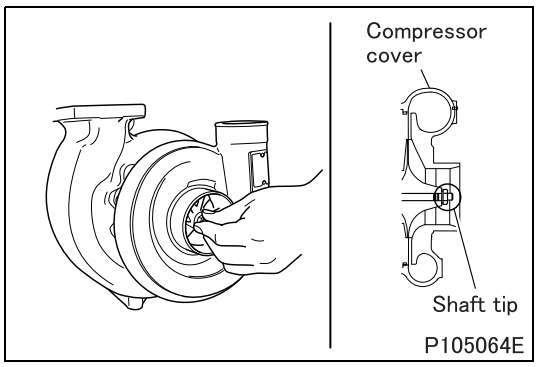

- Turn the compressor wheel by turning the shaft tip with fingers. Check that the compressor wheel rotate smoothly without touching the compressor.
- If any abnormality is found, disassemble and inspect the turbocharger. (See “TURBOCHARGER”.)

https://truckmanualshub.com/

AIR DUCT AND AIR CLEANER

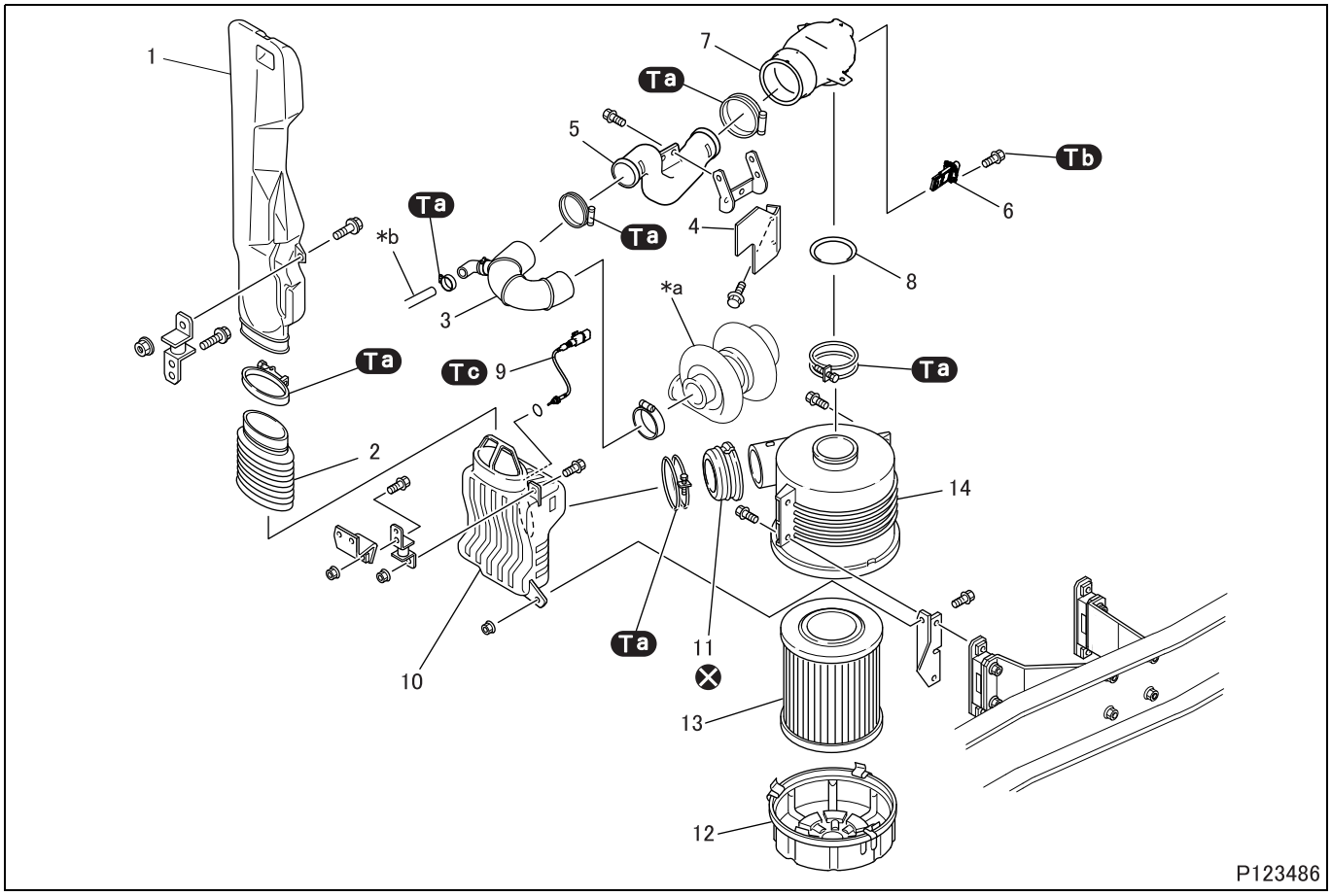

● Disassembly sequence

1 Air inlet duct
2 Connector
3 Air hose
4 Insulator
5 Air duct
6 Air flow sensor
7 Connector
8 Mesh filter
9 Intake air temperature sensor
10 Air box
11 Rubber seal
12 Air cleaner cap
13 Air cleaner element
14 Air cleaner case

***a**: Turbocharger
***b**: Positive crankcase ventilation hose B
⊗: Non-reusable parts

● Assembly sequence

Follow the disassembly sequence in reverse.

Tightening torque (Unit: N·m {kgf·m})

Mark	Parts to be tightened	Tightening torque	Remarks
Ta	Clamp	3.0 to 3.4 {0.3 to 0.35}	–
Tb	Bolt (air flow sensor mounting)	1.2 to 1.8 {0.12 to 0.18}	–
Tc	Intake air temperature sensor	10 {1.0}	–

https://truckmanualshub.com/

◆Cleaning procedure◆

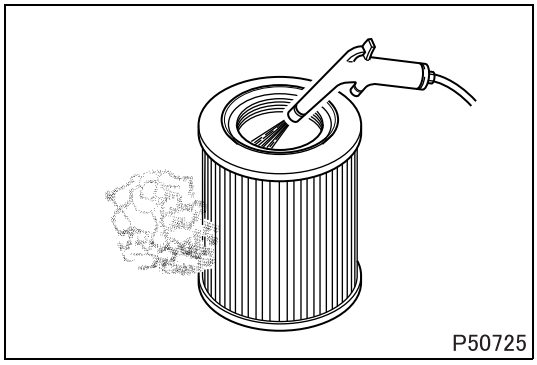

■ Cleaning: Element

- Blow a jet of compressed air at a pressure not higher than 685 kPa {7 kgf/cm^2} against the inside surfaces of the element.
- Move the compressed air jet up and down along all pleats of the filter paper element.

CAUTION ⚠

- **For the frequency and timing of cleaning, see the relevant instruction manual. More frequent cleaning than necessary may damage the element, causing dust and foreign matter to be sucked into the engine.**
- **Do not strike the element or hit it against another object to remove dust.**
- **Do not blow compressed air against outside surfaces of the element.**

◆Inspection procedure◆

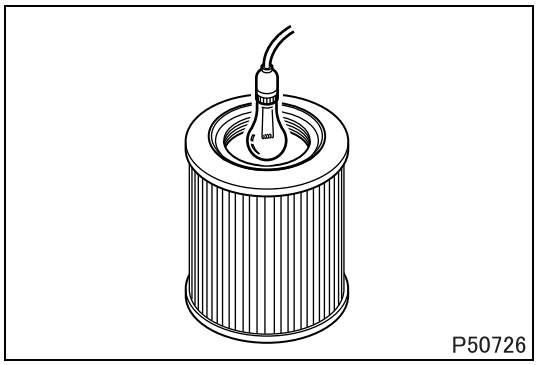

■ Inspection: Element

- Shine some electric light inside the element.
- Replace the element if thin spots or broken parts are evident in the filter paper, or if the packing at the top of the element is damaged.
  Also replace the element if the dust on the element is damp with oily smoke or soot, regardless of the replacement schedule.

◆Installation procedure◆

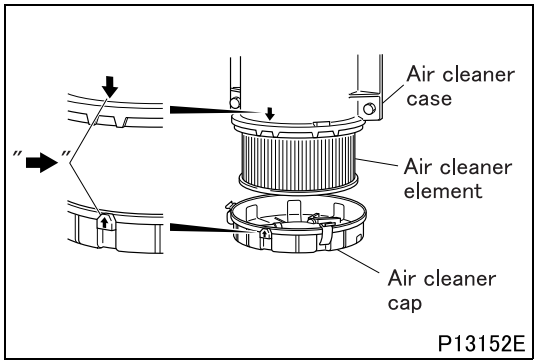

■ Installation: Air cleaner cap

➡: Alignment mark

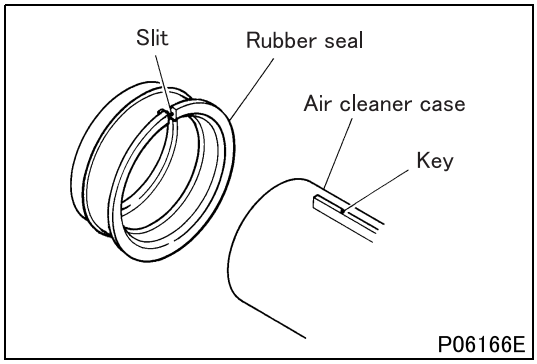

■ Installation: Rubber seal

- Align slit of rubber seal with key of air cleaner case.

https://truckmanualshub.com/

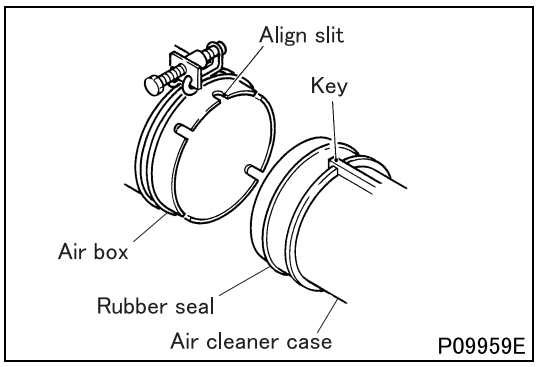

■ **Installation: Air box**

- Align slit of air box with key of air cleaner case.

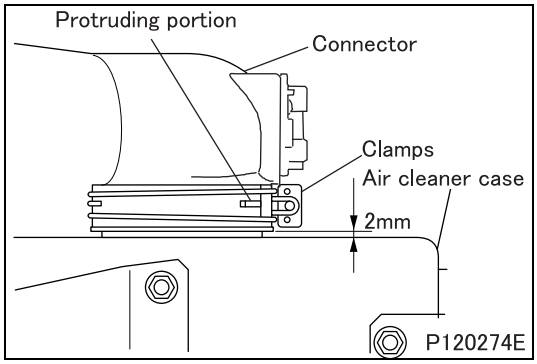

■ **Installation: Connector**

- The protruding portion of the connector is put between clamps.
- Installation is such that the space between the connector and the air cleaner case measures the amount shown in the figure.

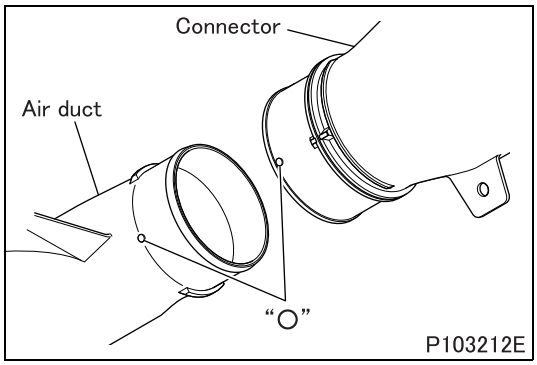

■ **Installation: Air duct**

- Align the mark " ○ " on air duct with the connector's and push the air duct in until it hits stopper.

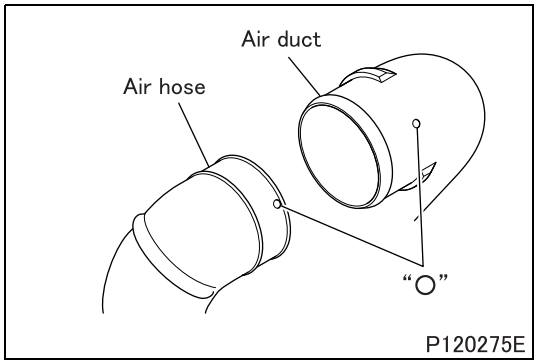

■ **Installation: Air hose**

- Align the mark " ○ " on air hose with the air duct's and push the air hose in until it hits stopper.

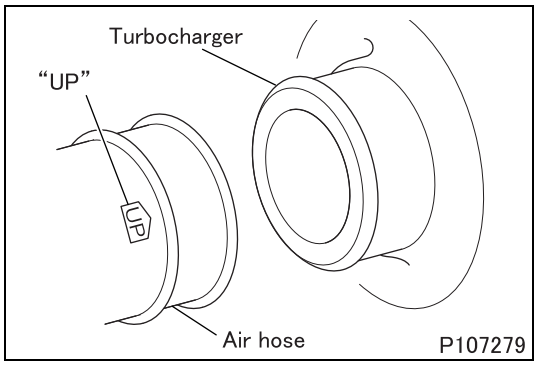

- Connect the air hose to the turbocharger with the "UP" mark facing up.

https://truckmanualshub.com/

M E M O

https://truckmanualshub.com/

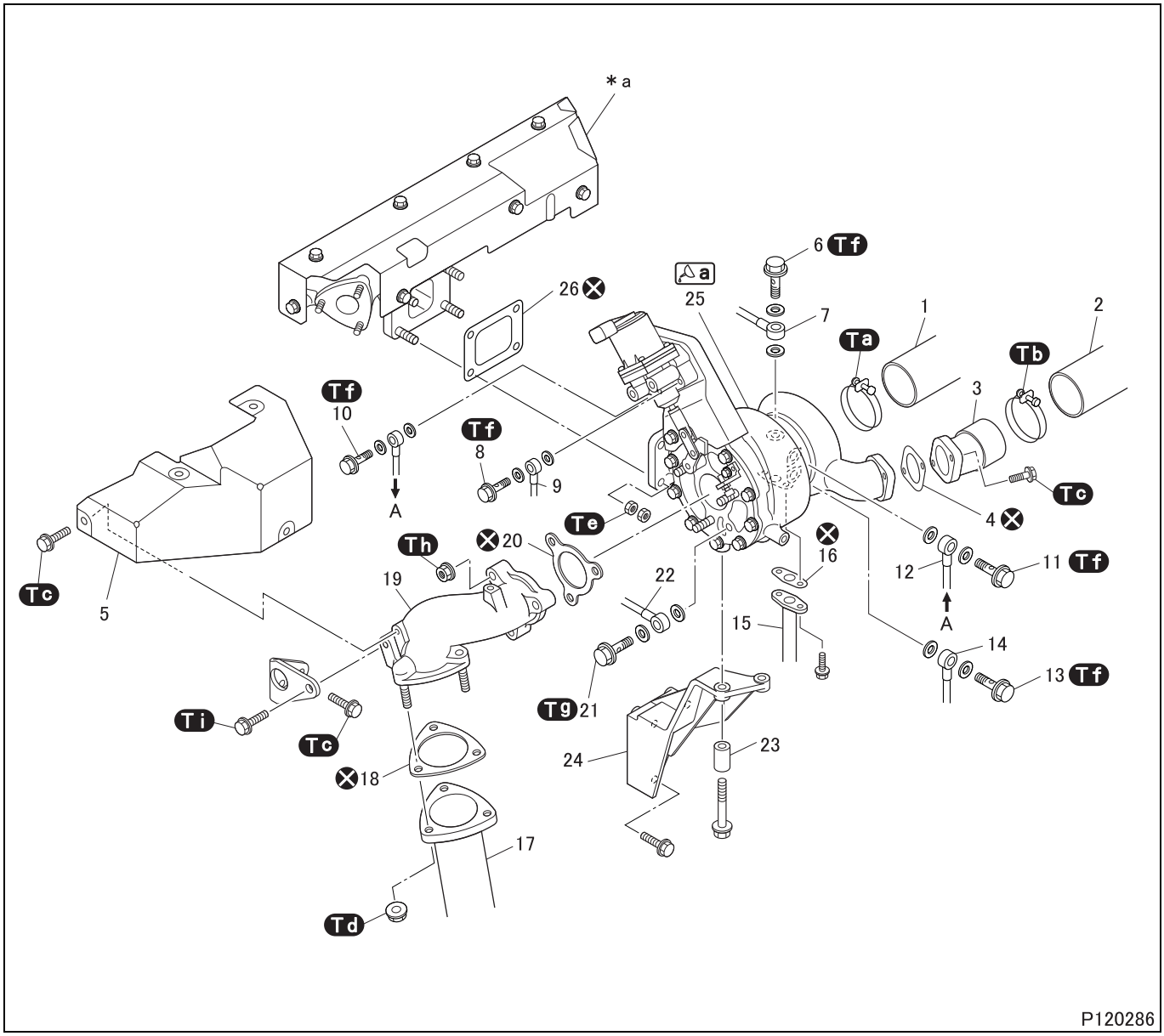

P120286

● Removal sequence

1 Air hose
2 Air inlet hose
3 Turbocharger coupler
4 Gasket
5 Insulator
6 Eyebolt
7 Oil pipe
8 Eyebolt
9 Water pipe
10 Eyebolt
11 Eyebolt
12 Water pipe
13 Eyebolt
14 Water pipe
15 Oil return pipe
16 Gasket
17 Front pipe
18 Gasket
19 Exhaust coupler
20 Gasket
21 Eyebolt
22 By-pass pipe
23 Spacer
24 Bracket
25 Turbocharger (See later section.)
26 Gasket

*a: Exhaust manifold

⊗: Non-reusable parts

● Installation sequence

Follow the removal sequence in reverse.

Tightening torque (Unit: N·m {kgf·m})

Mark	Parts to be tightened	Tightening torque	Remarks
Ta	Clamp	3 to 3.4 {0.3 to 0.35}	–
Tb	Clamp	3.9 to 4.9 {0.4 to 0.5}	–
Tc	Bolt (turbocharger coupler mounting)	23.8 {2.4}	–
	Bolt (insulator mounting)		
	Bolt (exhaust coupler stay mounting)		
Td	Nut (front pipe mounting)	45 to 60 {4.6 to 6.1}	–
Te	Nut (turbocharger mounting)	42 {4.2}	–
Tf	Eyebolt (water pipe mounting)	21 {2.1}	–
	Eyebolt (oil pipe mounting)		
Tg	Eyebolt (by-pass pipe)	39 {4.0}	–
Th	Nut (exhaust coupler mounting)	64 {6.5}	–
Ti	Bolt (exhaust coupler stay mounting)	46 {4.7}	–

Lubricant and/or sealant

Mark	Points of application	Specified lubricant and/or sealant	Quantity
a	Pouring into turbocharger	Engine oil	As required

◆Installation procedure◆

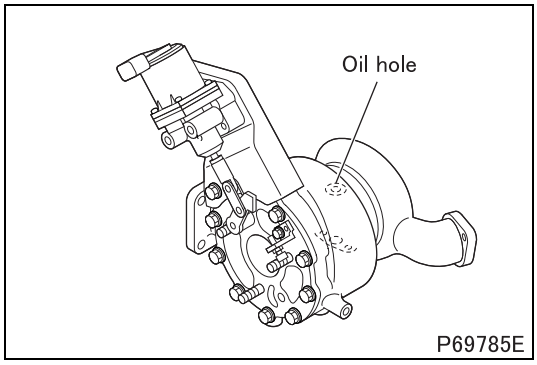

■ Installation: Turbocharger

- Before installing the turbocharger assembly, pour engine oil into the oil hole to ensure smooth operation of the internal parts.

https://truckmanualshub.com/

Turbocharger

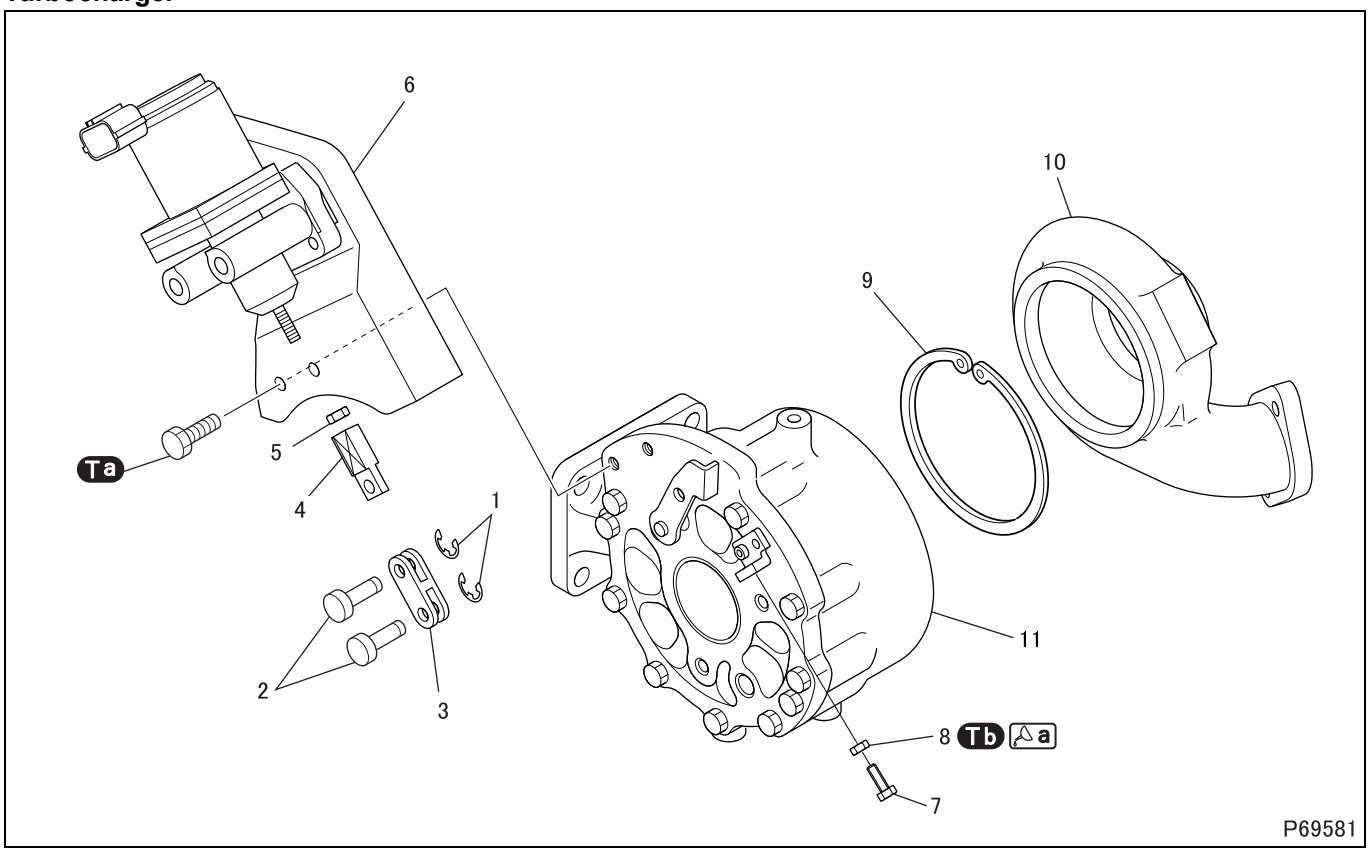

● Removal sequence

1 Snap ring
2 Pin
3 Lever
4 Joint
5 Lock nut
6 Actuator
7 Lock nut
8 Position bolt
9 Snap ring
10 Compressor cover
11 Turbine assembly

⊗: Non-reusable parts

NOTE

- **Do not remove the joint and position bolt from the actuator and turbine assembly unless they are defective.**

CAUTION ⚠

- **The blades on the turbine assembly are easily bent. Make sure that they do not strike the compressor cover.**
- **The turbine assembly is a non-disassemble component. When it becomes unsmooth in rotation or has a damaged compressor wheel, replace the turbocharger.**

● Installation sequence

Follow the removal sequence in reverse.

Service standards (Unit: mm)

Location	Maintenance item	Standard value	Limit	Remedy
2	Pin outer diameter	8	7.5	Replace
3	Lever inner diameter	ϕ8	ϕ8.5	Replace
4	Joint inner diameter	ϕ8	ϕ8.5	Replace
6	Actuator shaft stroke	18.5 to 21	18.4	Replace
11	Play in shaft axis direction of turbine assembly	0.39 to 0.67	–	Replace

Tightening torque (Unit: N·m {kgf·m})

Mark	Parts to be tightened	Tightening torque	Remarks
Ta	Bolt (bracket mounting)	21.6 to 23.5 {2.2 to 2.4}	–
Tb	Lock nut	4.9 to 9.8 {0.5 to 1.0}	–

Lubricant and/or sealant

Mark	Points of application	Specified lubricant and/or sealant	Quantity
a	Thread area of nuts	Seizure preventive compound (FEL-PRO CA-5)	As required

◆Work before removal◆

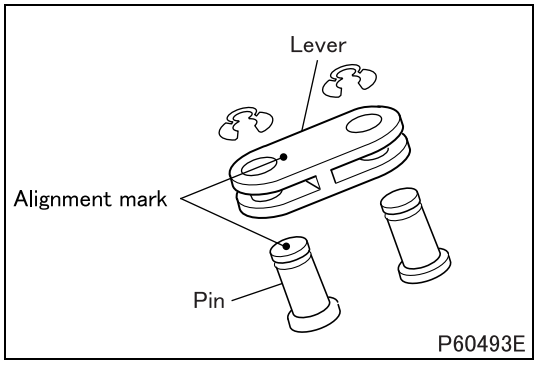

■ **Alignment mark**

- Put alignment marks on the pin and lever.

CAUTION ⚠

- **Be sure to provide alignment marks on the lever and pin to ensure installation of the pins in right places when reused. Pins in wrong position would change boost pressure to result in a malfunctioning or damaged engine.**

◆Work after disassembly◆

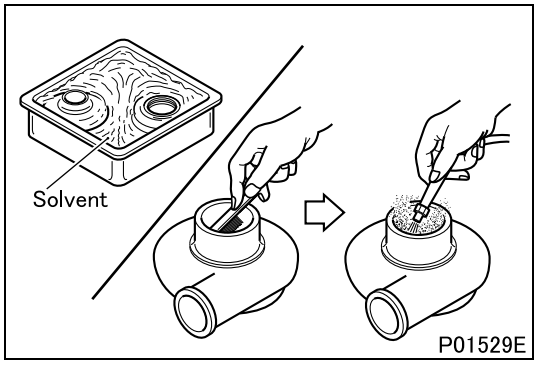

■ **Cleaning**

- Before cleaning, visually check the disassembled parts for scorches, abrasion and other marks that may be difficult to see after cleaning. Replace any part that appears defective.
- Immerse the disassembled parts in a non-flammable solvent (a 5 to 10 aqueous solution of Oil Clean from New Hope Co., Ltd.). Take out the parts and blow them dry with compressed air. Remove any hard deposits with a stiff brush or plastic scraper.

CAUTION ⚠

- **Do not immerse the cartridge assembly in the solvent. Doing so will cause the O-ring inside the cartridge assembly to sell up, which may adversely affect turbocharger operation.**

- Again, immerse the parts in the solvent.
- Blow them dry using compressed air.

https://truckmanualshub.com/

◆Inspection procedure◆

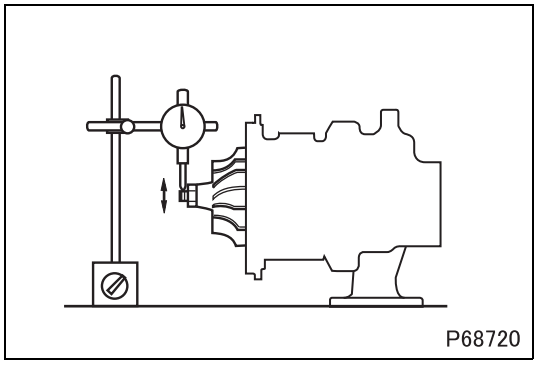

■ Inspection: Play in shaft axis direction of turbine assembly

- With the flange of the turbine assembly attached to a flat plate, measure the play with a dial gauge.
- If the measurement exceeds the specified limit, replace the turbine assembly.

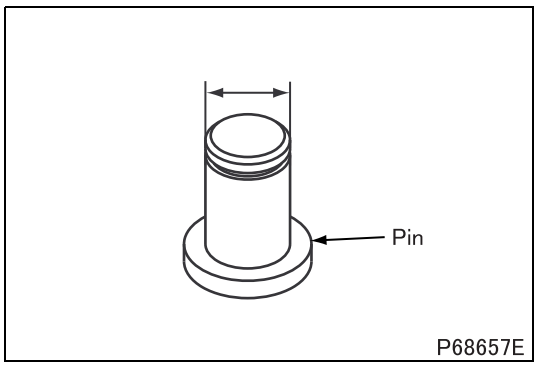

■ Inspection: Pin outer diameter

- If the measurement is less than the limit, replace the pin.

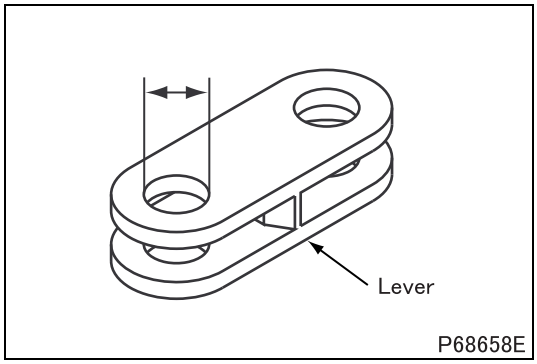

■ Inspection: Lever inner diameter

- If the measurement exceeds the limit, replace the lever.

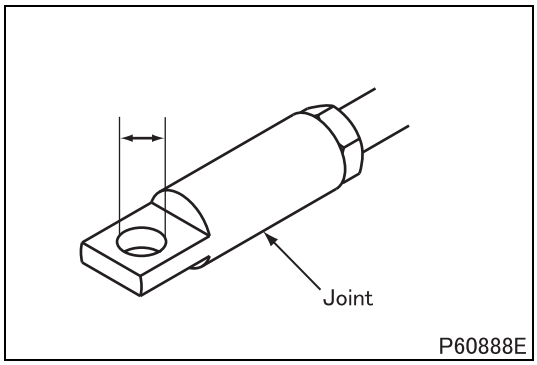

■ Inspection: Joint inner diameter

- If the measurement exceeds the limit, replace the joint.

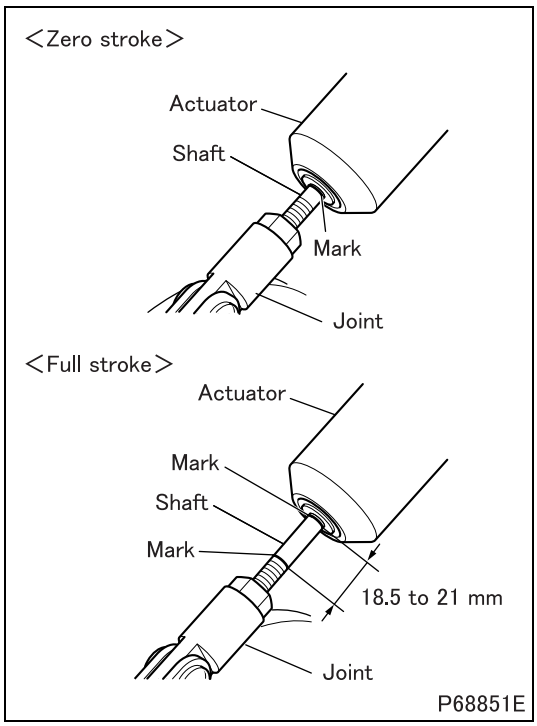

■ **Inspection: Actuator shaft stroke**

- Conduct the actuator check with the turbocharger electronic drive unit mounted on the vehicle.
- Mark the actuator shaft at the zero stroke point.
- Select [A5: EGR, ETV, VGT] from [Actuator Test] on the Multi-Use Tester screen and execute it. The actuator shaft will be brought into a full stroke state.
- Measure the amount of stroke from the full stroke point to the marked point.
- If the measurement is out of specified standard value, replace the actuator.

◆Installation procedure◆

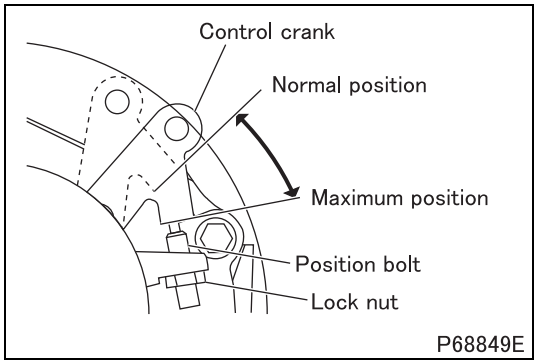

■ **Installation: Position bolt**

- Move the control crank to the maximum position, and install the position bolt to the turbine assembly.
  Make sure that the position bolt is in contact with the control crank.
- In this state, give the position bolt two and half turns, then tighten the lock nut to secure the position bolt.

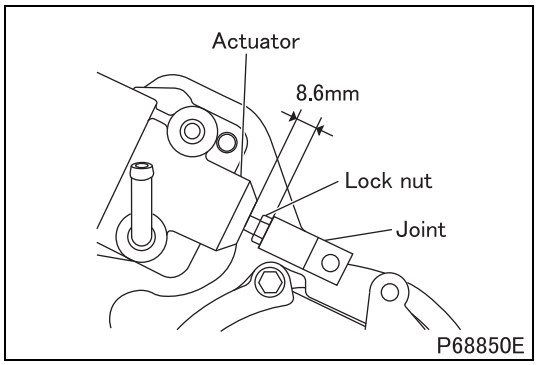

■ **Installation: Joint**

- With the actuator shaft in a zero stroke state, adjust the distance between the end faces of the actuator and joint to the illustrated value.
  Adjusting guide: 1 mm with one full turn of joint
- After the adjustment, tighten the lock nut.

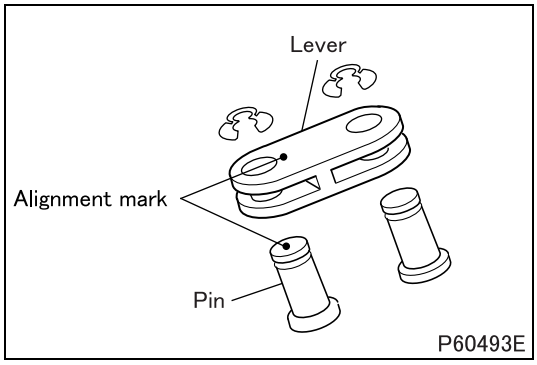

■ **Installation: Pin**

- Install the pins in the lever according to alignment marks.

CAUTION ⚠

- **Be sure to match the alignment marks to ensure installation of the pins in right places when reused. Pins in wrong position would change the boost pressure to result in a malfunctioning or damaged engine.**

https://truckmanualshub.com/

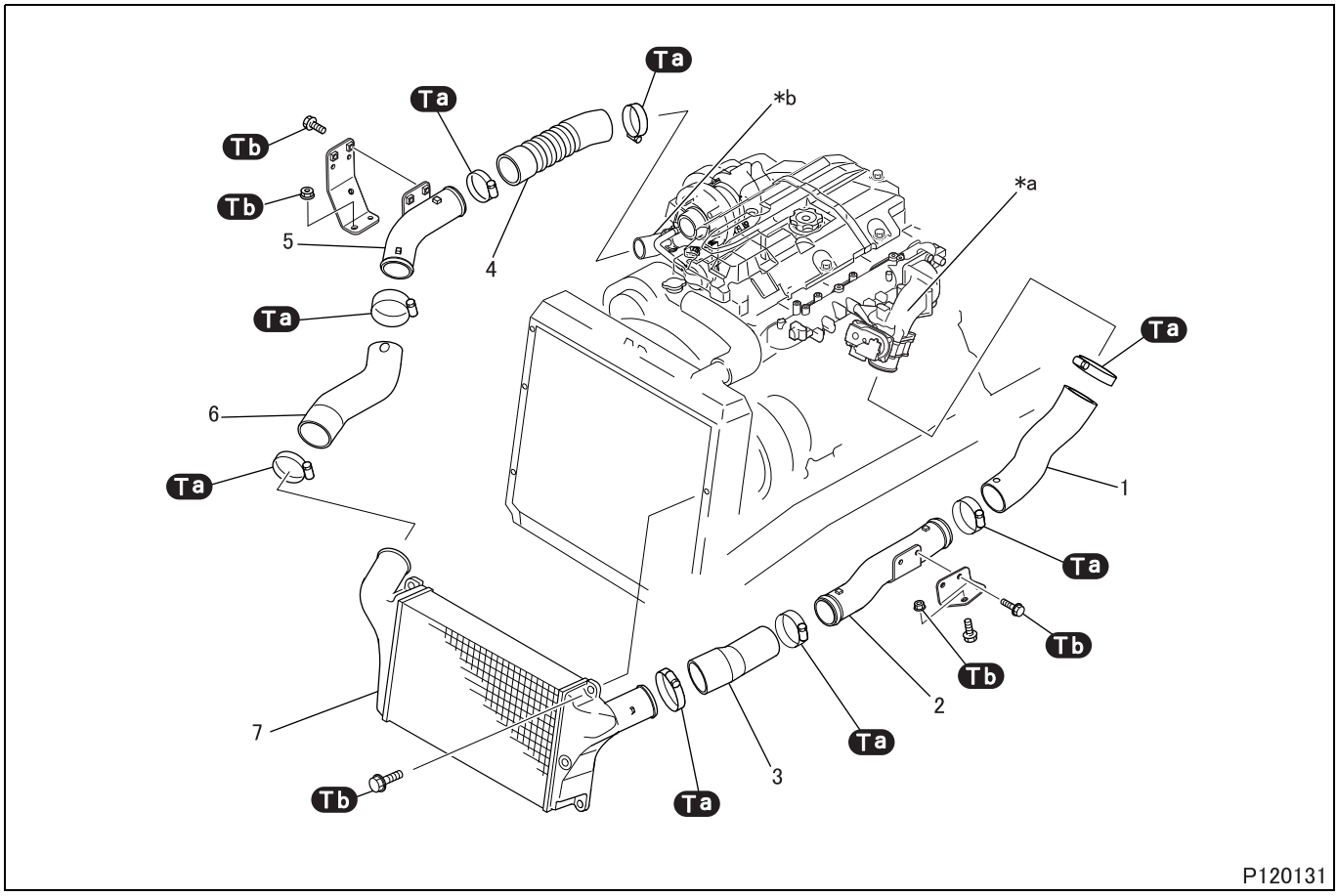

●Disassembly sequence

1 Air inlet hose
2 Air inlet pipe LH
3 Air inlet hose
4 Air inlet hose
5 Air inlet pipe RH
6 Air inlet hose
7 Intercooler

***a**: Air inlet duct
***b**: Turbocharger coupler

CAUTION ⚠

- **Do not remove forcedly the air inlet hose using a screwdriver or other similar tool. Doing so could damage the fluorine treatment layer on the inside surface of the hose, deteriorating the resistance to oil of the hose.**

●Assembly sequence

Follow the disassembly sequence in reverse.

Service standards

Location	Maintenance item	Standard value	Limit	Remedy
8	Intercooler air leakage (air pressure: 200 kPa {2.0 kgf/cm^2} maintained for 30 seconds)	0 cm^3 {0 mL}	–	Replace

Tightening torque (Unit: N·m {kgf·m})

Mark	Parts to be tightened	Tightening torque	Remarks
Ta	Clamp	6.0 to 6.5 {0.6 to 0.7}	–
Tb	Bolt (bracket mounting)	12 to 15 {1.2 to 1.5}	–
	Nut (bracket mounting)		
	Bolt (intercooler mounting)		
	Bolt (air inlet pipe LH)		

◆Inspection procedure◆

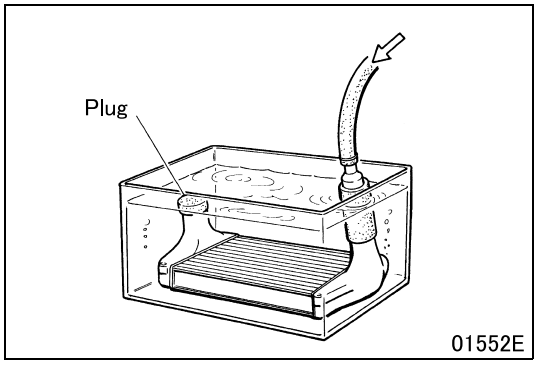

■Inspection: Intercooler

- Plug one of the air ports of the intercooler and immerse it in a tank of water. Apply the specified air pressure to the intercooler through the other air port and retain pressure for 30 seconds.
- Replace the intercooler if any air leakage is evident.

◆Installation procedure◆

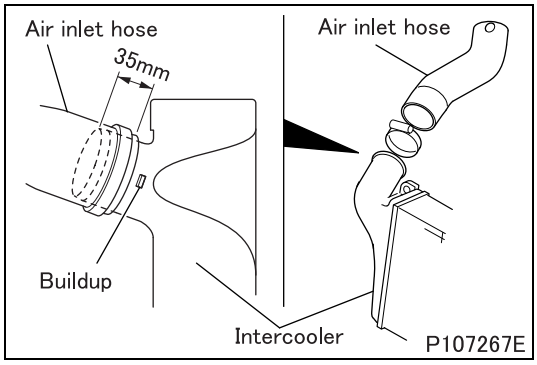

■Installation: Air inlet hose

- Install the air inlet hose in the intercooler to the dimension shown in the illustration.

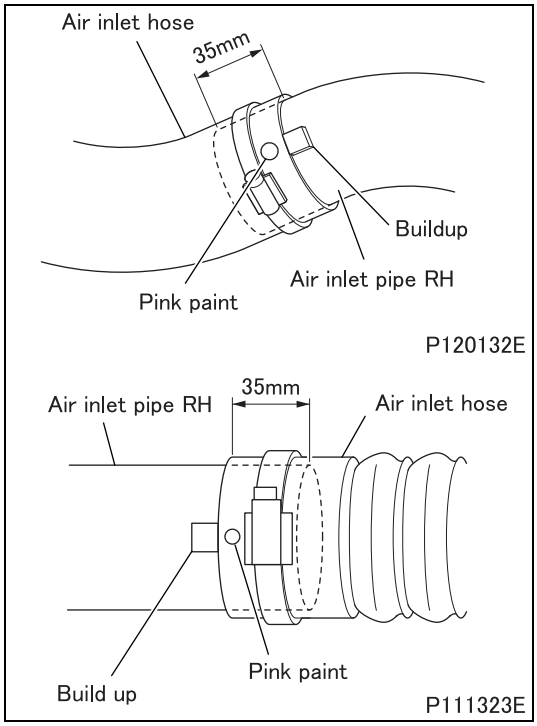

- Install the air inlet hose in the air inlet pipe RH to the dimension shown in the illustration with the pink paint on the hose and the buildup on the pipe aligned.

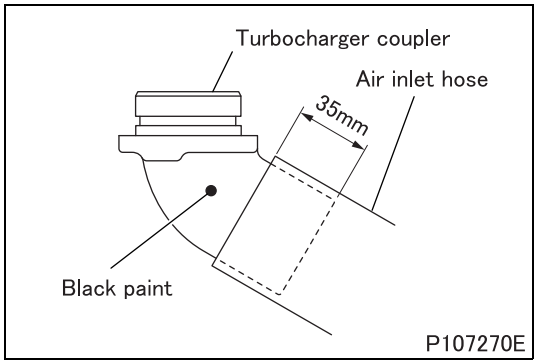

- Install the air inlet hose in the turbocharger coupler to the dimension shown in the illustration.

https://truckmanualshub.com/

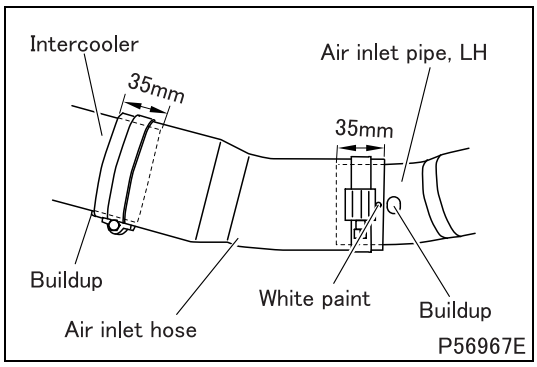

- Connect the air inlet hose to the LH air inlet pipe with the white paint on the hose aligned with the buildup on the pipe.
- Connect the air inlet hoses to the intercooler, LH air inlet pipe and air inlet duct to the dimensions indicated in the illustrations.

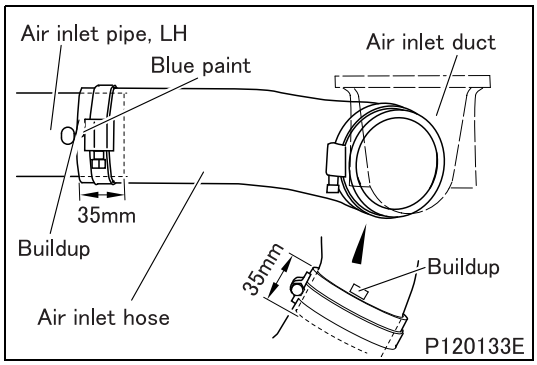

- Connect the air inlet hose to the LH air inlet pipe with the blue paint on the hose aligned with the buildup on the pipe.

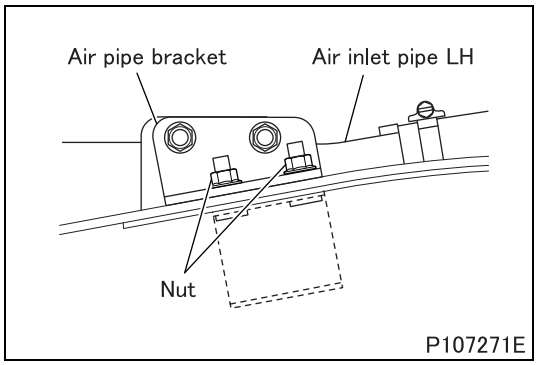

■ **Installation: Air inlet pipe LH**

- When installing the air inlet pipe LH, tighten the nut on the frame side first.

https://truckmanualshub.com/

M E M O

https://truckmanualshub.com/

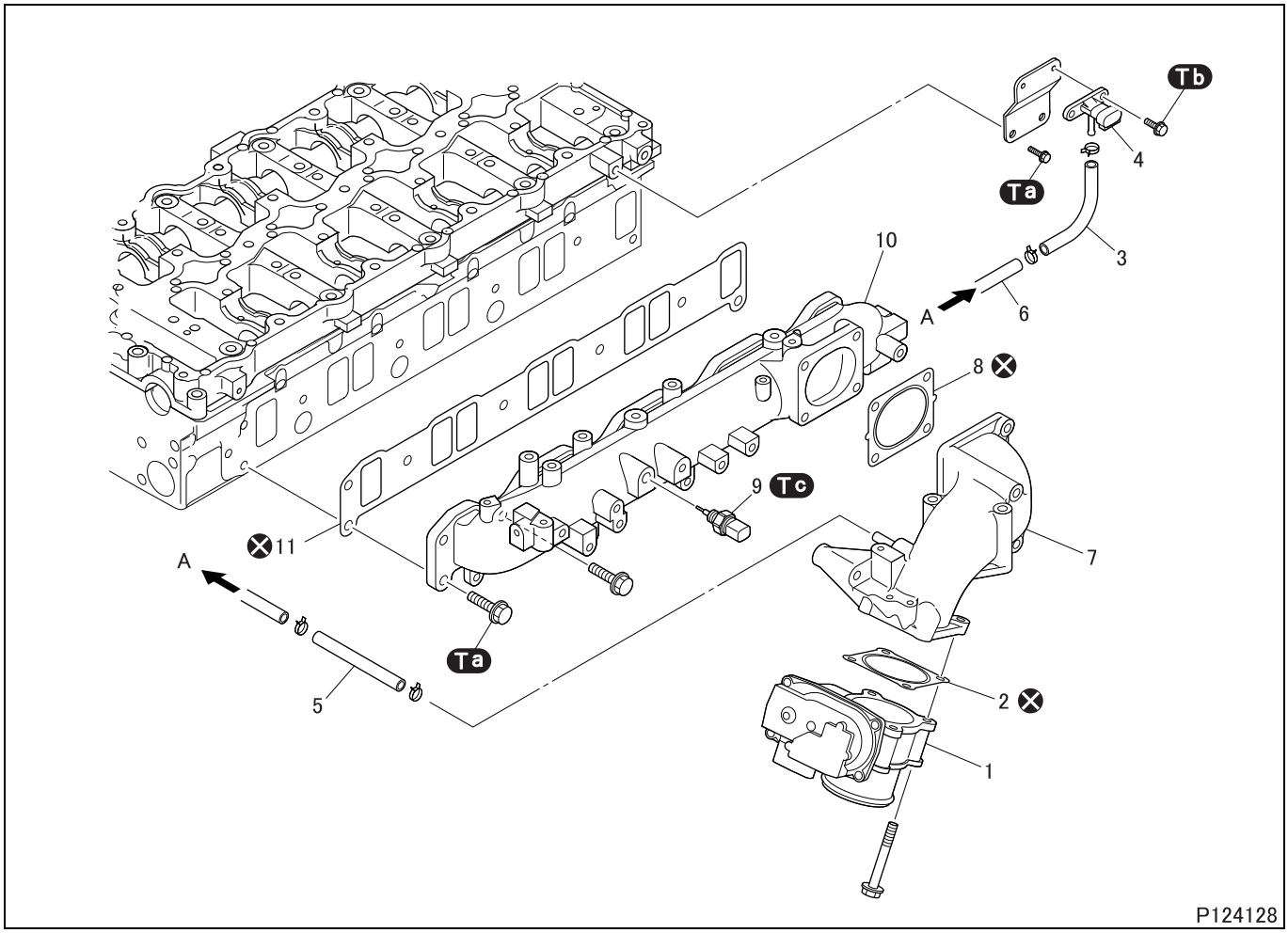

● **Disassembly sequence**

1 Intake throttle
2 Gasket
3 Vacuum hose
4 Boost pressure sensor
5 Vacuum hose
6 Vacuum pipe
7 Air inlet pipe
8 Gasket
9 Boost air temperature sensor
10 Intake manifold
11 Gasket

⊗: Non-reusable parts

● **Assembly sequence**

Follow the disassembly sequence in reverse.

Tightening torque (Unit: N·m {kgf·m})

Mark	Parts to be tightened	Tightening torque	Remarks
Ta	Bolt (boost pressure sensor bracket mounting)	23.2 {2.4}	–
	Bolt (intake manifold mounting)		
Tb	Bolt (boost pressure sensor mounting)	12.7 {1.3}	–
Tc	Boost air temperature sensor	25 ± 5 {2.5 ± 0.5}	–

https://truckmanualshub.com/

◆Inspection procedure◆

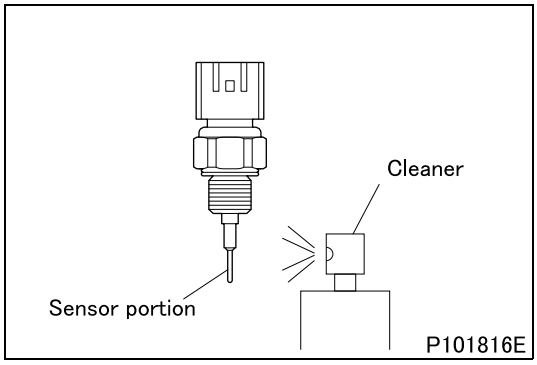

■Inspection: Boost air temperature sensor

- Check that the sensor portion is free of soot, oily substance, etc.
- If not, clean the sensor portion as follows.
- Spray a cleaner on the sensor portion from 2 or 3 cm away.
  Recommended cleaners:
  Nonchlorinated solvent
- In 20 to 30 seconds after spraying, wipe the sensor portion clear of the sprayed cleaner using a soft waste cloth the like.

CAUTION ⚠

- **Be sure to wait for 20 to 30 seconds before wiping. It takes the cleaner that long to dissolve foreign matter.**

- If the sensor portion is fouled excessively, the positive crankcase ventilation may be faulty. Inspect the positive crankcase ventilation valve and filter to locate the cause and remove it.

◆Installation procedure◆

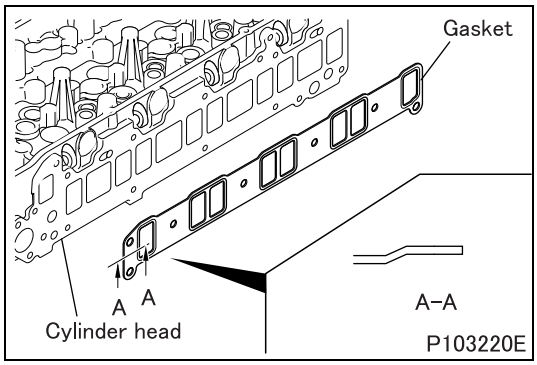

■Installation: Gasket

- Install the gasket on the cylinder head in the illustrated direction.

https://truckmanualshub.com/

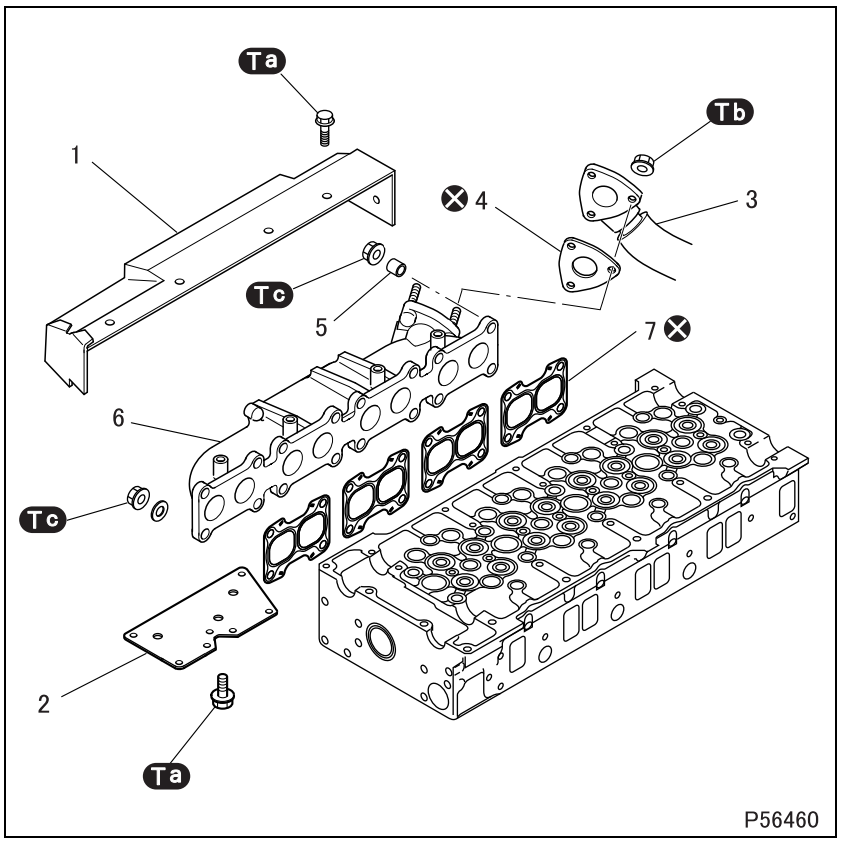

● **Disassembly sequence**

1 Insulator
2 Under insulator
3 Exhaust gas recirculation pipe
4 Gasket
5 Distance piece
6 Exhaust manifold
7 Gasket

⊗: Non-reusable parts

● **Assembly sequence**

Follow the disassembly sequence in reverse.

Tightening torque (Unit: N·m {kgf·m})

Mark	Parts to be tightened	Tightening torque	Remarks
Ta	Bolt (insulator mounting)	11.8 {1.2}	–
Tb	Nut (exhaust gas recirculation pipe mounting)	20.6 {2.1}	–
Tc	Nut (exhaust manifold mounting)	41.2 {4.2}	–

◆Installation procedure◆

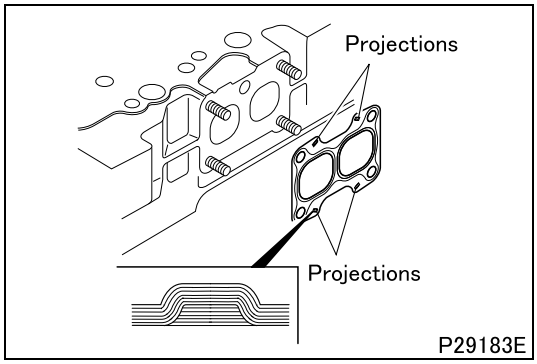

■ **Installation: Gasket**

- Install the gasket on the cylinder head with their surfaces facing in the illustrated directions.

https://truckmanualshub.com/

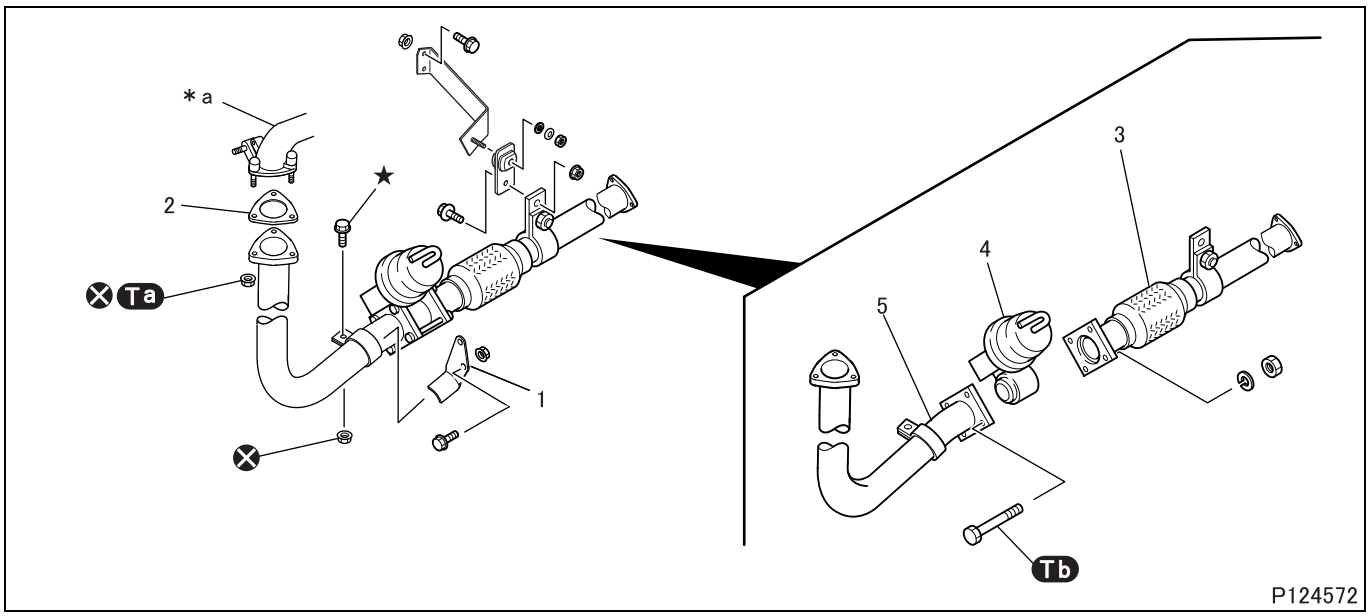

● **Disassembly sequence**

1 Brace bracket
2 Gasket
3 Front pipe
4 Exhaust shutter (See later section.)
5 Front pipe

***a**: Exhaust manifold
⊗: Non-reusable parts

CAUTION ⚠

- **Loosen the ★ marked bolt first to prevent undue forces from being applied to the exhaust pipe.**

● **Assembly sequence**

Follow the disassembly sequence in reverse.

CAUTION ⚠

- **Tighten the ★ marked bolt last to prevent undue forces from being applied to the exhaust pipe.**

Tightening torque (Unit: N·m {kgf·m})

Mark	Parts to be tightened	Tightening torque	Remarks
Ta	Nut (front pipe mounting)	45 to 60 {4.6 to 6.1}	–
Tb	Bolt (exhaust shutter unit mounting)	27 to 29 {2.8 to 3.0}	–

◆Installation procedure◆

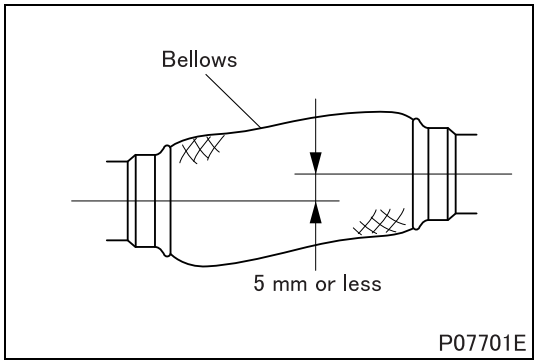

■ **Installation: Front pipe**

- Install the front pipe so that the amounts of offset in both vertical and horizontal directions between the pipes in front of and behind the bellows are smaller than the dimension indicated in the illustration.

CAUTION ⚠

- **The bellows on the front pipe have the purpose of reducing the level of noise from the vehicle. It is not intended for compensating for misalignment that may result from improper installation of the front pipe. Install the front pipe properly to avoid excessive tension or other stress on the bellows.**

https://truckmanualshub.com/

Exhaust Shutter

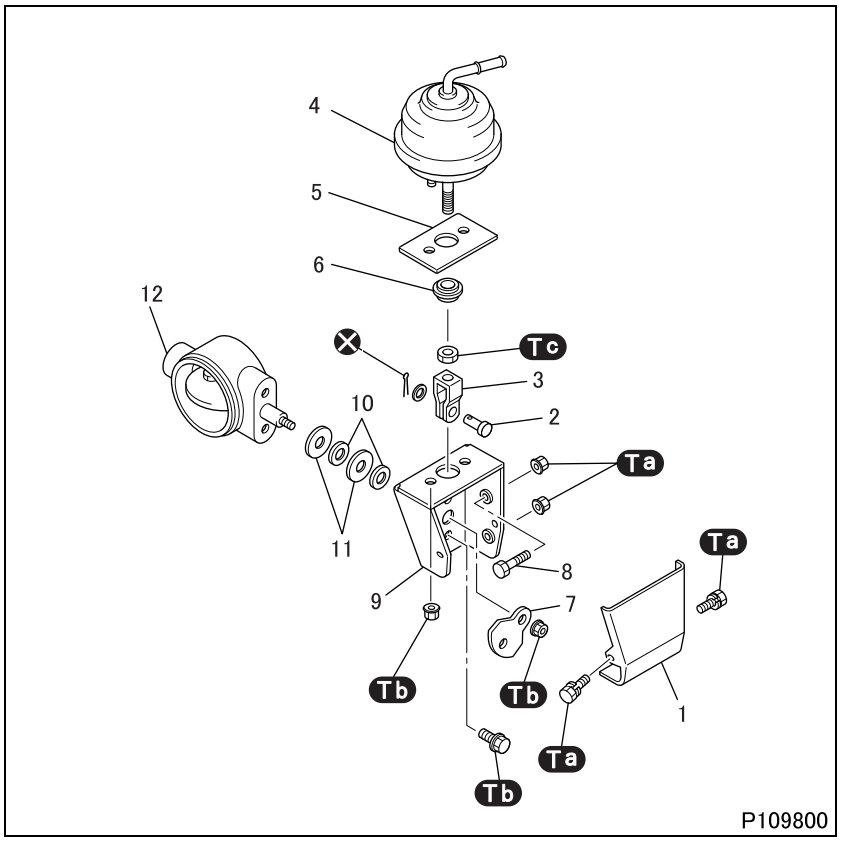

● Disassembly sequence

1 Cover
2 Clevis pin
3 Clevis
4 Power chamber
5 Gasket
6 Bearing
7 Lever
8 Adjust bolt
9 Bracket
10 Seal ring A
11 Seal ring B
12 Valve

CAUTION ⚠

- **Do not attempt to disassemble the power chamber.**

● Assembly sequence

Follow the disassembly sequence in reverse.

Service standards (Unit: mm)

Location	Maintenance item	Standard value	Limit	Remedy
–	Average of top and bottom clearances between butterfly valve and body with valve fully closed (with power chamber vacuum of 87 to 93 kPa {650 to 700 mmHg} or above)	0.80 to 0.95	–	Adjust
4	Air-tightness of power chamber (at 15 sec. after vacuum of 67 kPa {500 mmHg} is achieved in chamber)	63 kPa {475 mmHg} or above	–	Replace

Tightening torque (Unit: N·m {kgf·m})

Mark	Parts to be tightened	Tightening torque	Remarks
Ta	Bolt (cover mounting)	4.9 to 6.9 {0.5 to 0.7}	–
	Lock nut (adjust bolt retention)		
Tb	Nut (power chamber mounting)	11 to 17 {1.10 to 1.70}	–
	Nut (lever mounting)		
	Bolt (bracket mounting)		
Tc	Lock nut (clevis retention)	9.8 to 16 {1.0 to 1.6}	–

◆Inspection procedure◆

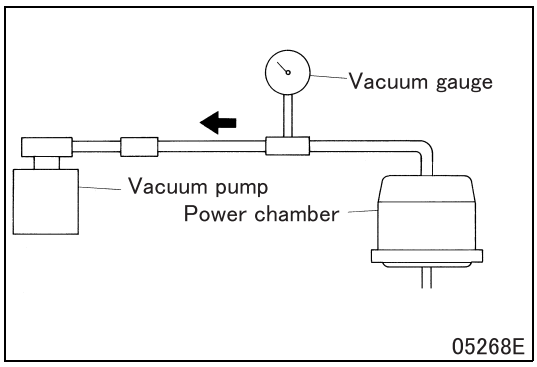

■Inspection: Air-tightness of power chamber

- Connect the components with piping as illustrated. Apply the specified inspection vacuum or higher to the power chamber and stop the vacuum pump.
- Fifteen seconds later, the reading on the vacuum gauge should conform to the standard value.
- If not, replace the power chamber.

◆Adjustment after installation◆

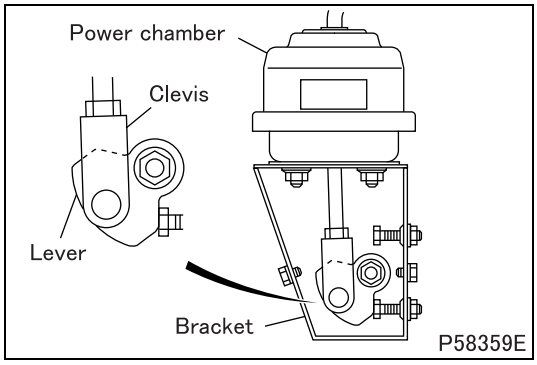

■Adjustment: Clevis

- Assemble the power chamber onto the bracket. Then, adjust the location of the clevis such that the hole in the clevis is aligned by half with the hole in the lever.

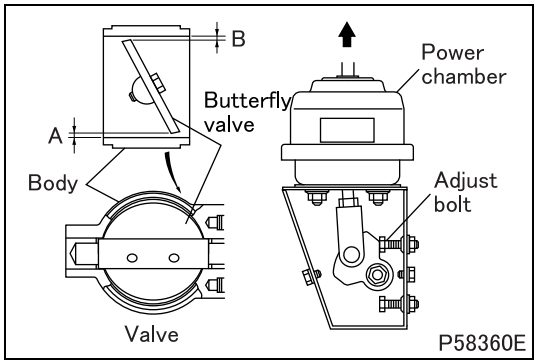

■Adjustment: Butterfly valve

(1) Average of top and bottom clearance between butterfly valve and body with valve fully closed.

- Apply a vacuum of 87 to 93 kPa {650 to 700 mmHg} to the power chamber to fully close the butterfly valve. With the valve fully closed, measure the top and bottom clearances B and A between the valve and the body, and obtain the average of the two. The average value should conform to the standard value. Adjust with the adjust bolt as required.

$$\text{Average clearance} = \frac{(A + B)}{2}$$

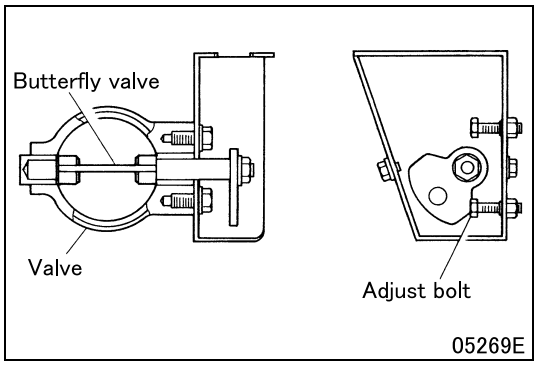

(2) Valve fully-open position

- Adjust the butterfly valve to the full open position using the adjust bolt.

https://truckmanualshub.com/

DIESEL PARTICULATE FILTER

<FE85DE, FE85DG>

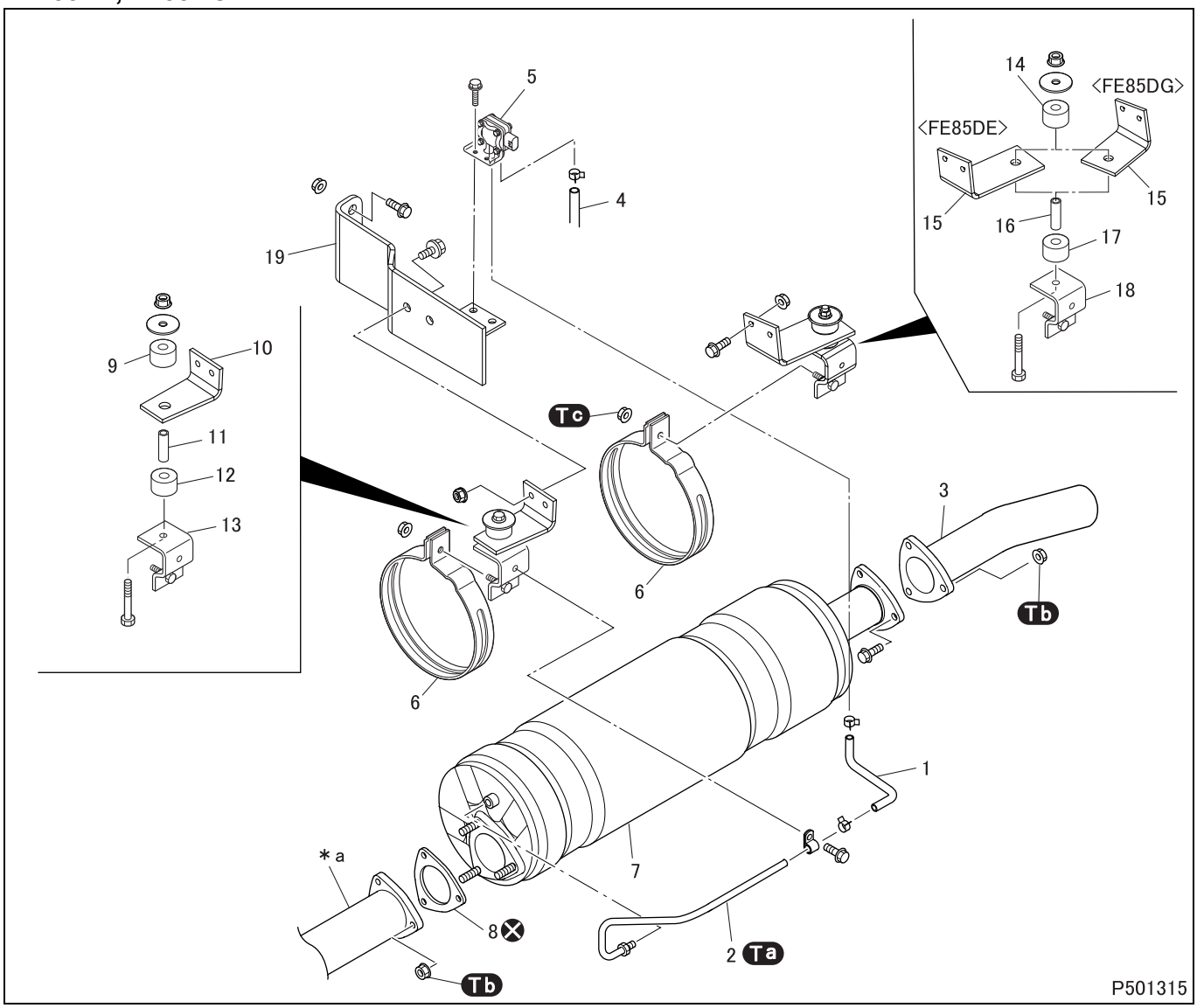

<Except FE85DE, FE85DG>

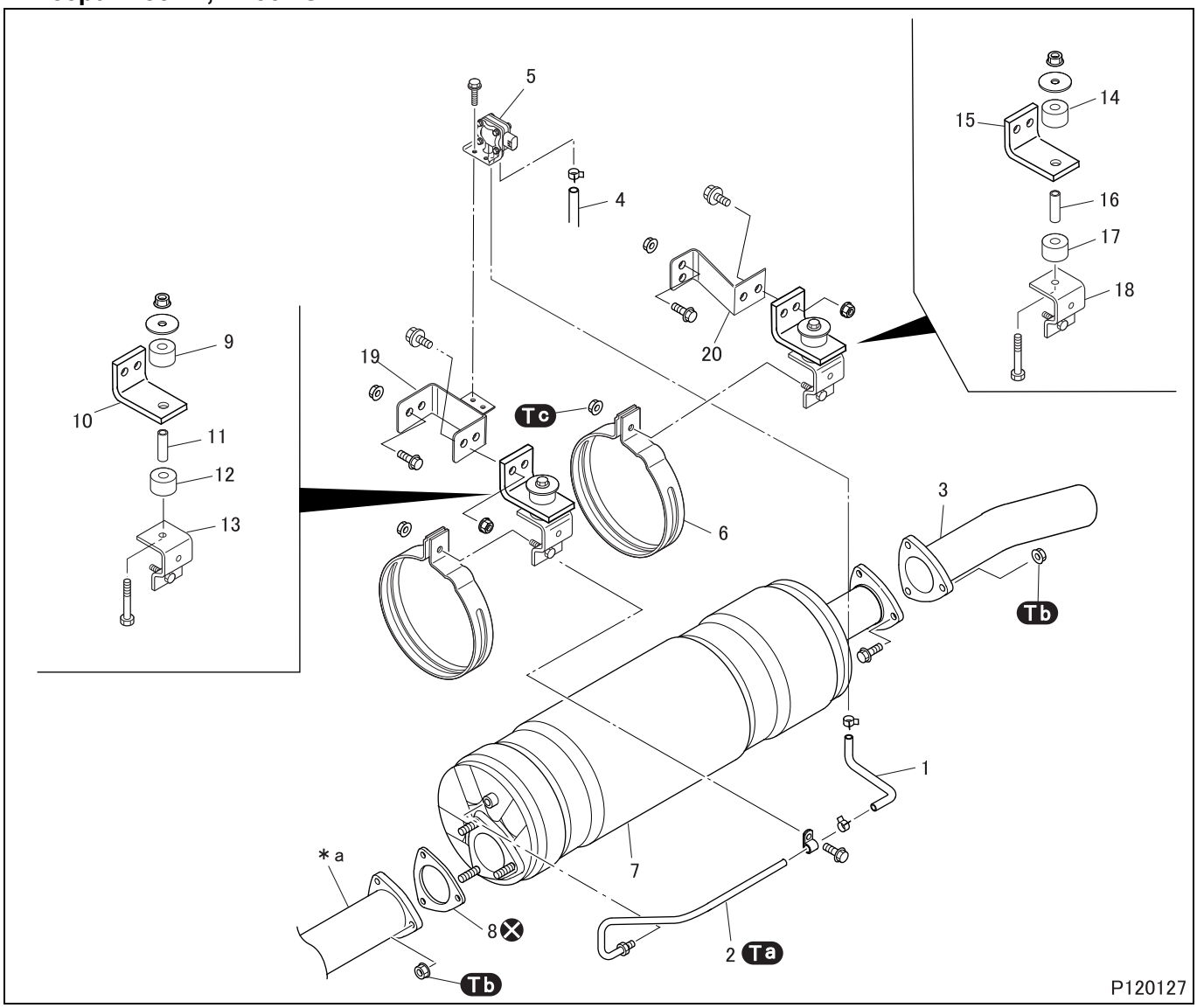

● Removal sequence

1	Pressure hose	**13**	Stay
2	Pressure pipe	**14**	Cushion rubber
3	Tail pipe	**15**	Bracket
4	Pressure hose	**16**	Collar
5	DPF differential pressure sensor	**17**	Cushion rubber
6	Diesel particulate filter band	**18**	Stay
7	Diesel particulate filter	**19**	Bracket
8	Gasket	**20**	Bracket
9	Cushion rubber		
10	Bracket	***a:**	Front pipe
11	Collar	⊗:	Non-reusable parts
12	Cushion rubber	DPF:	Diesel Particulate Filter

NOTE

- **The color of the diesel particulate filter surface may turn brown. This discoloration is due to the inherent characteristics of stainless steel and does not indicate rusting or any other abnormality.**

● Installation sequence

Follow the removal sequence in reverse.

https://truckmanualshub.com/

Tightening torque (Unit: N·m {kgf·m})

Mark	Parts to be tightened	Tightening torque	Remarks
Ta	Pressure pipe	40 {4.0}	–
Tb	Nut (tail pipe mounting)	26 to 33 {2.7 to 3.2}	–
	Nut (diesel particulate filter mounting)		
Tc	Nut (diesel particulate filter band mounting)	20 {2.0}	–

◆Inspection procedure◆

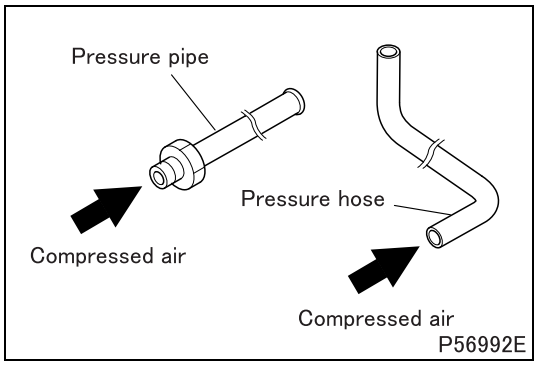

■Inspection: Pressure pipe and hose

- Check the pressure pipe and hose for clogging by blowing compressed air into the pipe and hose.

CAUTION ⚠

- **Inspection must be performed on an individual pressure pipe or hose.**
- **If compressed air is blown into the pressure pipe or hose with DPF differential pressure sensor still installed, the sensor may become damaged.**

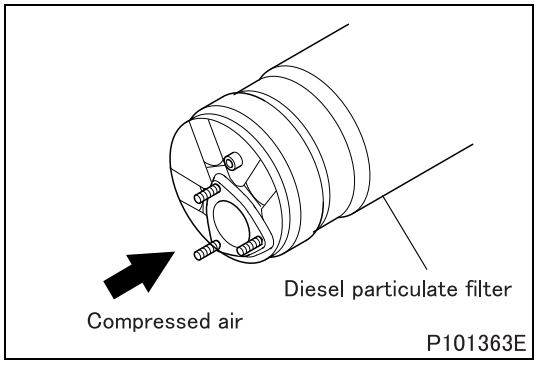

■Inspection: Diesel particulate filter

- Check the inner exhaust channel of diesel particulate filter for clogging with foreign material.
- If clogged, the inner exhaust channel must be cleaned with compressed air or diesel particulate filter must be replaced.
- If diesel particulate filter is clogged, this may be due to problems with the engine. Check the engine and adjust as required. Also check the engine oil and fuel.

https://truckmanualshub.com/

GROUP 15E TURBOCHARGER CONTROL SYSTEM

SPECIFICATIONS.....(See Gr15.)

STRUCTURE AND OPERATION
1. Overview 15E-2
2. Electronic Control System 15E-3
3. Electronic Control Unit Wiring Diagram 15E-5

TROUBLESHOOTING
1. Inspection Based on Diagnosis Codes ..... (See Gr13E.)
2. Multi-Use Tester Service Data ..... (See Gr13E.)
3. Actuator Test Using Multi-Use Tester..... (See Gr13E.)
4. Electronic Control Unit Input/Output Table ..... (See Gr13E.)

INSPECTION OF ELECTRICAL PARTS ..... (See Gr54.)

INSTALLED LOCATIONS OF PARTS ..... (See Gr54.)

ELECTRIC CIRCUIT DIAGRAM ..... (See Gr54.)

https://truckmanualshub.com/

1. Overview

- In the turbocharger control system, various engine-related information (engine speed, coolant temperature, accelerator position) and driving status are collected by the relevant sensors and are sent to the engine electronic control unit and turbocharger electronic drive unit which then control the engine based on the information received.
- The turbocharger actuator controls the opening of turbine vanes according to control signals to ensure low fuel consumption and high torque operation over the entire speed range.

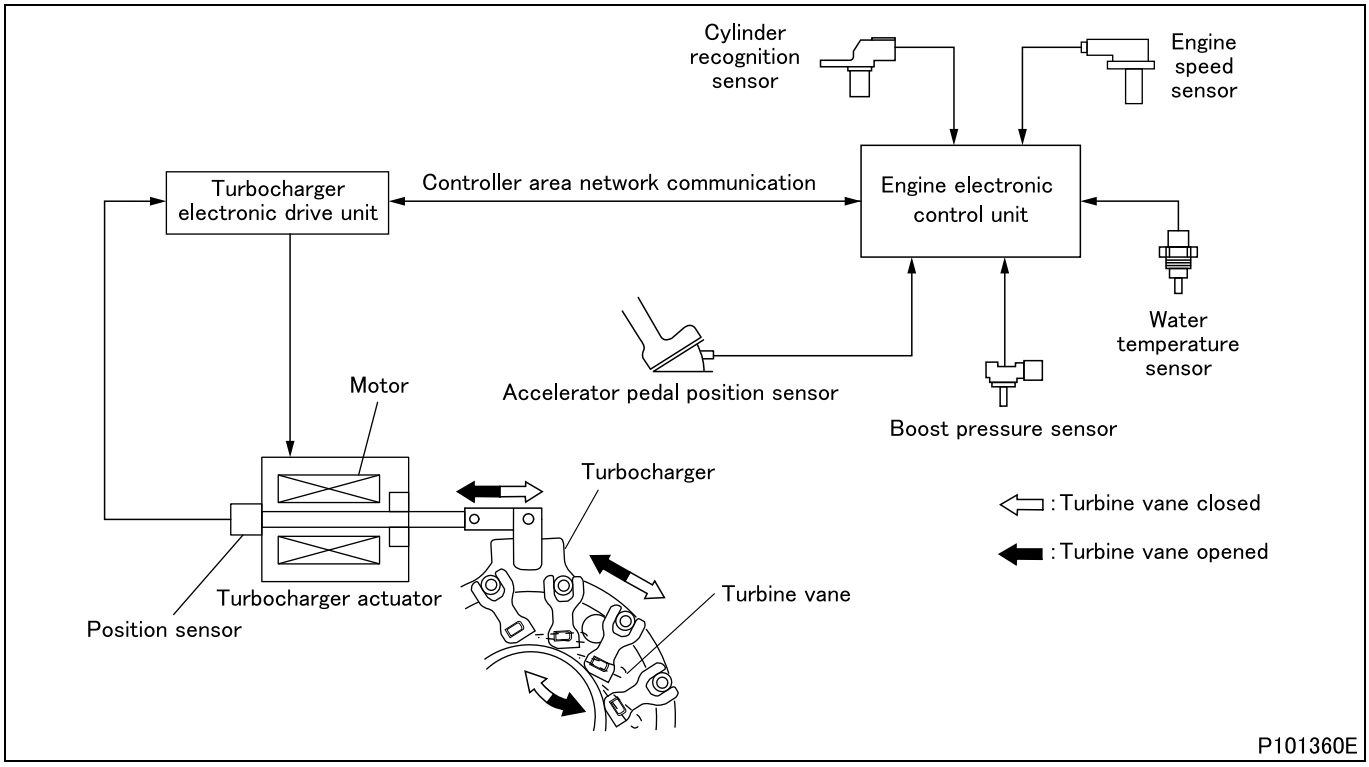

2. Electronic Control System

2.1 System block diagram

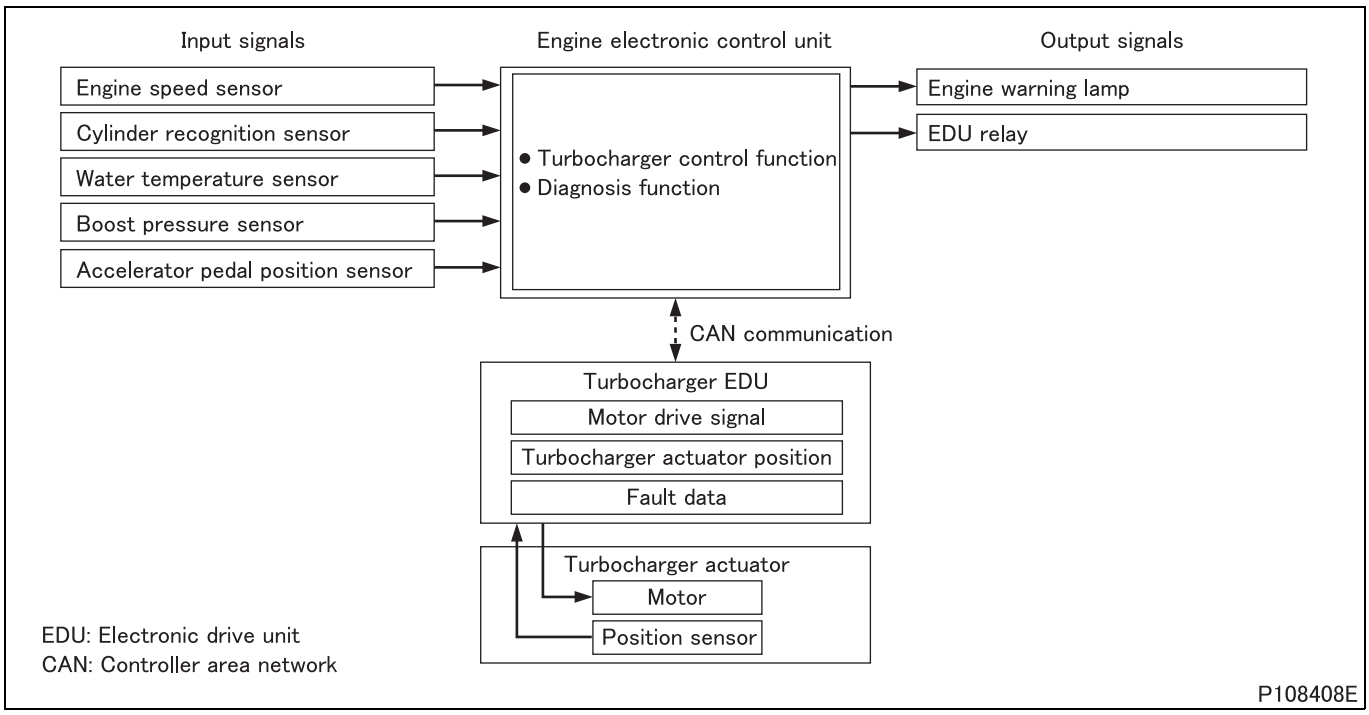

Part	Main function/operation
Engine speed sensor	Sensing of engine speed
Cylinder recognition sensor	Cylinder recognition
Water temperature sensor	Sensing of coolant temperature
Boost pressure sensor	Sensing of boost pressure
Accelerator pedal position sensor	Sensing of extent of accelerator pedal depression
Engine warning lamp	Indication of system abnormalities
EDU relay	Switching ON/OFF supply of power to exhaust gas recirculation electronic drive unit, throttle and turbocharger electronic drive unit
CAN communication (Turbocharger EDU)	Engine data recognized by the engine electronic control unit are outputted to the CAN bus to turbocharger systems to obtain data that they need for control. Turbocharger electronic drive unit issues signals to the engine electronic control unit via the CAN bus to enable it to effect engine control appropriate for each type of system control.

https://truckmanualshub.com/

2.2 Turbocharger control function

- In response to output data from various sensors, the engine electronic control unit determines the opening of turbine vanes as required by the engine operating status and sends necessary control signals to the turbocharger electronic drive unit. (target opening of turbine vanes)
- The turbocharger electronic drive unit activates the turbocharger actuator motor to detect the amount of resultant shaft position by means of the position sensor and sends it to the engine electronic control unit. (actual opening of turbine vanes)
  Thus, the target opening of turbine vanes can be accurately maintained as commanded by the engine electronic control unit.

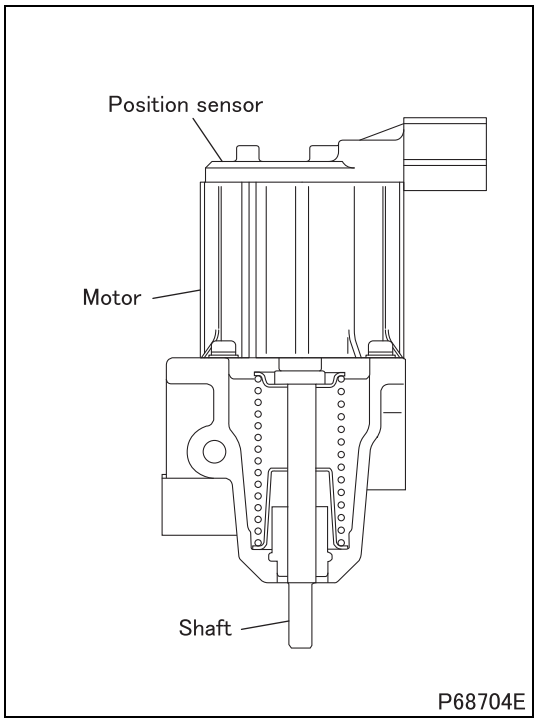

(1) Turbocharger actuator

- In response to command signals from the turbocharger electronic drive unit, the turbocharger actuator moves the shaft up and down by means of its DC motor to open and close the turbine vanes.

2.3 Fault diagnosis function

- The engine electronic control unit continuously monitors the electronic drive units and sensors for faults. In the event that the engine electronic control unit finds a component faulty, it causes an indication to be made in the meter cluster to alert the driver. At the same time, it memorizes the fault location in the form of a diagnosis code and starts a control during fault.
- While the engine is running, the turbocharger electronic drive unit continuously monitor communication with the position sensor and motor of the turbocharger actuator communication with the engine electronic control unit. In the event that they identify a fault, they send fault data to the engine electronic control unit.
- While control necessitated by a fault is taking place, the system's functionality is limited to ensure vehicle and driver safety. It is possible to read the memorized diagnosis code using a Multi-Use Tester or from flashing of the warning lamp.
- The control during fault recovers by servising the faults. However, for some diagnosis codes, the warning lamp stays illuminated until the normal signals are input for several times.
- Diagnosis codes shown by the Multi-Use Tester and those indicated by flashing of the warning lamp are different.
- The Multi-Use Tester is capable of showing more detailed diagnosis codes.

3. Electronic Control Unit Wiring Diagram

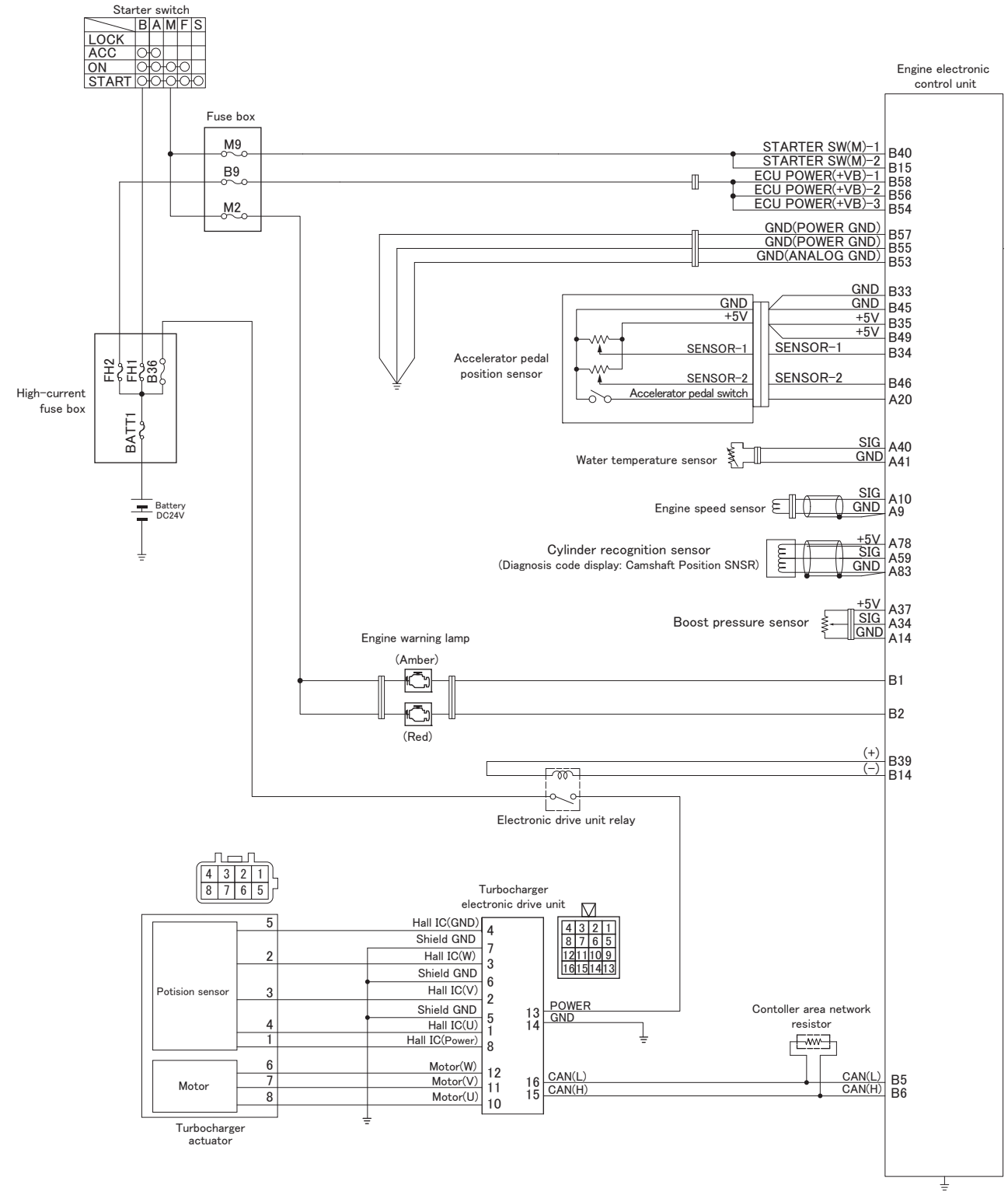

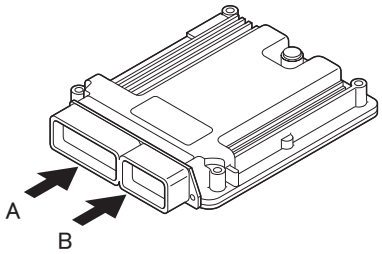

A : GE96A

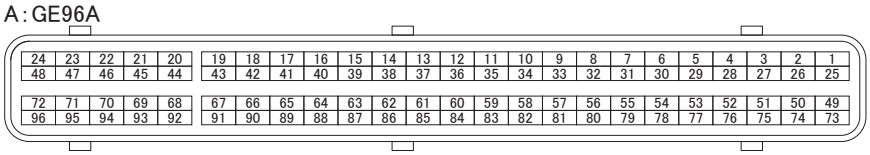

B : GE58A

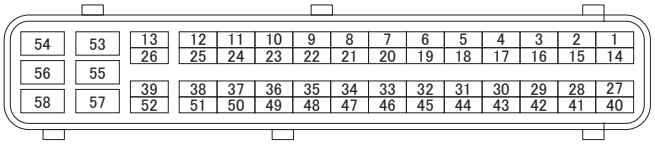

C10044-ECU-15E

https://truckmanualshub.com/

GROUP 17 EMISSION CONTROL

STRUCTURE AND OPERATION
1. Exhaust Gas Recirculation System 17-2
2. Crankcase Emission Control System 17-3

EXHAUST GAS RECIRCULATION VALVE, PIPE AND COOLER 17-4

CRANKCASE EMISSION CONTROL SYSTEM 17-6

https://truckmanualshub.com/

1. Exhaust Gas Recirculation System

- In the exhaust gas recirculation system, the engine electronic control unit and multiple electronic drive units control the exhaust gas recirculation valve and intake throttle in accordance with information from sensors on various aspects of the engine (engine speed, intake air quantity, coolant temperature, throttle opening, etc.).
- Exhaust gas recirculation involves the introduction of inert gases in the post-combustion exhaust emissions into the intake manifold. By reducing the combustion temperature, it reduces the amount of nitrogen oxides (NOx), which are harmful, in the exhaust emissions.
  Further, an exhaust gas recirculation cooler cools the recirculated exhaust emissions, thereby reducing the peak combustion temperature.
- The intake air quantity is adjusted by means of intake throttle control such that the effectiveness of exhaust gas recirculation is maximized.

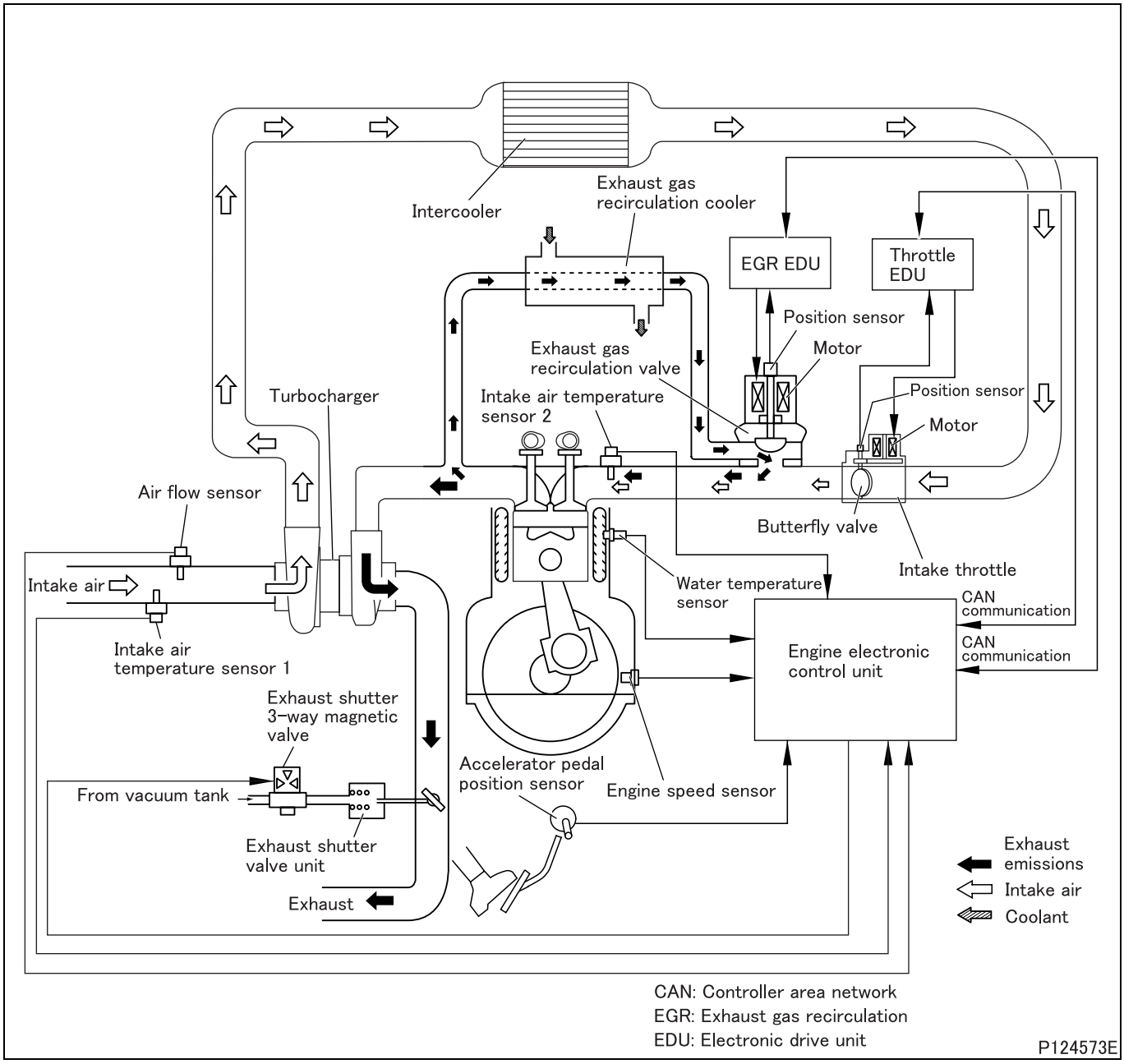

https://truckmanualshub.com/

2. Crankcase Emission Control System

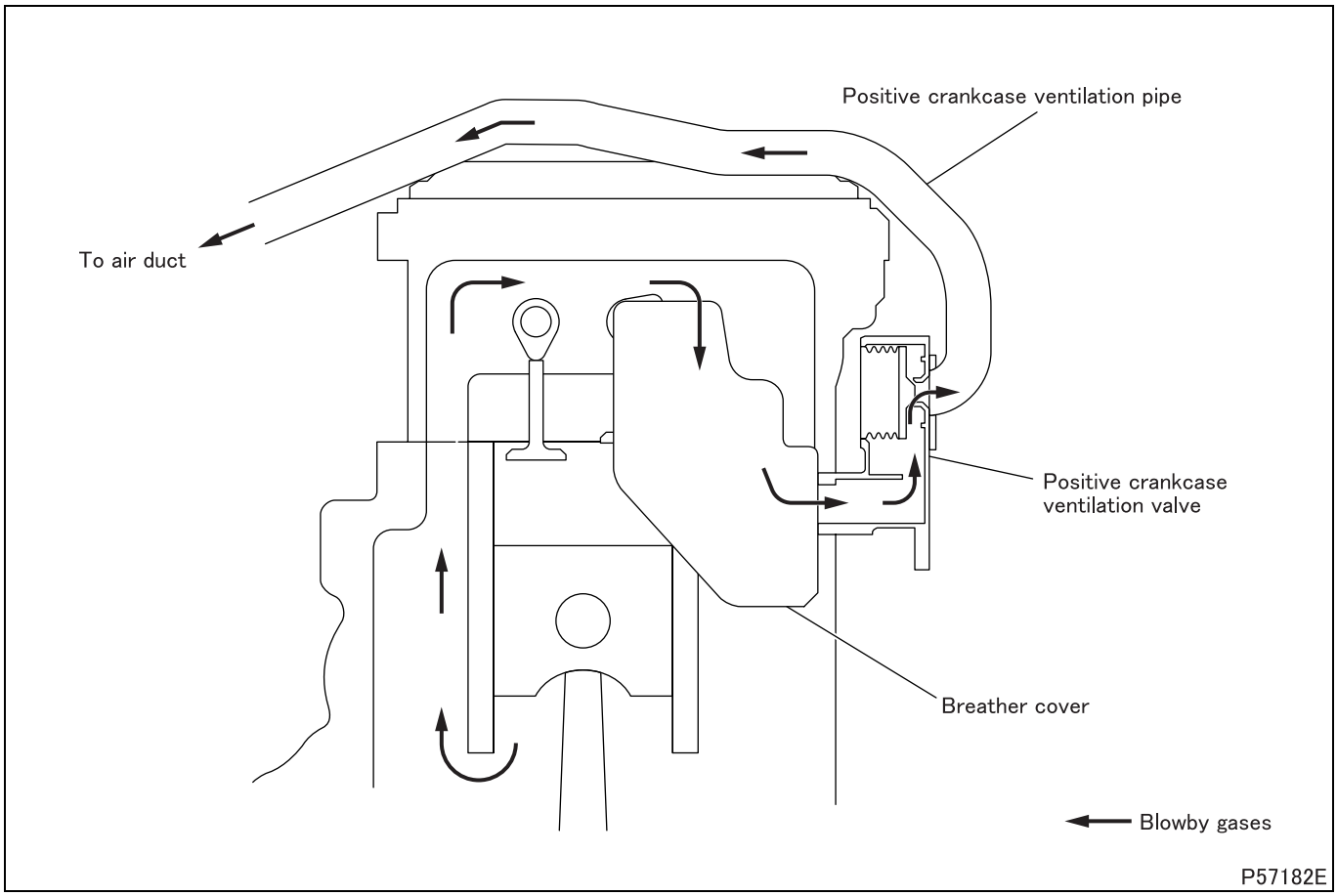

- The crankcase emission control system returns blowby gases to an air duct to prevent them from being released to the outside air.
- The positive crankcase ventilation valve keeps constant the pressure inside the crankcase.

https://truckmanualshub.com/

EXHAUST GAS RECIRCULATION VALVE, PIPE AND COOLER

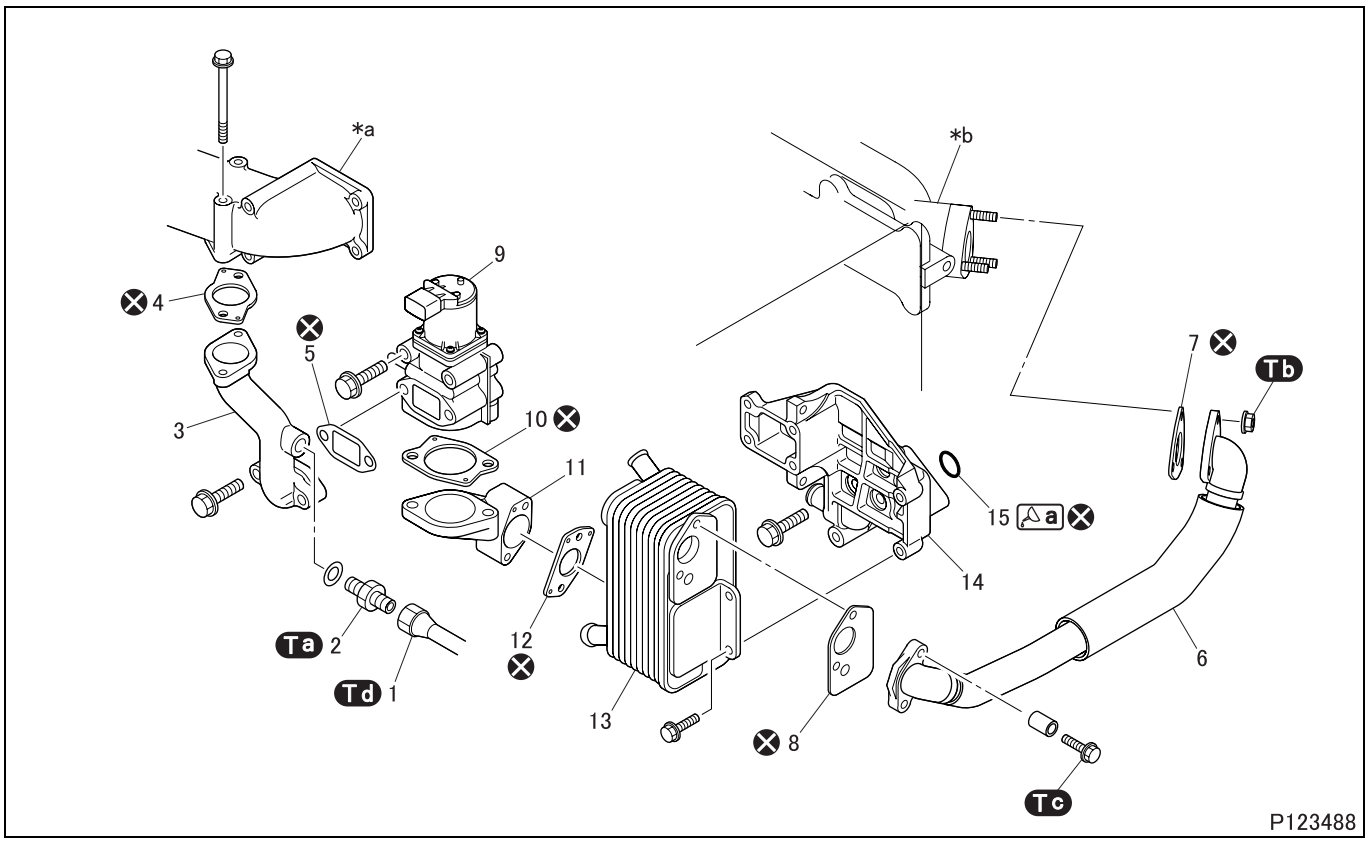

● **Removal sequence**

1 By-pass pipe
2 Connector
3 EGR pipe C
4 EGR gasket
5 EGR gasket A
6 EGR pipe A
7 EGR pipe gasket
8 EGR gasket
9 EGR valve
10 EGR gasket B
11 EGR pipe B
12 EGR gasket
13 EGR cooler
14 EGR cooler bracket
15 O-ring

***a**: Air inlet pipe
***b**: Exhaust manifold
⊗: Non-reusable parts
EGR: Exhaust gas recirculation

- Even when all coolant in the crankcase has been drained out, approximately 1 dm^3 {1 L} of coolant remains in the EGR cooler. Before removing the EGR cooler, make ready a container to catch the coolant.

● **Installation sequence**

Follow the removal sequence in reverse.

Service standards

Location	Maintenance item		Standard value	Limit	Remedy
13	Air leakage from EGR cooler	Leakage into coolant (air pressure: 196 kPa {2.0 kgf/cm^2})	0 cm^3 {0 mL}	–	Repair
		Leakage into exhaust gas (air pressure: 294 kPa {3.0 kgf/cm^2})	0 cm^3 {0 mL}		

Tightening torque (Unit: N·m {kgf·m})

Mark	Parts to be tightened	Tightening torque	Remarks
Ta	Connector	59 {6.0}	–
Tb	Nut (mounting of EGR pipe A)	20.6 {2.1}	–
Tc	Bolt (mounting of EGR pipe A)	23.8 {2.4}	–
Td	By-pass pipe	60 {6.1}	–

◆Inspection procedures◆

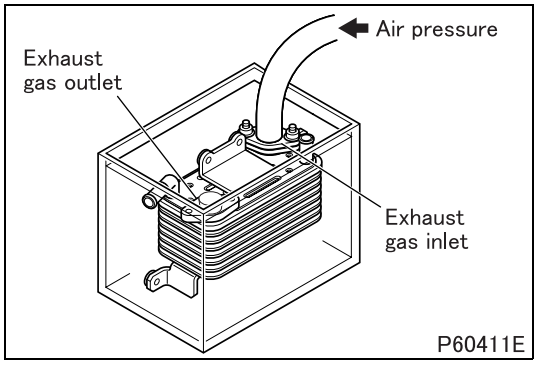

■ Inspection: Air leakage from EGR cooler

- Perform the following inspection. If any abnormality is found, replace the exhaust gas recirculation cooler.

(1) Exhaust gas passage side

- Fit a cover over the exhaust gas outlet of the exhaust gas recirculation cooler, and connect a hose to the exhaust gas inlet. Then, submerge the exhaust gas recirculation cooler in a container of water. Make sure the coolant passage is full of water.
- Apply air pressure of 294 kPa {3 kgf/cm^2} through the hose. Check that air does not leak from any part of the exhaust gas recirculation cooler.

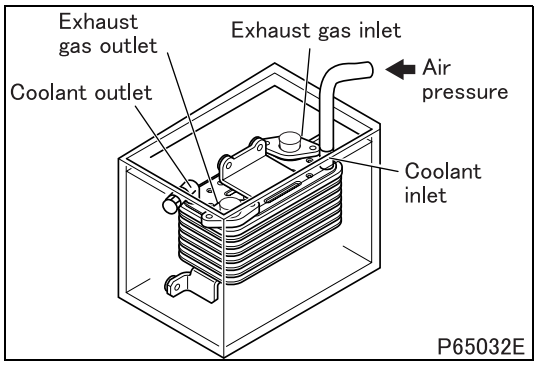

(2) Coolant passage side

- Fit covers over the exhaust gas recirculation cooler's exhaust gas inlet, exhaust gas outlet, and coolant outlet, and connect a hose to the coolant inlet. Then, submerge the exhaust gas recirculation cooler in a container of water.
- Apply air pressure of 196 kPa {2 kgf/cm^2} through the hose. Check that air does not leak from any part of the exhaust gas recirculation cooler.

https://truckmanualshub.com/

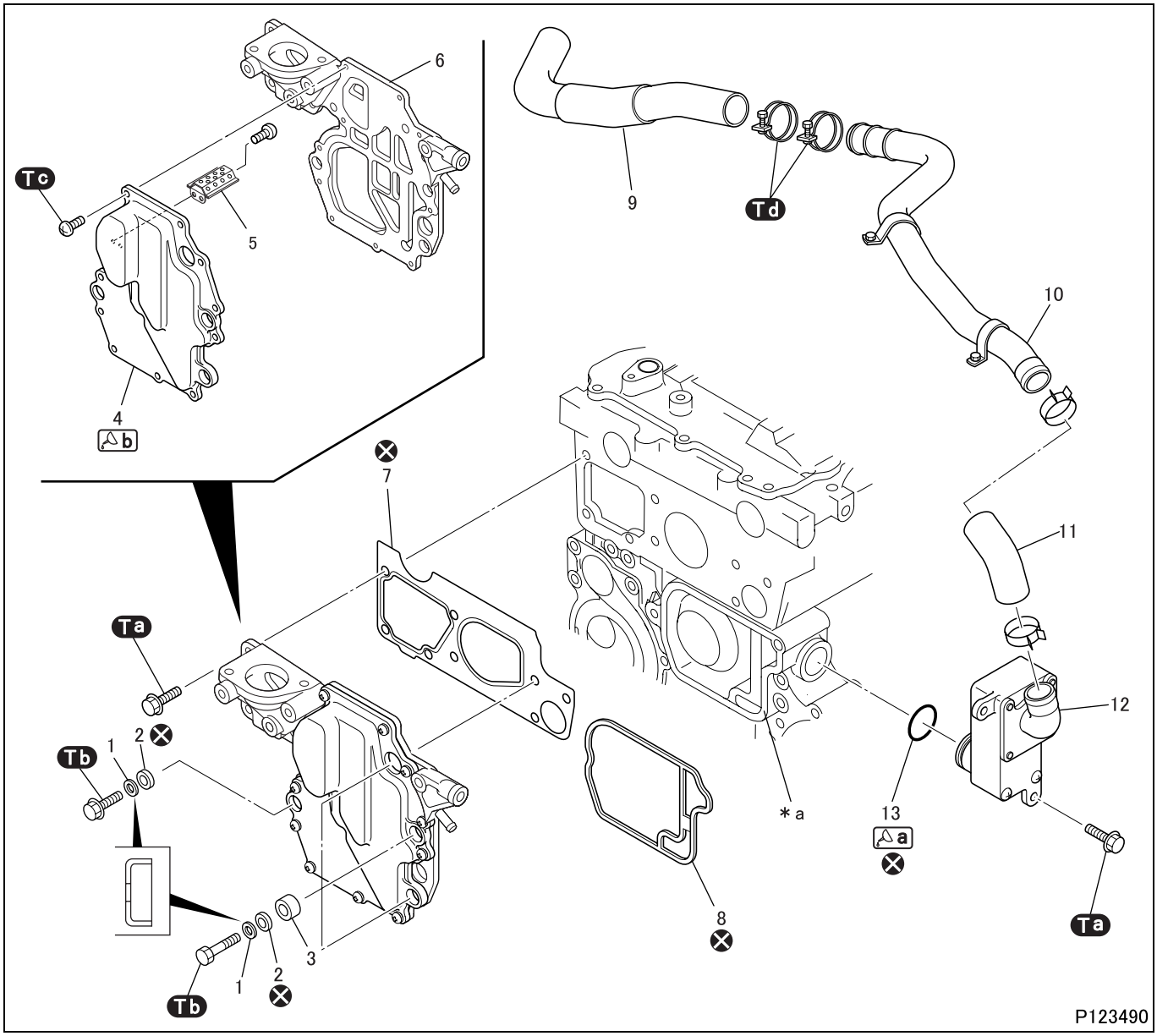

● **Removal sequence**

1 Washer
2 Rubber bushing
3 Spacer
4 Breather cover A
5 Separator plate
6 Breather cover B
7 Gasket
8 Breather gasket
9 PCV hose B
10 PCV pipe
11 PCV hose
12 PCV valve
13 O-ring

***a**: Front case
⊗: Non-reusable parts
PCV: Positive crankcase ventilation

● **Installation sequence**

Perform installation by following the removal sequence in reverse.

Tightening torque (Unit: N·m {kgf·m})

Mark	Parts to be tightened	Tightening torque	Remarks
Ta	Bolt (mounting of breather cover)	23.2 {2.4}	–
	Bolt (mounting of PCV valve)		
Tb	Bolt (mounting of breather cover)	9.8 {1.0}	–
Tc	Screw (mounting of breather cover A)	2 to 3 {0.2 to 0.3}	–
Td	Clamp	4 {0.4}	–

Lubricant and/or sealant

Mark	Points of application	Specified lubricant and/or sealant	Quantity
a	O-ring	Engine oil	As required
b	Mating surface of breather cover A or B	ThreeBond 1216	As required

◆Installation procedures◆

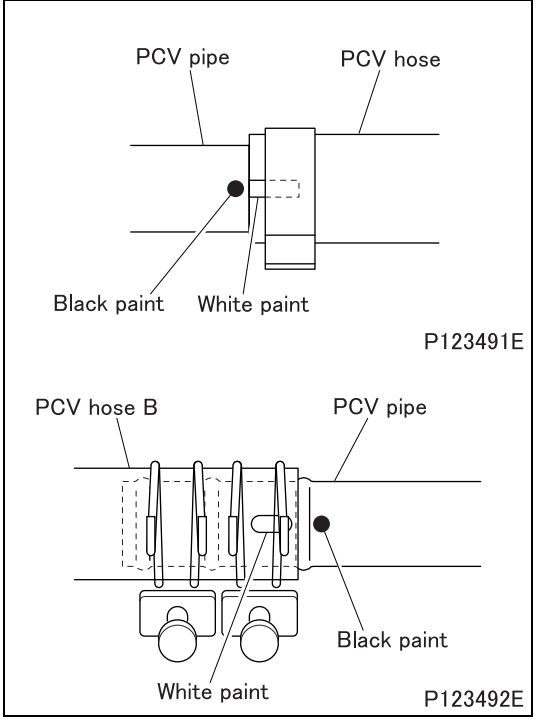

■ Installation: PCV hose

- Install the PCV hose to the PCV pipe with the white paint on the hose and the black paint on the pipe aligned as shown in the illustration.

■ Installation: PCV hose B

- Install the PCV hose B to the PCV pipe with the white paint on the hose and the black paint on the pipe aligned as shown in the illustration.

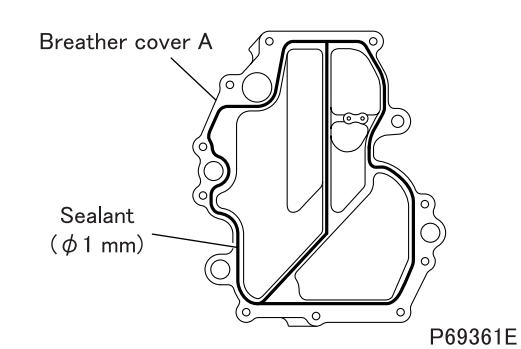

■ Installation: Breather cover A

- Clean the sealant application surfaces of each part.
- Apply a bead of sealant to the breather cover A evenly and without any breaks as shown in the illustration.
- Install the lower crankcase within three minutes of applying the sealant to the upper crankcase, being careful not to dislodge the sealant.

https://truckmanualshub.com/

GROUP 17E EXHAUST GAS RECIRCULATION SYSTEM AND DIESEL PARTICULATE FILTER

SPECIFICATIONS ..... (See Gr17.)

STRUCTURE AND OPERATION
1. Overview 17E-2
2. Electronic Control System 17E-4
3. Electronic Control Unit Connection Diagram 17E-7

TROUBLESHOOTING
1. Inspection Based on Diagnosis Codes ..... (See Gr13E.)
2. Multi-Use Tester Service Data ..... (See Gr13E.)
3. Actuator Test Using Multi-Use Tester ..... (See Gr13E.)
4. Electronic Control Unit Input/Output Table ..... (See Gr13E.)

INSPECTION OF ELECTRICAL PARTS ..... (See Gr54.)

INSTALLED LOCATIONS OF PARTS ..... (See Gr54.)

ELECTRIC CIRCUIT DIAGRAM ..... (See Gr54.)

https://truckmanualshub.com/

1. Overview

1.1 Exhaust gas recirculation system

- In the exhaust gas recirculation system, the engine electronic control unit and multiple electronic drive units control the exhaust gas recirculation valve and intake throttle in accordance with information from sensors on various aspects of the engine (engine speed, intake air quantity, coolant temperature, throttle opening, etc.).
- Exhaust gas recirculation involves the introduction of inert gases in the post-combustion exhaust emissions into the intake manifold. By reducing the combustion temperature, it reduces the amount of nitrogen oxides (NOx), which are harmful, in the exhaust emissions.
  Further, an exhaust gas recirculation cooler cools the recirculated exhaust emissions, thereby reducing the peak combustion temperature.
- The intake air quantity is adjusted by means of intake throttle control such that the effectiveness of exhaust gas recirculation is maximized.

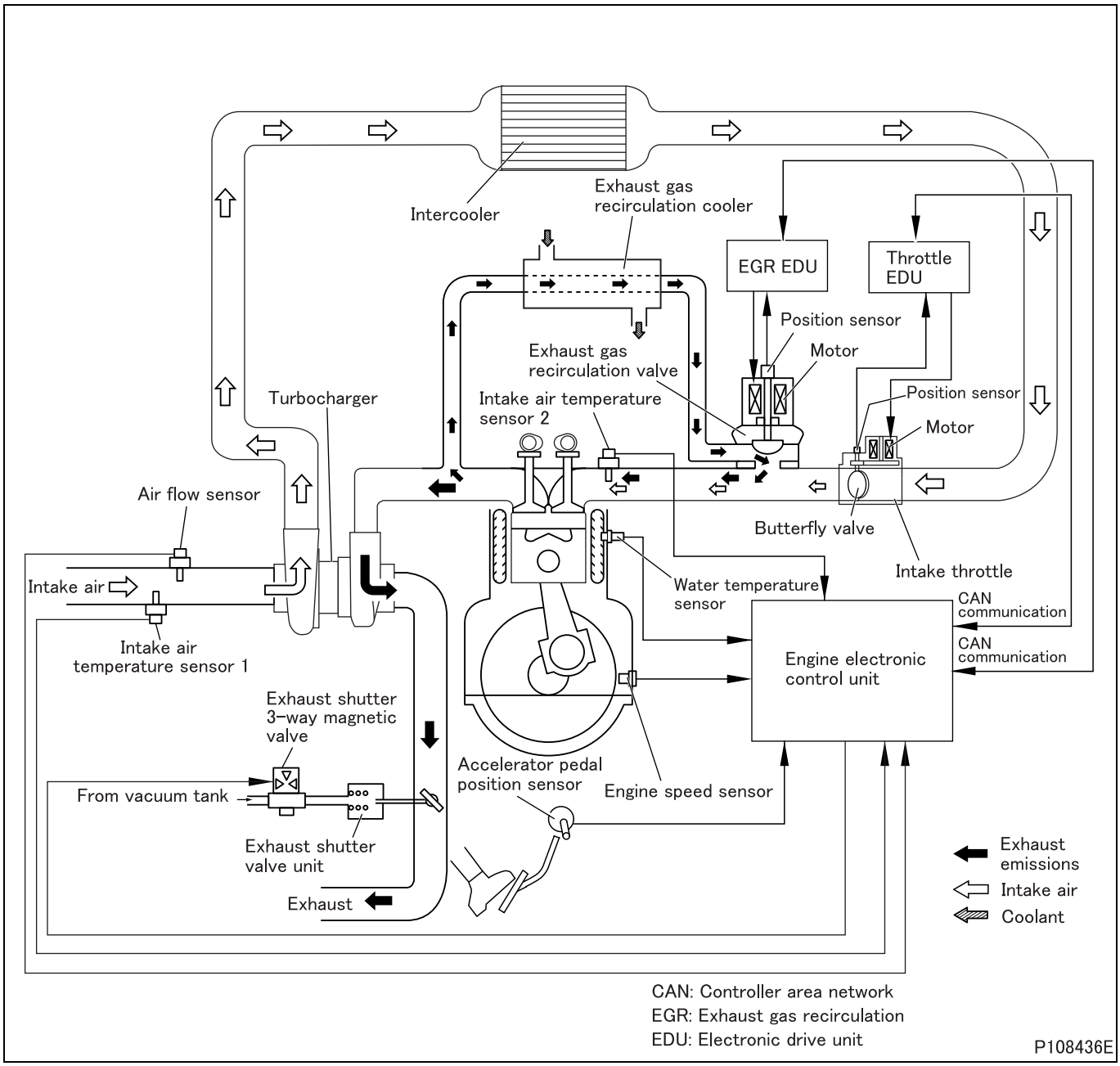

https://truckmanualshub.com/

1.2 Diesel particulate filter

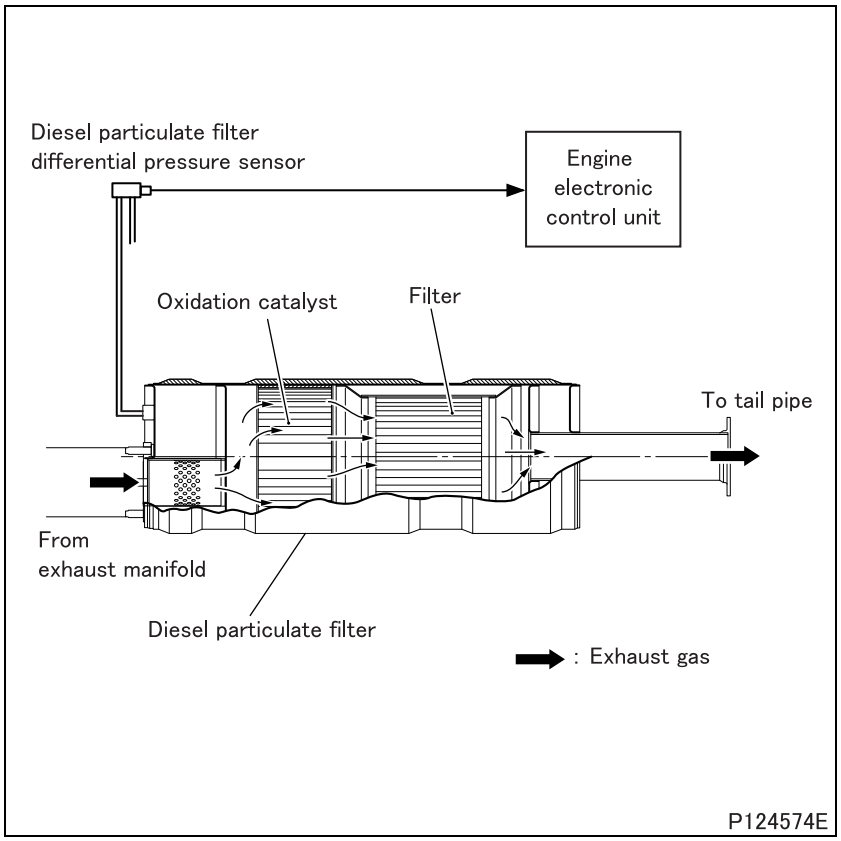

- Diesel particulate filter is a large-capacity system consisting of an ultra-efficient oxidation catalyst and a filter. Diesel particulate filter is designed to efficiently break and capture PM emitted by engines running on low-sulfur fuel, and the filter is continuously regenerated.
- The new environmentally-friendly engine has drastically-reduced PM emission levels. In addition, the ultra-efficient oxidation catalyst breaks and treats most of PM emitted from the engine, minimizing PM loading/deposit onto the subsequent filter. As a result, the filter is unlikely to clog up even under the driving conditions that require long hours of drive with relatively low exhaust gas temperature. Also, active regeneration, which increases fuel consumption, is not required.
- The size of the filtration openings has been optimized to eliminate the deposit of ash (product of combustion) generated in the engine. The filter requires no maintenance, including periodical cleaning.
- The diesel particulate filter differential pressure sensor compares diesel particulate filter pressure with atmospheric pressure and outputs difference data to the engine electronic control unit.

https://truckmanualshub.com/

2. Electronic Control System

2.1 System block diagram

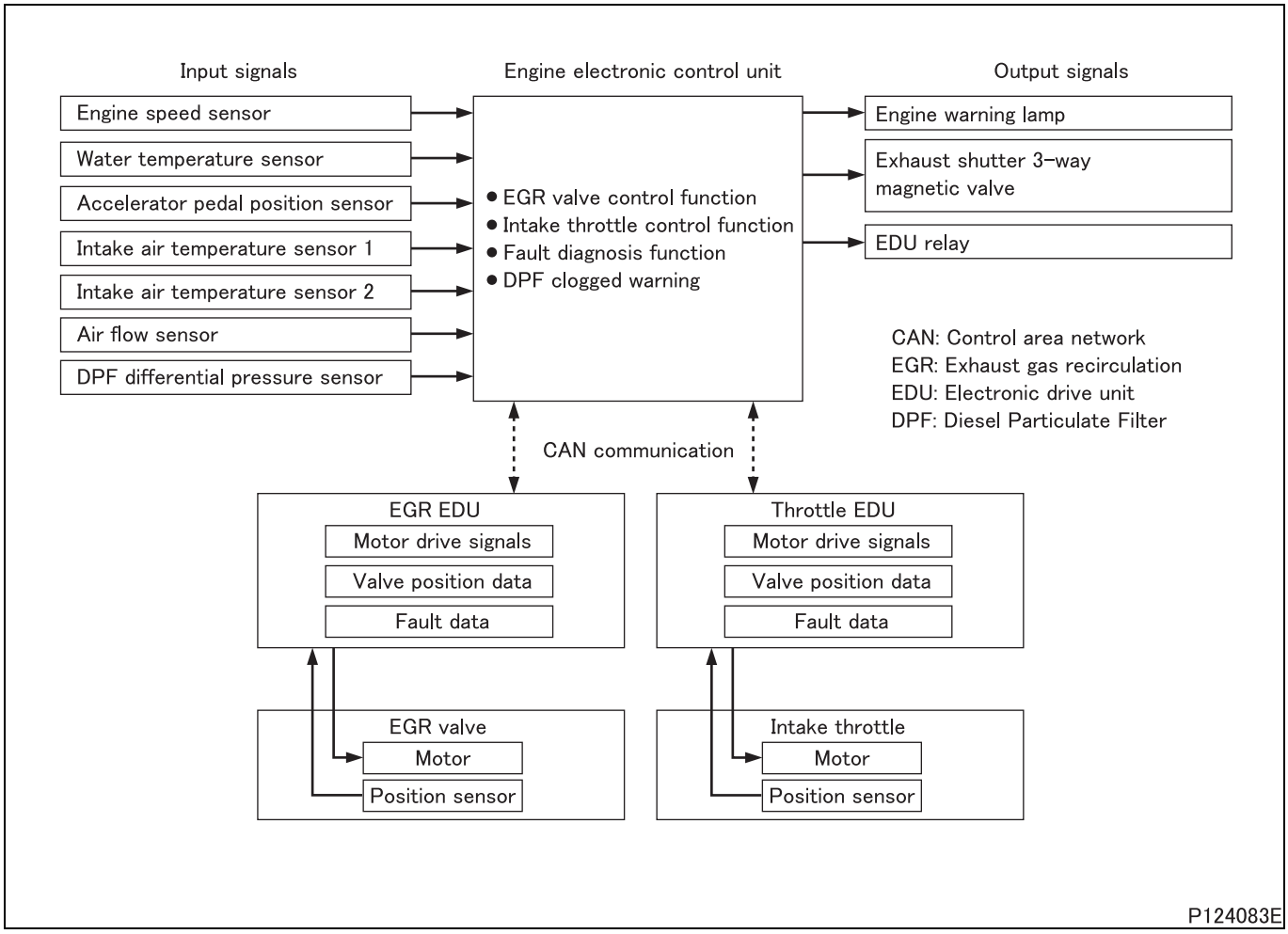

Part	Main function/operation
Engine speed sensor	Sensing of engine speed
Water temperature sensor	Sensing of coolant temperature
Accelerator pedal position sensor	Sensing of extent of accelerator pedal depression
Intake air temperature sensor 1	Sensing of intake air temperature
Intake air temperature sensor 2	Sensing of boost air temperature
Air flow sensor	Sensing of intake air flow rate
DPF differential pressure sensor	Detection of pressure differential between DPF inlet pressure and atmospheric pressure
Engine warning lamp	Indication of system abnormalities
Exhaust shutter 3-way magnetic valve	ON/OFF control of exhaust shutter valve
EDU relay	Switching ON/OFF supply of power to exhaust gas recirculation electronic drive unit, throttle and turbocharger electronic drive unit
CAN communication (EGR EDU, Throttle EDU)	Engine data recognized by the engine electronic control unit are outputted to the CAN bus to enable systems to obtain data that they need for control. Each electronic drive unit issues signals to the engine electronic control unit via the CAN bus to enable it to effect engine control appropriate for each type of system control.

2.2 Exhaust gas recirculation

(1) Exhaust gas recirculation valve control function

- In accordance with data from sensors, the engine electronic control unit determines the exhaust gas recirculation valve opening that suits the operating condition and sends a control signal (this indicates the target exhaust gas recirculation valve opening) to the exhaust gas recirculation electronic drive unit.
  When necessary to prevent black smoke emissions and engine speed instability (for example, when the engine is heavily loaded, when the engine is lightly loaded, and when the exhaust brake is operating), the engine electronic control unit stops exhaust gas recirculation valve control.
- The exhaust gas recirculation electronic drive unit activates the exhaust gas recirculation valve motor. At the same time, it monitors the extent of valve lift using a position sensor and sends this information (this indicates the actual exhaust gas recirculation valve opening) to the engine electronic control unit.
  This operation makes it possible for the target exhaust gas recirculation valve opening indicated by the engine electronic control unit to be precisely maintained.

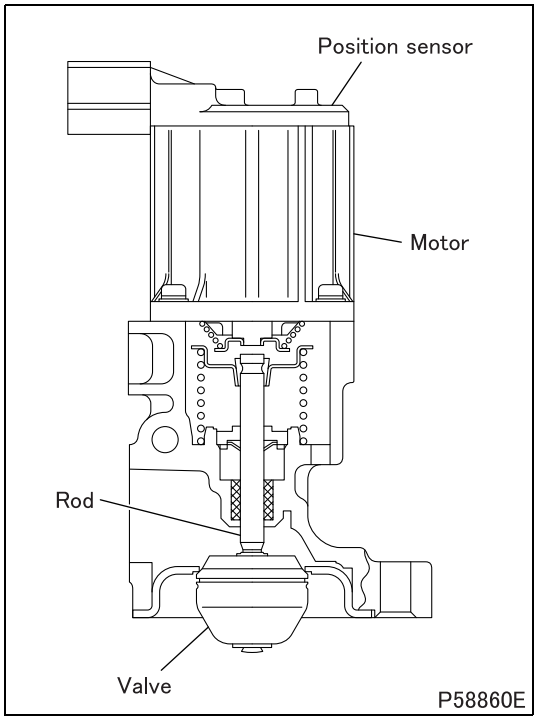

(1.1) Exhaust gas recirculation valve

- DC motor in the exhaust gas recirculation valve is driven by control signals from the exhaust gas recirculation electronic drive unit. Via a rod, the motor's operation opens and closes the valve.

(2) Intake throttle control function

- When the engine electronic control unit determines from sensor data on the engine speed and engine loading that the vacuum pressure in the intake manifold is low, it increases the amount of exhaust emissions introduced into the intake manifold by determining an appropriate butterfly valve opening and by sending corresponding control signals (these indicate the target throttle opening) to the throttle electronic drive unit.
- The throttle electronic drive unit activates the valve motor. At the same time, it monitors the valve opening using a position sensor and sends this information (this indicates the actual throttle opening) to the engine electronic control unit.
  This operation makes it possible for the target throttle opening indicated by the engine electronic control unit to be precisely maintained.

https://truckmanualshub.com/

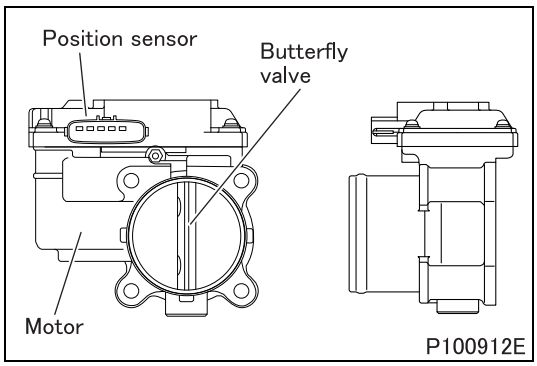

(2.1) Intake throttle

- In accordance with signals from the throttle electronic drive unit, the motor opens and closes the butterfly valve, thereby adjusting the intake air amount such that the effectiveness of exhaust gas recirculation is maximized.

(3) Fault diagnosis function

- The engine electronic control unit continuously monitors the electronic drive units and sensors for faults. In the event that the engine electronic control unit finds a component faulty, it causes an indication to be made in the meter cluster to alert the driver. At the same time, it memorizes the fault location in the form of a diagnosis code and starts a control during fault.
- While the engine is running, the exhaust gas recirculation electronic drive unit and throttle electronic drive unit continuously monitor communication with the position sensor and motor of the exhaust gas recirculation valve, communication with the position sensor and motor of the throttle actuator, and communication with the engine electronic control unit. In the event that they identify a fault, they send fault data to the engine electronic control unit.
- While control necessitated by a fault is taking place, the system's functionality is limited to ensure vehicle and driver safety. It is possible to read the memorized diagnosis code using a Multi-Use Tester or from flashing of the warning lamp.
- The control during fault recovers by servising the faults. However, for some diagnosis codes, the warning lamp stays illuminated until the normal signals are input for several times.
- Diagnosis codes shown by the Multi-Use Tester and those indicated by flashing of the warning lamp are different.
- The Multi-Use Tester is capable of showing more detailed diagnosis codes.

2.3 Diesel particulate filter

(1) Diesel particulate filter clogged warning function

- The function works to alert the driver that the filter is clogged with accumulated particulate matter when the engine electronic control unit so determines.
- The engine electronic control unit determines whether or not the diesel particulate filter is clogged according to the difference between diesel particulate filter pressure and atmospheric pressure received from the diesel particulate filter differential pressure sensor.

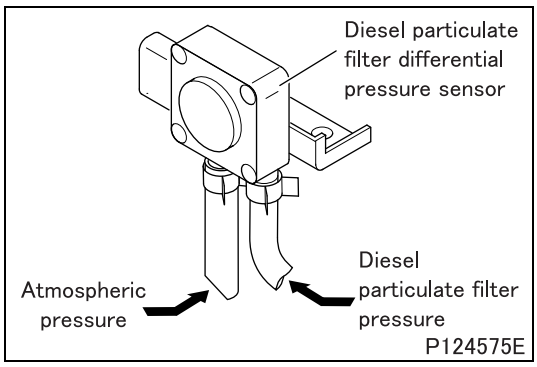

(1.1) Diesel particulate filter differential pressure sensor

- The sensor compares diesel particulate filter pressure with atmospheric pressure and outputs difference data to the engine electronic control unit.
- When the pressure difference exceeds the specified limit, the engine electronic control unit turns on the warning lamp in the meter cluster and the buzzer, thereby warning the driver of the existing condition.

(2) Diagnostic function

- The engine electronic control unit monitors the condition of the sensors for failure. In the event that the engine electronic control unit finds a component faulty, it causes an indication to be made in the meter cluster to alert the driver. At the same time, it memorizes the fault location in the form of a diagnosis code. Then, a control during fault is started.
- When control-during-fault is started, system function is restricted to ensure safety of the vehicle and driver. Stored diagnosis codes can be retrieved on the Multi-Use Tester or the meter cluster.

3. Electronic Control Unit Connection Diagram

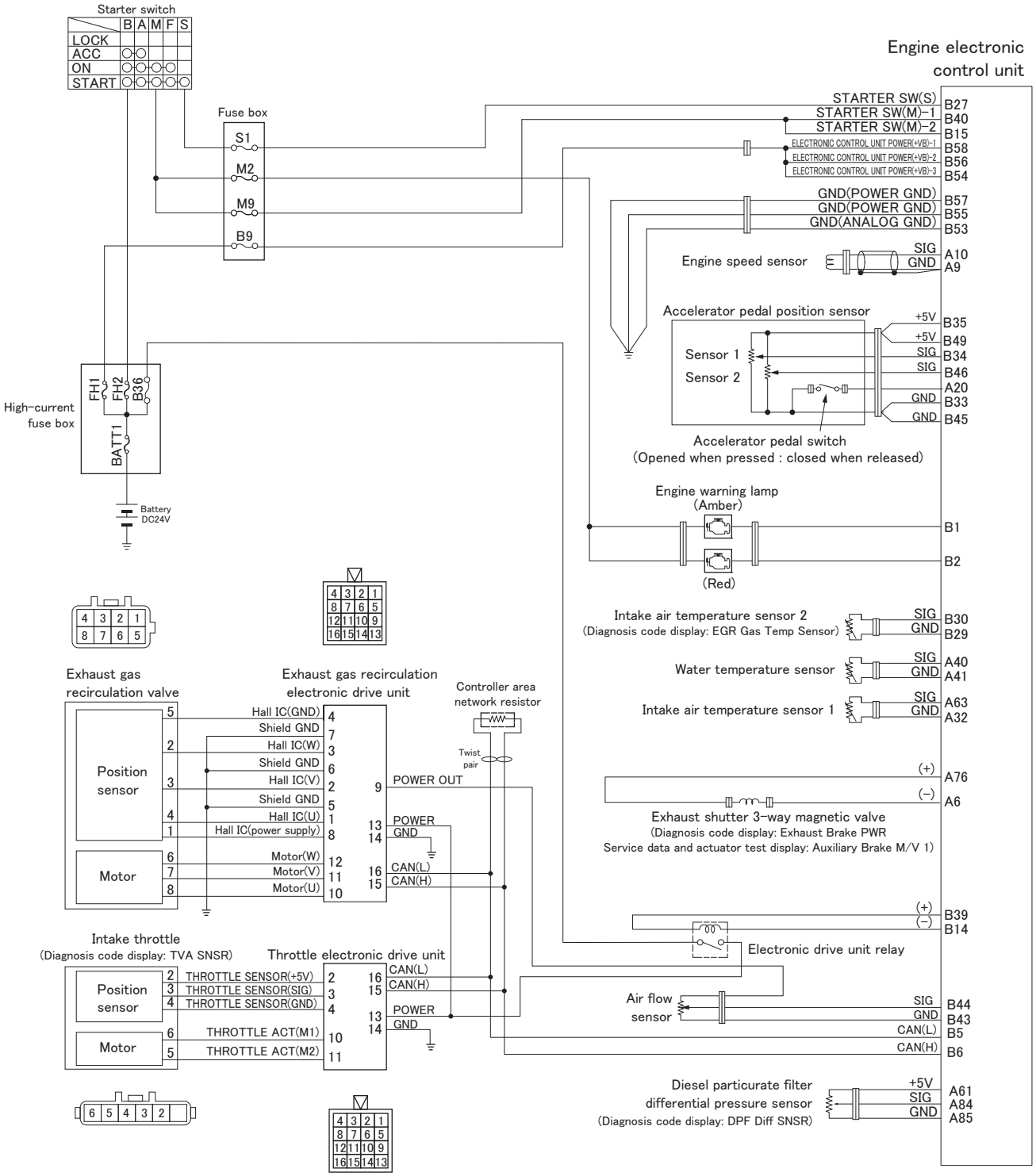

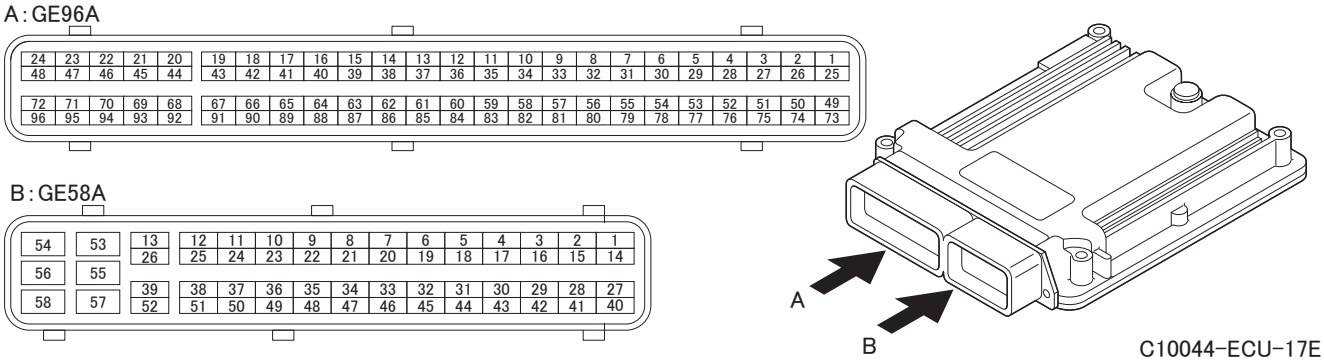

C10044-ECU-17E

https://truckmanualshub.com/

CANTER

(EURO 4)

For Colombia

Shop Manual

4M5 diesel engine

MITSUBISHI FUSO TRUCK & BUS CORP.

MARCH 2015

https://truckmanualshub.com/

Pub.No.00ELT0085, MARCH 2015

MITSUBISHI FUSO TRUCK & BUS CORPORATION
www.mitsubishi-fuso.com