https://truckmanualshub.com/

PACCAR

SERVICE MANUAL

Section	Multiplexed Electrical System Service Manual
Number	PM819023/KM815057
Date	08/14/2012

2012 Multiplexed Electrical System Service Manual — (P30-1011)

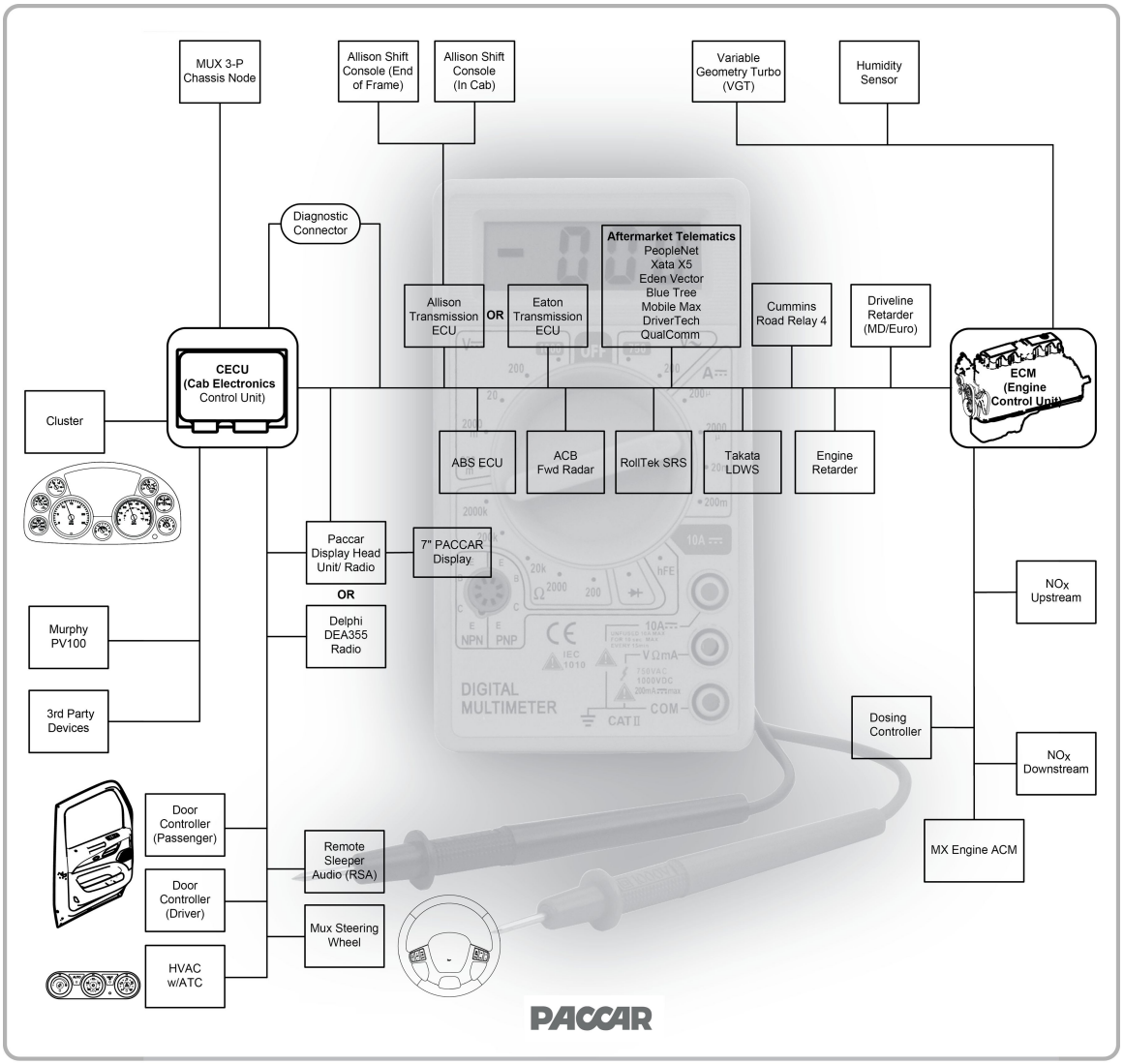

https://truckmanualshub.com/

©2012 PACCAR Corporation

Confidentiality Notice: This document and the information contained herein is proprietary. It shall not be reproduced, copied or disclosed, in whole or in part, or used for manufacture without the written permission of PACCAR. You are hereby notified that any dissemination of this information is strictly prohibited.

https://truckmanualshub.com/

Table of Contents

Safety 1
Applies To 2
Exploded View 3
What's New 4
General Information 5
Special Tools 6
Specifications 7
How It Works 8
Maintenance 9
Disassembly / Assembly 10
Inspection 11
Troubleshooting 12
Glossary 13
Index 14

https://truckmanualshub.com/

https://truckmanualshub.com/

1 Safety

Important Notes . . . . . 1 - 2

Important Notes

The simulate function within ESA can provide a valuable diagnosis tool. To ensure safe operation, certain CECU outputs are not accessible for simulation such as: cruise control, engine oil pressure and the park brake switch.

Simulation of gauges is also not permitted if the engine is running.

Replacing the CECU results in the odometer being reset. Take appropriate action to record the vehicle miles prior to removing the CECU.

⚠ CAUTION
Interrupting the communication or power supply during a control unit reflash could result in hardware damage.

ESA recognizes when a software update is required on a connected vehicle. If for some reason the user chooses not to reflash the control unit, ESA triggers a warning display. The LCD backlighting of the speedometer and outside air temperature blink for 1 minute. The warning is triggered at every key-on of the vehicle until the required update is performed to alert the operator or other technicians that a vehicle reflash is required.

ESA automatically identifies the version of CECU hardware when connected, and only permits software downloads that are applicable for that control unit. Software versions are not backwards compatible; a vehicle is rendered inoperative if a CECU without the correct software version is installed.

Check the program menu within ESA to see if an inoperative feature is disabled. This is very important when diagnosing an inoperative physical gauge on a CECU equipped vehicle. The gauge may have been previously disabled.

Instrumentation Service Information describing how to remove, disassemble, and reinstall instrumentation components is located on ServiceNet. Before attempting any instrumentation repairs, the technician should have a complete understanding of the procedures described in ServiceNet.

This manual contains service manual information covering vehicles equipped with software version "CECU3 with Chassis Node" (P30-1011). For vehicles with prior CECU software versions (such as: "CECU3 with Chassis Node" (P30-1009), CECU3 (P30-1008), ICU (P30-1003), and CECU/CECU2 (P30-1002)) refer to earlier publications.

When replacing a chassis node, disconnect the batteries and do not reconnect them until node installation and all wiring connections are complete. A new chassis node and the CECU need to be powered up simultaneously during the node's first power cycle; otherwise a fault code message will appear in the main instrument cluster between the speedometer and tachometer. This message indicates that the CECU is not recognizing the proper communication with the chassis node.

NAMUX 4 incorporates software in the CECU along with software in the instrument cluster. These software versions will often be linked together which will require both units to get updated should the other get updated. ESA will prompt the user if such a requirement is needed.

https://truckmanualshub.com/

2 Applies To

Multiplexing Overview . . . . . 2 - 2
Models–Build Dates . . . . . 2 - 2

Multiplexing Overview

This manual provides service information covering trucks equipped with the multiplexed instrumentation system. Before attempting to make service repairs, the technician should be knowledgeable about the system design, components, operation and troubleshooting procedures for diagnosing multiplexed instrumentation problems.

How communication works in a multiplex system: Each major subsystem in the truck's electrical system is operated by a control module that sends and receives data to and from a central hub computer. The central hub computer is called the CECU (Cab Electronic Control Unit). Since we're into the third generation now, we sometimes call it CECU3.

The CECU receives data related to controlling the various devices of the electrical system. It then makes decisions based on that input and sends information to each of the subsystem system control modules (nodes) about what that node should do with the components it controls.

This new generation incorporates much of the same architecture from previous designs with added data communications with more control modules. The software has been upgraded to incorporate interlocks to ensure safety, maximize vehicle performance and simplify driver interaction.

Models–Build Dates

Identifying which control unit is in the vehicle helps determine what features are present and also aids in troubleshooting.

Control Unit	Hardware Part Number	Software Version	Models	Engine Emissions Level	Production Built Dates
ICU	Q21-1029-X-XXX	P30-1003-XXX	**PB:** 357, 378, 379, 385, 386 **KW:** C500, T600, T800, W900, Off-Highway	1998, 2004	2005 - 2006
CECU / CECU2	Q21-1055-X-XXX / Q21-1075-X-XXX	P30-1002-XXX	**PB:** 365, 367, 384, 386, 388, 389 **KW:** C500, T440/T470, T660, T800, W900, Off-Highway	2007	2007 - 2009
			PB: 387 **KW:** T2000		2008 - 2009
			PB: 325, 330, 335, 340		2009
CECU3	Q21-1076-X-XXX	P30-1008-XXX	**PB:** 325, 330, 337, 348, 387 **KW:** T170, T270, T370, T700	2010	2010 - present
CECU3 with Chassis Node	Q21-1076-X-XXX with Q21-1077-X-XXX	P30-1009-XXX	**PB:** 365, 367, 384, 386, 388, 389 **KW:** C500, T440/T470, T660, T800, W900, Off-Highway	2010	2010 - present
			PB: 365, 367, 384, 386 **KW:** T660, T800	2010	2010 - 2011
CECU3 with Chassis Node	Q21-1076-X-XXX with Q21-1077-X-XXX	P30-1011-XXX	**PB:** 579 **KW:** T680	2010	2011 - present

https://truckmanualshub.com/

Control Unit Identification

Control unit identification can be made using a few methods:

- Searching using the Electronic Catalog (ECAT)
- Connecting using the Electronic Service Analyst (ESA)
- Menu Control Switch (MCS) of the information display

Using ECAT or ESA are the easiest and most exact ways of determining the type of control unit in the truck.

Electronic Catalog (ECAT) Identification

ECAT provides a parts list “as built” and Bill of Materials information for each specific truck. The catalog is searchable, and contains the part number and identification of the trucks instrument panel control unit.

- ICU Part Number Q21-1029-X-XXX
- CECU Part Number Q21-1055-X-XXX
- CECU2 Part Number Q21-1075-X-XXX
- CECU3 Part Number Q21-1076-X-XXX
- Chassis Node Part Number Q21-1077-X-XXX

The blank digits (denoted by "X") in the above part numbers represent:

- "-X" is the hardware revision.
- "-XXX" is the software boot loader version.

Electronic Service Analyst (ESA) Identification

Connecting using ESA brings up a control unit information window. In this window, the sixth line item is the Control Unit Type and identifies whether the truck has an ICU or CECU. It also details the variant of the CECU.

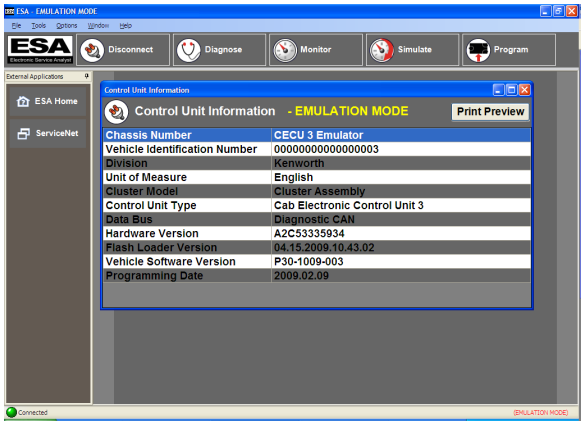

Line item ten of this Control Unit Information window displays the current Vehicle Software Version. This details the current CECU software and programming date that is presently installed on the vehicle.

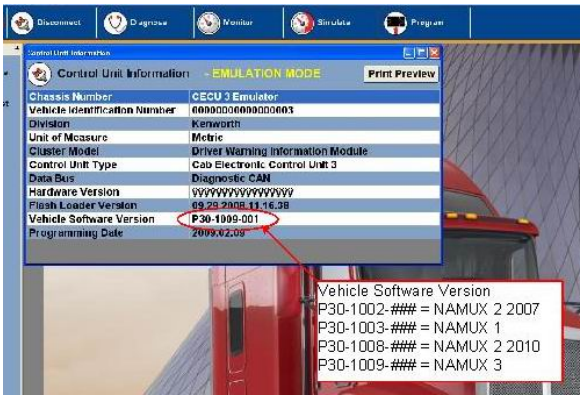

Upon connection, ESA recognizes if a software update has been issued for the control unit within the connected vehicle. If an update is required, ESA prompts the technician to perform the update operation.

MCS Identification

For vehicles equipped with the information display, control unit identification is possible via the Menu Control Switch (MCS). Using the MCS knob, select the "Truck Information" menu. Use this menu to look up the "CECU SW Ver." Software version P30-1002-XXX can denote either a CECU or CECU2.

- ICU Software P30-1003-XXX
- CECU Software P30-1002-XXX
- CECU2 Software P30-1002-XXX
- CECU3 Software P30-1008-XXX
- CECU3 with Chassis Node Software P30-1009-XXX
- CECU3 with Chassis Node Software P30-1011-XXX

https://truckmanualshub.com/

https://truckmanualshub.com/

3 Exploded View

Control Unit Location . . . . . 3 - 2

Control Unit Location

CECU Locations

The heart of the multiplexed instrumentation system is the CECU. The unit is located in the center of the dash, beneath the cupholders.

Typical CECU Locations (Kenworth)

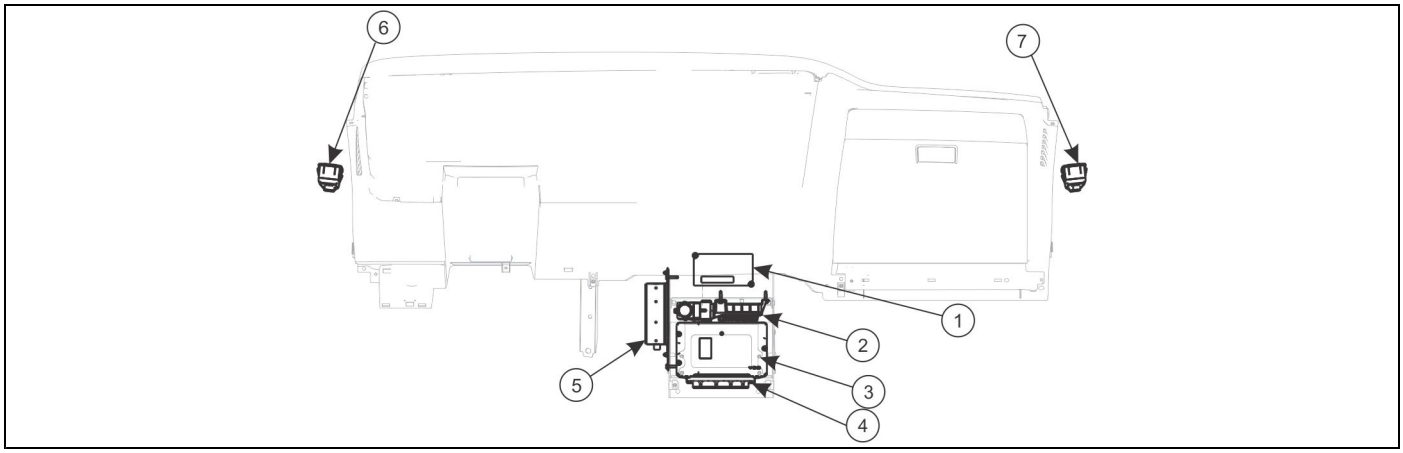

1. AMOT module
2. Allison Transmission
3. Cab ECU
4. ABS ECU
5. ELS Amplifier
6. Driver Door Controller
7. Passenger Door Controller

Typical CECU Locations (Peterbilt)

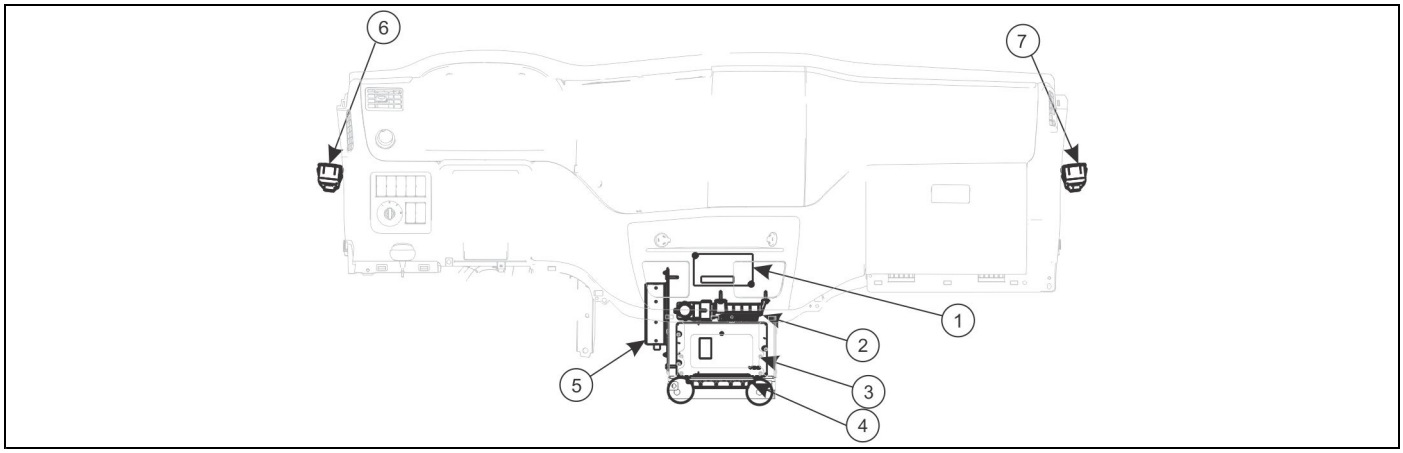

1. AMOT module
2. Allison Transmission
3. Cab ECU
4. ABS ECU
5. ELS Amplifier
6. Driver Door Controller
7. Passenger Door Controller

https://truckmanualshub.com/

Chassis Node Locations

The chassis node is located below the driver side door.

Typical Chassis Node Location

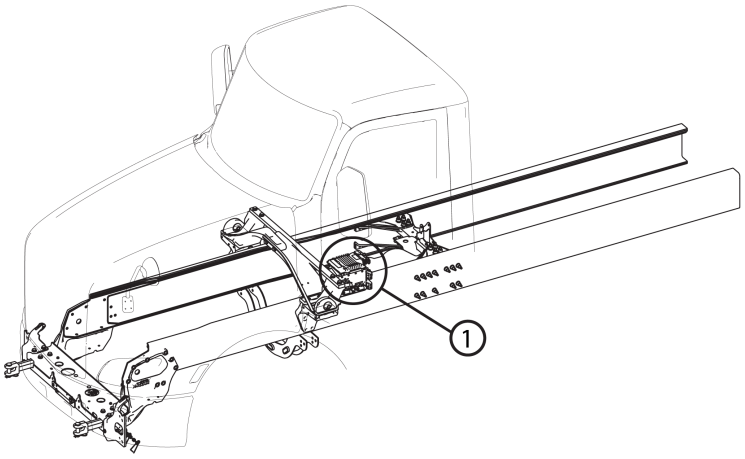

1. Chassis Node

NOTE
Chassis Nodes and connectors are painted over with frame paint. To release the connectors, it will be necessary to scrape away the paint to access and release the connector locking lever.

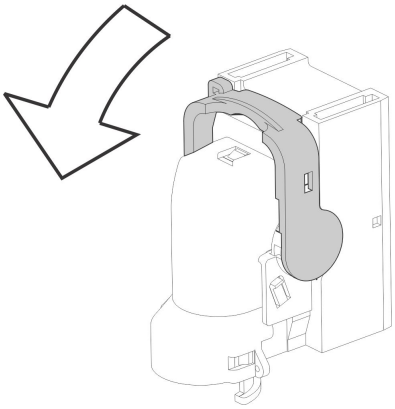

https://truckmanualshub.com/

https://truckmanualshub.com/

4 What's New

Software P30-1011 Features . . . . . 4 - 2

https://truckmanualshub.com/

Software P30-1011 Features

NOTE
Software versions are not backwards compatible; this manual contains service manual information covering vehicles equipped with software version "CECU3 with Chassis Node" (P30-1011). For vehicles with prior CECU software versions (such as: "CECU3 with Chassis Node" (P30-1009), CECU3 (P30-1008), ICU (P30-1003), and CECU/CECU2 (P30-1002)) refer to earlier publications. A vehicle is rendered inoperative if a CECU without the correct software version is installed.

The most notable change to NAMUX is the factory programmed interlocks. Interlocks are defined as parameters that must be validated before a function will engage. For example, the system will not allow the vehicle to move if the park brake switch has not been de-activated.

The Menu Control Switch (MCS) now has the 'back' function as a dedicated button on the menu control switch on the dash. It is not a menu selection in the program.

P30-1011 features fewer hardwired circuits and more communications over the CAN networks.

The fault messaging capabilities have improved with this new release. The information to the driver is more complete and can provide the driver with general action items for each warning icon.

The program itself has improved capabilities with regard to trip information. There are 4 individual trip odometers that the user can customize to fit their needs.

If there is a data communication failure between the CECU and Instrument Cluster the Cluster Display will show a message indicating communication failure. This is intended to alert the driver that the Instrument Cluster is not displaying the gauges accurately and it indicates a physical failure on the I-CAN.

New Systems

Brief overview of some of the newly introduced systems of the latest software version.

Steering Wheel Controls (cruise and radio)

The multiplexed steering wheel is a carry-over design from other PACCAR markets. It communicates on the C-CAN line for audio and cruise control inputs from the operator.

Radio

The radio is now on the C-CAN databus.

Virtual Gauges/Navigation/Telematics Unit (optional)

This unit provides vehicle information to the operator and receives the information from the V-CAN. The display provides real time information in the form of gauges. It is also connected to the C-CAN for audio output.

Rear Sleeper Radio Controls (optional)

The rear sleeper audio controls communicates signals from the control panel in the sleeper to allow the occupant to control the audio from the sleeper.

HVAC

All air conditioning inputs are communicated to the controller through the C-CAN. Input for the HVAC system may come from sensors used by the engine computer or cab computer. For example, the outside air temperature sensor is mounted to the mirror and the signal must be sent through the door control module and the cab control module before being received by the HVAC controller.

Electric Over Air Switches

Electric Over Air (EOA) switches initiate electrical signals to actuate air valves in order to activate and deactivate air functions (such as: suspension dumps, differential locks, PTO switches, trailer switches, etc.).

There are a total of eight available EOA general function switches with four additional hardwired

https://truckmanualshub.com/

lifter/pusher axle switches. The eight general switches are inputs into the CECU while the four hardwired switches are wired directly to the air solenoids with no software interlocks or CECU control.

For detailed information on the EOA interlocks refer to Electric Over Air Switch Interlocks on page 8-11 in the "How It Works" section of this manual.

Exterior Lighting Self Test

The Exterior Lighting Self Test (ELST) is intended to be operator activated and used to enhance the vehicle pre-drive inspection.

When initiated, the ELST toggles between two exterior lighting sequences. The ELST tests the functionality of certain exterior lights.

The ELST can be activated from a dash switch that is accessible from outside the cab or by the optional remote keyless key fob transmitter.

Cab Dimmer

The cab dimmer switch is a momentary up/down dash switch that allows the user to raise or lower the dash backlighting illumination levels.

The vehicle has a day time brightness setting that is independent of the night time brightness setting.

Door Controls

The Door Control System (DCS) operates with CECU electrical architecture to enable the user to raise/lower the door windows, lock/unlock door locks, adjust mirror position, and activate mirror heat.

Body CAN

There is a dedicated communication line (B-CAN) for customer installed control units. This dataline may be used by body builders to add like protocol control units. For more information regarding the B-CAN, refer to the appropriate Body Builder Manual.

https://truckmanualshub.com/

https://truckmanualshub.com/

5 General Information

Service Resources . . . . . 5 - 2

Service Resources

Disabled Gauges

With the CECU, disabling a component turns the component off completely. The disabled component is removed from all signal transmissions in order to allow the other features on the vehicle faster communication. A disabled gauge will not function or communicate with the control unit.

NOTE
Check the program menu to see if an inoperative feature is disabled. This is very important when diagnosing an inoperative gauge on a CECU equipped vehicle. The gauge may have been previously disabled.

When a service technician installs an optional gauge in the multiplexed instrumentation system, the newly installed gauge will initially be disabled. Because the gauge is not factory-installed, the technician must program the CECU to monitor it. Until the CECU is programmed, the link between the CECU and the gauge is termed “disabled” – that is, the CECU is prevented from detecting errors, and also from logging and displaying diagnostic trouble codes (DTCs).

To program the CECU and enable gauges, select “Program”. If the gauge value is “Disable”, change it to “Enable”.

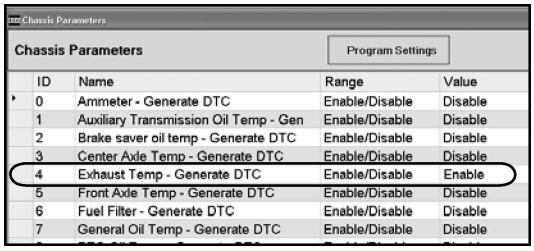

Once the CECU is programmed and the link to the gauge is “enabled”, the CECU monitors it, diagnoses errors like “shorts” and “opens”, logs DTCs for troubleshooting, and displays the DTCs on ESA’s “Diagnose” screen.

Communication Diagram

Communication diagrams illustrate the signal transmissions between components (switches, sensors, control units, CAN lines, etc.) necessary to perform system functions.

Controller Area Network (CAN) Communication

The following diagram provides an example of the communication lines and signal paths of a typical multiplexed vehicle. Determining the correct communication lines that provide a signal to the CECU and where these circuits interconnect, help pinpoint possible trouble areas. Sometimes these connections become loose, have bent or misaligned pins, and visually inspecting them may help identify why other electrical problems may be occurring.

Network	Description	What’s on the Network
V-CAN	Vehicle powertrain	Transmission
		Engine
		ABS
		telematics (optional)[1]
D-CAN	Diagnostic	Diagnostic connector
F-CAN	Frame components	Chassis Node
I-CAN	Instruments	Instrument cluster
C-CAN	Cab	PACCAR Display or Radio
		Door controllers
		HVAC
		Remote Sleeper Audio (optional)
		Multifunction steering wheel (optional)
B-CAN	Body Builder	Aftermarket devices[2]
E-CAN	Engine Input	Turbo
		Humidity Sensor
		EGR
A-CAN[3]	Aftertreatment	NOx sensors
		Doser Control Unit
		Aftertreatment control unit

[1]Not all telematics units will be recognized by the CECU architecture.
[2]Telematic units connected to the BCAN will not be recognized by the CECU. Any device spliced into a CAN wire will not be recognized by the CECU architecture.
[3]For vehicles built with PACCAR MX engine.

https://truckmanualshub.com/

CAN Communication Interface Diagram

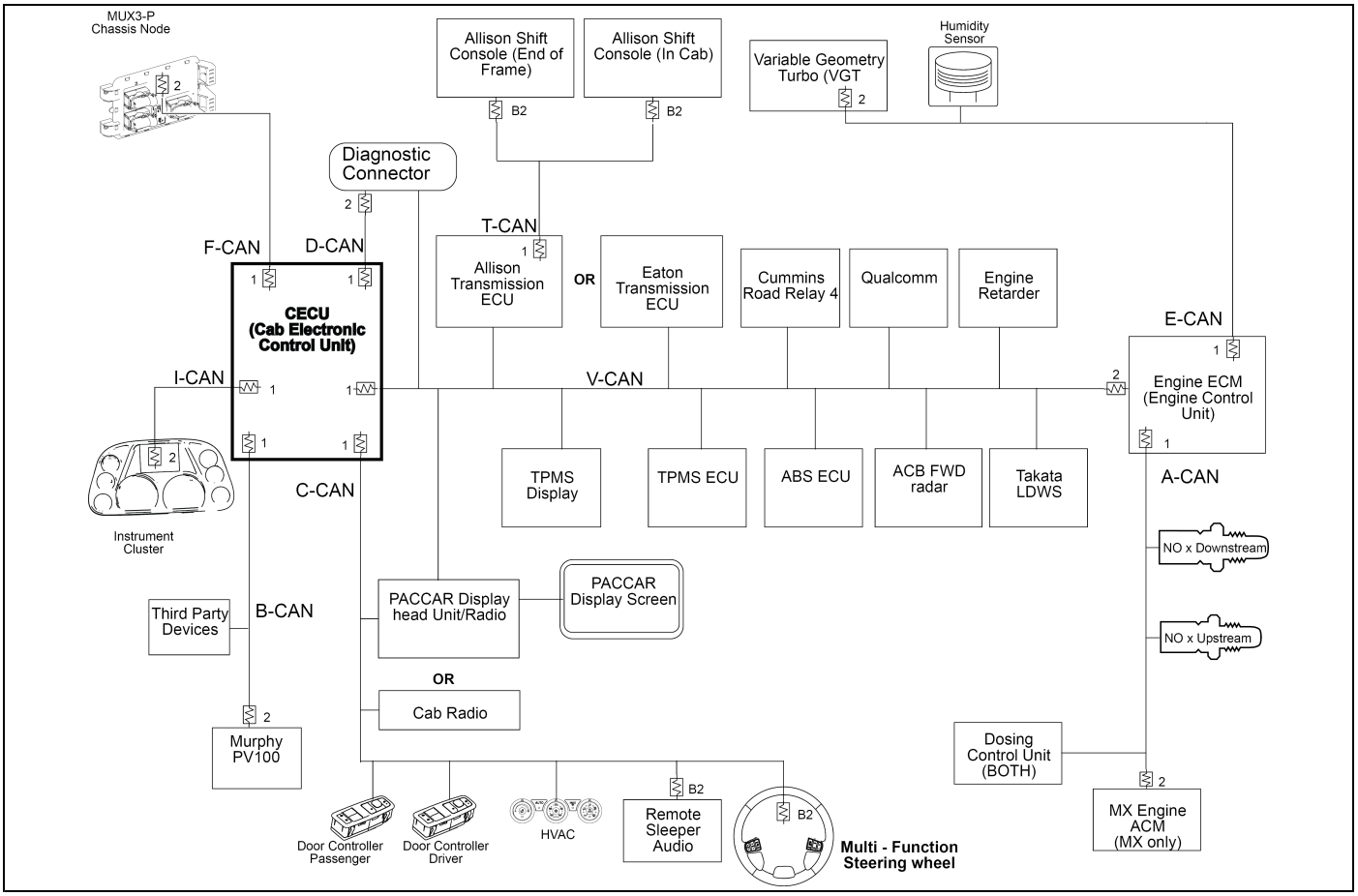

CECU Details

The heart of the multiplexed instrumentation system is the CECU. See Control Unit Locations on page 3-2 for illustrations depicting the physical position of the control unit.

The CECU receives data related to controlling the various devices of the electrical system. It then makes decisions based on that input and sends information to subsystem system control modules (nodes) about what that node should do with the components it controls.

CECU Connector Identification

There are 5 electrical connectors that plug into the CECU.

- Connector A - 9 pins
- Connector B - 24 pins
- Connector C - 52 pins
- Connector D - 40 pins
- Connector E - 9 pins

For an illustration of the side view of a CECU showing where the harness connectors attach into the control unit, see CECU Figure. This figure identifies connector position on the control unit as well as individual connector pin locations.

CECU

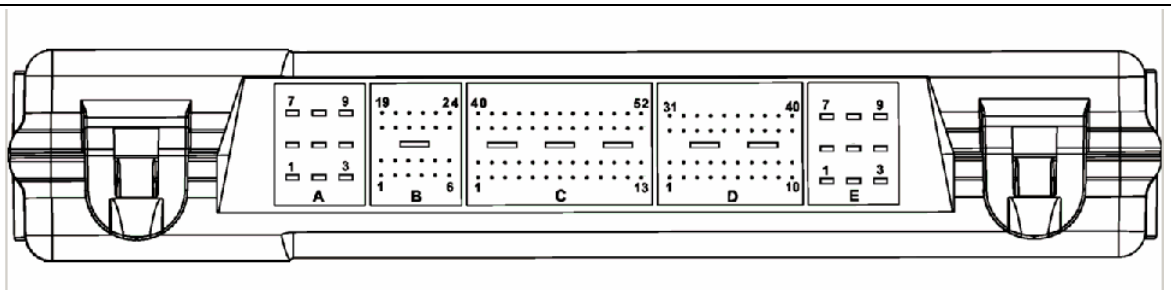

For connector face views at the harness connectors that plug into the CECU, see CECU Connector Face Views Figure. These connectors all branch from the instrument panel harness that routes behind the dash.

CECU Connector Face Views

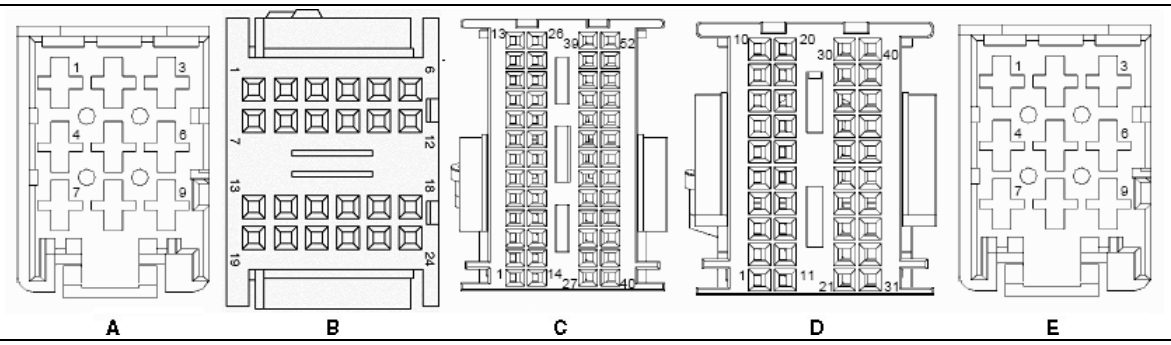

https://truckmanualshub.com/

CECU Comparison Chart - (Pinout)

Conn	Pin Number	Circuit Function
A	1	CVSG power
	2	Power - battery
	3	Cab dome lamp output
	4	Menu control switch power
	5	Ground
	6	Menu control switch ground
	7	Dash/panel illumination
	8	Auxiliary backlighting
	9	Power - battery
B	1	Menu control switch encode A
	2	Menu control switch encode B
	3	Menu control switch enter
	4	Exterior lighting self test input
	5	Ignition input (Start)
	6	Dome lamp input
	7	Seat belt telltale
	8	Cruise set
	9	Cruise resume
	10	Back-up alarm mute
	11	Retarder select 1
	12	Retarder select 2
	13	Clutch switch
	14	Headlamps active
	15	PTO set
	16	PTO resume
	17	Engine fan override
	18	Regen enable
	19	Inhibit regen
	20	ABS off road
	21	Marker lamp (Tractor)
	22	LVD input
	23	Transfer Case Engaged
	24	Reserve - passenger seat occupancy sensor

Conn	Pin Number	Circuit Function
C	1	Power supply +5V sensors
	2	Analog return
	3	Electric over air switch 1 input
	4	Not used
	5	Spare analog input
	6	Air pressure transducer - primary
	7	Air pressure transducer - secondary
	8	Air pressure transducer - application
	9	Gauge Sensor 1
	10	Air filter restriction
	11	Gauge Sensor 2
	12	Dimmer switch (up)
	13	Dimmer switch (down)
	14	CVSG data
	15	CVSG return
	16	Outside air temperature (Pre- 2010 engines only)
	17	Electric over air switch 3 input
	18	Electric over air switch 4 input
	19	Electric over air switch 5 input
	20	Electric over air switch 6 input
	21	Transmission oil temperature - main
	22	Electric over air switch 7 input
	23	Pyrometer (Pre-2007 engines only)
	24	Electric over air switch 8 input
	25	Analog return
	26	Electric over air switch 2 input
	27	Spare
	28	Spare
	29	Spare
	30	Gauge Sensor 3
	31	Wiper resistor ladder
	32	Turn signal resistor ladder
	33	LVD battery voltage
	34	Gauge Sensor 4
	35	C-CAN ground
	36	Not used
	37	C-CAN high
	38	C-CAN low
	39	Trailer stop lamp relay
	40	D-CAN high
	41	D-CAN low
	42	D-CAN ground
	43	B-CAN high
	44	B-CAN low
	45	B-CAN ground
	46	Marker flash
	47	Windshield washer pump
	48	DRL interrupt
	49	Marker lamp (Trailer) (Kenworth)
	50	Fuel Level Sender Select
	51	Headlamp flash
	52	Headlamp high/low

Conn	Pin Number	Circuit Function
D	1	Power - ignition
	2	General purpose wakeup
	3	Power - accessory
	4	Hazard
	5	Brake switch
	6	Spare digital input
	7	Park brake active
	8	Fog lamps (1st set)
	9	MCS back switch
	10	Cruise on/off
	11	Interaxle lock telltale
	12	Park lamp (Kenworth)
	13	Tractor ABS telltale
	14	Trailer ABS telltale
	15	Check engine telltale
	16	Stop engine telltale
	17	Windshield wiper (fast)
	18	Secondary fog lamps
	19	Editable telltale 1
	20	Editable telltale 2
	21	Editable telltale 3
	22	Spare
	23	Editable telltale 5
	24	Editable telltale 6
	25	Editable telltale 7
	26	Spare
	27	Spare
	28	Dash buzzer 1A
	29	Dash buzzer 1B
	30	Dash buzzer 1C
	31	Dash buzzer 2
	32	F-CAN high
	33	F-CAN low
	34	I-CAN high
	35	I-CAN low
	36	I-CAN ground
	37	V-CAN high
	38	V-CAN low
	39	V-CAN ground
	40	V-CAN low terminated
E	1	Idle timer relay
	2	Windshield wiper relay
	3	Ignition relay (Start)
	4	Cab marker/clearance lamp relay
	5	Ground
	6	LVD Bus 1
	7	Park lamp relay
	8	Trailer marker/clearance lamp relay
	9	Mirror heat relay

https://truckmanualshub.com/

Chassis Node Details

The node that receives information from the CECU to control exterior lighting, Electric over Air controls, and windshield wipers is called the chassis node. The chassis node serves as a bidirectional conduit for both information and control.

Chassis Node Connector Identification

There are three 21-pin electrical connectors that plug into the Chassis Node.

- Connector A - 21 pins
- Connector B - 21 pins
- Connector C - 21 pins

For an illustration of the side view of a Chassis Node showing where the harness connectors attach into the control unit, see Chassis Node Figure. This figure identifies connector position on the control unit as well as individual connector pin locations.

Chassis Node Figure

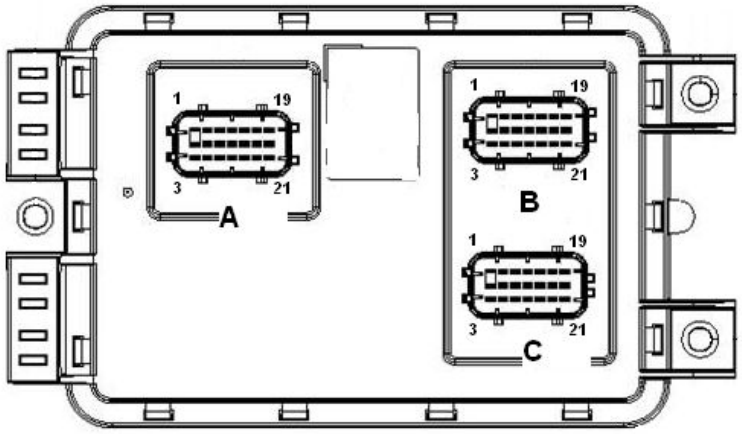

For connector face views at the harness connectors that plug into the Chassis Node, see Chassis Node Connector Face Views Figure.

Chassis Node Connector Face Views

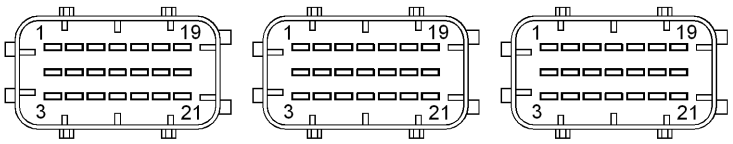

https://truckmanualshub.com/

Chassis Node Comparison Chart - (Pinout)

Conn	Pin Number	Circuit Function
A	1	Left headlamp low beam output (PWM)
	2	Power - ignition input
	3	Ground
	4	Battery power - 1
	5	Neutral switch input
	6	Fuel level 1 input
	7	Right headlamp high beam output
	8	Backup switch input
	9	Fuel level 2 input
	10	Reverse loads (Peterbilt) Snowplow (Kenworth)
	11	Spare digital input
	12	Spare analog input
	13	Left headlamp high beam output
	14	(reserved)
	15	Spare analog input
	16	Battery power - 2
	17	(reserved)
	18	F-CAN high
	19	Right headlamp low beam output (PWM)
	20	(reserved)
	21	F-CAN low
B	1	Battery power - 3
	2	Right turn/stop rear output (Tractor)
	3	Power supply +5V sensors
	4	Left turn front/side output
	5	Fuel filter restriction input
	6	Transmission oil temperature - auxiliary input
	7	Right turn front/side output
	8	Spare analog input
	9	General oil temperature input
	10	Battery power - 4
	11	Spare analog input
	12	Reserve for remote accelerator
	13	Left turn/stop rear output
	14	Reserve for clutch wear sensor
	15	Driving/fog lamps output
	16	Left turn trailer output
	17	Ammeter input
	18	Battery power - 7
	19	Battery power - 5
	20	Left turn front/DRL output
	21	Right turn front/DRL output

Conn	Pin Number	Circuit Function
C	1	Analog return
	2	Electric over air switch 1 output
	3	Electric over air switch 2 output
	4	Transfer case oil temperature input
	5	Electric over air switch 3 output
	6	Electric over air switch 4 output
	7	PTO oil temperature input
	8	Electric over air switch 5 output
	9	Electric over air switch 6 output
	10	Rear axle temperature input
	11	Electric over air switch 7 output
	12	Electric over air switch 8 output
	13	Front axle temperature input
	14	DRL headlamps (Perterbilt)
	15	Battery power - 8
	16	Center/steer axle temperature input
	17	Windshield wiper motor control output
	18	Trailer engine coolant valve
	19	Battery power - 8
	20	Right turn trailer output
	21	Back-up alarm control output

https://truckmanualshub.com/

7 Specifications

Parameter Part Numbers. . . . . 7 - 2

https://truckmanualshub.com/

Parameter Part Numbers

CECU Parameters

Parameters are used to identify to the CECU what features are present on a vehicle. The parameters can be altered by a dealer to enable, disable, or assign certain functionality to that feature.

Parameter part numbers are searchable in ECAT and allow a dealer to determine what parameters were set at the factory. Also, if adding a new feature to a vehicle, the corresponding parameter needs to be programmed to the CECU and enabled.

CECU Parameter Part Number	Parameter Description	Min. Value	Max. Value	Explanation
Q30-1024-000	ABS installed	0	1	Parameter controls DTC's related to ABS system. Value 0/Disabled means ABS is not installed and DTC's are disabled Value 1/Enabled means ABS is installed and DTC's are enabled.
Q30-1024-001	After Treatment Regeneration Function	0	1	Parameter is used to allow information from the engine to turn on the telltales for the high exhaust temperature (emission system temperature) and regeneration filter. Value 0/Disabled means not allow cluster to display DPF and HEST telltales on cluster. Value 1/Enabled means allow cluster to display DPF and HEST telltales on cluster.
Q30-1024-002	ATC installed	0	1	Currently has no effect on functionality. Parameter will be used to determine the presence of traction control. Value 0/Disabled means ATC is not installed. Value 1/Enabled means ATC is installed.
Q30-1024-003	Retarder Range Map	0	4	Parameter is used to define the engine brake levels. Value 1 means engine brake switches have two braking levels 0%, 100%. Value 2 means engine brake switches have three braking levels 0%, 50%, 100%. Value 3 means engine brake switches have four braking levels 0%, 33%, 66%, 100%. Value 4 means engine brake switches have three braking levels 0%, 33%, 66%.
Q30-1024-004	Clutch Switch Present	1	1	Parameter is used to determine if the clutch switch is connected to the CECU. Value 0/Disabled means clutch switch is not installed (it has an automatic transmission or is hardwired to engine). Value 1/Enabled means clutch switch is installed (it has a manual transmission and is wired to the control unit).
Q30-1024-005	Cruise Control Set Switch Accel or Decel	0	1	Parameter is used to define the cruise control set/resume switch functionality. Value 0/Disabled means set switch is used for accelerate, and resume switch is used for decelerate. Value 1/Enabled means set switch is used for decelerate, and resume switch is used for accelerate.
Q30-1024-006	Cruise Control Present	0	1	Parameter is used to determine if cruise control is installed and controls the cruise control messages to the engine. Value 0/Disabled means cruise control switches are not installed. Value 1/Enabled means cruise control switches are installed.

https://truckmanualshub.com/

CECU Parameter Part Number	Parameter Description	Min. Value	Max. Value	Explanation
Q30-1024-007	Clock Alarm Available	0	1	Parameter is used to determine if the alarm clock will be displayed on the information display. Value 0/Disabled means Alarm Clock is not available in information display. Value 1/Enabled means Alarm Clock is available in information display
Q30-1024-008	Clock Available	0	1	Parameter is used to determine if the clock will be displayed on the information display. Value 0/Disabled means Clock is not available in information display. Value 1/Enabled means Clock available in information display
Q30-1024-009	Diagnostics Available	0	1	Parameter is used to determine if the diagnostics will be displayed on the information display. Value 0/Disabled means Diagnostic is not available in information display. Value 1/Enabled means Diagnostic is available in information display
Q30-1024-010	Ignition Timer Available	0	1	Parameter is used to determine if the ignition timer will be displayed on the information display. Value 0/Disabled means Ignition Timer is not available in information display. Value 1/Enabled means Ignition Timer is available in information display
Q30-1024-011	Languages Available	0	1	Parameter is used to determine if other languages are available on the information display. Value 0/Disabled means Language selection is not available in information display. Value 1/Enabled means Language selection is available in information display
Q30-1024-012	RPM Detail Available	0	1	Parameter is used to determine if the RPM information will be displayed on the information display. Value 0/Disabled means RPM information is not available in information display. Value 1/Enabled means RPM information is available in information display
Q30-1024-014	Trip Information Available	0	1	Parameter is used to determine if the trip information will be displayed on the information display. Value 0/Disabled means Trip Information is not available in information display. Value 1/Enabled means Trip Information is available in information display
Q30-1024-015	Truck Information Available	0	1	Parameter is used to determine if the truck information will be displayed on the information display. Value 0/Disabled means Truck Information is not available in information display. Value 1/Enabled means Truck Information is available in information display
Q30-1024-016	Highline Menus Wraparound	0	1	Parameter is used to control the scrolling in information display. Value 0/Disabled means that the menu will stop when it reaches the top or the bottom of the list when scrolling. Value 1/Enabled means that the menu will wrap around when it reaches the top or the bottom of the list when scrolling.
Q30-1024-017	Dome Lamp Controlled By Door	0	1	Parameter is used to determine if the dome lamps are controlled by the (driver/passenger) door. Value 0/Disabled means the door does not control the dome lamps. Value 1/Enabled means the door does control the dome lamps.

CECU Parameter Part Number	Parameter Description	Min. Value	Max. Value	Explanation
Q30-1024-018	Dome Lamp Delay Present	0	1	Parameter is used to determine if the dome lamp delays turning off after the door is closed. Value 0/Disabled means there is no delay before the dome lamp turns off. Value 1/Enabled means there is a delay before the dome lamp turns off.
Q30-1024-019	Dome Lamp Dimming Present	0	1	Parameter is used to determine if the dome lamp dims out slowly after the door is closed. Value 0/Disabled means dome lamp turns off quickly after the door is closed and delay if enabled. Value 1/Enabled means dome lamp dims out slowly after the door is closed and delay if enabled.
Q30-1024-020	Air Filter Restriction Gauge Installed	0	1	Parameter controls the functionality (output on CVSG bus and DTC's) of the air filter restriction gauge. Value 0/Disabled means Air Filter Restriction Gauge is not installed. Value 1/Enabled means Air Filter Restriction Gauge is installed.
Q30-1024-022	Ammeter Gauge Installed	0	1	Parameter controls the functionality (output on CVSG bus and DTC's) of the ammeter gauge. Value 0/Disabled means Ammeter Gauge is not installed. Value 1/Enabled means Ammeter Gauge is installed.
Q30-1024-023	Auxiliary Transmission Temperature Gauge Installed	0	1	Parameter controls the functionality (output on CVSG bus and DTC's) of the auxiliary transmission temperature gauge. Value 0/Disabled means Auxiliary Transmission Temperature is not installed. Value 1/Enabled means Auxiliary Transmission Temperature is installed.
Q30-1024-024	Axle Temperature Front Gauge Installed	0	1	Parameter controls the functionality (output on CVSG bus and DTC's) of the front axle temperature gauge if installed. Value 0/Disabled means Axle Temperature Front Gauge is not installed. Value 1/Enabled means Axle Temperature Front Gauge is installed.
Q30-1024-025	Axle Temperature Rear Gauge Installed	0	1	Parameter controls the functionality (output on CVSG bus and DTC's) of the rear axle temperature gauge. Value 0/Disabled means Axle Temperature Rear Gauge is not installed. Value 1/Enabled means Axle Temperature Rear Gauge is installed.
Q30-1024-026	Axle Temperature Center Gauge Installed	0	1	Parameter controls the functionality (output on CVSG bus and DTC's) of the center axle temperature gauge. Value 0/Disabled means Axle Temperature Center Gauge is not installed. Value 1/Enabled means Axle Temperature Center Gauge is installed.
Q30-1024-027	Brake Applied Pressure Gauge Installed	0	1	Parameter controls the functionality (output on CVSG bus and DTC's) of the brake application pressure gauge. Value 0/Disabled means Brake Applied Pressure Gauge is not installed. Value 1/Enabled means Brake Applied Pressure Gauge is installed.
Q30-1024-028	Brakesaver Oil Temperature Gauge Installed	0	1	Parameter controls the functionality (output on CVSG bus and DTC's) of the brakesaver oil temperature gauge. Valve 0/Disabled means Brakesaver Oil Temperature Gauge is not installed. Valve 1/Enable means Brakesaver Oil Temperature Gauge is installed.
Q30-1024-029	Engine Coolant Temperature Gauge Installed	0	1	Parameter controls the functionality (output on CVSG bus and DTC's) of the engine coolant temperature gauge. Value 0/Disabled means Engine Coolant Temperature Gauge is not installed. Value 1/Enabled means Engine Coolant Temperature Gauge is installed.

https://truckmanualshub.com/

CECU Parameter Part Number	Parameter Description	Min. Value	Max. Value	Explanation
Q30-1024-030	Engine Manifold Pressure (Turbo Boost) Gauge Installed	0	1	Parameter controls the functionality (output on CVSG bus and DTC's) of the manifold pressure gauge. Value 0/Disabled means Manifold Pressure Gauge is not installed. Value 1/Enabled means Manifold Pressure Gauge is installed.
Q30-1024-031	Engine Oil Pressure Gauge Installed	0	1	Parameter controls the functionality (output on CVSG bus and DTC's) of the engine oil pressure gauge. Value 0/Disabled means Engine Oil Pressure Gauge is not installed. Value 1/Enabled means Engine Oil Pressure Gauge is installed.
Q30-1024-032	Engine Oil Temperature Gauge Installed	0	1	Parameter controls the functionality (output on CVSG bus and DTC's) of the engine oil temperature gauge. Value 0/Disabled means Engine Oil Temperature Gauge is not installed. Value 1/Enabled means Engine Oil Temperature Gauge is installed.
Q30-1024-033	Exhaust Temperature Gauge (Pyrometer) Installed	0	1	Parameter controls the functionality (output on CVSG bus and DTC's) of the exhaust temperature gauge. Valve 0/Disabled means Exhaust Temperature Gauge is not installed. Valve 1/Enable means Exhaust Temperature Gauge is installed.
Q30-1024-034	Fuel Delivery Pressure Gauge Installed	0	1	Valve 0/Disabled means Fuel Delivery Pressure Gauge is not installed. Valve 1/Enable means Fuel Delivery Pressure Gauge is installed.
Q30-1024-035	Fuel Filter Restriction Gauge Installed	0	1	Parameter controls the functionality (output on CVSG bus and DTC's) of the fuel restriction gauge. Value 0/Disabled means Fuel Filter Restriction Gauge is not installed. Value 1/Enabled means Fuel Filter Restriction Gauge is installed.
Q30-1024-036	General Oil Temperature Gauge Installed	0	1	Parameter controls the functionality (output on CVSG bus and DTC's) of the general oil temperature gauge. Value 0/Disabled means General Oil Temperature Gauge is not installed. Value 1/Enabled means General Oil Temperature Gauge is installed.
Q30-1024-037	Primary Air Pressure Gauge Installed	0	1	Parameter controls the functionality (output on CVSG bus and DTC's) of the primary air pressure gauge. Value 0/Disabled means Primary Air Pressure Gauge is not installed. Value 1/Enabled means Primary Air Pressure Gauge is installed.
Q30-1024-038	Primary Fuel Level Gauge Installed	0	1	Parameter controls the functionality (output on CVSG bus and DTC's) of the primary fuel level gauge. Value 0/Disabled means Primary Fuel Level Gauge is not installed. Value 1/Enabled means Primary Fuel Level Gauge is installed.
Q30-1024-039	PTO Oil Temperature Gauge Installed	0	1	Valve 0/Disabled means gauge is not installed. Valve 1/Enable means gauge is installed.
Q30-1024-040	Secondary Air Pressure Gauge Installed	0	1	Parameter controls the functionality (output on CVSG bus and DTC's) of the secondary air pressure gauge. Value 0/Disabled means Secondary Air Pressure Gauge is not installed. Value 1/Enabled means Secondary Air Pressure Gauge is installed.
Q30-1024-041	Secondary Fuel Level Gauge Installed	0	1	Parameter controls the functionality (output on CVSG bus and DTC's) of the secondary fuel level gauge. Value 0/Disabled means Secondary Fuel Level Gauge is not installed. Value 1/Enabled means Secondary Fuel Level Gauge is installed.
Q30-1024-042	Transfer Case Oil Temperature Gauge Installed	0	1	Parameter controls the functionality (output on CVSG bus and DTC's) of the transfer case oil temperature gauge. Value 0/Disabled means Transfer Case Oil Temperature Gauge is not installed. Value 1/Enabled means Transfer Case Oil Temperature Gauge is installed.

CECU Parameter Part Number	Parameter Description	Min. Value	Max. Value	Explanation
Q30-1024-043	Transmission Temperature Gauge Installed	0	1	Parameter controls the functionality (output on CVSG bus and DTC's) of the transmission temperature gauge. Value 0/Disabled means Transmission Temperature Gauge is not installed. Value 1/Enabled means Transmission Temperature Gauge is installed.
Q30-1024-044	Voltmeter Gauge Installed	0	1	Parameter controls the functionality (output on CVSG bus and DTC's) of the voltmeter gauge. Value 0/Disabled means Voltmeter Gauge is not installed. Value 1/Enabled means Voltmeter Gauge is installed.
Q30-1024-045	Engine Retarder Present	0	1	Parameter is used to determine if the engine brake switch is installed. Value 0/Disabled means engine brake switches are not installed. Value 1/Enabled means engine brake switches are installed.
Q30-1024-046	Engine Make	0	3	Parameter is used to determine what type of engine is installed. Value 0 means the truck is equipped with CAT engine. Value 1 means the truck is equipped with CUMMINS engine. Value 2 means the truck is equipped with PACCAR engine. Value 3 means the truck is equipped with OTHER engine.
Q30-1024-047	Engine Fan Override Present	0	1	Parameter is used to determine if the fan override switch is installed. Value 0/Disabled means engine fan override switch is not installed. Value 1/Enabled means engine fan override switch is installed.
Q30-1024-048	Gear Display Present	0	1	Parameter is used to determine the presence of gear display on the information display. Value 0/Disabled means Gear Display functionality is not available in information display. Value 1/Enabled means Gear Display functionality is available in information display.
Q30-1024-049	CECU Programming Required	0	1	Parameter is used to determine if the backlighting is flashed to indicate that the CECU has not been parameterized. Value 0/Disabled means the LCD backlights are not flashed. Value 1/Enabled means the LCD backlights are flashed.
Q30-1024-050	Headlamp Warning Present	0	1	Parameter controls "headlamp-left-on"-warning. Value 0/Disabled means an alarm will not sound when the lights are on, the key is off and the driver door is open. Value 1/Enabled means an alarm will sound when the lights are on, key is off and the driver door is open.
Q30-1024-051	Change Distance Units	0	1	Parameter controls whether or not the operator can change the units in the cluster. Value 0/Disabled means the operator cannot change the units in the cluster. Value 1/Enabled means the operator can change the units in the cluster.
Q30-1024-052	Cluster Backlight Day Value	0	255	Parameter is used to set the intensity of the backlighting for the cluster when the lights are not on. Value 0 means minimum illumination. Value 255 means maximum illumination.
Q30-1024-053	CVSG Backlight Day Value	0	127	Parameter is used to set the intensity of the backlighting for the gauges when the lights are not on. Value 0 means minimum illumination. Value 127 means maximum illumination.

https://truckmanualshub.com/

CECU Parameter Part Number	Parameter Description	Min. Value	Max. Value	Explanation
Q30-1024-054	Dash Backlight Day Value	0	255	Parameter is used to set the intensity of the backlighting for the entire dash when the lights are not on. Value 0 means minimum illumination. Value 255 means maximum illumination.
Q30-1024-055	Dash Dim With Dome Light	0	1	Parameter is used to determine if the dash backlighting should dim if the dome light is on. Value 0/Disabled means the functionality is disabled. Value 1/Enabled means the functionality is enabled.
Q30-1024-056	TFT Backlight Day Value	0	255	Parameter is used to set the intensity of the backlighting for the information display when the lights are not on. Value 0 means minimum illumination. Value 255 means maximum illumination.
Q30-1024-058	Transfer Case Temperature Sensor Type	0	1	Parameter is used to determine which type of transfer case temperature sensor is installed for the transfer case temperature gauge. This determines the input range. Value 0 means Transfer Case Temperature Sensor Type = Delphi. Value 1 means Transfer Case Temperature Sensor Type = Siemens (or Continental).
Q30-1024-059	Park Brake Symbol In Indication Bar	0	1	Parameter is used to determine if the park brake symbol is available on the indicator bar located on the RH side of the information display. Value 0/Disabled means park brake symbol will not be displayed. Value 1/Enabled means park brake symbol will be displayed.
Q30-1024-060	PTO Control Present	0	1	Parameter is used to determine the presence of PTO controls. (For CUMMINS engine, default value is 1 - Cruise Control PTO idle bump). Value 0/Disabled means PTO Control functionality is disabled. Value 1/Enabled means PTO Control functionality is enabled.
Q30-1024-062	After Treatment Regeneration Switch	0	1	Parameter is used to determine if the Diesel Particulate Filter (DPF) aftertreatment regeneration force or inhibit switches are installed. Value 0/Disabled means After Treatment Regeneration Switch is not installed. Value 1/Enabled means After Treatment Regeneration Switch is installed.
Q30-1024-063	Remote PTO Present	0	1	Parameter is used to determine if the remote PTO switches are installed (PACCAR engines only). Value 0/Disabled means Remote PTO switches are not installed. Value 1/Enabled means Remote PTO switches are wired to CECU and functionality is enabled.
Q30-1024-064	RPM Sweet Spot High Limit	0	3000	Parameter is used to set the high limit for RPM sweet spot bargraph displayed on the information display.
Q30-1024-065	RPM Sweet Spot Low Limit	0	3000	Parameter is used to set the low limit for RPM sweet spot bargraph displayed on the information display.
Q30-1024-066	Transmission Make	0	4	Parameter is used to determine the type/make of transmission. Value 0 - Manual transmission. Value 1 - Autoshift transmission. Value 2 - Ultrashift transmission. Value 3 - Freedomline transmission. Value 4 - Allison transmission.

CECU Parameter Part Number	Parameter Description	Min. Value	Max. Value	Explanation
Q30-1024-067	Brake Applied Pressure Sensor Installed	0	1	Parameter is used to determine if the brake application pressure sensor is installed. This parameter will effect the functionality of the brake applied gauge and cruise control. Value 0/Disabled means brake application pressure sensor is not installed. Brake applied gauge will not function and CECU will not send brake info on databus. Value 1/Enabled means brake application pressure sensor is installed. Brake applied gauge will be enabled (If "Brake Applied Pressure Gauge Installed" parameter is also enabled) and CECU will send brake info on databus.
Q30-1024-068	Dome Light Controlled By Low Voltage Disconnect	0	1	Parameter is used to determine if the dome lamps are controlled by the LVD. Value 0/Disabled means the dome lamps are not controlled by the LVD. Value 1/Enabled means the dome lamps are controlled by the LVD.
Q30-1024-069	LVD Sytem Dropout Voltage	0	600	Parameter is used to determine the voltage cutout to turn off the dome lamps. Default setting is 121: or 12.1 volts.
Q30-1024-070	Alarm Bell Symbol	0	2	Parameter is used to determine the status of the alarm bell symbol in the information display. Value 0 means the alarm bell symbol is off. Value 1 means the alarm bell symbol is on solid. Value 2 means the alarm bell symbol is animated.
Q30-1024-071	Ignition Timer Maximum Time	5	90	Parameter is used to determine the maximum time the idle timer can be set to. The value can be set in one minute increments. Value 5 means five minutes. Value 90 means ninety minutes.
Q30-1024-072	Voltage Trim Multiplier	0	999999	Parameter is used to trim or calibrate the voltmeter. This value is the "multiplier" portion of the trim and has a range between 0 and 999999. See Voltmeter Trim Procedure on page 7-21 following this chart, for steps to determine the correct value.
Q30-1024-073	Voltage Trim Offset	0	10000	Parameter is used to trim or calibrate the voltmeter. This value is the "offset" portion of the trim and has a range between 0 and 10000. See Voltmeter Trim Procedure on page 7-21 following this chart, for steps to determine the correct value.
Q30-1024-074	Low Voltage Disconnect Installed	0	1	Parameter is used to determine if a low voltage disconnect system is installed. Value 0/Disabled means a LVD system is not installed. Value 1/Enabled means a LVD system is installed.
Q30-1024-075	Engine Fan With Park Brake Installed	0	1	Parameter is used to determine if an engine fan override is available to the operator. This override will allow the operator to turn the engine fan on when the park brakes are set and the engine ECU permits the fan to turn on. Value 0/ Disable means that this function is not enabled and the operator cannot control when the engine fan turns on. Value 1/Enabled means that the operator may turn the engine fan on when the park brakes are on and the engine ECU permits the fan to be on.
Q30-1024-076	Primary Air Pressure on V-CAN	0	1	Parameter is used to determine if the primary air pressure is broadcast on the V-CAN. Value 0/Disabled means the primary air pressure is not broadcast on the V-CAN. Value 1/Enabled means the primary air pressure is broadcast on the V-CAN.

https://truckmanualshub.com/

CECU Parameter Part Number	Parameter Description	Min. Value	Max. Value	Explanation
Q30-1024-077	Secondary Air Pressure on V-CAN	0	1	Parameter is used to determine if the secondary air pressure is broadcast on the V-CAN. Value 0/Disabled means the secondary air pressure is not broadcast on the V-CAN. Value 1/Enabled means the secondary air pressure is broadcast on the V-CAN.
Q30-1024-078	Voltage on V-CAN	0	1	Parameter is used to determine if voltage is broadcast on the V-CAN. Value 0/Disabled means voltage is not broadcast on the V-CAN. Value 1/Enable means voltage is broadcast on the V-CAN.
Q30-1024-079	Primary Fuel Level on V-CAN	0	1	Parameter is used to determine if the primary fuel level is broadcast on the V-CAN. Value 0/Disabled means the primary fuel level is not broadcast on the V-CAN. Value 1/Enable means the primary fuel level is broadcast on the V-CAN.
Q30-1024-080	Secondary Fuel Level on V-CAN	0	1	Parameter is used to determine if the secondary fuel level is broadcast on the V-CAN. Value 0/Disabled; not broadcast on the V-CAN. Value 1/Enable; broadcast on the V-CAN.
Q30-1024-082	Smart Wheel Installed	0	1	Parameter is used to determine if a smart wheel is installed. This parameter enables the cluster retarder lamp. This lamp is only enabled when the truck is equipped with a multiplex steering wheel. Value 0/Disabled means a smart wheel is not installed. Value 1/Enable means a smart wheel is installed.
Q30-1024-083	Governed Speed Limit Available	0	1	Parameter controls if the Governed speed limit transmitted by the Engine on V-CAN is displayed on the "Engine Info" MFD screen. Value 0/Disabled means the Governed Speed Limit is not Displayed Value 1/Enable means the Governed Speed Limit is displayed, if the Engine is transmitting it.
Q30-1024-084	Remote Accelerator Sensor Installed	0	1	Parameter controls fault logging for Remote Accelerator input (C27 of CECU). Also controls transmission of Remote Accelerator information on V-CAN. Value 0/Disabled means that no DTCs will be logged if that input is in a failure state (open, short) and "Not Available" is transmitted on V-CAN Value 1/Enable means that DTCs will be logged if that input is in a failure state (open, short). The remote accelerator values on V-CAN are populated with valid data (or "Error" if a fault is occurring on the input).
Q30-1024-085	Axle Temperature Steer Gauge Installed	0	1	Parameter controls fault logging of analog input and gauge outputs to CVSG. (For Peterbilt Only) Value 0/Disabled means that no DTCs will be logged if that input is in a failure state (open, short) and the gauge needle will not move if connected to the CVSG bus. Value 1/Enable means that DTCs will be logged if that input is in failure state (open, short) and the gauge needle will move when connected to the CVSG bus.

https://truckmanualshub.com/

CECU Parameter Part Number	Parameter Description	Min. Value	Max. Value	Explanation
Q30-1024-086	Fleet ID Available	0	1	Parameter controls whether the Fleet ID is visible in the Truck Information screen in the MFD. Value 0/Disabled means the Fleet ID is not visible in the Truck Information screen. Value 1/Enable means the Fleet ID is enabled in the Truck Information screen. This requires the Fleet ID to be programmed by ESA, otherwise it will not be visible.
Q30-1024-088	Diesel Exhaust Fluid Gauge Installed	0	1	Parameter controls fault logging and gauge needle if the DEF gauge is installed. Value 0/Disabled means that no faults will be logged and the gauge needle will not move if the gauge is installed. Value 1/Enable means that DTCs will be logged if the DEF information from the aftertreatment system is not available and the gauge needle will respond to DEF level changes.
Q30-1024-089	DRL Enabled	0	1	Parameter controls the DRL functionality of the exterior lighting. Value 0/Disable means the headlamp switch and high beam switch control the headlamps. When they are turned off, the headlamps will turn off. Value 1/Enabled means the low beams (at 50% power) or integrated turn signal will be on at all times when the headlamp or highbeam switch is not on.
Q30-1024-090	DRL Inhibit Switch Type	0	2	Parameter controls the behavior of the DRL Inhibit Switch. Value 0/None means that the DRL Inhibit Input is not observed by the CECU. Value 1=Normal means that the DRL will be disabled when the switch is active. Value 2=Canadian (10 sec max) means that the DRL will be disabled when the switch is active, for a maximum of 10 seconds. After 10 seconds, the DRL will turn back on and a DTC will be active as long as the DRL switch is still active.
Q30-1024-092	Fog Lamps Installed	0	1	Parameter controls the fog lamp outputs of the Chassis Node. Value 0/Disabled means the fog lamp output is not driven. If fog lamps are installed, they will never be lit. Value 1/Enabled means the fog lamp output will output faults (open, short).
Q30-1024-093	Lights With Wipers Enable	0	1	Parameter controls whether the menu item is available for Lights with Wipers. When enabled by the operator through the MFD, the low beam headlamps will turn on whenever the wipers are active (INT, LOW, or HI). Value 0/Disabled means the headlamps will not turn on when the wipers are active. Value 1/Enabled means the headlamps will turn on when the wipers are active.

https://truckmanualshub.com/

CECU Parameter Part Number	Parameter Description	Min. Value	Max. Value	Explanation
Q30-1024-094	Head Lamp Type	0	40	Parameter controls the PWM activity of the headlamps. Value 0/Single means Single Sealed Beam Value 1/Dual means Dual Sealed Beam Value 2-9/reserved means reserved Value 10/PB means Replaceable Bulb Value 11-19/reserved means reserved Value 20/Integral means Integral Beam Pod Value 21-39/reserved means reserved Value 40/Integral means Integral Beam Pod HID
Q30-1024-095	Starter RPM Protection Enable	0	1	Parameter controls whether the Starter will be disabled when the engine is running. Value 0/Disabled means the engine RPM will be ignored when allowing the starter to engage. Value 1/Enabled means the engine RPM must be below 500 rpm for the starter to engage.
Q30-1024-096	Starter In Gear Protection Enable	0	1	Parameter controls whether the starter will be disabled because of the transmission state. Value 0/Disabled means the starter will be enabled regardless of the transmission state. Value 1/Enabled means the starter will be disabled if the transmission is not in neutral (optional for manual transmissions).
Q30-1024-097	Starter Overcrank Protection Enable	0	1	Parameter controls whether the starter will be disabled due to overuse. Value 0/Disabled means the starter will not be disabled due to overuse Value 1/Enabled means the starter will be disabled if the starter is overused (cranking for 90s without sufficient cooldown).
Q30-1024-099	PACCAR Lighting Model	0	5	Parameter controls the Lighting Model Value 0 = No Exterior Lighting Value 1 = KW BCAB Value 2 = PB BCAB Value 3 = KW NGP Value 4 = PB Value 5 = KW ECE Russian Homologation
Q30-1024-101	Trailer Detect Enable	0	1	Parameter controls the Trailer Detect functionality. Value 0/Disabled means there is no addition diagnostics of the trailer connection. Value 1/Enabled means there is additional diagnostics of the trailer. The operator will be warned if the trailer has become disconnected or is intermittently disconnecting while in motion
Q30-1024-102	Turn Lamps Front Side Installed	0	1	Parameter controls the outputs for the front side turn lamps. Value 0/Disabled means with the hardware installed, the lamps will work, but the diagnostics will not (except short circuits) Value 1/Enabled means the outputs and diagnostics are enabled (mostly for the fender lamps for T660s). If it is enabled with no hardware installed, you will get constant open circuit errors.

CECU Parameter Part Number	Parameter Description	Min. Value	Max. Value	Explanation
Q30-1024-103	Turn Lamps Trailer Installed	0	1	Parameter controls the outputs for the trailer outputs 0/Disabled means with the hardware installed, the lamps will work, but the diagnostics will not (except short circuits) Value 1/Enabled means outputs and diagnostics are enabled. If it is enabled with no hardware installed, you will get constant open circuit errors.
Q30-1024-104	OAT Source	0	1	Parameter controls the signal used to populate the LCD in the Tachometer, as well as all other CECU features that use temperature as part of the algorithm. Value 0/CECU means that the analog input of the CECU is used (non-OBD engines). Value 1/Engine means that the J1939 V-CAN input from the Engine will be used.
Q30-1024-105	Backup Alarm Mute Enabled	0	1	Parameter controls the backup alarm mute functionality. Value 0/Disabled means the backup alarm will never be muted. Value 1/Enabled means the external backup alarm speaker will be muted when the dash switch is activated by the operator.
Q30-1024-106	Pre Trip Lighting Test Enabled	0	1	Parameter controls the availability of the Pre Trip Lighting Test. Value 0/Disabled means the menu item in the settings menu is not available and the Pre Trip sequence will never be executed. Value 1/Enabled means the menu item is available in the settings menu. When the operator enables it, the pre trip lighting sequence will be initiated.
Q30-1024-107	Pre Trip Test Sequence Interval	10s	30s	Parameter controls the interval of the pre trip lighting test. This is how long it stays in any one mode before transition to the next test mode.
Q30-1024-108	Enable Gateway	0	1	Parameter controls the gateway functionality. This must be enabled for the following Gateway parameters to take effect. Value 0/Disabled means no Gateway of messages will occur. Value 1/Enabled means the settings of the following gateway parameters will be observed.
Q30-1024-109	Enable Router	0	1	Parameter controls the router functionality. This must be enabled for the following Router parameters to take effect. Value 0/Disabled means no Routing of messages will occur. Value 1/Enabled means the settings of the following router parameters will be observed.
Q30-1024-110	Gateway Engine CCVS Message	0	64	Parameter controls the settings for this individual message. Add the numbers together for multiple destinations. Value 0; OFF Value 1; B-CAN Value 2; C-CAN Value 4; D-CAN Value 8; F-CAN Value 16; I-CAN Value 32; V-CAN

https://truckmanualshub.com/

CECU Parameter Part Number	Parameter Description	Min. Value	Max. Value	Explanation
Q30-1024-112	Gateway Engine EEC1 Message	0	64	Parameter controls the settings for this individual message. Add the numbers together for multiple destinations. Value 0; OFF Value 1; B-CAN Value 2; C-CAN Value 4; D-CAN Value 8; F-CAN Value 16; I-CAN Value 32; V-CAN
Q30-1024-113	Gateway Engine EEC2 Message	0	64	Parameter controls the settings for this individual message. Add the numbers together for multiple destinations. Value 0; OFF Value 1; B-CAN Value 2; C-CAN Value 4; D-CAN Value 8; F-CAN Value 16; I-CAN Value 32; V-CAN
Q30-1024-114	Gateway Engine ET1 Message	0	64	Parameter controls the settings for this individual message. Add the numbers together for multiple destinations. Value 0; OFF Value 1; B-CAN Value 2; C-CAN Value 4; D-CAN Value 8; F-CAN Value 16; I-CAN Value 32; V-CAN
Q30-1024-115	Gateway Engine IC1 Message	0	64	Parameter controls the settings for this individual message. Add the numbers together for multiple destinations. Value 0; OFF Value 1; B-CAN Value 2; C-CAN Value 4; D-CAN Value 8; F-CAN Value 16; I-CAN Value 32; V-CAN
Q30-1024-116	Gateway Engine LFE Message	0	64	Parameter controls the settings for this individual message. Add the numbers together for multiple destinations. Value 0; OFF Value 1; B-CAN Value 2; C-CAN Value 4; D-CAN Value 8; F-CAN Value 16; I-CAN Value 32; V-CAN

CECU Parameter Part Number	Parameter Description	Min. Value	Max. Value	Explanation
Q30-1024-118	Gateway Transmission ETC1 Message	0	64	Parameter controls the settings for this individual message. Add the numbers together for multiple destinations. Value 0; OFF Value 1; B-CAN Value 2; C-CAN Value 4; D-CAN Value 8; F-CAN Value 16; I-CAN Value 32; V-CAN
Q30-1024-119	Gateway Transmission ETC2 Message	0	64	Parameter controls the settings for this individual message. Add the numbers together for multiple destinations. Value 0; OFF Value 1; B-CAN Value 2; C-CAN Value 4; D-CAN Value 8; F-CAN Value 16; I-CAN Value 32; V-CAN
Q30-1024-120	Route Engine AMB Message	0	64	Parameter controls the settings for this individual message. Add the numbers together for multiple destinations. Value 0; OFF Value 1; B-CAN Value 2; C-CAN Value 4; D-CAN Value 8; F-CAN Value 16; I-CAN Value 32; V-CAN
Q30-1024-121	Route Engine EFLP1 Message	0	64	Parameter controls the settings for this individual message. Add the numbers together for multiple destinations. Value 0; OFF Value 1; B-CAN Value 2; C-CAN Value 4; D-CAN Value 8; F-CAN Value 16; I-CAN Value 32; V-CAN
Q30-1024-122	Route Engine FD Message	0	64	Parameter controls the settings for this individual message. Add the numbers together for multiple destinations. Value 0; OFF Value 1; B-CAN Value 2; C-CAN Value 4; D-CAN Value 8; F-CAN Value 16; I-CAN Value 32; V-CAN

https://truckmanualshub.com/

CECU Parameter Part Number	Parameter Description	Min. Value	Max. Value	Explanation
Q30-1024-123	Route Engine HOURS Message	0	64	Parameter controls the settings for this individual message. Add the numbers together for multiple destinations. Value 0; OFF Value 1; B-CAN Value 2; C-CAN Value 4; D-CAN Value 8; F-CAN Value 16; I-CAN Value 32; V-CAN
Q30-1024-124	Route Engine LFC Message	0	64	Parameter controls the settings for this individual message. Add the numbers together for multiple destinations. Value 0; OFF Value 1; B-CAN Value 2; C-CAN Value 4; D-CAN Value 8; F-CAN Value 16; I-CAN Value 32; V-CAN
Q30-1024-125	Route Engine VD Message	0	64	Parameter controls the settings for this individual message. Add the numbers together for multiple destinations. Value 0; OFF Value 1; B-CAN Value 2; C-CAN Value 4; D-CAN Value 8; F-CAN Value 16; I-CAN Value 32; V-CAN
Q30-1024-126	Route Transmission TRF1 Message	0	64	Parameter controls the settings for this individual message. Add the numbers together for multiple destinations. Value 0; OFF Value 1; B-CAN Value 2; C-CAN Value 4; D-CAN Value 8; F-CAN Value 16; I-CAN Value 32; V-CAN
Q30-1024-127	Transmit CECU LC Message	0	64	Parameter controls the settings for this individual message. Add the numbers together for multiple destinations. Value 0; OFF Value 1; B-CAN Value 2; C-CAN Value 4; D-CAN Value 8; F-CAN Value 16; I-CAN Value 32; V-CAN

https://truckmanualshub.com/

CECU Parameter Part Number	Parameter Description	Min. Value	Max. Value	Explanation
Q30-1024-128	Enable LED Front Side Turn	0	1	Parameter controls the ability of the diagnostics to detect faults on this circuit. These lamps are the rear fender lamps or other supplemental lamps. Value 0/Disabled means the LEDs will be incorrectly diagnosed as open circuits due to their electrical characteristics. Value 1/Enabled means the open circuit detection is disabled.
Q30-1024-129	Enable LED Front Turn DRL	0	1	Parameter controls the ability of the diagnostics to detect faults on this circuit. These lamps are the Integral Beam turn/DRL lamp or fender turn lamps. Value 0/Disabled means the LEDs will be incorrectly diagnosed as open circuits due to their electrical characteristics. Value 1/Enabled means the open circuit detection is disabled.
Q30-1024-130	Enable LED Rear Stop Turn	0	1	Parameter controls the ability of the diagnostics to detect faults on this circuit. These lamps are the tractor brake/tail lamps. Value 0/Disabled means the LEDs will be incorrectly diagnosed as open circuits due to their electrical characteristics. Value 1/Enabled means the open circuit detection is disabled.
Q30-1024-131	Multiplex ABS Off Road Switch	0	1	Parameter is used to determine if the ABS Off Road Switch is connected to the CECU. Value 0/Disabled means ABS Offroad Switch is not installed. Value 1/Enabled means ABS Offroad Switch is installed. This parameter is required for the ABS Off Road switch to communicate with the ABS ECU via J1939 V-CAN.
Q30-1024-132	Engine Fan on with AC and Park Brake	0	1	Parameter is used to determine if an engine fan override is available to the operator. This override will allow the operator to turn the engine fan on when the park brakes are set, A/C is ON and the engine ECU permits the fan to turn on. Value 0/ Disable means that this function is not enabled and the operator cannot control when the engine fan turns on. Value 1/Enabled means that the operator may turn the engine fan on when the park brakes are on, A/C is ON and the engine ECU permits the fan to be on.
Q30-1024-133	Brake Lamps on with Engine Retarder	0	1	Parameter is used to determine if the tractor and trailer brake lamps will turn on when the engine retarder is engaged. Value 0/Disabled means the tractor and trailer brake lamps will not turn on when the engine retarder is engaged. Value 1/Enabled means the tractor and trailer brake lamps will turn on when the engine retarder is engaged.
Q30-1024-134	CECU LVD Enable	0	1	Parameter is used to determine if the CECU is controlling the Low Voltage Disconnect (LVD). Value 0/Disabled means the CECU is not controlling LVD functionality. Value 1/Enabled means the CECU is controlling LVD Functionality.
Q30-1024-135	Operator Control of LVD Voltage Level	0	1	Parameter is used to determine if the operator can control the Low Voltage Disconnect (LVD) shutoff voltage. Value 0/Disabled means the operator is not controlling the LVD shutoff voltage. Value 1/Enabled means the operator is controlling the LVD shutoff voltage.

https://truckmanualshub.com/

CECU Parameter Part Number	Parameter Description	Min. Value	Max. Value	Explanation
Q30-1024-137	Advanced ABS Installed	0	1	Parameter is used to determine if Advanced ABS is installed. Value 0/Disabled means Advanced ABS is disabled. Value 1/Enabled means Advanced ABS is enabled. This parameter is required for trucks with Bendix Advanced Cruise with Braking (ACB)
Q30-1024-138	Water In Fuel Warning Enabled	0	1	Parameter is used to determine if the Water In Fuel warning pop-up message is enabled. Value 0/Disabled means the Water In Fuel Pop-up warning message will not display when the appropriate condition exists. Value 1/Enabled means the Water In Fuel Pop-up warning message will display when the appropriate condition exists.
Q30-1024-139	Variable Speed Fan Cutoff Vehicle Speed	5	50	Parameter is used to set the vehicle speed cut off for the Variable Speed Fan. Value 5 means below 5 MPH the CECU sends the value of Variable Fan Low Speed Value (Q30-1024-140) for the Engine Fan and above 5 MPH the CECU sends the value of 100% for the Engine Fan when the appropriate conditions exist. Value 50 means below 50 MPH the CECU sends the value of Variable Fan Low Speed Value (Q30-1024-140) for the Engine Fan and above 50 MPH the CECU sends the value of 100% for the Engine Fan when the appropriate conditions exist.
Q30-1024-140	Variable Speed Fan Low Value	0	100	Parameter is used to set the Variable Speed Engine cooling fan when the engine permits the input from the CECU. Value 0/ means that the CECU is requesting 0% engine fan engagement. Value 0/ means that the CECU is requesting 1000% engine fan engagement.
Q30-1024-141	Variable Speed Fan Enable	0	1	Parameter is used to determine if the Variable Speed Fan is installed. Value 0/Disabled means Variable Speed Fan is not installed. Value 1/Enabled means the Variable Speed Fan is installed. This parameter is required for the Borg Warner Cool Logic Fans.
Q30-1024-142	Brake Application Air on V-CAN	0	1	Parameter is used to determine if the brake application air pressure is broadcast on the V-CAN. Value 0/Disabled; not broadcast on the V-CAN. Value 1/Enable; broadcast on the V-CAN.
Q30-1024-143	Main Transmission Oil Temp on V-CAN	0	1	Parameter is used to determine if the main transmission oil temperature is broadcast on the V-CAN. Value 0/Disabled; not broadcast on the V-CAN. Value 1/Enable; broadcast on the V-CAN.
Q30-1024-144	Trip Average Fuel Economy on V-CAN	0	1	Parameter is used to determine if the trip average fuel economy is broadcast on the V-CAN. Value 0/Disabled; not broadcast on the V-CAN. Value 1/Enable; broadcast on the V-CAN.

CECU Parameter Part Number	Parameter Description	Min. Value	Max. Value	Explanation
Q30-1024-145	Destination for Engine DPF Control Message 1	0	64	Parameter controls the settings for this individual message. Add the numbers together for multiple destinations. Value 0; OFF Value 1; B-CAN Value 2; C-CAN Value 4; D-CAN Value 8; F-CAN Value 16; I-CAN Value 32; V-CAN
Q30-1024-146	Destination for Engine Aftertreatment SCR Tank Message 1	0	64	Parameter controls the settings for this individual message. Add the numbers together for multiple destinations. Value 0; OFF Value 1; B-CAN Value 2; C-CAN Value 4; D-CAN Value 8; F-CAN Value 16; I-CAN Value 32; V-CAN
Q30-1024-147	Engine Protection Countdown Timer Popup Available	0	1	Parameter is used to determine if the engine protection countdown timer popup will be displayed on the information display. Value 0/Disabled means the engine protection countdown timer popup is not available in information display. Value 1/Enabled means the engine protection countdown timer popup is available in information display
Q30-1024-148	Front Axle Engaged Speed Warning Popup Available	0	1	Parameter is used to determine if the front axle engaged speed warning popup will be displayed on the information display. Value 0/Disabled means the front axle engaged speed warning popup is not available in information display. Value 1/Enabled means the front axle engaged speed warning popup is available in information display
Q30-1024-149	Front Axle Engaged Vehicle Warning Speed Threshold	8	161	Parameter is used to set the vehicle speed threshold at which the front axle engaged speed warning will trigger.
Q30-1024-150	Adaptive Cruise and Braking Display Available	0	1	Parameter is used to determine if the adaptive cruise and braking display will be displayed on the information display. Value 0/Disabled means the adaptive cruise and braking display is not available in information display. Value 1/Enabled means the adaptive cruise and braking display is available in information display
Q30-1024-151	Turn Lamps Front Side	0	1	Parameter is used to determine if the turn lamp front side should be enabled. Value 0/Disabled means the turn lamp front side is disabled. Value 1/Enabled means the turn lamp front side is enabled.
Q30-1024-152	Overspeed Shutdown Installed	0	1	Parameter is used to determine if the overspeed shutdown feature is installed. Value 0/Disabled means the overspeed shutdown feature is not installed. Value 1/Enabled means the overspeed shutdown feature is installed.

https://truckmanualshub.com/

CECU Parameter Part Number	Parameter Description	Min. Value	Max. Value	Explanation
Q30-1024-153	Overspeed Shutdown Low Air Warning Enabled	0	1	Parameter is used to determine if the overspeed shutdown low air warning is enabled. Value 0/Disabled means the overspeed shutdown low air warning is disabled. Value 1/Enabled means the overspeed shutdown low air warning is enabled.
Q30-1024-154	Overspeed Shutdown Low Air Threshold	8	161	Parameter is used to set the primary air pressure threshold value at which the overspeed shutdown low air warning will trigger.
Q30-1024-155	Transmission Telltale Trigger Value	0	300	Parameter is used to set the flexible activation level value at which the transmission oil temperature telltale will trigger.
Q30-1024-156	PTO Total Fuel Fault Enabled	0	1	Parameter is used to determine if the PTO total fuel fault message is enabled. Value 0/Disabled means the PTO total fuel fault message is disabled. Value 1/Enabled means the PTO total fuel fault message is enabled.
Q30-1024-157	Marker Lamp Switch Configuration	0	2	Parameter is used to determine the marker lamp switch configuration. Value 0 means the truck is equipped with a single switch that controls park lamps. Value 1 means the truck is equipped with a single switch that controls both cab and trailer marker lamps. Value 2 means the truck is equipped with separate switches, one for cab marker lamps, another for trailer marker lamps.
Q30-1024-158	Dark Cabin Enabled	0	1	Parameter is used to determine if the dark cabin feature is available in the settings screen. Value 0/Disabled means the dark cabin feature is not available. Value 1/Enabled means the dark cabin feature is available.
Q30-1024-159	Axle Oil Temperature Telltale Value	0	300	Parameter is used to set the level at which the axle oil temperature telltale will trigger.
Q30-1024-160	Electric Over Air Function 1			Parameter is used to set the function that is installed to this EOA switch-output pair
Q30-1024-161	Electric Over Air Function 2			Parameter is used to set the function that is installed to this EOA switch-output pair
Q30-1024-162	Electric Over Air Function 3			Parameter is used to set the function that is installed to this EOA switch-output pair
Q30-1024-163	Electric Over Air Function 4			Parameter is used to set the function that is installed to this EOA switch-output pair
Q30-1024-164	Electric Over Air Function 5			Parameter is used to set the function that is installed to this EOA switch-output pair
Q30-1024-165	Electric Over Air Function 6			Parameter is used to set the function that is installed to this EOA switch-output pair
Q30-1024-166	Electric Over Air Function 7			Parameter is used to set the function that is installed to this EOA switch-output pair
Q30-1024-167	Electric Over Air Function 8			Parameter is used to set the function that is installed to this EOA switch-output pair
Q30-1024-168	Electric Over Air Function 1 Speed Cutoff			Parameter is used to set the interlock speed cutoff for the corresponding EOA switch-output pair
Q30-1024-169	Electric Over Air Function 2 Speed Cutoff			Parameter is used to set the interlock speed cutoff for the corresponding EOA switch-output pair
Q30-1024-170	Electric Over Air Function 3 Speed Cutoff			Parameter is used to set the interlock speed cutoff for the corresponding EOA switch-output pair

https://truckmanualshub.com/

CECU Parameter Part Number	Parameter Description	Min. Value	Max. Value	Explanation
Q30-1024-171	Electric Over Air Function 4 Speed Cutoff			Parameter is used to set the interlock speed cutoff for the corresponding EOA switch-output pair
Q30-1024-172	Electric Over Air Function 5 Speed Cutoff			Parameter is used to set the interlock speed cutoff for the corresponding EOA switch-output pair
Q30-1024-173	Electric Over Air Function 6 Speed Cutoff			Parameter is used to set the interlock speed cutoff for the corresponding EOA switch-output pair
Q30-1024-174	Electric Over Air Function 7 Speed Cutoff			Parameter is used to set the interlock speed cutoff for the corresponding EOA switch-output pair
Q30-1024-175	Electric Over Air Function 8 Speed Cutoff			Parameter is used to set the interlock speed cutoff for the corresponding EOA switch-output pair
Q30-1008-501	Editable Telltale 1 Icon ID			Used by ESA to select the Icon displayed in monitor and simulate modes. Does not effect any vehicle functions. Refer to Q30-1008 drawing.
Q30-1008-517	Editable Telltale 3 Icon ID			Used by ESA to select the Icon displayed in monitor and simulate modes. Does not effect any vehicle functions. Refer to Q30-1008 drawing.
Q30-1008-518	Editable Telltale 2 Icon ID			Used by ESA to select the Icon displayed in monitor and simulate modes. Does not effect any vehicle functions. Refer to Q30-1008 drawing.
Q30-1008-519	Editable Telltale 4 Icon ID			Used by ESA to select the Icon displayed in monitor and simulate modes. Does not effect any vehicle functions. Refer to Q30-1008 drawing.
Q30-1008-520	Editable Telltale 5 Icon ID			Used by ESA to select the Icon displayed in monitor and simulate modes. Does not effect any vehicle functions. Refer to Q30-1008 drawing.
Q30-1008-522	Editable Telltale 6 Icon ID			Used by ESA to select the Icon displayed in monitor and simulate modes. Does not effect any vehicle functions. Refer to Q30-1008 drawing.
Q30-1008-524	Editable Telltale 8 Icon ID			Used by ESA to select the Icon displayed in monitor and simulate modes. Does not effect any vehicle functions. Refer to Q30-1008 drawing.
Q30-1008-526	Editable Telltale 9 Icon ID			Used by ESA to select the Icon displayed in monitor and simulate modes. Does not effect any vehicle functions. Refer to Q30-1008 drawing.

https://truckmanualshub.com/

Voltmeter Trim Procedure

Use the following steps when determining the appropriate parameter values for the Voltage Trim Multiplier and Voltage Trim Offset.

1. Set the park brake and turn ignition key to the ON position.
2. Make sure the Voltmeter Trim Offset and Voltmeter Trim Multiplier parameters are set to the default values. Using ESA, select 'Parameters' from the main menu screen, then select 'Standard Gauges', then scroll down to view the Voltmeter Trim Offset and Voltmeter Trim Multiplier. If the values for these parameters are not set at the default values, use ESA to reset the values as follows:
   a. Default Voltmeter Trim Offset = 5,000
   b. Default Voltmeter Trim Multiplier = 100,000

> **NOTE**
> To correctly calibrate the voltmeter, both the Voltmeter Trim Offset and Voltmeter Trim Multiplier parameters must be reset to their default values before performing this procedure.

3. Measure the voltage at the batteries. Record the value on the worksheet as “Measured Battery Voltage Engine Off”.
4. Note the displayed voltage using ESA or with the Voltmeter CVSG. Record the value on the worksheet as “Displayed Battery Voltage Engine Off”.
5. Start the Engine.
6. Measure the voltage at the batteries (same place as in step 3). Record the value on the worksheet as “Measured Battery Voltage Engine Running”.
7. Note the displayed voltage using ESA or with the Voltmeter CVSG. Record the value on the worksheet as “Displayed Battery Voltage Engine Running”.
8. Perform the calculations on the worksheet to determine the appropriate values for the Voltage Trim Multiplier and Voltage Trim Offset.
9. Use ESA to set the parameter values to the calculated values.

Voltmeter Trim Values Worksheet

Vehicle Voltage

Procedure	Value	Worksheet Entry
STEP 3: Measured BATT Voltage Engine Off		A
STEP 6: Measured BATT Voltage Engine Running		B
STEP 4: Displayed BATT Voltage Engine Off		C
STEP 7: Displayed BATT Voltage Engine Running		D

Entry			Entry			Result	
B		-		A	=		E
D		-		C	=		F
E		+		F	=		G
C		x		G	=		H
A		-		H	=		I
I		x	1,000		=		J
J		+	5,000		=		K
G		x	100,000		=		L
K		=	Voltmeter Trim Offset Value				
L		=	Voltmeter Trim Multiplier Value				

https://truckmanualshub.com/

https://truckmanualshub.com/

8 How It Works

Cab Electronic Control Unit (CECU) . . 8 - 2
Display Diagnostic Codes . . . . . 8 - 4
Electric Over Air Switches . . . . . 8 - 11

https://truckmanualshub.com/

Cab Electronic Control Unit (CECU)

Functional Description

The heart of the multiplexed instrumentation system is the CECU. Refer to the Control Unit Locations on page 3-2 section of this manual for location views of the of CECU.

Vehicle component inputs are sent to the CECU through the J1939 data buses or conventional wiring. The CECU interprets the various inputs and monitors/controls the functions for each input through the CECU software. Output messages from the CECU provide data for the gauges, warning lamps, audible alarms, and displays inside the cluster. Additionally, the CECU provides output for the HVAC controller.

The CECU receives data related to controlling the various devices of the electrical system. It then makes decisions based on that input and sends information to subsystem control modules about what that system should do with the components it controls.

When used in conjunction with the Electronic Service Analyst (ESA) diagnostic software tool, the technician can review fault codes stored in the CECU, verify whether the instrumentation is working properly and diagnose the root cause of the problem more easily.

CECU Architecture

The software programming of the control unit can be grouped into three main types:

- Run Time (RT) - which acts as the operating system where all communication takes place.
- Programmable Logic Controller (PLC) Code - manufacturer specific programmed code and software that is developed, accessible and editable.
- Vendor Module - blocks of code that are developed for specific manufacturers to allow other features to be implemented more efficiently.

Currently, ESA can look at all information that is communicated between the RT and PLC Code portions of the CECU software. Any signals, whether they are inputs, outputs, or dataline signals, sent between the RT and PLC Code are visible to ESA. These are the signals that may be monitored and simulated using ESA.

Limitations with ESA are found in the communications with the pre-developed Vendor Modules. Currently this information is not visible to ESA. Some features that have Vendor Module programming, such as the odometer and the message display, are not available to monitor and/or simulate through ESA.

The CECU will accept J1939 signals from the B-CAN and a very limited selection of signals on the V-CAN. Diagnostic codes for these devices are not contained in this service manual.

The BCAN is designed to accept customer installed devices through a connector on the CAN wire. Devices installed on the BCAN MUST use the provided connector to function properly. Any device that is spliced into the CAN wire will not function properly.

The VCAN is designed with connectors for an optional telematics device. Any telematics device connected to a CAN wire other than the VCAN will not function properly. Not all telematic devices will be recognized by the CECU.

https://truckmanualshub.com/

CAUTION
Any attempt to cut or attach directly to the CAN wire except through a provided connector, may cause equipment malfunction, equipment damage and will void the manufacturer's warranty.

Chassis Node

The node that receives information from the CECU to control, exterior lighting, Electric over Air controls, and windshield wipers is called the chassis node. The chassis node serves as a bidirectional conduit for both information and control.

These inputs are hardwired to the chassis node and broadcast to the CECU.

- Ammeter
- Auxiliary Transmission Oil Temperature
- Axle Temperature, Rear
- Axle Temperature, Front
- Axle Temperature, Center / Steer
- Back Up Switch
- Differential Lock Telltale
- Fuel Filter Restriction
- General Oil Temperature
- PTO Oil Temperature
- Transfer Case Oil Temperature

The inputs from these sensors are fed into the chassis node where the information is then processed into data and sent to the CECU by way of the CAN (Controller Area Network) data bus, specifically the F-CAN. In addition to receiving and processing sensor data, the chassis node also controls the operation of relays that power several electrical subsystems. These include:

- Back Up Alarm
- Windshield Washer

The information sent from the sensors attached to the chassis node is sent to the CECU, processed, and where appropriate returned to the chassis in the form of commands related to the outputs controlled by the chassis node.

The design and manufacture of the chassis node is such that it is delivered to the plant or dealership without configuration parameters loaded into it. Upon the first power cycle of the system the CECU downloads the appropriate configuration parameters so that the chassis node can setup its I/O correctly. Depending on the software configuration of the CECU, these parameters may be different than other trucks and unique

https://truckmanualshub.com/

to the specific requirements of the truck being assembled. Once the chassis node has received its configuration parameters, it stores them in flash memory permanently and does not require any additional downloads from the CECU. This is a one time event, and once complete, the chassis node can be removed and reinstalled without the need of a power cycle.

NOTE
When replacing a chassis node, disconnect the batteries and do not reconnect them until the new node installation and all wiring connections are complete. A new chassis node and the CECU need to be powered up simultaneously during the node's first power cycle; otherwise a fault on the information display will indicate that the CECU is not recognizing the proper communication with the chassis node.

The problem occurs when the CECU and chassis node are not powered up simultaneously during the first power cycle. This may happen for a variety of reasons which include; missing chassis node, missing fuses, harnessing not connected, etc. If the CECU recognizes that the chassis node is not communicating as expected, it will trigger a fault in the information display. Cycling the ignition will not correct this problem since the parameter file is only transmitted to the chassis node after a complete battery power cycle.

Perform a complete battery power cycle by cycling battery power directly at the batteries. Battery power should be removed from the system for at least 30 seconds during the power cycle so that all electrical devices completely discharge and are truly powered down.

Display Diagnostic Codes

This section describes the information display text in the Diagnostic Screen and the DTC that triggered it. In the following table, the "xx" represents any two digit Failure Mode Indicator (FMI).

The following display codes are grouped by source (system or controller the DTC relates to).

https://truckmanualshub.com/

ABS Related Display Codes

For ABS related codes refer to the appropriate ABS service tool and ABS service manual.

ABS Diagnostic Trouble Codes	
Display Text	**DTC**
Diff Lock Solenoid	564xx
ASR Offroad Switch	576xx
System Diagnostic Code 4	614xx
System Voltage	627xx
ECU Fault	629xx
ECU Fault	630xx
J1939	639xx
SA LEFT Wheel Speed Sensor	789xx
SA RIGHT Wheel Speed Sensor	790xx
DA LEFT Wheel Speed Sensor	791xx
DA RIGHT Wheel Speed Sensor	792xx
AA LEFT Wheel Speed Sensor	793xx
AA RIGHT Wheel Speed Sensor	794xx
SA LEFT PMV	795xx
SA RIGHT PMV	796xx
DA LEFT PMV	797xx
DA RIGHT PMV	798xx
AA LEFT PMV	799xx
AA RIGHT PMV	800xx
Retarder Relay	801xx
Relay Diagonal 1	802xx
TCV DA Solenoid	806xx
TCV SA Solenoid	807xx
Wheel Speed Sensor Reversed	810xx
ABS Lamp Fault	811xx
Stop Lamp Switch	1045xx
Trailer PMV	1056xx
SUSP Pressure Sensor	1059xx
Pressure Sensor	1067xx
Pressure Sensor Secondary Circuit	1068xx
Tires Size Out Of Range	1069xx
SAS Signal	1807xx
YRS Sensor	1808xx
LAS Sensor	1809xx
Connect Service Tool	Any Other
ACC Sensor Misaligned	88607
General ACC Fault. Connect Service Tool	88614
ACC Not Available due to Temp. Brake Ov.	383916

CECU Related Display Codes

These tables list the system and circuit and the related DTC code. For a listing of DTC codes in numerical order, please refer to the tables shown in Chapter 12. In addition, the complete table also contains full descriptions of the code and the FMI values.

For troubleshooting of CECU related codes refer to the appropriate instrumentation service manual.

CECU Diagnostic Trouble Codes	
Display Text	**DTC**
Fuel Filter Restriction	16xx on page 12-2
Wait Starter Cooldown Enforced	1675xx on page 12-10
High Beam Lamp(s) Fault	2348xx on page 12-10
Low Beam Lamp(s) Fault	2350xx on page 12-10
Left Front Lamp(s) Fault	2368xx on page 12-11
Right Front Lamp(s) Fault	2370xx on page 12-11
Left Rear Lamp(s) Fault	2372xx on page 12-11
Right Rear Lamp(s) Fault	2374xx on page 12-11
Marker Lamp(s) Fault	2378xx on page 12-12
Clearance Lamp(s) Fault	2382xx on page 12-12
Primary Fog Lamps Fault	2388xx on page 12-12
Secondary Fog Lamps Fault	2390xx on page 12-12
Left Trailer Lamp(s) Fault	2396xx on page 12-13
Right Trailer Lamp(s) Fault	2398xx on page 12-13
Current Sensor Fault	2579xx on page 12-13
Main Light Switch Fault	2872xx on page 12-14
Sec. Light Switch Fault	2873xx on page 12-14
High Beam Switch Fault	2874xx on page 12-15
Hazard Switch Fault	2875xx on page 12-15
Turn Lamp Switch Fault	2876xx on page 12-15
CECU Power Input	3509xx on page 12-15
CECU Power Input	3510xx on page 12-15
Correct at Next Service	3511xx on page 12-15
Correct at Next Service	3512xx on page 12-15
Correct at Next Service	3513xx on page 12-15
Correct at Next Service	3514xx on page 12-15
Correct at Next Service	5125xx on page 12-16
Correct at Next Service	5126xx on page 12-16
Correct at Next Service	5127xx on page 12-16
Correct at Next Service	5128xx on page 12-16
Vehicle Speed Message Missing	8409 on page 12-3
Accel Pedal Message Missing	9109 on page 12-3
App. Air Pressure Sensor Open	11603 on page 12-3
App. Air Pressure Sensor Short	11604 on page 12-3
Pri. Air Pressure Sensor Open	11703 on page 12-3
Pri. Air Pressure Sensor Short	11704 on page 12-3
Sec. Air Pressure Sensor Open	11803 on page 12-3
Sec. Air Pressure Sensor Short	11804 on page 12-4
Ignition Power Circuit Fault	15802 on page 12-4
Ignition Power Circuit Fault	15803 on page 12-4
Ignition Power Circuit Fault	15804 on page 12-4
Control Unit Over Voltage	16800 on page 12-4
Control Unit Under Voltage	16801 on page 12-4

CECU Diagnostic Trouble Codes	
Display Text	**DTC**
Outside Temp Sensor Open	17103 on page 12-4
Outside Temp Sensor Short	17104 on page 12-5
Instant Economy Message Missing	18409 on page 12-5
Engine Speed Message Missing	19009 on page 12-5
Odometer Offset Recalculated	24510 on page 12-5
Engine Hours Message Missing	24709 on page 12-5
Total PTO Hours Message Missing	24809 on page 12-6
Gauge Bus Power Open Circuit	67805 on page 12-7
Gauge Bus Power Short Circuit	67806 on page 12-7
Pri. Fuel Level Sensor Open	82903 on page 12-7
Pri. Fuel Level Sensor Short	82904 on page 12-8
Vehicle Distance Message Missing	91709 on page 12-8
Total PTO Fuel Message Missing	102809 on page 12-8
Instrument Bus Comm Failure	123109 on page 12-8
ABS J1939 Failure	148109 on page 12-9
Trans. J1939 Failure	148209 on page 12-9
Engine J1939 Failure	148309 on page 12-9
Dash Dimmer Switch Open	149106 on page 12-9
Dash Dimmer Switch Short	149206 on page 12-9
Connect Service Tool	Any Other

DPF Related Display Codes

For DPF related codes, refer to the appropriate engine service tool and engine service manual.

DPF Diagnostic Trouble Codes	
Display Text	DTC
Exhaust Trap Inlet Pressure	81xx
Vehicle Speed Sensor	84xx
Fuel Delivery Pressure	94xx
Boost Pressure	102xx
Barometric Pressure	108xx
Switched Power	158xx
Engine Fuel Rate	183xx
Engine Speed	190xx
Total Distance Traveled	245xx
Engine Percent Torque	513xx
J1939 Datalink	639xx
AUX I/O Circuit 1	701xx
AUX I/O Circuit 2	702xx
AUX I/O Circuit 3	703xx
AUX I/O Circuit 4	704xx
AUX I/O Circuit 5	705xx
AUX I/O Circuit 6	706xx
AUX I/O Circuit 7	707xx
Air Supply Pressure Input	1087xx
Exhaust Gas Temp 1	3241xx
Exhaust Gas Temp 3	3245xx
Exhaust Gas Temp 2	3249xx
Particulate Trap 1 Pressure	3251xx
Catalyst Dosing Unit	3361xx
DPF Fuel Pressure Actuator 1	3471xx
DPF Air Pressure Actuator 1	3472xx
DPF Purge Air Pressure	3486xx
Part Trap 1 Regen Not Available	3750xx
Connect Service Tool	Any Other

https://truckmanualshub.com/

Engine Related Display Codes

For engine related codes, refer to the appropriate engine service tool and engine service manual.

Engine Diagnostic Trouble Codes	
Display Text	**DTC**
EGR Valve Leakage	27xx
Secondary Fuel Level	38xx
Intercooler Coolant Temperature	52xx
Two Speed Axle Switch	69xx
Park Brake Switch	70xx
Max Vehicle Speed Limit	74xx
Exhaust Trap Inlet Pressure	81xx
Vehicle Speed Sensor	84xx
Throttle Position	91xx
AUX Torque Switch	93xx
Fuel Delivery Pressure	94xx
Fuel Filter Restriction	95xx
Fuel Tank Level	96xx
Water In Fuel	97xx
Engine Oil Level	98xx
Engine Oil Filter	99xx
Engine Oil Pressure	100xx
Crankcase Pressure	101xx
Boost Pressure	102xx
Turbo Speed	103xx
Intake Manifold Air Temp	105xx
Intake Manifold Pressure	106xx
Barometric Pressure	108xx
Engine Coolant Temperature	110xx
Low Coolant Level	111xx
Water Pump	112xx
Engine Droop	113xx
Inlet Air Mass Flow Rate	132xx
Fuel Rail Pressure	157xx
Switched Power	158xx
Rated Engine Power	166xx
Alternator Potential	167xx
Battery	168xx
Ambient Air Temperature	171xx
Air Inlet Temperature	172xx
Exhaust Gas Temperature	173xx
Fuel Temp	174xx
Engine Oil Temperature	175xx
Engine Fuel Rate	183xx
Engine Speed	190xx
Trans Output Speed	191xx
Trip Fuel	231xx
Total Distance Traveled	245xx
Clock Real Time	251xx
EGR Delta Pressure	411xx
EGR Temp	412xx
OEM AUX Temperature	441xx
Engine Percent Torque	513xx
Retarder Torque	520xx
Gear Out of Range	524xx

Engine Diagnostic Trouble Codes	
Display Text	**DTC**
Reference Retarder	556xx
Throttle Switch	558xx
Torque Converter Lockup	573xx
Engine Idle Timer Override	592xx
Idle Shutdown Occurrence	593xx
Engine Idle Shutdown Alert	594xx
Cruise Enable Switch	596xx
Brake Switch	597xx
Clutch Switch	598xx
Cruise Set Switch	599xx
Cruise Decel Switch	600xx
Cruise Resume Switch	601xx
Cruise Accel Switch	602xx
Brake Pedal Switch 2	603xx
J1708 Data Link Error	608xx
System Diagnostic Code 1	611xx
System Diagnostic Code 2	612xx
System Diagnostic Code 3	615xx
5V Supply 1	620xx
Red Stop Lamp Status	623xx
Amber Stop Lamp Status	624xx
Intake Air Heater	626xx
ECU Power Loss	627xx
ECU Warning	629xx
Engine Software Error	630xx
Engine Software Error	631xx
Fuel Shutoff Valve	632xx
Fuel Control Valve	633xx
Timing Actuator	635xx
Engine Speed Signal	637xx
J1939 Datatlink	639xx
AUX Dual Output Shutdown	640xx
Turbo Actuator	641xx
Engine External Speed Command	644xx
Fan Clutch Driver	647xx
BPV Diag SLMP Data	649xx
Injector Spill Valve 1	651xx
Injector Spill Valve 2	652xx
Injector Spill Valve 3	653xx
Injector Spill Valve 4	654xx
Injector Spill Valve 5	655xx
Injector Spill Valve 6	656xx
Injector Spill Valve 7	657xx
Injector Spill Valve 8	658xx
Injector Spill Valve 9	659xx
Injector Spill Valve 10	660xx
Injector Spill Valve 11	661xx
Injector Spill Valve 12	662xx
Starter Solenoid	677xx
8V Supply	678xx
AUX PWM Driver	697xx
AUX I/O Circuit 1	701xx
AUX I/O Circuit 2	702xx
AUX I/O Circuit 3	703xx
AUX I/O Circuit 4	704xx

Engine Diagnostic Trouble Codes	
Display Text	**DTC**
AUX I/O Circuit 5	705xx
AUX I/O Circuit 6	706xx
AUX I/O Circuit 7	707xx
Speed Sensor 2	723xx
Inlet Air Heater	729xx
A/C Comp Clutch Switch	876xx
Front Axle Speed	904xx
PWM Output	923xx
Auxiliary Output 2	925xx
Auxiliary Output 3	926xx
Fuel Pump Actuator	931xx
Engine Retarder	973xx
Remote Accel	974xx
Fan Control Output	977xx
PTO Set Speed Switch	979xx
PTO Enable Switch	980xx
Remote PTO Resume Switch	982xx
Remote PTO Set Switch	984xx
A/C Pressure Switch	985xx
Fan Request Speed	986xx
Sensor Supply Voltage	1043xx
Fan Driver	1071xx
Engine Brake (Jake)	1072xx
Engine Brake (Jake)	1073xx
Exhaust Brake Actuator	1074xx
Fuel Lift Pump	1075xx
Fuel Injection Pump Calibration	1076xx
Fuel Injection Pump Control	1077xx
5V Supply 1	1079xx
5V Supply 2	1080xx
Engine Retarder Torque	1085xx
Air Supply Pressure Input	1087xx
Engine Warning State	1107xx
Engine Near Shutdown	1109xx
Engine Brake Output	1112xx
Foot Brake Switch	1121xx
Post Intercooler Temp	1131xx
ECU Temp	1136xx
Turbo Inlet Temperature	1172xx
Turbo Wastegate Actuator	1188xx
Anti-Theft	1195xx
Anti-Theft	1196xx
Exhaust Gas Pressure	1209xx
Water Pump Temp	1212xx
Fault CAN Bus 2	1231xx
Engine Shutdown Switch	1237xx
High Fuel Leakage	1239xx
Fuel Control Valve	1244xx
Timing Actuator	1245xx
Oil Burn Valve	1265xx
Idle Shutdown	1267xx
Starter Solenoid	1321xx
Fuel Rail 1	1347xx
Fuel Rail 2	1348xx
Injector Rail	1349xx

Engine Diagnostic Trouble Codes	
Display Text	**DTC**
Change Engine Oil	1378xx
Engine Oil Level	1380xx
Fuel Filter	1382xx
AUX Temp 1	1385xx
AUX Pressure	1388xx
Pressure Relief Valve	1442xx
ECU Power Relay	1485xx
Injector Boost Voltage	1542xx
Engine Derated	1569xx
Cruise Speed Out of Range	1588xx
Cruise Speed Out of Range	1590xx
Cruise Pause Switch	1633xx
Intake Air Temperature	1636xx
Fan Speed	1639xx
Auto Start Failed	1664xx
Demand Retarder	1715xx
Retarder Selection	1716xx
Catalyst Tank Level	1761xx
Maximum Retarder Speed	1780xx
YC Engine Control	1817xx
YC Brake Control	1819xx
Accel Pedal Position	2623xx
Turbo 1	2629xx
Auxiliary Output 4	2646xx
Auxiliary Output 5	2647xx
EGR Mass Flow	2659xx
Turbo 1 Inlet	2789xx
Turbo 1 Output	2790xx
EGR	2791xx
VGT Position	2795xx
Engine Injector Calibration	2797xx
Air Shutdown Actuator	2813xx
Trans Crank Enable	2900xx
Intake Valve Oil Pressure	2948xx
Intake Valve Oil Pressure	2949xx
Intake Valve Actuator 1	2950xx
Intake Valve Actuator 2	2951xx
Intake Valve Actuator 3	2952xx
Intake Valve Actuator 4	2953xx
Intake Valve Actuator 5	2954xx
Intake Valve Actuator 6	2955xx
Coolant Driver	2988xx
Catalyst Missing	3050xx
EGR Plugged	3058xx
J1939 DPF Monitor	3064xx
Exhaust Gas Temp 1	3241xx
Particulate Trap Inlet Temp 1	3242xx
Exhaust Gas Temp 3	3245xx
Particulate Trap Outlet Temp	3246xx
Exhaust Gas Temp 2	3249xx
Particulate Trap 1 Pressure	3251xx
Particulate Trap 2 Temp	3258xx
Particulate Trap 2 Inlet Temp	3276xx
Particulate Trap 2 Outlet Temp	3280xx
Particulate Trap 2 Pressure	3285xx

https://truckmanualshub.com/

Engine Diagnostic Trouble Codes	
Display Text	**DTC**
Catalyst Dosing Unit	3361xx
DPF Fuel Pressure Actuator 1	3471xx
DPF Air Pressure Actuator 1	3472xx
DPF Ignition Failure	3473xx
DPF Ignition Loss	3474xx
DPF Fuel Pressure Control	3479xx
DPF Fuel Pressure Voltage	3480xx
Regen Fuel Rate	3481xx
DPF Fuel Enable Actuator	3482xx
DPF Ignition Current	3484xx
DPF Purge Air Pressure	3486xx
DPF Air Pressure Control	3487xx
DPF Purge Air Actuator	3490xx
DPF Fuel Pressure	3494xx
Sensor Supply Voltage 1	3509xx
Sensor Supply Voltage 2	3510xx
Sensor Supply Voltage 3	3511xx
Sensor Supply Voltage 4	3512xx
Sensor Supply Voltage 5	3513xx
Regen Manually Disabled	3530xx
Ambient Air Density	3555xx
DPF Fuel Injector 1 No Response	3556xx
ECU Power Output	3598xx
Engine Injector 1 Actuator 2	3659xx
Engine Injector 2 Actuator 2	3660xx
Engine Injector 3 Actuator 2	3661xx
Engine Injector 4 Actuator 2	3662xx
Engine Injector 5 Actuator 2	3663xx
Engine Injector 6 Actuator 2	3664xx
Particulate Trap Regen Inhibit Switch	3695xx
Particulate Trap Regen Force Switch	3696xx
Active Regen Switched Off	3703xx
Particulate Trap Regen Inhibited	3711xx
Particulate Trap Soot Load Percent	3719xx
Part Trap 1 Regen Not Available	3750xx
DPF Secondary Air Diff Pressure	3830xx
DPF Secondary Air Mass Flow	3832xx
NOx Limit Exceed Due to Quality	4094xx
NOx Limit Exceed Due to Quantity	4096xx
NOx Limit Exceed Due to Quality	4094xx
NOx Limit Exceed Due to Quantity	4096xx
DPF Fuel Drain Voltage	4097xx
Aftertreatment DEF Tank Low Level Indicator	5245xx
Aftertreatment SCR Operator Inducement Severity	5246xx
Electronic Trans Control 1	61442xx
Electronic Trans Control 2	61445xx
SWD Derate Lamp Data	65519xx
EXT PWM PCAC	65520xx
J1939CM DPF State	65521xx
J1939CM DPF Shutdown	65522xx
EXT PWM Back Pressure	65523xx
J1939CM DPF Post Filter	65524xx
J1939CM DPF Fail WO Engine	65525xx

Engine Diagnostic Trouble Codes	
Display Text	**DTC**
J1939CM DPF Fail And Engine	65526xx
J1939CM DPF Lamp Data	65527xx
Fuel Injector 246 HI	65528xx
Fuel Injector 135 HI	65529xx
Fuel Injector 4 Lamp Data	65530xx
Fuel Injector 2 Lamp Data	65531xx
Fuel Injector 6 Lamp Data	65532xx
Fuel Injector 3 Lamp Data	65533xx
Fuel Injector 5 Lamp Data	65534xx
Fuel Injector 1 Lamp Data	65535xx
CGI Mass Flow Rate	520192xx
CGI Gas Temp	520193xx
CGI Actuator Shaft Position	520194xx
CGI Diff Pressure	520196xx
CGI Absolute Pressure	520197xx
See Operator's Manual	Any Other

HVAC Related Display Codes

For HVAC related codes, refer to the appropriate service tool and HVAC service manual.

HVAC Diagnostic Trouble Codes	
Display Text	**DTC**
Low Refrigerant Charge	871xx
Compressor Clutch Relay Circuit	876xx
A/C Evaporator Temperature	1547xx
CAB HVAC Temperature Control Actuator	3986xx
Cab HVAC Mode Control Actuator Panel	3981xx
Cab HVAC Mode Control Actuator Defrost	520196xx
Cab HVAC Mode Control Actuator Floor	520197xx
Cab HVAC Recirculation Door Control Actuator	3984xx
Cab HVAC System Controller	3985xx
HVAC Blower Motor Speed Adjustment	1553xx
Battery Potential / Power Input 1	168xx
Pressure Sensor supply voltage	3509xx
J1939 Network	639xx
Sun load sensor	919xx

Transmission Related Display Codes

For transmission related codes, refer to the appropriate transmission service tool and transmission service manual.

Transmission Diagnostic Trouble Codes	
Display Text	**DTC**
Correct at Next Service	3359xx
Correct at Next Service	4177xx
Correct at Next Service	4178xx
Connect Service Tool	Any Other

https://truckmanualshub.com/

Electric Over Air Switches

Electric Over Air (EOA) switches initiate electrical signals to control air-valves in order to activate and deactivate air functions.

Functional description

The EOA System is described as the following: electrical switches send a logic signal to the CECU that signifies a state change in the air function. The CECU inputs the switch states and applies a software interlock, if applicable, to ensure that all defined parameters for the specific interlock are met before allowing the function to change states. Once the interlock conditions have been met, the CECU sends an SAE J1939 multiplexed message to the Chassis Node. The Chassis Node accepts the multiplexed message and activates/deactivates the desired output corresponding to a specific accessory air solenoid. The following table provides a list of all air controls that also contain a CECU software interlock condition. The table does not include any interlocks programmed into other ECU's (such as the Transmission or Engine ECU) or any mechanical interlocks designed into the air system. The second column will show what condition must be true for the air control to function and the last column provides programmable limits if the parameter is configurable. If the interlock is not programmable, then the cell has been left blank. If an interlock has been activated, the instrument cluster will provide operator instructions on how to resolve the interlock.

NAMUX 4 Software EOA Interlocks

Function Description	Interlock Condition	Parameter Limits
2-Speed Rear Axle Switch	Inter-Axle Diff. Lock Switch Off	
	Park Brakes Set	
Air Accessory Switch	Park Brakes Set	
Air Suspension Dump Switch	Park Brakes Set	
Air Suspension Dump Switch	Under Speed Threshold = 5 mph (8 km/h)	0-10 mph (0-16 km/h)
Air Suspension Over-Inflation Switch (Kenworth Only)	Under Speed Threshold = 25 mph (40 km/h)	
Aux Trans 3-Position Control Switch	Park Brakes Set	
Fifth Wheel Slide Switch	Under Speed Threshold=3 mph (5 km/h)	0-5 mph (0-8 km/h)
Front-Axle Declutch Switch (Kenworth Only)	Under Speed Threshold = 25 mph (40 km/h)	0-70 mph (0-112 km/h)
Inter-Axle Differential Lock Switch	Under Speed Threshold = 25 mph (40 km/h)	25-70 mph (40 - 112 km/h)

Function Description	Interlock Condition	Parameter Limits
Kingpin Release Switch	Park Brakes Set	
PTO Switch #1	Park Brakes Set	
PTO Switch #2	Park Brakes Set	
PTO Two-Position Switch	Park Brakes Set	
Trailer Air Suspension Dump Switch	Under Speed Threshold = 5 mph (8 km/h)	0-10 mph (0-16 km/h)
	Park Brakes Set	
Trailer Dump Gate Switch (Kenworth Only)	Under Speed Threshold = 25 mph (40 km/h)	0-40 mph (0-64 km/h)
Trailer Center Dump Gate Switch (Kenworth Only)	Under Speed Threshold = 25 mph (40 km/h)	0-40 mph (0-64 km/h)
Trailer Forward Dump Gate Switch (Kenworth Only)	Under Speed Threshold = 25 mph (40 km/h)	0-40 mph (0-64 km/h)
Trailer Rear Dump Gate Switch (Kenworth Only)	Under Speed Threshold = 25 mph (40 km/h)	0-40 mph (0-64 km/h)
Transfer Case Engage/Disengage Switch (Kenworth Only)	Under Speed Threshold = 1 mph (1.6 km/h) Range: 1-1 AND Transmission in Neutral	
Transfer Case Hi/Low Switch	Under Speed Threshold = 1 mph (1.6 km/h) Range: 1-1 AND Transmission in Neutral	
Truck Dump Gate Switch (Kenworth Only)	Under Speed Threshold = 25 mph (40 km/h)	0-40 mph (0-64 km/h)
Wheel Diff. Lock Front Axle Switch	Under Speed Threshold = 25 mph (40 km/h)	
Wheel Diff. Lock Forward Rear Axle Switch	Under Speed Threshold = 25 mph (40 km/h)	
Wheel Diff. Lock Center Rear Axle Switch (Kenworth Only)	Under Speed Threshold = 25 mph (40 km/h)	
Wheel Diff. Lock Rear Rear Axle Switch	Under Speed Threshold = 25 mph (40 km/h)	
Wheel Diff. Lock Single Rear Axle Switch (Kenworth Only)	Under Speed Threshold = 25 mph (40 km/h)	
Wheel Diff. Lock Dual Rear Axles Switch	Under Speed Threshold = 25 mph (40 km/h)	

https://truckmanualshub.com/

12 Troubleshooting

Diagnostic Trouble Codes . . . . . 12 - 2

CAN Troubleshooting Procedures . 12 - 16

Terminating Resistor Test Procedure 12 - 17

Data Collection . . . . . 12 - 18

Diagnosing the VCAN Trunk . . . . 12 - 19

Diagnosing the VCAN Branch . . . 12 - 21

Diagnosing Devices on a CAN Line . 12 - 22

Diagnosing the ECAN . . . . . 12 - 23

Diagnosing the TCAN . . . . . 12 - 25

Diagnosing the CCAN (without Multifunction Steering Wheel) . . 12 - 27

Diagnosing the CCAN (with Multifunction Steering Wheel) . . 12 - 29

Diagnosing the ACAN (with PACCAR MX engine) . . . . . 12 - 31

Diagnosing the ICAN . . . . . 12 - 33

Diagnosing the BCAN, DCAN or FCAN . . . . . 12 - 35

Locating a Failed Resistor or an Open Between Two Resistors . . . . . 12 - 39

https://truckmanualshub.com/

Diagnostic Trouble Codes

Introduction

This chart provides: a listing of possible CECU related diagnostic trouble codes (DTCs), detailing the following:

- Diagnostic trouble codes (DTCs)
- Where the signal input is received
- Component affected
- Fault description
- Detailed summary including possible causes

For pinpoint tests and troubleshooting procedures, refer to the appropriate instrumentation service manual. In addition, the Electrical Service manual will contain location information for harnesses and the Air system manual will contain location information for air pressure sensors.

DTC	Input Received By	Item / System	Description	Detailed Description
1603	Chassis Node	Fuel Filter Restriction	Open in fuel filter restriction circuit	This DTC will be recorded when the control unit sees an open or short to ground at the fuel filter restriction sensor input. Some possible causes for this are a broken wire, corroded or disconnected connector, or sensor failure.
1604	Chassis Node	Fuel Filter Restriction	Short in fuel filter restriction circuit	This DTC will be recorded when the control unit sees a short to +5V at the fuel filter restriction sensor input. Some possible causes for this are a pinched wire, water in a connector, or sensor failure.
7503		Front Steer Axle Oil Temp	Open in front steer axle oil temp circuit	This DTC will be recorded when the control unit sees an open at the front steer drive axle oil temperature sensor input. Some possible causes for this are a broken wire, corroded or disconnected connector, or sensor failure.
7504		Front Steer Axle Oil Temp	Short in front steer axle oil temp circuit	This DTC will be recorded when the control unit sees a short to ground at the front steer axle oil temperature sensor input. Some possible causes for this are a pinched wire, water in a connector, or sensor failure.
7703	Chassis Node	Rear Drive Oil Temp	Open in rear drive axle oil temp circuit	This DTC will be recorded when the control unit sees an open at the rear drive axle oil temperature sensor input. Some possible causes for this are a broken wire, corroded or disconnected connector, or sensor failure.
7704	Chassis Node	Rear Drive Oil Temp	Short in rear drive axle oil temp circuit	This DTC will be recorded when the control unit sees a short to ground at the rear drive axle oil temperature sensor input. Some possible causes for this are a pinched wire, water in a connector, or sensor failure.
7803	Chassis Node	Center/Steer axle Oil Temp	Open in center drive axle oil temp circuit	This DTC will be recorded when the control unit sees an open at the center drive axle oil temperature sensor input. Some possible causes for this are a broken wire, corroded or disconnected connector, or sensor failure.
7804	Chassis Node	Center Drive axle Oil Temp	Short in center drive axle oil temp circuit	This DTC will be recorded when the control unit sees a short to ground at the center drive axle oil temperature sensor input. Some possible causes for this are a pinched wire, water in a connector, or sensor failure.

https://truckmanualshub.com/

DTC	Input Received By	Item / System	Description	Detailed Description
8409	CECU	Wheel-Based Vehicle Speed Message	Wheel based vehicle speed message missing	This DTC will be recorded when the control unit does not see the Wheel Based Vehicle Speed message from the engine, or when the message has timed out. Some possible causes for this include faulty wiring to the engine controller, incorrect engine programming or a faulty engine controller.
9003	Chassis Node	PTO Oil Temp	Open in PTO oil temp circuit	This DTC will be recorded when the control unit sees an open at the PTO oil temperature sensor input. Some possible causes for this are a broken wire, corroded or disconnected connector, or sensor failure.
9004	Chassis Node	PTO Oil Temp	Short in PTO oil temp circuit	This DTC will be recorded when the control unit sees a short to ground at the PTO oil temperature sensor input. Some possible causes for this are a pinched wire, water in a connector, or sensor failure.
9109	CECU	Accelerator Pedal Position Message	Accelerator pedal position message missing	This DTC will be recorded when the control unit does not see the Accelerator Pedal Position Speed message from the engine, or when the message has timed out. Some possible causes for this include faulty data link wiring to the engine controller, incorrect engine programming or a faulty engine controller.
10703	CECU	Air Filter Restriction	Open in air filter restriction circuit	This DTC will be recorded when the control unit sees an open at the air filter restriction sensor input. Some possible causes for this are a broken wire, corroded or disconnected connector, or sensor failure.
10704	CECU	Air Filter Restriction	Short in air filter restriction circuit	This DTC will be recorded when the control unit sees a short to +5V at the air filter restriction sensor input. Some possible causes for this are a pinched wire, water in a connector, or sensor failure.
11603	CECU	Application Air Pressure	Open in application air pressure circuit	This DTC will be recorded when the control unit sees an open or short to ground at the tractor brake application air pressure sensor input. Some possible causes for this are a broken wire, corroded or disconnected connector, or sensor failure.
11604	CECU	Application Air Pressure	Short in application air pressure circuit	This DTC will be recorded when the control unit sees a short to +5V at the tractor brake application air pressure sensor input. Some possible causes for this are a pinched wire, water in a connector, or sensor failure.
11703	CECU	Primary Air Pressure	Open in primary air pressure circuit	This DTC will be recorded when the control unit sees an open or short to ground at the primary air pressure sensor input. Some possible causes for this are a broken wire, corroded or disconnected connector, or sensor failure.
11704	CECU	Primary Air Pressure	Short in primary air pressure circuit	This DTC will be recorded when the control unit sees a short to +5V at the primary air pressure sensor input. Some possible causes for this are a pinched wire, water in a connector, or sensor failure.
11803	CECU	Secondary Air Pressure	Open in secondary air pressure circuit	This DTC will be recorded when the control unit sees an open or short to ground at the secondary air pressure sensor input. Some possible causes for this are a broken wire, corroded or disconnected connector, or sensor failure.

https://truckmanualshub.com/

DTC	Input Received By	Item / System	Description	Detailed Description
11804	CECU	Secondary Air Pressure	Short in secondary air pressure circuit	This DTC will be recorded when the control unit sees a short to +5V at the secondary air pressure sensor input. Some possible causes for this are a pinched wire, water in a connector, or sensor failure.
15802	CECU	Ignition Power	Ignition Power is in an indeterminate state	This DTC will be recorded when the control unit sees between 33% and 66% of battery voltage on the ignition pin. A possible cause for this is faulty ignition sense wiring. The ignition sense wire comes from the power distribution box to the control unit behind the cup holder. This sense wire is also used for other control units such as the door modules and cluster. The wiring to those control units may be the issue.
15803	CECU	Ignition Power	12V is on control unit ignition pin but not on cluster ignition pin	This DTC will be recorded when the control unit sees 12V on control unit ignition pin but not on cluster ignition pin. Some possible causes for this are a broken wire, corroded or disconnected connector. Ignition power is supplied to the cluster from the power distribution box near the drivers left foot through the IP harness to the cluster.
15804	CECU	Ignition Power	12V is on cluster ignition pin but not on control unit ignition pin	This DTC will be recorded when the control unit sees 12V on cluster ignition pin but not on control unit ignition pin. Some possible causes for this are a broken wire, corroded or disconnected connector. Ignition power is supplied to the control unit from the power distribution box near the drivers left foot through the IP harness to the control unit behind the cup holder.
16800	CECU	Control Unit Battery Voltage	Over voltage	The control unit continually monitors the voltage it is supplied. If the voltage is above 16.5 volts the system will record this fault. Some possible causes for this fault are faulty alternator, or jump starting with to high of voltage. Power is supplied from the power distribution box near the drivers left foot through the IP harness to the control unit behind the cup holder.
16801	CECU	Control Unit Battery Voltage	Under voltage for more than 10 minutes	The control unit continually monitors the voltage it is supplied. If the voltage is below 8.4 volts for 10 minutes the system will record this fault. Some possible causes for this fault are low batteries, too much system load, faulty alternator, or corroded connectors. Power is supplied for the power distribution box near the drivers left foot through the IP harness to the control unit behind the cup holder.
17102	CECU	Outside Air Temp	Outside air temp message from engine error	This DTC will be recorded when the CAN signal for the outside air temperature sensor from the engine is in the invalid range. Some possible causes for this are broken wire or sensor failure. Modifying the sensor or its location can impact vehicle performance, emissions, and/or reliability.
17103	CECU	Outside Air Temp	Open in outside air temp circuit	This DTC will be recorded when the control unit sees an open at the outside air temperature sensor input. Some possible causes for this are a broken wire, corroded or disconnected connector, or sensor failure.

https://truckmanualshub.com/

DTC	Input Received By	Item / System	Description	Detailed Description
17104	CECU	Outside Air Temp	Short in outside air temp circuit	This DTC will be recorded when the control unit sees a short to ground at the outside air temperature sensor input. Some possible causes for this are a pinched wire, water in a connector, or sensor failure.
17303	CECU	Exhaust Temp	Open in exhaust temp circuit	This DTC will be recorded when the control unit sees an open at the exhaust temp sensor input. Some possible causes for this are a broken wire, corroded or disconnected connector, or sensor failure.
17304	CECU	Exhaust Temp	Short in exhaust temp circuit	This DTC will be recorded when the control unit sees a short to ground at the exhaust temp sensor input. Some possible causes for this are a pinched wire, water in a connector, or sensor failure.
17703	CECU	Transmission Oil Temp	Open in transmission oil temp circuit	This DTC will be recorded when the control unit sees an open at the transmission oil temperature sensor input. Some possible causes for this are a broken wire, corroded or disconnected connector, or sensor failure.
17704	CECU	Transmission Oil Temp	Short in transmission oil temp circuit	This DTC will be recorded when the control unit sees a short to ground at the transmission oil temperature sensor input. Some possible causes for this are a pinched wire, water in a connector, or sensor failure.
18409	CECU	Instantaneous Fuel Economy message	Instantaneous fuel economy message missing	This DTC will be recorded when the control unit does not see the Instantaneous Fuel Economy message from the engine, or when the message has timed out. Some possible causes for this include faulty wiring to the engine controller or a faulty/misconfigured engine controller.
19009	CECU	Engine Speed Message	Engine speed message missing	This DTC will be recorded when the control unit does not see the Engine Speed message from the engine, or when the message has timed out. Some possible causes for this include faulty wiring to the engine controller or a faulty/misconfigured engine controller.
23731	CECU	Engine VIN	VIN mismatched	This DTC will be recorded when the control unit sees a mismatch between the VIN from the engine and the VIN stored in the control unit.
24510	CECU	Offset of Odometer	Odometer offset has been recalculated	The instrumentation system continually calculates the odometer reading using information from the engine ECU. It stores the offset between the engine ECU and instrumentation system. This offset is recalculated if the engine ECU or the control unit are replaced. This DTC will appear when the offset is recalculated.
24709	CECU	Engine Total Hours of Operation	Engine total hours of operation message missing	This DTC will be recorded when the control unit does not see the Engine Total Hours of Operation message from the engine, or when the message has timed out. Some possible causes for this include faulty data bus wiring to the engine controller or a faulty/misconfigured engine controller.

DTC	Input Received By	Item / System	Description	Detailed Description
24809	CECU	Total Power Takeoff Hours	Total power takeoff hours message missing	This DTC will be recorded when the control unit does not see the Total Power Takeoff Hours message from the engine, or when the message has timed out. Some possible causes for this include faulty data bus wiring to the engine controller or a faulty/misconfigured engine controller.
44103	Chassis Node	General Temp	Open in general oil temp circuit	This DTC will be recorded when the control unit sees an open at the general oil temperature sensor input. Some possible causes for this are a broken wire, corroded or disconnected connector, or sensor failure. The wiring for this sensor runs from the chassis node through the chassis and IP harnesses to a connector behind the right hand gauge panel.
44104	Chassis Node	General Temp	Short in general oil temp circuit	This DTC will be recorded when the control unit sees a short to ground at the general temperature sensor input. Some possible causes for this are a pinched wire, water in a connector, or sensor failure. The wiring for this sensor runs from the chassis node through the chassis and IP harnesses to a connector behind the right hand gauge panel.
44203	Chassis Node	Aux Transmission Temp	Open in aux transmission temp circuit	This DTC will be recorded when the control unit sees an open at the auxiliary transmission oil temperature sensor input. Some possible causes for this are a broken wire, corroded or disconnected connector, or sensor failure.
44204	Chassis Node	Aux Transmission Temp	Short in aux transmission temp circuit	This DTC will be recorded when the control unit sees a short to ground at the auxiliary transmission oil temperature sensor input. Some possible causes for this are a pinched wire, water in a connector, or sensor failure.
57803	Chassis Node	Forward Drive Oil Temp	Open in forward drive axle oil temp circuit	This DTC will be recorded when the control unit sees an open at the forward drive axle oil temperature sensor input. Some possible causes for this are a broken wire, corroded or disconnected connector, or sensor failure.
57804	Chassis Node	Forward Drive Oil Temp	Short in forward drive axle oil temp circuit	This DTC will be recorded when the control unit sees a short to ground at the forward drive axle oil temperature sensor input. Some possible causes for this are a pinched wire, water in a connector, or sensor failure.
59631		Cruise Control	Cruise control rationality check	This DTC will be recorded when the driver attempts to set the SET or RESUME before he has touched the brake and the clutch. This fault will remain active until the keyswitch is cycled.
59902		Cruise Control	Invalid input from cruise control set switch	This DTC will be recorded when the control unit sees an invalid voltage range from the cruise control set switch. Some possible causes for this are an intermittent connection at the switch, corroded or broken wire or bad switch.
59631		Cruise Control	Invalid input from cruise control resume switch	This DTC will be recorded when the control unit sees an invalid voltage range from the cruise control resume switch. Some possible causes for this are an intermittent connection at the switch, corroded or broken wire or bad switch.

https://truckmanualshub.com/

DTC	Input Received By	Item / System	Description	Detailed Description
67805	CECU	CVSG / MCS Supply	CVSG / MCS supply open load	This DTC will be recorded when the control unit sees an open load on the power supply to the CVSG bus and the Menu Control Switch. A possible cause of this failure is a broken wire leading to the 2" gauges. A common symptom of this fault is that none of the 2" gauges are working.
67806	CECU	CVSG / MCS Supply	CVSG / MCS supply shorted to ground	This DTC will be recorded when the sees a short to ground on the CVSG supply. Some possible causes for this are a pinched wire, bent pins on a CVSG or a failed CVSG.
80404	CECU	ABS Mode	“Tractor ABS Not Installed” input is shorted and ABS system is present.	This DTC will be recorded when the control unit “ABS Installed” parameter is disabled and it is receiving messages from an ABS system on V-CAN. If the vehicle is to be equipped with ABS enable the “ABS Installed” parameter. If the vehicle is not to be equipped with ABS remove the ABS control unit.
70104	CECU	Electric Over Air	Electric over air switch 1 short to ground	This DTC will be recorded when the control unit sees a short to ground at the electric over air switch 1 input. Some possible causes for this are a pinched wire, water in a connector, or switch failure.
70204	CECU	Electric Over Air	Electric over air switch 2 short to ground	This DTC will be recorded when the control unit sees a short to ground at the electric over air switch 2 input. Some possible causes for this are a pinched wire, water in a connector, or switch failure.
70304	CECU	Electric Over Air	Electric over air switch 3 short to ground	This DTC will be recorded when the control unit sees a short to ground at the electric over air switch 3 input. Some possible causes for this are a pinched wire, water in a connector, or switch failure.
70404	CECU	Electric Over Air	Electric over air switch 4 short to ground	This DTC will be recorded when the control unit sees a short to ground at the electric over air switch 4 input. Some possible causes for this are a pinched wire, water in a connector, or switch failure.
70504	CECU	Electric Over Air	Electric over air switch 5 short to ground	This DTC will be recorded when the control unit sees a short to ground at the electric over air switch 5 input. Some possible causes for this are a pinched wire, water in a connector, or switch failure.
70604	CECU	Electric Over Air	Electric over air switch 6 short to ground	This DTC will be recorded when the control unit sees a short to ground at the electric over air switch 6 input. Some possible causes for this are a pinched wire, water in a connector, or switch failure.
70704	CECU	Electric Over Air	Electric over air switch 7 short to ground	This DTC will be recorded when the control unit sees a short to ground at the electric over air switch 7 input. Some possible causes for this are a pinched wire, water in a connector, or switch failure.
70804	CECU	Electric Over Air	Electric over air switch 8 short to ground	This DTC will be recorded when the control unit sees a short to ground at the electric over air switch 8 input. Some possible causes for this are a pinched wire, water in a connector, or switch failure.
82903	Chassis Node	Primary Fuel	Open in primary fuel level circuit	This DTC will be recorded when the control unit sees an open at the primary fuel level sensor input. Some possible causes for this are a broken wire, corroded or disconnected connector, or sensor failure.

https://truckmanualshub.com/

DTC	Input Received By	Item / System	Description	Detailed Description
82904	Chassis Node	Primary Fuel	Short in primary fuel level circuit	This DTC will be recorded when the control unit sees a short to ground at the primary fuel level sensor input. Some possible causes for this are a pinched wire, water in a connector, or sensor failure.
83003	Chassis Node	Secondary Fuel	Open in secondary fuel level circuit	This DTC will be recorded when the control unit sees an open at the secondary fuel level sensor input. Some possible causes for this are a broken wire, corroded or disconnected connector, or sensor failure.
83004	Chassis Node	Secondary Fuel	Short in secondary fuel level circuit	This DTC will be recorded when the control unit sees a short to ground at the secondary fuel level sensor input. Some possible causes for this are a pinched wire, water in a connector, or sensor failure.
88609		Adaptive Cruise	Control unit cannot read messages from adaptive cruise on V-CAN	This DTC will be recorded when the control unit cannot read messages from the Adaptive Cruise ECU. Some possible causes for this are a broken wire, corroded or disconnected connector, no terminating resistors, no power to the Adaptive Cruise ECU or Adaptive Cruise ECU failure.
91709	CECU	High Resolution Vehicle Distance Message	High resolution vehicle distance message missing	This DTC will be recorded when the control unit does not see the High Resolution Vehicle Distance message from the engine, or when the message has timed out. Some possible causes for this include faulty data bus wiring to the engine controller or a faulty engine controller.
97403	Chassis Node	Remote Accelerator	Open in remote accelerator circuit	This DTC will be recorded when the control unit sees an open at the remote accelerator input. Some possible causes for this are a broken wire, corroded or disconnected connector, or throttle controller failure.
97404	Chassis Node	Remote Accelerator	Short in remote accelerator circuit	This DTC will be recorded when the control unit sees a short to ground at the remote accelerator input. Some possible causes for this are a pinched wire, water in a connector, or throttle controller failure.
102809	CECU	Total Engine PTO Fuel Used Message	Total engine PTO fuel used message missing	This DTC will be recorded when the control unit does not see the Total Engine PTO Fuel Used message from the engine, or when the message has timed out. Some possible causes for this include faulty data bus wiring to the engine controller or a faulty/misconfigured engine controller.
123109	CECU	I-CAN	Control Unit cannot read messages from cluster on I-CAN	This DTC will be recorded when the control unit cannot read messages from the cluster. Some possible causes for this are a broken wire, corroded or disconnected connector, no power to the cluster or cluster failure.
138703	CECU	Brake Saver Oil Temp	Open in brake saver oil temp circuit	This DTC will be recorded when the control unit sees an open at the brake saver oil temperature sensor input. Some possible causes for this are a broken wire, corroded or disconnected connector, or sensor failure.
138704	CECU	Brake Saver Oil Temp	Short in brake saver oil temp circuit	This DTC will be recorded when the control unit sees a short to ground at the brake saver oil temperature sensor input. Some possible causes for this are a pinched wire, water in a connector, or sensor failure.

https://truckmanualshub.com/

DTC	Input Received By	Item / System	Description	Detailed Description
138803	Chassis Node	Transfer Case Oil Temp	Open in transfer case oil temp circuit	This DTC will be recorded when the control unit sees an open at the transfer case oil temperature sensor input. Some possible causes for this are a broken wire, corroded or disconnected connector, or sensor failure.
138804	Chassis Node	Transfer Case Oil Temp	Short in transfer case oil temp circuit	This DTC will be recorded when the control unit sees a short to ground at the transfer case oil temperature sensor input. Some possible causes for this are a pinched wire, water in a connector, or sensor failure.
148109	CECU	V-CAN	Control unit cannot read messages from ABS on V-CAN	This DTC will be recorded when the control unit cannot read messages from the ABS system. Some possible causes for this are a broken wire, corroded or disconnected connector, no terminating resistors, no power to the ABS system or ABS ECU failure.
148209	CECU	V-CAN	Control Unit cannot read messages from Transmission on V-CAN	This DTC will be recorded when the control unit cannot read messages from the transmission ECU. Some possible causes for this are a broken wire, corroded or disconnected connector, no terminating resistors, no power to the Transmission or Transmission ECU failure.
148309	CECU	V-CAN	Control Unit cannot read messages from Engine on V-CAN	This DTC will be recorded when the control unit cannot read messages from the engine ECU. Some possible causes for this are a broken wire, corroded or disconnected connector, no terminating resistors, no power to the engine or engine ECU failure.
148702	CECU	Dash Light Dimmer	Dimmer invalid range	This is caused by the Dimmer Up or Dimmer Down wires reporting invalid voltage. Check the switch and wiring for damage
148703			Open in dash dimmer input circuit	This DTC will be recorded when the control unit sees an open at the dash light dimmer control input. Some possible causes for this are a broken wire, corroded or disconnected connector, or dimmer control failure.
148704			Short in dash dimmer input circuit	This DTC will be recorded when the control unit sees a short to ground at the dash light dimmer control input. Some possible causes for this are a pinched wire, water in a connector, or dimmer control failure.
148707			Dimmer stuck	This is caused by either the Dimmer switch button being stuck Up or Down for 20 seconds. Check the switch and wiring for damage
149106			Short in dash dimmer output #1 circuit	This DTC will be recorded when the sees a short to ground on the #1 dimmer output. Some possible causes for this are a pinched wire, water in a connector, or dimmed component failure. This output controls dimming to the left and right spare backlighting.
149206			Short in dash dimmer output #2 circuit	This DTC will be recorded when the sees a short to ground on the #2 dimmer output. Some possible causes for this are a pinched wire, water in a connector, or dimmed component failure. This output controls dimming to much of the instrument illumination and backlighting.

https://truckmanualshub.com/

DTC	Input Received By	Item / System	Description	Detailed Description
167502	CECU	Starter Motor Cooldown Enforce	Starter disabled due to over crank protection	This DTC will be recorded when the allowed cranking time has been reached and the starter is disabled. This DTC will go away and the starter will be re-enabled after 15 minutes.
176102	CECU	Diesel Exhaust Fluid	Diesel exhaust fluid level message error	This DTC will be recorded when the control unit receives an invalid range on the diesel exhaust fluid level message from the engine ECU or does not receive the message in a timely manner.
176109		Diesel Exhaust Fluid	Diesel exhaust fluid level message error	This DTC will be recorded when the control unit receives a Not Available signal on the diesel exhaust fluid level message from the engine ECU or when the message has timed out. Some possible causes for this include faulty wiring to the engine controller or a faulty/misconfigured engine controller.
176119		Diesel Exhaust Fluid	Diesel exhaust fluid level message error	This DTC will be recorded when the control unit receives an invalid range on the diesel exhaust fluid level message from the engine ECU. Some possible causes for this include faulty wiring to the engine controller or a faulty/misconfigured engine controller.
234801 234803 234805 234806 234813 234831	Chassis Node	Exterior Lighting - High Beam	Left or right high beam output general error Left or right high beam output short to power Left or right high beam output under current or open circuit Left or right high beam output over current Left or right high beam output general error Left or right high beam output not available	This set of DTCs will be recorded when there is a problem with one of the High Beam circuits. This could be caused by failed bulbs, wiring harness issues, or corroded connectors. Left high beam output from Pin 13 of the Chassis Node connector A. Right high beam output from Pin 7 of the Chassis Node connector A.
235001	Chassis Node	Exterior Lighting - Low Beam	Left or right low beam output general error	This set of DTCs will be recorded when there is a problem with one of the Low Beam circuits. This could be caused by failed bulbs, wiring harness issues, or corroded connectors. Left low beam output from Pin 1 of the Chassis Node connector A. Right low beam output from Pin 19 of the Chassis Node connector A.
235003			Left or right low beam output short to power	
235005			Left or right low beam output under current or open circuit	
235006			Left or right low beam output over current	
235013			Left or right low beam output general error	
235031			Left or right low beam output not available	

https://truckmanualshub.com/

DTC	Input Received By	Item / System	Description	Detailed Description
236801	Chassis Node	Exterior Lighting - Left Front Turn	Left front turn or left front side turn output general error	This set of DTCs will be recorded when there is a problem with one of the Left Front Turn circuit. This could be caused by failed bulbs, wiring harness issues, or corroded connectors. Left front turn output from Pin 4 of the Chassis Node connector B.
236803			Left front turn or left front side turn output short to power	
236805			Left front turn or left front side turn output under current or open circuit	
236806			Left front turn or left front side turn output over current	
236813			Left front turn or left front side turn output general error	
236831			Left front turn or left front side turn output not available	
237001	Chassis Node	Exterior Lighting - Right Front Turn	Right front turn or left front side turn output general error	This set of DTCs will be recorded when there is a problem with one of the Right Front Turn circuit. This could be caused by failed bulbs, wiring harness issues, or corroded connectors. Right front turn output from Pin 7 of the Chassis Node connector B.
237003			Right front turn or left front side turn output short to power	
237005			Right front turn or left front side turn output under current or open circuit	
237006			Right front turn or left front side turn output over current	
237013			Right front turn or left front side turn output general error	
237031			Right front turn or left front side turn output not available	
237201	Chassis Node	Exterior Lighting - Tractor/Truck Left Rear Turn/Stop	Left rear turn/stop output general error	This set of DTCs will be recorded when there is a problem with one of the Left Rear Turn/Stop circuit. This could be caused by failed bulbs, wiring harness issues, or corroded connectors. Tractor/Truck left rear turn/stop output from Pin 13 of the Chassis Node connector B.
237203			Left rear turn/stop output short to power	
237205			Left rear turn/stop output under current or open circuit	
237206			Left rear turn/stop output over current	
237213			Left rear turn/stop output general error	
237231			Left rear turn/stop output not available	
237401	Chassis Node	Exterior Lighting - Tractor/Truck Right Rear Turn/Stop	Right rear turn/stop output general error	This set of DTCs will be recorded when there is a problem with one of the Right Rear Turn/Stop circuit. This could be caused by failed bulbs, wiring harness issues, or corroded connectors. Tractor/Truck right rear turn/stop output from Pin 2 of the Chassis Node connector B.
237403			Right rear turn/stop output short to power	
237405			Right rear turn/stop output under current or open circuit	
237406			Right rear turn/stop output over current	
237413			Right rear turn/stop output general error	
237431			Right rear turn/stop output not available	

https://truckmanualshub.com/

DTC	Input Received By	Item / System	Description	Detailed Description
237801	Chassis Node	Exterior Lighting - Marker Lamp	Marker lamp output general error	This set of DTCs will be recorded when there is a problem with one of the Marker Lamp circuit. This could be caused by failed bulbs, wiring harness issues, or corroded connectors. Marker lamp relay control output from Pin 10 of the Chassis Node connector A.
237803			Marker lamp output short to power	
237805			Marker lamp output under current or open circuit	
237806			Marker lamp output over current	
237813			Marker lamp output general error	
237831			Marker lamp output not available	
238201	CECU	Exterior Lighting - Clearance Lamp	Clearance lamp output general error	This set of DTCs will be recorded when there is a problem with one of the Clearance Lamp circuit. This could be caused by failed bulbs, wiring harness issues, or corroded connectors.
238203			Clearance lamp output short to power	
238205			Clearance lamp output under current or open circuit	
238206			Clearance lamp output over current	
238213			Clearance lamp output general error	
238231			Clearance lamp output not available	
238801	Chassis Node	Exterior Lighting - Fog Lamp	Fog lamp output general error	This set of DTCs will be recorded when there is a problem with one of the Fog Lamp circuit. This could be caused by failed bulbs, wiring harness issues, or corroded connectors. Fog lamps output from Pin 15 of the Chassis Node connector B.
238803			Fog lamp output short to power	
238805			Fog lamp output under current or open circuit	
238806			Fog lamp output over current	
238813			Fog lamp output general error	
238831			Fog lamp output not available	
239001	Chassis Node	Exterior Lighting - Secondary Fog Lamp	Secondary fog lamp output general error	This set of DTCs will be recorded when there is a problem with one of the Secondary Fog Lamp circuit. This could be caused by failed bulbs, wiring harness issues, or corroded connectors. Secondary fog lamp relay control output from Pin 18 of the Chassis Node connector C.
239003			Secondary fog lamp output short to power	
239005			Secondary fog lamp output under current or open circuit	
239006			Secondary fog lamp output over current	
239013			Secondary fog lamp output general error	
239031			Secondary fog lamp output not available	
239102	Chassis Node	Backup Switch	Invalid input from backup alarm mute switch	This DTC will be recorded when the control unit sees an invalid voltage range from the backup alarm mute switch. Some possible causes for this are an intermittent connection at the switch, corroded or broken wire or bad switch.
239202	Chassis Node	Reverse Switch	Invalid input from reverse switch	This DTC will be recorded when the control unit sees an invalid voltage range from the reverse switch. Some possible causes for this are an intermittent connection at the switch, corroded or broken wire or bad switch.

https://truckmanualshub.com/

DTC	Input Received By	Item / System	Description	Detailed Description
239601	Chassis Node	Exterior Lighting - Left Turn Trailer Lamp	Left trailer turn output general error	This set of DTCs will be recorded when there is a problem with one of the Left Turn Trailer Lamp circuit. This could be caused by failed bulbs, wiring harness issues, or corroded connectors. Left turn trailer output from Pin 16 of the Chassis Node connector B.
239603			Left trailer turn output short to power	
239605			Left trailer turn output under current or open circuit	
239606			Left trailer turn output over current	
239613			Left trailer turn output general error	
239631			Left trailer turn output not available	
239801	CECU	Exterior Lighting - Right Turn Trailer Lamp	Right trailer turn output general error	This set of DTCs will be recorded when there is a problem with one of the Right Turn Trailer Lamp circuit. This could be caused by failed bulbs, wiring harness issues, or corroded connectors. Right turn trailer output from Pin 20 of the Chassis Node connector C.
239803			Right trailer turn output short to power	
239805			Right trailer turn output under current or open circuit	
239806			Right trailer turn output over current	
239813			Right trailer turn output general error	
239831			Right trailer turn output not available	
240401	CECU	Park Lamps	Park lamp general error	This set of DTCs will be recorded when there is a wiring problem between the Power distribution center and the CECU connector E pin 7.
240403			Park lamp short to power	
240405			Park lamp open circuit	
240406			Park lamp short to ground	
240413			Park lamp bad reference voltage	
240431			Park lamp chassis node lathches fault	
257903	CECU	Battery Current	Open in ammeter sensor circuit	This DTC will be recorded when the control unit sees an open at the ammeter sensor input. Some possible causes for this are a broken wire, corroded or disconnected connector, or sensor failure.
257904	CECU	Battery Current	Short in ammeter sensor circuit	This DTC will be recorded when the control unit sees a short at the ammeter sensor input. Some possible causes for this are pinched wire, water in a connector, or sensor failure.
265106		Dome Lamp	Dome lamp over current	This DTC will be recorded when the control unit sees overcurrent on the dome lamp output circuit. Some possible cause for this are a short to ground in the circuit, a pinched wire or the wattage of the bulbs on in the circuit are exceeding the output capacity.
286302		Wiper	Invalid range high speed wiper switch input	This DTC will be recorded when the control unit sees an invalid voltage range on the high speed wiper switch input. Some possible causes are broken wire, corroded or disconnected connector or faulty turn stalk switch.
286303		Wiper	Open in wiper relay output	This DTC will be recorded when the control unit sees an open at the wiper output relay. Some possible causes for this are a broken wire, corroded or disconnected connector.

https://truckmanualshub.com/

DTC	Input Received By	Item / System	Description	Detailed Description
286304		Wiper	Short in wiper relay output	This DTC will be recorded when the control unit sees a short to ground at the wiper output relay. Some possible causes for this are a pinched wire or water in a connector.
286307	CECU	Wiper	Out of range on low speed wiper switch input	This DTC will be recorded when the control unit sees an out of range voltage value on the low speed wiper switch. Some possible causes are broken wire, corroded or disconnected connector or faulty turn stalk switch.
286602		Washer	Invalid range on washer pump switch input	This DTC will be recorded when the control unit sees a invalid range of washer pump switch input. Some possible causes are broken wire, corroded or disconnected connector or faulty turn stalk switch.
286603		Washer	Open in washer pump relay output	This DTC will be recorded when the control unit sees an open at the washer pump output relay. Some possible causes for this are a broken wire, corroded or disconnected connector.
286604		Washer	Short in washer pump relay output	This DTC will be recorded when the control unit sees a short to ground at the washer pump output relay. Some possible causes for this are a pinched wire or water in a connector.
286612	CECU	Washer Switch	Short in washer pump switch input or input active for more than 15 seconds	This DTC will be recorded when the control unit sees a washer pump switch input active for more than 15 seconds. The control unit determines that a washer pump active for longer than 15 seconds may be a short circuit. Some possible causes for this are a pinched wire, corrosion or water in the connector or faulty turn stalk switch.
287204	CECU	Flash to Pass Switch	Short in flash to pass switch input or input active for more than 10 seconds	This DTC will be recorded when the control unit sees the flash to pass switch active for more than 10 seconds. The control unit determines that a Flash to Pass switch input active for longer than 10 seconds may be a short circuit. Some possible causes for this are a pinched wire, corrosion or water in the connector or faulty turn stalk switch.
287304	CECU	Marker Lamp Flash Switch	Short in marker lamp flash switch input or input active for more than 10 seconds	This DTC will be recorded when the control unit sees the marker lamp flash switch input active for more than 10 seconds. The control unit determines that a marker lamp flash switch input active for longer than 10 seconds may be a short circuit. Some possible causes for this are a pinched wire, corrosion or water in the connector or faulty marker lamp flash switch.

https://truckmanualshub.com/

DTC	Input Received By	Item / System	Description	Detailed Description
287404	CECU	High Beam Toggle Switch	Short in high beam toggle switch input or input active for more than 10 seconds	This DTC will be recorded when the control unit sees the high beam toggle switch input active for more than 10 seconds. The control unit determines that a high beam toggle switch input active for longer than 10 seconds may be a short circuit. Some possible causes for this are a pinched wire, corrosion or water in the connector or faulty turn stalk switch.
287604	CECU	Turn Signal Switch	Short in turn signal switch	This DTC will be recorded when the control unit sees the turn stalk input of a short circuit value (< 253Ω).
287607			Out of range - turn signal switch	This DTC will be recorded when the control unit sees the turn stalk input in an invalid range (253Ω < Input < 270Ω OR 580Ω < Input < 685Ω).
350905		CECU Power	CECU power input 1 fault	These two DTC's will be recorded when there is a wiring or fuse problem for the CECU power, connector A pin 2.
351005			CECU power input 2 fault	
351105		MUX3-P Power	Chassis Node Power Input 1 Fault	Inspect wiring and fusing of Chassis Node Power pin A04
351131		MUX3-P Power	Chassis Node Power Input 1 Fault	Inspect wiring and fusing of Chassis Node Power pin A04
351205		MUX3-P Power	Chassis Node Power Input 2 Fault	Inspect wiring and fusing of Chassis Node Power pin A16
351231		MUX3-P Power	Chassis Node Power Input 2 Fault	Inspect wiring and fusing of Chassis Node Power pin A16
351305		MUX3-P Power	Chassis Node Power Input 3 Fault	Inspect wiring and fusing of Chassis Node Power pin B01
351331		MUX3-P Power	Chassis Node Power Input 3 Fault	Inspect wiring and fusing of Chassis Node Power pin B01
351405		MUX3-P Power	Chassis Node Power Input 4 Fault	Inspect wiring and fusing of Chassis Node Power pin B10
351431		MUX3-P Power	Chassis Node Power Input 4 Fault	Inspect wiring and fusing of Chassis Node Power pin B10
369602		Aftertreatment	Short in washer pump relay output	This DTC will be recorded when the control unit sees both regeneration force and inhibit switches are active at the same time for more than 0.5 sec. Some possible causes for this are a broken regeneration switch on the dash or wiring for these circuits short circuited together behind the dash.
369709		Aftertreatment	Diesel particulate filter lamp message error	This DTC will be recorded when the control unit sees an invalid range on the diesel particulate filter lamp message from the engine ECU or when the message has timed out. Some possible causes for this include faulty wiring to the engine controller or a faulty engine controller.
369809		Aftertreatment	Exhaust system high temperature lamp message error	This DTC will be recorded when the control unit sees an invalid range on the hot exhaust system temperature lamp message from the engine ECU or when the message has timed out. Some possible causes for this include faulty wiring to the engine controller or a faulty engine controller.

DTC	Input Received By	Item / System	Description	Detailed Description
370309		Aftertreatment	Regeneration inhibited due to inhibit switch message error	This DTC will be recorded when the control unit sees an invalid range on the regeneration inhibited due to inhibit switch message from the engine ECU or when the message has timed out. Some possible causes for this include faulty wiring to the engine controller or a faulty engine controller.
512505		MUX3-P Power	Chassis Node Power Input 5 Fault	Inspect wiring and fusing of Chassis Node Power pin B19
512531		MUX3-P Power	Chassis Node Power Input 5 Fault	Inspect wiring and fusing of Chassis Node Power pin B19
512605		MUX3-P Power	Chassis Node Power Input 6 Fault	Inspect wiring and fusing of Chassis Node Power pin C19
512631		MUX3-P Power	Chassis Node Power Input 6 Fault	Inspect wiring and fusing of Chassis Node Power pin C19
512705		MUX3-P Power	Chassis Node Power Input 7 Fault	Inspect wiring and fusing of Chassis Node Power pin B18
512731		MUX3-P Power	Chassis Node Power Input 7 Fault	Inspect wiring and fusing of Chassis Node Power pin B18
512805		MUX3-P Power	Chassis Node Power Input 8 Fault	Inspect wiring and fusing of Chassis Node Power pin C15
512831		MUX3-P Power	Chassis Node Power Input 8 Fault	Inspect wiring and fusing of Chassis Node Power pin C15
524502	CECU	Diesel Exhaust Fluid	Diesel exhaust fluid telltale message error	This DTC will be recorded when the control unit receives an invalid range on the diesel exhaust fluid telltale message from the engine ECU or does not receive the message in a timely manner.
524509		Diesel Exhaust Fluid	Diesel exhaust fluid telltale message error	This DTC will be recorded when the control unit receives Not Available Signal on the diesel exhaust fluid telltale message from the engine ECU or when the message has timed out. Some possible causes for this include faulty wiring to the engine controller or a faulty engine controller.
524519		Diesel Exhaust Fluid	Diesel exhaust fluid telltale message error	This DTC will be recorded when the control unit receives an invalid range on the diesel exhaust fluid telltale message from the engine ECU. Some possible causes for this include faulty wiring to the engine controller or a faulty engine controller.
524602	CECU	Diesel Exhaust Fluid	Diesel exhaust fluid inducement severity error	This DTC will be recorded when the control unit sees a invalid value from the J1939 network for Operator Inducement Severity.
524609		Aftertreatment	Aftertreatment system operator inducement severity message error	This DTC will be recorded when the control unit received a Not Available signal on the aftertreatment operator inducement severity message from the engine ECU or when the message has timed out. Some possible causes for this include faulty wiring to the engine controller or a faulty engine controller.
524619		Aftertreatment	Aftertreatment system operator inducement severity message error	This DTC will be recorded when the control unit received an invalid range on the aftertreatment operator inducement severity message from the engine ECU.

CAN Troubleshooting Procedures

Introduction

The following flow charts are provided to help the technician with troubleshooting a CAN databus issue. The vehicle has multiple CAN buses along with a complex arrangement of sensors and controllers. The technician should be able to troubleshoot an issue provided that the technician has basic experience in troubleshooting instrumentation and has a multi-meter amongst the typical shop tools.

https://truckmanualshub.com/

In addition to the charts, there are larger scale diagrams of the CAN databus available to print and markup with multimeter values.

Terminating Resistor Test Procedure

To determine if an inline resistor is working, locate the resistor. The resistors are shown on the following diagrams. If the resistor is outside the box that represents a controller, then the resistor is inline.

Once a resistor has been physically found, disconnect resistors from the resistor holders and test resistance (approximately 120 ohm) of each resistor across terminals as shown.

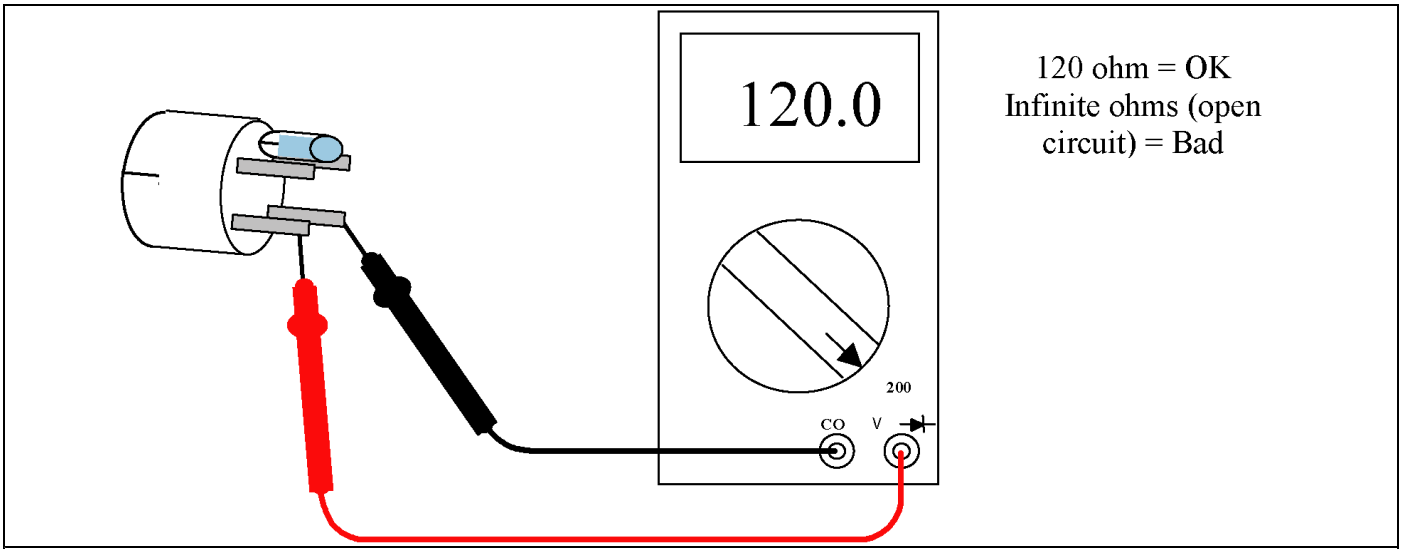

https://truckmanualshub.com/

Data Collection

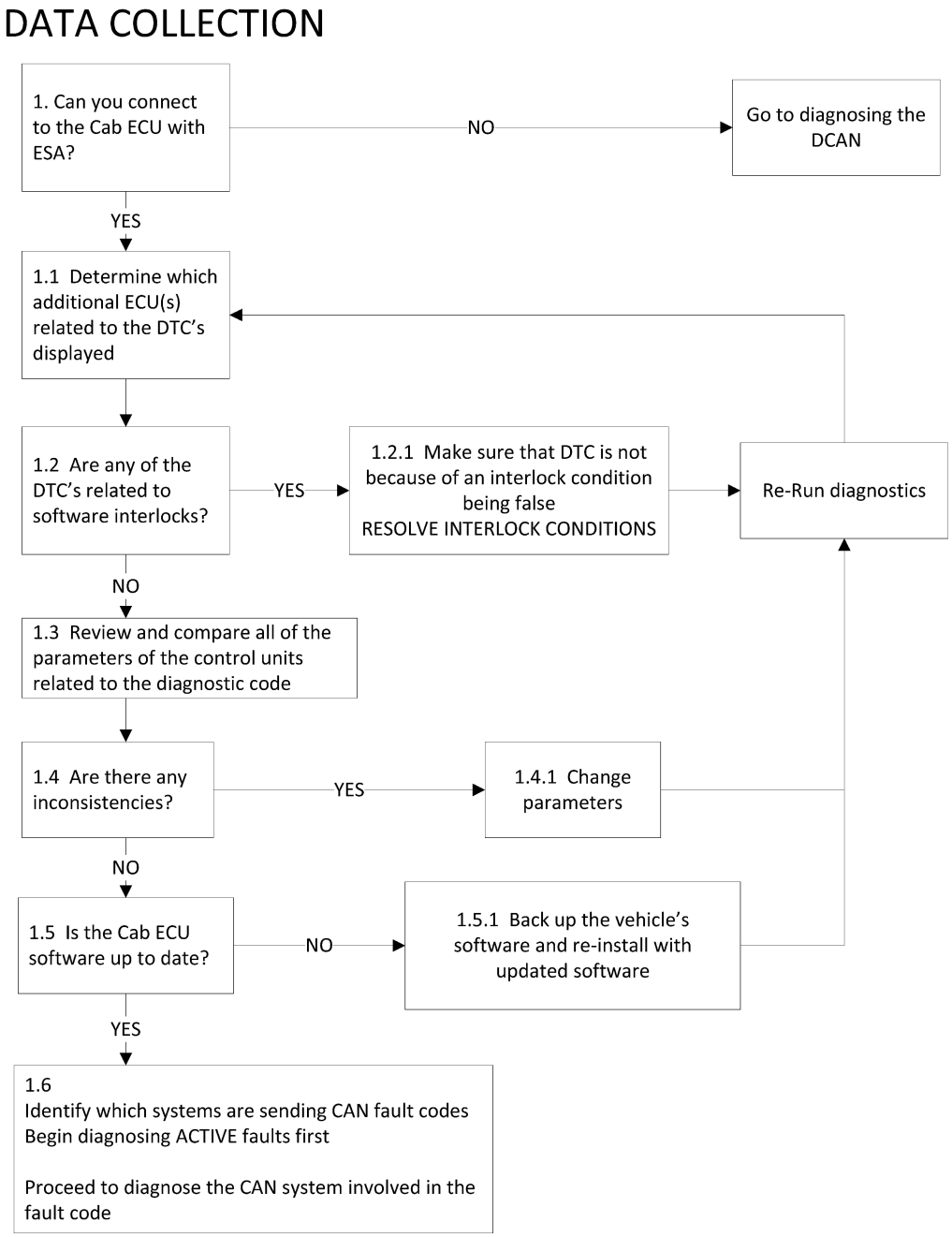

https://truckmanualshub.com/

Diagnosing the VCAN Trunk

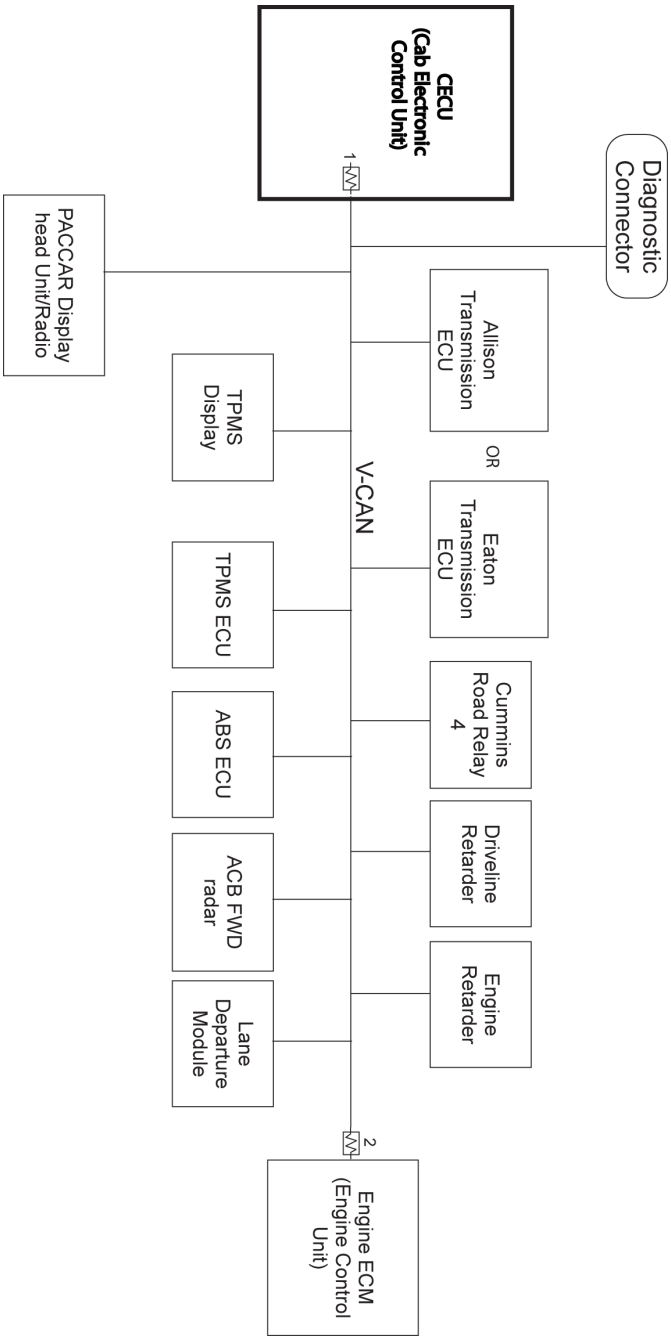

https://truckmanualshub.com/

Diagnosing the VCAN Trunk

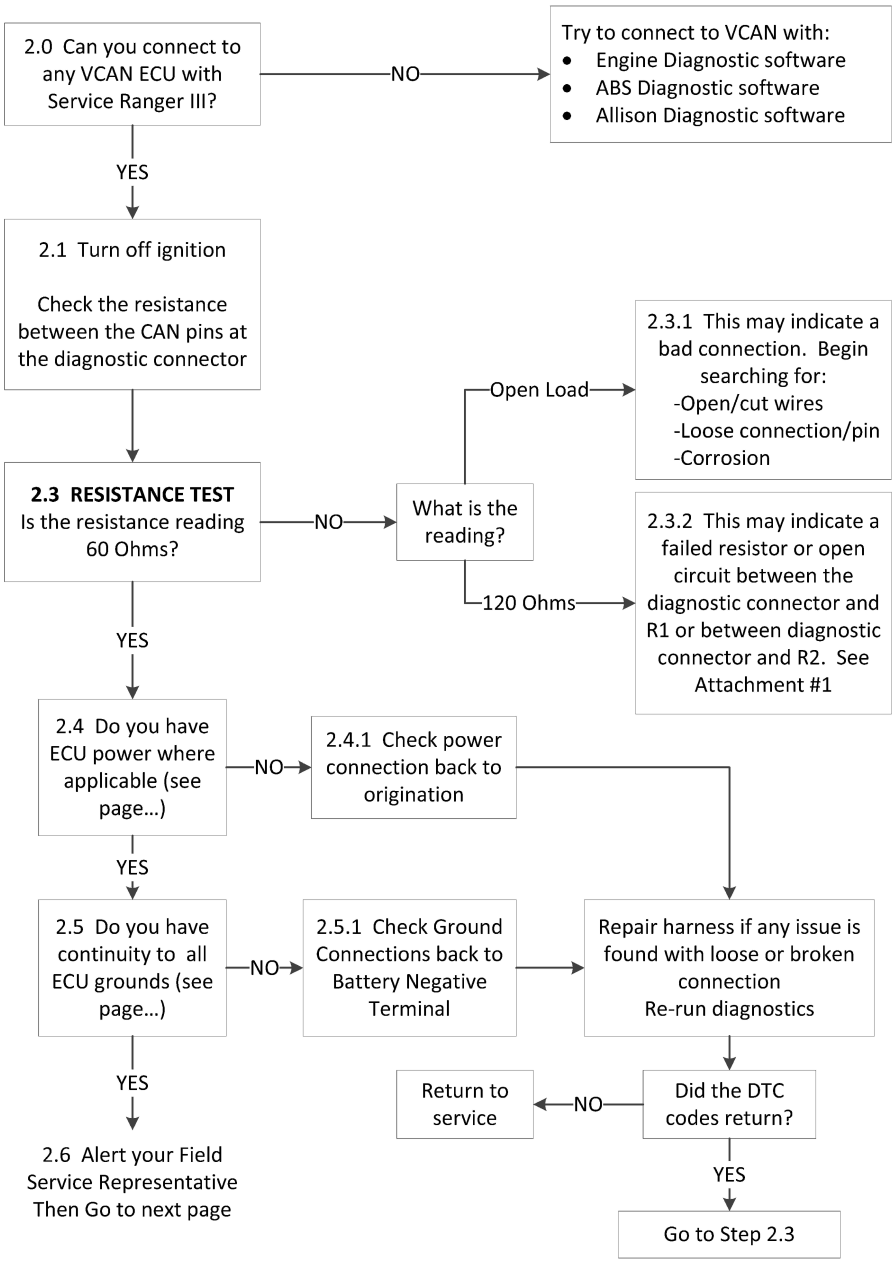

https://truckmanualshub.com/

Diagnosing the VCAN Branch

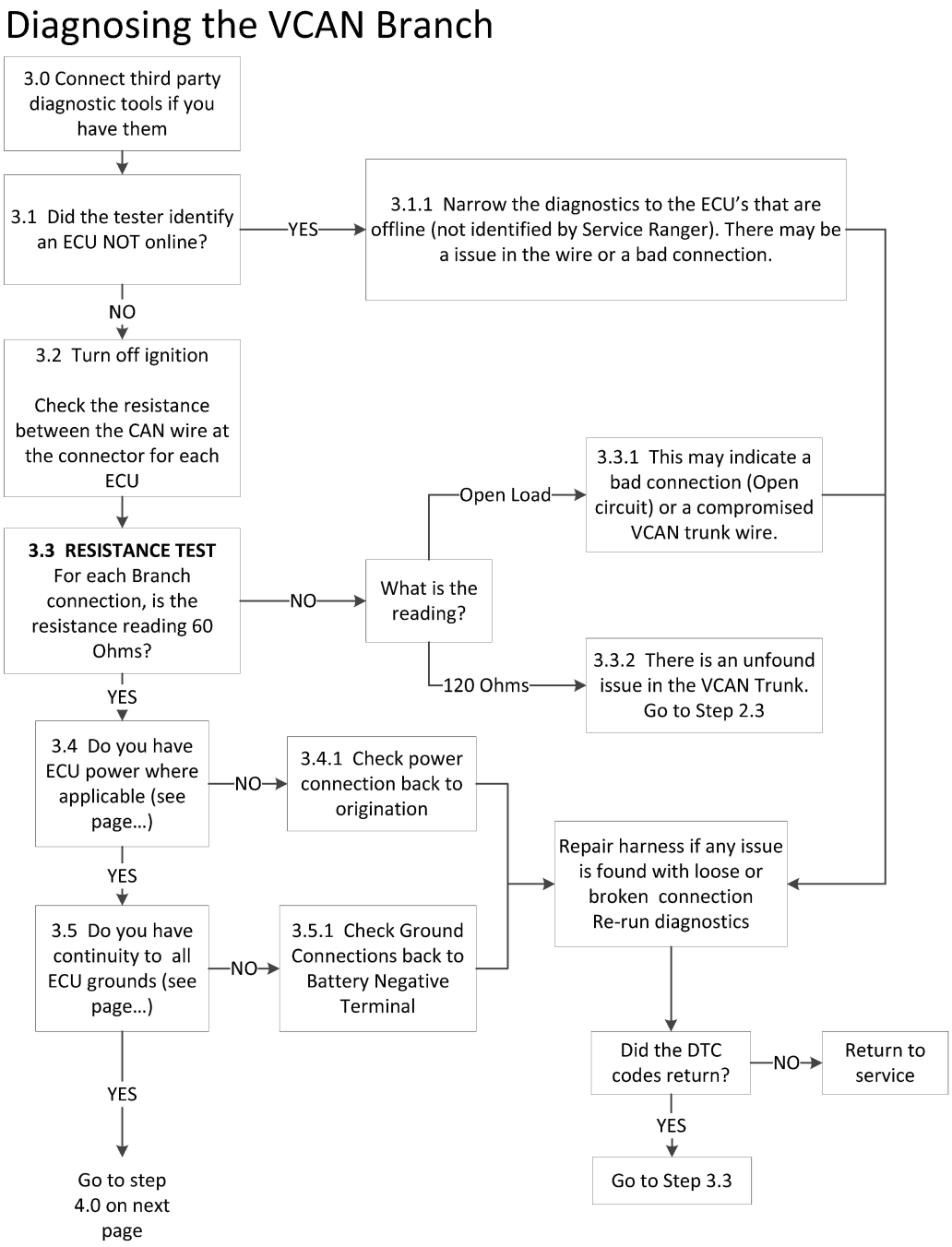

https://truckmanualshub.com/

Diagnosing Devices on a CAN Line

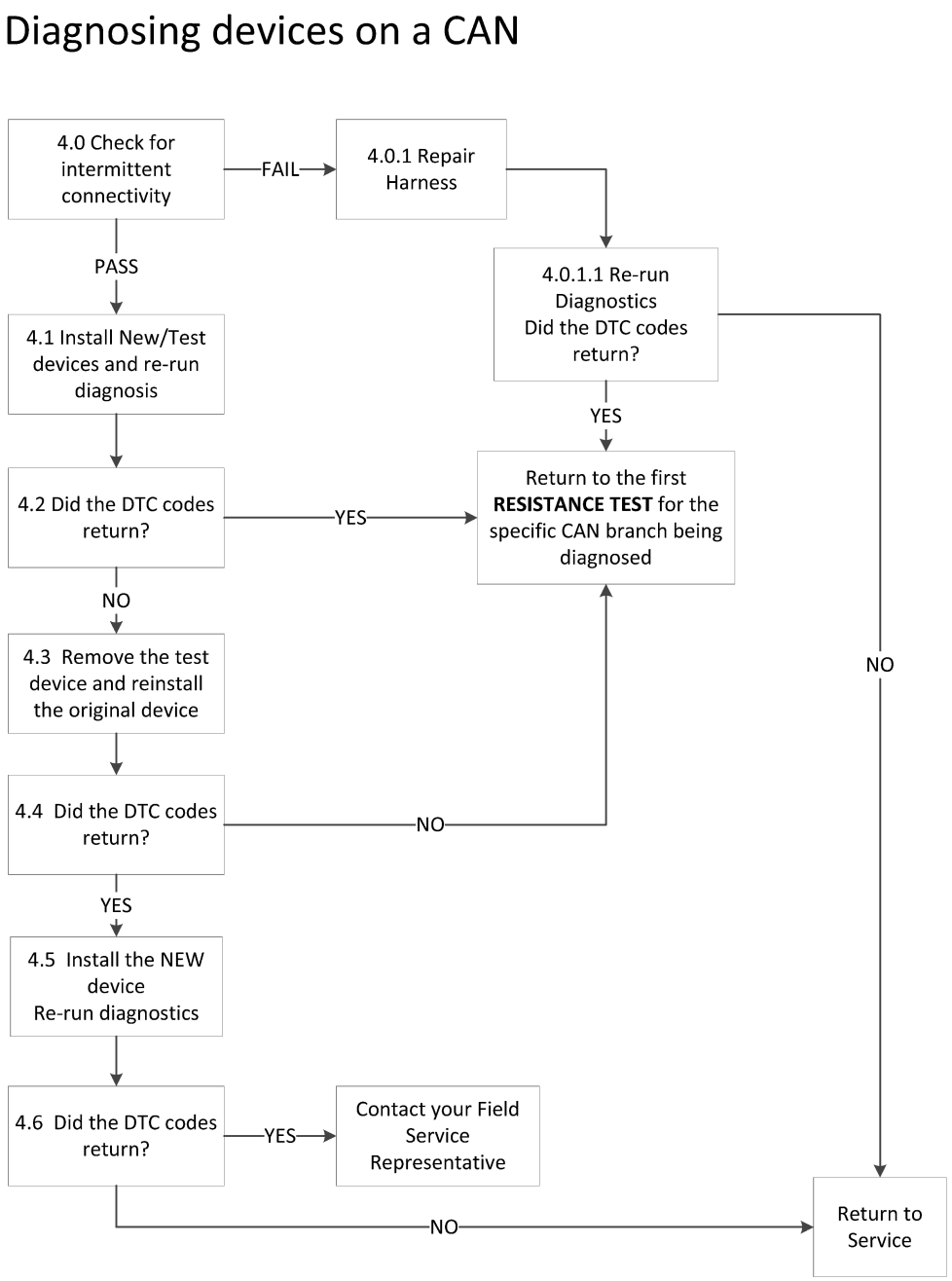

https://truckmanualshub.com/

Diagnosing the ECAN

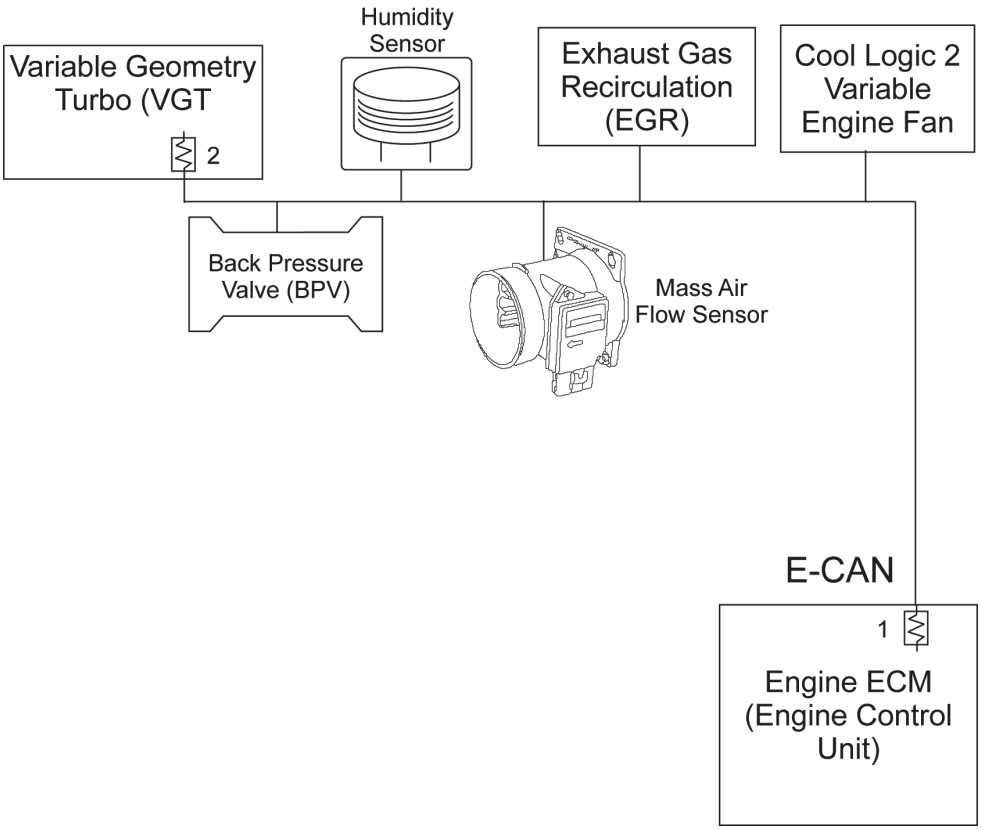

https://truckmanualshub.com/

Diagnosing the ECAN

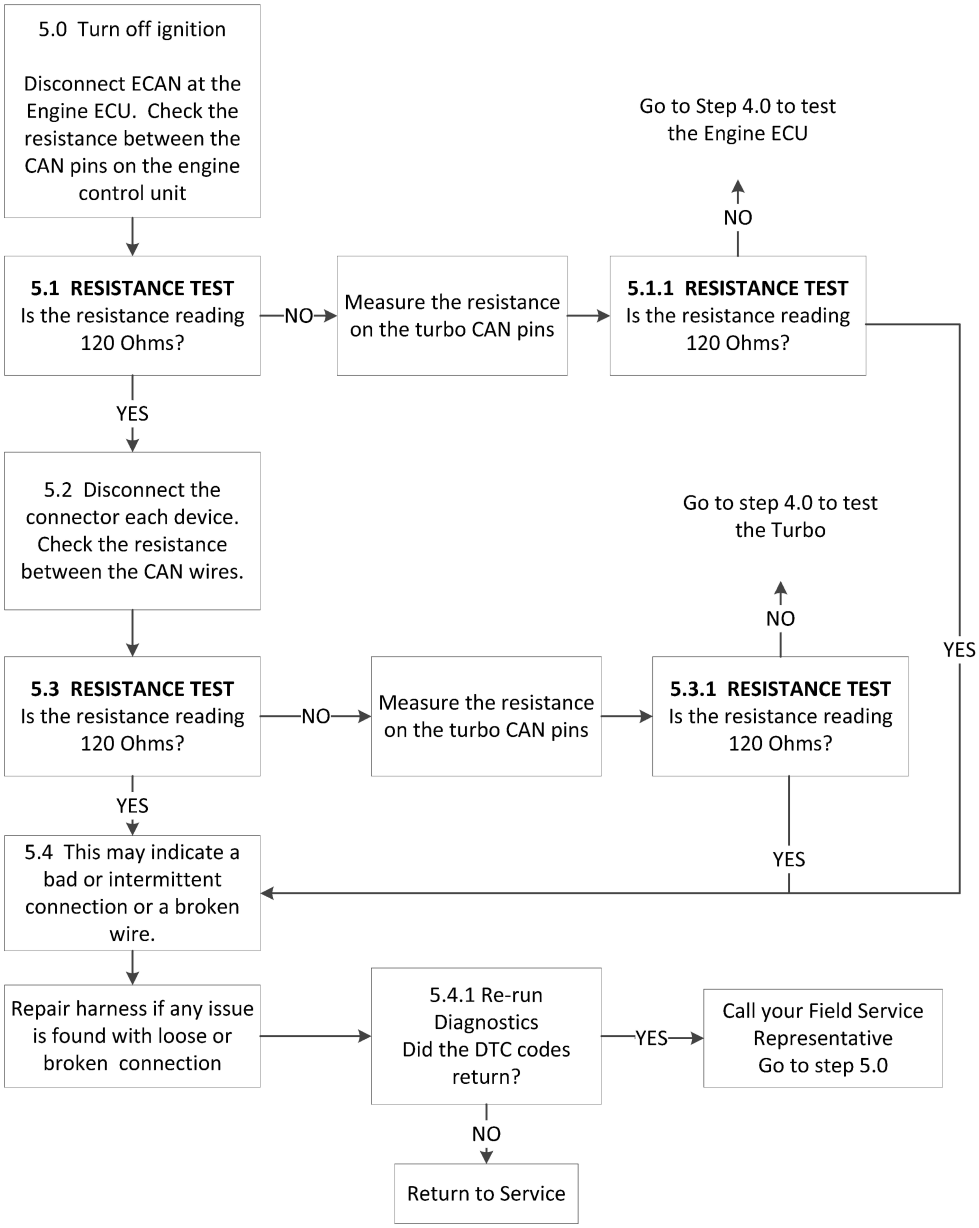

https://truckmanualshub.com/

Diagnosing the TCAN

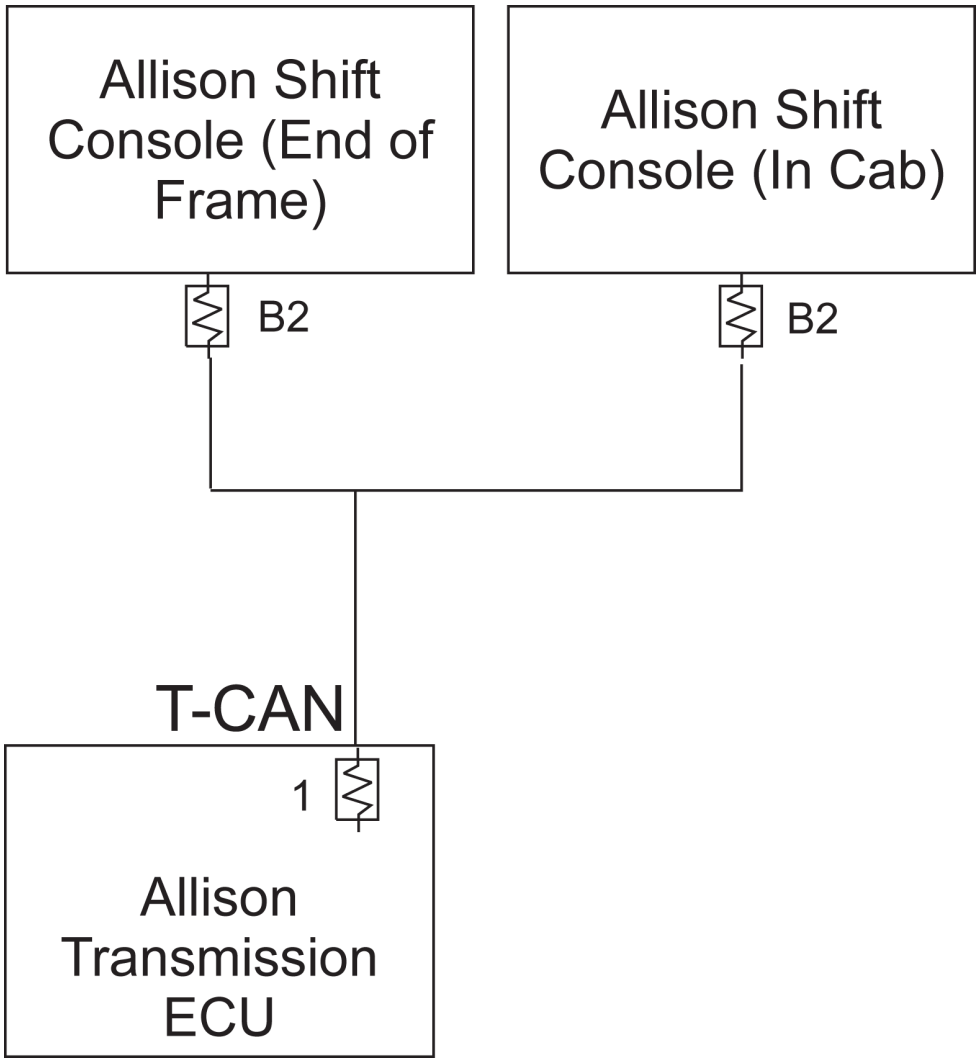

https://truckmanualshub.com/

Diagnosing the TCAN

(Allison Transmission only)

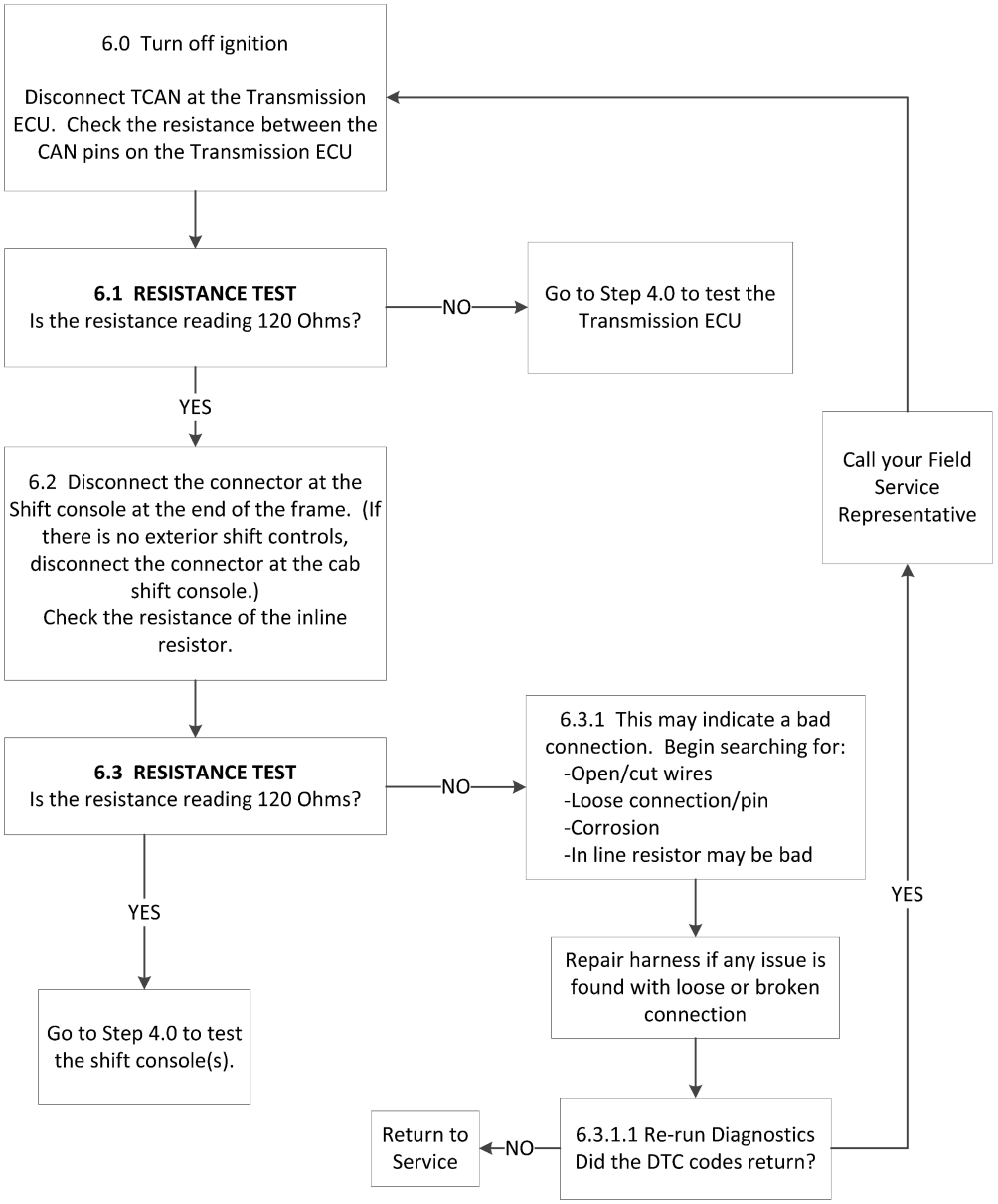

https://truckmanualshub.com/

Diagnosing the CCAN (without Multifunction Steering Wheel)

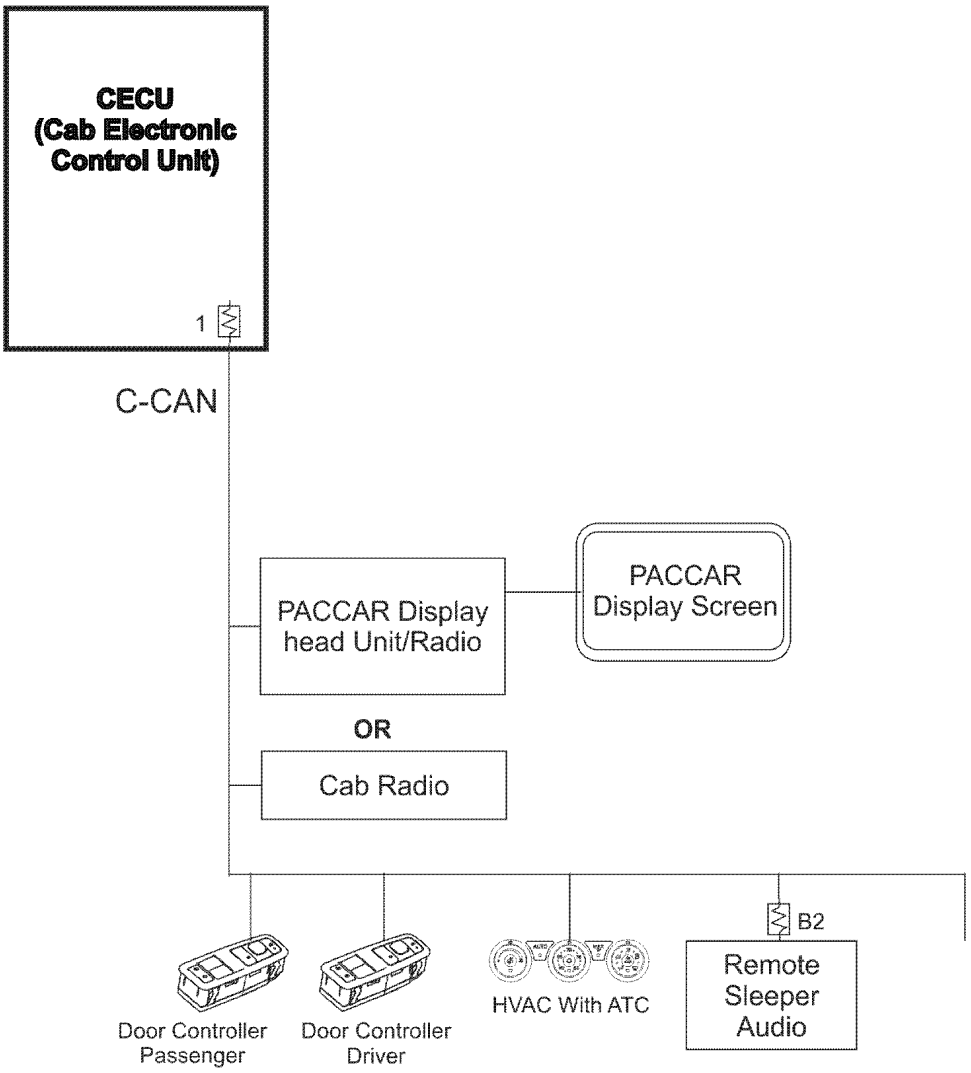

https://truckmanualshub.com/

Diagnosing the CCAN

(Vehicles **without** Multifunction Steering Wheel)

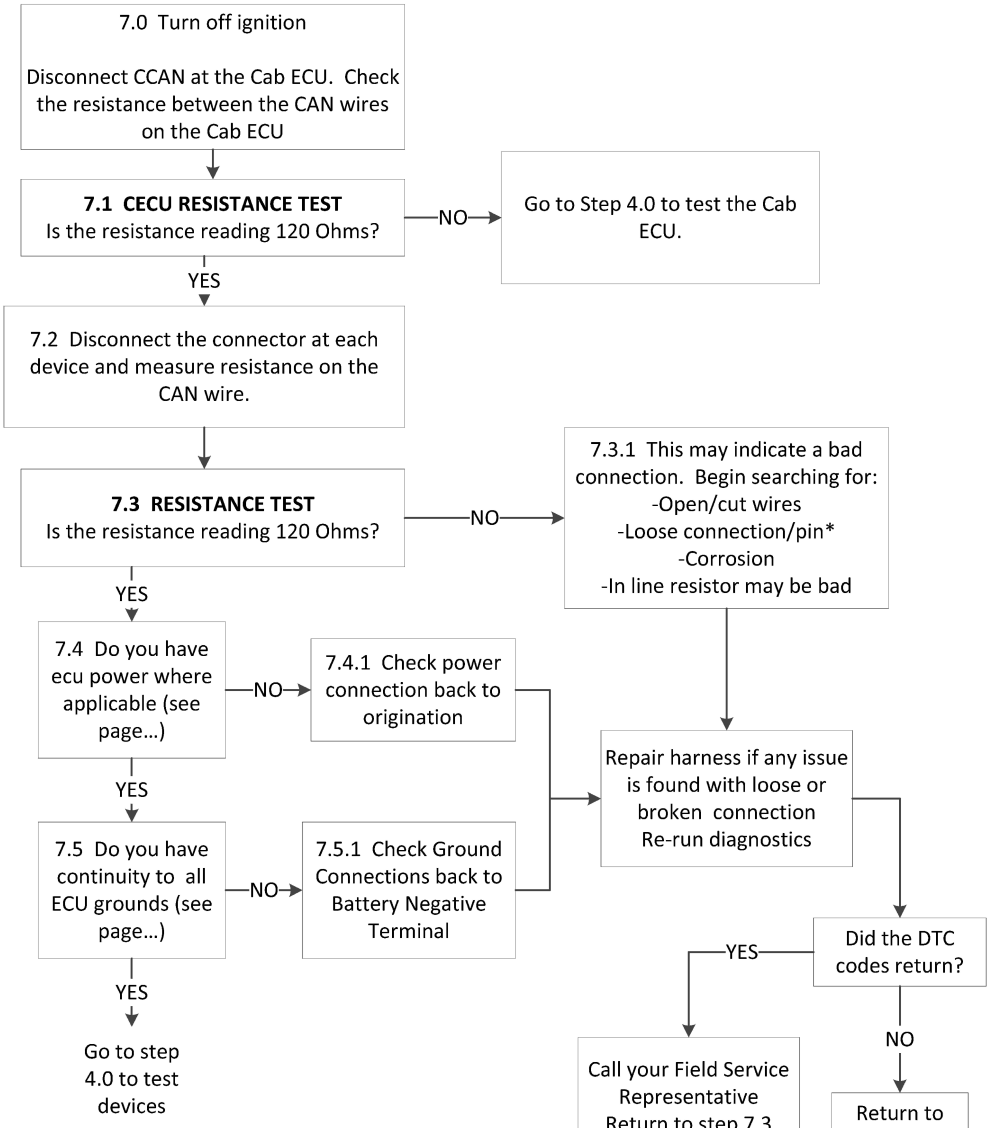

* Vehicles without the Multifunction steering wheel will have a terminating connector installed. Be sure to include this connector in the diagnosis.

https://truckmanualshub.com/

Diagnosing the CCAN (with Multifunction Steering Wheel)

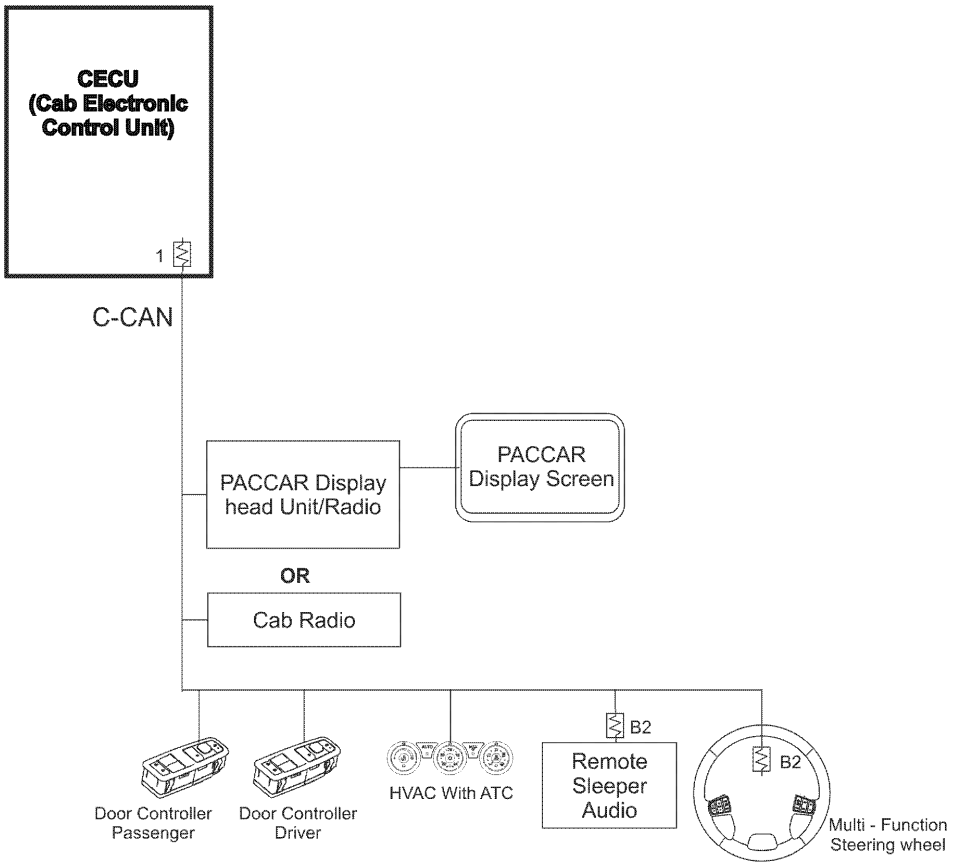

https://truckmanualshub.com/

Diagnosing the CCAN

(Vehicles **with** Multifunction Steering Wheel)

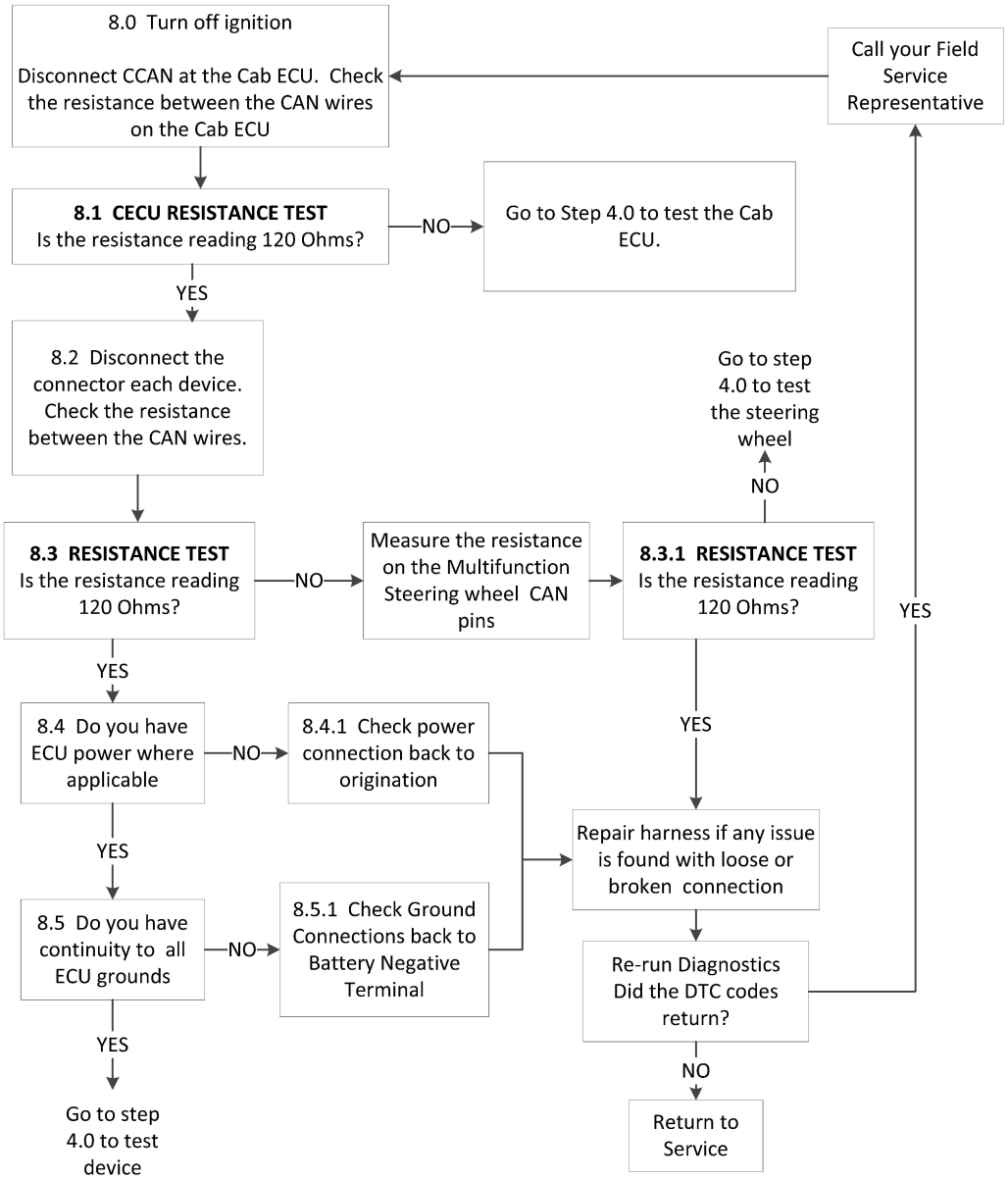

https://truckmanualshub.com/

Diagnosing the ACAN (with PACCAR MX engine)

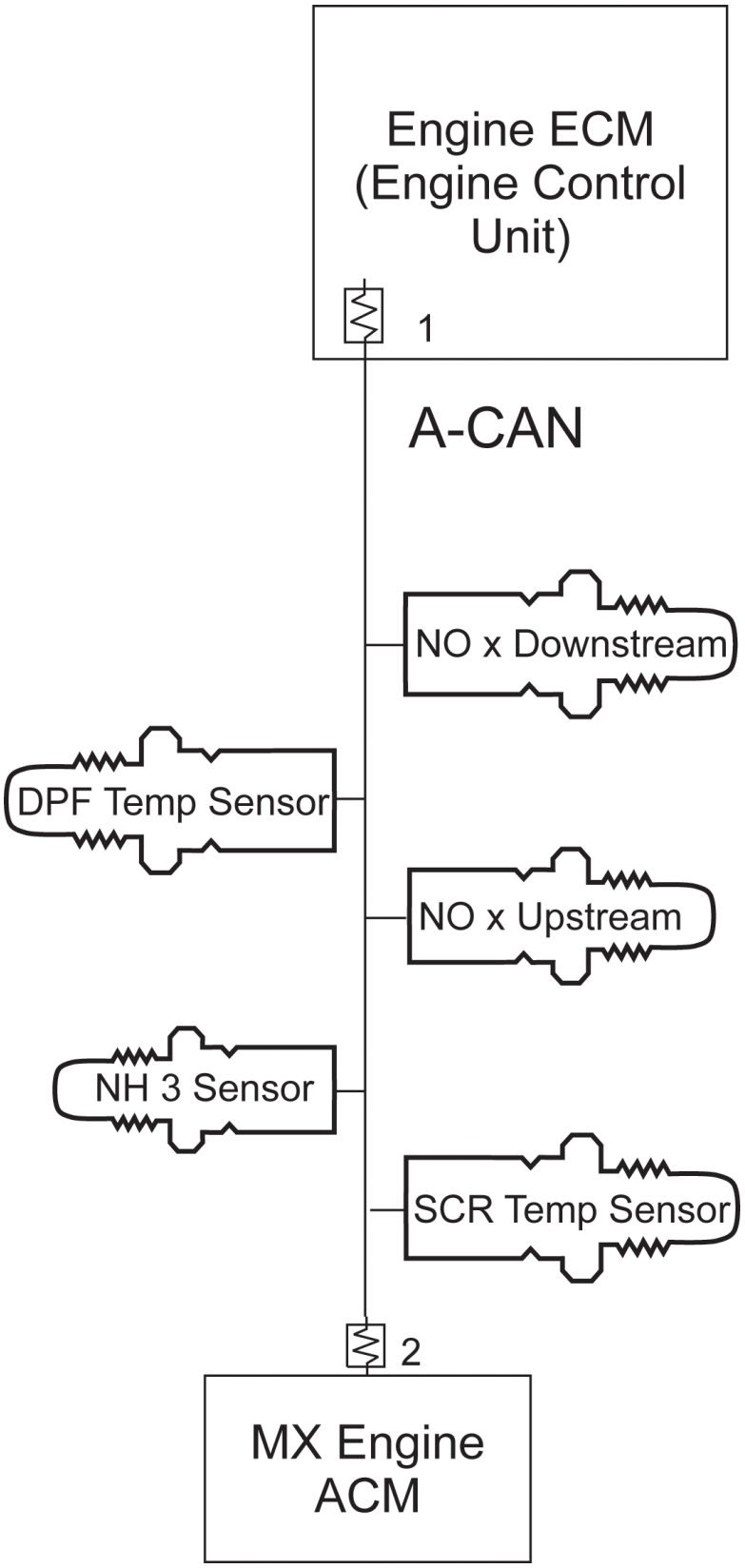

https://truckmanualshub.com/

Diagnosing the ACAN

(Vehicles with PACCAR MX engine)

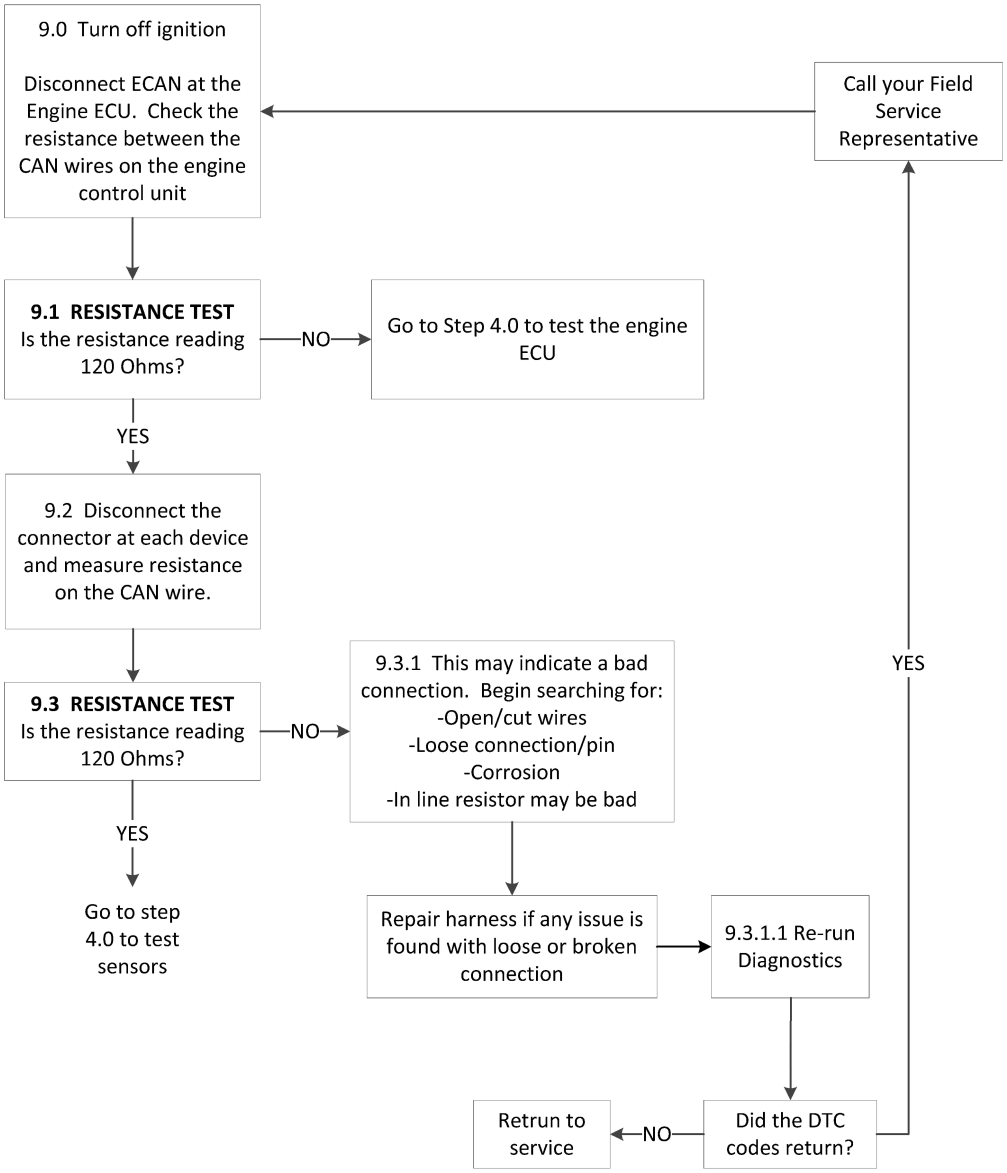

https://truckmanualshub.com/

Diagnosing the ICAN

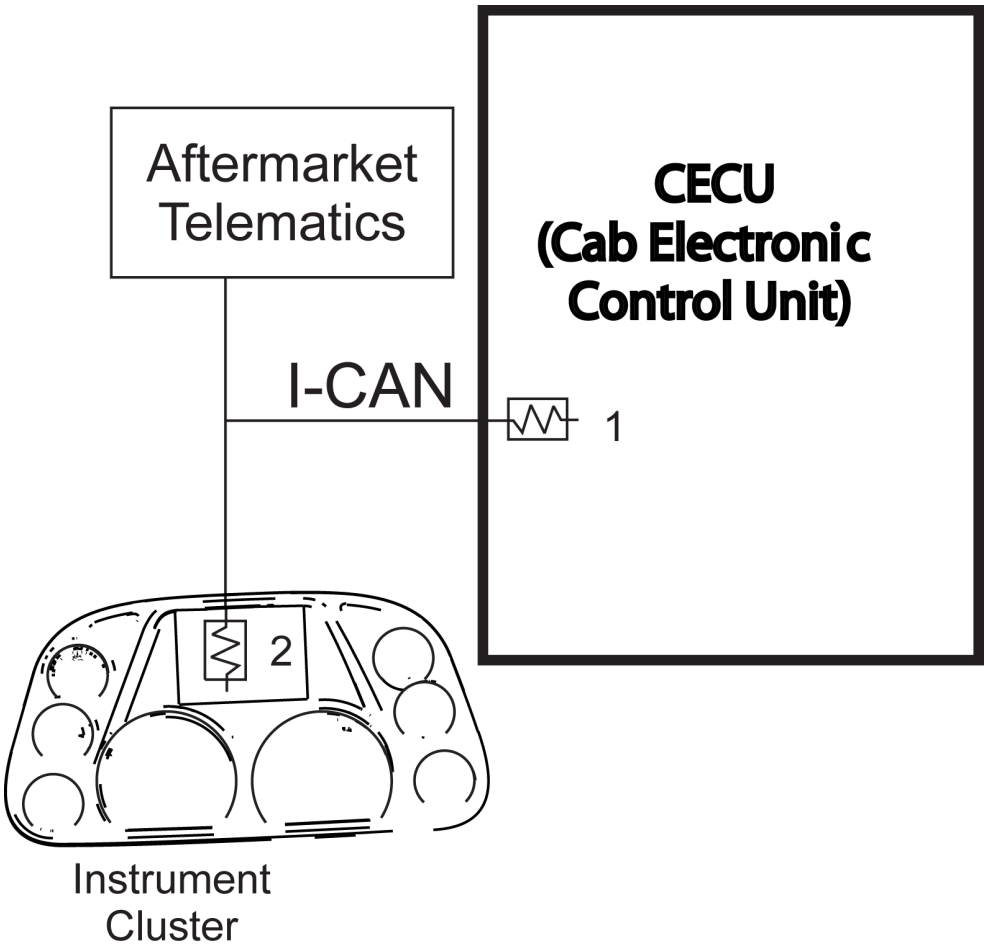

https://truckmanualshub.com/

Diagnosing the ICAN

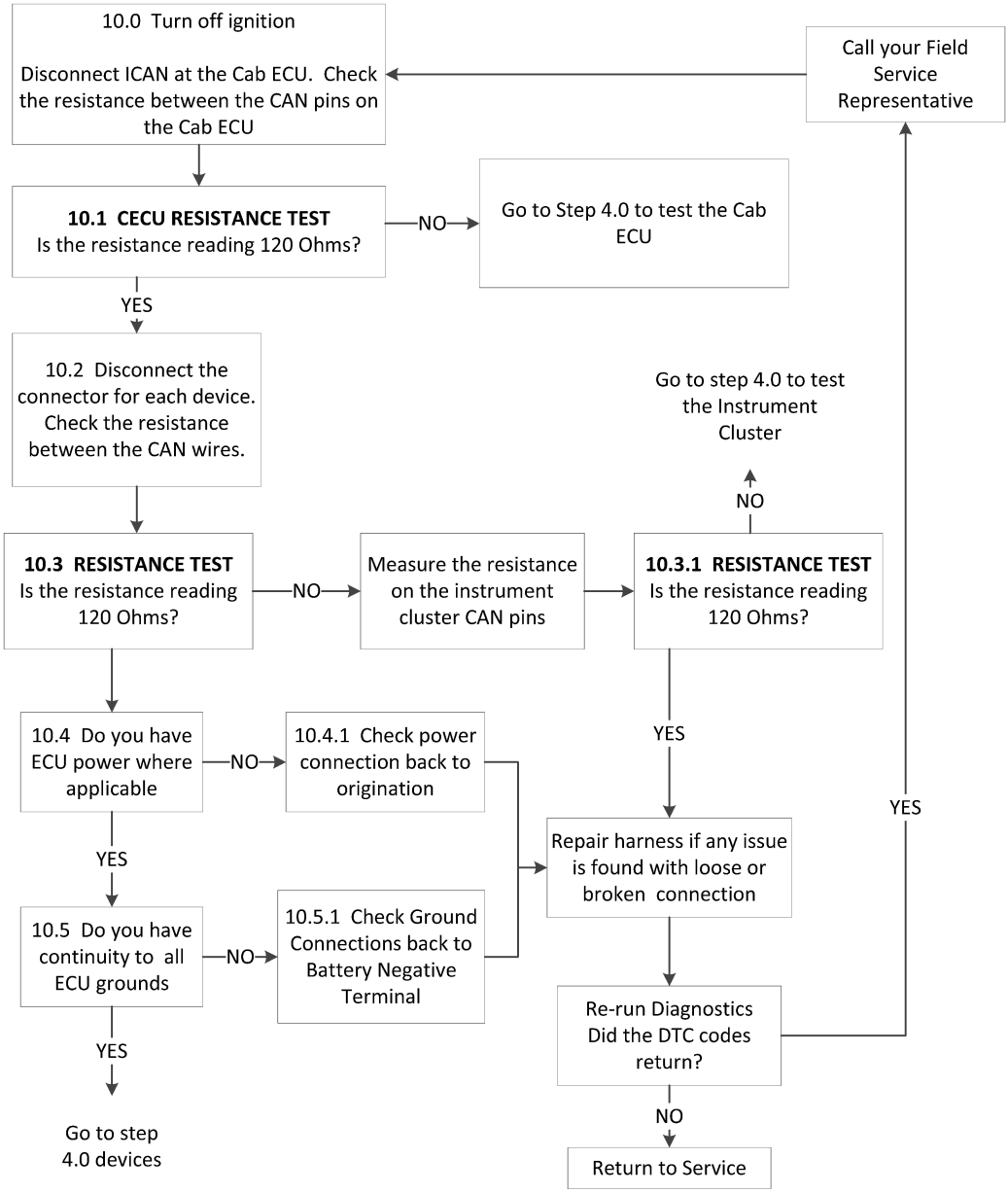

https://truckmanualshub.com/

Diagnosing the BCAN, DCAN or FCAN

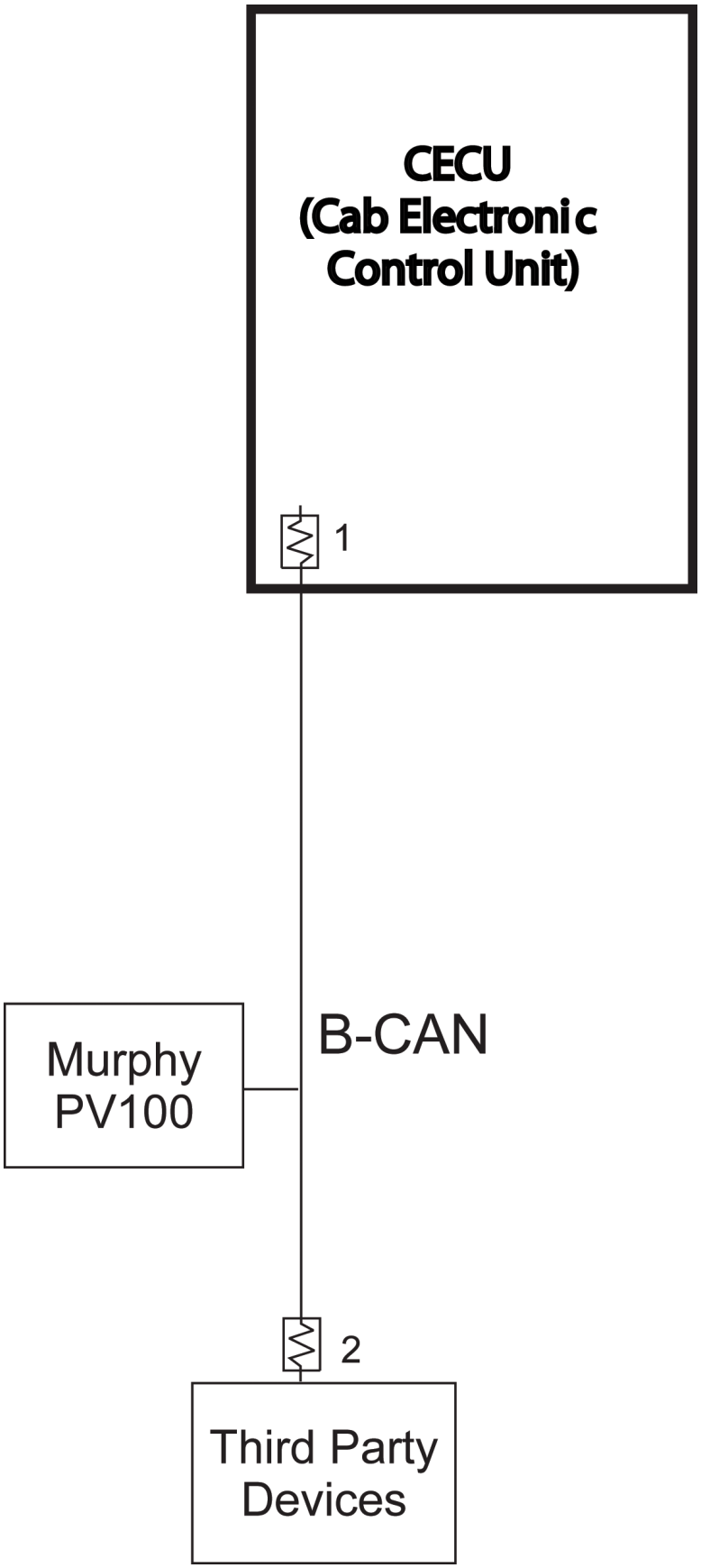

https://truckmanualshub.com/

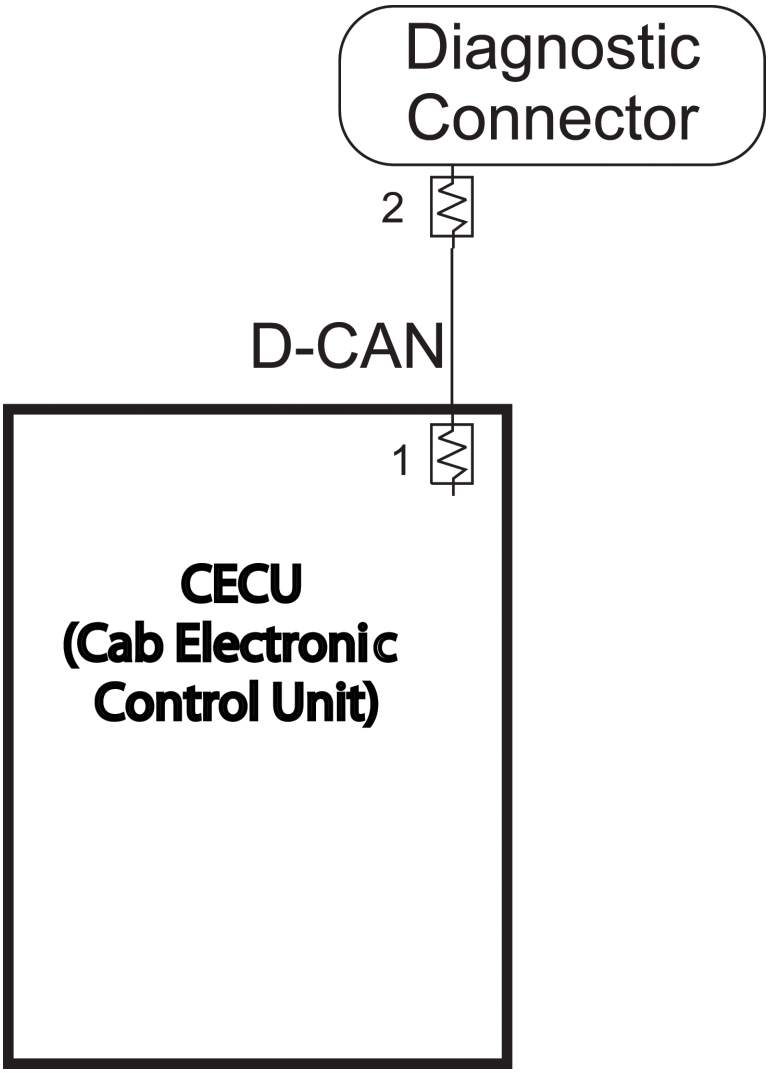

https://truckmanualshub.com/

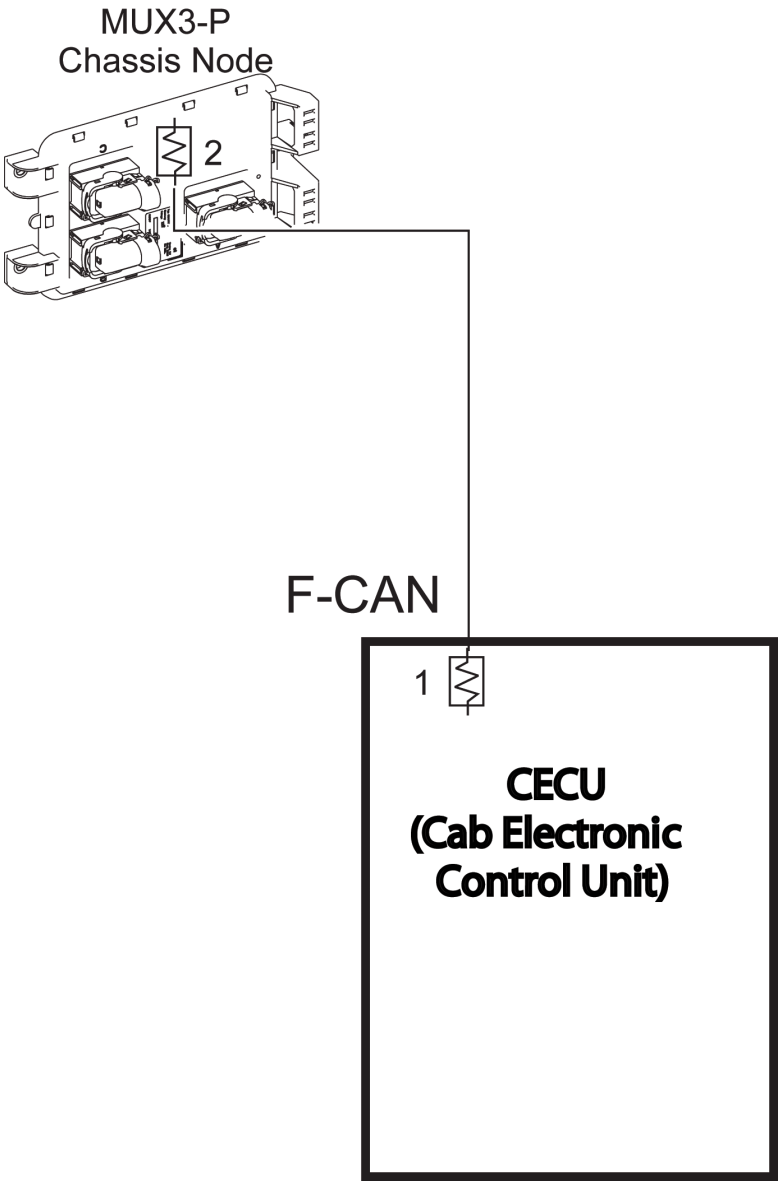

https://truckmanualshub.com/

Diagnosing either BCAN, DCAN or FCAN

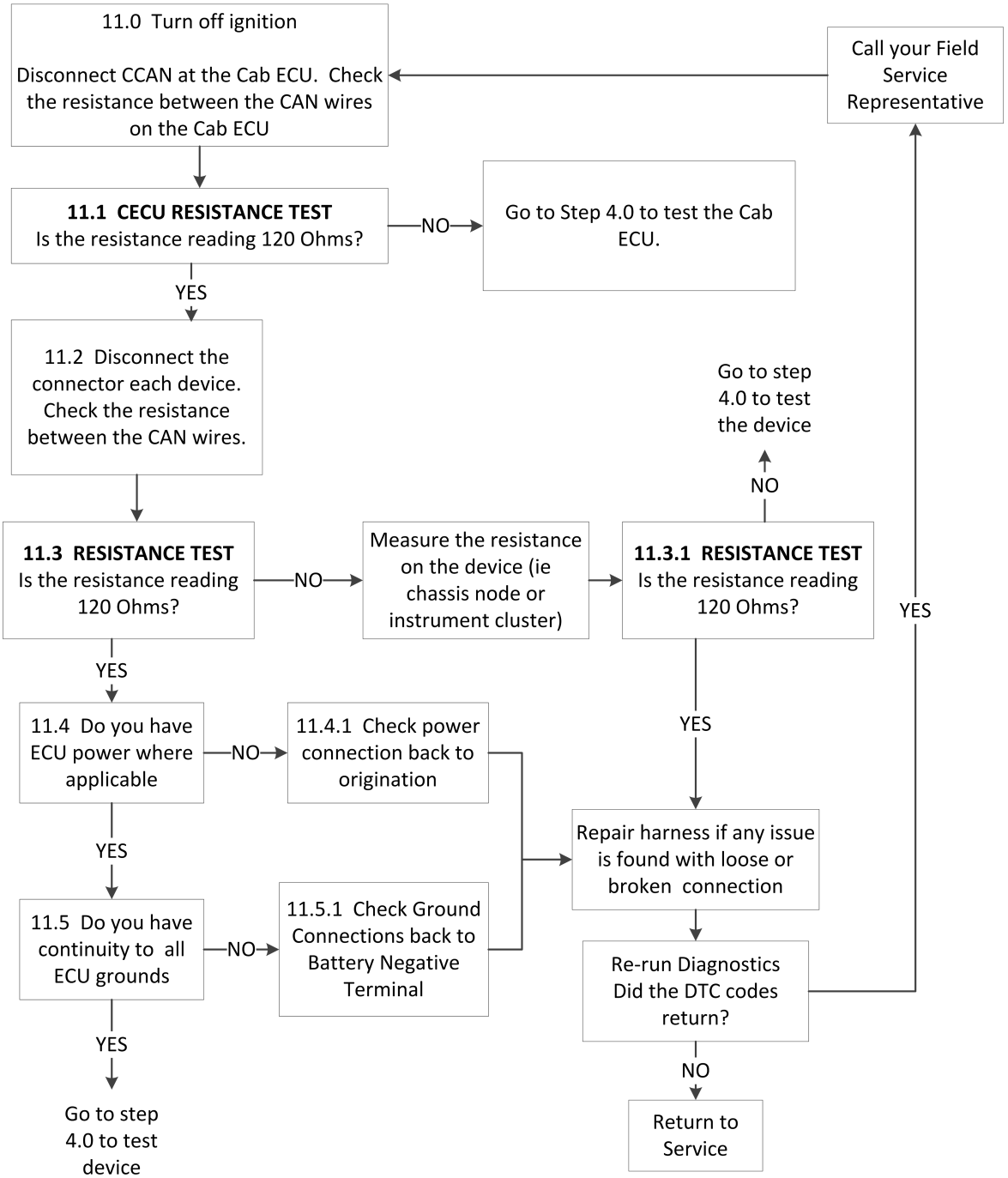

https://truckmanualshub.com/

Locating a Failed Resistor or an Open Between Two Resistors

Attachment #1: Locating a failed resistor or an open between two resistors

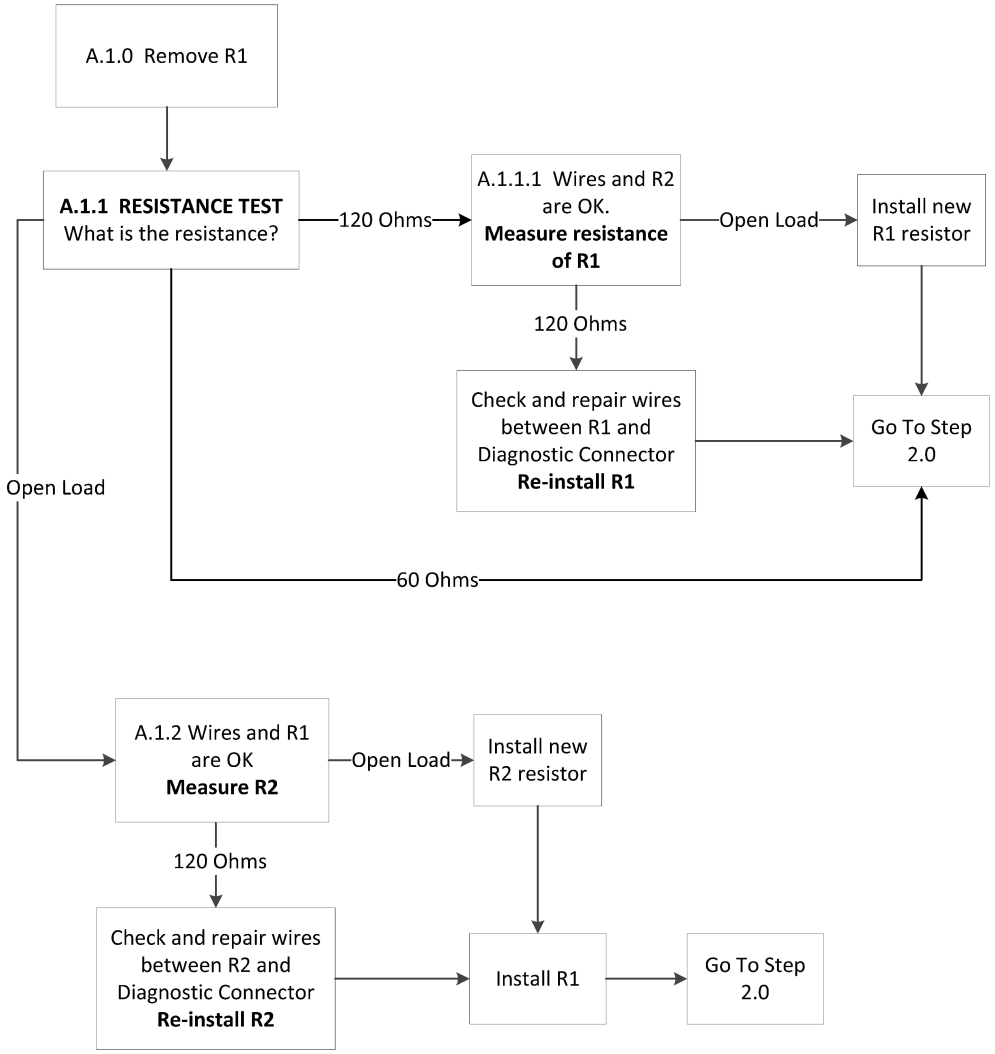

https://truckmanualshub.com/

https://truckmanualshub.com/

13 Glossary

Acronyms and Abbreviations . . . . 13 - 2

https://truckmanualshub.com/

Acronyms and Abbreviations

A-CAN	Aftertreatment Controller Area Network
ABS	Anti-lock Brakes System
ACM	Aftertreatment Control Module
ATC	Automatic Traction Control
C-CAN	Cab Controller Area Network
CAN	Controller Area Network
CECU	Cab Electronic Control Unit
CVSG	Commercial Vehicle Smart Gauges
D-CAN	Diagnostic Controller Area Network
DCS	Door Control System
DEF	Diesel Exhaust Fluid
DLA	Data Link Adapter
DPF	Diesel Particulate Filter
DTC	Diagnostic Trouble Code
DWIM	Driver Warning and Information Module
ECAT	Electronic Catalog
ECM	Engine Control Module
ECU	Electronic Control Unit
EGR	Exhaust Gas Recirculation
ELST	Exterior Lighting Self Test
EOA	Electric Over AirExt Lighting Self Test
ESA	Electronic Service Analyst
F-CAN	Frame Controller Area Network
FMI	Failure Mode Indicator
HEST	High Exhaust System Temperature
HID	High Intensity Discharge
HVAC	Heating, Ventilation & Air Conditioning
I-CAN	Instrumentation Controller Area Network
ICU	Instrumentation Control Unit
IP	Instrument Panel
KW	Kenworth
LCD	Liquid Crystal Display
LVD	Low Voltage Disconnect
MCS	Menu Control Switch
NGP	Next Generation Platform
OBD	On Board Diagnostics
PB	Peterbilt
PD	Power Distribution
PLC	Programmable Logic Controller
PTO	Power Take Off
PWM	Pulse Width Modulation
RKE	Remote Keyless Entry
RT	Run Time
SPN	Suspect Parameter Number
USB	Universal Serial Bus
V-CAN	Vehicle Controller Area Network
VBATT	Battery Voltage
VEM	Vehicle Error Memory
VIN	Vehicle Identification Number

https://truckmanualshub.com/

Index

C

CAN Troubleshooting Procedures 12-16
CECU 8-2
  Architecture 8-2
  CECU details 5-4
  Comparison chart 5-5
  Connector face views 5-4
  Connector identification 5-4
  Side view 5-4
Chassis Node
  Comparison chart 5-8
  Connector face views 5-7
  Connector identification 5-7
  Details 5-7
  Side view 5-7
Communication Diagram 5-2
Communication Interface Diagrams 5-3
Control Unit 8-2
  Build dates 2-2
  Functional description 8-2
  Identification 2-3
  Location 3-2

D

Diagnostic Trouble Codes 12-2
Diagnostic trouble codes
  DTC102809 12-8
  DTC10703 12-3
  DTC10704 12-3
  DTC11603 12-3
  DTC11604 12-3
  DTC116703 12-3
  DTC11704 12-3
  DTC11803 12-3
  DTC11804 12-4
  DTC123109 12-8
  DTC138703 12-8
  DTC138704 12-8
  DTC138803 12-9
  DTC138804 12-9
  DTC148109 12-9
  DTC148209 12-9
  DTC148309 12-9
  DTC148702 12-9
  DTC148703 12-9
  DTC148704 12-9
  DTC148707 12-9
  DTC149106 12-9
  DTC149206 12-9
  DTC15802 12-4
  DTC15803 12-4
  DTC15804 12-4
  DTC1603 12-2
  DTC1604 12-2
  DTC167502 12-10
  DTC16800 12-4
  DTC16801 12-4
  DTC17102 12-4
  DTC17103 12-4
  DTC17104 12-5
  DTC17303 12-5
  DTC17304 12-5
  DTC176102 12-10
  DTC176109 12-10
  DTC176119 12-10
  DTC17703 12-5
  DTC17704 12-5
  DTC18409 12-5
  DTC19009 12-5
  DTC2348xx 12-10
  DTC2350xx 12-10
  DTC2368xx 12-11
  DTC2370xx 12-11
  DTC2372xx 12-11
  DTC23731 12-5
  DTC2374xx 12-11
  DTC2378xx 12-12
  DTC2382xx 12-12
  DTC2388xx 12-12
  DTC2390xx 12-12
  DTC239102 12-12
  DTC239202 12-12
  DTC2396xx 12-13
  DTC2404xx 12-13
  DTC24510 12-5
  DTC24709 12-5
  DTC24809 12-6
  DTC257903 12-13
  DTC2579034 12-13
  DTC265106 12-13
  DTC286302 12-13
  DTC286303 12-13
  DTC286304 12-14
  DTC286307 12-14
  DTC286602 12-14
  DTC286603 12-14
  DTC286604 12-14
  DTC286612 12-14
  DTC287204 12-14
  DTC287304 12-14
  DTC287404 12-15
  DTC287604 12-15
  DTC287607 12-15
  DTC350905 12-15
  DTC351005 12-15
  DTC351105 12-15
  DTC351131 12-15
  DTC351205 12-15
  DTC351231 12-15
  DTC351305 12-15
  DTC351331 12-15
  DTC351405 12-15
  DTC351431 12-15
  DTC369602 12-15
  DTC369709 12-15
  DTC369809 12-15
  DTC370309 12-16
  DTC44103 12-6
  DTC44104 12-6
  DTC44203 12-6
  DTC44204 12-6
  DTC512505 12-16
  DTC512531 12-16
  DTC512605 12-16
  DTC512631 12-16
  DTC512705 12-16
  DTC512731 12-16
  DTC512805 12-16
  DTC512831 12-16
  DTC524502 12-16
  DTC524509 12-16
  DTC524519 12-16
  DTC524602 12-16

https://truckmanualshub.com/

DTC524609 12-16
DTC524619 12-16
DTC57803 12-6
DTC57804 12-6
DTC59631 12-6
DTC59902 12-6
DTC67805 12-7
DTC67806 12-7
DTC70104 12-7
DTC70204 12-7
DTC70304 12-7
DTC70404 12-7
DTC70504 12-7
DTC70604 12-7
DTC70704 12-7
DTC70804 12-7
DTC7503 12-2
DTC7504 12-2
DTC7703 12-2
DTC7704 12-2
DTC7803 12-2
DTC7804 12-2
DTC80404 12-7
DTC82903 12-7
DTC82904 12-8
DTC83003 12-8
DTC83004 12-8
DTC8409 12-3
DTC88609 12-8
DTC9003 12-3
DTC9004 12-3
DTC9109 12-3
DTC91709 12-8
DTC97403 12-8
DTC97404 12-8
Disabled gauges 5-2
Display Diagnostic Codes 8-4

E

Electric Over Air Switches 8-11
Functional description 8-11
Exploded View 3-2

G

General Information 5-2

I

Important Notes 1-2

M

Multiplexing 2-2

P

Parameter
Part numbers 7-2

S

Service Resources 5-2
CECU details 5-4
Chassis node details 5-7
Disabled gauges 5-2
Voltmeter trim values worksheet 7-21
Service resources
Voltmeter trim procedure 7-21
Service resources
Communications diagram 5-2
Specifications 7-2

T

Terminating resistor test procedure (J1939) 12-17
Troubleshooting 12-2
CAN Procedures 12-16

V

Voltmeter Trim Values 7-21