https://truckmanualshub.com/

Workshop Manual

Group 30

I
4(0)

TAD650VE, TAD660VE, TAD734GE, TAD750VE, TAD760VE

https://truckmanualshub.com/

Group 30 Electrical system

Industrial Engines

TAD734GE, TAD650VE, TAD660VE, TAD750VE, TAD760VE

Contents

Safety rules 3

General information 4
- About this Workshop Manual 4
- Spare parts 4
- Certified engines 4

Repair instructions 5
- Our common responsibility 6
- Tightening torques 6

Special tools 7

EMS 2 - "Engine Management System" 8
- General information 8
- CAN - Controller Area Network 8
- CIU - Control Interface Unit 9
- DCU - Display Control Unit 9
- Fuel control 10
- Calculation of fuel quantity 10
- Altitude correction 10
- Diagnostic function 10

Component location 11
- TAD 650, 660, 750, 760 VE 11
- TAD 734 GE 12

Component description 13
- Starter motor 13
- Alternator 13
- Injectors 14
- Speed sensor, crankshaft 14
- Speed sensor, camshaft 14
- Sensor, boost pressure/ boost temperature 15
- Sensor, oil pressure, engine 15
- EGR 15
- Coolant temperature sensor 16
- Sensor, common rail pressure (fuel) 16
- Sensor, fuel pressure 16
- Magnetically controlled proportional valve (MPROP) 17
- Water in fuel switch, secondary fuel filter 17
- Switch, coolant level 17
- Preheater 18
- Engine control unit, EMS 2 18

Repair instructions 19
- General advice on working with EMS engines 19
- Electric welding 20
- Changing the engine control unit 21
- Reprogramming a control unit 22
- Programming an empty control unit 23
- Fault tracing of cables and connectors 24
- Checking the starter motor voltage 26
- Checking the charging system 27
- Rail pressure measurement 28

Malfunctions 29
- Fault code information 29
- FMI table / SAE standard 30
- Manual fault tracing in bus cables 33

Diagnostic Trouble Codes 34
- MID 128, PID 45 Inlet air heater status 34
- MID 128, PID 94 Fuel pressure 37
- MID 128, PID 97 Water in fuel 43
- MID 128, PID 100 Oil pressure 46
- MID 128, PID 105 Boost temperature 52
- MID 128, PID 106 Boost pressure 58

7747632 English 03-2007

https://truckmanualshub.com/

MID 128, PID 108
Ambient air pressure 64
MID 128, PID 110
Coolant temperature 66
MID 128, PID 111
Coolant level 72
MID 128, PID 158
Battery voltage 76
MID 128, PID 164
Rail pressure 78
MID 128, PID 190
Engine speed 84
MID 128 / MID 144, PPID 4
Start input CIU 85
MID 128 / MID 144, PPID 6
Engine stop switch 87
MID 128, PPID 19
Internal EGR status 89
MID 128, PPID 55
EMS temperature 93
MID 128, PPID 98
Engine sync acknowledge 95
MID 128 / 144, PPID 132
Throttle input request failure, DCU/CIU 97
MID 128, SID 1-6
Injector common rail # 1-6 100
MID 128, SID 21
Speed sensor camshaft 105
MID 128, SID 22
Speed sensor, crankshaft 110
MID 128, SID 39
Engine starter relay 115
MID 128, SID 42
Injection control pressure regulator 118
MID 128, SID 70
Preheat sense 122
MID 128, SID 211
5V sensor supply 2 124
MID 128, SID 231
Communication fault J 1939 126
MID 128, SID 232
5V sensor supply 1 129
MID 128, SID 240
Program memory 131
MID 128, SID 254
Controller error 132
MID 128, PSID 96
Rail pressure system 133
MID 128, PSID 97
Rail pressure release valve 137
MID 128 / MID 144, PSID 201
J1939 communication bus 141

Engine protection 144
TAD 650, 660, 750, 760 VE 144
TAD 734 GE 145

Wiring diagrams 146
Wiring diagram EMS 2:
Vechicle harness TAD 650-760VE 146
Engine harness TAD 650-760VE 147
Engine harness TAD 734GE 148
Wiring diagram DCU 149
Wiring diagram CIU 150

Technical data 151
Switch, water in fuel 151
Sensor, fuel pressure 151
Speed sensor, camshaft /
Speed sensor, crankshaft 151
Sensor, oil pressure 151
Sensor, rail pressure 151
Combination sensor,
boost pressure/boost temperature 152
Sensor, coolant temperature 152
Switch, coolant level 152
Alternator 152
Starter motor 152

Index 153

References to Service Bulletins 153

© 2007 AB VOLVO PENTA
We reserve the right to make modifications without prior notice.
Printed on environmentally compatible paper.

https://truckmanualshub.com/

Safety rules

Introduction

This workshop manual contains technical data, descriptions and repair instructions for the Volvo Penta products or product versions noted in the table of contents. Check that you have the correct Workshop Manual for your engine.

Read the available safety information, ”General information” and ”Repair instructions” in this workshop manual before you start to do any service work.

Important!

The following special warning symbols occur in this book and on the engine.

⚠ **WARNING!** Warns for the risk of personal injury, property damage or that a mechanical fault can occur if the instructions are not followed.

⚠ **IMPORTANT!** Is used to call attention to things which could cause damage or malfunctions to product or property.

NOTE! Is used to call attention to important information, to facilitate work processes or operation.

Below is a summary of the risks involved and safety precautions you should always observe or carry out when performing work on the EMS 2 system.

⚠ Before electric welding is done, the connector on the EMS system must be disconnected. Disconnect the engine from system voltage by turning off the main switch.
Disconnect the cable connectors from the control unit.
Reconnect the EMS 2 control module terminal when the electric welding is finished and the electric welding equipment has been disconnected.

⚠ Be careful, watch out for the moving components of the engine during function testing and in operation. Approaching the engine during operation entails a risk of personal injury. Remember that loose clothes or long hair can catch on rotating components and cause severe injury.

⚠ Never do any work on an engine which just hangs from a lifting device (crane etc.).

⚠ The engine must not be run in areas where explosive material or any gases are stored.

⚠ Only start the engine in a well-ventilated area. If the engine is run in a confined space, make sure that the crankcase ventilation and exhaust gases can be led away from the workplace.

⚠ The battery lockers must never be exposed to open flames or sparks. Never smoke close to the batteries. The batteries generate hydrogen gas when charged, which can form an explosive gas when mixed with air. This gas mixture is very flammable and highly explosive. A spark, which can be caused by incorrect battery connection, can cause a single spark which is sufficient to cause an explosion with resulting damage. Do not shift the connections when attempting to start the engine (spark risk) and do not lean over any of the batteries. Please refer to the advice in the instruction book.

⚠ Always ensure that the + (positive pole) and – (negative pole) are securely connected to their appropriate terminals on the battery. If the batteries are wrongly connected, this can cause severe damage to the electrical equipment. Please refer to the wiring diagram.

⚠ Always use goggles when charging and handling batteries. Battery electrolyte contains sulfuric acid, which is highly corrosive. If battery acid comes into contact with your skin, wash it off at once with a lot of soap and water, and then get medical help. If battery acid comes into contact with your eyes, flush your eyes at once (preferably with an eye shower) with a lot of clean water, and then get medical help at once.

https://truckmanualshub.com/

General information

About this Workshop Manual

This workshop manual contains descriptions and repair instructions for the standard versions of the TAD734GE, TAD650VE, TAD660VE, TAD750 and TAD760VE engines.

The workshop manual can illustrate tasks done on any of the engines noted above. This means that the illustrations and photographs which clarify certain details might not correspond with other engines in some cases. Repair methods are similar in all important respects, however. If this is not the case, this is noted. Important differences are noted separately.

The engine designation and number are noted on the number plate and engine decal. The engine designation and number must always be given in all correspondence about any product.

The workshop manual is produced primarily for the use of Volvo Penta workshops and service technicians. For this reason the manual presupposes a certain basic knowledge and that the user can carry out the mechanical/electrical work described to a general standard of engineering competence.

Volvo Penta constantly improves its products, so we reserve the right to make modifications without prior notification. All information in this manual is based on product data which was available up to the date on which the manual was printed. Any material changes introduced into the product or service methods after this date are notified by means of Service Bulletins.

Spare parts

Spare parts for electrical and fuel systems are subject to various national safety requirements. Volvo Penta Original Spare Parts meet these specifications. Any kind of damage whatsoever, occasioned by use of non-original Volvo Penta spares for the product in question, will not be compensated by the warranty offered by Volvo Penta.

Certified engines

When doing service and repair on emission certified engines, it is important to be aware of the following:

Certification means that an engine type has been checked and approved by the relevant authority. The engine manufacturer guarantees that all engines made of the same type are equivalent to the certified engine.

This makes special demands on service and repair work, as follows:

- Maintenance and service intervals recommended by Volvo Penta must be complied with.
- Only Volvo Penta original spares may be used.
- Service to injection pumps, pump settings and injectors must always be done by an authorized Volvo Penta workshop.
- The engine must not be converted or modified, except for the accessories and service kits which Volvo Penta has approved for the engine.
- No installation changes to the exhaust pipe and engine air inlet ducts may be done.
- No seals may be broken by unauthorized personnel.

The general advice in the instruction book about operation, care and maintenance applies.

⚠ **IMPORTANT!** Delayed or inferior care/maintenance, and the use of non-original spares parts means that Volvo Penta can no longer be responsible for guaranteeing that the engine complies with the certified version.

Damage and/or costs which arise from this will not be compensated by Volvo Penta.

https://truckmanualshub.com/

Repair instructions

The working methods described in the workshop manual apply to work carried out in a workshop. For this reason, the engine is lifted out and mounted on an engine support. Unless otherwise stated reconditioning work which can be carried out with the engine in place follows the same working method.

The warning signs which occur in the workshop manual (please refer to “Safety information” for their meanings).

⚠ WARNING!

⚠ IMPORTANT!

NOTE!

are not comprehensive in any way, since we can not of course foresee everything, because service work is done in highly varying circumstances. For this reason, all we can do is to point out the risks which we believe could occur due to incorrect work in a well-equipped workshop, using work methods and tools tested by us.

All operations described in the Workshop Manual for which there are Volvo Penta Special Tools available assume that these tools are used when carrying out the repair. Volvo Penta Special Tools have been developed to ensure the most safe and rational working methods possible. It is therefore the responsibility of anyone using other tools or other working methods than we recommend to determine that there is no risk of personal injury or mechanical damage or malfunction as a result.

In some cases special safety precautions and user instructions may be required in order to use the tools and chemicals mentioned in the Workshop Manual. These rules must always be observed, so there are no special instructions about this in the workshop manual.

By following these basic recommendations and using common sense it is possible to avoid most of the risks involved in the work. A clean work place and a clean engine will eliminate many risks of personal injury and engine malfunction.

Above all, when work on fuel systems, lubrication systems, inlet systems, turbocharger, bearing caps and seals is done, it is extremely important that no dirt or other kinds of foreign particles are able to get in, since this would otherwise cause malfunctions or shortened repair life.

https://truckmanualshub.com/

Our common responsibility

Each engine consists of a large number of collaborating systems and components. Any deviation of a component from its technical specification can dramatically increase the environmental impact of an otherwise good engine. For this reason, it is important that the specified wear tolerances are observed, that systems which are adjustable are correctly adjusted and that Volvo Penta Original Spares are used for the engine. The stated service intervals in the Maintenance Schedule (see the Owner's Manual) must be observed.

Some systems, such as the components in the fuel system, require special expertise and special testing equipment for service and maintenance. For environmental reasons etc., some components are sealed at the factory. It is only permissible to work on sealed components if you are authorized to do such work.

Remember that most chemical products, incorrectly used, damage the environment. Volvo Penta recommends the use of biodegradable degreasers whenever engine components are de-greased, unless otherwise specified in the workshop manual. When working aboard a boat, be careful to ensure that oils, wash residue etc. are processed for destruction, and are not inadvertently discharged with bilge water into the environment.

Tightening torques

The tightening torque for vital fasteners, which should be tightened with a torque wrench, are listed in "Technical Data: Special tightening torques" and noted in the job descriptions in the book. All torque specifications apply to clean screws, screw heads and mating faces. Torque data stated apply to lightly oiled or dry threads. If lubricants, locking fluids or sealants are needed on a fastener, the type of preparation to be used will be noted in the job description and in "Tightening Torques". For fasteners where specific torque values are not given, please refer to "Technical data: General tightening torques". General torque specifications are target values and the fastener does not need to be tightened with a torque wrench.

Dimension	Torque Nm
M5	6
M6	10
M8	25
M10	50
M12	80
M14	140
M16	220

https://truckmanualshub.com/

Special tools

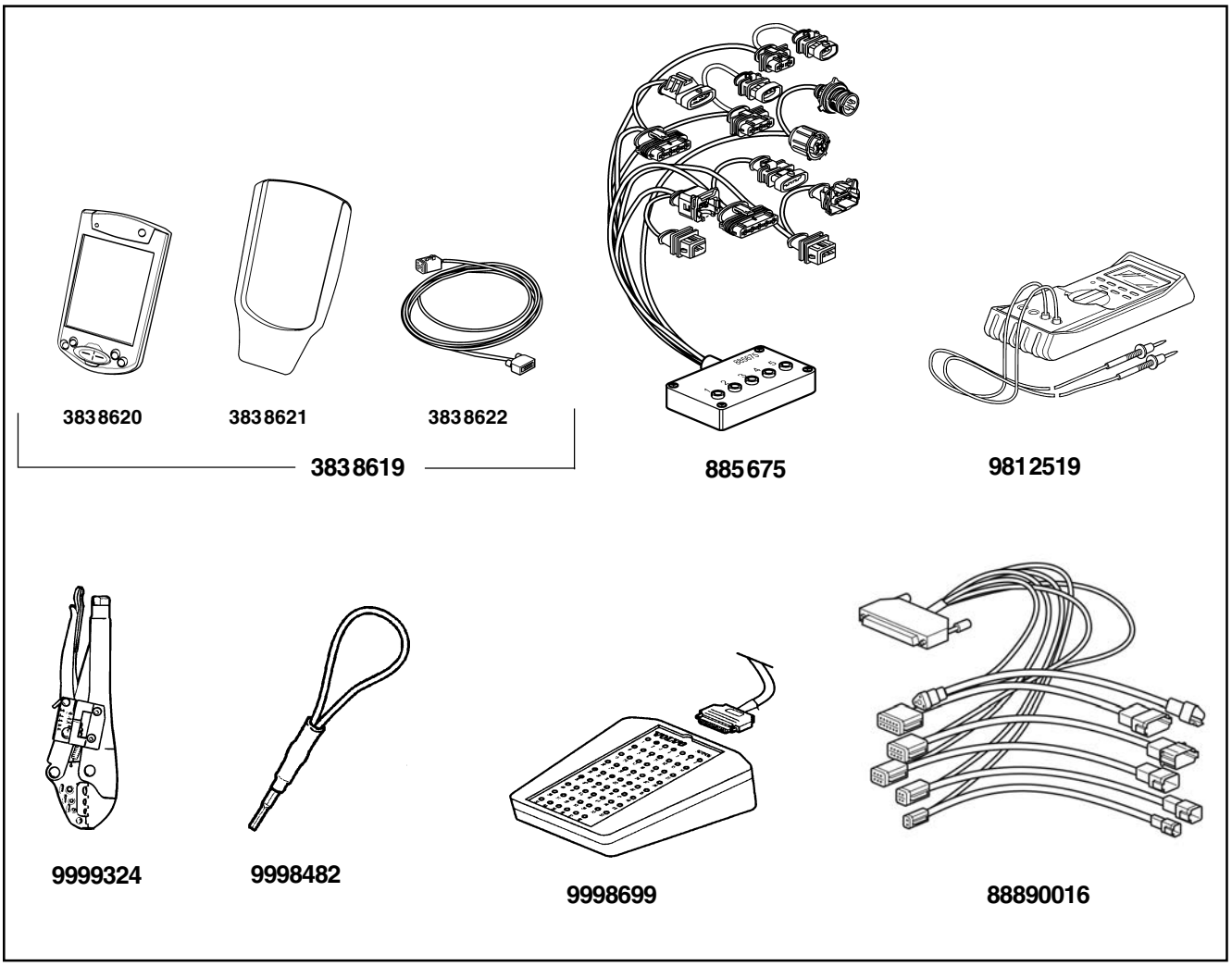

3838619	VODIA complete diagnostic tool.* Components:
3838620	VODIA – palmtop computer (PDA) with SD card.
3838621	VODIA – docking station. Used with VODIA PDA (3838620).
3838622	VODIA – cable with connector. Used with docking station (3838621) on the engine's communication connector.

***Note.** More detailed information about using the VODIA tool can be found in the tool's instruction manual.

885675	Adapter cable for sensor test
9812519	Multimeter
9999324	Terminal crimping tool
9998482	Gauge for connector on control unit
9998699	Measurebox
88890016	Adapter cable

https://truckmanualshub.com/

EMS 2 - “Engine Management System”

General information

EMS 2 is an electronic system with CAN communication (Controller Area Network) for diesel engine control. The system has been developed by Volvo and includes fuel control and diagnostic function.

The system consists of a control module, six injectors, a number of sensors that supply the control module with measurements, sockets for diagnosis and functional checks. The engine can be connected to a communications interface consisting of a CAN link and a serial link.

CAN - Controller Area Network

The J1939 CAN link is responsible after all communication between the engine control unit (EMS 2) and a communication interface (such as CIU/DCU), except for diagnostics. Diagnostics are managed by the so-called J1708/J1587 link. The CAN link is much faster than the J1708/J1587 link and has been designed to connect to other components that support the SAE J1939 protocol, such as instrument panels and transmissions.

If a fault develops on the CAN link, signals for the engine speed potentiometer, and the start and stop knobs are taken over by the J1708/J1587 link. However, instrument and indicator lamps are completely turned off.

If faults occur in both links, the engine starts to idle. The only way to shut off the engine in this case is to use the auxiliary stop (AUX-STOP).

https://truckmanualshub.com/

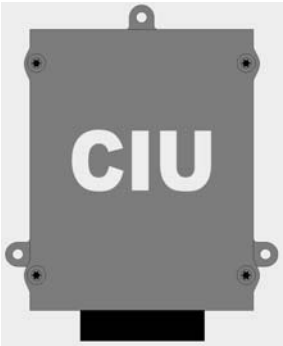

CIU - Control Interface Unit

The CIU is a “translator” between the CAN bus and the customer’s own control panel. This unit has two serial communication links, one fast and one slow.

The fast one is a CAN link that features a bus speed of 250 Kbit/s. All data regarding instruments, indicator lamps, contacts and potentiometers are controlled by this bus.

The slower J1708/J1587 link handles diagnostic information for, among other things, the flashing code. The VODIA diagnosis tool also uses the J1708/J1587 link to communicate with the system.

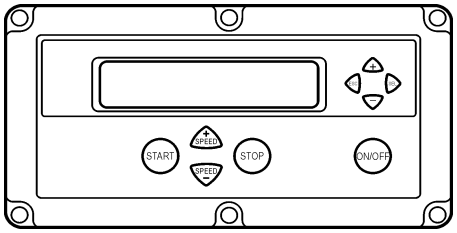

DCU - Display Control Unit

DCU is a digital instrument panel that communicates with the engine control module via the CAN link. DCU has several functions, such as:

Engine control

– Start, stop, speed control, preheating etc.

Monitoring

– Engine speed, boost pressure, boost temperature, coolant temperature, oil pressure, oil temperature, engine hours, battery voltage, instantaneous fuel consumption and fuel consumption (trip fuel).

Diagnostics

– Shows fault codes in text. Lists previous faults.

Parameter setting

– Idling speed, alarm limit for oil temperature/coolant temperature, droop.

– Preheating for ignition.

Information

– Information about hardware, software and engine identification.

https://truckmanualshub.com/

Fuel control

The amount of fuel injected into the engine and the injection advance are fully electronically controlled, via fuel valves in the injectors, once the control unit has analyzed the engine’s fuel requirements.

This means that the engine always receives the correct volume of fuel in all operating conditions, which offers lower fuel consumption, minimal exhaust emissions etc.

The control unit monitors and reads the injectors to ensure that the correct volume of fuel is injected into each cylinder, and it calculates and set the injection advance. Control is mainly done with the help of the speed sensors, fuel pressure sensor and the combined sensor for boost pressure/boost temperature.

The control unit controls the injectors via a signal to the electromagnetically operated fuel valve in each injector, which can be opened and closed.

Calculation of fuel quantity

The quantity of fuel to be injected into the cylinder is calculated by the control unit. The calculation determines the time that the fuel valve is open (when the fuel valve is open fuel is sprayed into the cylinder). The parameters which govern the amount of fuel injected are:

- Demanded engine speed
- Engine protector functions
- Temperature
- Boost pressure

Altitude correction

The control unit contains an atmospheric pressure sensor and an altitude compensation function for engines that operate at high altitude. This function limits the fuel volume in relation to ambient air pressure. This is to prevent smoke, high exhaust temperature and to protect the turbocharger from overspeeding.

Diagnostic function

The task of the diagnostic function is to discover and localize any malfunctions in the EMS 2 system, to protect the engine and to inform about any problems that occur.

If a malfunction is discovered, this is announced by warning lamps, a flashing diagnostic lamp or in plain language on the instrument panel, depending on the equipment used. If a fault code is obtained as a flashing code or in plain language, this is used for guidance in any fault tracing. Fault codes can also be read by Volvo’s VODIA tool at authorized Volvo Penta workshops.

In case of serious disturbances, the engine is shut down completely or the control module decreases the power output (depending on the application). Once again, a fault code is set for guidance in any fault tracing.

https://truckmanualshub.com/

Component location TAD 650, 660, 750, 760 VE

NOTE! Location can differ, depending on engine model.

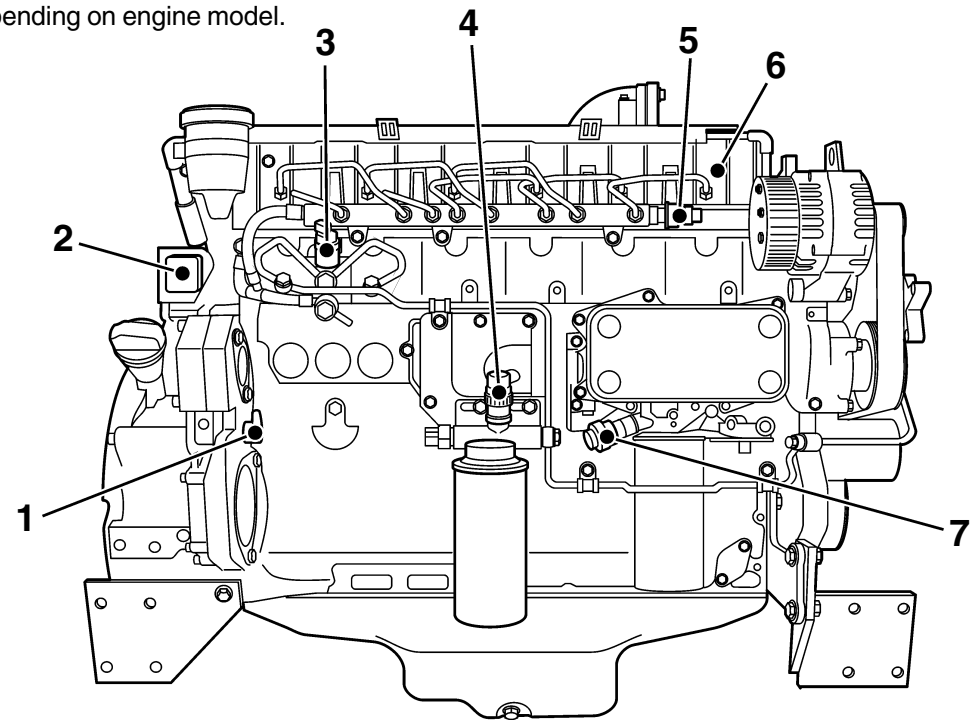

1. Speed sensor, camshaft
2. Connection, EMS 2
3. Solenoid controlled proportional valve, high pressure pump – fuel (MPROP)
4. Fuel pressure
5. Fuel pressure in comman rail
6. Glow plugs, one for each injector
7. Oil pressure sensor
8. Boost pressure and temperature
9. Solenoid valve, EGR
10. Coolant temperature
11. Speed sensor, crankshaft
12. Water in fuel (not shown, mounted on primary fuel filter).

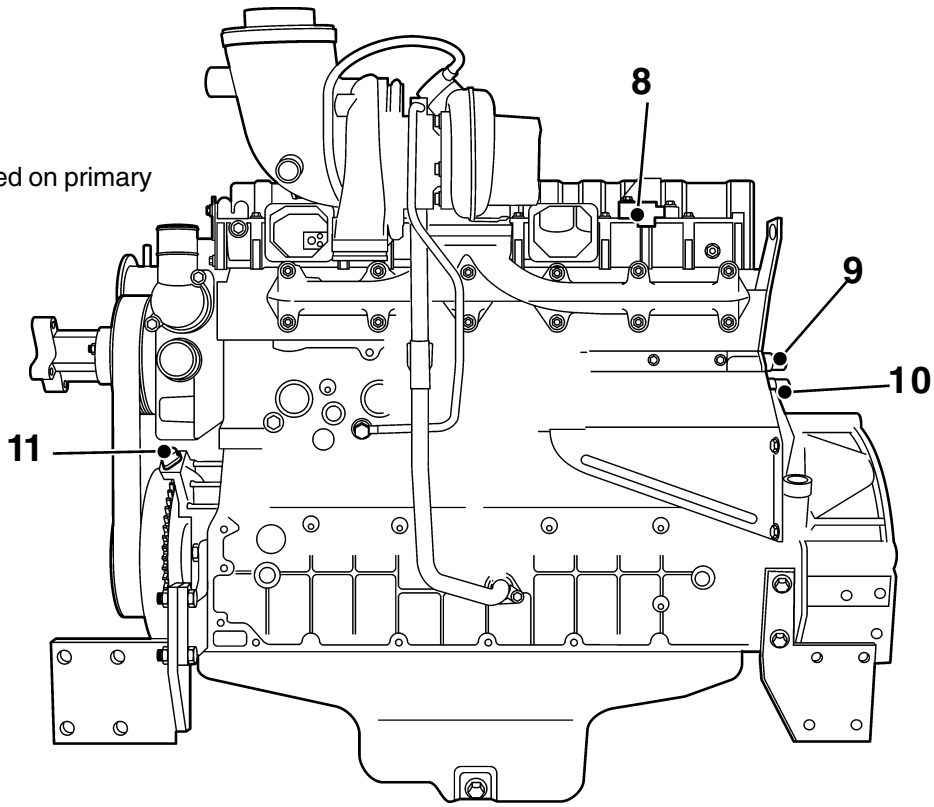

https://truckmanualshub.com/

Component location TAD 734 GE

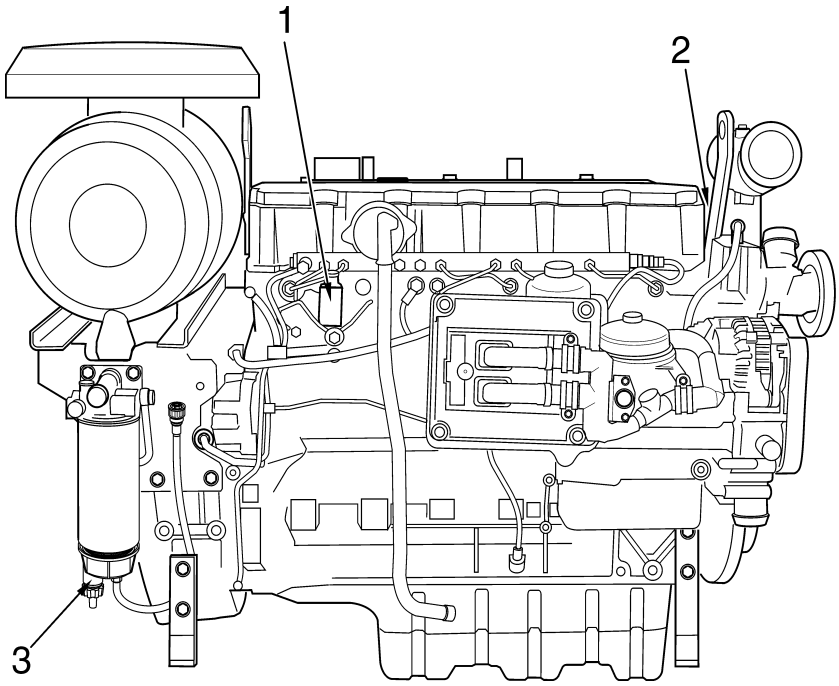

1. Solenoid controlled proportional valve, high pressure pump – fuel (MPROP)
2. Coolant temperature sensor
3. Water in fuel switch(mounted on primary fuel filter).
4. Boost pressure and temperature sensor
5. Preheater, intake manifold
6. Fuel pressure in comman rail
7. Fuel pressure sensor
8. Oil pressure sensor
9. Main relay
10. Speed sensor, crankshaft
11. Speed sensor, camshaft

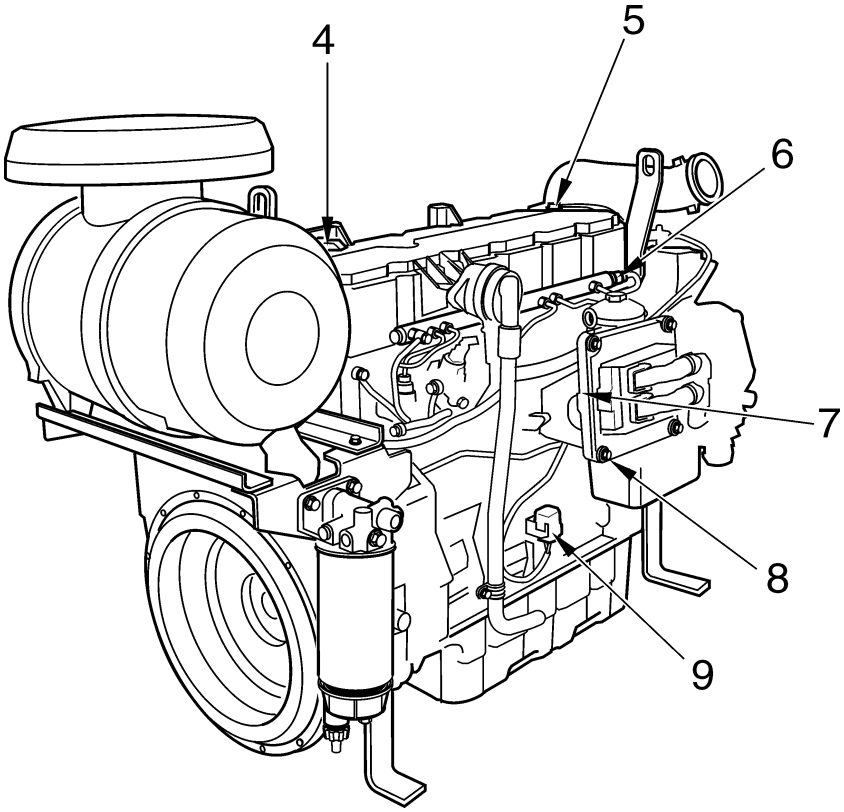

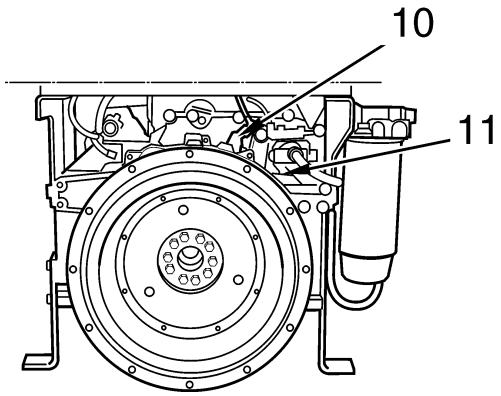

https://truckmanualshub.com/

Component description

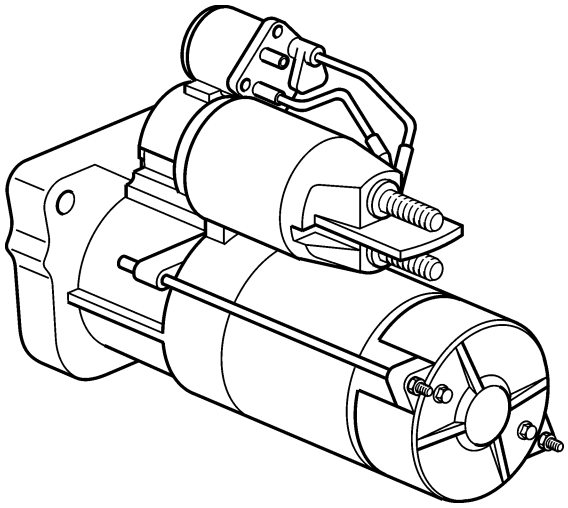

Starter motor

The starter motor is installed in the flywheel housing, on the left-hand side of the engine. The starter motor relay is “positive connected”, which means that the relay is connected to battery voltage.

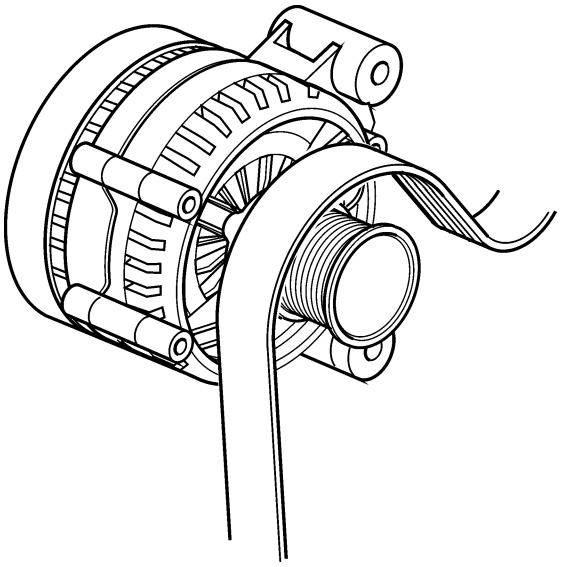

Alternator

The alternator is belt driven and mounted on the front of the engine, on the right.

https://truckmanualshub.com/

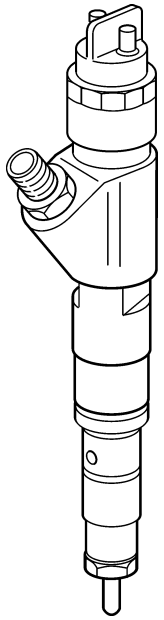

Injectors

The injectors are installed on the cylinder head.

The amount of fuel injected and injection duration is controlled by the engine control unit, via electromagnetically controlled fuel valves in the injectors. This means that the engine always receives the correct volume of fuel in all operating conditions, which offers lower fuel consumption, minimal exhaust emissions etc.

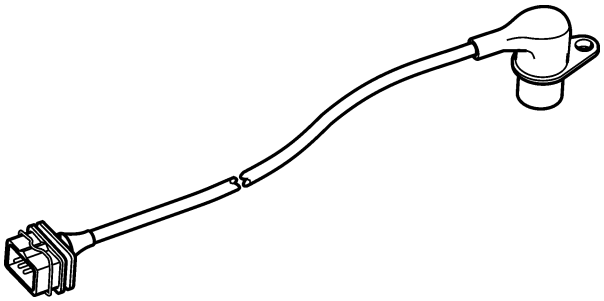

Speed sensor, crankshaft

The engine speed sensor is an inductive sensor. When the crankshaft rotates impulses are created in the sensor via a tooth wheel on or behind the torsion damper. The impulses create a pulse signal in the sensor that the engine control unit (EMS 2) uses to calculate the crankshaft's rpm.

The tooth wheel has a tooth free gap for the EMS 2 to recognize the crankshafts position.
The signal is sent to the engine control unit, which calculates the injection in advance and the amount of fuel to be injected.

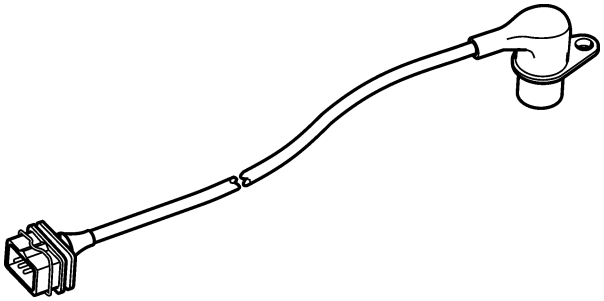

Speed sensor, camshaft (camshaft position)

The camshaft sensor is an inductive sensor. When the camshaft rotates impulses are created in the sensor via a tooth wheel installed on the camshaft. The tooth has seven teeth, one for each cylinder and one to determine when cylinder one is to be injected. The impulses create a pulse signal in the sensor that the engine control unit (EMS 2) uses to calculate when a cylinder is in turn for injection.

https://truckmanualshub.com/

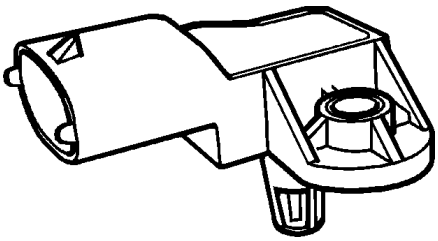

Sensor, boost pressure/boost temperature

The boost pressure and the boost temperature are measured by a combined sensor located on the inlet manifold on the left of the engine.

The sensor is supplied by a 5 Volt reference voltage from the engine control module.

The boost pressure sensor measures the absolute pressure, which is the sum of the boost pressure and atmospheric pressure (300 kPa thus corresponds to a boost pressure of 200 kPa when atmospheric pressure is 100 kPa).

The pressure signal is a voltage signal which is proportional to absolute pressure.

The boost temperature sensor consists of a non-linear resistor, whose resistance varies with boost temperature. The resistance falls as the temperature rises.

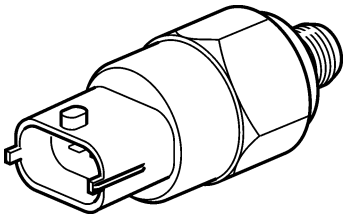

Sensor, oil pressure, engine

Oil pressure is measured by a sensor installed in the engine block on the right side of the engine.

The sensor measures pressure in the main oil gallery, and is supplied by a 5 Volt reference voltage from the engine control module.

The pressure signal is a voltage signal which is proportional to the lubrication oil pressure.

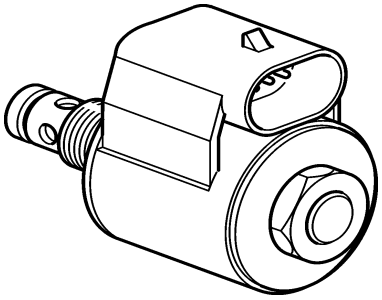

IEGR (only VE engines)

The IEGR valve is a 2-way solenoid valve controlled by the engine control unit. The IEGR solenoid controls a oil pressure that effects a control valve which activate the exhaust gas recirculation function.

https://truckmanualshub.com/

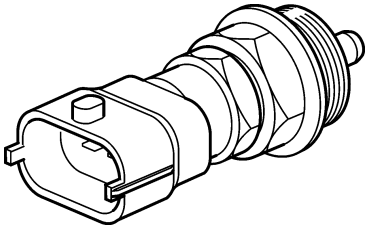

Coolant temperature sensor

The sensor is located on the cylinder head, at the rear end of the engine.

The sensor senses the engine coolant temperature and sends the information to the engine control unit. The sensor consists of a non-linear resistor, whose resistance varies with coolant temperature. The resistance falls as the coolant temperature rises.

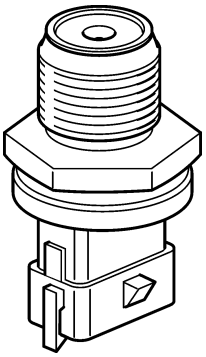

Sensor, common rail pressure (fuel)

The sensor is mounted on the right of the engine, at the front of the common rail, which distributes fuel to the injectors.

The rail pressure sensor senses the fuel pressure and converts this to a voltage which is registered by the engine control unit.

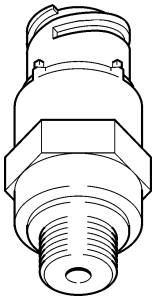

Sensor, fuel pressure

The sensor measures fuel pressure and is located on the fuel filter bracket. The sensor is an active sensor, i.e. the sensor requires a supply voltage of +5 Volt. The sensor provides an output signal whose voltage is proportional to the pressure that the sensor measures.

https://truckmanualshub.com/

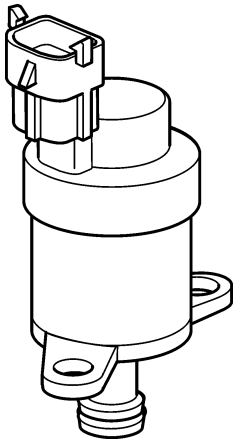

Magnetically controlled proportional valve (MPROP)

A magnetically controlled proportional valve (MPROP) controls the high pressure pump to ensure that the correct fuel pressure (rail pressure) is retained despite varying engine speed and loading.

The input signal to the valve is a PWM signal whose pulse width is controlled by the engine control module.

When the current through the valve is changed, this affects the fuel flow, which results in changed rail pressure.

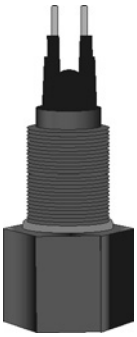

Water in fuel switch, secondary fuel filter

A switch is located in the water trap under the fuel filter. Its task is to detect whether there is water in the fuel.

The switch senses the resistance between two pins, wich are in contact with the fuel. When there is no water in the fuel, the resistance is very high. If there is any water in the fuel, the resistance falls.

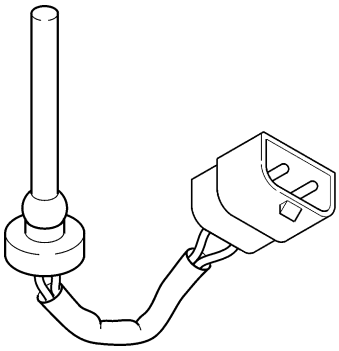

Switch, coolant level

The task of the switch is to discover whether the coolant level in the engine (expansion tank) has become too low. An alarm signal is sent when the coolant level is too low.

https://truckmanualshub.com/

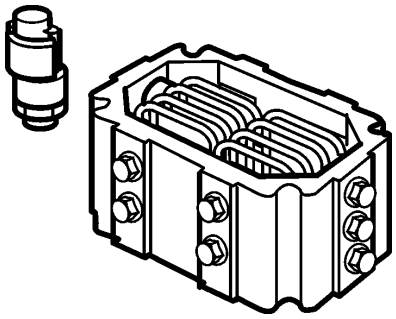

Preheater with preheater relay

The preheater is located in the inlet manifold at the left side of the engine. The preheat relay is located at the engines left side beneath the preheater.

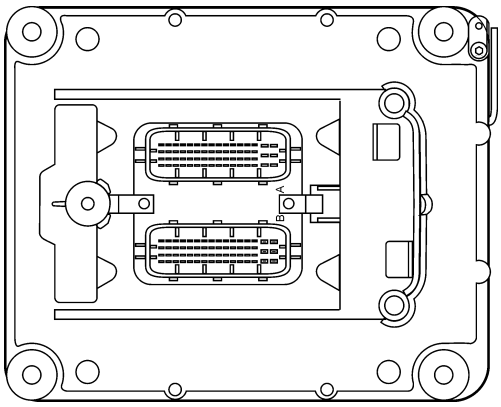

Engine control unit, EMS 2

The engine control unit checks and controls the injectors, to ensure that the correct volume of fuel is injected into each cylinder at the right time. It also controls the high pressure pump via the proportional valve (MPROP) to ensure that the system always has the correct fuel pressure (rail pressure).

The control unit also calculates and adjusts the injection advance. Regulation is mainly done with the aid of the engine speed sensor and the combined sensor for boost pressure/boost temperature.

The EMS 2 system processor is located in the control unit, protected from water and vibration.

The processor receives continuous information about:

- Engine speed
- Throttle
- Oil pressure
- Boost pressure/temperature
- Fuel pressure (common rail pressure)
- Fuel alarm, “water in fuel”
- Camshaft position
- Coolant temperature

The information provides information about current operation conditions and allows the processor to calculate the correct fuel volume, monitor engine status etc.

https://truckmanualshub.com/

Repair instructions

General advice on working with EMS engines

The following advice must be followed to avoid damage to the engine control unit and other electronics.

⚠ **IMPORTANT!** The system must be disconnected from system voltage (by cutting the current with the main switch) and the starter key(s) must be in the 0 position when the engine control module connectors are disconnected or connected.

- Never disconnect the current with the main switches when an engine is running.
- Never undo a battery cable when the engine is running.
- Turn the main switches off or disconnect the battery cables during quick charging of the batteries.
- **NOTE!** During normal trickle charging, it is not necessary to turn the main switches off.
- Only batteries may be used for start help. A help start device can produce a very high voltage and damage the control unit and other electronics.
- If a connector is disconnected from a sensor, be very careful to avoid allowing the contact pins to come into contact with oil, water or dirt.

https://truckmanualshub.com/

Electric welding

1. **NOTE!** Cut the current with the main switch.

IMPORTANT! The system must be disconnected from system voltage when the engine control module connectors are disconnected or connected.

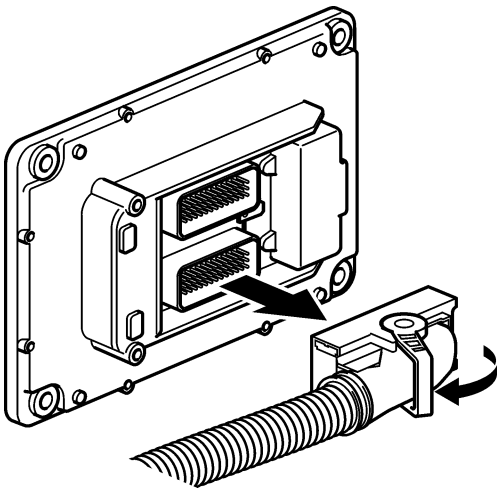

2. Undo the two connectors from the engine control unit before any electric welding starts. Turn the locking arm down at the same time as the connector is pulled outwards.

3. Disconnect all connections to the alternator.

   Connect the welder earth clamp to the component to be welded, or as close as possible to the weld site. The clamp must never be connected to the engine or in such a way that current can pass through a bearing.

IMPORTANT! After welding is completed, the disconnected components, such as alternator cables and battery cables must be connected in the correct order.
The battery cables must always be connected last.

https://truckmanualshub.com/

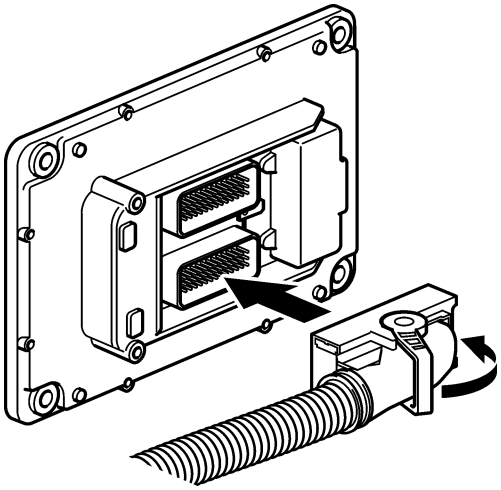

Changing the engine control unit

1. **NOTE!** Cut the current with the main switch.

   ⚠ **IMPORTANT!** The system must be disconnected from system voltage when the engine control module connectors are disconnected or connected*.

2. Remove the two connectors from the engine control unit. Turn the locking arm down at the same time as the connector is pulled outwards

3. If the new engine control unit has recently been programmed:

   Start the engine and check whether any fault codes related to the engine control unit occur.

https://truckmanualshub.com/

Reprogramming a control unit

⚠ **IMPORTANT!** The CHASSIS ID number must be readily available to allow the software to be downloaded.

Action:

1. Log in to **Volvo Penta Partner Network's** website:

www.vppn.com

2. Choose "VODIA" in the left-hand menu.

3. Choose "ECU programming" in the left-hand menu.

4. Follow the instructions under "Download software". Choose the control units to be reprogrammed and click the "Download" button. The software for the control units is now downloaded to the PDA*.

* **Note.** PDA = "Personal Digital Assistant" (palmtop computer).

5. Take a look under "Settings", "Software information" in VODIA to check that the software has been downloaded.

6. Connect the VODIA to the engine (control unit) to be programmed.

7. Start with the engine control unit.

   Select "Engine with mounting and equipment" in the VODIA menu.

   Select "MID 128 Control unit, programming".

   VODIA will guide you through the entire programming process.

8. The next control unit is the vehicle ECU.

   Select "Electrical system and instruments" in the VODIA menu.

   Select "MID 144 ECU, programming".

   VODIA will guide you through the entire programming process.

9. **NOTE!** Programming must be reported back to Volvo Penta within 28 days. Log in to **Volvo Penta Partner Network's** web site:

www.vppn.com

10. Choose "VODIA" in the left-hand menu.

11. Choose "Report software" in the left-hand menu.

12. Follow the instructions for "Report software/parameter". Click "Report software/parameter".

https://truckmanualshub.com/

Programming an empty control unit

When a new engine control unit is installed, where no software has been downloaded, the control unit must be programmed.

The new control unit must have the same part number as the old control unit. If the control units do not have the same part number, it will not be possible to program the new control unit until a “Conversion kit” has been ordered from Volvo Penta.

If the control units have the same part number, the new control unit can be programmed as usual. Please refer to “Programming a control unit”.

If the part numbers do not coincide – proceed as possible:

1. Have both part numbers available.

2. Log in to **Volvo Penta Network’s** web site:

www.vppn.com

3. Choose “VODIA” in the left-hand menu.

4. Choose “Conversion kit” in the left-hand menu. A new page, “Conversion kit / Accessory kit”, opens up.

5. Click the text “**Available conversions kits**” which is shown in bold face.

6. A new window opens. Follow the instructions given in the window.

7. Return to the “Conversion kit / Accessory kit” page and follow the instructions to order a new “conversion kit”.

8. Volvo Penta’s database is now updated. It can take about a minute before a confirmation is sent.

9. Programing of the control unit can now start. Please refer to “Programming a control unit”.

https://truckmanualshub.com/

Fault tracing of cables and connectors

Special tools: 9812519, 9998482

Check all connectors visually

Check the following:

- Look for oxidation which can impair contact in connectors.
- Check that terminals are undamaged, that they are correctly inserted into their connectors, and that the cable is correctly terminated in the terminal.
- Check that there is good mechanical contact in the connector. Use a loose pin to check this.

  ⚠ **IMPORTANT!** The multi-pin connectors for the engine control unit must only be checked with gauge 9998482.
- Carefully insert gauge 9998482 into the multi-pin connector. Pull and push the connector in and out a few times and feel whether the terminal socket grasps the tool. If the terminal socket does not grasp, or if it feels slack, the connection pins should be changed. Please refer to ”Joining electrical cables for multi-connector” Check the secondary locking in the connector.

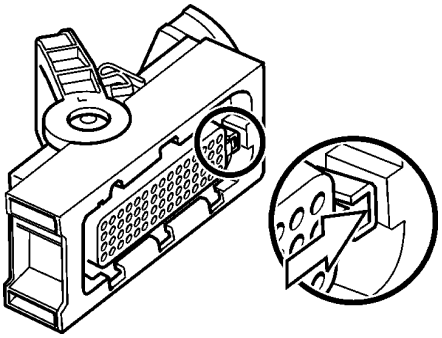

- If possible, shake the cables and pull the connectors during measurement to discover whether the cable harness is damaged.
- Check that the cables are not damaged. Avoid clamping cables in tight bends close to the connector.
- Check the function of the secondary locking.

Contact problems

Intermittent contact or temporary recurring faults can be difficult to fault trace, and are frequently caused by oxidation, vibration or poorly terminated cables.

Wear can also cause faults. For this reason, avoid disconnecting a connector unless it is necessary.

Other contact problems can be caused by damage to pins, sockets and connectors etc.

Shake cables and pull connectors during measurement, to find where the cable is damaged.

Contact resistance and oxidation

Resistance in connectors, cables and junctions should be close to 0 Ω. A certain amount of resistance will occur, however, because of oxidation in connectors.

If this resistance is too great, malfunctions occur. The amount of resistance that can be tolerated before malfunctions occur varies, depending on the load in the circuit.

Open circuit

Possible reasons for faults could be chafed or broken cables, or connectors which have come undone.

Use the wiring schedule to check the cable harnesses which are relevant to the function. Start off with the most probable cable harness in the circuit.

Check the following:

- Disconnect the relevant connector at each end of the cable harness.
- Use multimeter 9812519 to measure the resistance between the ends of the cable.
  Nominal value close to 0 Ω.
- If possible, shake the cables and pull the connectors during measurement to discover whether the cable harness is damaged.
- Check the next cable harness in the wiring schedule if no fault has been found.

https://truckmanualshub.com/

Joining electrical cables for connectors

Special tools: 9808648, 999 9324

Repair kit: 107 8054

1

Disconnect the connector from the engine control unit or from the power supply unit, please refer to ”Control unit, changing”.

Undo the connector, to gain access to the cable leading to the pin which is to be changed.

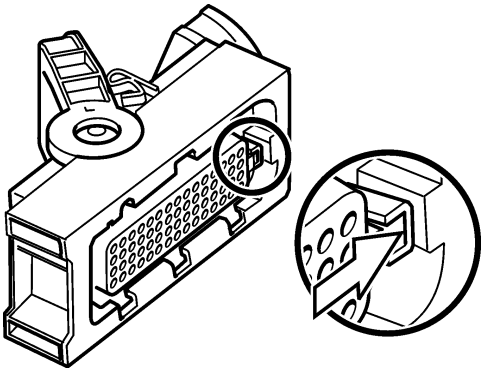

2

Undo the pin catch.

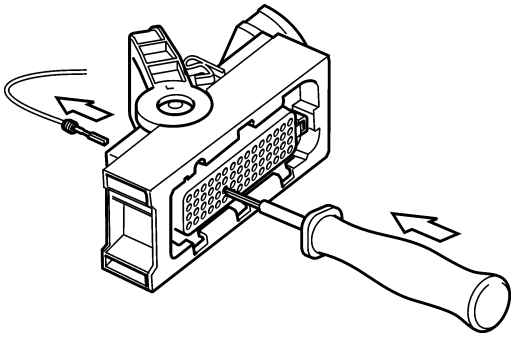

3

Remove the pin with tool no. 9808648.

NOTE! Only remove one pin at a time.

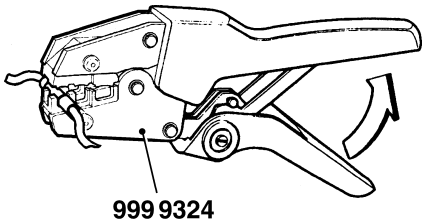

4

Cut off the cable and the pin which is to be changed. Join the cable with the new one, using repair kit 10.78054. Use cable crimping tool no. 999 9324.

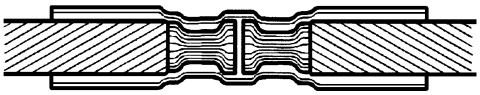

5

Carefully heat the joint with a hot air gun, to make the insulation shrink and seal tightly.

https://truckmanualshub.com/

6
Put the pin back in the right place in the connector before removing the next pin, if several pins are to be changed. Check that the locking tongue locks the pin in the connector.

7
Install the cables with insulation and tie wraps in the connector, in the reverse order to disassembly.

8
Install the connector in the reverse order to disassembly.

9
Check that the connector and the mating connector on the engine control unit or power supply unit are clean and dry.

10
Join up the multi-pin connector. Please refer to ”Control unit, changing” for advice on joining up the connector.

11
Start the engine and check carefully that no fault codes occur.

Checking the starter motor voltage

Special tools: Multimeter 981 2519

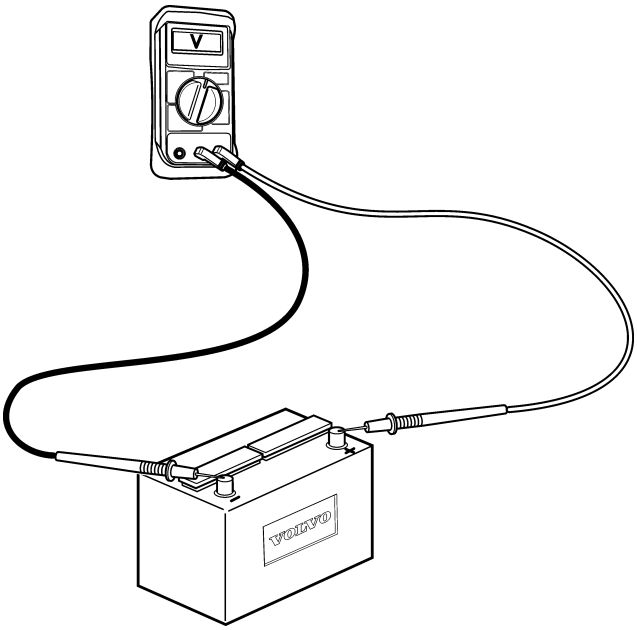

General

If battery voltage falls below 24.7 V*, the starter motor will not be able to crank the engine at normal speed.

A fully charged battery has an open circuit voltage of about 25.4 V.

* **Note.** Measured on the batteries.

Voltage measurement, check

1
Check that the battery voltage is at least 24.7 V* when unloaded by using multimeter 981 2519 to measure between the battery poles.

* **Note.** Measured on the batteries.

2
Turn the main switch on.

3
Check that the voltage between terminal B+ on the starter motor and battery negatives connection point is the same as the battery voltage.

https://truckmanualshub.com/

Checking the charging system

Special tools: 9812519

Generally about alternators:
The voltage output from an alternator must be limited to prevent the elecrolyte in the battery to evaporate. The alternator output is regulated (limited) by the voltage regulator in the alternator. The maximum current that the alternator can deliver at regulated voltage output depends on the alternator revolution. When the engine is started an excitation current is needed to “wake up” the alternator.

NOTE! It is the consumers (batteries included) which decides the output current from the alternator.

Measurements

1. Engine off.
2. Use multimeter 9812519 to do a voltage measurement over the battery. The nominal voltage over a full loaded battery is approx. 25.4V.
3. Engine on. Run at 1500 rpm.
4. Use multimeter 9812519 to do a voltage measurement over the battery. The nominal charging voltage over the battery should be approx. 27.8-28.6V.

Fault tracing charging system

Battery
1. Check that all connectors at the battery is correct assembled.
2. Check the conditions of the cables to the battery.
3. Check the water level in the battery.
4. Check, if possible, the specific gravity of all cells.

when no charge
1. Check the alternator belt tension.
2. Check that all connectors at the alternator and at the battery is correct assembled.
3. Check the conditions of all cables in the charging system.
4. Regulator fault, try another alternator.

when undercharge
1. Check the alternator belt tension.
2. Check that all connectors at the alternator and at the battery is correct assembled.
3. Check the conditions of all cables in the charging system.
4. Regulator fault, try another alternator.

when overcharge
1. Probably regulator fault, try another alternator.

https://truckmanualshub.com/

Rail pressure measurement

This measurement is used for measuring the rail pressure. For example if the engine doesn't start this measurement can show the rail pressure while the engine is cranking. If it is air in the system the rail pressure could be too low for the engine control unit to activate injection.

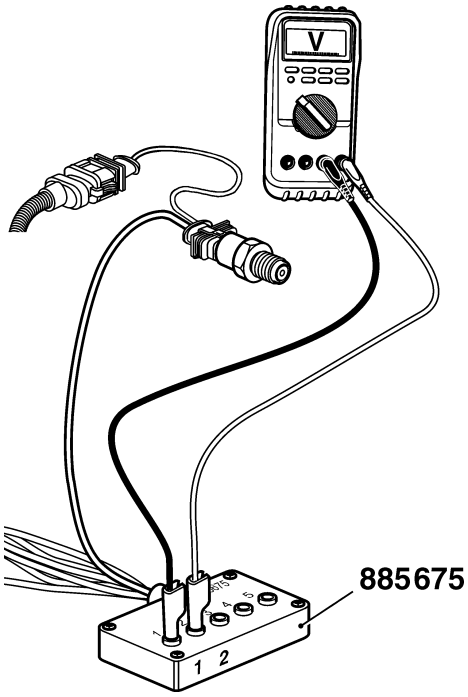

1. **NOTE!** Starter key in position 0.
2. Undo the connector from the sensor.
3. Connect adapter cable (885675) between the sensor and the engine control unit.
4. Use multimeter (9812519) for voltage measurement. Connect the COM from the multimeter to measurement point 1. Connect V from the multimeter to measurement point 2.
5. **NOTE!** Starter key in position I. The multimeter should now show 0.5 Volt which is equal to 0Mpa (0bar).
6. When cranking the engine, read the voltage value on the multimeter and look in the table which pressure the voltage equals.

NOTE! To activate injection a rail pressure of at least 25 MPa (250 bar) is demanded.

Voltage	0.5	0.95	1.0	1.1	1.2	1.3	1.4	1.5	1.6	1.7
MPa	0	20.3	22.5	27.0	31.5	36.0	40.5	45.0	49.5	54.0
Bar	0	203.0	225.0	270.0	315.0	360.0	405.0	450.0	495.0	540.0
Voltage	1.8	1.9	2.0	2.1	2.2	2.3	2.4	2.5	2.6	2.7
MPa	58.5	63.0	67.5	72.0	76.5	81.0	85.5	90.0	94.5	99.0
Bar	585.0	630.0	675.0	720.0	765.0	810.0	855.0	900.0	945.0	990.0
Voltage	2.8	2.9	3.0	3.1	3.2	3.3	3.4	3.5	3.6	3.7
MPa	103.5	108.0	112.5	117.0	121.5	126.0	130.5	135.0	139.5	144.0
Bar	1035.0	1080.0	1125.0	1170.0	1215.0	1260.0	1305.0	1350.0	1395.0	1440.0
Voltage	3.8	3.9	4.0	4.1	4.2	4.3	4.4	4.5		
MPa	148.5	153.0	157.5	162.0	166.5	171.0	175.5	180.0		
Bar	1485.0	1530.0	1575.0	1620.0	1665.0	1710.0	1755.0	1800.0		

https://truckmanualshub.com/

Malfunctions

Fault code information

- **MID** - Message Identification Description:
  The MID consists of a number which designates the control unit that sent the fault code message. (e.g. the engine control unit).

- **PID** - Parameter Identification Description:
  The PID consists of a number that designates a parameter (value) to which the fault code relates (oil pressure, for example).

- **PPID** - Proprietary PID:
  The same as the PID, but this is a Volvo-specific parameter.

- **SID** - Subsystem Identification Description:
  The SID consists of a number that designates a component to which the fault code relates (injector, for example).

- **PSID** - Proprietary SID:
  The same as the SID, but this is a Volvo-specific component.

- **FMI** - Failure Mode Identifier:
  FMI indicates the type of fault (please refer to the FMI table below).

- **SPN** - Suspect Parameter Number

https://truckmanualshub.com/

FMI table

SAE standard

FMI	Display text	SAE text
0	“Value too high”	Valid data, but above the normal working range
1	“Value too low”	Valid data, but below the normal working range
2	“Faulty data”	Intermittent or faulty data
3	“Electrical fault”	Abnormally high voltage or short circuit to higher voltage
4	“Electrical fault”	Abnormally low voltage or short circuit to lower voltage
5	“Electrical fault”	Abnormally low current or open circuit
6	“Electrical fault”	Abnormally high current or short circuit to battery negative
7	“Mechanical fault”	Faulty response from mechanical system
8	“Mechanical or electrical fault”	Abnormal frequency
9	“Communication fault”	Abnormal updating rate
10	“Mechanical or electrical fault”	Abnormally large variations
11	“Unknown fault”	Unidentified fault
12	“Component fault”	Faulty unit or component
13	“Faulty calibration”	Calibration values outside the limits
14	“Unknown fault”	Special instructions
15		Data valid but above normal operating range - least severe level
16		Data valid but above normal operating range - moderately severe level
17		Data valid but above normal operating range - least severe level
18		Data valid but above normal operating range - moderately severe level
19		Received network data in error
20		Reserved for SAE assignment
21		Reserved for SAE assignment
22		Reserved for SAE assignment
23		Reserved for SAE assignment
24		Reserved for SAE assignment
25		Reserved for SAE assignment
26		Reserved for SAE assignment
27		Reserved for SAE assignment
28		Reserved for SAE assignment
29		Reserved for SAE assignment
30		Reserved for SAE assignment
31		Condition exist

https://truckmanualshub.com/

Volvo-specific for injectors (MID 128, SID 1 – 6)

FMI	Help
3	Short circuit to battery voltage, injector low voltage side
4	Short circuit to battery negative, injector low voltage or high voltage side
5	Open circuit in injector circuit
7	Mechanical system not responding properly
12	Low injector hold current

General advice

NOTE!

The following must be done before fault tracing continues, to avoid changing functional sensors:

- If there is an active/inactive fault code.

  Remove the connector from the sensor. Check that there is no oxidation and that the connector pins are not damaged.

  If there is a fault, please refer to the instructions in chapter “Fault tracing of cables and connectors”.

NOTE! Some fault codes become inactive when the engine is stopped. Start the engine to check whether the fault code is still inactive with the engine running.

- **After an action with the connector**

  Put the connector* back. Check if the fault code becomes inactive.
  Check faults that could be related to that specific sensor.

  If the fault remains, measure the cables and sensors to check them, as instructed.

***NOTE!** No grease in the connector.

https://truckmanualshub.com/

Network

The system has two types of communication buses.

CAN

A data link (CAN bus) links the nodes to each other. CAN (“Controller Area Network”) is an industrial standard for distributed systems.

The CAN bus consists of a pair of copper conductors which are twisted 30 times per meter. The nodes communicate via the CAN bus and they form a network together, which exchanges information and benefits from each other’s services.

The CAN bus is a serial bus and is the primary control bus.

J1587

The communication bus, J1587, is also used for accessories and for diagnostics.

This is a serial bus in accordance with standard SAE J1708.

https://truckmanualshub.com/

Manual fault tracing in bus cables

Special tools:
Multimeter 9812519

IMPORTANT! Cut the current with the main switch before the cables are disconnected.

Use the multimeter to check the bus cables. The conductors in the bus cables should not be in contact with each other.

Disconnect a bus cable at each end and measure the resistance between the pins to check this. The multimeter should show infinite resistance between each pin. If the resistance is less than infinite, there is a fault.

Measuring the engine cables

Two types of measurement are done on the engine cable harness, both resistance measurement and voltage measurement.

The measurements are done to ensure that no open circuits or short circuits occur.

If there is an open circuit, the resistance is infinite, and if there is a short circuit, it is close to zero. The resistance values given in the workshop manual are approximate, and should be regarded as guidelines.

NOTE!

When resistance measurement is done, the engine should be stopped and system voltage should be cut off with the main switch.

All resistance measurement is done at +20°C (68°F) and with a cold engine.

https://truckmanualshub.com/

Diagnostic Trouble Codes

MID 128, PID 45

Inlet air heater status

MID 128: Engine control unit

FMI 3: The voltage exceeds the normal value or is short circuited to higher voltage.

FMI 4: The voltage is less than the normal value or is short circuited to lower voltage.

FMI 5: The current is less than the normal value or is open circuited.

FMI	Fault code explanation
3, 4, 5	Faulty sensor / Faulty sensor circuit

Fault indication

DCU: Engine warning in DCU display.

CIU: Flash code

Flash code

Electrical fault: 5.4

Value fault: None

Symptom

FMI 3, 5: Preheat relay never activated. White smoke for cold start. Start problems in cold climate.

FMI 4: Induction air is hot. Preheat relay is impossible to turn off. Preheat fuse will break.

https://truckmanualshub.com/

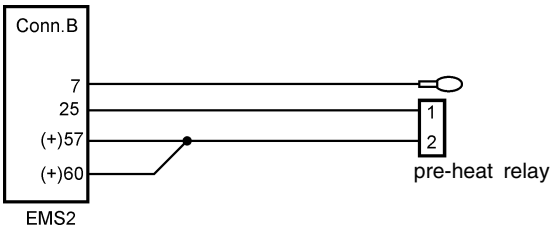

Circuit description

In cold climate the intake air need too be preheated. This is either done for GE engines by the preheater which is located in the inlet manifoldor or for VE engines by the glowplugs that are mounted in the cylinderhead. The preheat function is activated/deactivated by the engine control unit via the preheat relay. When the preheat function is activated B25 alter its potential and the relay activates. B7 is a sense cable which senses that the voltage supply to the preheater is correct.

Fault tracing

FMI 3 Abnormally high voltage or short circuit to higher voltage

Possible reason:

- Short circuit to B+ in cable harness between EMS 2 and preheat relay.

Suitable action:

1. Check cable harness and connectors between EMS 2 and preheat relay.

FMI 4 Abnormally low voltage or short circuit to lower voltage

Possible reason:

- Short circuit to battery negative in cable harness between EMS 2 and preheat relay.

Suitable action:

1. Check cable harness and connectors between EMS 2 and preheat relay.

https://truckmanualshub.com/

FMI 5 Abnormally low current or open circuit

Possible reason:

- An open circuit in cable harness between EMS 2 and preheat relay.

Suitable action:

1. Check the contact pressure in socket 25 in the engine connector B.
2. Check cable harness and connectors between EMS 2 and preheat relay.

Measurements

NOTE! If any of the measurements shows an abnormal value, check the wiring to and from the engine control unit and the preheat relay.

Checking the wiring:

1. **NOTE!** Cut the current with the main switch.
2. Remove connector B from the EMS 2.
3. Connect the B connector to brakeout cable 9990014 with measurebox 9998699.
4. Use multimeter 9812519 to do a resistance measurement.

Measurement points on box	Nominal value
7 (preheat sense) - one of the preheat connectors	R ≈ 0 Ω
25 (relay activation) - one of the preheat connectors	R ≈ 0 Ω
60 (relay +) - one of the preheat connectors	R ≈ 0 Ω

https://truckmanualshub.com/

MID 128, PID 94

Fuel pressure

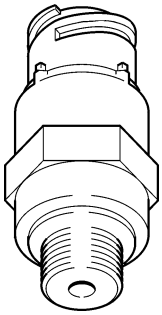

MID 128: Engine control unit

FMI 1: The sensor value is valid but below the normal working range.

FMI 3: The voltage exceeds the normal value or is short circuited to higher voltage.

FMI 5: The current is less than the normal value or is open circuited.

FMI 7: Mechanical fault. The system responds incorrectly.

FMI	Fault code explanation
1	Fuel pressure is too low
3, 5	Faulty sensor / Faulty sensor circuit
7	Fuel pressure is critically low

Fault indication

DCU: Engine warning in DCU display.

CIU: Flash code

Flash code

Electrical fault: 3.6

Value fault: 3.8

Symptom

None

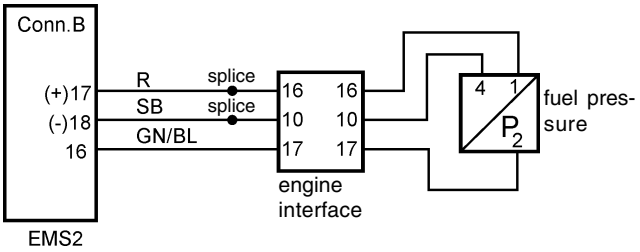

Note! Only TAD 650, 660, 750, 760 has an engine interface. On TAD 734 the wiring to the EMS 2 is the same but without any engine interface.

Circuit description

The sensor is an active sensor, i.e. the sensor must receive operating voltage. Pin B17 on the engine control unit provides pin 1 on the sensor with an operating voltage of +5 Volt. Pin 4 on the sensor is connected to battery negative via pin B18 on the engine control unit. The output signal from the pressure sensor, pin 2 on the sensor to pin B16 on the EMS 2, is a voltage signal that is proportional to the fuel pressure.

https://truckmanualshub.com/

Fault tracing

FMI 1 Fuel pressure is too low

Conditions for fault code:

The fuel pressure alarm depends on the engine revolution.

Suitable action:

1. Check fuel level.
2. Open all fuel cocks and check that no leakage occurs.
3. Check drive belt adjustment.
4. Change all fuel filters. (pre- and fine filter)
5. Check that no fuel hose is squeezed or folded.
6. Check function of fuel pressure sensor by control measuring the fuel pressure. (see workshop manual)
7. Check fuel feed pump.
8. Change fuel pressure release valve. (see workshop manual)

FMI 3 Abnormally high voltage or short circuit to higher voltage

Conditions for fault code:

The voltage on pin B16 on the EMS 2 is more than 4,75 Volt.

Possible reason:

- An open circuit in fuel sensor negative cable.
- Short circuited fuel sensor signal cable to 5V voltage or to battery voltage.
- Faulty sensor.

Suitable action:

1. Check contact pressure in socket 18 in the engine connector B. Also check contact pressure in connector at fuel pressure sensor.
2. Check cable harness and connectors between fuel sensor and EMS 2.
3. Check function of fuel pressure sensor.

https://truckmanualshub.com/

FMI 5 Abnormally low current or open circuit

Conditions for fault code:

The voltage on pin B16 on the EMS 2 is less than 0.07 Volt.

Possible reason:

- An open circuit in fuel sensor 5V supply cable.
- An open circuit in fuel sensor signal cable.
- Short circuited sensor signal cable to battery negative.
- Faulty sensor.

Suitable action:

1. Check contact pressure in socket 16 and 17 in the engine connector B. Also check contact pressure in connector at fuel pressure sensor.
2. Check cable harness and connectors between fuel sensor and EMS 2.
3. Check function of fuel pressure sensor.

FMI 7 Critically low pressure

Conditions for fault code:

The fuel pressure alarm depends on the engine revolution.

Suitable action:

1. Check fuel level.
2. Open all fuel cocks and check that no leakage occurs.
3. Check drivebelt adjustment.
4. Change all fuel filters. (pre- and fine filter)
5. Chech that no fuel hose is squeezed or folded.
6. Check functionof fuel pressure sensor by control measuring the fuel pressure. (see workshop manual)
7. Check fuel feed pump.
8. Change fuel pressure release valve. (see workshop manual)

https://truckmanualshub.com/

Measurements

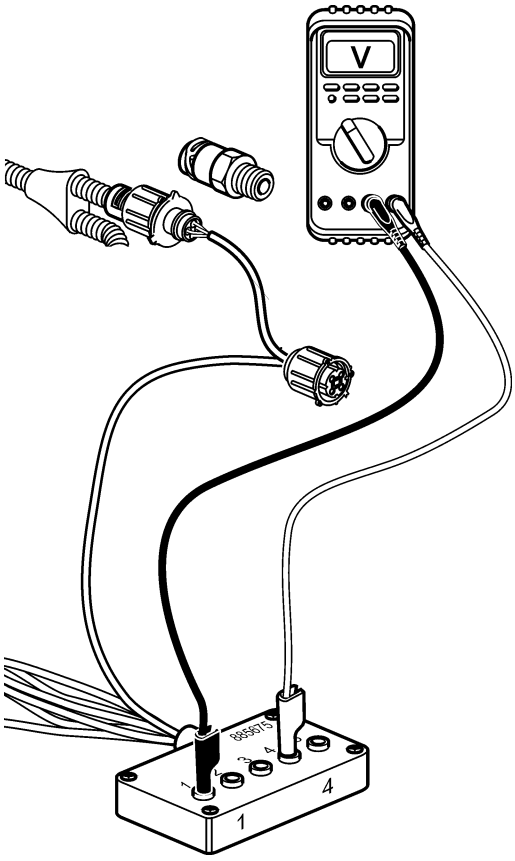

NOTE! If any of the measurements shows an abnormal value, check the wiring to and from the engine interface.

Supply cable

- **NOTE!** Turn ignition off.
- Disconnect the connector from the sensor
- Connect adapter cable 885675 to the cable harness connector to the engine control unit.
- Use multimeter 9812519 for voltage measurement.
- Turn ignition on.

Measurement points	Nominal value
1– 4	U ≈ 5V

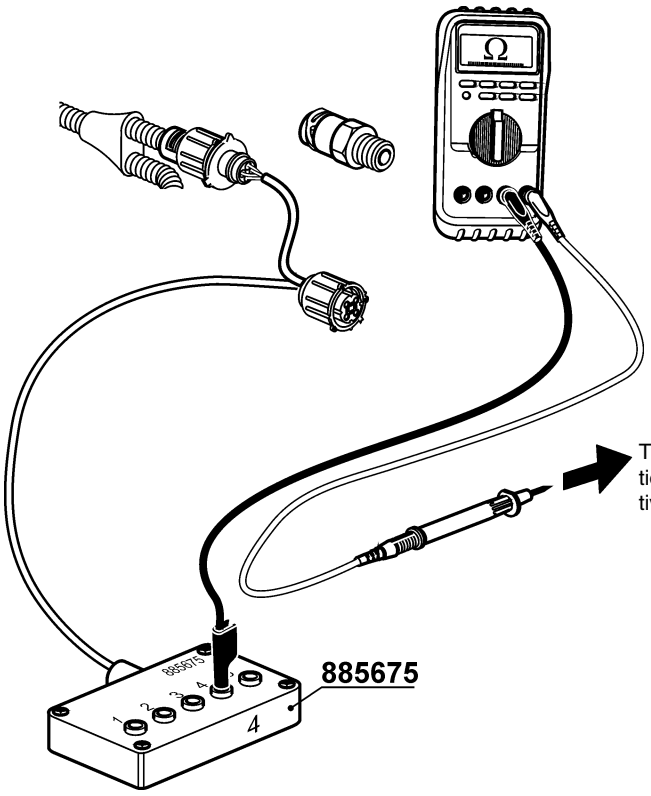

Negative cable:

- **NOTE!** Cut the current with the main switch.
- Disconnect the connector from the sensor
- Connect adapter cable 885675 to the cable harness connector to the engine control unit.
- Use multimeter 9812519 to do resistance measurement against the engine control unit.

Measurement points	Nominal value
4 – Battery negative	R ≈ 0 Ω

https://truckmanualshub.com/

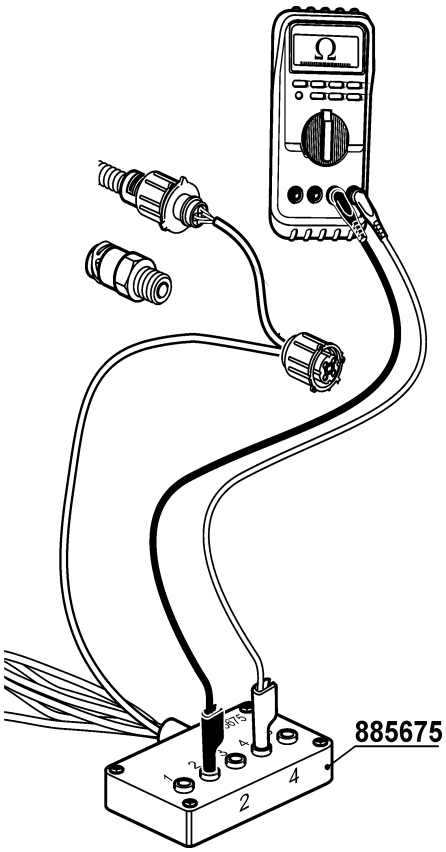

Signal cable:

- **NOTE!** Cut the current with the main switch.
- Disconnect the connector from the sensor
- Connect adapter cable 885675 to the cable harness connector to the engine control unit.
- Use multimeter 9812519 to do resistance measurement against the engine control unit.

Measurement points	Nominal value
4 – 2	R ≈ 80 - 120 kΩ

NOTE! Measurement is done to eliminate short circuiting or breaks in the cable to the engine control unit.

https://truckmanualshub.com/

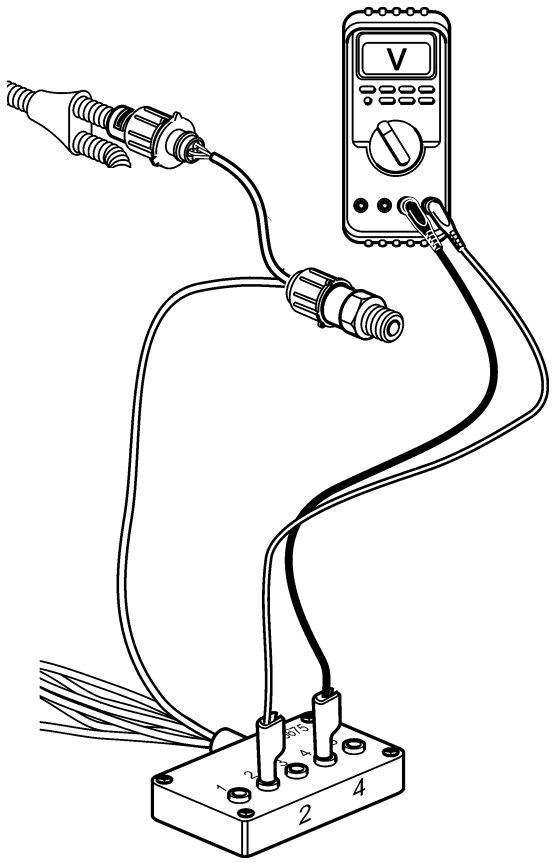

Checking fuel pressure sensor

- **NOTE!** Turn ignition off.
- Disconnect the connector from the sensor
- Connect adapter cable 885675 between the sensor and the engine control unit.
- Use multimeter 9812519 for voltage measurement.
- Turn ignition on.

Measurement points	Nominal value
4 – 2	U ≈ 0,5 V (at normal atmospheric pressure)

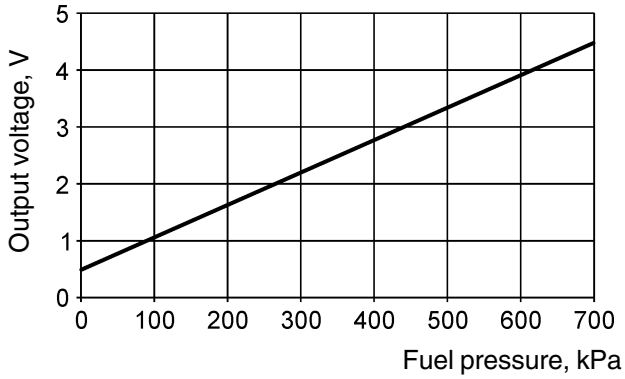

Component specification

Working range: 0 – 7 bar = 0 – 700 kPa

Supply voltage: 5,00 +/- 0,25 VDC

Nominal output voltage at 25 °C and at supply voltage 5,00 VDC:

0,5 VDC at 0 bar = 0 kPa

4,5 VDC at 7 bar = 700 kPa

https://truckmanualshub.com/

MID 128, PID 97

Water in fuel

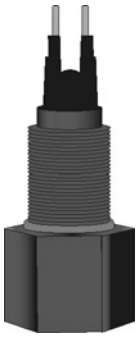

MID 128: Engine control unit

FMI 0: The sensor value is valid but above the normal working range.

FMI 3: The voltage exceeds the normal value or is short circuited to higher voltage.

FMI 4: The voltage is less than the normal value or is short circuited to lower voltage.

FMI	Fault code explanation
0	Water in fuel
3, 4	Faulty sensor / Faulty monitor circuit

Fault indication

DCU: Engine warning in DCU display

CIU: Flash code

Flash code

Electrical fault: 2.9

Value fault: 2.1

Symptom

None

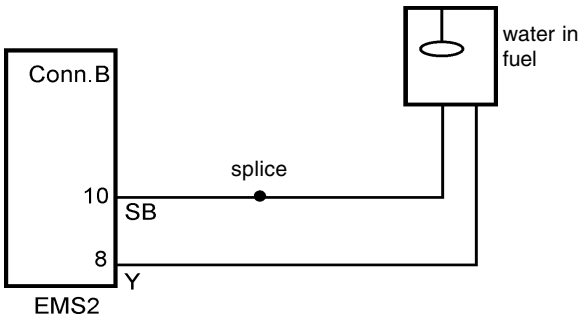

Circuit description

A monitor is located in the water trap under the fuel filter. Its task is to detect whether there is water in the fuel.

The monitor senses the resistance between two pins, wich are in contact with the fuel. When there is no water in the fuel, the resistance is very high. If there is any water in the fuel, the resistance falls.

At a threshold resistance (water has been detected), the monitor's output signal (yellow cable) to the engine control unit pin B8 will be pulled down to zero.

https://truckmanualshub.com/

Fault tracing

FMI 0 Water in fuel

Conditions for fault code:

Water in the fuel trap has been detected.

Suitable action:

1. Empty the water trap.
2. Check function of water in fuel monitor.

FMI 3

Conditions for fault code:

The voltage signal on B8 is too high.

Possible reason:

- The cable connected to B8 is short circuited to battery voltage.

Suitable action:

1. Check cable harness and connectors between water in fuel monitor and EMS 2.

FMI 4

Conditions for fault code:

The voltage signal on B8 is too low.

Possible reason:

- Short circuit between both cables to the water in fuel monitor.
- The cable connected to B8 is short circuited to battery negative.

Suitable action:

1. Check cable harness and connectors between water in fuel monitor and EMS 2.

https://truckmanualshub.com/

Measurements

Supply cable:

- **NOTE!** Turn ignition off.
- Disconnect the connector from the monitor
- Use multimeter 9812519 for voltage measurement
- **NOTE!** Turn ignition on.

Measurement points	Nominal value
Yellow conductor – Black conductor	U ≈ Battery voltage x 0.8

Negative cable:

- **NOTE!** Cut the current with the main switch.
- Disconnect the connector from the monitor
- Use multimeter 9812519 to do resistance measurement against the engine control unit.

Measurement points	Nominal value
Black conductor – Battery negative	R ≈ 0 Ω

Checking water in fuel monitor

1. Disconnect the connector to the water in fuel monitor.
2. Use multimeter 9812519 to do a resistance measurement towards the monitor.

Measurement points	Nominal value
1 – 2 Monitor immersed in water	R ≈ 0 Ω
1 – 2 Monitor immersed in fuel	R ≈ ∞ Ω

https://truckmanualshub.com/

MID 128, PID 100

Oil pressure

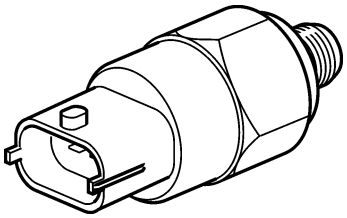

MID 128: Engine control unit

FMI 1: The sensor value is valid but below the normal working range.

FMI 3: The voltage exceeds the normal value or is short circuited to higher voltage.

FMI 5: The current is less than the normal value or is open circuited.

FMI	Fault code explanation
1	Oil pressure is too low
3, 5	Faulty sensor / Faulty sensor circuit

Fault indication

DCU: Engine warning in DCU display.

CIU: Flash code

Flash code

Electrical fault: 3.1

Value fault: 6.6

Symptom

FMI 1: Power is reduced due to error torque map if engine protection parameter is activated.

https://truckmanualshub.com/

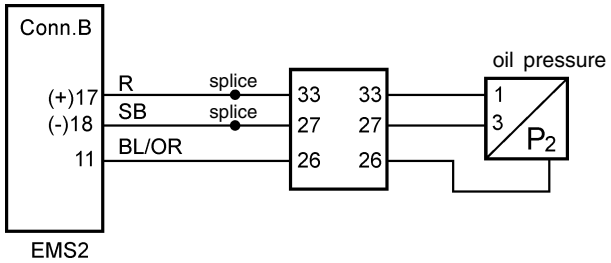

Note! Only TAD 650, 660, 750, 760 has an engine interface. On TAD 734 the wiring to the EMS 2 is the same but without any engine interface.

Circuit description

The sensor is an active sensor, i.e. the sensor must receive operating voltage. Pin B17 on the engine control unit (EMS 2) provides pin 1 on the sensor with an operating voltage of +5 Volt. Pin 3 on the sensor is connected to battery negative via pin B18 on the EMS 2.

The output signal from the pressure sensor, pin 2 on the sensor to pin B11 on the EMS 2, is a voltage signal that is proportional to the oil pressure (after the oil filters).

Fault tracing

FMI 1 Oil pressure is too low

Conditions for fault code:

Oil pressure depends on the engine revolution. Oil pressure exceeds the set value of the engine protection parameter.

Possible reason:

- Too low engine oil level.
- Blocked oil filter.
- Oil leakage.
- Faulty oil pressure sensor.

Suitable action:

1. Check engine oil level and quality of the oil.
2. Change engine oil and oil filter to prevent blocked oil filter.
3. Check that no engine oil leakage occurs.
4. Check function of oil pressure sensor by control measuring the engine oil pressure (see workshop manual Group 21-26).

https://truckmanualshub.com/

FMI 3 Abnormally high voltage or short circuit to higher voltage

Conditions for fault code:

The voltage on pin B11 on the EMS 2 is more than 4.95 Volt.

Possible reason:

- Short circuit between signal cable and 5V supply to oil pressure sensor.
- Faulty sensor.

Suitable action:

1. Check cable harness and connectors between oil pressure sensor and EMS 2.
2. Check function of oil pressure sensor.

FMI 5 Abnormally low current or open circuit

Conditions for fault code:

The voltage on pin B11 on the EMS 2 is less than 0.07 Volt.

Possible reason:

- An open circuit in 5V supply cable to oil pressure sensor.
- An open circuit in signal cable to oil pressure sensor.
- Short circuit between signal cable and battery negative to oil pressure sensor.
- Faulty sensor.

Suitable action:

1. Check contact pressure in socket 11 and 17 in engine connector B. Also check contact pressure in connector at oil pressure sensor.
2. Check cable harness and connectors between oil pressure sensor and EMS 2.
3. Check function of oil pressure sensor.

https://truckmanualshub.com/

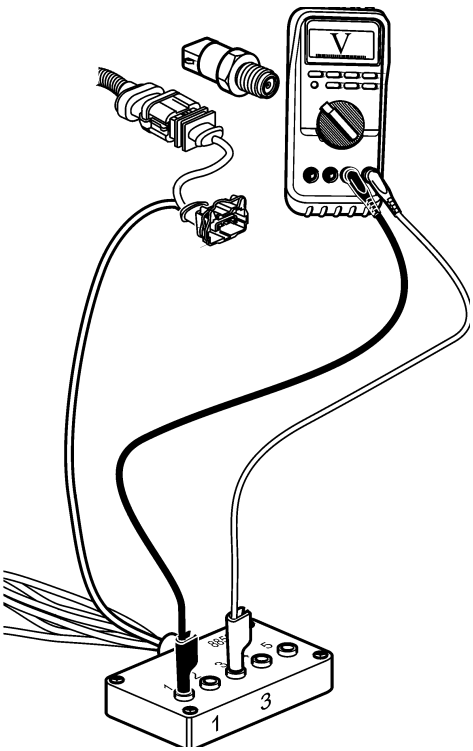

Measurements

NOTE! If any of the measurements shows an abnormal value, check the wiring to and from the engine interface.

Supply cable:

- **NOTE!** Turn ignition off.
- Remove the connector from the sensor.
- Connect adapter cable 885675 between the sensor and engine control unit.
- Use multimeter 9812519 for voltage measurement
- **NOTE!** Turn ignition on.

Measurement points	Nominal value
1 – 3	U ≈ 5 V

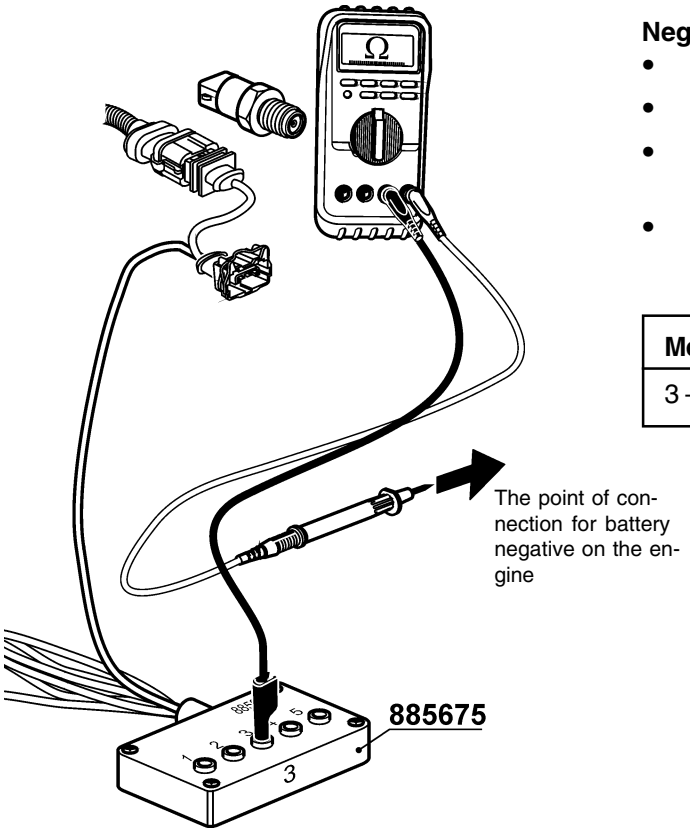

Negative cable:

- **NOTE!** Cut the current with the main switch.
- Disconnect the connector from the sensor
- Connect adapter cable 885675 to the cable harness connector to the engine control unit.
- Use multimeter 9812519 to do resistance measurement against the engine control unit.

Measurement points	Nominal value
3 – Battery negative	R ≈ 0 Ω

https://truckmanualshub.com/

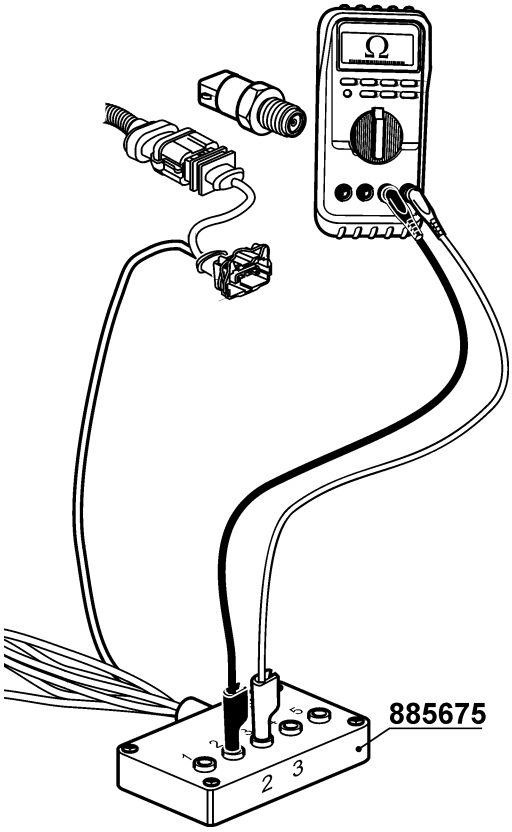

Signal cable:

- **NOTE!** Cut the current with the main switch.
- Disconnect the connector from the sensor
- Connect adapter cable 885675 to the cable harness connector to the engine control unit.
- Use multimeter 9812519 to do resistance measurement against the engine control unit.

Measurement points	Nominal value
2 – 3	R ≈ 80 -120 kΩ

NOTE! Measurement is done to eliminate short circuiting or breaks in the cable to the engine control unit.

https://truckmanualshub.com/

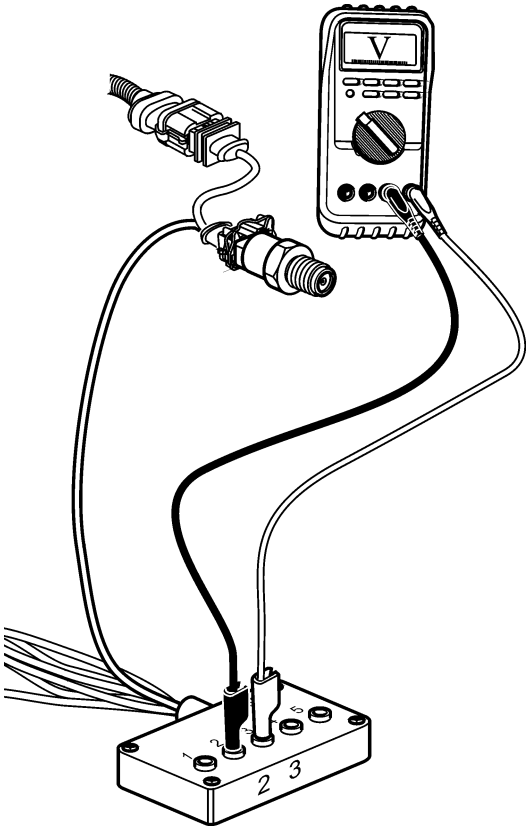

Checking the oil pressure sensor

- **NOTE!** Turn ignition off.
- Disconnect the connector from the sensor
- Connect adapter cable 885675 between the sensor and the engine control unit.
- Use multimeter 9812519 for voltage measurement
- Turn ignition on.

Measurement points	Nominal value
2 – 3	U ≈ 0,5 V (at normal atmospheric pressure)

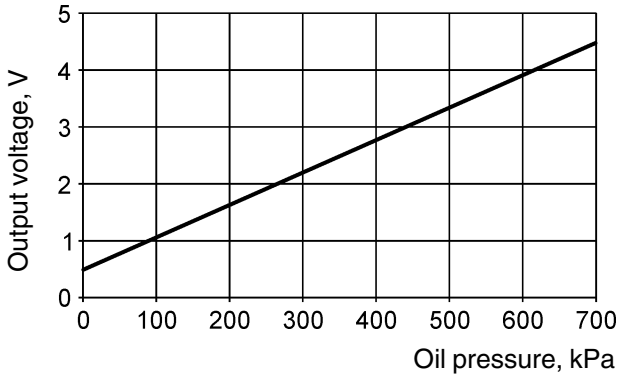

Component specification

Working range: 0 – 7 bar = 0 – 700 kPa

Supply voltage: 5,00 +/- 0,25 VDC

Nominal output voltage at 25 °C and at supply voltage 5,00 VDC:

0,5 VDC at 0 bar = 0 kPa

4,5 VDC at 7 bar = 700 kPa

https://truckmanualshub.com/

MID 128, PID 105

Boost temperature

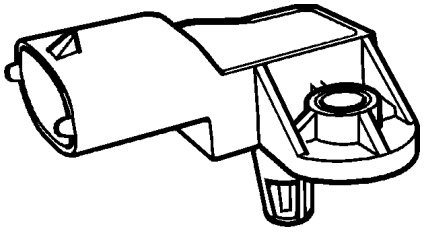

MID 128: Engine control unit

FMI 0: The sensor value is valid but above the normal working range.

FMI 4: The voltage is less than the normal value or is short circuited to lower voltage.

FMI 5: The current is less than the normal value or is open circuited.

FMI	Fault code explanation
0	Boost temperature is too high
4, 5	Faulty sensor / Faulty sensor circuit

Fault indication

DCU: Engine warning in DCU display.

CIU: Flash code

Flash code

Electrical fault: 3.2

Value fault: 6.2

Symptom

FMI 0: Engine is derated if engine protection parameter is activated.

FMI 4, 5: Pressure set to 40° C.

https://truckmanualshub.com/

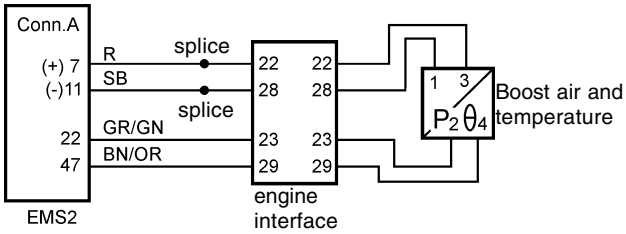

Note! Only TAD 650, 660, 750, 760 has an engine interface. On TAD 734 the wiring to the EMS 2 is the same but without any engine interface.

Circuit description

The boost temperature sensor consists of a thermistor which forms a closed circuit with an internal resistor in the engine control unit (EMS 2), via the engine interface. The thermistor resistor changes in a non-linear manner, depending on the boost temperature.

The EMS 2 provides the circuit with a reference voltage of +5 Volt. The EMS 2 measures the voltage drop over the thermistor via pin A47 and pin A11 on the EMS 2. Pin 1 on the sensor is connected to battery negative via pin A11 on the EMS 2.

When the boost air is cold, the thermistor resistance is high and the EMS 2 senses a high voltage drop. As the boost air warms up, the resistance in the thermistor falls and the voltage drop across it falls.

Fault tracing

FMI 0 Boost temperature is too high

Conditions for fault code:

Boost temperature exceeds the set value of the engine protection parameter.

Possible reason:

- Engine temperature is too high.
- High surrounding temperature.
- Dust or dirt on the outside of the intercooler.
- Faulty boost temperature sensor.

Suitable action:

1. Check that engine temperature is normal.
2. Clean the intercooler.
3. Check function of boost temperature sensor.

https://truckmanualshub.com/

FMI 4 Abnormally low voltage or short circuit to lower voltage

Conditions for fault code:

The voltage on pin B47 on the EMS 2 is less than 0.07 Volt.

Possible reason:

- Short circuited sensor signal cable to battery negative.
- Faulty sensor.

Suitable action:

1. Check cable harness and connectors between boost temperature sensor and EMS 2.
2. Check function of boost temperature sensor.

FMI 5 Abnormally low current or open circuit

Conditions for fault code:

The voltage on pin B47 on the EMS 2 is more than 4.95 Volt.

Possible reason:

- An open circuit in 5V supply cable to sensor.
- An open circuit in boost temperature signal cable.
- Short circuited sensor signal cable to 5V voltage or to battery voltage.
- Faulty sensor.

Suitable action:

1. Check contact pressure in socket 47 and 7 in engine connector A. Also check contact pressure in connector at boost temperture sensor.
2. Check cable harness and connectors between boost temperature sensor and EMS 2.
3. Check function of boost temperature sensor.

https://truckmanualshub.com/

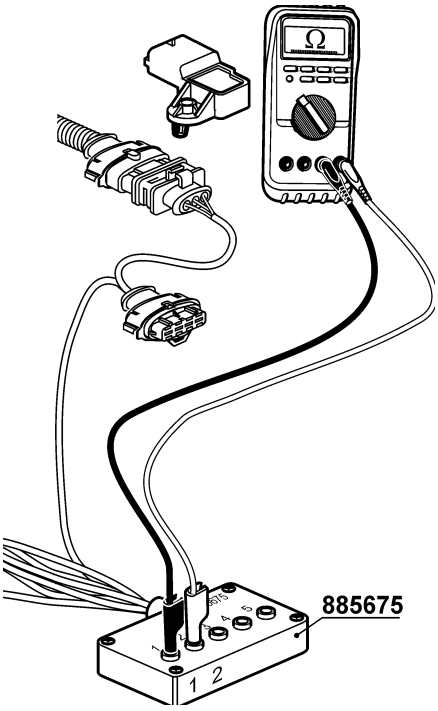

Measurements

NOTE! If any of the measurements shows an abnormal value, check the wiring to and from the engine interface.

Signal cable:

- **NOTE!** Turn ignition off.
- Disconnect the connector from the sensor
- Connect adapter cable 885675 to the cable harness connector to the engine control unit.
- Use multimeter 9812519 for voltage measurement.
- Turn ignition on.

Measurement points	**Nominal value**
1 – 2	U ≈ 5 V

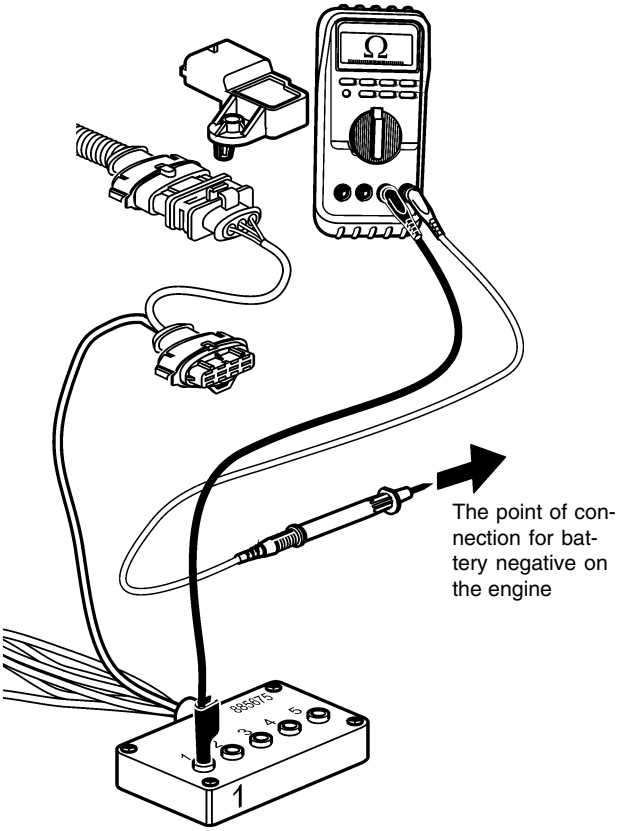

Negative cable:

- **NOTE!** Cut the current with the main switch.
- Disconnect the connector from the sensor
- Connect adapter cable 885675 to the cable harness connector to the engine control unit.
- Use multimeter 9812519 to do resistance measurement against the engine control unit.

Measurement points	**Nominal value**
1 – Battery negative	R ≈ 0 Ω

https://truckmanualshub.com/

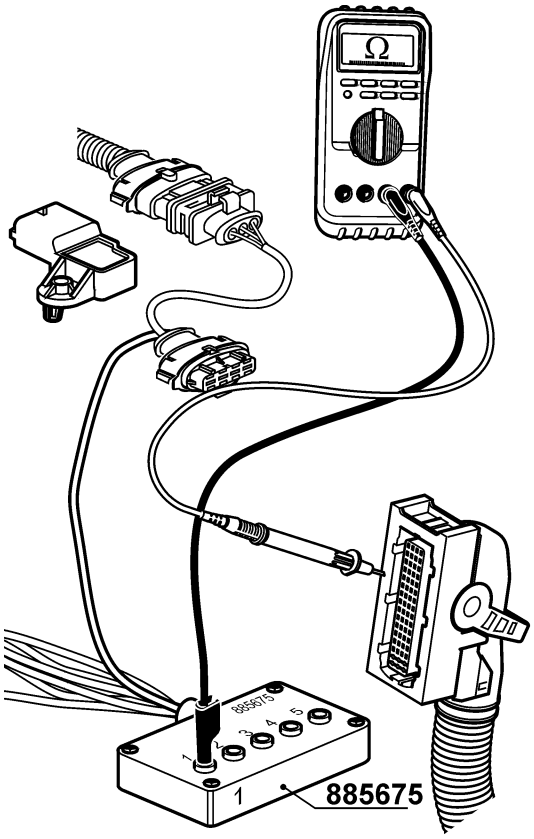

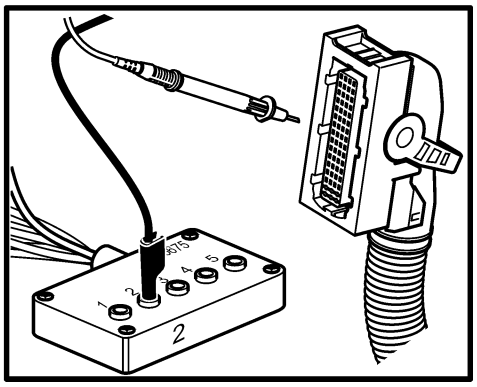

Checking the sensor cable for open circuit or short-circuit:

- **NOTE!** Cut the current with the main switch.
- Disconnect the connector from the sensor.
- Connect adapter cable 885675 to the cable harness connector to the engine control unit.
- Remove connector A from the engine control unit.
- Use multimeter 9812519 to do a resistance measurement against the engine control unit connector A.

Measurement points	**Nominal value**
2 (885675)– 47 (EMS 2, conn.A)	R ≈ 0 Ω
2 (885675)– 11(EMS 2, conn.A)	R ≈ ∞ Ω
1 (885675)– 47 (EMS 2, conn.A)	R ≈ ∞ Ω
1 (885675)– 11(EMS 2, conn.A)	R ≈ 0 Ω

NOTE! Measurement is done to eliminate short circuiting or breaks in the cable to the engine control unit.

https://truckmanualshub.com/

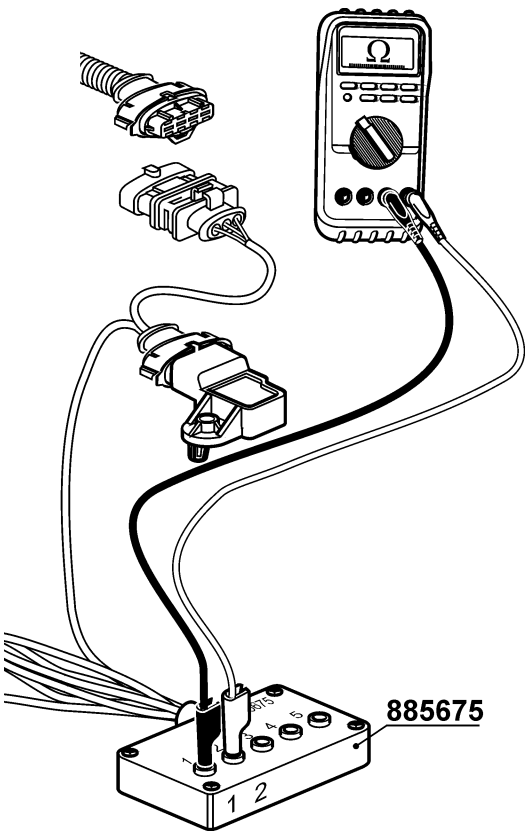

Checking boost temperature sensor

- **NOTE!** Cut the current with the main switch.
- Connect adapter cable (885675) to the sensor. Do **not** connect the other end of the adapter cable.
- Use multimeter 9812519 to do resistance measurement.

Measurement points	Nominal value
1 – 2	R ≈ 9426 Ω +/- 470 Ω (at -10° C)
1 – 2	R ≈ 5896 Ω +/- 332 Ω (at 0° C)
1 – 2	R ≈ 2511 Ω +/- 109 Ω (at 20° C)
1 – 2	R ≈ 1200 Ω +/- 47 Ω (at 40° C)
1 – 2	R ≈ 612 Ω +/- 22 Ω (at 60° C)
1 – 2	R ≈ 329 Ω +/- 11 Ω (at 80° C)
1 – 2	R ≈ 186 Ω +/- 5 Ω (at 100° C)
1 – 2	R ≈ 110 Ω +/- 4 Ω (at 120° C)

https://truckmanualshub.com/

MID 128, PID 106

Boost pressure

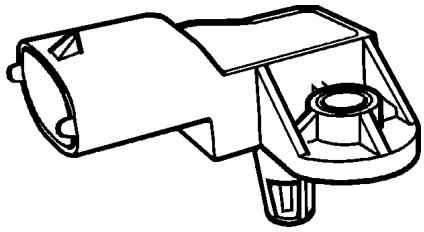

MID 128: Engine control unit

FMI 0: The sensor value is valid but above the normal working range.

FMI 3: The voltage exceeds the normal value or is short circuited to higher voltage.

FMI 5: The current is less than the normal value or is open circuited.

FMI	Fault code explanation
0	Boost pressure is too high
3, 5	Faulty sensor / Faulty sensor circuit

Fault indication

DCU: Engine warning in DCU display.

CIU: Flash code

Flash code

Electrical fault: 3.4

Value fault: 3.5

Symptom

FMI 0: Power is reduced due to error torque map if engine protection parameter is activated.

FMI 3, 5: Pressure set to atmospheric pressure + 30 kPa. Engine performance is derated.

https://truckmanualshub.com/

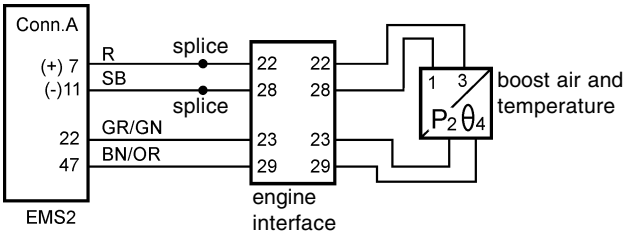

Note! Only TAD 650, 660, 750, 760 has an engine interface. On TAD 734 the wiring to the EMS 2 is the same but without any engine interface.

Circuit description

The sensor is an active sensor, i.e. the sensor must receive operating voltage. The boost pressure sensor measures the absolute pressure, which is the sum of the boost pressure and atmospheric pressure (300 kPa thus corresponds to a boost pressure of 200 kPa when atmospheric pressure is 100 kPa).

Pin A7 on the engine control unit (EMS 2) provides pin 3 on the sensor with an operating voltage of +5 Volt. Pin 1 on the sensor is connected to battery negative via pin A11 on the EMS 2. The output signal from the pressure sensor, pin 4 on the sensor to pin A22 on the EMS 2, is a voltage signal that is proportional to the boost pressure.

Fault tracing

FMI 0 Boost pressure is too high

Conditions for fault code:

Boost pressure exceeds the set value of the engine protection parameter.

Possible reason:

- The wastegate does not function properly.
- Faulty boost pressure sensor.
- Wrong turbo compressor unit according to the engine specification.

Suitable action:

1. Check wastegate functionality (see workshop manual Group 21-26).
2. Check function of boost pressure sensor by control measuring boost pressure using a measuring tap (see workshop manual Group 21-26).
3. Check that turbo compressor unit is in according to the engine specification.

https://truckmanualshub.com/

FMI 3 Abnormally high voltage or short circuit to higher voltage

Conditions for fault code:

The voltage on pin A22 on the EMS 2 is more than 4.75 Volt.

Possible reason:

- Short circuited sensor signal cable to 5V voltage or battery voltage.
- Faulty sensor.

Suitable action:

1. Check cable harness and connectors between boost pressure sensor and EMS 2.
2. Check function of boost pressure sensor.

FMI 5 Abnormally low current or open circuit

Conditions for fault code:

The voltage on pin A22 on the EMS 2 is less than 0.07 Volt.

Possible reason:

- An open circuit in boost pressure signal cable.
- An open circuit in sensor negative cable.
- Short circuited boost pressure signal cable to sensor negative cable.
- Faulty sensor.

Suitable action:

1. Check contact pressure in socket 22 and 11 in engine connector A. Also check contact pressure in connector at boost pressure sensor.
2. Check cable harness and connectors between boost pressure sensor and EMS 2.
3. Check function of boost pressure sensor.

https://truckmanualshub.com/

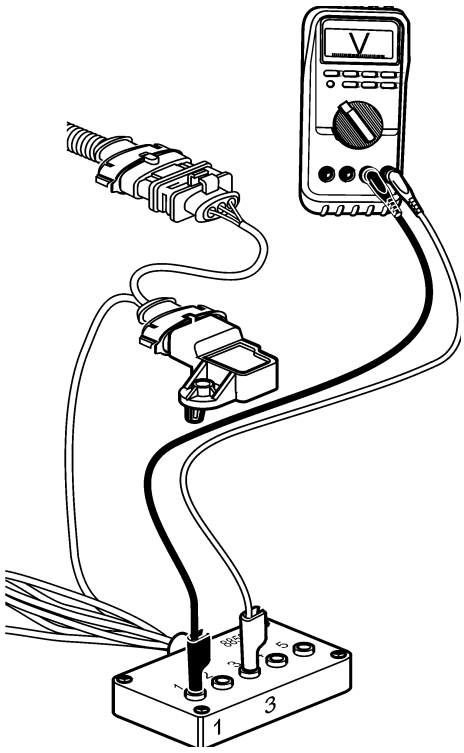

Measurements

NOTE! If any of the measurements shows an abnormal value, check the wiring to and from the engine interface.

Supply cable:

- **NOTE!** Turn ignition off.
- Remove the connector from the sensor. Connect adapter cable 885675 between the sensor and engine control unit.
- Use multimeter 9812519 for voltage measurement
- Turn ignition on.

Measurement points	Nominal value
1 – 3	U ≈ 5 V

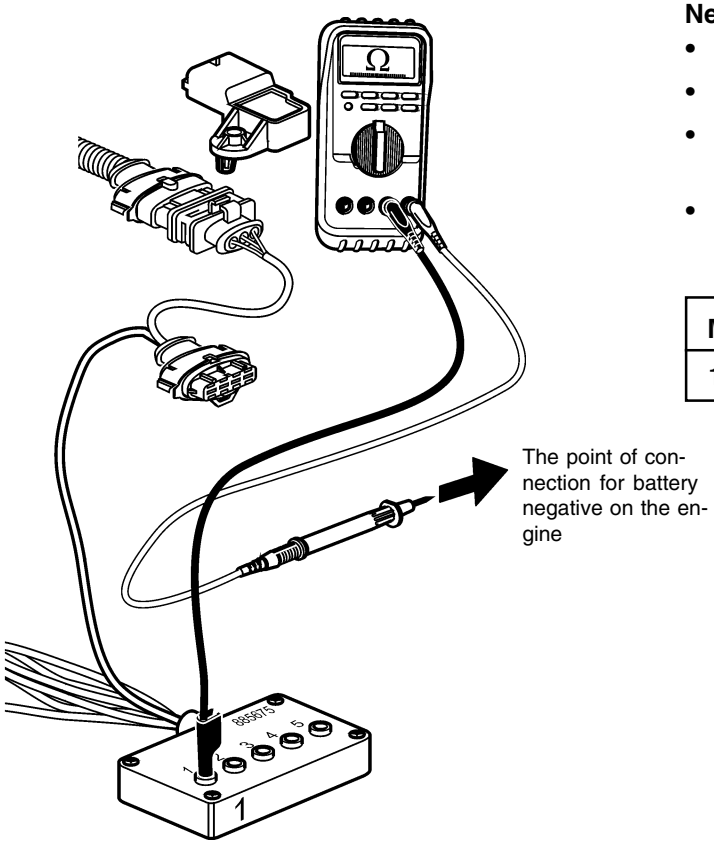

Negative cable:

- **NOTE!** Cut the current with the main switch.
- Disconnect the connector from the sensor
- Connect adapter cable 885675 to the cable harness connector to the engine control unit.
- Use multimeter 9812519 to do resistance measurement against the engine control unit.

Measurement points	Nominal value
1 – Battery negative	R ≈ 0 Ω

https://truckmanualshub.com/

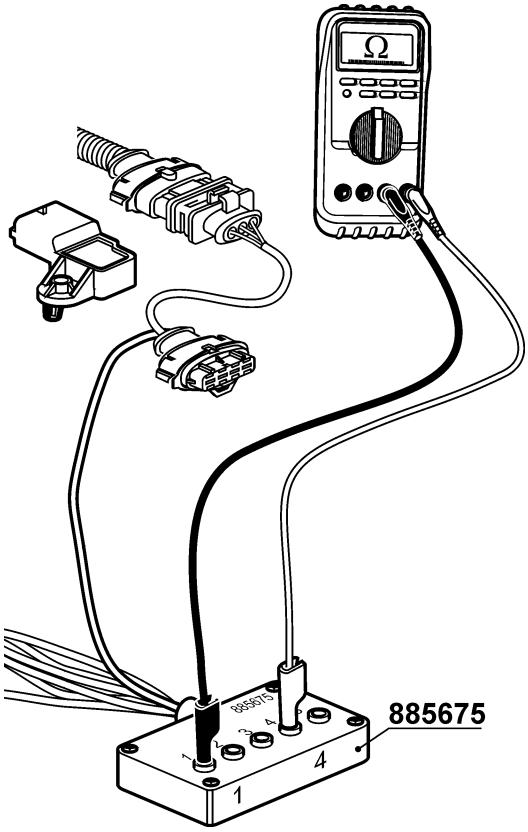

Signal cable:

- **NOTE!** Cut the current with the main switch.
- Disconnect the connector from the sensor
- Connect adapter cable 885675 to the cable harness connector to the engine control unit.
- Use multimeter 9812519 to do resistance measurement against the engine control unit.

Measurement points	Nominal value
4 – 1	R ≈ 80 -120 kΩ

NOTE! Measurement is done to eliminate short circuiting or breaks in the cable to the engine control unit.

https://truckmanualshub.com/

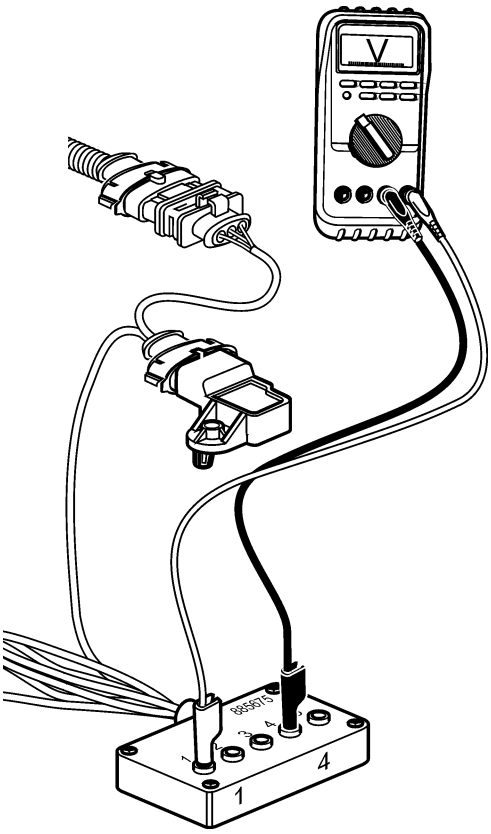

Checking boost pressure sensor

- **NOTE!** Turn ignition off.
- Disconnect the connector from the sensor
- Connect adapter cable 885675 between the sensor and the engine control unit.
- Use multimeter 9812519 for voltage measurement.
- Turn ignition on.

Measurement points	Nominal value
1 – 4	U ≈ 1,1 V (at normal atmospheric pressure)

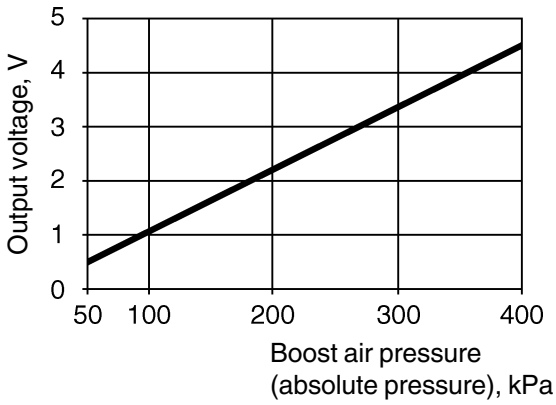

Component specification

Working range: 0,5 – 4,0 bar = 50 – 400 kPa

Supply voltage: 5,00 +/- 0,25 VDC

Nominal output voltage at 25 °C and at supply voltage 5,00 VDC:

0,5 VDC at 0,5 bar = 50 kPa

4,5 VDC at 4 bar = 400 kPa

https://truckmanualshub.com/

MID 128, PID 108

Ambient air pressure

MID 128: Engine control unit

FMI 2: Intermittent or faulty data.

FMI 3: The voltage exceeds the normal value or is short circuited to higher voltage.

FMI 4: The voltage is less than the normal value or is short circuited to lower voltage.

FMI	Fault code explanation
2	Plausibility
3, 4	Faulty sensor / Faulty sensor circuit

Fault indication

DCU: None

CIU: None

Flash code

Electrical fault: None

Value fault: None

Symptom

FMI 3, 4: Ambient pressure is set to 1.0 bar.

Component description

Sensor is placed inside the engine control unit.

https://truckmanualshub.com/

Fault tracing

FMI 2, 3, 4

Conditions for fault code:

Internal fault in the engine control unit.

Suitable action:

1. Replace the engine control unit (EMS 2).

https://truckmanualshub.com/

MID 128, PID 110

Coolant temperature

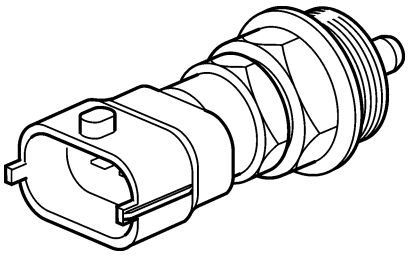

MID 128: Engine control unit

FMI 0: The sensor value is valid but above the normal working range.

FMI 4: The voltage is less than the normal value or is short circuited to lower voltage.

FMI 5: The current is less than the normal value or is open circuited.

FMI	Fault code explanation
0	Coolant temperature too high
4, 5	Faulty sensor / Faulty sensor circuit

Fault indication

DCU: Engine warning in DCU display

CIU: Flash code

Flash code

Electrical fault: 3.3

Value fault: 6.1

Symptom

FMI 0: Engine is derated if engine protection parameter is activated

FMI 4, 5: Engine is difficult to start

https://truckmanualshub.com/

skall vara 18 ej 10

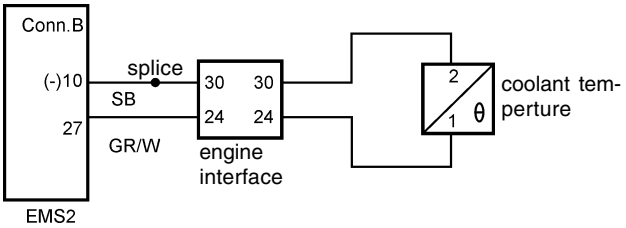

Note! Only TAD 650, 660, 750, 760 has an engine interface. On TAD 734 the wiring to the EMS 2 is the same but without any engine interface.

Circuit description

The coolant temperature sensor consists of a thermistor which forms a closed circuit with an internal resistor in the engine control unit (EMS 2) via the engine interface. The thermistor resistor changes in a non-linear manner, depending on the coolant temperature. The EMS 2 provides the circuit with a reference voltage of +5 Volt. The EMS 2 measures the voltage drop over the thermistor via pin B27 and pin B18 on the EMS 2. Pin 1 on the sensor is connected to battery negative via pin B18 on the EMS 2. When the coolant is cold, the thermistor resistance is high and the EMS 2 senses a high voltage drop. As the coolant warms up, the resistance in the thermistor falls and the voltage drop across it falls.

Fault tracing

FMI 0: Coolant temperature is too high

Conditions for fault code:

Coolant water temperature exceeds the set value of the engine protection.

Possible reason:

- Coolant level too low.
- Dust or dirt on the outside of the radiator.
- Drive belt is not properly adjusted.
- There is air in the coolant water system.
- Faulty thermostat.
- Faulty temperature sensor.
- Clogged cooling water system.

Suitable action:

1. Check coolant level.
2. Check outside of the radiator for dust and dirt.
3. Check drive belt adjustment.
4. Bleed coolant water system.
5. If low coolant level check coolant water system for leakage by a pressure test.
6. Check coolant pressure valve in the coolant cup or try with another coolant cup.
7. Check coolant water thermostat or change coolant water thermostat.
8. Check function of coolant temperature sensor.
9. Clean cooling water system.

https://truckmanualshub.com/

FMI 4 Abnormally low voltage or short circuit to lower voltage

Conditions for fault code:

The voltage on pin B18 on the EMS 2 is less than 0.07 Volt.

Possible reason:

- Short circuit between both cables to the coolant temperature sensor.
- Faulty sensor.

Suitable action:

1. Check cable harness and all connectors between coolant temperature sensor and EMS 2.
2. Check function of coolant temperature sensor.

FMI 5 Abnormally low current or open circuit

Conditions for fault code:

The voltage on pin B27 on the EMS 2 is more than 4.95 Volt.

Possible reason:

- Open circuit in signal cable to temperature sensor.
- Open circuit in negative cable to temperature sensor.
- Faulty sensor.

Suitable action:

1. Check contact pressure in socket 18 and 27 in engine connector B. Check also contact pressure in connector at coolant temperature sensor.
2. Check cable harness and all connectors between coolant temperature sensor and EMS 2.
3. Check function of coolant temperature sensor.

https://truckmanualshub.com/

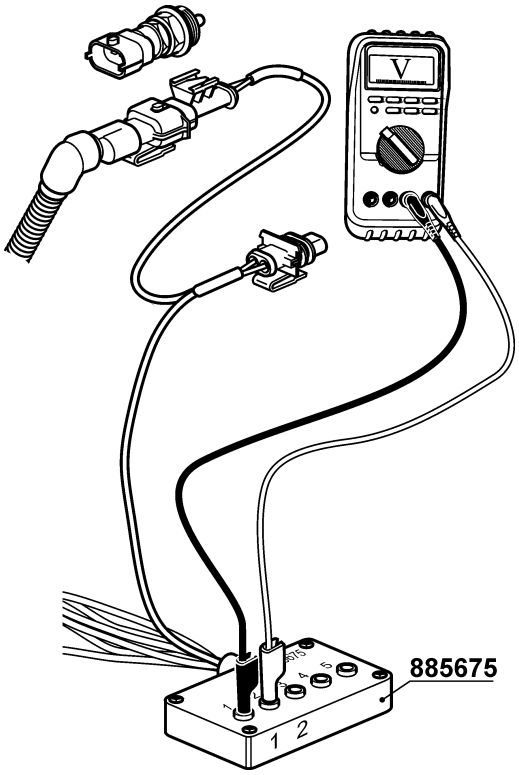

Measurements

NOTE! If any of the measurements shows an abnormal value, check the wiring to and from the engine interface.

Signal cable:

- **NOTE!** Turn ignition off.
- Disconnect the connector from the sensor.
- Connect adapter cable 885675 to the cable harness connector to the engine control unit.
- Use multimeter 9812519 for voltage measurement.
- **NOTE!** Turn ignition on.

Measurement points	Nominal value
1 – 2	U ≈ 5 V

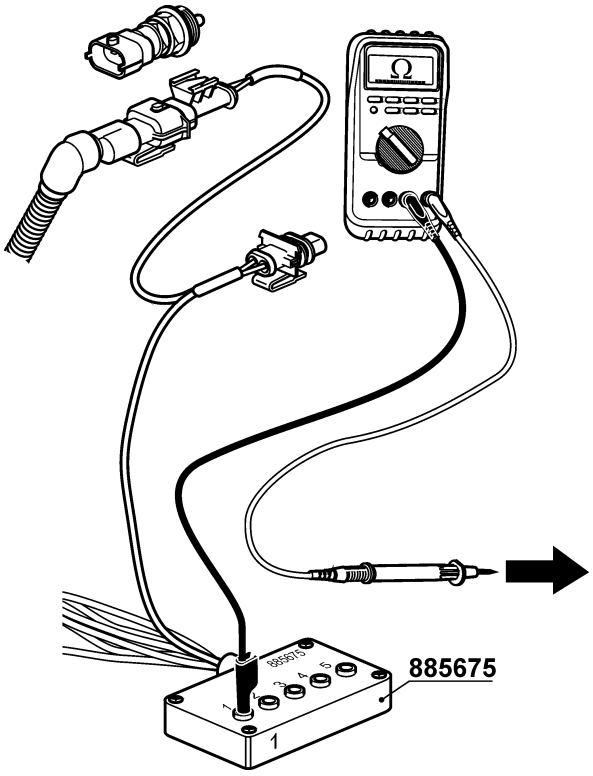

The point of connection for battery negative on the engine

Negative cable:

- **NOTE!** Cut the current with the main switch.
- Disconnect the connector from the sensor
- Connect adapter cable 885675 to the cable harness connector to the engine control unit.
- Use multimeter 9812519 to do resistance measurement against the engine control unit.

Measurement points	Nominal value
1 – Battery negative	R ≈ 0 Ω

https://truckmanualshub.com/

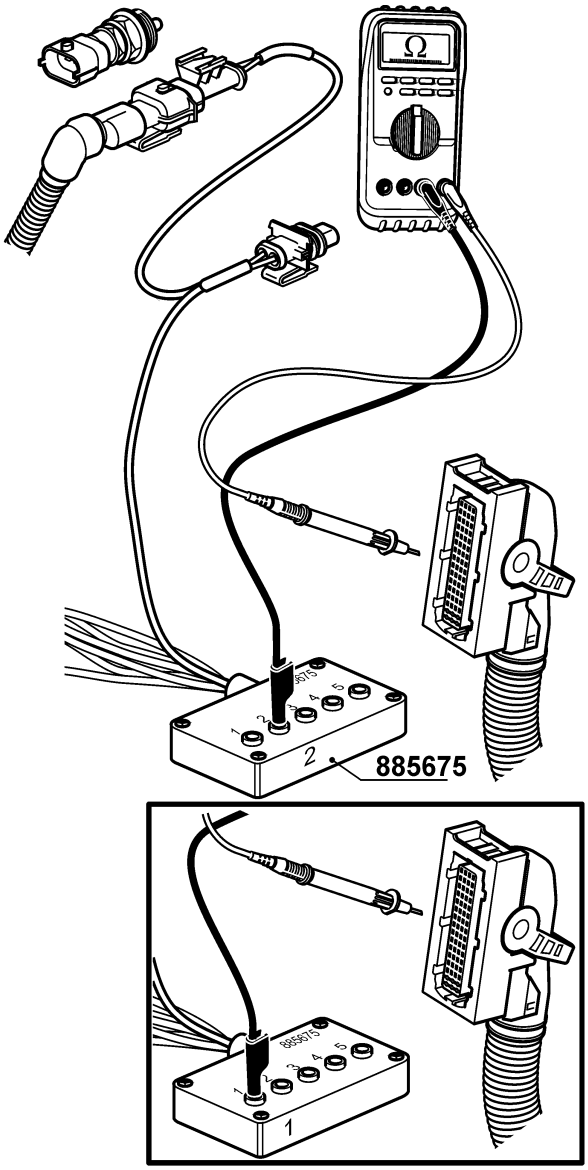

Checking the sensor cable for an open circuit or short-circuit:

NOTE! Cut the current with the main switch.

- Disconnect the connector from the sensor.
- Connect adapter cable 885675 to the cable harness connector to the engine control unit.
- Remove connector B from the engine control unit.
- Use multimeter 9812519 to do a resistance measurement against the engine control unit connector B.

Measurement points	Nominal value
2 (885675)– 27 (EMS 2, conn.B)	R ≈ 0 Ω
2 (885675)– 18 (EMS 2, conn.B)	R ≈ ∞ Ω
1 (885675)– 27 (EMS 2, conn.B)	R ≈ ∞ Ω
1 (885675)– 18 (EMS 2, conn.B)	R ≈ 0 Ω

NOTE! Measurement is done to eliminate short circuiting or breaks in the cable to the engine control unit.

https://truckmanualshub.com/

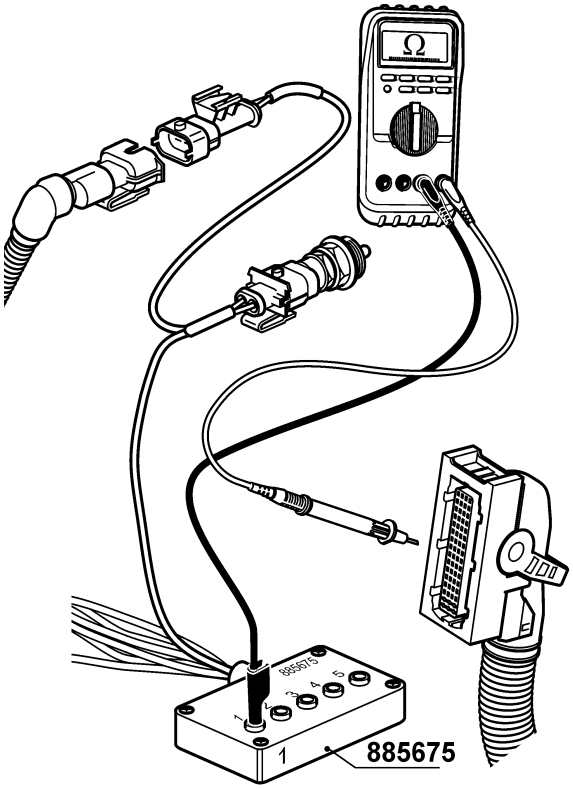

Checking coolant temperature sensor

- **NOTE!** Cut the current with the main switch.
- Connect adapter cable 885675 to the sensor. Do **not** connect the other end of the adapter cable.
- Use multimeter 9812519 to do resistance measurement.

Measurement points	Nominal value
1 – 2	R ≈ 9397 Ω +/- 755 Ω (at -10° C)
1 – 2	R ≈ 5896 Ω +/- 430 Ω (at 0° C)
1 – 2	R ≈ 2500 Ω +/- 148 Ω (at 20° C)
1 – 2	R ≈ 1175 Ω +/- 56 Ω (at 40° C)
1 – 2	R ≈ 596 Ω +/- 22 Ω (at 60° C)
1 – 2	R ≈ 323 Ω +/- 10 Ω (at 80° C)
1 – 2	R ≈ 186 Ω +/- 5 Ω (at 100° C)
1 – 2	R ≈ 113 Ω +/- 4 Ω (at 120° C)

https://truckmanualshub.com/

MID 128, PID 111

Coolant level

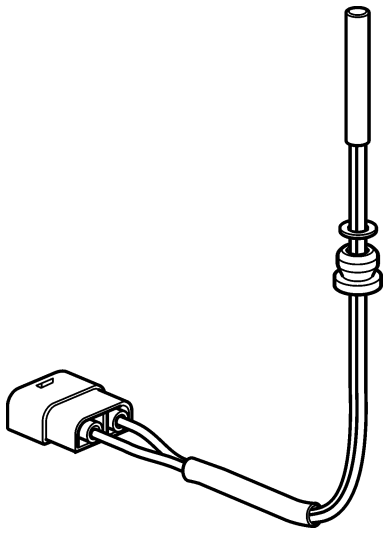

MID 128: Engine control unit

FMI 1: The sensor value is valid but below the normal working range.

FMI 3: The voltage exceeds the normal value or is short circuited to higher voltage.

FMI	Fault code explanation
1	Coolant level is too low
3	Faulty sensor / Faulty sensor circuit

Fault indication

DCU: Engine warning in DCU display.

CIU: Flash code

Flash code

Electrical fault: 2.3

Value fault: 2.2

Symptom

FMI 1

VE engines: Engine is derated if engine protection parameter is activated.

GE engines: Engine is shutdown.

https://truckmanualshub.com/

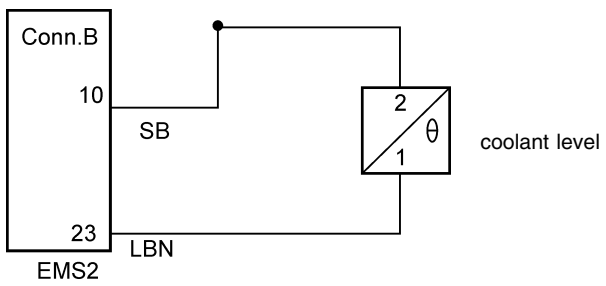

Circuit description

The coolant level in the engine is monitored by a level switch. Pin B23 on the engine control unit (EMS 2) provides pin 1 on the level switch with a voltage. Pin 2 on the level switch is connected to battery negative via pin B10 on the engine control unit.

The level switch has two states: On/Off.

The level switch consists of two sections, the actual switch and a magnetic float which is built into the expansion tank. The switch senses the position of the magnetic float. When the coolant level falls, the float operates the switch and a closed circuit is formed.

Fault tracing

FMI 1 Coolant level is too low

Suitable action:

1. Check coolant level.
2. Bleed coolant water system.
3. If low coolant level check coolant water system for leakage by a pressure test.
4. Check pressure valve in the coolant cup or try with another coolant cup.
5. Check wiring to the coolant level switch.
6. Check function of coolant level switch.

FMI 3 Abnormally high voltage or short circuit to higher voltage has been detected.

Fault condition:

The voltage on pin B23 in the engine control unit is too high.

Possible reason:

• Short circuit to battery voltage on pin B23.

Suitable action:

1. Check cable harness and connectors between coolant level monitor and EMS2.

https://truckmanualshub.com/

Measurements

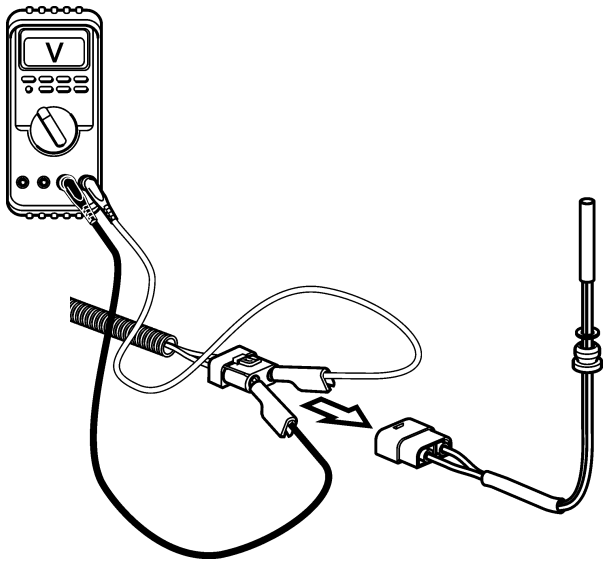

Supply cable:

- **NOTE!** Turn ignition off.
- Disconnect the connector from the level switch.
- Connect adapter cable 885675 to the cable harness connector to the engine control unit.
- Use multimeter 9812519 for voltage measurement
- **NOTE!** Turn the ignition on.

Measurement points	Nominal value
1 – 2	U ≈ Battery voltage x 0.8

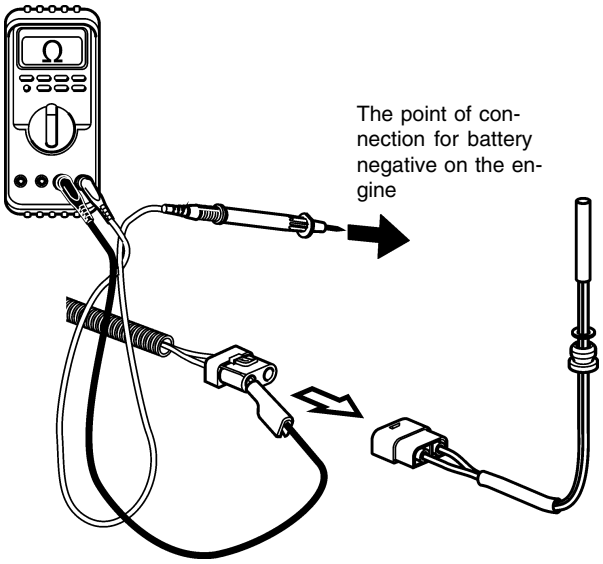

Negative cable:

- **NOTE!** Cut the current with the main switch.
- Disconnect the connector from the level switch.
- Connect adapter cable 885675 to the cable harness connector to the engine control unit.
- Use multimeter 9812519 to do resistance measurement against the engine control unit.

Measurement points	Nominal value
2 – Battery negative	R ≈ 0 Ω

https://truckmanualshub.com/

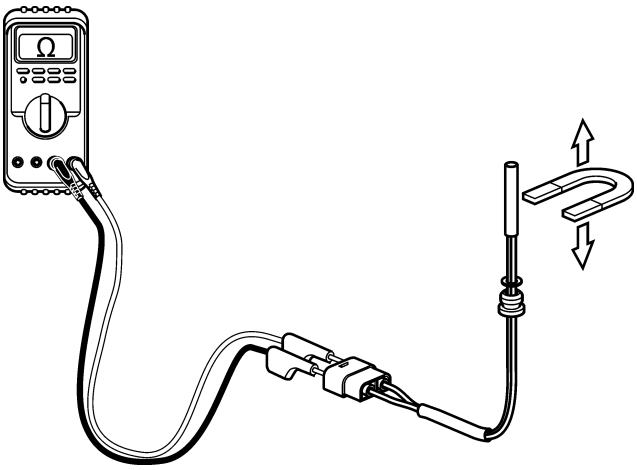

Checking coolant switch

NOTE! The coolant level monitor can be removed without having to drain the coolant.

1. Undo the connector and remove the level switch from the expansion tank.
2. Use multimeter 9812519 to do resistance measurement against the switch.

Measurement points	Nominal value
Blue – Black	R ≈ ∞ Ω

3. Move a magnet along the monitor and observe the resistance value. The resistance should drop to approx. 0 Ohm.

Measurement points	Nominal value
Blue – Black	R ≈ 0 Ω

https://truckmanualshub.com/

MID 128, PID 158

Battery voltage

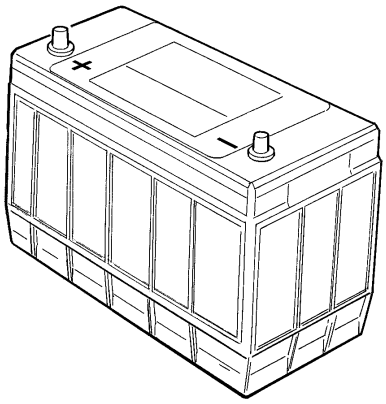

MID 128: Engine control unit

FMI 1: The sensor value is valid but below the normal working range.

FMI	Fault code explanation
1	Bellow range

Fault indication

DCU: Engine warning in DCU display.

CIU: Flash code

Flash code

Electrical fault: None (EMS)

Value fault: 3.9 (EMS)

Electrical fault: None (CIU)

Value fault: 6.9 (CIU)

Symptom

Could be engine starting problems.

https://truckmanualshub.com/

Fault tracing

FMI 1 Less than normal working range.

Possible reason:
Battery voltage less than 24.1V

Possible reason:
- Altenator belt
- Flat / poor batteries
- Fault in cables or connectors for battery / alternator
- Faulty altenator

Suitable action:
1. Check battery cables and connections.
2. Check / charge batteries.
3. Check altenator and drive belt.

https://truckmanualshub.com/

MID 128, PID 164

Rail pressure

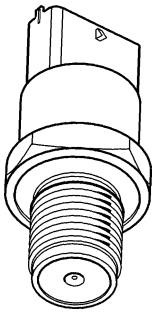

MID 128: Engine control unit

FMI 0: The sensor value is valid but above the normal working range.

FMI 2: Intermittent or faulty data.

FMI 4: The voltage is less than the normal value or is short circuited to lower voltage.

FMI 5: The current is less than the normal value or is open circuited.

FMI	Fault code explanation
0	Sensor out of range
2	Plausibility
4, 5	Faulty sensor / Faulty sensor circuit

Fault indication

DCU: Engine warning in DCU display.

CIU: None

Lamp status

FMI 0: None

FMI 2, 4, 5: Yellow lamp

Flash code

Electrical fault: 8.3

Value fault: None

Symptom

FMI 2, 4, 5: Engine speed limitation (1100rpm). Full fuel flow delivery, limp home with pressure release valve opened. An estimated rail pressure with depending to fuel quantity will be used.

https://truckmanualshub.com/

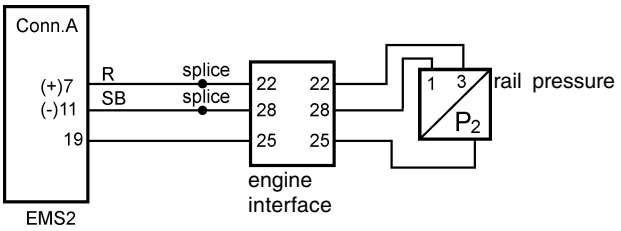

Note! Only TAD 650, 660, 750, 760 has an engine interface. On TAD 734 the wiring to the EMS 2 is the same but without any engine interface.

Circuit description

The sensor is an active sensor, i.e. the sensor must receive operating voltage. Pin A7 on the engine control unit (EMS 2) provides pin 3 on the sensor with an operating voltage of +5 Volt. Pin 1 on the sensor is connected to battery negative via pin A11 on the EMS 2. The output signal from the pressure sensor, pin 2 on the sensor to pin A19 on the EMS 2, is a voltage signal that is proportional to the rail pressure.

Fault tracing

FMI 0 Rail pressure is too high

Conditions for fault code:

Rail pressure depends on engine revolution and engine load.

Possible reason:

- Faulty MROP.
- Faulty rail pressure sensor.

Suitable action:

1. Check MPROP cables and connectors.
2. Check function of rail pressure sensor.

FMI 2

Conditions for fault code:

Plausibility fault.

Possible reason:

- Faulty rail pressure sensor.

Suitable reason:

1. Check function of rail pressure sensor.

https://truckmanualshub.com/

FMI 4 Abnormally low voltage or short circuit to lower voltage

Conditions for fault code:

The voltage on pin A19 on the EMS 2 is less than 0.07 Volt.

Possible reason:

- Short circuited sensor signal cable to battery negative.
- Faulty rail pressure sensor.

Suitable action:

1. Check cable harness and connectors between rail pressure sensor and EMS 2.
2. Check function of rail pressure sensor.

FMI 5 Abnormally low current or open circuit

Conditions for fault code:

The voltage on pin A19 on the EMS 2 is more than 4.95 Volt.

Possible reason:

- An open circuit in rail sensor 5V supply cable.
- An open circuit in rail sensor negative cable.
- An open circuit in rail sensor signal cable.
- Short circuited sensor signal cable to 5V supply cable.
- Short circuited sensor negative cable to 5V supply cable.
- Faulty rail pressure sensor.

Suitable action:

1. Check contact pressure in socket 7, 11 and 19 in engine connector A. Also check contact pressure in connector at fuel pressure sensor.
2. Check cable harness and connectors between rail pressure sensor and EMS 2.
2. Check function of rail pressure sensor.

https://truckmanualshub.com/

Measurements

NOTE! If any of the measurements shows an abnormal value, check the wiring to and from the engine interface.

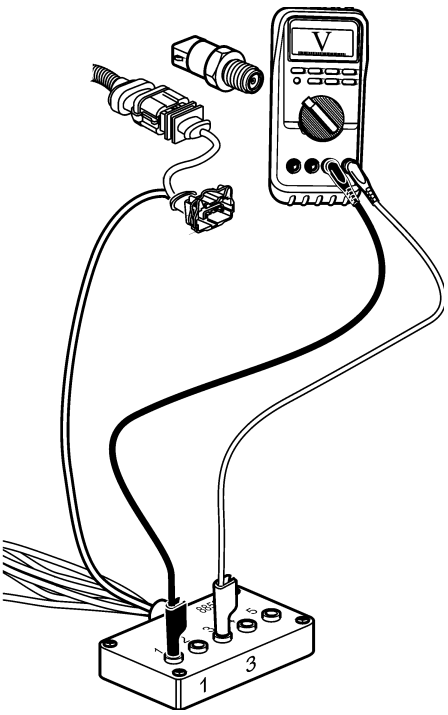

Supply cable:

- **NOTE!** Turn ignition off.
- Disconnect the connector from the sensor
- Connect adapter cable 885675 to the cable harness connector to the engine control unit.
- Use multimeter 9812519 for voltage measurement.
- Turn ignition on.

Measurement points	Nominal value
1 – 3	U ≈ 5V

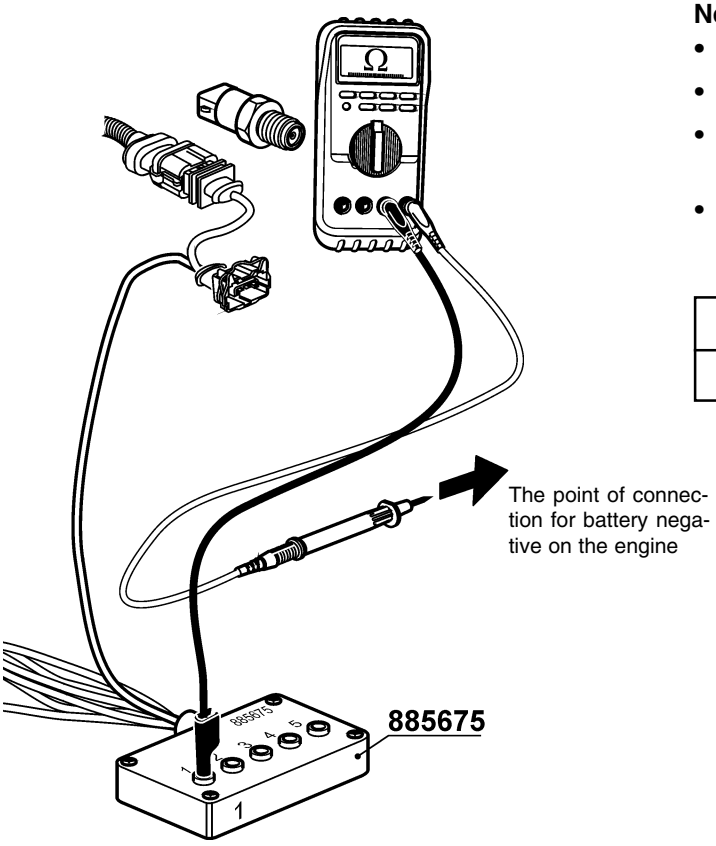

Negative cable:

- **NOTE!** Cut the current with the main switch.
- Disconnect the connector from the sensor
- Connect adapter cable 885675 to the cable harness connector to the engine control unit.
- Use multimeter 9812519 to do resistance measurement against the engine control unit.

Measurement points	Nominal value
1 – Battery negative	R ≈ 0 Ω

https://truckmanualshub.com/

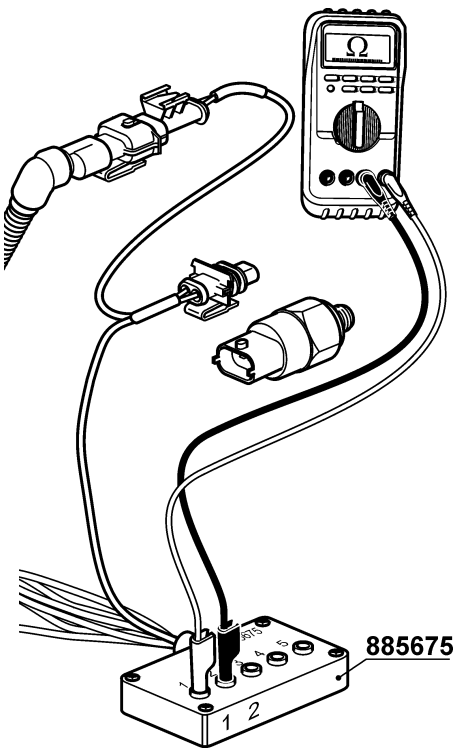

Signal cable:

- **NOTE!** Cut the current with the main switch.
- Disconnect the connector from the sensor
- Connect adapter cable 885675 to the cable harness connector to the engine control unit.
- Use multimeter 9812519 to do resistance measurement against the engine control unit.

Measurement points	Nominal value
1 – 2	R ≈ 4.0 – 5.0 kΩ

NOTE! Measurement is done to eliminate short circuiting or breaks in the cable to the engine control unit.

https://truckmanualshub.com/

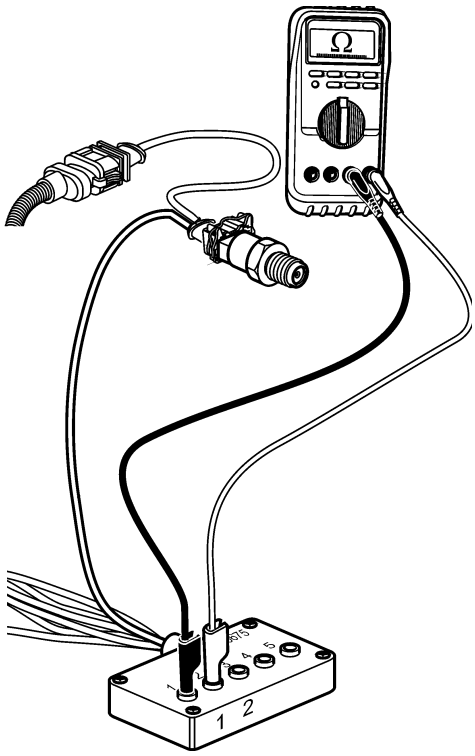

Checking fuel pressure sensor

- **NOTE!** Turn ignition off.
- Disconnect the connector from the sensor
- Connect adapter cable 885675 between the sensor and the engine control unit.
- Use multimeter 9812519 for voltage measurement.
- Turn ignition on.

Measurement points	Nominal value
1 – 2	U ≈ 0,5 V (at normal atmospheric pressure)

Component specification

Working range: 0 – 1800 bar = 0 – 180 MPa

Supply voltage: 5.00 +/- 0.25 VDC

Nominal output voltage at 25 °C and at supply voltage 5.00 VDC:

0.5 VDC at 0 bar = 0 kPa

4.5 VDC at 1800 bar = 180 MPa

https://truckmanualshub.com/

MID 128, PID 190

Engine speed

MID 128: Engine control unit.

FMI 0: The sensor value is valid but above the normal working range.

FMI	Fault code explanation
0	Engine is / was overspeeding

Fault indication

DCU: Engine warning in DCU display.

CIU: Flash code

Flash code

Electrical fault: None

Value fault: 2.6

Symptom

Engine speed limited.

Fault tracing

FMI 0

Possible reason:

Too high engine speed.

Suitable action:

1. After the engine has stopped, search for the reason for the high speed.

https://truckmanualshub.com/

MID 128 / MID 144, PPID 4

Starter input CIU

MID 128: Engine control unit.
MID 144: DCU/CIU

FMI 3: The voltage exceeds the normal value or is short circuited to higher voltage.

FMI 4: The voltage is less than the normal value or is short circuited to lower voltage.

FMI	Fault code explanation
3, 4	Faulty circuit

Fault indication

DCU: Engine warning in DCU display.

CIU: Flash code

Flash code

Electrical fault: 4.7 (EMS)
Value fault: None (EMS)

Electrical fault: 5.2 (CIU)
Value fault: None (CIU)

Symptom

FMI 3: The engine starts cranking immediately when ignition is turned on.

FMI 4: The engine can not be started.

https://truckmanualshub.com/

Fault tracing

FMI 3 Abnormally high voltage or short circuit to higher voltage

Possible reason:

- Faulty start switch.

Suitable action:

1. Check that start switch is connected correctly.
2. Check cable harness and connectors between CIU and start switch.
3. Check function of start switch.

FMI 4 Abnormally low voltage or short circuit to lower voltage

Possible reason:

- Short circuited CIU start signal cable to battery negative.
- Faulty start switch.

Suitable action:

1. Check that start switch is connected correctly.
2. Check contact pressure in socket 35 in the CIU connector.
3. Check cable harness and connectors between CIU and start switch.
4. Check function of start switch.

https://truckmanualshub.com/

MID 128 / MID 144, PPID 6

Engine stop switch

MID 128: Engine control unit
MID 144: DCU/CIU

FMI 3: The voltage exceeds the normal value or is short circuited to higher voltage.

FMI 4: The voltage is less than the normal value or is short circuited to lower voltage.

FMI 5: The current is less than the normal value or is open circuited.

FMI	Fault code explanation
3, 4, 5	Faulty circuit

Fault indication

DCU: Engine warning in DCU display.

CIU: Flash code

Flash code

Electrical fault: 4.8 (EMS)
Value fault: None (EMS)

Electrical fault: 5.3 (CIU)
Value fault: None (CIU)

Symptom

The engine can only be stopped by using AUX stop.

FMI5: Engine can’t be stopped.

https://truckmanualshub.com/

Fault tracing

FMI 3 Abnormally high voltage or short circuit to higher voltage

Possible reason:

- Stop signal activated too long.
- Faulty stop button.

Suitable action:

1. Check that the stop button isn't stucked.
2. Check that stop button is connected correctly.
3. Check cable harness and connectors at aux stop button at EMS / stop button at CIU.
4. Check function of aux stop button at EMS / stop button at CIU.

FMI 4 Abnormally low voltage or short circuit to lower voltage

Possible reason:

- Short circuit to battery negative.

Suitable action:

1. Check cable harness and connectors at aux stop button at EMS / stop button at CIU.
2. Check function of aux stop button at EMS / stop button at CIU.

FMI 5 Abnormally low current or open circuit

Possible reason:

- An open circuit in aux stop circuit.

Suitable action:

1. Check cable harness and connectors at aux stop button at EMS / stop button at CIU.
2. Check function of aux stop button at EMS / stop button at CIU.

https://truckmanualshub.com/

MID 128, PPID 19

Internal EGR status

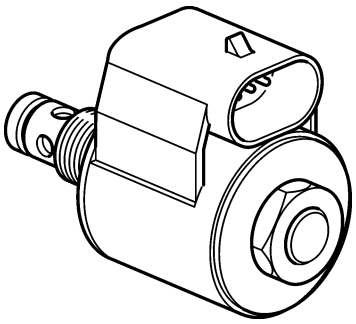

MID 128: Engine control unit

FMI 3: The voltage exceeds the normal value or is short circuited to higher voltage.

FMI 4: The voltage is less than the normal value or is short circuited to battery negative.

FMI 5: The current is less than the normal value or is open circuited.

FMI 7: Mechanical fault. The system responds incorrectly.

FMI	Fault code explanation
3, 4, 5	Faulty sensor / Faulty sensor circuit
7	Mechanical fault

Fault indication

DCU: Engine warning in DCU display.

CIU: None

Flash code

Electrical fault: 8.5
Value fault: None

Symptom

FMI 3, 4, 5: IEGR can not be turned on.

FMI 7: May damage turbine, increased power and emissions.

https://truckmanualshub.com/

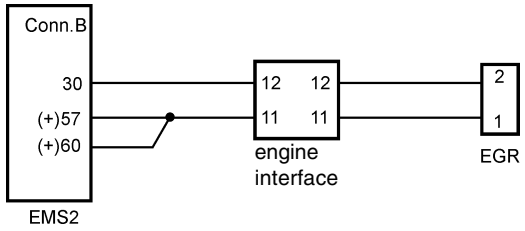

Circuit description

Internal exhaust gas recirculation, IEGR, is like the name says used for recirculation of exhaust gases. This for lowering the emissions from the engine. The IEGR valve is a 2-way solenoid valve controlled by the engine control unit. The IEGR solenoid controls a oil pressure that effects a control valve which activate the exhaust gas recirculation function. The solenoid is activated when pin B30 on the EMS 2 changes its potential.

Fault tracing

FMI 3 Abnormally high voltage or short circuit to higher voltage

Possible reason:

- Short circuited IEGR signal cable to 5V voltage or to battery voltage.

Suitable action:

1. Check cable harness and connectors between EMS 2 and IEGR.

FMI 4 Abnormally low voltage or short circuit to lower voltage

Possible reason:

- Short circuited IEGR signal cable to battery negative.

Suitable action:

1. Check cable harness and connectors between EMS 2 and IEGR.

https://truckmanualshub.com/

FMI 5 Abnormally low current or open circuit

Possible reason:

- An open circuit in one or both of the cables to the IEGR.

Suitable action:

1. Check cable harness and connectors between EMS 2 and IEGR.
2. Check IEGR coil.

FMI 7 Mechanical fault

Possible reason:

- IEGR solenoid mechanically stucked.
- Too low oil pressure to activate the IEGR.

Suitable action:

1. Check function of IEGR solenoid.
2. Check engine oil pressure.

Measurements

NOTE! If any of the measurements shows an abnormal value, check the wiring to and from the engine interface.

Checking the wiring:

1. **NOTE!** Cut the current with the main switch.
2. Remove the connector to the IEGR solenoid.
3. Remove connector B from the EMS 2.
4. Connect the B connector to brakeout cable 9990014 with measurebox 9998699.
5. Use multimeter 9812519 to do a resistance measurement.

Measurement points in box	Nominal value
30 (IEGR signal) - 2 (IEGR connector)	R ≈ 0 Ω
57, 60 (relay +) - 1 (IEGR connector)	R ≈ 0 Ω

https://truckmanualshub.com/

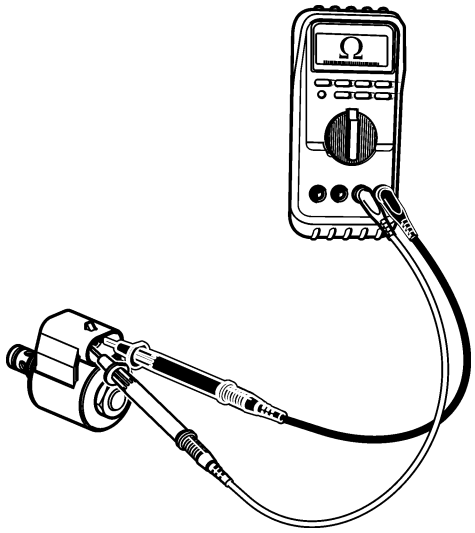

Checking IEGR coil

1. **NOTE!** Cut the current with the main switch.
2. Remove the connector from the IEGR solenoid .
3. Use multimeter 9812519 to measure the resistance in the IEGR coil.

Measurement points	Nominal value
1 – 2	R ≈ 28 – 42 Ω

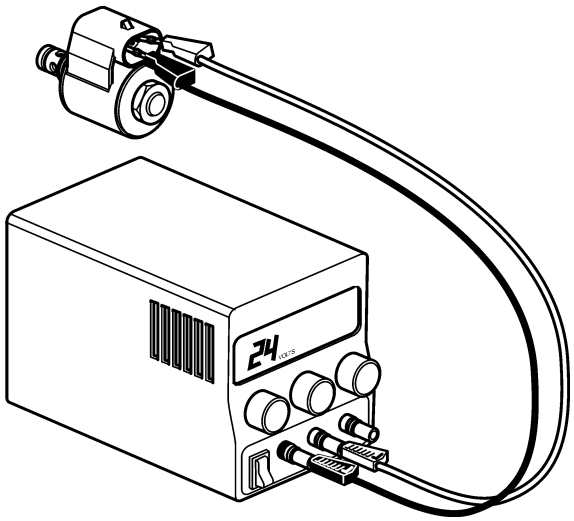

Checking IEGR solenoid

1. **NOTE!** Cut the current with the main switch.
2. Remove the IEGR solenoid.
   Please see the workshop manual for TAD650-760VE Group 21-26, for reference how to remove the IEGR solenoid.
3. Connect a 24 volt power supply to the IEGR electrical connection. The solenoid should now make a click when alter its position.

https://truckmanualshub.com/

MID 128, PPID 55

ECU temperature

MID 128: Engine control unit

FMI 0: The sensor value is valid but above the normal working range.

FMI 4: The voltage is less than the normal value or is short circuited to lower voltage.

FMI 5: The current is less than the normal value or is open circuited.

FMI	Fault code explanation
0	ECU temperature is too high
4, 5	Faulty sensor / Faulty sensor circuit

Fault indication

DCU: Engine warning in DCU display.

CIU: None

Flash code

Electrical fault: 8.4

Value fault: None

Symptom

None.

https://truckmanualshub.com/

Circuit description

The temperature sensor is installed inside of the EMS 2 unit.

Fault tracing

FMI 0

Fault condition:
The temperature inside the engine control unit is too high.

Possible reason:
- High surrounding temperature.
- Fault in sensor.

Suitable action:
1. Check if the surrounding temperature is high or if the EMS 2 unit is exposed to heat radiation.
2. Change EMS 2 unit.

FMI 4 The voltage is less than the normal value or is short circuited to lower voltage.

Possible reason:
- Fault in sensor circuit.

Suitable action:
1. Change EMS 2 unit.

FMI 5 Abnormally low current or open circuit

Possible reason:
- Fault in sensor circuit.

Suitable action:
1. Change EMS 2 unit.

https://truckmanualshub.com/

MID 128, PPID 98

Engine sync acknowledge

MID 128: Engine control unit

FMI 9: Abnormal updating frequency on the secondary bus.

FMI	Fault code explanation
9	Communication fault

Fault indication

DCU Engine warning in DCU display.

CIU Flashcode

Flash code

Electrical fault: None

https://truckmanualshub.com/

Fault tracing

NOTE! If the control panel ONLY communicates on the J1939 communication and NOT the redundancy of J1587 for start, stop and throttle this fault code is active in the VODIA and that is normal.

FMI 9

Fault condition:

“Time-out” on the J1587 bus.

Possible reason:

- Fault in the communication with the DCU/CIU.
- No DCU/CIU found.
- Open circuit in the power supply cable between the engine control unit and the DCU/CIU.
- Faulty DCU/CIU.

Suitable action

1. Check communication cables to the DCU/CIU.
2. Check power supply cable between engine control unit and DCU/CIU.
3. Check that DCU/CIU is programmed for correct engine type.

https://truckmanualshub.com/

MID 128 / 144, PPID 132

Throttle input request failure, DCU/CIU

MID 128: Engine control unit
MID 144: Control interface unit

FMI 3: The voltage exceeds the normal value or is short circuited to higher voltage.

FMI 4: The voltage is less than the normal value or is short circuited to battery negative.

FMI 9: Abnormal update rate

FMI	Fault code explanation
3, 4	Faulty throttle potentiometer / Faulty throttle potentiometer circuit
9	EMS2 is missing the throttle signal

Fault indication

DCU: Engine warning in DCU display.

CIU: Flashcode

Flash code

Electrical fault: 2.8

Value fault: None

Symptom

Engine goes to idle. If the accelerator is released at first and then pressed down again the engine can be forced to run using the idle contact.

https://truckmanualshub.com/

Fault tracing

NOTE! If the control panel ONLY communicates on the J1939 communication and NOT the redundancy of J1587 for start, stop and throttle this fault code is active in the VODIA and that is normal.

FMI 3 Abnormally high voltage or short circuit to higher voltage

Possible reason:

- Open circuit in any or all of the throttle signals.
- Short circuited throttle potentiometer signal cable to 5V voltage or to battery voltage.
- Faulty throttle potentiometer.

Suitable action:

1. Check that the throttle potentiometer is connected correctly.
2. Check cable harness and connectors between CIU and CIU throttle potentiometer.
3. Check function of throttle potentiometer.
4. Check contact pressure in socket 2, 3 and 30 in CIU connector.

FMI 4 Abnormally low voltage or short circuit to lower voltage

Possible reason:

- Short circuited throttle potentiometer signal cable to battery negative.
- Faulty throttle potentiometer.

Suitable action:

1. Check that the throttle potentiometer is connected correctly.
2. Check cable harness and connectors between CIU and CIU throttle potentiometer.
3. Check function of throttle potentiometer.

https://truckmanualshub.com/

FMI 9

Fault condition:

EMS2 gets no throttle signal on the J1939 bus from the CIU.

Suitable action:

1. Check that the throttle potentiometer is connected correctly.
2. Check cable harness and connectors between CIU and CIU throttle potentiometer.
3. Check function of throttle potentiometer.
4. Check contact pressure in socket 2, 3 and 30 in CIU connector.

Logging throttle signal with Vodia

To verify the throttle signal on the J1587 bus do as follow:

1. Choose “Log test” under the “Service and maintenance” meny.
2. Choose “MID 128, Accelerator Pedal Position” and “MID 144, Throttle Calibrated Position” and press play.
3. Verify that booth throttle values displayed in percentage by Vodia changes simultaneous while moving the throttle.

https://truckmanualshub.com/

MID 128, SID 1-6

Injector common rail # 1-6

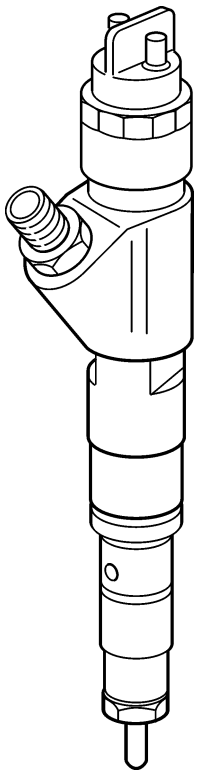

MID 128: Engine control unit.

FMI 3: Short to battery voltage, injector low voltage side.

FMI 4: Short to battery negative, injector high voltage side.

FMI 5: Break in injector circuit.

FMI 7: Mechanical fault. The system responds incorrectly.

FMI 12: Low injector hold current.

FMI 14: Special instructions.

FMI	Fault code explanation
3, 4, 5, 7, 12	Fault in the injection system

Fault indication

DCU: Engine warning in DCU display.

CIU: Flash code

Flash code

Electrical fault: 7.1– 7.6

Value fault: None

Symptom

FMI 3, 4, 5: Faulty injector is shut off. Limp home on rest of injectors.

https://truckmanualshub.com/

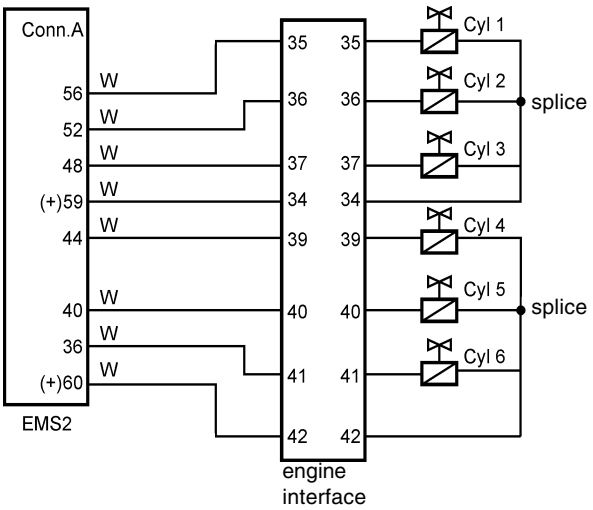

Note! Only TAD 650, 660, 750, 760 has an engine interface. On TAD 734 the wiring to the EMS 2 is the same but without any engine interface.

Circuit description

The electronic injectors used on the engine has an electronically controlled solenoid. The solenoid is controlled by the engine control unit.

The injectors receive voltage from pin A59 orA 60 on the engine control unit. To activate an injector solenoid the engine control unit grounds the current injector.

Fault tracing

NOTE! Identify which injector by the SID number.

FMI 3 Checking injector circuit

Conditions for fault code:

Injector activated and faulty voltage in injector low side

Possible reason:

- Short circuit to battery voltage on the pin on the respective injector's low voltage side. (EMS 2 pin: 56, 52, 48 and 44, 40, 36)
- Short circuit between high voltage and low voltage side.
- Short circuit to battery voltage in low voltage injector wire.

Suitable action:

1. Check cable harness and connectors between injectors and engine control unit (EMS 2).

https://truckmanualshub.com/

FMI 4 Checking injector circuit

Conditions for fault code:

Injector activated and faulty voltage in injector high side.

Possible reason:

- Short circuit to battery negative on the pin on the respective injector's high voltage side. (EMS 2 pin: 59 and 60)
- Short circuit to battery negative in high voltage injector wire.

Suitable action:

1. Check cable harness and connectors between injectors and engine control unit (EMS 2).

FMI 5 Checking injector circuit

Conditions for fault code:

Injector activated and faulty voltage in injector high or low side.

Possible reason:

- An open circuit in low voltage wiring side or high voltage wiring side.
- If three injection fault codes are set there is an open circuit on the high side. If one injection fault code is set there is an open circuit on the low side.
- Short circuit to battery voltage on the pin on the respective injector's high voltage side. (EMS 2 pin: 59 and 60)
- Short circuit to battery negative on the pin on the respective injector's low voltage side. (EMS 2 pin: 56, 52, 48 and 44, 40, 36)

Suitable action:

1. Check contact pressure in socket 36, 40, 44 ,52, 56, 59 and 60 in engine connector A.
2. Check cable harness and connectors between injectors and engine control unit (EMS 2).

https://truckmanualshub.com/

FMI 7

Conditions for fault code:

Injector activated and cylinder balancing above limit.

If a fault code is set when the engine has an unsymmetrical load it can not be rectified. At idle speed the engine control unit is trying to compensate for uneven running by adding more or less fuel to the injectors, cylinder balancing. If the engine load is too unsymmetrical the compensation is not enough and a fault code will be set.

Possible reason:

- Unsymmetrical load of the engine.
- Poor / uneven compression.
- Faulty injector.

Suitable action:

1. Clear the fault code with the Vodia tool. Let the engine run at idle speed without any load and see if the fault code reappear.
2. Perform test of cylinder compression using the VODIA tool.
3. Change only the faulty injector.

FMI 12 Checking injector circuit

Conditions for fault code:

Low injector hold current. Injector activated.

Possible reason:

- Intermittent fault.

Suitable action:

1. Check cables harness and connectors between injector and engine control unit.

https://truckmanualshub.com/

FMI 14

Conditions for fault code:

Low or high flow through injector.

Possible reason:

- Faulty injector: leakage in spill valve, increased nozzle hole.

Suitable action:

1. Change only the faulty injector.

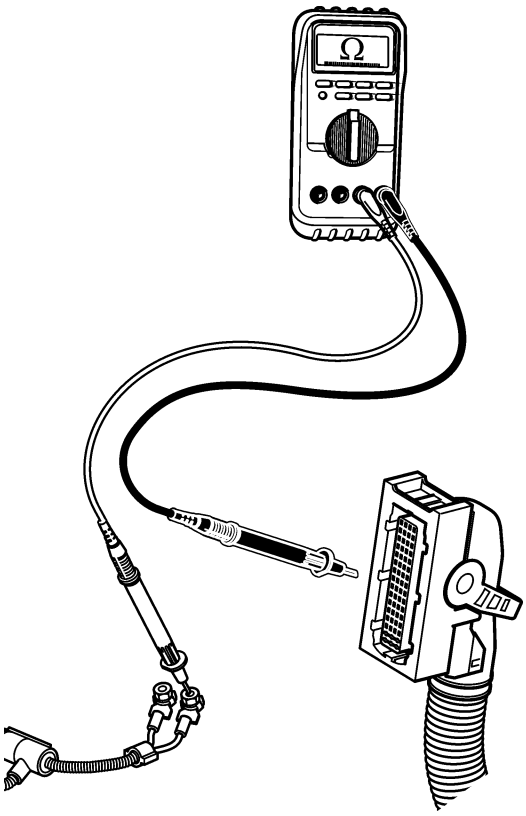

Measurements

NOTE! If any of the measurements shows an abnormal value, check the wiring to and from the engine interface.

- **NOTE!** Cut the current with the main switch.
- Remove both wires that are connected to the injector that is to be measured.
- Remove connector A from the EMS 2.
- Use multimeter 9812519 to do a resistance measurement between connector A from the EMS 2 to the loosened wires from the injector. See circuit description which pin in the connector A to measure from.

https://truckmanualshub.com/

MID 128, SID 21

Speed sensor, camshaft

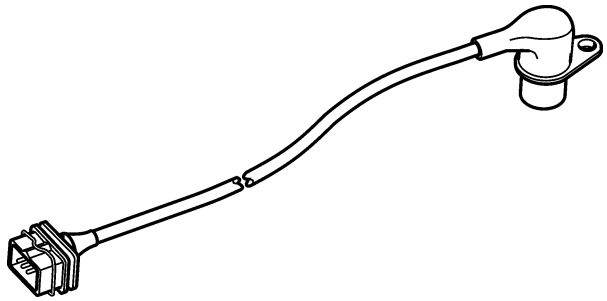

MID 128: Engine control unit.

FMI 2: Intermittent or faulty data

FMI 3: No signal

FMI 8: Abnormal frequency

FMI	Fault code explanation
2, 3, 8	Faulty sensor / Faulty sensor circuit

Fault indication:

DCU: Engine warning in DCU display.

CIU: Flash code

Flash code:

Electrical fault: 2.5

Value fault: None

Symptom:

FMI 2, 3, 8: The engine start time will increase, uses only crankshaft sensor.

https://truckmanualshub.com/

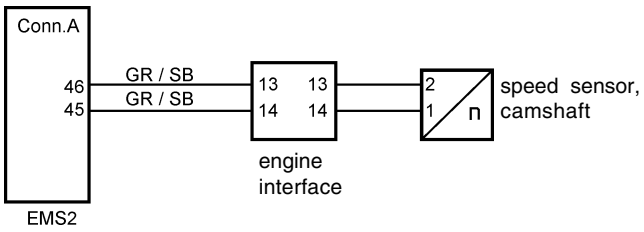

Note! Only TAD 650, 660, 750, 760 has an engine interface. On TAD 734 the wiring to the EMS 2 is the same but without any engine interface.

Circuit description

The camshaft sensor is an inductive sensor. When the camshaft rotates impulses are created in the sensor via a tooth wheel installed on the camshaft. The tooth wheel has 7 teeth, one for each cylinder + one to determine when cylinder one is to be injected. The impulses create a pulse signal in the sensor that the engine control unit (EMS 2) uses to calculate when a cylinder is in turn for injection.

Fault tracing

FMI 2 Checking sensor circuit

Conditions for fault code:

Incorrect timing.

Possible reason:

- Polarity fault. The cables to the cam sensor is shifted.
- Intermittent fault.
- Incorrectly mounted cam sensor.

Suitable action:

1. Check cable harness and connectors between cam sensor and EMS 2.
2. Check that the cam sensor is connected as in the circuit description.
3. Check contact pressure in socket 45 and 46 in engine connector A.
4. Check function of cam sensor.

https://truckmanualshub.com/

FMI 3 Checking sensor circuit

Conditions for fault code:

No sensor signal when expected.

Possible reason:

- Incorrectly mounted cam sensor.
- An open circuit in any or both of the cables to the cam sensor.
- Short circuit between cables to cam sensor.
- Faulty cam sensor.

Suitable action:

1. Check installation of cam speed sensor.
2. Check cable harness and connectors between cam sensor and EMS 2.
3. Check contact pressure in socket 45 and 46 in engine connector A.
4. Check function of cam sensor.

FMI 8 Checking sensor circuit

Conditions for fault code:

Incorrect sensor signal.

Possible reason:

- Incorrectly mounted speed sensor.
- Electrical interference in the speed signal.

Suitable action:

1. Check wiring between cam sensor and EMS 2.
2. Check contact pressure in socket 45 and 46 in engine connector A.
3. Check installation of cam sensor.
4. Attempt to localize the source of interference.
5. Check function of cam sensor.

https://truckmanualshub.com/

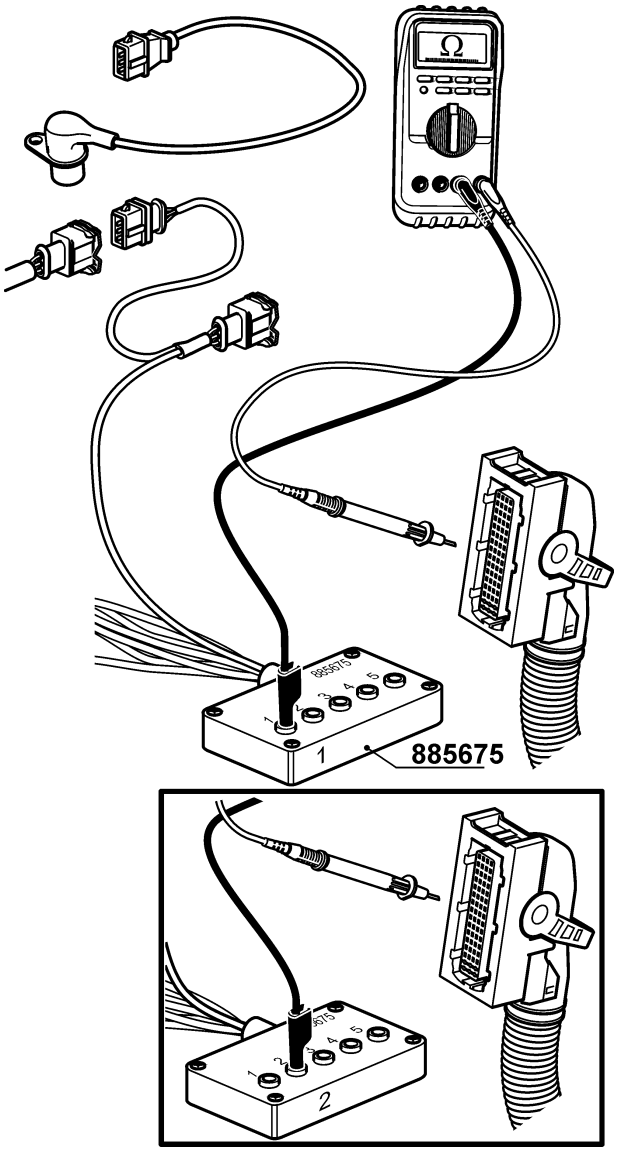

Measurements

NOTE! If any of the measurements shows an abnormal value, check the wiring to and from the engine interface.

- **NOTE!** Cut the current with the main switch.
- Remove the connector from the sensor. Connect adapter cable 885675 to the connector.
- Remove connector A from the EMS 2.
- Use multimeter 9812519 to do a resistance measurement from the sensor connector to connector A to verify that neither of the wires are broken or short circuited.

Measurement points	Nominal value
1 (sensor conn.) – 46 (conn. A)	R ≈ 0 Ω
2 (sensor conn.) – 45 (conn. A)	R ≈ 0 Ω
1 (sensor conn.) – 2 (sensor conn.)	R ≈ ∞ Ω

https://truckmanualshub.com/

Checking camshaft position sensor

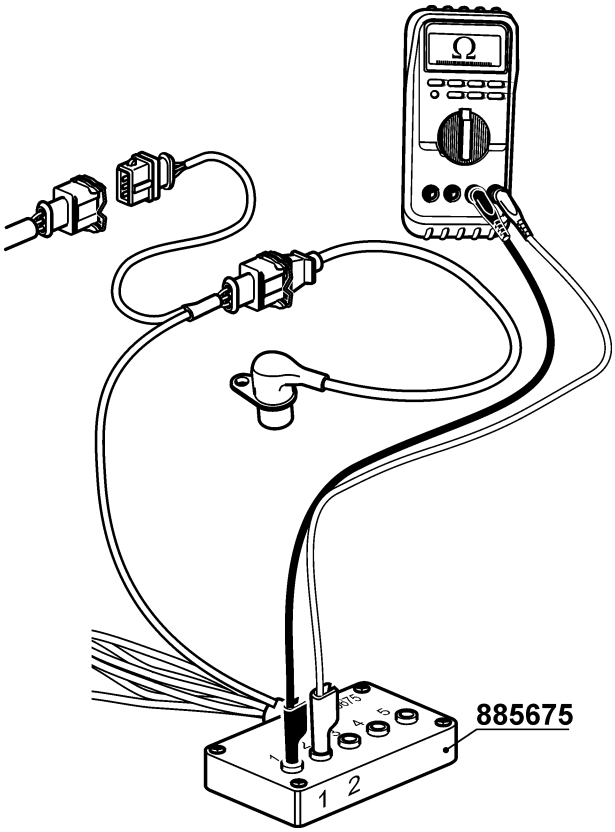

1. **NOTE!** Cut the current with the main switch.
2. Undo the connector from the sensor and remove the sensor from the cylinder head.
   Check that the sensor does not have any external damage, or any swarf which has got stuck on it.
3. Connect adapter cable 885675 to sensor.

NOTE! Do **not** connect the other end of the adapter cable to the engine cable harness, since this can cause a measurement error.

4. Use multimeter 9812519 for resistance measurement.

Measurement points	Nominal value
1 – 2	R ≈ 3,5 kΩ at 20°C

NOTE! The measurement must exclude short circuit or open circuit to the engine control unit.

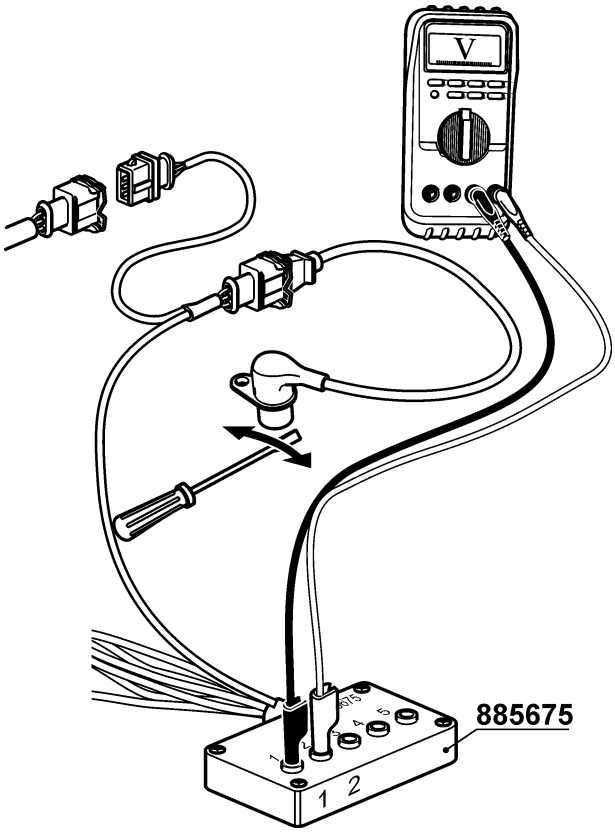

5. Use multimeter 9812519 for a AC voltage measurement.
   Move a metal object rapidly back and forwards not more than 1 mm in front of the sensor. Check that the multimeter gives a reading.
6. Install the sensor.

https://truckmanualshub.com/

MID 128, SID 22

Speed sensor, crankshaft

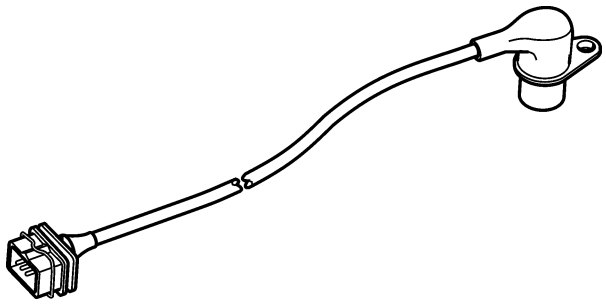

MID 128: Engine control unit

FMI 2: Intermittent or faulty data

FMI 3: No signal

FMI 8: Abnormal frequency

FMI	Fault code explanation
2, 3, 8	Faulty sensor / Faulty sensor circuit

Fault indication:

DCU: Engine warning in DCU display.

CIU: Flash code

Flash code

Electrical fault: 2.4

Value fault: None

Symptom

FMI 3: Engine is running with imprecise timing causing risk of high fuel consumption and smoke. Cylinder balancing not working with risk of uneven running.

FMI 2, 8: Engine is difficult to start, uses only cam sensor.

https://truckmanualshub.com/

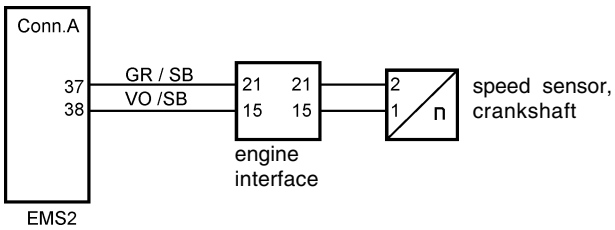

Note! Only TAD 650, 660, 750, 760 has an engine interface. On TAD 734 the wiring to the EMS 2 is the same but without any engine interface.

Circuit description

The speed sensor is an inductive sensor. When the crankshaft rotates impulses are created in the sensor via a tooth wheel on or behind the torsion damper. The impulses create a pulse signal in the sensor that the engine control unit (EMS 2) uses to calculate the crankshaft rpm.

The tooth wheel has a tooth free gap for the EMS 2 to recognize the position of the crankshaft.

Fault tracing

FMI 2 Checking sensor circuit

Conditions for fault code:

Incorrect signal.

Possible reason:

- Short circuit between cables to speed sensor.
- Polarity fault. The cables to the speed sensor is shifted.

Suitable action:

1. Check cable harness and connectors between speed sensor and EMS 2.
2. Check that speed sensor is connected as in the circuit description.
3. Check function of speed sensor.

https://truckmanualshub.com/

FMI 3 Checking sensor circuit

Conditions for fault code:

No sensor signal when expected or permanent loss of sensor signal.

Possible reason:

- Open circuit in any or both of cables to the speed sensor.
- Incorrectly mounted speed sensor.
- Faulty speed sensor.

Suitable action:

1. Check cable harness and connectors between speed sensor and EMS 2.
2. Check contact pressure in socket 37 and 38 in engine connector A.
4. Check installation of speed sensor.
5. Check function of speed sensor.

FMI 8 Checking sensor circuit

Conditions for fault code:

Incorrect speed sensor signal.

Possible reason:

- Incorrectly mounted speed sensor.
- Electrical interference in the sensor signal.

Suitable action:

1. Check wiring and connectors between speed sensor and EMS 2.
2. Check contact pressure in socket 37 and 38 in engine connector A.
3. Check installation of speed sensor.
4. Attempt to localize the source of interference.
5. Check and clean the speed sensor.

https://truckmanualshub.com/

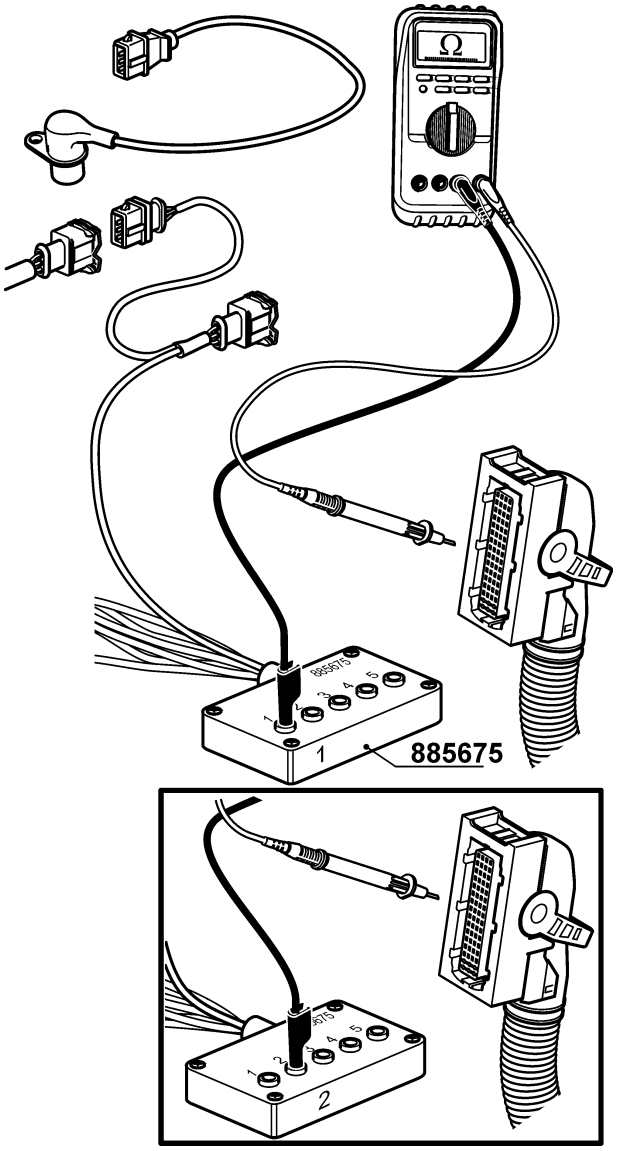

Measurements

NOTE! If any of the measurements shows an abnormal value, check the wiring to and from the engine interface.

- **NOTE!** Cut the current with the main switch.
- Remove the connector from the sensor.
- Connect adapter cable 885675 to the cable harness connector to the engine control unit.
- Remove connector A from the EMS 2.
- Use multimeter 9812519 to do a resistance measurement from the sensor connector to connector A, to verify that neither of the wires are broken or short circuited.

Measurement points	Nominal value
1 (sensor conn.) – 38 (conn. A)	R ≈ 0 Ω
2 (sensor conn.) – 37 (conn. A)	R ≈ 0 Ω
1 (sensor conn.) – 2 (sensor conn.)	R ≈ ∞ Ω

https://truckmanualshub.com/

Checking speed sensor

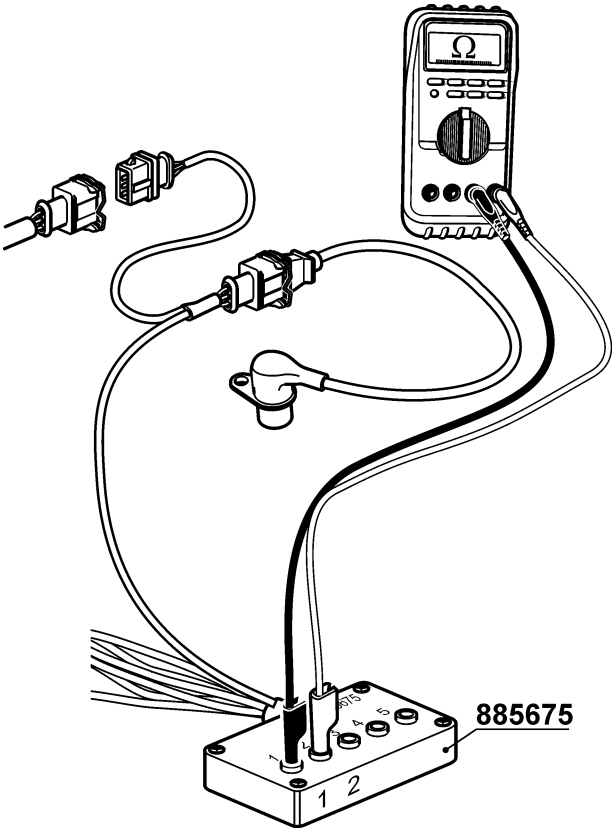

1. **NOTE!** Cut the current with the main switch.
2. Undo the connector from the sensor and remove the sensor from the cylinder head.
   Check that the sensor does not have any external damage, or any swarf which has got stuck on it.
3. Connect adapter cable 885675 to sensor.

NOTE! Do **not** connect the other end of the adapter cable to the engine cable harness, since this can cause a measurement error.

4. Use multimeter 9812519 for resistance measurement.

Measurement points	Nominal value
1 – 2	R ≈ 0,9 kΩ at 20°C

NOTE! The measurement must exclude short circuit or open circuit to the engine control unit.

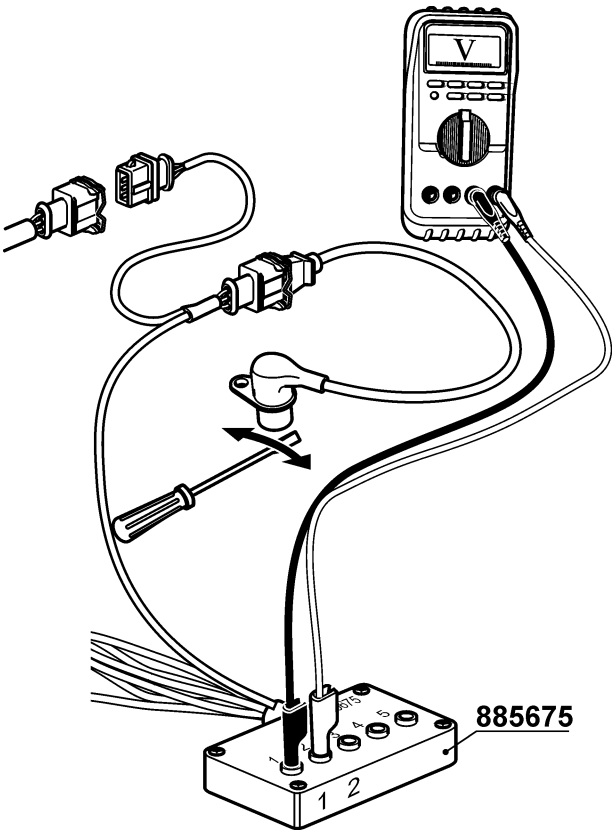

5. Use multimeter 9812519 for a AC voltage measurement.

   Move a metal object rapidly back and forwards not more than 1 mm in front of the sensor. Check that the multimeter gives a reading.
6. Install the sensor.

https://truckmanualshub.com/

MID 128, SID 39

Engine starter relay

MID 128: Engine control unit

FMI 3: The voltage exceeds the normal value or is short circuited to higher voltage.

FMI 4: The voltage is less than the normal value or is short circuited to lower voltage.

FMI 5: The current is less than the normal value or is open circuited.

FMI	Fault code explanation
3, 4, 5	Fault in starter relay circuit

Fault indication

DCU: Engine warning in DCU display.

CIU: None

Flash code

Electrical fault: 4.6

Value fault: None

Symptom

Start motor does not engage.

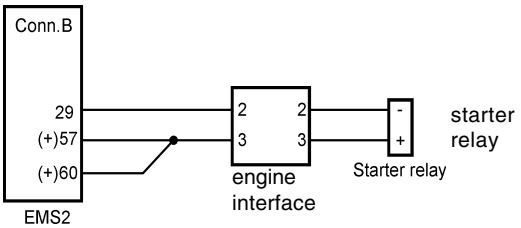

Note! Only TAD 650, 660, 750, 760 has an engine interface. On TAD 734 the wiring to the EMS 2 is the same but without any engine interface.

Circuit description

The starter relay is located on the starter motor. When ignition is on, the starter relay recives battery voltage from B57 and B60. B29 is not activated. When the start button is activated B29 alter its potential and the relay activates.

https://truckmanualshub.com/

Fault tracing

at starter motor problems:

- Check battery condition.
- Check wiring to start motor.
- Check that starter relay click when start button is activated.

FMI 3

Conditions for fault code:

Short circuit too battery voltage.

Possible reason:

- Short circuit in starter relay cable.
- Faulty starter relay.

Suitable action:

1. Check cable harness and connections between starter relay and EMS 2.
2. Check function of starter relay.

FMI 4

Conditions for fault code:

Short circuit too battery negative.

Possible reason:

- Short circuit in starter relay cable.
- Faulty starter relay.

Suitable action:

1. Check cable harness and connections between starter relay and EMS 2.
2. Check function of starter relay.

https://truckmanualshub.com/

FMI 5

Conditions for fault code:

Open circuit.

Possible reason:

- An open circuit in starter relay cable.
- Faulty starter relay.

Suitable action:

1. Check cable harness and connections between starter relay and EMS 2.
2. Check contact pressure in socket B29 in engine connector.
3. Check function of starter relay.

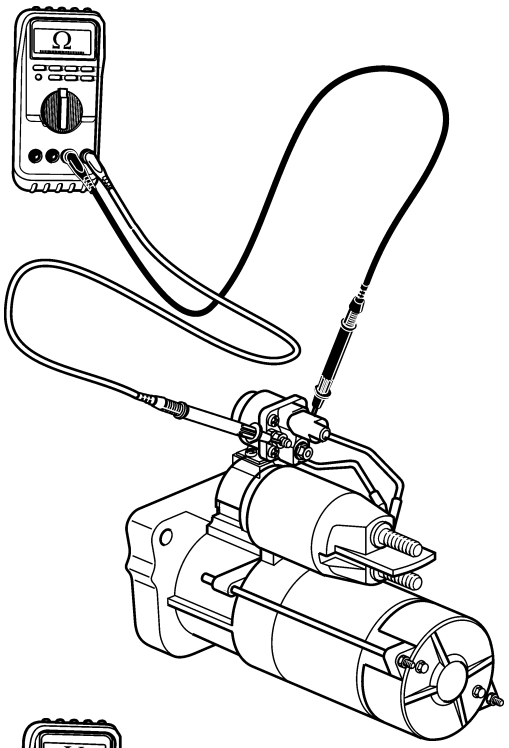

Measurements

Checking starter relay coil

1. **NOTE!** Cut the current with the main switch.
2. Remove one of the wires to the starter relay.
3. Use multimeter 9812519 to measure the resistance in the coil.

Measurement points	Nominal value
Relay connectors	R ≈ 9 – 15 Ω

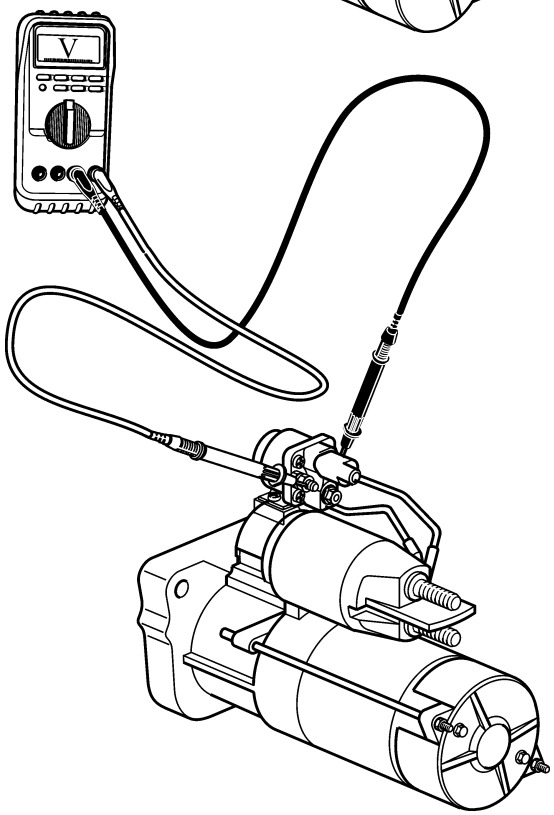

Checking starter relay voltage supply

1. Turn ignition off.
2. Connect multimeter 9812519 to do a voltage measurement over the starter relay.
3. Turn ignition on.

Measurement points	Nominal value
Relay connectors	V ≈ 0 V

4. Push start button.

Measurement points	Nominal value
Relay connectors	V ≈ Battery Voltage

https://truckmanualshub.com/

MID 128, SID 42

Injection control pressure regulator

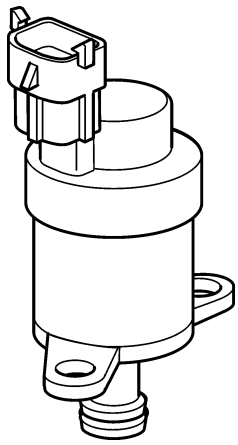

MID 128: Engine control unit

FMI 3: The voltage exceeds the normal value or is short circuited to higher voltage.

FMI 4: The voltage is less than the normal value or is short circuited to lower voltage.

FMI 5: The current is less than the normal value or is open circuited.

FMI 6: The current is greater than the normal value or is short circuited to battery negative.

FMI 13: Calibration value of range

FMI	Fault code explanation
3, 4, 5, 6, 13	Faulty regulator / Faulty regulator circuit

Fault indication

DCU: Engine warning in DCU display

CIU: None

Flash code

Electrical fault: 8.3

Value fault: None

Symptom

All FMI: Full fuel flow delivery. Limp home with pressure release valve opened.

FMI 5, 13: Possible stall of engine.

https://truckmanualshub.com/

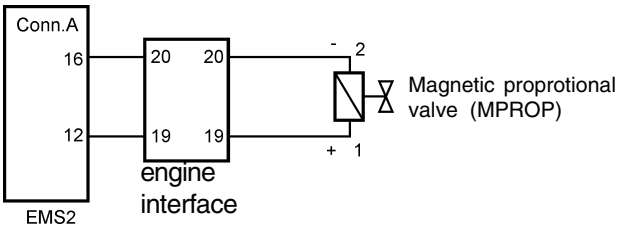

Note! Only TAD 650, 660, 750, 760 has an engine interface. On TAD 734 the wiring to the EMS 2 is the same but without any engine interface.

Component description

A magnetically controlled proportional valve (MPROP) controls the fuel pressure (rail pressure) to ensure that the correct fuel pressure is retained despite varying engine speed and loading. Signal from engine control unit is a PWM signal (pulse width modulated signal). When the current through the valve is changed, this affects the fuel flow, which results in changed rail pressure. The rail pressure sensor senses the pressure and converts the pressure signal to a voltage which is registered by the engine control unit. If the current to the valve solenoid rises, the less fuel pressure (rail pressure) is obtained. So if a wire breaks full fuel flow will be achieved.

Fault tracing

FMI 3 Abnormally high voltage or short circuit to higher voltage

Possible reason:

- Short circuit to battery voltage in MPROP negative cable, pin 2 on MPROP.

Suitable action:

1. Check cable harness and connectors between EMS 2 and MPROP.

FMI 4 Abnormally low voltage or short circuit to lower voltage

Possible reason:

- Short circuit to battery negative in MPROP positive wire, pin 1 on MPROP.

Suitable action:

1. Check cable harness and connectors between EMS 2 and MPROP.

https://truckmanualshub.com/

FMI 5 The current is less than the normal value or is open circuited

Possible reason:

- An open circuit in one or both cables from EMS 2 to MPROP.
- Short circuit to battery negative in MPROP positive wire, pin 1 on MPROP.
- Short circuit between both wires to MPROP.
- Short circuit to battery voltage in MPROP positive wire, pin 1 on MPROP.

Suitable action:

1. Check contact pressure in socket 12 and 16 in engine connector A. Also check contact pressure in connector at MPROP.
2. Check cable harness and connectors between EMS 2 and MPROP.

FMI 6 The current is greater than the normal value or is short circuited to battery negative

Possible reason:

- Short circuit to battery negative in MPROP negative cable, pin 2 on MPROP.
- An open circuit in one or both cables from EMS 2 to MPROP.

Suitable action:

1. Check contact pressure in socket 12 and 16 in engine connector A. Also check contact pressure in connector at MPROP.
2. Check cable harness and connectors between EMS 2 and MPROP

FMI 13

Possible reason:

- Short circuit to battery negative in MPROP negative cable, pin 2 on MPROP.

Suitable action:

1. Check cable harness and connectors between EMS 2 and MPROP.

https://truckmanualshub.com/

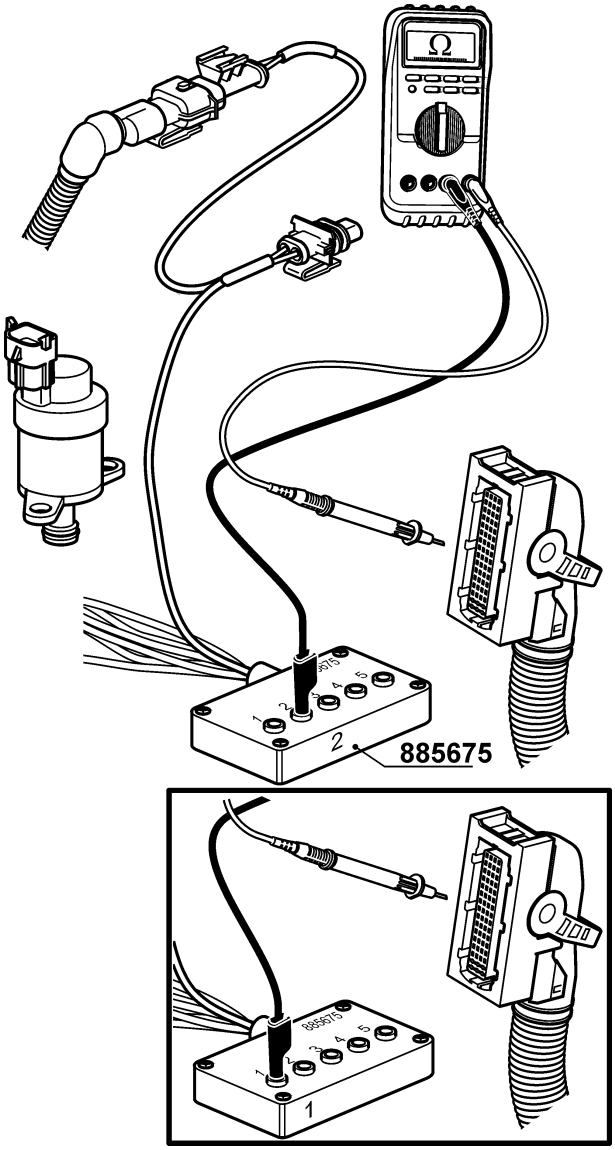

Measurements

NOTE! If any of the measurements shows an abnormal value, check the wiring to and from the engine interface.

Checking the wiring:

- **NOTE!** Cut the current with the main switch.
- Remove the connector to the MPROP.
- Remove connector A from the EMS 2.
- Use multimeter 9812519 to do a resistance measurement against the engine control unit connector A.

Measurement points	Nominal value
2 (885675) – 16 (EMS 2, conn.A)	R ≈ 0 Ω
2 (885675) – 12 (EMS 2, conn.A)	R ≈ ∞ Ω
1 (885675) – 16 (EMS 2, conn.A)	R ≈ ∞ Ω
1 (885675) – 12 (EMS 2, conn.A)	R ≈ 0 Ω

https://truckmanualshub.com/

MID 128, SID 70

Preheat sense

MID 128: Engine control unit

FMI 3: The voltage exceeds the normal value or is short circuited to higher voltage.

FMI 4: The voltage is less than the normal value or is short circuited to lower voltage.

FMI 5: The current is less than the normal value or is open circuited.

FMI	Fault code explanation
3, 4, 5	Faulty relay / Faulty relay circuit

Fault indication

DCU: Engine warning in DCU display.

CIU: None

Flash code

Electrical fault: None

Value fault: None

Symptom

FMI 3: Fuse for shorting wire breaks.

FMI 4: Start problems in cold climate.

FMI 5: Might get start problems in cold climate.

https://truckmanualshub.com/

Fault tracing

FMI 3 Abnormally high voltage or short circuit to higher voltage

Possible reason:

- Short circuit to battery voltage in sense wire.
- Heating element broken.

Suitable action:

1. Check cable harness and connectors to heating element.
2. Check function of preheat relay.
3. Change heating element.

FMI 4 Abnormally low voltage or short circuit to lower voltage

Possible reason:

- Short circuit to battery negative in sense wire.

Suitable action:

1. Check function of preheat relay.
2. Check cable harness and connectors to heating element.

FMI 5

Possible reason:

- An open circuit in sense wiring.
- Heating element broken.

Suitable action:

1. Check contact pressure in socket 7 in engine connector B.
2. Check cable harness and connections to heating element.
3. Change heating element.

https://truckmanualshub.com/

MID 128, SID 211

5V sensor supply 2

MID 128: Engine control unit

FMI 3: The voltage exceeds the normal value or is short circuited to higher voltage.

FMI 4: The voltage is less than the normal value or is short circuited to lower voltage.

FMI	Fault code explanation
3, 4	Faulty sensor / Faulty sensor circuit

Fault indication

DCU: Engine warning in DCU display.

CIU: None

Flash code

Electrical fault: 9.3

Value fault: None

Symptom

None

https://truckmanualshub.com/

Fault tracing

FMI 3 Abnormally high voltage or short circuit to higher voltage

Conditions for fault code:

The voltage exceeds the normal value or is short circuited to higher voltage.

Possible reason:

- Short circuit between 5V supply voltage and battery voltage in EMS 2 connector B.

Suitable action:

1. Check all 5V supply cables distributed by EMS 2 connector B. (see EMS 2 wiring diagram)

FMI 4 Abnormally low voltage or short circuit to lower voltage

Possible reason:

- Short circuit between the supply cables to the oil pressure sensor.
- Short circuit between the supply cables to the fuel pressure sensor.

Suitable action:

1. Check the sensor supply cables to oil pressure sensor.
2. Check the sensor supply cables to fuel pressure sensor.

https://truckmanualshub.com/

MID 128, SID 231
Communication fault J 1939

MID 128: Engine control unit
MID 144: DCU/CIU

FMI 2: Intermittent or faulty data.

FMI	Fault code explanation
2	Communication fault J 1939

Fault indication

DCU: Engine warning in DCU display.

CIU: Flash code

Flash code

Electrical fault: 6.5 (EMS)

Value fault: None (EMS)

Electrical fault: 6.4 (CIU)

Value fault: None (CIU)

Symptom

Engine can not be started or if engine is running it can only be stopped by pushing the aux-stop.

https://truckmanualshub.com/

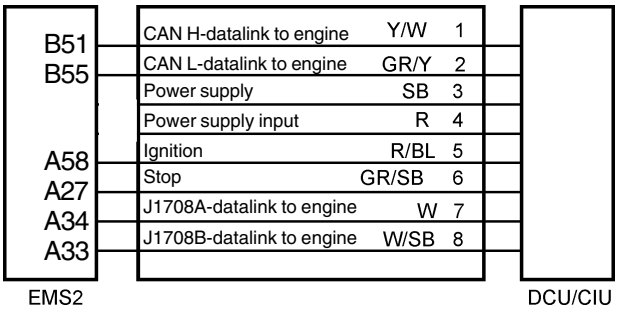

Cable description

Fault tracing

FMI 2 Checking circuit

Conditions for fault code:

CAN communication is missing.

Possible reason:

- CAN H and CAN L short circuited to each other.
- CAN H or CAN L short circuited to battery negative on pin 3.
- CAN L short circuited to power supply on pin 4.
- CAN H or CAN L short circuited to any of the J1708 links.

Suitable action:

1. Check all data links between DCU/CIU and EMS 2.

https://truckmanualshub.com/

Measurements

Checking the CAN bus cable. The resistance of the CAN bus termination resistors, one 120 Ω resistor in the ECU and one 120 Ω resistor in the cable harness, are measured.

- **NOTE!** Cut the current with the main switch.
- Disconnect the 8-pin Deutsch connector at the DCU or disconnect at the CIU.
- Use multimeter 9812519 to do resistance measurement towards the EMS 2.

Measurement points in the engine connector at the DCU	Nominal value
1 – 2	U ≈ 60 Ω

or

Measurement points in the CIU connector	Nominal value
11 – 12	U ≈ 60 Ω

NOTE! Even if the measured value equals the nominal value the data bus cable could be faulty due to shortcircuit between a data bus cable and another cable in the harness.

- Connect adapter cable 88890016 with measurebox 9998699 between the EMS 2 and the CIU/DCU.
- Use multimeter 9812519 to a voltage measurement.
- Turn ignition on.

Measurement points in the measurebox	Nominal value
16 – 17 (between CAN bus)	U ≈ 2.3 V – 2.7 V

NOTE! Even if the measured value equals the nominal value the data bus cable could be faulty due to shortcircuit between a data bus cable and another cable in the harness.

https://truckmanualshub.com/

MID 128, SID 232

5V sensor supply 1

MID 128: Engine control unit

FMI 3: The voltage exceeds the normal value or is short circuited to higher voltage.

FMI 4: The voltage is less than the normal value or is short circuited to lower voltage.

FMI	Fault code explanation
3, 4	Faulty sensor / Faulty sensor circuit

Fault indication

DCU: Engine warning in DCU display.

CIU: None

Flash code

Electrical fault: 9.3

Value fault: None

Symptom

None

https://truckmanualshub.com/

Fault tracing

FMI 3 Abnormally high voltage or short circuit to higher voltage

Conditions for fault code:

The voltage exceeds the normal value or is short circuited to higher voltage.

Possible reason:

- Short circuit between 5V supply voltage and battery voltage in EMS 2 connector A.

Suitable action:

1. Check all 5V supply cables distributed by EMS 2 connector A. (see EMS 2 wiring diagram)

FMI 4 Abnormally low voltage or short circuit to lower voltage

Possible reason:

- Short circuit between the supply cables to the boost pressure sensor.
- Short circuit between the supply cables to the rail pressure sensor.

Suitable action:

1. Check the sensor supply cables to boost pressure sensor.
2. Check the sensor supply cables to rail pressure sensor.

https://truckmanualshub.com/

MID 128, SID 240

Program memory

MID 128: Engine control unit

FMI 2: Intermittent or faulty data.

FMI 7: Mechanical fault. The system responds incorrectly.

FMI 11: Unidentified fault.

FMI 14: Special instruction.

FMI	Fault code explanation
2, 7, 11, 14	Communication fault

Fault indication

DCU: Engine warning in DCU display.

CIU: Flash code

Flash code

Electrical fault: 9.9

Value fault: None

Symptom

The engine can not be started.

Fault tracing

FMI 2, 7, 11, 14

Conditions for fault code:

Checksum error.

Possible reason:

- Downloading interrupted.
- Internal fault in the engine control unit.

Suitable action:

1. Reprogram the engine control unit.
2. Change the engine control unit.

https://truckmanualshub.com/

MID 128, SID 254

Controller error

MID 128: Engine control unit
MID 144: DCU/CIU

FMI 3: RAM addressing failure.

FMI 8: Abnormal frequency.

FMI 12: Faulty unit or component.

FMI	Fault code explanation
3, 8, 12	Faulty component

Fault indication

DCU: Engine warning in DCU display.

CIU: Flash code

Flash code

Electrical fault: 9.9 (EMS)

Value fault: None (EMS)

Electrical fault: 9.8 (CIU)

Value fault: None (CIU)

Symptom

The engine can not be started.

Fault tracing

FMI 3, 8, 12

Conditions for fault code:

Internal fault in the engine control unit.

Suitable action:

1. Replace the engine control unit.

https://truckmanualshub.com/

MID 128, PSID 96

Rail pressure system

MID 128: Engine control unit

FMI 0: The sensor value is valid but above the normal working range.

FMI 1: The sensor value is valid but below the normal working range.

FMI 4: The voltage is less than the normal value or is short circuited to lower voltage.

FMI 7: Mechanical fault. The system responds incorrectly.

FMI 12: Faulty unit or component.

FMI	Fault code explanation
0, 1, 4, 7, 12	Fault in rail pressure circuit

Fault indication

DCU: Engine warning in DCU display.

CIU: None

Lamp status

FMI 0, 12: Yellow lamp

FMI 1, 4, 7: Red lamp

Flash code

Electrical fault: 8.3

Value fault: None

Symptom

FMI 0: Engine derated: engine speed limitation (1100 rpm). Full fuel flow delivery. Limp home with pressure relief valve opened.

FMI 1, 7, 12: Engine derated: engine speed limitation (1100 rpm). Fuel pressure limitation (800 bar). Engine torque reduction.

FMI 4: Engine derated: engine speed limitation (1100 rpm). Fuel pressure limitation (800 bar). Engine torque reduction. Engine shut off or difficult to start.

https://truckmanualshub.com/

Fault tracing

FMI 0

Conditions for fault code:

Rail pressure controller integral part too low.

Possible reason:

- MPROP stuck open due to mechanical fault or an open circuit in MPROP electrical wiring.
- Faulty rail pressure sensor.
- An injector does not open.

Suitable action:

1. Check contact pressure in socket 12 and 16 in engine connector A.
2. Check MPROP cables and connectors.
3. Check function of rail pressure sensor.
4. Change MPROP valve.
5. Check if an injector is faulty.

FMI 1

Conditions for fault code:

Rail pressure controller integral part too big. High pressure leakage detected.

Possible reason:

- High pressure leakage.
- Faulty rail pressure sensor.
- MPROP closed or partly closed or out of characteristic,
- Rail pressure release valve stuck open or unwanted opening.
- An injector is stuck open.
- Faulty high pressure pump.

Suitable action:

1. Check fuel pipes for leakage (high pressure pipes, suction pipes, return pipes).
2. Check function of rail pressure sensor (see MID 128, PID 164).
3. Change the rail pressure release valve.
4. Check MPROP cables and connectors.
5. Change MPROP valve.
6. Check if an injector is faulty.
7. Check both high pressure pumps (see workshop manual Group 21-26).

https://truckmanualshub.com/

FMI 4

Conditions for fault code:

Low rail pressure

Possible reason:

- Low fuel level.
- Air gets into the fuel system.
- High pressure leakage.
- Low pressure leakage.
- Blocked fuel filter, pre- and fine filter.
- Faulty rail pressure sensor.
- MPROP closed or partly closed or out of characteristic,
- Rail pressure release valve stuck open or unwanted opening.
- An injector is stuck open.
- Faulty high pressure pump.

Suitable action:

1. Check fuel level, hoses and fuel filter for leakage.
2. Check fuel pipes for leakage (high pressure pipes, suction pipes, return pipes).
3. Change fuel filters, pre- and fine filter.
4. Check function of rail pressure sensor (see MID 128, PID 164).
5. Change the rail pressure release valve.
6. Check MPROP cables and connectors.
7. Change MPROP valve.
8. Check if an injector is faulty.
9. Check both high pressure pumps (see workshop manual Group 21-26).

FMI 7

Conditions for fault code:

Cylinder balancing exceeding upper threshold. Rail pressure controller integral part too big.

Possible reason:

- High pressure pipes rail to injector leakage, see SID1-6 (FMI 7) for info which injector.

Suitable action:

1. Check for leakage in the high pressure system.

https://truckmanualshub.com/

FMI 12

Conditions for fault code:

Rail pressure too low. Rail pressure nominal value deviates positive from set point value.

Possible reason:

- Low fuel level.
- Air gets into the fuel system.
- High pressure leakage.
- Low pressure leakage.
- Blocked fuel filter, pre- and fine filter.
- Faulty rail pressure sensor.
- MPROP closed or partly closed or out of characteristic,
- Rail pressure release valve stuck open or unwanted opening.
- An injector is stuck open.
- Faulty high pressure pump.

Suitable action:

1. Check fuel level, hoses and fuel filter for leakage.
2. Check fuel pipes for leakage (high pressure pipes, suction pipes, return pipes).
3. Change fuel filters, pre- and fine filter.
4. Check function of rail pressure sensor (see MID 128, PID 164).
5. Change the rail pressure release valve.
6. Check MPROP cables and connectors.
7. Change MPROP valve.
8. Check if an injector is faulty.
9. Check both high pressure pumps.

https://truckmanualshub.com/

MID 128, PSID 97

Rail pressure release valve

MID 128: Engine control unit

FMI 0: The sensor value is valid but above the normal working range.

FMI 7: Mechanical fault. The system responds incorrectly.

FMI 11: Unidentified fault.

FMI 14: Special instruction.

FMI	Fault code explanation
0	Leakage detected in pressure release valve
7	Pressure release valve stuck close
11, 14	Pressure release valve open

Fault indication

DCU: Engine warning in DCU display.

CIU: None

Lamp status

FMI 0, 11, 14: Yellow lamp

FMI 7: Red lamp

Flash code

Electrical fault: 8.3

Value fault: None

Symptom

FMI 0, 11: Engine derated: engine speed limitation (1100 rpm). Fuel pressure limitation (800 bar). Engine torque reduction.

FMI 7: Engine shut off after delay or engine derated. Engine derated: engine speed limitation (1100 rpm). Fuel pressure limitation (800 bar). Engine torque reduction.

FMI 14: Engine derated: engine speed limitation (1100 rpm). Engine torque reduction. Full fuel flow delivery. Limp home with pressure release valve opened.

https://truckmanualshub.com/

Circuit description

The task of the pressure limiting valve (safety valve) is to protect the system from excess pressure. The valve opens and reduces the fuel pressure (rail pressure) by releasing fuel to the return pipe as necessary. The valve is a two-stage valve. Stage one opens at about 190 MPa (1900 bar / 27557 psi) and stage 2 maintains the pressure at about 60 MPa (600 bar / 8702 psi). If the MPROP valve* has been damaged and gives full flow, for example, the pressure release valve reduces the fuel flow to about 60 MPa (600 bar / 8702 psi).

*** NOTE!** MPROP valve = Magnetically controlled proportional valve.

Fault tracing

FMI 0

Conditions for fault code:

Leakage detected in rail pressure release valve, open mode.

Possible reason:

- Rail pressure controller out of range.
- Faulty rail pressure release valve.

Suitable action:

1. Check function of rail pressure sensor.
2. Change the rail pressure release valve.

https://truckmanualshub.com/

FMI 7

Conditions for fault code:

Rail pressure release valve stuck close.

Possible reason:

- An open circuit in one or both cables from EMS 2 to MPROP.
- Short circuit to battery negative in MPROP positive wire, pin 1 on MPROP.
- Rail pressure release valve stuck close.

Suitable action:

1. Check contact pressure in socket 12 and 16 in engine connector A. Also check contact pressure in connector at MPROP.
2. Check cable harness and connectors between EMS 2 and MPROP.
3. Change the rail pressure release valve.

FMI 11

Conditions for fault code:

High rail pressure when rail pressure release valve is open.

Possible reason:

- Rail pressure controller out of range.
- Pressure release valve stuck close or out of characteristic.

Suitable action:

1. Check function of rail pressure sensor.
2. Change the rail pressure release valve.

https://truckmanualshub.com/

FMI 14

Conditions for fault code:

Rail pressure release valve stuck open.

Possible reason:

- Blocked fuel return line.
- An open circuit in one or both cables from EMS 2 to MPROP.
- Short circuit to battery negative in MPROP negative cable, pin 2 on MPROP.
- MPROP stuck open.

Suitable action:

1. Check fuel return line.
2. Check contact pressure in socket 12 and 16 in engine connector A. Also check contact pressure in connector at MPROP.
3. Check cable harness and connector between EMS 2 and MPROP.
4. Change MPROP valve.

https://truckmanualshub.com/

MID 128, PSID 201

J1939 communication bus

MID 128: Engine control unit

FMI 9: Abnormal updating rate.

FMI	Fault code explanation
9	Communication error

Fault indication

DCU: Engine warning in DCU display.

CIU: None

Flash code

Electrical fault: None

Value fault: None

Symptom

None

Component description

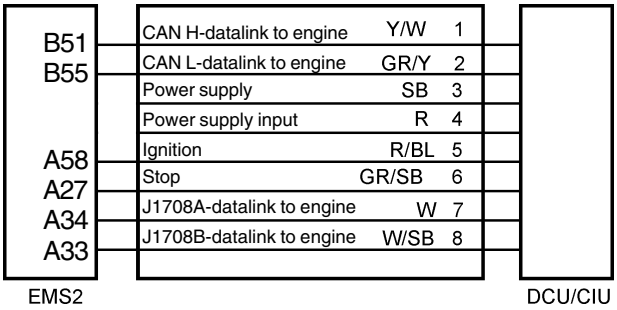

https://truckmanualshub.com/

Fault tracing

FMI 9

Conditions for fault code:

No communication with the engine control unit.

Possible reason:

- An open circuit in CAN H or CAN L or both CAN links between EMS 2 and DCU/CIU.
- An open circuit in Power supply 0V cable between EMS 2 and DCU/CIU.
- An open circuit in Power supply input cable between EMS 2 and DCU/CIU.
- CAN H short circuited to power supply in pin 4.

Suitable action:

1. Check contact pressure in socket 51 and 55 in engine connector B.
2. Check for an open circuit or short circuit between cables in the cable harness between the DCU/CIU and EMS 2, via the engine connector.

https://truckmanualshub.com/

Measurements

Checking the CAN bus cable. The resistance of the CAN bus termination resistors, one 120 Ω resistor in the ECU and one 120 Ω resistor in the cable harness, are measured.

- **NOTE!** Cut the current with the main switch.
- Disconnect the 8-pin Deutsch connector at the DCU or disconnect at the CIU.
- Use multimeter 9812519 to do resistance measurement towards the EMS 2.

Measurement points in the engine connector at the DCU	Nominal value
1 – 2	U ≈ 60 Ω

or

Measurement points in the CIU connector	Nominal value
11 – 12	U ≈ 60 Ω

NOTE! Even if the measured value equals the nominal value the data bus cable could be faulty due to shortcircuit between a data bus cable and another cable in the harness.

- Connect adapter cable 88890016 with measurebox 9998699 between the EMS 2 and the CIU/DCU.
- Use multimeter 9812519 to a voltage measurement.

Measurement points in the measurebox	Nominal value
16 – 17 (between CAN bus)	U ≈ 2.3 V – 2.7 V

NOTE! Even if the measured value equals the nominal value the data bus cable could be faulty due to shortcircuit between a data bus cable and another cable in the harness.

https://truckmanualshub.com/

Engine protection

TAD 650, 660, 750, 760 VE

Derate to engine protection map

Parameter	“Yellow lamp”	“Red lamp”	0%	50%	70%	100%	Forced to idle after 5 sec.	Forced shutdown after 15 sec.
High coolant temperature (°C)	98	101	101	-	-	106	>106	>106
High boost temperature (°C)	80	83	83	-	-	90	>90	>90
High boost pressure (kPa)	340	350	-	350	-	-	>355	>355
Low oil pressure (kPa)	Limit	20<limit	-	-	20<limit	-	25<limit	25<limit

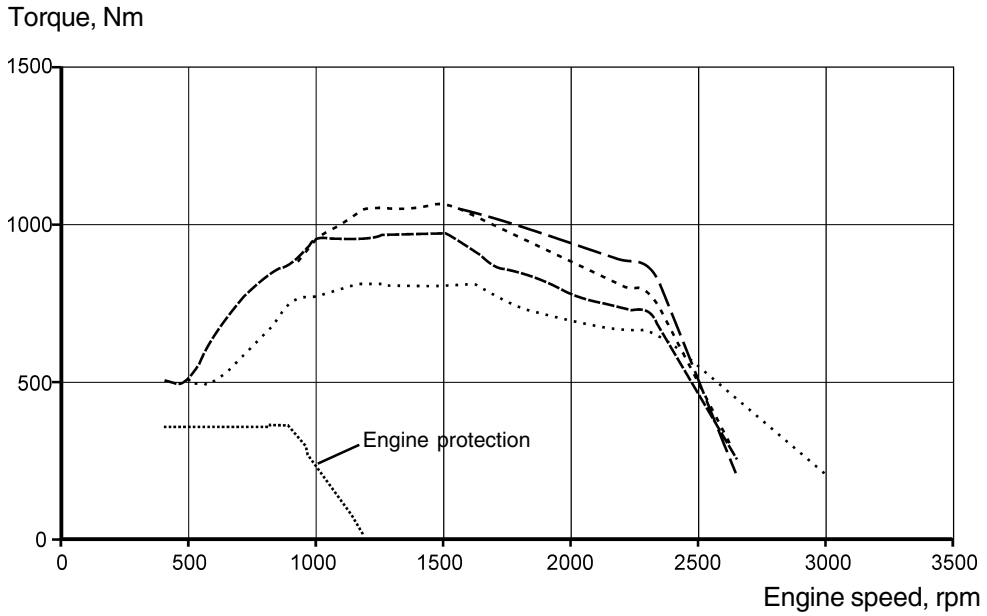

Oil pressure limit

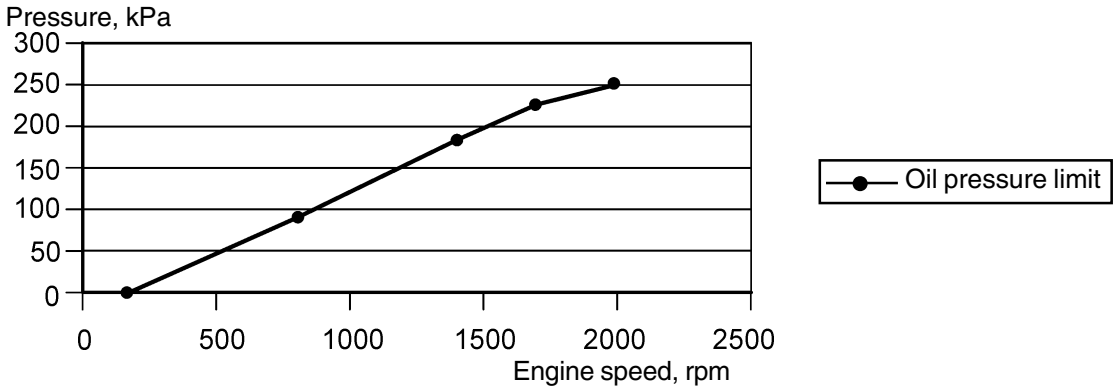

https://truckmanualshub.com/

Engine protection

TAD 734 GE

Parameter	“Yellow lamp”	“Red lamp”	Forced shutdown
High coolant temperature (°C)	98	106	>106
High oil temperature (°C)	125	135	>135
High boost temperature (°C)	80	90	>90
High boost pressure (kPa)	340	355	>355
Low coolant level	-	switch	switch
Low oil pressure (kPa)	Limit	25<limit	25<limit

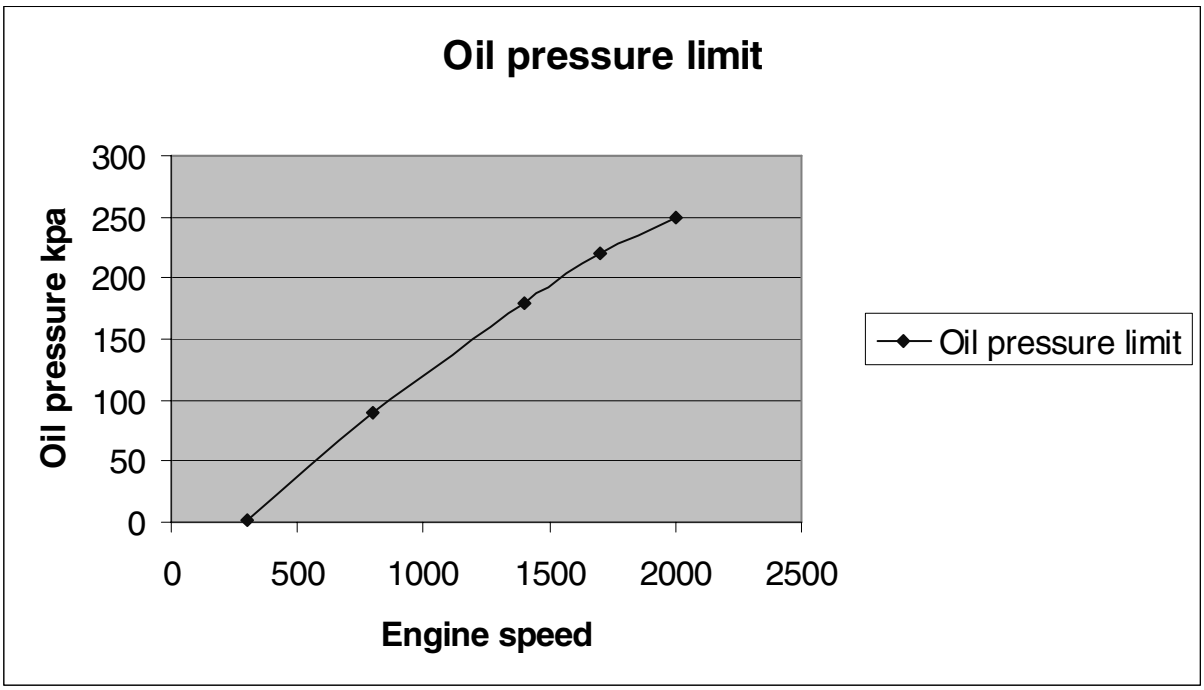

https://truckmanualshub.com/

Wiring diagrams

EMS2, vehicle harness TAD650, 660, 750, 760 VE

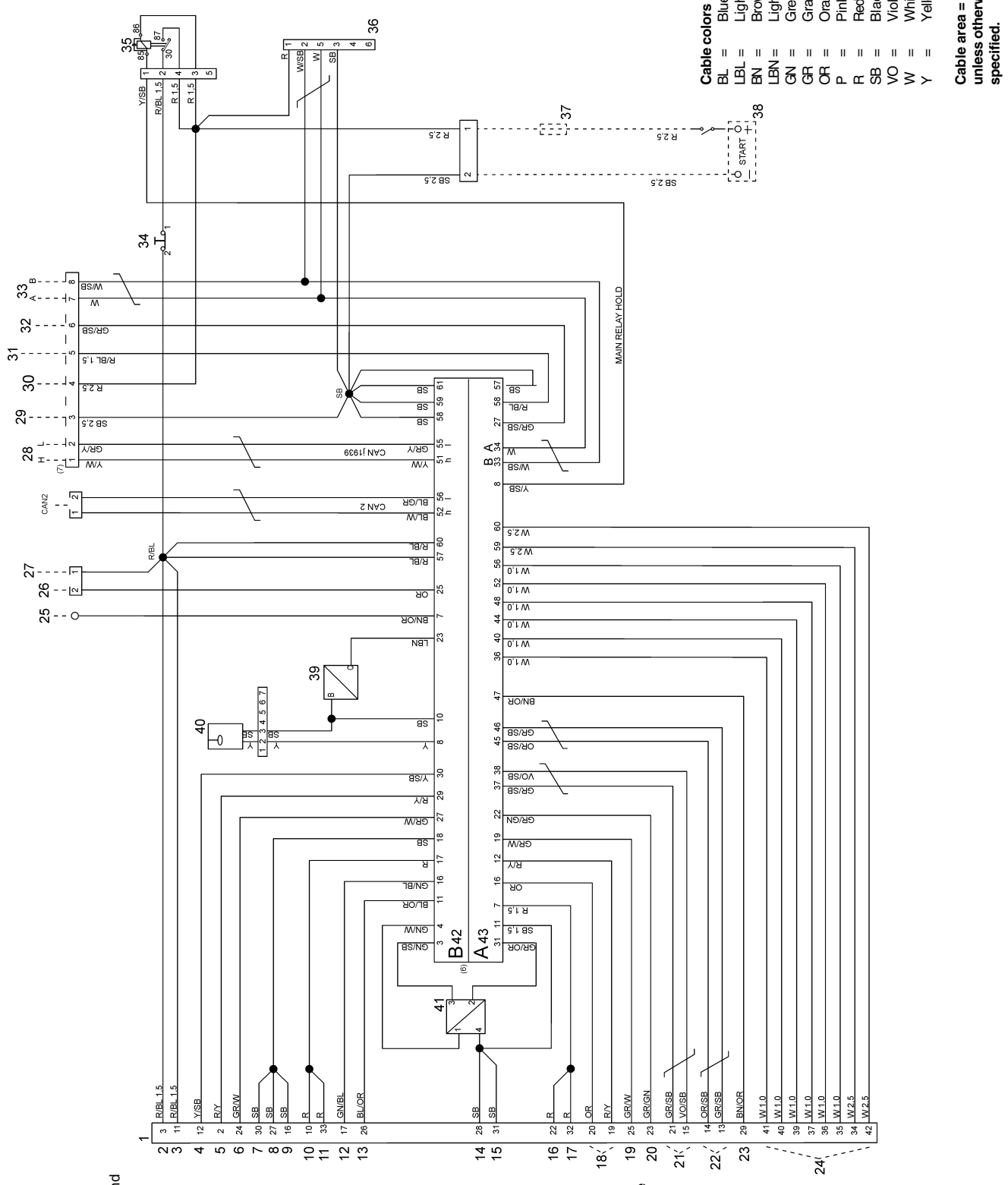

1. Connector (X17)
2. Start relay, supply
3. Internal EGR, supply
4. Internal EGR
5. Start relay
6. Coolant temperature
7. Coolant temperature, ground
8. Oil pressure, ground
9. Fuel pressure, ground
10. Fuel pressure, supply
11. Oil pressure, supply
12. Fuel pressure
13. Oil pressure
14. Boost pressure/ temperature, ground
15. Rail pressure, ground
16. Boost pressure/ temperature, supply
17. Rail pressure, supply
18. MPROP
19. Rail pressure
20. Boost pressure
21. Speed sensor, crankshaft
21. Speed sensor, camshaft
22. Boost temperature
24. Injectors
25. Preheat, sensor
26. Preheat relay
27. Preheat, supply
28. J1939 CAN bus
29. Battery negative
30. Battery plus
31. Ignition
32. Stop
33. J1587/1708 (bus)
34. Extra stop (AUX stop)
35. Main relay
36. Connector engine interface
37. Main fuse 10A
38. Battery (24V)
39. Coolant level
40. Water in fuel
41. Oil level/temperature
42. Connector A, control unit EMS 2
43. Connector B, control unit EMS 2

https://truckmanualshub.com/

EMS 2, engine harness, TAD650, 660, 750, 760 VE

1. Conector (x17)
2. Start relay, supply
3. Internal EGR, supply
4. Internal EGR
5. Start relay
6. Coolant temperature
7. Coolant temperature, ground
8. Oil pressure, ground
9. Fuel pressure, ground
10. Fuel pressure, supply
11. Oil pressure, supply
12. Fuel pressure
13. Oil pressure
14. Boost pressure/temperature, ground
15. Rail pressure, ground
16. Boost pressure/temperature, supply
17. Rail pressure, supply
18. M PROP
19. Rail pressure
20. Boost pressure
21. Speed sensor, crankshaft
22. Speed sensor, camshaft
23. Boost temperature
24. Injectors
25. Start motor and prestart relay
26. Internal EGR, sensor
27. Coolant temperature, sensor
28. Fuel pressure, sensor
29. Oil pressure, sensor
30. Boost pressure/temperature, sensor
31. Rail pressure, sensor
32. M PROP
33. Speed sensor, crankshaft
34. Speed sensor, camshaft

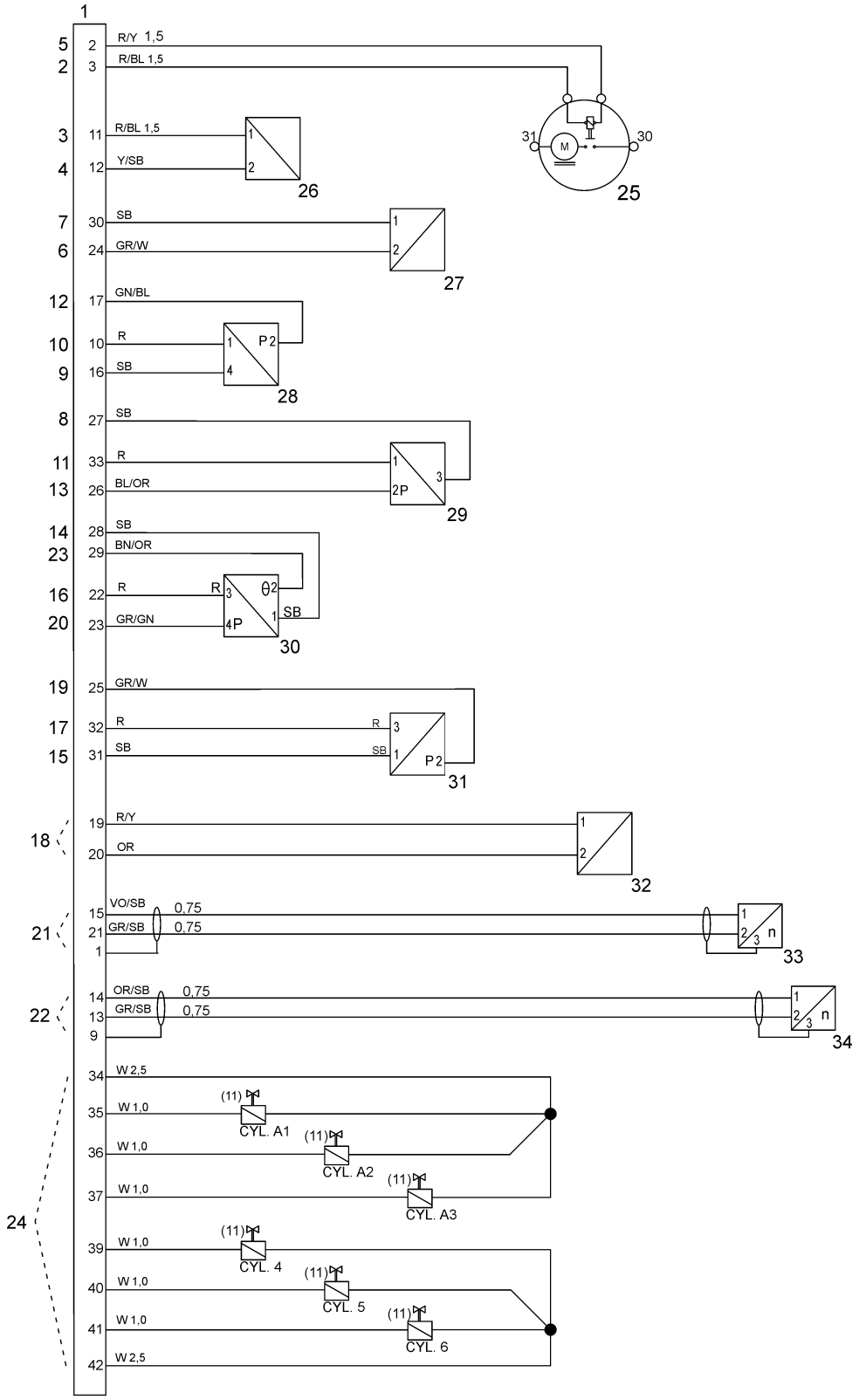

Cable colors

BL	=	Blue
LBL	=	Light blue
BN	=	Brown
LBN	=	Light brown
GN	=	Green
GR	=	Gray
OR	=	Orange
P	=	Pink
R	=	Red
SB	=	Black
VO	=	Violet
W	=	White
Y	=	Yellow

Cable area = 0.75 mm² unless otherwise specified.

https://truckmanualshub.com/

EMS 2, engine harness, TAD734 GE

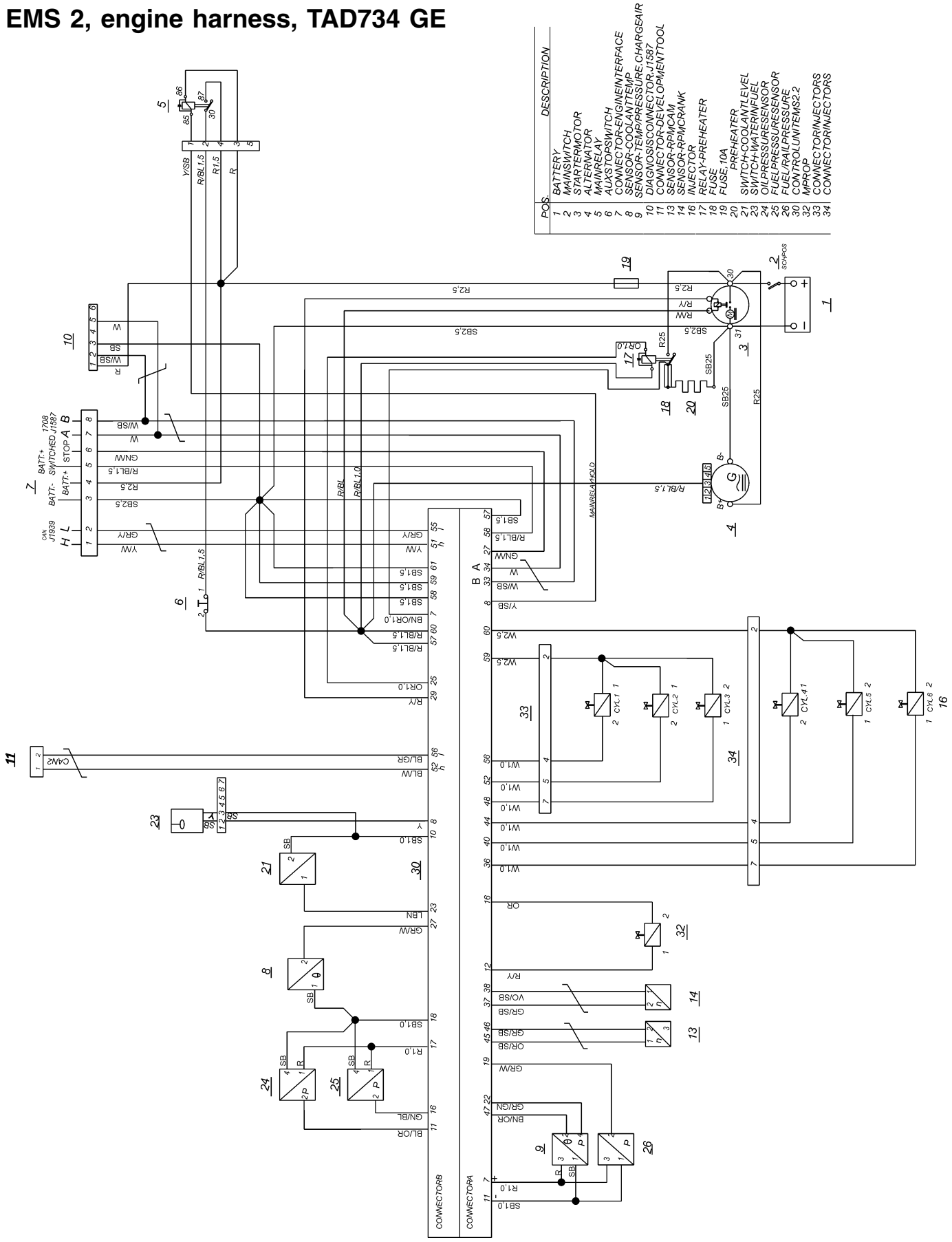

https://truckmanualshub.com/

DCU

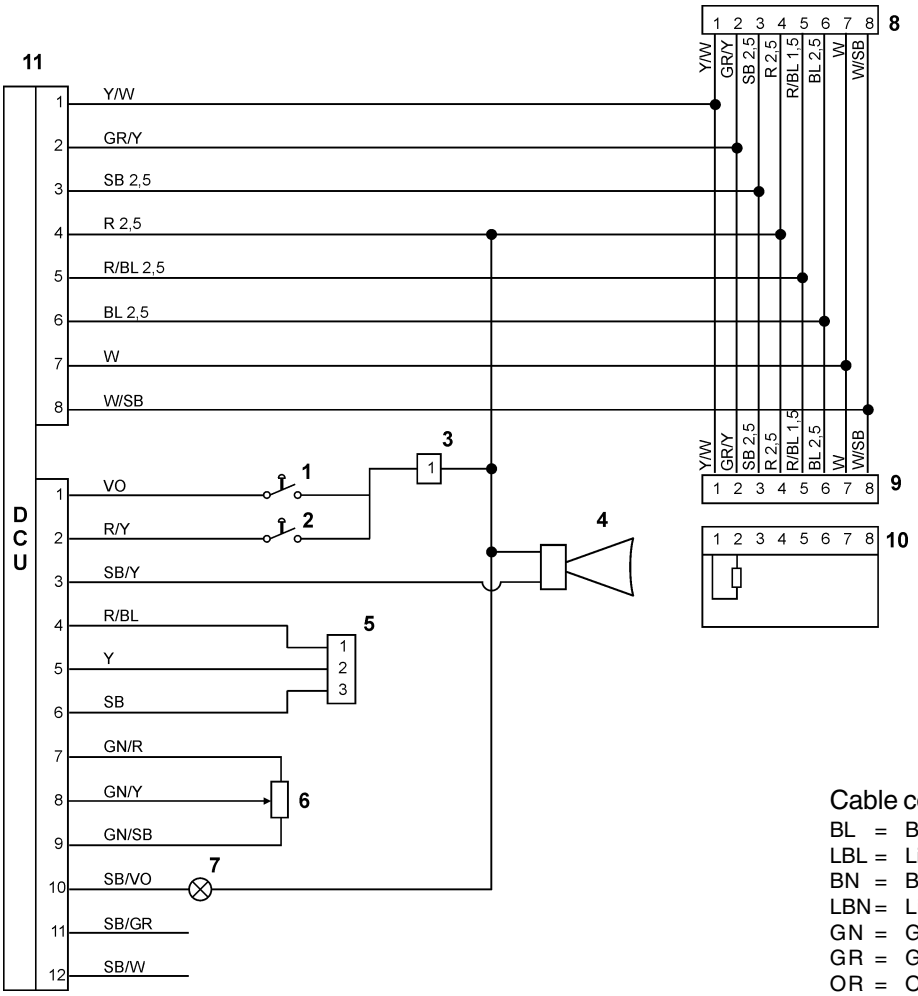

Cable colours

BL = Blue
LBL = Light blue
BN = Brown
LBN = Light brown
GN = Green
GR = Grey
OR = Orange
P = Pink
R = Red
SB = Black
VO = Violet
W = White
Y = Yellow

Cable area = 0.75 mm² unless otherwise specified.

1. Stop contact
2. Start contact
3. 1-pin connector
4. Horn, buzzer alarm
5. Easy Link connector
6. RPM-potentiometer
7. Indicator engine operation
8. 8-pin connector engine interface
9. 8-pin connector engine interface
10. Termination resistance 120 Ohm
11. Display Control unit (DCU)

https://truckmanualshub.com/

CIU

Cable colors

BL	=	Blue
LBL	=	Light blue
BN	=	Brown
LBN	=	Light brown
GN	=	Green
GR	=	Grey
OR	=	Orange
P	=	Pink
R	=	Red
SB	=	Black
VO	=	Violet
W	=	White
Y	=	Yellow

Cable area = 0.75 mm² unless otherwise specified.

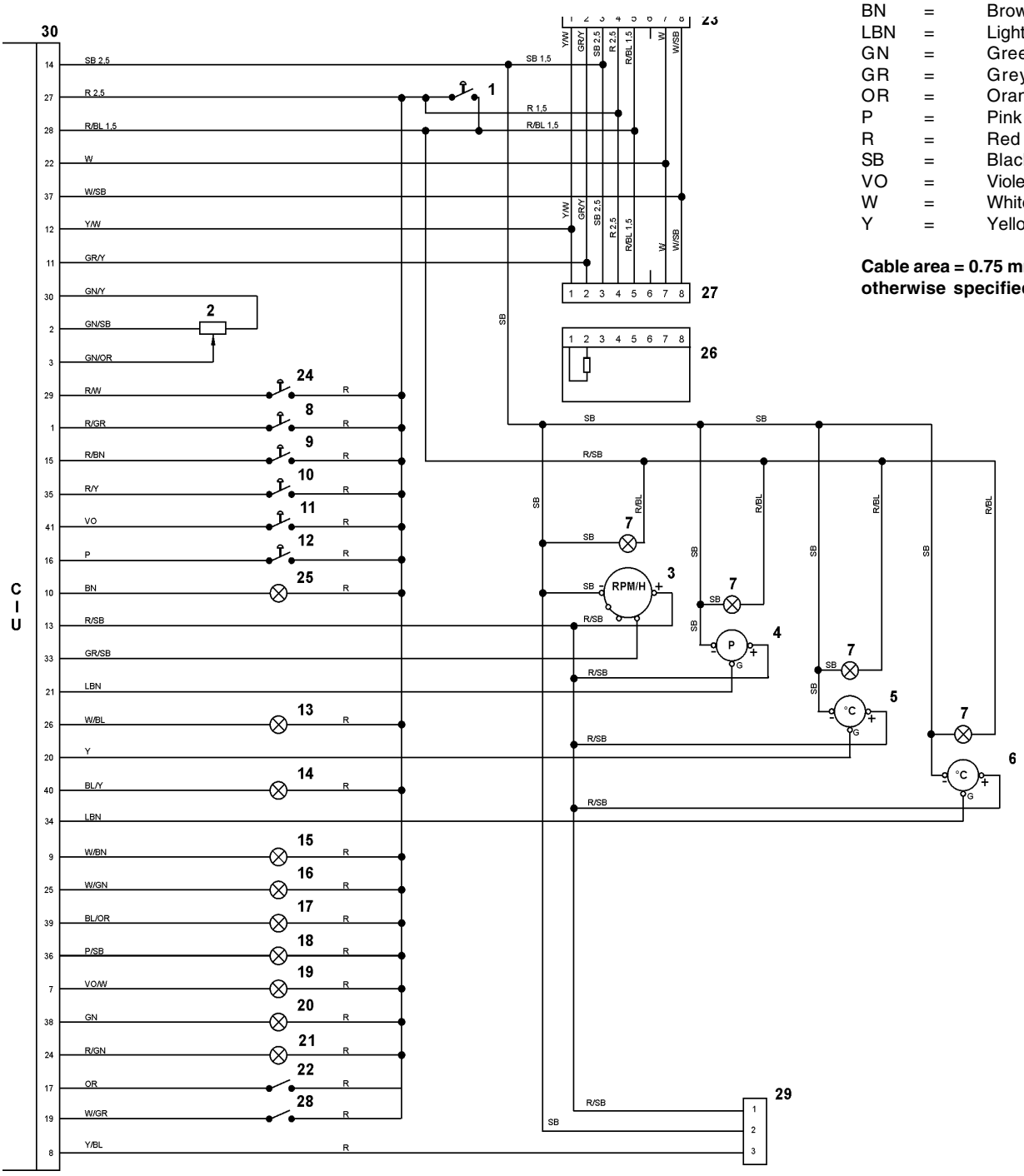

1. Key switch (15+)
2. RPM potentiometer
3. Tachometer (code 14)
4. Oil pressure, instrument
5. Oil temperature, instrument
6. Coolant temperature, instrument
7. Instrument illumination
8. Idling contact, two-way
9. 1500 / 1800 rpm switch, two-way
10. Starter contact, spring biased
11. Stop switch, spring biased
12. Diagnosis contact, spring return
13. Alarm, low oil pressure
14. Alarm, high oil temperature
15. Alarm, high coolant temperature
16. Alarm, low coolant level
17. Fuel alarm
18. Diagnostic lamp
19. Horn
20. Operation indicator
21. Preheating indication
22. Preheating contact
23. 8-pin connector engine interface
24. Governor switch
25. Battery voltage alarm
26. Termination resistance 120 Ohm
27. 8-pin connector engine interface
28. Contact, engine protection override
29. Easy Link connector block
30. Control Interface Unit (CIU)

https://truckmanualshub.com/

Technical data

Switch, water in fuel

Voltage ..... 24 V
Connector 2-pin
Contact type ..... Closing at detection with water

Sensor, fuel pressure

Voltage ..... 5 V
Connector 3-pin
Working pressure range: ..... 0 – 700 kPa (0 – 7 bar)
Pressure signal ..... 0,5– 4,5 V
Working temperature range ..... -40 °C to +140 °C
Type ..... Linear
Max tightening torque ..... 30 ±5 Nm (22 ±3.7 lbf-ft)

Speed sensor, camshaft / Speed sensor, crankshaft

Connector 3-pin
Working temperature range: ..... –40°C to +130°C
Type ..... Inductive sensor
Max tightening torque ..... 8 ±2 Nm (6±1.5 lbf-ft)

Sensor, oil pressure

Voltage ..... 5 V
Connector 3-pin
Working pressure range: ..... 0–700 kPa (0 – 7 bar)
Pressure signal ..... 0.5– 4.5 V
Working temperature range: ..... –40°C to +140°C
Type ..... Linear
Max tightening torque ..... 30 ±5 Nm (22 ±3.7 lbf-ft)

Sensor, rail pressure

Voltage ..... 5 V
Connector 3-pin
Working pressure range:: ..... 0–180 MPa (0 – 1800 bar)
Pressure signal ..... 0.5 – 4.5 V
Working temperature range: ..... –40°C to +130°C
Type ..... Linea
Max tightening torque ..... 70 Nm (51.6 lbf-ft)

https://truckmanualshub.com/

Combination sensor, boost pressure/boost temperature

Voltage	5 V
Connector	4-pin
Working pressure range::	50 – 400 kPa (0.5-4 bar)
Pressure signal	0.5 – 4.5 V
Working temperature range:	–40°C to +130°C
Type	Linear/NTC

Sensor, coolant temperature

Voltage	5 V
Connector	2-pin
Type	NTC
Max tightening torque	25 Nm (18.4 lbf-ft)

Switch, coolant level

Connector	2-pin
Contact type	Closing with low coolant level

Alternator

Voltage	28V
Connector	2-pin
Capacity	80 A at 28V

Starter motor

Voltage	24 V
Connector	1 pol
Capacity	5.5 kW

https://truckmanualshub.com/

Index

MID 128 (engine control unit EMS):

	SPN	Flashcode Electrical fault/ value fault	PID	PPID	SID	PSID	FMI	Please refer to page:
Ambient air pressure	108	-/-	108				2, 3, 4	64
Battery voltage	158	-/3.9 (EMS) -/6.9 (CIU)	158				1	76
Boost pressure	106	3.4/3.5	106				0, 3, 5	58
Boost temperature	105	3.2/6.2	105				0, 4, 5	52
Communication fault J 1939	639	6.5/- (EMS) 6.4/- (CIU)			231		2	126
Controller error	629	9.9/- (EMS) 9.8/- (CIU)			254		3, 8, 12	132
Coolant temperature	110	3.3/6.1	110				1, 3, 4	66
Coolant level	111	2.3/2.2	111				1	72
ECU temperature		8.4/-		55			0, 4, 5	93
Engine speed	190	-/2.6	190				0	84
Engine starter relay	677/1675	4.6			39		3, 4, 5	115
Engine stop switch	520195 970	4.8/- (EMS) 5.3/- (CIU)		6			3, 4, 5	87
Engine sync acknowledge	608	-		98			9	95
Injection control pressure regulator	679	8.3/-			42		3, 4, 5, 6, 13	118
Injector common rail #1–6	651-656	7.1-7.6/-			1–6		3, 4, 5, 7, 12	100
Internal EGR status		8.5/-		19			3, 4, 5, 7	89
Inlet air heater status	626	5.4/-	45				3, 4, 5	33
J 1939 communication bus	639/1675	-				201	9	141
Fuel pressure	94	3.6/3.8	94				1, 3, 5, 7	36
Oil pressure	100	3.1/6.6	100				1, 3, 5	46
Preheat sensor	729				70		3, 4, 5	122
Program memory	639	9.9/-			240		2, 7, 11, 14	131
Rail pressure	164	8.3	164				0, 2, 4, 5	78
Rail pressure release valve	679	8.3				97	0, 7, 11, 14	137
Rail pressure system	1239					96	0, 1, 4, 7, 12	133
Speed sensor, camshaft	636	2.5/-			21		2, 3, 8	105

MID 128 (engine control unit EMS):

	SPN	Flashcode Electrical fault/ value fault	PID	PPID	SID	PSID	FMI	Please refer to page:
Speed sensor, crankshaft	637	2.4/-			22		2, 3, 8	110
Starter input CIU		4.7/5.2		4			3, 4	85
Throttle input request failure, DCU/CIU	608	2.8/-		132			3, 4, 9	97
Water in fuel	97	2.9/2.1	97				0, 4	43
5V sensor supply 1	620	9.3/-			232		3, 4	129
5V sensor supply 2		9.3/-			211		3, 4	124

https://truckmanualshub.com/

References to Service Bulletins

Group	No.	Date	Refers to

Notes

https://truckmanualshub.com/

Report form

Do you have any complaints or other comments about this manual. Please make a copy of this page, write your comments down and send them to us. The address is at the bottom. We would prefer you to write in English or Swedish.

From: .....

.....

.....

.....

Refers to publication: .....

Publication No.: ..... Date of issue: .....

Proposal/motivation: .....

.....

.....

.....

.....

.....

.....

.....

.....

Date: .....

Signed: .....

AB Volvo Penta
Technical Information
Dept. 42200
SE-405 08 Göteborg
Sweden

https://truckmanualshub.com/

7747632 English 03-2007