https://truckmanualshub.com/

USE AND MAINTENANCE

SOLARIS 35
SOLARIS 45
SOLARIS 55

SAME
Head offices
V.le Ing F. Cassani, 15
24047 Treviglio (BG)
Tel. 0363/4211
www.same-tractors.com

https://truckmanualshub.com/

Company with Quality System
Certified in compliance with ISO 9001:2000

Preface

The manual describes options and equipment levels available throughout the various markets and therefore some of the items covered may not apply to your tractor. Follow the instructions carefully.

SAME Service Centres are always at your disposal with advice and assistance to help you use and maintain your tractor correctly.

No liability can be accepted for any injury or damage resulting from operations that are perfomed in a manner other than that described in this publication, or from the improper use of the tractor, or from poor workmanship in the carrying out of maintenance operations or from failure to observe the instructions given.

This Manual must always be kept with the tractor. Keep it with care. If in the future you will sell your tractor, please forward this Manual to the new tractor owner

https://truckmanualshub.com/

Table of contents

- Preface II
- Table of contents III
- Important. X

- **SECTION 1 - Safety . . . . . XV**
  - Introduction to Safety XVI
  - Safety XVI
  - A Word to the Operator XVI
  - Danger, Warning, Caution XVI
  - Follow a Safety Programme XVIII
    - For Safe Operation XVIII
  - General safety rules XVIII
  - Protective Structures. XXIV
    - Roll Over Protective Structures XXIV
    - Operation XXIV
  - Damage to the ROPS XXV
  - Cab XXV
  - Prepare for Safe Operation. XXVI
    - Protect Yourself. XXVI
    - Risks from exposure to noise XXVI
    - Know Your Equipment XXVII
    - Use all Available Protective and Safety Devices XXVII
    - Check the Equipment XXVIII
    - Clean the Tractor XXX
    - Protect the Environment. XXX
  - Servicing the Tractor. XXXI
  - Starting XXXI
    - Warn Personnel before Starting XXXI
    - Mount and Dismount Safely. XXXII
    - Start Safely. XXXII
    - Follow Recommended Starting Procedures XXXIII
    - Test the Controls XXXIII
    - Starting Fluid XXXIII
    - Work Safely. XXXIV
    - Making the Right Moves XXXIV
    - Follow Safe Operating Practices XXXIV
    - Watch out for Others XXXV
    - Risk of Overturning XXXVII
    - To Avoid Side Overturns XXXVII
    - To Avoid Rear Overturns. XXXVIII
  - General Operating Hazards XXXIX
    - Implements and Attachments XL
    - Safety - Towing XLI
    - Road Transport XLII
    - Rules of the Road XLII
    - After Operation XLIV
    - Welding work on the tractor body XLIV
    - Safety instructions for the installation of supplementary equipment and/or electronic components. XLV
  - Safety and operational decals XLVI

https://truckmanualshub.com/

- International symbols (Part. 1) LVIII
- International symbols (Part. 2) LIX
- International symbols (Part. 3) LX
- Metric conversion LXI
  - Conversion tables LXII

- **SECTION 2 - Replacement parts 1**
  - Tractor serial number 1
  - Engine serial number 2
  - Tractor identification plate 2
    - Original replacement parts 3

- **SECTION 3 - Use 5**
  - Checking the tractor prior to starting work 5
    - Refuelling 6
    - Checking the engine oil level 7
  - Access to the driving position 8
  - Lights' switch 9
  - Instrument panel 10
    - Fuel gauge 11
    - Engine temperature gauge 11
    - Tachometer 12
    - Pilot lights' 13
    - Warning light 15
    - Front/rear differential lock button 15
    - Emergency flashers control 15
    - Hand accelerator 15
  - Ignition switch 16
  - Engine 17
    - Precautions for optimum engine performance 17
  - Starting the engine 19
    - Electronic control of engine cooling system 20
  - Engine shut down 21
  - Cold starting 22
  - Emergency starting through auxiliary battery 23
  - Turbocharging 24
  - Manual emergency stop 25
  - Adjusting the driver’s seat 26
    - BOSTROM Minibaltic XH2 seat with spring suspension 26
    - KAB P4 XH2 sprung seat 27
  - Adjusting the rearview mirrors 29
  - Control pedals 30
    - Clutch control pedal 30
    - Brake pedal 31
    - Handbrake lever 32
    - Accelerator pedal 32
    - Gearbox and P.T.O. clutch 33
    - Controls located to the right of the driver 34
  - Gearbox controls 35
    - Transmission speed selection 36
  - Front and rear differential lock 37
  - Front-wheel drive 38
  - Power take-off 39
    - Front P.T.O. (1000 rpm) 40

https://truckmanualshub.com/

- Rear - central PTO 41
- Synchronized power take-off 42
- Underside P.T.O. for control of implements mounted underside 43
- Rear brakes 44

- Load sensing - mechanical lift 45
  - Controls 46
  - Hydraulic system 50
- Auxiliary hydraulic services control valve 53
  - Nomenclature 54
  - Types of auxiliary hydraulic service control valve 55
  - The controls 56
  - Example connection and operation of a double-acting cylinder 58
  - Connection of an implement to the auxiliary hydraulic service couplers 59
  - Converting a control valve from double-acting to single-acting 62
  - Example of connection to a single-acting cylinder 63
- Class “A” drawbar 64
- Towing hitch 65
  - Class “C” towing hitch 66
- CEE towing hitch 67
- Three-point linkage 69
  - Adjustment of the telescopic stabilisers 70
  - Adjustment of the top link 70
  - Adjustable vertical link 71
  - Mid mount implements with lifting arms 72
- Hydraulic front lift 73
  - Bodywork 75
  - Safety frame 76
- Cab 78
  - GRAMMER MSG 83/8 type seat 79
  - Ventilation 80
  - Controls 80
  - Heating system 81
  - Air conditioning 83
  - Controls located in the cab roof lining 85
  - Opening front window 86
  - Opening rear window 86
  - Cab roof light 87
  - Storage compartment 87
  - Digital quartz clock 87
- Active carbon air filter 89
  - Cable channel for passing external implement control cables into the cab 90
  - Hazard warning triangle 90
  - Screen wash liquid reservoir 90

- **SECTION 4 - Wheels 91**
  - Track adjustment 91
  - Tyre inflation pressures 92
  - Width of the front axle (without wheels) 93
  - Mechanical ratio (front wheel revolutions / rear wheel revolution) 93
  - Width of rear axle (without wheels) 93
  - Row crop tires 93
  - Running direction of tires 94
  - Adjusting steering stops 94

https://truckmanualshub.com/

- Adjustable track wheels . . . 95
- Permissible tyre combinations . . . 96
- Track width adjustment for wheels with adjustable rims . . . 97
  - Front wheels . . . 97
  - Rear wheels . . . 98
- Track width adjustment for wheels with fixed rims . . . 104
- Ballast . . . 105
  - Front horizontal ballast blocks . . . 105
  - Rear ballast . . . 105
  - Ballasting by filling the tyres with water + antifreeze solution . . . 106
  - Filling the tyre with water . . . 107
  - Draining water from the tyre . . . 107

- **SECTION 5 - Maintenance operations . . . 109**
- Lubricants and fluids . . . 111
- Maintenance intervals . . . 112
- Maintenance and inspection schedule . . . 114
- Fuel storage . . . 117
  - Refueling . . . 117
  - Refueling at the end of the day . . . 118
- Engine maintenance . . . 119
  - Raising the engine hood . . . 120
  - Cleaning the front grille . . . 120
  - Checking the engine oil level . . . 121
  - Changing the engine oil . . . 121
  - Changing the engine oil filters . . . 123
  - Cleaning and replacement of the fuel filter . . . 123
  - Bleeding air from the fuel system . . . 123
  - Electro-magnetic fuel pump . . . 127
  - Filter periodic maintenance . . . 128
  - Filter replacement . . . 128
  - Filter inspection and cleaning . . . 128
  - Fuel . . . 129
- Air filter . . . 130
- Cleaning the air filter . . . 131
- Engine cooling system . . . 133
  - Checking the level of coolant in the expansion tank . . . 133
  - AKROS FREEZE liquid coolant . . . 133
  - Changing the coolant/antifreeze mixture and flushing the cooling system . . . 134
  - Thermostat . . . 134
  - Cleaning the oil cooler . . . 135
- Adjusting belt tension . . . 136
- Gearbox clutch . . . 137
- Rear and underside P.T.O. clutch . . . 137
- Maintenance of the gearbox, differential and rear reduction units . . . 138
  - Checking the transmission oil level . . . 140
  - Changing the oil . . . 141
- Maintenance of the hydrostatic power steering . . . 142
  - Bleeding air from the hydraulic system . . . 142
- Checking operation of the differential lock controls . . . 143
- Maintenance of the front and rear brakes . . . 144
  - Checking the braking action . . . 144
- Front differential lock (if installed) . . . 144
- Maintenance of the front wheel drive system . . . 145

https://truckmanualshub.com/

- Front axle and hub final drives (4WD) 145
- Front axle pivot bushes 145
- Maintenance of hydraulic power-lift 147
- Maintenance of the 3-point linkage 147
  - Rear 3-point linkage 147
- Maintenance of Front P.T.O. 148
- Maintenance of front lift 149
- Windscreen washer 150
- Windscreen and rear screen wipers 150
- Maintenance of the air conditioning system 151
  - Cab air filter (cleaning) 151
  - Active carbon air filter 151
- Maintenance of the heating system 152
- Maintenance of the air conditioning system 153
  - Checking the air conditioning system 153
  - Air conditioning system compressor 154
  - Air conditioning system 154
  - Air conditioning system recharging and maintenance valve 155
- General cleaning of the tractor 156
  - Cleaning with detergents 156
- Cleaning with compressed air 156

- **SECTION 6 - Electrical system 157**
- Battery 157
  - Checking the battery 157
- Fuse box 159
  - List of electrical system components 162
  - Fuse box 164
  - Connector for connection to front wiring loom 165
  - Connector for connection to rear wiring loom 165
  - Cab electrical system wiring 166
  - Electrical diagram - cab air conditioning unit 167
- Cab fuse box 168
  - Rear outlet socket - standard 168
  - Cab electrical system wiring 169
  - Wiring for cab air conditioning unit 170
  - Wiring for radio 171
  - 171
  - Wiring for cab 171
  - Wiring for worklights 171
- Lights 172
  - Cleaning the headlights and sidelights 172
  - Bulb replacement 172
  - Rear light assemblies 173
  - Front sidelights and direction indicators mounted on the sides of the tractor 174
  - Front and rear working lights in cab roof 175
  - Interior light 176
  - Rear work lights for tractors with platform 176
- Headlight alignment 177
  - Horizontal adjustment 178
  - Vertical adjustment 178

- **SECTION 7 - Storage of the tractor 179**

https://truckmanualshub.com/

- Operations prior to garaging the tractor for a long period 179
- Preparing the tractor for use after a long period of storage. 180

- **SECTION 8 - Technical specifications. 181**
  - Engine 181
  - Clutch 182
  - Power take-off 182
  - Gearbox 184
  - Gearbox ratios schematic 185
  - Performance - Ground speed in km/h (mph) @ 3000 rpm 186
  - Front driving axle. 188
  - Hydrostatic steering system 188
  - Front hydraulic lift 188
  - Hydraulic diagram of lift. 189
  - Hydrostatic steering system 190
  - Cab 190
  - Dimensions and weights 191
  - Unladen weight of tractor (without ballast) 192
  - Unladen weight of tractor (with ballast) 192
  - Maximum permissible loads 193
  - Maximum trailerable loads 193
  - Ballast weights 193
  - Attachment of implements to the tractor 194
  - Implement attachment points 195

- **SECTION 9 - Fault diagnosis 199**
  - Engine 199
  - Gearbox 201
  - Rear power take-off. 202
  - Front driving axle. 202
  - Brakes 202
  - Hydraulic lift. 202
  - Auxiliary hydraulic systems 203

- **Appendix . . . . . A**
  - Combination of tractor and mounted implement. . . . . B
    - Determination of the total weight, the axle loads, the tyre load carrying capacity and the necessary minimum ballasting . . . . . B
    - Consideration of rear mounted implement and front/rear combinations. C
    - Front mounted implement. C

    - **Note . . . . . F**

https://truckmanualshub.com/

SOLARIS with standard tyres

SOLARIS with Garden tyres

https://truckmanualshub.com/

Important

1 - DO NOT use the tractor before having read and understood this manual in its entirety. The purchaser and user is in fact responsible for reading this Use and Maintenance manual and for following the safety precautions and the instructions for use and maintenance herein.

2 - Make sure that you are familiar with all the safety instructions on the warning notices represented in this manual and on the tractor. If you do not understand any of the instructions, contact your authorised dealer to obtasin further clarification.

3 - If this tractor is to be lent or hired out to anyone, it is the owner's responsibility to ensure that any prospective users have read and fully understood the Use and Maintenance manual before using the tractor, and that they have received suitable instruction on the safe and correct use of the vehicle.

4 - The operator is responsible for the daily inspection of the tractor and its maintenance. He must make sure that any parts that could render continued use of the tractor unsafe or cause excessive wear or damage of other components are repaired or replaced. NEVER attempt to carry out repairs or adjustments unless qualified to do so.

5 - When new parts are required, it is important that only genuine parts are used.
Extensive damage may occur as a result of the fitment of parts of inferior quality. Customer are advised that warranty expires immediately if not genuine parts are used.

6 - These tractor are designed solely for use in customary agricultural operations (intended use). Use in any other way is considered as contrary to the intended use. The tractor maker accepts no liability for any damage or injury resulting from misuse and these risks must be borne solely by the user.

https://truckmanualshub.com/

Note

Since the production process may be modified subsequent to the printing of this manual, the instructions, illustrations, specifications or other information in this manual may not correspond exactly to your tractor.

In accordance with the Company's policy of continuous improvement to its machines, alterations in the specifications of machines may be made at any time without notice.

https://truckmanualshub.com/

To the owner of the new SAME tractor

Practical experience in the field is the key to the success of your new SAME tractor, both as regards the design and the assembly. For many years, SAME tractors have been used for the widest range of applications in all possible conditions. However, even the best products require care and maintenance.

To get the very best from your tractor, read this manual carefully before undertaking any work or maintenance operations. Make sure you understand all the safety notices affixed to the tractor or reported in this manual. Keep this manual in a safe place where it is ready to hand for consultation. Do not attempt to carry out any repairs or adjustments unless competent to do so. Do not hesitate to contact your Dealer if you require further information or assistance.

https://truckmanualshub.com/

IMPORTANT: THE SAFETY SEAL ON THE ENGINE GOVERNOR IS APPLIED BY THE MANUFACTURER AND ENSURES THAT THE POWER OUTPUT OF YOUR TRACTOR DOES NOT EXCEED THE DECLARED AND APPROVED VALUE.ANY TAMPERING WITH THIS SEAL ON THE GOVERNOR WILL VOID THE WARRANTY FOR THE ENTIRE TRACTOR WITH IMMEDIATE EFFECT.

WARNING: IN SOME OF THE ILLUSTRATIONS USED IN THIS OPERATOR INSTRUCTION BOOK, PANEL OR GUARDS MAY HAVE BEEN REMOVED FOR CLARITY. NEVER OPERATE THE TRACTOR WITHOUT THESE COMPONENTS IN POSITION. IF THE REMOVAL OF PANEL OR GUARDS IS NECESSARY TO MAKE A REPAIR, THEY MUST BE REPLACED BEFORE OPERATION.

CE - This symbol certifies that the tractor has undergone and passed the electromagnetic compatibility test.

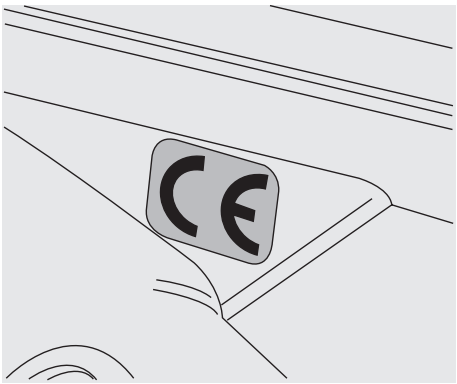

WARNING: DIESEL ENGINE EXHAUST AND SOME OF ITS CONSTITUENTS ARE KNOWN TO SOME STATES TO CAUSE CANCER, BIRTH DEFECTS AND OTHER REPRODUCTIVE HARM.

https://truckmanualshub.com/

WARNING: BATTERY POSTS, TERMINALS AND RELATED ACCESSORIES CONTAIN LEAD AND LEAD COMPOUNDS, CHEMICALS KNOWN TO THE STATE OF CALIFORNIA TO CAUSE CANCER AND BIRTH DEFECTS OR OTHER REPRODUCTIVE HARM. WASH HANDS AFTER HANDLING.

WARNING: A NATURALLY ASPIRATED ENGINE, WHEN WORKING, CAUSES RISK OF SPARKES. IT'S DANGEROUS ON ALL FOREST, BRUSH OR AGRICULTURAL CROP COVERED LAND. KEEP IN MIND THAT YOUR TRACTOR IS NOT EQUIPPED WITH A RATED QUALIFIED SPARK ARRESTER.

This manual has been prepared with the aim of helping the owner and/or operator to carry out all the operations related to the use and maintenance of the tractor.

This manual is divided into nine main sections: safety, tractor identification data, instructions for use, wheel and tyres, lubricants and routine maintenance, electrical system, storage instructions, technical specifications, fault diagnosis.
A table of contents appears in the previous pages.
There is an alphabetical index at the back of the manual.

References to the 'left', 'right', front or rear of the vehicle are in the sense of a person in the driver's seat facing forwards.

https://truckmanualshub.com/

SECTION 1 - Safety

Safety Alert Symbol and Terms

This safety alert symbol means ATTENTION! BECOME ALERT! YOUR SAFETY IS INVOLVED!

The safety alert symbol identifies important safety messages on machines, safety signs, in manuals, or elsewhere.
When you see this symbol, be alert to the possibility of personal injury or death.
Follow the instructions in the safety message.

Why is SAFETY important to you?

ACCIDENTS DISABLE and KILL
ACCIDENTS are COSTLY
ACCIDENTS can be AVOIDED

Tractor and Implement Safety

The tractor is a source of power - Mechanical and Hydraulic.
On its own, the tractor is of little practical value. Only when used in conjunction with an implement or other attachment does it become a working unit.
This instruction book is compiled to cover those safe working practices that are associated with the base tractor operation.
It does not cover all operation and safety instructions relevant to all known implements and attachments that may be fitted at the time of tractor delivery or at some future date.
It is essential that operators use and understand the relevant instruction manual of such implements and attachments.

https://truckmanualshub.com/

Introduction to Safety

This safety section of your Operator Instruction Book is intended to point out some of the basic safety situations which may be encountered during the normal operation and maintenance of your FOOTSTEP (ROPS) or CAB tractor, and to suggest possible ways of dealing with these situations. This section is NOT a replacement for other safety practices featured in other sections of this book.

Additional precautions may be necessary, depending on attachments used and conditions at the work site or in the service area. The tractor maker has no direct control over tractor application, operation, inspection, lubrication, or maintenance. Therefore it is YOUR responsibility to use good safety practices in these areas.

Safety

The safety of the operator is one of the main concerns in designing and developing a new tractor. Designers incorporate as many safety features as is possible in constructing our tractors. However, every year many accidents occur which could have been avoided by a few seconds thought and a more careful approach to handling farm machinery and implements. Read and practice the safety instructions detailed in the next pages of this book.

A Word to the Operator

It is YOUR responsibility to read and understand the safety section in this book before operating your tractor.
You must follow these safety instructions that take you step by step through your working day.

Remember that YOU are the key to safety. Good safety practices not only protect you, but also the people around you. Study the features in this manual and make them a working part of your safety programme. Keep in mind that this safety section is written only for this type of machine. Practice all other usual and customary safe working precautions, and above all - REMEMBER –SAFETY IS YOUR RESPONSIBILITY. YOU CAN PREVENT SERIOUS INJURY OR DEATH.

Use only SAME DEUTZ-FAHR approved attachments and equipment.

Danger, Warning, Caution

Whenever you see the words and symbols shown below, used in this book and on decals, you MUST take note of their instructions as they relate to personal safety.

https://truckmanualshub.com/

DANGER	**DANGER: This symbol together with the word DANGER indicates an imminently hazardous situation that, if not avoided, will result in DEATH OR VERY SERIOUS INJURY.**
WARNING	**WARNING: This symbol together with the word WARNING indicates a potentially hazardous situation that if not avoided could result in DEATH or SERIOUS INJURY.**
CAUTION	**CAUTION: This symbol together with the word CAUTION is used to indicate a potentially hazardous situation that, if not avoided, may result in MINOR INJURY.**

IMPORTANT: The word IMPORTANT is used to identify special instructions or procedures which, if not strictly observed, could result in damage to, or destruction of the machine, process or its surroundings.

NOTE: The word NOTE is used to indicate points of particular interest for more efficient and convenient repair or operation.

Decals

WARNING: DO NOT REMOVE OR OBSCURE DANGER, WARNING, CAUTION OR INSTRUCTION DECALS. REPLACE ANY DANGER, WARNING, CAUTION OR INSTRUCTION DECALS THAT ARE NOT READABLE OR ARE MISSING. REPLACEMENT DECALS ARE AVAILABLE FROM YOUR DEALER IN THE EVENT OF LOSS OR DAMAGE. THE ACTUAL LOCATION AND ORDERING CODE OF THESE SAFETY DECALS IS ILLUSTRATED AT THE END OF THIS SECTION. WHEN YOU REPLACE A PART THAT CARRIES A SAFETY LABEL, MAKE SURE THAT THE SAME LABEL IS APPLIED TO THE NEW PART. DO NOT USE FUEL OR SOLVENTS ETC. TO CLEAN SAFETY LABELS. USE A CLEAN CLOTH DAMPED IN SOAPY WATER.

If a used tractor has been purchased, refer to the illustrations at the end of this section to ensure that all the safety warning decals are in the correct position and are readable.

WARNING: IN SOME OF THE ILLUSTRATIONS USED IN THIS OPERATOR INSTRUCTION BOOK, PANEL OR GUARDS MAY HAVE BEEN REMOVED FOR CLARITY. NEVER OPERATE THE TRACTOR WITHOUT THESE COMPONENTS IN POSITION. IF THE REMOVAL OF PANEL OR GUARDS IS NECESSARY TO MAKE A REPAIR, THEY MUST BE REPLACED BEFORE OPERATION.

https://truckmanualshub.com/

Follow a Safety Programme

For Safe Operation

For safe operation of an agricultural tractor, you must be a qualified and authorized operator. To be qualified you must understand the written instructions supplied in this Operator Instruction Book, have training, and know the safety rules and regulations for the job.
Some regulations specify that no one under the age of 16 years, for example, may operate power machinery. This includes tractors. It is your responsibility to know what these regulations are, and obey them, in the operating area or situation.
These will include, but are not limited to, the following instructions for safe tractor operation.

WARNING: AN OPERATOR SHOULD NOT USE ALCOHOL OR DRUGS WHICH CAN AFFECT HIS ALERTNESS OR CO-ORDINATION. AN OPERATOR ON PRESCRIPTION OR 'OVER THE COUNTER' DRUGS NEEDS MEDICAL ADVICE ON WHETHER OR NOT HE OR SHE CAN SAFELY OPERATE MACHINES.

General safety rules

- DO NOT allow children or unqualified persons to operate your tractor. Keep others away from your area of work.
- Securely fasten your seat belt when the tractor has a ROPS (Roll Over Protective Structure) frame in the upright position or is fitted with a cab.

- Before starting the engine, check that all the tractor controls are in neutral position. This is to prevent accidental movement of the vehicle or the starting of tractor-driven implements.
- ONLY operate the controls when seated in the driver's seat.

https://truckmanualshub.com/

- Always use the seat belt. When used correctly, it can help you drive in safety. Ensure the belt is worn without slack or twists, and that is not caught on objects near the seat or trapped under the seat support.

- Before leaving the driving position, remember to lower the 3-point linkage and/or any implement mounted on the tractor, to put all controls in neutral, to apply the handbrake, to switch off the engine, to remove the key from the ignition switch and to turn the battery earth switch to “off” (where present).
- Where possible, avoid operating the tractor near ditches, embankments and holes. Reduce speed when turning, crossing slopes, and on rough, slippery, or muddy surfaces.
- Stay off slopes too steep for safe operation.
- Watch where you are going, especially at row ends, on roads, and around trees.
- DO NOT permit others to ride on the tractor or the implement unless an approved passenger seat and seat belt is fitted.
- Hitch only to the drawbar and hitch points recommended, and never above the centre line of the rear axle.
- Operate the tractor smoothly - no jerky turns, starts or stops. When the tractor is stopped, apply the parking brake securely. Lower the implement and remove the key.
- DO NOT modify or remove any part of the equipment and DO NOT use attachments unless they are properly matched to your tractor.
- For safety reasons, avoid very steep slopes. Change down through the gears on both uphill and downhill slopes, especially with heavy loads. NEVER allow the tractor to freewheel with the clutch disengaged or the gearbox in neutral.

https://truckmanualshub.com/

- ALWAYS travel at a speed that allows full control and stability of the tractor. Avoid working near embankments and ditches. Reduce speed when turning or driving on steep gradients, and when travelling over ground that is loose, slippy or covered in mud.

- DO NOT travel on the road or at high speed with the differential lock engaged, as this could cause steering problems and thus lead to accidents.

- Before starting the tractor or PTO driven implements, ALWAYS check that no-one is within the tractor/implement operating area.

- Only attach to the 3-point linkage those implements specifically designed for the purpose. Do not use the 3-point linkage as a towing hook. For towing, use the rear towing hitch only (the front hook is for use in emergencies only).

- ALWAYS check that the weight of the towed vehicle or trailer is less than the weight of the tractor (unless equipped with independent braking). Braking distance will increase with speed and the weight towed, particularly on downhill slopes.

- Lock the oscillating towing hitch in a fixed position and use the safety locks when travelling on the public highway. Display load warning signs when necessary and in accordance with the applicable regulations. It is the responsibility of the operator to know and comply with the requirements of the highway code.

- Use emergency lights when travelling on the public highway, both in daytime and at night.Use direction indicators before any turning manoeuvre.Ensure that all the lights on the tractor are kept clean.

- Use the bolt provided to lock the two brake pedals together when travelling on the road. This is to ensure more uniform and more effective braking.

- All machinery driven by the PTO is a potential cause of serious and even fatal injury. Ensure that the PTO and drive shaft guards are always in place. Before starting any work in the vicinity of the PTO shaft, and before servicing/cleaning PTO-driven implements, put the PTO control in the disengaged position, stop the tractor engine and wait until all the moving parts of the implement have come to a complete standstill.

https://truckmanualshub.com/

— Alighting from the driving position when the engine is running, although permitted in emergencies, creates a hazardous situation for which additional precautions must be taken as regards the tractor and any implements connected to it. In any case, before leaving the driving position, make sure that all the safety devices are in place, that no-one is in the vicinity of the tractor, that the tractor is parked on a level surface, that the handbrake is applied and that all the drive control levers are in neutral position. While alighting from the tractor, keep well clear of any moving parts.

— NEVER operate the tractor inside a building with the doors closed. It is essential to ensure that the area is sufficiently ventilated.

— Fluids under pressure can cause severe injury. NEVER use your hands to trace an oil or fuel leak. Use instead a piece of wood or cardboard for this purpose. Before disconnecting any part of a normally pressurised circuit, always make sure that the circuit is fully depressurised. If engine oil, hydraulic fluid or any fluid from a pressurised circuit penetrates your skin, seek medical assistance IMMEDIATELY.

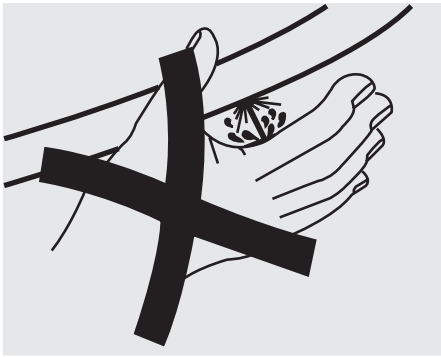

— DO NOT use explosive ether based products to facilitate cold starting. Follow the instructions given in this manual in the section “Cold starting”.

— Incorrect connection of the battery terminals or between the battery and a battery charger could damage the electrical system or even cause the battery to explode. NEVER connect the battery terminals together. The acid electrolyte contained in the battery is highly corrosive and can cause burns or even blindness if it enters the eyes. When filling/topping up a battery with electrolyte, NEVER smoke or allow a naked flame in the vicinity and always wear safety goggles.

https://truckmanualshub.com/

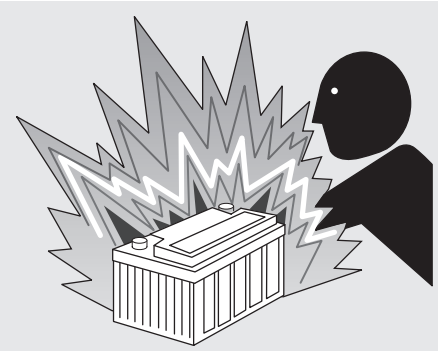

- DO NOT use elastic materials to pull the tractor, as a sudden release of energy stored in the material could cause a fatal accident.
- NEVER attempt to weld or repair a wheel or wheel rim when fitted with an inflated tyre.

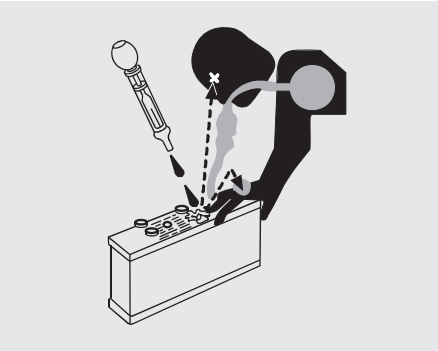

- A runaway tractor can cause serious or fatal injury. Only start the engine when seated in the driving position and after checking that all the drive controls are in neutral. NEVER start the engine from the ground or by bypassing the electrical safety system. If the starter motor fails to operate when all the controls are in neutral position, contact your nearest Assistance Service centre.

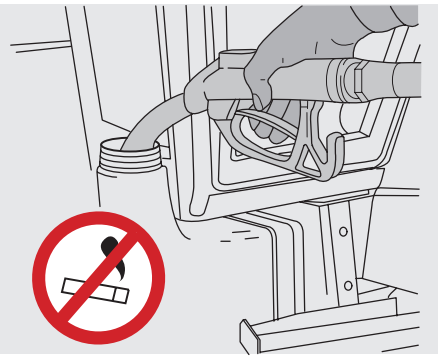

- NEVER refuel the tractor when the engine is running or even hot. DO NOT smoke when refueling. DO NOT fill the fuel tank right to the brim, but leave a little space to allow for expansion of the fuel. Refuel in a safe place, away from naked flames or sparks.
- NEVER allow anyone to stand between the tractor and the implement during hitching operations.
- NEVER wear headphones or earphones to listen to the radio or music while driving. This reduces your ability to concentrate and to hear sounds essential to safe driving.

https://truckmanualshub.com/

- Avoid contact with pesticides. Tractor cabs, when fitted, do NOT protect you against inhaling dangerous pesticides. Meticulously follow the manufacturer's instructions for using and handling pesticides. Always wear the required personal protective equipment (respirator, face mask, etc.) even in the cab.

- Certain tractor models are equipped with speed measurement radar. Even though these radar systems emit only low intensity radio waves, NEVER look directly at the device when it is operating.

- Periodically check the wheel nuts and tighten them to the specified torque. (See the Maintenance section for wheel nut torque values).

- The best way to transport a tractor that has broken down is to tow it away on a flat bed truck. Always secure the tractor to the truck with chains before driving off. If you must tow a tractor, do not exceed 10 km/h, and always have an operator at the tractor's controls to steer and brake as necessary. If necessary, ask your dealer if the model of tractor you have can be towed or not.

- Do not weld or heat any painted parts. Toxic fumes could be given off. Remove paint by abrasion first, before heating the part. Always perform these operations in a well ventilated area.

- Keep heat well away from pipes and hoses containing pressurised fluids. Heating pressurised pipes and hoses can cause inflammable fluids to spray out and cause serious burns to you and others nearby.

https://truckmanualshub.com/

Protective Structures

Roll Over Protective Structures

A Roll Over Protective Structure (ROPS) and seat belt is fitted as standard equipment to the footstep tractor at the time of factory assembly. If the ROPS was removed by the original purchaser or has been removed, it is recommended that you equip your tractor with a Roll Over Protective Structure and a seat belt. ROPS are effective in reducing injuries during overturn accidents.

Overturning a tractor without ROPS can result in serious injury or death.
If a fold down ROPS is installed DO NOT wear seat belt when the ROPS is in the folded down position.

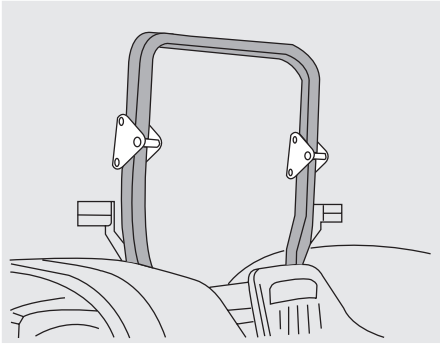

Operation

- Before using the tractor ensure that the ROPS frame is not damaged, that it is securely fastened to the tractor and if a hinged section is fitted that it is in the raised position and secured.

- If the ROPS has been removed from the tractor, or folded down for a specific operation, it must be refitted or erected immediately afterwards using the proper hardware and applying the recommended torque values.

- DO NOT attach chains, ropes, or cables to the ROPS for pulling purposes; this will cause the tractor to tip backwards. Always pull from the tractor drawbar.

- Always wear your seat belt - adjusted snugly except when operating with a folded down ROPS.

- Check the seat belt for damage. A damaged seat belt must be replaced.

https://truckmanualshub.com/

Damage to the ROPS

If the tractor has rolled over or the ROPS has been damaged (such as striking an overhead object during transport), the ROPS must be replaced to provide the original degree of protection.
After an accident, check for damage to the ROPS, operator's seat, seat belt and seat belt mountings.
Before you operate the tractor, replace all damaged parts.

DO NOT WELD, DRILL, BEND OR STRAIGHTEN THE ROPS.
To do so reduces the protection it offer

Cab

The safety cab has been designed for fitment to this series of tractor and meets all the legal requirements of cab safety and noise levels.

The safety cab conforms to the various international safety standards. The cab must NEVER be drilled, or modified to install accessories or implements . Welding components to the cab or repairing damaged components is NOT PERMITTED. DO NOT attach chains or ropes to the main frame of the cab for pulling purposes.

If additional controls or displays are to be added to the operator's area contact your Dealer for information as to how this can best be done.
The ROPS cab together with the seat belt is effective in reducing injuries during overturn accidents. Wearing the seat belt is an important part of this protection.

- Always wear your seat belt-adjusted snugly.

- Check the seat belt for damage. A damaged seat belt must be replaced.

WARNING: IF THE TRACTOR HAS TO OPERATE IN AREAS WITH RISK OF FALLING OBJECTS (LIKE IN MINES, ETC.), WHERE A FOPS IS REQUIRED, PLEASE CONSIDER THAT YOUR TRACTOR, EQUIPPED WITH ROPS SAFETY STRUCTURE (FRAME OR CAB), IS NOT ALLOWED TO OPERATE IN THOSE AREAS.

https://truckmanualshub.com/

Prepare for Safe Operation

Protect Yourself

Wear all the protective clothing and personal safety devices issued to you or called for by job conditions. Don't take chances.

You may need:

- A hard hat.
- Safety glasses, goggles, or face shield.
- Hearing protection.
- Respirator or filter mask.
- Foul weather clothing.
- Reflective clothing.
- Heavy gloves (neoprene for chemicals, leather for rough work).
- Safety boots.

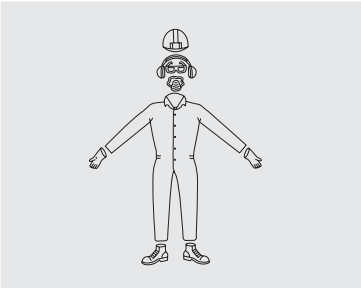

Note where fire extinguishers and first-aid or emergency equipment is kept and get to know where to find help in a hurry. Make sure you know how to use this equipment.

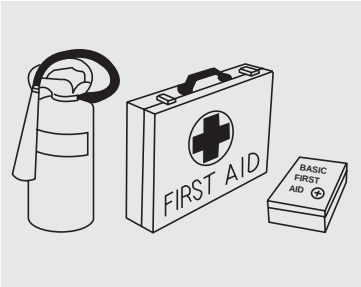

DO NOT wear loose clothing, jewellery or other items and tie up long hair which could entangle in controls or other parts of the tractor.

Risks from exposure to noise

The tractor and any implements attached to it constitute a source of noise of which the intensity and frequency can be measured using the appropriate instruments.
Anyone who uses the tractor must know that:

- exposure to excessive and/or prolonged noise can cause serious damage, not just to the hearing but also to general health. The higher the noise level (dbA) and the greater the duration of exposure, the higher the risk. The combination of both these factors can be expressed in the value LEP (level of personal exposure to noise).
- you therefore need to know the noise level generated by the tractor. This information can be found in the Use and Maintenance Handbook, under the chapter heading "Technical Data".

https://truckmanualshub.com/

— the use of ear protection is essential when the noise level exceeds a certain value and/or when operating the tractor for prolonged periods. The point at which action is to be taken is generally when the level of personal exposure LEP reaches or exceeds 85 dbA. Various types of protection are available, including ear muffs, ear plugs and helmets.

Know Your Equipment

Know your tractor. Know how to operate all equipment on your machine and the implements and attachments used with it. Know the purpose of all the controls, gauges and dials. Know the rated load capacity, speed range, braking and steering characteristics, turning
radius, and operating clearances.
Keep in mind that rain, snow, ice, loose gravel, soft ground, etc. can change the way your tractor operates.

Under poor conditions, slow down and be extra careful, engage four-wheel drive, if fitted.

Study the **DANGER**, **WARNING**, or **CAUTION** safety signs on your tractor and the information signs also.

READ THIS OPERATOR INSTRUCTION BOOK BEFORE STARTING THE ENGINE.
STUDY IT BEFORE YOU START WORK.
IF THERE IS SOMETHING IN THE MANUAL YOU DON'T UNDERSTAND, ASK SOMEONE (such as your equipment Dealer) TO EXPLAIN IT TO YOU.

IMPORTANT: This manual covers general safe practices for agricultural tractors. It must always be kept with the tractor. For further copies contact your Dealer.

Use all Available Protective and Safety Devices

Keep all protective devices in place and securely fastened. Make certain all guards, shields and safety signs are properly installed, as specified, and are in good condition.

https://truckmanualshub.com/

To help keep you and others around you safe, your tractor must be equipped with:

- Roll Over Protective Structure (ROPS), and seat belt.
- Tractor P.T.O. shield.

Your tractor may also need:

- Rear view mirror.
- Fire extinguisher.

- ROPS, FOPS (Falling Object Protective Structure), protective enclosure or protective screens. Remember FOPS are protection from light falling objects and are not intended as protection from large falling objects such as large round bales or fence rails.

- SMV (slow moving vehicle) emblem, additional safety guards, lights or decals and a back up alarm.

Know which devices are required for safe operation of your tractor. Use them. Make sure they are in place and in good condition. **DO NOT** remove or disconnect any safety device.

Check the Equipment

Before you begin your working day, take time to check your tractor and ensure that all systems are in good operational condition.

- **DO NOT** smoke while refuelling the tractor. Keep any type of open flame away.

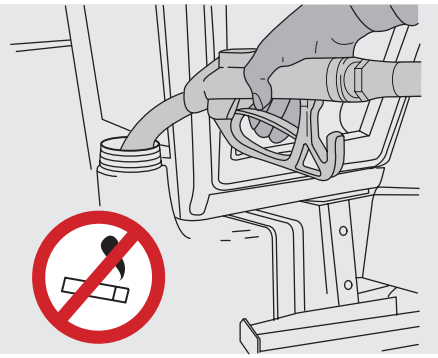

- Stop the engine and wait for it to cool before refuelling.

- Check for loose, broken, missing, or damaged parts.

- Have everything put into good repair. Make certain all safety devices are in place.

- Check ROPS and seat belt for damage. A damaged ROPS or seat belt **MUST** be replaced.

- Ensure that implements and attachments are properly installed and that the tractor and implement P.T.O. rev/min ratings match.

https://truckmanualshub.com/

- Check the tyres for cuts, bulges and correct pressure. Replace worn or damaged tyres.
- Check the engine oil level and add oil if required.
- Perform all maintenance procedures outlined in the maintenance and adjustment section of this manual.
- Check foot and parking brakes for proper operation, adjust if necessary.
- Check that the P.T.O. driveline locking devices are latched.
- Check that the tractor P.T.O. shield and driveline guards are in place and operating properly.
- Check the tractor and implement hydraulic system. Have any leaks or damaged parts repaired or replaced.

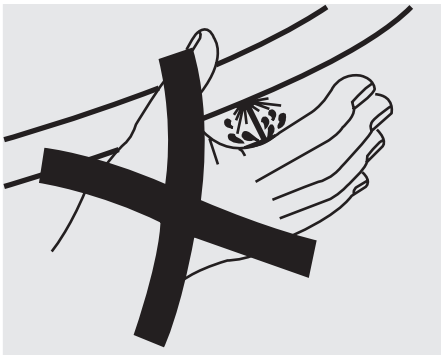

WARNING: DIESEL FUEL OR HYDRAULIC FLUID UNDER PRESSURE CAN PENETRATE THE SKIN OR EYES AND CAUSE SERIOUS PERSONAL INJURY, BLINDNESS OR DEATH. FLUID LEAKS, UNDER PRESSURE, MAY NOT BE VISIBLE. USE A PIECE OF CARDBOARD OR WOOD TO FIND LEAKS. DO NOT USE YOUR BARE HAND. WEAR SAFETY GOGGLES FOR EYE PROTECTION. IF ANY FLUID IS INJECTED INTO THE SKIN, IT MUST BE SURGICALLY REMOVED WITHIN A FEW HOURS BY A DOCTOR FAMILIAR WITH THIS TYPE OF INJURY.

https://truckmanualshub.com/

Before applying pressure to the fuel or hydraulic system, be sure all connections are tight and that lines, pipes, and hoses are not damaged. Before disconnecting fuel or hydraulic lines, be sure to relieve all pressure. Make sure that all hydraulic lines are correctly installed and not crossed.

WARNING: LIQUID COOLING SYSTEMS BUILD UP PRESSURE AS THE ENGINE GETS HOT. BEFORE REMOVING THE RADIATOR CAP, STOP THE ENGINE AND LET THE SYSTEM COOL.
CHECK THE ENGINE COOLING SYSTEM AND ADD COOLANT AS REQUIRED.

Clean the Tractor

- Keep work surfaces and engine compartments clean.
- Before cleaning the machine, always lower implements to the ground, place transmission in neutral or with the lowest gear engaged, if mechanical, engage the parking brake, shut off the engine and remove the key.
- Clean steps, pedals and floor. Remove grease or oil. Brush away dust or mud. In winter, scrape away snow and ice. Remember - slippery surfaces are dangerous.
- Remove or put away tools, buckets, chains and hooks.

Protect the Environment

It is illegal to pollute drains, water courses or soil. Use authorised waste disposal facilities, including civic amenity sites and garages providing facilities for disposal of used oil. If in doubt, contact your local authority for advice.

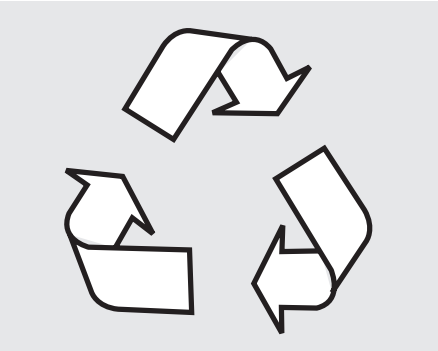

https://truckmanualshub.com/

Servicing the Tractor

- DO NOT service the tractor while the engine is running or hot, or if the tractor is in motion.
- Before making adjustments to, or servicing the electrical system, disconnect the battery negative (-) cable first.
- To prevent fires or explosions keep open flame away from the battery or cold weather starting aids. To prevent sparks which could cause explosions use jump cables according to instructions.
- When making repairs or adjustments it is recommended that you consult your Dealer, and have the work carried out by trained personnel.
- The implement and/or tractor must be supported on suitable wooden blocks or stands, NOT a hydraulic jack.
- Check all nuts and bolts periodically for tightness, especially wheel hub and rim nuts. Tighten to the prescribed torque values.
- Check the brakes regularly, top up the reservoir and/or adjust where necessary. Make sure that the brakes are evenly adjusted, especially when using a trailer.

Starting

Warn Personnel before Starting

Before starting, walk completely around the tractor and any attached equipment. Make sure that no one is under it, on it, or close to it. Let other workers and bystanders know you are starting up and don't start until everyone is clear of the tractor, implements and towed equipment.
Ensure that all bystanders, particularly children, are a suitable distance away before starting the engine.

https://truckmanualshub.com/

Mount and Dismount Safely

Always use ‘three point contact’ with the machine, and face the machine when you mount it. (Three point contact means both hands and one foot or one hand and both feet are in contact with the machine at all times during mounting and dismounting).

Clean your shoes and wipe your hands before climbing on. Use handrails, grab handles, ladders or steps (as provided) when mounting or dismounting.

DO NOT use control levers as a hand hold and never step on foot controls when mounting or dismounting.

DO NOT attempt to mount or dismount from a moving tractor. DO NOT jump off a tractor other than in an emergency.

Start Safely

WARNING: BEFORE STARTING THE ENGINE MAKE SURE THERE IS PLENTY OF VENTILATION. DO NOT OPERATE THE ENGINE IN A CLOSED BUILDING. THE EXHAUST FUMES MAY CAUSE ASPHYXIATION.

Always start the engine from the operator’s seat with all the transmission levers and the P.T.O. lever in neutral.
Make sure that the tractor’s dual brake pedals are locked together at all times unless you are making turns in the field which require independent use of the brakes. Make sure the brakes are properly adjusted so that both brakes engage at the same time.
Adjust the seat, fasten the seat belt, apply the parking brake and put all controls in neutral before starting up.

https://truckmanualshub.com/

DANGER: START THE ENGINE, WITH THE STARTER KEY, FROM THE OPERATOR'S SEAT ONLY. DO NOT ATTEMPT TO START THE ENGINE BY SHORTING ACROSS THE STARTER TERMINALS. THE MACHINE WILL START IN GEAR IF THE NEUTRAL START CIRCUIT IS BYPASSED. THIS COULD CAUSE SERIOUS INJURY OR DEATH TO ANYONE IN THE VICINITY OF THE TRACTOR. ENSURE THAT THE ENGINE STARTER SOLENOID COVER IS ALWAYS IN POSITON.

Follow Recommended Starting Procedures

Follow the starting procedures recommended in the Operation section of this Operator Instruction Book. This includes normal starting, cold starting, and the use of starting fluids.

Test the Controls

After starting, re-check all gauges and lights. Make sure everything is functioning correctly. If the tractor does not respond correctly when each control is operated, DO NOT use the machine until the fault is rectified.

Starting Fluid

DANGER: DO NOT USE AEROSOL CANS OF STARTING AID ON TRACTORS WITH THE THERMOSTART CONNECTED TO THE ELECTRICAL SYSTEM. ETHER COMBINED WITH THERMOSTART CAN CAUSE AN EXPLOSION WITH DAMAGE TO ENGINE, PERSONAL INJURY, OR BOTH.

Your tractor has been fitted with a thermostart cold starting device. If aerosol cans of starting fluid, or ether start-aid, are to be used the thermostart must be disconnected. Remove the wire from the thermostart unit which will be found on the induction manifold. Tape the end of the wire to prevent an electrical short circuit.

https://truckmanualshub.com/

Handle starting fluid as directed by the manufacturer. Starting fluid must only be used when an ether-start aid is fitted as original equipment by the manufacturer or when installed by a Dealer as an accessory. In cases of tractors being fitted with glow plugs or thermostart, these must be removed prior to the installation of an ether start-aid.

Work Safely

WARNING: AN UNBALANCED TRACTOR COULD OVERTURN AND CAUSE INJURY OR DEATH. MAKE SURE FRONT FRAME COUNTER-WEIGHTS, WHEEL WEIGHTS AND WHEEL BALLAST ARE USED AS RECOMMENDED BY THE MANUFACTURER. DO NOT ADD EXTRA COUNTERWEIGHTS TO COMPENSATE FOR AN OVERLOADED TRACTOR, IT IS RECOMMENDED TO REDUCE THE LOAD. KEEP ALL PARTS OF YOUR BODY INSIDE THE OPERATOR'S COMPARTMENT WHILE OPERATING THE TRACTOR.

Making the Right Moves

Make sure your tractor is ready for the job it must do.
Know the rated load capacities of your tractor and never exceed them. Be certain that any equipment or implements you intend to use DO NOT exceed the load rating of your tractor. Be sure the tractor and implement PTO speed match.

Keep in mind that tractors normally operate on uneven, unpaved, and often bumpy or sloping surfaces. Operating conditions can reduce the amount of weight you should carry or pull.

Follow Safe Operating Practices

- Operate the controls smoothly - don't jerk the steering wheel or other controls.

- DO NOT get on or off a moving tractor. Keep a firm grip on the steering wheel at all times, with the thumbs clear of the spokes when driving the tractor

https://truckmanualshub.com/

- Make sure you have adequate clearance in all directions for tractor, cab, ROPS and implement.

- **DO NOT** play games with a tractor or equipment.Use only for intended purpose.

- **DO NOT** attempt to work the controls except from the operator's , if tractor is NOT equipped with proper passenger seat.

- **DO NOT** carry passengers, if tractor is NOT equipped with proper passenger seat.

- Before dismounting, always disengage the P.T.O., lower all attachments and implements to the ground, engage parking brake, shut off the engine, engage the lowest gear (if mechanical transmission) and remove the key. With hydraulic transmission or powershift transmission or powershuttle, **ALWAYS** chock the tractor wheels.

DO NOT touch, lean on, or reach through any implement mechanism or permit others to do so.
Stay alert. Should something break, come loose, or fail to operate on your equipment, stop work, lower equipment to the ground, shut off the engine, inspect the machine and have repairs or adjustments made before resuming operation.

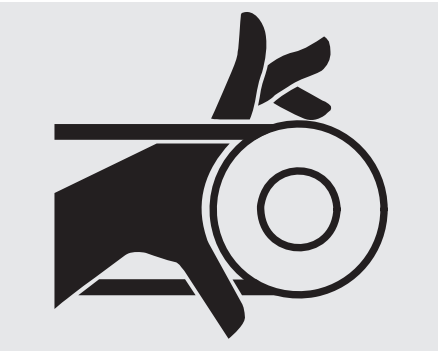

Watch out for Others

- Be aware of what is going on. DO NOT allow an untrained or unqualified person to operate your tractor. They could injure themselves or someone else.

https://truckmanualshub.com/

WARNING: YOUR TRACTOR IS A ONE-PERSON MACHINE. DO NOT PERMIT OTHERS TO RIDE ON THE TRACTOR OR THE IMPLEMENT. IN SOME TERRITORIES A PASSENGER SEAT MUST BE FITTED TO CARRY PASSENGERS. DO NOT ALLOW ANYONE TO RIDE ON THE IMPLEMENTS OR OTHER EQUIPMENT INCLUDING TRAILERS, EXCEPT ON CERTAIN HARVESTING EQUIPMENT, SPECIFICALLY DESIGNED FOR RIDERS DURING THE ACTUAL HARVEST OPERATION ONLY (NOT DURING TRANSPORT). SUCH EQUIPMENT MUST HAVE PROVISION FOR A SAFE RIDING AREA. DO NOT ALLOW CHILDREN ON THE TRACTOR.

- Be certain you can control both speed and direction before moving. Move slowly until you are sure that everything is operating properly. After starting, recheck the steering, right and left. Be certain you have full steering and brake control. If differential is locked, **DO NOT** operate at high speed or turn the tractor until the differential lock is disengaged.
- **DO NOT** lift a load over anyone.
- Keep others away from your operation. **DO NOT** allow anyone to stand or pass under a raised implement.
- **DO NOT** lift objects that can not be contained in the bucket, get the appropriate attachment. **DO NOT** allow anyone to stand on the ROPS or fenders.
- When using a loader, avoid sudden stops, starts, turns, or change of direction. Keep loads close to the ground when transporting.
- **DO NOT** stand (or allow anyone else to stand) in front of, under, or behind loaded or loading equipment. **DO NOT** drive a tractor up to someone standing in front of a fixed object.
- Keep others away from universal joints, hitches, drawbar, lift arms, P.T.O. drives, cylinders, belts, pulleys, and other moving parts. Keep all shields and guards in place.

WARNING: DO NOT STAND, OR ALLOW ANYONE ELSE TO STAND, BETWEEN THE TRACTOR AND IMPLEMENT UNLESS THE ENGINE IS TURNED OFF AND THE PARKING BRAKE IS ENGAGED, THE LOWEST GEAR IS ENGAGED, THE KEY IS REMOVED, AND ALL ATTACHMENTS OR IMPLEMENTS ARE LOWERED TO THE GROUND.

https://truckmanualshub.com/

Risk of Overturning

For your safety, it is strongly recommended that all footstep tractors are fitted with Roll Over Protective Structures (ROPS) and seat belts.
In the event of an overturn with a tractor fitted with a cab or ROPS, hold the steering wheel firmly and DO NOT attempt to leave the seat until the tractor has come to rest. If the doors of the cab are obstructed, leave through the rear window or the roof hatch.

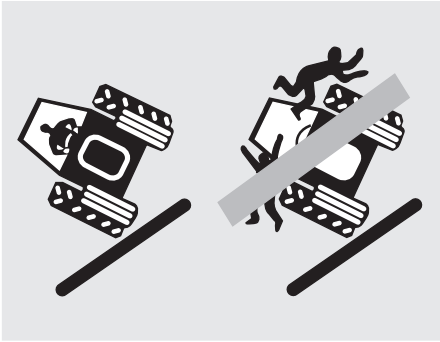

To Avoid Side Overturns

- Set the wheel track at the widest setting suitable for the job being done.
- Lock the brake pedals together before driving at transport speeds.
- Reduce speed to match operating conditions. If the tractor is equipped with a front-end loader, carry the bucket and load as low as possible.
- Make wide slow turns at reduced speed. Don’t let your tractor bounce. You may lose steering control.
- Don’t pull a load too heavy for your tractor. It could run away on the down slope or the tractor could jack-knife around a towed load.
- Don’t brake suddenly. Apply brakes smoothly and gradually.
- When going down a slope, use the throttle to slow the tractor engine and use the same gear range you would use to go up the slope. Shift into gear before you start downhill.
- Engage four-wheel drive (if fitted).
- It is less likely that the tractor will overturn if you travel straight up or down a steep slope rather than across it.

https://truckmanualshub.com/

- Avoid crossing steep slopes if possible. If you must do so, avoid any holes or depressions on the downhill side. Avoid any stumps, rocks, bumps or raised areas on the uphill side. When operating near ditches and banks, always keep your tractor behind the shear line. Avoid ditches, embankments and river-banks which might cave in.

- If it is necessary to cross a steep slope, avoid turning uphill, slow down and make a wide turn. Travel directly up or down the slope, never across it. When travelling up or down a slope, keep the heavy end of the tractor on the uphill side.

- If when travelling across a slope with side mounted implements, keep the implement on the uphill side.Do not raise the implements. Keep them as low to the ground as possible when crossing a slope.

- When towing a load at transport speed or in the field, lock the drawbar in the centre position and use a safety chain.

WARNING: DO NOT DISENGAGE THE CLUTCH OR ATTEMPT TO SHIFT GEAR AFTER YOU HAVE STARTED DOWNHILL.

- **DO NOT** use your tractor to round up farm animals.

To Avoid Rear Overturns

WARNING: HITCHING TO THE REAR AXLE, OR ANY OTHER POINT ABOVE THE SWINGING DRAWBAR, CAN CAUSE A REAR OVER-TURN.

- **DO NOT** pull anything using the top link connection, or from any point above the centre line of the rear axle. Always use an approved drawbar, and only use a drawbar pin that locks in place.

- High hitching can cause rear overturn, which may cause serious injury or death. Hitch loads to the drawbar only.

- Only use a three-point linkage drawbar when stays are fitted to keep it in the down position.

- Use front counterweights to increase tractor stability when towing a heavy load or to counter balance a heavy rear mounted implement.

https://truckmanualshub.com/

- Start forward slowly and gradually increase your speed. DO NOT rev the engine or drop the clutch. If the tractor is attached to a heavy load, or immovable object, improper clutching may cause overturn.

- If the front end of the tractor starts to lift, reduce your speed and, if necessary, disengage the clutch.

- If your tractor is bogged down in mud or frozen to the ground, DO NOT attempt to drive forwards. The tractor can rotate around its rear wheels and overturn. Lift any attached implement and attempt to BACK OUT. If this is not possible, tow it out with another vehicle.

- If you get stuck in a ditch, BACK OUT, if possible. If you must go forward, do it slowly and carefully.

- A bare tractor or tractor with rear mounted attachments should be backed up the slope in reverse and travel forward downhill.

- A tractor with a loaded front-end bucket should be backed down the slope and travel forward uphill.Keep the loader bucket as low as possible.

- Always keep the tractor in gear when going downhill. DO NOT permit the tractor to coast with clutch disengaged or transmission in neutral.

General Operating Hazards

DANGER: DO NOT ATTEMPT TO UNPLUG THE HYDRAULIC CONNECTIONS, OR ADJUST AN IMPLEMENT WITH THE ENGINE RUNNING OR THE P.T.O. DRIVE IN OPERATION. TO DO SO MAY RESULT IN VERY SERIOUS INJURY OR DEATH.

- Ensure that the P.T.O. shield is in place and that the P.T.O. cap is fitted when the P.T.O. driveline is not in use.

- Before attaching, detaching, cleaning or adjusting P.T.O. driven implements, disengage the P.T.O., stop the engine, remove the key, and make sure that the P.T.O. driveline has stopped.

- Ensure that all the P.T.O. driveline guards are in place and observe all safety decals.

- Be sure everyone is clear of your machine before engaging the P.T.O.. For stationary P.T.O. operation, always place transmission in neutral, engage parking brake, and chock both tractor and implement wheels.

https://truckmanualshub.com/

- When operating mobile P.T.O. driven equipment, DO NOT leave the tractor seat until the PTO drive is disengaged, the lowest gear is engaged (if mechanical), the parking brake is engaged, the engine shut off and the key removed.

- DO NOT use P.T.O. adaptors, reducers or extensions as they extend the P.T.O. coupler and universal joint out beyond the protection offered by the P.T.O. shield.

- The top link and lift rods must not be extended beyond the point where threads begin to show.

- When using chemicals, carefully follow for use, storage and disposal. Also follow the chemical application equipment manufacturer's instructions.

- When operating under poor visibility conditions, or in the dark, use your tractor field lights and reduce your ground speed. DO NOT use your field lights when travelling on a roadway because rear pointed white lights may be illegal except when reversing and may confuse following drivers.

- Operate your tractor with the wheels set at the widest setting possible, consistent with the particular task you are performing. To adjust wheel settings refer to Maintenance and Adjustment section.

- Reduce your speed when operating over rough or slippery ground and when foliage restricts your view of hazards.

- DO NOT make sharp turns at high speed.

Implements and Attachments

WARNING: A FRONT-END LOADER (BUCKET OR FORKS) MUST BE EQUIPPED WITH A SUITABLE RESTRAINING DEVICE TO PREVENT THE LOAD (BALES, FENCE POSTS, ROLLS OF FENCE, WIRE ETC.) FROM ROLLING DOWN THE LIFT ARMS INTO THE OPERATOR'S COMPARTMENT AND CRUSHING THE DRIVER WHEN THE LOADER IS RAISED. INADEQUATELY SECURED OBJECTS COULD ALSO FALL AND INJURE BYSTANDERS.

- Three-point hitch and side mounted implements make a much larger arc when turning than towed equipment. Make certain to allow sufficient clearance for turning. Use only approved attachments and implements.

- When using attachments or implements with the tractor, be sure to thoroughly read the Operator Instruction Book for that attachment or implement and follow its safety instructions.

https://truckmanualshub.com/

- **DO NOT** overload an attachment or towed equipment. Use proper counter-weights to maintain tractor stability. Hitch loads to the drawbar only.

- A safety chain will help control drawn equipment should it be accidentally separated from the drawbar while transporting. Using the appropriate adaptor parts, attach the chain to the tractor drawbar support or other specified anchor location. Provide only enough slack in the chain to permit turning. See your Dealer for a chain with a strength rating equal to, or greater than the gross weight of the towed machine.

- Make sure any towed implements are equipped with a safety chain linking tractor and implement.

- Pull only from the approved drawbar. Towing or attaching to other locations may cause the tractor to overturn.

WARNING: TRACTOR REQUIRES CORRECT TRAILER BRAKING EQUIPMENT BE INSTALLED AND CONNECTED TO THE EQUIPMENT.

Safety - Towing

- For towed equipment WITHOUT brakes, DO NOT tow equipment:
  - at speeds over 30 km/h (19 miles/h);
  - that, when fully loaded, weighs more than 1 times the weight of the towing unit (please refer to local rules).

- For towed equipment WITH MECHANICAL brakes, **DO NOT** tow equipment:
  - at speeds over 30 km/h (19 miles/h);
  - that, when fully loaded, weighs more than 1 times the weight of the towing unit or 5000 Kg (please refer to local rules).

- For towed equipment WITH HYDRAULIC OR PNEUMATIC brakes, **DO NOT** tow equipment:
  - at speeds over 40 km/h (25 miles/h);
  - that, when fully loaded, weighs more than 4 times the weight of the towing unit, with a maximum of 20000 Kg (please refer to local rules).

- When parking tractor and towed trailer, engage the lowest transmission gear, engage parking brake, shut off the engine, remove the key and chock both tractor and trailer wheels

- Stopping distance increases with speed and weight of towed loads, and on hills and slopes. Towed loads with or without brakes that are too heavy for the tractor or are towed too fast can cause loss of control. Consider the total weight of the equipment and its load.

https://truckmanualshub.com/

WARNING: ON TOWING TRAILERS, BEFORE LEAVING THE DRIVING POSITION, REMEMBER TO PUT ALL CONTROLS IN NEUTRAL, TO APPLY THE HANDBRAKE, TO SWITCH OFF THE ENGINE, TO ENGAGE THE LOWEST GEAR (IF MECHANICAL TRANSMISSION) AND TO REMOVE THE KEY. WITH HYDRAULIC TRANSMISSION OR POWERSHIFT TRANSMISSION OR POWERSHUTTLE, ALWAYS CHOCK BOTH TRACTOR AND TRAILER WHEELS.

Road Transport

BEFORE operating your tractor on a public road, a number of precautions must be taken.

- Familiarise yourself with - and obey - all laws appropriate to your tractor.
- Lock your brake pedals together.
- Raise all implements to their transport position and lock them in place.
- Place all implements into their narrowest transport configuration.
- Disengage the P.T.O. and differential lock.
- Make sure any required clearance flags or hazard lights are in place and in working order.
- Make sure you use a proper hitch pin with a clip retainer.
- Clean off all reflectors and road lights, front and rear, and be certain they are in working order.
- Make sure tractor and equipment are equipped with Slow Moving Vehicle (SMV) signs and other marking aids recommended for improved visibility, or beacon if the law requires them.

WARNING: DO NOT ALLOW ANY PASSENGERS ON THE TRACTOR OR TOWED EQUIPMENT.

Rules of the Road

WHEN operating your tractor on a public road a number of precautions must be taken.

- Know the route you are going to travel.
- Use flashing lights or beacon when travelling on roads, day or night, unless prohibited by law.
- Use caution when towing a load at transport speeds especially if the towed equipment is NOT equipped with brakes.

https://truckmanualshub.com/

- Observe all local or national regulations regarding the road speed of your tractor.
- Observe all local or national regulations regarding the max towed weight.
- Use extreme caution when transporting on snow-covered or slippery roads.
- Wait for traffic to clear before entering a public road.
- Beware of blind intersections. Slow down until you have a clear view.
- **DO NOT** attempt to pass at any intersection.
- Slow down for turns and curves.
- Make wide, gentle turns.
- Signal your intent to slow, stop or turn.
- Shift to a lower gear before going up or down hills.
- Keep tractor in gear. **DO NOT** coast with the clutch disengaged or transmission in neutral.
- Stay out of the path of oncoming traffic.
- Drive in your correct lane keeping as near to the kerb as possible.
- If traffic builds up behind you, pull off the road and let it go by.
- Drive defensively. Anticipate what other drivers might do.
- When towing a load, start braking sooner than normal and slow down gradually.
- Watch out for overhead obstructions.
- Make sure that the load does not obscure warning or any other lights.

https://truckmanualshub.com/

After Operation

When stopping at any time, bring the tractor to a complete halt, apply the parking brake, disengage the P.T.O., place the lowest gear engaged, lower the implement to the ground, stop the engine and remove the key BEFORE leaving the seat.

Welding work on the tractor body

Before performing electrical welding work on the tractor body or on attached implements, always disconnect the electrical wiring of the generator, the battery and the electronic boxes.

Welding work on the cab posts is not permitted.

Watch out that plastic components, such as air compressor system or hydraulic hoses, are not overheated.

https://truckmanualshub.com/

Safety instructions for the installation of supplementary equipment and/or electronic components.

The tractor is equipped with electronic control devices. The operation of other electronic devices can create electromagnetic fields, which may cause malfunctions in the tractor's electronics. To prevent the risk of injury deriving from such malfunctions, observe the following safety instructions.

When installing supplementary equipment and/or electrical and electronic components on the tractor which require connection to the tractor's electrical system, it is the responsibility of the user to ensure that the installation does not cause malfunction of the tractor's electronics or other components. This applies mainly to the following devices:

Radio
CB radio receiver
Mobile telephone (ETACS, GSM, etc.)

In particular, it is important to check that any supplementary electrical or electronic devices installed comply with the current EMC directives 89/336/EEC and that they bear the CE marking.

For the installation of mobile communication systems (e.g. radio transmitter/receivers, telephone), it is important to observe the following additional instructions:

Ensure that you have a licence to operate the device (e.g.: BZT licence in Germany).

Ensure that the device/s are firmly fixed.

The use of mobile radio and telephones is only permitted if connected to an external antenna.

Radio transmission components must be installed separately from the vehicle's electronic components.

The antenna must be fitted in a professional manner and there must be a good connection between the antenna and the vehicle earthing point.
The wiring, installation, and the maximum permissible power consumption must comply with the assembly instructions.

https://truckmanualshub.com/

Safety and operational decals

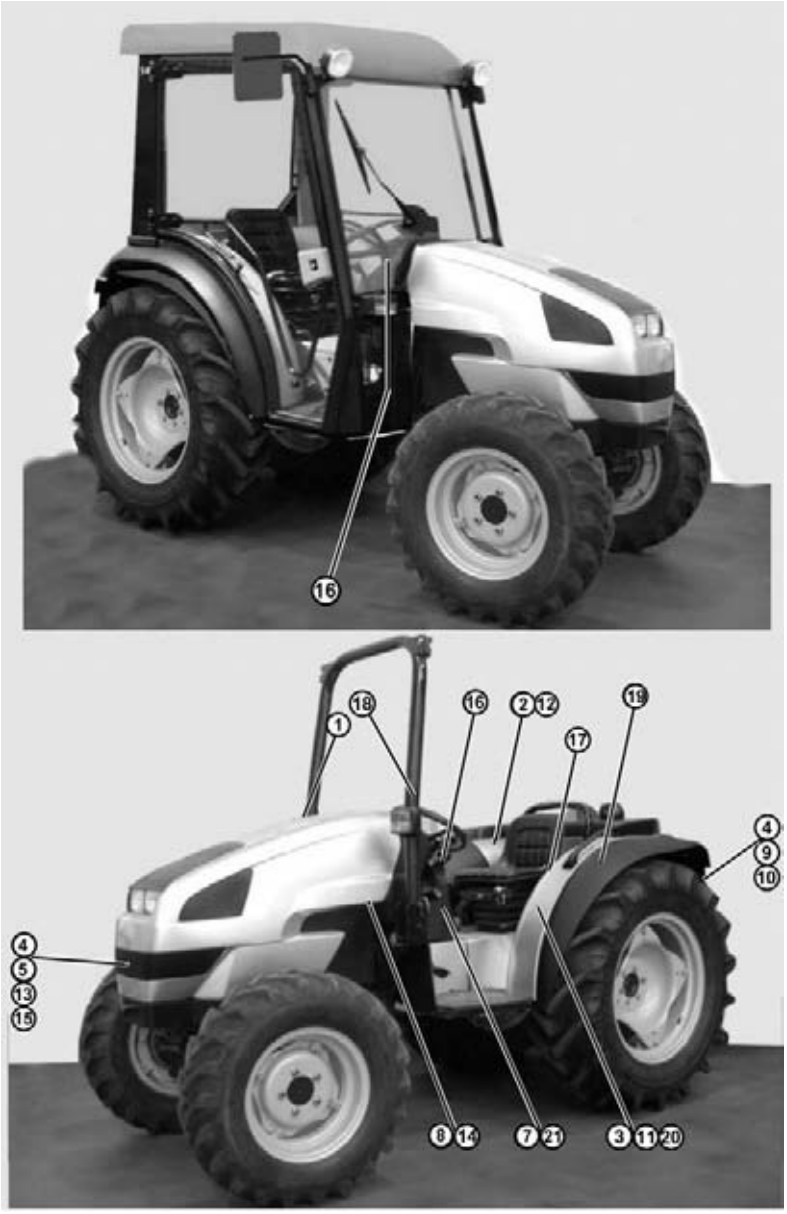

WARNING: Replace any damaged or lost decal on this tractor before further operation.

https://truckmanualshub.com/

1 - P/N 2.9929.847.0
Location: On the front wall of right support of the safety roll bar

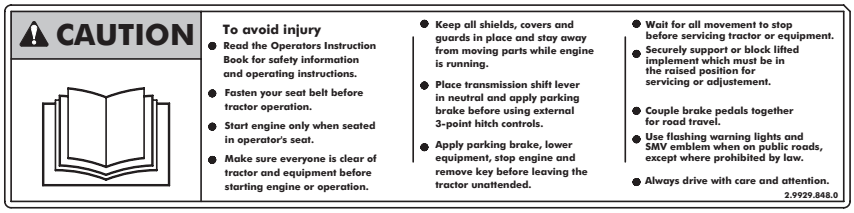

2 - P/N 2.9929.848.0
Location: On the left fender (next to the driver’s seat)

https://truckmanualshub.com/

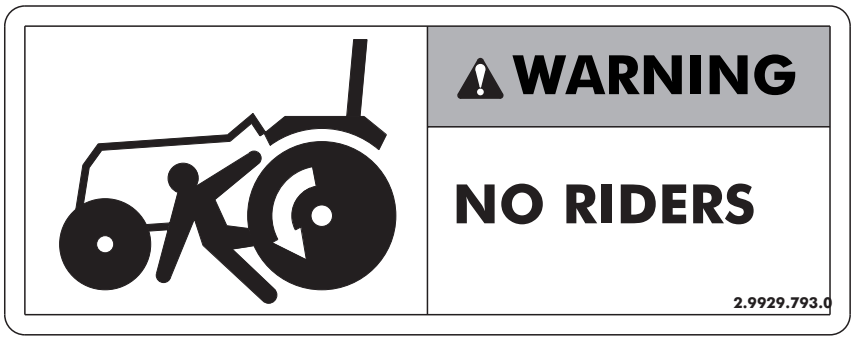

3 - P/N 2.9929.793.0
Location: On the left fender (near the platform)

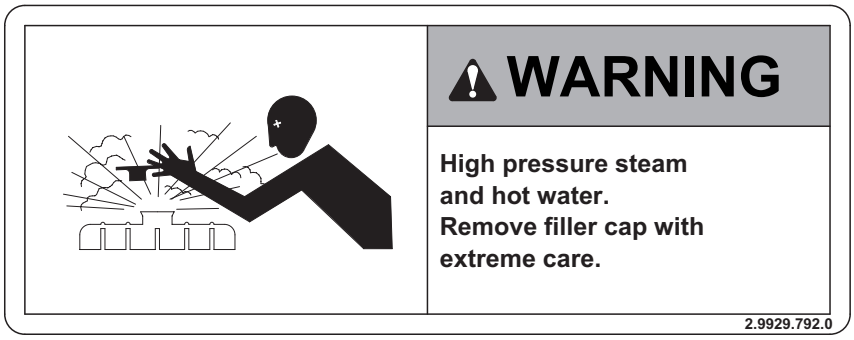

4 - P/N 2.9929.792.0
Location: On top of the battery - left side

https://truckmanualshub.com/

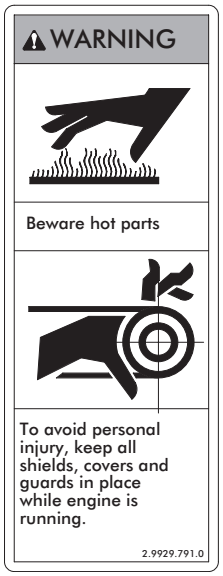

5 - P/N 2.9929.791.0
Location: On the front part of the structure under-hood

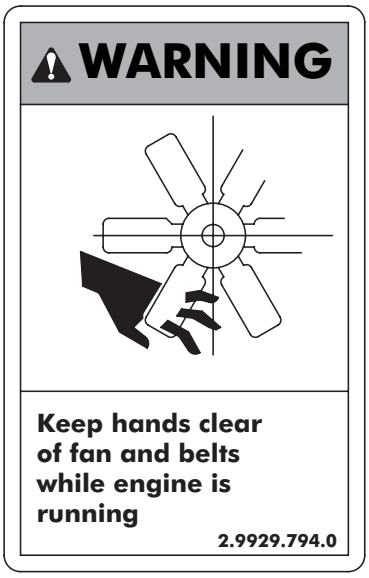

6 - P/N 2.9929.794.0
Location: On top of the radiator - right side

https://truckmanualshub.com/

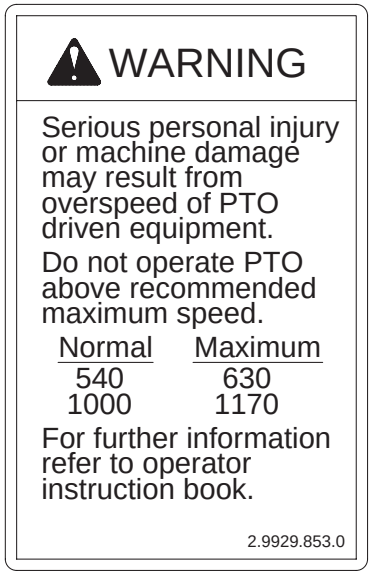

7 - P/N 2.9929.853.0
Location: On left side of the transmission tunnel

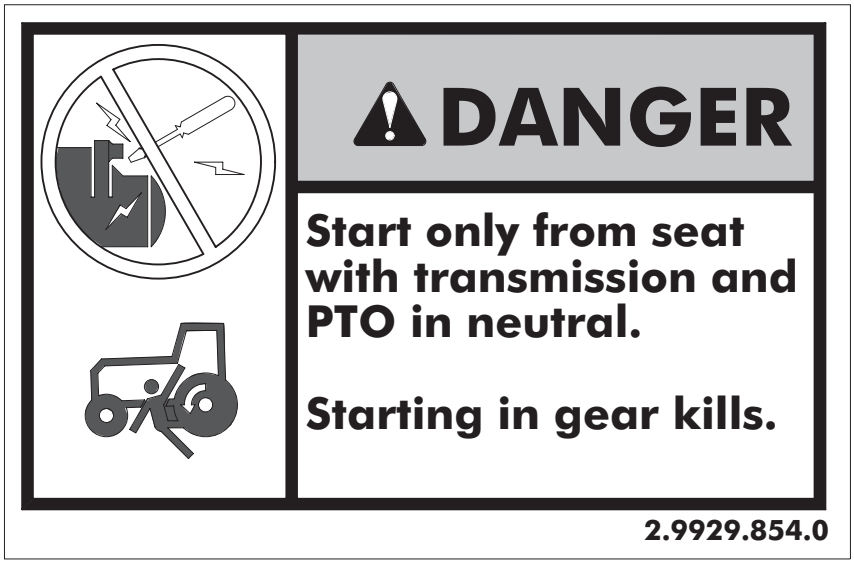

8 - P/N 2.9929.854.0
Location: On carter of protection of the collector of unloading

L

https://truckmanualshub.com/

540 OR 1000 R.P.M. P.T.O

1. POSITION DRAWBAR HITCH HOLE AS FOLLOWS:

PTO RPM	SHAFT SIZE	DISTANCE "A"
540	35 mm (1.38 IN.)	356 mm (14.0 IN.)
1000	35 mm (1.38 IN.)	406 mm (16.0 IN.)
1000	45 mm (1.75 IN.)	508 mm (20.0 IN.)

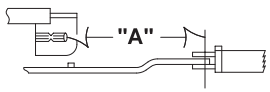

2. LOCK DRAWBAR IN LINE WITH P.T.O. OUTPUT SHAFT.
3. POSITION IMPLEMENT P.T.O. DRIVELINE IN LINE WITH DRAWBAR.
4. DO NOT OPERATE P.T.O. ABOVE RATED SPEED FOR 540 OR 1000 R.P.M. P.T.O. SHAFT.
5. READ OPERATOR MANUALS FOR COMPLETE INSTRUCTIONS AND SAFE OPERATION TO AVOID ACCIDENTS.

2.9929.304.0/10

9 - P/N 2.9929.304.0/10
Location: On carter of protection of rear P.T.O.

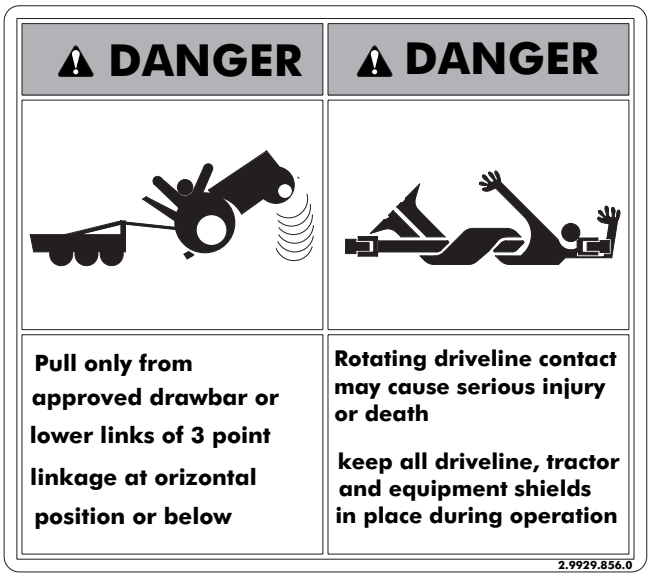

10 - P/N 2.9929.856.0
Location: On the left fender (rear of the platform)

https://truckmanualshub.com/

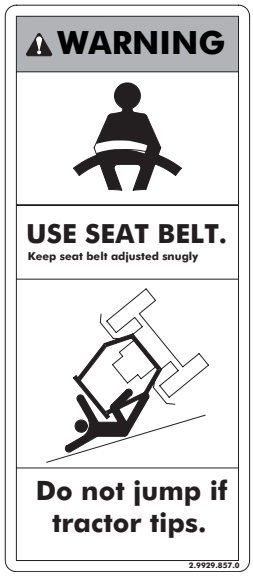

11 - P/N 2.9929.857.0
Location: On the left fender (near the platform)

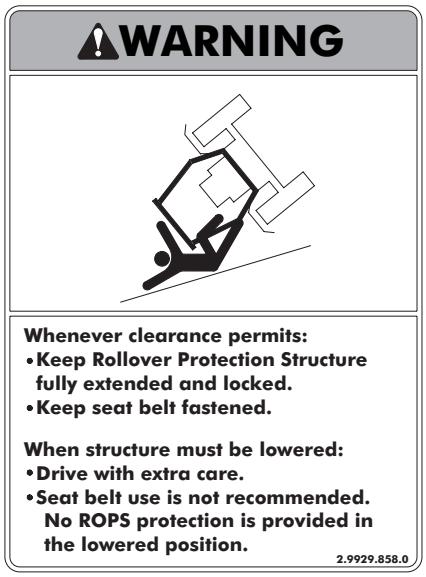

12 - P/N 2.9929.858.0
Location: On the right fender (next to the driver's seat)

https://truckmanualshub.com/

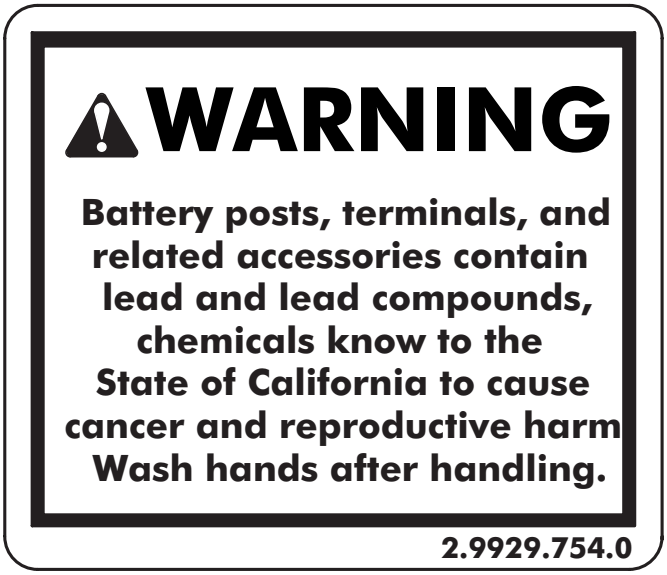

13 - P/N 2.9929.754.0
Location: On top of the battery

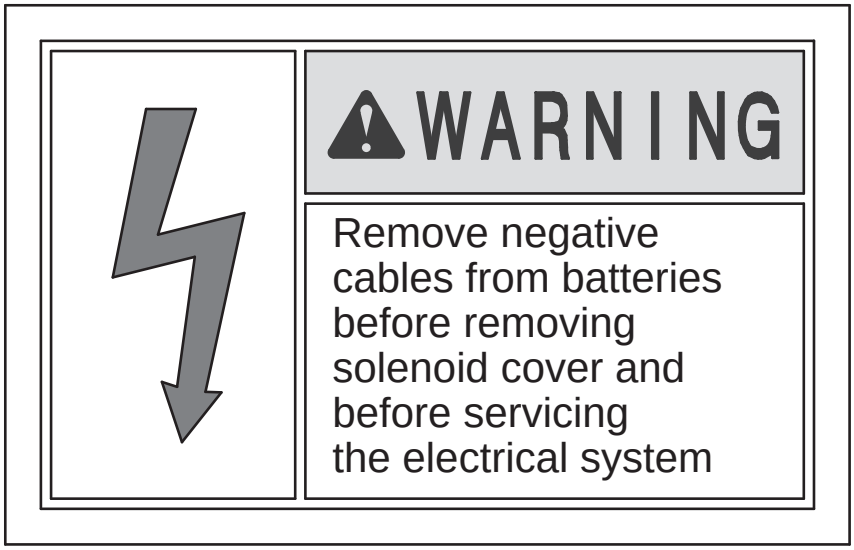

14 - P/N 2.9929.994.0
Location: On top of the start-engine

https://truckmanualshub.com/

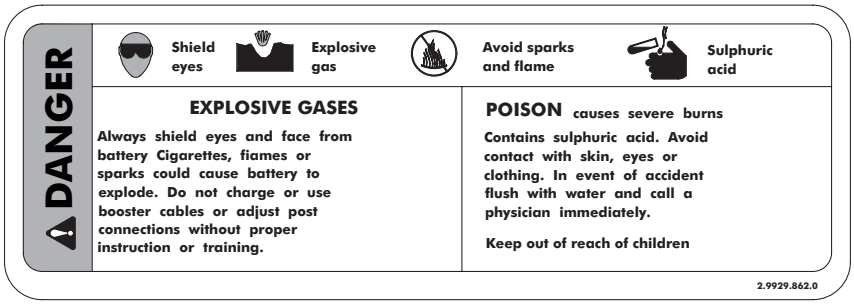

15 - P/N 2.9929.862.0
Location: On top of the battery

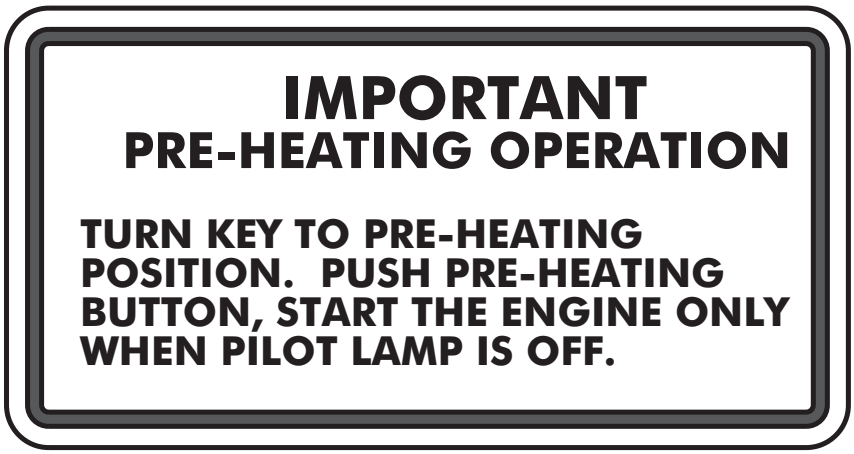

16 - P/N 2.9929.852.0
Location: On the drive-consolle (under the sterring-wheel)

https://truckmanualshub.com/

17 - P/N 2.9929.702.0
Location: On the platform (near the hand-brake)

18 - P/N 2.9929.699.0/10
Location: On the left side to roll bar

https://truckmanualshub.com/

WARNING

THIS TRACTOR IS EQUIPPED WITH A SHIFTABLE PTO: TO AVOID INJURY:
1. MATCH PTO SPEED TO IMPLEMENT
2. KEEP ALL SHIELDS IN PLACE
3. CENTER AND LOCK DRAWBAR
4. ENGAGE PTO CAREFULLY

2.9929.281.0/10

19 - P/N 2.9929.281.0/10
Location: On the left fender (rear of the platform)

WARNING

Engage the parking brake to prevent tractor movement with the engine off.

The clutch WILL NOT hold the tractor in place,even thogh transmission is in gear. Unexpected tractor movement may cause serious injury

2.9929.813.0

20 - P/N 2.9929.813.0
Location: On the left fender (near the hand-brake)

https://truckmanualshub.com/

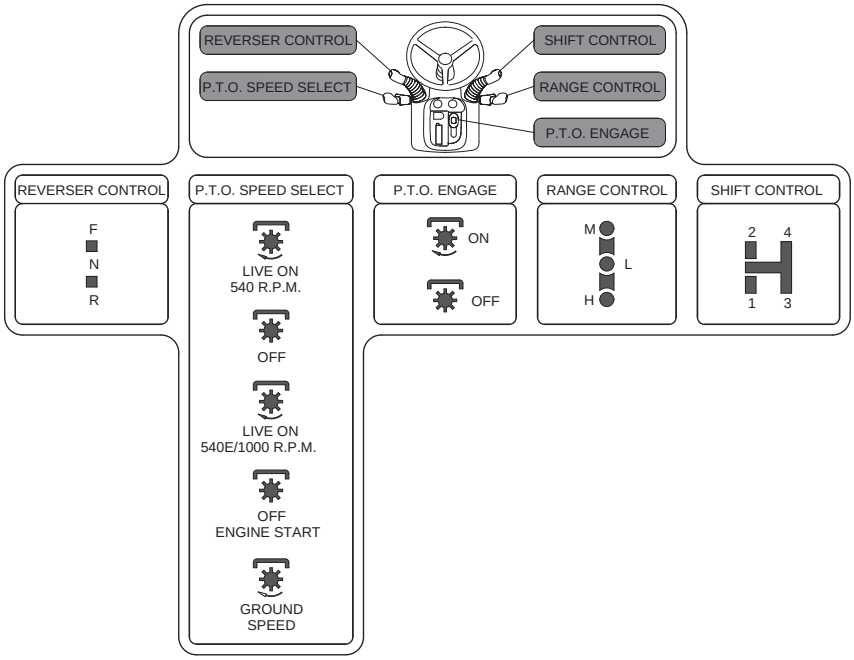

19 - P/N 0.013.7539.0
Location: On top of the top of transmission tunnel

WARNING: DO NOT REMOVE OR OBSCURE DANGER, WARNING, CAUTION OR INSTRUCTION DECALS. REPLACE ANY DANGER, WARNING, CAUTION OR INSTRUCTION DECALS THAT ARE NOT READABLE OR ARE MISSING. REPLACEMENT DECALS ARE AVAILABLE FROM YOUR DEALER IN THE EVENT OF LOSS OR DAMAGE. THE ACTUAL LOCATION AND ORDERING CODE OF THESE SAFETY DECALS IS ILLUSTRATED AT THE END OF THIS SECTION.
WHEN YOU REPLACE A PART THAT CARRIES A SAFETY LABEL, MAKE SURE THAT THE SAME LABEL IS APPLIED TO THE NEW PART. DO NOT USE FUEL OR SOLVENTS ETC. TO CLEAN SAFETY LABELS. USE A CLEAN CLOTH DAMPED IN SOAPY WATER.

https://truckmanualshub.com/

International symbols (Part. 1)

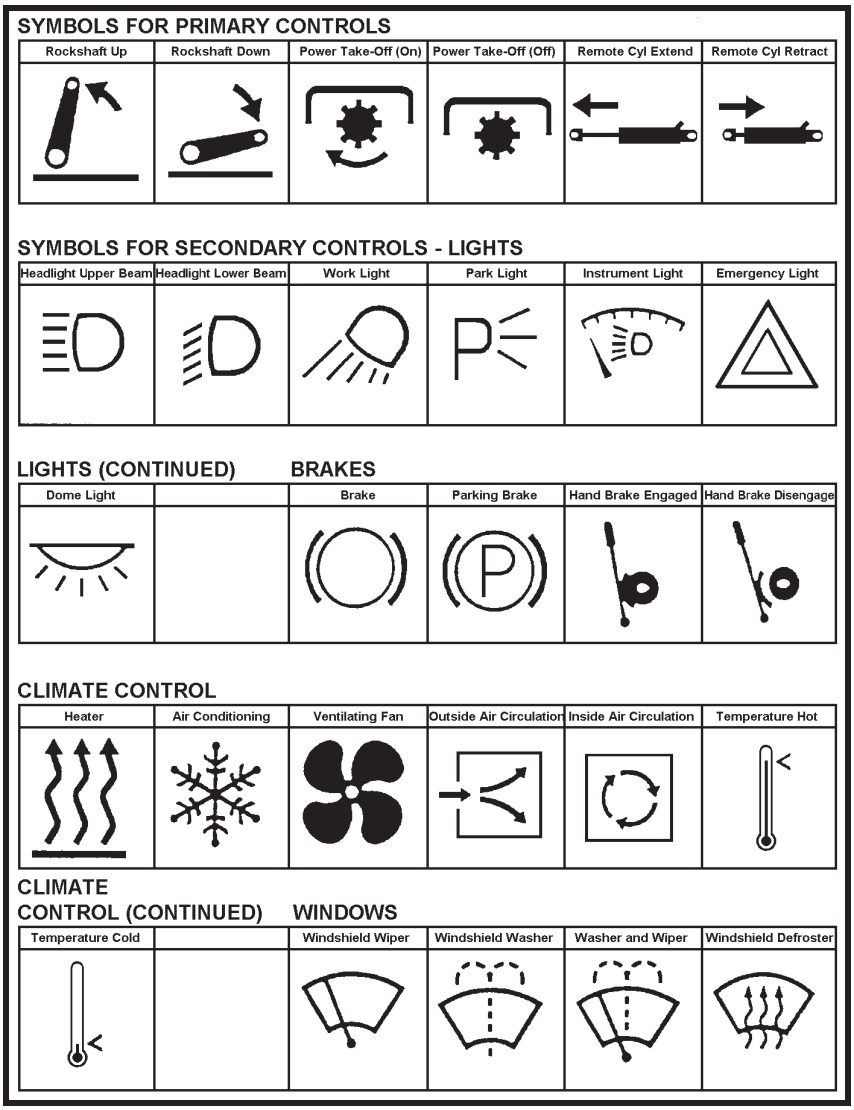

https://truckmanualshub.com/

International symbols (Part. 2)

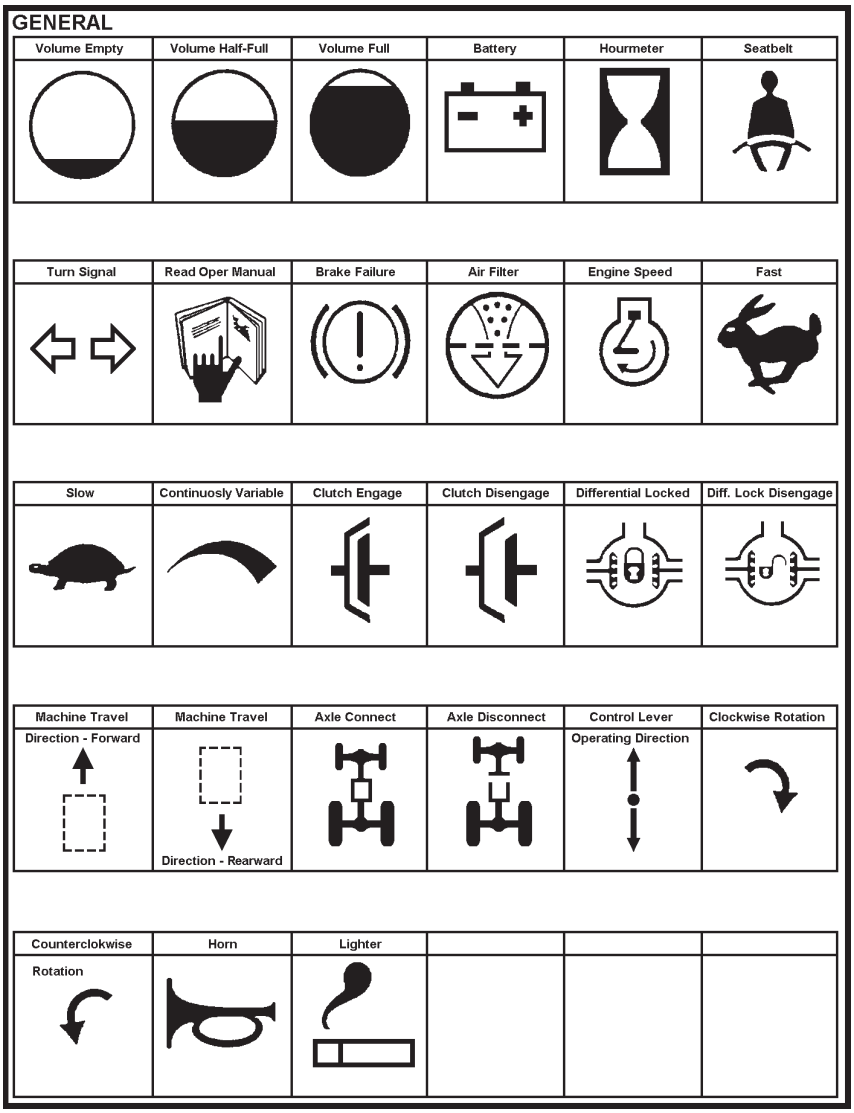

https://truckmanualshub.com/

International symbols (Part. 3)

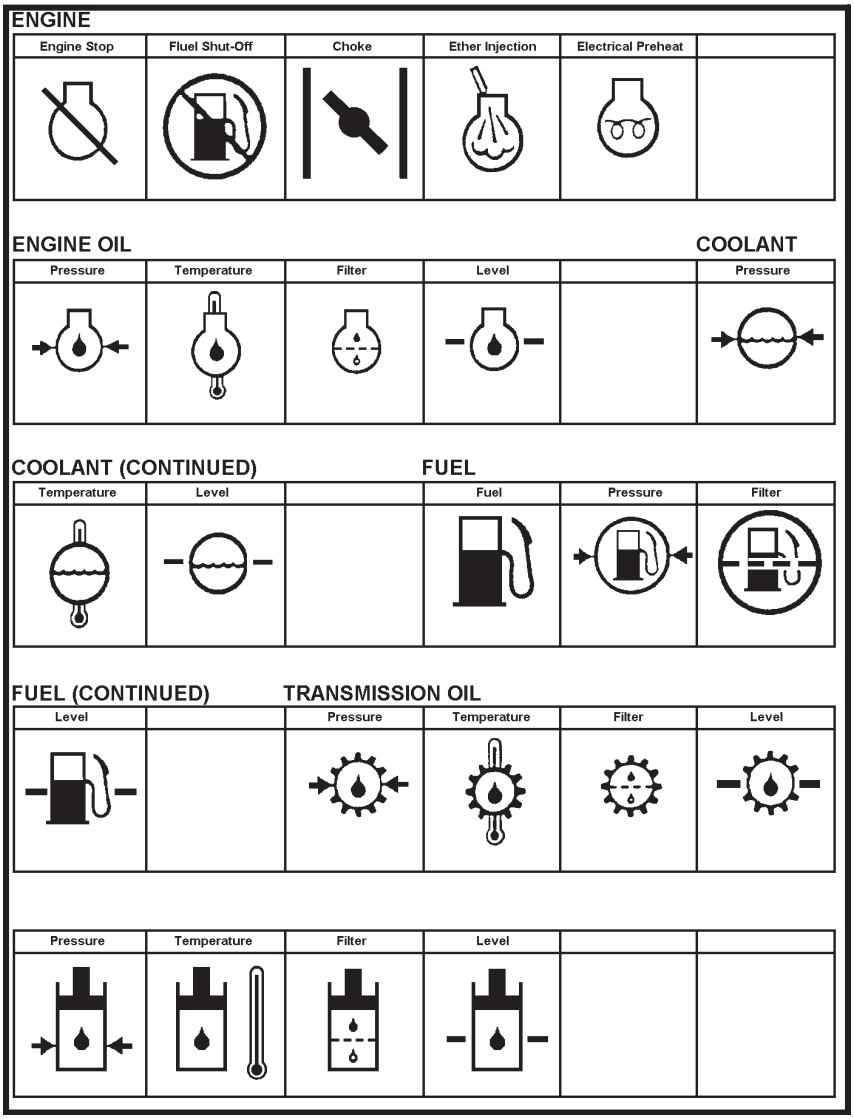

https://truckmanualshub.com/

Metric conversion

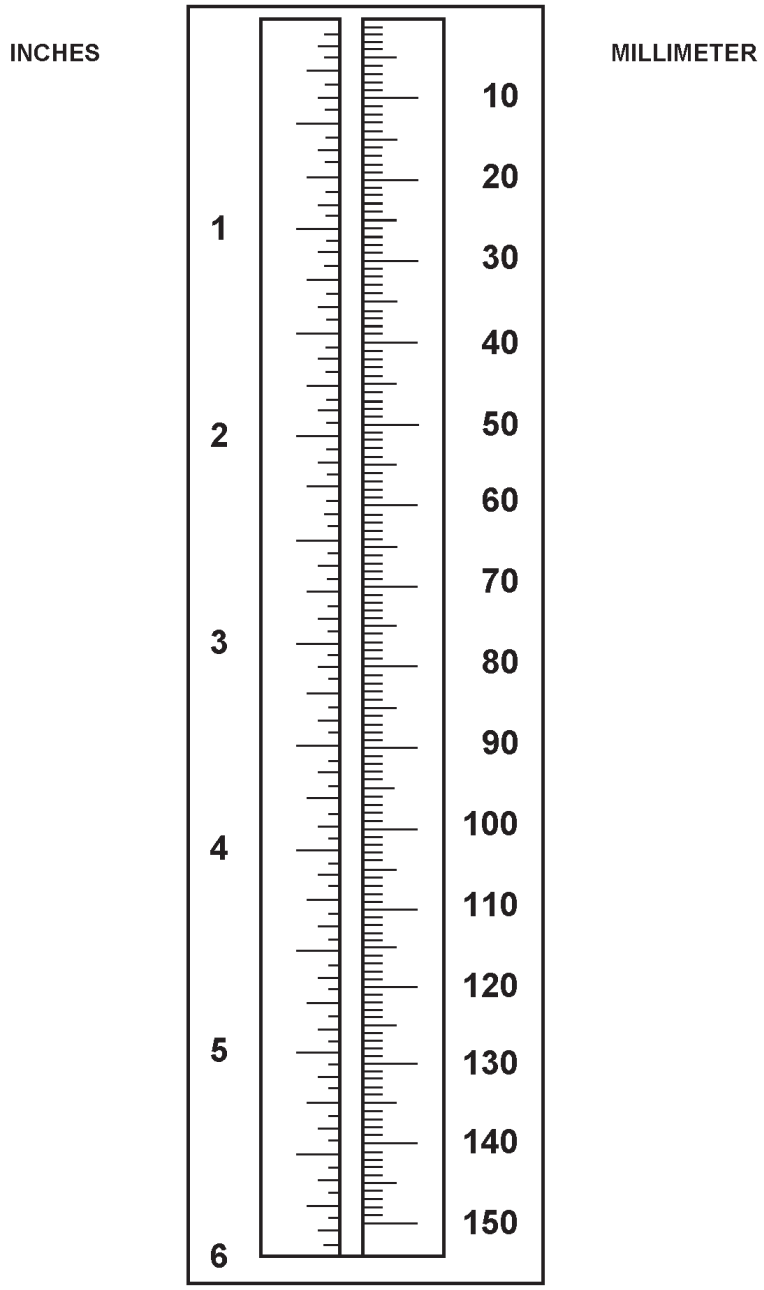

https://truckmanualshub.com/

Conversion tables

Area	Multiply by
mm^2 to in^2	0.0015
in^2 to mm^2	645.16
m^2 to ft^2	10.764
ft^2 to m^2	0.0929
ha to acre	2.4711
acre to ha	0.4047

Capacity	**Multiply by**
Ml to fluid oz	0.0351
fluid oz to ml	28.413
litre to Imp. gal	0.2200
Imp. gal to litre	4.5640
litre to US gal	0.2640
US gal to litre	3.7850
Imp. gal to US gal	1.2010
US gal to Imp gal	0.8330
litre to US qts	1.0567

Length	**Multiply by**
mm to in	0.0394
in to mm	25.400
m to ft	3.2808
ft to m	0.3048
km to mile	0.6214
mile to km	1.6093

Power	**Multiply by**
ps to hp	0.9863
hp to ps	1.0139
kW to hp	1.3410
hp to kW	0.7457

https://truckmanualshub.com/

Pressure . . . . . Multiply by

Bar to psi 14.504
Psi to bar 0.0690

Speed. . . . . Multiply by

km/hr to mph 0.6214
mph to km/hr 1.6093

Torque . . . . . Multiply by

Nm to lbf ft 0.738
lbf ft to Nm 1.356
Kgm to Nm 9.810
Nm to Kgm 0.102

Volume . . . . . Multiply by

mm^3 to in^3 . . . . . 0.6102
in^3 to mm^3 . . . . . 163.87
m^3 to ft^3 . . . . . 35.315
ft^3 to m^3 . . . . . 0.0283

Weight . . . . . Multiply by

gram to oz 0.3530
oz to gram 28.350
kg to lb 2.2046
lb to kg 0.4536
kg to ton 0.0010
ton to kg 1016.1
tonne to ton 0.9842
ton to tonne 1.0160

Temperature

°C to °F. . . . . 1.8 x °C + 32
°F to °C . . . . . (°F - 32) 1.8

https://truckmanualshub.com/

Note

https://truckmanualshub.com/

SECTION 2 - Replacement parts

The use of ORIGINAL PARTS will ensure that the perfect operating efficiency of your tractor is maintained and that operating costs are kept to a minimum.
When ordering replacement parts, please supply the following information:

1 - Tractor serial number and engine serial number
(in the case of engine parts).
2 - Part name and code number.

Tractor serial number

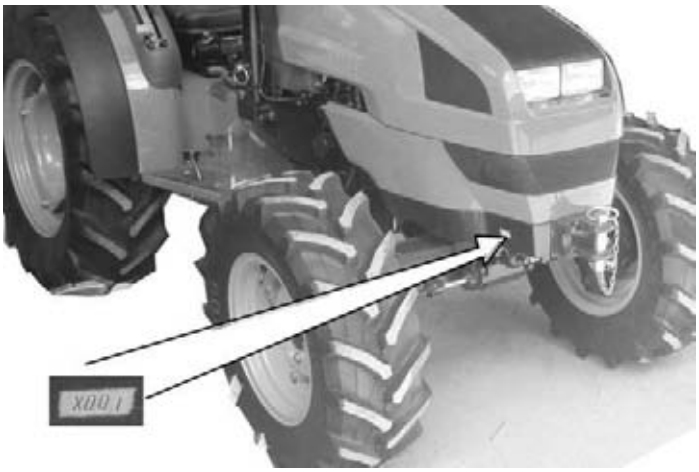

The tractor serial number is stamped on the right side of the front support.

Tractor identification data plate (located on the right under the instrument panel).

https://truckmanualshub.com/

Engine serial number

The engine serial number is stamped on the plate located on top of the engine

Tractor identification plate

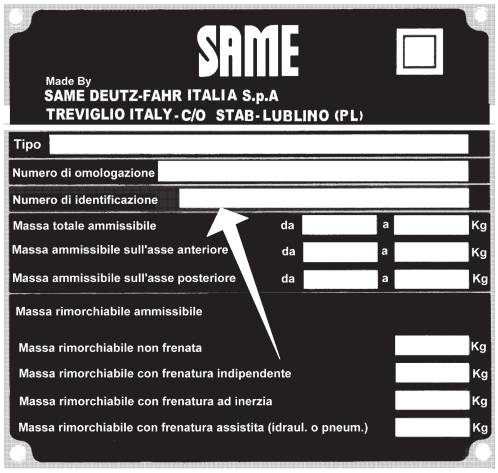

Identification data plate

https://truckmanualshub.com/

Original replacement parts

This use and maintenance manual covers all the models in the ***SOLARIS*** range.

The models in this range are all very similar and have many parts in common.

Model
SOLARIS 35
SOLARIS 45
SOLARIS 55

Your authorized SAME dealer is obliged to provide all the Technical Assistance necessary and to offer you technical support through his workshop and specially trained personnel to ensure that your tractor continues to offer the very best performance.

In order to obtain replacement parts or prompt and efficient technical assistance, the owner must provide the tractor model, the tractor serial number, the engine model and the engine serial number.

Use the space below to record your tractor identification data:

* Tractor model _____
* Tractor serial number _____
* Engine model _____
* Engine serial number _____
* Date of purchase _____
* Dealer's name _____
* Dealer's telephone numbe _____

https://truckmanualshub.com/

CAUTION: BEFORE CARRYING OUT ANY OPERATIONS, READ THE INSTRUCTIONS IN THIS MANUAL. FOLLOW THE INSTRUCTIONS CAREFULLY DURING OPERATION OF THE TRACTOR.

WARNING: DO NOT REMOVE OR OBSCURE DANGER, WARNING, CAUTION OR INSTRUCTION DECALS. REPLACE ANY DANGER, WARNING, CAUTION OR INSTRUCTION DECALS THAT ARE NOT READABLE OR ARE MISSING. REPLACEMENT DECALS ARE AVAILABLE FROM YOUR DEALER IN THE EVENT OF LOSS OR DAMAGE. THE ACTUAL LOCATION AND ORDERING CODE OF THESE SAFETY DECALS IS ILLUSTRATED AT THE END OF THIS SECTION. WHEN YOU REPLACE A PART THAT CARRIES A SAFETY LABEL, MAKE SURE THAT THE SAME LABEL IS APPLIED TO THE NEW PART. DO NOT USE FUEL OR SOLVENTS ETC. TO CLEAN SAFETY LABELS. USE A CLEAN CLOTH DAMPED IN SOAPY WATER.

WARNING: DO NOT ALLOW ANY PASSENGERS ON THE TRACTOR OR TOWED EQUIPMENT.

https://truckmanualshub.com/

SECTION 3 - Use

Checking the tractor prior to starting work

Before starting work, inspect the tractor exterior for signs of oil leaks or other faults.
Make any necessary repairs after having established the cause of the problem.
Clean all mud, straw, leaves, etc. from the tractor.

Refuel as necessary.

CAUTION: BEFORE CARRYING OUT ANY OPERATIONS, READ THE INSTRUCTIONS IN THIS MANUAL. FOLLOW THE INSTRUCTIONS CAREFULLY DURING OPERATION OF THE TRACTOR.

CAUTION: DURING TRACTOR REFUELING, ALWAYS TURN THE ENGINE OFF AND CLEAN ANY FUEL SPILLED ON THE TRACTOR.

CAUTION: WITH A COLD ENGINE YOU MAY NOTICE ABNORMAL COMBUSTION. THIS SHOULD CLEAR UP ONCE THE ENGINE HAS REACHED NORMAL OPERATING TEMPERATURE.

https://truckmanualshub.com/

Refuelling

Proceed as follows to refuel:
CAUTION! Do NOT remove the cap from the supplementary fuel tank (on the left of the tractor) if you can still see diesel fuel in the round level window at the top of the tank.

- Refuelling the supplementary fuel tank

- Only fill the supplementary tank if the fuel level drops below the level window **A**. Remove the filler cap **B** and fill the tank with diesel fuel.
- Replace the filler cap and screw on securely.

Total volume of diesel fuel:
15 litres (3.96 U.S. gal).

- Refuelling the main fuel tank
Always fill the supplementary fuel tank before you fill the main fuel tank.

- Remove the filler cap and fill the tank with diesel fuel.
- Replace the filler cap.

main fuel tank capacity 30 litres (7.92 U.S. gal)

https://truckmanualshub.com/

Checking the engine oil level

This should be done with tractor standing on level ground and the engine switched off.

Pull the dipstick out, clean it, reinsert fully and then pull it out again to read the level.

If necessary, top up the engine oil through the oil filler.

WARNING: DO NOT STAND, OR ALLOW ANYONE ELSE TO STAND, BETWEEN THE TRACTOR AND IMPLEMENT UNLESS THE ENGINE IS TURNED OFF AND THE PARKING BRAKE IS ENGAGED, ONE TRANSMISSION GEAR IS ENGAGED, THE KEY IS REMOVED, AND ALL ATTACHMENTS OR IMPLEMENTS ARE LOWERED TO THE GROUND.

CAUTION: NEVER LEAVE YOUR TRACTOR WITH ENGINE RUNNING, IF NOT STRICTLY NECESSARY. IN THIS CASE PUT ALL GEAR LEVERS IN "NEUTRAL" AND PULL FULLY THE HAND-BRAKE LEVER.

WARNING: AN OPERATOR SHOULD NOT USE ALCOHOL OR DRUGS WHICH CAN AFFECT HIS ALERTNESS OR CO-ORDINATION. AN OPERATOR ON PRESCRIPTION OR 'OVER THE COUNTER' DRUGS NEEDS MEDICAL ADVICE ON WHETHER OR NOT HE OR SHE CAN SAFELY OPERATE MACHINES.

https://truckmanualshub.com/

Access to the driving position

Access to the cab is by large non-slip steps. A convenient handle ensures easy access to the driving seat.

DANGER: CONTACT BETWEEN THE TRACTOR OR ATTACHED IMPLEMENTS AND HIGH-TENSION ELECTRICAL LINES MAY CAUSE DEATH. IN CASE OF CONTACT WITH HIGH-TENSION ELECTRICAL LINES, DO NOT GET DOWN FROM THE DRIVING POSITION, BUT MANOEUVRE THE TRACTOR AND/OR IMPLEMENT TO ELIMINATE THE CONTACT AND DRIVE AWAY TO A SAFE DISTANCE FROM THE ELECTRICAL LINE.

CAUTION: ALWAYS RESPECT THE NATIONAL RULES AND THE ROADWAY LEGISLATION.

CAUTION: ALWAYS WEAR CLOTHING SUITABLE FOR THE TYPE OF WORK TO BE PERFORMED. IF NECESSARY, USE HEARING PROTECTION PLUGS AND WEAR EYE PROTECTION.

https://truckmanualshub.com/

Lights' switch

The lights, direction indicators and horn switches are mounted on a lever located on the left of the steering column under the steering wheel.

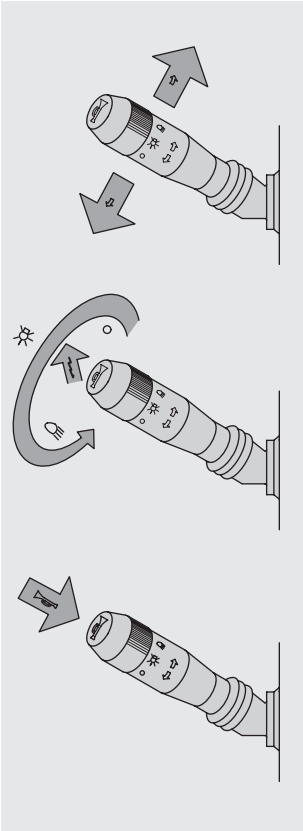

Move the control lever forward to turn on the right direction indicator.
Pull the control lever backward to turn on the left direction indicator.

The control lever knob has three positions for lights control.

1st Position - lights off and head lamp flashing occurs by pulling the lever upwards.

2nd Position - side lights on. Headlamps flash each time the lever is pulled upwards.

3rd Position - Dipped headlamp beams on. Pull the lever towards the steering wheel to change to full beams and vice-versa.

Warning horn: the warning horn sounds by pressing the lever axially.

CAUTION: CAREFULLY READ ALL SAFETY INSTRUCTIONS CONTAINED IN THE OPERATING AND MAINTENANCE HANDBOOK AND FOLLOW THE INSTRUCTIONS LISTED ON THE TRACTOR'S DECALS.

WARNING: DO NOT REMOVE RADIATOR CAP WHILE ENGINE IS HOT. RADIATOR IS PRESSURIZED AND IF OPENED WHILE HOT, STEAM AND BOILING LIQUID WILL BE SPRAYED OUT, WHICH MAY INJURY YOU AND OTHERS WHICH MAY BE CLOSE BY. THERE CAN ALSO BE A EXCESSIVE AMOUNT OF COOLANT LOSS.

https://truckmanualshub.com/

Instrument panel

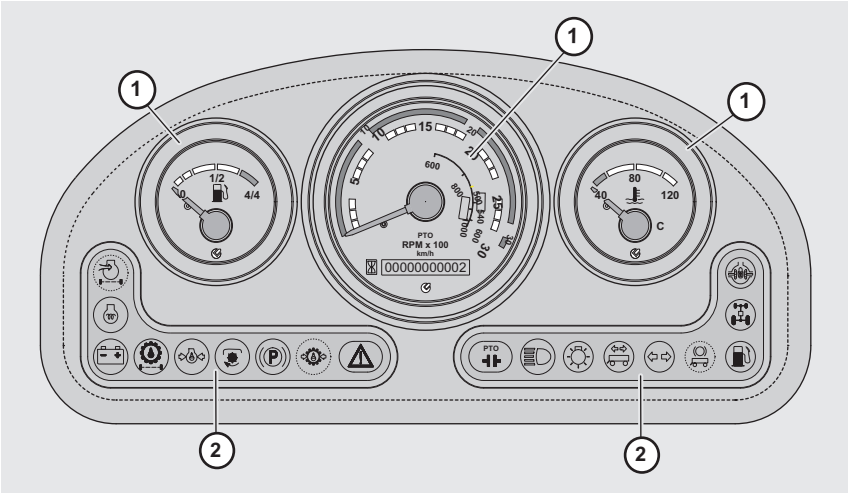

Instrument panel for tractors with cab
1 - Indicators
2 - Indicator lights panel

The instrument panel provides all the information required to control the tractor and monitor productivity.
The instruments are arranged in two groups:

- **Analogue dials and gauges:** providing information at a glance about tractor operation
- **Instrument panel lights:** providing information about the operating status of the tractor systems.

DANGER: TAKE CARE NOT TO CAUSE DANGEROUS SPARKS WHEN WORKING IN PROXIMITY TO FUEL DEPOSITS OR OTHER FLAMMABLE MATERIAL.

CAUTION: IT'S IMPORTANT TO RESPECT THE ENVIROMENT AND TO FOLLOW THE ANTI-POLLUTION RULES. ANY FLUID (OIL, FUEL, COOLANT) OR FILTERS AND BATTERIES HAVE TO BE WASTED, BY FOLLOWING THE LOCAL RULES.

https://truckmanualshub.com/

Analogue dials and gauges

Fuel gauge

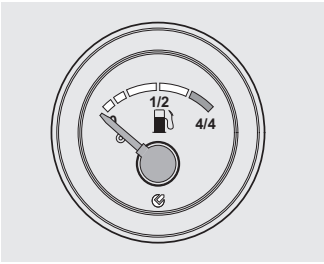

Total fuel capacity is 30+15 litres (3.96 U.S. gal + 7.92 U.S. gal) (including 15 litres (3.96 U.S. gal) in the supplementary tank).
“RESERVE” fuel level is indicated by the needle positioned in the **red part** of the scale and by illumination of the low fuel warning light on the indicator lights panel.

CAUTION: DO NOT OPERATATE ENGINE UNTIL FUEL TANK IS ENPTY. IF ENGINE IS RUN OUT OF FUEL, IT WILL BECOME NECESSARY TO BLEED AIR FROM FUEL SYSTEM.

Engine temperature gauge

Gauge indicates engine coolant temperature of water-cooled engine.

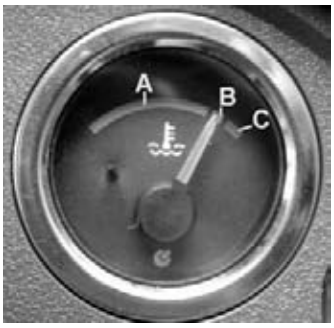

- end of green area = 100°C (212 °F)

- yellow area = 105°C (221 °F)
The engine can continue working continuously until the general warning light comes on.

- start of red area = over 105°C (221 °F)
Switch the engine off immediately.

WARNING: IF THE NEEDLE ENTERS THE RED SECTION, SWITCH OFF THE ENGINE IMMEDIATELY.
IF THE NEEDLE IS IN THE BLUE SECTION, THE TEMPERATURE IS TOO LOW; WAIT UNTIL THE NEEDLE ENTERS THE WHITE SECTION BEFORE PUTTING THE ENGINE UNDER LOAD.

https://truckmanualshub.com/

Tachometer

The outer scale (blue background) shows tractor ground speed with the highest gear (4aH) engaged.

The middle scale (white background) shows engine speed in rpm.

The inner scale (white background) shows the speed of the 540-1000 PTO.

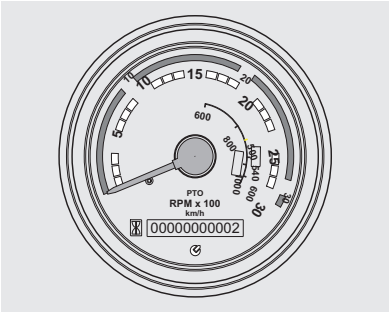

The counter indicates the number of tractor operating hours. The work hour is defined by the engine speed:
1 hour = 150,000 engine revolutions.

RPM x 100
km/h
00000000002

CAUTION: DO NOT PERMIT OTHERS TO RIDE ON THE TRACTOR OR THE IMPLEMENT UNLESS AN APPROVED PASSENGER SEAT HAS BEEN INSTALLED OR MADE AVAILABLE AS AN OPTION BY THE MANUFACTURE(S).

DANGER: DO NOT ALLOW PASSENGERS ON THE TRACTOR UNLESS IT IS EQUIPPED WITH A SEAT SPECIFICALLY FOR THIS PURPOSE. CARRYING PASSENGERS IN AN IRREGULAR FASHION CAN OBSTRUCT THE DRIVER'S VIEW AND CONSEQUENTLY JEOPARDISE SAFETY.

CAUTION: WHEN TRAVELLING ON PUBLIC ROADS, ALWAYS KEEP THE REQUIRED SAFETY LIGHTS TURNED ON. IF NECESSARY, EQUIP THE TRACTOR WITH REFLECTING BANDS OR OTHER REFLECTING DEVICES. DO NOT USE THE WORKING LIGHTS ON PUBLIC ROADS.

https://truckmanualshub.com/

Pilot lights'

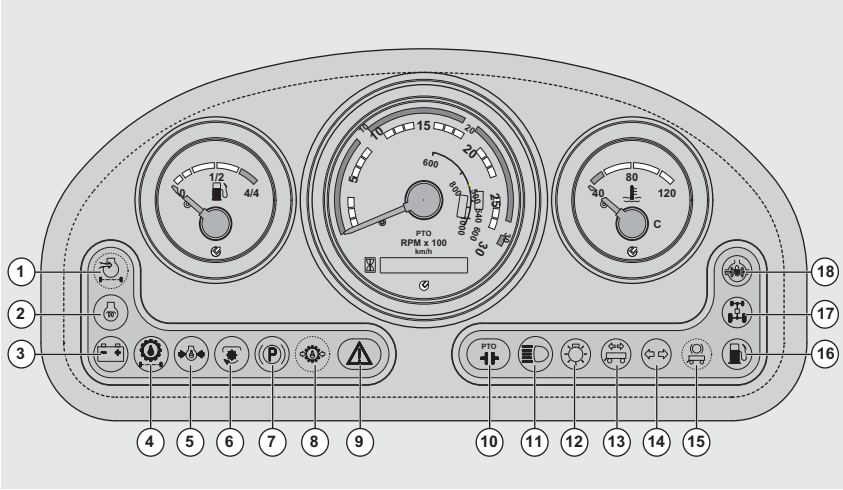

1 - Air filter warning pilot lamp - RED
ON - Air filter restricted, clean or replace it.

2 - Cold start activation pilot lamp - ORANGE
Light comes on below 10°C (50°F) - OFF - Engine can be started.

3 - Alternator charge pilot lamp - RED
ON - Key on position No. 1 OFF - After engine starting
ON DURING ENGINE RUNNING: make sure the alternator drive belt is not broken; otherwise, consult one of our Authorized Service Centres

4 - Hydraulic services oil filter warning pilot lamp - RED
ON - Replace oil filters.

5 - Engine oil pressure pilot lamp - RED
ON - Key on position No. 1 OFF - After engine starting.
ON WHEN ENGINE IS RUNNING: switch the engine off immediately and contact your Service Centre.

WARNING: IF THE OIL PRESSURE WARNING LIGHT STAYS ON WHEN THE ENGINE IS RUNNING, SWITCH OFF THE ENGINE IMMEDIATELY.

WARNING: IF THE TRACTOR BEGINS TO TURNOVER, HOLD ON TO THE STEERING WHEEL. DO NOT ATTEMPT TO JUMP CLEAR.

https://truckmanualshub.com/

6 - Lamp indicating engagement of PTO speed - YELLOW
ON - Indicates rotation of PTO speed shaft .

7 - Parking brake pilot lamp - RED
ON - Parking brake is applied.

8 - Hydraulic services circuit pressure pilot lamp - RED
ON - Signals a pressure drop inside the hydraulic services' circuit.

9 - Warning lamp - RED
ON WHEN ENGINE IS RUNNING: switch the engine off immediately and contact your Service Centre.

10 - Rear PTO clutch indicator - RED
LIT – Shows that the rear PTO clutch is disengaged.
When the PTO clutch is engaged, the splined drive could start to turn.

11 - Main beam warning light - BLUE
ON - Indicates that the main beam headlights are on.

12 - Lighting on - GREEN
ON - Side lights and driving beams are on.

13 - First trailer direction indicator and hazard lights pilot lamp - GREEN
Flashes to indicate either trailer direction and emergency stop.

14 - Tractor direction indicator and hazard lights pilot lamp - GREEN
Flashes to indicate either the direction of tractor and emergency stop.

15 - Parking brake of trailer pilot lamp - RED
ON - Parking brake is applied.

16 - Fuel reserve pilot lamp - YELLOW
ON - Fuel is running out.

17 - Front-wheel drive pilot lamp - ORANGE
ON - Signals the use of front-wheel drive.

18 - Differential lock engagement pilot lamp - ORANGE
ON - Differential locks are engaged, steering is prevented.

CAUTION: BEFORE STARTING THE TRACTOR, CHECK ITS CONDITION FOR OPERATING SAFETLY ON THE PUBLIC HIGHWAY.

https://truckmanualshub.com/

Warning light

If this dashboard warning light comes on while the engine is running, switch the engine off immediately.

1- No charge from the alternator
2- Insufficient oil pressure
3- Hand brake applied

- A few moments after starting the engine (if the handbrake is not applied) this light will come on if one of the conditions 1-2 is met; or if the coolant temperature rises above the set limit.

Front/rear differential lock button

Press the button to lock the front and rear differentials.
A pilot lamp incorporated in the button signals the locking; to unlock press the button once again.

Emergency flashers control

Push the red push-button to activate them and the direction indicators will flash simultaneously. The push-button is equipped with a pilot lamp which can be replaced by unscrewing the push-button.

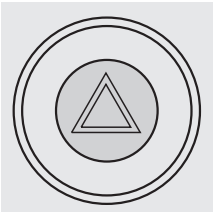

Hand accelerator

Push the hand accelerator (located to the right of the steering wheel) forward to decelerate, or pull it back to accelerate.

https://truckmanualshub.com/

Ignition switch

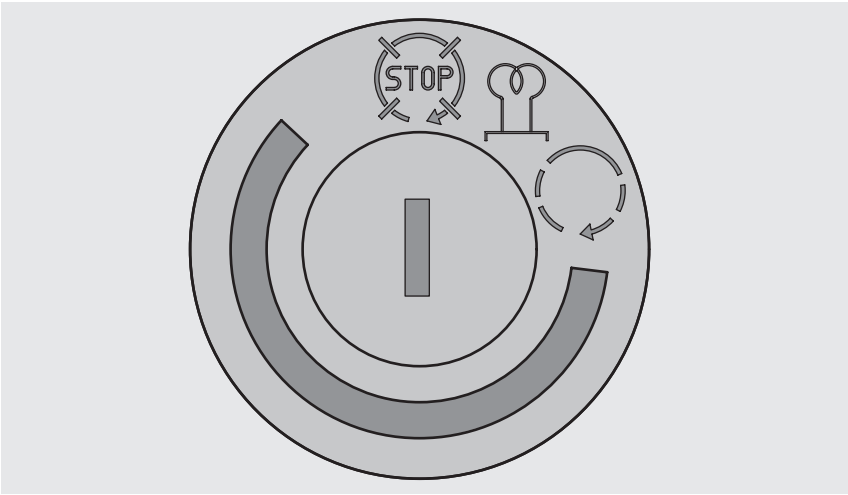

Ignition switch

Controls and checkover instruments

Electrical system deenergized - key removable;

Active electric circuit: - Lamps indicating operation of the alternator and low engine oil pressure light up on the instrument panel.

Engine starting

WARNING: BEFORE STARTING THE ENGINE MAKE SURE THERE IS PLENTY OF VENTILATION. DO NOT OPERATE THE ENGINE IN A CLOSED BUILDING. THE EXHAUST FUMES MAY CAUSE ASPHYXIATION.

https://truckmanualshub.com/

Engine

Precautions for optimum engine performance

- Use the prescribed engine oil and always verify that the oil pressure pilot lamp is operating.
- Use clean fuel free of impurities and water.
- With the engine running always make sure that the water temperature is correct.
- Check the exhaust gases to see if the engine is in good working condition.
- Regularly perform the maintenance operations as indicated in the Maintenance Schedule Chart.

- first 50 work hours
The tractor is delivered to the customer ready for use under full power.

Nevertheless, **FOR THE FIRST 50 HOURS' RUNNING**, it is recommended that the tractor not be run at maximum load for long periods so as to enable the piston rings and the various moving parts to bed in properly.

During this period we strongly advise to refrain from running the engine at low r.p.m.s or high r.p.m.s for a long time when in neutral, as either situation is harmful and would result in engine components becoming bedded in such a way that **MAXIMUM PERFORMANCE** will not be guaranteed.

IMPORTANT: THE SAFETY SEAL ON THE ENGINE GOVERNOR IS APPLIED BY THE MANUFACTURER AND ENSURES THAT THE POWER OUTPUT OF YOUR TRACTOR DOES NOT EXCEED THE DECLARED AND APPROVED VALUE.ANY TAMPERING WITH THIS SEAL ON THE GOVERNOR WILL VOID THE WARRANTY FOR THE ENTIRE TRACTOR WITH IMMEDIATE EFFECT.

DANGER: DO NOT USE AEROSOL CANS OF STARTING AID ON TRACTORS WITH THE THERMOSTART CONNECTED TO THE ELECTRICAL SYSTEM. ETHER COMBINED WITH THERMOSTART CAN CAUSE AN EXPLOSION WITH DAMAGE TO ENGINE, PERSONAL INJURY, OR BOTH.

https://truckmanualshub.com/

For a good running-in, the following rules should be observed:

- whenever the engine is started up, it should be left idling for a few minutes;
- avoid using the engine continuously at low or at high idling speeds with light loads;
- during the first 20 hours' work do not use the engine with excessively high loads; use tractor under full load for gradually longer periods;
- before stopping the engine, let it run for a few minutes at low idling speed;
- the maintenance operations and checks listed below should be performed most conscientiously:

during the initial work phase	engine oil level:	*check frequently*
at 50 hours	change engine oil and replace oil filter:	*use recommended oil only; before fitting the filter, oil the sealing ring*

WARNING: DIESEL ENGINE EXHAUST AND SOME OF ITS CONSTITUENTS ARE KNOWN TO SOME STATES TO CAUSE CANCER, BIRTH DEFECTS AND OTHER REPRODUCTIVE HARM.

https://truckmanualshub.com/

Starting the engine

Before starting the engine through the ignition key:

- Switch off all battery-operated equipment (such as headlamps,direction indicators, electric fan, windshield wiper, heating systems).
- Depress the clutch pedal.
- Set the P.T.O. clutch selector to **ENGINE START - OFF** position, (see the label on page 41).
  IMPORTANT - Under certain operating conditions it may not be possible to set the PTO clutch selector to **ENGINE START - OFF** position, the tractor can be started by moving the PTO clutch lever to disengaged position (see the figure on page 33).
- Move the shuttle lever to neutral position.

Insert the key and turn to N **1**,making sure that the engine oil pressure and alternator lights come on.

Turn the key to the start N **2**, and accelerate as appropriate.

When engine has started, release the key, which will automatically return to position N **1**.

If engine does not start, repeat the operation when starter motor has stopped (after 10-15 seconds) a maximum of 3-4 times.

In particularly cold climates, the tractor should be equipped with thermostarter
In this case the ignition switch is provided with the thermostarter preheating position ( ), therefore turn the ignition key to this position and wait until the related pilot lamp lights up.

WARNING: LIQUID COOLING SYSTEMS BUILD UP PRESSURE AS THE ENGINE GETS HOT. BEFORE REMOVING THE RADIATOR CAP, STOP THE ENGINE AND LET THE SYSTEM COOL.
CHECK THE ENGINE COOLING SYSTEM AND ADD COOLANT AS REQUIRED.

https://truckmanualshub.com/

Electronic control of engine cooling system

The engine cooling system is controlled by an electronic control unit.

The control unit uses a temperature sensor to switch the cooling fan on when the engine reaches 92°C and to switch it back off again when temperature drops below 90°C.

Important: The operator should be able to hear the fan working.

Engine temperature control unit

Engine cooling fan

CAUTION: BY LOW TEMPERATURE, AFTER STARTING KEEP THE ENGINE NOT ABOVE 1800 REV/MIN, UNTIL IT HAS REACHED THE NORMAL WORKING TEMPERATURE.

https://truckmanualshub.com/

Engine shut down

- If engine is exceptionally hot, allow it to idle for a few minutes.

- Put the gear lever in neutral; in the case of tractors with an electronic regulator, turn the ignition key to position STOP.
  In the case of tractors with mechanical accelerators, operate the engine stop command until engine comes to a stop, then turn the ignition key to position STOP.

  The engine stop command has a self-lock function; to unlock before starting the engine, pull the lever located below.

Driving position.

DANGER: NEVER START THE ENGINE BY SHORT-CIRCUITING THE STARTER ENGINE'S TERMINALS. THIS MAY CAUSE SUDDEN TAKE-OFFS WHICH COULD BE VERY DANGEROUS TO THE OPERATOR.

https://truckmanualshub.com/

Cold starting

Diesel engines are to be refuelled exclusively with diesel fuel of the type normally commercially available and which conforms to the requirements of the applicable standards.

In winter, when the temperature falls below 0° C (32°F), it is essential to use only winter diesel fuel, which allows the engine to run correctly at temperatures down to –20°C (-4°F).
If summer diesel fuel is used at low temperatures, the molecules of paraffin contained in the fuel will be deposited on the filters which will therefore become clogged and prevent the fuel from arriving at the injection pump.

In certain countries, diesel fuel containing special additives is available which are suitable for temperatures even below –20°C (-4°F).
If winter diesel fuel is not available (or if it is available but the temperature is below –20°C (-4°F) kerosene (paraffin oil) may be added in the percentages indicated in the diagram.

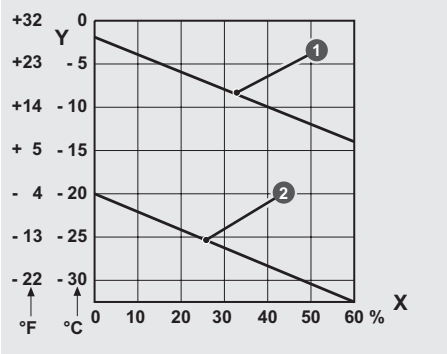

1 = summer diesel fuel
2 = winter diesel fuel
X = % of kerosene to be added
Y = external temperature in °C.

Pour the kerosene into the tank first and then the fuel, only mixing the two liquids in the fuel tank.

For further information, contact your Dealer or fuel supplier.

DANGER: START THE ENGINE, WITH THE STARTER KEY, FROM THE OPERATOR'S SEAT ONLY. DO NOT ATTEMPT TO START THE ENGINE BY SHORTING ACROSS THE STARTER TERMINALS. THE MACHINE WILL START IN GEAR IF THE NEUTRAL START CIRCUIT IS BYPASSED. THIS COULD CAUSE SERIOUS INJURY OR DEATH TO ANYONE IN THE VICINITY OF THE TRACTOR. ENSURE THAT THE ENGINE STARTER SOLENOID COVER IS ALWAYS IN POSITON.

https://truckmanualshub.com/

Emergency starting through auxiliary battery

N.B.: The auxiliary battery might also be on another tractor; in any case, it is essential that it has the same rated voltage and the same number of elements as the discharged battery.

Make sure the two vehicles are not in contact.
Disconnect all battery-fed equipment through the proper controlling devices.
Shift into neutral position.
Make sure the discharged battery is properly earthed (grounded), its terminals are well tightened and the elctrolyte level is correct.

The following procedure should be observed:

- Connect both batteries as shown in figure.
- If the auxiliary battery is on another tractor, it is first necessary to start this tractor by setting the engine to 1/4th of its idling speed.
- Start the tractor by means of the ignition key throughout the usual procedure.

If the engine does not start the first time, repeat same operation after 15 to 20 seconds, i.e. with stationary starter, up to 3-4 times. Should the engine not start once again, determine it is not due to engine's failure.

DANGER: MAKE SURE YOU CONNECT THE BATTERY TERMINALS CORRECTLY. DANGER OF SHORT-CIRCUIT!

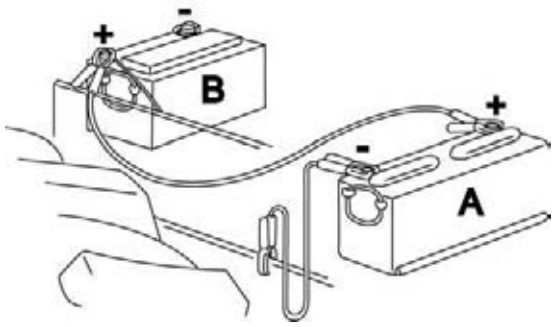

Battery connection through the suitable connecting cables.
A - Auxiliary battery
B - Discharged battery

https://truckmanualshub.com/

WARNING: DO NOT DISENGAGE THE CLUTCH OR ATTEMPT TO SHIFT GEAR AFTER YOU HAVE STARTED DOWNHILL.

Turbocharging

- **for 45 - 55 HP**

The turbocharging unit has the function of forcing more air into the cylinders. this in turn proportionally increases the diesel fuel delivery capacity.

The increase in fuel delivery capacity is done to obtain greater engine power.

The turbocharger unit, of extremely simple and rational design, consists of a turbine and a compressor.
The turbine is operated by the exhaust gases from the engine (this way, part of the gases' kinetic energy which would otherwise be wasted is recovered). The turbine drives the compressor, which compresses the air aspirated through the filter into the cylinder intake duct.

WARNING

1 - Never race a cold engine.
Run the engine just above idling speed for a minute or two to let the oil warm up progressively (the turbocharger is lubricated by the engine oil) so as to ensure a perfect lubrication of the turbine.

2 - After some hours of heavy work, let the engine idle for a few minutes before stopping it. This is to prevent the turbine from rotating through inertia without sufficient lubrication.
Since the turbocharger rotates at very high speeds, (70.000 to 110.000 r.p.m.) under normal working conditions, even a few seconds of poor lubrication may lead to irreparable damage.

https://truckmanualshub.com/

Turbocharging for 45 - 55HP

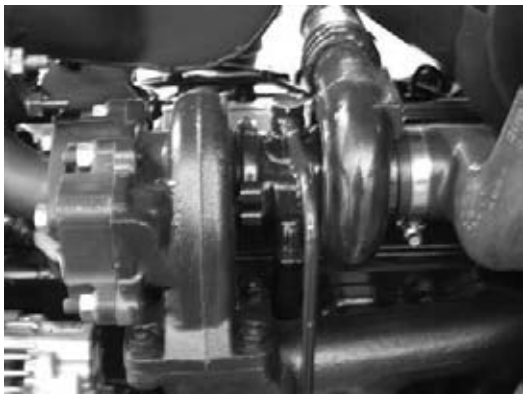

Manual emergency stop

The engine is equipped with a manual emergency stop pushbutton (indicated in the figure).

Press the button in the direction shown by the arrow to shut off the fuel supply and stop the engine in an emergency.

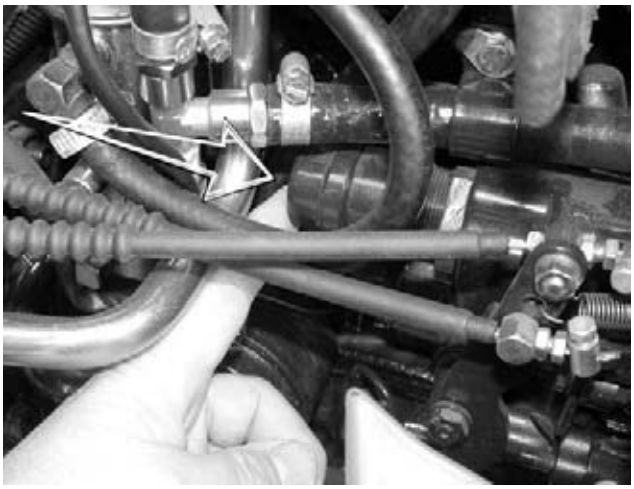

CAUTION: AFTER SOME HOURS OF HEAVY WORK, LET THE ENGINE IDLE FOR A FEW MINUTES BEFORE STOPPING IT. THIS IS TO PREVENT THE TURBINE FROM ROTATING THROUGH INERTIA WITHOUT SUFFICIENT LUBRICATION.

https://truckmanualshub.com/

Adjusting the driver's seat

For this tractor its have been foreseen 2 types of driver's seat

BOSTROM Minibaltic XH2 seat with spring suspension

The driving seat can be adjusted as follows:

- adjusting spring response control, according to the weight of the driver (move the lever **1**, the indicator on the plate **2** will show the greater or lesser sensitivity).
- longitudinal adjustment, the seat slides back and forward to suit the stature and personal preference of the driver (release lever **3**).
- To adjust the height of the seat, pull knob **4** out from the notches, and move it to the right or left to increase or decrease the height of the seat.

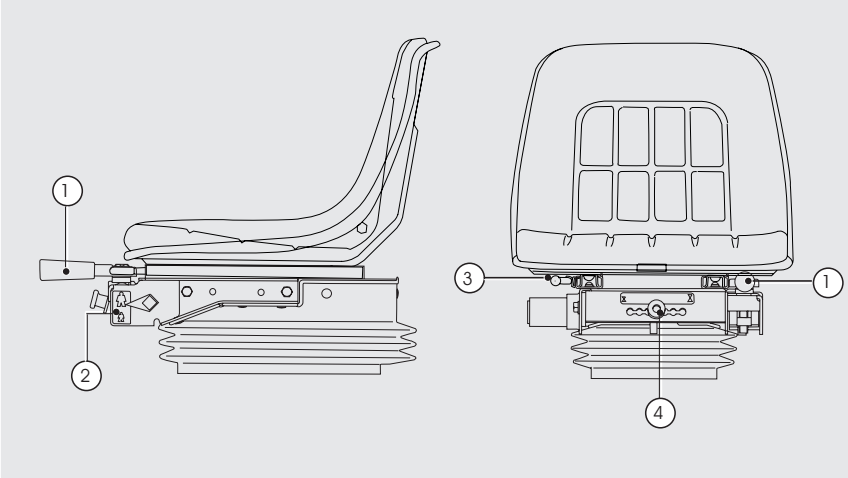

Side and frontal view of seat BOSTROM Minibaltic
1 - Spring suspension setting lever
2 - Plate indicating spring suspension setting
3 - Lever for longitudinal seat adjustment
4 - Height adjustment knob

CAUTION: BEFORE USING THE TRACTOR, TAKE TIME TO FAMILIARISE YOURSELF WITH ALL THE CONTROLS.

https://truckmanualshub.com/

KAB P4 XH2 sprung seat

Questo sedile dispone delle seguenti regolazioni:

- adjusting spring response control, according to the weight of the driver (move the lever **1**, the indicator on the plate **2** will show the greater or lesser sensitivity).
- longitudinal adjustment, the seat slides back and forward to suit the stature and personal preference of the driver (release lever **3**).
- To adjust the height of the seat, pull knob **4** out from the notches, and move it to the right or left to increase or decrease the height of the seat.

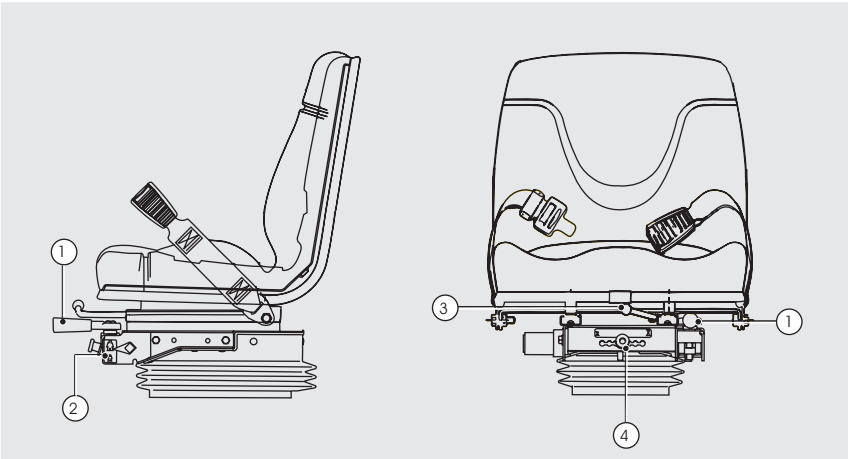

Side and frontal view of seat KAB P4
1 - Spring suspension setting lever
2 - Plate indicating spring suspension setting
3 - Lever for longitudinal seat adjustment
4 - Height adjuster knob

WARNING: A NATURALLY ASPIRATED ENGINE, WHEN WORKING, CAUSES RISK OF SPARKES. IT'S DANGEROUS ON ALL FOREST, BRUSH OR AGRICULTURAL CROP COVERED LAND. KEEP IN MIND THAT YOUR TRACTOR IS NOT EQUIPPED WITH A RATED QUALIFIED SPARK ARRESTER.

https://truckmanualshub.com/

Seat belts
Seat belts, which are a legal requirement in certain countries, are fitted as optional equipment. If your tractor is not originally equipped with seat belts, retrofit seat belt kits can be ordered from our Parts Service. Contact your local Dealer for further information.

To fasten the seat belt, insert the blade **A** into the slot **B**.

To relase the seat belt, press button **C**.

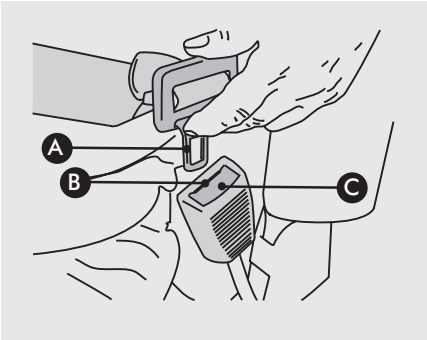

N.B.: Seat belts are fitted as standard equipment when sold in North America.

To adjust the seat belt:

pull end **D** to shorten the belt

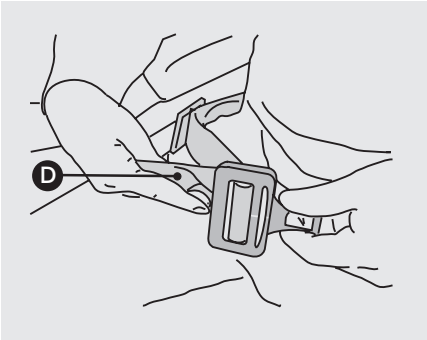

or end **E** to lengthen the belt.

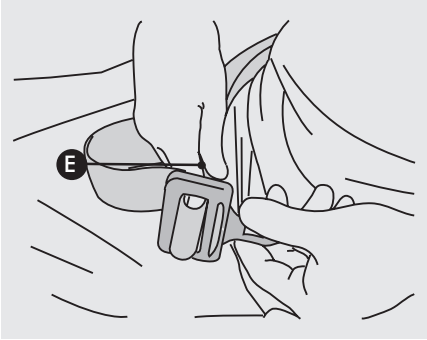

CAUTION: ALWAYS FASTEN YOUR SEAT BELT. THE USE OF A SEAT BELT REDUCES THE RISK OF SERIOUS INJURY IN CASE OF AN ACCIDENT.

https://truckmanualshub.com/

- **Only for cab tractors**

Adjusting the rearview mirrors

For maximum control when performing difficult manoeuvres it is vital that the rearview mirrors are correctly adjusted.
Position the mirror to obtain a clear view of the side of the tractor and the implement from the driver's seat.

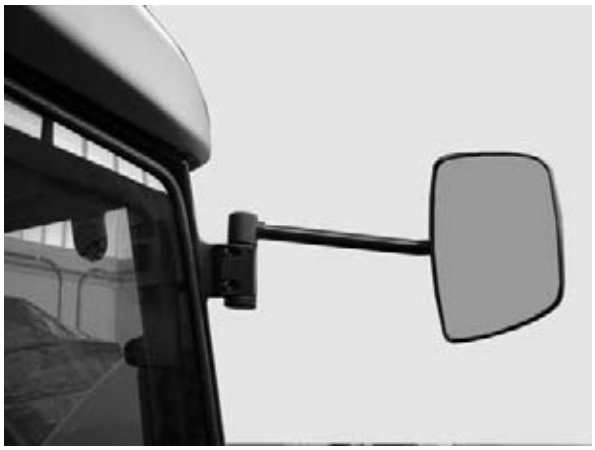

Tilt the mirror manually to obtain the best view from the driver's seat.

Adjust both mirrors in this way.

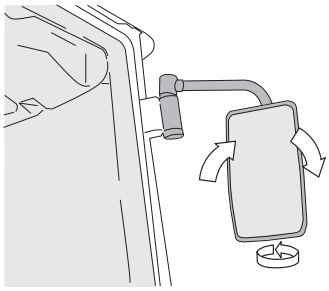

The mirror arms rotate about their pivots and can be turned inwards towards the tractor to reduce the overall width of the vehicle.

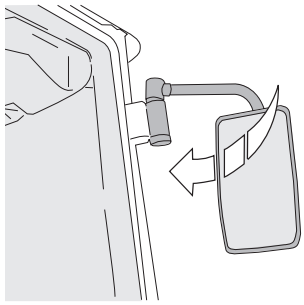

When rotated in towards the tractor, the arms encounter two intermediate rest positions.

https://truckmanualshub.com/

Control pedals

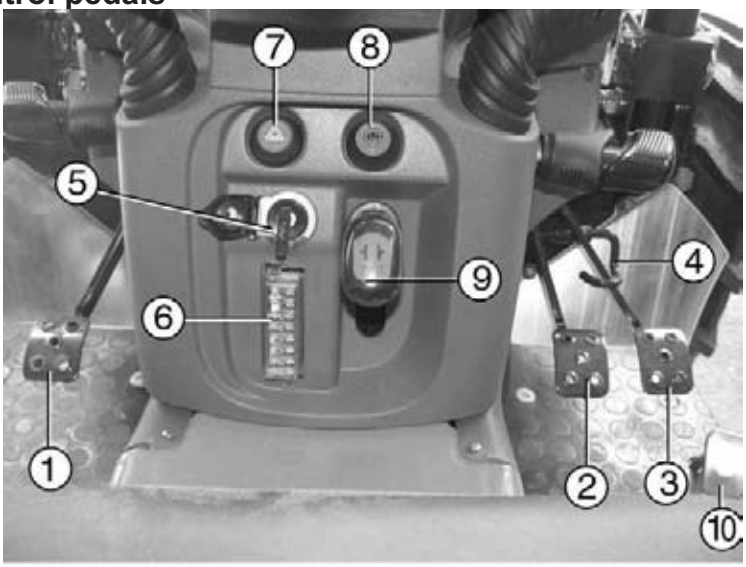

Control pedals
1 - Clutch control pedal
2 - Left brake control pedal
3 - Right brake control pedal
4 - Brake pedals connecting bolt
5 -Ignition switch
6 - Fuse holder box
7 - Hazard warning lights
8 - Diff-lock control push-button switch
9 - P.T.O. clutch control
10 - Accelerator pedal

Clutch control pedal

The clutch is operated by means of the pedal located to the left of the driver's seat.
When disengaging the clutch the pedal must always be fully depressed and the engine r.p.m. reduced.
Other than for short periods such as gear changing the clutch must not be held depressed, always select "NEUTRAL" and engage the clutch.
When engaging the clutch , "IN GEAR", the pedal must be released smoothly and carefully without excessive engine speed to avoid excessive slippage.
After clutch engagement the pedal must be fully released and must not be used as a "foot-rest".
Incorrect clutch operation will result in excessive clutch wear.

CAUTION: DO NOT REST YOUR FOOT ON CLUTCH PEDAL OR PARTIALLY DEPRESS CLUTCH PEDAL. PREMATURE CLUTCH WEAR WILL RESULT.

https://truckmanualshub.com/

CAUTION: DO NOT DISENGAGE THE CLUTCH AND/OR PUT THE GEAR IN "NEUTRAL" AFTER YOU HAVE STARTED DOWNHILL.

CAUTION: AVOID KEEPING THE CLUTCH PEDAL DEPRESSED WHEN THE TRACTOR IS STATIONARY. SELECT NEUTRAL, EVEN WHEN STOPPING FOR BRIEF PERIODS.

Brake pedal

The disc brakes are located on the rear halfshafts before the final drive units and are operated by the relative pedals.

If the latch connecting the two pedals together is released, the right brakes may be operated separately from the left brakes.

WARNING: ON TRAVELLING DOWNHILL FOR A LONG TIME, DO NOT USE CONTINOUSLY THE BRAKES, BUT USE ALSO THE ENGINE BRAKING POWER, BY SHIFTING INTO LOW GEARS.

WARNING: DO NOT USE A SEPARATE BRAKE PEDAL WHEN THE DIFFERENTIAL LOCK IS ENGAGED, AT HIGH SPEED, WHEN TOWING A TRAILER.

CAUTION: INSPECT PERIODICALLY THE BRAKE FLUID LEVEL IN THE TANK. THE BRAKE FLUID TANK MUST BE ALWAYS FULL.

https://truckmanualshub.com/

Handbrake lever

The handbrake operates independently of the service brakes and is applied by pulling up on the handbrake lever.
The handbrake warning light on the instrument panel will illuminate when the handbrake is applied.

CAUTION: APPLY THE PARKING BRAKE AFTER THE ENGINE HAS STOPPED AND BEFORE LEAVING THE TRACTOR.

CAUTION: THE PARKING BRAKE SHOULD ALWAYS BE APPLIED WHEN TRACTOR IS PARKED OR LEFT UNATTENDED.

Accelerator pedal

https://truckmanualshub.com/

Gearbox and P.T.O. clutch

The clutch is the two-disk type.

The two disks, one for the gearbox and one for the P.T.O., are equipped with circular friction lining of organic material.

The controls are completely separate:

– The clutch is engaged by depressing the pedal on the left-hand side of the driver's post.
It should be depressed firmly but carefully, so as to avoid sharp jerks to tractor when releasing it.
The pedal must always be fully depressed to prevent unnecessary wear of the clutch disk.

– The P.T.O. clutch control lever is equipped with a locking ring to prevent accidental operation. To operate the lever, pull the locking ring up towards the knob and move the lever in the required direction. To engage the clutch, move the lever downwards until you feel the tab engage the notch. To disengage the clutch, pull the locking ring up towards the knob to release the tab from the notch and move the lever upwards.

P.T.O. clutch control

- **To engage** the clutch, move the lever downwards.

- **To disengage** the clutch, move the lever upwards.

WARNING: BRAKE PEDALS MUST ALWAYS BE LOCKED TOGETHER WHEN TRAVELLING ON THE HIGHWAY. THIS WILL ENSURE UNIFORM BRAKING AND PROVIDE MAXIMUM STOPPING ABILITY. SHARP TURNS MUST ONLY BE MADE AT SLOW SPEEDS.

NOTE: When working on steep gradients, take care to ensure that all moving parts receive adequate lubrication.

https://truckmanualshub.com/

Controls located to the right of the driver

The easily-identifiable controls are arranged so that the most important ones are nearest the driver.

A - Auxiliary control valve controls
B - Front PTO controls
C - Rear lift controls
D - Rocker switch for supplementary rear hydraulics (light blue)

CAUTION: TRAVELLING ON ROAD, USE THE ACCELERATOR PEDAL ONLY AND NOT THE HAND THROTTLE LEVER.

https://truckmanualshub.com/

Gearbox controls

The transmission comprises a 4-speed synchronised gearbox and 3 speed ranges.
A shuttle is fitted as standard to give a total of **12** forward gears and **12** reverse gears.
On request, the tractor can be equipped with a creeper range giving another four gears for a total of **16** forward and **16** reverse gears.

The range gear lever is equipped with a locking ring to prevent accidental operation.
To operate this lever, pull the locking ring up towards the knob and then move the lever to the M, L or H position as required.
Next operate the main gear lever and the shuttle lever to select the required drive direction.

Reversing Control

Gearshifting Control

Speed range Control

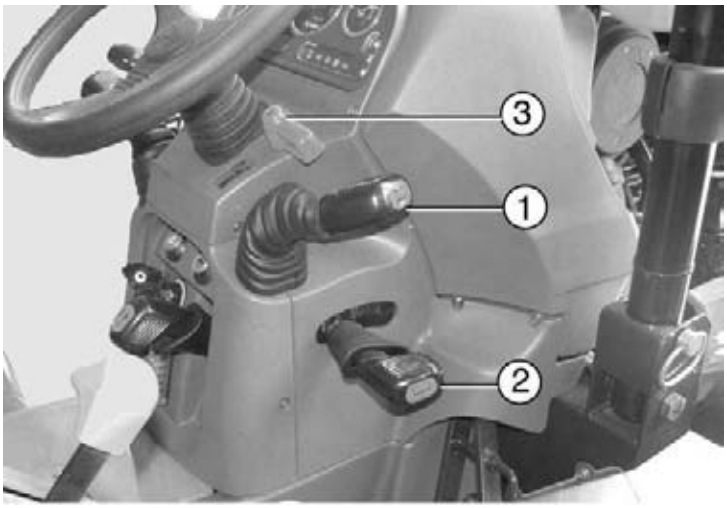

Gear levers
1 - Main gear lever
2 - Range gear lever
3 - Hand throttle

NOTE: Before starting the tractor, the shuttle control lever must be in neutral position.

https://truckmanualshub.com/

Transmission speed selection

Once the engine has started, select the speed range among the 3 available with the special lever and then choosing the desired speed.
Selection of forward speed depends greatly on the soil type, the implement used, work being performed, etc.
If you wish to use the creeper range, engage the creeper selector lever before selecting the required gear. The low gear range must also be selected before you can engage the creeper range.

To select a desired speed range, fully declutch and, once the tractor is stationary, act on the speed range lever (M - L - H).

In any case, always avoid using a gear which overloads the engine.

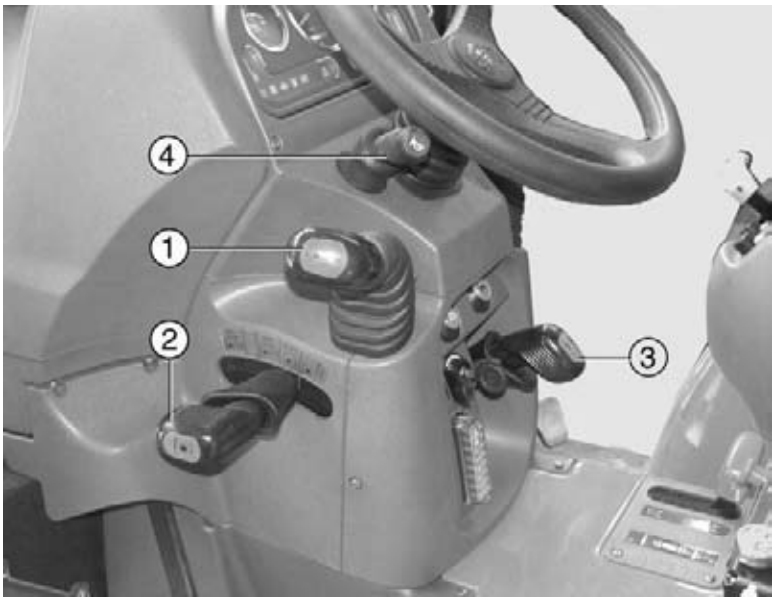

Gear levers
1 - Shuttle lever
2 - P.T.O. speed selector
3 - P.T.O. clutch lever
4 - Lights switch

To check in a simple way if the engine is overloaded, the following test is suggested: keep the accelerator at 1/4th of its travel, then suddenly accelerate to maximum speed.
If the engine revs do not increase, but on the contrary decrease, this means the engine is overloaded. In this case, shift into a lower gear.

https://truckmanualshub.com/

Creeper range selector lever
A - ENGAGED
B - DISENGAGED

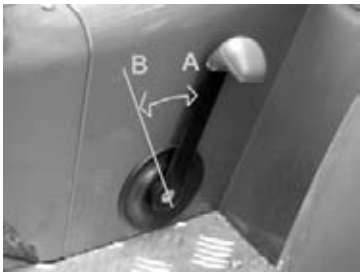

WARNING: The forward-reversing gear unit control lever should only be used when the tractor is fully stationary

Front and rear differential lock

The differential lock should ONLY be used when on a straight path and before excessive wheel spin occurs.

The tractor is equipped with **electro-hydraulic control**: to engage the differential lock, push control butto which remains in position and will light up due to built-in pilot lamp.

Press button again to disengage the differential lock.

A special pilot lamp on the dashboard indicates the locking of the differentials.

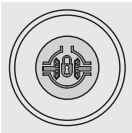

N.B. - Absolutely do not engage the differential lock while a wheel is spinning excessively. In this case, depress clutch pedal before locking the differentials.

WARNING: DO NOT ENGAGE THE DIFFERENTIAL LOCK IN THE FOLLOWING SITUATIONS: ON TRAVELLING AT SPEED ABOVE 15 KM/H, ON STEERING, WHEN THE TWO BRAKE PEDALS ARE NOT LOCKED TOGETHER.

https://truckmanualshub.com/

Front-wheel drive

Front-wheel drive allows for high work performance: during transportation on steep slopes, when working with difficult soil conditions or when a high draft effort is required.

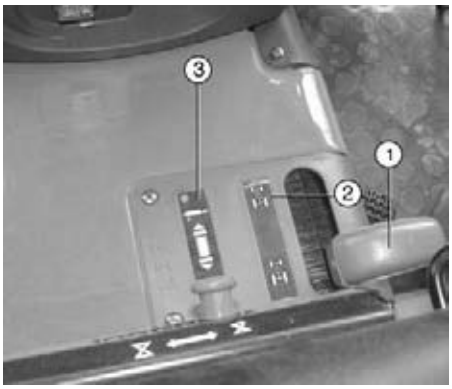

Front-wheel drive must only be engaged when the tractor is stationary.

To engage, move the lever 1 forward as indicated on plate 2. To disengage, move the lever backwards.

The indicator on the dashboard lights to show drive engagement.

Four Wheel Drive control
1 – Front wheel drive control lever
2 – 4WD plate
A – Front wheel drive engaged
B - Front wheel drive disengaged
3 – Hydraulic lift plate

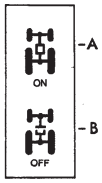

DANGER: USE ONLY APPROVED NON-FLAMMABLE, NON-TOXIC SOLVENTS FOR CLEANING PARTS. NEVER USE PETROL, SOLVENTS OR OTHER FLAMMABLE FLUIDS.

IMPORTANT - It is advised to use the front-wheel drive when performing transport operations on a road only if the tractor is subjected to a high draft effort. This is in order to prevent premature wear of the tires.

https://truckmanualshub.com/

Power take-off

WARNING: DO NOT OPERATE PTO AT ENGINE SPEED GREATER THAN RATED PTO RPM. DAMAGE TO IMPLEMENT AND PERSONAL INJURY COULD RESULT.

CAUTION: WHEN OPERATING PTO IMPLEMENTS SUCH AS ROTARY MOWERS, HAY BALERS, GRINDER-MIXER, ETC. THE IMPLEMENT SHOULD BE EQUIPPED WITH AN OVERRUNNING CLUTCH OR DAMAGE TO PTO BRAKE MAY OCCUR.

CAUTION: BEFORE DISMOUNTING, ALWAYS DISENGAGE THE P.T.O., LOWER ALL ATTACHMENTS AND IMPLEMENTS TO THE GROUND, ENGAGE PARKING BRAKE, SHUT OFF THE ENGINE, ENGAGE THE LOWEST GEAR (IF MECHANICAL TRANSMISSION) AND REMOVE THE KEY. WITH HYDRAULIC TRANSMISSION OR POWERSHIFT TRANSMISSION OR POWERSHUTTLE, ALWAYS CHOCK THE TRACTOR WHEELS.

DANGER: THE DRIVEN IMPLEMENTS COULD ROTATE FOR SOME TIME AFTER P.T.O. HAS BEEN DISENGAGED. PLEASE STOP THE TRACTOR ENGINE AND WAIT UNTIL ALL THE MOVING PARTS OF IMPLEMENT HAVE COME TO A COMPLETE STANDSTILL, BEFORE TO START ANY SERVICING OPERATION.

DANGER: KEEP PROTECTIVE SHIELD IN PLACE OVER PTO SHAFT AT ALL TIMES. ALWAYS DISENGAGE POWER TAKE-OFF AND STOP ENGINE BEFORE DISMOUNTING TRACTOR EXCEPT WHEN PERFORMING STATIONARY PTO OPERATIONS.

DANGER: BEFORE FITTING OR REMOVING THE IMPLEMENT DRIVE SHAFT, ENSURE THAT THE ENGINE IS SWITCHED OFF AND THE PARKING BRAKE IS APPLIED.

WARNING: BEFORE STARTING THE ENGINE ALWAYS ENSURE THAT PTO LEVER IS IN NEUTRAL POSITION. THIS CAN BE VERIFIED BY CHECKING THAT PTO INDICATOR LIGHT ON DASHBOARD IS NOT LIT WHEN IGNITION KEY IS TURNED TO POSITION 1. ENGINE WILL NOT ROTATE IF PTO IS IN THE ENGAGED POSITION.

https://truckmanualshub.com/

DANGER: AS SOON AS THE CARDAN SHAFT (SHAFT WITH UNIVERSAL JOINT(S)) IS REMOVED, ALWAYS INSTALL THE PTO OUTPUT SHAFT CUP.

DANGER: DO NOT CONNECT, DISCONNECT OR ADJUST PTO WITH THE ENGINE RUNNING.

CAUTION: AFTER ANY P.T.O. OPERATION, ENSURE THAT THE P.T.O. CLUTCH LEVER (OR PUSH BUTTON) IS DESENGAGED; THEN PUT IN "NEUTRAL" THE P.T.O. RPM SELECTOR DEVICE (540/1000, ECO, GROUND SPEED; IT'S DEPENDING FROM TRACTOR CONFIGURATION).

Front P.T.O. (1000 rpm)

On request, the tractor can be equipped with a front PTO driven directly from the engine crankshaft via a gearbox and electro-hydraulically operated clutch capable of transmitting full engine power.

The front PTO operates independently of the rear PTO.
To engage the front PTO, use the switch to the right of the driving position.

Push the switch forwards to engage the front PTO and back to disengage it.

The switch also has a middle position in which the PTO is disengaged and the engine can be started.
The switch is fitted with a lock device to prevent accidental engagement and disengagement of the PTO.

To engage or disengage the PTO, hold down the release button on the driver end of the switch and move the PTO switch forward or back.

https://truckmanualshub.com/

Rear - central PTO

The PTO can be supplied in the following configurations:

- 540
- 540 - 1000 rpm
- 540 - 540 ECO rpm
- 540 - 1000 rpm and synchronised
- 540 - 540 ECO rpm and synchronised
- 540 - 540 ECO rpm and synchronised + central

The lever shown in the figure below selects the drive (REAR - CENTRAL) and PTO speed.

To operate this lever, first disengage the PTO clutch using the clutch lever (Page 33), then pull the lever lock up towards the knob and move the lever in the required direction.

Said lever has 4 positions::

1 - Engagement position rear P.T.O. 540 r.p.m.
2 - 1000 r.p.m. position - rear P.T.O. and underside P.T.O.
3 - Neutral
4 - Engagement position synchro mesh P.T.O. for rear shaft end.

PTO speed selector

https://truckmanualshub.com/

Just like the clutch control lever, the 540/1000 rpm PTO speed selector lever is also equipped with a safety lock to prevent accidental operation.

To operate the lever, move the lock towards the knob and then move the lever in the direction of the required PTO speed as shown on the plate.

CAUTION! Only operate the 540/1000 rpm rear PTO speed selector with the engine off and the PTO clutch disengaged.

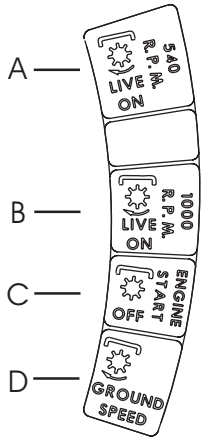

P.T.O. speed selection control data plate
A - Rear speed selection 540 r.p.m.
B - Rear speed selection 1000 r.p.m / underside 2000 r.p.m. or 540 ECO rpm rear / 2000 rpm central
C - Neutral position
D - Synchro mesh P.T.O.

Synchronized power take-off

- **(clockwise rotation)**

The tractors can be equipped, on request, with an additional P.T.O. shaft terminal of 1.3/8", 6 splines, for a P.T.O. synchronized with the transmission.
To select the desired speed, simply move the lever to the position indicating the required speed as shown on the plate.

CAUTION: WHEN USING THE GROUNDSPEED PTO, REMEMBER THAT WHEN YOU DRIVE THE TRACTOR IN REVERSE GEAR, THE DIRECTION OF ROTATION OF THE PTO SHAFT WILL ALSO BE REVERSED. THEREFORE, WITH CERTAIN IMPLEMENTS IT IS ADVISABLE TO DISENGAGE THE PTO BEFORE ENGAGING REVERSE GEAR IN ORDER TO AVOID DAMAGING THE IMPLEMENT.

CAUTION: WHEN OPERATING PTO DRIVEN EQUIPMENT OR WHEN TOWING HEAVY EQUIPMENT AT TRANSPORT SPEEDS, LOCK THE DRAWBAR IN ITS CENTER POSITION WITH RETAINING PINS AND ATTACH IMPLEMENT SAFETY CHAINS.

DANGER: WHILE THE PTO IS IN OPERATION, NO-ONE MUST STAND IN THE VICINITY OF THE PTO OUTPUT SHAFT OR THE DRIVE SHAFT.

https://truckmanualshub.com/

Underside P.T.O. for control of implements mounted underside

Underside P.T.O. (2000 rpm)
1 - Underside P.T.O. shaft
2 - Parking brake froked rod
3 - Left service brake rod

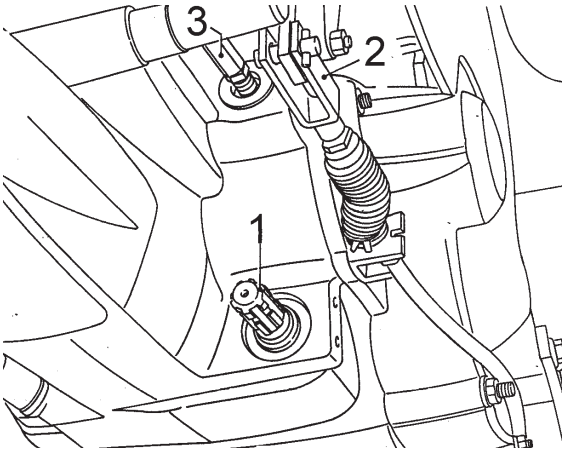

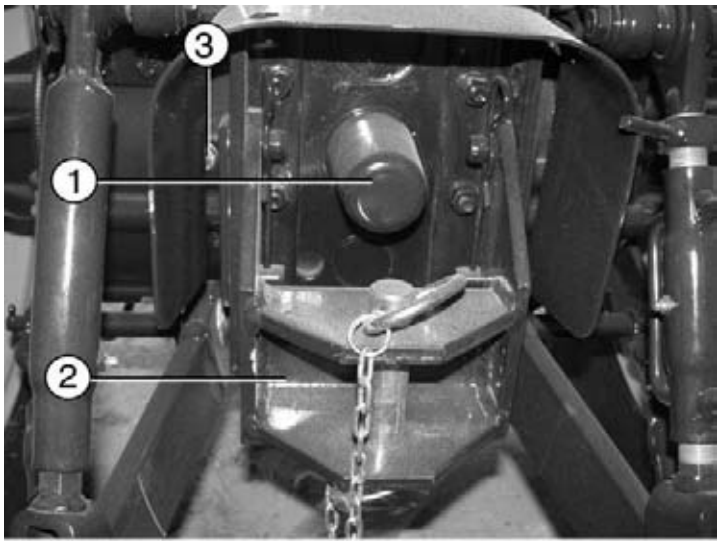

Rear P.T.O. shafts
1 - 540/1000 rpm shaft (*or 540 ECO rpm) /*Ground speed P.T.O. shaft
2 - Tow hook
3 - Gearbox oil level

https://truckmanualshub.com/

Rear brakes

The braking system has oil bath disks positioned on rear axle shafts, before the final reduction gears.

Through the use of two mechanically-controlled pedals, the brakes can be applied separately or simultaneously.

The pedals are coupled using the special latch; this is advisable during fast transport operations and it is mandatory on all roadways.

The parking brake has a fully independent control that acts on the service brakes; it is operated by pulling the hand lever upwards (see page 32).

When the parking brake is applied, the warning light on the instrument panel is illuminated (**9** - page 18).

WARNING: IF MORE THAN ONE PERSON IS INVOLVED ATTACHING AN IMPLEMENT, GREAT CARE MUST BE TAKEN. WHEN MAKING ANY ADJUSTMENT TO THE HYDRAULIC LIFT SYSTEM, THE PERSON(S) IN THE AREA MUST STAND CLEAR. SERIOUS INJURY CAN RESULT BY BEING CRUSHED.

WARNING: THE IMPLEMENTS MUST ALWAYS BE LOWERED TO THE GROUND WHENEVER THE TRACTOR IS NOT OPERATING OR WHEN ADJUSTMENT, MAINTENANCE OR REPAIR OPERATIONS ARE TO BE CARRIED OUT.

https://truckmanualshub.com/

Load sensing - mechanical lift

The power-lift assembly to control mounted, semi-mounted or towed implements, consists of an hydraulic unit that performs the following functions:

- automatic implement position control;
- automatic draft control;
- mixed position and draft control;
- automatic adjustment of implement lowering speed through «Valvematic»;
- quick implement penetration;
- hydraulic control of external implements.

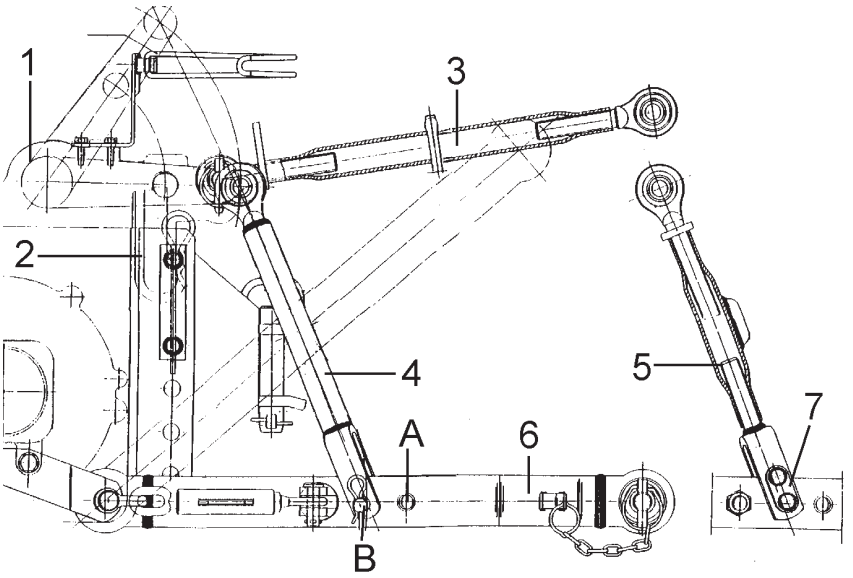

Lifting components diagram (3-point hitch)
1 - Outer adjustment arm
2 - Draft control sprin
3 - Top link
4 - Left lifting arm (stationary)
5 - Right lifting arm (adjustable)
6 - Telescopic stabilizers
7 - Vertical link attaching plate w/pin
A - Lifting capacity is increased when lifting rod is positioned in hole A
B - Lifting height is increased when lifting rod is positioned in hole B

https://truckmanualshub.com/

Controls

The hydraulic power-lift control levers are grouped in the special console on the operator's right-hand side.

Lever with yellow knob (1): used for raising and lowering implement (sector part is yellow), for identifying desired working position, during controlled position duties and for mixed draft-position control (yellow and green sector).
The working range of the lever is controlled by adjustable stop, which allows the user to identify and maintain the same working position.

Lever with green knob (2): automatically controls the desired working depth in relation to the resistance met by the implement in the ground.
Its action range is indicated by the green sector with a numbering interval from 0 to 12, and by the red sector.
This lever is also provided with adjustable stop which limits the lever's travel in such a way that the same desired working depth can be obtained every time.

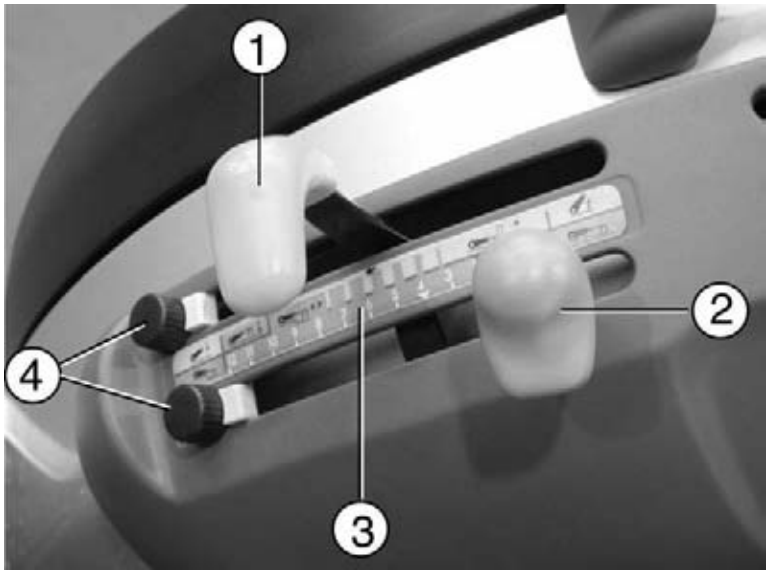

Hydraulic power-lift control levers
1 - Yellow lever position control
2 - Green lever draft control
3 - Command lever sector
4 - Power-lift control levers stop screw

https://truckmanualshub.com/

Raising and lowering the implement
To raise the implement, pull the yellow lever backwards (in the yellow sector), until the desired height is achieved.
To lower the implement push the yellow lever forwards close to the limit of the yellow sector.
The green lever should be positioned on No. 12 of its own sector.

Transporting with raised implement
The yellow lever must be pulled backwards all the way.
The green lever must be placed on No. 12 of its own sector.

Working with position control
(rotary harrows, cultivators, manure spreaders, etc.)

Place the green lever on No. 12 of its own sector.
Move the yellow lever along the yellow sector until the desired working position is reached, setting its travel with the adjustable stop screw to return on the next run to the same working position.

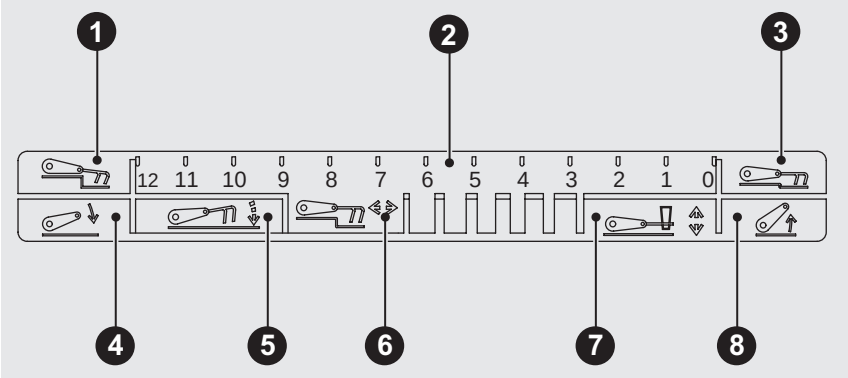

Lift control levers
1 - Maximum draft control
2 - Draft control - green sector
3 - Minimum draft control
4 - Down
5 - FLOAT - blue sector
6 - Mixed control
7 - Depth control - yellow sector
8 - Up

WARNING: NEVER TOW IMPLEMENTS USING LOWER LINK ARMS. PULL ONLY FROM THE APPROVED DRAWBAR OR TOW HITCH. TOWING OR ATTACHING TO OTHER LOCATIONS MAY CAUSE THE TRACTOR TO OVERTURN.

https://truckmanualshub.com/

Working with draft control
(ploughs, rippers, trenchers, etc.)

Place green lever on No. 4 or 5 of its own sector.
Pull yellow lever into blue sector marked with "FLOAT" so as to obtain quick implement penetration sinking into the ground.
Pull the yellow lever in the green sector to the edge of the blue sector.
Move the green lever forwards until the desired working depth is obtained, then lock it in place through the special adjustable stop screw so as to obtain the same working depth during successive runs.
At the end of the furrow to raise the implement from the ground pull the yellow lever fully backwards against its stop. When starting a new furrow push the yellow lever into blue sector "FLOAT" and leave it there until the implement has attained the desired working depth, after which immediately move it back into green sector.

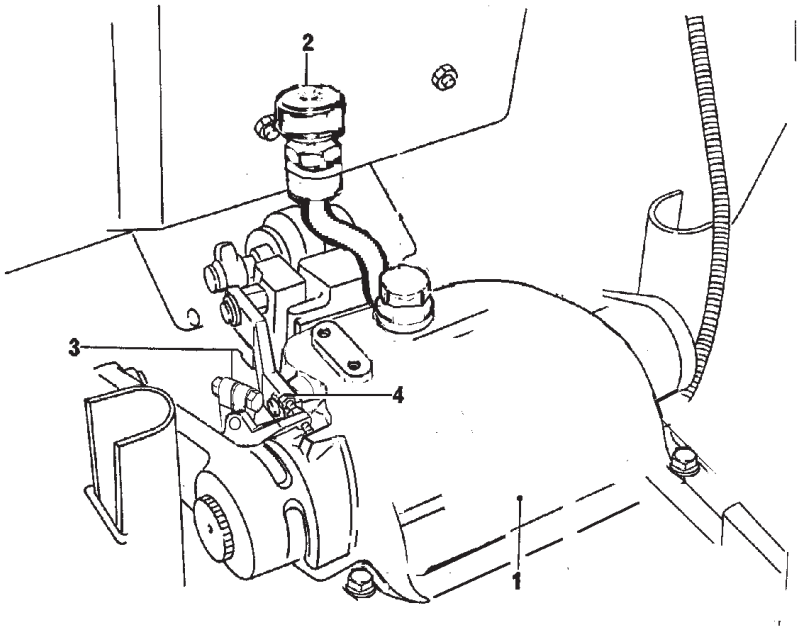

Three point lift housing and oil fill
1 - Three point hydraulic lift housing.
2 - Hydraulic oil fill cap & breather for gearbox power lift and hydraulic system.
3 - Draft control sensing link.
4 - Position control lever (yellow) adjusting screw.

https://truckmanualshub.com/

Working with surface and underground implements with simultaneous draft and position control - Mix control

When working with soil of variable conditions, to prevent the implement from sinking more than necessary in terrains of minor consistency, the power-lift control levers should be positioned in such a way to obtain both implement effort and position control.

For mixed control, start work and position the levers as described in "draft control work", then move the yellow lever backwards along the sector (yellow and green) until lifting commences; move the lever slightly forward again (1-2 mm / 0.0394-0.0788 in) to immobilise the implement in position.

Working with float position
(e.g. sowing machine)

When the implement is to follow the ground contours, push the yellow lever in the blue sector (FLOAT).

The green lever may be in any of the positions included between No. 6 and No. 12 of its own sector.

At the beginning and end of each row act only on the yellow lever to raise and lower the implement .

NOTE - The implements must always be lowered to the ground whenever the tractor is not operating or when adjustment, maintenance or repair operations are to be carried out.

https://truckmanualshub.com/

Hydraulic system

DANGER: FLUIDS THAT ARE UNDER PRESSURE CAN PENETRATE HUMAN TISSUE CAUSING SERIOUS INJURY. IT IS RECOMMENDED TO ALWAYS STOP THE ENGINE AND RELIEVE THE PRESSURE BEFORE CONNECTING OR DISCONNECTING LINES.

All the oil utilized is taken from the gearbox and filtered thorugh an interchangeable cartridge filter, which is supplied with a pressure switch that signals its clogging then sent under pressure to the various loads by two hydraulic pumps mounted in tandem.
If the tractor is equipped with a front PTO, the oil used to operate the hydraulic clutch is taken from the main circuit via an electro-hydraulically operated valve from which it is delivered to the clutch thrust bearing. From the clutch, a transfer pump returns the oil to the drain line and back to the gearbox.

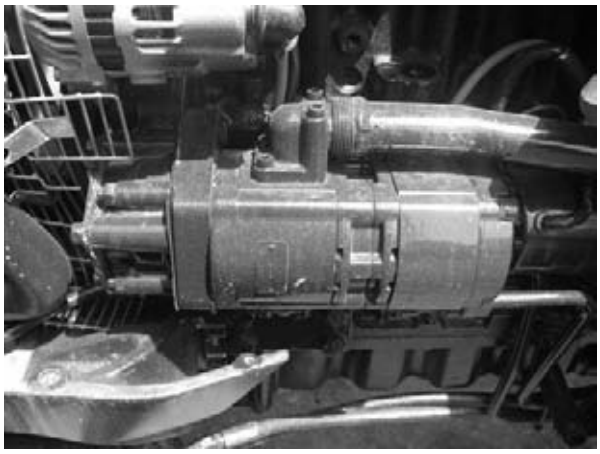

Hydraulic system pumps located on the left side of the tractor.

CAUTION: ALL IMPLEMENTS MOUNTED TO THE TRACTOR MUST BE SAFELY ATTACHED.

CAUTION: WHEN OPERATING STATIONARY P.T.O. DRIVEN EQUIPMENT (FOR EXAMPLE WATER PUMP, ETC.), DO NOT LEAVE THE TRACTOR SEAT UNTIL ALL GEAR LEVERS ARE IN “NEUTRAL”, THE PARKING BRAKE IS FULLY ENGAGED, THE CAB DOOR LOCKED WITH THE KEY AND THE TRACTOR AND IMPLEMENT WHEELS ARE CHOCKED.

https://truckmanualshub.com/

Hydraulic oil filter

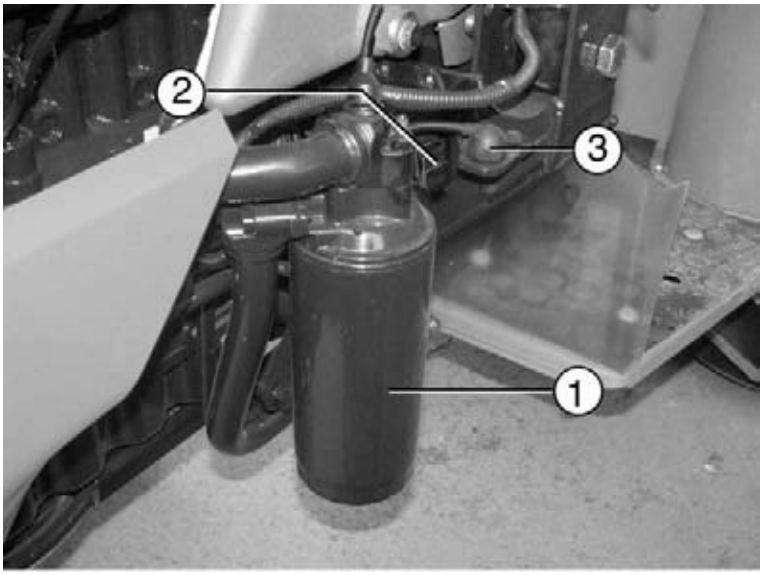

1 - Hydraulic oil filter
2 - Electrical power socket
3 - Start enabling switch connected to the clutch pedal.

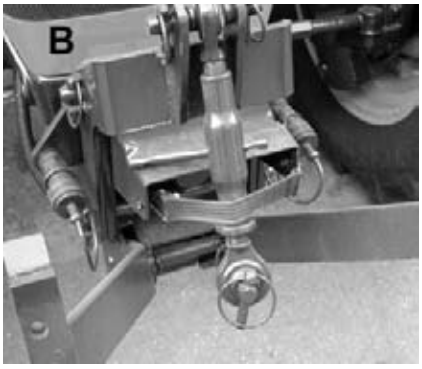

A - Centrally located hydraulic couplers on the right side of the tractor
To operate the couplers, first shut off the front lift at the cock to one side, then move lever 2, page 56, to operate the auxiliary control valves.

B - Hydraulic couplers at the front of the tractor
To operate these couplers, use lever 1, page 56.

https://truckmanualshub.com/

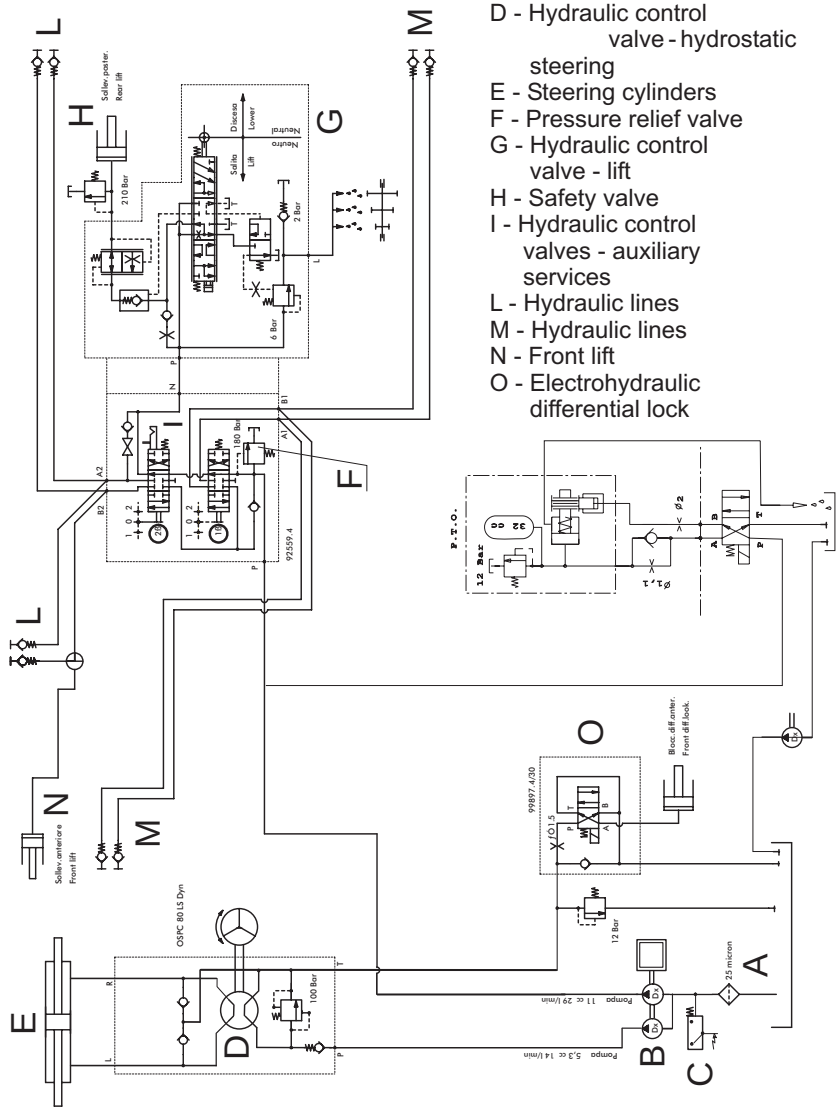

Hydraulic system of the tractor.

https://truckmanualshub.com/

Auxiliary hydraulic services control valve

The auxiliary hydraulic services control valve enables the control of external implements with hydraulic rams and motors, meeting the operating requirements for all applications.

WARNING: CONTROL LEVER MUST BE MECHANICALLY RETURNED TO THE NEUTRAL POSITION ONCE THE HYDRAULIC CYLINDER HAS REACHED THE END OF ITS TRAVEL. FAILURE TO DO SO WILL RESULT IN THE HYDRAULIC CIRCUIT BEING PLACED UNDER A STRAIN WHICH COULD RESULT IN OVERHEATING OF HYDRAULICS AND DAMAGE TO TRACTOR HYDRAULIC COMPONENTS AND/OR IMPLEMENT.

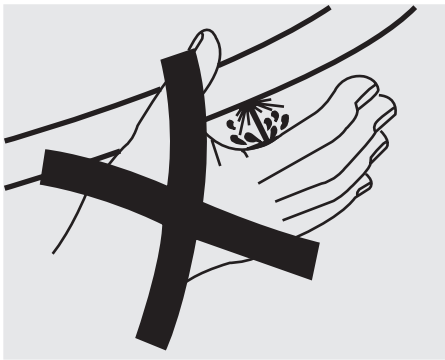

WARNING: HYDRAULIC FLUID UNDER PRESSURE CAN PENTRATE THE SKIN OR EYES AND CAUSE SERIOUS INJURY, BLINDNESS OR DEATH. FLUID LEAKS UNDER PRESSURE, MAY NOT BE VISIBLE. LOOSEN CONNECTIONS SLOWLY, KEEPING HANDS AND FINGERS CLEAR OF LOOSENED FITTINGS. USE A PIECE OF CARDBOARD OR WOOD TO LOCATE LEAKS, DO NOT USE YOUR FINGERS OR HANDS. WEAR SAFETY GOGGLES FOR EYE PROTECTION. IF ANY FULID IS INJECTED INTO THE SKIN, SEEK MEDICAL ATTENTION IMMEDIATELY.

https://truckmanualshub.com/

Nomenclature

Directional control valve:

A valve that can be operated to control the flow of oil from a pressurised circuit to an outlet port. There are three main types of directional control valve: SINGLE-ACTING (no longer used), DOUBLE-ACTING and DOUBLE/SINGLE-ACTING.

Double-acting control valve:

When the control lever is moved in one direction, the control valve spool shifts to allow pressurised oil to flow out through one port and return through a second port. When the control lever is moved in the opposite direction, the direction of flow is reversed. The control lever has 3 positions: pressure port 1, neutral 0, pressure port 2.

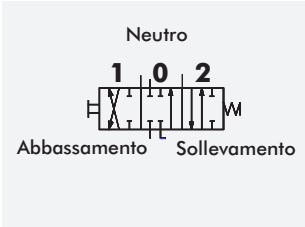

Double/single-acting control valve:

This valve is like the double-acting valve described above, but can be converted into a single-acting valve by way of a screw. When operating in single-acting mode, the valve is connected to the implement by a single hose connected to the pressure port 1; this hose serves as both the pressure and return line (when the control lever is in the “return” position). The control lever still has 3 positions: pressure 1, neutral 0 and return.

Double/ single acting

Conversion to single-acting - Turn the screw **A** to one port of the control valve which is permanently connected to the tank return line, so that the other port may be used for both pressure and return.

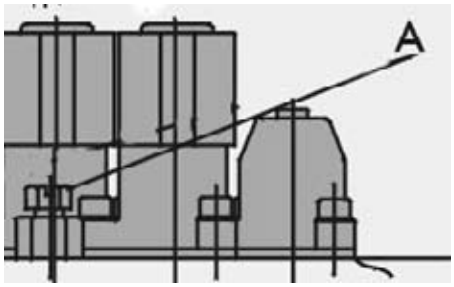

https://truckmanualshub.com/

DETENT device:

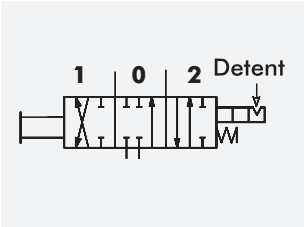

Mechanical detent that engages the control valve spool when it is moved to a certain position at the end of its stroke. The spool can only be released manually by operating the control lever.
If the spool is not equipped with a DETENT, the control lever will always return to the centre position (NEUTRAL) when released by the operator.

Types of auxiliary hydraulic service control valve

The tractor is equipped with a **4** way auxiliary hydraulic control valve (2 double acting ways + 2 double acting ways transformable into single acting ways with DETENT).

The four way hydraulic system is split to provide 2 way hydraulics in the centre of the right hand side of the tractor and 2 way hydraulics at the front of the tractor.

The two hydraulic couplers at the side of the tractor are operated by lever **2** (see the figure on page 56) while those at the front of the tractor (if fitted) are operated by lever **1** (see the figure on page 56).

The **2** way hydraulic circuit at the side of the tractor is equipped with a valve permitting it to be used to power the front lift hydraulics.

Lever **2** also operates the front lift.

WARNING: DO NOT STAND OR PASS UNDER HYDRAULICALLY LIFTED LOADS.

https://truckmanualshub.com/

The controls

The manual controls of the auxiliary services control valve consist of two control levers, each with two positions, located to the right of the driving position. These levers are equipped with locks to secure them in neutral position. To lock the lever, rotate the fork so that it engages the shaft of the control lever.

Hydraulic control valve levers.

1 - Control lever - outer hydraulic service couplers.
2 - Control lever - inner hydraulic service couplers.

In the case of a double-acting control valve, moving the lever back (cylinder symbol on RED background), will direct oil under pressure to the upper service coupler. The oil returning from the implement ram can drain to tank through the lower service coupler.

Moving the control lever forward (cylinder symbol on the YELLOW background) will direct oil under pressure to the lower service coupler. The oil returning from the implement ram can drain to tank through the upper service coupler.

When the auxiliary control valves are not in use, the control levers must always be in the neutral position.

DANGER: ON CONNECTING THE HYDRAULIC LINES OF THE IMPLEMENT TO THE HYDRAULIC LINES OF THE TRACTOR, ALWAYS FOLLOW CAREFULLY THE INSTRUCTION SHOWN ON THE TRACTORS DECALS OR DESCRIBED INSIDE THIS MANUAL. WRONG CONNECTIONS OF THE HYDRAULIC LINES BETWEEN IMPLEMENT AND TRACTOR COULD CAUSE UNEXPECTED MOUVEMENTS IN THE IMPLEMENTS, WITH SERIOUS RISK OF PERSONAL INJURY.

https://truckmanualshub.com/

Behaviour of the oil flow in the hydraulic circuit connecting the couplers and the actuator cylinders on the implement.

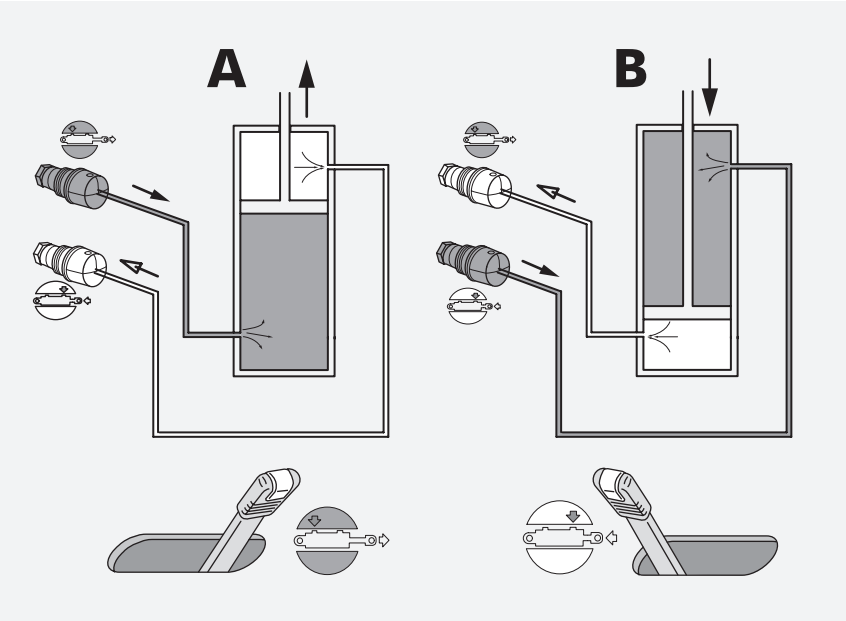

A - Oil pressure to cylinder - LIFTING
B - Oil pressure to cylinder – LOWERING

WARNING: DURING THE IMPLEMENT HITCHING AND UNHITCHING OPERATIONS GREAT CARE MUST BE TAKEN TO ADVOID SERIOUS INJURY TO YOURSELF AND OTHERS. WHENEVER USING SUPPORTS FOR THE IMPLEMENT, MAKE SURE THEY ARE SUITABLE AND SUFFICIENTLY STRONG. NEVER USE CONCRETE BLOCKS, BRICKS OR WOOD FOR SUPPORT. THEY CAN COLLAPSE EVEN UNDER LIGHT LOADS. DON'T ALLOW PEOPLE TO STAY NEARLY.

https://truckmanualshub.com/

Example connection and operation of a double-acting cylinder

(Turnover of reversible plough)

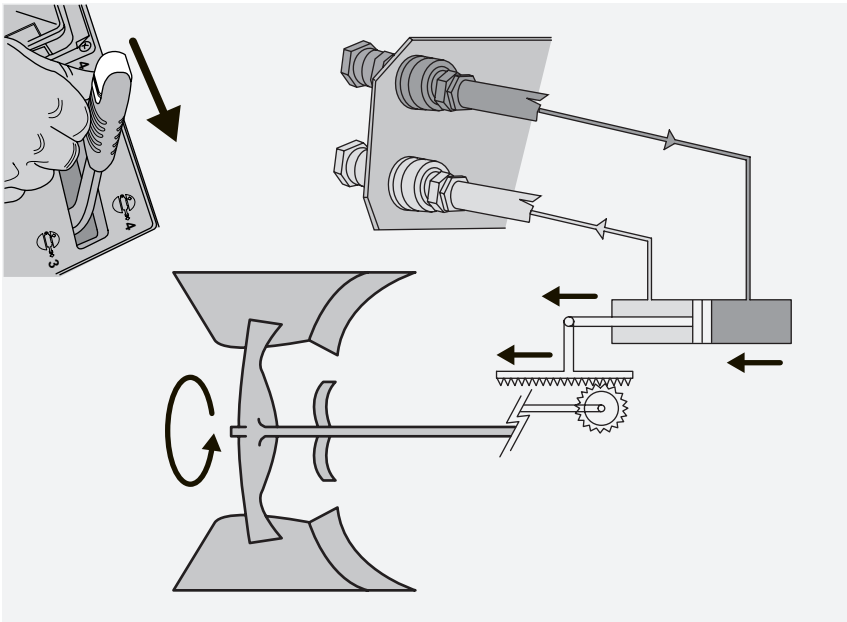

When the auxiliary service control valves are not in use, the control levers must always in be in the neutral position

WARNING: DIESEL FUEL OR HYDRAULIC FLUID UNDER PRESSURE CAN PENETRATE THE SKIN OR EYES AND CAUSE SERIOUS PERSONAL INJURY, BLINDNESS OR DEATH. FLUID LEAKS, UNDER PRESSURE, MAY NOT BE VISIBLE. USE A PIECE OF CARDBOARD OR WOOD TO FIND LEAKS. DO NOT USE YOUR BARE HAND. WEAR SAFETY GOGGLES FOR EYE PROTECTION. IF ANY FLUID IS INJECTED INTO THE SKIN, IT MUST BE SURGICALLY REMOVED WITHIN A FEW HOURS BY A DOCTOR FAMILIAR WITH THIS TYPE OF INJURY.

https://truckmanualshub.com/

Connection of an implement to the auxiliary hydraulic service couplers

N.B. - the hydraulic couplers have 1/2” female fittings that allow connection under pressure of the male fitting on the implement hose. The couplers are also designed to disconnect automatically if accidentally jerked.

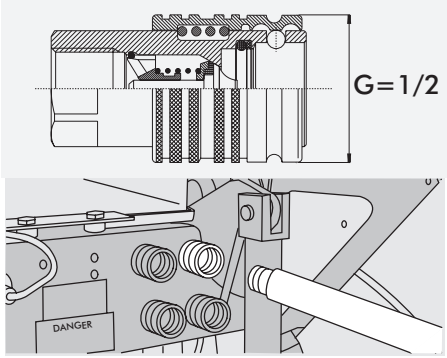

Hydraulic services connections

IMPORTANT : check that connection hoses are of sufficient length to allow unimpeded manoeuvring of the tractor and implement.

To disconnect the hose, return the distributor’s controls to neutral position to release any residual pressure from the system, then pull the hose off.

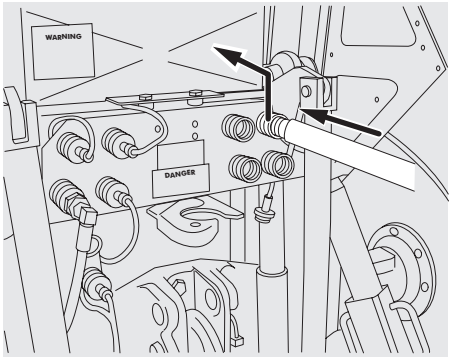

Disconnecting a hose from the hydraulic coupler

WARNING: KEEP THE TRACTOR LOCKED, USING A CHOCK, WHEN PARKING ON SLEEP GROUND, REPAIRING OR MAINTENANCE OPERATING.

DANGER: DO NOT ATTEMPT TO UNPLUG THE HYDRAULIC CONNECTIONS, OR ADJUST AN IMPLEMENT WITH THE ENGINE RUNNING OR THE P.T.O. DRIVE IN OPERATION. TO DO SO MAY RESULT IN VERY SERIOUS INJURY OR DEATH.

https://truckmanualshub.com/

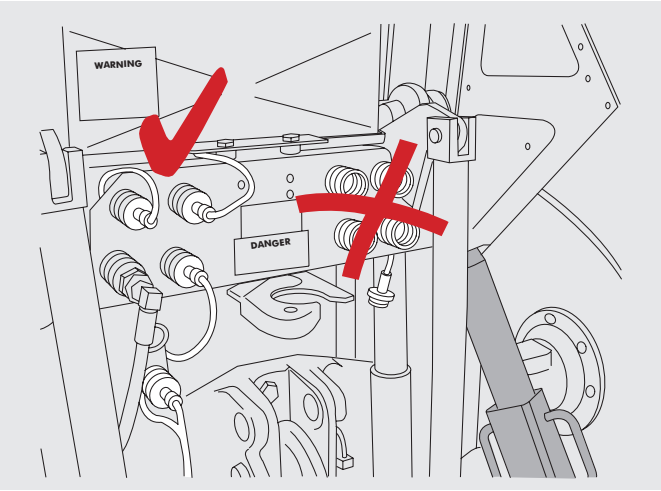

Protection of the hydraulic service couplers

Clean the rubber covers carefully and insert them in the couplers.

NOTE: The hydraulic coupler fittings must be kept clean and fitted with their protective caps.

https://truckmanualshub.com/

Checking the transmission oil level

CAUTION: Before connecting implement hoses to the service couplers, stop the engine and check that the connection fittings are clean. After having connected the hoses and started the engine, check that the hydraulic system is functioning correctly.
Then, after having operated the cylinders a few times to equalise the pressure (moving the control lever to the lowering position, then to the lifting position and then back to neutral), check the transmission oil level (circular gauge **A**) with the cylinders both extended (lifting), and retracted (lowering). The transmission oil should **never** be allowed to fall below the minimum level (with cylinders extended) and should not ever greatly **exceed** the **maximum level**, as the same oil supplies both the external hydraulic services and the transmission.

NOTE: using the tractor with too little oil in the gearbox can cause serious damage.

Transmission oil filler plug

https://truckmanualshub.com/

In the case of a single-acting control valve:

Moving the control lever back (control lever number on RED background) directs oil pressure to the upper service coupler with the same number also on a RED background.

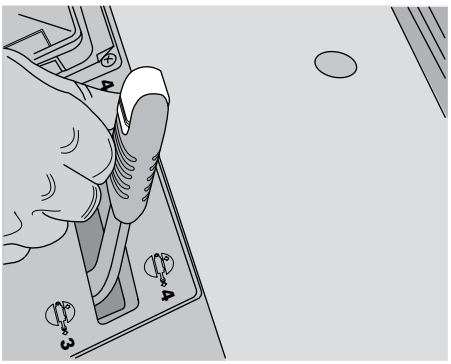

Control lever in lifting position

Moving the control lever forwards (control lever number on YELLOW background) the oil returning from the cylinder on the implement can drain to tank through the upper service coupler with the same number on a RED background.

Converting a control valve from double-acting to single-acting

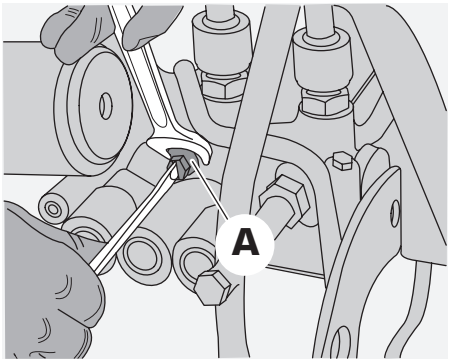

Conversion of double/ single acting control valve

Turn the screws **A** on the control valve approximately 3 turns in a clockwise direction to convert the control valve from double- to single-acting operation and turn the screws back to restore double-acting operation.

https://truckmanualshub.com/

Example of connection to a single-acting cylinder

(Trailer with hydraulic tipping)

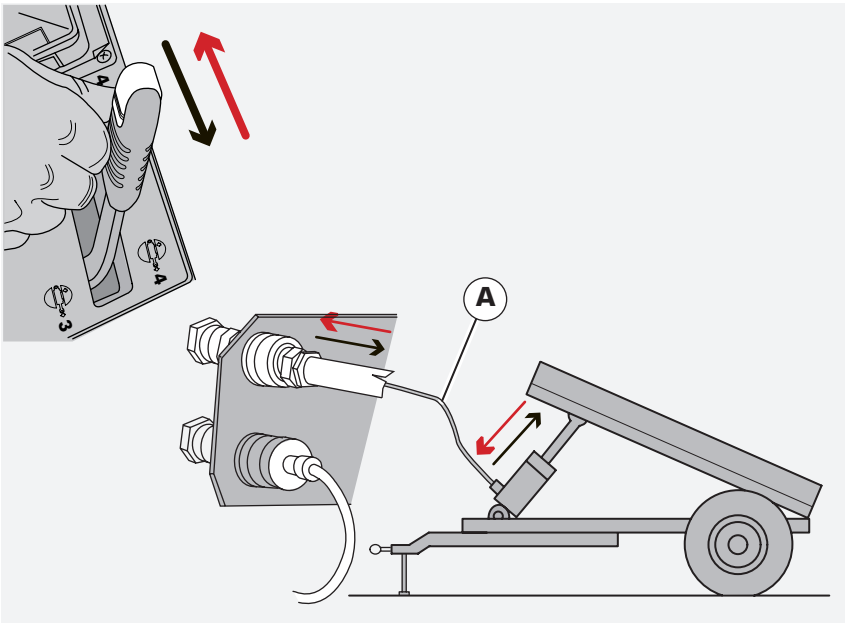

Note: hose **A** must be connected to an **upper** service coupler. To raise the trailer, move the control lever back (control lever number on RED background)

WARNING: always return the control lever to the neutral position as soon as the external cylinder reaches the end of its stroke, in order to avoid maintaining maximum pressure in the circuit for too long and thus causing potentially dangerous stresses within the system.

To lower the trailer, move the control lever forward (control lever number on YELLOW background)

NOTE: Make sure that different types of oil are never mixed.Ensure the utmost cleanliness when making the hydraulic coupling between the implement and tractor. Cover any couplers not in use with their protective caps.

https://truckmanualshub.com/

Class “A” drawbar

- **(optional)**

Swinging drawbar of the type commonly used for towing agricultural implements, for trailers with more than one axle and consequently with low vertical load.
To facilitate trailer attachment, the drawbar consists of a swinging bar with horizontal adjustment.

- It is secured to the tractor under the gearbox with the aid of the central hole on the end of the bar.
- To adjust the horizontal position of the bar, withdraw the pin, move the bar to the required position, and then replace the pin and secure it with the lock pin

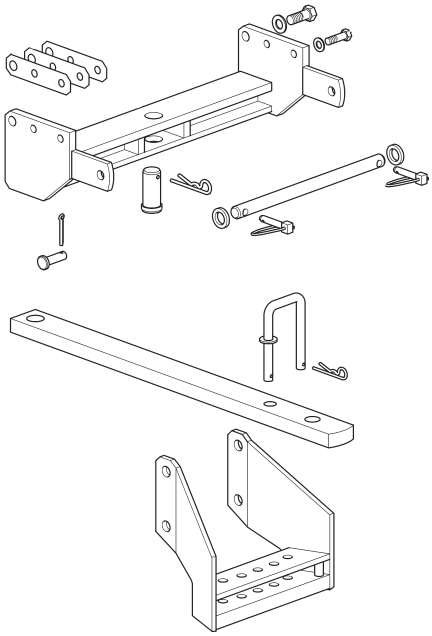

WARNING - NEVER ALLOW ANYONE TO RIDE ON THE DRAWBAR OR THE LOWER LIFT ARMS WHEN THE TRACTOR IS IN MOTION.

https://truckmanualshub.com/

Towing hitch

The towing hitch is used for towing agricultural implements and road-going trailers with one or more axles.
Various types of towing hook are available on request, depending on the national market.

To facilitate trailer attachment, the towing hitch can be fixed at different heights from the ground.

N.B. - the maximum permissible hitch load (for single-axle trailers), the maximum permisible hitch height for road use (for trailers with one or more axles) and the maximum trailed load are indicated in the tractor registration document.

Any problems resulting from failure to observe these operating limits shall be responsibility of the user.

WARNING: A FRONT-END LOADER (BUCKET OR FORKS) MUST BE EQUIPPED WITH A SUITABLE RESTRAINING DEVICE TO PREVENT THE LOAD (BALES, FENCE POSTS, ROLLS OF FENCE, WIRE ETC.) FROM ROLLING DOWN THE LIFT ARMS INTO THE OPERATOR'S COMPARTMENT AND CRUSHING THE DRIVER WHEN THE LOADER IS RAISED. INADEQUATELY SECURED OBJECTS COULD ALSO FALL AND INJURE BYSTANDERS.

https://truckmanualshub.com/

Class “C” towing hitch

The “C” class towing hook is commonly used for towing farm equipment and road trailers with one or more axles.
To facilitate trailer attachment, the towing hitch can be fixed at different heights from the ground.

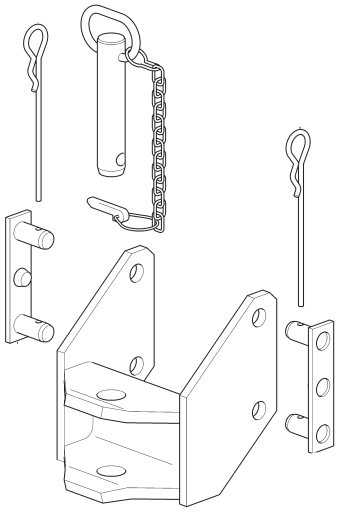

Class “C” towing hitch

DANGER: BE SURE EVERYONE IS CLEAR OF THREE POINT HITCH BEFORE STARTING ENGINE. LOWER THREE POINT HITCH AND STOP ENGINE BEFORE MAKING ADJUSTMENTS, MAINTENANCE OR REPAIRS.

CAUTION: WHEN TRANSPORTING HEAVY LOADS (EXCEEDING THE TRACTOR’S WEIGHT) REDUCE THE SPEED TO UNDER 15 KM/H (9,5 MPH).

WARNING: ON TOWING TRAILERS, BEFORE LEAVING THE DRIVING POSITION, REMEMBER TO PUT ALL CONTROLS IN NEUTRAL, TO APPLY THE HANDBRAKE, TO SWITCH OFF THE ENGINE, TO ENGAGE THE LOWEST GEAR (IF MECHANICAL TRANSMISSION) AND TO REMOVE THE KEY. WITH HYDRAULIC TRANSMISSION OR POWERSHIFT TRANSMISSION OR POWERSHUTTLE, ALWAYS CHOCK BOTH TRACTOR AND TRAILER WHEELS.

https://truckmanualshub.com/

CEE towing hitch

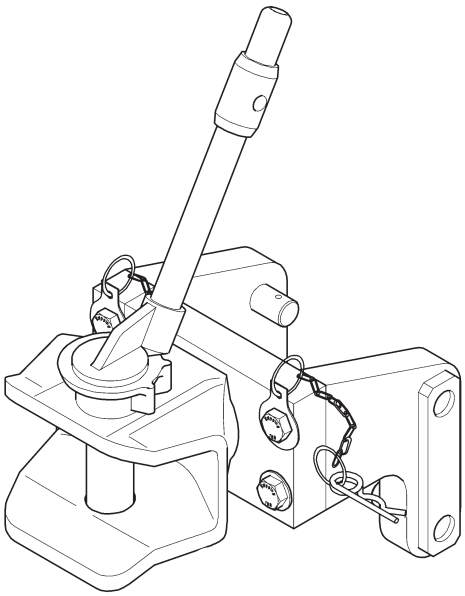

This hitch, only used in certain markets, is attached to the rear of the transmission case.

CAUTION: WEIGHT OF TOWED EQUIPMENT, WITHOUT BRAKES, SHOULD NOT EXCEED WEIGHT OF TRACTOR.

WARNING: AN UNBALANCED TRACTOR COULD OVERTURN AND CAUSE INJURY OR DEATH. MAKE SURE FRONT FRAME COUNTER-WEIGHTS, WHEEL WEIGHTS AND WHEEL BALLAST ARE USED AS RECOMMENDED BY THE MANUFACTURER. DO NOT ADD EXTRA COUNTERWEIGHTS TO COMPENSATE FOR AN OVERLOADED TRACTOR, IT IS RECOMMENDED TO REDUCE THE LOAD. KEEP ALL PARTS OF YOUR BODY INSIDE THE OPERATOR'S COMPARTMENT WHILE OPERATING THE TRACTOR.

https://truckmanualshub.com/

WARNING: NEVER UNDER ANY CIRCUMSTANCES USE THE 3-POINT LINKAGE TO TOW TRAILERS.

WARNING: NEVER ALLOW ANYONE TO RIDE ON TOW HOOK, DRAWBAR OR LIFTING ARMS AT ANY TIME.

WARNING: NEVER ENTER THE AREA BETWEEN THE TRACTOR AND THE IMPLEMENT WHEN THE TRACTOR IS IN MOTION. ALWAYS LOWER THE IMPLEMENT WHEN THE TRACTOR IS STATIONARY.

CAUTION: DO NOT USE THE FRONT HITCH FOR TOWING EQUIPMENTS. IT'S FOR EMERGENCY ONLY.

WARNING: NEVER TOW IMPLEMENTS BY ATTACHING THEN TO UPPER LINK OR UPPER LINK SUPPORT ONLY. THIS COULD IN SOME CASES RESULT IN REAR OVERTURN.

CAUTION: WHEN HITCHING AN IMPLEMENT TO DRAWBAR, ALWAYS SECURE HITCH PIN WITH A SAFETY PIN AND ATTACH IMPLEMENT SAFETY CHAINS.

https://truckmanualshub.com/

Three-point linkage

The 3-point linkage is used to attach implements to the hydraulic lift. When properly adjusted, it is suitable for the attachment of class I implements.

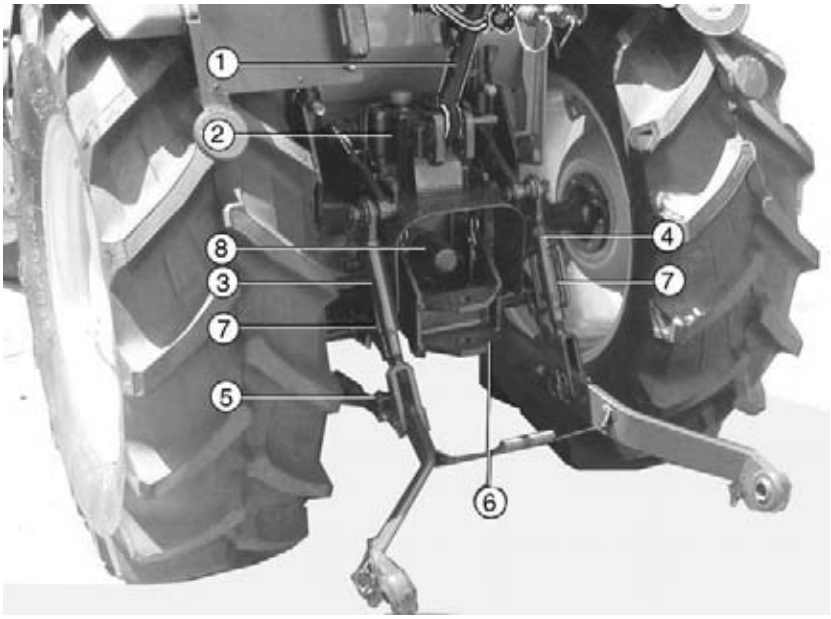

Rear view of tractor
1 - Top link
2 - Hydraulic lift
3 - Left-hand lifting rod (fixed)
4 - Right-hand lifting rod (adjustable)
5 - Telescopic stabilisers
6 - Quick-action hydraulic coupler
7 - Grease nipples
8 - Rear PTO stub shaft
9 - Towing hitch

NOTE: When adjusting the length of the top link of the 3-point hitch, take care that it does not come apart and ensure that a sufficient length of the threaded end of the turnbuckle is screwed into the turnbuckle housing to withstand the tractive force applied when working.

WARNING: HITCHING TO THE REAR AXLE, OR ANY OTHER POINT ABOVE THE SWINGING DRAWBAR, CAN CAUSE A REAR OVER-TURN.

https://truckmanualshub.com/

The ends of the lifting rods feature slots that allow wide implements to adapt to uneven ground.
The lengths of the top link and the lifting rods are adjusted by way of threaded sleeves fitted with handles for easy operation.

WARNING: DO NOT STAND, OR ALLOW ANYONE ELSE TO STAND, BETWEEN THE TRACTOR AND IMPLEMENT UNLESS THE ENGINE IS TURNED OFF AND THE PARKING BRAKE IS ENGAGED, THE LOWEST GEAR IS ENGAGED, THE KEY IS REMOVED, AND ALL ATTACHMENTS OR IMPLEMENTS ARE LOWERED TO THE GROUND.

Adjustment of the telescopic stabilisers

The telescopic stabilisers serve to prevent or limit side movement (transverse oscillation) of the implement.

The stabilisers must be adjusted without free play, when transporting implements and when working with grader blades, scraper blades, rollers, mowers, seed drills augers and similar implements.

The stabilisers must be adjusted with a little free play, when working with with ploughs, harrows, cultivators and similiar implements, or when working in draft control mode

Adjustment of the top link

This adjustment serves to position the implement at the correct angle to the ground.

Shortening the top link increases the angle; lengthening the top link reduces the angle.

Normally, when the lower lift arms are positioned horizontally, the rear end of the top link should be angled upwards.
The distance between the lower lift arms and the top link must never be less than 460 mm (18 in) .

WARNING: WHEN OPERATING THE LIFT CONTROLS, STAND WELL CLEAR OF THE OPERATING RADIUS OF THE LIFT ARMS AND ANY ATTACHED IMPLEMENTS.
THIS IS TO AVOID THE RISK OF INJURY IN THE CASE OF INCORRECT MANOEUVRES.

https://truckmanualshub.com/

Adjustable vertical link

The three-point right hand vertical link is attached to lower link by means of a special pin and plate that allows two positions:

- position A locks vertical link solid to lower link.
- position B allows for some floating of lower link when installed into slot of vertical link.

This has a dual purpose:

- to allow easier attaching of implement
- to allow implement to freely follow the ground contours for specific jobs.

For correct installation:

- remove cotter pin and turnover the plate with pin. Install through slot of vertical link and hole in lower link as shown in **A** to allow for some floating of lower link.
- install plate so that pin fits through solid hole of vertical link to prevent floating of lower link.

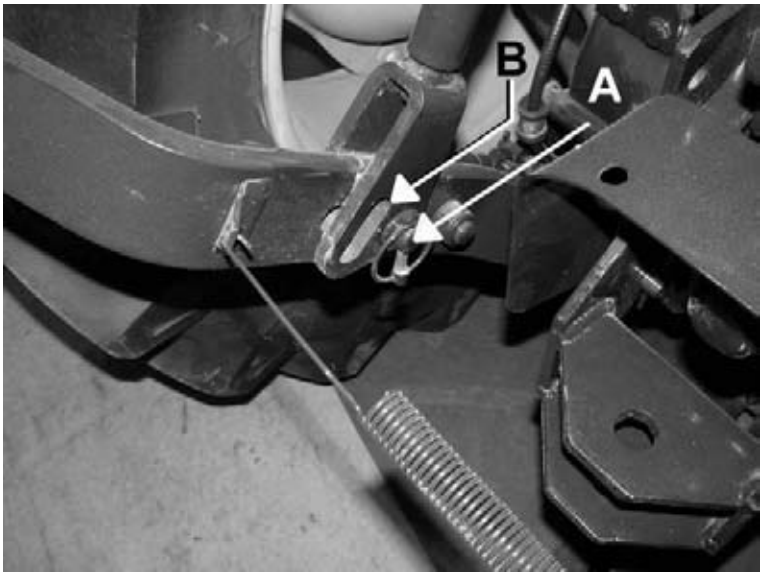

Coupling device for attaching the lifting rod to the lower link.
A - Fixed coupler
B - Coupler with play

IMPORTANT: Whenever brackets are used to lock the lower lifting arms into a stationary position. The yellow Position Control Lever, must remain all the way forward into the red FLOAT sector, and should not be moved rearward into the blue sector of quadrant.

https://truckmanualshub.com/

Mid mount implements with lifting arms

The tractor is preset for the installation of a mid mount mower equipped with lifting arms to be connected to the lower mid-section.

These type rotary mowers can be driven by the 1 inch P.T.O output shaft located under mid-section of tractor.

The tractor can be equipped with both the attachments (optional) for implement mounting and the control for implement raising and lowering.

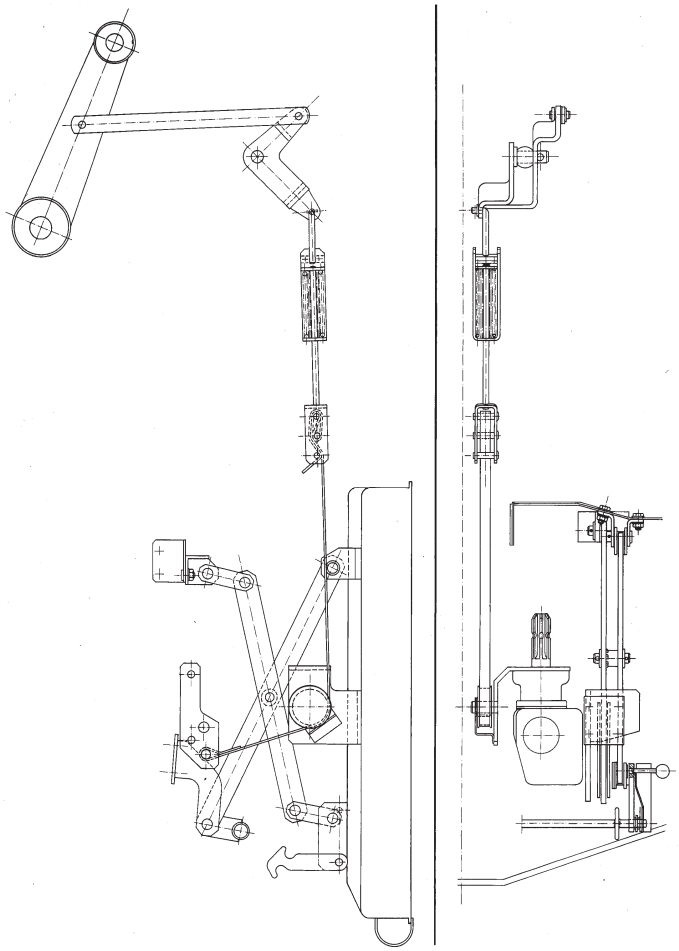

Ventral lift controls and devices

https://truckmanualshub.com/

Hydraulic front lift

On request, the tractor can be fitted with a hydraulic front lift.

To operate the front lift, turn the cock **A** on the right side of the tractor to the relevant position and then use the auxiliary control valve lever.

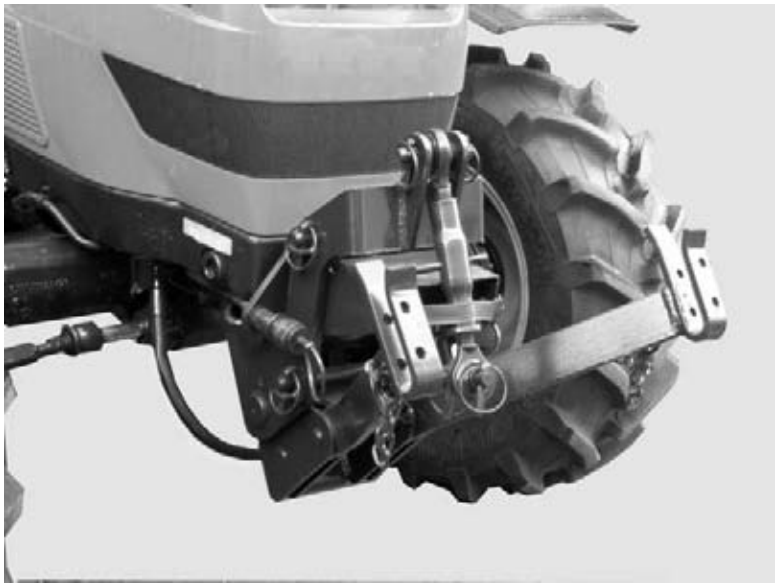

Front three point linkage

CAUTION: ENSURE THAT ANY IMPLEMENTS ATTACHED TO THE TRACTOR DO NOT EXCEED THE MAXIMUM PERMISSIBLE LOADS INDICATED BY THE MANUFACTURER.

https://truckmanualshub.com/

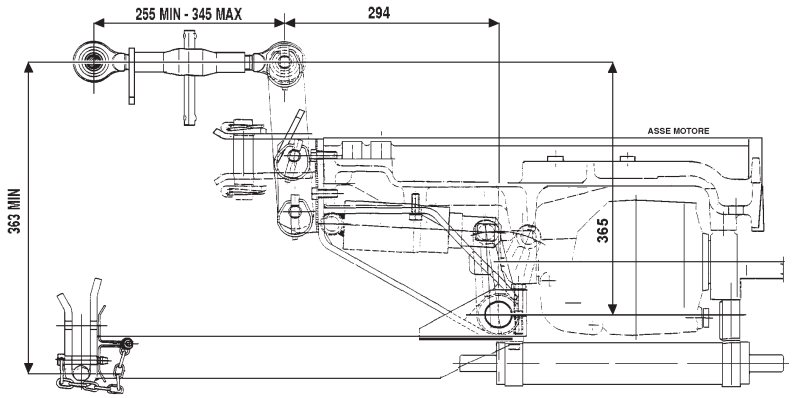

Adjusting the top link for correct implement hitching.

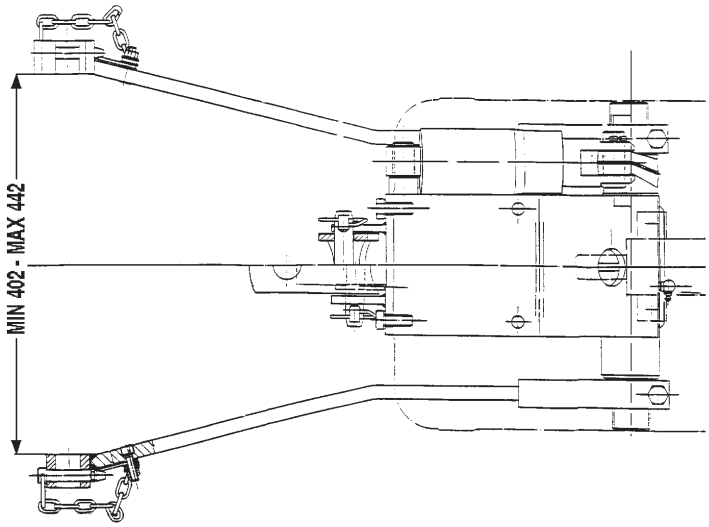

Distance between the bottom links of the front three point linkage.

https://truckmanualshub.com/

Bodywork

The hood tilts up to allow easy access to the engine for servicing.

To raise the hood, push the button to release the front catch and push the hood upwards.

The hood is held open by a spring damper.

To close the hood, pull it downwards and press firmly on the top to engage the catch.

https://truckmanualshub.com/

Safety frame

The safety frame can be tilted forwards.

Remove the pin from hole A and tilt the safety frame forwards.

Engage the pin in hole B to lock the safety frame in lowered position (see next page).

Only operate the tractor with the safety frame down when strictly necessary for specific farming tasks.

Removing the pin to release and tilt the safety frame.

WARNING: IF THE TRACTOR IS EQUIPPED WITH A FOLD DOWN ROPS, DO NOT WEAR SEAT BELT WHEN THE ROPS IS IN THE FOLDED DOWN POSITION FOR A SPECIFIC OPERATION. WEAR SEAT BELT AGAIN WHEN THE ROPS IS ERECTED.

https://truckmanualshub.com/

Inserting the lock pin to secure the roll bar in the folded position.

NOTE: carry out these steps in reverse order to return the roll bar to the upright position.

WARNING! When the safety frame is down, the operator has no protection in the event of the tractor turning over. The operator must therefore take extra special care when working with the safety frame down. Only operate the tractor with the safety frame down to perform tasks that demand operation under such conditions, and never when driving on the roads.

WARNING: IF THE ROPS/CAB HAS BEEN DAMAGED OR MODIFIED, THE ROPS/CAB MUST BE REPLACED TO PROVIDE THE ORIGINAL DEGREE OF PROTECTION.AFTER AN ACCIDENT, CHECK FOR DAMAGE TO THE ROPS/CAB, OPERATOR'S SEAT, SEAT BELT AND SEAT BELT MOUNTINGS.BEFORE YOU OPERATE THE TRACTOR, REPLACE ALL DAMAGED PARTS.

https://truckmanualshub.com/

Cab

- **(Optional)**

The tractor, if equipped with water cooled engine, can be equipped with a optional cab that includes outside air ventilation and cab heater. Cab air conditioning is not available. The cab can be removed when necessary by removal of four lock pins and disconnecting water heater hoses and cab electrical, which both utilize quick disconnects.

View of tractor with cab

Interior cab roof

https://truckmanualshub.com/

GRAMMER MSG 83/8 type seat

This seat is available in two versions:

- with seat cover in synthetic material.
- with seat cover in fabric.

This seat features the following adjustments:

- **longitudinal adjustment,** the seat slides back and forward to suit the stature and personal preference of the driver release lever 1.
- **adjusting spring response control,** turn the lever 2 to increase or reduce spring sensitivity, according to the weight of the driver.
- **height adjustment,** enabled by rotating the knob 3 between positions 0 and 3. The position selected is marked by a yellow indicator located to one side of the knob.

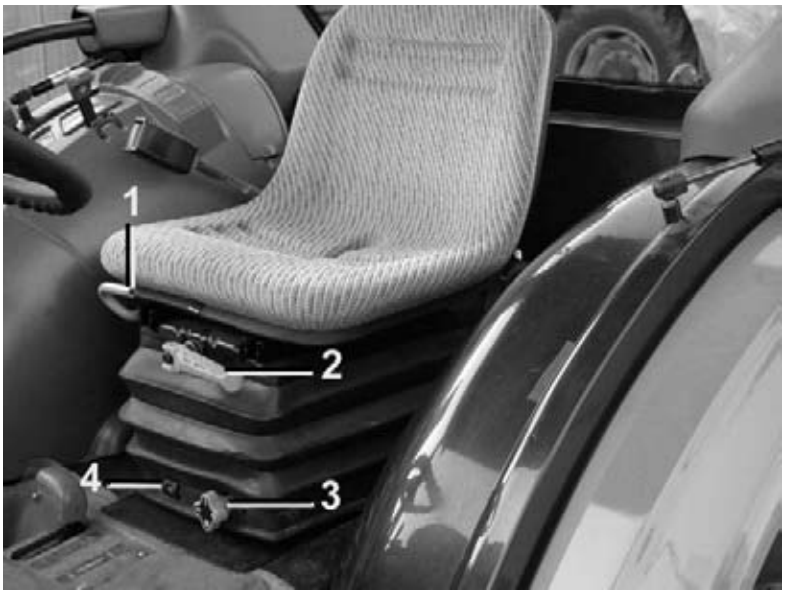

GRAMMER MSG 83/8 type seat
1 - Lever for longitudinal seat adjustment
2 - Spring suspension setting lever
3 - Height adjustment knob

https://truckmanualshub.com/

Ventilation

The ventilation unit is housed in the cab ceiling.
To switch it on and adjust it, turn the electrical fan switch to the desired speed.
When the ventilation system is on, a slight pressurization is created inside the cab. This forces the air flowing into the cab to pass through the filter placed behind the front grille.
The fan switch can be operated only after the ignition key is inserted.
The air flow can be regulated and directed by suitably positioning the air diffusers.

The air can be taken from the outside or alternatively from the inside of the cab depending on the position of the air recirculating grille.

Fully closed air recirculating grille: the air is taken from the outside only by way of the front grille and filtered through a paper filter placed under the grating itself.

Either fully or partially open air recirculating grille: now the air is recirculated inside the cab.

N.B. - It is very important that the air diffusers never be completely closed so as to allow for a steady air flow.
To obtain a greater pressurization inside the cab, it is necessary to take the air from the outside, therefore the inside air recirculating grille should be fully closed.

Controls

Ventilation control

0 - Electrical fan off.
1 - Electrical fan on first speed.
2 - Electrical fan on second speed
3 - Electrical fan on third speed

Heating control potentiometer

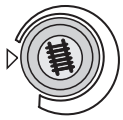

By turning it clockwise along the red sector after the system is switched on, a progressive power increase of the heating unit is obtained.

Air conditioning control

Rotating the knob clockwise, the interior of the cab will gradually become cooler

https://truckmanualshub.com/

Heating system

The heater is switched on and adjusted by rotating the control knob at the roof console, then switching on the blower and setting the selector at the preferred speed.

To warm the cab up quickly, the knob should be rotated fully clockwise and the blower set to speed 3.
The screen is demisted or defrosted by air directed through a slot ven. For defrost or fast demist, all other vents should be closed off.

IMPORTANT: ventilation is provided by a single blower unit serving both the heating system and the air-conditioning system.
After reaching the desired temperature adjust the system to suit your needs.

N.B. - For ideal system operation, the engine must run at 1600 r.p.m.

WARNING:

- Before starting the engine, make sure the system is off (by turning off the ventilation fan) so as not to overload the battery.
- After using the system at full power for a long period of time, never turn it off suddenly but let it first idle for about 20 seconds.
- If the air does not come out from the diffusers right away as soon as the system is started, turn off immediately and identify the fault.
- **N.B.** Never turn on the heating system when working in dusty environments.

WARNING: DO NOT DRIVE WHERE TRACTOR COULD SLIP OR TIP.

WARNING: IN SOME OF THE ILLUSTRATIONS USED IN THIS OPERATOR INSTRUCTION BOOK, PANEL OR GUARDS MAY HAVE BEEN REMOVED FOR CLARITY. NEVER OPERATE THE TRACTOR WITHOUT THESE COMPONENTS IN POSITION. IF THE REMOVAL OF PANEL OR GUARDS IS NECESSARY TO MAKE A REPAIR, THEY MUST BE REPLACED BEFORE OPERATION.

https://truckmanualshub.com/

System configuration

The heating system consist of two units:

- Electric heater **3** and blower unit **4** installed behind roof console.
- Power supplyng set, consisting of an auxiliary alternator **2** located front of the engine and driven by a belt directly linked to the engine pulley. In the event of the system failing to operate, check the fuse in the roof terminal box.

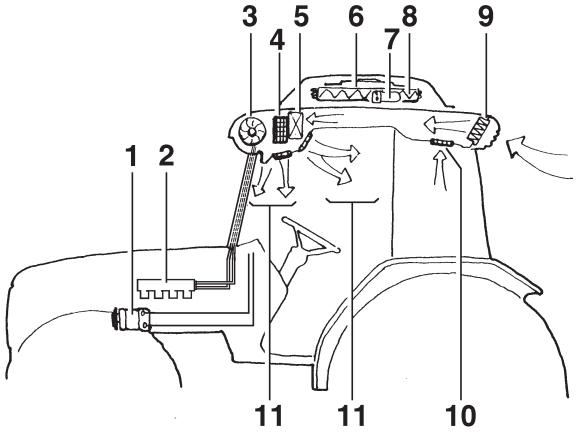

Configuration of the air ventilation, heating and conditioning system

1 - Compressor
2 - Engine coolant manifold
3 - 3 speed fan
4 - Electric resistence
5 - Evaporator
6 - Ventilator
7 - Dehydrating filter
8 - Condenser
9 - Air filter
10 - Recirculation inlets
11 - Air diffusing outles

CAUTION: ON TRAVELLING ON THE PUBBLIC ROAD WITH FRONT IMPLEMENTS, IF THE VISIBILITY IS NOT ENOUGH (TRAFFIC LIGHTS COVERED BY THE ATTACHED IMPLEMENT), PLEASE SWITCH ON THE WORKING LIGHTS.

https://truckmanualshub.com/

Air conditioning

The air conditioning system is designed to maintain an ideal temperature inside the cab and to ensure safe and risk-free operation.

The air conditioning unit in the cab roof.

- However, it is advisable to consult our specialized workshops whenever repairs or adjustments need to be performed.

- Do not approach the system with open flames, as any escape from the circuit may produce a lethal gas.

- Never loosen for any reason the pipe fittings and do not handle piping. In addition, do not remove the oil plug located on the compressor as the gas inside the circuit is under pressure.

- The refrigerant may cause severe burns resulting in frostbite. In case of injuries proceed in the following manner:
  - if the refrigerant hits your eyes, DO NOT rub eyes, it is necessary to immediately wash them with some drops of mineral oil and afterwards with a solution consisting of boric acid and water (one teaspoon of acid diluted in 1/4th a litre - 0.26 U.S. qt - of water). Seek medical attention as soon as possible.
  - If the refrigerant hits the skin causing it to become frostbitten, try to warm up the injured area with cold water and subsequently apply some greasy cream.

WARNING *- When working in very dusty areas and a greater cab pressurization is required to prevent dust from entering the cab, it is recommended* ***closing the air recirculating outlets****.*

CAUTION: THE CAB IS IN FULL CONFORMITY WITH THE INTERNATIONAL STANDARDS AS TO THE CAB'S SOUNDPROOFING.BE VERY CAREFUL WHEN OPERATING IN SMALL SPACES AND ALWAYS PROTECT YOUR EARS WHENEVER OTHER WORKING EQUIPMENT IS GENERATING DANGEROUS NOISE LEVELS.

https://truckmanualshub.com/

System controls
The air conditioning system can only operate when the engine is running and after having switched on the electric fan.

The system provides fresh and dehumidified air.

Rotate the knob and set to the required speed: then rotate the air conditioning potentiometer, bearing in mind that a clockwise rotation causes a progressive temperature decrease inside the cab.

To improve system efficiency, part of the conditioned air let into the cab is aspirated from the cab interior.

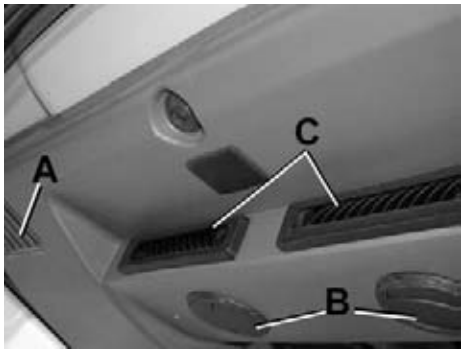

To improve system efficiency, vent **A-C** can be opened by loosening the three thumb screws and sliding vent over to allow inside air re-circulation. This permits the air volume into the cab to be regulated in a proportion of 5-15%.

To cool the cab it is suggested to:
- fully open the pivotable air diffusers **C**;
- turn the electric fan control and the potentiometer all the way;
- open the cab doors a few seconds to let the warm air flow out, in case the tractor has been exposed to the sun for long;
- use the system regulating potentiometer (thermostat) to reach the desired temperature.

After a few minutes the small sight glass placed above the dehydrating filter should be transparent and free of bubbles.

If not, turn the system off and consult our skilled personnel.

https://truckmanualshub.com/

Controls located in the cab roof lining

Pivotable headlight control

Front working lamps switch
They are provided with a built-in pilot lamp, indicating the lamps are lit.

Front screen wiper control

Front screen washer control
Depress the button to operate the electric pump for front glass washing.

Rear working lamps switch
They are provided with a built-in pilot lamp, indicating the lamps are lit.

Rear windscreen wiper and washer control
Depress the button to operate the electric pump for rear glass washing.

https://truckmanualshub.com/

Opening front window

The tractor is fitted with an opening front window.
To open it, turn the 2 locking levers (one on each side).
Push the window outwards to open it. The window is held open by two dampers.

Opening rear window

The tractor is fitted with an opening rear window. To open it, turn the locking lever anti-clockwise. Push the window outwards to open it. The window is held open by two dampers.

Interior cab roof: The cab roof is padded with an insulating material to reduce heat inside the cab and keep the cab cool when the tractor is working in hot sun. The roof also incorporates a sun-roof.

The areas of the cab floor where the driver places his feet are covered with non-slip carpeting. Keep the carpet clear of earth and mud, etc. to ensure maximum safety when entering and leaving the cab.

WARNING: DO NOT REMOVE OR OBSCURE DANGER, WARNING, CAUTION OR INSTRUCTION DECALS. REPLACE ANY DANGER, WARNING, CAUTION OR INSTRUCTION DECALS THAT ARE NOT READABLE OR ARE MISSING. REPLACEMENT DECALS ARE AVAILABLE FROM YOUR DEALER IN THE EVENT OF LOSS OR DAMAGE. THE ACTUAL LOCATION AND ORDERING CODE OF THESE SAFETY DECALS IS ILLUSTRATED AT THE END OF THIS SECTION. WHEN YOU REPLACE A PART THAT CARRIES A SAFETY LABEL, MAKE SURE THAT THE SAME LABEL IS APPLIED TO THE NEW PART. DO NOT USE FUEL OR SOLVENTS ETC. TO CLEAN SAFETY LABELS. USE A CLEAN CLOTH DAMPED IN SOAPY WATER.

https://truckmanualshub.com/

Cab roof light

Press the side of the roof light to switch it on.

Storage compartment

This is located on the right of the tractor alongside the auxiliary control valve levers.

Digital quartz clock

The clock is located in the front of the cab roof.
Proceed as follows to set the exact time:
Press button **A** to set the correct hour.
Press button **B** to set the correct minutes.

The cab roof is also fitted with a mounting and electrical power socket for a flashing beacon. The beacon switch is permanently live so that the beacon can be operated even if the ignition is not switched on.

DANGER: DO NOT WELD, DRILL, BEND OR MODIFY THE ROPS OR THE CABIN. TO DO SO REDUCES THE PROTECTION IT OFFERS.

WARNING: DO NOT ALLOW ANYONE TO CARRY OUT ANY MAINTENANCE OPERATIONS ON THE TRACTOR OR AN ATTACHED IMPLEMENT UNLESS THE ENGINE IS SWITCHED OFF, THE GEARBOX IS IN NEUTRAL, THE PTO IS DISENGAGED, THE HANDBRAKE IS APPLIED AND ANY ATTACHED IMPLEMENT IS LOWERED TO THE GROUND.

https://truckmanualshub.com/

WARNING: FLUIDS THAT FACILITATE ENGINE STARTING ARE HIGHLY FLAMMABLE. WHEN USING THEM, KEEP AWAY FROM SPARK SOURCES (BATTERIES, CONNECTORS, ETC). THESE FLUIDS SHOULD BE KEPT IN COOL AREAS AND THE CONTAINERS PROPERLY STORED.

CAUTION: WHEN USING CHEMICALS, CAREFULLY FOLLOW THE CHEMICAL MANUFACTURER'S INSTRUCTIONS FOR USE, STORAGE AND DISPOSAL. ALSO FOLLOW THE CHEMICAL APPLICATION EQUIPMENT MANUFACTURER'S INSTRUCTIONS.

DANGER: REPLACE THE "ACTIVE CARBON" FILTER AFTER 200 WORKING HOURS OR AFTER 36 MONTHS. IF YOU NOTICE SMELL OF PESTICIDE INSIDE THE CAB, REPLACE IMMEDIATELY THE FILTER AND LET CHECKED THE CAB GASKETS.

WARNING: IF THE TRACTOR HAS TO OPERATE IN AREAS WITH RISK OF FALLING OBJECTS (LIKE IN MINES, ETC.), WHERE A FOPS IS REQUIRED, PLEASE CONSIDER THAT YOUR TRACTOR, EQUIPPED WITH ROPS SAFETY STRUCTURE (FRAME OR CAB), IS NOT ALLOWED TO OPERATE IN THOSE AREAS.

WARNING: REDUCE YOUR SPEED, ENGAGING A LOWER GEAR, WHEN TRAVEL DOWNHILL OR OVER ROUGH GROUND AND BEFORE TO TURN.

https://truckmanualshub.com/

Active carbon air filter

- **(optional)**

WARNING: «PAPER» FILTER IS NOT SUITABLE FOR THE TREATMENT OF PESTICIDES AND SO MUST BE REPLACED BY AN «ACTIVE CARBON» FILTER AVAILABLE OPTIONALLY. ONCE THE PESTICIDE TREATMENT IS FINISHED, IT IS NECESSARY TO ONCE AGAIN REPLACE THE "ACTIVE CARBON" FILTER WITH THE PAPER FILTER, SINCE THIS IS THE ONLY TYPE SUITED FOR FILTERING FOREIGN PARTICLES FROM THE AIR.

Active carbon filters are removed and fitted in the same way as normal filters.

WARNING: the filter does not provide total protection against toxic substances.

- When handling the filter, wear protective gloves; this filter is to be fitted in place of the standard dust filter.
- After each use, the filter must be removed and replaced in its original packaging. The standard dust filter must then be refitted. The packaging should be carefully sealed in order to maintain the filter in good working condition.
- This filter, if used correctly and for no longer than a total of 200 hours, has a maximum life of 36 months from the moment the packaging is opened (the date of manufacture is indicated on the filter).
- It is important that the filter is removed during use of the tractor for any applications other than pesticide spraying; dust will clog the filter in a very short time.
- Do not wash the filter or clean with compressed air.
- Used filters must be disposed of at specialised collection centres.

Always follow the instructions provided by the product manufacturer.

https://truckmanualshub.com/

Cable channel for passing external implement control cables into the cab

At the rear right side of the cab there is a cable channel for passing external implement control cables into the cab.
To open the channel, pull the sliding cover **A** upwards as shown in the figure

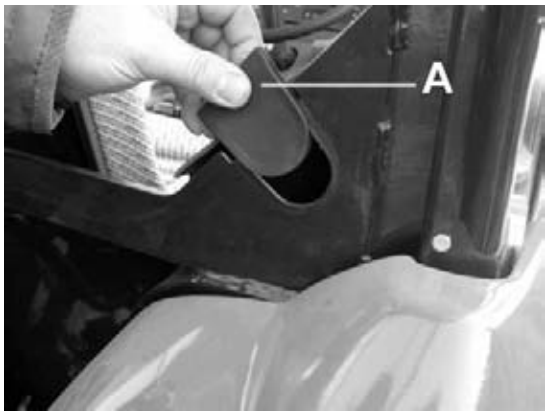

Hazard warning triangle

The triangle is located at the rear of the cab, in the compartment behind the seat.

Screen wash liquid reservoir

This is located inside the cab at the bottom of the left hand rear upright.

A - Screen wash liquid reservoir

WARNING: YOUR TRACTOR IS A ONE-PERSON MACHINE. DO NOT PERMIT OTHERS TO RIDE ON THE TRACTOR OR THE IMPLEMENT. IN SOME TERRITORIES A PASSENGER SEAT MUST BE FITTED TO CARRY PASSENGERS. DO NOT ALLOW ANYONE TO RIDE ON THE IMPLEMENTS OR OTHER EQUIPMENT INCLUDING TRAILERS, EXCEPT ON CERTAIN HARVESTING EQUIPMENT, SPECIFICALLY DESIGNED FOR RIDERS DURING THE ACTUAL HARVEST OPERATION ONLY (NOT DURING TRANSPORT). SUCH EQUIPMENT MUST HAVE PROVISION FOR A SAFE RIDING AREA. DO NOT ALLOW CHILDREN ON THE TRACTOR.

https://truckmanualshub.com/

SECTION 4 - Wheels

Track adjustment

Tracks are adjusted to match the tractor to different row spacings and implements, e.g. ploughs.
Tractors are delivered with disc wheels – track-adjusting wheels. Depending on the size of the tires, you can choose among up to eight different track widths.
Check the steering angle whenever the wheel track is modified.
Furthermore, bear in mind the international ruling providing that the distance between the outer edge of the illuminated face of direction indicators, position lights, tail lights and top rear reflectors and the outer edge of the tires should not exceed 400 mm (15.76 in).
Any maximum track widths which may be specified in the vehicle registration papers for the travelling on public lanes and roads must not be exceeded.

CAUTION: BEFORE CARRYING OUT ANY OPERATIONS, READ THE INSTRUCTIONS IN THIS MANUAL. FOLLOW THE INSTRUCTIONS CAREFULLY DURING OPERATION OF THE TRACTOR.

After any adjustment to the track width and whenever changing the wheels, tighten the nuts and bolts to the following required tightening torques:

- Front wheels bolts M14x1,5 = 17 kgm (169 Nm) (124,7 lbf ft);
- Rear wheels bolts M14x1,5 = 17 kgm (169 Nm) (124,7 lbf ft);

After 20 hours of work, all the nuts and bolts fixing the front and rear wheels have to be retightened to the previous torques.
Before changing the wheels, ensure that the tractor cannot move and use suitable supports.
Seating the tyre on the rim using compressed air: ensure that the air line extension between the valve and the person inflating the tyre is of sufficient length to allow the person to stand by the side of the tyre rather than in front of it. This operation should be carried out by specially trained personnel only.

CAUTION: CAREFULLY READ ALL SAFETY INSTRUCTIONS CONTAINED IN THE OPERATING AND MAINTENANCE HANDBOOK AND FOLLOW THE INSTRUCTIONS LISTED ON THE TRACTOR'S DECALS.

https://truckmanualshub.com/

Tyre inflation pressures

- Tyres for front 4WD: 1.6 bar (23 psi)
- Rear tyres: 1.3 bar (19 psi)

For the tyre bead to seat correctly on the rim, the inflation pressure must never exceed 5 bar (72.52 psi). Higher inflations pressures may cause the tyre/rim to explode.
We recommend the use of metal safety cages or tyre restraint bars when carrying out operations that require tyre inflation pressures above the values for normal use.

WARNING: FOR THE TYRE BEAD TO SEAT CORRECTLY ON THE RIM, THE INFLATION PRESSURE MUST NEVER EXCEED 5 BAR (72 PSI).
HIGHER INFLATIONS PRESSURES MAY CAUSE THE TYRE/RIM TO EXPLODE.
WE RECOMMEND THE USE OF METAL SAFETY CAGES OR TYRE RESTRAINT BARS WHEN CARRYING OUT OPERATIONS THAT REQUIRE TYRE INFLATION PRESSURES ABOVE THE VALUES FOR NORMAL USE.

IMPORTANT - When working on agricultural land in conditions requiring maximum grip, the rear tyre inflation pressure may be reduced to a minimum of 0.8 bar (11.60 psi). The normal inflation pressures for front and rear tyres are those reported in the specifications table. These values may be reduced proportionally to the permitted limits when necessary to ensure a correct mechanical match between the front and rear wheels.

Narrow track

– at rear
Depending on the given tire size, not all of the shown track widths are suitable for your tractor, as tire and fender may interfere. When selecting the track width, make sure that there is adequate clearance between fender and tire.

– at front
If you combine a narrow front axle track width with wide tires, watch out that this does not block too much the steer angle. Check the distance between engine hood and fenders. For this purpose, turn front wheels against lock, then move front wheels up and down and let axle swing.

https://truckmanualshub.com/

Width of the front axle (without wheels)

35 HP	
Narrow	916 mm (36.09 in)
Wide	1050 mm (41.37 in)
45 HP	
Narrow	916 mm (36.09 in)
Wide	1050 mm (41.37 in)
55 HP	
Narrow	916 mm (36.09 in)
Wide	1200 mm (47.28 in)

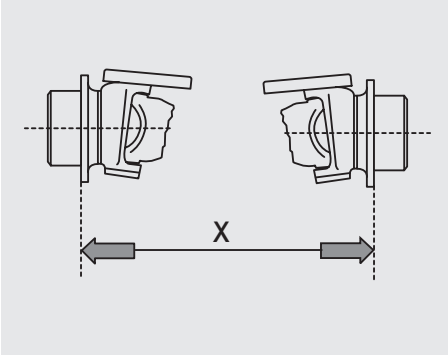

Mechanical ratio (front wheel revolutions / rear wheel revolution)

35 HP - 45 HP - 55 HP	**1,4725**

Width of rear axle (without wheels)

35 HP	
Narrow	762 mm (30.02 in)
Wide	882 mm (34.75 in)
45 HP	
Narrow	762 mm (30.02 in)
Wide	966 mm (38.06 in)
55 HP	
Narrow	762 mm (30.02 in)
Wide	966 mm (38.06 in)

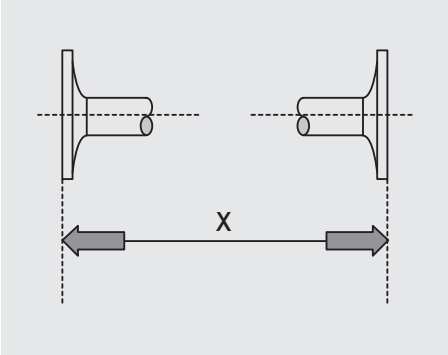

Row crop tires

When changing the tractor over to row crop (bar tread) tires, observe load rating and speed limits!
Given the tremendous variety of tyres available, always ask your nearest dealer for information on alternative tyres and data on homologation, capacity, pressure, track, etc..

https://truckmanualshub.com/

Running direction of tires

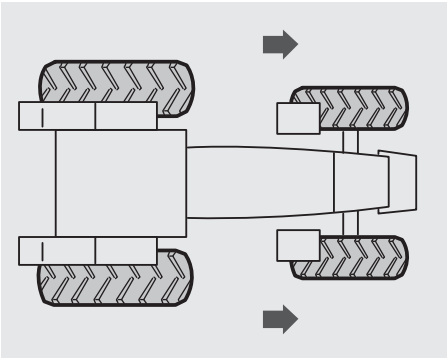

Tyres must always be fitted so that the tread pattern is oriented correctly with respect to the direction of forward travel. In the case of wheels where the rim is welded to the wheel disc, the left and right wheels may be swapped over to alter the track width; in all cases, however, the V-shaped tread pattern must always point towards the front of the tractor, as shown in the figure above.

Note: approved tyre combinations: in each market, only the approved combinations for the specific zone are available.

Adjusting steering stops

After every change of the front tyres, check the steering angle.

Procedure:

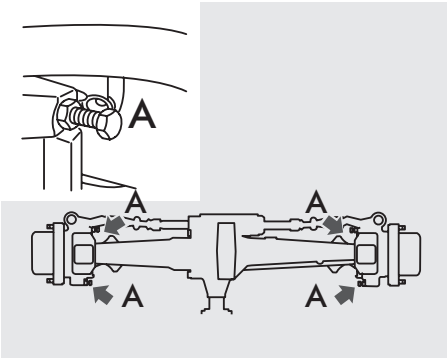

Operate parking brake

- Additionally secure tractor against rolling (wheel chock)
- In the case of tractors with suspended front axle, disconnect front axle suspension
- Jack up tractor at its front
- Turn steering wheel (to left and right).
- Adjustment of the steering angle.

When the front axle is in the condition of maximum oscillation and the wheels are turned to the maximum steering angle, there must be no interference between the fenders and engine hood. If necessary, adjust the internal angle.

WARNING: ALWAYS MAINTAIN THE CORRECT TYRE PRESSURE. WHEN INFLATING THE TYRES MAKE SURE TO STAND TO THE SIDE OF THE CENTRAL FLANGE.

https://truckmanualshub.com/

Adjustable track wheels

1 = Bracket
2 = Rim
3 = Bracket thickness
4 = Wheel

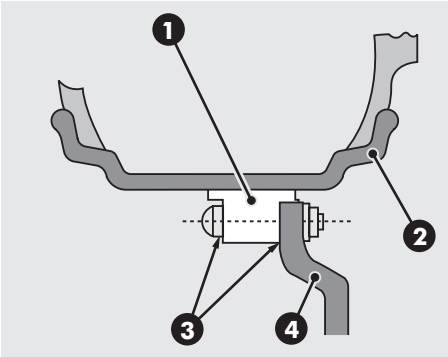

The support bracket **1** on the rim **2** is fixed offset with respect to the centreline of the rim (and therefore with respect to the tyre too).
During fitting, the bracket can be fitted in contact with the wheel **4** on both sides.

This allows for two different tracks.
Two more tracks can be achieved by turning the rim **2** with respect to the wheel **1**.
This means that there are in fact 4 possible ways of fitting the rim **2** and wheel **4**.

If you then fit the assembled wheel on to the hub (or rear half-axle) with the bell facing inside or outside you can actually achieve 8 different configurations (see figures on following pages) for distance between the centreline of the wheel and the mating surface on the wheel hub or half-axle flange. There are therefore 8 possible track values.

WARNING: FOR WHEELS DISASSEMBLING AND FOR MAINTENANCE AND REPAIR, LIFT THE TRACTOR, USING SPECIFIC TOOLS ONLY.

WARNING: WHEN IT IS NECESSARY TO WIDEN THE FRONT TREAD, AVOID DANGEROUS OVERLOADS.

https://truckmanualshub.com/

Permissible tyre combinations

Id	Front / Rear	35	45	55	Width (1) mm (in) min.	Width (1) mm (in) max
A	6.50/80-12 stretto	●			949 (37.39)	1225 (48.27)
	280/70R18 stretto				1138 (44.84)	1252 (49.33)
B	7.00-12 stretto	●			946 (37.27)	1278 (50.35)
	11.2R20 stretto				1092 (43.02)	1292 (50.90)
C	7.00-12 standard	●			1232 (48.54)	1260 (49.64)
	11.2R20 standard				1172 (46.18)	1372 (54.06)
D	7.00-12 standard	●	●	●	1232 (48.54)	1260 (49.64)
	320/70R20 standard				1252 (49.33)	1452 (57.21)
E	6.50-16 standard	●			1071 (42.20)	1411 (55.59)
	11.2R24 standard				1112 (43.81)	1512 (59.57)
F	27X8.50-15 garden	●			1185 (46.69)	1265 (49.84)
	13.6-16 garden				1300 (51.22)	1400 (55.16)
G	27X8.50-15 garden	●			1225 (48.27)	1225 (48.27)
	38X14.00-20 garden				1292 (50.90)	1312 (51.69)
H	260/70-16 standard	●			1140 (44.92)	1536 (60.52)
	11.2R24 standard				1150 (45.31)	1642 (64.69)
I	200/70R16	●	●	●	1140 (44.92)	1536 (60.52)
	320/R20				1252 (49.33)	1452 (57.21)
L	240/70R16	●	●	●	1140 (44.92)	1536 (60.52)
	360/70R20				1252 (49.33)	1452 (57.21)
M	260/70R16	●	●	●	986 (38.85)	1414 (55.71)
	320/70R24				1238 (48.78)	1432 (56.42)
I	7.50R16 standard		●	●	1065 (45 HP) (41.96) 1215 (55 HP) (47.87)	1361(45 HP) (53.62) 1511(55 HP) (59.53)
	12.4R24 standard				1196 (45 HP) (47.12) 1346 (55 HP) (53.03)	1596 (45 HP) (62.88) 1596 (55 HP) (62.88)
L	7.50-16 standard		●	●	1065 (45 HP) (41.96) 1215 (55 HP) (47.87)	1361(45 HP) (53.62) 1511 (55 HP) (59.53)
	360/70R24 standard				1276 (45 HP) (50.27) 1426(55 HP) (56.18)	1596 (45 HP) (62.88) 1596(55 HP) (62.88)
M	31X13.50-15 garden		●	●	1322 (45 HP) (52.09) 1472 (55 HP) (58.00)	1498(45 HP) (59.02) 1498 (55 HP) (59.02)
	44X18.00-20 garden				1390 (45 HP) (54.77) 1540 (55 HP) (60.68)	1502 (45 HP) (59.18) 1502 (55 HP) (59.18)
N	280/70-16 standard		●	●	1140 (45 HP) (44.92) 1290 (55 HP) (50.83)	1536 (45 HP) (60.52) 1536 (55 HP) (60.52)
	360/70-24 standard				1276 (45 HP) (50.27) 1426 (55 HP) (56.18)	1596 (45 HP) (62.88) 1596 (55 HP) (62.88)
O	31X13.50-15 garden			●	1322 (52.09)	1498 (59.02)
	475/65D20				1390 (54.77)	1502 (59.18)

(1) - Width here refers to the maximum width of the tractor with minimum track setting and the maximum width with maximum track setting.
N.B.: this value may vary according to the make of tyre and the inflation pressure.
Id:The letters A, B, C, etc. refer to the tables on pages 102.

https://truckmanualshub.com/

Track width adjustment for wheels with adjustable rims

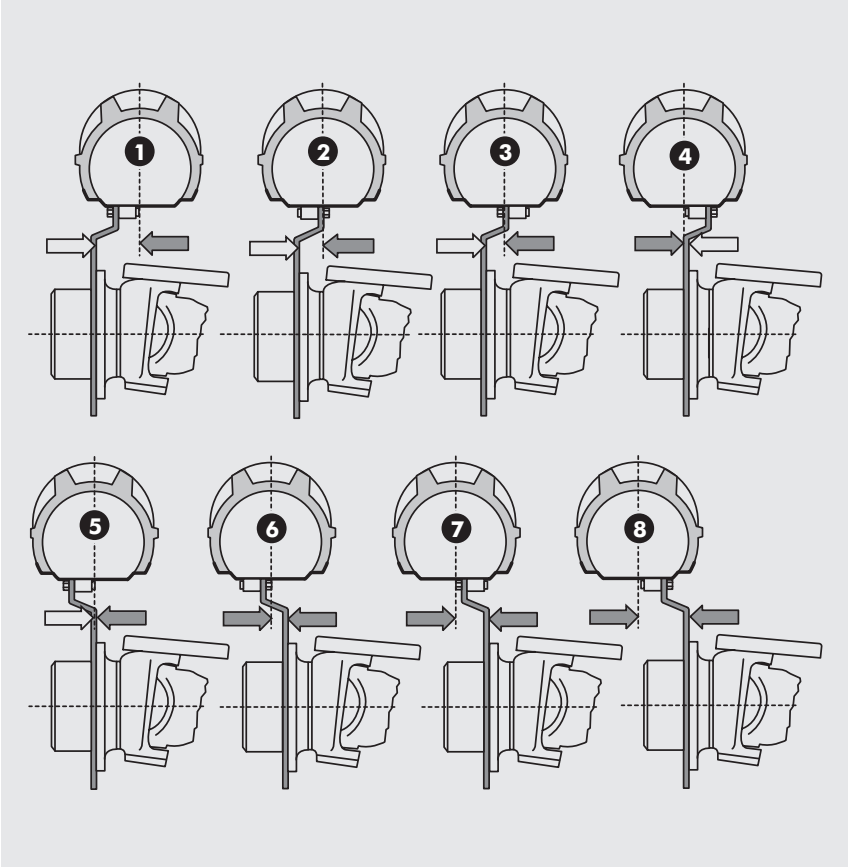

Front wheels

This figure illustrates the 8 different fitting possibilities and the 8 possible front track settings shown in the tables on the following pages.

WARNING: AN UNBALANCED TRACTOR COULD OVERTURN AND CAUSE INJURY OR DEATH. MAKE SURE FRONT FRAME COUNTER-WEIGHTS, WHEEL WEIGHTS AND WHEEL BALLAST ARE USED AS RECOMMENDED BY THE MANUFACTURER. DO NOT ADD EXTRA COUNTERWEIGHTS TO COMPENSATE FOR AN OVERLOADED TRACTOR, IT IS RECOMMENDED TO REDUCE THE LOAD. KEEP ALL PARTS OF YOUR BODY INSIDE THE OPERATOR'S COMPARTMENT WHILE OPERATING THE TRACTOR.

https://truckmanualshub.com/

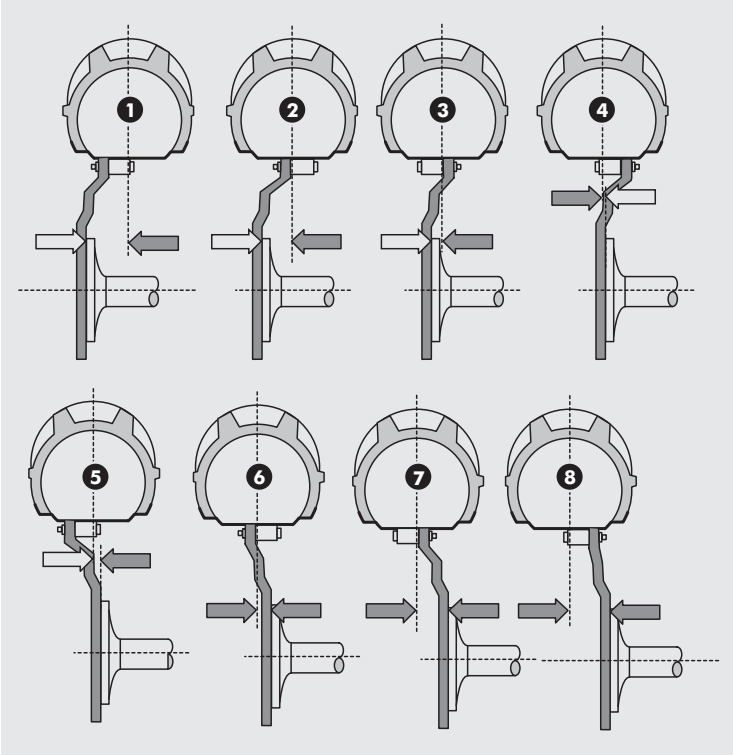

Rear wheels

This figure illustrates the 8 different fitting possibilities, and the 8 possible rear track settings shown in the tables on the following pages.

WARNING:
NEVER INFLATE BEYOND 35 POUNDS OF PRESSURE TO SEAT BEADS.
NEVER STAND, LEAN OR REACH OVER THE ASSEMBLY DURING INFLATION.
INSPECT BOTH SIDES OF THE TIRE TO BE SURE THAT THE BEADS ARE EVENLY SEATED. IF TIRE IS MOUNTED ON A MACHINE THAT DOES NOT HAVE A POSITIVE LOCK-DOWN DEVICE TO HOLD THE WHEEL, INFLATION SHOULD BE DONE IN A SAFETY CAGE OR OTHER RESTRAINING DEVICE. IF BOTH BEADS ARE NOT PROPERLY SEATED WHEN PRESSURE REACHES 35 PSI, COMPLETELY DEFLATE THE ASSEMBLY, REPOSITION THE TIRE AND/OR TUBE ON THE RIM, RELUBRICATE AND REINFLATE. INFLATING BEYOND 35 PSI AIR PRESSURE WHEN TRYING TO SEAT THE BEADS IS A DANGEROUS PRACTICE THAT MAY BREAK A TIRE BEAD (OR EVEN THE RIM) WITH EXPLOSIVE FORCE, POSSIBLY RESULTING IN SERIOUS INJURY OR DEATH. AFTER THE BEADS ARE FULLY SEATED, PRESSURE MAY BE INCREASED ABOVE 35 PSI TO OPERATING PRESSURES, NOT TO EXCEED THE MAXIMUM MOLDED ON THE TIRE SIDEWALL.

https://truckmanualshub.com/

A 35HP stretto

Track widths		front	rear
		6.50/80-12	280/70R18
1	mm (in)	784 (30.89)	- (-)
2	mm (in)	908 (35.78)	- (-)
3	mm (in)	840 (33.10)	- (-)
4	mm (in)	964 (37.98)	- (-)
5	mm (in)	880 (34.67)	- (-)
6	mm (in)	1004 (39.56)	858 (33.81)
7	mm (in)	936 (36.88)	882 (34.75)
8	mm (in)	1060 (41.76)	972 (38.30)

B 35HP stretto

Track widths		front	rear
		7.00-12	11.2R20
1	mm (in)	756 (29.79)	- (-)
2	mm (in)	880 (34.67)	- (-)
3	mm (in)	868 (30.20)	- (-)
4	mm (in)	992 (39.08)	812 (31.99)
5	mm (in)	852 (33.57)	- (-)
6	mm (in)	976 (38.45)	818 (32.23)
7	mm (in)	964 (37.98)	922 (36.33)
8	mm (in)	1088 (42.87)	1012 (39.87)

C 35HP standard

Track widths		front	rear
		7.00-12	11.2R20
1	mm (in)	1042 (41.05)	- (-)
2	mm (in)	1054 (41.53)	- (-)
3	mm (in)	1042 (41.05)	- (-)
4	mm (in)	1054 (41.53)	832 (32.78)
5	mm (in)	1058 (41.69)	948 (37.35)
6	mm (in)	1070 (42.16)	1038 (40.90)
7	mm (in)	1058 (41.69)	1142 (44.99)
8	mm (in)	1070 (42.16)	1232 (48.54)

D 35HP standard

Track widths		front	rear
		7.00-12	320/70R20
1	mm (in)	1042 (41.05)	- (-)
2	mm (in)	1054 (41.53)	- (-)
3	mm (in)	1042 (41.05)	- (-)
4	mm (in)	1054 (41.53)	932 (36.72)
5	mm (in)	1058 (41.69)	- (-)
6	mm (in)	1070 (42.16)	938 (36.96)
7	mm (in)	1058 (41.69)	1042 (41.05)
8	mm (in)	1070 (42.16)	1132 (44.60)

E 35HP standard

Track widths		front	rear
		6.50-16	11-2R24
1	mm (in)	888 (34.99)	- (-)
2	mm (in)	1004 (39.56)	- (-)
3	mm (in)	952 (37.51)	- (-)
4	mm (in)	1068 (42.08)	832 (32.78)
5	mm (in)	1048 (41.29)	948 (37.35)
6	mm (in)	1164 (45.86)	1038 (40.90)
7	mm (in)	1112 (43.81)	1142 (44.99)
8	mm (in)	1228 (48.38)	1232 (48.54)

F 35HP garden

Track widths		front	rear
		27x8.50-15	38x14.00-20
1	mm (in)	970 (38.22)	- (-)
2	mm (in)	- (-)	- (-)
3	mm (in)	- (-)	- (-)
4	mm (in)	- (-)	- (-)
5	mm (in)	- (-)	942 (37.11)
6	mm (in)	- (-)	962 (37.90)
7	mm (in)	- (-)	942 (37.11)
8	mm (in)	1050 (41.37)	962 (37.90)

Tables A, B, etc. refer to the tyre combinations denoted by these letters on page 96.

https://truckmanualshub.com/

G 35HP garden

Track widths		front	rear
		27x8.50-15	13.6R16
1	mm (in)	970 (38.22)	950 (37.43)
2	mm (in)	- (-)	- (-)
3	mm (in)	- (-)	- (-)
4	mm (in)	- (-)	- (-)
5	mm (in)	- (-)	- (-)
6	mm (in)	- (-)	- (-)
7	mm (in)	- (-)	- (-)
8	mm (in)	1050 (41.37)	1050 (41.37)

H 35HP standard

Track widths		front	rear
		260/70-16	11.2R24
1	mm (in)	860 (33.88)	- (-)
2	mm (in)	936 (36.88)	- (-)
3	mm (in)	1020 (40.19)	870 (34.28)
4	mm (in)	1096 (43.18)	982 (38.69)
5	mm (in)	1020 (40.19)	1076 (42.39)
6	mm (in)	1096 (43.18)	1168 (46.02)
7	mm (in)	1180 (46.49)	1270 (50.04)
8	mm (in)	1256 (49.49)	1362 (53.66)

I 35HPstandard

Track widths		front	rear
		200/70R16	320/70R20
1	mm (in)	860 (33.88)	- (-)
2	mm (in)	936 (36.88)	- (-)
3	mm (in)	1020 (40.19)	- (-)
4	mm (in)	1096 (43.18)	932 (36.72)
5	mm (in)	1020 (40.19)	- (-)
6	mm (in)	1096 (43.18)	838 (33.02)
7	mm (in)	1180 (46.49)	1042 (41.05)
8	mm (in)	1256 (49.49)	1132 (44.60)

L 35HPstandard

Track widths		front	rear
		240/70R16	360/70R20
1	mm (in)	860 (33.88)	- (-)
2	mm (in)	936 (36.88)	- (-)
3	mm (in)	1020 (40.19)	- (-)
4	mm (in)	1096 (43.18)	932 (36.72)
5	mm (in)	1020 (40.19)	- (-)
6	mm (in)	1096 (43.18)	938 (36.96)
7	mm (in)	1180 (46.49)	1042 (41.05)
8	mm (in)	1256 (49.49)	1132 (44.60)

M 35-45-55HPstretto

Track widths		front	rear
		260/70R16	320/70R24
1	mm (in)	726 (28.60)	- (-)
2	mm (in)	802 (31.60)	- (-)
3	mm (in)	886 (34.91)	- (-)
4	mm (in)	962 (37.90)	- (-)
5	mm (in)	886 (34.91)	- (-)
6	mm (in)	962 (37.90)	918 (36.17)
7	mm (in)	1046 (41.21)	1022 (40.27)
8	mm (in)	1122 (44.21)	1112 (43.81)

https://truckmanualshub.com/

N 45HPstandard

Track widths		front	rear
		7.50-16	12.4R24
1	mm (in)	860 (33.88)	- (-)
2	mm (in)	936 (36.88)	- (-)
3	mm (in)	936 (36.88)	- (-)
4	mm (in)	1096 (43.18)	916 (36.09)
5	mm (in)	1020 (40.19)	1032 (40.66)
6	mm (in)	1096 (43.18)	1122 (44.21)
7	mm (in)	1180 (46.49)	1226 (48.30)
8	mm (in)	1256 (49.49)	1316 (51.85)

O 45HPstandard

Track widths		front	rear
		7.50-16	360/70R24
1	mm (in)	860 (33.88)	- (-)
2	mm (in)	936 (36.88)	- (-)
3	mm (in)	936 (36.88)	- (-)
4	mm (in)	1096 (43.18)	916 (36.09)
5	mm (in)	1020 (40.19)	1032 (40.66)
6	mm (in)	1096 (43.18)	1122 (44.21)
7	mm (in)	1180 (46.49)	1226 (48.30)
8	mm (in)	1256 (49.49)	1316 (51.85)

P 45HP garden

Track widths		front	rear
		31x13.50-15	44x18.00-20
1	mm (in)	- (-)	- (-)
2	mm (in)	- (-)	- (-)
3	mm (in)	976 (38.45)	1032 (40.66)
4	mm (in)	- (-)	- (-)
5	mm (in)	- (-)	- (-)
6	mm (in)	- (-)	- (-)
7	mm (in)	- (-)	- (-)
8	mm (in)	- (-)	- (-)

Q 45HP

Track widths		front	rear
		280/70-16	360/70-24
1	mm (in)	860 (33.88)	- (-)
2	mm (in)	936 (36.88)	- (-)
3	mm (in)	1020 (40.19)	- (-)
4	mm (in)	1096 (43.18)	916 (36.09)
5	mm (in)	1020 (40.19)	1032 (40.66)
6	mm (in)	1096 (43.18)	1122 (44.21)
7	mm (in)	1180 (46.49)	1226 (48.30)
8	mm (in)	1256 (49.49)	1316 (51.85)

I-M 45-55HPstretto

Track widths		front	rear
		200/70R16	320/70R20
1	mm (in)	860 (33.88)	- (-)
2	mm (in)	936 (36.88)	- (-)
3	mm (in)	1020 (40.19)	- (-)
4	mm (in)	1096 (43.18)	932 (36.72)
5	mm (in)	1020 (40.19)	- (-)
6	mm (in)	1096 (43.18)	838 (33.02)
7	mm (in)	1180 (46.49)	1042 (41.05)
8	mm (in)	1256 (49.49)	1132 (44.60)

L 45-55stretto

Track widths		front	rear
		240/70R16	360/70R20
1	mm (in)	860 (33.88)	- (-)
2	mm (in)	936 (36.88)	- (-)
3	mm (in)	1020 (40.19)	- (-)
4	mm (in)	1096 (43.18)	932 (36.72)
5	mm (in)	1020 (40.19)	- (-)
6	mm (in)	1096 (43.18)	938 (36.96)
7	mm (in)	1180 (46.49)	1042 (41.05)
8	mm (in)	1256 (49.49)	1132 (44.60)

https://truckmanualshub.com/

A 45-55HP stretto

Track widths		front	rear
		6.50-16	11-2R20
1	mm (in)	888 (34.99)	- (-)
2	mm (in)	1004 (39.56)	- (-)
3	mm (in)	952 (37.51)	- (-)
4	mm (in)	1068 (42.08)	892 (35.14)
5	mm (in)	1048 (41.29)	888 (34.99)
6	mm (in)	1164 (45.86)	978 (38.53)
7	mm (in)	1112 (43.81)	1002 (39.48)
8	mm (in)	1228 (48.38)	1092 (43.02)

B 45-55HP stretto

Track widths		front	rear
		7.00-12	11.2R20
1	mm (in)	1042 (41.05)	- (-)
2	mm (in)	1054 (41.53)	- (-)
3	mm (in)	1042 (41.05)	- (-)
4	mm (in)	1054 (41.53)	892 (33.96)
5	mm (in)	1058 (41.69)	888 (34.99)
6	mm (in)	1070 (42.16)	978 (38.53)
7	mm (in)	1058 (41.69)	1002 (39.48)
8	mm (in)	1070 (42.16)	1092 (43.02)

D 45-55HP stretto

Track widths		front	rear
		7.00-12	320/70/20
1	mm (in)	1042 (41.05)	- (-)
2	mm (in)	1054 (41.53)	- (-)
3	mm (in)	1042 (41.05)	- (-)
4	mm (in)	1054 (41.53)	932 (36.72)
5	mm (in)	1058 (41.69)	- (-)
6	mm (in)	1070 (42.16)	938 (36.96)
7	mm (in)	1058 (41.69)	1042 (41.05)
8	mm (in)	1070 (42.16)	1132 (44.60)

E 45-55HP stretto

Track widths		front	rear
		6.50-16	11-2R24
1	mm (in)	888 (34.99)	- (-)
2	mm (in)	1004 (39.56)	- (-)
3	mm (in)	952 (37.51)	- (-)
4	mm (in)	1068 (42.08)	832 (32.78)
5	mm (in)	1048 (41.29)	948 (37.35)
6	mm (in)	1164 (45.86)	1038 (40.90)
7	mm (in)	1112 (43.81)	1142 (40.90)
8	mm (in)	1228 (48.38)	1232 (44.99)

G 45HP garden

Track widths		front	rear
		31x13.50-15	44x18.00-20
1	mm (in)	972 (38.30)	920 (36.25)
2	mm (in)	- (-)	- (-)
3	mm (in)	- (-)	- (-)
4	mm (in)	- (-)	- (-)
5	mm (in)	- (-)	- (-)
6	mm (in)	- (-)	- (-)
7	mm (in)	- (-)	- (-)
8	mm (in)	1148 (45.23)	1032 (40.66)

H 45-55HP stretto

Track widths		front	rear
		260/70-16	11.2R24
1	mm (in)	726 (28.60)	- (-)
2	mm (in)	802 (31.60)	- (-)
3	mm (in)	886 (34.91)	870 (34.28)
4	mm (in)	962 (37.90)	982 (38.69)
5	mm (in)	886 (34.91)	1076 (42.39)
6	mm (in)	962 (37.90)	1168 (46.02)
7	mm (in)	1046 (41.21)	1270 (50.04)
8	mm (in)	1122 (44.21)	1362 (53.66)

https://truckmanualshub.com/

N 55HPstandard

Track widths		front	rear
		7.50-16	12.4R24
1	mm (in)	1010 (39.79)	- (-)
2	mm (in)	1086 (42.79)	- (-)
3	mm (in)	1170 (46.10)	- (-)
4	mm (in)	1246 (49.09)	916 (36.09)
5	mm (in)	1170 (46.10)	1032 (40.66)
6	mm (in)	1246 (49.09)	1122 (44.21)
7	mm (in)	1330 (52.40)	1226 (48.30)
8	mm (in)	1406 (55.40)	1316 (51.85)

O 55HPstandard

Track widths		front	rear
		7.50-16	360/70R24
1	mm (in)	1010 (39.79)	- (-)
2	mm (in)	1086 (42.79)	- (-)
3	mm (in)	1170 (46.10)	- (-)
4	mm (in)	1246 (49.09)	916 (36.09)
5	mm (in)	1170 (46.10)	1032 (40.66)
6	mm (in)	1246 (49.09)	1122 (44.21)
7	mm (in)	1330 (52.40)	1226 (48.30)
8	mm (in)	1316 (55.40)	1316 (51.85)

P 55HP garden

Track widths		front	rear
		31x13.50-15	44x18.00-20
1	mm (in)	1142 (44.99)	920 (36.25)
2	mm (in)	- (-)	- (-)
3	mm (in)	- (-)	- (-)
4	mm (in)	- (-)	- (-)
5	mm (in)	- (-)	- (-)
6	mm (in)	- (-)	- (-)
7	mm (in)	- (-)	- (-)
8	mm (in)	1298 (51.14)	1032 (40.66)

Q 55HPstandard

Track widths		front	rear
		280/70-16	360/70-24
1	mm (in)	860 (33.88)	- (-)
2	mm (in)	936 (36.88)	- (-)
3	mm (in)	1020 (40.19)	- (-)
4	mm (in)	1096 (43.18)	916 (36.09)
5	mm (in)	1020 (40.19)	1032 (40.66)
6	mm (in)	1096 (43.18)	1122 (44.21)
7	mm (in)	1180 (46.49)	1226 (48.30)
8	mm (in)	1256 (49.49)	1316 (51.85)

M 55HPstandard

Track widths		front	rear
		31x13.50-15	475/65D20
1	mm (in)	1142 (44.99)	920 (36.25)
2	mm (in)	- (-)	- (-)
3	mm (in)	- (-)	- (-)
4	mm (in)	- (-)	- (-)
5	mm (in)	- (-)	- (-)
6	mm (in)	- (-)	- (-)
7	mm (in)	- (-)	- (-)
8	mm (in)	1298 (51.14)	1032 (40.66)

https://truckmanualshub.com/

Track width adjustment for wheels with fixed rims

In this case only two fitting methods, A and B, are possible for the front and rear wheels, as shown in the figure.

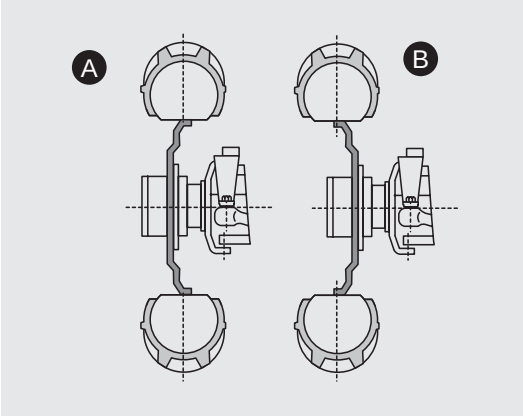

Front wheels

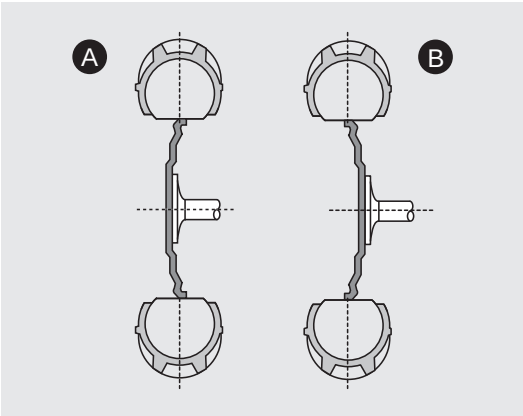

Rear wheels

The following wheels have fixed rims:
- 7.00-12 front
- 31x13.50-15 front
- 44x18.00-20 rear
- 13.6-16 rear
- 260/70R16 front
- 320/70R24 rear

https://truckmanualshub.com/

Ballast

Front horizontal ballast blocks

- ballast in **15 kg (33.07 lb)** cast iron blocks. Up to a maximum of 4 blocks can be applied, giving a total ballast of **60 Kg (132.28 lb)**. Each horizontal block is secured by 2 ballast mounting rods under the front ballast frame.

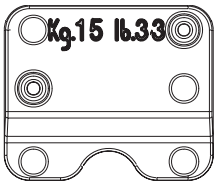

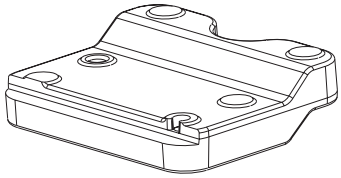

The horizontal blocks can be augmented by 4 vertical blocks (25 kg (55.12 lb) each), fitted on a special mounting frame at the front of the tractor

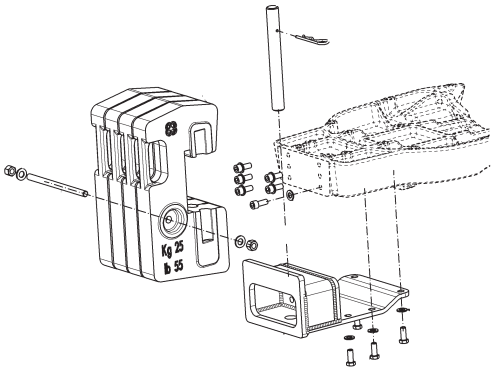

Rear ballast

ballast in the form of metal wheel rings, one each side. The cast iron wheel ballast must be fitted to the rear wheel flange and bolted to the half-axle.

- 2 ballast weights (1 per wheel) weighing 43 kg (94.80 lb) each, for a total of 86 kg (189.60 lb).

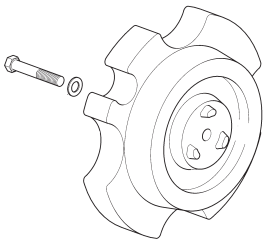

CAUTION: ALWAYS FASTEN YOUR SEAT BELT. THE USE OF A SEAT BELT REDUCES THE RISK OF SERIOUS INJURY IN CASE OF AN ACCIDENT.

https://truckmanualshub.com/

Ballasting by filling the tyres with water + antifreeze solution

To prevent the water from freezing and damaging the tyres, use additives to obtain a neutralised solution of calcium chloride.
Proceed as follows: pour the required quantity of water into a container and then slowly pour in calcium chloride in the proportion of approx. 30 kg (66.1 lb) to every 100 litres (26.4 U.S. gal) of water.

N.B. - Add calcium chloride to the water, not vice versa, to prevent the risk of a violent chemical reaction.
The amount of liquid in the tyre must not exceed 75% of the total tyre volume.

Warning: the antifreeze solution does not offer protection at temperatures below -20°C (68°F).

CAUTION: ON BALLASTING THE TRACTOR, VERIFY THAT THE FRONT AXLE WEIGHT IS AT LEAST THE 20% OF THE TOTAL TRACTOR WEIGHT. IT'S TO GUARANTEE A SAFE STEERING.

WARNING: REMEMBER THAT STEERING, BRAKING AND TRACTOR PERFORMANCE IN GENERAL WILL BE GREATLY AFFECTED BY THE IMPLEMENTS ATTACHED, THE TRAILERS TOWED OR THE BALLAST APPLIED.

Further information is obtainable from the tire trade. The antifreeze is to be added to the water under constant stirring until it is completely dissolved. After having filled the tires, flush all equipment with water, as the solution is highly aggressive.
The liquid must be introduced into the tyre using a special adapter specifically designed for this purpose.

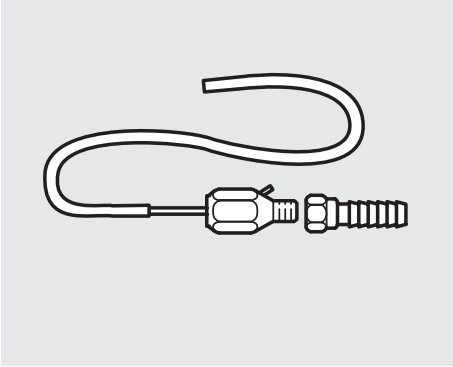

(These adapters are supplied by tyre manufacturers).

CAUTION: DURING TRACTOR REFUELING, ALWAYS TURN THE ENGINE OFF AND CLEAN ANY FUEL SPILLED ON THE TRACTOR.

https://truckmanualshub.com/

Filling the tyre with water

Jack up tractor. Rotate wheel so that the inner-tube tire valve is in upper position. Screw out valve insert. Screw water filling valve into the tire valve. Connect water hose. Connect the water hose and fill until the water starts to come out of the breather at the bottom of the valve. Screw off water filling valve. Refit valve insert. Inflate tire to specified pressure.

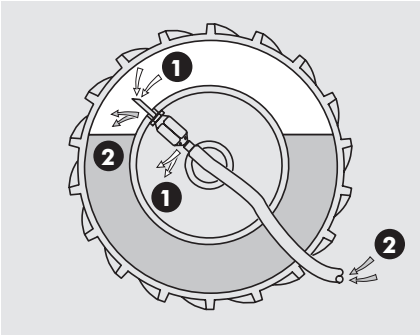

1 - AIR
2 - WATER

CAUTION: WHILE MIXING THE ANTIFREEZE SOLUTION AND FILLING THE TYRE, IT IS ESSENTIAL TO WEAR SAFETY GOGGLES AND PROTECTIVE CLOTHING. ADD CALCIUM TO THE WATER, NOT VICE VERSA, TO PREVENT THE RISK OF A VIOLENT CHEMICAL REACTION.

Draining water from the tyre

Jack up tractor. Rotate wheel so that the inner-tube tire valve comes down. Screw out tire valve insert. Allow water to drain. Screw on combined valve.
Inflate tire. The air pressure will force out any remaining water through the bleeder bore. Screw off combined valve. Refit tire valve insert. Inflate tire to specified pressure.

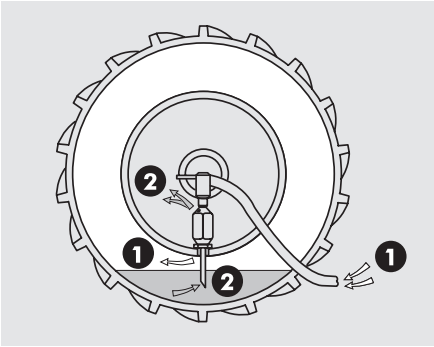

WARNING:
STAY OUT OF THE TRAJECTORY AS INDICATED BY SHADED AREA. ALWAYS USE A SAFETY CAGE OR OTHER RESTRAINING DEVICE IN COMPLIANCE WITH OSHA REGULATIONS.
NOTE: UNDER SOME CIRCUMSTANCES, THE TRAJECTORY MAY DEVIATE FROM ITS EXPECTED PATH

https://truckmanualshub.com/

WARNING:
SERIOUS INJURY OR DEATH MAY RESULT FROM:
EXPLOSION OF TIRE/RIM/WHEEL ASSEMBLY DUE TO IMPROPER MOUNTING – NEVER EXCEED 35 PSI (AIR PRESSURE) WHEN SEATING BEADS. – ALWAYS USE SAFETY CAGE OR OTHER RESTRAINING DEVICE AND CLIP-ON EXTENSION HOSE. ONLY SPECIALLY TRAINED PERSONS SHOULD MOUNT TIRES.
TIRE FAILURE DUE TO MISAPPLICATION/IMPROPER INFLATION/OVERLOADING/EXCEEDING MAXIMUM SPEED – FOLLOW TIRE MANUFACTURER'S INSTRUCTIONS. CHECK INFLATION PRESSURE FREQUENTLY WITH GAUGE.
EXPLOSION OF THE TIRE/RIM/WHEEL ASSEMBLY DUE TO WELDING THE RIM WITHOUT FIRST REMOVING THE TIRE – NEVER REWORK, WELD, HEAT OR BRAZE THE RIM OF A TIRE/RIM/WHEEL ASSEMBLY.

WARNING:
TIRE CHANGING CAN BE DANGEROUS AND SHOULD BE DONE BY TRAINED PERSONNEL USING PROPER TOOLS AND PROCEDURES. ALWAYS READ AND UNDERSTAND ANY MANUFACTURER'S WARNING CONTAINED IN THEIR CUSTOMERS' LITERATURE OR MOLDED INTO THE TIRE SIDEWALL.
FAILURE TO COMPLY WITH THESE PROCEDURES MAY RESULT IN FAULTY POSITIONING OF THE TIRE AND/OR RIM PARTS, AND CAUSE THE ASSEMBLY TO BURST WITH EXPLOSIVE FORCE, SUFFICIENT TO CAUSE SERIOUS PHYSICAL INJURY OR DEATH. NEVER MOUNT OR USE DAMAGED TIRES OR RIMS.

WARNING: REINFLATION OF ANY TYPE OF TIRE/RIM ASSEMBLY THAT HAS BEEN OPERATED IN A RUN-FLAT OR UNDERINFLATED CONDITION (80% OR LESS OF RECOMMENDED PRESSURE), CAN RESULT IN SERIOUS INJURY OR DEATH. THE TIRE MAY BE DAMAGED ON THE INSIDE AND CAN EXPLODE WHILE YOU ARE ADDING AIR. THE RIM PARTS MAY BE WORN, DAMAGED OR DISLODGED AND CAN EXPLOSIVELY SEPARATE. NEVER REWORK, WELD, HEAT, OR BRAZE THE TIRE/WHEEL/RIM. HEATING THE RIM OF TIRE/WHEEL/RIM ASSEMBLY CAN CAUSE A TIRE TO EXPLODE, CAUSING SERIOUS INJURY OR DEATH. THE USE OF ANY FLAMMABLE MATERIAL DURING TIRE SERVICING IS ABSOLUTELY PROHIBITED. USE OF STARTING FLUID, ETHER, GASOLINE OR ANY OTHER FLAMMABLE MATERIAL TO LUBRICATE, SEAL OR SEAT THE BEADS OF A TUBELESS TIRE CAN CAUSE THE TIRE TO EXPLODE OR CAN CAUSE THE EXPLOSIVE SEPARATION OF THE TIRE/RIM ASSEMBLY RESULTING IN SERIOUS INJURY OR DEATH. NEVER HAMMER, STRIKE OR PRY ON ANY TYPE OF TIRE/RIM ASSEMBLY WHILE THE TIRE CONTAINS INFLATION PRESSURE. DO NOT ATTEMPT TO SEAT ANY PART WHILE THE TIRE CONTAINS ANY INFLATION PRESSURE. THIS COULD RESULT IN SERIOUS INJURY OR DEATH.

https://truckmanualshub.com/

SECTION 5 - Maintenance operations

This section of the manual deals with the lubrication and general maintenance of the tractor.

CAUTION: BEFORE CARRYING OUT ANY OPERATIONS, READ THE INSTRUCTIONS IN THIS MANUAL. FOLLOW THE INSTRUCTIONS CAREFULLY DURING OPERATION OF THE TRACTOR.

CAUTION: CAREFULLY READ ALL SAFETY INSTRUCTIONS CONTAINED IN THE OPERATING AND MAINTENANCE HANDBOOK AND FOLLOW THE INSTRUCTIONS LISTED ON THE TRACTOR'S DECALS.

CAUTION: ALWAYS MAINTAIN THE TRACTOR IN GOOD WORKING CONDITION. LACK OF MAINTENANCE CAN CAUSE NEEDLESS DOWN TIME AND CAN INFLUENCE NEGATIVELY ON THE DURATION OF ITS WORK LIFE.

WARNING: IN SOME OF THE ILLUSTRATIONS USED IN THIS OPERATOR INSTRUCTION BOOK, PANEL OR GUARDS MAY HAVE BEEN REMOVED FOR CLARITY. NEVER OPERATE THE TRACTOR WITHOUT THESE COMPONENTS IN POSITION. IF THE REMOVAL OF PANEL OR GUARDS IS NECESSARY TO MAKE A REPAIR, THEY MUST BE REPLACED BEFORE OPERATION.

DANGER: NEVER START THE ENGINE BY SHORT-CIRCUITING THE STARTER ENGINE'S TERMINALS. THIS MAY CAUSE SUDDEN TAKE-OFFS WHICH COULD BE VERY DANGEROUS TO THE OPERATOR.

https://truckmanualshub.com/

CAUTION: ALWAYS WEAR CLOTHING SUITABLE FOR THE TYPE OF WORK TO BE PERFORMED. IF NECESSARY, USE HEARING PROTECTION PLUGS AND WEAR EYE PROTECTION.

CAUTION: IT IS IMPORTANT TO ALWAYS HAVE FIRST-AID EQUIPMENT READ-ILY
AVAILABLE:
- FIRST-AID KIT WITH MEDICAMENTS;
- FIRE EXTINGUISHER;
- EMERGENCY TELEPHONE NUMBERS ON HAND (DOCTOR, HOSPITAL, AMBULANCE, FIREMEN).

WARNING: DO NOT ALLOW ANYONE TO CARRY OUT ANY MAINTENANCE OPERATIONS ON THE TRACTOR OR AN ATTACHED IMPLEMENT UNLESS THE ENGINE IS SWITCHED OFF, THE GEARBOX IS IN NEUTRAL, THE PTO IS DISENGAGED, THE HANDBRAKE IS APPLIED AND ANY ATTACHED IMPLEMENT IS LOWERED TO THE GROUND.

DANGER: START THE ENGINE, WITH THE STARTER KEY, FROM THE OPERATOR'S SEAT ONLY. DO NOT ATTEMPT TO START THE ENGINE BY SHORTING ACROSS THE STARTER TERMINALS. THE MACHINE WILL START IN GEAR IF THE NEUTRAL START CIRCUIT IS BYPASSED. THIS COULD CAUSE SERIOUS INJURY OR DEATH TO ANYONE IN THE VICINITY OF THE TRACTOR. ENSURE THAT THE ENGINE STARTER SOLENOID COVER IS ALWAYS IN POSITON.

For information regarding the quantities and qualities of lubricant and fluids, refer to the "Prescribed lubricants and furnishments" on page 111.

Lubricants and fluids

PRESCRIBED LUBRIFICANTS AND FUELS SOLARIS 35 - 45 - 55

The values specified here are approximate and may vary from one application to another. The key factor is always the relevant mar dipstick or fill level indicator on the filling station device.

Part to be supplied	Litres (U.S. gal)	Product	Specifications	change hours
Engine **SOLARIS**	**4.7**** **(5.9)**	AKROS TURBO 15W40	SAE 15w-40 ACEA E3-96 API CF SDFG OM-1991 MIL-L-2104 E level MB 228.3 level	300* (1)
Radiator antifreeze SOLARIS 35	4.5 (4.7)	50% acqua + 50% AKROS FREEZE	SDFG EC-1599 A	1200 (2)
Radiator antifreeze SOLARIS 45/55	5.5 (5.8)			
Gearbox and Rear axle, Hydraulic power-lift, Auxiliary system and Hydrostatic steering	21 **(22.2)**	AKROS MULTI	SAE 10w-30 SAE 20w-30 UTTO API GL4 SDFG OT-1891	1200
Front -wheel drive	4.8 **(5)**	AKROS MULTI	SAE 10w-30 SAE 20w-30 UTTO API GL4 SDFG OT-1891	1200
Lubrication points		AKROS GREASE T2	NLGI 2 - LITIO SDFG GR-1202 L	50

(*) 1° replace after 50 hours

(**) With filter + 1 litre

(1) - or once a year

(2) - or once every 2 years

https://truckmanualshub.com/

https://truckmanualshub.com/

Maintenance intervals

The recommended maintenance intervals apply to normal operating conditions.

CAUTION: BEFORE STARTING THE TRACTOR, CHECK ITS CONDITION FOR OPERATING SAFETLY ON THE PUBLIC HIGHWAY.

If the tractor is subjected to extreme working conditions and/or dusty environments, the intervals between maintenance operations will have to be reduced accordingly.

Scrupulously observe the recommended maintenance intervals and only use recommended lubricants and fluids.
Using inferior quality lubricants in order to save money can result in serious damage to the tractor.

Failure to have the tractor serviced at the recommended maintenance intervals and to use the prescribed lubricants will invalidate the manufacturer's warranty.

DANGER: TO AVOID EYE INJURY, NEVER EXPOSE EYES TO WAVE EMISSION ZONES WHEN RADAR IS IN OPERATION. DO THE RADAR MAINTENANCE ONLY AFTER ENGINE TURNED OFF AND IGNITION KEY IN STOP POSITION.

https://truckmanualshub.com/

Important notes

- Ensure that any containers used to store lubricants are perfectly clean. Funnels and measuring cups must be covered to prevent dust settling on them.
- Clean the areas adjacent to the parts to be lubricated.
- Grease parts when warm so that the grease flows more easily.
- Clean all plugs and caps before replacing them.
- Fuel tank capacities are indicated in the table on the opposite page.
- Carry out all operations in accordance with the instructions given and the applicable safety regulations.
- Before starting work on the tractor, make sure the engine is switched off, the key is removed from the ignition and the handbrake is applied.
- Only work with the engine running when this is specifically indicated in the instructions.

WARNING: BEFORE STARTING THE ENGINE MAKE SURE THERE IS PLENTY OF VENTILATION. DO NOT OPERATE THE ENGINE IN A CLOSED BUILDING. THE EXHAUST FUMES MAY CAUSE ASPHYXIATION.

WARNING: DO NOT REMOVE OR OBSCURE DANGER, WARNING, CAUTION OR INSTRUCTION DECALS. REPLACE ANY DANGER, WARNING, CAUTION OR INSTRUCTION DECALS THAT ARE NOT READABLE OR ARE MISSING. REPLACEMENT DECALS ARE AVAILABLE FROM YOUR DEALER IN THE EVENT OF LOSS OR DAMAGE. THE ACTUAL LOCATION AND ORDERING CODE OF THESE SAFETY DECALS IS ILLUSTRATED AT THE END OF THIS SECTION. WHEN YOU REPLACE A PART THAT CARRIES A SAFETY LABEL, MAKE SURE THAT THE SAME LABEL IS APPLIED TO THE NEW PART. DO NOT USE FUEL OR SOLVENTS ETC. TO CLEAN SAFETY LABELS. USE A CLEAN CLOTH DAMPED IN SOAPY WATER.

https://truckmanualshub.com/

Maintenance and inspection schedule

* Or every year.
** If the fuel used contains more than 0.5% of sulphur, service intervals must be halved.
*** At least 2 hours after stopping the engine.

		Operating hour								
		Deliv-ery	After 50 hours	Every Hours 50	300	400	600*	800	900	1200
1	**Engine**									
1.1	Check engine oil level (for type of oil see table on page 111)	●	At the start of each workday or every 10 hours.							
1.2	Change engine oil (at least once a year - for type of oil see table on page 111)**		●		●		●		●	●
1.3	Renew oil filter element		●		●		●		●	●
1.4	Check valve clearances***		●			●		●		●
1.5	Check coolant level		●	Periodically						
1.6	Change coolant			Every 2 years						
1.7	Check tension of drive belt/s	●	●	●	●	●	●	●	●	●
1.8	Renew fuel filter					●	●	●		●
1.9	Checking the pipe and hose unions (oil/diesel)		At least every 2 years				●			
1.10	Check that air filter is clean		When the warning light illuminates							
1.11	Renew air filter element		Renew element at least once a year or after 6 cleaning							
1.12	Renew air filter inner safety element		Replace inner safety filter after ever 3 cleanings of the outer filter							
1.13	Check cleanliness of the oil cooler in the front engine compartment			every 50 hours						

2	**Transmission and hydraulic system**							
2.1	Check transmission oil level	●	●		●	●	●	●
2.2	Change gearbox oil		Change oil at least once a year - for type of oil see table on page 111					
2.3	Sostituzione dei filtri dell'olio del cambio - guida idrostatica - sollevatore - distributori		First renew the filters **after 150 operating hours** and subsequently whenever the oil is changed or the warning light illuminates					
2.5	Check cleanliness of the oil cooler in the front engine compartment			●	●	●	●	●
3	**Front axle**							
3.1	4WD-Checking the oil level in the differential and epicyclic reduction units	●		●	●	●	●	●
3.2	4WD-Change oil in differential and epicyclic reduction unit		Change the oil every 1200 hours of work or at least once a year. See the lubricants table on page 111 for information on oil types.					
3.3	4WD-Check oil level in hubs	●		●	●	●	●	●
3.4	4WD-Change hub oil		Change the oil at least once a year - for type of oil see table on page111					
3.5	Check front wheel toe-in	●						●

https://truckmanualshub.com/

		Operating hour						
		Deliv-ery	After 50 hours	Every hours 50	300	600	900	1200
4	**Brakes**							
4.1	Check braking action	•		•	•	•	•	•
4.2	Check free play in brake pedals and handbrake	•		•	•	•	•	•
5	**Differential locks**							
5.1	Check differential locking system	•			•	•	•	•
6	**Hydrostatic steering**							
6.1	Check oil lines	•		•	•	•	•	•
7	**Climate control system**							
7.1	Check cleanliness of climate control system filters	•			•	•	•	•
7.2	Change refrigerant							•
8	**Greasing**							
8.1	Grease stabiliser tie-rods (2)	•				•		
8.2	Grease front support of front axle (1)	•				•		
8.3	Grease rear support of front axle (1)	•				•		
8.4	Grease rear half-shaft bearings (2)	•				•		
9	**Electrical system**							
9.1	Check system operation (lights - direction indicators - warning lights - control units)	•		•	•	•	•	•
9.2	Check battery	•		•	•	•	•	•
10	**Tightening torques**							
10.1	Check tightness of front and rear wheel bolts	•		•	•	•	•	•

https://truckmanualshub.com/

CAUTION: DISCONNECT THE BATTERY CABLES, BEFORE TO VERIFY OR REPAIR THE ELECTRICAL WIRING OR BEFORE TO START WELDING OPERATIONS ON TRACTOR OR ON ATTACHED IMPLEMENTS.

DANGER: MAKE SURE YOU CONNECT THE BATTERY TERMINALS CORRECTLY. DANGER OF SHORT-CIRCUIT!

WARNING: WEAR EYE PROTECTION WHEN CHARGING OR BOOSTING BATTERY.

WARNING: CONNECT ONLY TO A 12 VOLT SUPPLY TO BOOST BATTERY.

CAUTION: IT'S IMPORTANT TO RESPECT THE ENVIROMENT AND TO FOLLOW THE ANTI-POLLUTION RULES. ANY FLUID (OIL, FUEL, COOLANT) OR FILTERS AND BATTERIES HAVE TO BE WASTED, BY FOLLOWING THE LOCAL RULES.

WARNING: DIESEL ENGINE EXHAUST AND SOME OF ITS CONSTITUENTS ARE KNOWN TO SOME STATES TO CAUSE CANCER, BIRTH DEFECTS AND OTHER REPRODUCTIVE HARM.

https://truckmanualshub.com/

Fuel storage

DANGER: TAKE CARE NOT TO CAUSE DANGEROUS SPARKS WHEN WORKING IN PROXIMITY TO FUEL DEPOSITS OR OTHER FLAMMABLE MATERIAL.

The conditions of fuel storage are very important. The interiors of the storage containers must be free of rust or any sediment, as any such material could cause serious damage to the injection system.

Refueling

CAUTION: DO NOT OPERATATE ENGINE UNTIL FUEL TANK IS ENPTY. IF ENGINE IS RUN OUT OF FUEL, IT WILL BECOME NECESSARY TO BLEED AIR FROM FUEL SYSTEM.

The tractor fuel gauge indicates the exact level of fuel in the fuel tanks.

Be careful not to run out of diesel fuel when operating the tractor, otherwise it will be necessary to bleed the air from fuel injection system.

WARNING: DO NOT FILL FUEL TANK WHILE ENGINE IS RUNNING, HOT, NEAR OPEN FLAME OR WHILE SMOKING. TRACTOR REFUELING SHOULD BE PERFORMED WITH THE ENGINE TURNED OFF AND IN OPEN AIR.

https://truckmanualshub.com/

Refueling at the end of the day

The tractor fuel tanks should always be filled at the end of the day. This is to avoid condensation forming in the tanks overnight.

Empty space in the fuel tank is a major cause of water in the fuel system.

Important! See the instructions on page 6 for information on how to top up.

CAUTION! Do NOT remove the cap from the supplementary fuel tank (on the left of the tractor) if you can still see diesel fuel in the round level window at the top of the tank.

- Refuelling the supplementary tank
*Total fuel capacity **15** litres (**3.96** U.S. gal).*

- Refuelling the main tank
*Total fuel capacity **30** litres (**7.92** U.S. Gal).*

DANGER: WHEN HANDLING BATTERIES:
- AVOID BREATHING IN FUMES PRODUCED BY THE ACID SOLUTION (if the acid is accidentally swallowed, drink plenty of water or milk, then drink beaten eggs or vegetal oil; seek medical attention immediately)
- USE THE APPROPRIATE PROCEDURE WHEN CHARGING
- CLEAN ALL PARTS WHERE ACID SOLUTION MIGHT HAVE SPILLED. IF IT SPILLS ON THE HANDS, NEUTRALIZE IT WITH HYDRATED LIME OR SODIUM BICARBONATE. IF IT HITS THE EYES, RINSE REPEATEDLY FOR 10-15 MINUTES, THEN SEEK MEDICAL ATTENTION IMMEDIATELY.

https://truckmanualshub.com/

Engine maintenance

CAUTION: WITH A COLD ENGINE YOU MAY NOTICE ABNORMAL COMBUSTION. THIS SHOULD CLEAR UP ONCE THE ENGINE HAS REACHED NORMAL OPERATING TEMPERATURE.

Before carrying out any work on the engine, wait until it has cooled down.

WARNING: ALWAYS SWITCH THE ENGINE OFF BEFORE CARRYING OUT ANY MAINTENANCE OPERATIONS. FOR ADDITIONAL SAFETY, REMOVE THE KEY FROM THE IGNITION.

During maintenance operations, apply the handbrake and position the chock under one of the wheels.

On completion of the work, replace all guards and covers, refit the side panels and close the hood.

WARNING: FLUIDS THAT FACILITATE ENGINE STARTING ARE HIGHLY FLAMMABLE. WHEN USING THEM, KEEP AWAY FROM SPARK SOURCES (BATTERIES, CONNECTORS, ETC). THESE FLUIDS SHOULD BE KEPT IN COOL AREAS AND THE CONTAINERS PROPERLY STORED.

WARNING: BEFORE CARRYING OUT ANY WORK ON THE ENGINE, WAIT UNTIL IT HAS COOLED DOWN.
DURING MAINTENANCE OPERATIONS, APPLY THE HANDBRAKE AND POSITION THE CHOCK UNDER ONE OF THE WHEELS.
ON COMPLETION OF THE WORK, REPLACE ALL GUARDS AND COVERS, REFIT THE SIDE PANELS AND CLOSE THE HOOD.

https://truckmanualshub.com/

Raising the engine hood

Press the front release button and push the hood upwards to open it.

To close the hood, push it down until you feel the catch engage.

Cleaning the front grille

For the engine cooling system to function correctly, the front grille must always be kept clean.

Clean the grille with a compressed air jet, blowing air through the grille from the inside to the outside.

Engine right side

https://truckmanualshub.com/

Checking the engine oil level

Start the engine and allow it to run for few minutes; then switch the engine off, wait for about one minute, then check the oil level.

Pull the dipstick out, wipe it with a clean, lint-free cloth, reinsert it and pull it out once again to read the oil level.

If the level lies between the two notches on the dispstick, it is correct.

If the oil requires topping up, unscrew the oil filler cap and top up with oil of the specified quality to the top notch on the dipstick.

DANGER: RISK OF BURNS WHEN THE ENGINE IS HOT; ALLOW THE ENGINE TO COOL BEFORE SERVICE, INSPECTION OR ADJUSTMENT.

Changing the engine oil

NOTE: Take care when draining oil from the engine sump, as hot oil can cause serious burns.
Collect and store used oil in suitable containers before taking it to an authorized collection centre.

https://truckmanualshub.com/

DANGER: FLUIDS THAT ARE UNDER PRESSURE CAN PENETRATE HUMAN TISSUE CAUSING SERIOUS INJURY. IT IS RECOMMENDED TO ALWAYS STOP THE ENGINE AND RELIEVE THE PRESSURE BEFORE CONNECTING OR DISCONNECTING LINES.

Proceed as follows:

Unscrew the oil drain plug located on the sump under the filler cap.

Renew the engine oil filters following the instructions given below.

- When all the oil has drained from the sump, inspect the drain plug seal and, if necessary, renew it before replacing the drain plug.
- Pour oil of the prescribed quality into the sump through the oil filler until the level reaches the upper notch on the dipstick.
- Run the engine for a few minutes and check the seals around the oil drain plug and the new oil filter.
- Check the oil level again and top up if necessary.

DANGER: TAKE CARE WHEN DRAINING OIL FROM THE ENGINE SUMP, AS HOT OIL CAN CAUSE SERIOUS BURNS.

WARNING: COLLECT AND STORE USED OIL IN SUITABLE CONTAINERS BEFORE TAKING IT TO AN AUTHORIZED COLLECTION CENTRE.

https://truckmanualshub.com/

Changing the engine oil filters

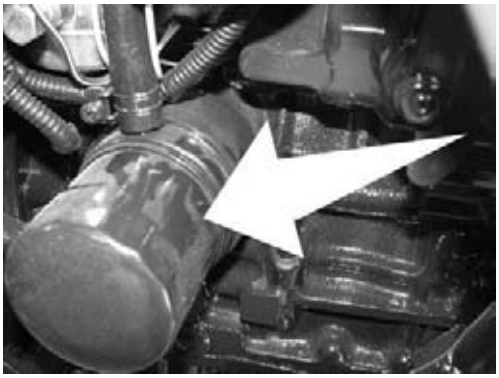

- Position a suitable receptacle under the filter.
- Unscrew the filter cartridge.
- Oil the new filter cartridge using the same oil as that used in the engine.
- Screw the new cartridge on by hand.
- On starting the engine, check for leaks around the cartridge seals.
- Check the engine oil level.

Cleaning and replacement of the fuel filter

Water and other deposits that accumulate in the fuel filter can make engine starting difficult. Replace the fuel filter every 400 work hours.

Bleeding air from the fuel system

This operation must be carried out when air has entered the fuel circuits as a result of the disassembly of fuel system components, running out of fuel or leaks around fuel line fittings.

When air is in the fuel system, the engine either fails to start completely or stops once it has started.

NOTE: Before mounting the preliminary or fine fuel filter, ensure that it is filled with diesel fuel.

https://truckmanualshub.com/

Proceed in the following manner:
- Turn the key to no. 1 so as to start of the electrically-controlled fuel feeding pump.
- Loosen the fuel filter drain screw (2) so that fuel with air bubbles flows out.
- Tighten the drain screw once again as soon as the fuel flowing out is free of air bubbles.
- Repeat the same procedure with the other fuel filter drain valve and with the injection pump drain valve, always following the directions indicated above.
  Before loosening another screw always tighten the previously used.
- Bring the hand throttle lever to the “peak horsepower” position and start the engine for a few seconds by means of the starter motor to expell air from the pump, the injectors and the injector pipes.

WARNING - Whenever water is seen through the filter’s glass bowl, it can be eliminated by loosening the clamps fastening the pipes to the filter and turning the filter upside-down to let the water flow out.

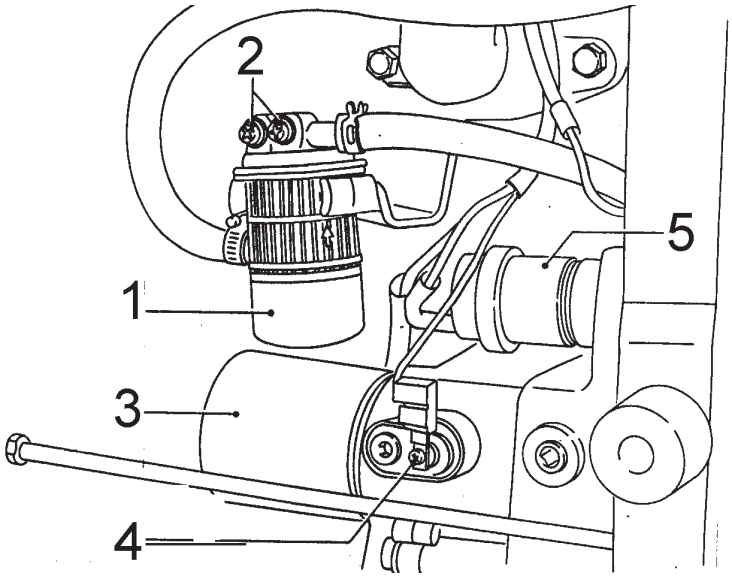

Engine middle right-hand side
1 - Fuel filter
2 - Air-bleedin
3 - Oil filter
4 - Oi filter clogging pressure switch
5 - Engine STOP electro-valve

https://truckmanualshub.com/

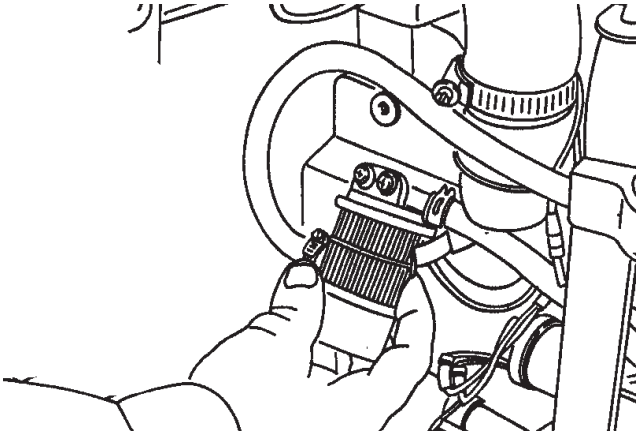

Fuel filter removal from engine

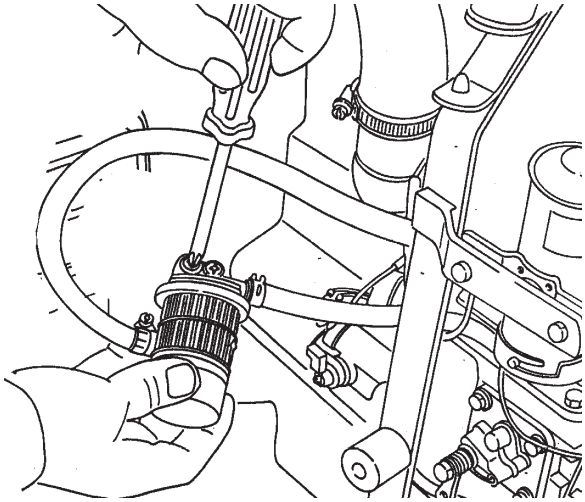

Fuel drain from filter and circuit

WARNING: DIESEL FUEL OR HYDRAULIC FLUID UNDER PRESSURE CAN PENETRATE THE SKIN OR EYES AND CAUSE SERIOUS PERSONAL INJURY, BLINDNESS OR DEATH. FLUID LEAKS, UNDER PRESSURE, MAY NOT BE VISIBLE. USE A PIECE OF CARDBOARD OR WOOD TO FIND LEAKS. DO NOT USE YOUR BARE HAND. WEAR SAFETY GOGGLES FOR EYE PROTECTION. IF ANY FLUID IS INJECTED INTO THE SKIN, IT MUST BE SURGICALLY REMOVED WITHIN A FEW HOURS BY A DOCTOR FAMILIAR WITH THIS TYPE OF INJURY.

https://truckmanualshub.com/

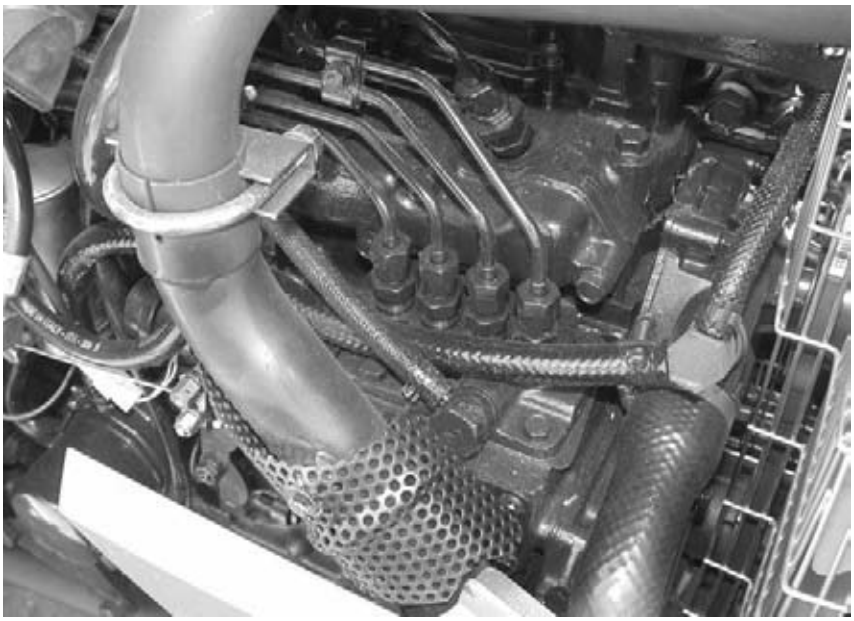

Engine right-hand side

The injection pump and injectors are the diesel engine's main components and therefore require special care. Turn to a specialized workshop to recalibrate the pump and the injectors. This is necessary so that both the pump and the injectors may be tested on special equipment.

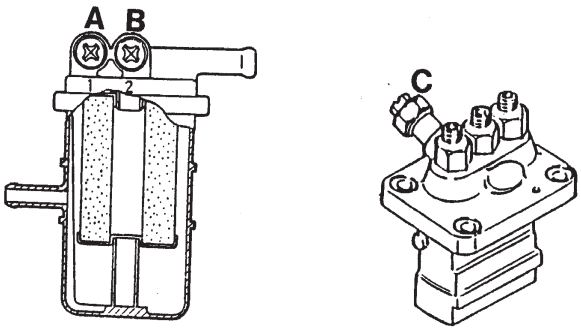

Fuel filter and injection pump - Mitsubishi -
A - Drain screw of circuit between tank and filter
B - Drain screw of ciruit between filter and injection pump
C - Injection pump drain screw

https://truckmanualshub.com/

WARNING: THE SHOCK ADSORBERS HAVE INSIDE GAS OR OIL UNDER PRESSURE. BEFORE ANY REPAIR OPERATION, READ CAREFULLY THE WORKSHOP MANUAL OF THE MAKER.

Electro-magnetic fuel pump

The fuel pump is equipped with a built-in filter; clean and replace this filter as frequently as the fuel filter.

Except for regular maintenance of the filter and fuel pump, all other operations must not be performed.

The fuel pump has a minimum supply capacity of 225cc (137.29 inc) every 15 seconds.

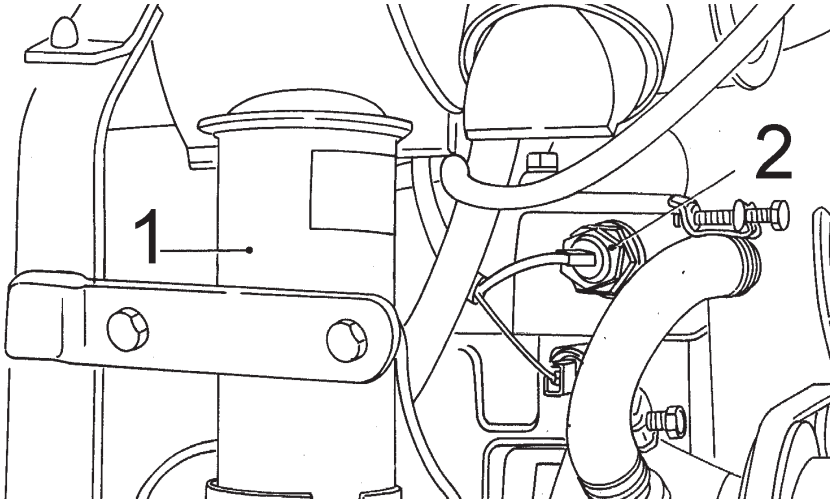

Fuel pump
1 - Electro-magnetic fuel supply pump
2 - Engine water temperature sensor

WARNING: DO NOT SMOKE OR LIGHT MATCHES WHEN SERVICING OR BLEEDING FUEL SYSTEM.

https://truckmanualshub.com/

Electro-magnetic pump
1 - Filter
2 - Gasket
3 - Gasket
4 - Magnet

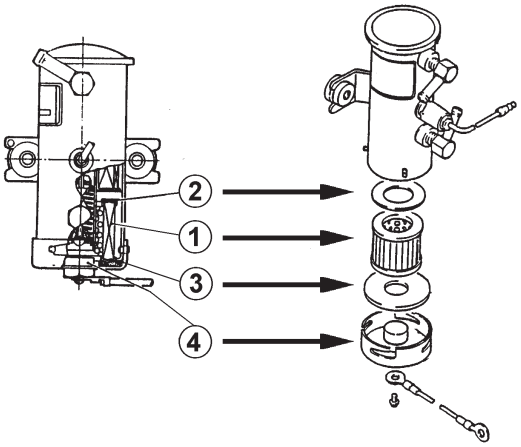

Filter periodic maintenance

- After the first 50 work hours and every 100 hours thereafter: inspect and clean pump filter.
- Every 400 hours: replace pump filter.

Filter replacement

Remove the cover from the lower section of the fuel pump, then pull out the filter. This filter is supplied with gaskets in the top and bottom section. The bottom cover has a magnetic part to attract any metal impurities present in the fuel supply circuit.

Filter inspection and cleaning

Wash the filter, the gaskets, the magnetic part and the cover by soaking them in clean fuel. Make sure there are no damaged areas and if so replace them.

https://truckmanualshub.com/

Assemble the new parts or those disassembled reversing the order of disassembly.

Checking the pump's normal operation
Rotate ignition key to position 1 and make sure by way of listening the pump is fuctioning properly. The pump will stop pulsating if the supply pressure exceeds the prescribed limits.
In addition, check for any fuel leaks.

Air bleeding
Air-bleeding of the fuel pump should be done with the engine on and ignition key in position 1.
This operation must be performed before bleeding the air out of the fuel filter and the injection pump.

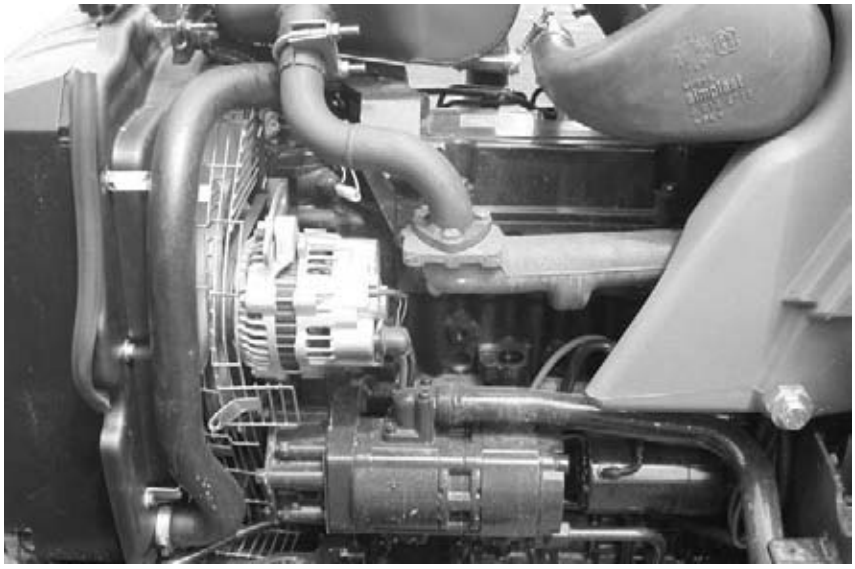

Engine left-hand side

Fuel

We recommend that you use only commercial brands of diesel fuel which have a sulphur content of 0.5% or less.

If you use a fuel with a sulphur content that exceeds 0.5%, the oil change intervals indicated in this manual must be halved.

https://truckmanualshub.com/

Air filter

Air filtering occurs by means of a folded paper element protected by a container and held in a sheet metal cylinder.

WARNING: the internal cartridge of the filter does not perform any filtration function. Its function is to prevent solid particles from entering the inlet manifold when the filter cartridge is removed. The inner safety element should never be cleaned but only replaced every three cleanings of the main cartridge.

Periodically: check the efficiency of the air filter dust exhausting valve.

Air filter

NOTE: Check regularly that the engine air cleaner casing and element are not damaged. Do not wash or brush the element.

NOTE: Periodically inspect air cleaner housing and element.

NOTE: The small inner secondary safety filter must never be used without the larger outer primary filter being in place. The purpose of the secondary safety filter is to serve as a backup to the primary and prevent dust or other items from entering while the primary is being cleaned or replaced.

https://truckmanualshub.com/

Cleaning the air filter

Clean the filtering element whenever the air filter warning light comes on.

Important
It is important to make sure that the warning light is always working correctly. To check its operation, start the engine and temporarily obstruct the air filter intake tube (do not use your hands). The filtering element must always be in perfect working order; if not, clean, wash or replace it.

Cleaning the filter using compressed air
This is the correct cleaning method to use when the filter is clogged with dust. Direct a jet of compressed air (max. pressure 6.8 bar/98 psi) from the inside to the outside of the element, moving the jet along the pleats in the paper until all the dust is removed.

Washing the filter element in water
This cleaning method is particularly recommended when the the filter element is clogged with oil substances. Wash the element using a jet of clean water (max. pressure 2.9 bar/42 psi) directed from the inside to the outside of the element. Leave the element to dry in a dust free environment for 24 hours.

Refitting the element
Wipe out the air filter casing with a dry rag, and check that the element is not deformed. Hold a light inside the paper element to check for tears or holes in the paper fabric.
The filter element must be replaced after being cleaned 6 times, unless any small holes or tears are detected sooner, in which case it must be renewed immediately.
The inner safety element must never be cleaned. It must, however, be replaced after the main element has been cleaned 3 times.

NOTE: Never use gasoline (petrol), kerosene or cleaning solvents to clean the element.
- do not attempt to blow the main element clean using tractor exhaust gases.
- never add oil to the dry air filter element.
- filter must be serviced when warning indicator pilot light comes on, otherwise engine could lose power and damage to engine could occur.
- never use a filter that shows sign of damage.
If in doubt, replace the filter.

https://truckmanualshub.com/

Washing the filter element

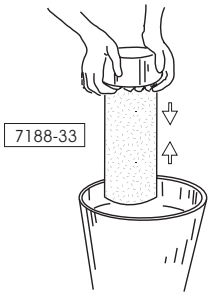

Cleaning the filter element using compressed air

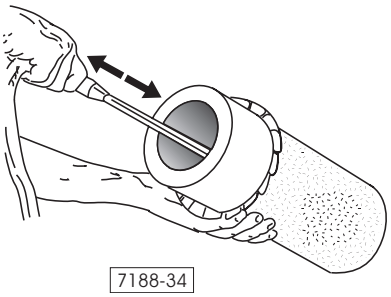

Eliminating any residue from the element using a water jet

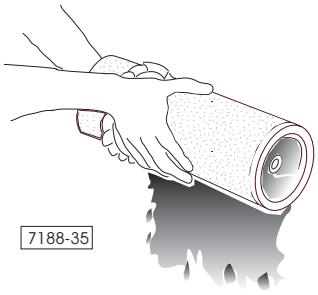

Inspecting the paper element for holes or tears using a light.

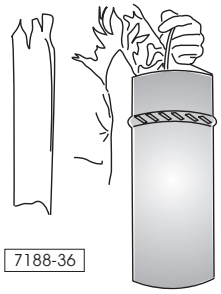

https://truckmanualshub.com/

Engine cooling system

WARNING: LIQUID COOLING SYSTEMS BUILD UP PRESSURE AS THE ENGINE GETS HOT. BEFORE REMOVING THE RADIATOR CAP, STOP THE ENGINE AND LET THE SYSTEM COOL.
CHECK THE ENGINE COOLING SYSTEM AND ADD COOLANT AS REQUIRED.

Checking the level of coolant in the expansion tank

N.B.- The cooling circuit operates under pressure; the pressure is controlled by way of the radiator cap which should never be removed **when the engine is hot.**
Excess pressure is removed by turning the radiator cap to the first position and then removing it completely.

AKROS FREEZE liquid coolant

Coolant/antifreeze mixture.

WARNING: ALWAYS USE THE 100% OF PERMANENT TYPE ANTI-FREEZE "AKROS FREEZE" AVAILABLE FROM YOUR DEALER, NEVER THE ALCOHOL TYPE ANTI-FREEZE.

https://truckmanualshub.com/

Changing the coolant/antifreeze mixture and flushing the cooling system

Clean the cooling system using a specific detergent.

Proceed as follows:

- Open the drain cock at the right of the engine block to drain the cooling circuit.

- Drain the radiator by removing the the drain plug on the bottom left-hand side;
- Fill the system with the detergent mixture (if the tractor is equipped with a cab heater, this should be set to maximum heating so that the detergent mixture also circulates through the heat exchanger);
- Start the engine and allow to it run for approx. one and a half hours.
- Drain the system and then fill it with water; then start the engine again, bring it up to a speed of approx. 1000 rpm and leave it running for 5 minutes.
- Drain the system once again.
- Refill with AKROS FREEZE, run the engine for a few minutes and then top up the system.

Thermostat

There are two thermostats in the cooling system that prevent the coolant from circulating in the radiator until it has reached a sufficiently high temperature (approx. 85°C/185°F).
If you are in any doubt as to whether a thermostat is functioning correctly, have it checked by qualified personnel.

WARNING: DO NOT REMOVE RADIATOR CAP WHILE ENGINE IS HOT. RADIATOR IS PRESSURIZED AND IF OPENED WHILE HOT, STEAM AND BOILING LIQUID WILL BE SPRAYED OUT, WHICH MAY INJURY YOU AND OTHERS WHICH MAY BE CLOSE BY. THERE CAN ALSO BE A EXCESSIVE AMOUNT OF COOLANT LOSS.

https://truckmanualshub.com/

Cleaning the oil cooler

The radiator is located in the front of the engine compartment.

The oil cooler can be cleaned with a compressed air jet, or, if necessary, a steam jet (max. pressure 6 bar/87 psi) or a water jet.

If the engine is to be cleaned at the same time, protect the air filter, the alternator and the starter motor.

Once all the components have been replaced, run the engine for a few minutes so that it heats up and dries any parts still wet.

Cleaning with detergents

If you use detergents to clean the oil cooler, use commercial products that dissolve oil.
The detegrent can be mixed with water for application by spray gun or brush.
After applying the solution, wait after few minutes, then rinse off with clean water.

Cleaning with compressed air

This operation is only suitable for removing dust. When cleaning the grilles or cab filter screens, make sure that the compressed air jet is directed in the opposite direction to the normal air flow.

Important: failure to keep the oil cooler clean can lead to overheating of the lubricated parts.

Warning: every time you clean the tractor, observe the applicable regulations for environmental protection.

https://truckmanualshub.com/

Adjusting belt tension

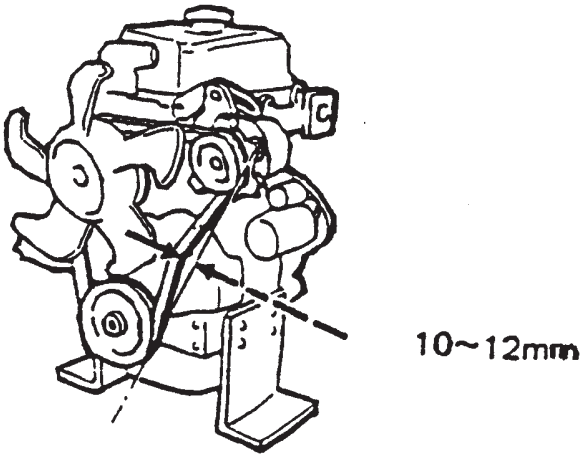

Check the belt exact tension by applying thumb pressure to the middle of the longest part: the deflection should be approximately 10/12 mm (0,39/0,47 in).
To adjust it, loosen the two fastening bolts and move the alternator.

Excessive tension may cause an accelerated wear and tear of the belt between the fan and the alternator pulley. On the other hand, a belt that is too loose or covered with grease may slip enough to cause engine overheating and/or insufficient battery recharging.

N.B. - The belt should be replaced as soon as it shows any sign of fraying or excessive wear of the sides.

CAUTION: INSPECT THE DRIVE BELTS OVER THEIR ENTIRE LENGTH. IF DAMAGED OR CRACKED, RENEW IMMEDIATELY.

CAUTION: IF THE BELT IS BROKEN DO NOT RUN THE ENGINE AS THE COOLING FAN IS INOPERATIVE.

https://truckmanualshub.com/

Gearbox clutch

Every 150 hours: check the pedal's free travel. This should be approximately 25 mm (0,985 in).

Otherwise turn to one of our Authorized Service Workshops and have it adjusted.

Rear and underside P.T.O. clutch

Periodically: operate the control and verify that engagement occurs correctly.
Otherwise turn to one of our Authorized Service Workshops and have it recalibrated.

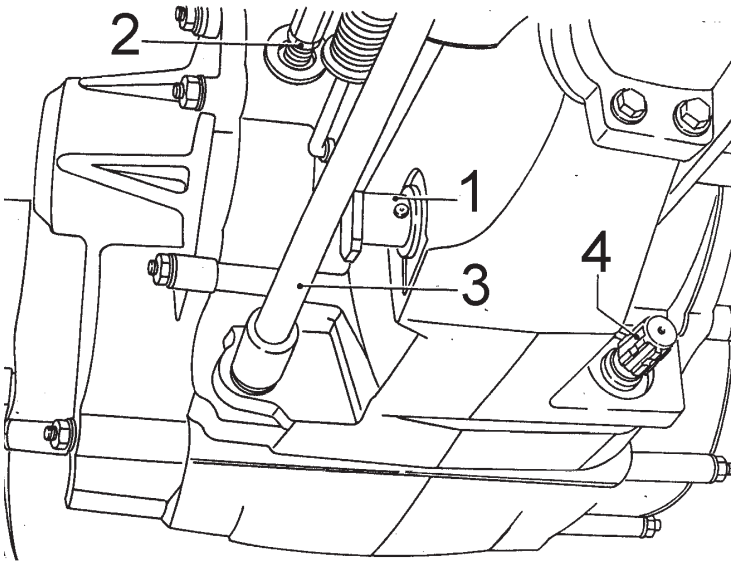

View of tractor underside
1 - Front-wheel drive control lever
2 - Service brakes control
3 - Rear differential lock control
4 - Underside P.T.O. shaft

https://truckmanualshub.com/

Maintenance of the gearbox, differential and rear reduction units

Every 150 hours: check gearbox oil level through level hole.

With tractor on leveled ground, the oil level should reach the hole's center line.

Every 1200 hours: replace the oil.

The gearbox oil also feeds all the tractor's hydraulic services: hydrostatic steering, power lift and hydraulic distributors.

The new oil must be poured in through the hole located in the power-lift's upper section.

After changing the oil, bleed the hydrostatic steering circuit by rotating the steering wheel in both directions with the engine running until oil free of bubbles flows out of the loosened fittings. Then tighten the fittings once again.

WARNING: HYDRAULIC FLUID UNDER PRESSURE CAN PENTRATE THE SKIN OR EYES AND CAUSE SERIOUS INJURY, BLINDNESS OR DEATH. FLUID LEAKS UNDER PRESSURE, MAY NOT BE VISIBLE. LOOSEN CONNECTIONS SLOWLY, KEEPING HANDS AND FINGERS CLEAR OF LOOSENED FITTINGS. USE A PIECE OF CARDBOARD OR WOOD TO LOCATE LEAKS, DO NOT USE YOUR FINGERS OR HANDS. WEAR SAFETY GOGGLES FOR EYE PROTECTION. IF ANY FULID IS INJECTED INTO THE SKIN, SEEK MEDICAL ATTENTION IMMEDIATELY.

https://truckmanualshub.com/

WARNING: when the filter clogged warning light comes on, have the oil filters changed immediately. Change the oil filter located on the left-hand roll bar support

N.B. ***If warning light continues to stay on after changing filter(s), contact a authorized service centre.*** *It is normal for the light to stay on for a few minutes immediately after starting the engine.*

Procedure for changing the transmission oil filters

- Position a suitable receptacle underneath the filter.
- Unscrew the cartridge.
- Oil the new cartridge using the same oil as that used in the transmission.
- Screw on cartridge, tightening by hand only.
- On starting the engine, check for leaks around the cartridge sealing ring.
- Check the transmission oil level.

Gearbox oil filter

NOTE: If noises occur in hydraulic pumps at operating temperature, a dirty oil filter could be the cause. in this case change the oil filter for the operating hydraulics immediately.

NOTE: Always park the tractor on a level surface when changing the oil or checking the level.

https://truckmanualshub.com/

Checking the transmission oil level

- The tractor must be parked on a flat, horizontal surface.
- The engine must have been switched off for at least 5 minutes and the handbrake must be on.
- The rear power lift must be lowered and the arms of the front power lift (if present) in the raised position.
- The control levers of the remote service control valves must be in neutral position.
- Check the oil level through the clear round inspection window 1 (see figure below).
- If necessary add oil of the specified type until the level reaches the bottom of the oil filler hole.Re-start and run the engine for a few minutes, then check the oil level again.
- Once you have finished adding oil, replace the clear plug in the oil filler hole.

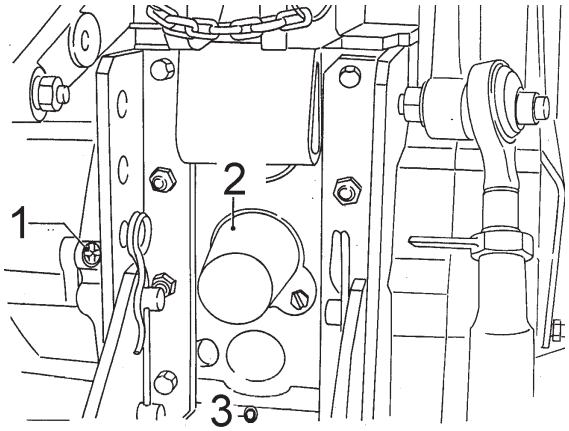

Rear view of tractor
1 - Gearbox oil level plug (rear part)
2 - P.T.O. shaft protective case
3 - Gearbox oil drain plug

WARNING: FOR THE WHEELS REPLACEMENT AND FOR SOME MAINTAINING OR REPAIRING OPERATIONS, THE TRACTOR MUST LIFTED, USING SPECIFIC SAFETY SUPPORTS. NEVER USE AS SUPPORT THE IMPLEMENTS ATTACHED TO THE TRACTOR. DO NOT ALLOW ANYONE TO GET ON THE TRACTOR, WHEN LIFTED FROM THE GROUND FOR MAINTENANCE OR REPAIR OPERATIONS.

https://truckmanualshub.com/

Changing the oil

The oil filters should be renewed at each oil change.
To change the oil in the transmission proceed as follows:

- Position a suitable container underneath, then remove the drain plug **3** Figure on page 140 located on the underside of the gearbox.
- Follow the instructions given on the next page to drain the oil from the hydrostatic steering circuit. Once you have changed the oil, bleed the air out of the circuit by turning the steering wheel in both directions with the engine running and with the unions slackened off, until bubble-free oil comes out. Then tighten the unions.
- To drain the oil from the front PTO (if fitted), unscrew the drain plug **B** shown in the figure. Clean any metallic particles off the drain plug magnet before refitting the drain plug. Remove the plug **C** and remove the metal mesh filter. Wash the filter thoroughly in diesel fuel. Refit the filter and the plug.
- Renew the oil filter positioned on the left side of the gearbox.
- Fit and tighten the drain plug 3 Figure on page, remove the filler plug located on the top of the lift cover and fill the gearbox with oil (approx. 21 litres) until the level reaches the lower edge of the hole **A**.

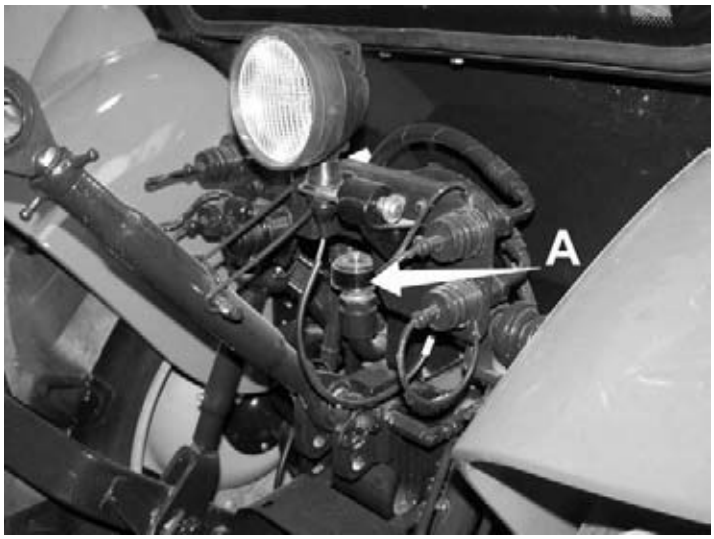

A - Gearbox fuel filler.

https://truckmanualshub.com/

- After filling, screw in the oil filler plug and run the engine for a few minutes
- Check the oil level through the sightglass and top up if necessary

Warning: take care when draining oil; hot oil can cause severe burns.

Used oil should be collected in suitable containers prior to being taken to a specialised disposal centre.

Maintenance of the hydrostatic power steering

Inspect the pipes for cracks or breaks and check for leaks around the pipe fittings and the control valve.

On illumination of the filter restriction warning light : renew filter (see pag. 51) following the instructions on page 139.

Bleeding air from the hydraulic system

When necessary, bleed the air from the steering system by loosening the two fittings on the steering cylinder and then turning the steering wheel in both directions (with the engine running) until the oil flowing from the fittings is free of air bubbles.

Tighten the unions and top up the gearbox oil.

WARNING: BATTERY POSTS, TERMINALS AND RELATED ACCESSORIES CONTAIN LEAD AND LEAD COMPOUNDS, CHEMICALS KNOWN TO THE STATE OF CALIFORNIA TO CAUSE CANCER AND BIRTH DEFECTS OR OTHER REPRODUCTIVE HARM. WASH HANDS AFTER HANDLING.

WARNING: KEEP THE TRACTOR LOCKED, USING A CHOCK, WHEN PARKING ON SLEEP GROUND, REPAIRING OR MAINTENANCE OPERATING.

https://truckmanualshub.com/

Checking operation of the differential lock controls

Operate the controls and check that the differential lock is engaged and disengaged correctly.

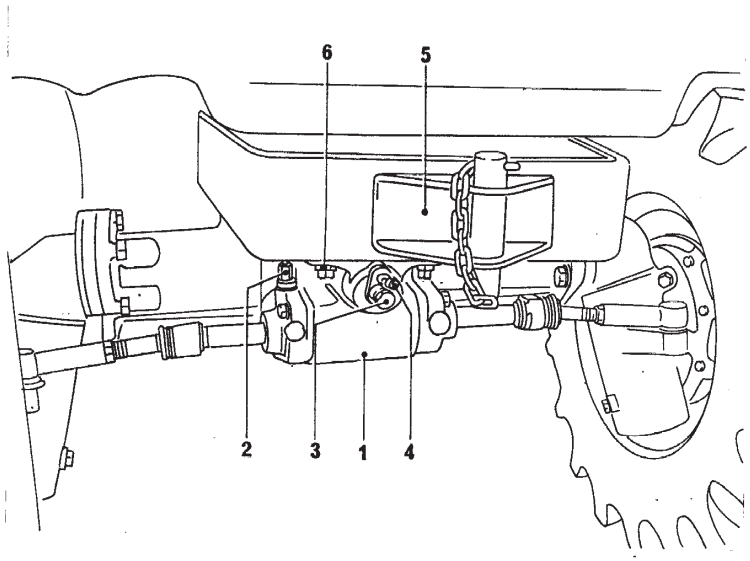

Hydrostatic steering
1 - Hydrostatic steering cylinder
2 - Cylinder oil drain fitting
3 - Front axle clearance adjustment screw
4 - Hinge pin front greaser
5 - Front towing hook
6 - Front axle oscillation angle adjustment screw

WARNING: FOR WHEELS DISASSEMBLING AND FOR MAINTENANCE AND REPAIR, LIFT THE TRACTOR, USING SPECIFIC TOOLS ONLY.

https://truckmanualshub.com/

Maintenance of the front and rear brakes

Every 150 hours: check the brake pedals' free travel.

Checking the braking action

The user should operate the brakes to test the braking action. If the brakes do not function correctly, contact your authorized service centre.

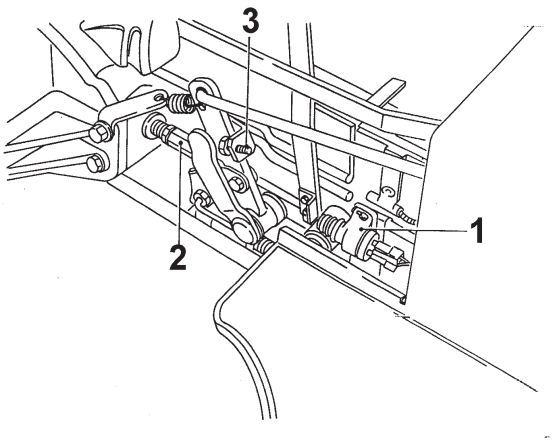

Controls under platform (right-hand side)
1 - Differential lock control
2 - Brakes STOP indicator (right)
3 - Brakes free travel adjustment screw
4 - Brakes end of travel stop screw

Front differential lock (if installed)

Periodically: check front differential lock engagement.
Any necessary inspections should be carried out by one of our Service Centres and as indicated in the tractor's "Workshop manual"

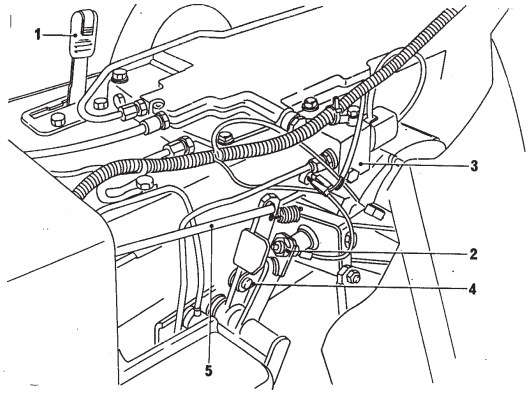

Controls under platform (left-hand side)
1 - Front traction engagement lever
2 - Brakes STOP indicator (left side)
3 - Front differential lock electronic control unit
4 - Parking brake control fork
5 - Left brake control rod

https://truckmanualshub.com/

Maintenance of the front wheel drive system

Front axle and hub final drives (4WD)

The front axle has a double-acting steering cylinder and an open centre directional control valve for the reactive steering.

Every 150 hours: check the oil level by removing the plug **2** of the figure below.
The oil level should be up to the lower edge of the hole; top up if necessary.

Every 1200 hours: change the oil. Drain off the old oil by removing the drain plugs **1** in the figure below and **1** in the figure on page 143. Fill with new oil through the filler **2** in the figure below.

Front axle pivot bushes

Every 50 hours: inject grease through the grease nipples **3** in the figure below and **4** on page 143.
Inject grease using a grease pump through the two grease nipples.

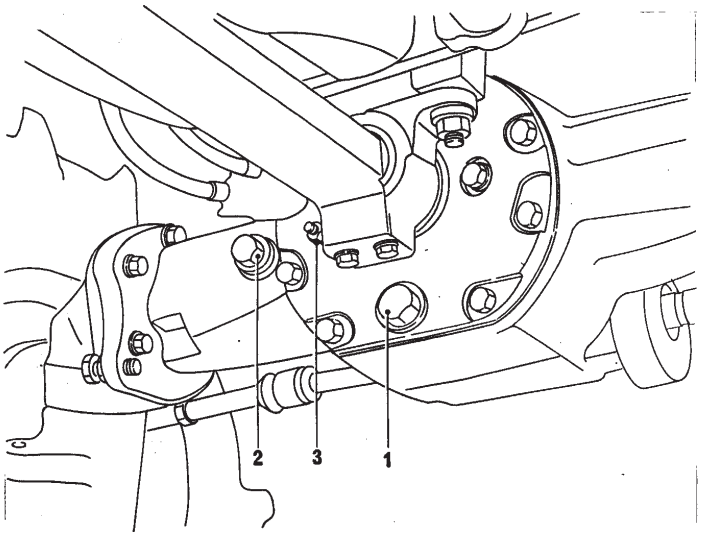

Front drive axle left-hand side
1 - Differential oil drain screw
2 - Differential oil level screw
3 - Axle oscillation rear support greaser

https://truckmanualshub.com/

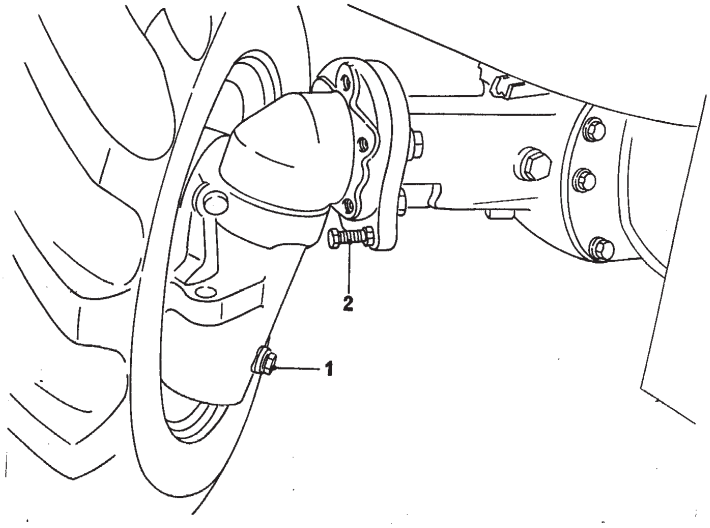

Four wheel drive tractor front drive axle
1 - Hub oil drain screw plug
2 - Steering angle adjusters.

Warning: Whenever you change the tyres or adjust the track, make sure that there is no interference between the tyres and the engine hood with the front axle fully inclined and fully steered. If necessary, adjust the steering angle adjusters accordingly.

DANGER: BEFORE DOING ANY JOB ON THE P.T.O. DRIVE LINE AND P.T.O. END SHAFT, ENSURE THAT PTO IS DISENGAGED, THE ENGINE SHUT OFF AND THE KEY REMOVED.

WARNING: THE IMPLEMENTS MUST ALWAYS BE LOWERED TO THE GROUND WHENEVER THE TRACTOR IS NOT OPERATING OR WHEN ADJUSTMENT, MAINTENANCE OR REPAIR OPERATIONS ARE TO BE CARRIED OUT.

CAUTION: ALL IMPLEMENTS MOUNTED TO THE TRACTOR MUST BE SAFELY ATTACHED.

https://truckmanualshub.com/

Maintenance of hydraulic power-lift

The hydraulic power-lift uses the same oil as the gearbox, which should be checked and changed according to the schedule listed in the related section.

Maintenance of the 3-point linkage

Rear 3-point linkage

Furthermore, grease the two lift rods and the stabiliser rods through the grease nipples indicated with the arrows in the figure below at the intervals specified in the maintenance schedule.

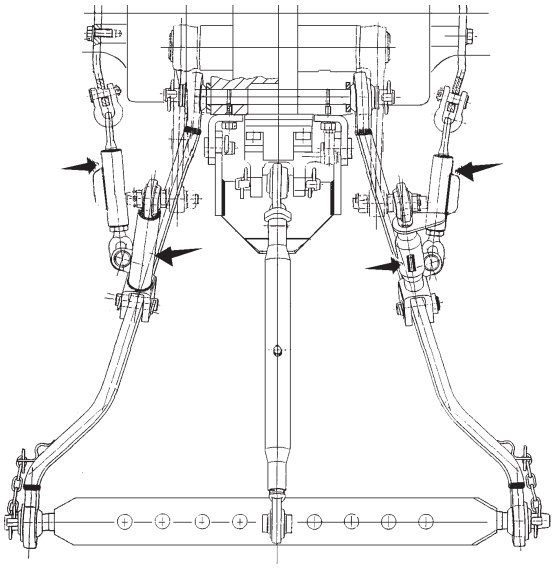

Rear 3-point linkage

NOTE: When adjusting the length of the top link of the 3-point hitch, take care that it does not come apart and ensure that a sufficient length of the threaded end of the turnbuckle is screwed into the turnbuckle housing to withstand the tractive force applied when working.

CAUTION: APPLY THE PARKING BRAKE AFTER THE ENGINE HAS STOPPED AND BEFORE LEAVING THE TRACTOR.

https://truckmanualshub.com/

Maintenance of Front P.T.O.

The front PTO uses oil from the gearbox.

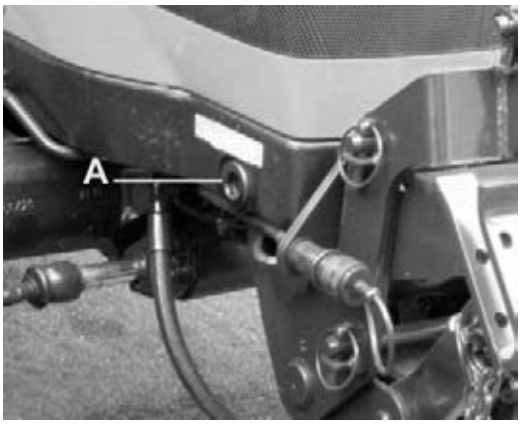

The hydraulic circuit is fitted with a concentric gear pump installed inside the P.T.O. group.

Oil is filtered by a metal mesh filter A on the right of the group.

Clean this filter in diesel fuel every time you change the gearbox oil.

When you change the oil in the gearbox, you must also drain the oil from the front PTO casing by removing drain plug **B** from the bottom of the casing.

Clean any metal particles off the drain plug magnet before refitting the drain plug.

A - Metal mesh filter
B - Drain plug

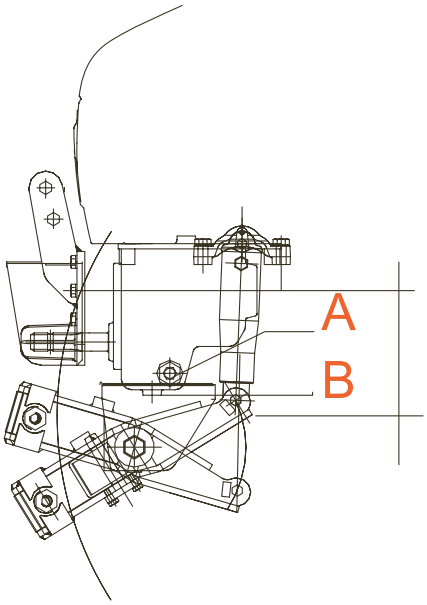

DANGER: DO NOT CONNECT, DISCONNECT OR ADJUST PTO WITH THE ENGINE RUNNING.

https://truckmanualshub.com/

Maintenance of front lift

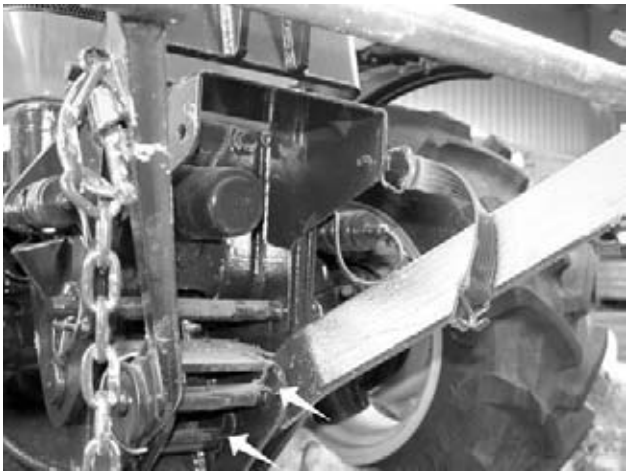

The lower links of the front lift can be removed if required by removing the 2 safety pins and pivot pins shown in the figure. For driving on public roads, the front lift links must be secured in raised position by means of the link pins and support.

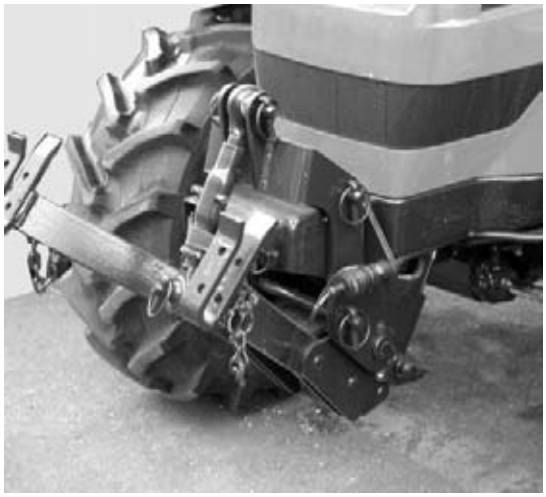

DANGER: THE DRIVEN IMPLEMENTS COULD ROTATE FOR SOME TIME AFTER P.T.O. HAS BEEN DISENGAGED. PLEASE STOP THE TRACTOR ENGINE AND WAIT UNTIL ALL THE MOVING PARTS OF IMPLEMENT HAVE COME TO A COMPLETE STANDSTILL, BEFORE TO START ANY SERVICING OPERATION.

https://truckmanualshub.com/

Windscreen washer

Check the level of windscreen washer fluid in the plastic container at the base of the left hand rear cab upright.

Clean plugged windscreen washer jets using a pin. Adjust the direction of the jets so that the spray hits the windscreen at the top of the arc described by the wiper blade.

During winter, it is advisable to add a suitable antifreeze or methyl alcohol to the windscreen washer fluid.

IMPORTANT: Always keep all the cab windows clean. Mirrors must also be kept clean and correctly positioned.

Windscreen and rear screen wipers

The wiper blades have a bayonet fitting. To remove the blade, raise the tab of the centre clip.

DANGER: REPLACE THE "ACTIVE CARBON" FILTER AFTER 200 WORKING HOURS OR AFTER 36 MONTHS. IF YOU NOTICE SMELL OF PESTICIDE INSIDE THE CAB, REPLACE IMMEDIATELY THE FILTER AND LET CHECKED THE CAB GASKETS.

CAUTION: REPAIRS TO THE AIR CONDITIONING SYSTEM MUST ONLY BE CARRIED OUT BY A SPECIALIZED SERVICE CENTRE.

https://truckmanualshub.com/

Maintenance of the air conditioning system

Cab air filter (cleaning)

Clean the filter at suitable intervals (depending on operating conditions). Slacken off the 4 retaining knobs (2 per side) to access the filters in the cab roof. Lift off the filter covers and remove the filters.

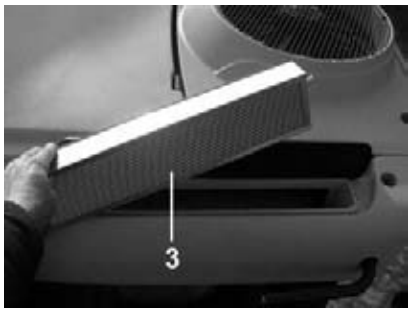

Cab air filter
1 - Filter cover
2 - Retaining knobs
3 - Air filter

Clean the filters as follows:

- Blow compressed air (max 6 bar/87 psi) through the filter in the opposite direction to the normal air flow in order to comletely remove all dust;
- Wash with a solution of water and detergent solution at 40°C (104°F) for about 15 minutes.
- Rinse with running water;
- Leave to dry at ambient temperature.

IMPORTANT: Replace the filters if they become damaged. Replace them in any case after they have been cleaned 6 times.

Active carbon air filter

The procedures for removal and refitting are the same as for ordinary filters.

Note that these filters can never offer total protection agianst toxic substances.
After every use, always fit the normal filters back.
Wear protective gloves when changing used filters.

Used filters should be taken to specialized waste disposal centres.

In any case, observe the manufacturer’s instructions regarding the handling and disposal of used filters.

https://truckmanualshub.com/

Maintenance of the heating system

The heating system utilises heat from the engine cooling system.

Every 1200 hours (or every 2 years): flush out the heating system along with the engine cooling system when the AKROS FREEZE coolant is changed.
During this operation the tap located on the right of the dashboard must be open, i.e. control knob turned fully clockwise.
Each season, check the supply and return lines for leaks.

Check belt tension: when firm thumb pressure is applied in the mid point between the two pulleys, the belt should deflect 5 to 8 mm (0,20 to 0,32 in) at most.

In case of system operation failure or interruption, check the system fuse.
If the air does not start coming out of the outles right away as soon as the system is set at work, immediately switch it off and identify the fault.

When switching on the system, always make sure the air intake ducts and the diffusers are not blocked.
Never turn on the heating system in dusty environments when the doors are open.

IMPORTANT: Never attempt to carry out any work on the heating system with running engine.

A - External air inlet grille
B - Air conditioning refrigerant cooling grille

https://truckmanualshub.com/

Maintenance of the air conditioning system

The system is made up of three units:
Fan-evaporator unit, placed under the cab ceiling;
Power supply unit, consisting of a motor-driven compressor.
Condenser and fan unit mounted on cab roof.

Every 50 hours: inspect radiator-condenser unit. After removing the protection grating, check if the radiator is dirty or clogged.
Carry out a careful cleaning, if necessary.

N.B. - Should the pipes of the air conditioning circuit come loose, the system has to be recharged using special equipment. Have the system recharged by a specialized repair shop.

For further repairs on the heating and conditioning systems consult one of our Service Centres.

Checking the air conditioning system

(To be performed at the beginning of each working year by a specialized workshop)

The presence of air and water in the system could jeopardize its efficiency:

- the air is uselessly compressed by the compressor and no cooling effect is produced.
- the moisture has a tendency to freeze in the coldest parts of the circuit, thus giving rise to obstructions which prevent the cooling efficiency.

Also check belt tension: when finger pressure is applied to the mid-point between both pulleys, the belt should deflect 8-10 mm (0,32-0,39 in) at most.

The system check begins by inspecting the condition of the refrigerant through the inspection window on top of the receiver-drier placed on the cab ceiling. The refrigerant, as seen through the inspection window, should be clear and free of bubbles.

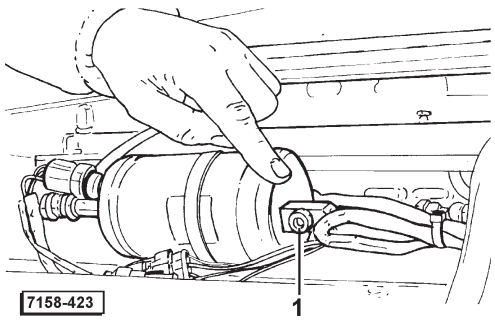

https://truckmanualshub.com/

Condenser fins must always be duly clean. Cleaning should be done using water or an air jet (pay particular attention not to bend the fins, if necessary straighten the fins again using a special tool).

Ascertain that the compressor is firmly secured to tractor and the pulleys are properly aligned.

WARNING - When removing the strainer or the air conditioning unit it is necessary to plug the inlet and oulet pipes at once, this to prevent both dust and moisture from entering the system.

Air conditioning system compressor

The compressor must be securely fixed to the tractor.

The refrigerant circuit is pressurised and therefore must never be opened. The ecological refrigerant R 134a is non-toxic and odourless, and is not inflammable.

However, there are certain essential safety precautions when handling refrigerant:

- Avoid direct contact with skin, as this can cause lesions similare to chilblains
- Avoid contact with eyes; should the refrigerant enter your eyes, seek medical assistance immediately.
- Any welding either directly on the refrigerant circuit or in the immediate vicinity is strictly prohibited. The refrigerant must not be be exposed to temperatures in excess of 80°C (176°F).

Air conditioning system

This is located in the cab roof. Slacken off the two retaining screws and lift off the cover to access the air conditioning system.

https://truckmanualshub.com/

Air conditioning system recharging and maintenance valve

All servicing or charging of the air conditioning system is to be performed at a specialist service centre.

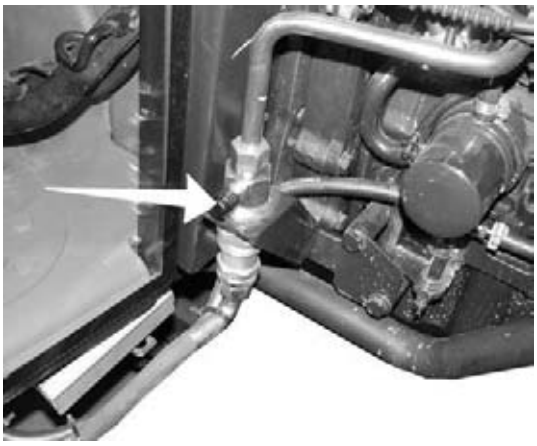

WARNING: «PAPER» FILTER IS NOT SUITABLE FOR THE TREATMENT OF PESTICIDES AND SO MUST BE REPLACED BY AN «ACTIVE CARBON» FILTER AVAILABLE OPTIONALLY. ONCE THE PESTICIDE TREATMENT IS FINISHED, IT IS NECESSARY TO ONCE AGAIN REPLACE THE "ACTIVE CARBON" FILTER WITH THE PAPER FILTER, SINCE THIS IS THE ONLY TYPE SUITED FOR FILTERING FOREIGN PARTICLES FROM THE AIR.

WARNING: CONTACT WITH REFRIGERANT CAN CAUSE SEVERE SKIN LESIONS. IN CASE OF CONTACT WITH THE EYES, DO NOT RUB EYES, SEEK IMMEDIATE MEDICAL ASSISTANCE.

https://truckmanualshub.com/

General cleaning of the tractor

Clean the tractor with a steam or water jet (do not exceed 6 bar/87 psi).

Protect all the decals containing safety or service information. Should any of the decals become illegible, have them replaced immediately.

If you intend to clean the engine at the same time, protect the air filter, alternator and starter motor.

After replacing any parts you removed prior to cleaning, run the engine for a few minutes to dry off any wet components.

Cleaning with detergents

Choose commercial products that dissolve oil.

The detergent/water solution can be applied by spray gun or brush.

After applying the solution, wait a few minutes then rinse with clean water.

Cleaning with compressed air

This cleaning method is only suitable for removing dust.

When cleaning the grilles in the engine compartment or the cab filters, always direct the air jet in the opposite direction to the normal air flow.

https://truckmanualshub.com/

SECTION 6 - Electrical system

Always disconnect the battery before carrying out any work on the electrical system. **Before any welding operations, disconnect the battery and all the connectors of the electronic control units.**

Battery

Checking the battery

The battery is of the maintenance-free type.
The battery status is displayed by the magic eye above the battery.
When the magic eye is coloured:
- GREEN —-> ***charge sufficient***
- BLACK —> ***needs charging***
- WHITE— -> ***needs topping up***

The electrolyte level should be between the minimum and maximum marks. Check the battery charge level at the start of the winter season. Re-charge if necessary.

DANGER: BATTERIES PRODUCE EXPLOSIVE GASES. KEEP FLAMES, SPARKS AND SMOKING MATERIAL AWAY FROM BATTERIES. VENTILATION IS REQUIRED, WHEN CHARGING OR STORING BATTERIES. AVOID CONTACT BETWEEN ACID AND SKIN OR CLOTHES.

CAUTION: BEFORE CARRYING OUT ANY OPERATIONS, READ THE INSTRUCTIONS IN THIS MANUAL. FOLLOW THE INSTRUCTIONS CAREFULLY DURING OPERATION OF THE TRACTOR.

CAUTION: DISCONNECT THE BATTERY CABLES, BEFORE TO VERIFY OR REPAIR THE ELECTRICAL WIRING OR BEFORE TO START WELDING OPERATIONS ON TRACTOR OR ON ATTACHED IMPLEMENTS.

WARNING: BATTERY POSTS, TERMINALS AND RELATED ACCESSORIES CONTAIN LEAD AND LEAD COMPOUNDS, CHEMICALS KNOWN TO THE STATE OF CALIFORNIA TO CAUSE CANCER AND BIRTH DEFECTS OR OTHER REPRODUCTIVE HARM. WASH HANDS AFTER HANDLING.

https://truckmanualshub.com/

To remove the battery from the tractor, proceed as follows:

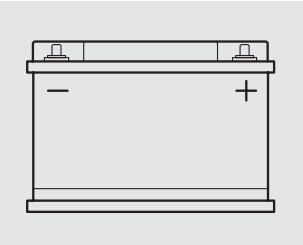

1 – The battery is located in the front of the engine compartment. The engine hood must be lifted to access the battery.
Disconnect the earth lead from the negative terminal first and then disconnect the lead from the positive terminal.
2 – Loosen the 2 retaining screws from the battery bracket and remove the battery from the mounting tray.
Always keep the battery terminals clean; smear them with vaseline to protect them agianst corrosion.
When refitting the battery, always connect the positive lead first and then the earth lead.
Important: Check frequently that the battery is securely anchored to its support.

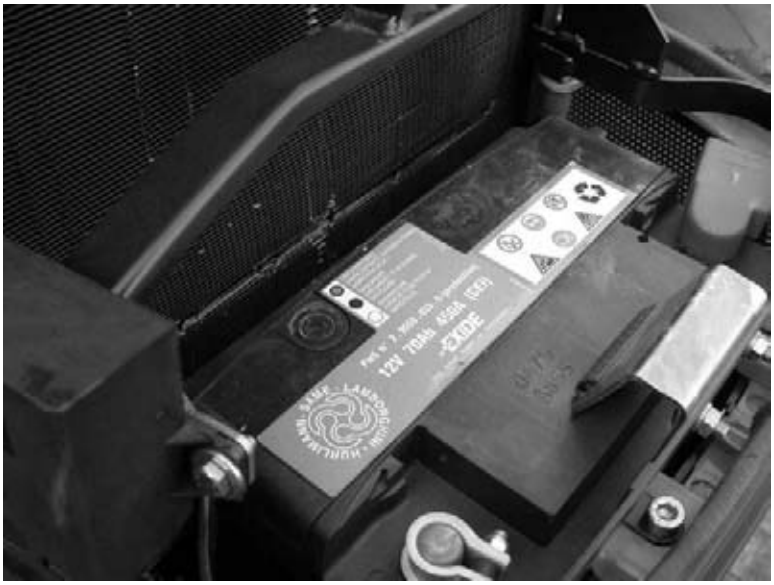

Engine front compartment

DANGER: MAKE SURE YOU CONNECT THE BATTERY TERMINALS CORRECTLY. DANGER OF SHORT-CIRCUIT!

https://truckmanualshub.com/

Fuse box

The electrical system is protected by fuses which are grouped in a plastic fusebox located under the bonnet close to the dashboard.

In addition, three more fuses (70A general, 30A glowplugs, 30A lighting) are located under the dashboard. To gain access for any replacement the dashboard must be removed by loosening the six securing screws.

Should any component part of the electrical system fail to function, check the corresponding fuse and replace it, if necessary. In the event of a sudden breakdown, temporarily replace a fuse covering an important function (i.e. a headlight) by another of less importance.

NOTE: Always switch off the engine before checking or replacing fuses and relays.

NOTE: Only use original fuses. The electrical system could be irreparably damaged by fitting an unsuitable fuse.

DANGER: START THE ENGINE, WITH THE STARTER KEY, FROM THE OPERATOR'S SEAT ONLY. DO NOT ATTEMPT TO START THE ENGINE BY SHORTING ACROSS THE STARTER TERMINALS. THE MACHINE WILL START IN GEAR IF THE NEUTRAL START CIRCUIT IS BYPASSED. THIS COULD CAUSE SERIOUS INJURY OR DEATH TO ANYONE IN THE VICINITY OF THE TRACTOR. ENSURE THAT THE ENGINE STARTER SOLENOID COVER IS ALWAYS IN POSITON.

DANGER: TAKE CARE NOT TO CAUSE DANGEROUS SPARKS WHEN WORKING IN PROXIMITY TO FUEL DEPOSITS OR OTHER FLAMMABLE MATERIAL.

https://truckmanualshub.com/

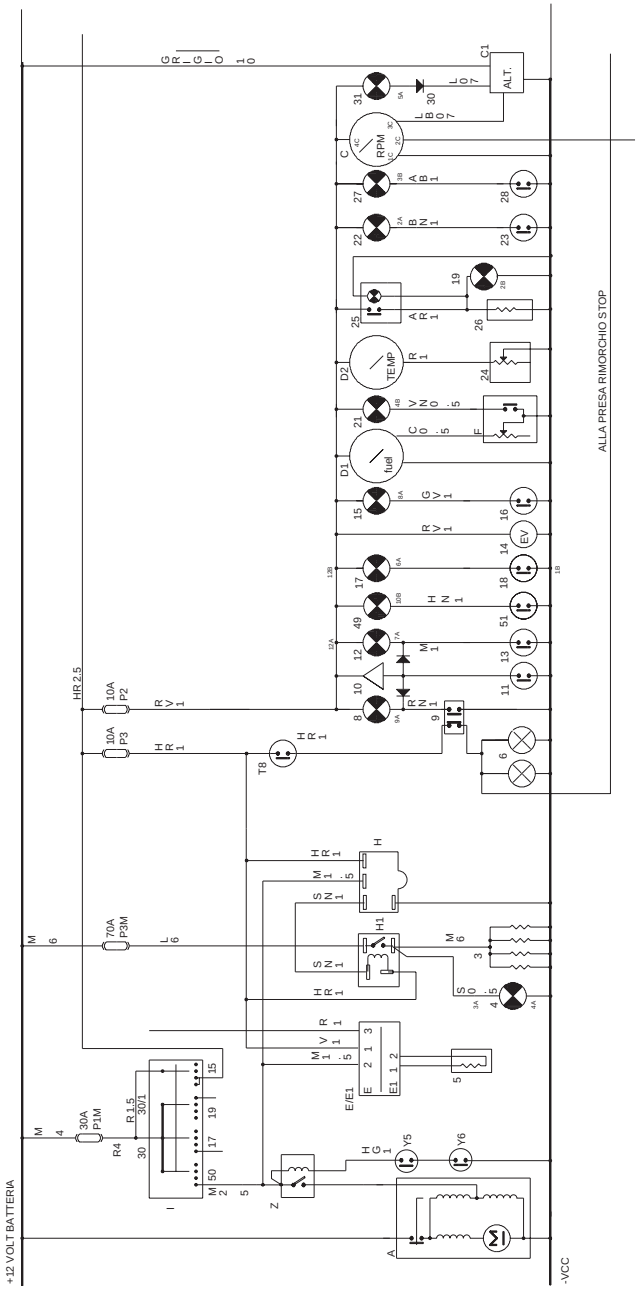

Functional diagram of electrical system (Dwg. 1)

https://truckmanualshub.com/

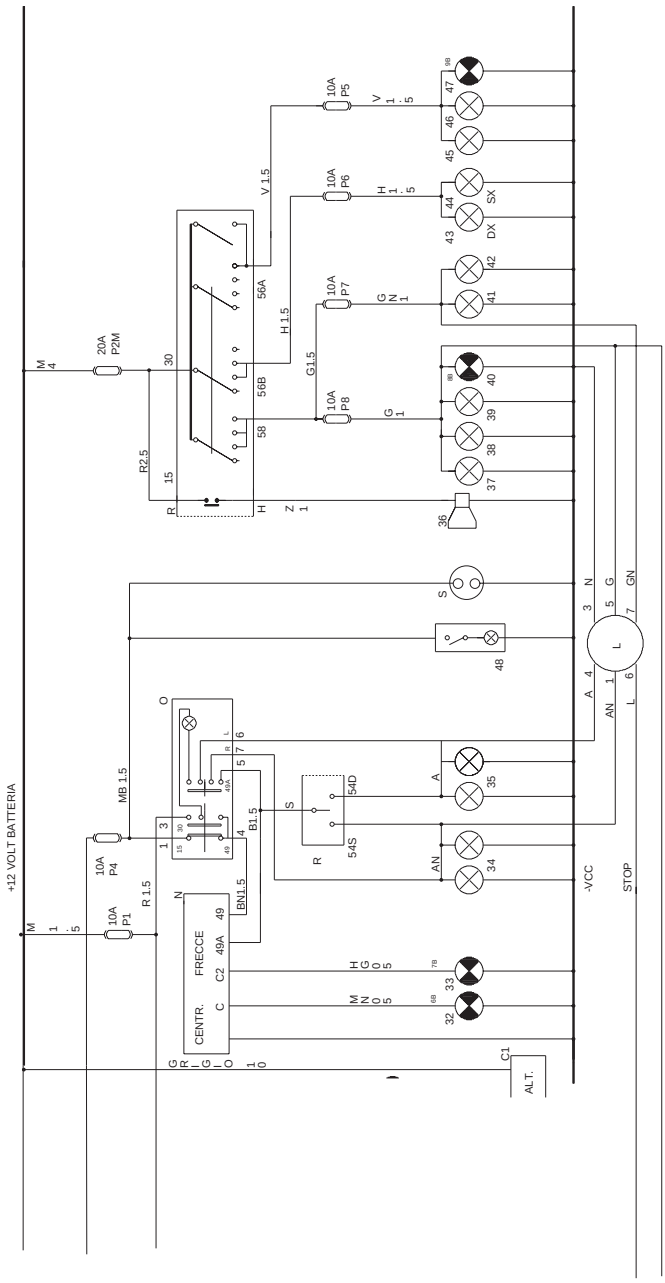

Functional diagram of electrical system (Dwg. 2)

https://truckmanualshub.com/

List of electrical system components

3 - Glowplug
4 - Glowplug warning light
4 - Glowplug warning light
5 - Engine stop solenoid
6 - Brake lights
8 - Handbrake on warning light
9 - Handbrake sensor
10 - Warning triangle
11 - Temperature sensor
12 -Engine oil pressure warning light
13 - Engine oil pressure sensor
14 - Fuel SV
15 - Rear PTO indicator light
16 - Rear PTO sensor
17 - Hydraulic fluid/air cleaner warning light
18 - Hydraulic fluid sensor
19 - Differential indicator light
21 - Low fuel warning light
22 - Air cleaner warning light
23 - Air cleaner sensor
24 - Coolant temperature sensor
25 - Differential lock control switch
26 - Differential lock engagement solenoid valve
27 - 4WD warning light
28 - 4WD engagement sensor
29 - Electronic rev counter
30 - Diode
31 - Battery charging warning light
32 - Direction indicators warning light
33 - Trailer direction indicators warning light
34 - LH direction indicators
35 - RH direction indicators
36 - Horn
37 - Number plate light
38 - LH rear sidelight
39 - RH front side light
40 - Sidelights warning light
41 - LH front sidelight
42 - RH rear sidelight
43 - RH low beam headlight
44 - LH low beam headlight
45 - RH full beam headlight
46 -LH full beam headlight
47 - Full beam headlights warning light
48 - Rear work light
49 - PTO clutch engaged warning light
51 - PTO clutch sensor

https://truckmanualshub.com/

A - Starter motor
C - Electronic rev counter
C1 - Alternator
D1 - Fuel gauge
D2 - Coolant temperature gauge
E/E1 - Engine stop
F - Fuel level sensor
H - Preheating control unit
H1 - Preheating relay
I - starter switch
Y6 - PTO enable
Y5 - Starting enable
L - Trailer socket
N - Direction indicators control unit
O - Hazard warning lights switch
P- Differential lock control switch
R - Lights/Direction indicators/Horn control
S - 12 Volt socket
T8 - STOP sensor
Z - 12V relay

Colour codes

M - Marrone/Brown
V - Verde/Green
Z - Viola/Violet
N - Nero/Black
S - Rosa/Pink
R - Rosso/Red
C - Arancio/Orange
A - Azzurro/Blue
B - Bianco/White
L - Blue/Dark blue
G - Giallo/Yellow
H - Grigio/Gray

https://truckmanualshub.com/

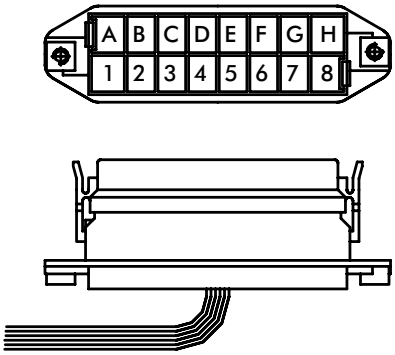

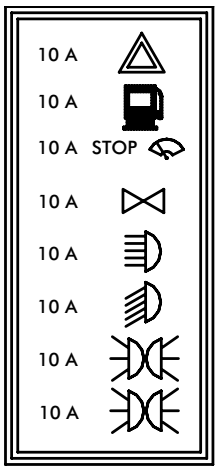

FUSES BOX

FUSIBILIERA

R 1 / R 1.5	A	EMERGENZA	EMERGENCY
RV 1 / RV 1	B	POMPA/EL.	PUMP/EL.
RV 1 / HR 1 / HR 1 / V 1	C	STOP/EL.	STOP/EL.
MB 1.5 / MB 1	D	DIREZIONI	DIRECTIONS
V 1.5 / V 0.5	E	ABBAGLIANTI	FULL BEAM H. LIGHTS
HN 1 / H 1	F	ANABBAGL.	DIPPED H. LIGHTS
GN 1 / GN 1	G	POSIZIONI	POSITIONS
G 1 / G 1.5 / G 1	H	POSIZIONI	POSITIONS
M 1.5	1	+ DIRETTO	+ DIRECT
HR 2.5	2	+ S/CHIAVE	+ UNDER KEY
HR 2.5	3	+ S/CHIAVE	+ UNDER KEY
HR 2.5	4	+ S/CHIAVE	+ UNDER KEY
V 1.5	5	ABBAGLIANTE	DIPPED H. LIGHTS
H 1.5	6	ANABBAGL.	FULL BEAM H. LIGHTS
G 1.5	7	DEVIOGUIDA	STEERING GEAR SWITCH
G 1.5	8	POSIZIONI	POSITIONS

Fuse box

- cod. 009.4450.0

https://truckmanualshub.com/

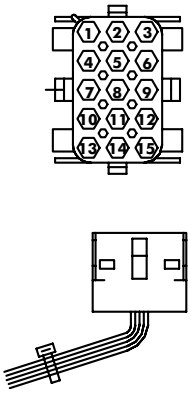

TO FRONT SIDE WIRING

AL CABLAGGIO ANTERIORE

B 0.5	1	FILTRO ARIA	AIR FILTER
M 0.5	2	P. OLIO MOT.	MOTOR OIL PRESS.
R 0.5	3	°C ACQUA	WATER TEMP.
VN 0.5	4	RISERVA GAS.	FUEL RESERVE
C 0.5	5	LIVELLO GAS.	FUEL LEVEL
L 0.5	6	GENERATORE	GENERATOR
LB 0.5	7	W CONTAGIRI	RPM INDICATOR
ZB 0.5 / RV 1	8	°C ACQUA △	WATER TEMP. △
RV 1	9	POMPA GAS.	FUEL PUMP
A 1	10	EV. STOP	STOP ELETTR.
A 1	11	EV. STOP	STOP ELETTR.
Z 1	12	AVV. ACUSTICO	HORN
V 1.5	13	ABBAGLIANTI	FULL BEAM H. LIGHTS
HN 1	14	ANABBAGL.	DIPPED H. LIGHTS
H 1	15	ANABBAGL.	DIPPED H. LIGHTS

Connector for connection to front wiring loom

TO BACK SIDE WIRING

AL CABLAGGIO POSTERIORE

RIGHT POSITION	POSIZIONE DX	1	G 1
LEFT POSITION	POSIZIONE SX	2	GN 1
+ STOP LIGHTS	+ LUCI STOP	3	HR 1
RIGHT DIRECTION	DIREZIONI DX	4	A 1
LEFT DIRECTION	DIREZIONI SX	5	AN 1
P.T.O.	P.T.O.	6	GV 1
HAND BRAKE	FR. A MANO	7	RN 1
DIFF.	DIFF.	8	AR 1
D.T.	D.T.	9	AB 1
WORK LIGHTS	FARO LAVORO	10	HG 1
		11	
		12	

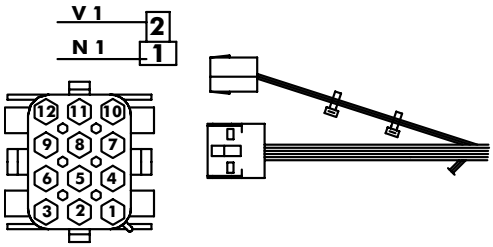

Connector for connection to rear wiring loom

DANGER: WHEN HANDLING BATTERIES:
- AVOID BREATHING IN FUMES PRODUCED BY THE ACID SOLUTION (if the acid is accidentally swallowed, drink plenty of water or milk, then drink beaten eggs or vegetal oil; seek medical attention immediately)
- USE THE APPROPRIATE PROCEDURE WHEN CHARGING
- CLEAN ALL PARTS WHERE ACID SOLUTION MIGHT HAVE SPILLED. IF IT SPILLS ON THE HANDS, NEUTRALIZE IT WITH HYDRATED LIME OR SODIUM BICARBONATE. IF IT HITS THE EYES, RINSE REPEATEDLY FOR 10-15 MINUTES, THEN SEEK MEDICAL ATTENTION IMMEDIATELY.

https://truckmanualshub.com/

Cab electrical system wiring

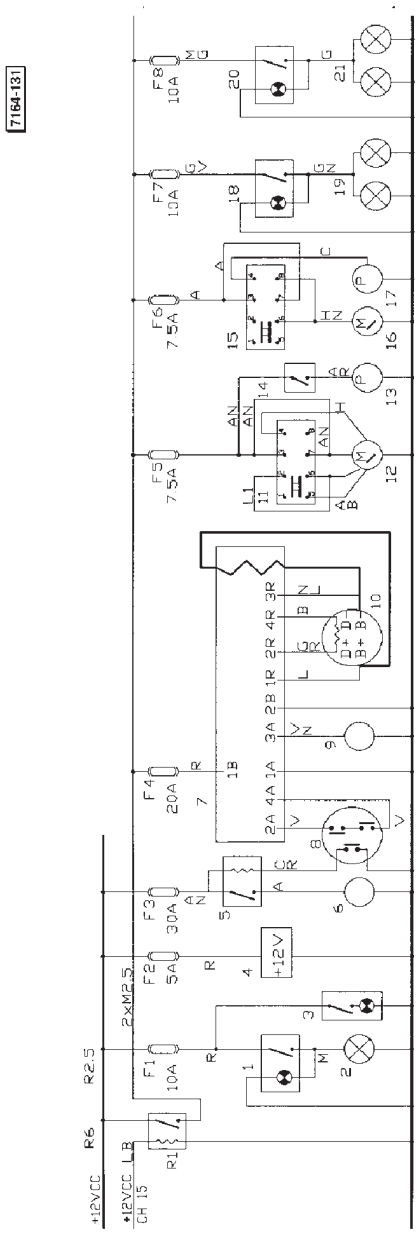

1 - Warning beacon switches
2 - Warning beacon
3 - Interior roof light
4 - 12 V power socket for radio
5 - Air conditioning system relay
6 - Condenser fan
7 - Heating and air conditioning group
8 - Pressure switch
9 - Compressor (R 132a)
10 - Heating unit
11 - Windscreen wiper switch
12 - Front windscreen wiper motor
13 - Front screenwash pump
14 - Screenwash button
15 - Windscreen wiper switch
16 - Rear windscreen wiper motor
17 - Rear screenwash pump
18 - Front work lights switch
19 - Front work lights
20 - Rear work lights switch
21 - Rear work lights

https://truckmanualshub.com/

Electrical diagram - cab air conditioning unit

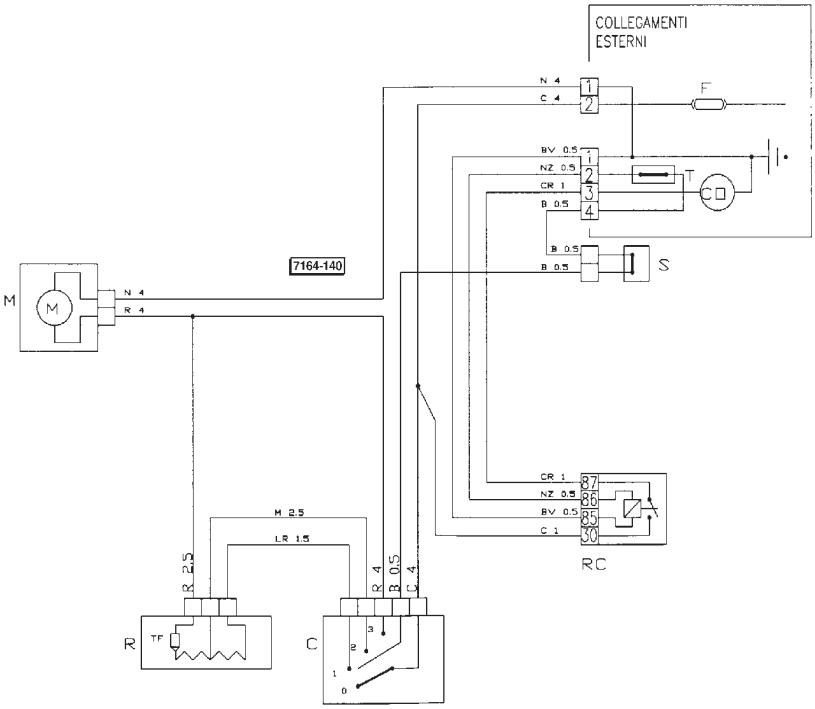

Key to air conditioning components

M	Fan heater
R	Blower speed control resistor
C	Blower speed selector
RC	Air conditioner relay
F	Power supply fuse
T	Air conditioning pressure switch
CO	Compressor
S	Thermostat

https://truckmanualshub.com/

Cab fuse box

F1 - Flasher unit
F2 - Radio
F3 - Air conditioning
F4 - Blower/heater
F5 - Front wiper
F6 - Rear wiper
F7 - Front work lights
F8 - Rear work lights

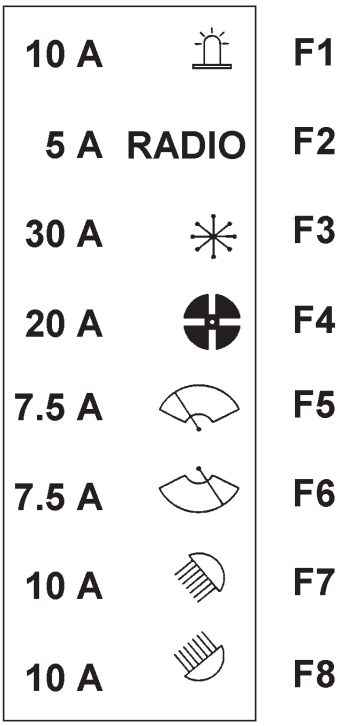

Rear outlet socket - standard

A = Outlet socket standard
1 = LH sidelight and direction indicators
2 = ---
3 = 31 – ground
4 = RX sidelight and direction indi ators
5 = 58 R - Sidelight DX and registration plate light
6 = 54 - STOP
7 = 58 Rear light

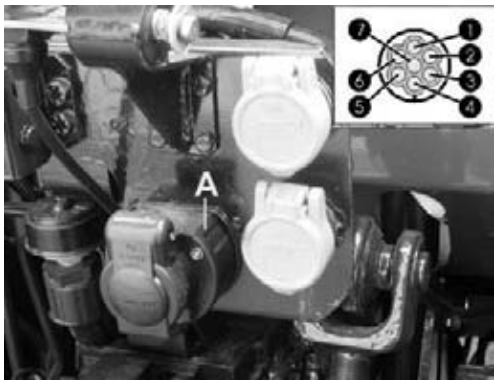

https://truckmanualshub.com/

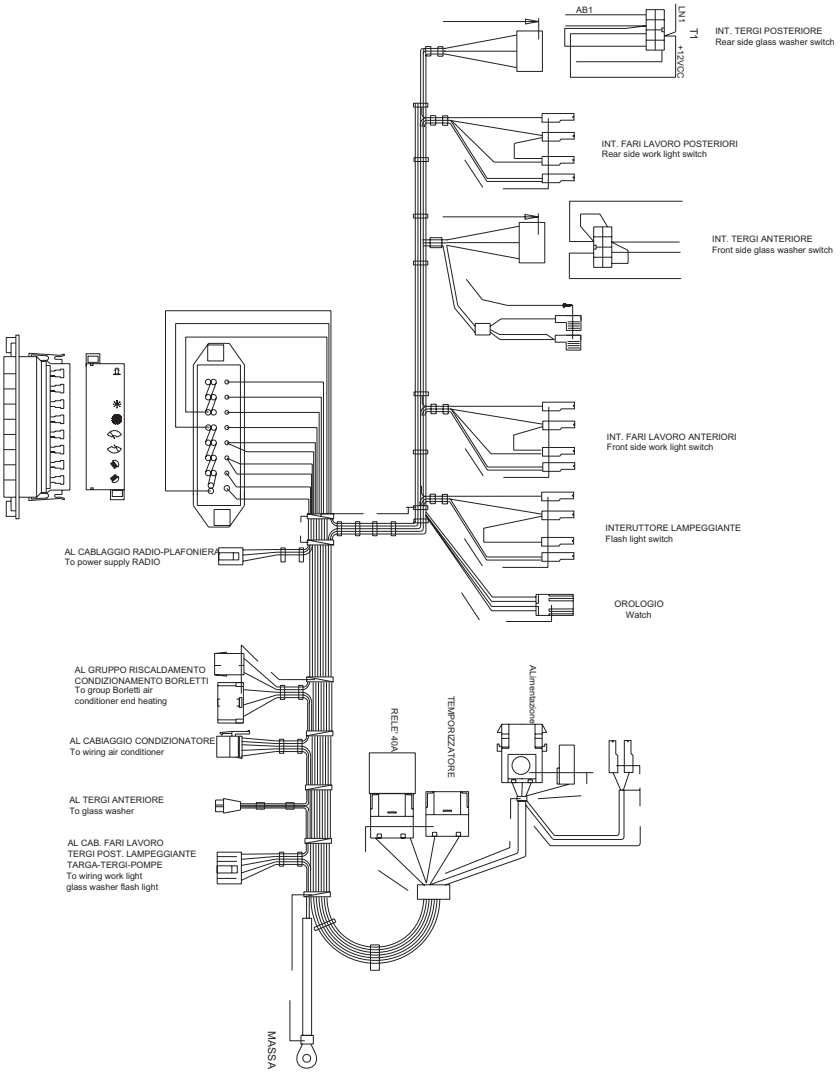

Cab electrical system wiring

https://truckmanualshub.com/

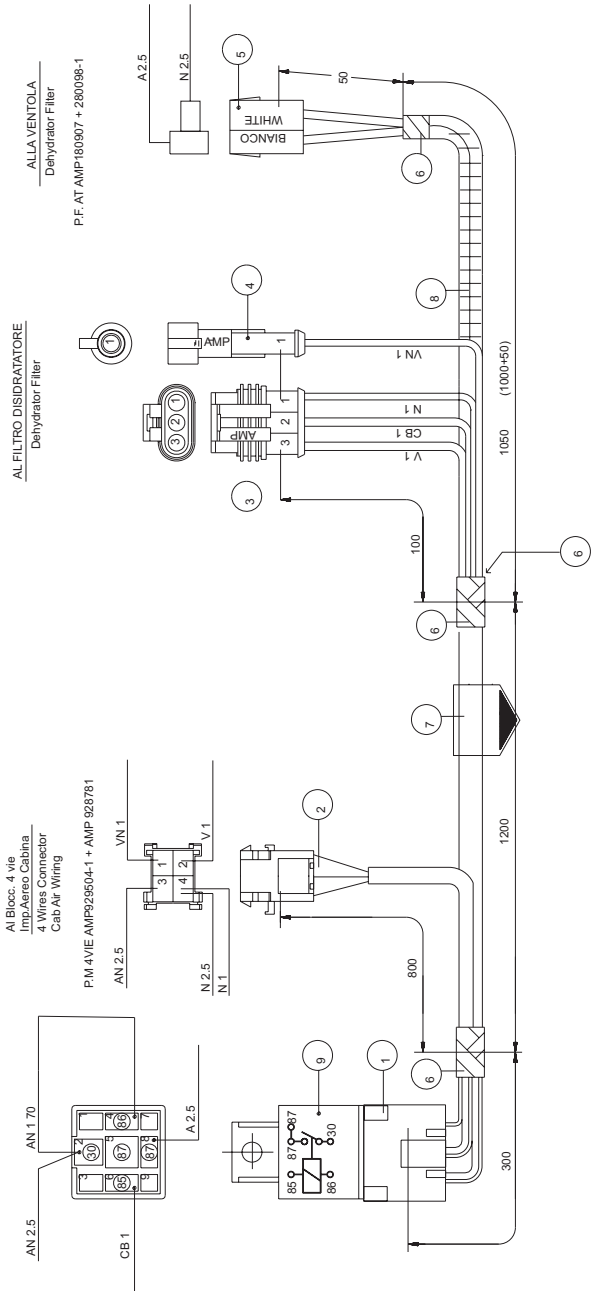

Wiring for cab air conditioning unit

https://truckmanualshub.com/

Wiring for radio

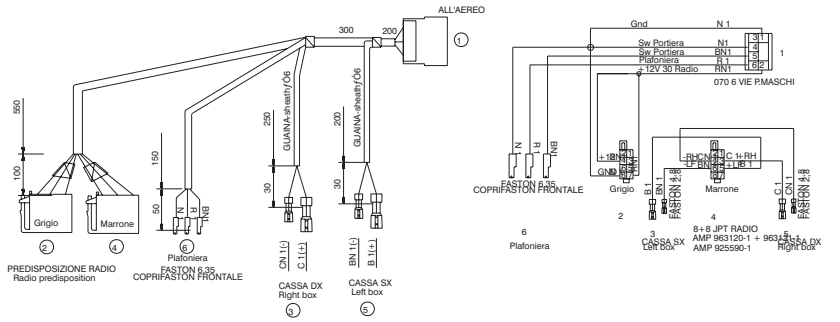

Wiring for cab

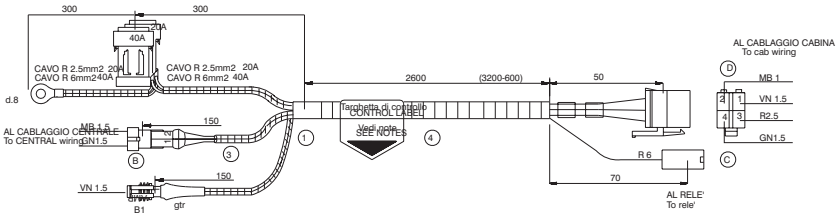

Wiring for worklights

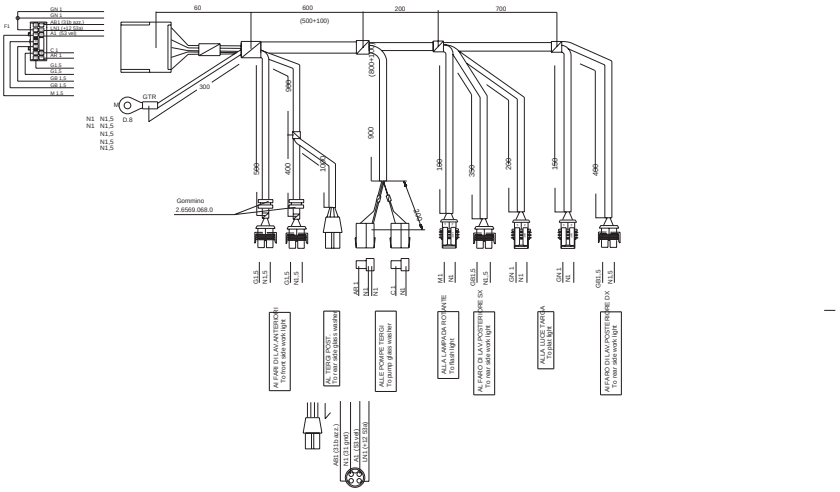

https://truckmanualshub.com/

Lights

Cleaning the headlights and sidelights

Clean with water or specific commercial products. We recommend that you switch off the lights before cleaning.

Bulb replacement

Front headlights *H4 12V 60/55W double filament bulb*
The headlights have double- filament bulbs for main and dipped beam ilumination.

To replace the bulbs, remove the front grille and proceed as follows:

- detach connector **1** from the base of the bulb.
- peel back and remove the rubber cover **2**.
- turn slightly the spring clip **3** that holds the bulb base **4** in position and detach it from the reflector.

WARNING*: avoid touching the inner surface of the reflector. Make sure no foreign material gets inside the reflector.*

- Insert the new bulb so that the locator tabs engage the notches in the rim of the reflctor **5**.
- Replace the ruber cover **2**, making sure that it fits snugly against the edge of the reflector.
- Push connector **1** onto the terminals on the bulb base.

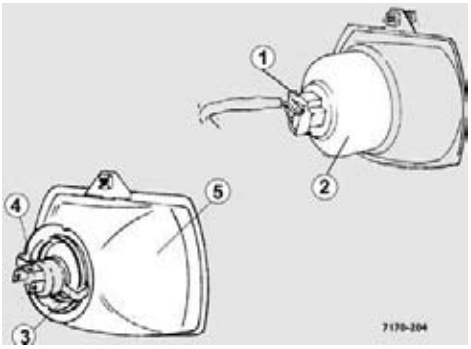

https://truckmanualshub.com/

Rear light assemblies

The tractor is equipped with two rear light assemblies on each fender (right and left) comprising the following lights:

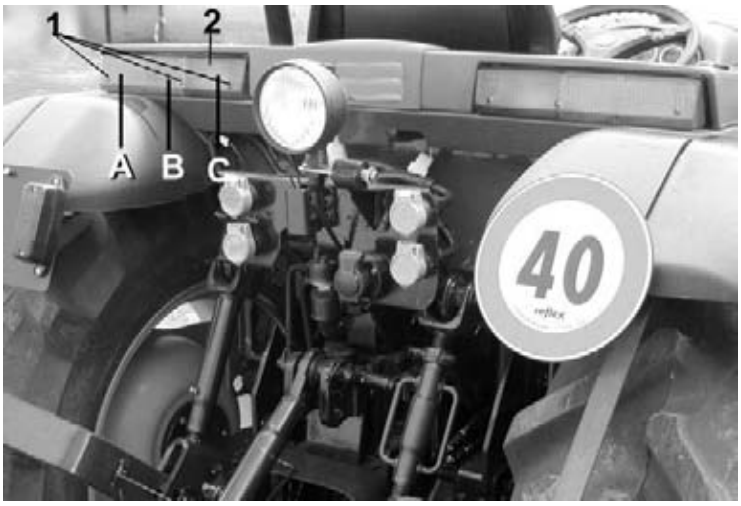

A - *red tail light.*
Bulb: DIN 72601-R5W 12V 5W

B - *brake light.*
Bulb: DIN 72601-P21 12V 21W

C - *direction indicator light.*
Bulb: DIN 72601-P21 12V 21W

To replace any of these bulbs, proceed as follows:

- Remove the screws **1** securing the red or yellow-red lens **2**.
- Gently remove the lens **2** to access the bulb.
- Turn the defective bulb counter-clockwise under slight pressure as far as it will go.
- Remove the bulb.
- Insert the new bulb and turn clockwise under slight pressure as far as it will go.
- Replace the lens **2** and secure with the screws **1**.

https://truckmanualshub.com/

Front sidelights and direction indicators mounted on the sides of the tractor

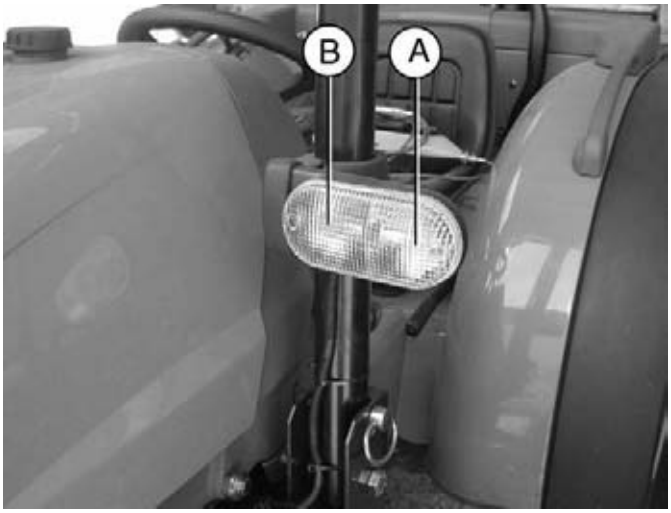

The light clusters mounted on each side of the tractor contain two bulbs:
A *- sidelights* ***B*** *- direction indicators.*

Bulb: DIN 72601-R5W 12V 5W - sidelight
Bulb: DIN 72601-P21 12V 21W - direction indicator

To replace either of the bulbs, proceed as follows:

- remove the two screws securing the yellow-white lens.
- gently remove the lens to access the bulb.
- apply light pressure and turn the defective bulb counter-clockwise as far as it will go.
- remove the bulb.
- insert the new bulb, apply light pressure and turn it clockwise as far as it will go.
- replace the lens and the two retaining screws.

https://truckmanualshub.com/

Front and rear working lights in cab roof

Bulbs: DIN 72601-H3 12V 55W -front (4) and rear (4)

To replace the bulbs, proceed as follows:

- carefully clean the outside of the light unit to avoid the risk of dirt getting on the reflector during bulb replacement.
- using your hands only (tools could easily damage the components) unscrew the two screws securing the rear cover and access the bulb as follows:
- detach the connector from the bulb base.
- slightly rotate the spring clip that holds the bulb base in position, and detach it from the reflector, disconnecting also the lead conected directly to the bulb.

WARNING: avoid touching the inner surface of the reflector. Make sure no foreign material gets inside the reflector.

- Insert the new bulb, engaging the locating tabs with the notches on the reflector rim. Connect the bulb lead.
- Push connector onto the terminals on the bulb base.

https://truckmanualshub.com/

Interior light

Interior courtesy light
DIN 72601-K 12V 10W

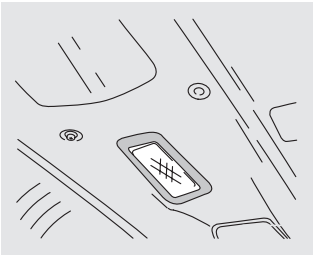

Rear work lights for tractors with platform

To replace the bulb, proceed as follows:

- Remove the rubber gasket and then the glass cover.
- Push down lightly on the bulb while turning it counter-clockwise as far as it will go.
- Pull out the bulb.
- Push the new bulb fully into the holder, and, applying light downward pressure, turn the bulb clockwise as far as it will go.
- Refit the glass cover and the rubber gasket.Rear work lights for tractors with platform.

Bulb: DIN 72601-H3 12V 55W

NOTE: Switch off the front and rear lights before cleaning them.

WARNING: CONNECT ONLY TO A 12 VOLT SUPPLY TO BOOST BATTERY.

https://truckmanualshub.com/

Headlight alignment

The tractor must be in normal road-going conditions and parked on a level surface at a distance of 10 m (32.8 ft) from a wall (tyres must be inflated to the correct pressures and the front wheels must be positioned for travel in a straight line).

Switch on the dipped beam headlights.

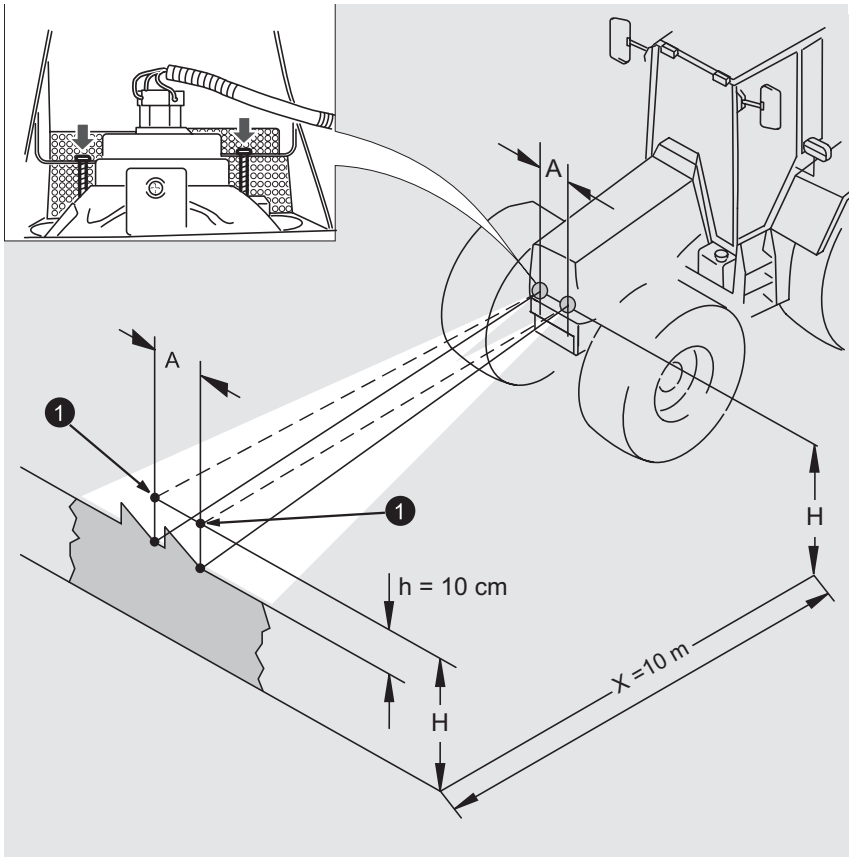

1 - points on the wall corresponding to the centres of the headlights
A - distance apart of headlights
H - height of headlights
h - distance of the centre of the beam from the horizontal axis
X - distance between headlights and wall

https://truckmanualshub.com/

Turn the adjuster screws indicated by the arrows in the figure to move the beam in a vertical or horizontal direction.

NOTE: in order to determine the points on the wall corresponding to the centres of the headlights, we recommend that you bring the tractor up to the wall with the dipped headlights on, mark the centres on the wall and then move back to a distance of **10 m (32.8 ft)** from the wall.

Horizontal adjustment

With the headlights switched on, the centres of the beams should be apart the distance **A** indicated in the figure.

Vertical adjustment

With the headlights on, the lines delimiting the light and dark zones on the wall should **10cm** (3.9 in) apart as shown in the figure.

IMPORTANT: The figure refers to headlight alignment for driving on the right-hand side of the road. For driving on the left-hand side of the road, the dark beam zone projected on the wall must be symmetrical to that shown in the figure (i.e. the points of the dark zone that penetrate the light zone must always be directed towards the edge of the road).

CAUTION: ALWAYS WEAR CLOTHING SUITABLE FOR THE TYPE OF WORK TO BE PERFORMED. IF NECESSARY, USE HEARING PROTECTION PLUGS AND WEAR EYE PROTECTION.

https://truckmanualshub.com/

SECTION 7 - Storage of the tractor

Operations prior to garaging the tractor for a long period

for example, before winter

If the tractor is not to be used for a long period, we recommend that you carry out the following operations to prevent certain components from deteriorating during storage.

- Run engine to thoroughly warm oil in crankcase. Drain oil and install new filter element. Refill crankcase with fresh oil as recommended in Specification section.
- Top up the cooling system radiator with the prescribed coolant with anti-freeze and anti-corrosion properties.
- Fill the fuel tank completely to prevent the condensation forming inside the tank.
- Start the engine and check that the fuel system and the injection system are functioning correctly.
- Check that the fuel filters are clean.
- Slightly loosen the fuel filler cap and the radiator cap so that the relative seals are not kept under pressure.
- Clean the air filter element. Lubricate the tractor as specified in the maintenance schedule.
- Remove the battery from the tractor and clean the two terminals (positive/negative).

The battery should be charged and then stored in a cool, dry place.

CAUTION: CAREFULLY READ ALL SAFETY INSTRUCTIONS CONTAINED IN THE OPERATING AND MAINTENANCE HANDBOOK AND FOLLOW THE INSTRUCTIONS LISTED ON THE TRACTOR'S DECALS.

https://truckmanualshub.com/

— Cover the exhaust pipe with a plastic sheet held in place with adhesive tape. The tractor must be completely clean; touch-up any scratches in the paintwork to prevent rust from forming.

— Apply a layer of grease to exposed metal surfaces as a protection against rust.

The tractor should be stored in a suitable garage, and preferably not exposed to dust. If the tractor has to be stored outside, cover it with a sheet.

IMPORTANT: do not leave the tractor idle for a long period without having first carried out the operations listed above.

Preparing the tractor for use after a long period of storage

— Remove the tractor from the wheel stands (if used).

— Remove the cover sheet (if any);

— Remove the cover from the exhaust.

— Charge and refit the battery (follow the instructions given in this manual).

— Start the engine and allow to tick over slowly for a few minutes.

— Do not use the throttle until you are sure that the engine is running correctly.

- Carry out all the operations prescribed in this manual for the start of the working season; the tractor will then be ready to be put back into service.

https://truckmanualshub.com/

SECTION 8 - Technical specifications

Engine

		35 HP	45 HP	55 HP
Model		S4L-Y162S T	S4L-Y1T62ST	S4L- T
Type		Water-cooled, 4-stroke cycle, in-line diesel engine		
Turbo		-	TD025 (WG)	TD03
Firing order		1 - 3 - 4 - 2		
Compression ratio		22:1		
Combustion chamber, type		A turbulence		
No. of cylinders		4		
Bore x Stroke, mm (in.)		78 x 78.5 (3.07 x 3.09)	78x78.5 3.07 x 3.09)	78 x 92 (3.07 x 3.59)
Displacement (cu in.)		1.500 (91.5)	1.500 (91.5)	1.758(107.4)
Maximum power	Kw/CV/hp (according to ECE R 24-03)	26/35/34.5	30/41/40.4	34,5/47/46.4
	Kw/CV/hp (according to 2000/25/CE)	28,5/39/38.4	31,5/43/42.4	37/51/50.3
	rpm	3000		
Maximum torque Nm/rpm (lbf ft/rpm)		83/1900 (61.2)/1900	100/2100 (73.8)/2100	122/2000 (90.0)/2000
Fuel system	Injection pump type	Bosch M		
	Governor type	Centrifugal with flyweights		
Lubrication system	Type	Centrifugal with flyweights		
	Oil filter	Cartridge type (full-flow)		
	Capacity	5.7 litres (1.50 U.S. gal.)		
Cooling system	Type	Water		
	Capacity U.S. gal.	1.8 (0.5)		2.5(0.7)
Starter, V - kW		12 - 1.6		12 – 2.0
Alternator, V – A		12 – 50		

CAUTION: CAREFULLY READ ALL SAFETY INSTRUCTIONS CONTAINED IN THE OPERATING AND MAINTENANCE HANDBOOK AND FOLLOW THE INSTRUCTIONS LISTED ON THE TRACTOR'S DECALS.

https://truckmanualshub.com/

Clutch

The clutch is of the 2-stage type with one plate for the main drive and one plate for the PTO drive.
The clutch housing has an air intake for more effective cooling of the clutch components. The controls are completely separate: pedal for the main clutch and hand lever for the PTO clutch.

Technical characteristics

Clutch plate - main clutch		**35HP - 45HP - 55HP**
clutch type		plate with circular friction linings
control type		mechanical, pedal operated
clutch plate diameter	mm	225
	in	8,86
clutch plate thickness	mm	10
	in	0,39
friction material		organic
clutch pedal free travel	mm	25
	in	0,98

Clutch plate - PTO		**35 HP - 45 HP - 55 HP**
clutch plate diameter	mm	225
	in	8,86
clutch plate thickness	mm	7.5
	in	0,29
friction material		RAYBESTOS asbestos free
clutch type:		plate with circular friction linings
control type:		mechanical, hand lever operated

Power take-off

Mid stub shaft	(UNI 221) 6X21X25
Rear stub shaft	1 3/8" 6-spline SAEJ 1170

Can be synchronised with the engine with ratios:

4.9000	for 540 rpm rear
3.7333	for 750 rpm rear
2.7368	for 1000 rpm rear
1.5263	for 2000 rpm Central

https://truckmanualshub.com/

Tabella giri/min.motore - giri/min albero PTO

engine rpm	**PTO shaft rpm**			
	Rear			**Mid**
	540	750	1000	2000
3052	-		-	2000
3000	610	804	1096	1965
2900	589	777	1060	1900
2800	569	750	1024	1835
2736	-	-	1000	-
2700	549	723	986	1769
2655	540	-	-	-
2600	529	696	950	1703
2500	508	669	913	1638
2400	488	643	876	1572
2300	468	616	840	1507
2200	447	589	804	1441
2100	427	562	767	1376
2000	406	535	730	1310
1900	386	509	694	1245
1800	366	482	658	1179

Can be synchronised with the rear wheels:

PTO revs/wheel revs: 7,1037

https://truckmanualshub.com/

Gearbox

The transmission comprises a 4-speed synchronised gearbox and 3 speed ranges.
A shuttle is fitted as standard to give a total of 12 forward gears and 12 reverse gears.

Reversing Control	Gearshifting control	Speed range control

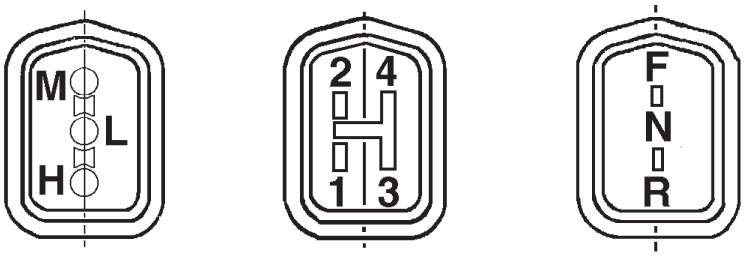

Number of gears		12FWD + 12REV
gearbox ratios		
1st gear		19/45= 1/2,8634
2nd gear		25/39 = 1/1.5600
3rd gear		32/33 = 1/1.0313
4th gear		38/26 = 1/0.6842
Shuttle		
forward		26/25 = 1/0.9615
reverse		20/19 = 1/0.9500
range gearbox ratios		
low (L)		(16/49)x(15/50)=1/10.2083
medium (M)		(16/49)x(28/37)=1/4.0469
high (H)		1/1
rear axle ratios:		
bevel drive		8/44 = 1/5.5000
final drive		11/59 = 1.5.3636
total ratio		29.4998
power take-off	540 rpm	10/49 = 1/4.900
	rear 1000 rpm	19/52 = 1/2.7368
mid 2000 rpm		(19/52)x(26/29)=1/1.5263

https://truckmanualshub.com/

Gearbox ratios schematic

- **for 35 - 45 - 55 HP**

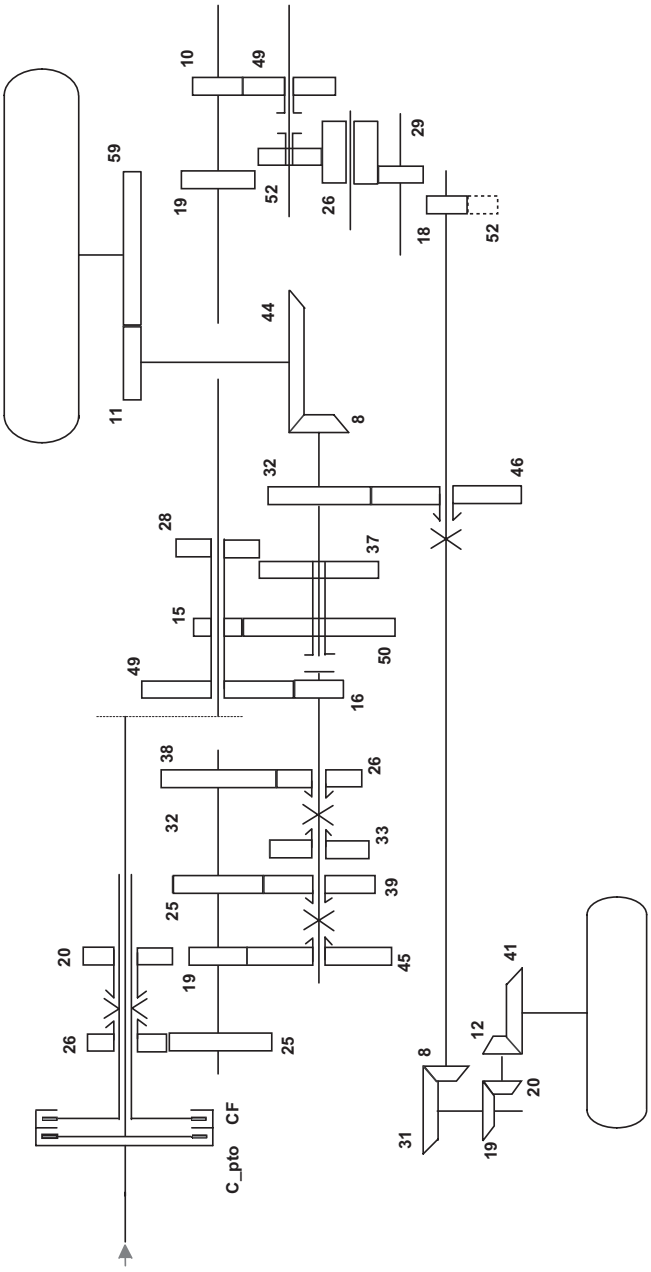

https://truckmanualshub.com/

Performance - Ground speed in km/h (mph) @ 3000 rpm

Forward gears		
	320/70 R20	360/70 R24
1a L Low creeper	- (-)	0.23 (0.14)
2a L Low creeper	- (-)	0.36 (0.22)
3a L Low creeper	- (-)	0.54 (0.34)
4a L Low creeper	- (-)	0.82 (0.51)
1a L	0.76 (0.47)	0.89 (0.55)
2a L	1.16 (0.72)	1.35 (0.84)
3a L	1.76 (1.09)	2.05 (1.27)
4a L	1.93 (1.20)	2.25 (1.40)
1a M	2.65 (1.65)	3.08 (1.91)
2a M	2.93 (1.82)	3.41 (2.12)
3a M	4.44 (2.75)	5.16 (3.21)
4a M	6.69 (4.16)	7.78 (4.83)
1a H	7.82 (4.86)	9.09 (5.65)
2a H	11.88 (7.38)	13.08 (8.13)
3a H	17.97 (11.17)	20.88 (12.97)
4a H	27.09 (16.83)	31.47 (19.56)
Reverse gear		
	320/70 R20	360/70 R24
1a L Low creeper	- (-)	0.24 (0.15)
1a L Low creeper	- (-)	0.37 (0.23)
1a L Low creeper	- (-)	0.55 (0.34)
1a L Low creeper	- (-)	0.61 (0.38)
1a L	0.77 (0.48)	0.90 (0.56)
2a L	1.17 (0.73)	1.38 (0.86)
3a L	1.78 (1.11)	2.08 (1.29)
4a L	1.95 (1.21)	2.29 (1.42)
1a M	2.68 (1.67)	3.14 (1.95)
2a M	2.97 (2.85)	3.48 (2.16)
3a M	4.49 (4.79)	5.26 (3.27)
4a M	6.77 (4.21)	7.94 (4.93)
1a H	7.92 (4.92)	9.28 (5.77)
2a H	12.02 (7.47)	14.09 (8.76)
3a H	18.19 (11.30)	21.32 (13.25)
4a H	27.42 (17.04)	32.14 (19.97)

https://truckmanualshub.com/

Important
Speeds vary according to the size of the rear tyres.
To calculate the speed for different tyres, simply multiply the speed values given on pages 186 by the following factors:

With reference to the speeds for rear tyres: 320/70R20	
rear tyres	Multiply by
11.2R20	1,005
13.6-16	0,975
38X14.00-20	0.953
11.4R24	1,109
44X18.00-20	1,1424
12.4R24	1,166

https://truckmanualshub.com/

Front driving axle

Ratios front axle reduction gear gearbox - front-wheel drive	32/46 = 1/1.4375
bevel drive	8/31 = 1/3.8750
final drive	(19/20) x (12/41) = 1/3.5965
total reduction	1/20,0336
mechanical ratio (No. of front wheel revs. per rear wheel rev)	1.4725
axle angle of oscillation	10°
inner wheel steering angle standard axle narrow axle	 57° 45°
Toe-in	—

Hydrostatic steering system

manufacturer	SAME DEUTZ-FAHR GROUP	
hydraulic lift type	with open centre control valve	
safety valve setting	bar psi	180 2610
Relief valve setting	bar psi	200 2900
minimum permissible piston diameter	mm in	74.051 2,93
maximum permissible cylinder diameter	mm in	75.030 2,96
lifting capacity with load concentrated on link arm ball ends at height for rear wheel centres	kg lb	1200 2644

Front hydraulic lift

Maximum lifting capacity 400 kg (881.84 lb).

https://truckmanualshub.com/

Hydraulic diagram of lift

1 - Valvematic
2 - Anti-shock valve
3 - Lowering valve
4 - Directional control valve
P - Pump
5 - Pilot valve
6 - Enabling valve
7 - Inlet valve
8 - Lubrication
T - Drain

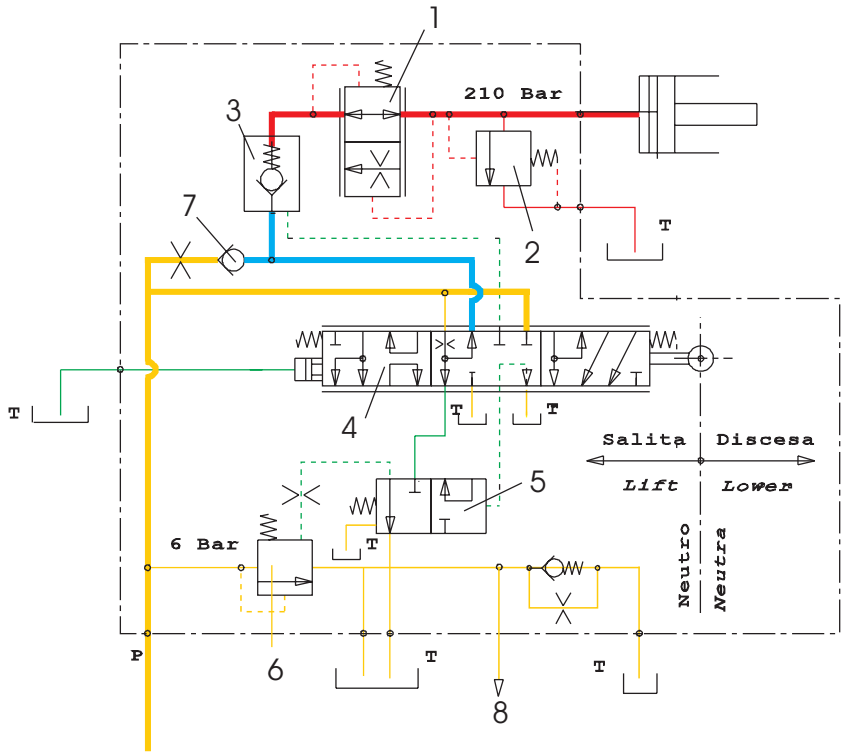

Hydraulic diagram of lift

https://truckmanualshub.com/

Hydrostatic steering system

			35 - 45 - 55 HP
control valve	code		009.3141.4/10
control valve type			DANFOSS OSPC 80 OR (open centre - reactive)
anti-shock valve setting	bar		100
	psi		1450
max. operating pressure	bar		150
	psi		2176
steering wheel rotation before start of steering			0° - 2° (with engine running)
			0° - 6° (with engine stopped)
hydrostatic cylinder thrust capacity		Kg	1324
		lb	2917
max. piston stroke	mm		68 for side
	in		2,68 for side
steering wheel rotations to full lock position			2.65

Cab

The maximum noise level, measured at the ear of the driver in accordance with the test method described in Addendum II to the European Directive **EEC 77/311** is the following:

Model	CAB			ROLL BAR	
	Type of cab	Maximum noise level measured at the driver's seat with doors and windows		Type of roll bar	Maximum noise level measured at the driver's seat db(A)
		open* db(A)	closed db(A)		
Solaris 35	-	-	-	T87	85
Solaris 45	-	-	-	T87	85
Solaris 55	-	-	-	T87	85

Warning! If the noise level with continuous tractor operation turns out to be equal to or greater than **85 dB(A)**, the user needs to take the appropriate precautions, as stated in the Italian Legislative Decree **DL no. 277** dated 15/08/1991, in articles 41, 42, 43 and 44.

https://truckmanualshub.com/

Dimensions and weights

		35HP	45HP	55HP
A - Maximum length				
- without linkage	mm (in)	2950 (116.2)	2980 (117.4)	2980 (117.4)
- with linkage	mm (in)	3166 (124.7)	3166 (124.7)	3166 (124.7)
- with front lift	mm (in)	3426 (134.9)	3426 (134.9)	3426 (134.9)
B - Width min - max	mm	1220-1360	1360-1675	1360-1675
	in	48-53.6	53.6-66	53.6-66
C - Height to ROPS	mm (in)	1955 (77)	2020 (79.6)	2020 (79.6)
D - Height to driver's seat	mm (in)	1240 (48.8)	1240 (48.8)	1240 (48.8)
E - Ground clearance	mm (in)	345 (13.6)	390 (15.4)	390 (15.4)
F - Wheelbase	mm (in)	1745 (68.7)	1745 (68.7)	1745 (68.7)
G - Front track width				
- min.	mm (in)	970 (38.2)	1040 (41)	1040 (41)
- standard	mm (in)	970 (38.2)	1040 (41)	1040 (41)
- max.	mm (in)	1120 (44.1)	1315 (51.9)	1315 (51.9)
H - Rear track width				
- min.	mm (in)	820 (32.3)	1005 (39.6)	1005 (39.6)
- base	mm (in)	820 (32.3)	1005 (39.6)	1005 (39.6)
- max.	mm (in)	1020 (40.2)	1320 (52)	1320 (52)
Kerb weight with ROPS				
- (without ballast weights)	kg (lb)	1250 (2754)	1320 (2908)	1320 (2908)
Minimum turning radius				
- (without brakes)	mm (in)	2600 (102.4)	2600 (102.4)	2600 (102.4)
Front tyres		7.00-12	7.50-16	7.50-16
Rear tyres		320/70R20	360/70R24	360/70R24

*With narrow axle and 280/70 r 18 rear tyres, minimum width: 1165 mm (45.90 in)

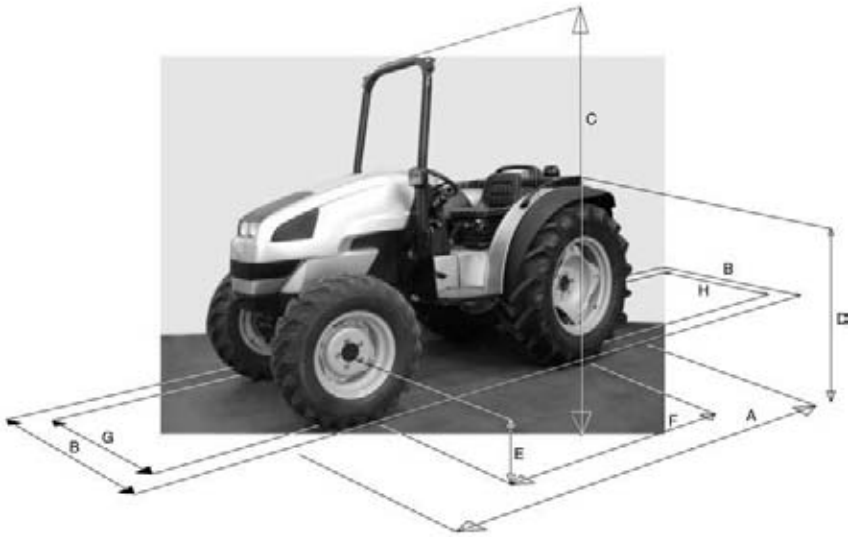

https://truckmanualshub.com/

Unladen weight of tractor (without ballast)

SOLARIS		WEIGHT OF TRACTOR WITH FRAME Kg (lb)		
		Front	Rear	TOTAL
35	4WD	A = 580 (1278) B = 740 (1630)	A = 620 (1366) B =720 (1586)	A = 1320 (2908) B = 1340 (2952)
45		A = 600 (1322) B = 760 (1674)	A = 760 (1674) B = 740* (1630)	A =1360 (2996) B = 1380* (3040)
55		A = 640 (1410) B = 780 (1718)	A = 780 (1718) B = 760 (1674)	A =1420 (3128) B = 1440 (3172)
		WEIGHT OF TRACTOR WITH CAB Kg (lb)		
35	4WD	A = ++ B = ++	A = ++ B = ++	A =++ B =++
45		A = ++ B = ++	A = ++ B = ++	A = ++ B = ++
55		A = ++ B = ++	A = ++ B = ++	A = ++ B = ++

A - Tractor without front lift
B - Tractor with front lift

++ - Version not availableiore

Unladen weight of tractor (with ballast)

SOLARIS		WEIGHT OF TRACTOR WITH FRAME Kg (lb)		
		Front	Rear	TOTAL
35	4WD	A = 640 (1410) B = 620 (1366)	A = 830 (1828) B = 810 (1784)	A = 1470 (3238) B = 1430 (3150)
45		A = 660 (1454) B = 640 (1410)	A = 850 (1872) B = 830 (1828)	A = 1510 (3326) B = 1470 (3238)
55		A = 700 (1542) B = 680 (1498)	A = 870 (1917) B = 850 (1872)	A = 1570 (3459) B = 1530 (3370)
		WEIGHT OF TRACTOR WITH CAB Kg (lb)		
35	4WD	A = ++ B = ++	A = ++ B = ++	A = ++ B = ++
45		A = ++ B = ++	A = ++ B = ++	A = ++ B = ++
55		A = ++ B = ++	A = ++ B = ++	A = ++ B = ++

A - Tractor without front lift
B - Tractor with front lift

https://truckmanualshub.com/

Maximum permissible loads

SOLARIS		MAXIMUM PERMISSIBLE LOADS Kg (lb)		
		Front	Rear	TOTAL
35	4WD	1000 (2230)	1400 (3084)	2400 (5287)
45	4WD	1000 (2230)	1400 (3084)	2400 (5287)
55	4WD	1000 (2230)	1400 (3084)	2400 (5287)

N.B.: the above data are dependent on use of the tyre sizes recommen- ded for each model

Maximum trailerable loads

— Tow implements WITHOUT BRAKES as follows:
- DO NOT exceed 30 km/h (18.6 mph)
- the weight of the towed implement, when fully laden, must NOT exceed the weight of the towing tractor.

– Tow implements with MECHANICAL BRAKES as follows:
- DO NOT exceed 30 km/h (18.6 mph)
- the weight of the towed implement, when fully laden, must NOT exceed 4000 kg (8818.4 lb).

Ballast weights

SOLARIS 35 - 45 - 55	FRONT BALLAST	
	PROFILED	
Material	metal	
Position	Located under the front support/in front of the front ballast frame	
Fixing	bolts	hooking
Number	3 (under)	4 (front)
Unit mass Kg (lb)	20 (44.09)	25 (25.12)
Total mass Kg (lb)	60 (132.28)	100 (220.46)

SOLARIS 35 - 45 - 55	REAR DISC BALLAST
Material	metal
Position	rear wheel
Fixing	bolts
Number	2 (1 SX + 1 DX)
Unit mass Kg (lb)	45 (99.21 lb)
Total mass Kg (lb)	90 (198.41 lb)

https://truckmanualshub.com/

Attachment of implements to the tractor

To allow full use in the widest possible range of applications, the structural frame of the tractor has been designed to afford a solid, safe mounting for agricultural or semi-industrial implements.

Before attaching particularly heavy implements to the tractor, please consult your SAME service centre.

There may be special applications in which the tyres the tractor was equipped with may not be suitable. In those special applications, it is recommend that your SAME dealer be consulted before a different tyre combination is installed other than what has been approved in the tyre section of this manual.

Before attaching the implement, check that the tyres are capable of supporting the load.

Check the markings on the walls of the tyres and consult the tyre manufacturer’s load tables.

https://truckmanualshub.com/

Implement attachment points

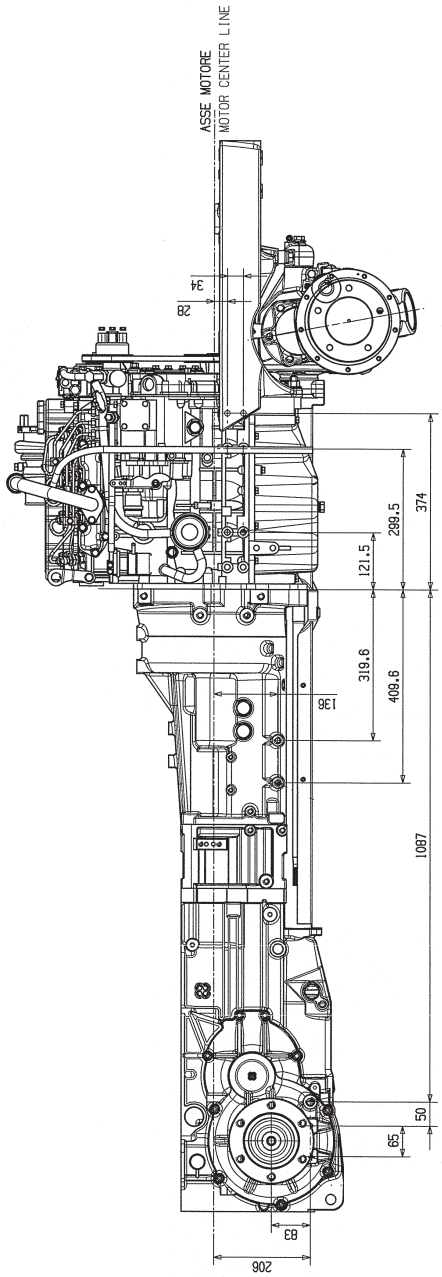

https://truckmanualshub.com/

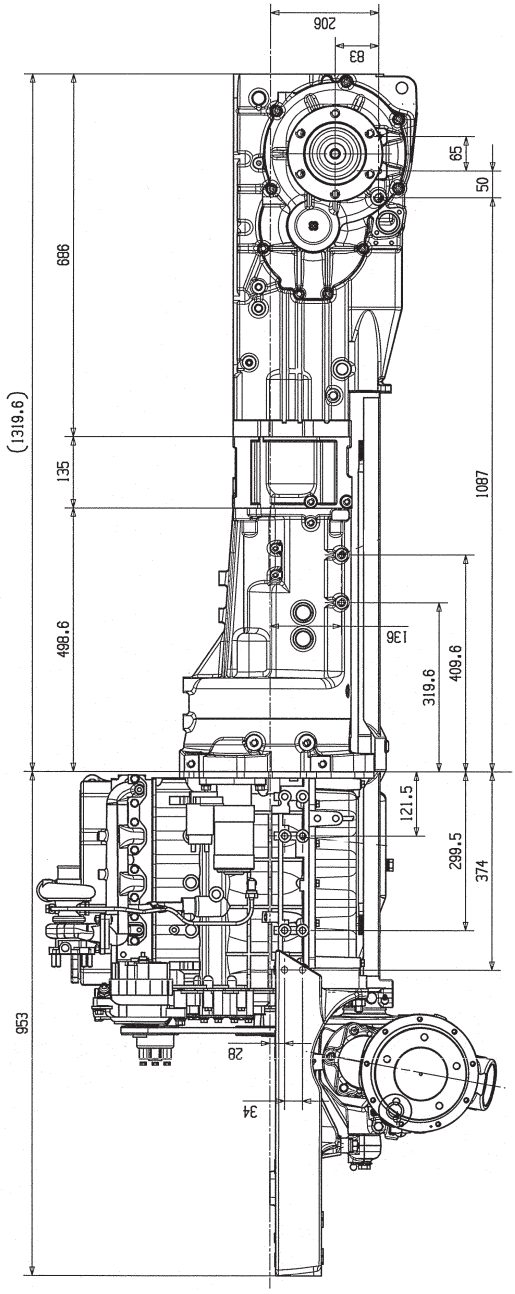

https://truckmanualshub.com/

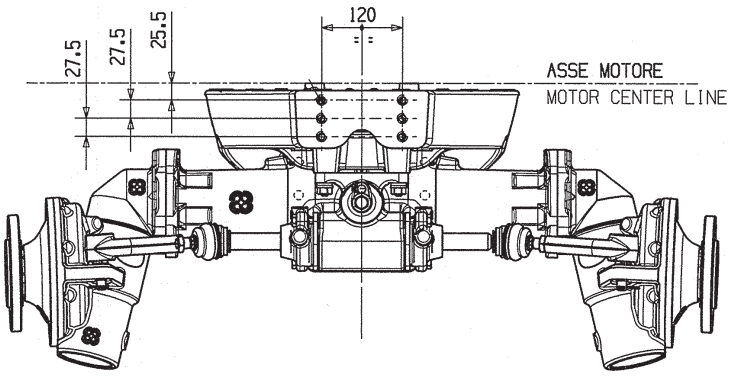

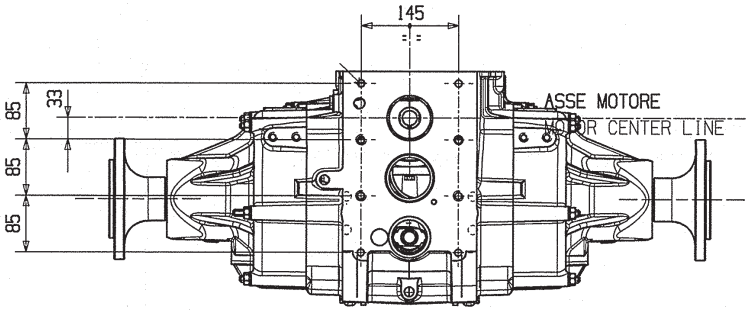

https://truckmanualshub.com/

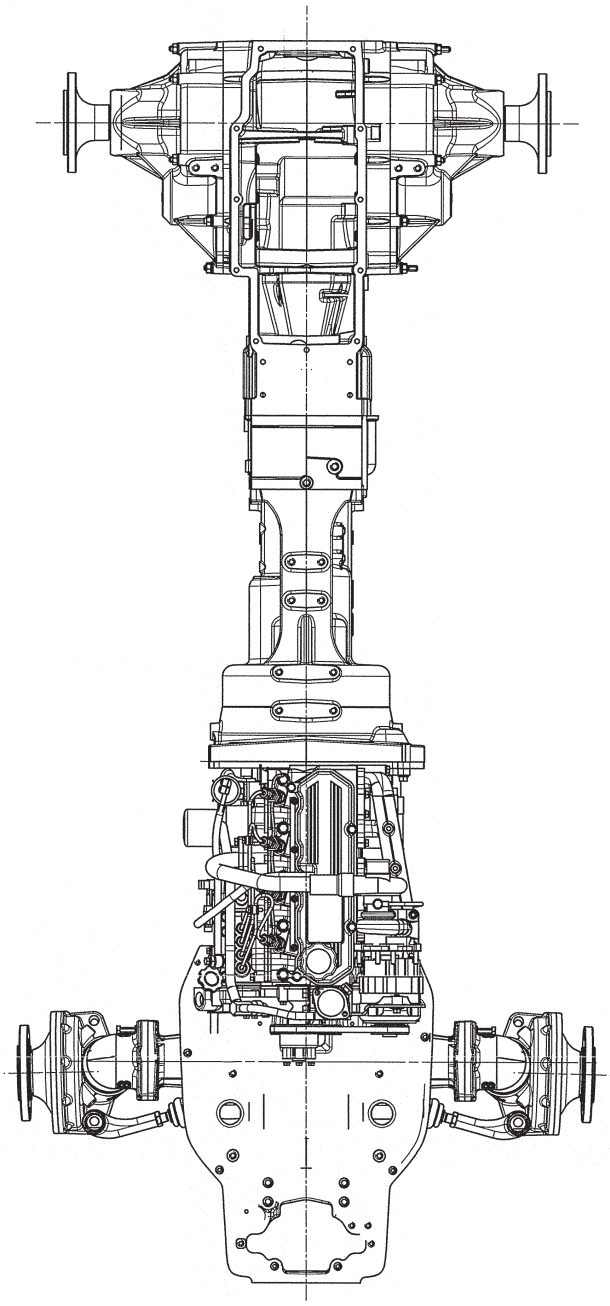

https://truckmanualshub.com/

SECTION 9 - Fault diagnosis

Engine

Engine fails to turn over when starter operated

— Check battery charge level:
  - If discharged, re-charge, otherwise clean the terminals and check that the battery is properly installed.

— Faulty starter motor; have the defective parts replaced by an auto electrician.

Engine difficult to start, or fails to re-start once stopped

— Check fuel level; inspect fuel filter and renew if necessary.

— Injection system faulty:
  - Check for air in the fuel system and bleed if necessary. If the problem persists, check the calibration of the injection pump and the injectors.

— Check the thermostarter; clean or replace as necessary.

— Poor compression: (operations to be carried out by a specialised service centre only) check the valve clearances (0.2 mm/0.008 in - for engine with air cooling system - 0.3 mm/0.012 in - for engine with water cooling system). Inspect the valves and grind or replace as necessary. Check head gasket and piston rings. If necessary, replace pistons and cylinder liners.

White smoke from exhaust

— Check injection pump timing (operation to be carried out by a specialised service centre). Check valve stem to valve guide clearance. If the problem persists, check piston rings and cylinder liners for wear and replace if necessary.

— Inspect injectors (operation to be carried out by a specialised service centre).

CAUTION: CAREFULLY READ ALL SAFETY INSTRUCTIONS CONTAINED IN THE OPERATING AND MAINTENANCE HANDBOOK AND FOLLOW THE INSTRUCTIONS LISTED ON THE TRACTOR'S DECALS.

https://truckmanualshub.com/

Dark smoke from exhaust

— Check that the air filter element is clean:
- Clean or replace as necessary. Check the efficiency of the injectors and calibrate if necessary. Check the calibration of the electronic rpm control (operation to be carried out by a specialised service centre).

Engine does not respond well to sudden acceleration

— Inspect the air filter element:
- Clean or replace as necessary.

— Inspect the fuel filter:
- Replace if necessary and bleed air from the system if necessary.

— Poor compression:
- Check valve clearances are (0.2 mm/0.008 in - for engine with air cooling system - 0.3 mm/0.012 in - for engine with water cooling system) in (operation to be carried out by a specialised service centre); grind or replace valves as necessary. If the problem persists, check piston rings and cylinder liners for wear and replace if necesssary.

The engine does not run at a constant speed

— Check for water in the fuel system:
- Drain the fuel tanks and refill with clean fuel.
- Check the calibration of the injectors (operation to be carried out by a specialised service centre).

Engine overheats

— Check drivebelt tensions:
- Adjust drivebelt tensions. Clean air intake grilles.

— Check the injection pump timing (operation to be carried out by a specialised service centre):
- Calibrate the pumps and, if necessary, the injectors.
- Check the pressure in the turbocharger outlet; clean the the turbocharger.

https://truckmanualshub.com/

Gearbox

Difficulty in selecting and deselecting gears

— Check selection mechanism for wear:
- Adjust or replace worn parts (operation to be carried out at a specialised service centre).

Gears disengage during work

— Check that the gear lever travel is sufficient to engage the gear:
- Adjust gear lever travel (operation to be carried out by a specialised service centre).

— Check gears for wear:
- Replace worn parts (operation to be carried out by a specialised service centre).

Noisy gearbox

— Check level and type of oil:
- Top up or change oil for recommended type.

— Check gear teeth and bearings for excessive wear:
- Replace worn parts (operation to be carried out by a specialised service centre).

— Check backlash between crown wheel and pinion:
- Adjust backlash (operation to be carried out by a specialised service centre).

Oil leaks

— Check that oil level is not too high:
- Restore correct level.

— Check that the breather valve is not blocked:
- Clean or replace as necessary.

— Check the oil seals for wear:
- Replace (operation to be carried out at a specialised service centre).

— Check gaskets:
- Replace (operation to be carried out at a specialised service centre).

https://truckmanualshub.com/

Rear power take-off

(All checks of the front and rear P.T.O. must be carried by a specialised service centre)

Front driving axle

Excessive wear of universal joint cross journals

— Oil leaks:
  - Oil breather clogged: clean. Check oil seals for wear and replace if necessary (operations to be carried out by a specialised service centre).

Worn tyres

— Check wheel toe-in (operation to be carried out by a specialised service centre).

— Wheel oscillation:
  - Check steering joints for wear and replace if necessary (operation to be be carried out by a specialised service centre).

Brakes

Poor braking action

— Check adjustment of brake controls and disk wear (adjustments to be carried out by a specialised service centre).

Hydraulic lift

(All inspection and repairs of the hydraulic lift are to be carried out by a specialised service centre)

The lift raises too slowly or fails to raise altogether

— Check that the lift is not overloaded.

— Check that the pump is functioning correctly:
  - Check that the oil is of the specified type and that the oil level is correct. Inspect pump and renew any worn parts. Check safety valve settings.

https://truckmanualshub.com/

The lift is only partially raised

— Check lift adjustments.

The lift is lowered too slowly

— Check that the “lowering” valve is not sticking.

The lift oscillates rhythmically

— Check adjustment and pressure relief valve settings.

When the lift arms are raised to maximum height, the pressure relief valve discharges continuously

— Check adjustment.

Control valve spool worn (with internal leaking).

Auxiliary hydraulic systems

Implements connected to the hydraulic system do not operate correctly

— Implements not suited to characteristics of the hydraulic system.

— Fault in the hydraulic lift system. See lift unit.

— Incorrect type/quantity of oil in the circuit: change and/or top up transmission oil.

— Oil filters clogged: renew filters.

— Oil pump worn or defective: overhaul or replace as necessary (operations to be carried out by a specialised service centre).

— Safety valve setting incorrect:
- Check valve pressure setting and adjust if necessary (operations to be carried out by a specialised service centre).

— Incorrect adjustment of control levers:
- Adjust (operations to be carried out by a specialised service centre).

https://truckmanualshub.com/

Excessive noise from system (with vibration of system pipes)

— Air in system:
- Check tightness of fittings and seals

— Interference between pipes (visual inspection):
- Move the pipes so that they are not in contact with other pipes or components.

Oil leaks

— Pipe fittings worked loose: tighten.

— Seals defective: replace.

— Pipes damaged: replace.

Automatic centering device does not function correctly

— Internal components damaged or sticking:
- Overhaul the automatic centering device; replace any defective parts (operations to be carried out by a specialised service centre).

Incorrect adjustment of control levers

— Adjust correctly (operations to be carried out by a specialised service centre):

— Automatic centering device defective or incorrectly adjusted:
Overhaul centering device (operation to be carried out by a specialised service centre)..

https://truckmanualshub.com/

Appendix

IMPORTANT! ADDITIONAL INFORMATION
Combination of tractor and mounted implement

https://truckmanualshub.com/

Combination of tractor and mounted implement

The mounting of implements on the front or rear three point linkage shall not result in exceeding the maximum permissible weight, the permissible axle loads and the tyre load carrying capacities of the tractor. The front axle of the tractor must always to be loaded with at least 20% of the unladen weight of the tractor.
Make sure before buying an implement that these conditions are fulfilled by carrying out the following calculations or by weighing the tractor/implement combination.

Determination of the total weight, the axle loads, the tyre load carrying capacity and the necessary minimum ballasting

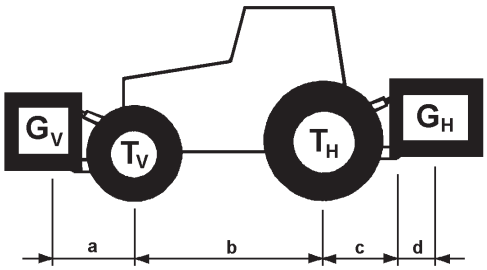

For the calculation you need the following data and see the table of page E:

T_L	[kg (lb)]	Unladen weight of tractor
T_V	[kg (lb)]	Front axle load of unladen tractor
T_H	[kg (lb)]	Rear axle load of unladen tractor
G_H	[kg (lb)]	Combined weight of rear mounted implement/rear ballast
G_V	[kg (lb)]	Combined weight of front mounted implement/front ballast
a	[mm (in)]	Distance from centre of gravity for combined front mounte dimplement/front ballast to front axle centre
b	[mm (in)]	Tractor wheelbase
c	[mm (in)]	Distance from rear axle centre to centre of lower link balls
d	[mm (in)]	Distance from centre of lower link balls to centre of gravity for combined rear mounted implement/rear ballast

https://truckmanualshub.com/

Consideration of rear mounted implement and front/rear combinations

1) Calculation of minimum ballasting at the front $G_{V\ min}$

$$G_{V\,min} = \frac{G_H \times (c + d) - T_V \times b + 0.2 \times T_L \times b}{a + b}$$

Record the calculated minimum ballasting which is needed at the front of the tractor into the table.

Front mounted implement

2) Calculation of the minimum ballasting at the rear $G_{H\ min}$

$$G_{H\,min} = \frac{G_V \times a - T_H \times b + 0.45 \times T_L \times b}{b + c + d}$$

Record the calculated minimum ballasting which is needed at the rear of the tractor into the table.

3) Calculation of the real front axle load $T_{V\ tot}$
(If with the front mounted implement (G_V) the required minimum front ballasting ($G_{V\ min}$), cannot be reached, the weight of the front mounted implement has to be increased to the weight of the minimum ballasting at the front!)

$$T_{V\,tot} = \frac{G_V \times (a + b) + T_V \times b - G_H \times (c+d)}{b}$$

Record the calculated real front axle load and the permissible front axle load of the tractor into the table.

4) Calculation of the real total weight G_{tot}
(If with the rear mounted implement (G_H) the required minimum rear ballasting ($G_{H\ min}$) cannot be reached, the weight of the rear mounted implements has to be increased to at least the weight of the minimum ballasting at the rear!)

$$G_{tot} = G_V + T_L + G_H$$

Record the calculated real and the permissible total weight given in the instruction handbook for the tractor into the table.

https://truckmanualshub.com/

5) Calculation of the real rear axle load $T_{H\ tot}$

$$T_{H\,tot} = G_{tot} - T_{V\,tot}$$

Record the calculated real and the permissible rear axle load given in the instruction handbook for the tractor into the table.

6) Tyre load carrying capacity

Record double the value (two tyres) of the permissible load carrying capacity into the table (see for instance documentation provided by the tyre manufacturer).

TABLE	Real value according to calculation	Permissible value according to instruction handbook	**Double** permissible tyre load carrying capacity (two tyres)
Minimum Ballasting Front/rear	/ Kg	---	---
Total weight	Kg	Kg	---
Front axle load	Kg	Kg	Kg
Rear axle load	Kg	Kg	Kg

The minimum ballasting has to be attached to the tractor either in form of a mounted implement or ballasting weight!

The calculated values must be less or equal ( ) the permissible values!

https://truckmanualshub.com/

SOLARIS	*35 HP*	*45 HP*	*55HP*
T_L kg	1340	1380	1440
T_V kg	620	640	680
T_H kg	720	740	780
G_H kg	variable		
G_V kg	variable		
a m	variabile		
b m	1746	1746	1746
c m	804	804	804
d m	variable		

https://truckmanualshub.com/

Note

https://truckmanualshub.com/

Index

A

A Word to the Operator XVI
Accelerator pedal 32
Access to the driving position 8
Active carbon air filter 89, 151
Adjustable track wheels 95
Adjustable vertical link 71
Adjusting belt tension 136
Adjusting steering stops 94
Adjusting the driver's seat 26
Adjusting the rearview mirrors 29
Adjustment of the telescopic stabilisers 70
Adjustment of the top link 70
Air conditioning 83
Air conditioning system 154
Air conditioning system compressor 154
Air conditioning system recharging
and maintenance valve 155
Air filter 130
Air filter warning pilot lamp 13
AKROS FREEZE liquid coolant 133
Alternator charge pilot lamp 13
Analogue dials and gauges. 11
Appendix. . . . . A
Attachment of implements to the tractor 194
Auxiliary hydraulic services control valve 53
Auxiliary hydraulic systems. 203

https://truckmanualshub.com/

B

Ballast 105
Ballast weights 193
Ballasting by filling the tyres with
water + antifreeze solution 106
Battery. 157
Bleeding air from the fuel system 123
Bleeding air from the hydraulic system 142
Bodywork 75
BOSTROM Minibaltic XH2 seat with
spring suspension 26
Brake pedal. 31
Brakes. 202
Bulb replacement 172

C

Cab . . . . . XXV, 78, 190
Cab air filter (cleaning) 151
Cab electrical system wiring 166, 169
Cab fuse box. 168
Cab roof light. 87
Cable channel for passing external implement
control cables into the cab 90
Caution XVI
CE XIII
CEE towing hitch. 67
Changing the coolant/antifreeze mixture
and flushing the cooling system 134
Changing the engine oil 121
Changing the engine oil filters. 123

https://truckmanualshub.com/

Check the Equipment XXVIII
Checking 5
Checking operation of the differential lock controls . . . 143
Checking the battery 157
Checking the engine oil level 7, 121
Checking the level of coolant in the expansion tank . . 133
Checking the transmission oil level 140
Class “A” drawbar 64
Class “C” towing hitch 66
Clean the Tractor XXX
Cleaning and replacement of the fuel filter 123
Cleaning the air filter 131
Cleaning the front grille 120
Cleaning the headlights and sidelights 172
Cleaning the oil cooler 135
Clutch 182
Clutch control pedal 30
Cold start activation pilot lamp 13
Cold starting 22
Combination of tractor and mounted implement. . . . . B
Connection of an implement to the auxiliary
hydraulic service couplers. 59
Connector for connection to front wiring loom 165
Connector for connection to rear wiring loom 165
Control pedals 30
Controllo della frenata 144
Controls and checkover instruments. 16
Controls located in the cab roof lining 85
Controls located to the right of the driver 34
Conversion tables LXII
Converting a control valve from double-acting
to single-acting 62

https://truckmanualshub.com/

D

Damage to the ROPS XXV
Danger XVI
Differential lock engagement pilot lamp 14
Digital quartz clock 87
Dimensions and weights 191
Draining water from the tyre 107

E

Electrical diagram - cab air conditioning unit 167
Electrical system 157
Electro-magnetic fuel pump 127
Electronic control of engine cooling system 20
Emergency flashers control 15
Emergency starting through auxiliary battery 23
Engine 17, 181, 199
Engine cooling system 133
Engine maintenance 119
Engine oil pressure pilot lamp 13
Engine serial number 2
Engine shut down 21
Engine temperature gauge 11

F

Fault diagnosis 199

https://truckmanualshub.com/

Filling the tyre with water 107
First trailer direction indicator and
hazard lights pilot lamp 14
Follow a Safety Programme XVIII
Front and rear differential lock 37
Front and rear working lights in cab roof. 175
Front axle and hub final drives 145
Front axle pivot bushes. 145
Front differential lock. 144
Front driving axle 188, 202
Front horizontal ballast blocks 105
Front hydraulic lift 188
Front P.T.O. (1000 rpm) 40
Front sidelights and direction indicators
mounted on the sides of the tractor 174
Front wheels 97
Front/rear differential lock button 15
Front-wheel drive 38
Front-wheel drive pilot lamp 14
Fuel. 129
Fuel gauge 11
Fuel reserve pilot lamp 14
Fuel storage 117
Fuse box 159, 164

G

Gearbox 184, 201
Gearbox and P.T.O. clutch 33
Gearbox clutch 137
Gearbox controls. 35
Gearbox ratios schematic 185
General cleaning of the tractor 156
General Operating Hazards XXXIX
General safety rules XVIII

https://truckmanualshub.com/

H

Hand accelerator. 15
Handbrake lever 32
Hazard warning triangle 90
Headlight alignment 177
Heating system 81
Hydraulic diagram of lift 189
Hydraulic front lift 73
Hydraulic services circuit pressure pilot lamp 14
Hydraulic services oil filter warning pilot lamp 13
Hydraulic system. 50
Hydrostatic steering system 188, 190

I

Ignition switch 16
Implement attachment points 195
Important X
Instrument panel for cab tractors 10
Interior light 176
International symbols. LVIII
Introduction to Safety XVI

https://truckmanualshub.com/

K

KAB P4 XH2 sprung seat 27
KAB XH2 type seat 79
Know Your Equipment XXVII

L

Lamp indicating engagement of front PTO speed 14
Lever with yellow knob 46
Lighting on 14
Lights 172
Lights' switch. 9
List of electrical system components 162
Load sensing - mechanical lift. 45
Lubricants and fluids 111

M

Main beam warning light 14
Maintenance and inspection schedule 114
Maintenance intervals 112
Maintenance of front lift. 149
Maintenance of Front P.T.O.. 148
Maintenance of hydraulic power-lift 147
Maintenance of the 3-point linkage 147
Maintenance of the air conditioning system 151, 153
Maintenance of the front and rear brakes 144

https://truckmanualshub.com/

Maintenance of the front wheel drive system 145
Maintenance of the gearbox, differential and rear reduction units 138
Maintenance of the heating system 152
Maintenance of the hydrostatic power steering 142
Maintenance operations 109
Manual emergency stop 25
Maximum permissible loads 193
Maximum trailerable loads 193
Mechanical ratio 93
Metric conversion LXI
Mid mount implements with lifting arms 72

N

Narrow track 92
Note . . . . . XI, LXIV, F

O

Opening front window 86
Opening rear window 86
Operations prior to garaging the tractor for a long period 179
Original replacement parts 3

https://truckmanualshub.com/

P

P.T.O. clutch control 33
Parking brake of trailer pilot lamp 14
Parking brake pilot lamp 14
Performance 186
Permissible tyre combinations 96
Pilot lights 13
Power take-off. 39, 182
Preface II
Prepare for Safe Operation. XXVI
Preparing the tractor for use after a long
period of storage 180
Protect the Environment XXX
Protective Structures XXIV

R

Raising the engine hood 120
Rear - central PTO 41
Rear and underside P.T.O. clutch. 137
Rear ballast. 105
Rear brakes 44
Rear light assemblies 173
Rear outlet socket - standard 168
Rear power take-off 202
Rear PTO clutch indicator. 14
Rear wheels 98
Rear work lights for tractors with platform. 176
rearview mirrors 29
Refueling. 117
Refueling at the end of the day 118

https://truckmanualshub.com/

Refuelling 6
Replacement parts 1
Risk of Overturning XXXVII
Roll Over Protective Structures XXIV
Row crop tires 93
Running direction of tires 94

S

Safety . . . . . XV, XVI
Safety Alert Symbol and Terms XV
Safety and operational decals XLVI
Safety frame 76
Safety instructions for the installation of supplementary equipment and/or electronic components.. XLV
Screen wash liquid reservoir 90
Seat belts 28
SECTION 1 - Safety XV
SECTION 2 - Replacement parts 1
SECTION 3 - Use 5
SECTION 4 - Wheels 91
SECTION 5 - Maintenance operations 109
SECTION 6 - Electrical system 157
SECTION 7 - Storage of the tractor 179
SECTION 8 - Technical specifications 181
SECTION 9 - Fault diagnosis 199
Servicing the Tractor XXXI
Start Safely XXXII
Starting XXXI
Starting Fluid XXXIII
Starting the engine 19
Storage compartment 87
Storage of the tractor 179
Synchronized power take-off 42

https://truckmanualshub.com/

T

Tachometer for cab tractors 12
Technical specifications 181
Thermostat 134
Three-point linkage 69
To the owner of the new SAME tractor. XII
Towing hitch 65
Track adjustment 91
Track width adjustment for wheels
with adjustable rims 97
Track width adjustment for wheels with
fixed rims. 104
Tractor direction indicator and hazard
lights pilot lamp 14
Tractor identification data plat. 1
Tractor identification plate. 2
Tractor serial number 1
Transmission speed selection 36
Turbocharging. 24
Types of auxiliary hydraulic service
control valve (8 ways) 55
Tyre inflation pressures. 92

U

Unladen weight of tractor (with ballast). 192
Unladen weight of tractor (without ballast) 192
Use 5

https://truckmanualshub.com/

V

Ventilation 80

W

Warning. XVI
Warning light. 15
Wheels 91
Width of rear axle 93
Width of the front axle. 93
Windscreen and rear screen wipers 150
Windscreen washer 150
Wiring for cab 171
Wiring for cab air conditioning unit 170
Wiring for radio 171
Wiring for worklights 171

https://truckmanualshub.com/

Any reproduction, including partial, of the text and illustrations in this publication is prohibited.

We reserve the right to modify the tractor at any time, while maintaining the essential characteristics of the product. The data reported in this publication are thus also subject to variation and consequently are not binding.

02/2006
By Personal Computing

cod. 307.7325.3.0
Technical Publications Dept.

https://truckmanualshub.com/

SAME DEUTZ-FAHR ITALIA S.p.A.

307. 7325. 3. 0

02/2006