https://truckmanualshub.com/

PREFACE

1. This Parts Catalog carries Yanmar crawler back-hoe B2-5.

2. Parts catalog history

	Parts catalog NO.	Published	Remarks
1st edition	000Y00K3840	Aug., 2002	Disuse old edition
1st revised	000Y00K3841	Feb., 2004	

3. Model name

SECTION	Column	Model name	M/#	Manufactured
Ⅰ(Vehicle)	(A)	B2-5 (JP)	50501～	2002/5～
	(B)	B2-5 (EX)		
Ⅱ(Engine)	(A)	3TNV76-BX	00106～	2002/5～

(Note) JP:Japan EX:export except U.S.A. & Australia

4. Your understanding is asking that this parts catalog is not a technical data manual setting forth as servicing procedures, This parts catalog is using simplified illustration.
Be sure to use Yanmar Genuine Parts in your maintenance servicing of Yanmar products.
Be careful not to use the simple parts available in the market, otherwise their use in repairing causes such as an early breakage, for instance.

https://truckmanualshub.com/

How to read this Parts Catalog.

1.Parts mentioned in Parts Catalog may not necessarily be standard equipping parts
2.Parts change may be made without prior notice.
3.Form of this Parts Catalog.

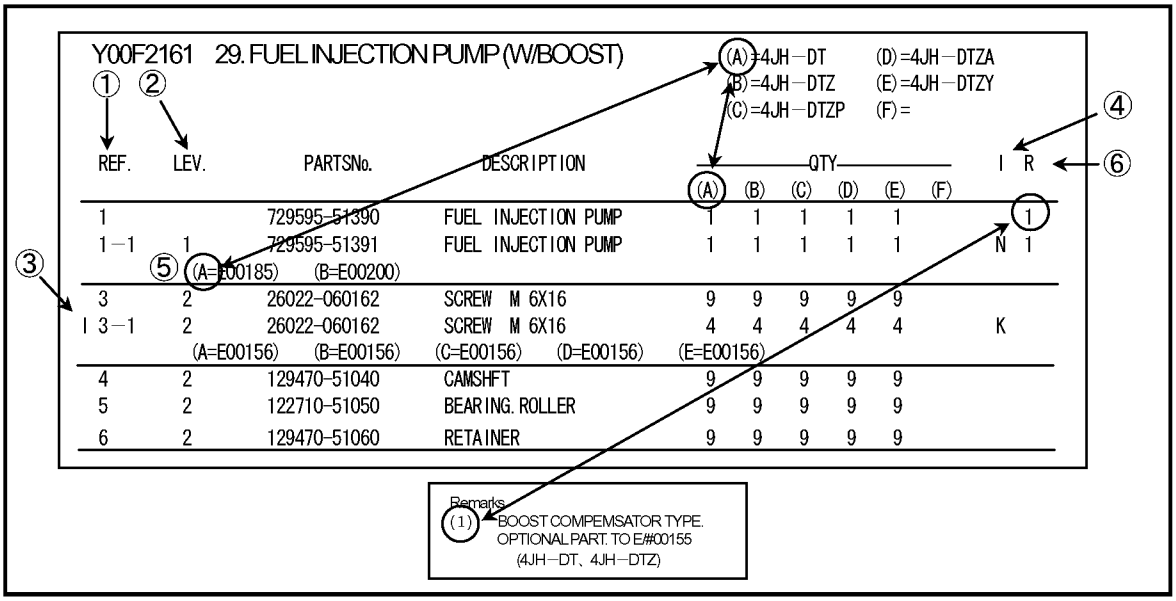

①Ref. No,

The Ref. No, in the list may not be in accordance with the Ref. No, on illustration.

(Ex.) illustration No, List heed No,

1 1 (Before change) → 1 − 1 (After change)

When interchangeable symbol N, and k, illustrations for the new parts are sometimes omitted.

②Lev. (Level)

Indication and Meaning of Level

Level Hereunder is given the relation among the number of number (1,2,3) the level and the nominal parent-child relationship.

1 ----- Parent parts (Assembly parts)
2 ----- Child parts included in " 1 " (Semi-Assembly parts, component parts of Assembly parts.)
3 ----- Child parts included in " 2 ", Grand-child parts in terms of " 1 ".
(Component parts of Semi-Assembly parts.)

Note) A parts of non-sale parts are illustrated but not listed.

③Change Mark

Change Mark " I " is given to the part for which a design change was made at this time.
The design change was not shown in the last published Parts Catalog.

④Interchangeability Mark

In the case where a part change took place, one of the following interchangeability marks is indicated for that part

Symbol	Interchangeability	Contents note
N	Old ⇐ ○ × ⇒ New	New Part is interchangeable for Old Part but not interchangeable conversely.
Q	Old ⇐ × ○ ⇒ New	New Part is not interchangeable for Old Part but interchangeable conversely.
R	Old ⇐ ○ ○ ⇒ New	New Part is interchangeable for Old Part and vice versa.
S	Old ⇐ × × ⇒ New	New Part is not interchangeable for Old Part and vice versa.
W		Part newly added.
Z		Part discontinued.
F		Not interchangeable single part but interchangeable by set of the related parts.
K		Changed only in quantity used.

⑤Effective Machine No,

When a part is changed, Effective Machine No, of a Model for which the part is applicable is indication
In each column of (A)-(F).

Product Symbol	Product No,	Product Symbol	Product No,
C	Clutch No, Compressor No,	M	Machine No,
D	Drive No,	T	Tractor No,
E	Engine No,	Note 1)※	Date

Note 1) Date may follow the symbol in some cases.(Ex.) ※1996.01
Note 2) As far as engine models shown by " XXX " are concerned, the modification of the parts could not be Predicted or the engine models themselves could not be identified.
Note 3) (A=E/#00185) means that the design change on the part has been effective for the model at the, column (A) (in the case, for 4JH-DT) on and from E/#(Engine Serial Number) 00185

⑥Remarks Mark

Figures or alphabets (Symbols) are entered in the remark column.
The comments (remarks) on the pertinent parts are indicated in the lower part of the list by the same symbols a those stated above.

https://truckmanualshub.com/

SPECIFICATIONS

Model		Ｂ２－５	
Item		Iron crawler	Rubber crawler
Machine mass	kg	1980	
Body mass	kg	1520	
Std. bucket capacity	m^3	0.066	
Std. bucket width	mm	490	
Max. digging depth	mm	2270 (2430 : blade)	
Max. vertical digging depth	mm	1950	
Max. cutting height	mm	4700	
Max. dump height	mm	3400	
Max. reach at ground level	mm	3900	
Min. swing radius	mm	790	
Boom offset amount	mm	left 710 / right 315	
Max. digging force (bucket)	kN (kgf)	18.6 (1900)	
Travel speed	km/h	low 2.2 / high 4.4	
Turning speed	min^{-1} (rpm)	9.5	
Average ground pressure	kPa (kgf/cm^2)	24.7 (0.251)	
Hyd. pump flux	ℓ/min	21.6×2 (variable pump) 21.1×1 (gear pump)	
Set pressure (main relief)	MPa (kgf/cm^2)	20.6 (210) ×3	
Model		Vertical 3-cylinder water-cooled diesel	
Name		３ＴＮＶ７６－ＢＸ	
Generating power/revolutions	kW/min^{-1} (PS/rpm)	14.3/2400 (19.5/2400)	
Displacement	ℓ	1.116	
Compress pressure	MPa (kgf/cm^2)	3.43 (35) at250min^{-1} (rpm)	
Nozzle jet pressure	MPa (kgf/cm^2)	12.3 (125)	
Fan belt (V-belt) size		FM35.5	
Generator capacity		12V/40A	
Battery model capacity		65B24L/12V, 40Ah (5 hours rate capacity)	

本機塗装色
VEHICLE PAINTED COLOR

https://truckmanualshub.com/

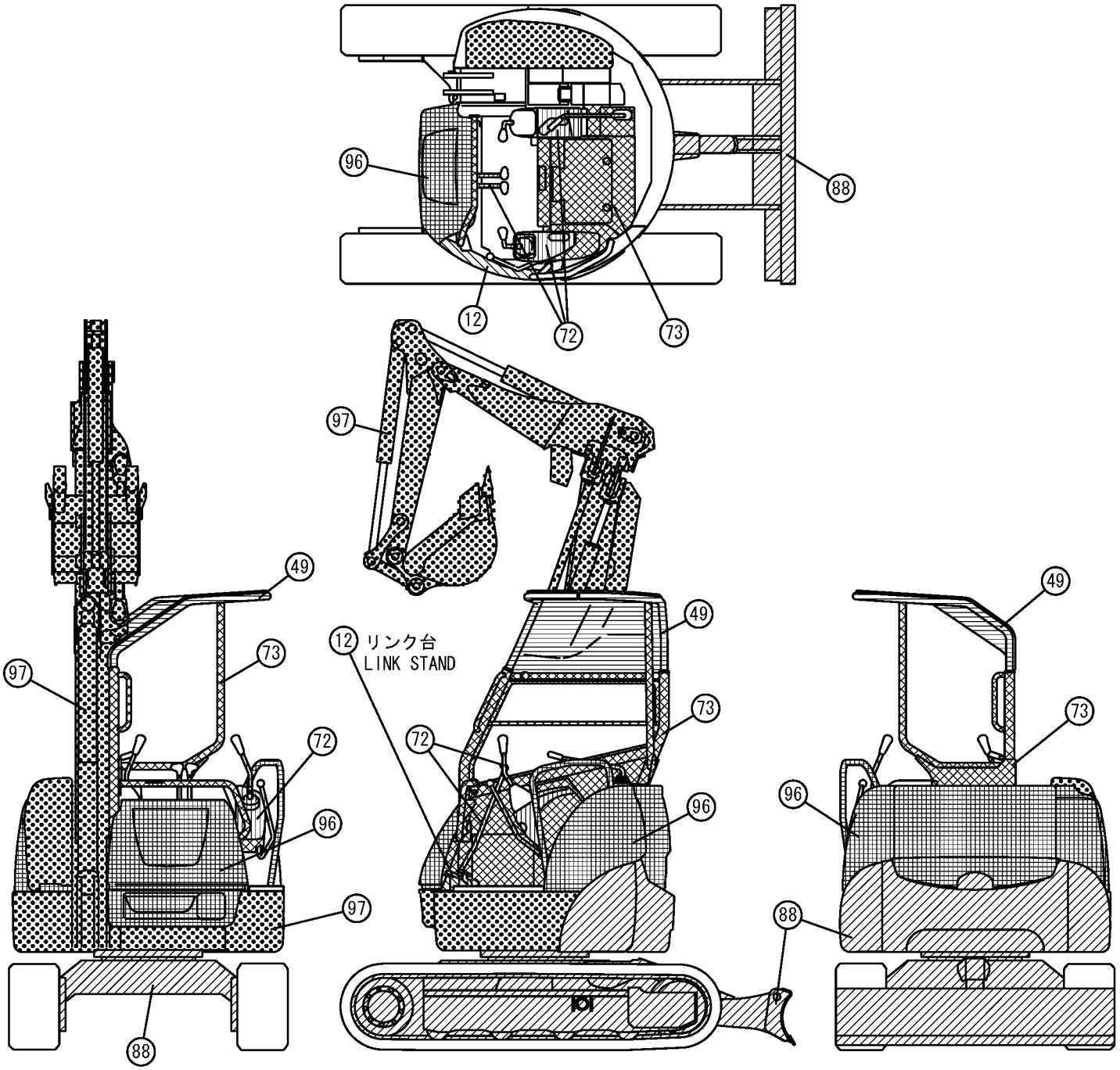

色区分 Color Code	表示 Desc-ription	塗装色 Painted Color	ﾏﾝｾﾙ記号 Munsel No.	塗料部品番号 (Paint Part No.)		
				16L缶(16L Can)	4L缶(4L Can)	ｽﾌﾟﾚｰ(SPRAY)
88		ヤンマー新ディープグリーン YANMAR New Deep Green	0.6B2.2/4.2	981101-09588	977620-40880	977620-30881
97		ヤンマーピーコックグリーン YANMAR Peacock Green	3.85BG5.31/9.15	981101-09597	977620-40970	977620-30971
49		ヤンマーネイビーグレー YANMAR Navy Gray	8.12B1.31/0.42	-------	TOR-91390000	TOR-90390002
73		ヤンマーワームグレー YANMAR Warm Gray	7Y5.3/0.8	-------	-------	TOR-90450003
96		ヤンマーシトラスグリーン YANMAR Citrus Green	4.84GY8.42/6.99	981101-09599	977620-40990	977620-30991
72		ヤンマーダークオリーブグレー YANMAR Dark Olive Gray	5.39Y2.92/0.78	-------	977620-40720	TOR-90460003
12		ヤンマーブラック YANMAR Black	4.90PB0.08/0.41	-------	TOR-91220001	TOR-90220003

https://truckmanualshub.com/

配線図
WIRING DIAGRAM

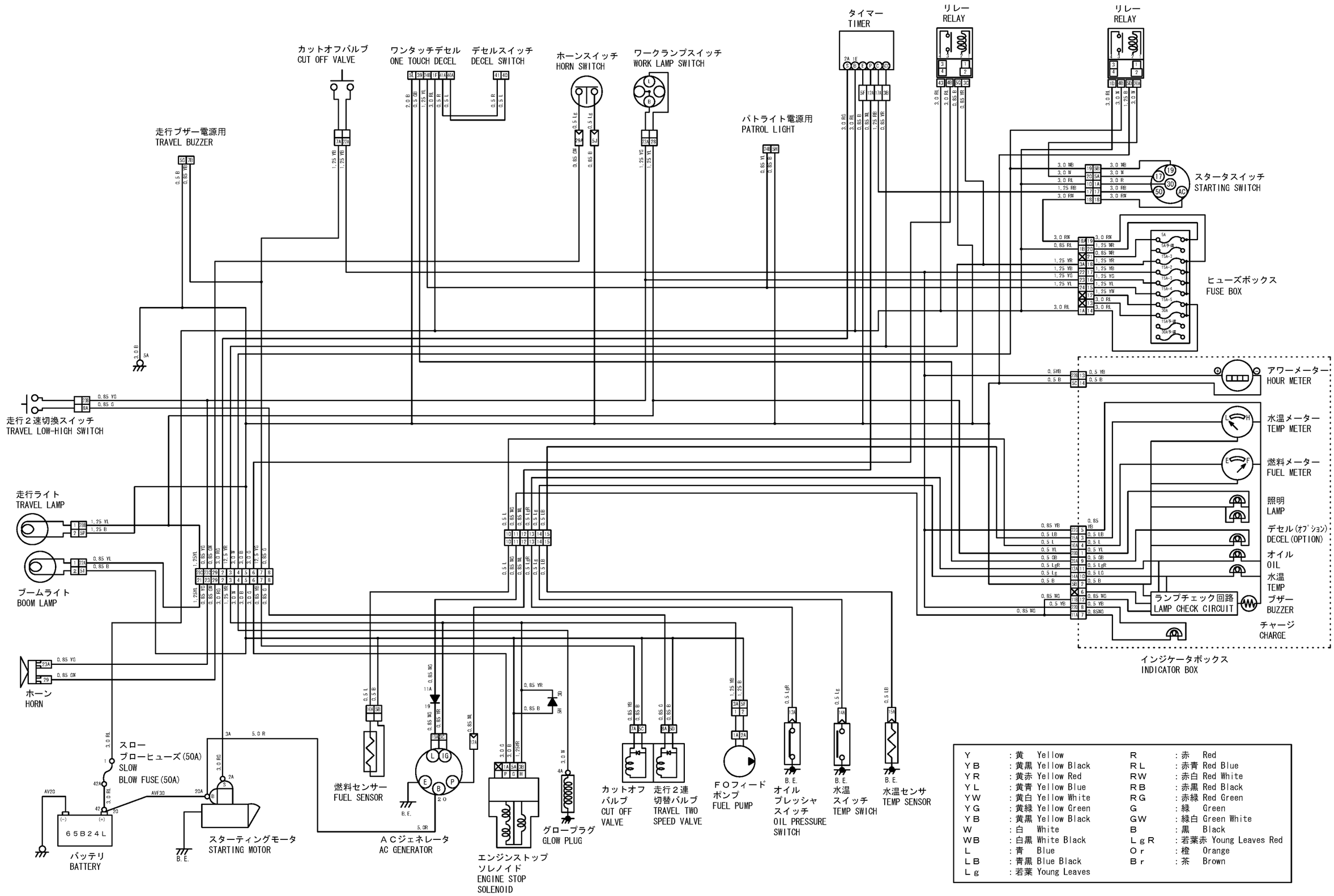

Y	：黄　Yellow	R	：赤　Red
YB	：黄黒 Yellow Black	RL	：赤青 Red Blue
YR	：黄赤 Yellow Red	RW	：赤白 Red White
YL	：黄青 Yellow Blue	RB	：赤黒 Red Black
YW	：黄白 Yellow White	RG	：赤緑 Red Green
YG	：黄緑 Yellow Green	G	：緑　Green
YB	：黄黒 Yellow Black	GW	：緑白 Green White
W	：白　White	B	：黒　Black
WB	：白黒 White Black	LgR	：若葉赤 Young Leaves Red
L	：青　Blue	Or	：橙　Orange
LB	：青黒 Blue Black	Br	：茶　Brown
Lg	：若葉 Young Leaves		

絵目次（1）・・・・・主要部品
https://truckmanualshub.com/
PICTURESQUE INDEX(1)・・・MAIN PARTS

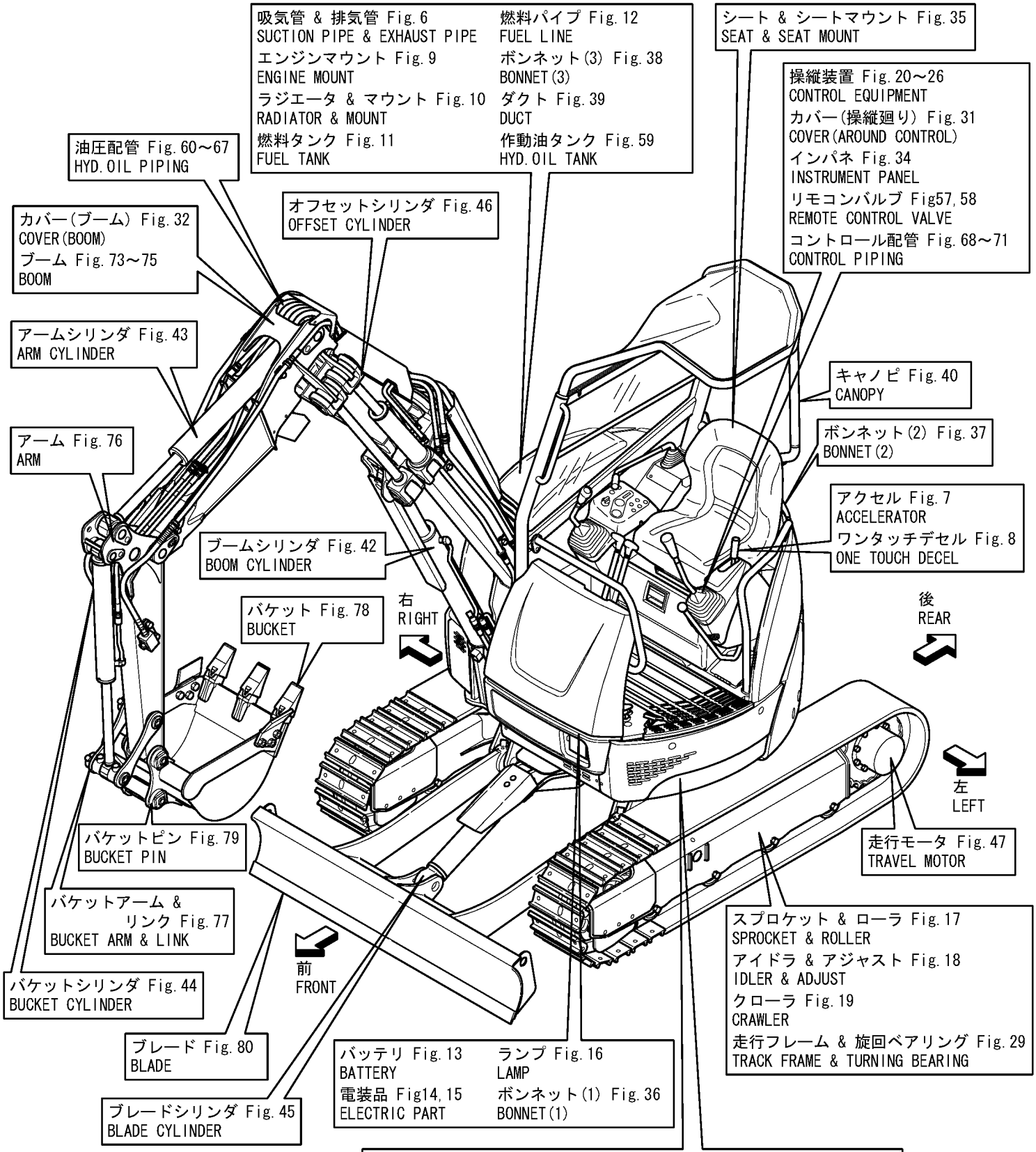

絵目次（2）・・・・・・・・油圧関係
https://truckmanualshub.com/
PICTURESQUE INDEX(2)・・・HYDRAULIC SECTION

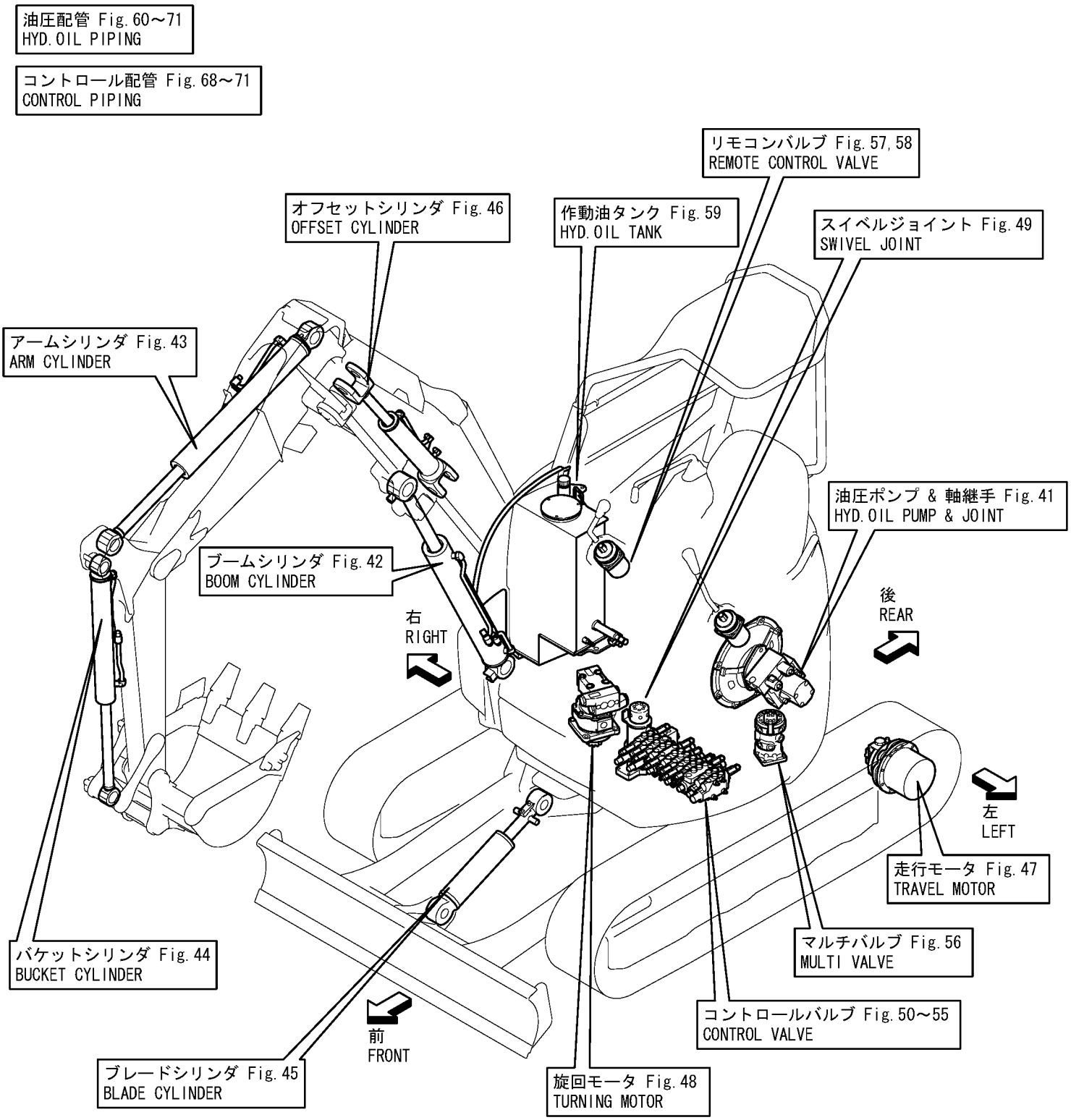

https://truckmanualshub.com/

Fig. 1 銘板(JP)
LABEL(JP)

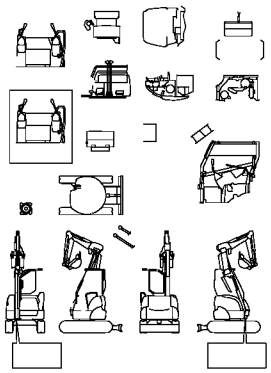

Fig. 2 銘板(EX)
LABEL(EX)

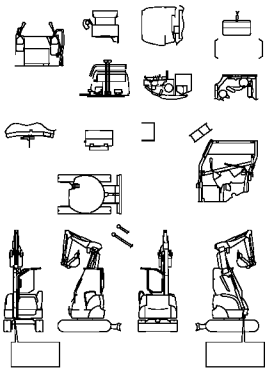

Fig. 3 安全銘板(JP)
SAFETY LABEL(JP)

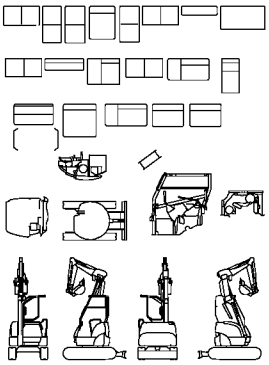

Fig. 4 安全銘板(EX)
SAFETY LABEL(EX)

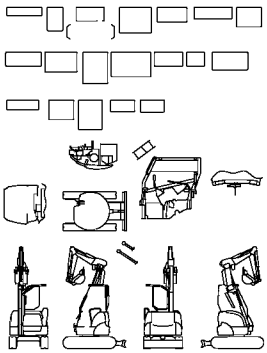

Fig. 5 付属品
ACCESSORY

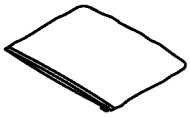

Fig. 6 吸気管 & 排気管
SUCTION PIPE & EXHAUST PIPE

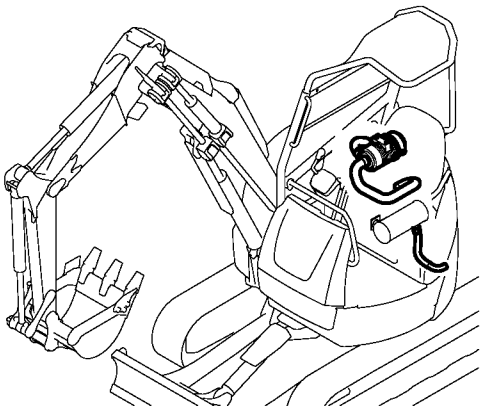

Fig. 7 アクセル
ACCELERATOR

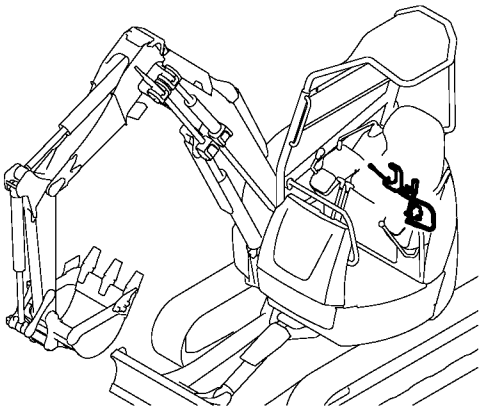

Fig. 8 ワンタッチデセル
ONE TOUCH DECEL

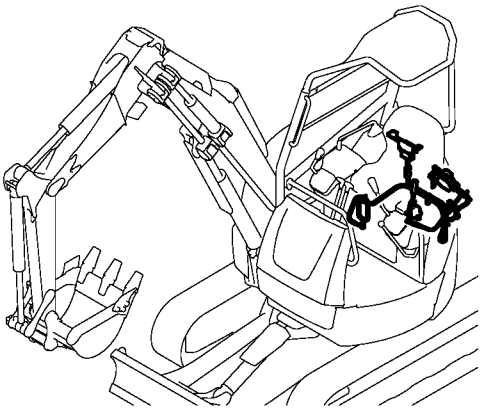

Fig. 9 エンジンマウント
ENGINE MOUNT

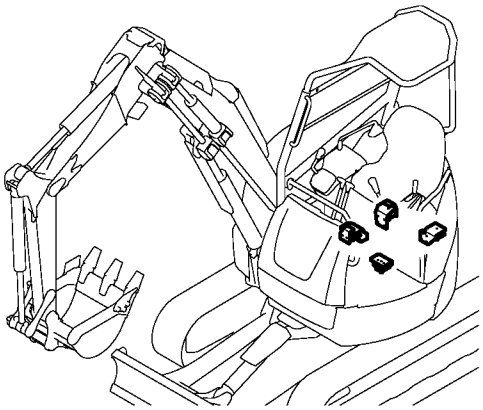

Fig. 10 ラジエータ & マウント
RADIATOR & MOUNT

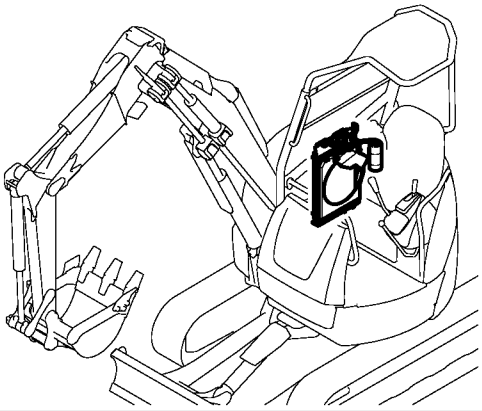

Fig. 11 燃料タンク
FUEL TANK

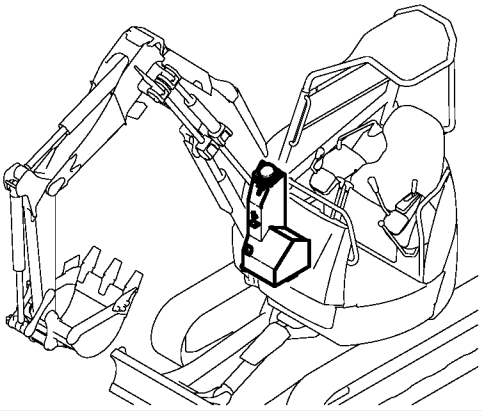

Fig. 12 燃料パイプ
FUEL LINE

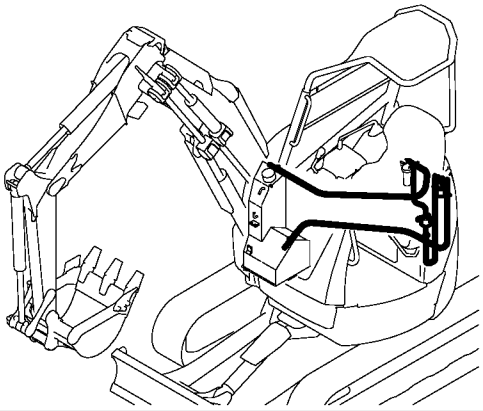

https://truckmanualshub.com/

Fig. 13 バッテリ
BATTERY

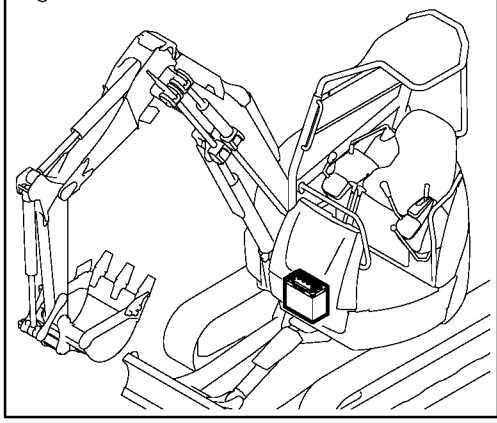

Fig. 14 電装品(ﾜｲﾔﾘﾝｸﾞ)
ELECTRIC PART(WIRING)

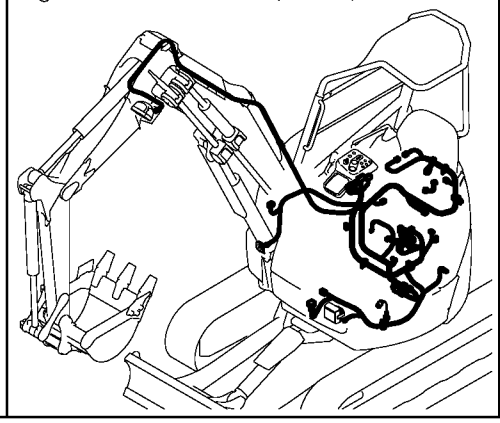

Fig. 15 電装品(機器)
ELECTRIC PART(EQUIPMENT)

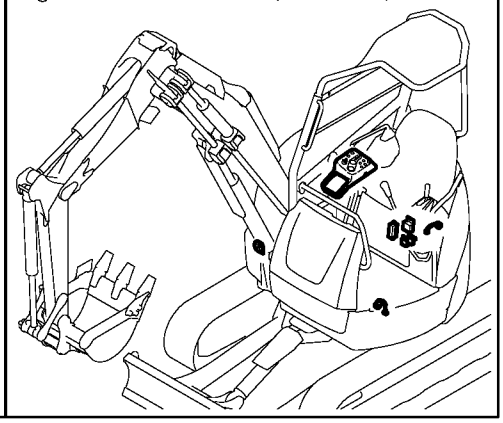

Fig. 16 ランプ
LAMP

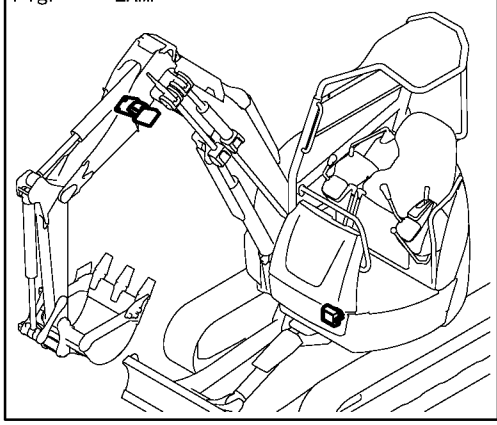

Fig. 17 スプロケット & ローラ
SPROCKET & ROLLER

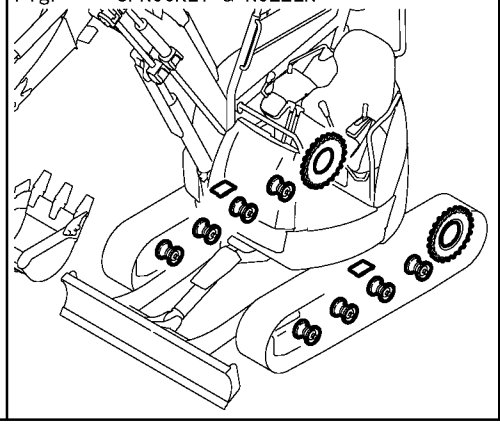

Fig. 18 アイドラ & アジャスト
IDLER & ADJUST

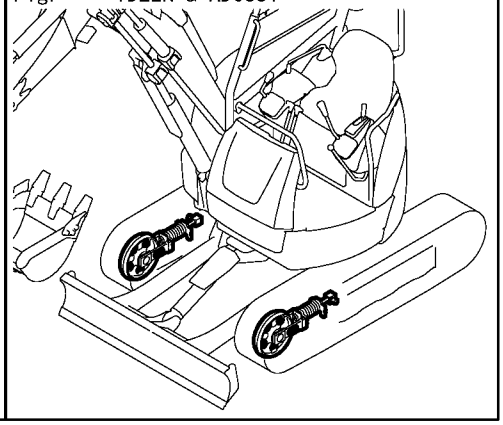

Fig. 19 クローラ
CRAWLER

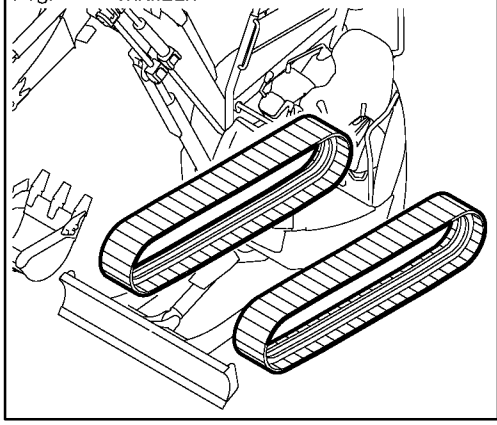

Fig. 20 操縦装置(ﾛｯｸﾚﾊﾞｰ & ｽﾀﾝﾄﾞ)
CONTROL EQUIPMENT(LOCK LEVER & STAND)

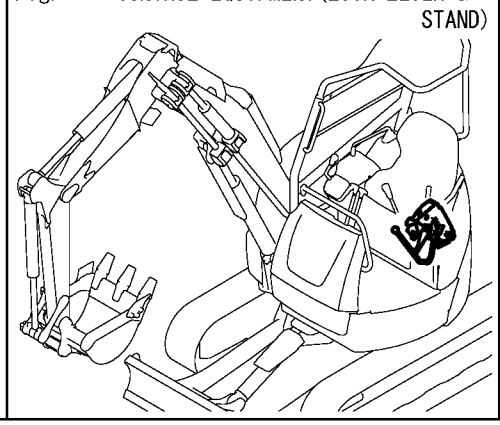

Fig. 21 操縦装置(走行ﾚﾊﾞｰ & ﾘﾝｸ台)
CONTROL EQUIPMENT(TRAVEL LEVER & LINK STAND)

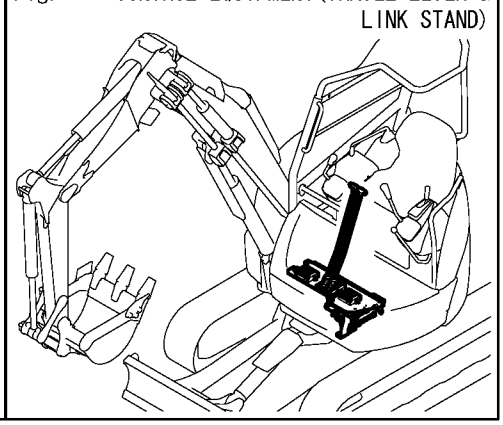

Fig. 22 操縦装置(作業ﾚﾊﾞｰ)
CONTROL EQUIPMENT(OPERATION LEVER)

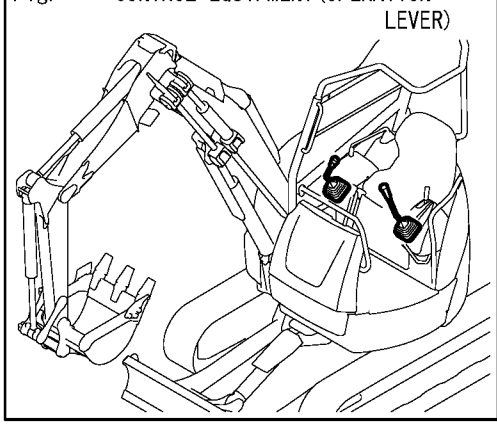

Fig. 23 操縦装置(ﾌﾞﾚｰﾄﾞﾚﾊﾞｰ)
CONTROL EQUIPMENT(BLADE LEVER)

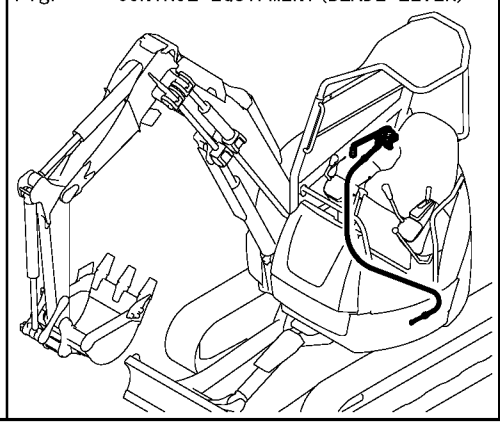

Fig. 24 操縦装置(ｽｲﾝｸﾞﾍﾟﾀﾞﾙ)
CONTROL EQUIPMENT(SWING PEDAL)

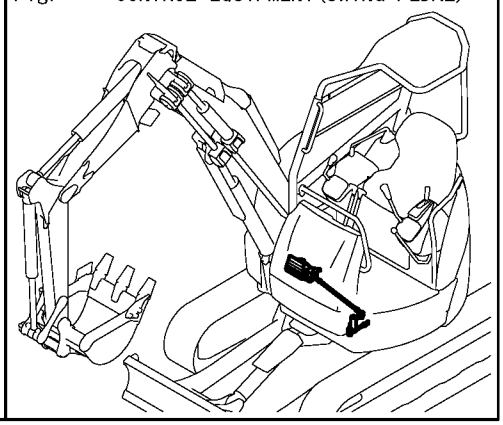

https://truckmanualshub.com/

Fig. 25 操縦装置(ﾛｰﾊｲﾍﾟﾀﾞﾙ)
CONTROL EQUIPMENT(LOW-HIGH PEDAL)

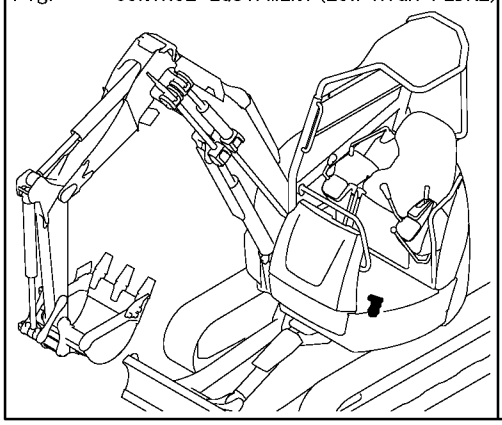

Fig. 26 操縦装置(PTO)
CONTROL EQUIPMENT(P.T.O.)

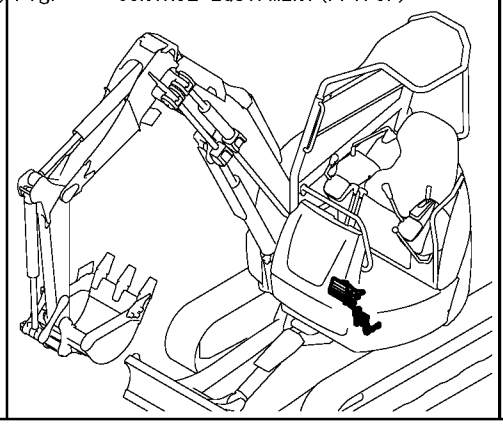

Fig. 27 コントロールバルブ台
CONTROL VALVE PLATE

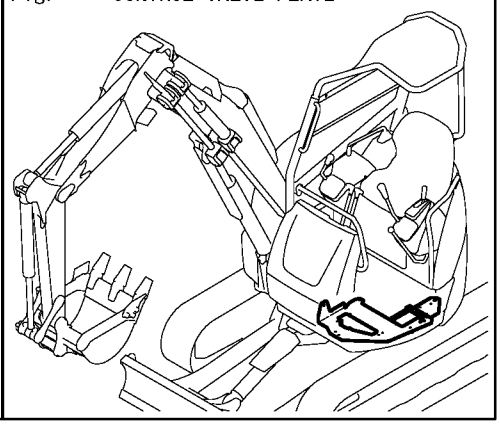

Fig. 28 旋回フレーム
TURNING FRAME

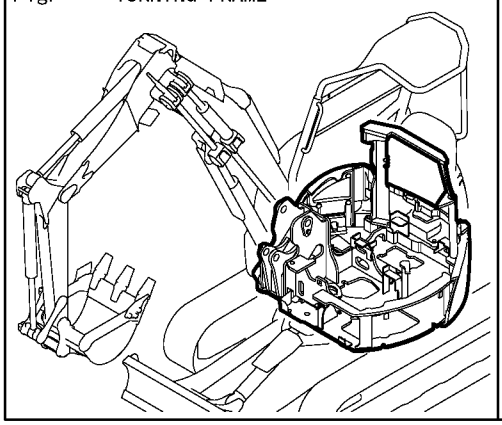

Fig. 29 走行フレーム & 旋回ベアリング
TRACK FRAME & TURNING BEARING

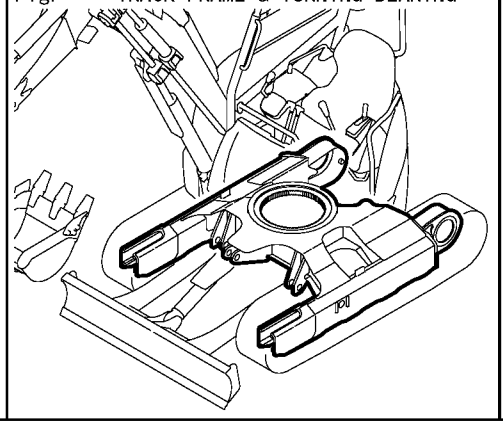

Fig. 30 カバー(ﾌﾚｰﾑ)
COVER(FRAME)

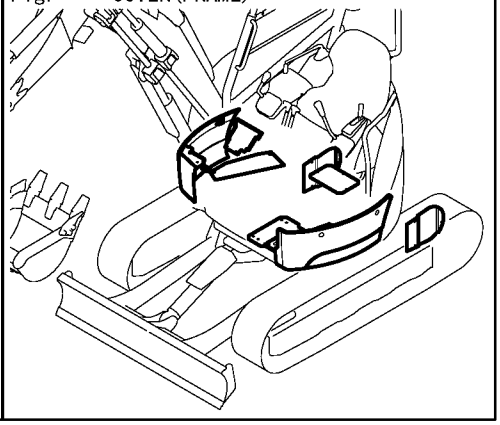

Fig. 31 カバー(操縦廻り)
COVER(AROUND CONTROL)

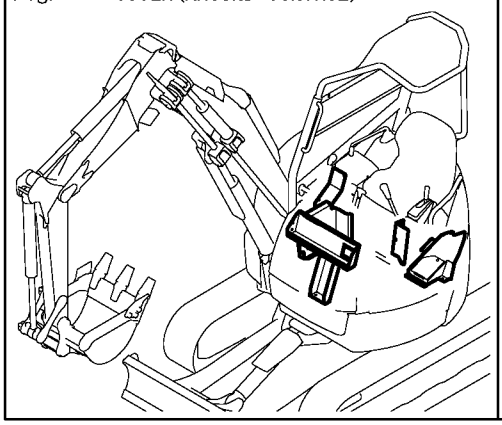

Fig. 32 カバー(ﾌﾞｰﾑ)
COVER(BOOM)

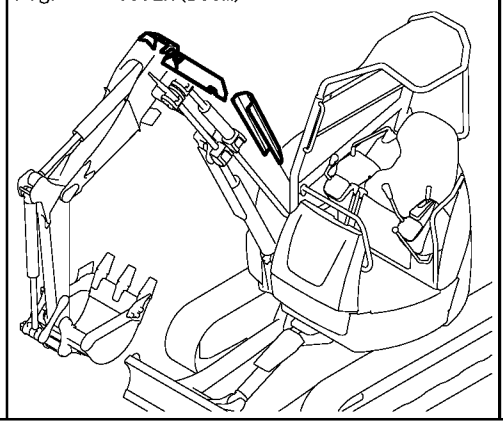

Fig. 33 ステップ & フロアマット
STEP & FLOOR MAT

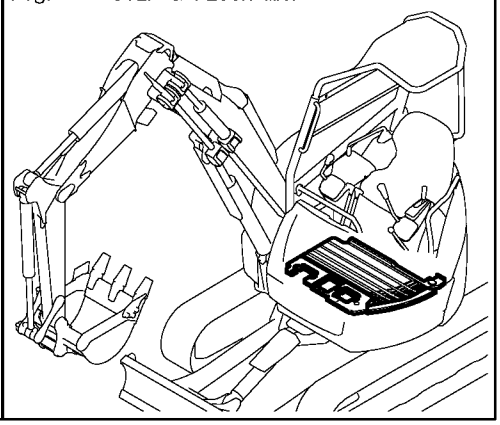

Fig. 34 インパネ
INSTRUMENT PANEL

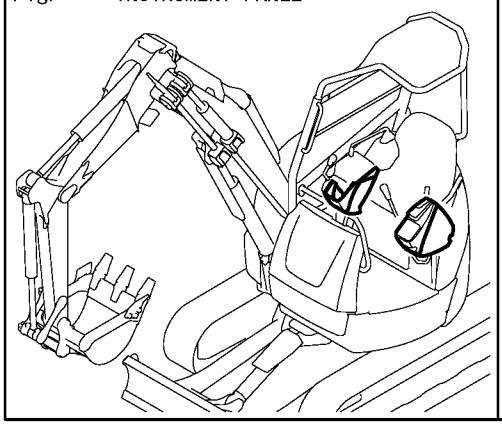

Fig. 35 シート & シートマウント
SEAT & SEAT MOUNT

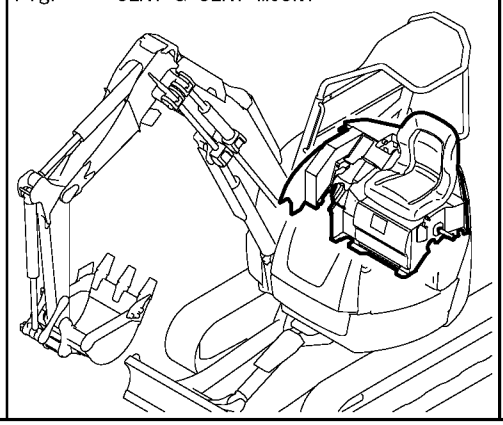

Fig. 36 ボンネット(1)
BONNET(1)

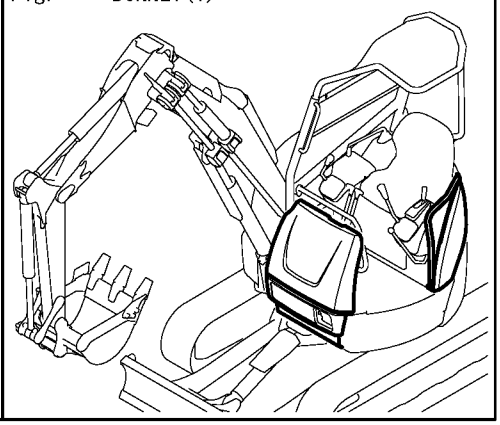

https://truckmanualshub.com/

Fig. 37 ボンネット(2)
BONNET(2)

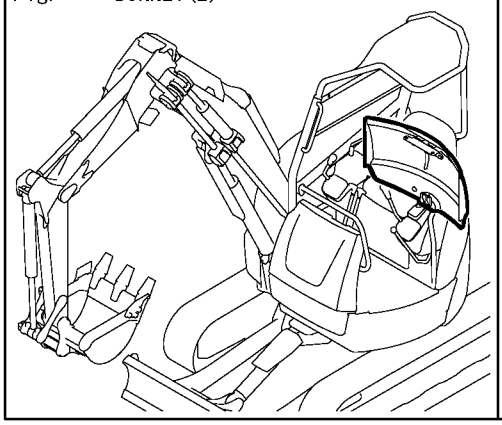

Fig. 38 ボンネット(3)
BONNET(3)

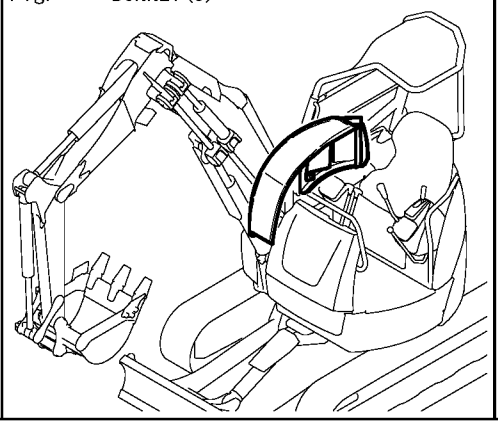

Fig. 39 ダクト
DUCT

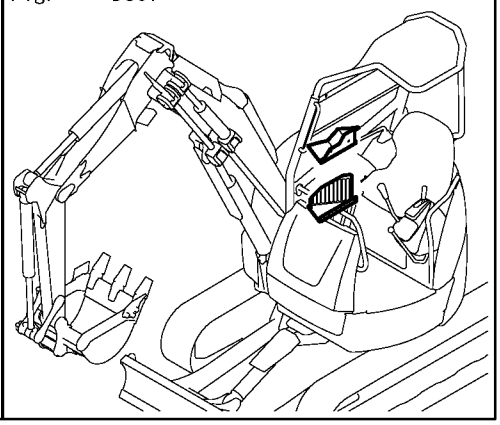

Fig. 40 キャノピ
CANOPY

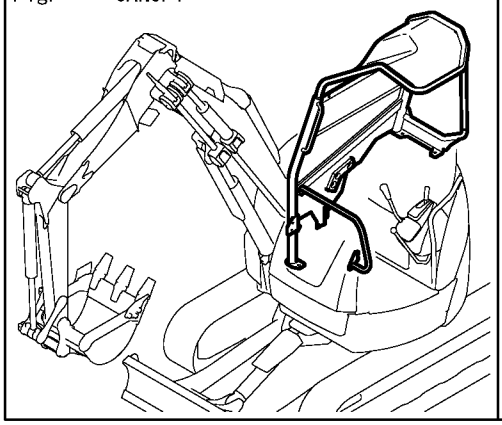

Fig. 41 油圧ポンプ & 軸継手
HYD.OIL PUMP & JOINT

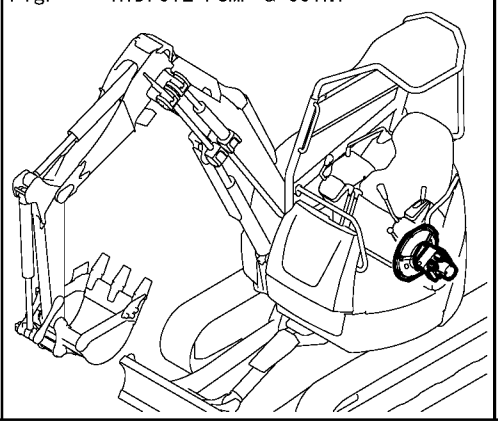

Fig. 42 ブームシリンダ
BOOM CYLINDER

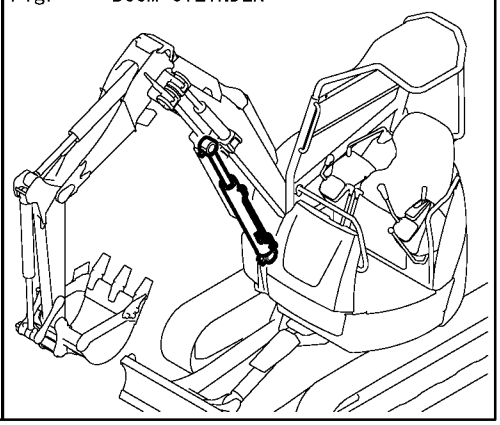

Fig. 43 アームシリンダ
ARM CYLINDER

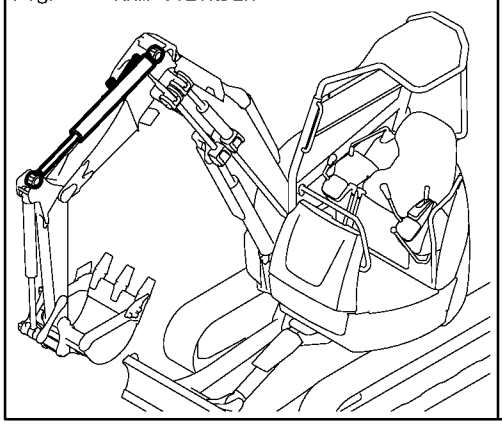

Fig. 44 バケットシリンダ
BUCKET CYLINDER

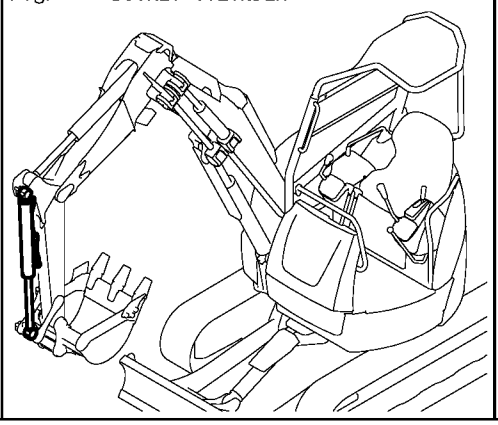

Fig. 45 ブレードシリンダ
BLADE CYLINDER

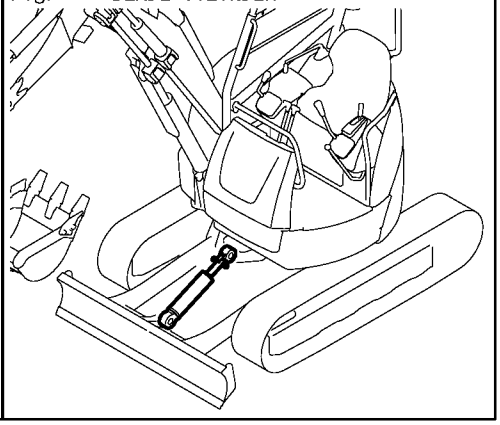

Fig. 46 オフセットシリンダ
OFFSET CYLINDER

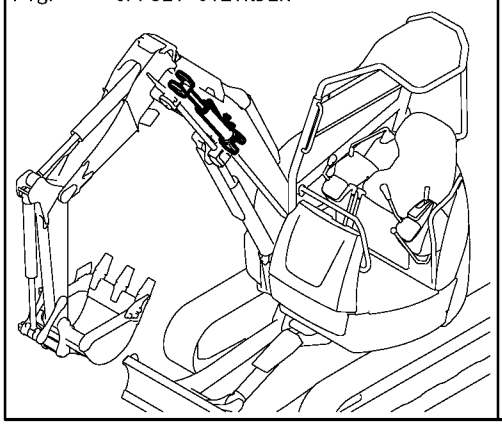

Fig. 47 走行モータ
TRAVEL MOTOR

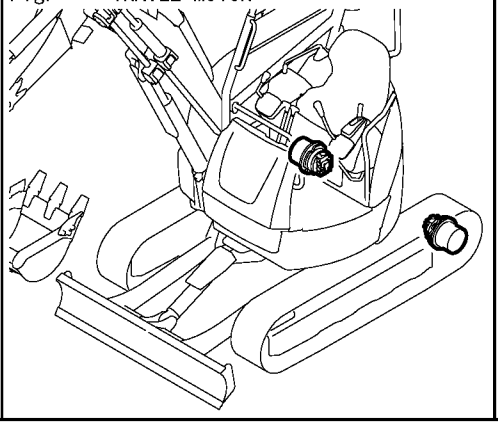

Fig. 48 旋回モータ
TURNING MOTOR

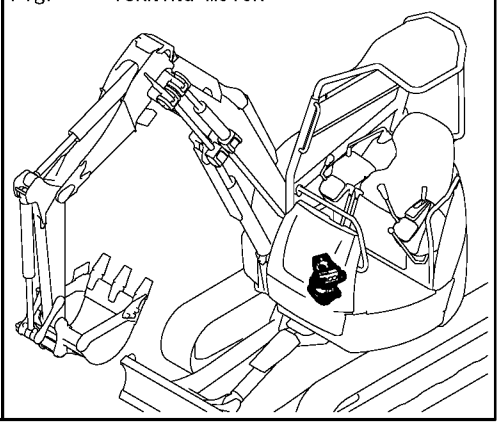

https://truckmanualshub.com/

Fig. 49 スイベルジョイント
SWIVEL JOINT

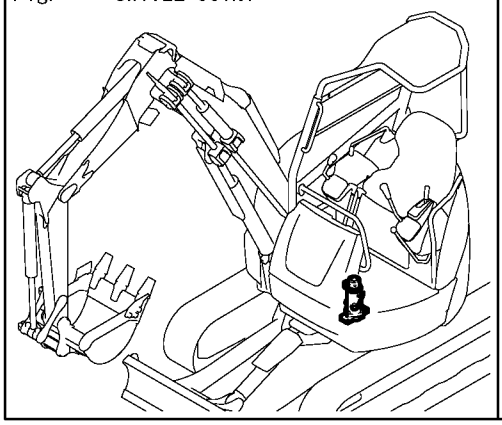

Fig. 50 コントロールバルブ(ﾊﾞｹｯﾄ & ﾌﾞｰﾑ1)
CONTROL VALVE(BUCKET & BOOM 1)

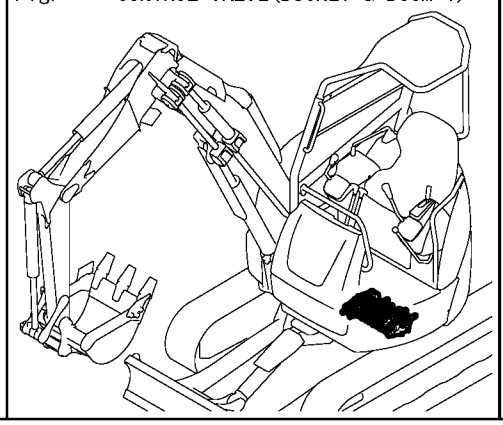

Fig. 51 コントロールバルブ
(ﾌﾞｰﾑ2 & 走行:右)
CONTROL VALVE
(BOOM 2 & TRAVEL:RIGHT)

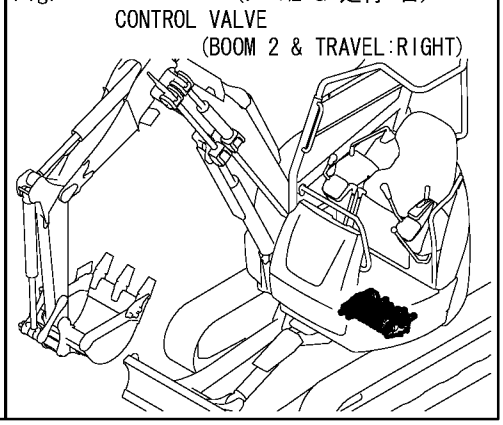

Fig. 52 コントロールバルブ
(Pﾎﾟｰﾄ & 走行:左)
CONTROL VALVE
(P PORT & TRAVEL:LEFT)

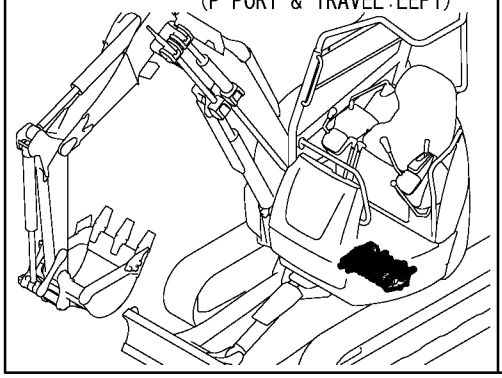

Fig. 53 コントロールバルブ(ｵﾌｾｯﾄ & ｱｰﾑ)
CONTROL VALVE(OFFSET & ARM)

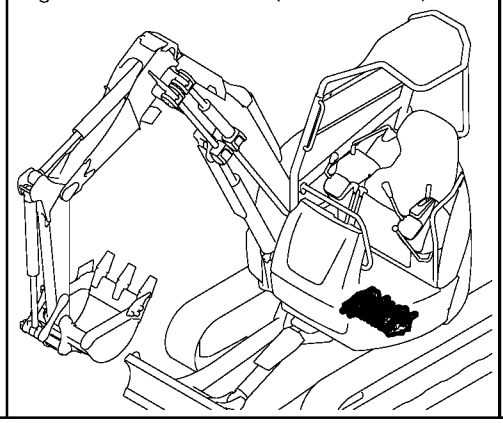

Fig. 54 コントロールバルブ(PTO & T/Pﾎﾟｰﾄ)
CONTROL VALVE(P.T.O. & T/P PORT)

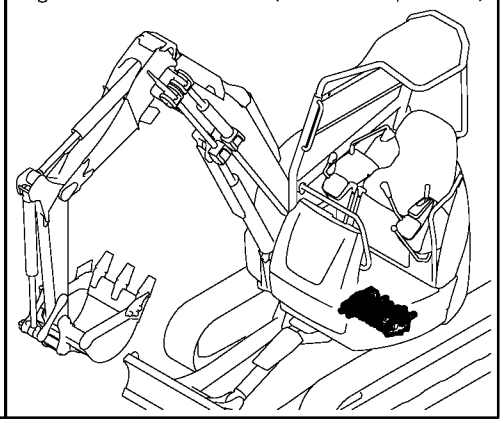

Fig. 55 コントロールバルブ(旋回 & ﾌﾞﾚｰﾄﾞ)
CONTROL VALVE(TURNING & BLADE)

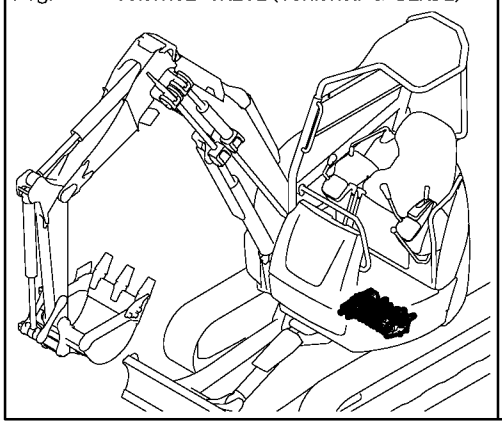

Fig. 56 マルチバルブ(4ｳｪｲ仕様)
MULTI VALVE(4-WAY SPEC.)

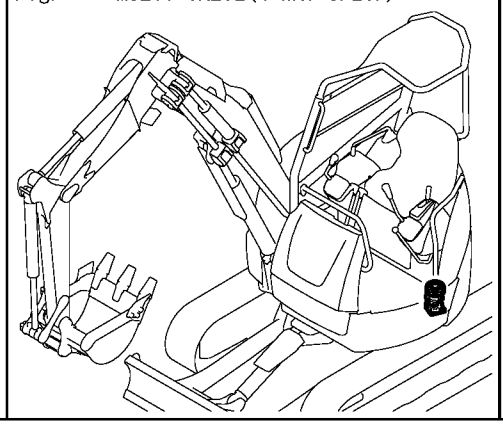

Fig. 57 リモコンバルブ
(標準:～M/#55500,4ｳｪｲ仕様)
REMOTE CONTROL VALVE(STANDARD:
TO M/#55500,4-WAY SPEC.)

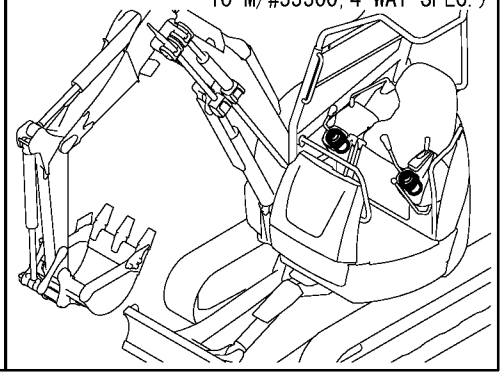

Fig. 58 リモコンバルブ(標準:M/#55501～)
REMOTE CONTROL VALVE
(STANDARD:FROM M/#55501)

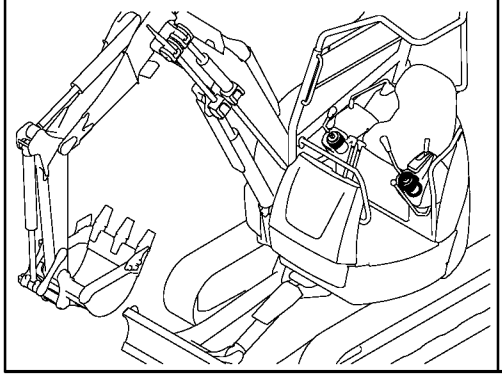

Fig. 59 作動油タンク
HYD.OIL TANK

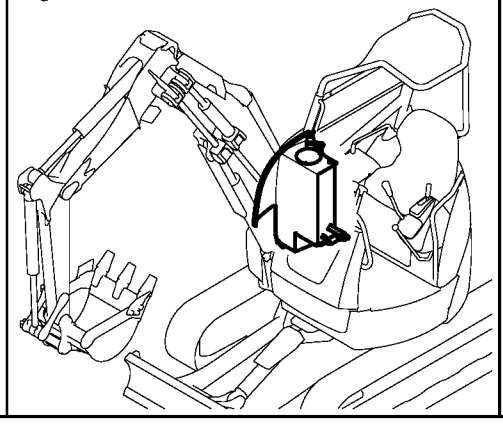

Fig. 60 油圧配管(ﾀﾝｸ～ﾎﾟﾝﾌﾟ～ﾊﾞﾙﾌﾞ)
HYD.OIL PIPING(TANK～PUMP～
VALVE)

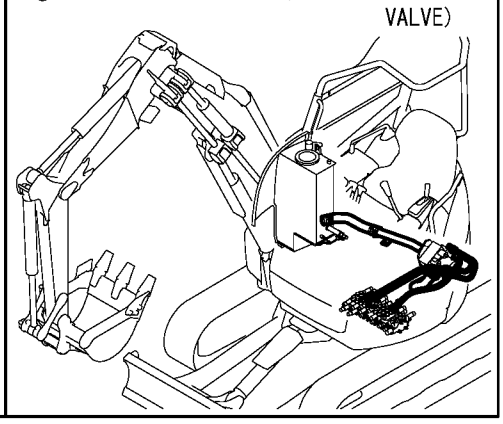

https://truckmanualshub.com/

Fig. 61 油圧配管(ﾎﾟﾝﾌﾟ,ﾊﾞﾙﾌﾞ～旋回ﾓｰﾀ,ﾌﾚｰﾑｴﾝﾄﾞ)
HYD. OIL PIPING(PUMP, VALVE～TURNING MOTOR, FRAME END)

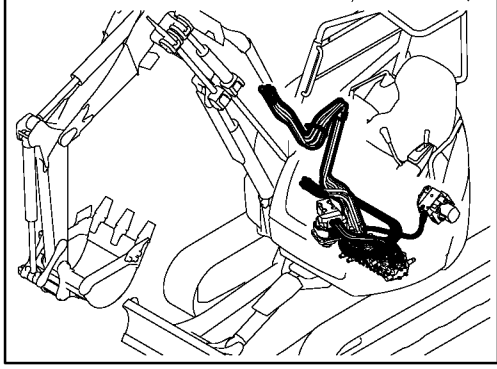

Fig. 62 油圧配管(ﾊﾞﾙﾌﾞ～ｽｲﾍﾞﾙ)
HYD. OIL PIPING(VALVE～SWIVEL)

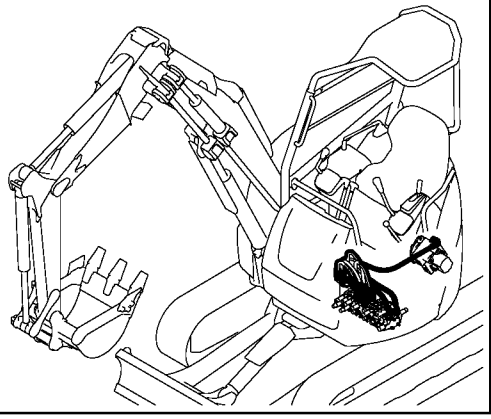

Fig. 63 油圧配管(ﾘﾀｰﾝ)
HYD. OIL PIPING(RETURN)

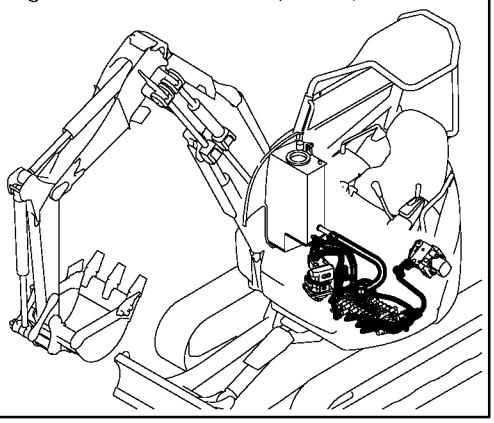

Fig. 64 油圧配管(PTO:ﾌﾚｰﾑｴﾝﾄﾞ)
HYD. OIL PIPING(P. T. O. :FRAME END)

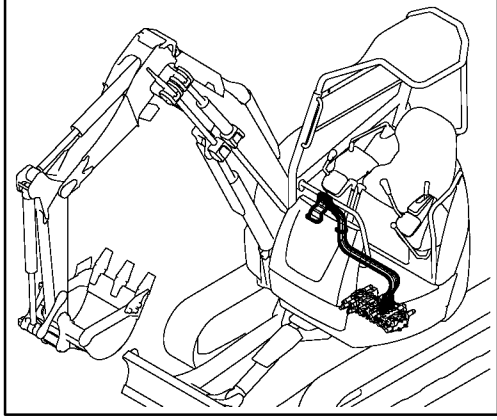

Fig. 65 油圧配管(ﾄﾗｯｸﾌﾚｰﾑ)
HYD. OIL PIPING(TRACK FRAME)

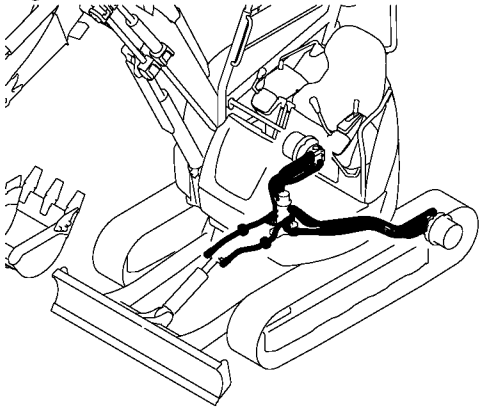

Fig. 66 油圧配管(ﾌﾞｰﾑ)
HYD. OIL PIPING(BOOM)

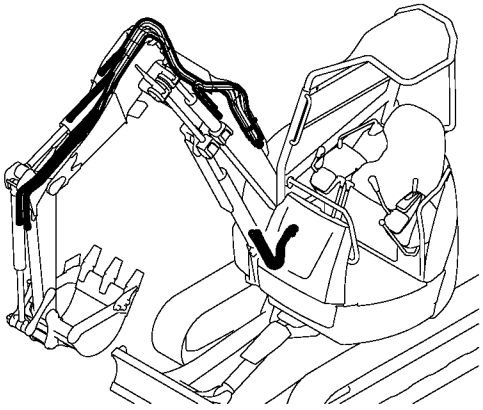

Fig. 67 油圧配管(PTO:ｱｰﾑｴﾝﾄﾞ)
HYD. OIL PIPING(P. T. O. :ARM END)

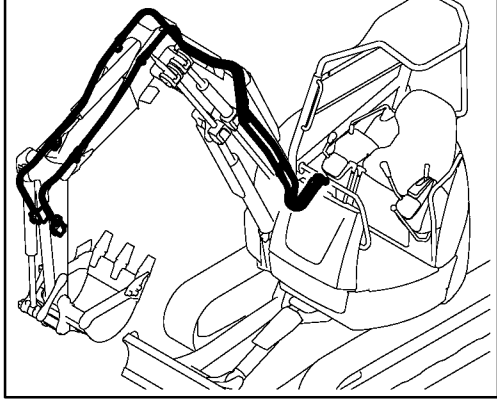

Fig. 68 コントロール配管(ﾎﾟﾝﾌﾟ～ﾊﾞﾙﾌﾞ～ﾘﾀｰﾝ)
CONTROL PIPING(PUMP～VALVE～RETURN)

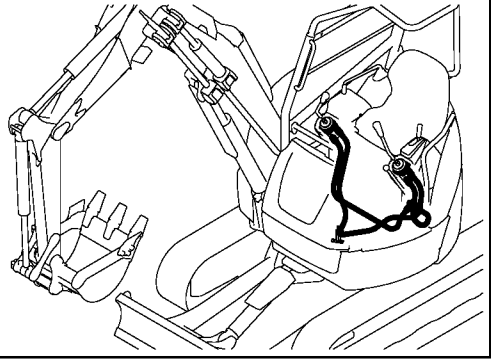

Fig. 69 コントロール配管(ﾘﾓｺﾝV～ｺﾝﾄﾛｰﾙV:標準,2ｳｪｲ仕様)
CONTROL PIPING
(REMOTE CONTROL V. ～CONTROL V. : STANDARD, 2-WAY SPEC.)

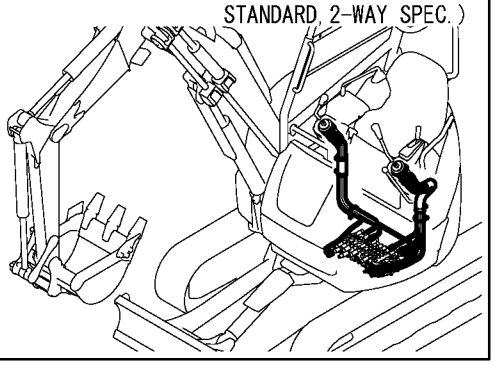

Fig. 70 コントロール配管(ﾘﾓｺﾝV～ﾏﾙﾁV:4ｳｪｲ仕様)
CONTROL PIPING(REMOTE CONTROL V. ～MULTI V. :4-WAY SPEC.)

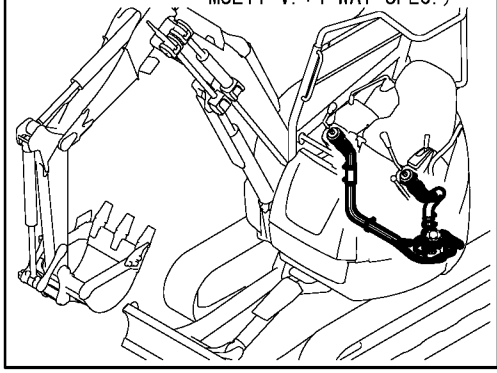

Fig. 71 コントロール配管(ﾏﾙﾁV～ｺﾝﾄﾛｰﾙV:4ｳｪｲ仕様)
CONTROL PIPING(MULTI V. ～CONTROL VALVE:4-WAY SPEC.)

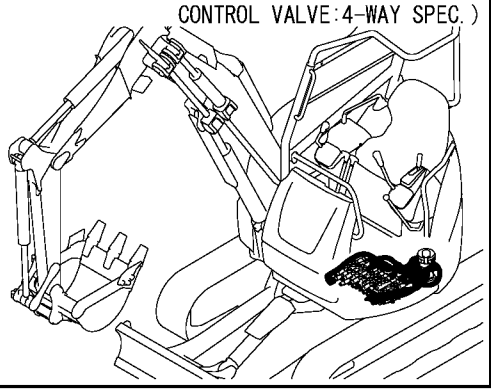

Fig. 72 遠隔グリーシング
GREASING

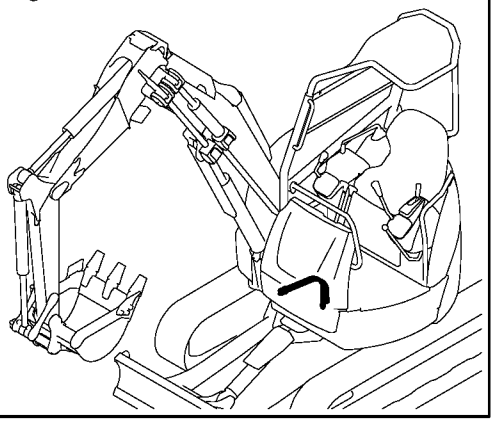

https://truckmanualshub.com/

Fig. 73 ブーム(A)
BOOM(A)

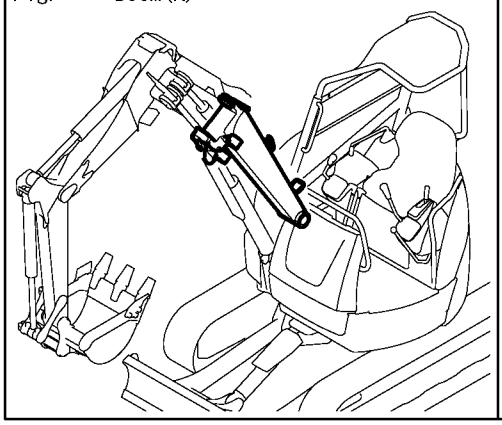

Fig. 74 ブーム(B)
BOOM(B)

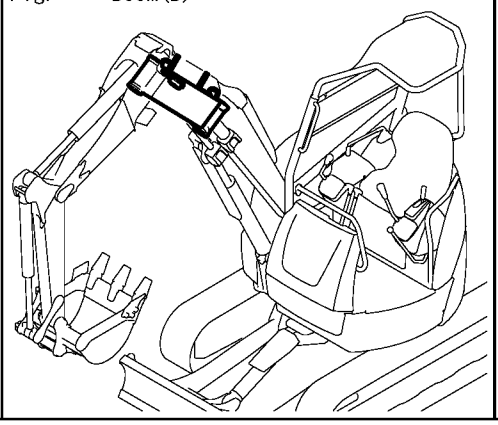

Fig. 75 ブーム(C)
BOOM(C)

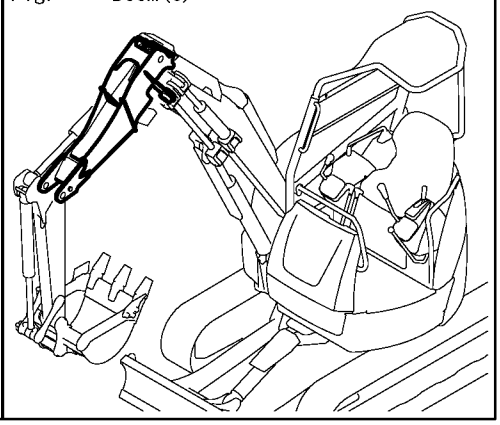

Fig. 76 アーム
ARM

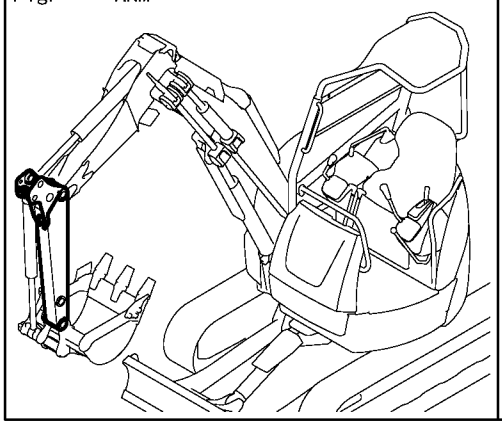

Fig. 77 バケットアーム & リンク
BUCKET ARM & LINK

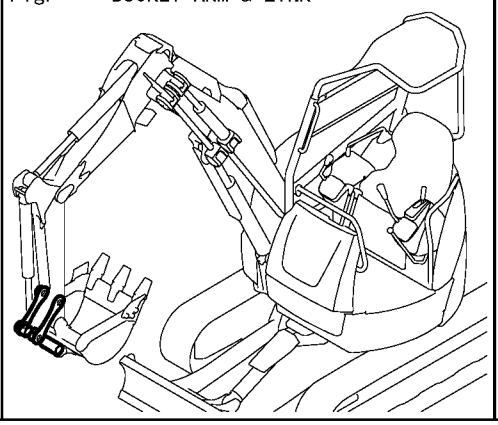

Fig. 78 バケット
BUCKET

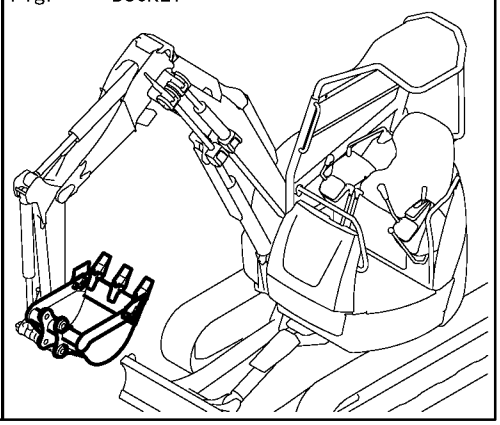

Fig. 79 バケットピン
BUCKET PIN

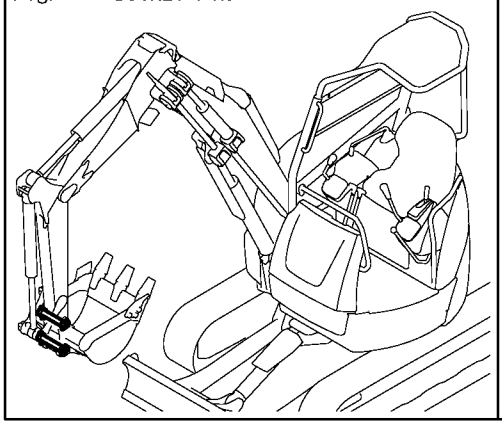

Fig. 80 ブレード
BLADE

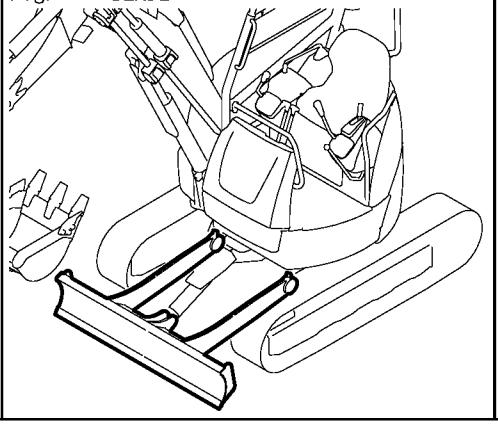

Fig. 81 ワンタッチデセルキット(ｵﾌﾟｼｮﾝ)
ONE TOUCH DECEL KIT(OPTIONAL)

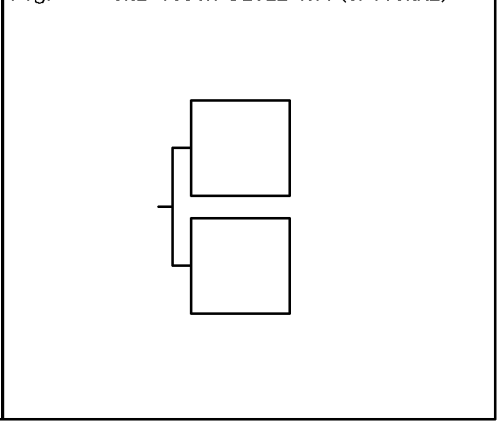

Fig. 82 ４ウェイマルチバルブキット
(ｵﾌﾟｼｮﾝ)
4-WAY MULTI VALVE KIT(OPTIONAL)

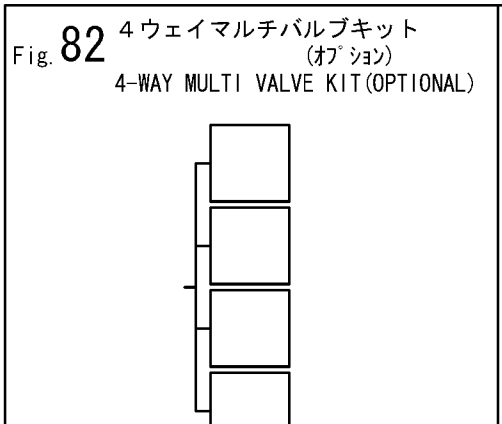

Fig. 83 ２ウェイマルチバルブキット
(標準:～M/#55500)(ｵﾌﾟｼｮﾝ)
2-WAY MULTI VALVE KIT
(STANDARD:TO M/#55500)(OPTIONAL)

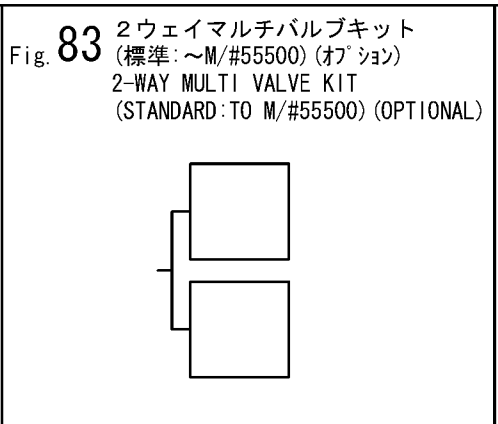

Fig. 84 ２ウェイマルチバルブキット
(標準:M/#55501～)(ｵﾌﾟｼｮﾝ)
2-WAY MULTI VALVE KIT(STANDARD:
FROM M/#55501)(OPTIONAL)

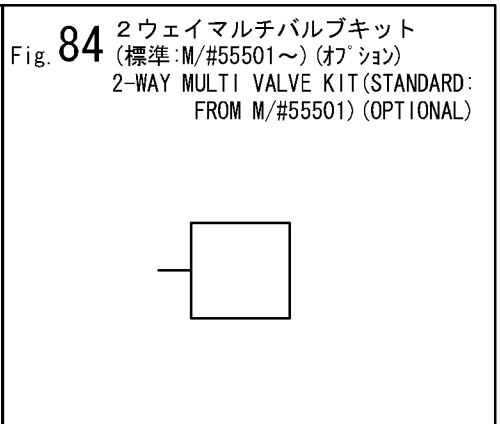

https://truckmanualshub.com/

Fig. 85 ＰＴＯキット(ｵﾌﾟｼｮﾝ)
P.T.O. KIT(OPTIONAL)

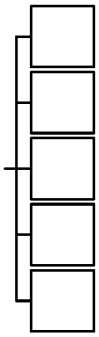

https://truckmanualshub.com/

```
1,1,,772487-03100,,"LABEL ASSY(B2-5 JP)",1,,,,,,,,,,,,,,,,,,
1-1,1,,772487-03101,,"LABEL ASSY(B2-5
JP)",1,,,,,,N,,72457041,M/#50507,,,,,,,,,,I
2,2,,172487-03110,,"LABEL,SPECIFICATION",1,,,,,,,,,,,,,,,,,,
2-1,2,,172487-
03111,,"LAVEL,SPECIFICATION",1,,,,,,N,,72457041,M/#50507,,,,,,,,,,I
3,2,,172456-03120,,"LABEL,OIL & WATER",1,,,,,,,,,,,,,,,,,,
4,2,,172444-03320,,LABEL,1,,,,,,,,,,,,,,,,,,
5,2,,172444-03130,,"LABEL,GREASE FEED",1,,,,,,,,,,,,,,,,,,
6,2,,172487-03150,,"LABEL,MODEL",2,,,,,,,,,,,,,,,,,,
7,2,,172444-03161,,"LABEL, LIFTING",1,,,,,,,,,,,,,,,,,,
8,2,,172458-03160,,"LABEL, REAR",1,,,,,,,,,,,,,,,,,,
9,2,,172487-03161,,"LABEL,FRONT COVER",1,,,,,,,,,,,,,,,,,,
10,2,,172444-03170,,LABEL,1,,,,,,,,,,,,,,,,,,
11,2,,172444-03180,,LABEL,2,,,,,,,,,,,,,,,,,,
11-1,2,,172444-03181,,LABEL,2,,,,,,R,,724980006,M/#55556,,,,,,,,,,I
12,2,,172444-03190,,LABEL,1,,,,,,,,,,,,,,,,,,
13,2,,172458-03190,,"LABEL,OILING",1,,,,,,,,,,,,,,,,,,
14,2,,172141-03202,,"LABEL,CAUTION",1,,,,,,,,,,,,,,,,,,
15,2,,172186-03200,,"LABEL,BRAND",1,,,,,,,,,,,,,,,,,,
16,2,,172450-03200,,"LABEL,BATTERY",1,,,,,,,,,,,,,,,,,,
17,2,,172458-03200,,"LABEL,FAN",1,,,,,,,,,,,,,,,,,,
18,2,,172487-03200,,LABEL,1,,,,,,,,,,,,,,,,,,
19,2,,172162-03351,,LABEL,1,,,,,,,,,,,,,,,,,,
20,2,,172444-03210,,LABEL,1,,,,,,,,,,,,,,,,,,
21,2,,172458-03210,,"LABEL,BELT",1,,,,,,,,,,,,,,,,,,
22,2,,172458-03220,,"LABEL,ACCELERATOR",1,,,,,,,,,,,,,,,,,,
23,2,,172458-03231,,"LABEL, HUSE",1,,,,,,,,,,,,,,,,,,
24,2,,172444-03240,,LABEL,1,,,,,,,,,,,,,,,,,,
25,2,,172173-03250,,LABEL,1,,,,,,,,,,,,,,,,,,
26,2,,172183-03250,,"LABEL,FUEL",1,,,,,,,,,,,,,,,,,,
27,2,,172444-03260,,LABEL,1,,,,,,,,,,,,,,,,,,
28,2,,172444-03270,,"LABEL,WARNING",1,,,,,,,,,,,,,,,,,,
29,2,,172444-03280,,LABEL,2,,,,,,,,,,,,,,,,,,
30,2,,172142-03302,,"LABEL,CAUTION",1,,,,,,,,,,,,,,,,,,
31,2,,172455-03340,,LABEL,1,,,,,,,,,,,,,,,,,,
32,2,,172964-03370,,LABEL,1,,,,,,,,,,,,,,,,,,
33,2,,172964-03481,,"LABEL,DANGER",1,,,,,,,,,,,,,,,,,,
34,2,,172164-03510,,"LABEL,LOADING",1,,,,,,,,,,,,,,,,,,
35,2,,172437-03510,,"LABEL,HOOK",3,,,,,,,,,,,,,,,,,,
36,2,,172164-03540,,LABEL,1,,,,,,,,,,,,,,,,,,
37,2,,172519-04180,,"LABEL,WARNING",1,,,,,,,,,,,,,,,,,,
38,2,,172519-04290,,"LABEL,WARNING",1,,,,,,,,,,,,,,,,,,
39,2,,121470-44540,,"LABEL, SUB-TANK",1,,,,,,,,,,,,,,,,,,
40,2,,933112-20200,,"LABEL, KEY SWITCH",1,,,,,,,,,,,,,,,,,,
41,2,,172183-03280,,"LABEL,LOCK",1,,,,,,,,,,,,,,,,,,
42,2,,172444-03290,,MAGNET,1,,,,,,,1,,,,,,,,,,
43,2,,172151-03551,,LABEL,1,,,,,,,1,,,,,,,,,,
44,2,,172162-03250,,"LABEL,PATTERN A",1,,,,,,,,,,,,,,,,,,
44-1,2,,172490-03200,,LABEL,1,,,,,,N,,724600328,M/#55501,,,,,,,,,,I
45,2,,172165-03231,,"LABEL, P.T.O.",1,,,,,,,2,,,,,,,,,,
45-1,2,,172496-03250,,"LABEL, P.T.O.",1,,,,,,N,2,724600328,M/#55501,,,,,,,,,,I
46,2,,172165-03240,,LABEL,1,,,,,,,3,,,,,,,,,,
47,2,,172458-03240,,"LABEL,LOCK",1,,,,,,,2,,,,,,,,,,
```

https://truckmanualshub.com/

見出しNo.1は
見出しNo.2から47を含みます
1 inc.2～47

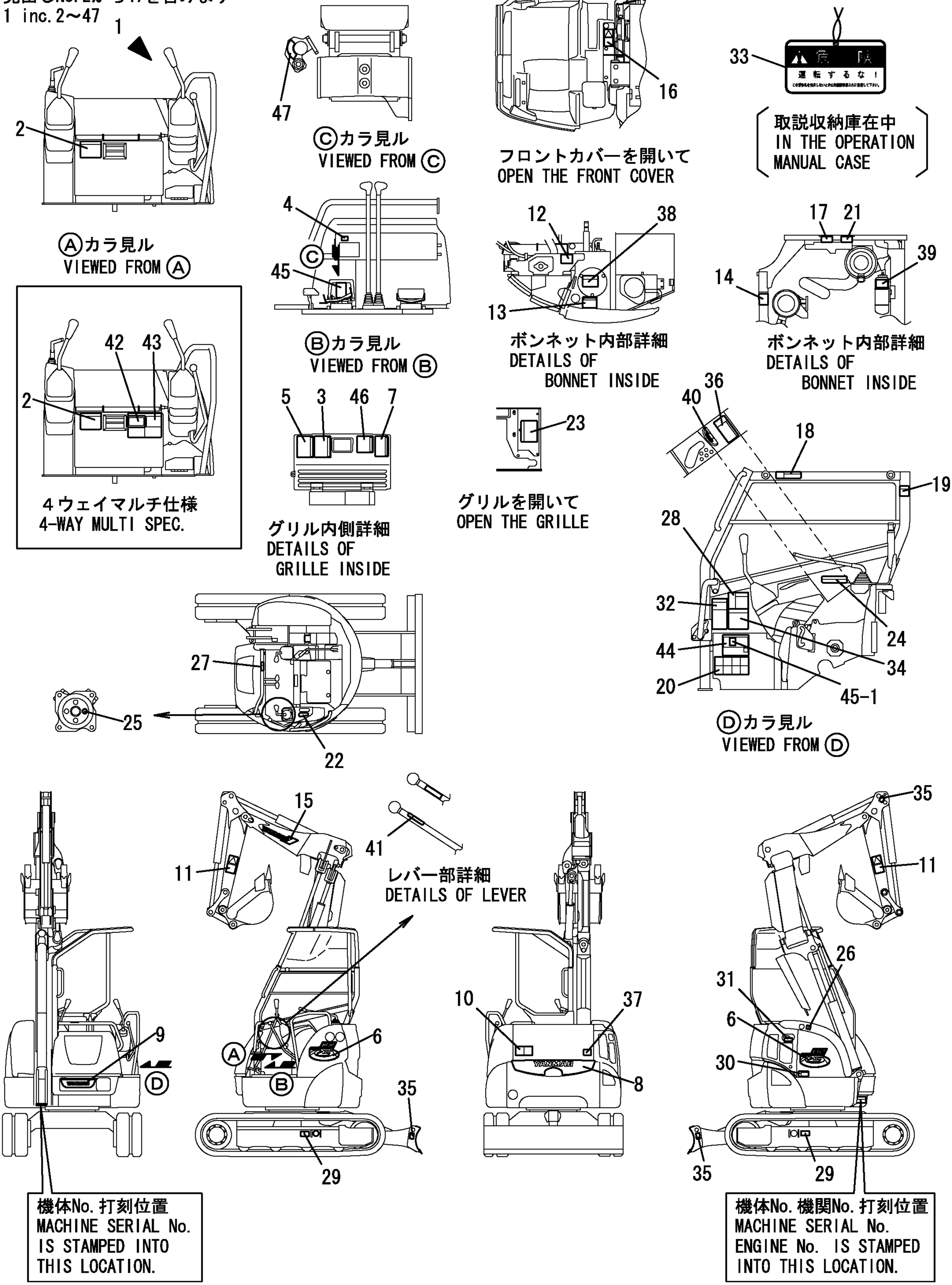

https://truckmanualshub.com/

```
1,1,,772487-03120,,"LABEL ASSY(B2-5 EX)",,1,,,,,,,,,,,,,,,,,,I
2,2,,172469-03140,,"LABEL,OIL&WATER",,1,,,,,,,,,,,,,,,,,,I
3,2,,172487-03150,,"LABEL,MODEL",,2,,,,,,,,,,,,,,,,,,I
4,2,,172458-03160,,"LABEL, REAR",,1,,,,,,,,,,,,,,,,,,I
5,2,,172487-03161,,"LABEL,FRONT COVER",,1,,,,,,,,,,,,,,,,,,I
6,2,,172472-03171,,"LABEL,FUSE US",,1,,,,,,,,,,,,,,,,,,I
7,2,,172186-03200,,"LABEL,BRAND",,2,,,,,,,,,,,,,,,,,,I
8,2,,172490-03200,,LABEL,,1,,,,,,,,,,,,,,,,,,I
9,2,,172487-03210,,"LABEL,SPECIFICATION",,1,,,,,,,,,,,,,,,,,,I
10,2,,172458-03220,,"LABEL,ACCELERATOR",,1,,,,,,,,,,,,,,,,,,I
11,2,,172487-03220,,"LAVEL,GREASING",,1,,,,,,,,,,,,,,,,,,I
12,2,,172487-03230,,"LABEL,CAUTION",,1,,,,,,,,,,,,,,,,,,I
13,2,,172487-03240,,LABEL,,1,,,,,,,,,,,,,,,,,,I
14,2,,172437-03250,,"TAG,SERVICING ASSY",,1,,,,,,,,,,,,,,,,,,I
15,2,,172487-03250,,LABEL,,1,,,,,,,,,,,,,,,,,,I
16,2,,172487-03260,,"LABEL,WARNING",,1,,,,,,,,,,,,,,,,,,I
17,2,,172487-03270,,LABEL,,1,,,,,,,,,,,,,,,,,,I
18,2,,172183-03280,,"LABEL,LOCK",,1,,,,,,,,,,,,,,,,,,I
19,2,,172463-03290,,"LABEL,HYD.OIL US",,1,,,,,,,,,,,,,,,,,,I
20,2,,172437-03310,,"LABEL,SLOPE",,1,,,,,,,,,,,,,,,,,,I
21,2,,172437-03321,,"LABEL,HYD.OIL TANK",,1,,,,,,,,,,,,,,,,,,I
22,2,,172462-03320,,LABEL,,1,,,,,,,,,,,,,,,,,,I
23,2,,172437-03341,,"LABEL,TRANSPORT",,1,,,,,,,,,,,,,,,,,,I
24,2,,172437-03351,,"LABEL,GREASE CYL.",,2,,,,,,,,,,,,,,,,,,I
25,2,,172437-03360,,"LABEL,BATTERY",,1,,,,,,,,,,,,,,,,,,I
26,2,,172437-03371,,LABEL,,1,,,,,,,,,,,,,,,,,,I
27,2,,172437-03380,,"LABEL,SWING AREA",,1,,,,,,,,,,,,,,,,,,I
28,2,,172437-03390,,"LABEL,RADIATOR",,1,,,,,,,,,,,,,,,,,,I
29,2,,172437-03401,,"LABEL (ENG COVER US",,1,,,,,,,,,,,,,,,,,,I
30,2,,172437-03411,,"LABEL (ENG ROOM US",,1,,,,,,,,,,,,,,,,,,I
31,2,,172437-03421,,"LABEL,MUFFLER",,1,,,,,,,,,,,,,,,,,,I
32,2,,172437-03431,,"LABEL,STEERING",,1,,,,,,,,,,,,,,,,,,I
33,2,,172437-03460,,"LABEL, BOOM",,2,,,,,,,,,,,,,,,,,,I
34,2,,172437-03470,,"LABEL,LEVER LOCK",,1,,,,,,,,,,,,,,,,,,I
35,2,,172437-03500,,"LABEL,FUEL",,1,,,,,,,,,,,,,,,,,,I
36,2,,172437-03510,,"LABEL,HOOK",,4,,,,,,,,,,,,,,,,,,I
37,2,,172448-03600,,"LABEL,MANUAL US",,1,,,,,,,,,,,,,,,,,,I
38,2,,172125-03950,,"LABEL, AIR CLEANER",,1,,,,,,,,,,,,,,,,,,I
39,2,,124764-44810,,"LABEL, SUB-TANK",,1,,,,,,,,,,,,,,,,,,I
40,2,,124764-44920,,"LABEL, ANTI-FREEZING",,1,,,,,,,,,,,,,,,,,,I
41,2,,933112-20200,,"LABEL, KEY SWITCH",,1,,,,,,,,,,,,,,,,,,I
42,2,,172496-03250,,"LABEL, P.T.O.",,1,,,,,,,,,,,,,,,,,,I
43,2,,172437-03241,,"LABEL,CRAWLER",,1,,,,,1,,,,,,,,,,,,I
44,2,,172458-03240,,"LABEL,LOCK",,1,,,,,,,,,,,,,,,,,,I
```

https://truckmanualshub.com/

見出しNo.1は
見出しNo.2から44を含みます
1 inc.2～44

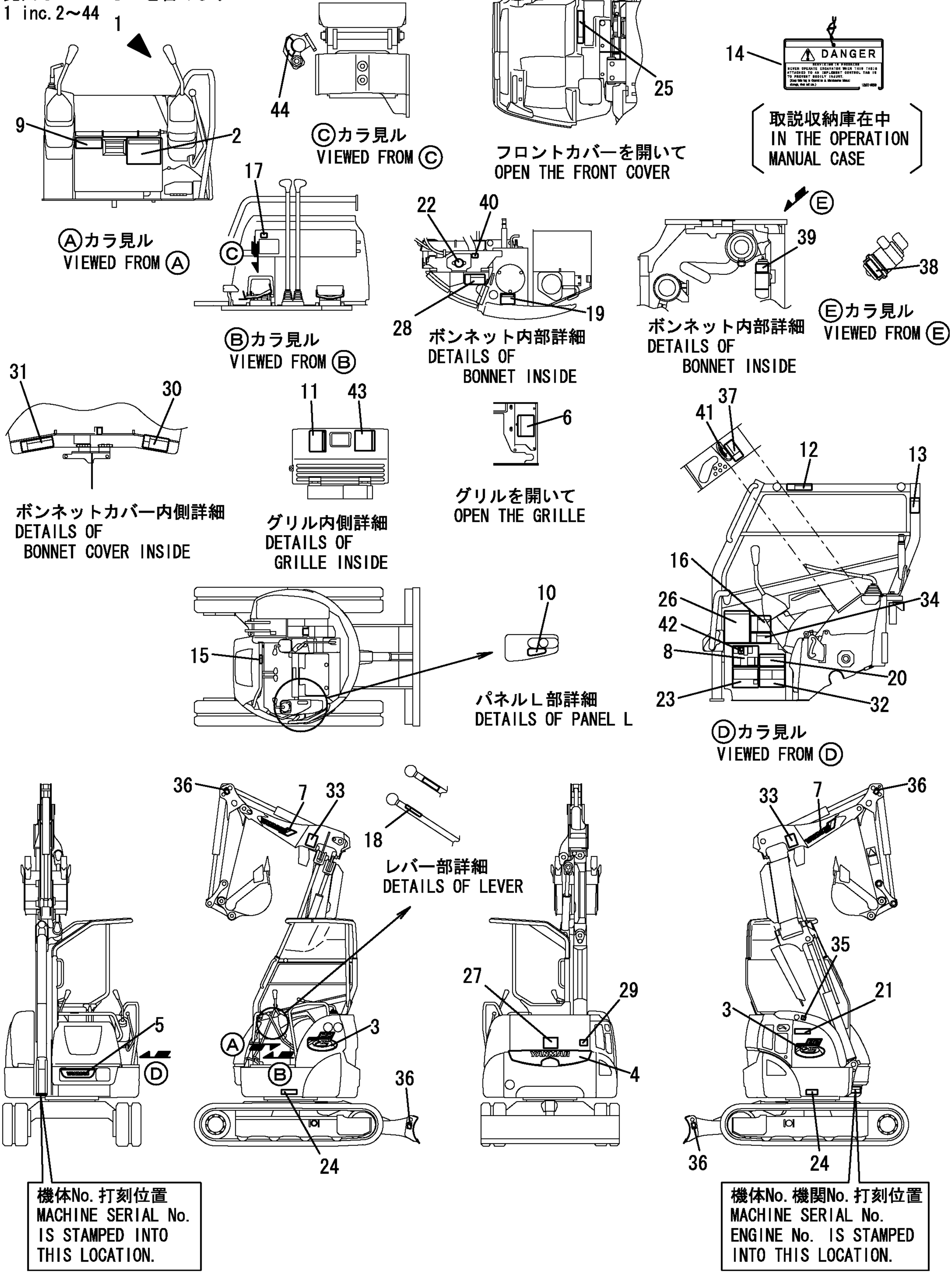

https://truckmanualshub.com/

```
1,1,,172444-03170,,LABEL,1,,,,,,,,,,,,,,,,,
2,1,,172444-03180,,LABEL,2,,,,,,,,,,,,,,,,,
2-1,1,,172444-03181,,LABEL,2,,,,,,R,,724980006,M/#55556,,,,,,,,,,,I
3,1,,172444-03190,,LABEL,1,,,,,,,,,,,,,,,,,
4,1,,172141-03202,,"LABEL,CAUTION",1,,,,,,,,,,,,,,,,,
5,1,,172450-03200,,"LABEL,BATTERY",1,,,,,,,,,,,,,,,,,
6,1,,172458-03200,,"LABEL,FAN",1,,,,,,,,,,,,,,,,,
7,1,,172487-03200,,LABEL,1,,,,,,,,,,,,,,,,,
8,1,,172444-03210,,LABEL,1,,,,,,,,,,,,,,,,,
9,1,,172458-03210,,"LABEL,BELT",1,,,,,,,,,,,,,,,,,
10,1,,172444-03240,,LABEL,1,,,,,,,,,,,,,,,,,
11,1,,172444-03270,,"LABEL,WARNING",1,,,,,,,,,,,,,,,,,
12,1,,172444-03280,,LABEL,2,,,,,,,,,,,,,,,,,
13,1,,172142-03302,,"LABEL,CAUTION",1,,,,,,,,,,,,,,,,,
14,1,,172964-03370,,LABEL,1,,,,,,,,,,,,,,,,,
15,1,,172964-03481,,"LABEL,DANGER",1,,,,,,,,,,,,,,,,,
16,1,,172164-03510,,"LABEL,LOADING",1,,,,,,,,,,,,,,,,,
17,1,,172164-03540,,LABEL,1,,,,,,,,,,,,,,,,,
18,1,,172519-04180,,"LABEL,WARNING",1,,,,,,,,,,,,,,,,,
19,1,,172519-04290,,"LABEL,WARNING",1,,,,,,,,,,,,,,,,,
20,1,,172162-03351,,LABEL,1,,,,,,,,,,,,,,,,,
```

https://truckmanualshub.com/

1

2

3

4

注意

- エンジンルーム内の点検は、エンジンが冷えているときに行なってください。
- やむをえずエンジン停止直後に点検を行なうときはサイレンサー・排気管などでやけどをしないように十分注意してください。

5

6

7

8

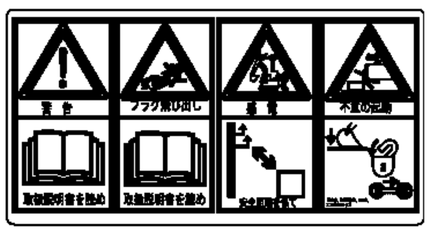

9

10

警告

- エンジン・モーターを始動するときは、かならず各操作レバーが「中立」位置であることを確認してください。本機が急に動いて、死傷するおそれがあります。

11

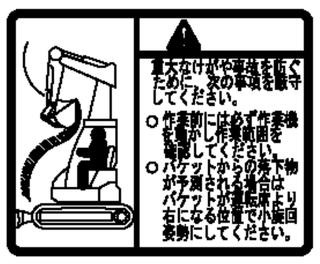

注意

重大なけがや事故を防ぐために、次の事項を厳守してください。

- 作業前にはかならず作業機を動かし作業範囲を確認してください。
- バケットからの落下物が予測される場合はバケットが運転席より右になる位常で小旋回姿勢にしてください。

12

13

注意

- 運転中および運転直後は、作動油タンクが高温になります。
- 作動油タンクなは手や体を ふれないでください。 やけどをするおそれがあります。

14

警告

重大なけがや死亡事故を防ぐため、機械または作業器を動かす前に次の事項を厳守してください。

- ホーンを鳴らして周りの人に知らせて下さい。
- 機械の上や周囲または作業範囲内に人がいないことを確認して下さい。
- 運行方向の視界が十分確保できるようお望むならば、上部を撤去して下さい。
- 視界の悪いところでは、誘導人をおいて下さい。

上記事項は、受付アラームやミラーが設置されていても厳守して下さい。

15

危険

運転するな！

この警告札を使用しないときは取扱説明書入れに保管して下さい。

取説収納庫在中
IN THE OPERATION
MANUAL CASE

16

警告

- トラックへの積込み、降ろしは車両が転落して、死傷するおそれがありますので、次のことを厳守してください。

1. 平たんで地盤の固いところで行なってください。
2. 道板の角度は15°以下にしてください。
3. 道板は、引っ掛け金具があり、幅・長さ・強度が十分あるものを使用してください。
4. 作業機、荷台および作業台は下げて、低速で行なってください。
5. 道板上ではけっしてに進路変更、変速はしないでください。

17

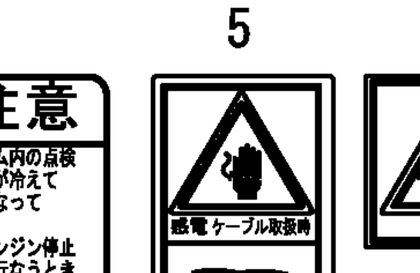

警告

- 軟弱地での走行や作業は、車両が転倒して死傷するおそれがありますので次のことを厳守してください。

1. エンジンを低速にして速度を下げて行なってください。
2. 走行するときは作業機を前向きにして、バケットを地上から20～30の高さにしてください。
3. 方向転換や横切り走行は行なわないでください。
4. 下り坂は、エンジンブレーキを利用してゆっくり降りてください。

18

警告

エンジン回転中は次のことを守ってください。

- □ボンネットは開けないこと。
- □ファン及びファンベルトに近付かないこと。

19

警告

1. 作動油タンクの補給口を開ける時は必ずエンジンを停止してください。
2. 作動油温が高いときはドレンプラグを緩めないでください。火傷をします。

20

警告

運転者の危険防止のため、窓がはずれたり破損したときは、すぐに窓を修復してください。

作業装置を動かすときは、キャノピールーフをはずさないでください。

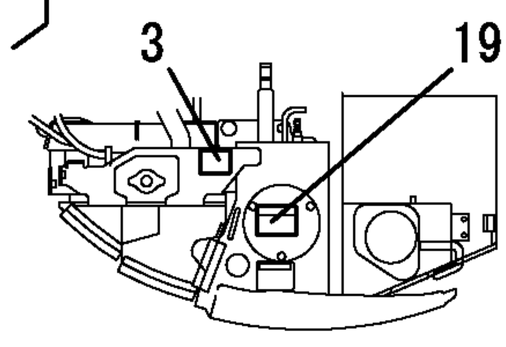

パネルL部詳細
DETAILS OF PANEL L

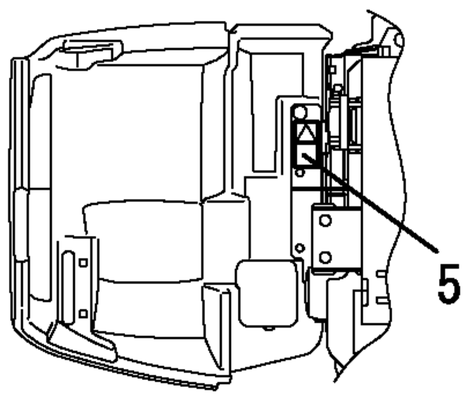

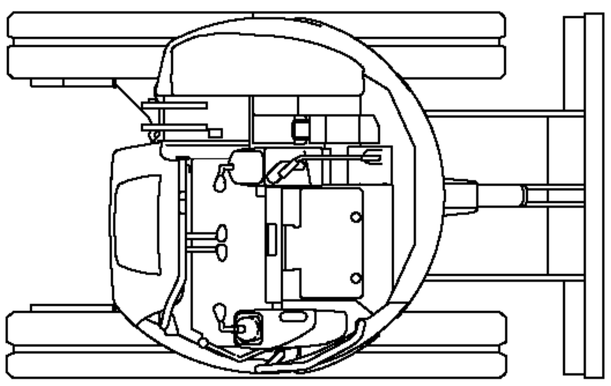

フロントカバーを開いて
OPEN THE FRONT COVER

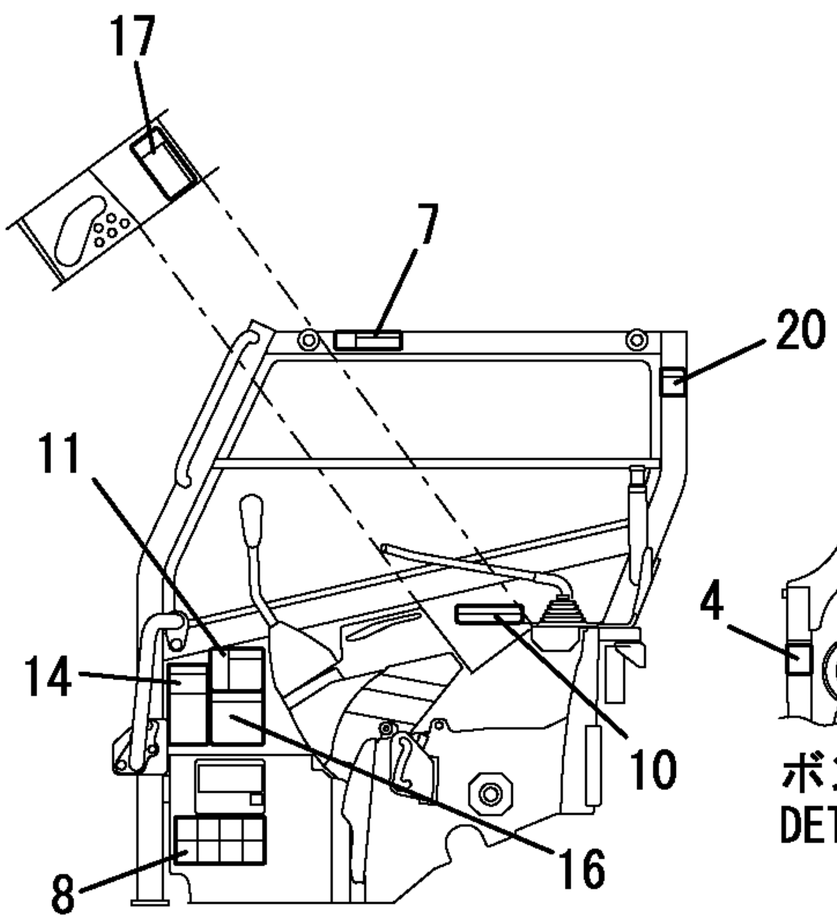

Ⓐカラ見ル
VIEWED FROM Ⓐ

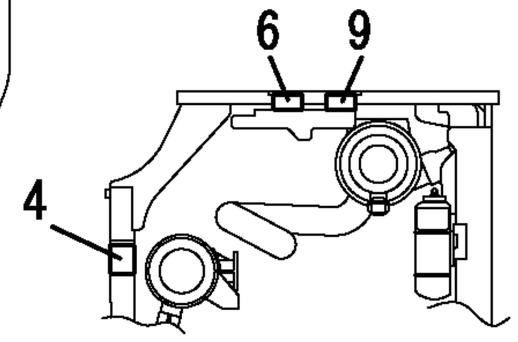

ボンネット内部詳細
DETAILS OF
BONNET INSIDE

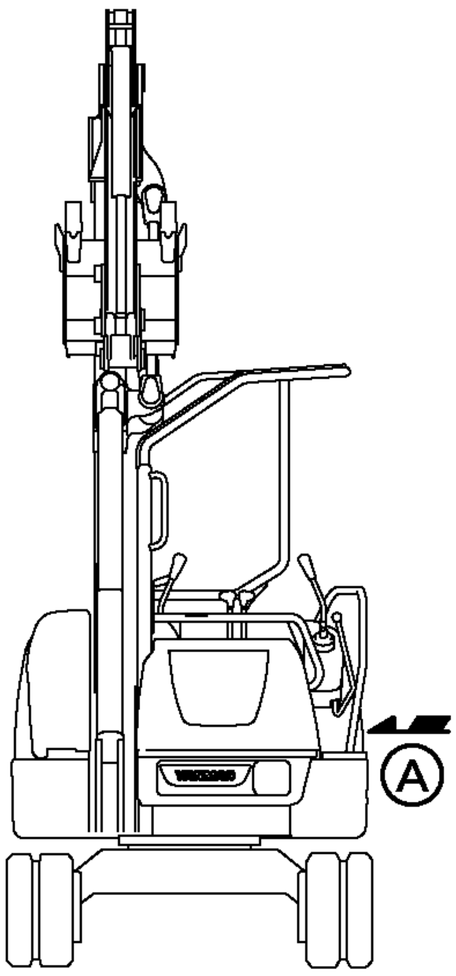

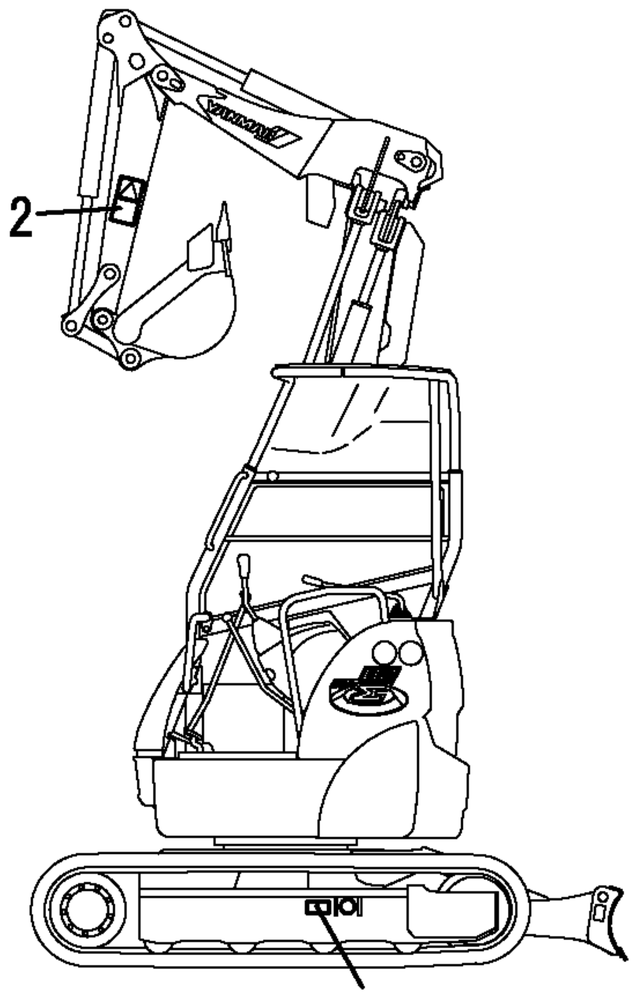

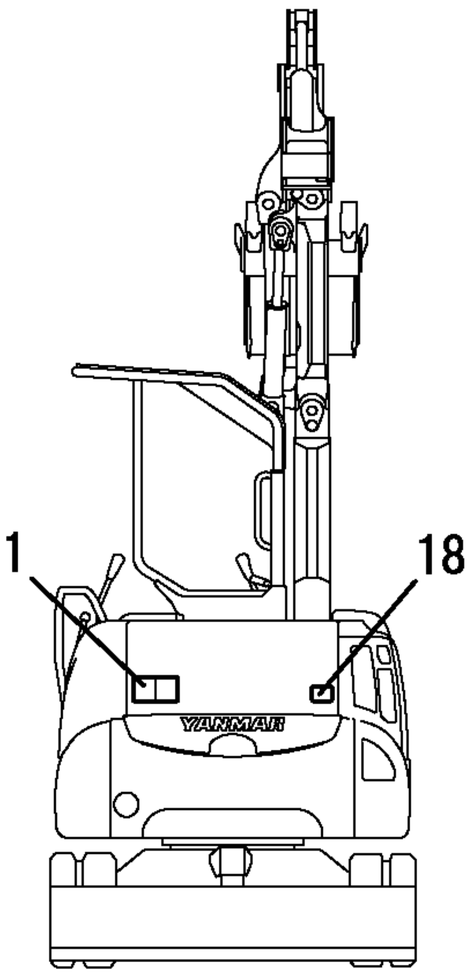

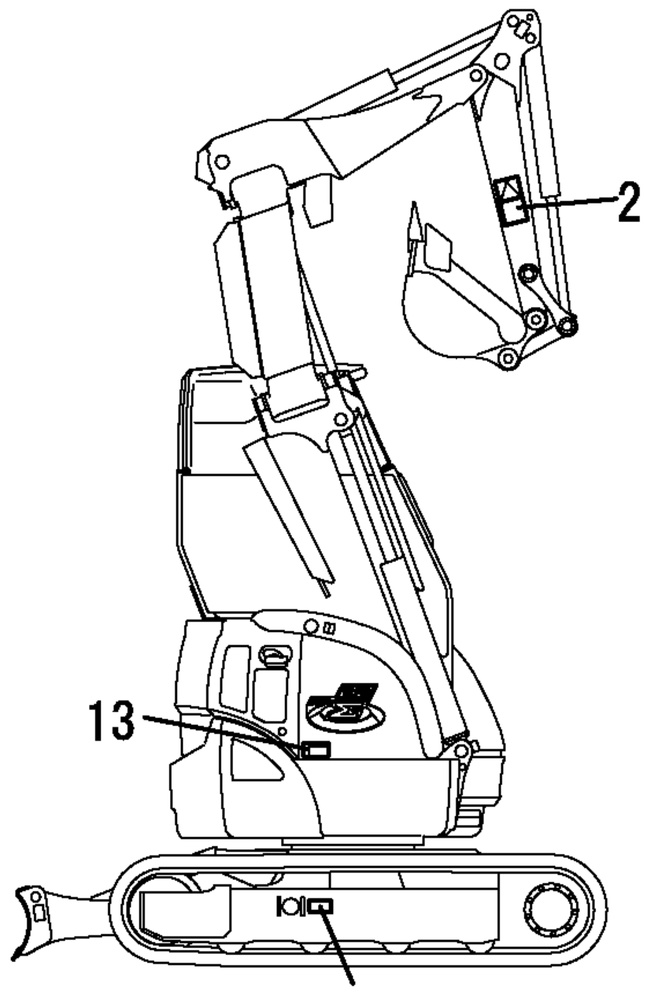

https://truckmanualshub.com/

```
1,1,,172487-03230,,"LABEL,CAUTION",,1,,,,,,,,,,,,,,,,,,I
2,1,,172487-03240,,LABEL,,1,,,,,,,,,,,,,,,,,,I
3,1,,172437-03250,,"TAG,SERVICING ASSY",,1,,,,,,,,,,,,,,,,,,I
4,1,,172487-03260,,"LABEL,WARNING",,1,,,,,,,,,,,,,,,,,,I
5,1,,172437-03310,,"LABEL,SLOPE",,1,,,,,,,,,,,,,,,,,,I
6,1,,172437-03321,,"LABEL,HYD.OIL TANK",,1,,,,,,,,,,,,,,,,,,I
7,1,,172437-03341,,"LABEL,TRANSPORT",,1,,,,,,,,,,,,,,,,,,I
8,1,,172437-03351,,"LABEL,GREASE CYL.",,2,,,,,,,,,,,,,,,,,,I
9,1,,172437-03360,,"LABEL,BATTERY",,1,,,,,,,,,,,,,,,,,,I
10,1,,172437-03371,,LABEL,,1,,,,,,,,,,,,,,,,,,I
11,1,,172437-03380,,"LABEL,SWING AREA",,1,,,,,,,,,,,,,,,,,,I
12,1,,172437-03390,,"LABEL,RADIATOR",,1,,,,,,,,,,,,,,,,,,I
13,1,,172437-03401,,"LABEL (ENG COVER US",,1,,,,,,,,,,,,,,,,,,I
14,1,,172437-03411,,"LABEL (ENG ROOM US",,1,,,,,,,,,,,,,,,,,,I
15,1,,172437-03421,,"LABEL,MUFFLER",,1,,,,,,,,,,,,,,,,,,I
16,1,,172437-03431,,"LABEL,STEERING",,1,,,,,,,,,,,,,,,,,,I
17,1,,172437-03460,,"LABEL, BOOM",,2,,,,,,,,,,,,,,,,,,I
18,1,,172437-03470,,"LABEL,LEVER LOCK",,1,,,,,,,,,,,,,,,,,,I
19,1,,172448-03600,,"LABEL,MANUAL US",,1,,,,,,,,,,,,,,,,,,I
```

https://truckmanualshub.com/

1

2

3

取説収納庫在中
IN THE OPERATION MANUAL CASE

4

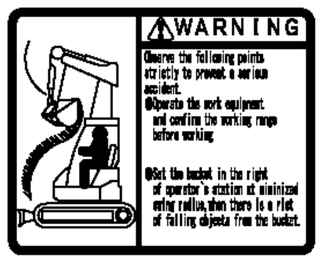

5

6

7

8

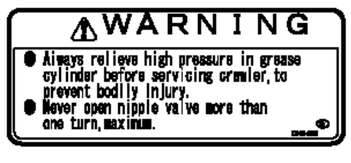

9

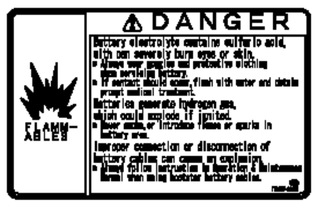

10

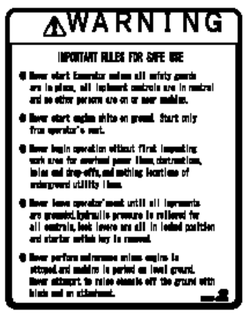

11

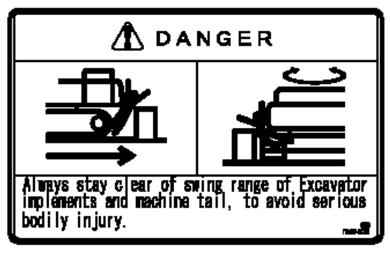

12

13

14

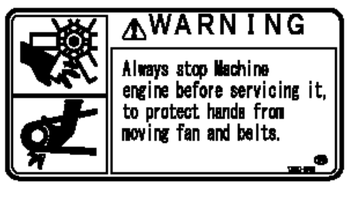

15

16

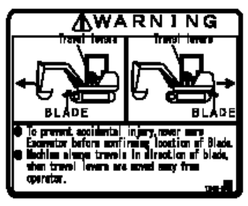

17

18

19

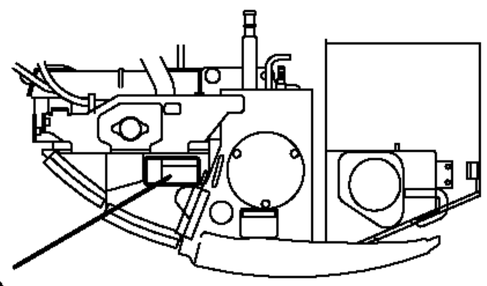

ボンネット内部詳細
DETAILS OF BONNET INSIDE

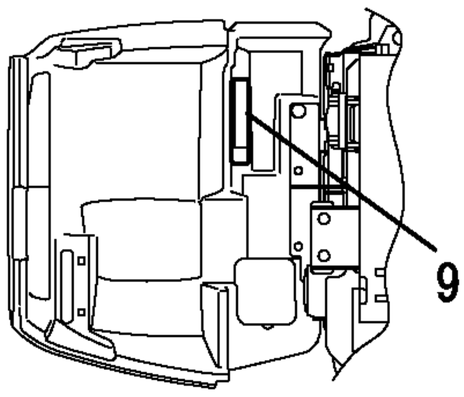

フロントカバーを開いて
OPEN THE FRONT COVER

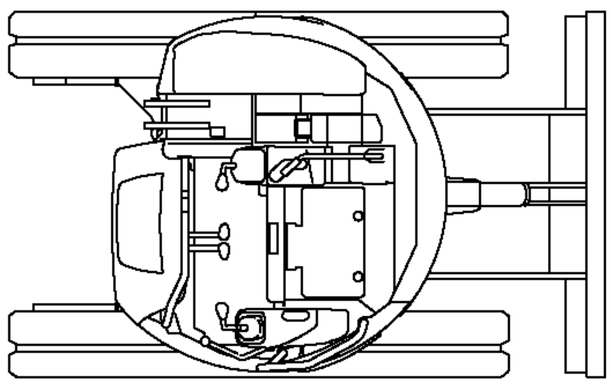

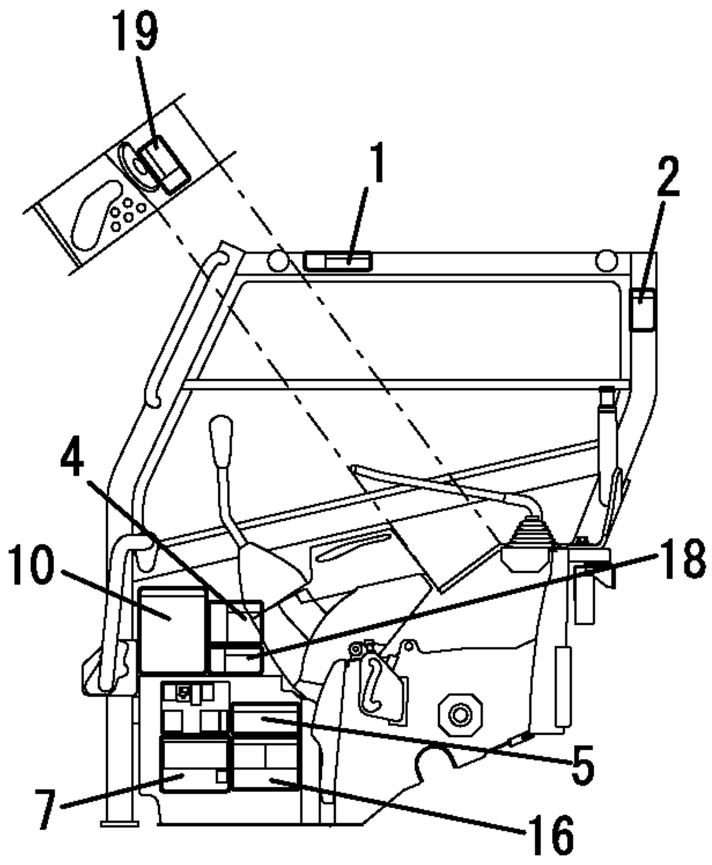

Ⓐカラ見ル
VIEWED FROM Ⓐ

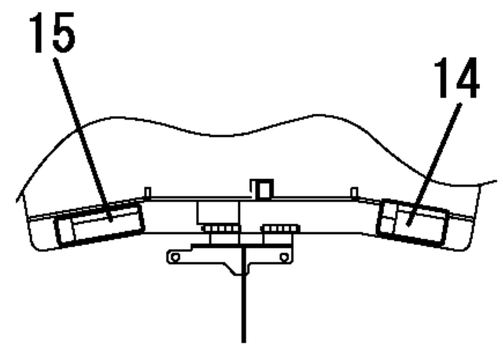

ボンネットカバー内側詳細
DETAILS OF BONNET COVER INSIDE

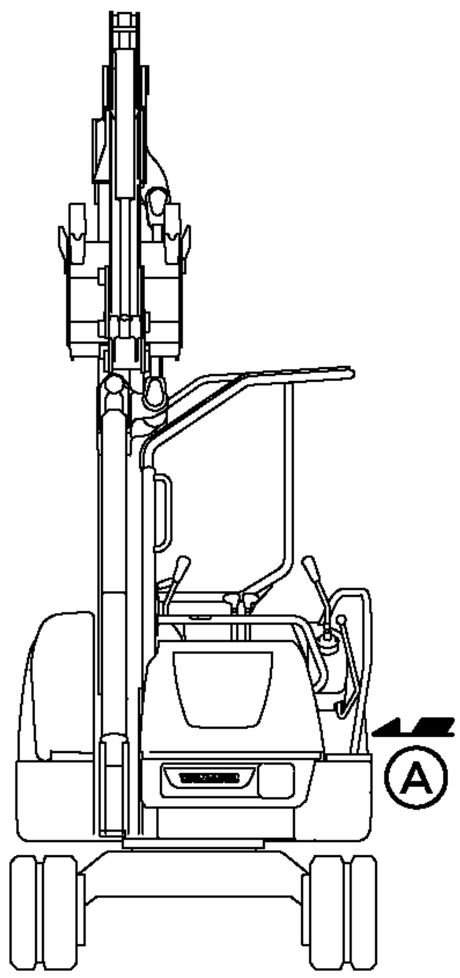

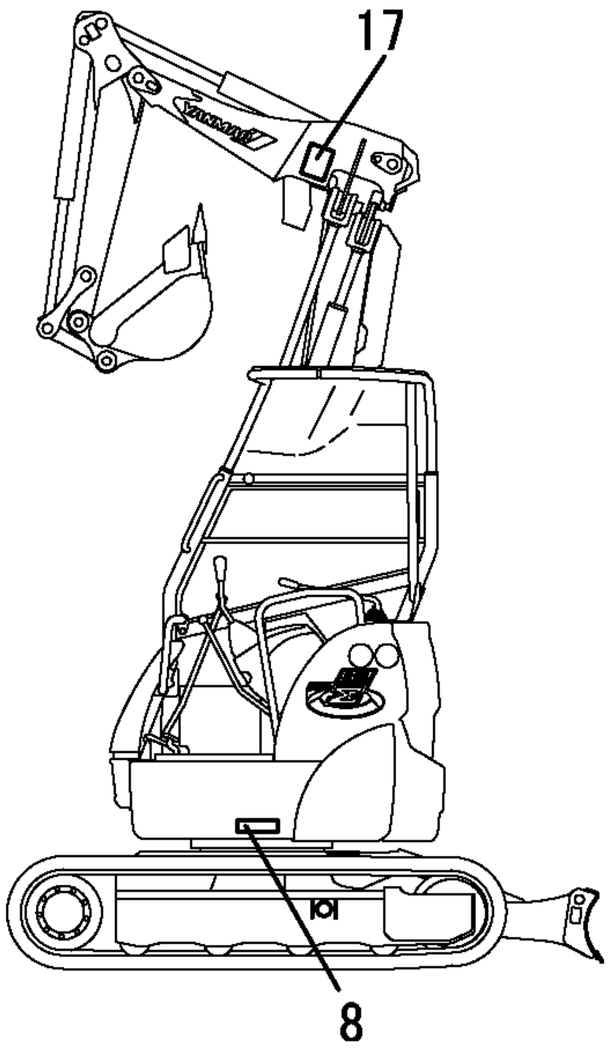

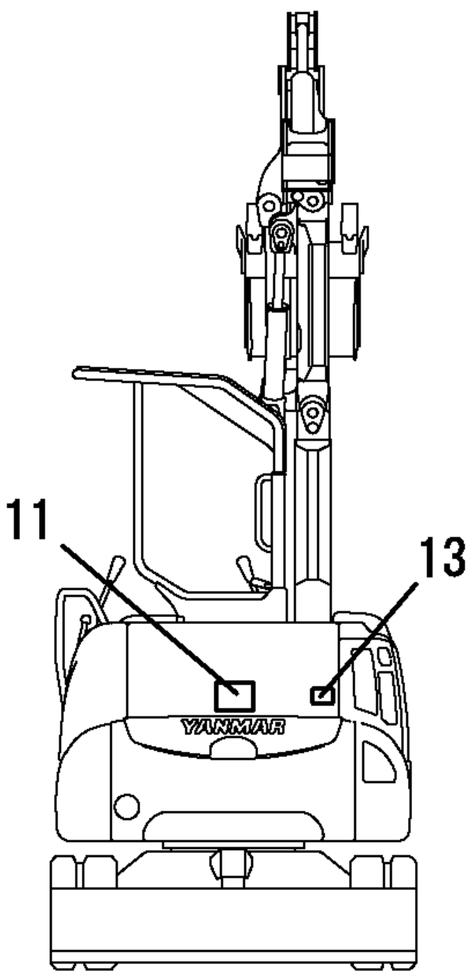

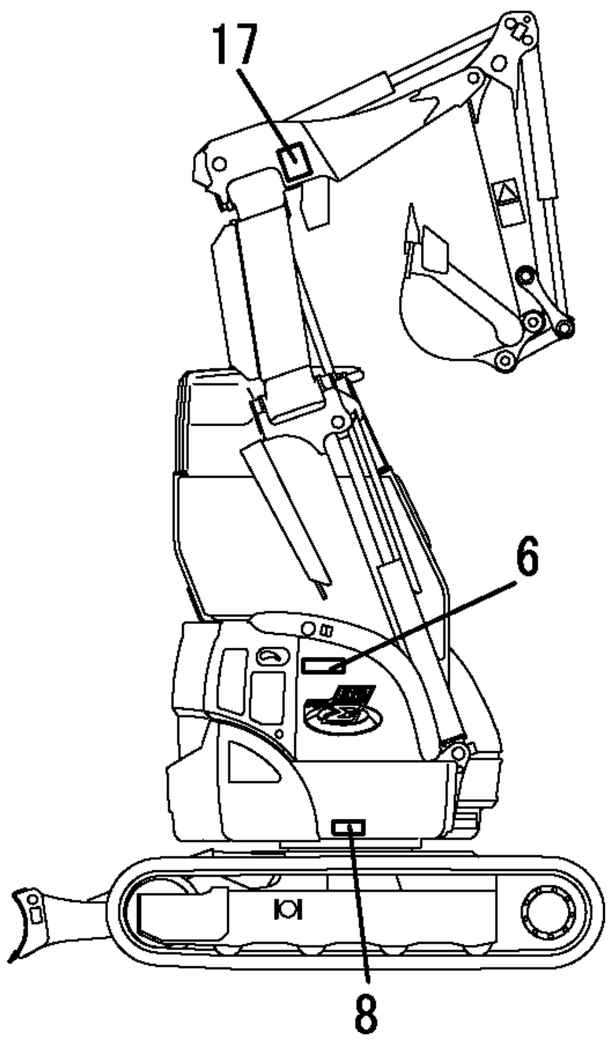

https://truckmanualshub.com/

1,1,,172176-07330,,"BAG, MANUAL",1,,,,,,,,,,,,,,,,,,

https://truckmanualshub.com/

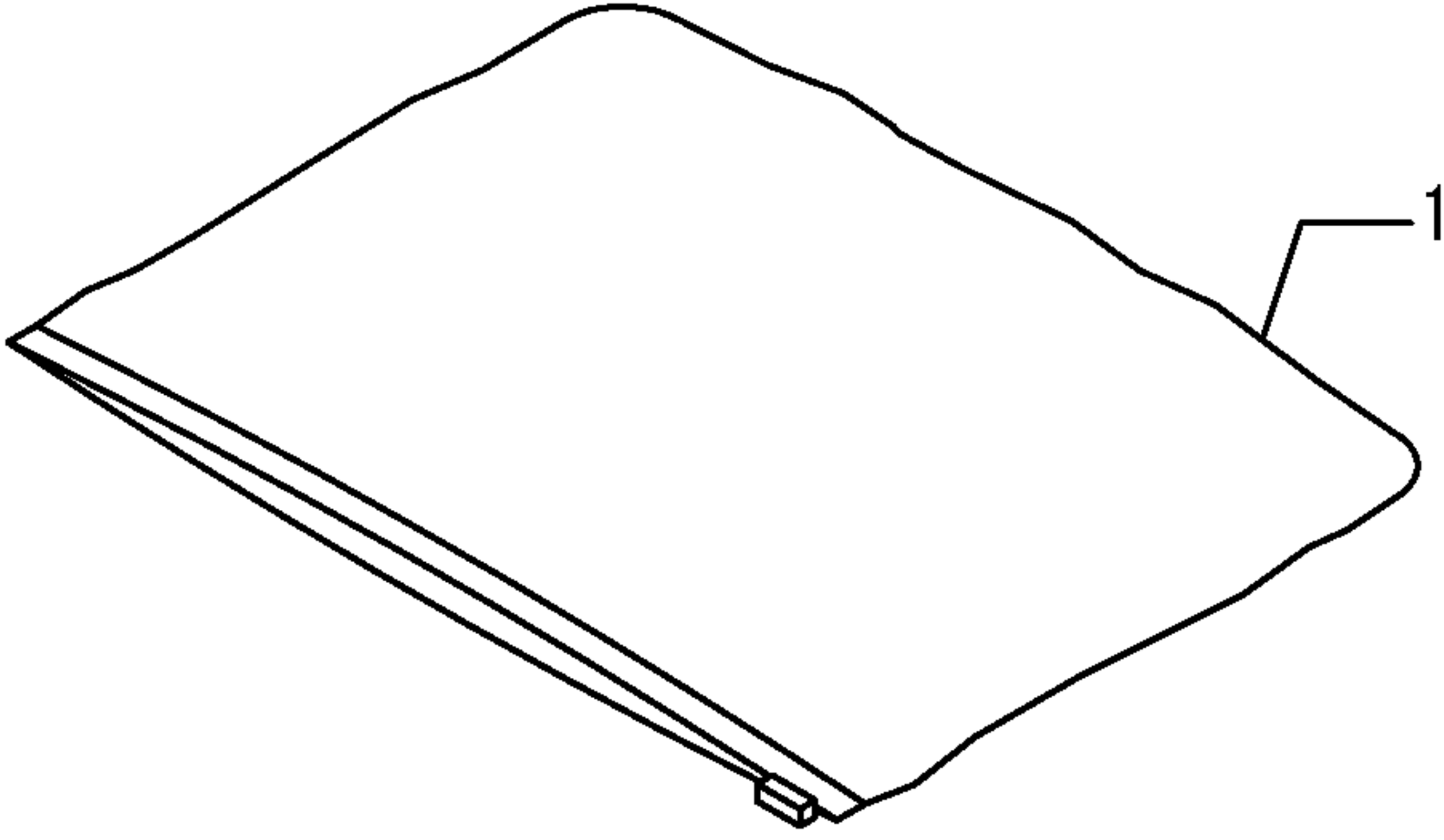

https://truckmanualshub.com/

```
1,1,,172487-11350,,"PIPE,EXH",1,1,,,,,,,,,,,,,,,,
2,1,,172487-11400,,CLAMP,1,1,,,,,,,,,,,,,,,,
3,1,,26013-100552,,"BOLT M10X 55",1,1,,,,,,,,,,,,,,,,
4,1,,26366-100002,,"NUT M10",1,1,,,,,,,,,,,,,,,,
5,1,,172487-11510,,"AIR CLEANER ASSY",1,1,,,,,,,,,,,,,,,,
6,2,,119808-12520,,"ELEMENT, OUTER",1,1,,,,,,,,,,,,,,,,
7,2,,119866-12530,,"COVER ASSY",1,1,,,,,,,,,,,,,,,,
8,2,,119808-12540,,"VALVE, UNLOADER",1,1,,,,,,,,,,,,,,,,
9,1,,172487-11540,,"HOSE A ASSY",1,,,,,,,,,,,,,,,,,,
9-1,1,,172487-11541,,"HOSE A ASSY",1,1,,,,,R,,72487125,M/#50770,,,,,,,,,,,I
10,2,,172487-11550,,"HOSE A,AIR CLEANER",1,1,,,,,,,,,,,,,,,,
11,2,,172487-11580,,PIPE,1,,,,,,,,,,,,,,,,,,
11-1,2,,172487-11581,,PIPE,1,1,,,,,R,,72487125,M/#50770,,,,,,,,,,,I
12,2,,23000-054000,,"CLAMP 54",1,,,,,,Z,,72487125,M/#50770,,,,,,,,,,,I
13,1,,172487-11560,,"HOSE B,AIR CLEANER",1,1,,,,,,,,,,,,,,,,
14,1,,22137-080000,,"WASHER 8, POLISHED",2,2,,,,,,,,,,,,,,,,
15,1,,23000-060000,,"CLAMP 60",3,3,,,,,,,,,,,,,,,,
16,1,,26013-080202,,"BOLT W/WASHER M8X20",2,2,,,,,,,,,,,,,,,,
```

https://truckmanualshub.com/

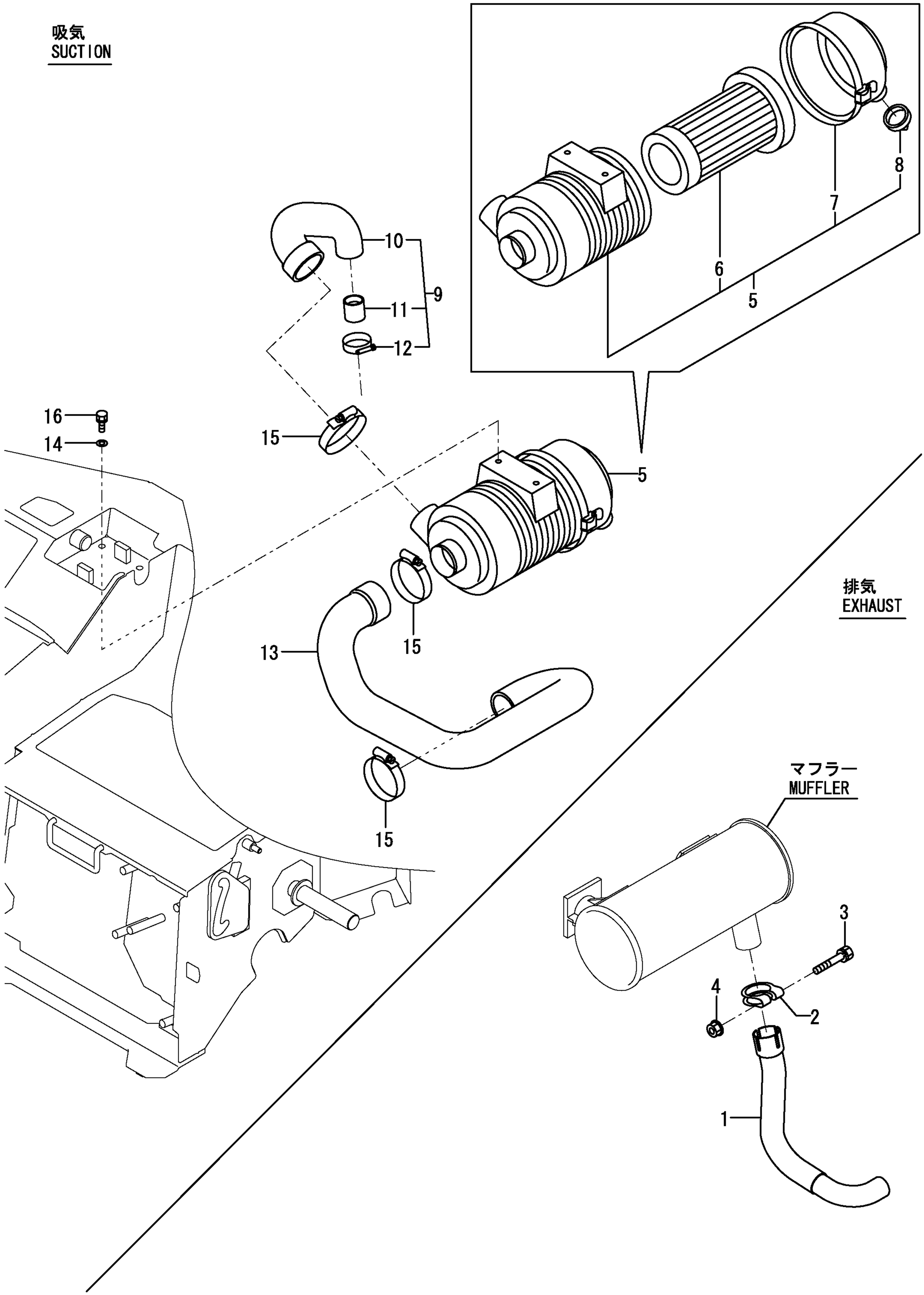

https://truckmanualshub.com/

```
1,1,,172458-12100,,"LEVER,ACCELERATOR",1,1,,,,,,,,,,,,,,,,,
2,1,,172456-12111,,"CABLE, ACCEL.",1,1,,,,,,,,,,,,,,,,,
3,1,,172487-12220,,BRACKET,1,1,,,,,,,,,,,,,,,,,
4,1,,172137-12270,,"JOINT, CABLE",1,1,,,,,,,,,,,,,,,,,
5,1,,1C6281-52310,,"PIN 6,COME-OFF SNAP",2,2,,,,,,,,,,,,,,,,,,
6,1,,1A1040-56900,,"PIN  6X 17",2,2,,,,,,,,,,,,,,,,,
7,1,,22137-060000,,"WASHER 6, POLISHED",2,2,,,,,,,,,,,,,,,,,
8,1,,26013-080162,,"BOLT W/WASHER M8X16",2,2,,,,,,,,,,,,,,,,,
9,1,,26013-100252,,"BOLT W/WASHER M10X25",2,2,,,,,,,,,,,,,,,,,,
```

https://truckmanualshub.com/

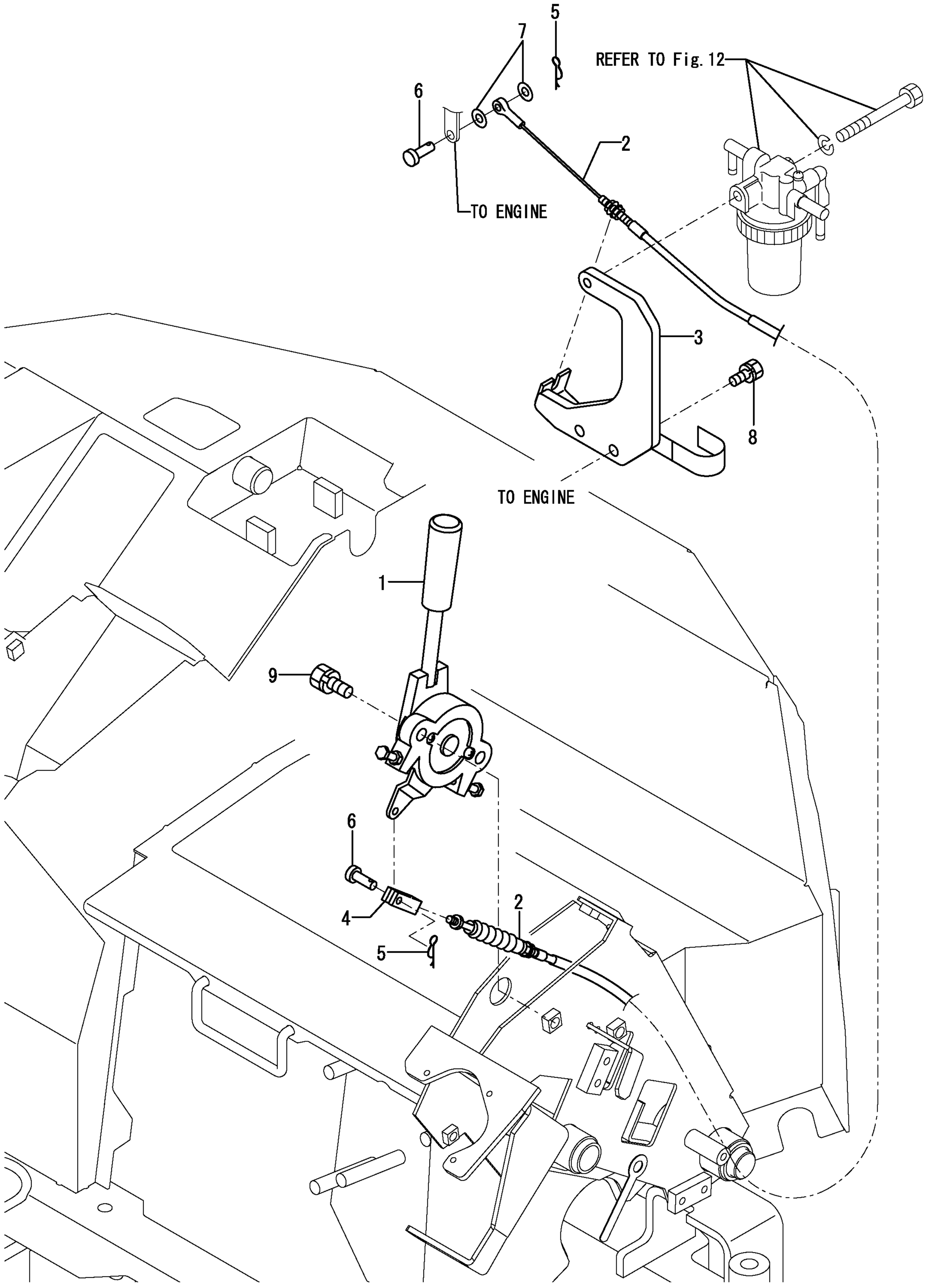

https://truckmanualshub.com/

```
1,1,,172456-12100,,"CABEL, ACCEL. OD",1,,,,,,,,,,,,,,,,,,,I
2,1,,172458-12100,,"LEVER,ACCELERATOR",1,,,,,,,,,,,,,,,,,,,I
3,1,,172137-12270,,"JOINT, CABLE",1,,,,,,,,,,,,,,,,,,,I
4,1,,172190-12360,,CABLE,1,,,,,,,,,,,,,,,,,,,I
5,1,,1C6281-52310,,"PIN 6,COME-OFF SNAP",2,,,,,,,,,,,,,,,,,,,I
6,1,,1C6281-52310,,"PIN 6,COME-OFF SNAP",2,,,,,,,,,,,,,,,,,,,I
7,1,,1A1040-56900,,"PIN  6X 17",2,,,,,,,,,,,,,,,,,,,I
8,1,,1A3809-56915,,"PIN 6X 20",1,,,,,,,,,,,,,,,,,,,I
9,1,,22137-060000,,"WASHER 6, POLISHED",2,,,,,,,,,,,,,,,,,,,I
10,1,,22137-060000,,"WASHER 6, POLISHED",3,,,,,,,,,,,,,,,,,,,I
11,1,,26013-080162,,"BOLT W/WASHER M8X16",2,,,,,,,,,,,,,,,,,,,I
12,1,,26013-100252,,"BOLT W/WASHER M10X25",2,,,,,,,,,,,,,,,,,,,I
13,1,,172164-12160,,"LINK B CMP",1,,,,,,,,,,,,,,,,,,,I
15,2,,24550-014200,,"BUSH 14X20",1,,,,,,,,,,,,,,,,,,,I
16,1,,172164-12200,,"SHAFT CMP",1,,,,,,,,,,,,,,,,,,,I
17,1,,172456-12201,,"BASE ASSY",1,,,,,,,,,,,,,,,,,,,I
19,2,,24550-014200,,"BUSH 14X20",1,,,,,,,,,,,,,,,,,,,I
20,1,,172175-12230,,"LINK A",1,,,,,,,,,,,,,,,,,,,I
21,1,,172175-12350,,"SPRING, RETURN",1,,,,,,,,,,,,,,,,,,,I
22,1,,172175-12370,,PLATE,1,,,,,,,,,,,,,,,,,,,I
23,1,,172456-14660,,BRACKET,1,,,,,,,,,,,,,,,,,,,I
24,1,,172137-16560,,BAND,1,,,,,,,,,,,,,,,,,,,I
25,1,,172460-16570,,"HARNESS DECEL ASSY",1,,,,,,,,,,,,,,,,,,,I
27,2,,29420-200000,,HUSE,2,,,,,,,,,,,,,,,,,,,I
28,1,,172162-17180,,SOLENOID,1,,,,,,,,,,,,,,,,,,,I
29,1,,172190-17220,,"RELEY, TIMER",1,,,,,,,,,,,,,,,,,,,I
30,1,,172487-17540,,BRACKET,1,,,,,,,,,,,,,,,,,,,I
31,1,,1C6281-52310,,"PIN 6,COME-OFF SNAP",2,,,,,,,,,,,,,,,,,,,I
32,1,,119620-66820,,JOINT,1,,,,,,,,,,,,,,,,,,,I
33,1,,22137-060000,,"WASHER 6, POLISHED",2,,,,,,,,,,,,,,,,,,,I
34,1,,22217-100000,,"SPRING WASHER 10",1,,,,,,,,,,,,,,,,,,,I
35,1,,22351-040025,,"PIN 4X25,SPRING",1,,,,,,,,,,,,,,,,,,,I
36,1,,24311-000210,,"O-RING 1A P-21.0",4,,,,,,,,,,,,,,,,,,,I
37,1,,26013-060162,,"BOLT M 6X 16",2,,,,,,,,,,,,,,,,,,,I
38,1,,26013-080202,,"BOLT W/WASHER M8X20",2,,,,,,,,,,,,,,,,,,,I
39,1,,26013-120252,,"BOLT M12X 25",2,,,,,,,,,,,,,,,,,,,I
40,1,,26022-060252,,"SCREW M 6X 25",2,,,,,,,,,,,,,,,,,,,I
41,1,,26116-100162,,"BOLT M10X 16 PLATED",1,,,,,,,,,,,,,,,,,,,I
42,1,,26716-060002,,"NUT 6",1,,,,,,,,,,,,,,,,,,,I
43,1,,933152-09280,,"BAND 170",5,,,,,,,,,,,,,,,,,,,I
44,1,,933166-17730,,"WASHER 10.5X30",1,,,,,,,,,,,,,,,,,,,I
45,1,,933168-55770,,"BAND 146",2,,,,,,,,,,,,,,,,,,,I
```

https://truckmanualshub.com/

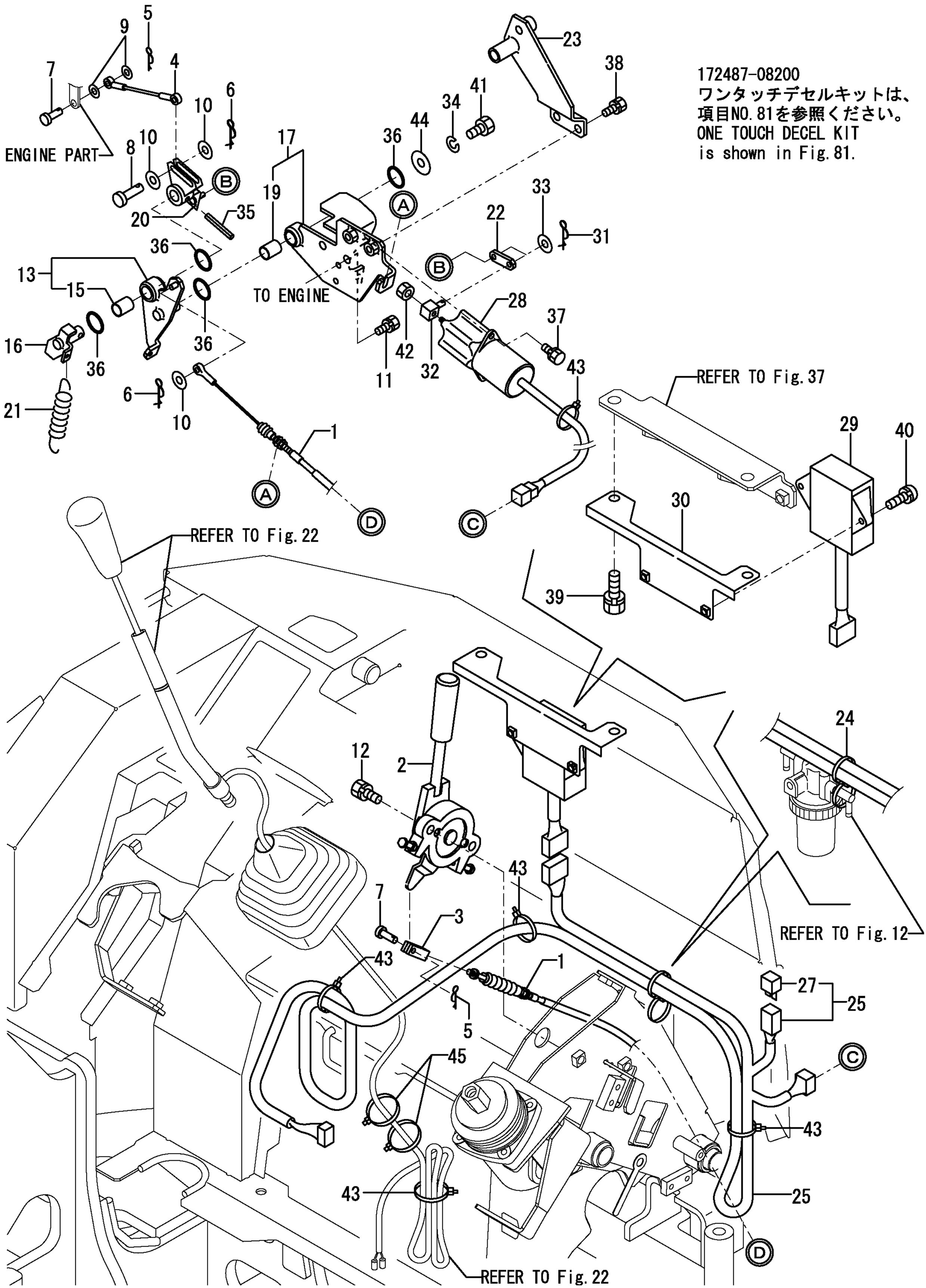

172487-08200
ワンタッチデセルキットは、
項目NO.81を参照ください。
ONE TOUCH DECEL KIT
is shown in Fig.81.

https://truckmanualshub.com/

```
1,1,,172487-13100,,"MOUNT RE,ENG",1,1,,,,,,,,,,,,,,,,
2,1,,172487-13110,,"MOUNT LF,ENG",1,1,,,,,,,,,,,,,,,,
3,1,,172456-13120,,"MOUNT RR,ENG",1,1,,,,,,,,,,,,,,,,
4,1,,172456-13130,,"MOUNT LR,ENG",1,1,,,,,,,,,,,,,,,,
5,1,,172456-13150,,"STOPPER RF,ENG",2,2,,,,,,,,,,,,,,,,
6,1,,172179-13211,,"RUBBER, ANTI VIBRAT.",4,4,,,,,,,,,,,,,,,,
7,1,,22217-100000,,"SPRING WASHER 10",8,8,,,,,,,,,,,,,,,,
8,1,,26013-100202,,"BOLT W/WASHER M10X20",4,4,,,,,,,,,,,,,,,,
9,1,,26013-100252,,"BOLT W/WASHER M10X25",16,16,,,,,,,,,,,,,,,,,
10,1,,26716-100002,,"NUT 10",8,8,,,,,,,,,,,,,,,,
```

https://truckmanualshub.com/

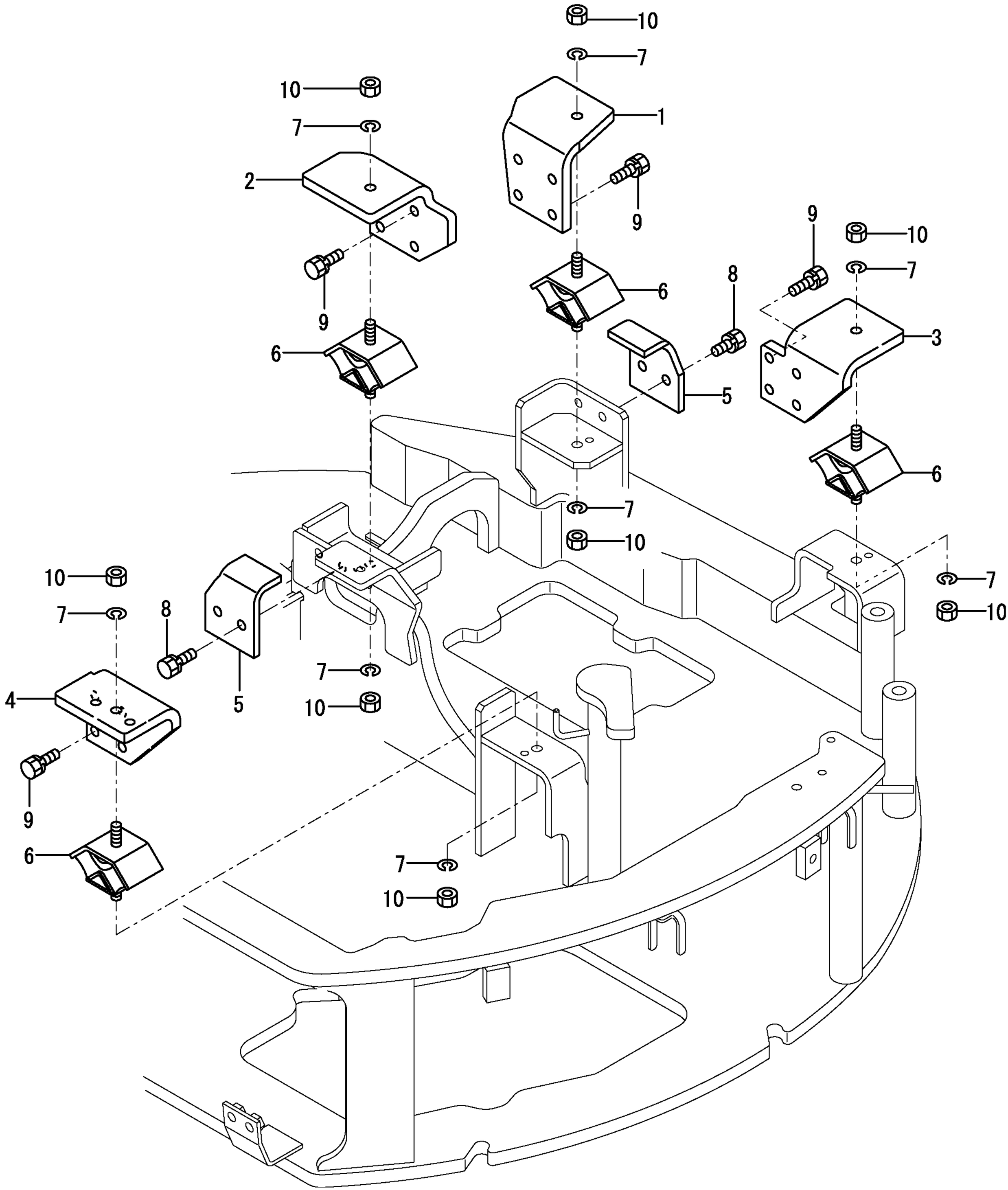

https://truckmanualshub.com/

```
1,1,,172444-13210,,"COCK ASSY,2-WAY",1,1,,,,,,,,,,,,,,,,
3,2,,121250-49121,,PLUG,1,1,,,,,,,,,,,,,,,,
4,2,,24311-000160,,"O-RING 1A P-16.0",1,1,,,,,,,,,,,,,,,,
5,1,,172487-13300,,RADIATOR,1,1,,,,,,,,,,,,,,,,
6,2,,172456-13310,,"CAP ,ASSY",1,1,,,,,,,,,,,,,,,,
7,2,,172456-13320,,"VALVE,STOP",1,1,,,,,,,,,,,,,,,,
8,2,,172456-13330,,O-RING,1,1,,,,,,,,,,,,,,,,
9,1,,172487-13400,,SHURAUD,1,1,,,,,,,,,,,,,,,,
10,2,,172456-13480,,"RUBBER 315",2,2,,,,,,,,,,,,,,,,
11,1,,172456-13451,,"PIPE (A), C.W.",1,1,,,,,,,,,,,,,,,,
12,1,,172487-13450,,SEAL,2,2,,,,,,,,,,,,,,,,
13,1,,172487-13460,,FAN-GUARD,1,1,,,,,,,,,,,,,,,,
14,1,,172456-13501,,"BRACKET A ASSY",1,1,,,,,,,,,,,,,,,,
15,1,,172487-13500,,"SEAL B (RADIATOR",2,2,,,,,,,,,,,,,,,,
16,1,,172734-14620,,"PIPE L=300, FUEL",1,1,,,,,,,,,,,,,,,,
17,1,,119813-44510,,"SUB-TANK ASSY",1,1,,,,,,,,,,,,,,,,
18,1,,124450-44550,,"CLAMP, SUB-TANK",1,1,,,,,,,,,,,,,,,,
19,1,,121256-44600,,"BRACKET, SUB-TANK",1,1,,,,,,,,,,,,,,,,
20,1,,119255-44660,,RUBBER,4,4,,,,,,,,,,,,,,,,
21,1,,124766-59050,,"CLAMP 12",4,4,,,,,,,,,,,,,,,,
22,1,,22137-060000,,"WASHER 6, POLISHED",3,3,,,,,,,,,,,,,,,,
23,1,,22137-100000,,"WASHER 10,POLISHED",5,5,,,,,,,,,,,,,,,,
24,1,,23001-041000,,"CLIP 41,HOSE",4,4,,,,,,,,,,,,,,,,
25,1,,26013-060162,,"BOLT M 6X 16",3,3,,,,,,,,,,,,,,,,
26,1,,26013-080162,,"BOLT W/WASHER M8X16",2,2,,,,,,,,,,,,,,,,
27,1,,26013-080162,,"BOLT W/WASHER M8X16",2,2,,,,,,,,,,,,,,,,
28,1,,26013-100202,,"BOLT W/WASHER M10X20",5,5,,,,,,,,,,,,,,,,
29,1,,26022-080162,,"SCREW M 8X 16",2,2,,,,,,,,,,,,,,,,
30,1,,172487-13340,,"HOSE B,COOLING WATER",1,1,,,,,,,,,,,,,,,,
31,1,,172157-13381,,HOSE,1,1,,,,,,,,,,,,,,,,
32,1,,172456-13381,,"BRACKET B ASSY",1,1,,,,,,,,,,,,,,,,
```

https://truckmanualshub.com/

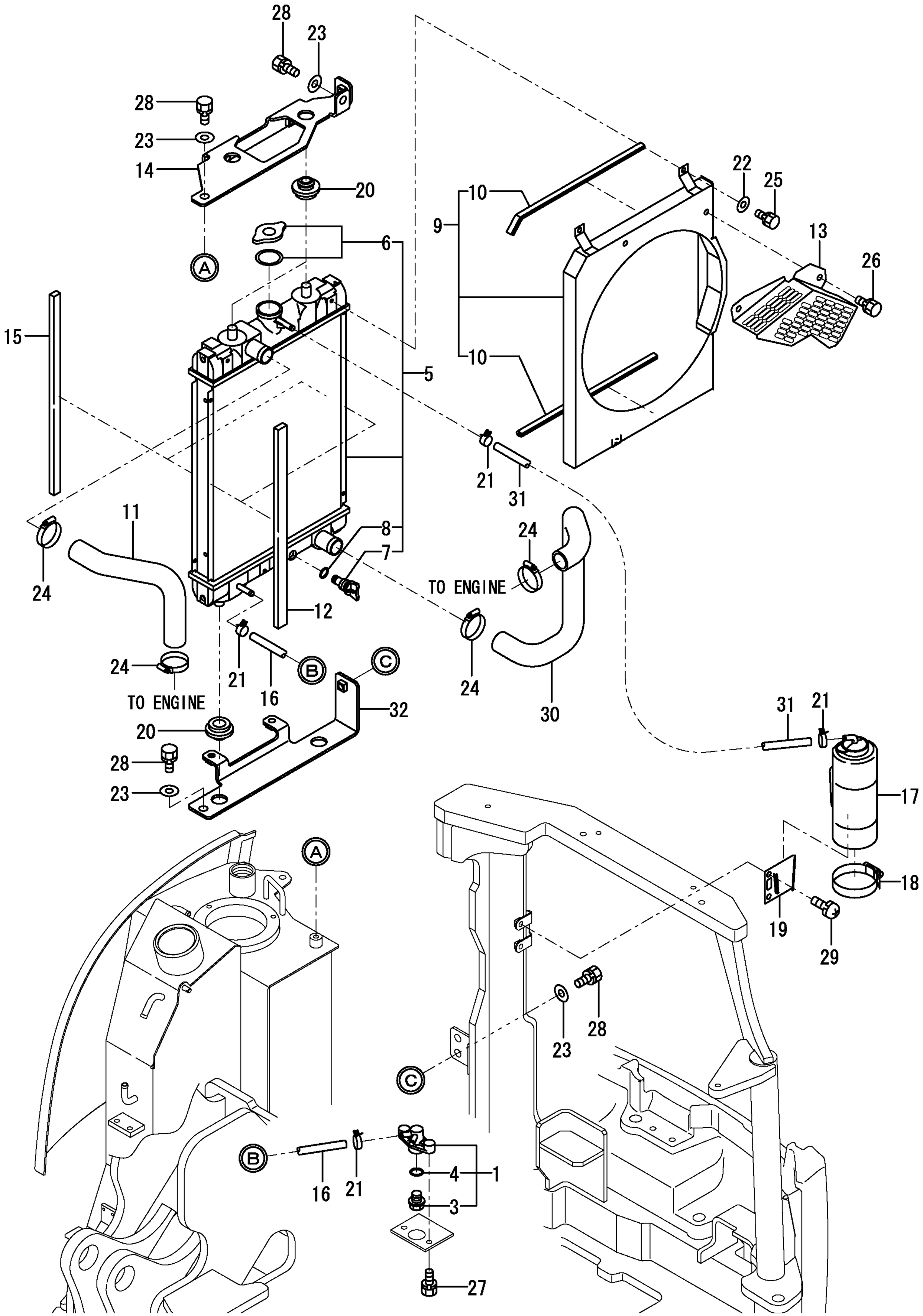

https://truckmanualshub.com/

```
1,1,,772487-14110,,"TANK ASSY,F.O.  (73)",1,1,,,,,,,,,,,,,,,,,
2,2,,104200-11920,,COCK,1,1,,,,,,,,,,,,,,,,,
4,2,,172155-14161,,"HOSE, FUEL GAUGE",1,1,,,,,,,,,,,,,,,,,
5,2,,172162-14200,,GASKET,1,1,,,,,,,,,,,,,,,,,
6,2,,172460-14220,,"FUEL GAUGE",1,1,,,,,,,,,,,,,,,,,
7,2,,172183-14250,,"FILTER (FUEL",1,1,,,,,,,,,,,,,,,,,
8,2,,172141-14260,,FLOAT,1,1,,,,,,,,,,,,,,,,,
9,2,,105340-55040,,"CAP, FUEL TANK",1,1,,,,,,,,,,,,,,,,,
10,2,,23010-014000,,"CLAMP 14",2,2,,,,,,,,,,,,,,,,,
11,2,,26022-050122,,"SCREW M 5X 12",5,5,,,,,,,,,,,,,,,,,
12,1,,172444-14250,,SAUCER,1,1,,,,,,,,,,,,,,,,,
13,1,,172444-14260,,"HOSE,FUEL",1,1,,,,,,,,,,,,,,,,,
14,1,,22137-140000,,"WASHER 14,POLISHED",3,3,,,,,,,,,,,,,,,,,
15,1,,22217-140000,,"SPRING WASHER 14",3,3,,,,,,,,,,,,,,,,,
16,1,,23080-013000,,"CLAMP 13,HOSE",1,1,,,,,,,,,,,,,,,,,
17,1,,26116-140352,,"BOLT M14X 35 PLATED",3,3,,,,,,,,,,,,,,,,,
```

https://truckmanualshub.com/

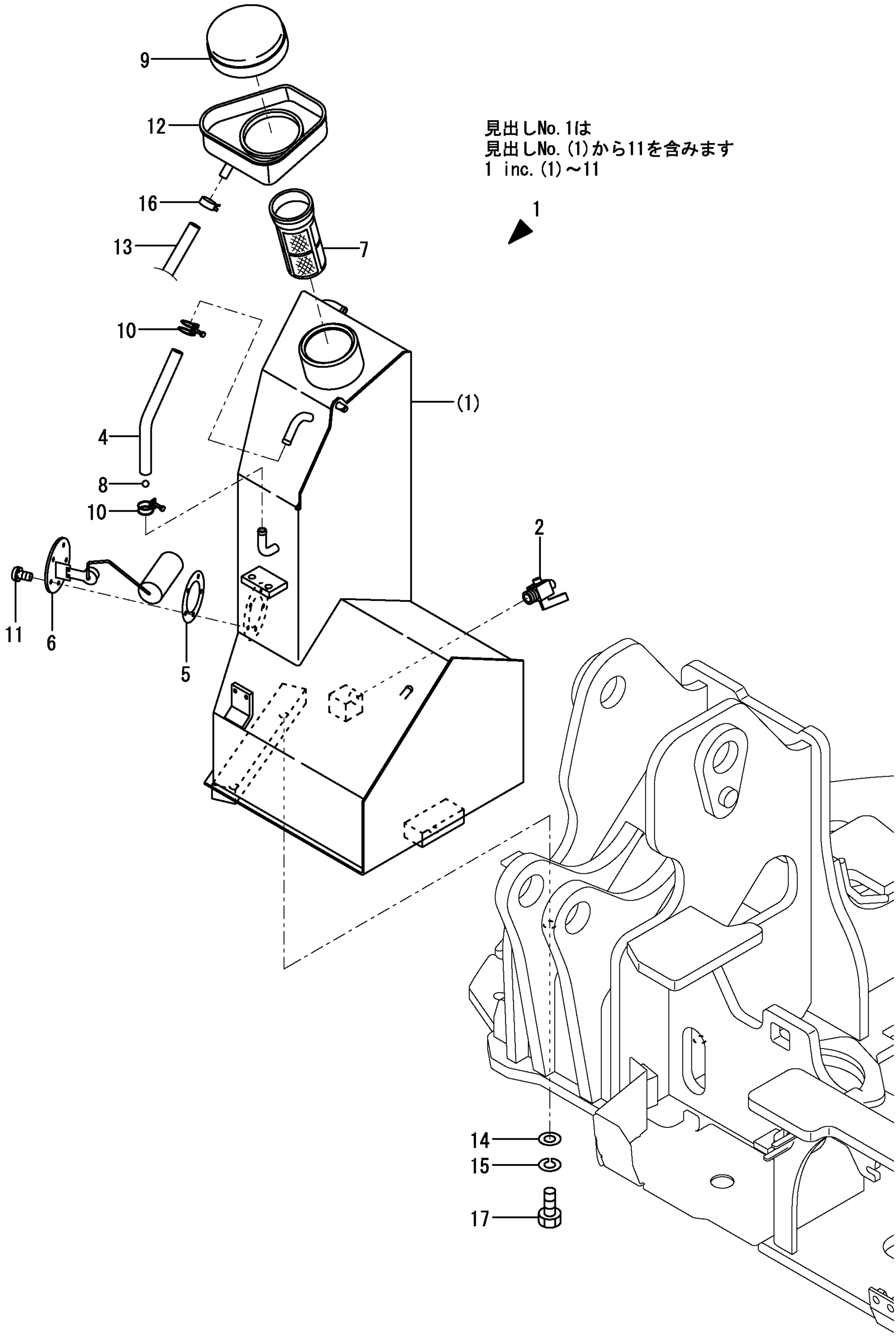

https://truckmanualshub.com/

```
1,1,,172186-13810,,HOSE,1,1,,,,,,,,,,,,,,,,
5,1,,172487-14500,,"HOSE FO,1300",1,1,,,,,,,,,,,,,,,,
9,1,,172487-14520,,"HOSE FO,1970",1,1,,,,,,,,,,,,,,,,
13,1,,172171-14610,,"HOSE 260,FUEL",1,1,,,,,,,,,,,,,,,,
14,1,,129612-52100,,"FUEL PUMP",1,1,,,,,,,,,,,,,,,,
15,1,,129335-55700,,"SEPARATOR, WATER",1,1,,,,,,,,,,,,,,,,
16,2,,104200-55321,,"VALVE, TAPER",1,1,,,,,,,,,,,,,,,,
17,2,,104200-55330,,"SPRING, TAPER VALVE",1,1,,,,,,,,,,,,,,,,
18,2,,104200-55341,,"HANDLE, COCK",1,1,,,,,,,,,,,,,,,,
19,2,,124064-55510,,"BOWL, FUEL STRAINER",1,1,,,,,,,,,,,,,,,,
20,2,,102103-55520,,O-RING,1,1,,,,,,,,,,,,,,,,
21,2,,110250-55610,,"RING, RETAINING",1,1,,,,,,,,,,,,,,,,
22,2,,121257-55720,,"SPRING, SCREEN",1,1,,,,,,,,,,,,,,,,
23,2,,121257-55731,,FLOAT,1,1,,,,,,,,,,,,,,,,
25,2,,101720-55750,,"PLUG, 6",2,2,,,,,,,,,,,,,,,,
26,2,,104200-55750,,"SCREW M 4",1,1,,,,,,,,,,,,,,,,
27,2,,171081-55910,,SCREEN,1,1,,,,,,,,,,,,,,,,
28,2,,23418-060000,,"GASKET 6, NYLON",2,2,,,,,,,,,,,,,,,,
29,2,,24311-240100,,"O-RING 1A P-10A",1,1,,,,,,,,,,,,,,,,
30,1,,124766-59050,,"CLAMP 12",8,8,,,,,,,,,,,,,,,,
31,1,,172122-79930,,"CLAMP B",1,1,,,,,,,,,,,,,,,,
32,1,,22137-060000,,"WASHER 6, POLISHED",2,2,,,,,,,,,,,,,,,,
33,1,,22217-080000,,"SPRING WASHER  8",1,1,,,,,,,,,,,,,,,,
34,1,,26013-060202,,"BOLT M 6X 20",2,2,,,,,,,,,,,,,,,,
35,1,,26116-080702,,"BOLT M 8X 70 PLATED",1,1,,,,,,,,,,,,,,,,
```

https://truckmanualshub.com/

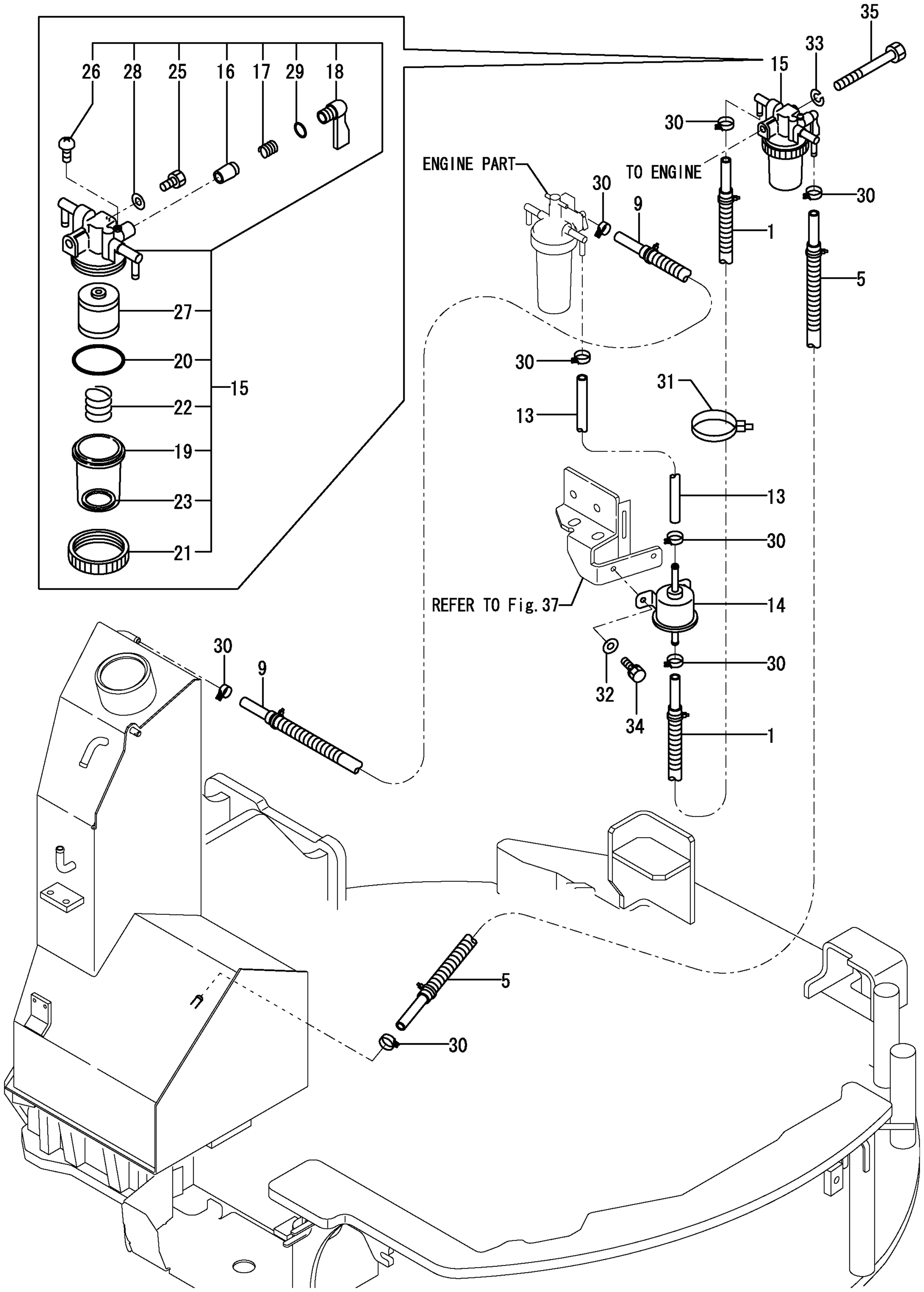

https://truckmanualshub.com/

```
1,1,,172487-16100,,"CORD,BATTERY(+)",1,1,,,,,,,,,,,,,,,,
2,1,,172149-16110,,"HARNESS, BATTERY",1,1,,,,,,,,,,,,,,,,
3,1,,172458-16110,,BATTERY,1,1,,,,,,,,,,,,,,,,
4,1,,22137-080000,,"WASHER 8, POLISHED",1,1,,,,,,,,,,,,,,,,
5,1,,26013-080162,,"BOLT W/WASHER M8X16",1,1,,,,,,,,,,,,,,,,
6,1,,26051-080002,,"NUT M 8",1,1,,,,,,,,,,,,,,,,
7,1,,172487-16140,,"CLAMP,BATTERY   (73)",1,1,,,,,,,,,,,,,,,,
8,1,,172487-16160,,"COVER,SATTERY",1,1,,,,,,,,,,,,,,,,
9,1,,172631-16350,,"ROD,BATTERY CLAMP",1,1,,,,,,,,,,,,,,,,
10,1,,172122-17190,,CLIP,2,2,,,,,,,,,,,,,,,,
11,1,,22157-060000,,"WASHER  6",1,1,,,,,,,,,,,,,,,,
12,1,,26716-060002,,"NUT 6",2,2,,,,,,,,,,,,,,,,
```

https://truckmanualshub.com/

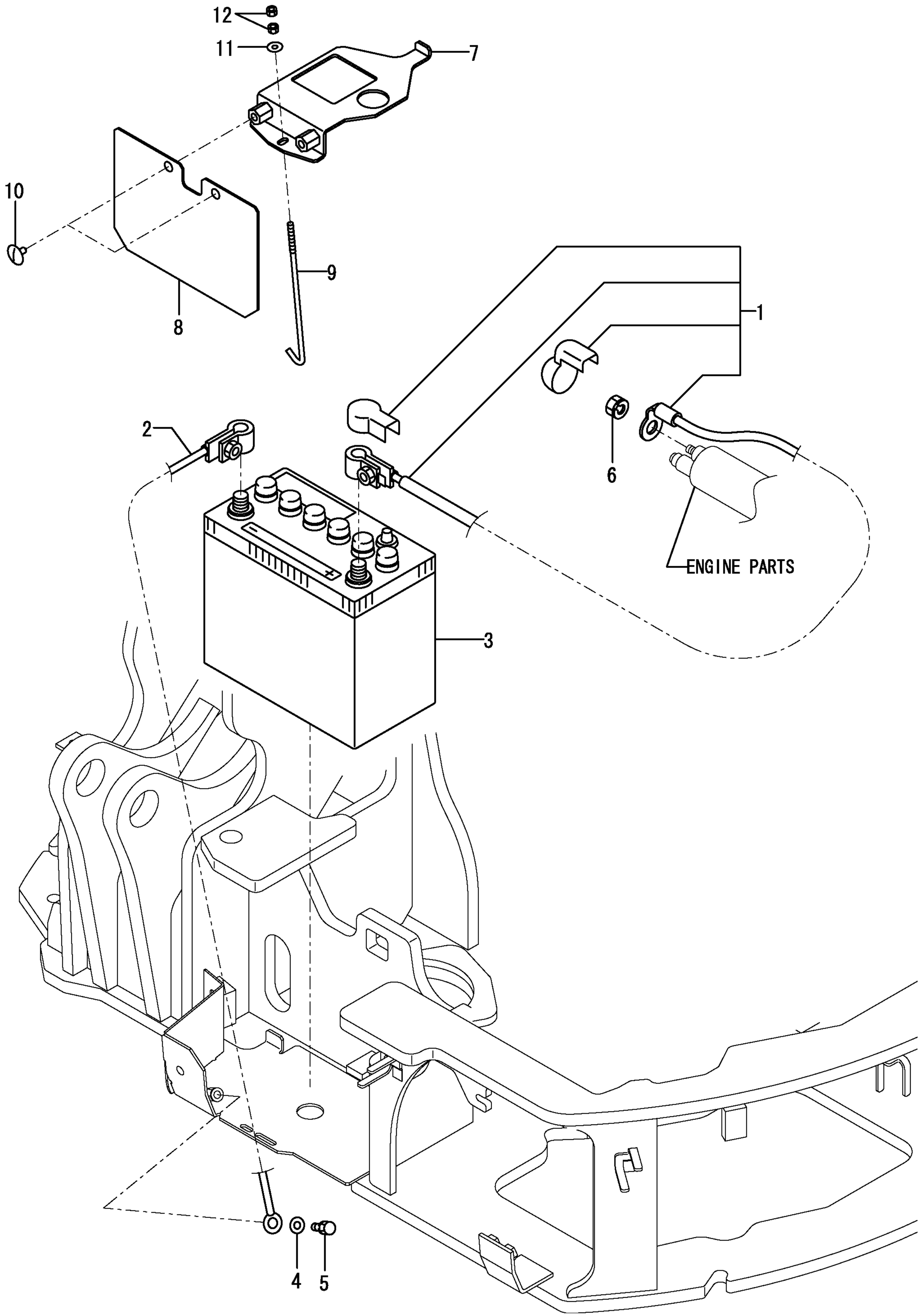

https://truckmanualshub.com/

```
1,1,,172487-16501,,"HARNESS A",1,1,,,,,,,,,,,,,,,,
3,2,,172648-16600,,DIODE,2,2,,,,,,,,,,,,,,,,
4,1,,172487-16521,,"HARNESS B",1,1,,,,,,,,,,,,,,,,
6,2,,172458-16550,,"HUSE,SLOW BLOW (50A",1,1,,,,,,,,,,,,,,,,
8,1,,172487-16530,,"HARNESS,BOOM LAMP",1,1,,,,,,,,,,,,,,,,
9,1,,172137-16560,,BAND,7,7,,,,,,,,,,,,,,,,
10,1,,172183-16560,,"CLIP 400,HOSE",2,2,,,,,,,,,,,,,,,,
11,1,,1A1380-59480,,"CLAMP A,SM.&DYN.CORD",1,1,,,,,,,,,,,,,,,,
12,1,,1A1380-59480,,"CLAMP A,SM.&DYN.CORD",1,1,,,,,,,,,,,,,,,,
13,1,,172165-62800,,"GROMMET 26",1,1,,,,,,,,,,,,,,,,
14,1,,172122-79930,,"CLAMP B",4,4,,,,,,,,,,,,,,,,
15,1,,22137-100000,,"WASHER 10,POLISHED",3,3,,,,,,,,,,,,,,,,
16,1,,26013-100162,,"BOLT M10X 16",3,3,,,,,,,,,,,,,,,,
17,1,,26013-100162,,"BOLT M10X 16",2,2,,,,,,,,,,,,,,,,
18,1,,26051-060002,,"NUT M 6",1,1,,,,,,,,,,,,,,,,
19,1,,933171-15801,,"WIRE, EARTH",1,1,,,,,,,,,,,,,,,,
20,1,,172487-16550,,"HARNESS, JOINT",1,1,,,,W,,72487123,M/#50676,,,,,,,,,,I
```

https://truckmanualshub.com/

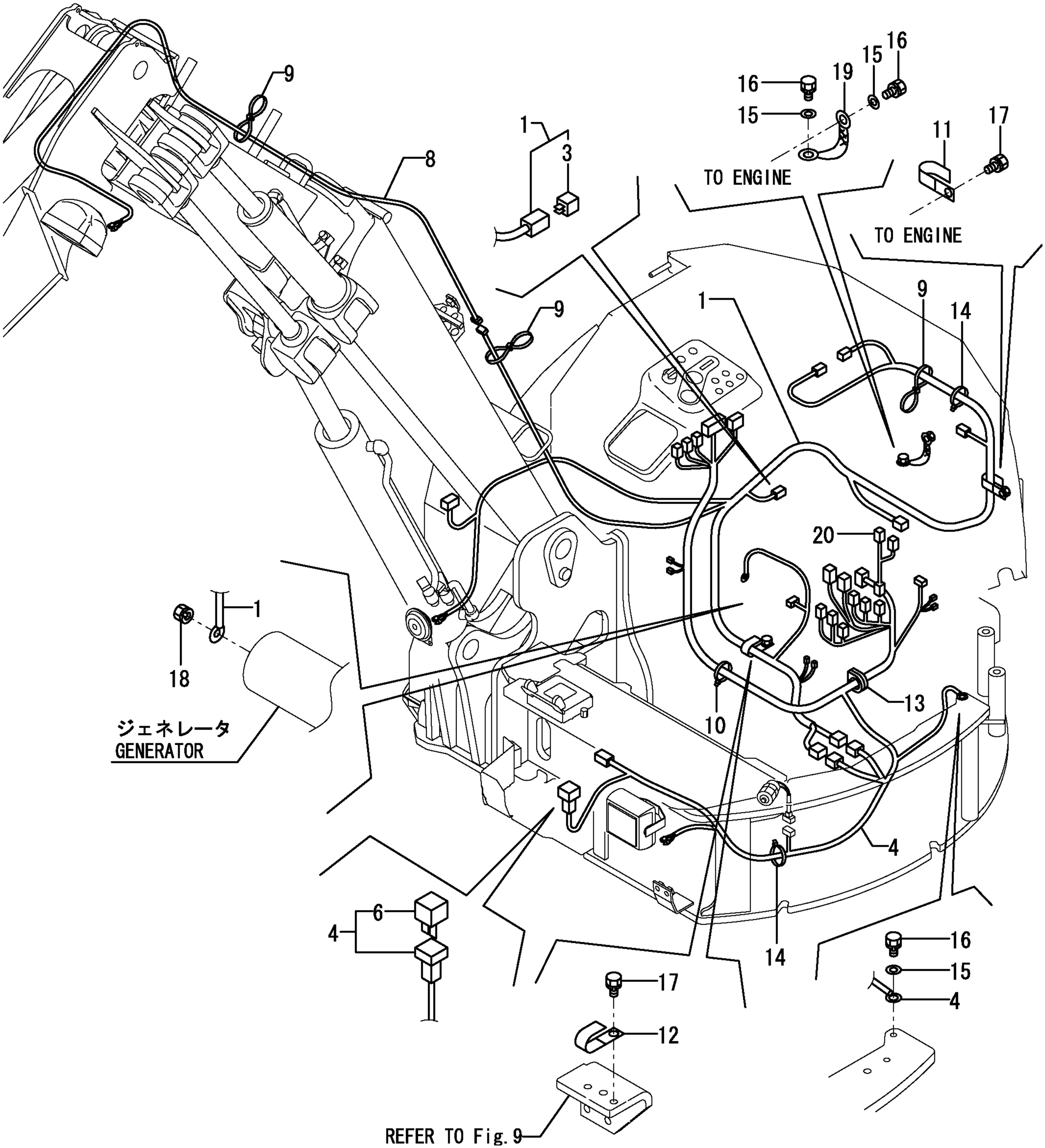

https://truckmanualshub.com/

```
1,1,,172187-17100,,"SWITCH, START",1,1,,,,,,,,,,,,,,,,
2,2,,172187-17070,,CODE,1,1,,,,,,,,,,,,,,,,
3,2,,172187-17080,,"COVER M5",3,3,,,,,,,,,,,,,,,,
4,2,,172187-17090,,"COVER M4",2,2,,,,,,,,,,,,,,,,
6,2,,933110-00301,,"KEY ASSY",1,1,,,,,,,,,,,,,,,,
9,1,,172187-17200,,"BOX, FUSE",1,1,,,,,,,,,,,,,,,,
10,2,,172175-17120,,PULLER,1,1,,,,,,,,,,,,,,,,
12,2,,172187-17220,,COVER,1,1,,,,,,,,,,,,,,,,
13,2,,29420-050000,,HUSE,2,2,,,,,,,,,,,,,,,,
14,2,,29420-150000,,HUSE,6,6,,,,,,,,,,,,,,,,
15,2,,29420-300000,,"FUSE B30",2,2,,,,,,,,,,,,,,,,
16,1,,172458-17500,,"BOX,INDICATOR(CANOPY",1,1,,,,,,,,,,,,,,,,
18,2,,172187-17280,,"SWITCH ASSY, LIGHT",1,1,,,,,,,,,,,,,,,,
20,2,,172187-17320,,PACKING,1,1,,,,,,,,,,,,,,,,,,,,I
22,2,,172187-17341,,"GAUGE ASSY",1,1,,,,,,,,,,,,,,,,
23,2,,172187-17350,,"METER ASSY, HOUR",1,1,,,,,,,,,,,,,,,,
24,2,,172187-17360,,"PRINT,CIRCUIT",1,1,,,,,,,,,,,,,,,,,,,,I
25,2,,172187-17371,,"CIRCUIT ASSY",1,1,,,,,,,,,,,,,,,,,,,,I
26,2,,172187-17380,,"BULB,T6.5-13.5V-2W",4,4,,,,,,,,,,,,,,,,
30,2,,172187-17470,,PLATE,1,1,,,,,,,,,,,,,,,,,,,,I
31,2,,172187-17480,,"BULB,T5-14V-2W",2,2,,,,,,,,,,,,,,,,
33,2,,172187-17560,,CAP,2,2,,,,,,,,,,,,,,,,
34,2,,172187-17570,,GASKET,2,2,,,,,,,,,,,,,,,,
35,1,,172458-46720,,"BOLT 8X20",1,1,,,,,,,,,,,,,,,,
36,1,,194151-57100,,HORN,1,1,,,,,,,,,,,,,,,,
37,1,,26776-180002,,"NUT M18,LOCK",2,2,,,,,,,,,,,,,,,,
38,1,,119802-77200,,"RELAY, SAFETY",1,1,,,,,,,,,,,,,,,,
39,1,,119650-77910,,"RELAY, GROW",2,2,,,,,,,,,,,,,,,,
42,1,,22137-060000,,"WASHER 6, POLISHED",9,9,,,,,,,,,,,,,,,,
43,1,,26013-060122,,"BOLT M 6X 12",4,4,,,,,,,,,,,,,,,,
44,1,,26013-060162,,"BOLT M 6X 16",2,2,,,,,,,,,,,,,,,,
45,1,,26013-060202,,"BOLT M 6X 20",1,1,,,,,,,,,,,,,,,,
46,1,,26013-060202,,"BOLT M 6X 20",2,2,,,,,,,,,,,,,,,,
47,1,,194464-52190,,"SWITCH, SAFETY START",2,2,,,,,,,,,,,,,,,,
48,1,,129211-77920,,TIMER,1,1,,,,,W,,72487123,M/#50676,,,,,,,,,,I
49,1,,172487-17700,,"BRACKET ASSY",1,1,,,,,W,,72487123,M/#50676,,,,,,,,,,I
50,1,,22137-060000,,"WASHER 6,
POLISHED",1,1,,,,,W,,72487123,M/#50676,,,,,,,,,,I
51,1,,26013-060162,,"BOLT M 6X 16",1,1,,,,,W,,72487123,M/#50676,,,,,,,,,,I
52,1,,172458-17171,,"KEY ASSY",1,,,,,,1,,,,,,,,,,,,I
54,3,,172458-17150,,HARNESS,1,,,,,,1,,,,,,,,,,,,I
55,3,,26022-050102,,"SCREW M 5X 10",5,,,,,,1,,,,,,,,,,,,I
56,2,,172458-17161,,PLATE,1,,,,,,1,,,,,,,,,,,,I
```

https://truckmanualshub.com/

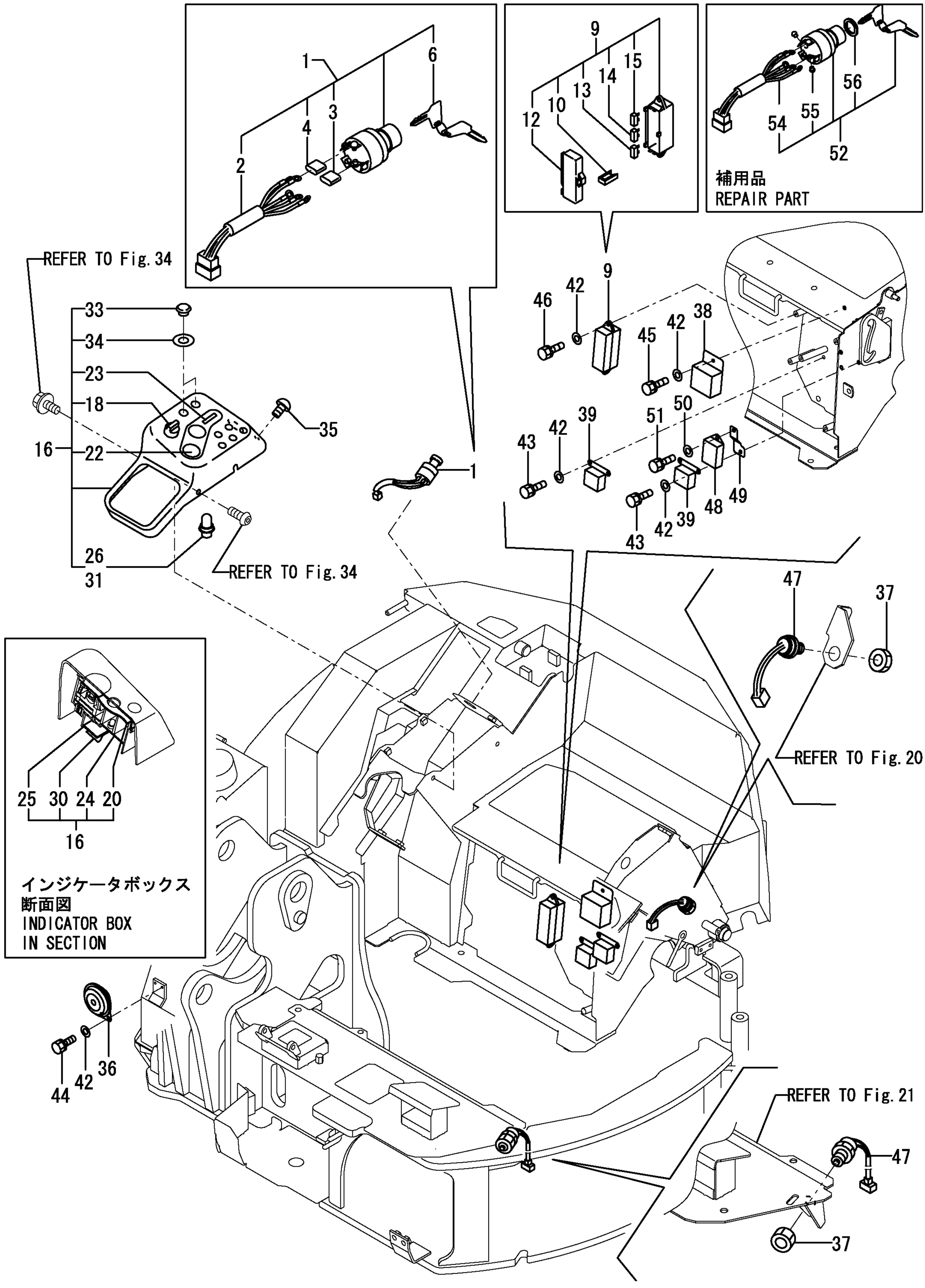

https://truckmanualshub.com/

```
1,1,,172487-17400,,"COVER,LAMP(GREEN:97)",1,1,,,,,,,,,,,,,,,,,
2,1,,172458-17450,,"LAMP,WORK",1,1,,,,,,,,,,,,,,,,,
3,2,,172187-17540,,"BULB (12V 55W",1,1,,,,,,,,,,,,,,,,,
4,1,,26013-080252,,"BOLT M 8X 25",4,4,,,,,,,,,,,,,,,,,
5,1,,172156-17401,,"LAMP, WORK",1,1,,,,,,,,,,,,,,,,,
6,2,,172156-17420,,"VALVE,12V27W",1,1,,,,,,,,,,,,,,,,,
7,1,,22137-080000,,"WASHER 8, POLISHED",1,1,,,,,,,,,,,,,,,,,
8,1,,26013-080202,,"BOLT W/WASHER M8X20",1,1,,,,,,,,,,,,,,,,,
9,1,,26716-080002,,"NUT M 8",1,1,,,,,,,,,,,,,,,,,
```

https://truckmanualshub.com/

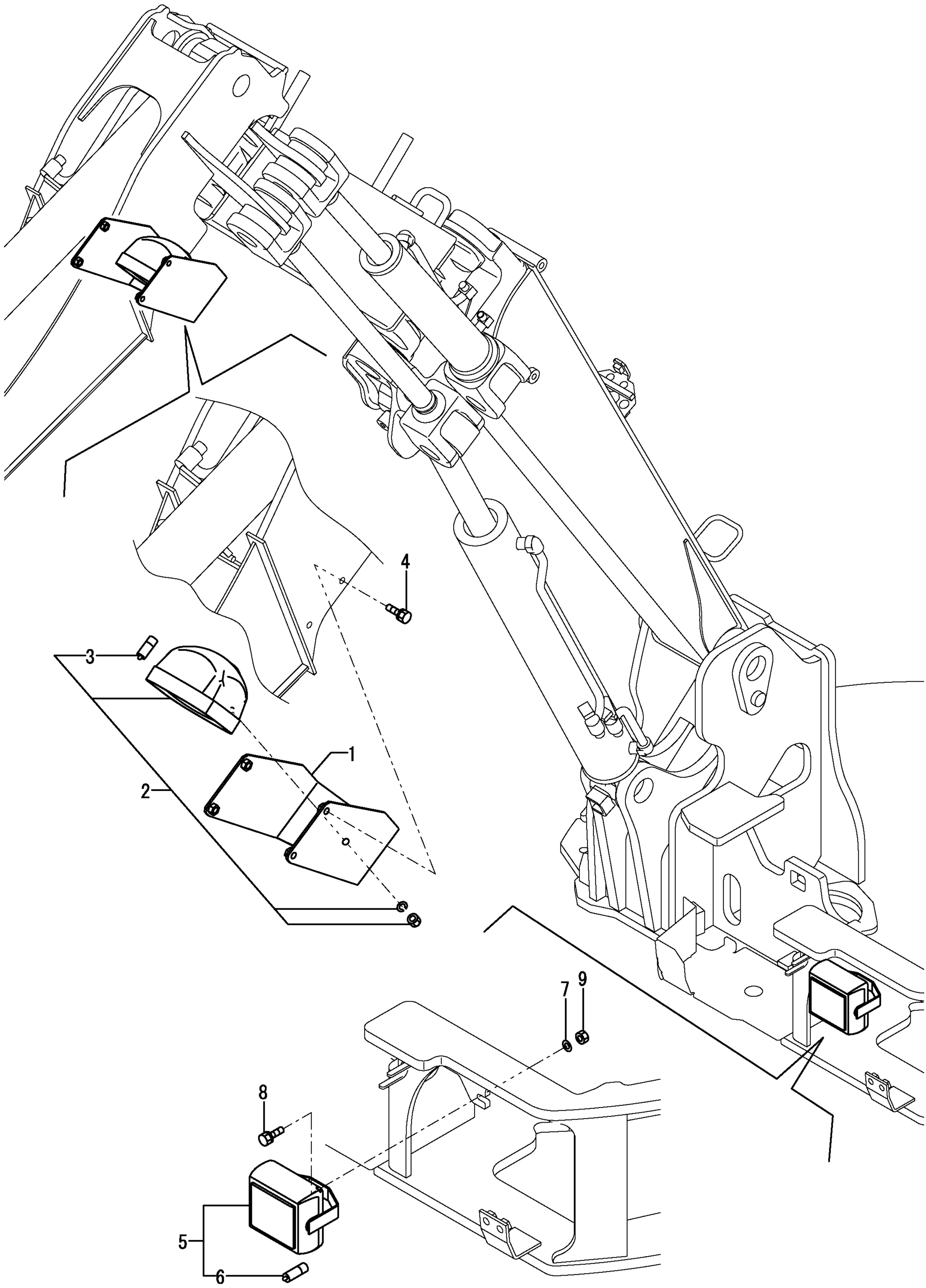

https://truckmanualshub.com/

```
1,1,,172173-29100,,"SPROCKET 23(GREEN:88",2,2,,,,,,,,,,,,,,,,
2,1,,26013-100252,,"BOLT W/WASHER M10X25",18,18,,,,,,,,,,,,,,,,
3,1,,772456-37301,,"TRACK ROLLER ASSY(88",8,8,,,,,,,,,,,,,,,,,,,,I
5,2,,172456-37320,,"SHAFT,ROLLER",8,8,,,,,,,,,,,,,,,,
6,2,,1E6140-73420,,"SEAL QLF255218, OIL",16,16,,,,,,,,,,,,,,,,
7,2,,22252-000520,,"CIRCLIP   52",16,16,,,,,,,,,,,,,,,,
8,2,,24101-062054,,"BEARING #6205",16,16,,,,,,,,,,,,,,,,
9,1,,26013-120252,,"BOLT M12X 25",16,16,,,,,,,,,,,,,,,,
10,1,,172110-36010,,COLLAR,4,4,,,,,,1,,,,,,,,,,
11,1,,172173-37500-1,,"PLATE,HOSE BAFFLE(88",2,2,,,,,,1,,,,,,,,,,
12,1,,172183-37510,,"COLLAR 11X16X13",4,4,,,,,,1,,,,,,,,,,
13,1,,172183-37520,,"COLLAR 16X24X13,RBBR",4,4,,,,,,1,,,,,,,,,,
14,1,,26013-100352,,"BOLT M10X 35",4,4,,,,,,1,,,,,,,,,,
15,1,,172456-37500,,"PLATE     (GREEN:88)",2,2,,,,,,2,,,,,,,,,,
16,1,,26013-100302,,"BOLT M10X 30",4,4,,,,,,2,,,,,,,,,,
```

https://truckmanualshub.com/

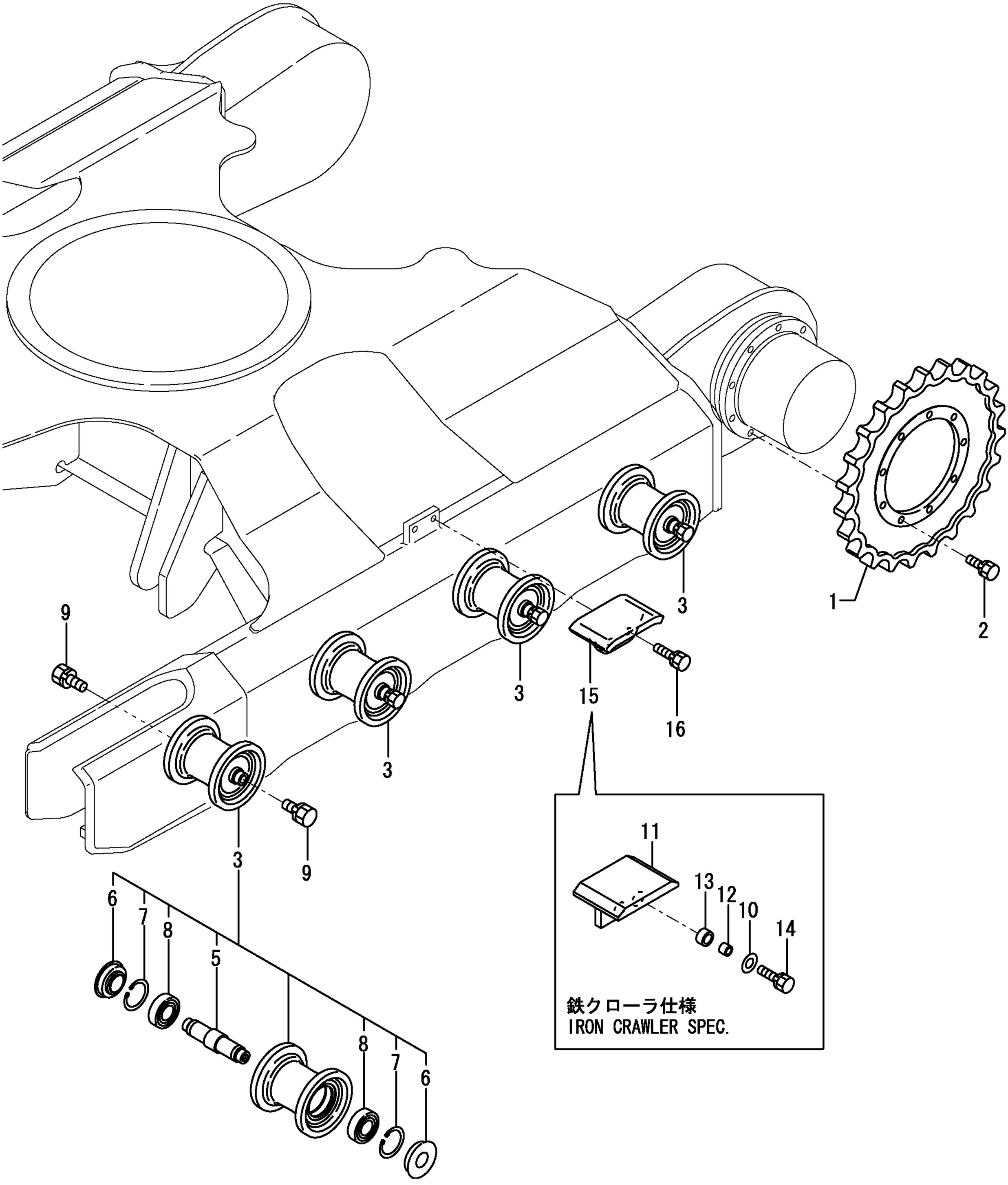

https://truckmanualshub.com/

```
1,1,,772456-37100,,"IDLER 285,RUBBER(88)",2,2,,,,,1,,,,,,,,,,
2,2,,172456-37100,,"IDLER 285 (GREEN:88)",2,2,,,,,,,,,,,,,,,
3,2,,172456-37120,,"SHAFT,IDLER",2,2,,,,,,,,,,,,,,,
4,2,,172456-37130,,"COVER L,IDLER SEAL",2,2,,,,,,,,,,,,,,,
5,2,,172141-37140,,"SEAL 357220",4,4,,,,,,,,,,,,,,,
6,2,,172456-37140,,"COVER R,IDLER SEAL",2,2,,,,,,,,,,,,,,,
7,2,,22242-000300,,"CIRCLIP   30",2,2,,,,,,,,,,,,,,,
8,2,,22252-000720,,"CIRCLIP   72",4,4,,,,,,,,,,,,,,,
9,2,,24101-062074,,"BALL BEARING",4,4,,,,,,,,,,,,,,,
10,1,,772456-37110,,"IDLER275ASY,IRON(88)",2,2,,,,,2,,,,,,,,,,
11,2,,172456-37110,,"IDLER 275 (GREEN:88)",2,2,,,,,,,,,,,,,,,
12,2,,172456-37120,,"SHAFT,IDLER",2,2,,,,,,,,,,,,,,,
13,2,,172456-37130,,"COVER L,IDLER SEAL",2,2,,,,,,,,,,,,,,,
14,2,,172141-37140,,"SEAL 357220",4,4,,,,,,,,,,,,,,,
15,2,,172456-37140,,"COVER R,IDLER SEAL",2,2,,,,,,,,,,,,,,,
16,2,,22242-000300,,"CIRCLIP   30",2,2,,,,,,,,,,,,,,,
17,2,,22252-000720,,"CIRCLIP   72",4,4,,,,,,,,,,,,,,,
18,2,,24101-062074,,"BALL BEARING",4,4,,,,,,,,,,,,,,,
19,1,,172456-37800,,"TUBE,ADJUST",2,,,,,,,,,,,,,,,,,
19-1,1,,172456-37801,,"TUBE ASSY,
ADJUST",2,2,,,,,S,,724560302,M/#55576,,,,,,,,,,I
20,1,,172122-37844,,"VALVE ASSY, NIPPLE",2,2,,,,,,,,,,,,,,,
21,2,,24315-000140,,"O-RING 1B P-14.0",2,2,,,,,,,,,,,,,,,
22,2,,24761-020000,,"NIPPLE PT1/8,GREASE",2,2,,,,,,,,,,,,,,,
23,1,,172137-37850,,"RING, BACK UP",2,2,,,,,,,,,,,,,,,
24,1,,172421-37851,,"SPRING, CRAWLER",2,2,,,,,,1,,,,,,,,,,
25,1,,24315-000300,,"O-RING 1B P-30.0",2,2,,,,,,,,,,,,,,,
26,1,,26013-100402,,"BOLT M10X 40",8,8,,,,,,,,,,,,,,,
27,1,,933126-38600,,"SEAL, DUST",2,2,,,,,,,,,,,,,,,
28,1,,933171-13691,,"PLUG PT1/8",2,2,,,,,,,,,,,,,,,
29,1,,172421-37701,,"SPRING, CRAWLER",2,2,,,,,,2,,,,,,,,,,
```

https://truckmanualshub.com/

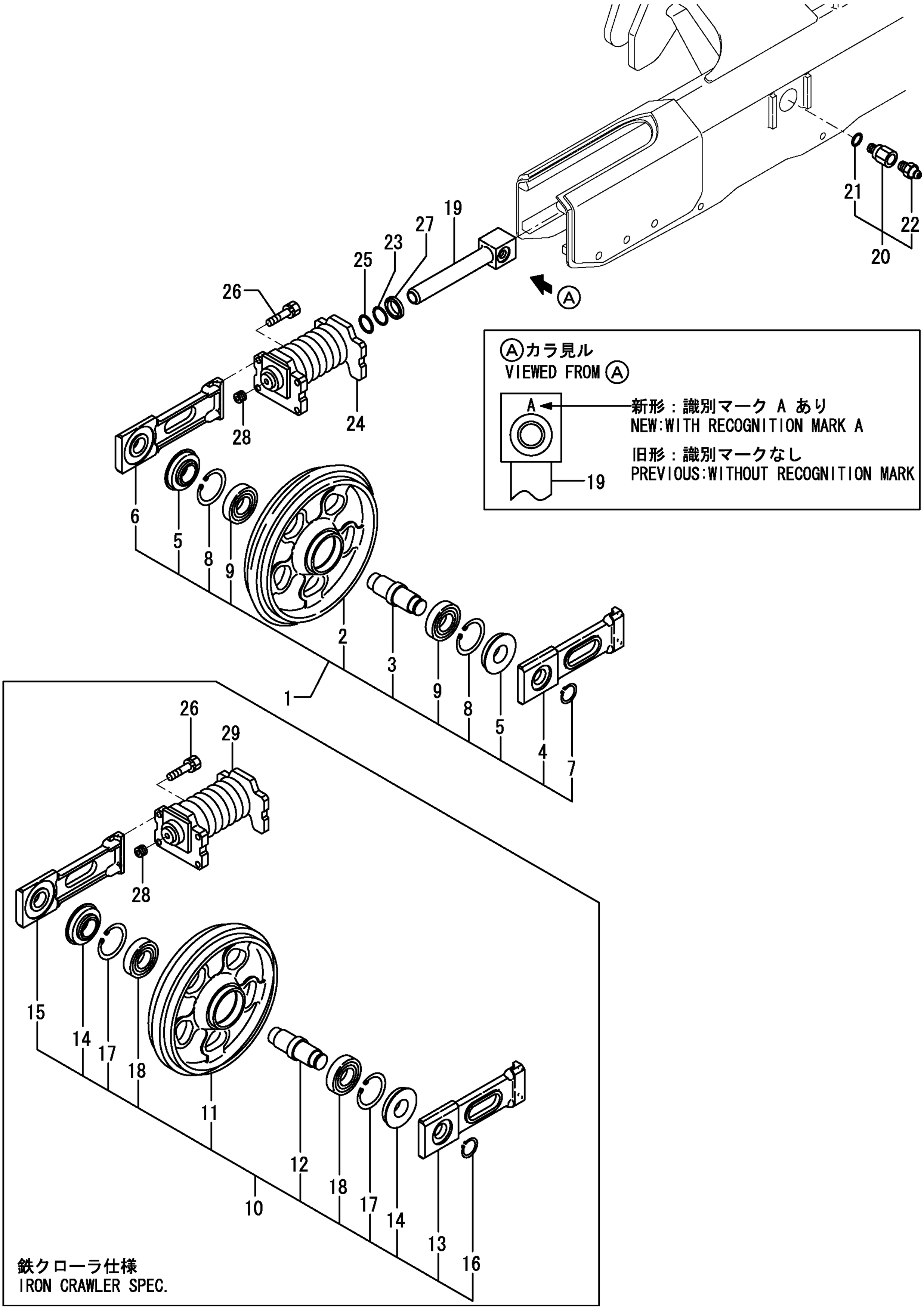

https://truckmanualshub.com/

```
1,1,,172456-38100,,"SHOE L,TRACK(GREEN88",1,1,,,,,1,,,,,,,,,,
2,2,,172421-38110,,"LINK,CRAWLER(GREEN88",1,1,,,,,,,,,,,,,,,
5,2,,172456-38110,,"PLATE,SHOE 250L (88)",44,44,,,,,,,,,,,,,,,,
6,2,,172173-38220,,"PIN,MASTER",1,1,,,,,,,,,,,,,,,
7,2,,172173-38300,,"PIN 4X22,LOCK",1,1,,,,,,,,,,,,,,,
8,1,,172456-38120,,"SHOE R,TRACK(GREEN88",1,1,,,,,,1,,,,,,,,,,
9,2,,172421-38110,,"LINK,CRAWLER(GREEN88",1,1,,,,,,,,,,,,,,,
12,2,,172456-38130,,"PLATE,SHOE 250R",44,44,,,,,,,,,,,,,,,,
13,2,,172173-38220,,"PIN,MASTER",1,1,,,,,,,,,,,,,,,
14,2,,172173-38300,,"PIN 4X22,LOCK",1,1,,,,,,,,,,,,,,,
15,1,,172421-38600,,"CRAWLER, RUBBER",2,2,,,,,,2,,,,,,,,,,
16,1,,172456-38300,,"TRUCK,MASTER 250L(88",1,1,,,,,,3,,,,,,,,,,,,I
17,2,,172173-38200,,"BUSH 22.15X43",1,1,,,,,,3,,,,,,,,,,,,I
18,1,,172456-38310,,"TRUCK,MASTER 250R(88",1,1,,,,,,3,,,,,,,,,,,,I
19,2,,172173-38200,,"BUSH 22.15X43",1,1,,,,,,3,,,,,,,,,,,,I
```

https://truckmanualshub.com/

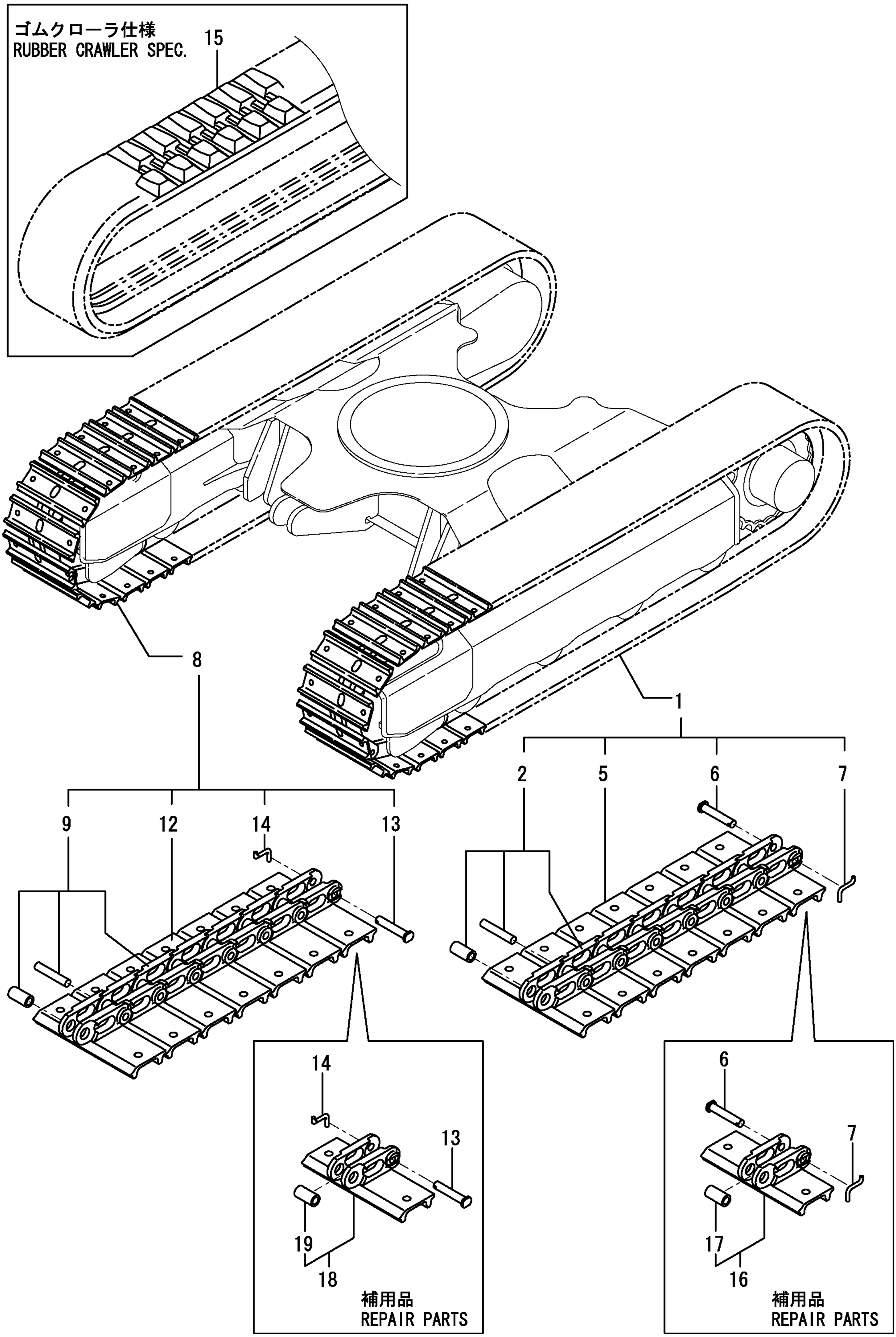

```
1,1,,1D4070-23580,,"GRIP,RED ROUND",1,1,,,,,,,,,,,,,,,,,
2,1,,172458-45850,,"GUIDE L,HOSE(GRAY:73",1,1,,,,,,,,,,,,,,,,,,
3,1,,172124-46200,,"O-RING 27X5.7",2,2,,,,,,,,,,,,,,,,,
4,1,,172458-46600,,"STAND L,LEVER(GRAY73",1,1,,,,,,,,,,,,,,,,,,
5,2,,172141-41370,,"BUSH 2015",2,2,,,,,,,,,,,,,,,,,
7,2,,24550-025150,,"BUSH 25X15",2,2,,,,,,,,,,,,,,,,,
8,1,,172162-46690,,SPRING,1,1,,,,,,,,,,,,,,,,,
9,1,,172455-46890,,"SPRING,GAS",1,1,,,,,,,,,,,,,,,,,
10,1,,172455-46950,,"BRACKET, SWITCH",1,1,,,,,,,,,,,,,,,,,
11,1,,172165-47550,,BUSH,1,1,,,,,,,,,,,,,,,,,
12,1,,172487-47620,,"LEVER L,LOCK(GRAY:72",1,1,,,,,,,,,,,,,,,,,,
13,1,,172458-47640,,"ROD,SPRING (GRAY:73)",1,1,,,,,,,,,,,,,,,,,,
14,1,,172165-47980,,"SHIM 42X25.5X0.5",2,2,,,,,,,,,,,,,,,,,
15,1,,172165-47990,,"WASHER 25.5X42",1,1,,,,,,,,,,,,,,,,,
16,1,,22137-080000,,"WASHER 8, POLISHED",2,2,,,,,,,,,,,,,,,,,
17,1,,22137-080000,,"WASHER 8, POLISHED",2,2,,,,,,,,,,,,,,,,,
18,1,,22242-000250,,"CIRCLIP 25S",1,1,,,,,,,,,,,,,,,,,
19,1,,22272-000070,,"CIRCLIP E- 7",1,1,,,,,,,,,,,,,,,,,
20,1,,22351-035040,,"SPRING PIN 3.5X40",1,1,,,,,,,,,,,,,,,,,
21,1,,22351-060040,,"SPRING PIN 6X40",1,1,,,,,,,,,,,,,,,,,
22,1,,24311-000340,,"O-RING 1A P-34.0",2,2,,,,,,,,,,,,,,,,,
23,1,,24761-050000,,"NIPPLE C,GREASE",2,2,,,,,,,,,,,,,,,,,
24,1,,26013-080162,,"BOLT W/WASHER M8X16",2,2,,,,,,,,,,,,,,,,,
25,1,,26013-080202,,"BOLT W/WASHER M8X20",2,2,,,,,,,,,,,,,,,,,
26,1,,22417-200200,,"COTTER PIN 2.0X20",2,2,,,,,,,,,,,,,,,,,
```

https://truckmanualshub.com/

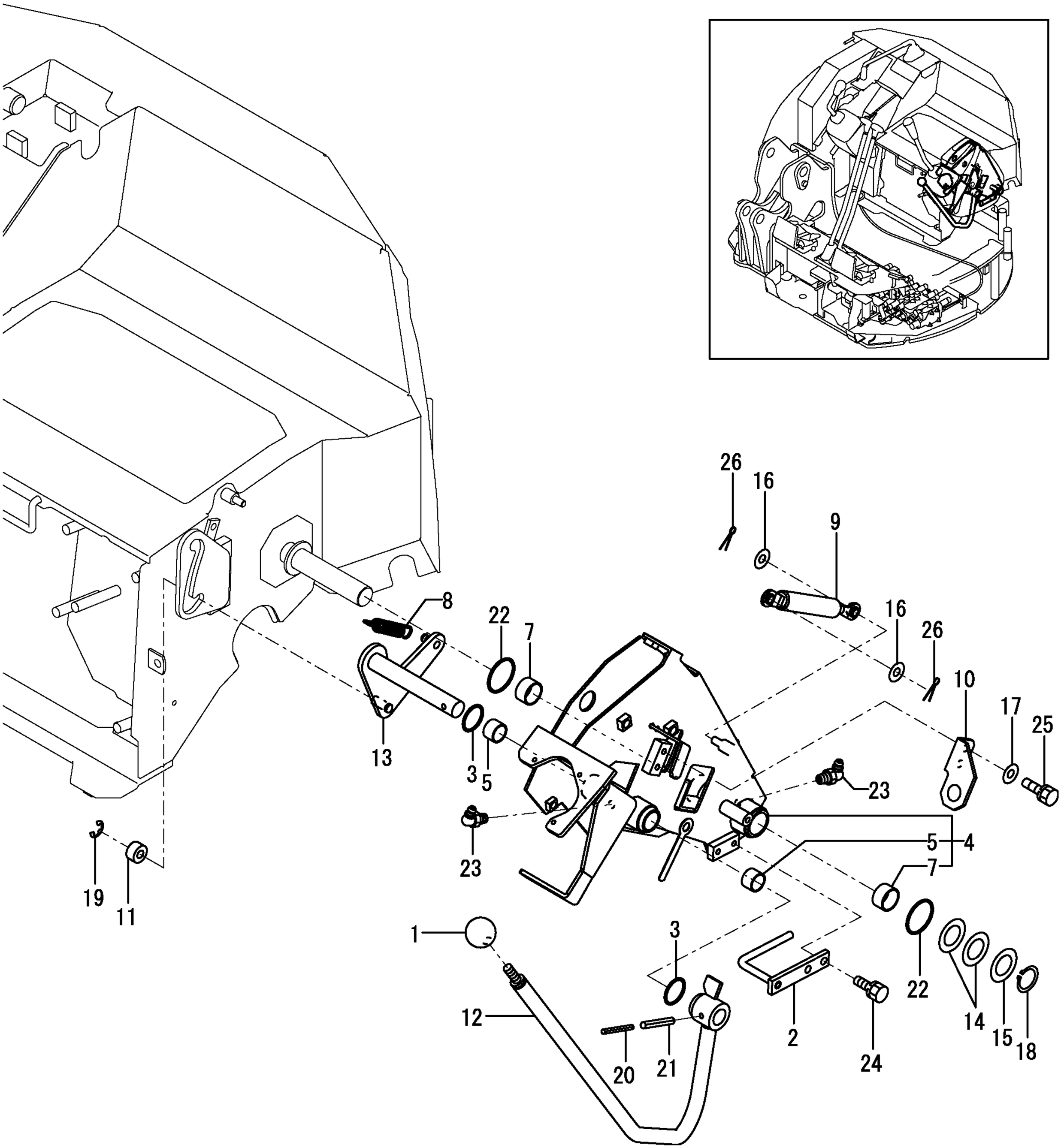

https://truckmanualshub.com/

```
1,1,,172141-41340,,BOOTS,2,2,,,,,,,,,,,,,,,,
2,1,,172487-45100,,"LEVER L,TRACK(GRAY72",1,,,,,,,,,,,,,,,,,,
2-1,1,,172487-45101,,"LEVER
L,TRACK(GRAY72",1,1,,,,,S,2,724870135,M/#55552,,,,,,,,,,,I
3,2,,172141-41370,,"BUSH 2015",2,2,,,,,,,,,,,,,,,,
5,1,,172487-45140,,"LEVER R,TRACK(GRAY72",1,,,,,,,,,,,,,,,,,,
5-1,1,,172487-45141,,"LEVER
R,TRACK(GRAY72",1,1,,,,,S,2,724870135,M/#55552,,,,,,,,,,,I
6,2,,172141-41370,,"BUSH 2015",2,2,,,,,,,,,,,,,,,,
8,1,,172164-45951,,"GRIP L, DRIV.",1,1,,,,,,,,,,,,,,,,
9,1,,172164-45961,,"GRIP R, DRIV.",1,1,,,,,,,,,,,,,,,,
10,1,,26116-100452,,"BOLT M10X 45 PLATED",2,2,,,,,,,,,,,,,,,,
11,1,,26116-100602,,"BOLT M10X 60 PLATED",2,2,,,,,,,,,,,,,,,,
12,1,,26716-100002,,"NUT 10",4,4,,,,,,,,,,,,,,,,
13,1,,26756-100002,,"LOCK NUT M10 PLATED",2,2,,,,,,,,,,,,,,,,
14,1,,172458-45660,,"BRACKET,TRUCK(GRAY72",1,,,,,,,,,,,,,,,,,,
14-1,1,,172472-45660,,"BRACKET ASSY
(TRUCK",1,1,,,,,N,2,72456284,M/#22514,,,,,,,,,,,I
15,1,,172124-46200,,"O-RING 27X5.7",3,3,,,,,,,,,,,,,,,,
16,1,,24761-020000,,"NIPPLE PT1/8,GREASE",2,,,,,,,,,,,,,,,,,,
16-1,1,,24761-020000,,"NIPPLE
PT1/8,GREASE",1,1,,,,,K,2,72456284,M/#22514,,,,,,,,,,,I
17,1,,26013-100252,,"BOLT W/WASHER M10X25",2,2,,,,,,,,,,,,,,,,
18,1,,172487-45400,,"LINK BASE (BRACK:12)",1,1,,,,,,,,,,,,,,,,
19,1,,172458-45510,,"BRACKET,BOOT(BLACK12",1,1,,,,,,,,,,,,,,,,
20,1,,172187-45760,,"COVER PAD",1,1,,,,,,,,,,,,,,,,
21,1,,172458-61500,,"RUBBER,SEAL 120",1,1,,,,,,,,,,,,,,,,
22,1,,172458-65390,,"RUBBER,SEAL 210",1,1,,,,,,,,,,,,,,,,
23,1,,22137-080000,,"WASHER 8, POLISHED",2,2,,,,,,,,,,,,,,,,
24,1,,26013-080162,,"BOLT W/WASHER M8X16",2,2,,,,,,,,,,,,,,,,
25,1,,26013-100202,,"BOLT W/WASHER M10X20",4,4,,,,,,,,,,,,,,,,
26,1,,172458-45250,,"ROD 91 ASSY",2,2,,,,,,,,,,,,,,,,
27,1,,172122-46590,,"ELBALL 8",2,2,,,,,,,,,,,,,,,,
28,1,,22117-080000,,"WASHER  8",2,2,,,,,,,,,,,,,,,,
29,1,,22417-160160,,"COTTER PIN 1.6X16",2,2,,,,,,,,,,,,,,,,
30,1,,26051-080002,,"NUT M 8",4,4,,,,,,,,,,,,,,,,
31,1,,933110-54100,,"PIN 4.75X14",2,2,,,,,,,,,,,,,,,,
32,1,,172487-45800,,"LINK BASE,PTO   (12)",1,1,,,,,,1,,,,,,,,,,
33,1,,24761-020000,,"NIPPLE PT1/8,GREASE",1,,,,,,,,,,,,,,,,,,,,,I
33-1,1,,24761-050000,,"NIPPLE
C,GREASE",1,1,,,,,S,2,72456284,M/#22514,,,,,,,,,,,I
```

https://truckmanualshub.com/

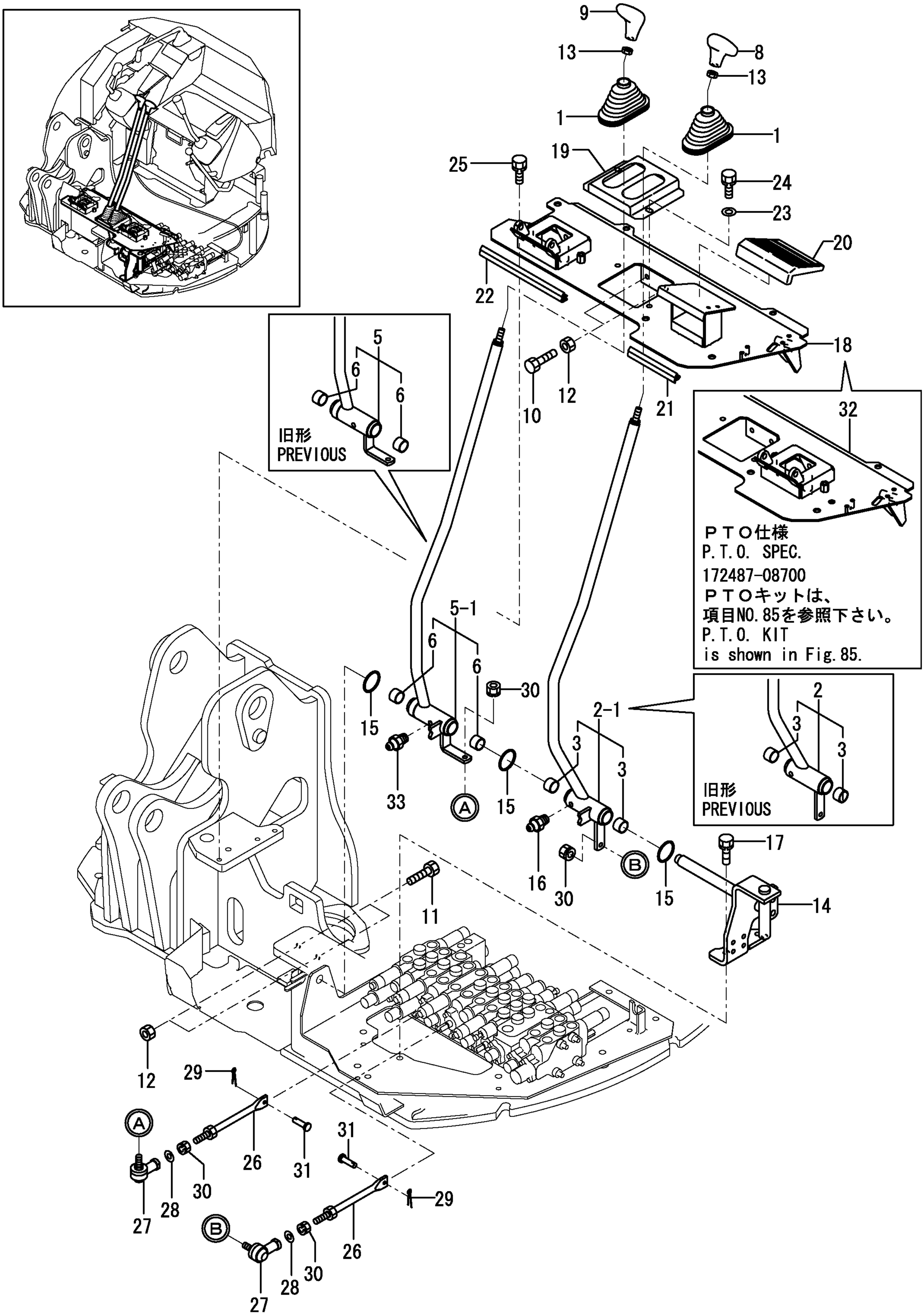

https://truckmanualshub.com/

```
1,1,,172151-45010,,"BOOT P,LEVER",2,2,,,,,,,,,,,,,,,,
2,1,,172458-45030,,"LEVER L    (GRAY:72)",1,1,,,,,,,,,,,,,,,,
3,1,,172458-45051,,"LEVER R(CAB(GRAY:72)",1,1,,,,,,,,,,,,,,,,
4,1,,172165-45071,,"KNOB (L) ASSY",1,1,,,,,,,,,,,,,,,,
5,1,,172165-47871,,"KNOB (A) ASSY",1,1,,,,,,,,,,,,,,,,
6,1,,26776-140002,,"LOCK NUT M14 PLATED",2,2,,,,,,,,,,,,,,,,
7,1,,933168-55770,,"BAND 146",2,2,,,,,,,,,,,,,,,,
8,1,,26587-040062,,"SCREW M 4X  6",2,2,,,,,,,,,,,,,,,,
9,1,,172458-46730,,"BOLT N6X30",6,6,,,,,,,,,,,,,,,,
10,1,,172455-46901,,"PLATE L, BOOTS",1,1,,,,,,,,,,,,,,,,
11,1,,172455-46941,,"PLATE R,BOOTS   (73)",1,1,,,,,,,,,,,,,,,,
12,1,,172190-45080,,"LEVER L CMP(DECEL",1,,,,,,,1,,,,,,,,,,,,I
13,1,,172176-47870,,KNOB,1,,,,,,,1,,,,,,,,,,,,I
14,1,,26587-040062,,"SCREW M 4X  6",2,,,,,,,1,,,,,,,,,,,,I
```

https://truckmanualshub.com/

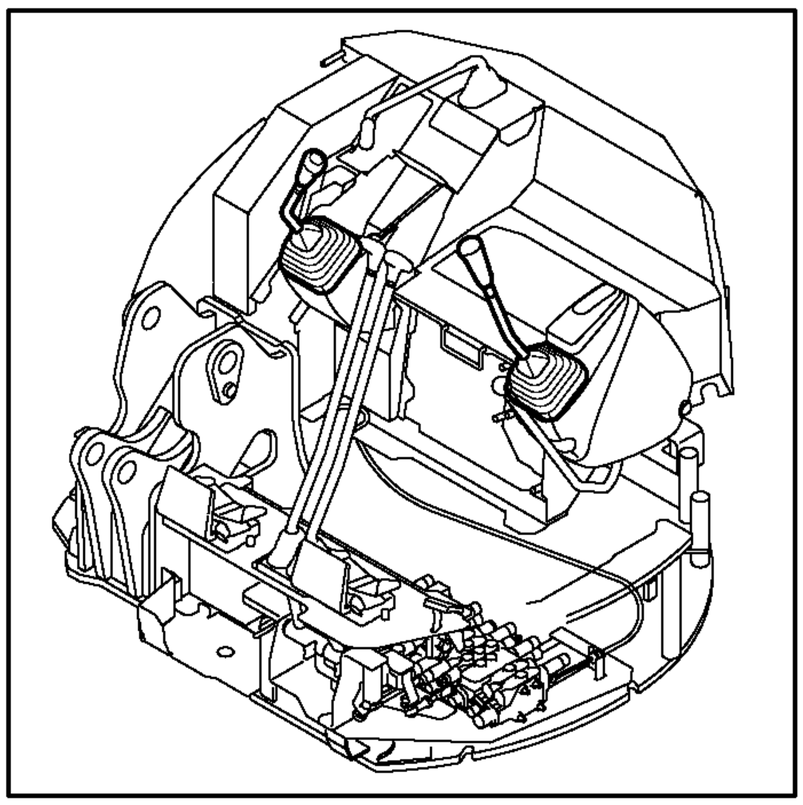

ワンタッチデセル仕様
ONE TOUCH DECEL SPEC.

172487-08200
ワンタッチデセルキットは、
項目NO.81を参照ください。
ONE TOUCH DECEL KIT
is shown in Fig.81.

REFER TO Fig.8

https://truckmanualshub.com/

```
1,1,,172964-12140,,GRIP(BLACK,1,1,,,,,,,,,,,,,,,,
2,1,,172141-41340,,BOOTS,1,1,,,,,,,,,,,,,,,,
3,1,,172487-45720,,"LEVER,BLADE(GRAY:72)",1,1,,,,,,,,,,,,,,,,
4,1,,172487-45750,,PLATE,1,1,,,,,,,,,,,,,,,,
5,1,,24311-000210,,"O-RING 1A P-21.0",2,2,,,,,,,,,,,,,,,,
6,1,,26051-100002,,"NUT M10",1,1,,,,,,,,,,,,,,,,
7,1,,26116-080302,,"BOLT 8X30",2,2,,,,,,,,,,,,,,,,
8,1,,26716-080002,,"NUT M 8",2,2,,,,,,,,,,,,,,,,
9,1,,172487-45850,,"CABEL,BLADE",1,1,,,,,,,,,,,,,,,,
10,2,,172458-45810,,"BALL JOINT",1,1,,,,,W,,72458523,M/#50501,,,,,,,,,,I
11,2,,26757-050002,,"NUT,  5",1,1,,,,,W,,72458523,M/#50501,,,,,,,,,,I
12,1,,22417-160160,,"COTTER PIN 1.6X16",1,1,,,,,,,,,,,,,,,,
13,1,,26051-080002,,"NUT M 8",1,1,,,,,,,,,,,,,,,,
14,1,,933110-54100,,"PIN 4.75X14",1,1,,,,,,,,,,,,,,,,
```

https://truckmanualshub.com/

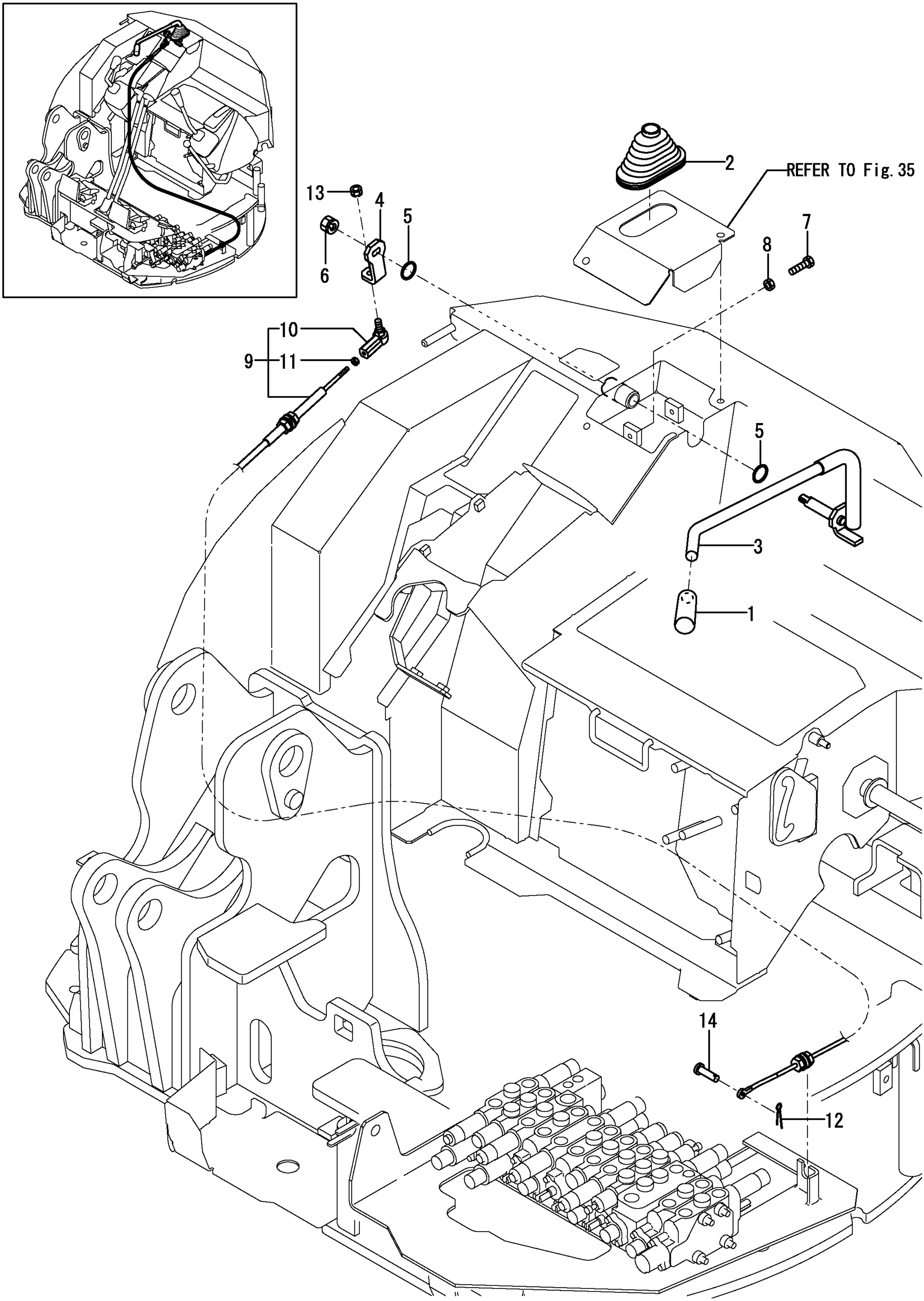

https://truckmanualshub.com/

```
1,1,,172458-45180,,"LINK,SWING (GRAY:72)",1,1,,,,,,,,,,,,,,,,,
2,2,,172141-41370,,"BUSH 2015",2,2,,,,,,,,,,,,,,,,,
4,1,,172458-45200,,"LINK,PEDAL (GRAY:72)",1,1,,,,,,,,,,,,,,,,,
5,2,,172141-41360,,"BUSH 1415",2,2,,,,,,,,,,,,,,,,,
7,1,,172458-45230,,"SHAFT,PEDAL(GRAY:72)",1,1,,,,,,,,,,,,,,,,,
8,1,,1A1040-45890,,"WASHER 10 36 4.5",1,1,,,,,,,,,,,,,,,,,
9,1,,172124-46200,,"O-RING 27X5.7",2,2,,,,,,,,,,,,,,,,,
10,1,,22217-100000,,"SPRING WASHER 10",1,1,,,,,,,,,,,,,,,,,
11,1,,24311-000210,,"O-RING 1A P-21.0",2,2,,,,,,,,,,,,,,,,,
12,1,,24761-020000,,"NIPPLE PT1/8,GREASE",1,1,,,,,,,,,,,,,,,,,
13,1,,24761-040000,,"NIPPLE B,GREASE",1,1,,,,,,,,,,,,,,,,,
14,1,,26013-080162,,"BOLT W/WASHER M8X16",2,2,,,,,,,,,,,,,,,,,
15,1,,26116-080254,,"BOLT M 8X 25 PLATED",2,2,,,,,,,,,,,,,,,,,
16,1,,26116-100202,,"BOLT M10X 20 PLATED",1,1,,,,,,,,,,,,,,,,,
17,1,,26716-080002,,"NUT M 8",2,2,,,,,,,,,,,,,,,,,
18,1,,172458-45521,,"PEDAL,SWING(GRAY:72)",1,1,,,,,,,,,,,,,,,,,,
19,1,,172458-45540,,"COVER,PEDAL(GRAY:72)",1,1,,,,,,,,,,,,,,,,,,
20,1,,172187-45650,,"SHAFT, PEDAL COVER",1,,,,,,,,,,,,,,,,,,
20-1,1,,172187-45651,,"SHAFT, PEDAL
COVER",1,1,,,,,R,,72458521,M/#50567,,,,,,,,,,,I
21,1,,172187-45760,,"COVER PAD",1,1,,,,,,,,,,,,,,,,,
22,1,,172157-45990,,"BOOTS, PEDAL",1,1,,,,,,,,,,,,,,,,,
23,1,,172165-46340,,BOLT,2,2,,,,,,,,,,,,,,,,,
24,1,,22137-100000,,"WASHER 10,POLISHED",2,,,,,,,,,,,,,,,,,,
24-1,1,,22137-100000,,"WASHER
10,POLISHED",1,1,,,,,K,,72458521,M/#50567,,,,,,,,,,,I
25,1,,22417-250200,,"COTTER PIN 2.5X20",2,,,,,,,,,,,,,,,,,,
25-1,1,,22417-250200,,"COTTER PIN
2.5X20",1,1,,,,,K,,72458521,M/#50567,,,,,,,,,,,I
26,1,,194200-37780,,"LS-NUT 8",1,1,,,,,,,,,,,,,,,,,
27,1,,172734-41300,,"LINK BALL 8L",1,1,,,,,,,,,,,,,,,,,
28,1,,172147-45640,,"ROD, LINK 360",1,1,,,,,,,,,,,,,,,,,
29,1,,172823-45940,,"ROD 130 COMP.",1,1,,,,,,,,,,,,,,,,,
30,1,,172122-46590,,"ELBALL 8",2,2,,,,,,,,,,,,,,,,,
31,1,,22117-080000,,"WASHER  8",3,3,,,,,,,,,,,,,,,,,
32,1,,22417-160160,,"COTTER PIN 1.6X16",1,1,,,,,,,,,,,,,,,,,,
33,1,,26051-080002,,"NUT M 8",5,5,,,,,,,,,,,,,,,,,
34,1,,933110-54100,,"PIN 4.75X14",1,1,,,,,,,,,,,,,,,,,
```

https://truckmanualshub.com/

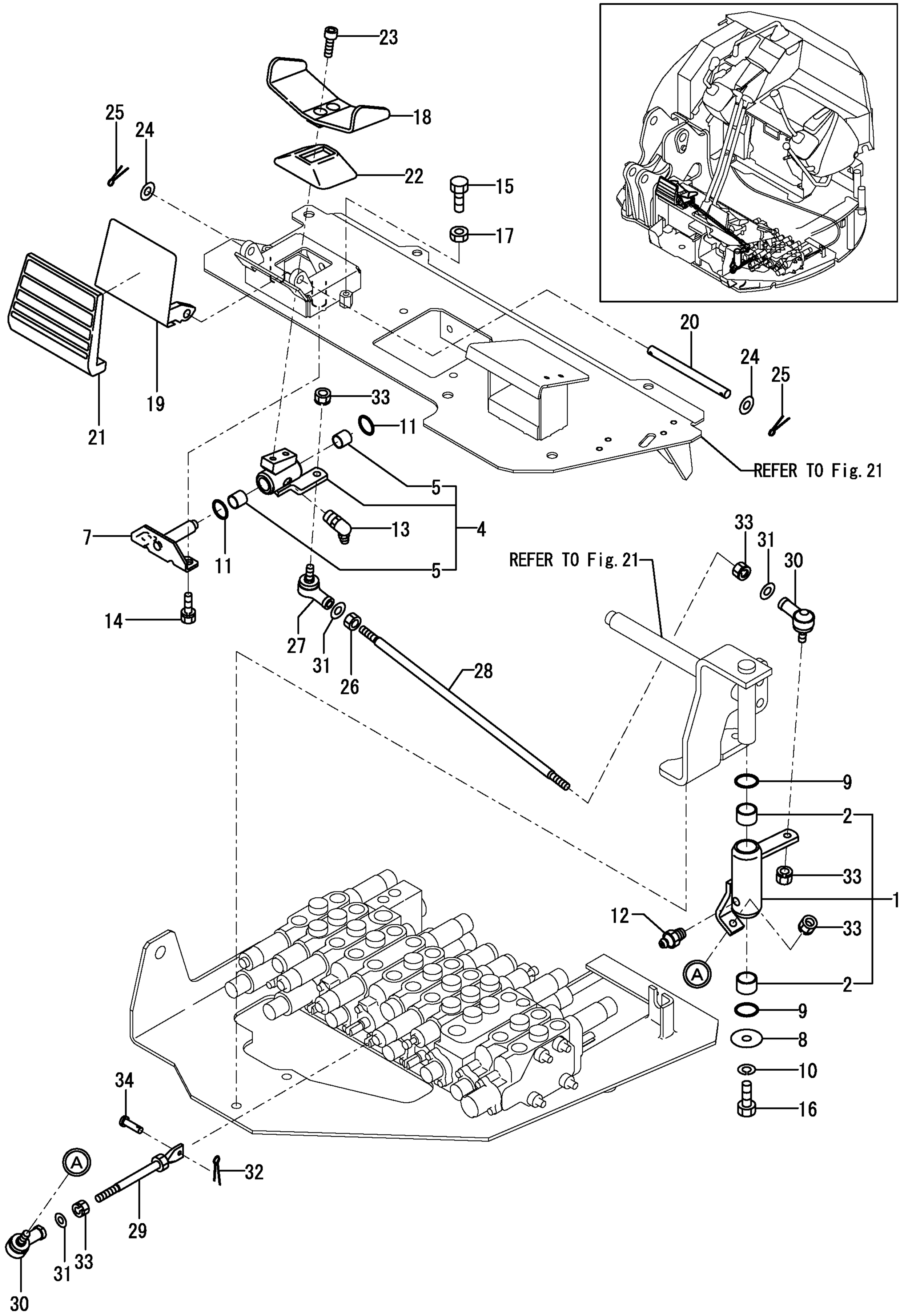

https://truckmanualshub.com/

```
1,1,,172162-12480,,"SPRING,RETURN",1,1,,,,,,,,,,,,,,,,
2,1,,1A1040-43900,,"SPRING WASHER",1,1,,,,,,,,,,,,,,,,
3,1,,172472-45900,,"PEDAL,LO-HI(GRAY:72)",1,,,,,,,,,,,,,,,,,,
3-1,1,,172487-45900,,"PEDAL,LO-
HI(GRAY:72)",1,1,,,,,N,,72487124,M/#50770,,,,,,,,,,I
4,1,,172458-45920,,"BRACKET,PEDAL(GRAY72",1,1,,,,,,,,,,,,,,,,,,
5,2,,172141-41360,,"BUSH 1415",2,2,,,,,,,,,,,,,,,,
7,1,,172458-45950,,"PAD,PEDAL",1,1,,,,,,,,,,,,,,,,
8,1,,24311-000210,,"O-RING 1A P-21.0",2,2,,,,,,,,,,,,,,,,
9,1,,26013-080162,,"BOLT W/WASHER M8X16",2,2,,,,,,,,,,,,,,,,
10,1,,26013-080202,,"BOLT W/WASHER M8X20",1,1,,,,,,,,,,,,,,,,
```

https://truckmanualshub.com/

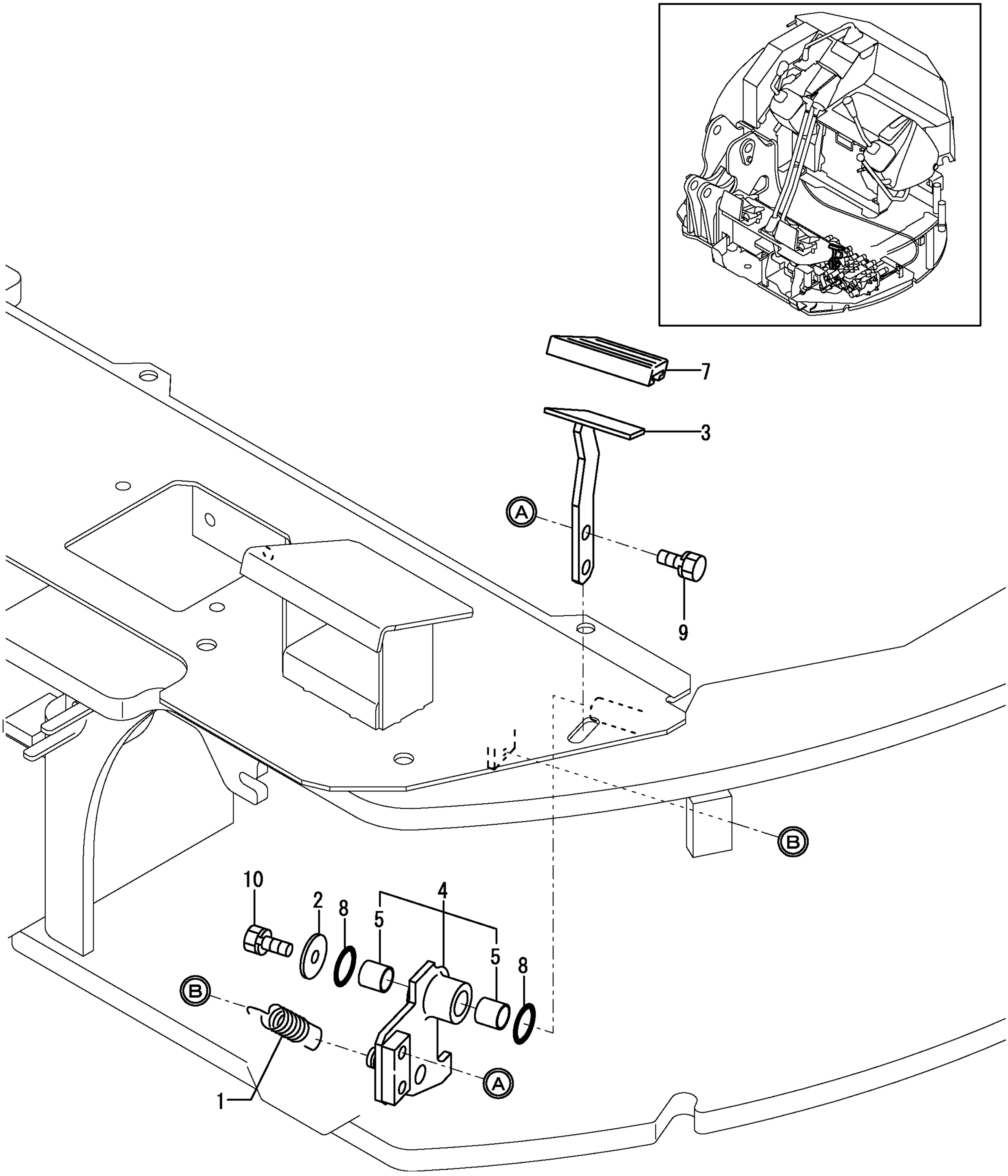

https://truckmanualshub.com/

```
1,1,,172068-28490,,"SPRING  8",2,2,,,,,,,,,,,,,,,
2,1,,172458-45521,,"PEDAL,SWING(GRAY:72)",1,1,,,,,,,,,,,,,,,
3,1,,172458-45540,,"COVER,PEDAL(GRAY:72)",1,1,,,,,,,,,,,,,,,
4,1,,172187-45650,,"SHAFT, PEDAL COVER",1,,,,,,,,,,,,,,,,,
4-1,1,,172187-45651,,"SHAFT, PEDAL
COVER",1,1,,,,R,,72458521,M/#50567,,,,,,,,,,I
5,1,,172187-45760,,"COVER PAD",1,1,,,,,,,,,,,,,,,,,
6,1,,172448-45800,,"PLATE,LOCK(PTO  (11)",1,1,,,,,,,,,,,,,,,,,
7,1,,172157-45990,,"BOOTS, PEDAL",1,1,,,,,,,,,,,,,,,,,
8,1,,172462-46230,,"BOLT 8X10",1,1,,,,,,,,,,,,,,,,,
9,1,,172165-46340,,BOLT,2,2,,,,,,,,,,,,,,,,,
10,1,,22137-080000,,"WASHER 8, POLISHED",1,1,,,,,,,,,,,,,,,,,
11,1,,22137-100000,,"WASHER 10,POLISHED",2,,,,,,,,,,,,,,,,,,
11-1,1,,22137-100000,,"WASHER
10,POLISHED",1,1,,,,,K,,72458521,M/#50567,,,,,,,,,,I
12,1,,22417-250200,,"COTTER PIN 2.5X20",2,,,,,,,,,,,,,,,,,,
12-1,1,,22417-250200,,"COTTER PIN
2.5X20",1,1,,,,,K,,72458521,M/#50567,,,,,,,,,,I
13,1,,26116-080254,,"BOLT M 8X 25 PLATED",2,2,,,,,,,,,,,,,,,,,
14,1,,26347-080002,,"U-NUT,  8",1,1,,,,,,,,,,,,,,,,,
15,1,,26716-080002,,"NUT M 8",2,2,,,,,,,,,,,,,,,,,
16,1,,26757-100002,,"NUT, 10",1,1,,,,,,,,,,,,,,,,,
17,1,,194200-37780,,"LS-NUT 8",1,1,,,,,,,,,,,,,,,,,
18,1,,172734-41300,,"LINK BALL 8L",1,1,,,,,,,,,,,,,,,,,
19,1,,172732-42450,,ROD,1,1,,,,,,,,,,,,,,,,,
20,1,,172823-45000,,"ROD 54, SPOOL",1,1,,,,,,,,,,,,,,,,,
21,1,,172487-45220,,"LINK,P.T.O.(GLAY:72)",1,1,,,,,,,,,,,,,,,,,
22,2,,172141-41360,,"BUSH 1415",2,2,,,,,,,,,,,,,,,,,
24,1,,172458-45230,,"SHAFT,PEDAL(GRAY:72)",1,1,,,,,,,,,,,,,,,,,
25,1,,172472-45300,,"LINK A,P.T.O.(GRAY72",1,1,,,,,,,,,,,,,,,,,
26,2,,172141-41370,,"BUSH 2015",2,2,,,,,,,,,,,,,,,,,
28,1,,1A1040-45890,,"WASHER 10 36 4.5",1,1,,,,,,,,,,,,,,,,,
29,1,,172458-46150,,"BRACKET,P.T.O.  (72)",1,1,,,,,,,,,,,,,,,,,
30,1,,172124-46200,,"O-RING 27X5.7",2,2,,,,,,,,,,,,,,,,,
31,1,,172122-46590,,"ELBALL 8",2,2,,,,,,,,,,,,,,,,,
32,1,,22117-080000,,"WASHER  8",3,3,,,,,,,,,,,,,,,,,
33,1,,22217-100000,,"SPRING WASHER 10",1,1,,,,,,,,,,,,,,,,,
34,1,,22417-160160,,"COTTER PIN 1.6X16",1,1,,,,,,,,,,,,,,,,,
35,1,,24311-000210,,"O-RING 1A P-21.0",2,2,,,,,,,,,,,,,,,,,
36,1,,24761-040000,,"NIPPLE B,GREASE",1,1,,,,,,,,,,,,,,,,,
37,1,,24761-050000,,"NIPPLE C,GREASE",1,1,,,,,,,,,,,,,,,,,
38,1,,26013-080162,,"BOLT W/WASHER M8X16",2,2,,,,,,,,,,,,,,,,,
39,1,,26013-100202,,"BOLT W/WASHER M10X20",2,2,,,,,,,,,,,,,,,,,
40,1,,26051-080002,,"NUT M 8",5,5,,,,,,,,,,,,,,,,,
41,1,,26116-100202,,"BOLT M10X 20 PLATED",1,1,,,,,,,,,,,,,,,,,
42,1,,933110-54100,,"PIN 4.75X14",1,1,,,,,,,,,,,,,,,,,
43,1,,172458-03240,,"LABEL,LOCK",1,1,,,,,W,,72487114,M/#50501,,,,,,,,,,I
44,1,,172496-03250,,"LABEL, P.T.O.",1,1,,,,,,,,,,,,,,,,,,,,,I
```

https://truckmanualshub.com/

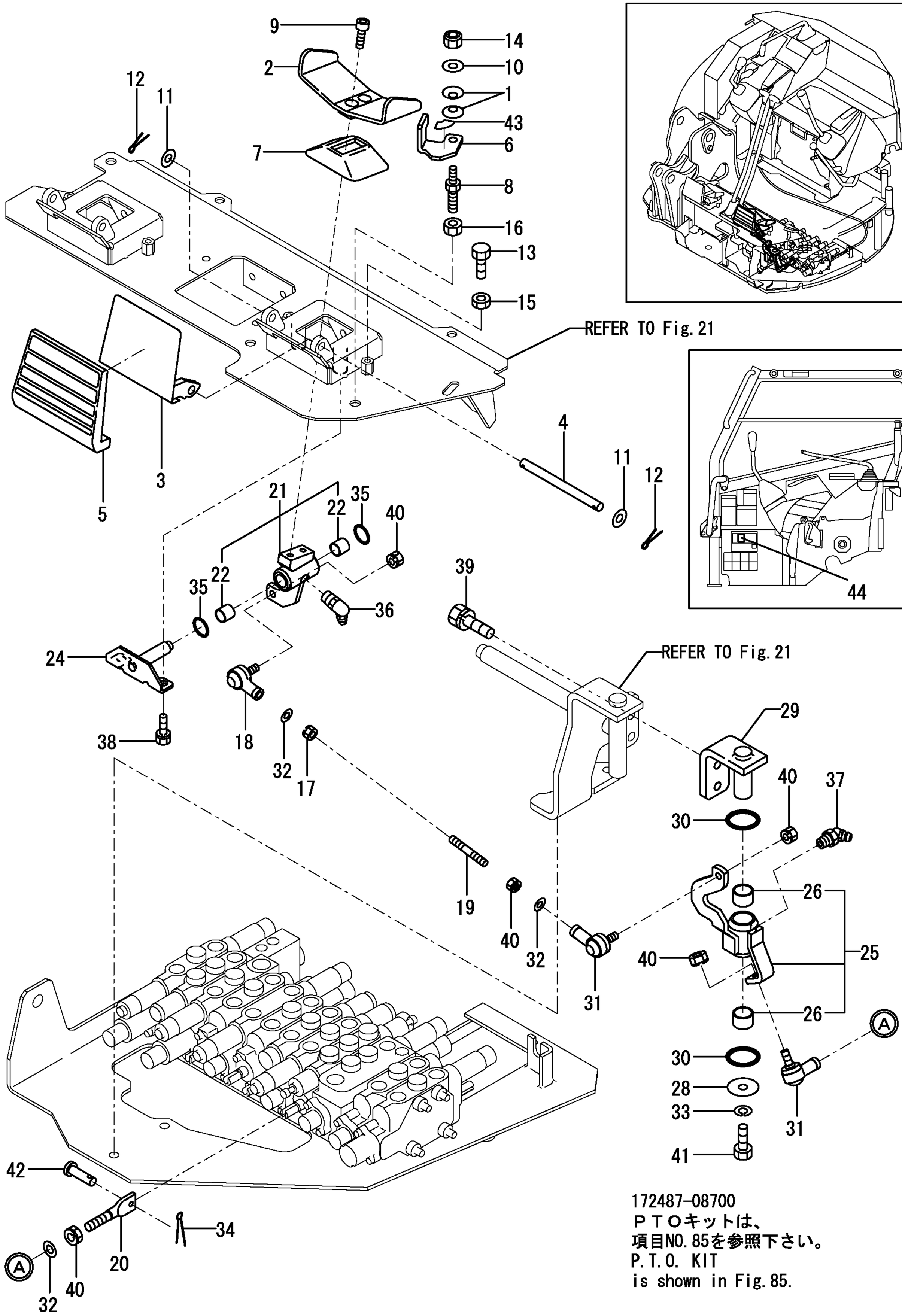

172487-08700
ＰＴＯキットは、
項目NO.85を参照下さい。
P.T.O. KIT
is shown in Fig.85.

https://truckmanualshub.com/

```
1,1,,172487-45600,,"PLATE,VALVE(GRAY:72)",1,1,,,,,,,,,,,,,,,,,
2,1,,26013-100402,,"BOLT M10X 40",5,5,,,,,,,,,,,,,,,,,
3,1,,172487-74200,,"BRACKET,MULTI",1,,,,,,,1,,,,,,,,,,,
4,1,,26013-100202,,"BOLT W/WASHER M10X20",3,,,,,,,1,,,,,,,,,,,
5,1,,26013-100352,,"BOLT M10X 35",1,,,,,,,1,,,,,,,,,,,
```

https://truckmanualshub.com/

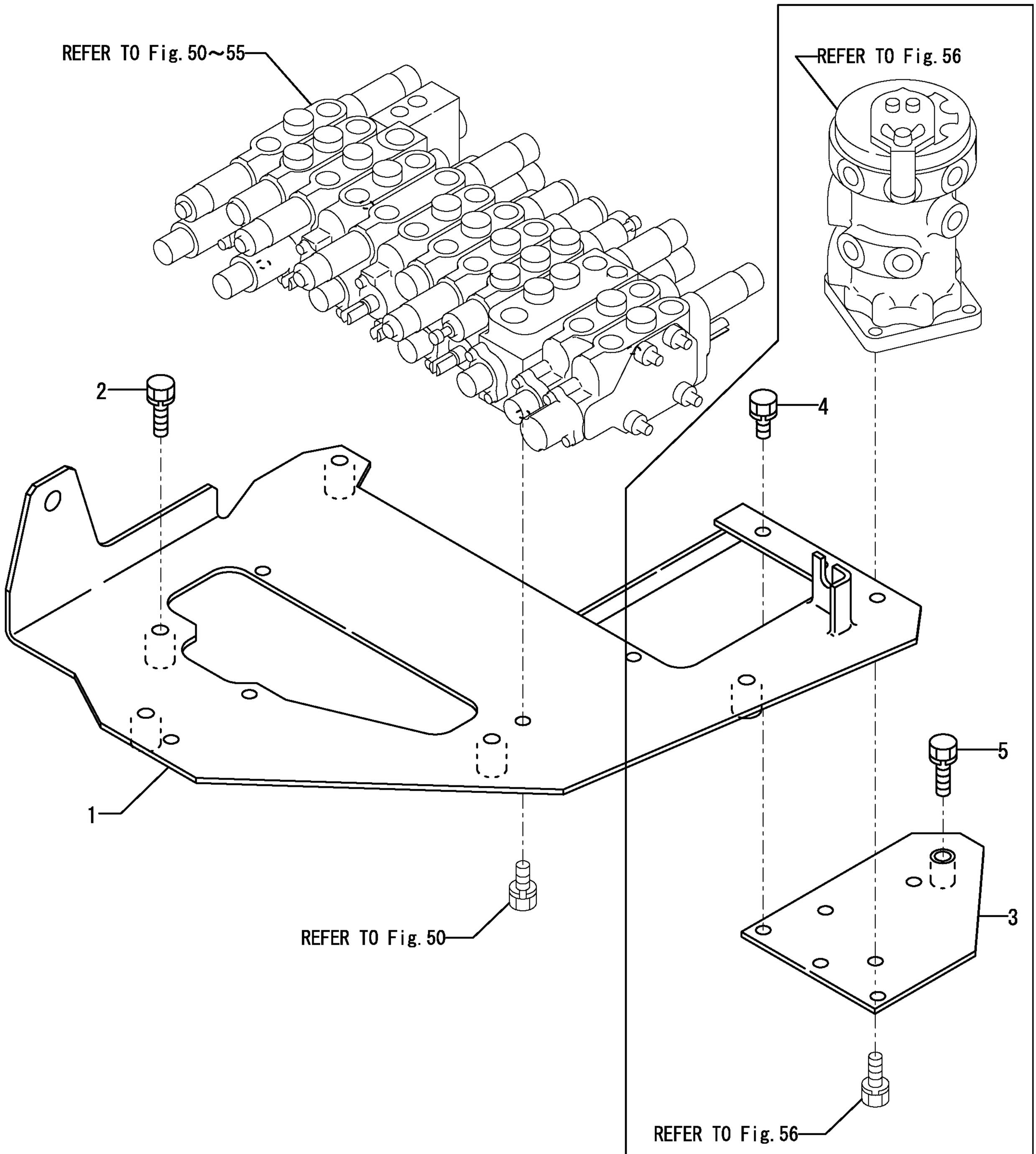

172487-08510
４ウェイマルチバルブキットは、
項目NO.82を参照下さい。
4-WAY MULTI VALVE KIT
is shown in Fig.82.

４ウェイマルチ仕様
4-WAY MULTI SPEC.

https://truckmanualshub.com/

```
1,1,,172487-53300,,"WEIGHT,COUNTER  (88)",1,1,,,,,,,,,,,,,,,,
3,2,,172487-53320,,"SEAL A",1,1,,,,,,,,,,,,,,,,
4,2,,172487-53330,,"SEAL B",1,1,,,,,,,,,,,,,,,,
5,2,,172458-53370,,"SEAL,COUNTER",2,2,,,,,,,,,,,,,,,,
6,1,,172458-53330,,"BRACKET ASSY",2,2,,,,,,,,,,,,,,,,
7,1,,172487-53350,,"WEIGHT L  (GREEN:88)",1,1,,,,,,,,,,,,,,,,
9,2,,172487-53370,,"SEAL C",1,1,,,,,,,,,,,,,,,,
10,1,,172487-53400,,"WEIGHT R  (GREEN:88)",1,1,,,,,,,,,,,,,,,,
12,2,,172487-53420,,"SEAL D",1,1,,,,,,,,,,,,,,,,
13,1,,172151-53430,,GROMMET,4,,,,,,,,,,,,,,,,
13-1,1,,172456-53700,,"GROMMET 30",4,4,,,,N,,72456276,M/#50770,,,,,,,,,,I
14,1,,172165-53480,,"BOLT M16X 60",2,2,,,,,,,,,,,,,,,,
15,1,,172165-53500,,WASHER,10,10,,,,,,,,,,,,,,,,
16,1,,22217-160000,,"SPRING WASHER 16",8,8,,,,,,,,,,,,,,,,
17,1,,26116-160452,,"BOLT M16X 45 PLATED",4,4,,,,,,,,,,,,,,,,
18,1,,26116-160652,,"BOLT M16X 65 PLATED",4,4,,,,,,,,,,,,,,,,
19,1,,172165-18940,,SEAL,1,1,,,,,,,,,,,,,,,,
20,1,,172487-54100,,"FRAME,TURNING   (97)",1,1,,,,,,,,,,,,,,,,
21,1,,172487-54750,,"SEAL 740",1,1,,,,,,,,,,,,,,,,
22,1,,172487-54760,,"SEAL A",1,1,,,,,,,,,,,,,,,,
23,1,,172487-54770,,"SEAL B",1,1,,,,,,,,,,,,,,,,
24,1,,172165-53500,,WASHER,4,4,,,,,,,,,,,,,,,,
25,1,,172487-67210,,"MOUNT,CANOPY(GRAY:73",1,1,,,,,,,,,,,,,,,,
26,1,,22217-160000,,"SPRING WASHER 16",4,4,,,,,,,,,,,,,,,,
27,1,,26116-160452,,"BOLT M16X 45 PLATED",4,4,,,,,,,,,,,,,,,,
```

https://truckmanualshub.com/

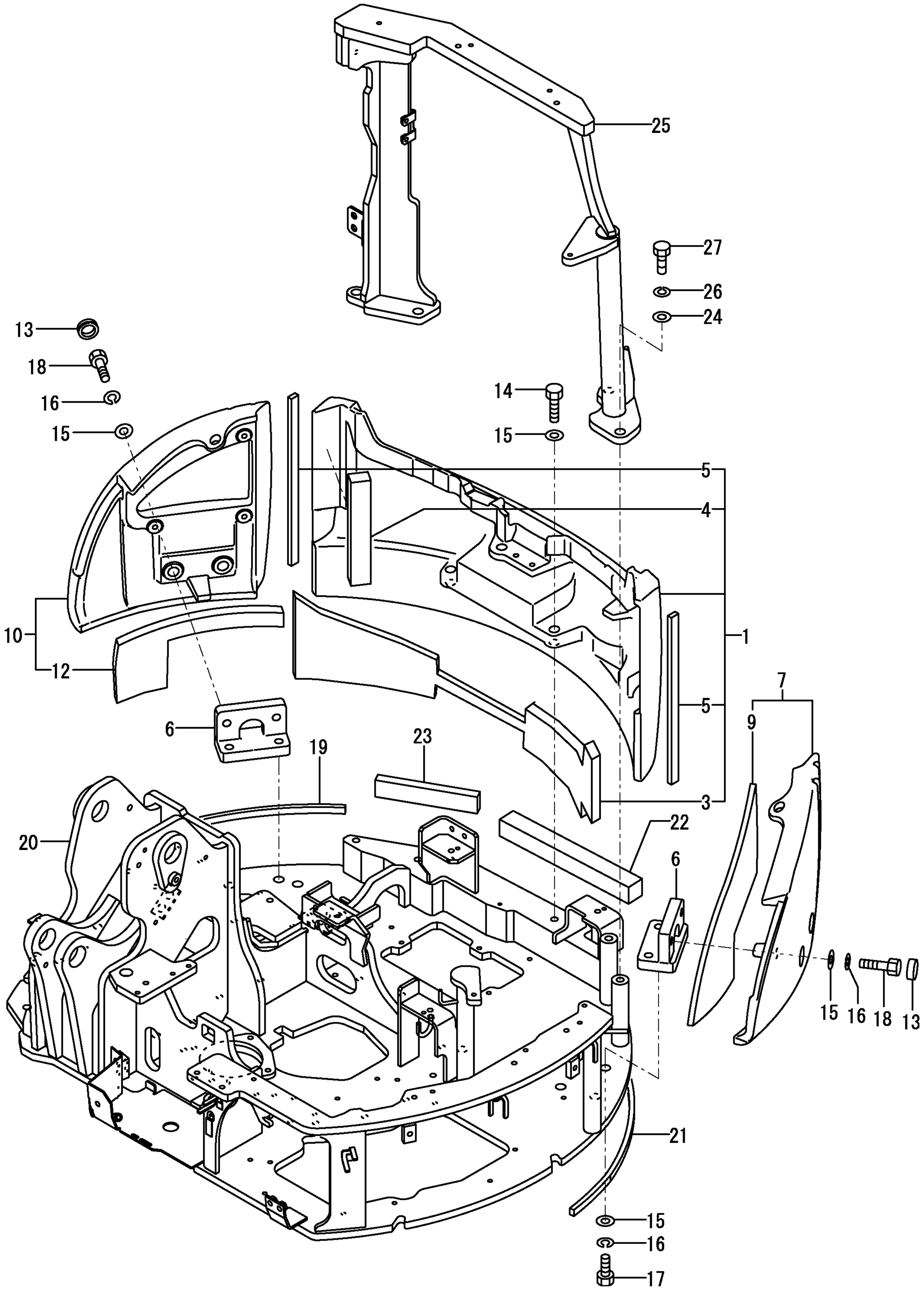

https://truckmanualshub.com/

```
1,1,,172456-50101,,"FRAME,LOWER(GREEN:88",1,,,,,,,,,,,,,,,,,,
1-1,1,,172456-
50102,,"FRAME,LOWER(GREEN:88",1,1,,,,,F,2,72456283,M/#55501,,,,,,,,,,,I
2,1,,172141-50890,,GROMMET,2,,,,,,,,,,,,,,,,,,
2-1,1,,172458-
50480,,"COVER,FRAME(GREEN:88",2,2,,,,,S,2,72456283,M/#55501,,,,,,,,,,,I
3,1,,172730-05250,,"WASHER 12",12,12,,,,,,1,,,,,,,,,,,
4,1,,172456-50800,,"GUARD L,SHOE(GREEN88",2,2,,,,,,1,,,,,,,,,,,
5,1,,172456-50830,,"GUARD R,HHOE(GREEN88",2,2,,,,,,1,,,,,,,,,,,
6,1,,26013-120352,,"BOLT M12X 35",12,12,,,,,,1,,,,,,,,,,,
7,1,,194940-24350,,"PIN 10X28,STRAIGHT",3,3,,,,,,,,,,,,,,,,,
8,1,,172456-57600,,"BEARING,TURNING",1,1,,,,,,,,,,,,,,,,,
9,2,,172183-57620,,"SEAL A,TURNING",1,1,,,,,,,,,,,,,,,,,
10,2,,172183-57630,,"SEAL B,TURNING",1,1,,,,,,,,,,,,,,,,,
11,1,,172141-57650,,"BOLT M12X 55 PLATED",32,32,,,,,,,,,,,,,,,,,,
12,1,,26107-100162,,"BOLT M10X 16
PLATED",4,,,,,,W,2,72456283,M/#55501,,,,,,,,,,,I
12-1,1,,26106-100122,,"BOLT M10X 12
PLATED",4,4,,,,,N,2,724570047,M/#55501,,,,,,,,,,,I
```

https://truckmanualshub.com/

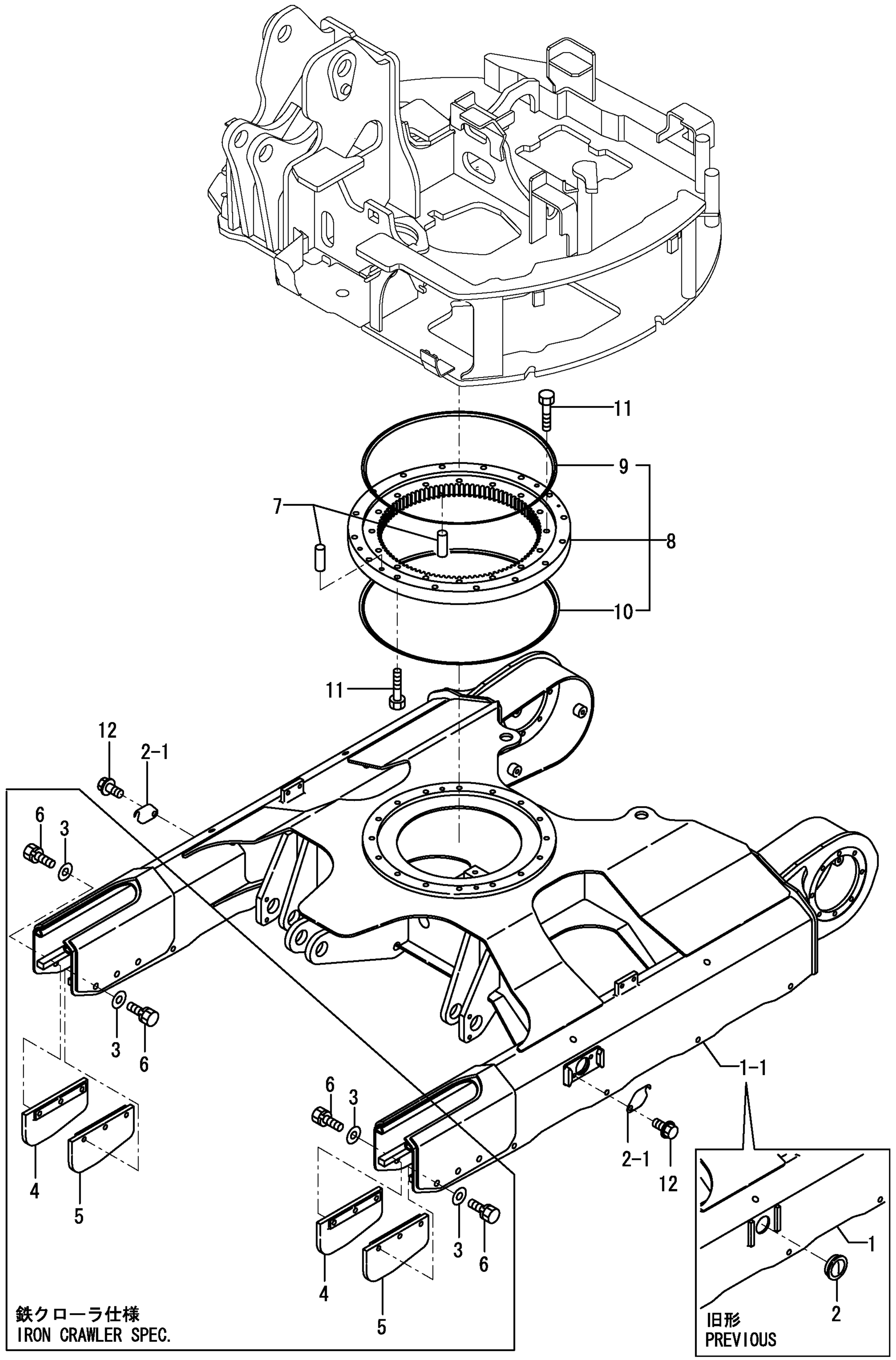

```
1,1,,172141-50762-1,,"COVER,UNDER(GREEN:88",1,1,,,,,,,,,,,,,,,,
2,1,,172487-61060,,"COVER L,FRAME   (97)",1,1,,,,,,,,,,,,,,,,
4,2,,172487-61240,,"SEAL, SIDECOVER",1,1,,,,,,,,,,,,,,,,
5,1,,172456-61100,,"COVER     (GREEN:97)",1,1,,,,,,,,,,,,,,,,
6,1,,172458-61110,,"COVER,VALVE(GREEN:97",1,1,,,,,,,,,,,,,,,,
7,1,,172173-61191,,"COVER, TRAVER   (88)",2,,,,,,,,,,,,,,,,,,
7-1,1,,172173-61190-1,,"COVER,TRAVEL",2,2,,,,,N,,72456275,M/#50501,,,,,,,,,,,I
8,1,,172458-61261,,WASHER,3,3,,,,,,,,,,,,,,,,
9,1,,172487-61270,,"COVER R,FRAME   (97)",1,1,,,,,,,,,,,,,,,,
10,1,,172487-61470,,"COVER UP,FRAME  (97)",1,1,,,,,,,,,,,,,,,,
11,1,,172487-61500,,"COVER,F.O (GREEN:97)",1,1,,,,,,,,,,,,,,,,
12,1,,172455-61600,,"PLUG 28X3.2",3,3,,,,,,,,,,,,,,,,
13,1,,22137-100000,,"WASHER 10,POLISHED",3,3,,,,,,,,,,,,,,,,
14,1,,26013-100202,,"BOLT W/WASHER M10X20",6,6,,,,,,,,,,,,,,,,
15,1,,26013-100202,,"BOLT W/WASHER M10X20",5,5,,,,,,,,,,,,,,,,
16,1,,26013-100202,,"BOLT W/WASHER M10X20",2,2,,,,,,,,,,,,,,,,
17,1,,26013-100352,,"BOLT M10X 35",3,3,,,,,,,,,,,,,,,,
18,1,,26013-120252,,"BOLT M12X 25",4,4,,,,,,,,,,,,,,,,
19,1,,26106-100162,,"BOLT M10X 16 PLATED",10,10,,,,,,,,,,,,,,,,
20,1,,26013-100202,,"BOLT W/WASHER M10X20",1,1,,,,,,,,,,,,,,,,
```

https://truckmanualshub.com/

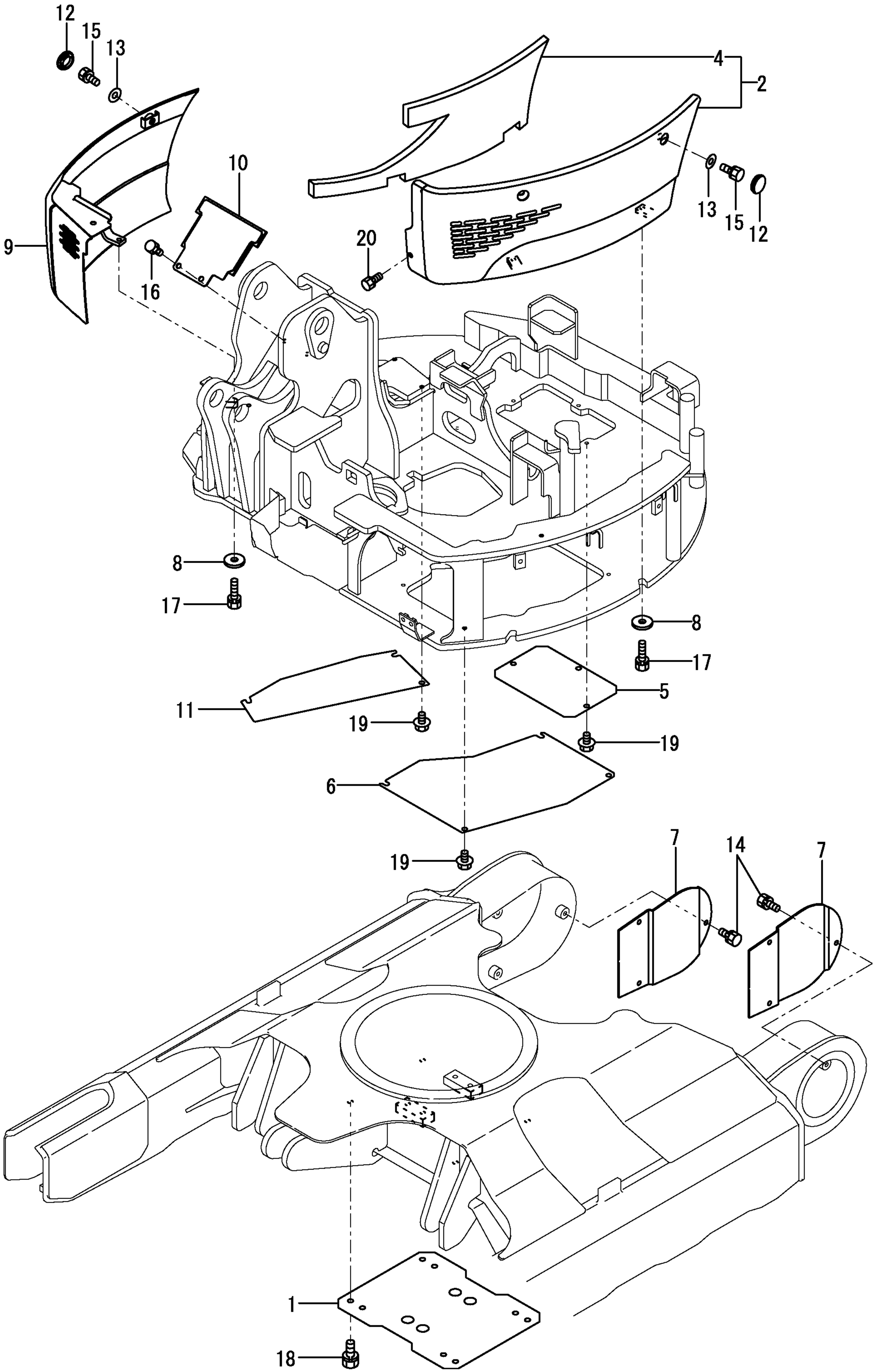

https://truckmanualshub.com/

```
1,1,,172487-61051,,"COVER,NULTI(BLACK:12",1,1,,,,,,,,,,,,,,,,,
3,2,,172487-61460,,"SEAL,MULTI COVER",1,1,,,,,,,,,,,,,,,,,
4,2,,172444-65680,,"SEAL 320",1,1,,,,,,,,,,,,,,,,,
5,1,,172487-61300,,"COVER      (GRAY:73)",1,1,,,,,,,,,,,,,,,,,
7,2,,172487-61370,,"SEAL,COVER",1,1,,,,,,,,,,,,,,,,,
8,1,,26013-100202,,"BOLT W/WASHER M10X20",2,,,,,,,,,,,,,,,,,,
9,1,,172142-62300,,"WING BOLT M10X15",1,1,,,,,,,,,,,,,,,,,
10,1,,172456-64640,,"COVER,ELECTRIC  (73)",1,1,,,,,,,,,,,,,,,,,
11,1,,22417-320200,,"COTTER PIN 3.2X20",1,1,,,,,,,,,,,,,,,,,
12,1,,26013-060122,,"BOLT M 6X 12",3,3,,,,,,,,,,,,,,,,,
13,1,,26013-100202,,"BOLT W/WASHER M10X20",2,2,,,,,,,,,,,,,,,,,
14,1,,26013-100602,,"BOLT M10X 60",2,,,,,,,M,,,,,,,,,,
14-1,1,,26013-100652,,"BOLT 10X65 W/SP.WSHR",2,2,,,,,,,,,,,,,,,,,,,,,I
15,1,,172164-13520,,"RUBBER, SEAL",1,1,,,,,,,,,,,,,,,,,
16,1,,172187-61421,,"HANDLE, LOCK",1,1,,,,,,,,,,,,,,,,,
17,1,,172487-62210,,"BRACKET    (GRAY:73)",1,1,,,,,,,,,,,,,,,,,
18,1,,26013-120252,,"BOLT M12X 25",2,2,,,,,,,,,,,,,,,,,
19,1,,26013-120252,,"BOLT M12X 25",2,2,,,,,,,,,,,,,,,,,
20,1,,172487-64740,,"COVER,HOSE (GRAY:73)",1,,,,,,,,,,,,,,,,,,
21,1,,22137-100000,,"WASHER
10,POLISHED",2,2,,,,,W,,72487119,M/#50676,,,,,,,,,,,I
```

https://truckmanualshub.com/

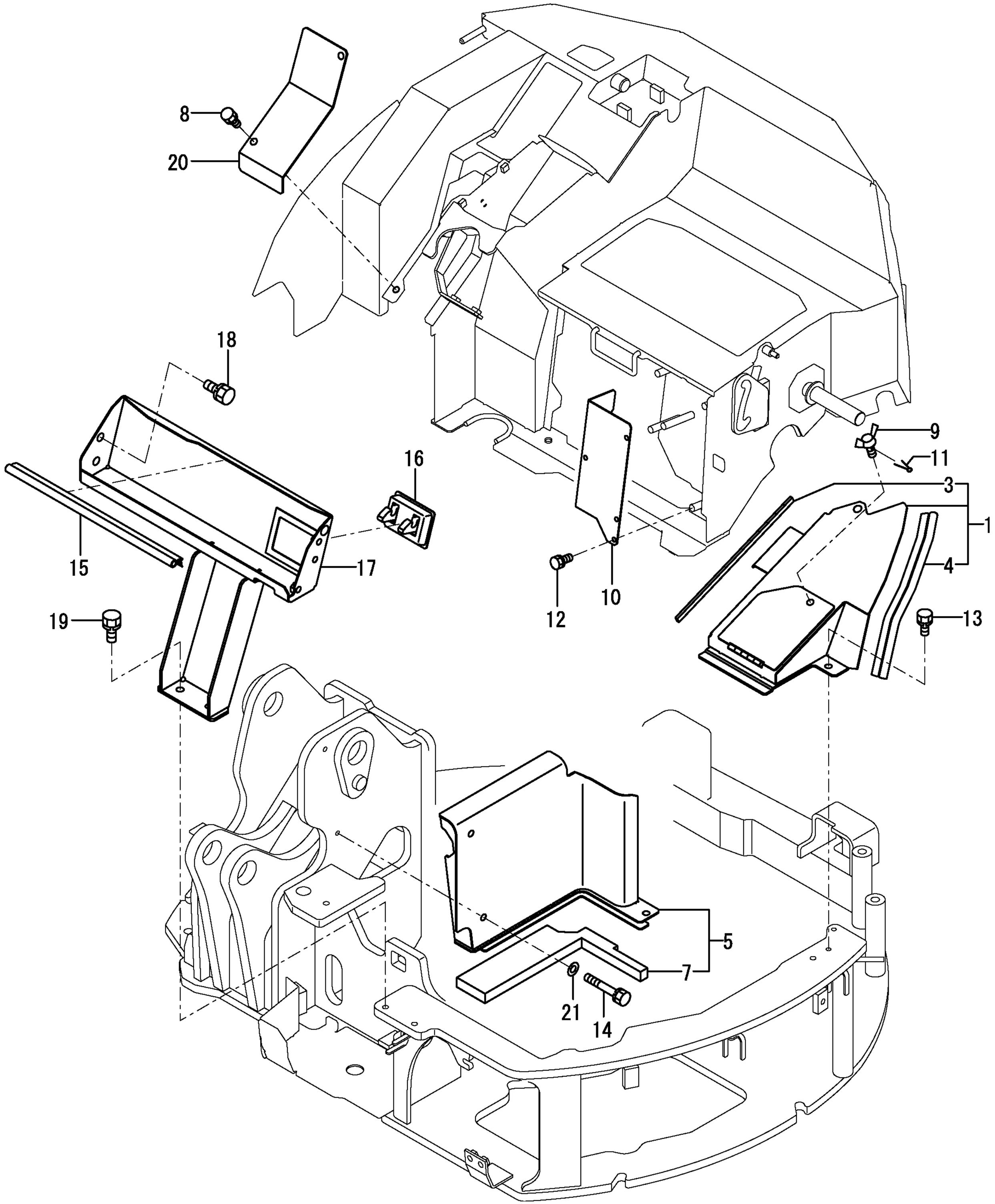

https://truckmanualshub.com/

```
1,1,,172487-61800,,"COVER,BOOM A(GREEN97",1,1,,,,,,,,,,,,,,,,,
2,1,,172487-61850,,"COVER,BOOM B(GREEN97",1,1,,,,,,,,,,,,,,,,,
3,1,,172487-61900,,"COVER,BOOM C(GREEN97",1,1,,,,,,,,,,,,,,,,,
4,1,,22217-080000,,"SPRING WASHER  8",4,4,,,,,,,,,,,,,,,,,
5,1,,22217-100000,,"SPRING WASHER 10",2,2,,,,,,,,,,,,,,,,,
6,1,,22217-100000,,"SPRING WASHER 10",2,2,,,,,,,,,,,,,,,,,
7,1,,26116-080162,,"BOLT 8X16",4,4,,,,,,,,,,,,,,,,,
8,1,,26116-100202,,"BOLT M10X 20 PLATED",1,1,,,,,,,,,,,,,,,,,
9,1,,26116-100202,,"BOLT M10X 20 PLATED",2,1,,,,,,,,,,,,,,,,,
10,1,,26116-101402,,"BOLT M10X140 PLATED",1,1,,,,,,,,,,,,,,,,,
```

https://truckmanualshub.com/

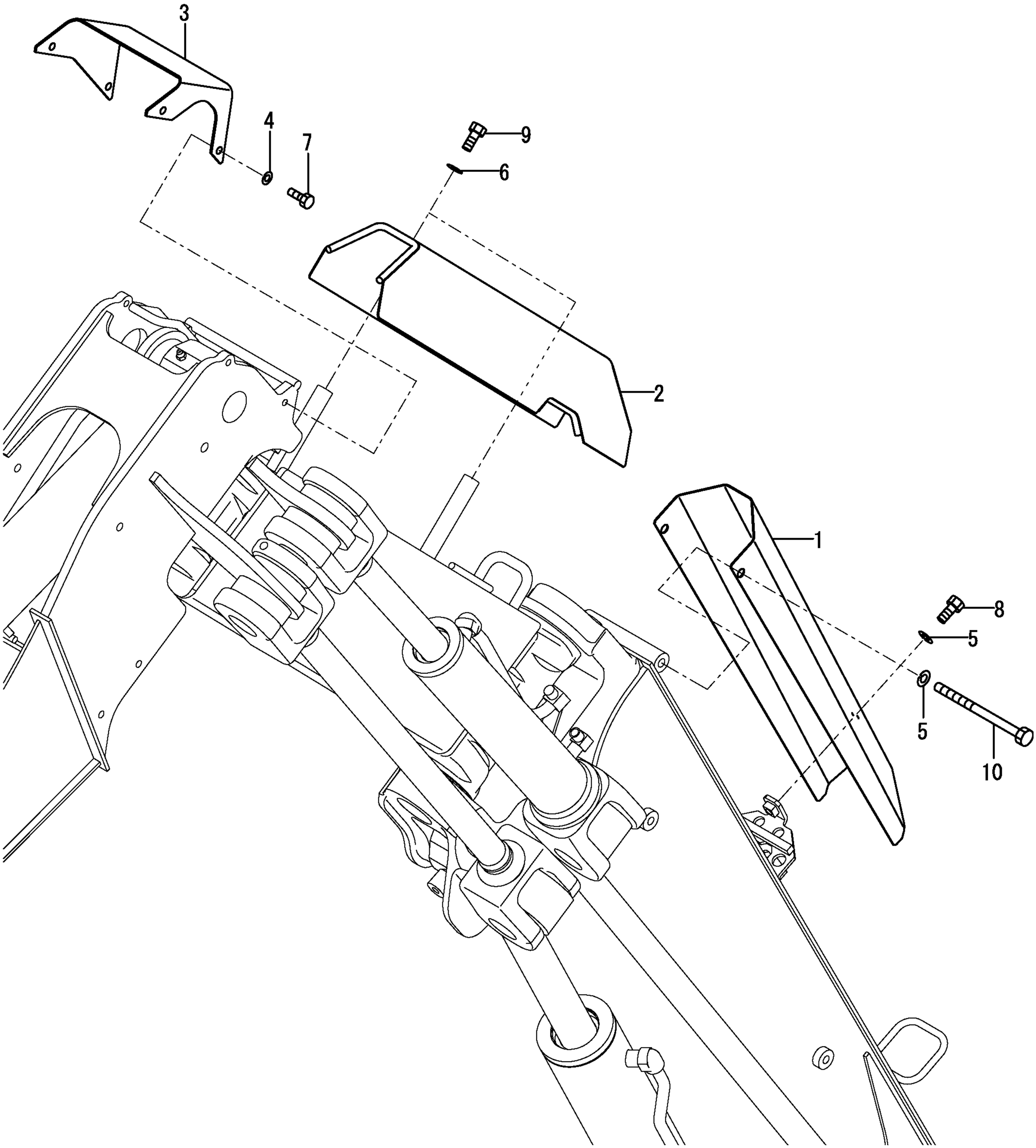

https://truckmanualshub.com/

```
1,1,,172458-62110,,"STEP,SIDE L(BLACK:12",1,1,,,,,,,,,,,,,,,,,
2,1,,172487-62140,,"STEP       (GRAY:73)",1,1,,,,,,,,,,,,,,,,,
4,2,,172487-62170,,"SEAL,STEP",1,1,,,,,,,,,,,,,,,,,
5,1,,22137-120000,,"WASHER 12,POLISHED",2,2,,,,,,,,,,,,,,,,,
6,1,,26013-100202,,"BOLT W/WASHER M10X20",6,6,,,,,,,,,,,,,,,,,
7,1,,26013-120302,,"BOLT W/WASHER M12X30",2,2,,,,,,,,,,,,,,,,,
8,1,,172487-62200,,"MAT A",1,1,,,,,,,,,,,,,,,,,
9,1,,172487-62300,,"MAT B",1,,,,,,,,,,,,,,,,,,,
10,1,,172487-62310,,"MAT B,P.T.O",1,1,,,,,,1,,,,,,,,,,,
11,1,,22137-100000,,"WASHER
10,POLISHED",6,6,,,,,W,,72487104,M/#50611,,,,,,,,,,,I
```

https://truckmanualshub.com/

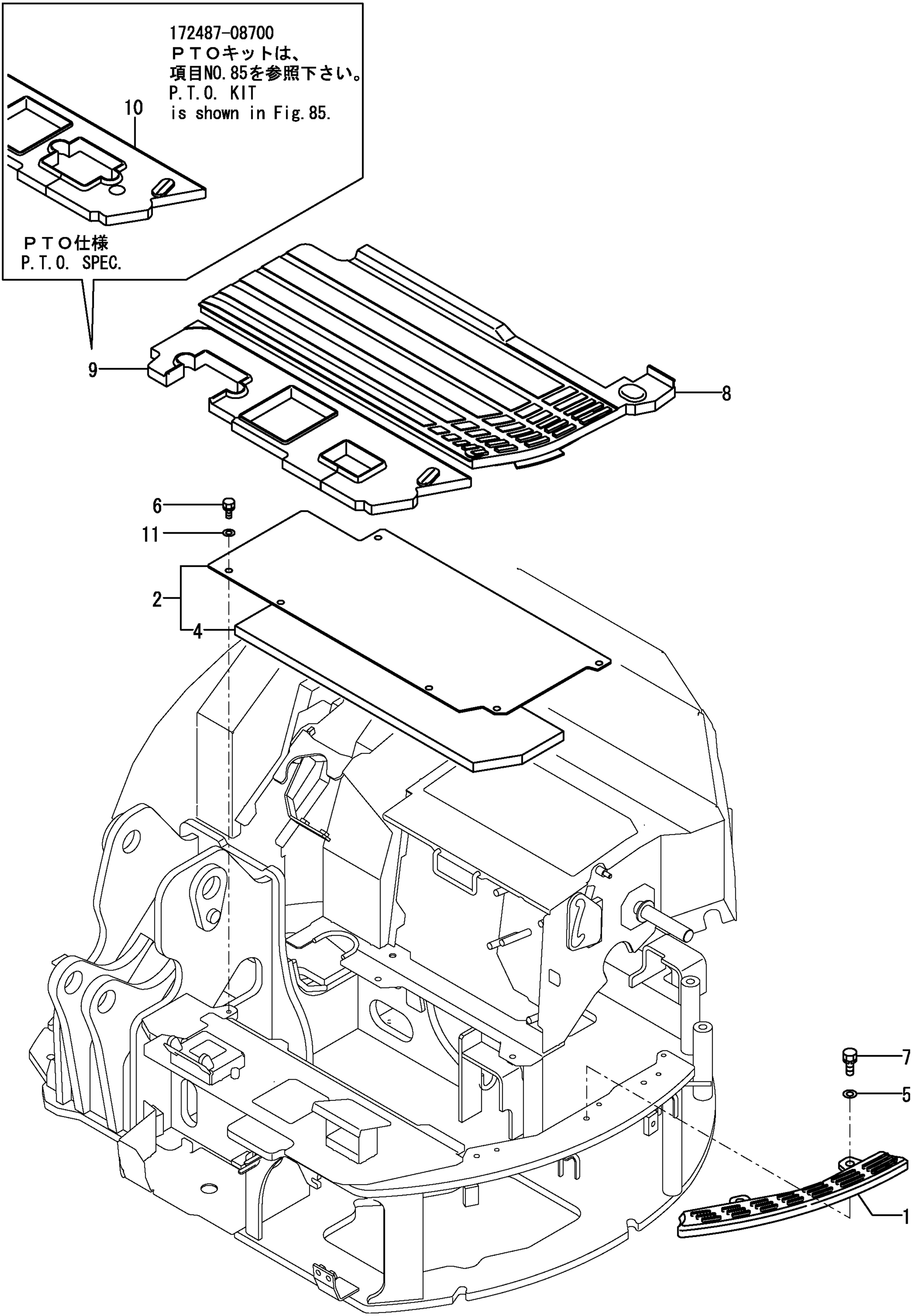

https://truckmanualshub.com/

```
1,1,,172458-46720,,"BOLT 8X20",3,3,,,,,,,,,,,,,,,
2,1,,172458-46720,,"BOLT 8X20",2,2,,,,,,,,,,,,,,,
3,1,,172458-46720,,"BOLT 8X20",1,1,,,,,,,,,,,,,,,
4,1,,172458-63100,,"INSTRUMENT PANEL L",1,,,,,,,,,,,,,,,,,
4-1,1,,172490-61920,,"INSTRUMENT PANEL
ASY",1,1,,,,,S,1,724900021,M/#55501,,,,,,,,,,I
5,2,,172490-61950,,COVER(2WAY,1,1,,,,,W,,724900021,M/#55501,,,,,,,,,,I
6,2,,172458-63110,,"INSTRUMENT PANEL
L,2",1,1,,,,,W,,724900021,M/#55501,,,,,,,,,,I
7,1,,172458-63120,,"INSTRUMENT PANEL L",1,1,,,,,,,,,,,,,,,,
8,1,,172458-63130,,"INSTRUMENT PANEL R",1,1,,,,,,,,,,,,,,,,
9,1,,172458-63140,,"INSTRUMENT PANEL R",1,1,,,,,,,,,,,,,,,,
10,1,,172519-63240,,"BOLT  8X 16",2,2,,,,,,,,,,,,,,,,
11,1,,172519-63240,,"BOLT  8X 16",1,1,,,,,,,,,,,,,,,,
12,1,,172458-46720,,"BOLT 8X20",1,1,,,,,,,,,,,,,,,,
13,1,,172458-63110,,"INSTRUMENT PANEL L,2",1,,,,,,,2,,,,,,,,,,,,I
14,1,,172458-63100,,"INSTRUMENT PANEL L",1,,,,,,,3,,,,,,,,,,,,I
```

https://truckmanualshub.com/

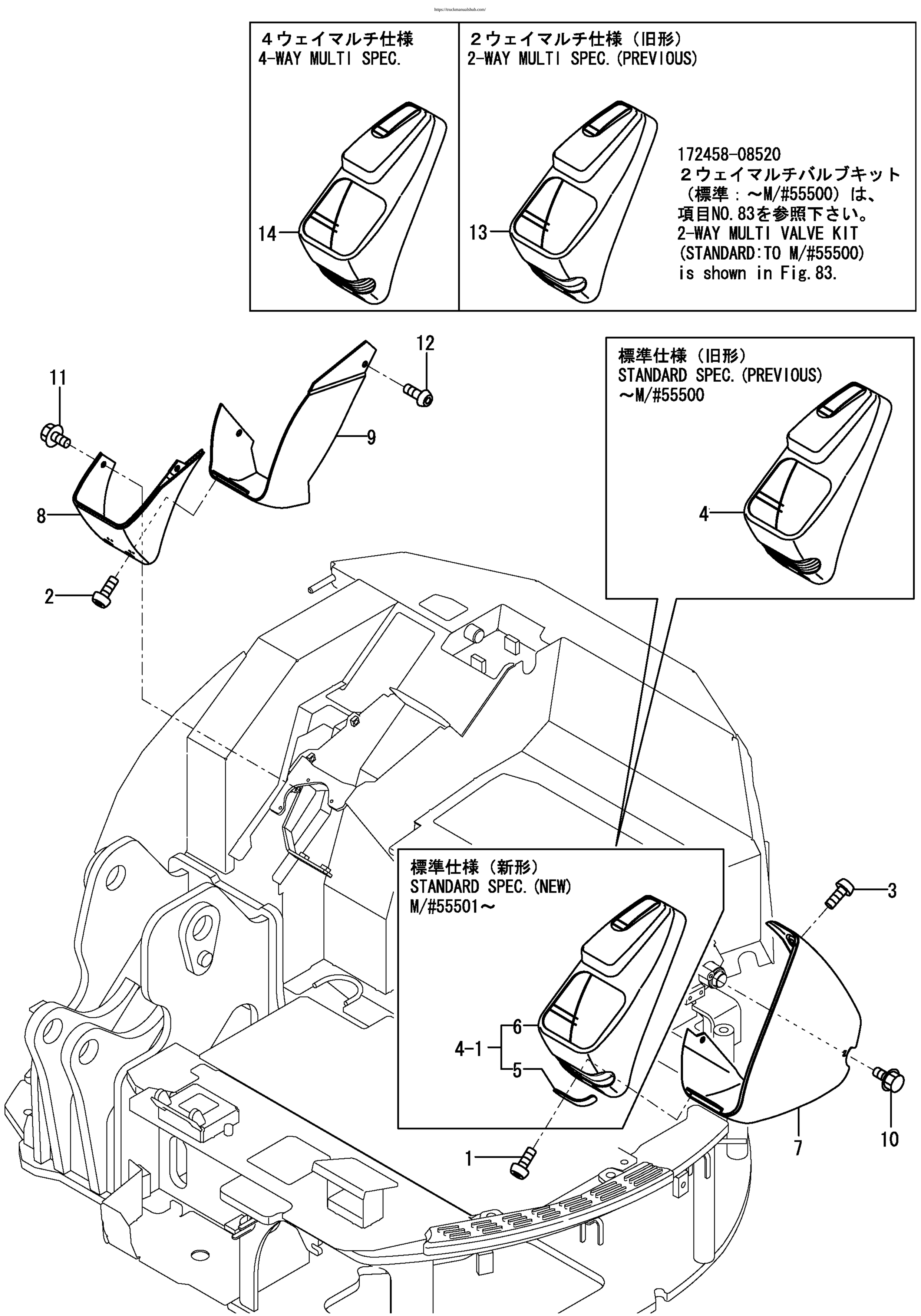

https://truckmanualshub.com/

```
1,1,,172448-64080,,PIN,1,1,,,,,,,,,,,,,,,,
2,1,,172649-64101,,"SEAT ASSY",1,1,,,,,,,,,,,,,,,,
3,1,,172141-64370,,"CUSHION, SEAT",2,2,,,,,,,,,,,,,,,,
4,1,,22137-080000,,"WASHER 8, POLISHED",1,1,,,,,,,,,,,,,,,,
5,1,,22372-080000,,"SNAP PIN (JASO 8)",1,1,,,,,,,,,,,,,,,,
6,1,,172187-61421,,"HANDLE, LOCK",1,1,,,,,,,,,,,,,,,,
7,1,,172165-62810,,"GROMMET 10",1,1,,,,,,,,,,,,,,,,
8,1,,172487-64201,,"MOUNT,SEAT (GRAY:73)",1,1,,,,,,,,,,,,,,,,
9,2,,172164-61250,,"RUBBER, SEAL",1,1,,,,,,,,,,,,,,,,
11,3,,24550-014100,,"BUSH 14X10",2,2,,,,,,,,,,,,,,,,
12,2,,172487-64780,,"RUBBER,SEAL 365",1,1,,,,,,,,,,,,,,,,
13,2,,172487-64810,,"SEAL A",1,1,,,,,,,,,,,,,,,,
14,2,,172487-64820,,"SEAL B",1,1,,,,,,,,,,,,,,,,
15,2,,172487-64830,,"SEAL C",1,1,,,,,,,,,,,,,,,,
16,2,,172487-64840,,"SEAL D",1,1,,,,,,,,,,,,,,,,
17,2,,172460-65830,,"RUBBER SEAL",1,1,,,,,,,,,,,,,,,,
18,2,,172165-66230,,"RUBBER,SEAL C",1,1,,,,,,,,,,,,,,,,
19,2,,172112-69790,,"PLUG 32X2",1,1,,,,,,,,,,,,,,,,
20,1,,172487-64651,,"GRILLE     (GRAY:73)",1,1,,,,,,,,,,,,,,,,
21,1,,172487-64700,,"PLATE,SEAT (GRAY:73)",1,1,,,,,,,,,,,,,,,,
23,2,,172487-64860,,"SEAL E",1,1,,,,,,,,,,,,,,,,
24,1,,172487-64720,,"COVER,BRADE LEVER(73",1,1,,,,,,,,,,,,,,,,
25,1,,172487-64730,,"COVER,SEAT MOUNT(73)",1,1,,,,,,,,,,,,,,,,
26,1,,172487-64750,,"PLATE,HOSE (GRAY:73)",1,1,,,,,,,,,,,,,,,,
27,1,,26013-100202,,"BOLT W/WASHER M10X20",3,3,,,,,,,,,,,,,,,,
28,1,,26013-100202,,"BOLT W/WASHER M10X20",4,4,,,,,,,,,,,,,,,,
29,1,,26013-100202,,"BOLT W/WASHER M10X20",4,4,,,,,,,,,,,,,,,,
30,1,,26013-100202,,"BOLT W/WASHER M10X20",2,2,,,,,,,,,,,,,,,,
31,1,,26013-100202,,"BOLT W/WASHER M10X20",2,2,,,,,,,,,,,,,,,,
32,1,,26013-100202,,"BOLT W/WASHER M10X20",2,2,,,,,,,,,,,,,,,,
33,1,,22137-100000,,"WASHER
10,POLISHED",1,1,,,,W,,72487103,M/#50611,,,,,,,,,,I
```

https://truckmanualshub.com/

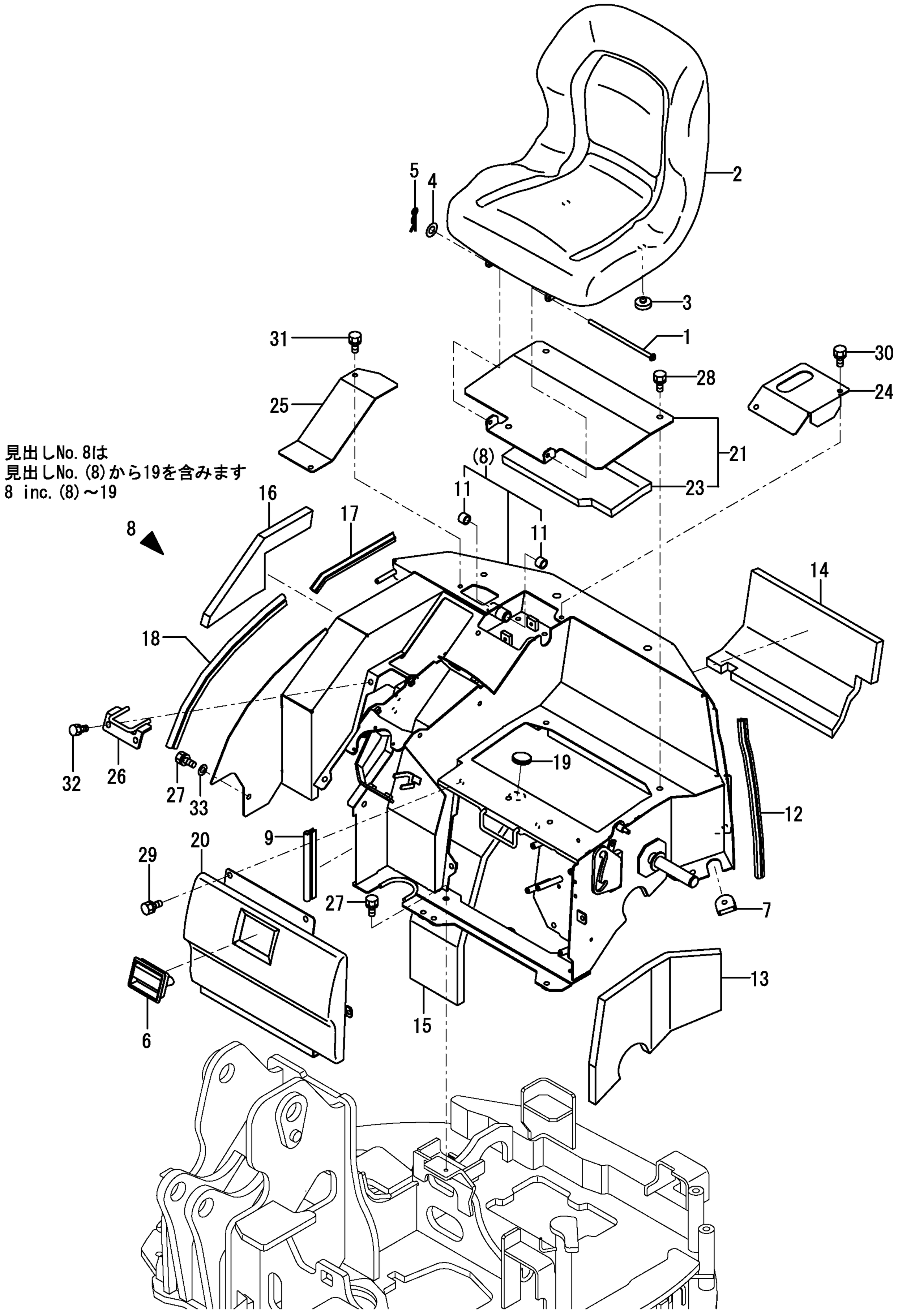

```
1,1,,172487-61100,,"COVER,FRONT",1,1,,,,,,,,,,,,,,,,,
2,1,,172487-61110,,"HINGE     (GREEN:97)",1,1,,,,,,,,,,,,,,,,,
3,1,,172487-61410,,"BONNET L  (GREEN:96)",1,1,,,,,,,,,,,,,,,,,
4,1,,172487-62550,,"PLATE,LOCK (GRAY:73)",1,1,,,,,,,,,,,,,,,,,
5,1,,22137-120000,,"WASHER 12,POLISHED",1,1,,,,,,,,,,,,,,,,,
6,1,,22157-080000,,"WASHER  8",3,3,,,,,,,,,,,,,,,,,
7,1,,22157-100000,,"WASHER 10",2,2,,,,,,,,,,,,,,,,,
8,1,,26013-080202,,"BOLT W/WASHER M8X20",2,2,,,,,,,,,,,,,,,,,
9,1,,26013-080202,,"BOLT W/WASHER M8X20",3,3,,,,,,,,,,,,,,,,,
10,1,,26013-100202,,"BOLT W/WASHER M10X20",2,2,,,,,,,,,,,,,,,,,
11,1,,26013-100252,,"BOLT W/WASHER M10X25",2,2,,,,,,,,,,,,,,,,,
12,1,,26013-120302,,"BOLT W/WASHER M12X30",1,1,,,,,,,,,,,,,,,,,
```

https://truckmanualshub.com/

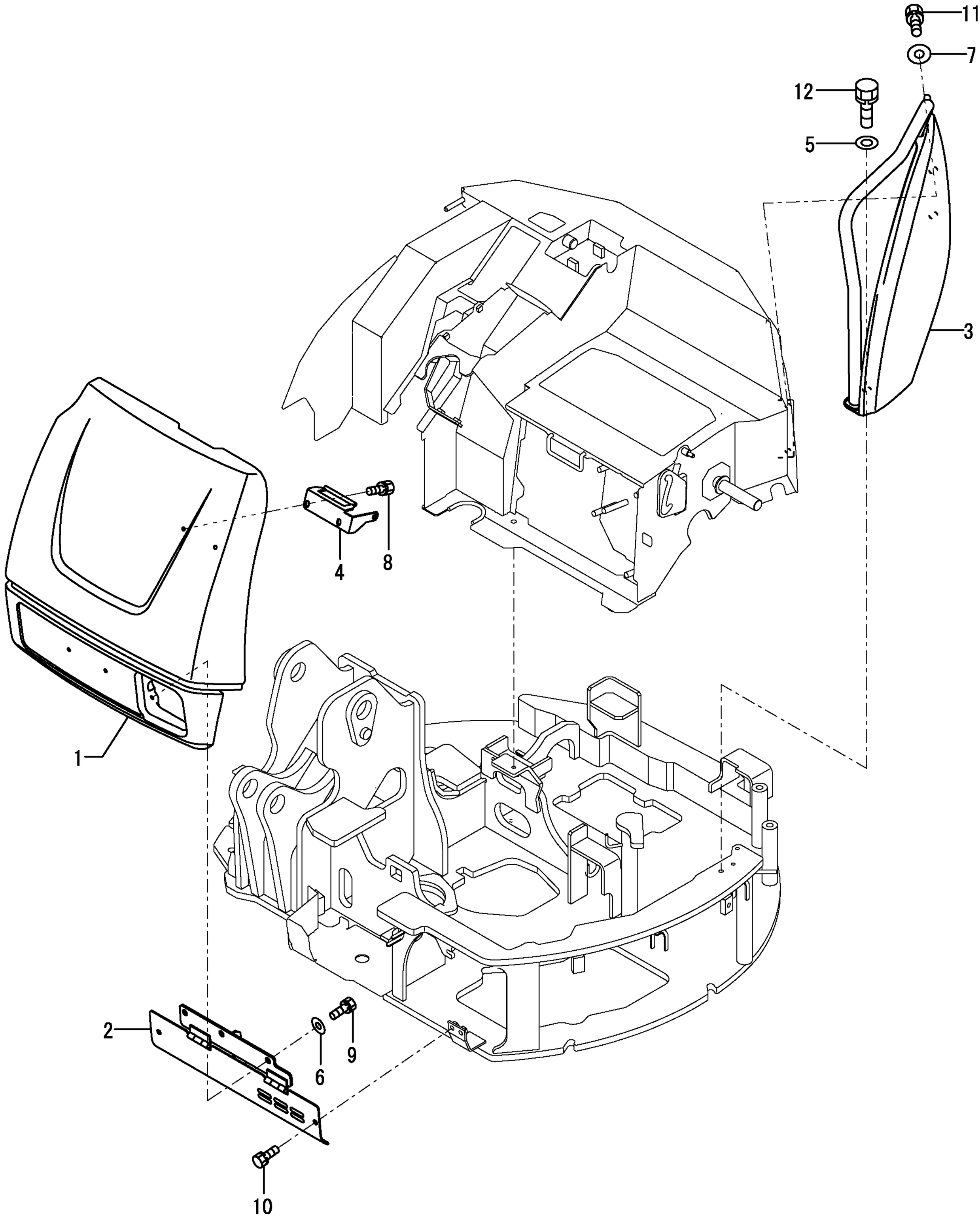

https://truckmanualshub.com/

```
1,1,,194145-04810,,"WASHER 10",2,2,,,,,,,,,,,,,,,
2,1,,194145-04810,,"WASHER 10",2,2,,,,,,,,,,,,,,,
3,1,,26013-100252,,"BOLT W/WASHER M10X25",2,2,,,,,,,,,,,,,,,,
4,1,,172444-64730,,"ROD,STOPPER",1,1,,,,,,,,,,,,,,,
5,1,,172458-65050,,SHAFT,1,1,,,,,,,,,,,,,,,
6,1,,172458-65060,,"COVER,BONNET LOCK",1,1,,,,,,,,,,,,,,,
7,1,,172487-65100,,"BONNET A  (GREEN:96)",1,1,,,,,,,,,,,,,,,
8,2,,172458-65070,,"SEAL 945",1,1,,,,,,,,,,,,,,,
9,2,,172458-65080,,"RUBBER,SEAL 1450",1,1,,,,,,,,,,,,,,,
11,2,,172487-65110,,"SEAL A",1,1,,,,,,,,,,,,,,,
12,2,,172487-65120,,"SEAL B",1,1,,,,,,,,,,,,,,,
13,1,,172456-65150,,"BRACKET A.LOCK  (73)",1,1,,,,,,,,,,,,,,,
14,1,,172456-65171,,"BRACKET B, LOCK",1,1,,,,,,,,,,,,,,,
15,1,,172487-65190,,"BRACKET C",1,1,,,,,,,,,,,,,,,
16,1,,172187-65210,,"LEVER ASSY, LOCK",1,1,,,,,,,,,,,,,,,
17,1,,172458-65271,,"PLATE,ROCK",1,1,,,,,,,,,,,,,,,
18,1,,172734-65270,,"SPRING, CATCH",1,1,,,,,,,,,,,,,,,
19,1,,172124-65480,,CATCHER,1,1,,,,,,,,,,,,,,,
20,1,,172164-66170,,"KEY ASSY, CYLINDER",1,1,,,,,,,,,,,,,,,
25,1,,26347-100002,,"U-NUT, 10",1,1,,,,,,,,,,,,,,,
26,1,,22137-100000,,"WASHER 10,POLISHED",2,2,,,,,,,,,,,,,,,
27,1,,22137-100000,,"WASHER 10,POLISHED",2,2,,,,,,,,,,,,,,,
28,1,,22157-080000,,"WASHER  8",2,2,,,,,,,,,,,,,,,
29,1,,22417-200200,,"COTTER PIN 2.0X20",2,2,,,,,,,,,,,,,,,
30,1,,22417-200200,,"COTTER PIN 2.0X20",2,2,,,,,,,,,,,,,,,
31,1,,26013-100252,,"BOLT W/WASHER M10X25",2,2,,,,,,,,,,,,,,,
32,1,,26013-100252,,"BOLT W/WASHER M10X25",2,2,,,,,,,,,,,,,,,
33,1,,26013-100252,,"BOLT W/WASHER M10X25",2,2,,,,,,,,,,,,,,,
```

https://truckmanualshub.com/

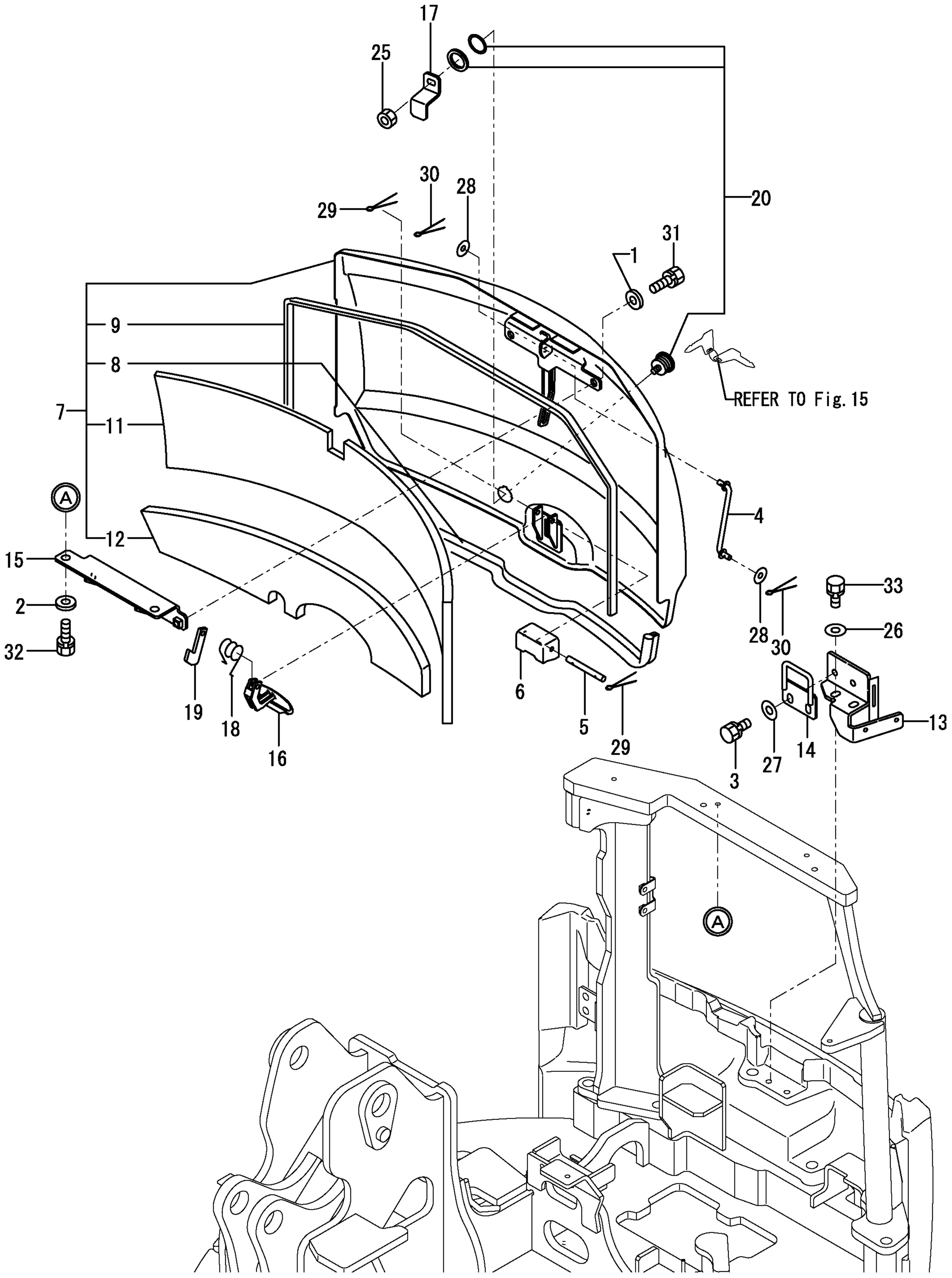

https://truckmanualshub.com/

```
1,1,,172455-65230-1,,"PLATE,KEY (GREEN:96)",1,1,,,,,,,,,,,,,,,,,
2,1,,172456-65301,,"BONNET R  (GREEN:96)",1,1,,,,,,,,,,,,,,,,,
2-1,1,,172456-65302,,"BONNET R ASSY
(96)",1,1,,,,,N,,724560314,M/#55615,724560314,M/#55615,,,,,,,,,I
3,2,,172444-54920,,"SEAL,WEIGHT C",1,1,,,,,,,,,,,,,,,,,
4,2,,172434-61190,,"TRIM 220",1,1,,,,,,,,,,,,,,,,,
5,2,,172458-61500,,"RUBBER,SEAL 120",1,1,,,,,,,,,,,,,,,,,
7,1,,172456-65440,,"BRACKET A,BONNET R",1,1,,,,,,,,,,,,,,,,,
7-1,1,,172456-65441,,"BRACKET
A",1,1,,,,,N,,724560314,M/#55615,724560314,M/#55615,,,,,,,,,I
8,1,,172456-65450,,"BRACKET B,BONNET R",1,1,,,,,,,,,,,,,,,,,
9,1,,172456-65461,,"BRACKET C",1,1,,,,,,,,,,,,,,,,,
10,1,,172456-65500,,"BONNET B",1,1,,,,,,,,,,,,,,,,,
11,1,,172456-65511,,"HINGE,BONNET B  (97)",1,1,,,,,,,,,,,,,,,,,
12,1,,172487-65520,,"PLATE,HOOK",1,,,,,,,M,,,,,,,,,,
12-1,1,,172456-65520,,"PLATE,HOOK",1,1,,,,,,,,,,,,,,,,,
13,1,,172458-65540,,"PLATE ASSY,STOPPER",1,1,,,,,,,,,,,,,,,,,
14,1,,172487-65520,,"PLATE,HOOK",1,1,,,,,,,,,,,,,,,,,
15,1,,172458-65560,,"PLATE,GUIDE",1,1,,,,,,,,,,,,,,,,,
16,1,,172455-65590,,"PLUG 28X2.3",1,1,,,,,,,,,,,,,,,,,
17,1,,172458-65600,,CABLE,1,1,,,,,,,,,,,,,,,,,
18,1,,172458-65610,,"HOOK ASSY",1,1,,,,,,,,,,,,,,,,,
19,1,,172458-65640,,"STAY ASSY,WIRE",1,1,,,,,,,,,,,,,,,,,
20,1,,172156-65690,,"TORSION SPRING,STOPR",1,1,,,,,,,,,,,,,,,,,
21,1,,172164-66170,,"KEY ASSY, CYLINDER",1,1,,,,,,,,,,,,,,,,,
26,1,,22137-080000,,"WASHER 8, POLISHED",2,2,,,,,,,,,,,,,,,,,
27,1,,22137-100000,,"WASHER 10,POLISHED",1,1,,,,,,,,,,,,,,,,,
28,1,,22157-100000,,"WASHER 10",6,6,,,,,,,,,,,,,,,,,
29,1,,22417-200200,,"COTTER PIN 2.0X20",2,2,,,,,,,,,,,,,,,,,
30,1,,26013-100202,,"BOLT W/WASHER M10X20",2,2,,,,,,,,,,,,,,,,,
31,1,,26013-100202,,"BOLT W/WASHER M10X20",2,2,,,,,,,,,,,,,,,,,
32,1,,26013-100202,,"BOLT W/WASHER M10X20",1,1,,,,,,,,,,,,,,,,,
33,1,,26013-100202,,"BOLT W/WASHER M10X20",2,2,,,,,,,,,,,,,,,,,
34,1,,26013-100202,,"BOLT W/WASHER M10X20",2,2,,,,,,,,,,,,,,,,,
35,1,,26013-100252,,"BOLT W/WASHER M10X25",5,5,,,,,,,,,,,,,,,,,
36,1,,26106-100162,,"BOLT M10X 16 PLATED",4,4,,,,,,,,,,,,,,,,,
37,1,,26347-080002,,"U-NUT,  8",1,1,,,,,,,,,,,,,,,,,
38,1,,26347-100002,,"U-NUT, 10",1,1,,,,,,,,,,,,,,,,,
39,1,,26013-100252,,"BOLT W/WASHER M10X25",1,1,,,,,,,,,,,,,,,,,
```

https://truckmanualshub.com/

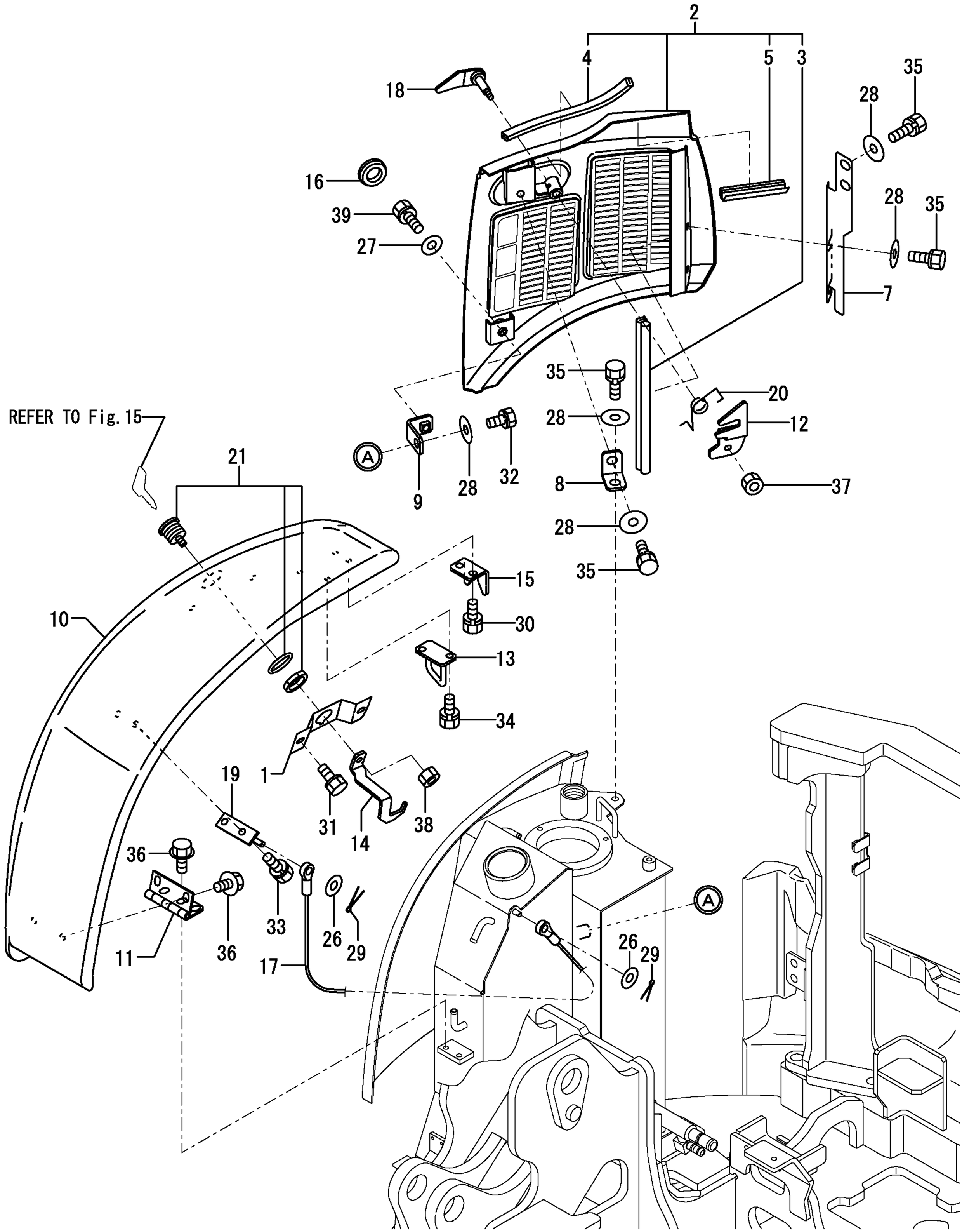

https://truckmanualshub.com/

```
1,1,,172456-65701,,"DUCT, UP   (GRAY:73)",1,1,,,,,,,,,,,,,,,,,
2,2,,172149-13340,,"RUBBER, RADIATOR",1,1,,,,,,,,,,,,,,,,,
3,2,,172162-15320,,SEAL,1,1,,,,,,,,,,,,,,,,,
4,2,,172444-54920,,"SEAL,WEIGHT C",1,1,,,,,,,,,,,,,,,,,
6,2,,172456-65790,,"RUBBER,SEAL 85",1,1,,,,,,,,,,,,,,,,,
7,1,,172456-65751,,"DUCT, LOW  (GRAY:73)",1,1,,,,,,,,,,,,,,,,,,
8,2,,172444-54910,,"SEAL,WEIGHT B",1,1,,,,,,,,,,,,,,,,,
9,2,,172164-61250,,"RUBBER, SEAL",1,1,,,,,,,,,,,,,,,,,
10,2,,172175-64810,,SEAL,1,1,,,,,,,,,,,,,,,,,
12,1,,26013-100202,,"BOLT W/WASHER M10X20",4,4,,,,,,,,,,,,,,,,,
```

https://truckmanualshub.com/

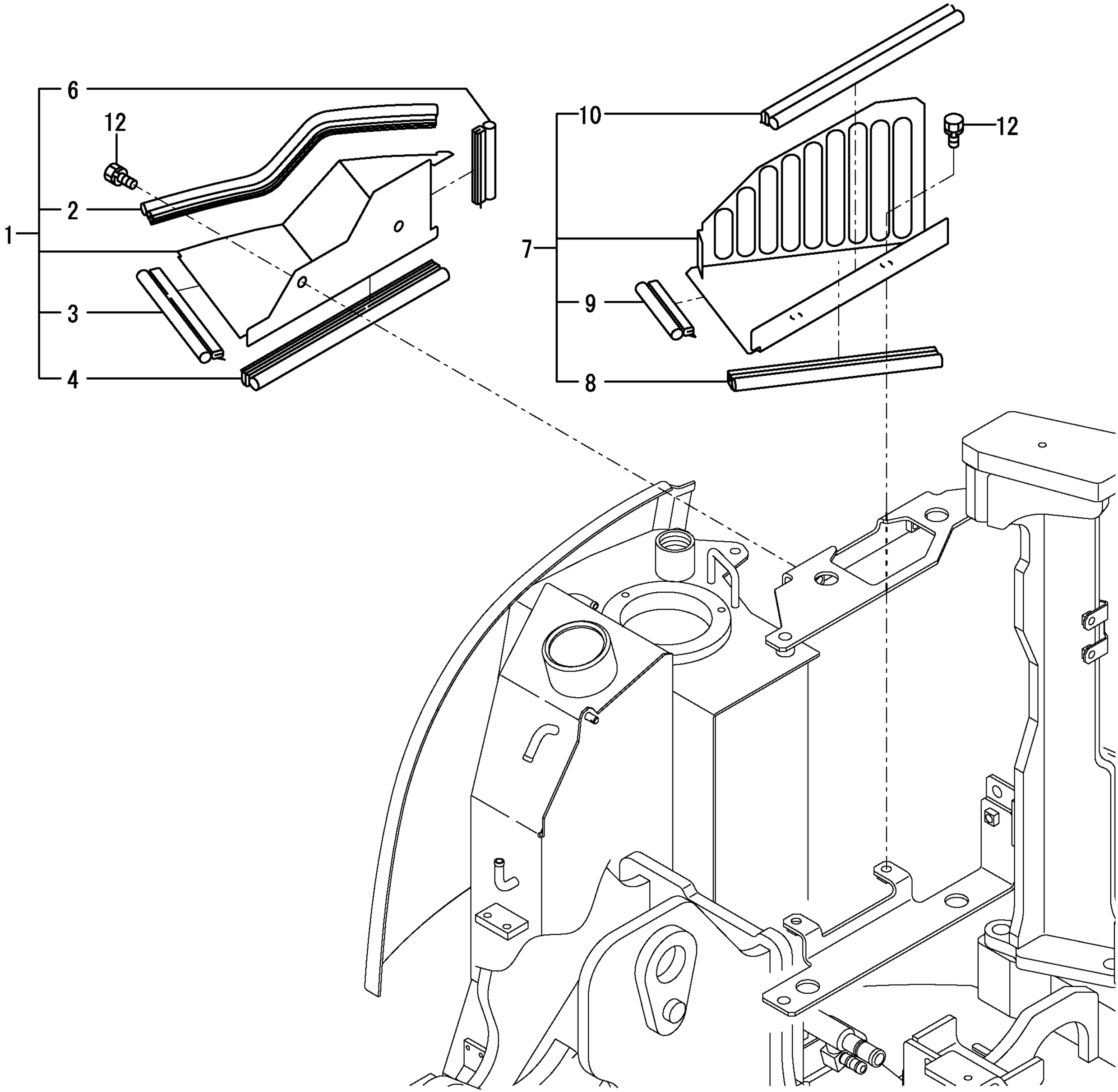

https://truckmanualshub.com/

```
1,1,,172732-61420,,"GROMMET,30",3,3,,,,,,,,,,,,,,,
2,1,,172487-68100,,"CANOPY,UPPER(GRAY:49",1,1,,,,,,,,,,,,,,,
3,1,,172487-68110,,"CANOPY,SIDE(GRAY:73)",1,1,,,,,,,,,,,,,,,
4,1,,172487-68260,,"ACRYL,SIDE",1,1,,,,,,,,,,,,,,,
5,1,,172487-68290,,"ACRYL,UPPER",1,1,,,,,,,,,,,,,,,
6,1,,172487-68390,,"PIPE       (GRAY:73)",1,1,,,,,,,,,,,,,,,
7,1,,172487-68420,,TRIM,1,1,,,,,,,,,,,,,,,
8,1,,172487-68430,,RUBBER,1,1,,,,,,,,,,,,,,,
9,1,,172487-68440,,"RUBBER 410",1,1,,,,,,,,,,,,,,,
10,1,,172487-68450,,"RUBBER 290",1,1,,,,,,,,,,,,,,,
11,1,,172487-68480,,"TAPE S",4,4,,,,,,,,,,,,,,,
12,1,,172487-68490,,"TAPE L",2,2,,,,,,,,,,,,,,,
13,1,,172487-68500,,"GRIP       (GRAY:73)",1,1,,,,,,,,,,,,,,,
14,1,,26706-120002,,"NUT M12",2,2,,,,,,,,,,,,,,,
15,1,,22137-100000,,"WASHER 10,POLISHED",1,1,,,,,,,,,,,,,,,
16,1,,22157-120000,,"WASHER 12",4,4,,,,,,,,,,,,,,,
17,1,,22157-120000,,"WASHER 12",2,2,,,,,,,,,,,,,,,
18,1,,26013-100202,,"BOLT W/WASHER M10X20",1,1,,,,,,,,,,,,,,,
19,1,,26013-100202,,"BOLT W/WASHER M10X20",2,2,,,,,,,,,,,,,,,
20,1,,26013-120252,,"BOLT M12X 25",2,2,,,,,,,,,,,,,,,
21,1,,26013-120252,,"BOLT M12X 25",1,1,,,,,,,,,,,,,,,
22,1,,26013-120352,,"BOLT M12X 35",4,4,,,,,,,,,,,,,,,
23,1,,26116-120302,,"BOLT M12X 30 PLATED",1,1,,,,,,,,,,,,,,,
24,1,,26116-120404,,"BOLT M12X 40 PLATED",1,1,,,,,,,,,,,,,,,
```

https://truckmanualshub.com/

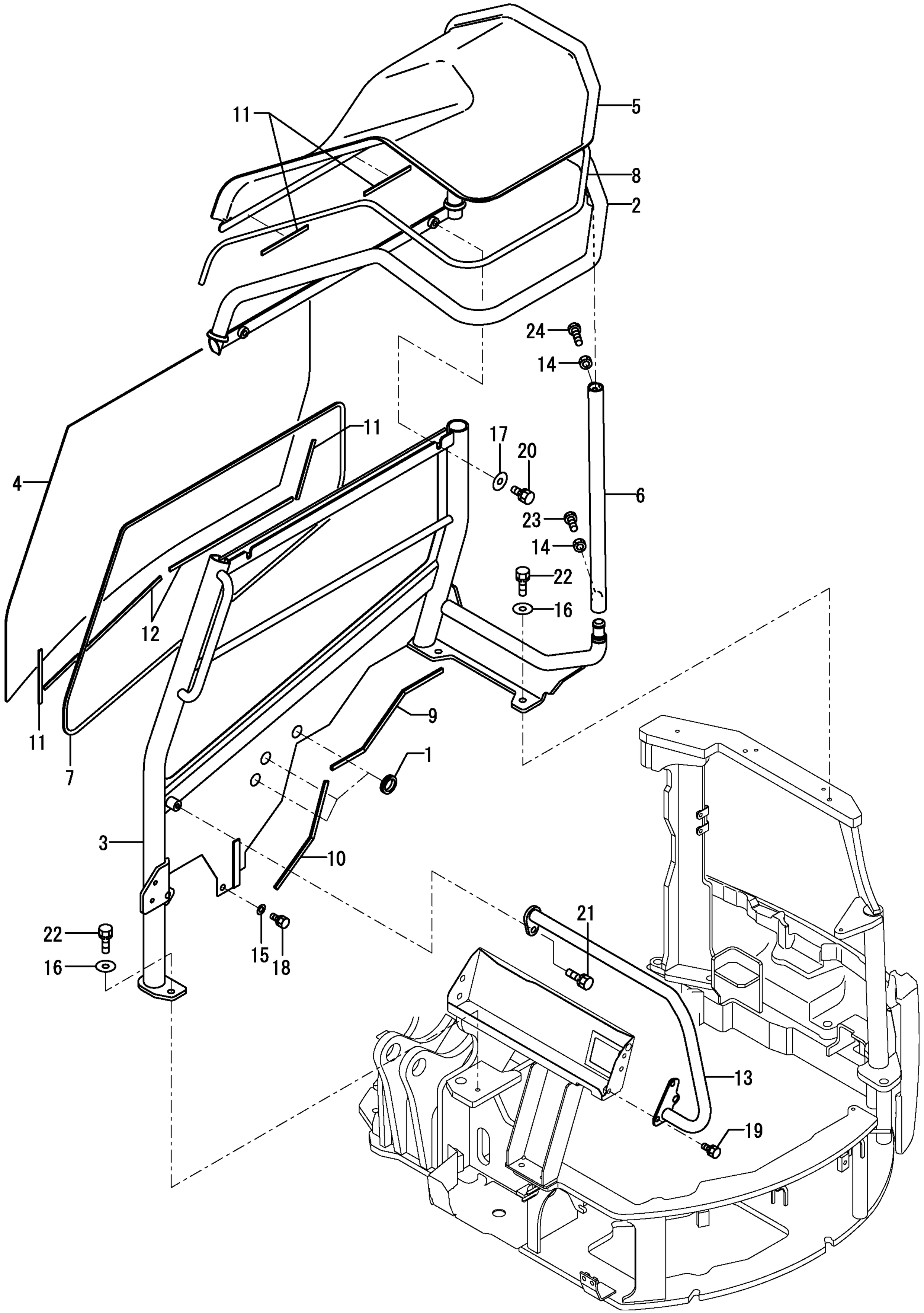

```
1,1,,172168-71101,,"COVER,FLYWHEEL  (88)",1,1,,,,,,,,,,,,,,,,
2,1,,26013-100302,,"BOLT M10X 30",8,8,,,,,,,,,,,,,,,,
3,1,,172165-71200,,COUPLING,1,1,,,,,,,,,,,,,,,,
4,1,,26450-120402,,"BOLT M12X 40",3,3,,,,,,,,,,,,,,,,
5,1,,172456-73100,,"PUMP ASSY",1,1,,,,,,,,,,,,,,,,
6,2,,172456-73110,,"SHAFT ASSY",1,1,,,,,,,,,,,,,,,,,,,,I
7,3,,172456-73120,,SHAFT,1,1,,,,,,,,,,,,,,,,,,,,I
8,3,,172456-73130,,"CASE,SEAL",1,1,,,,,,,,,,,,,,,,,,,,I
9,3,,172456-73140,,"SEAL, OIL",1,1,,,,,,,,,,,,,,,,,,,,I
10,3,,172456-73150,,O-RING,1,1,,,,,,,,,,,,,,,,,,,,I
11,3,,172456-73160,,"CIRCLIP,",1,1,,,,,,,,,,,,,,,,,,,,I
12,3,,172456-73170,,KEY,1,1,,,,,,,,,,,,,,,,,,,,I
13,3,,172456-73180,,"PIN BUSH",1,1,,,,,,,,,,,,,,,,,,,,I
14,3,,172179-73220,,"BEARING,",1,1,,,,,,,,,,,,,,,,,,,,I
15,3,,22242-000200,,"CIRCLIP   20",1,1,,,,,,,,,,,,,,,,,,,,I
17,3,,172179-73250,,COVER,1,1,,,,,,,,,,,,,,,,,,,,I
18,3,,24321-000450,,"O-RING 1A G-45.0",1,1,,,,,,,,,,,,,,,,,,,,I
19,3,,26450-060122,,"BOLT M 6X 12",4,4,,,,,,,,,,,,,,,,,,,,I
20,2,,172179-73130,,"ROTORY SET",1,1,,,,,,,,,,,,,,,,
21,2,,172179-73190,,BUSHING,1,1,,,,,,,,,,,,,,,,,,,,I
22,2,,172456-73280,,"COVER ASSY",1,1,,,,,,,,,,,,,,,,,,,,I
23,3,,172179-73270,,BEARING,1,1,,,,,,,,,,,,,,,,,,,,I
24,3,,172179-73280,,GASKET,1,1,,,,,,,,,,,,,,,,,,,,I
25,3,,172456-73290,,"CONTROL PLATE",1,1,,,,,,,,,,,,,,,,,,,,I
26,3,,172650-73450,,"BOLT,8X55HEX SOCKET",2,2,,,,,,,,,,,,,,,,,,,,I
27,3,,172456-73600,,ORIFICE,2,2,,,,,,,,,,,,,,,,,,,,I
28,3,,172456-73610,,FILTER,1,1,,,,,,,,,,,,,,,,,,,,I
29,3,,172164-73670,,"CIRCLIP,",1,1,,,,,,,,,,,,,,,,,,,,I
30,3,,22312-060120,,"PARALLEL PIN 6X12",2,2,,,,,,,,,,,,,,,,,,,,I
31,3,,26450-080202,,"BOLT M 8X 20",2,2,,,,,,,,,,,,,,,,,,,,I
32,3,,26450-080402,,"BOLT 8X40",1,1,,,,,,,,,,,,,,,,,,,,I
33,2,,172164-73470,,"VALVE ASSY, RELIEF",1,1,,,,,,,,,,,,,,,,,,,,I
36,3,,172164-73380,,"SPRING, RETERN",1,1,,,,,,,,,,,,,,,,,,,,I
37,3,,172164-73390,,NUT,1,1,,,,,,,,,,,,,,,,,,,,I
38,3,,172164-73510,,"SEAT, SPRING",1,1,,,,,,,,,,,,,,,,,,,,I
39,3,,172141-74430,,O-RING,1,1,,,,,,,,,,,,,,,,,,,,I
40,2,,172456-73650,,"SPRING ASSY, CONTROL",1,1,,,,,,,,,,,,,,,,,,,,I
41,3,,172179-73400,,"STAY,SPRING",1,1,,,,,,,,,,,,,,,,,,,,I
42,3,,172179-73430,,"ADJUST SCREW",1,1,,,,,,,,,,,,,,,,,,,,I
43,3,,172179-73460,,"NUT M 6",1,1,,,,,,,,,,,,,,,,,,,,I
44,3,,172456-73660,,COVER,1,1,,,,,,,,,,,,,,,,,,,,I
45,3,,172456-73670,,SPRING,1,1,,,,,,,,,,,,,,,,,,,,I
46,3,,172456-73680,,SPRING,1,1,,,,,,,,,,,,,,,,,,,,I
47,3,,172456-73690,,"SPRING PLATE A",1,1,,,,,,,,,,,,,,,,,,,,I
48,3,,172456-73700,,"SPRING PLATE B",1,1,,,,,,,,,,,,,,,,,,,,I
49,3,,172456-73710,,SHIM,1,1,,,,,,,,,,,,,,,,,,,,I
50,3,,172456-73720,,SHIM,1,1,,,,,,,,,,,,,,,,,,,,I
51,3,,172456-73730,,SHIM,1,1,,,,,,,,,,,,,,,,,,,,I
52,3,,24311-000090,,"O-RING 1A P-9.0",1,1,,,,,,,,,,,,,,,,,,,,I
53,3,,24311-000180,,"O-RING 1A P-18.0",1,1,,,,,,,,,,,,,,,,,,,,I
54,3,,26450-060202,,"BOLT M 6X 20",1,1,,,,,,,,,,,,,,,,,,,,I
55,2,,172456-73740,,"PISTON ASSY, CONTROL",1,1,,,,,,,,,,,,,,,,,,,,I
56,3,,172168-71500,,"PARALLEL PIN",1,1,,,,,,,,,,,,,,,,,,,,I
57,3,,172168-71510,,O-RING,1,1,,,,,,,,,,,,,,,,,,,,I
58,3,,172168-71520,,"CONICAL SPRING",2,2,,,,,,,,,,,,,,,,,,,,I
59,3,,172168-71530,,RETAINER,1,1,,,,,,,,,,,,,,,,,,,,I
60,3,,172179-73510,,PISTON,1,1,,,,,,,,,,,,,,,,,,,,I
61,3,,172179-73540,,O-RING,2,2,,,,,,,,,,,,,,,,,,,,I
62,3,,172456-73750,,CYLINDER,1,1,,,,,,,,,,,,,,,,,,,,I
63,3,,172456-73770,,"PISTON, HYDRAULIC",2,2,,,,,,,,,,,,,,,,,,,,I
64,3,,26450-060202,,"BOLT M 6X 20",2,2,,,,,,,,,,,,,,,,,,,,I
65,2,,172456-73790,,"PUMP ASSY, GEAR",1,1,,,,,,,,,,,,,,,,
66,3,,172141-71520,,RING,1,1,,,,,,,,,,,,,,,,,,,,I
```

```
67,3,,172141-71550,,O-RING,2,2,,,,,,,,,,,,,,,,,,,I
68,3,,172141-71560,,RING,2,2,,,,,,,,,,,,,,,,,,,,I
69,3,,172141-73220,,PLATE,1,1,,,,,,,,,,,,,,,,,,,I
70,3,,172141-73230,,GUIDE,2,2,,,,,,,,,,,,,,,,,,,I
71,3,,172456-73800,,COVER,1,1,,,,,,,,,,,,,,,,,,,I
72,3,,172456-73810,,JOINT,1,1,,,,,,,,,,,,,,,,,,,I
73,3,,172456-73840,,"CIRCLIP,",1,1,,,,,,,,,,,,,,,,,,,,I
74,3,,172456-73850,,BLADE,1,1,,,,,,,,,,,,,,,,,,,I
75,3,,24315-000060,,"O-RING 1B P-6.0",1,1,,,,,,,,,,,,,,,,,,,I
76,3,,24321-000900,,"O-RING 1A G-90.0",1,1,,,,,,,,,,,,,,,,,,,,I
77,3,,26450-100252,,"BOLT M10X 25",2,2,,,,,,,,,,,,,,,
78,2,,172456-73860,,"VALVE ASSY",1,1,,,,,,,,,,,,,,,
79,3,,172164-73030,,"COVER, SUPPORT",1,1,,,,,,,,,,,,,,,,,,,I
80,3,,172164-73040,,"BAND, BINDER",2,2,,,,,,,,,,,,,,,,,,,I
81,3,,172164-73490,,CLUMP,1,1,,,,,,,,,,,,,,,,,,,I
82,3,,172164-73500,,WASHER,1,1,,,,,,,,,,,,,,,,,,,I
83,3,,172456-73580,,"SOLENOID (A",1,1,,,,,W,,72456268,M/#50501,,,,,,,,,,I
84,3,,172456-73590,,"SOLENOID (B",1,1,,,,,W,,72456268,M/#50501,,,,,,,,,,I
85,3,,172456-73880,,SPRING,1,1,,,,,,,,,,,,,,,,,,,I
86,3,,172456-73900,,"BALL, STEEL",1,1,,,,,,,,,,,,,,,,,,,I
87,3,,172456-73930,,"ELEMENT,FILTER",1,1,,,,,,,,,,,,,,,,,,,I
88,3,,172456-73960,,O-RING,2,2,,,,,,,,,,,,,,,,,,,I
89,3,,172142-74590,,PLUG,1,1,,,,,,,,,,,,,,,,,,,I
90,4,,172142-74650,,"PLUG 1/8",1,1,,,,,,,,,,,,,,,,,,,I
91,4,,24315-000080,,"O-RING 1B P-8.0",1,1,,,,,,,,,,,,,,,,,,,I
92,3,,172142-74600,,PLUG,1,1,,,,,,,,,,,,,,,,,,,I
93,4,,172142-74660,,"PLUG 1/4",1,1,,,,,,,,,,,,,,,,,,,I
94,4,,24315-000110,,"O-RING 1B P-11.0",1,1,,,,,,,,,,,,,,,,,,,I
95,3,,172165-74740,,SPRING,2,2,,,,,,,,,,,,,,,,,,,I
96,3,,24311-000160,,"O-RING 1A P-16.0",2,2,,,,,,,,,,,,,,,,,,,I
97,3,,26450-040102,,"BOLT  4* 10",5,5,,,,,,,,,,,,,,,,,,,I
98,3,,26450-080302,,"BOLT M 8X 30",2,2,,,,,,,,,,,,,,,
99,2,,172142-74670,,"PLUG, 3/8",1,1,,,,,,,,,,,,,,,,,,,I
100,2,,172456-75430,,PLUG,1,1,,,,,,,,,,,,,,,,,,,I
101,2,,172456-75440,,"PUMP ASSY, TROCHOID",1,1,,,,,,,,,,,,,,,,,,,I
102,3,,172456-75450,,GEAR,1,1,,,,,,,,,,,,,,,,,,,I
103,3,,172456-75460,,"PIN, SPRING",1,1,,,,,,,,,,,,,,,,,,,I
104,3,,172456-75480,,BLADE,1,1,,,,,,,,,,,,,,,,,,,I
105,3,,172187-75860,,CASE,1,1,,,,,,,,,,,,,,,,,,,I
106,3,,172187-75870,,"PLATE A ,SIDE",1,1,,,,,,,,,,,,,,,,,,,I
107,3,,172187-75880,,O-RING,1,1,,,,,,,,,,,,,,,,,,,I
108,3,,172187-75910,,"PLATE B ,SIDE",1,1,,,,,,,,,,,,,,,,,,,I
109,3,,172187-75920,,"PIN,SPRING",1,1,,,,,,,,,,,,,,,,,,,I
110,3,,26450-050122,,"BOLT M 5X 12",3,3,,,,,,,,,,,,,,,,,,,I
111,2,,24315-000140,,"O-RING 1B P-14.0",2,2,,,,,,,,,,,,,,,,,,,I
112,1,,172456-73070,,"SEAL SET",1,1,,,,,,,,,,,,,,,
113,2,,172456-73140,,"SEAL, OIL",1,1,,,,,,,,,,,,,,,
114,2,,172456-73150,,O-RING,1,1,,,,,,,,,,,,,,,
115,2,,24321-000450,,"O-RING 1A G-45.0",1,1,,,,,,,,,,,,,,,
116,2,,172179-73280,,GASKET,1,1,,,,,,,,,,,,,,,
117,2,,172456-73610,,FILTER,1,1,,,,,,,,,,,,,,,
118,2,,172141-74430,,O-RING,1,1,,,,,,,,,,,,,,,
119,2,,24311-000090,,"O-RING 1A P-9.0",1,1,,,,,,,,,,,,,,,
120,2,,24311-000180,,"O-RING 1A P-18.0",1,1,,,,,,,,,,,,,,,
121,2,,172168-71510,,O-RING,1,1,,,,,,,,,,,,,,,
122,2,,172179-73540,,O-RING,2,2,,,,,,,,,,,,,,,
123,2,,24315-000060,,"O-RING 1B P-6.0",1,1,,,,,,,,,,,,,,,
124,2,,24321-000900,,"O-RING 1A G-90.0",1,1,,,,,,,,,,,,,,,
125,2,,172456-73930,,"ELEMENT,FILTER",1,1,,,,,,,,,,,,,,,
126,2,,172456-73960,,O-RING,2,2,,,,,,,,,,,,,,,
127,2,,24315-000080,,"O-RING 1B P-8.0",1,1,,,,,,,,,,,,,,,
128,2,,24315-000110,,"O-RING 1B P-11.0",1,1,,,,,,,,,,,,,,,
129,2,,24311-000160,,"O-RING 1A P-16.0",2,2,,,,,,,,,,,,,,,
```

https://truckmanualshub.com/

```
130,2,,172187-75880,,O-RING,1,1,,,,,,,,,,,,,,,,
131,2,,24315-000140,,"O-RING 1B P-14.0",2,2,,,,,,,,,,,,,,,,
132,2,,172141-71550,,O-RING,2,2,,,,,,,,,,,,,,,,,,,,I
133,1,,26013-120302,,"BOLT W/WASHER M12X30",2,2,,,,,,,,,,,,,,,,
```

https://truckmanualshub.com/

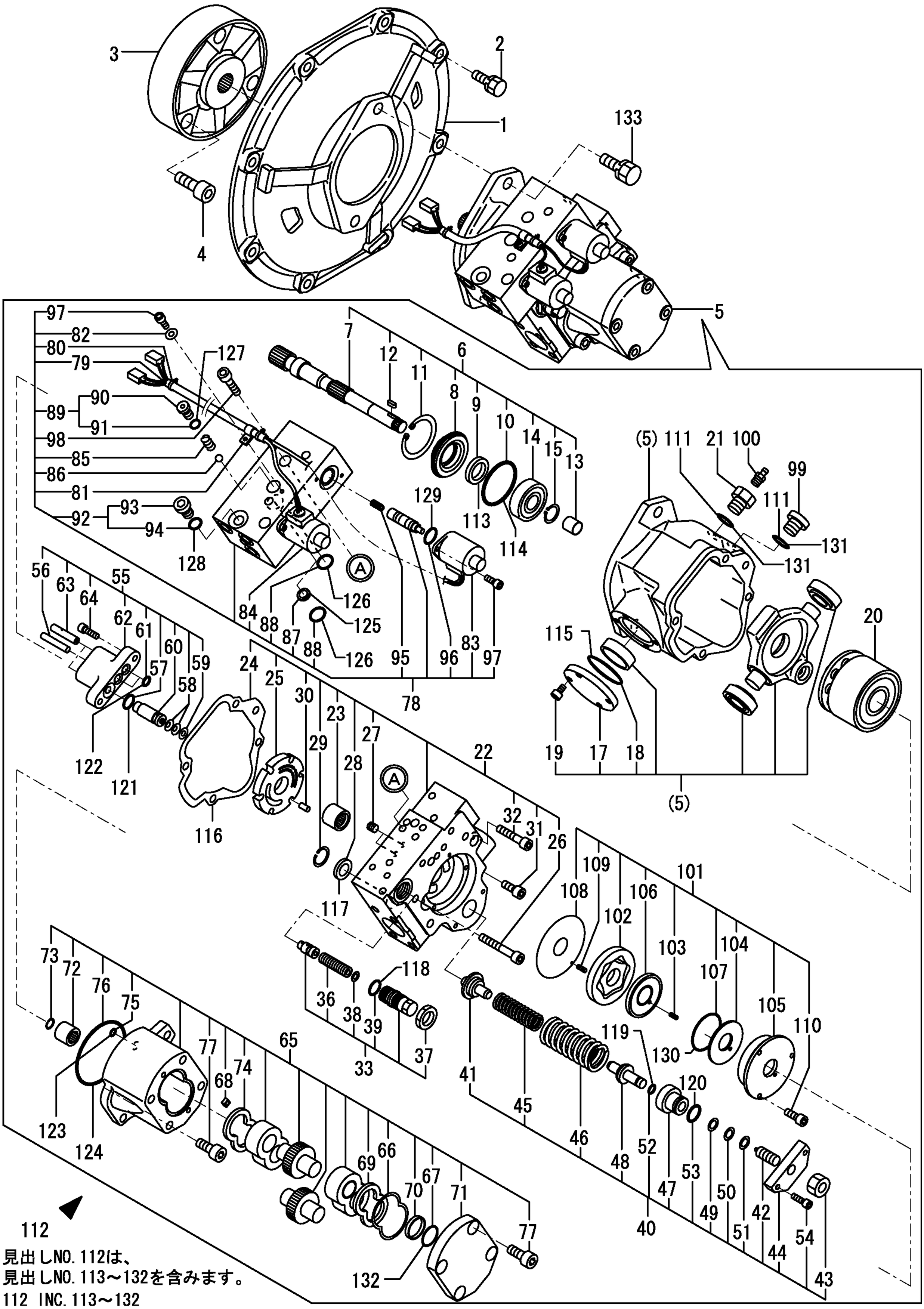

見出しNO.112は、
見出しNO.113～132を含みます。
112 INC.113～132

https://truckmanualshub.com/

```
1,1,,172487-72100,,"CYLINDER,BOOM   (97)",1,1,,,,,,,,,,,,,,,,
2,2,,172487-72010,,"SEAL SET,HEAD 80X45",1,1,,,,,,,,,,,,,,,,
10,2,,172487-72020,,"SEAL SET,PISTON 80",1,,,,,,,,,,,,,,,,,,
10-1,2,,172487-72021,,"PISTON SEAL
SET,BOOM",1,1,,,,,N,,72458500,M/#50502,,,,,,,,,,I
13,2,,172487-72110,,"TUBE,MOOM (GREEN:97)",1,1,,,,,,,,,,,,,,,,,,
14,3,,172146-72310,,"BUSH 45 50",1,1,,,,,,,,,,,,,,,,,,
15,3,,172168-81410,,"SEAL 45X55X4, DUST",2,2,,,,,,,,,,,,,,,,,,
16,2,,172487-72150,,"PLUNGER 56,CUSHON",1,1,,,,,,,,,,,,,,,,,,
17,2,,172487-72160,,"COLLAR 33 44,CUSHON",1,1,,,,,,,,,,,,,,,,,,
18,2,,172487-72180,,"HEAD 80 45",1,1,,,,,,,,,,,,,,,,,,
20,3,,24550-045300,,BUSH,1,1,,,,,,,,,,,,,,,,,,
21,2,,172487-72200,,"LOD 45,BOOM",1,1,,,,,,,,,,,,,,,,,,
22,3,,172146-72310,,"BUSH 45 50",1,1,,,,,,,,,,,,,,,,,,
23,3,,172168-72390,,"SEAT,SCREW
M10X34.3",1,1,,,,,W,,72458525,M/#50501,,,,,,,,,,I
24,3,,172168-81410,,"SEAL 45X55X4, DUST",2,2,,,,,,,,,,,,,,,,,,
25,2,,172142-72260,,"WASHER 80 B",1,1,,,,,,,,,,,,,,,,,,
26,2,,172422-72470,,PISTON,1,1,,,,,,,,,,,,,,,,,,
27,2,,24761-020000,,"NIPPLE PT1/8,GREASE",1,1,,,,,,,,,,,,,,,,,,
28,2,,24761-040000,,"NIPPLE B,GREASE",1,1,,,,,,,,,,,,,,,,,,
29,2,,933111-20200,,"U-NUT M33",1,1,,,,,,,,,,,,,,,,,,
30,1,,172487-72290,,"COVER,SLIDE(GREEN:97",1,1,,,,,,,,,,,,,,,,,,,,
31,1,,172186-72480,,"GUIDE,SLIDE",2,2,,,,,,,,,,,,,,,,,,
32,1,,22217-100000,,"SPRING WASHER 10",1,1,,,,,,,,,,,,,,,,,,
33,1,,26116-100162,,"BOLT M10X 16 PLATED",1,1,,,,,,,,,,,,,,,,,,
34,1,,933147-03400,,"WASHER, BRAKE ARM",1,1,,,,,,,,,,,,,,,,,,
35,1,,933168-14170,,"SPRING 16",2,2,,,,,,,,,,,,,,,,,,
```

https://truckmanualshub.com/

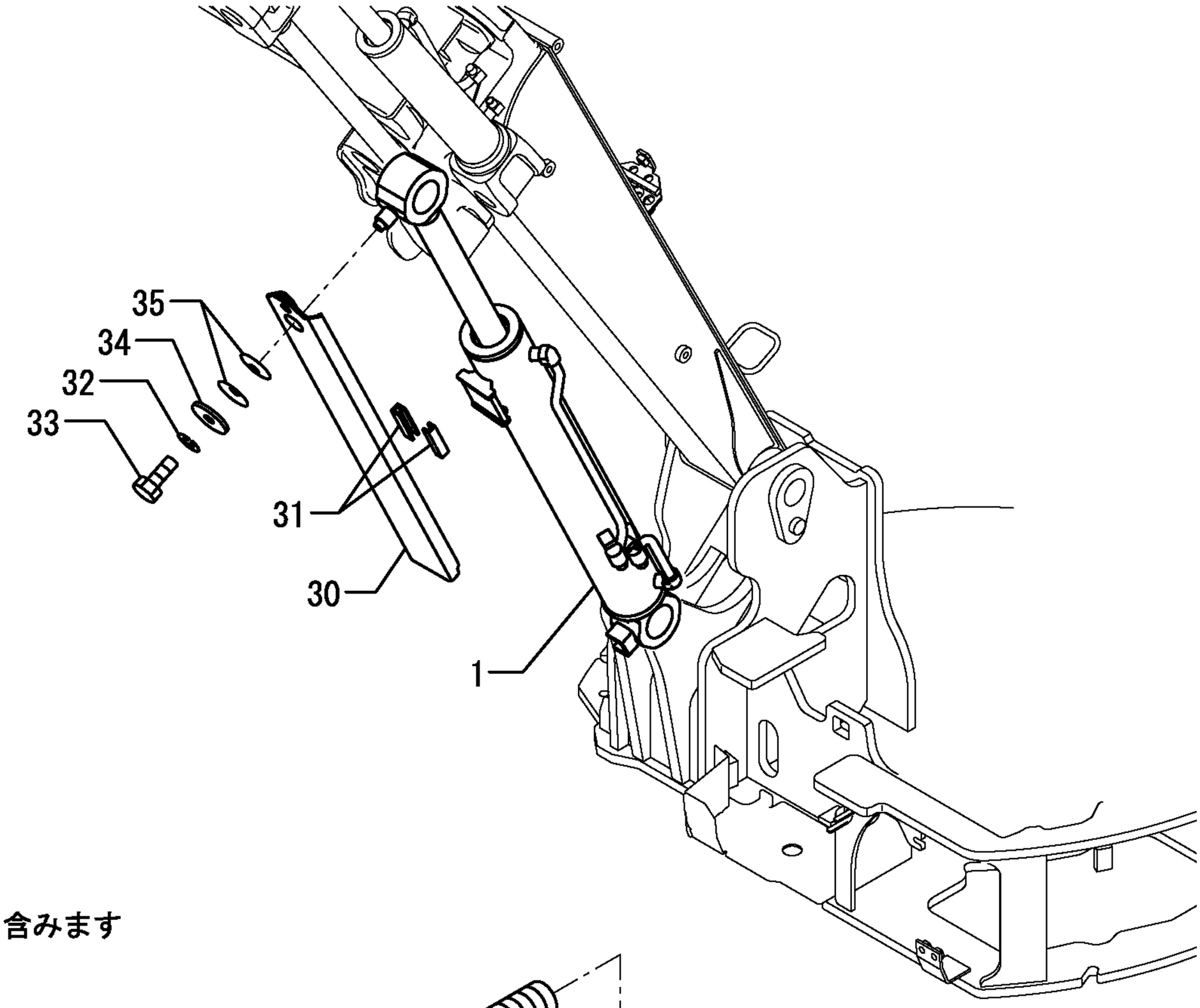

見出しNo.1は
見出しNo.2から29を含みます
1 inc.2～29

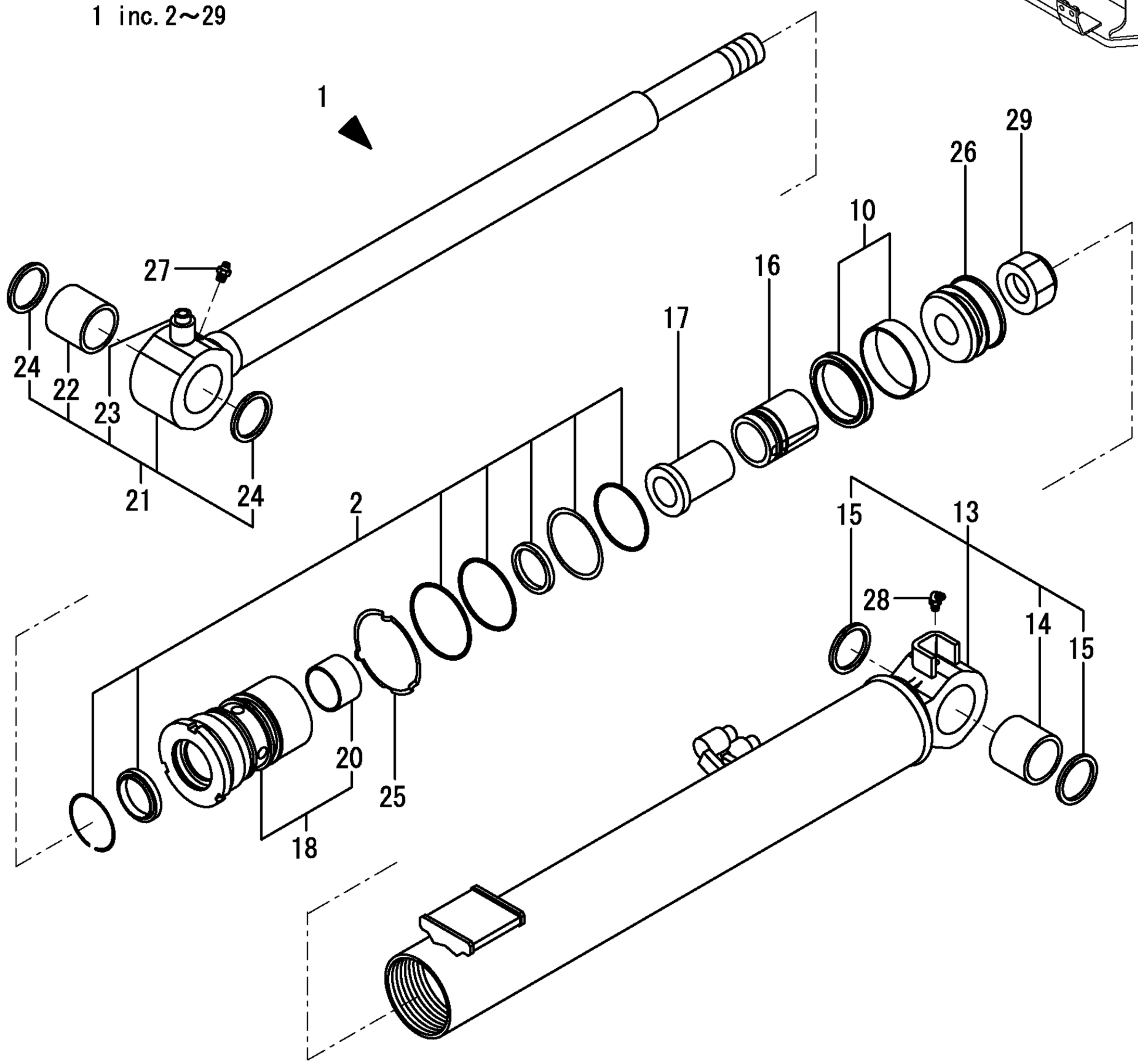

https://truckmanualshub.com/

```
1,1,,172487-72300,,"CYLINDER,ARM(GREEN97",1,1,,,,,,,,,,,,,,,,
2,2,,172143-72010,,"SEAL SET,PISTON 70",1,,,,,,,,,,,,,,,,,,
2-1,2,,172460-72070,,"SEAL SET",1,1,,,,,N,,72458500,M/#50502,,,,,,,,,,I
5,2,,172456-72010,,"SEAL SET 70*40,HEAD",1,1,,,,,,,,,,,,,,,,,,
13,2,,172456-72190,,"PISTON 70 27",1,1,,,,,,,,,,,,,,,,,,
14,2,,172141-72250,,"U-NUT M27",1,1,,,,,,,,,,,,,,,,,,
15,2,,172487-72310,,"TUBE,ARM  (GREEN:97)",1,1,,,,,,,,,,,,,,,,,,
16,3,,172168-72410,,"BUSH 40X50X40",1,1,,,,,,,,,,,,,,,,,,
17,3,,172448-72650,,"SEAL 40X50X4,DUST",2,2,,,,,,,,,,,,,,,,,,
18,2,,172487-72350,,"HEAD 70 40",1,1,,,,,,,,,,,,,,,,,,
20,3,,24550-040300,,"BUSH 40X30",1,1,,,,,,,,,,,,,,,,,,
21,2,,172487-72380,,"ROD ASSY, ARM",1,1,,,,,,,,,,,,,,,,,,
22,3,,172168-72410,,"BUSH 40X50X40",1,1,,,,,,,,,,,,,,,,,,
23,3,,172448-72650,,"SEAL 40X50X4,DUST",2,2,,,,,,,,,,,,,,,,,,
24,2,,172487-72400,,"PLUNGER 50,CUSHON",1,1,,,,,,,,,,,,,,,,,,
25,2,,172487-72410,,"COLLAR 27 38,CUSHON",1,1,,,,,,,,,,,,,,,,,,
26,2,,172141-72420,,"WASHER 70, LOCK",1,1,,,,,,,,,,,,,,,,,,
27,2,,24761-020000,,"NIPPLE PT1/8,GREASE",2,2,,,,,,,,,,,,,,,,,,
```

https://truckmanualshub.com/

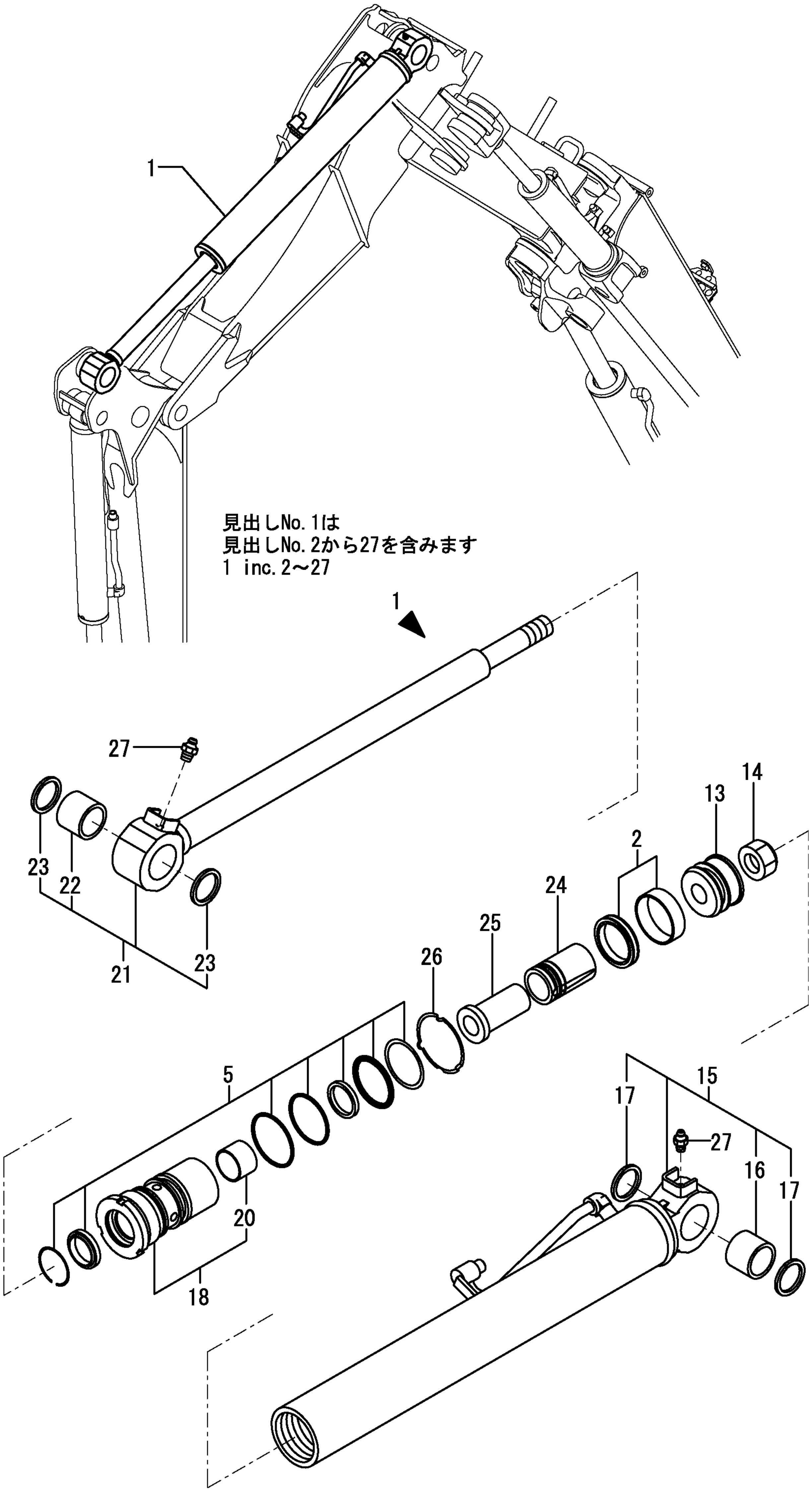

https://truckmanualshub.com/

```
1,1,,172456-72501,,"CYLINDER, BUCKET(97)",1,,,,,,,,,,,,,,,,,,
1-1,1,,172456-72502,,"CYLINDER,BUCKET
(97)",1,1,,,,,N,,72456271,M/#50770,,,,,,,,,,I
2,2,,172456-72031,,"SEAL SET,HEAD 55X35",1,1,,,,,,,,,,,,,,,,,,
7,2,,172171-72130,,"U-NUT M24",1,,,,,,,,,,,,,,,,,,,
7-1,2,,172141-72250,,"U-NUT M27",1,1,,,,,S,,72456271,M/#50770,,,,,,,,,,I
8,2,,172449-72310,,"PISTON 55(24-28",1,,,,,,,1,,,,,,,,,,,,,I
8-1,2,,172449-72311,,"PISTON 55(24-28",1,,,,,,N,1,72448155,M/#50506,,,,,,,,,,I
8-2,2,,172456-72580,,"PISTON 55 (27-
27",1,1,,,,,S,1,72456271,M/#50770,,,,,,,,,,I
9,2,,172449-72320,,"GASKET RGU 55",1,,,,,,,,,,,,,,,,,,,
9-1,2,,172449-72321,,"GASKET RGU55
ASSSY",1,1,,,,,N,,72448155,M/#50506,,,,,,,,,,I
12,2,,172449-72410,,"HEAD CMP B,55-35",1,1,,,,,,,,,,,,,,,,,
14,3,,24550-035300,,"BUSH 35X30",1,1,,,,,,,,,,,,,,,,,
15,2,,172456-72512,,"TUBE ASSY,BUCKET(97)",1,1,,,,,,,,,,,,,,,,,
16,3,,172141-72561,,"BUSH (35-45-30",1,1,,,,,,,,,,,,,,,,,
17,3,,172448-81610,,"SEAL 35X45X4,DUST",2,2,,,,,,,,,,,,,,,,,
18,2,,172173-72550,,"ROCK WASHER 55",1,1,,,,,,,,,,,,,,,,,
19,2,,172456-72560,,"LOD CMP,BUCKET",1,,,,,,,2,,,,,,,,,,,,,I
19-1,2,,172456-72561,,"ROD ASSY,
BUCKET",1,1,,,,,S,2,72456271,M/#50770,,,,,,,,,,I
20,3,,172141-72561,,"BUSH (35-45-30",1,1,,,,,,,,,,,,,,,,,
21,3,,172448-81610,,"SEAL 35X45X4,DUST",2,2,,,,,,,,,,,,,,,,,
22,2,,24761-040000,,"NIPPLE B,GREASE",1,1,,,,,,,,,,,,,,,,,
```

https://truckmanualshub.com/

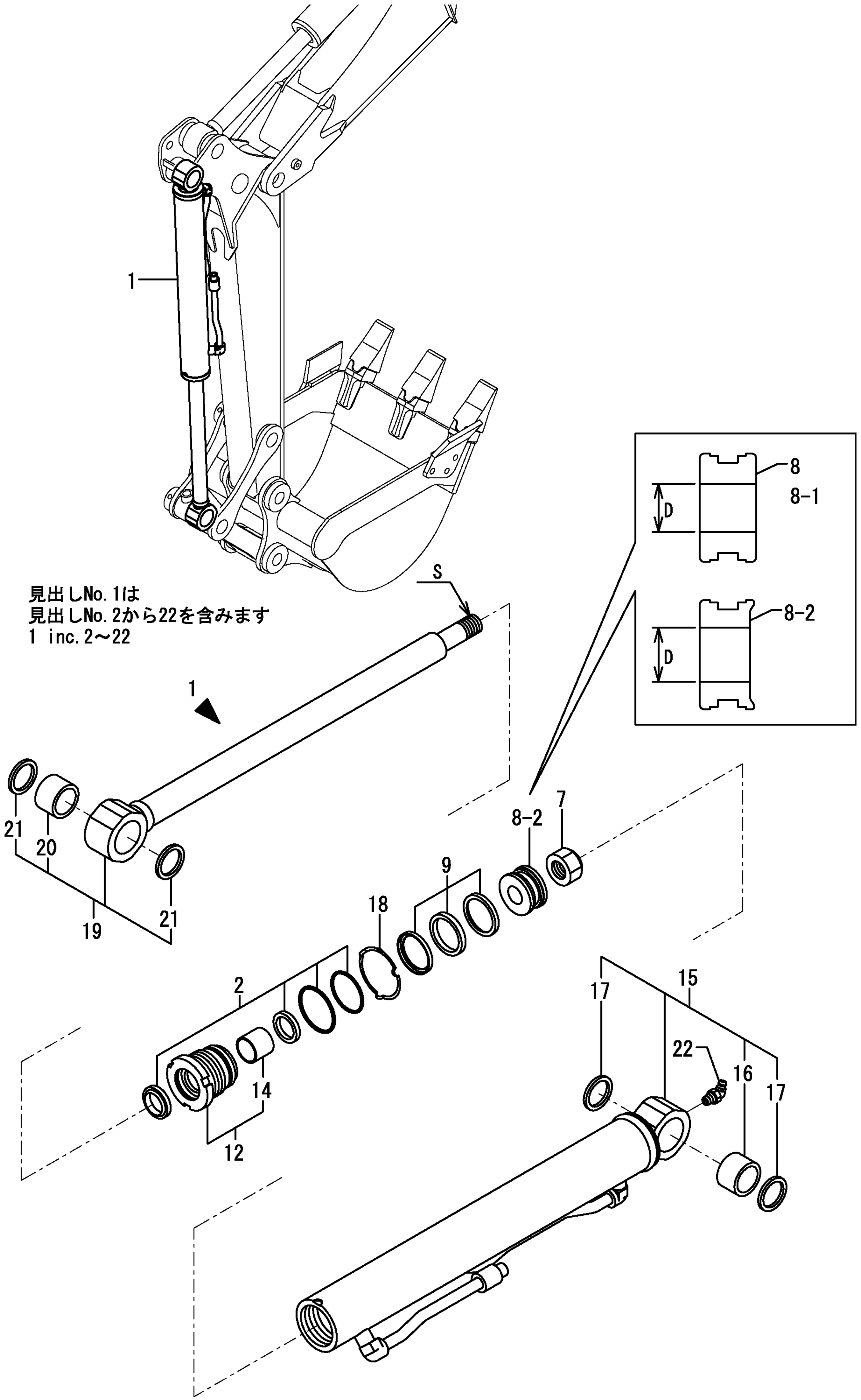

https://truckmanualshub.com/

```
1,1,,172421-72700,,"CYLINDER ASSY.,BLADE",1,1,,,,,,,,,,,,,,,,
2,2,,172168-72010,,"SEAL KIT",1,,,,,,Z,,72458500,M/#50502,,,,,,,,,,I
3,3,,172168-72020,,"SEAL SET, HEAD 70X40",1,1,,,,,,,,,,,,,,,,
8,3,,172168-72030,,"SEAL SET,PISTON70X40",1,,,,,,,,,,,,,,,,,,
8-1,3,,172460-72070,,"SEAL SET",1,1,,,,,N,,72458500,M/#50502,,,,,,,,,,I
11,3,,172141-72420,,"WASHER 70, LOCK",1,1,,,,,,,,,,,,,,,,
12,3,,933111-26600,,"RING 55, SPRING",1,1,,,,,,,,,,,,,,,,
13,2,,172143-72400,,"HEAD 70 40",1,1,,,,,,,,,,,,,,,,
15,3,,24550-040300,,"BUSH 40X30",1,1,,,,,,,,,,,,,,,,
16,2,,172175-72550,,U-NUT,1,1,,,,,,,,,,,,,,,,
17,2,,172421-72710,,"TUBE ASSY.,BLADE",1,1,,,,,,,,,,,,,,,,
18,3,,172168-72240,,"BUSH 38X50X40",1,1,,,,,,,,,,,,,,,,
19,3,,172168-81270,,"SEAL,DUST 38X50X4",2,2,,,,,,,,,,,,,,,,
20,2,,172421-72730,,"ROD COMP.,BLADE",1,1,,,,,,,,,,,,,,,,
21,3,,172168-72240,,"BUSH 38X50X40",1,1,,,,,,,,,,,,,,,,
22,3,,172168-81270,,"SEAL,DUST 38X50X4",2,2,,,,,,,,,,,,,,,,
23,3,,23871-005000,,"PLUG PT 1/16",1,1,,,,,,,,,,,,,,,,
24,2,,172421-72770,,"PISTON 70 30",1,1,,,,,,,,,,,,,,,,
25,1,,172422-72790,,"COVER,BLADE(GREEN:88",1,1,,,,,,,,,,,,,,,,
26,1,,26013-100202,,"BOLT W/WASHER M10X20",2,2,,,,,,,,,,,,,,,,
```

https://truckmanualshub.com/

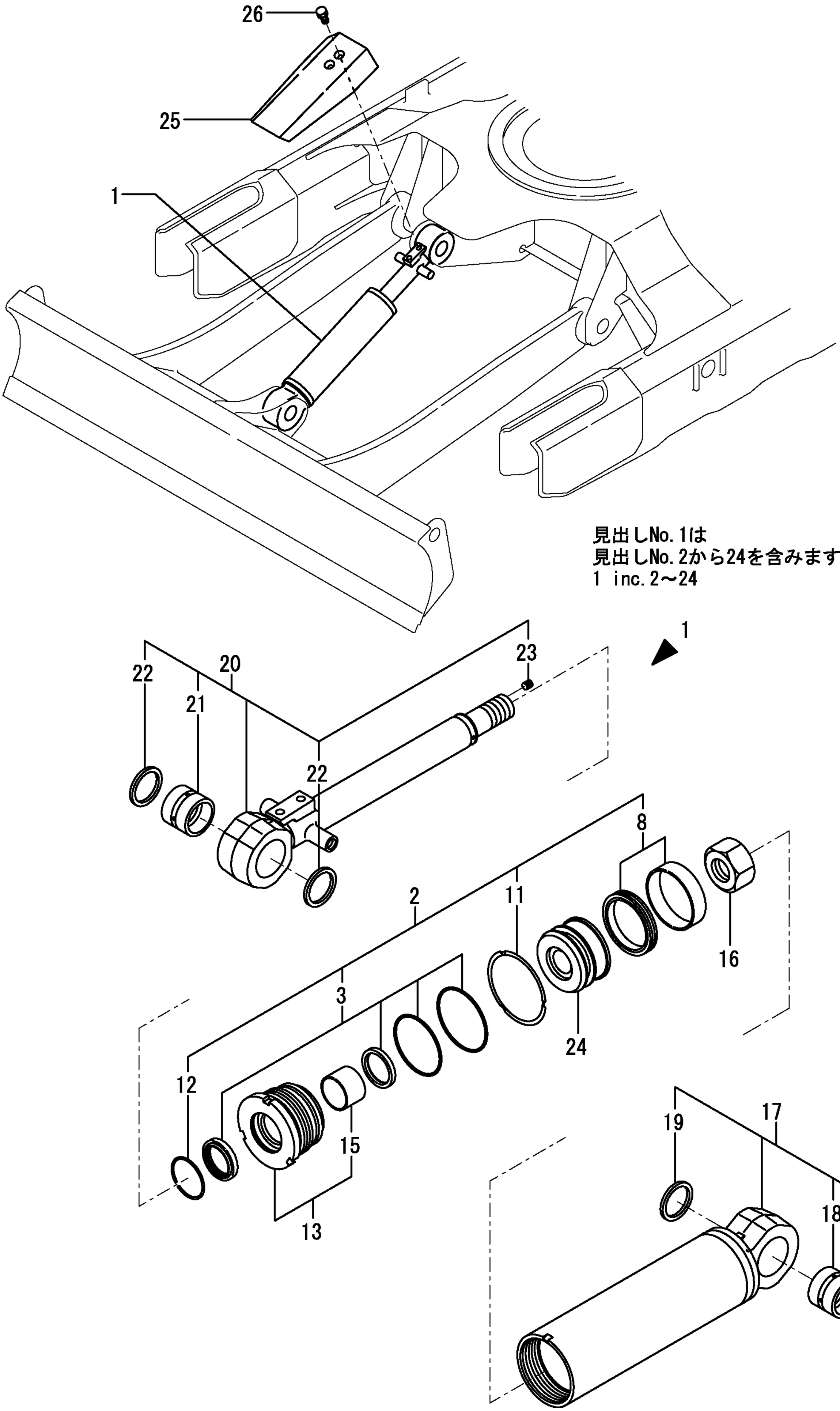

https://truckmanualshub.com/

```
1,1,,172487-72700,,"CYLINDER,OFFSET (97)",1,1,,,,,,,,,,,,,,,,
2,2,,172457-72050,,"SEAL SET 60X35,HEAD",1,1,,,,,,,,,,,,,,,,
8,2,,172171-72120,,PISTON,1,1,,,,,,,,,,,,,,,,
9,2,,172171-72130,,"U-NUT M24",1,1,,,,,,,,,,,,,,,,
10,2,,172137-72452,,"SEAL SET 60A, PISTON",1,,,,,,,,,,,,,,,,,,
10-1,2,,172137-72453,,"SEAL SET, PISTON
60A",1,1,,,,,N,,72458500,M/#50502,,,,,,,,,,I
13,2,,172141-72540,,"HEAD 6035, CYLINDER",1,1,,,,,,,,,,,,,,,,
15,3,,24550-035300,,"BUSH 35X30",1,1,,,,,,,,,,,,,,,,
16,2,,172487-72710,,"TUBE,OFFSET(GREEN:97",1,1,,,,,,,,,,,,,,,,,,
17,2,,172487-72740,,"LOD,OFFSET",1,1,,,,,,,,,,,,,,,,
18,2,,933125-59600,,"WASHER 60 B, LOCK",1,1,,,,,,,,,,,,,,,,
```

https://truckmanualshub.com/

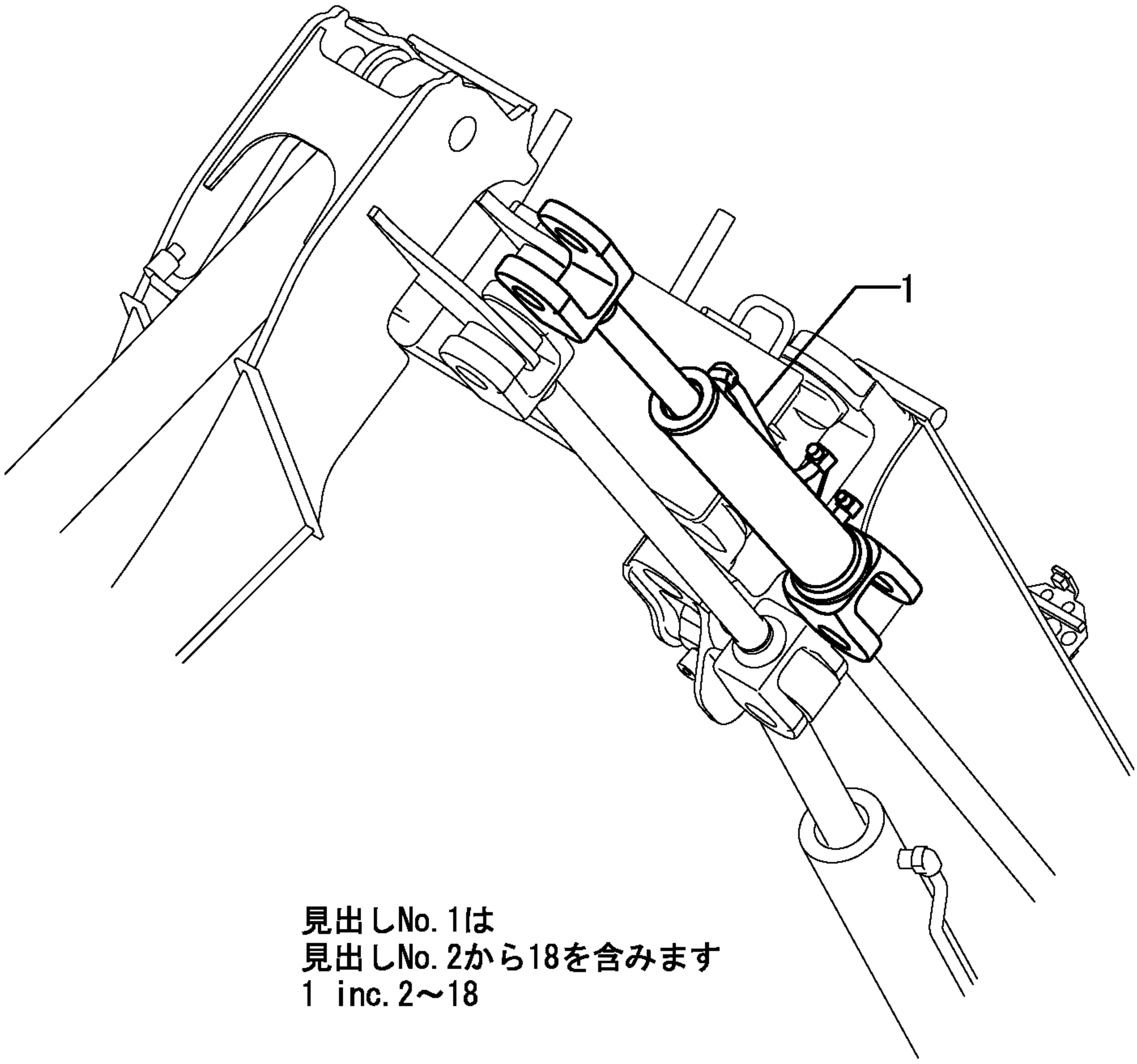

見出しNo.1は
見出しNo.2から18を含みます
1 inc.2～18

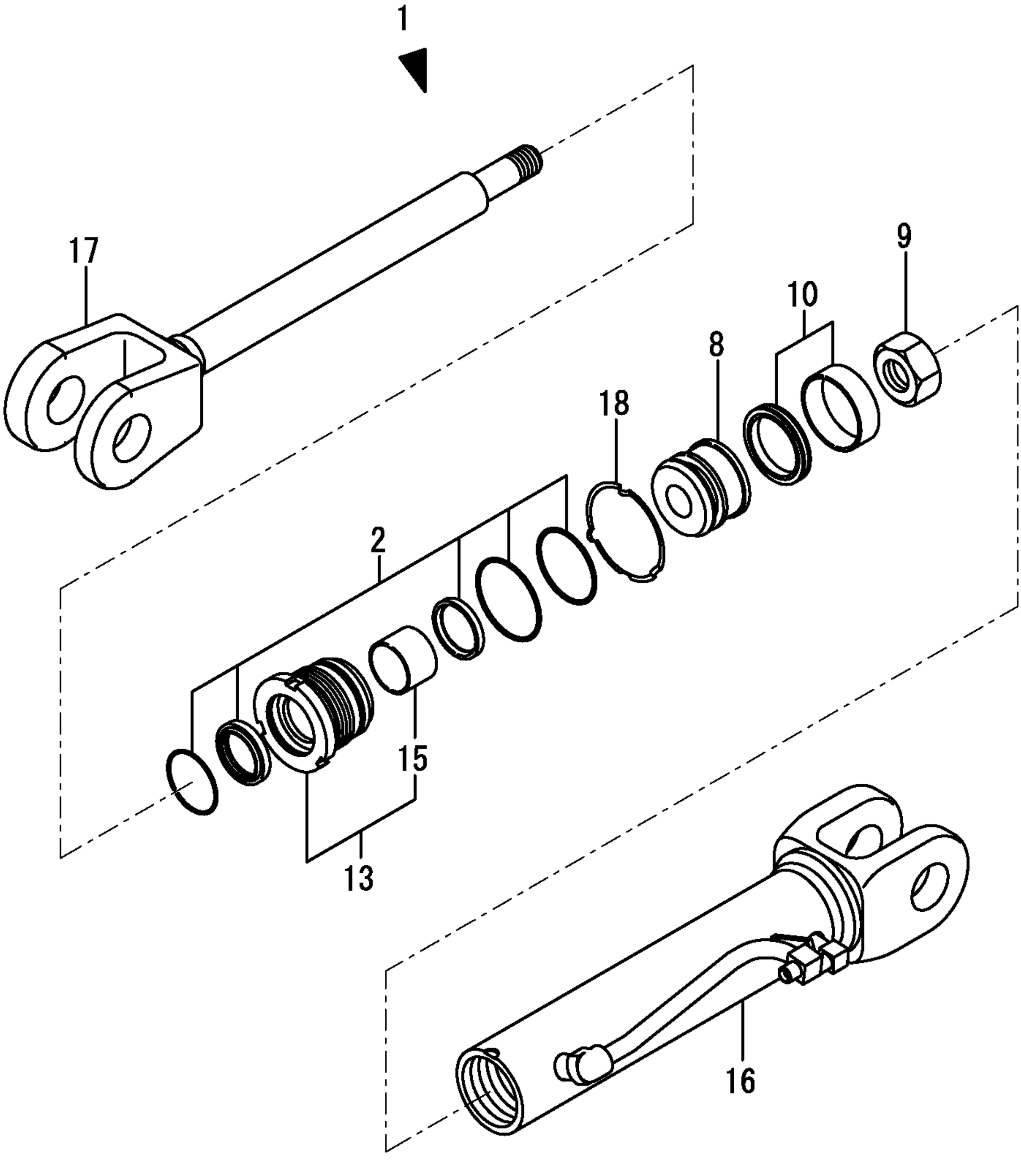

https://truckmanualshub.com/

```
1,1,,172456-73300,,"MOTOR ASSY,TRAVEL",2,2,,,,,,,,,,,,,,,,
2,2,,1A6240-37360,,PLUG,4,4,,,,,,,,,,,,,,,,,,,I
3,2,,172147-70220,,PLUG,4,4,,,,,,,,,,,,,,,,,,,I
4,2,,172450-73620,,"CYLINDER BLOCK KIT",2,2,,,,,,,,,,,,,,,,
14,2,,172148-70301,,PLUG,6,6,,,,,,,,,,,,,,,,,,,I
16,2,,172141-70450,,"SEAT, SPRING",4,4,,,,,,,,,,,,,,,,,,,I
17,2,,172162-70780,,PLUG,2,2,,,,,,,,,,,,,,,,,,,I
18,2,,172168-71950,,SPRING,4,4,,,,,,,,,,,,,,,,,,,I
19,2,,172638-73330,,PLATE,2,2,,,,,,,,,,,,,,,,,,,I
20,2,,172456-73340,,"REDUCTION GEAR",2,2,,,,,,,,,,,,,,,,,,,I
21,3,,172141-70110,,SCREW,8,8,,,,,,,,,,,,,,,,,,,I
22,3,,172147-70120,,"GAUGE, W/ROLLER",8,8,,,,,,,,,,,,,,,,,,,I
23,3,,172141-70150,,"GAUGE, W/ROLLER",6,6,,,,,,,,,,,,,,,,,,,I
24,3,,172141-70160,,"RACE, INNER",6,6,,,,,,,,,,,,,,,,,,,I
25,3,,172148-70301,,PLUG,4,4,,,,,,,,,,,,,,,,,,,I
26,3,,172122-70350,,BALL,198,198,,,,,,,,,,,,,,,,,,,I
27,3,,172122-70350,,BALL,20,20,,,,,,,,,,,,,,,,,,,I
28,3,,172450-73330,,PLUG,4,4,,,,,,,,,,,,,,,,,,,I
29,3,,172421-73350,,"PLANETARY, GEAR A",6,6,,,,,,,,,,,,,,,,,,,I
30,3,,172456-73350,,"RING NUT",2,2,,,,,,,,,,,,,,,,,,,I
31,3,,172456-73360,,"PLANETARY, GEAR B",8,8,,,,,,,,,,,,,,,,,,,I
32,3,,172456-73370,,"INNER RACE",8,8,,,,,,,,,,,,,,,,,,,I
33,3,,172456-73380,,"GEAR,SUN",2,2,,,,,,,,,,,,,,,,,,,I
34,3,,172456-73390,,"SNAP RING",2,2,,,,,,,,,,,,,,,,,,,I
35,3,,172456-73400,,HOLDER,2,2,,,,,,,,,,,,,,,,,,,I
36,3,,172456-73410,,"GEAR, DRIVE",2,2,,,,,,,,,,,,,,,,,,,I
37,3,,172456-73420,,"THRUST PLATE",2,2,,,,,,,,,,,,,,,,,,,I
38,3,,172122-73430,,PLUG,4,4,,,,,,,,,,,,,,,,,,,I
39,3,,172456-73430,,"THRUST PLATE",2,2,,,,,,,,,,,,,,,,,,,I
40,3,,172456-73440,,"THRUST PLATE",2,2,,,,,,,,,,,,,,,,,,,I
41,3,,172456-73450,,COVER,2,2,,,,,,,,,,,,,,,,,,,I
43,3,,172183-73520,,BEARING,2,2,,,,,,,,,,,,,,,,,,,I
44,3,,172183-73560,,"WASHER, THRUST",8,8,,,,,,,,,,,,,,,,,,,I
45,3,,172183-73570,,"PLATE, THRUST",2,2,,,,,,,,,,,,,,,,,,,I
46,3,,172183-73660,,WIRE,2,2,,,,,,,,,,,,,,,,
49,2,,172421-73400,,SPRING,2,2,,,,,,,,,,,,,,,,,,,I
50,2,,172456-73460,,"SLANT PLATE",2,2,,,,,,,,,,,,,,,,,,,I
51,2,,172122-73470,,PIN,2,2,,,,,,,,,,,,,,,,,,,I
52,2,,172456-73330,,"BASE PLATE ASSY",2,2,,,,,,,,,,,,,,,,
55,4,,172141-70410,,"VALVE, CHECK",4,4,,,,,,,,,,,,,,,,,,,I
56,4,,172141-70420,,SPRING,4,4,,,,,,,,,,,,,,,,,,,I
58,4,,172421-73380,,PLUG,4,4,,,,,,,,,,,,,,,,,,,I
59,4,,172456-73490,,SPOOL,2,2,,,,,,,,,,,,,,,,,,,I
61,2,,172122-73480,,PIN,4,4,,,,,,,,,,,,,,,,,,,I
63,2,,172456-73500,,SPRING,4,4,,,,,,,,,,,,,,,,,,,I
64,2,,172450-73510,,"BALL,STEEL",4,4,,,,,,,,,,,,,,,,,,,I
65,2,,172456-73510,,"CAP, STEERING WHEEL",4,4,,,,,,,,,,,,,,,,,,,I
66,2,,172456-73520,,ORIFICE,4,4,,,,,,,,,,,,,,,,,,,I
67,2,,172456-73540,,"VALVE ASSY",2,2,,,,,,,,,,,,,,,,
68,3,,172148-71580,,SPRING,4,4,,,,,,,,,,,,,,,,,,,I
69,3,,172456-73550,,"BODY, VALVE",2,2,,,,,,,,,,,,,,,,,,,I
70,3,,172456-73560,,"CHECK VALVE",4,4,,,,,,,,,,,,,,,,,,,I
71,3,,172183-73770,,PLUG,4,4,,,,,,,,,,,,,,,,,,,I
74,3,,24315-000120,,"O-RING 1B P-12.0",2,2,,,,,,,,,,,,,,,,,,,I
75,2,,172450-73550,,"PISTON ASSY",4,4,,,,,,,,,,,,,,,,,,,I
76,2,,172456-73570,,"BOLT,SOCKET HEAD",6,6,,,,,,,,,,,,,,,,
77,2,,172183-73670,,SHAFT,2,2,,,,,,,,,,,,,,,,,,,I
78,2,,172183-73780,,PLUG,2,2,,,,,,,,,,,,,,,,,,,I
79,2,,172183-73870,,PLUG,4,4,,,,,,,,,,,,,,,,,,,I
80,2,,172312-74790,,ORIFICE,8,8,,,,,,,,,,,,,,,,,,,I
81,2,,24101-060024,,"BALL BEARING",2,2,,,,,,,,,,,,,,,,,,,I
82,2,,24101-060044,,"BALL BEARING #6004",2,2,,,,,,,,,,,,,,,,,,,I
87,2,,26450-080202,,"BOLT M 8X 20",12,12,,,,,,,,,,,,,,,,,,,I
```

https://truckmanualshub.com/

```
88,1,,172456-73320,,"SEAL SET",2,2,,,,,,,,,,,,,,,,
102,1,,26013-100252,,"BOLT W/WASHER M10X25",16,16,,,,,,,,,,,,,,,,
```

https://truckmanualshub.com/

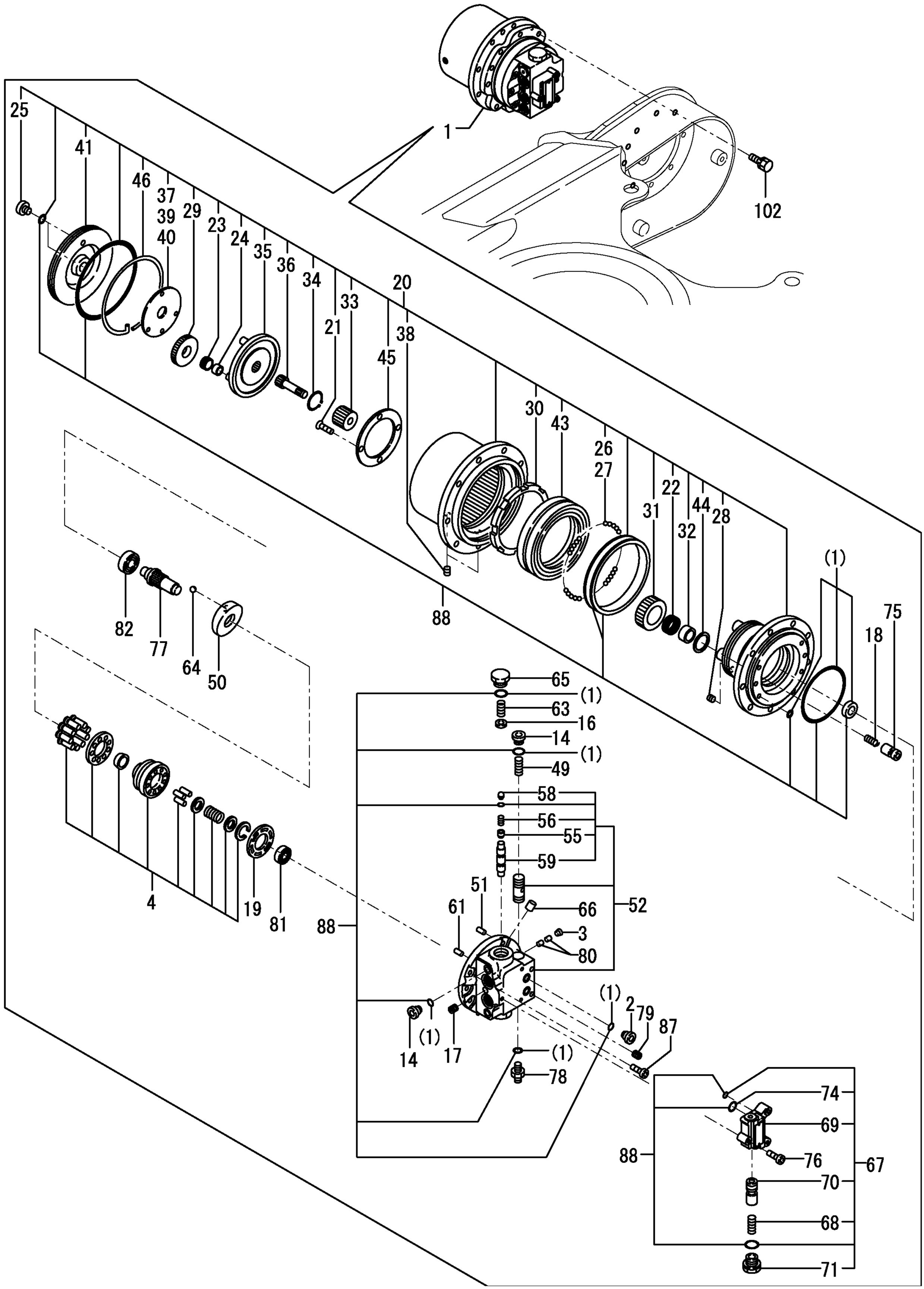

https://truckmanualshub.com/

```
1,1,,172456-73310,,"MOTOR,SWING",1,1,,,,,,,,,,,,,,,
2,2,,172456-77100,,VALVE,1,1,,,,,,,,,,,,,,,
3,3,,172456-77110,,"SEAL SET",1,1,,,,,,,,,,,,,,,
7,3,,172456-77130,,"BOLT 6*65",2,2,,,,,,,,,,,,,,,,,,,I
8,3,,23871-010000,,"PLUG PT1/8,SCREW",6,6,,,,,,,,,,,,,,,,,,,I
9,2,,172456-77140,,"MOTOR,SWING",1,1,,,,,,,,,,,,,,,
10,3,,172137-70490,,PLUG,4,4,,,,,,,,,,,,,,,,,,,I
11,3,,172137-70570,,PIN,2,2,,,,,,,,,,,,,,,,,,,I
12,3,,172137-70580,,SPRING,2,2,,,,,,,,,,,,,,,,,,,I
13,3,,172148-73350,,"PLATE, VALVE",1,1,,,,,,,,,,,,,,,,,,,I
14,3,,172173-73510,,"BOLT 12X40",4,4,,,,,,,,,,,,,,,,,,,I
15,3,,172173-73520,,COLLAR,1,1,,,,,,,,,,,,,,,,,,,I
16,3,,172173-73570,,JIROLLER,1,1,,,,,,,,,,,,,,,,,,,I
17,3,,172168-73580,,BALL,2,2,,,,,,,,,,,,,,,,,,,I
18,3,,172173-73580,,DRIVE,1,1,,,,,,,,,,,,,,,,,,,I
19,3,,172168-73590,,PLUG,2,2,,,,,,,,,,,,,,,,,,,I
20,3,,172173-73590,,HOLDER,1,1,,,,,,,,,,,,,,,,,,,I
21,3,,172168-73600,,SPRING,2,2,,,,,,,,,,,,,,,,,,,I
22,3,,172173-73600,,RING,1,1,,,,,,,,,,,,,,,,,,,I
23,3,,172173-73690,,"SNAP RING",1,1,,,,,,,,,,,,,,,,,,,I
24,3,,172173-73700,,"SNAP RING",1,1,,,,,,,,,,,,,,,,,,,I
25,3,,172456-77150,,"HOUSING, BEARING",1,1,,,,,,,,,,,,,,,,,,,I
26,3,,172456-77160,,"FLANGE, MOUTING",1,1,,,,,,,,,,,,,,,,,,,I
27,3,,172456-77170,,"GEAR, PINION",1,1,,,,,,,,,,,,,,,,,,,I
28,3,,172456-77180,,"PISTON, HYDRAULIC",1,1,,,,,,,,,,,,,,,,,,,I
29,3,,172456-77190,,RING,1,1,,,,,,,,,,,,,,,,,,,I
30,3,,172456-77200,,CIRCLIP,1,1,,,,,,,,,,,,,,,,,,,I
31,3,,172456-77210,,"PLATE,FRICTION",6,6,,,,,,,,,,,,,,,,,,,I
32,3,,172456-77220,,PLATE,7,7,,,,,,,,,,,,,,,,,,,I
33,3,,172456-77230,,SPRING,8,8,,,,,,,,,,,,,,,,,,,I
34,3,,172456-77240,,"FRONT BEARING",1,1,,,,,,,,,,,,,,,,,,,I
35,3,,172456-77250,,"NEEDLE BEARING",1,1,,,,,,,,,,,,,,,,,,,I
36,3,,172141-77260,,"VALVE DRIVE",1,1,,,,,,,,,,,,,,,,,,,I
37,3,,172456-77270,,"BOLT 6*65",8,8,,,,,,,,,,,,,,,,,,,I
38,3,,172456-77280,,"HOUSING, VALVE",1,1,,,,,,,,,,,,,,,,,,,I
39,3,,172456-77290,,"SEAL SET",1,1,,,,,,,,,,,,,,,
51,3,,172141-77400,,"PLUG, BLIND",2,2,,,,,,,,,,,,,,,
52,1,,26013-120402,,"BOLT M12X 40",4,4,,,,,,,,,,,,,,,
```

https://truckmanualshub.com/

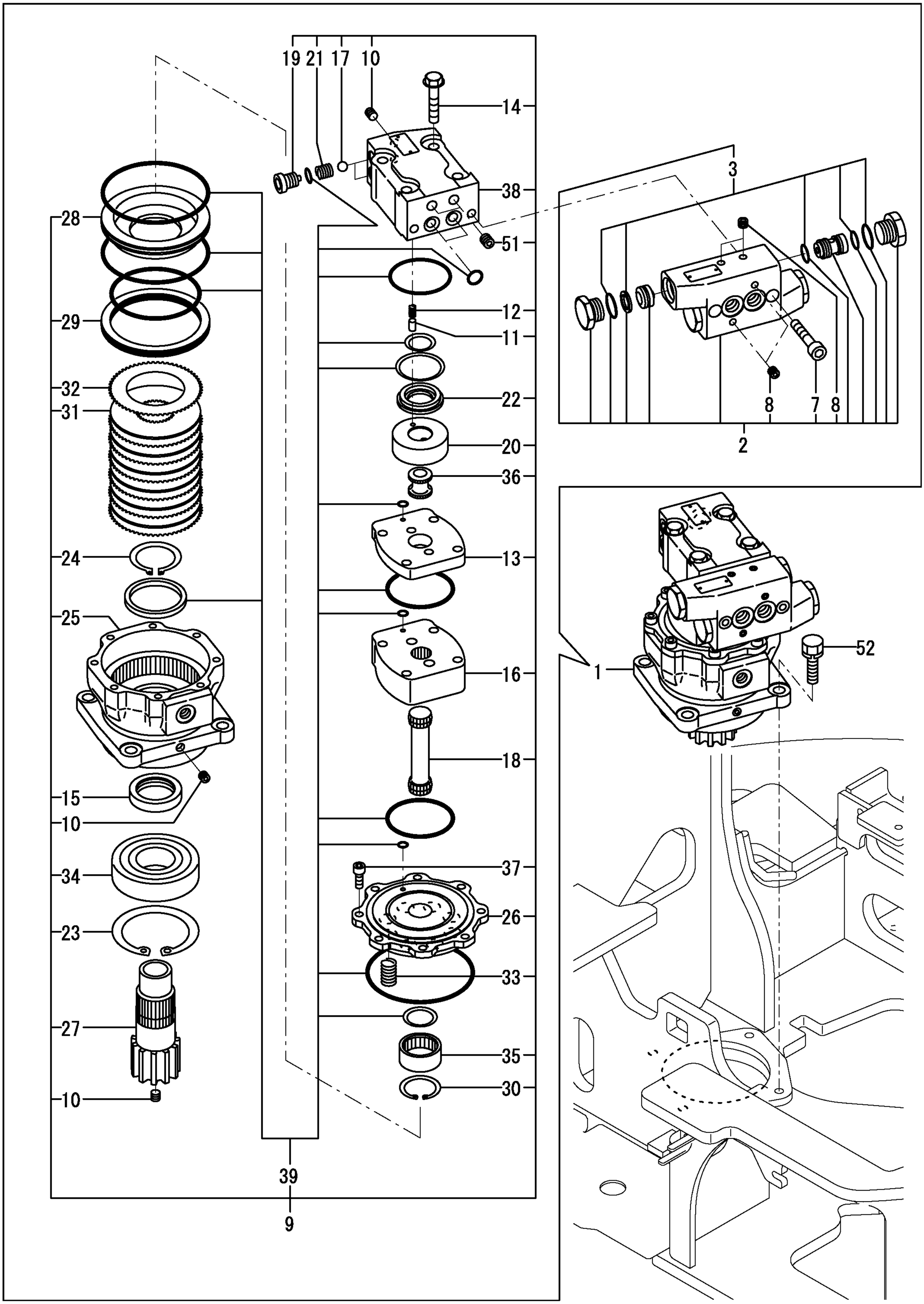

https://truckmanualshub.com/

```
1,1,,172444-73802,,"JOINT ASSY, SWIVEL",1,1,,,,,,,,,,,,,,,,,
2,2,,172444-73810,,"SHAFT, SWIVEL",1,1,,,,,,,,,,,,,,,,,
3,2,,172444-73831,,"HUB, SWIVEL",1,1,,,,,,,,,,,,,,,,,
4,2,,172444-73840,,"FLANGE, SWIVEL",1,1,,,,,,,,,,,,,,,,,
5,2,,172137-73860,,"SPACER, SWIVEL",1,1,,,,,,,,,,,,,,,,,
6,2,,172444-73880,,"SEAL KIT,SWIVEL",1,1,,,,,,,,,,,,,,,,,
7,3,,172142-73800,,"O-RING 55.76X5.7",1,1,,,,,,,,,,,,,,,,,
8,3,,172458-73820,,"SEAL, SWIVEL",7,7,,,,,,,,,,,,,,,,,
9,3,,172148-73870,,"RING EL, BACK UP",1,1,,,,,,,,,,,,,,,,,
10,3,,24311-000750,,"O-RING 1A P-75.0",1,1,,,,,,,,,,,,,,,,,
11,3,,24321-000700,,"O-RING 1A G70.0,NBR",1,1,,,,,,,,,,,,,,,,,,
12,2,,22242-000451,,"CIRCLIP   45",1,1,,,,,,,,,,,,,,,,,
13,2,,23871-020000,,"PLUG PT1/4,SCREW",7,7,,,,,,,,,,,,,,,,,
14,2,,26013-100352,,"BOLT M10X 35",3,3,,,,,,,,,,,,,,,,,
15,1,,26013-100402,,"BOLT M10X 40",4,4,,,,,,,,,,,,,,,,,
```

https://truckmanualshub.com/

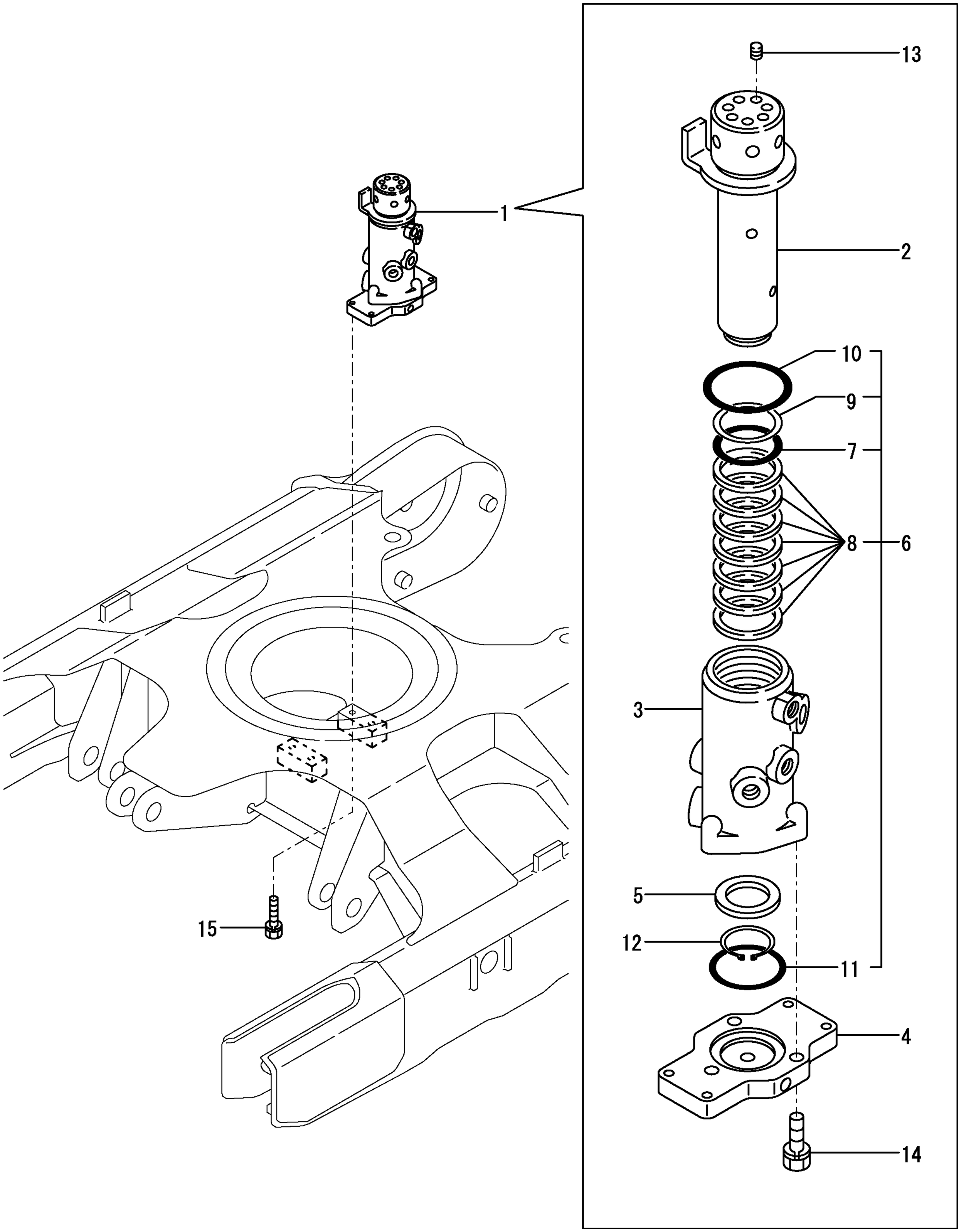

```
1,1,,172487-74100,,"VALVE ASSY,CONTROL",1,1,,,,,,,,,,,,,,,,
2,2,,172456-74380,,"BOOM LOCK SEC.",1,1,,,,,,,,,,,,,,,,
3,3,,172447-74230,,ANTI-CAVITATION,1,1,,,,,,,,,,,,,,,,
4,3,,172456-74260,,"BOOM LOCK ASSY",1,1,,,,,,,,,,,,,,,,
5,4,,172458-74290,,"CHECK VALVE",1,1,,,,,,,,,,,,,,,,,,,,I
6,4,,172458-74360,,"SPRING, CHECK VALVE",1,1,,,,,,,,,,,,,,,,,,,,,,I
7,4,,172456-74410,,"PACKING  P 16",1,1,,,,,,,,,,,,,,,,
8,4,,172456-74420,,"PACKING  P 17",1,1,,,,,,,,,,,,,,,,
9,4,,172458-74640,,"STAY, CHECK VALVE",1,1,,,,,,,,,,,,,,,,,,,,I
10,4,,172458-74650,,"STAY, CHECK VALVE",1,1,,,,,,,,,,,,,,,,,,,,I
11,4,,24311-000060,,"O-RING 1A P-6.0",1,1,,,,,,,,,,,,,,,,
12,4,,24315-000080,,"O-RING 1B P-8.0",2,2,,,,,,,,,,,,,,,,,,,,I
13,4,,24315-000110,,"O-RING 1B P-11.0",2,2,,,,,,,,,,,,,,,,
14,4,,24315-000140,,"O-RING 1B P-14.0",1,1,,,,,,,,,,,,,,,,
15,4,,24311-000180,,"O-RING 1A P-18.0",1,1,,,,,,,,,,,,,,,,
16,2,,172456-74390,,"BUCKET CHANGE-OVER",1,1,,,,,,,,,,,,,,,,
17,3,,172456-74280,,"OVERLOAD 250/5",2,2,,,,,,,,,,,,,,,,
18,3,,172458-74610,,"BUCKET SEC. ASSY",1,1,,,,,,,,,,,,,,,,
19,4,,172458-74150,,"CHECK VALVE",1,1,,,,,,,,,,,,,,,,,,,,I
20,4,,172458-74160,,"SPRING, CHECK VALVE",1,1,,,,,,,,,,,,,,,,,,,,,I
21,4,,172458-74230,,"PACKING  S 22",2,2,,,,,,,,,,,,,,,,
22,4,,172458-74240,,"COVER B1, PILOT",1,1,,,,,,,,,,,,,,,,,,,,I
23,4,,172458-74250,,"COVER A1, PILOT",1,1,,,,,,,,,,,,,,,,,,,,I
24,4,,172458-74260,,"SWP HEX.BOLT 5X20",4,4,,,,,,,,,,,,,,,,,,,,I
25,4,,172458-74620,,"SPOOL ASSY,BUCKET",1,1,,,,,,,,,,,,,,,,,,,,I
26,4,,172458-74630,,"STAY, CHECK VALVE",1,1,,,,,,,,,,,,,,,,,,,,I
27,4,,24315-000110,,"O-RING 1B P-11.0",1,1,,,,,,,,,,,,,,,,
28,2,,172458-74720,,"PACKING  G  4",2,2,,,,,,,,,,,,,,,,
29,2,,172458-74730,,"BOLT L380",4,4,,,,,,,,,,,,,,,,
30,2,,24311-000180,,"O-RING 1A P-18.0",2,2,,,,,,,,,,,,,,,,
31,2,,24315-000090,,"O-RING 1B P- 9.0",1,1,,,,,,,,,,,,,,,,
32,2,,24315-000100,,"O-RING 1B P-10.0",1,1,,,,,,,,,,,,,,,,
33,2,,26716-080002,,"NUT M 8",4,4,,,,,,,,,,,,,,,,
34,1,,26013-100162,,"BOLT M10X 16",3,3,,,,,,,,,,,,,,,,
```

https://truckmanualshub.com/

コントロールバルブＡＳＳＹ
CONTROL VALVE ASSY
172487-74100
項目NO.50の見出しNO.1は、
項目NO.50の見出しNO.2～33と
項目NO.51の見出しNO.1～28と
項目NO.52の見出しNO.1～25と
項目NO.53の見出しNO.1～30と
項目NO.54の見出しNO.1～33と
項目NO.55の見出しNO.1～25を含みます。
Fig.50 Ref.No.1
INC.Fig.50 Ref.No.2～33.
INC.Fig.51 Ref.No.1～28.
INC.Fig.52 Ref.No.1～25.
INC.Fig.53 Ref.No.1～30.
INC.Fig.54 Ref.No.1～33.
INC.Fig.55 Ref.No.1～25.

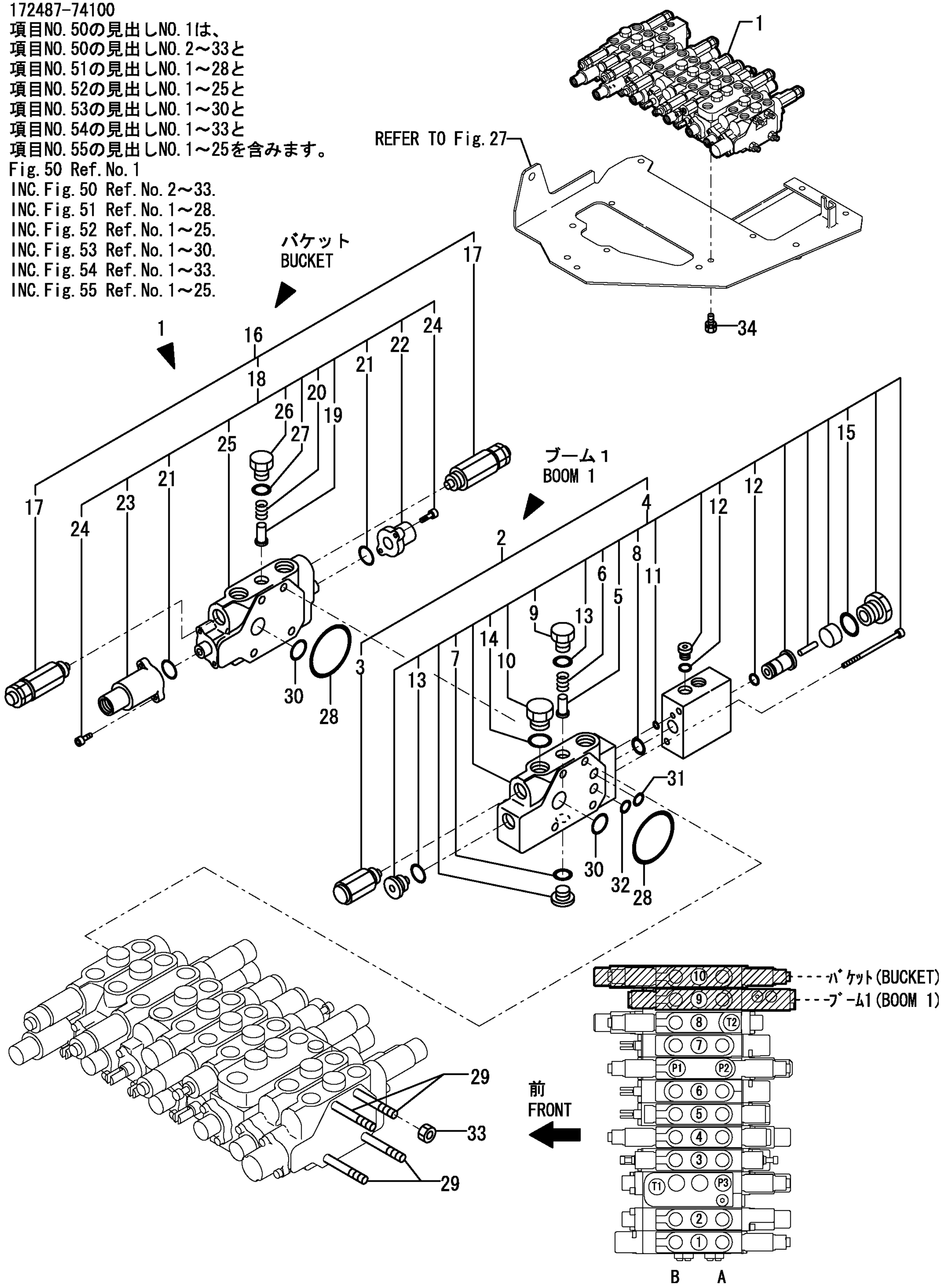

https://truckmanualshub.com/

```
1,2,,172456-74190,,"DRIVE R SEC. ASSY",1,1,,,,,,,,,,,,,,,
2,3,,172458-74130,,"DUST WIPER",1,1,,,,,,,,,,,,,,,
3,3,,172458-74140,,"BRACKET, OIL SEAL",1,1,,,,,,,,,,,,,,,,,,,I
4,3,,172458-74170,,"CAP,SPRING",1,1,,,,,,,,,,,,,,,,,,,I
5,3,,172456-74230,,"SPOOL ASSY,TRAVEL",1,1,,,,,,,,,,,,,,,,,,,I
6,3,,172458-74290,,"CHECK VALVE",1,1,,,,,,,,,,,,,,,,,,,I
7,3,,172458-74360,,"SPRING, CHECK VALVE",1,1,,,,,,,,,,,,,,,,,,,I
8,3,,172458-74460,,"PLUG GPM1/32",2,2,,,,,,,,,,,,,,,,,,,I
9,4,,172458-74640,,"STAY, CHECK VALVE",1,1,,,,,,,,,,,,,,,,,,,I
10,3,,24311-000120,,"O-RING 1A P 12.0",1,1,,,,,,,,,,,,,,,
11,3,,24315-000110,,"O-RING 1B P-11.0",1,1,,,,,,,,,,,,,,,
12,3,,26450-050102,,"BOLT M 5X 10",2,2,,,,,,,,,,,,,,,,,,I
13,3,,26450-050182,,"BOLT  5* 18",2,2,,,,,,,,,,,,,,,,,,I
14,2,,172487-74370,,"BOOM CHANGE-OVER",1,1,,,,,,,,,,,,,,,
15,3,,172487-74240,,"BOOM SEC.ASSY",1,1,,,,,,,,,,,,,,,
16,4,,172458-74150,,"CHECK VALVE",1,1,,,,,,,,,,,,,,,,,,,I
17,4,,172458-74160,,"SPRING, CHECK VALVE",1,1,,,,,,,,,,,,,,,,,,,I
18,4,,172458-74230,,"PACKING  S 22",2,2,,,,,,,,,,,,,,,
19,4,,172458-74240,,"COVER B1, PILOT",1,1,,,,,,,,,,,,,,,,,,,I
20,4,,172458-74250,,"COVER A1, PILOT",1,1,,,,,,,,,,,,,,,,,,,I
21,4,,172487-74250,,"SPOOL ASSY,BOOM",1,1,,,,,,,,,,,,,,,,,,,I
22,4,,172458-74260,,"SWP HEX.BOLT 5X20",4,4,,,,,,,,,,,,,,,,,,,I
23,4,,172458-74630,,"STAY, CHECK VALVE",1,1,,,,,,,,,,,,,,,,,,,I
24,4,,24315-000110,,"O-RING 1B P-11.0",1,1,,,,,,,,,,,,,,,
25,3,,172456-74280,,"OVERLOAD 250/5",1,1,,,,,,,,,,,,,,,
26,2,,172458-74720,,"PACKING  G  4",2,2,,,,,,,,,,,,,,,
27,2,,24311-000060,,"O-RING 1A P-6.0",2,2,,,,,,,,,,,,,,,
28,2,,24311-000180,,"O-RING 1A P-18.0",1,1,,,,,,,,,,,,,,,
```

https://truckmanualshub.com/

コントロールバルブＡＳＳＹ
CONTROL VALVE ASSY
172487-74100

項目NO.50の見出しNO.1は、
項目NO.50の見出しNO.2～33と
項目NO.51の見出しNO.1～28と
項目NO.52の見出しNO.1～25と
項目NO.53の見出しNO.1～30と
項目NO.54の見出しNO.1～33と
項目NO.55の見出しNO.1～25を含みます。

Fig.50 Ref.No.1
INC.Fig.50 Ref.No.2～33.
INC.Fig.51 Ref.No.1～28.
INC.Fig.52 Ref.No.1～25.
INC.Fig.53 Ref.No.1～30.
INC.Fig.54 Ref.No.1～33.
INC.Fig.55 Ref.No.1～25.

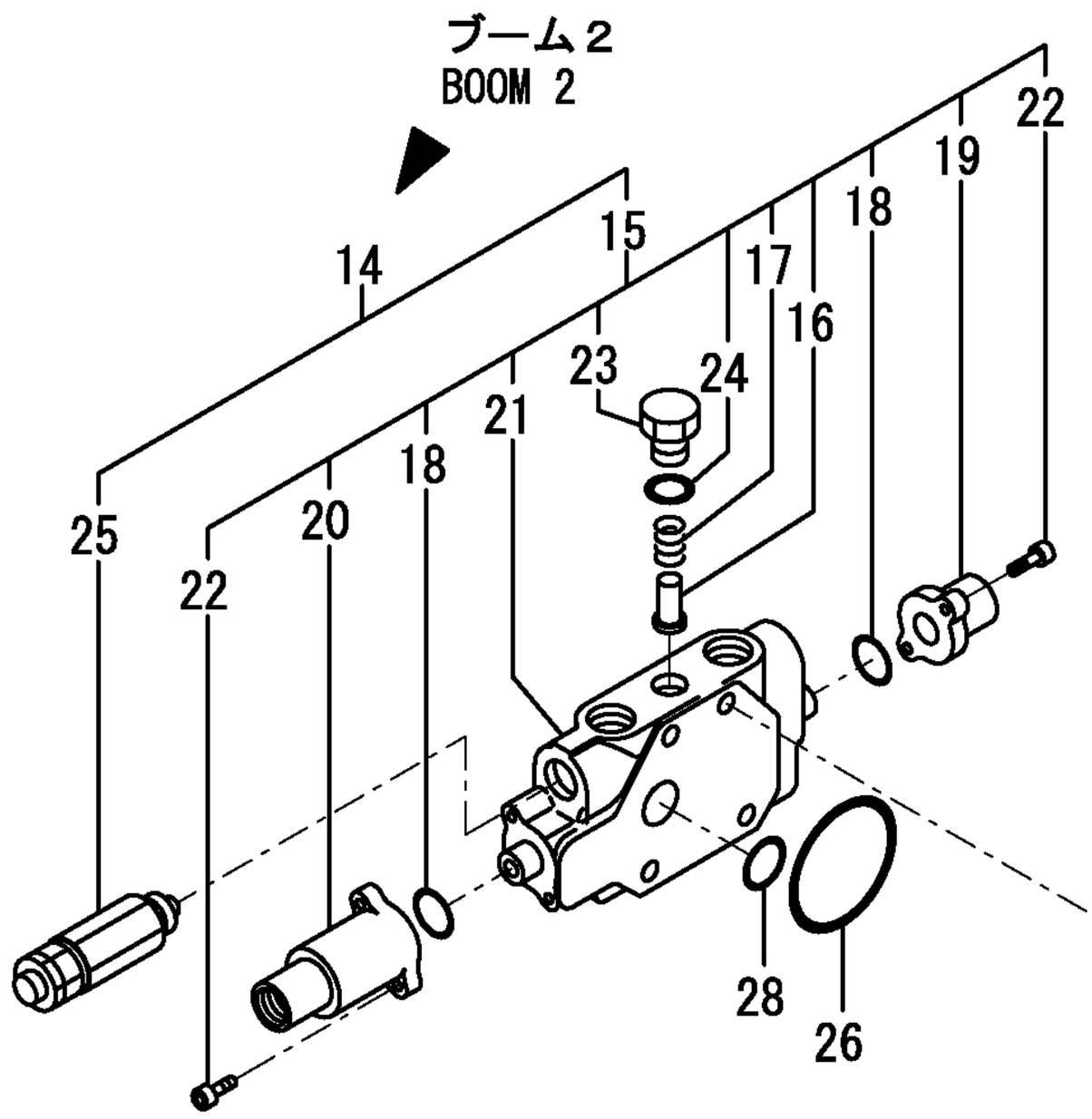

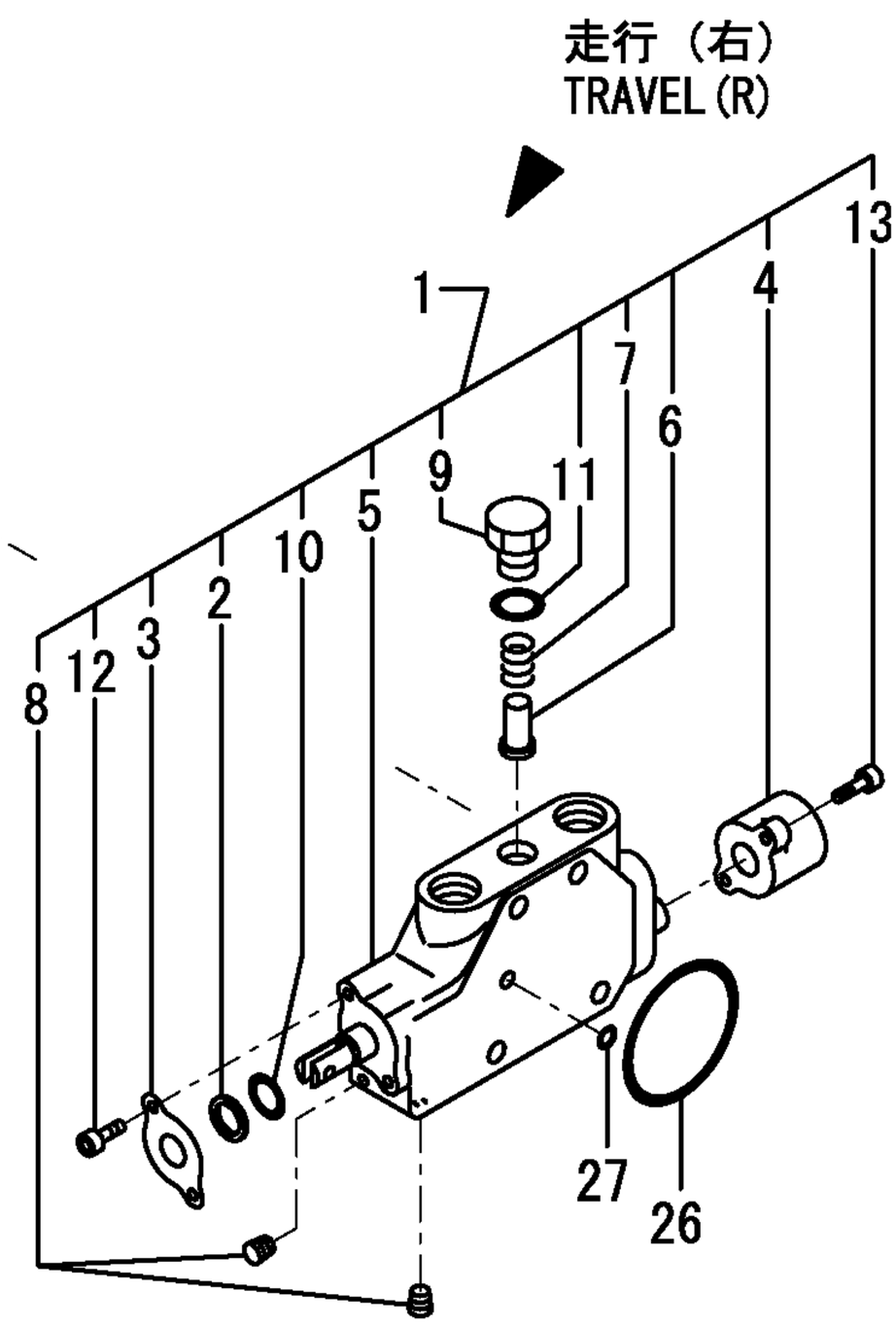

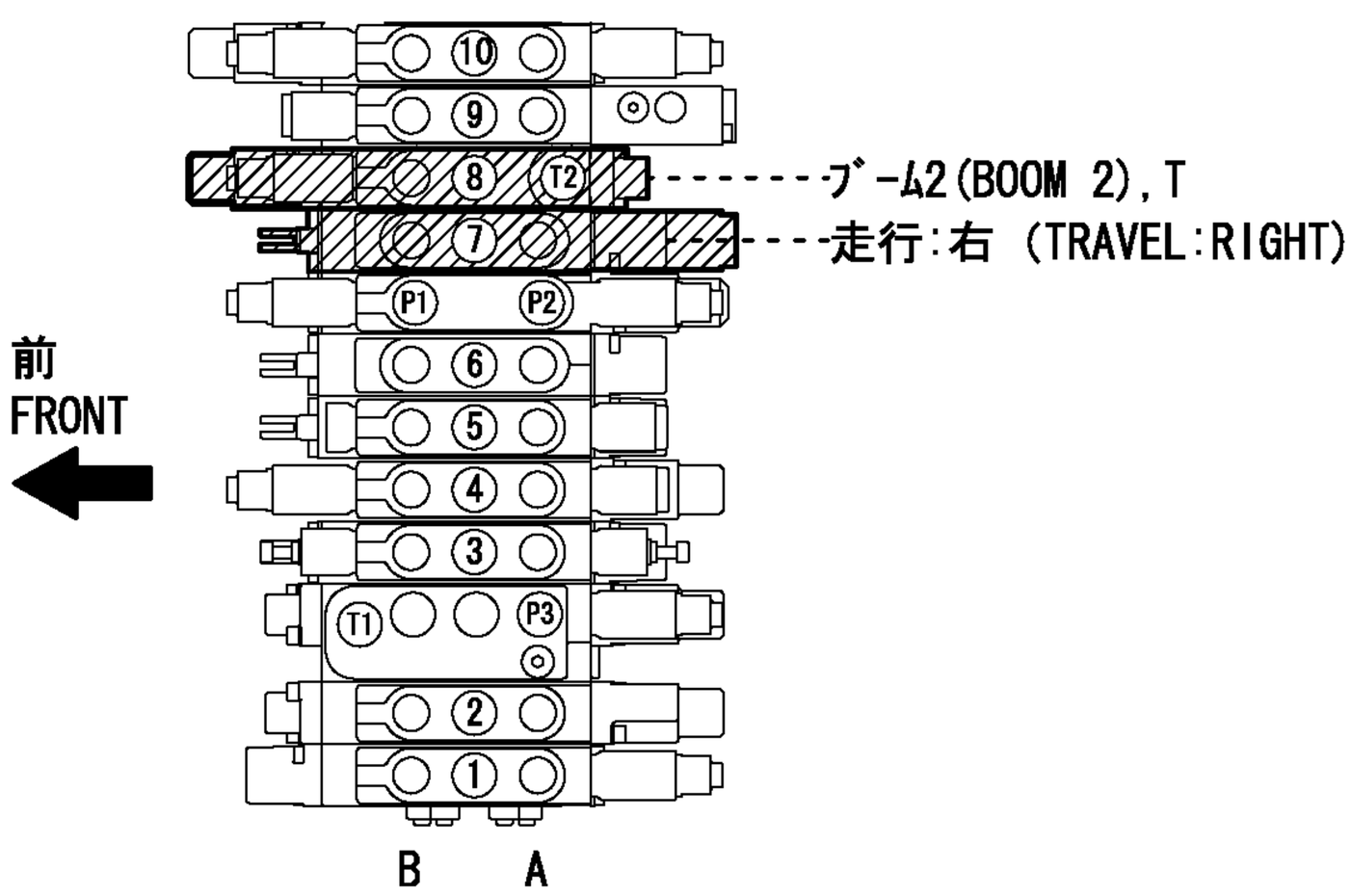

https://truckmanualshub.com/

```
1,2,,172456-74170,,"DRIVE L SEC. ASSY",1,1,,,,,,,,,,,,,,,,
2,3,,172458-74130,,"DUST WIPER",1,1,,,,,,,,,,,,,,,,
3,3,,172458-74140,,"BRACKET, OIL SEAL",1,1,,,,,,,,,,,,,,,,,,,,I
4,3,,172458-74170,,"CAP,SPRING",1,1,,,,,,,,,,,,,,,,,,,,I
5,3,,172456-74180,,"SPOOL ASSY,TRAVEL",1,1,,,,,,,,,,,,,,,,,,,,I
6,3,,172458-74290,,"CHECK VALVE",1,1,,,,,,,,,,,,,,,,,,,,I
7,3,,172458-74360,,"SPRING, CHECK VALVE",1,1,,,,,,,,,,,,,,,,,,,,I
8,3,,172458-74460,,"PLUG GPM1/32",2,2,,,,,,,,,,,,,,,,,,,,I
9,3,,172458-74640,,"STAY, CHECK VALVE",1,1,,,,,,,,,,,,,,,,,,,,I
10,3,,24311-000120,,"O-RING 1A P 12.0",1,1,,,,,,,,,,,,,,,,
11,3,,24315-000110,,"O-RING 1B P-11.0",1,1,,,,,,,,,,,,,,,,
12,3,,26450-050102,,"BOLT M 5X 10",2,2,,,,,,,,,,,,,,,,,,,,I
13,3,,26450-050182,,"BOLT  5* 18",2,2,,,,,,,,,,,,,,,,,,,,I
14,2,,172456-74350,,"INLET DIVISION",1,1,,,,,,,,,,,,,,,,
15,3,,172456-74400,,"VALVE, RELIEF 210/20",2,2,,,,,,,,,,,,,,,,
16,3,,172458-74520,,"INLET SEC. ASSY",1,1,,,,,,,,,,,,,,,,
17,4,,172458-74230,,"PACKING  S 22",2,2,,,,,,,,,,,,,,,,
18,4,,172458-74240,,"COVER B1, PILOT",1,1,,,,,,,,,,,,,,,,,,,,I
19,4,,172458-74260,,"SWP HEX.BOLT 5X20",4,4,,,,,,,,,,,,,,,,,,,,I
20,4,,172458-74530,,"SEAT, SPRING",1,1,,,,,,,,,,,,,,,,,,,,I
21,4,,172458-74540,,"SPRING,RETURN",1,1,,,,,,,,,,,,,,,,,,,,I
22,4,,172458-74550,,"COVER A2, PILOT",1,1,,,,,,,,,,,,,,,,,,,,I
23,2,,172458-74720,,"PACKING  G  4",2,2,,,,,,,,,,,,,,,,
24,2,,24311-000060,,"O-RING 1A P-6.0",2,2,,,,,,,,,,,,,,,,
25,2,,24311-000180,,"O-RING 1A P-18.0",1,1,,,,,,,,,,,,,,,,
```

https://truckmanualshub.com/

コントロールバルブＡＳＳＹ
CONTROL VALVE ASSY
172487-74100

項目NO.50の見出しNO.1は、
項目NO.50の見出しNO.2～33と
項目NO.51の見出しNO.1～28と
項目NO.52の見出しNO.1～25と
項目NO.53の見出しNO.1～30と
項目NO.54の見出しNO.1～33と
項目NO.55の見出しNO.1～25を含みます。

Fig.50 Ref.No.1
INC.Fig.50 Ref.No.2～33.
INC.Fig.51 Ref.No.1～28.
INC.Fig.52 Ref.No.1～25.
INC.Fig.53 Ref.No.1～30.
INC.Fig.54 Ref.No.1～33.
INC.Fig.55 Ref.No.1～25.

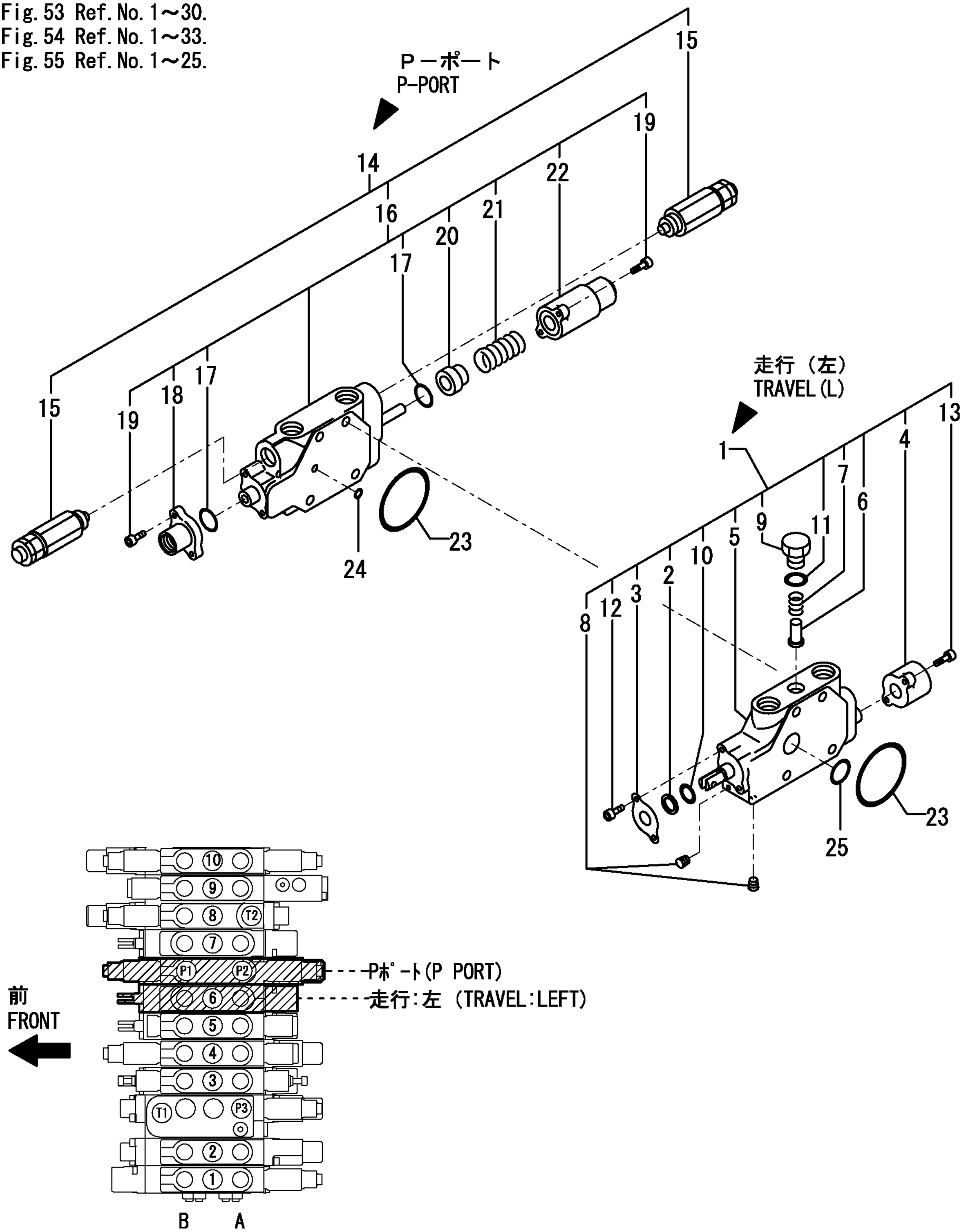

https://truckmanualshub.com/

```
1,2,,172456-74320,,"ARM CHANGE-OVER",1,1,,,,,,,,,,,,,,,
2,3,,172456-74150,,"ARM SEC. ASSY",1,1,,,,,,,,,,,,,,,
3,4,,172458-74150,,"CHECK VALVE",1,1,,,,,,,,,,,,,,,,,,,I
4,4,,172456-74160,,"SPOOL ASSY,BOOM",1,1,,,,,,,,,,,,,,,,,,,I
5,4,,172458-74160,,"SPRING, CHECK VALVE",1,1,,,,,,,,,,,,,,,,,,,I
6,4,,172458-74230,,"PACKING  S 22",2,2,,,,,,,,,,,,,,,
7,4,,172458-74240,,"COVER B1, PILOT",1,1,,,,,,,,,,,,,,,,,,,I
8,4,,172458-74250,,"COVER A1, PILOT",1,1,,,,,,,,,,,,,,,,,,,I
9,4,,172458-74260,,"SWP HEX.BOLT 5X20",4,4,,,,,,,,,,,,,,,,,,,I
10,4,,172458-74630,,"STAY, CHECK VALVE",1,1,,,,,,,,,,,,,,,,,,,I
11,4,,24315-000110,,"O-RING 1B P-11.0",1,1,,,,,,,,,,,,,,,
12,3,,172447-74221,,"PORT RELIFE VALVE",1,1,,,,,,,,,,,,,,,
13,3,,172447-74230,,ANTI-CAVITATION,1,1,,,,,,,,,,,,,,,
14,2,,172487-74330,,"OFFSET CHANGE-OVER",1,1,,,,,,,,,,,,,,,
15,3,,172447-74230,,ANTI-CAVITATION,1,1,,,,,,,,,,,,,,,
16,3,,172456-74290,,"RELIEF VALVE PLUG",1,1,,,,,,,,,,,,,,,
17,3,,172487-74420,,"SWING SEC.ASSY",1,1,,,,,,,,,,,,,,,
18,4,,172458-74130,,"DUST WIPER",1,1,,,,,,,,,,,,,,,
19,4,,172458-74140,,"BRACKET, OIL SEAL",1,1,,,,,,,,,,,,,,,,,,,I
20,4,,172458-74150,,"CHECK VALVE",1,1,,,,,,,,,,,,,,,,,,,I
21,4,,172458-74160,,"SPRING, CHECK VALVE",1,1,,,,,,,,,,,,,,,,,,,I
22,4,,172458-74430,,"SPOOL ASSY,SWING",1,1,,,,,,,,,,,,,,,,,,,I
23,4,,172458-74630,,"STAY, CHECK VALVE",1,1,,,,,,,,,,,,,,,,,,,I
24,4,,24311-000120,,"O-RING 1A P 12.0",1,1,,,,,,,,,,,,,,,
25,4,,24315-000110,,"O-RING 1B P-11.0",1,1,,,,,,,,,,,,,,,
26,4,,26450-050102,,"BOLT M 5X 10",2,2,,,,,,,,,,,,,,,,,,,I
27,4,,26450-050182,,"BOLT  5* 18",2,2,,,,,,,,,,,,,,,,,,,I
28,4,,172458-74170,,"CAP,SPRING",1,1,,,,,,,,,,,,,,,,,,,I
29,2,,172458-74720,,"PACKING  G  4",2,2,,,,,,,,,,,,,,,
30,2,,24311-000180,,"O-RING 1A P-18.0",2,2,,,,,,,,,,,,,,,
```

https://truckmanualshub.com/

コントロールバルブＡＳＳＹ
CONTROL VALVE ASSY
172487-74100

項目NO.50の見出しNO.1は、
項目NO.50の見出しNO.2～33と
項目NO.51の見出しNO.1～28と
項目NO.52の見出しNO.1～25と
項目NO.53の見出しNO.1～30と
項目NO.54の見出しNO.1～33と
項目NO.55の見出しNO.1～25を含みます。

Fig.50 Ref.No.1
INC.Fig.50 Ref.No.2～33.
INC.Fig.51 Ref.No.1～28.
INC.Fig.52 Ref.No.1～25.
INC.Fig.53 Ref.No.1～30.
INC.Fig.54 Ref.No.1～33.
INC.Fig.55 Ref.No.1～25.

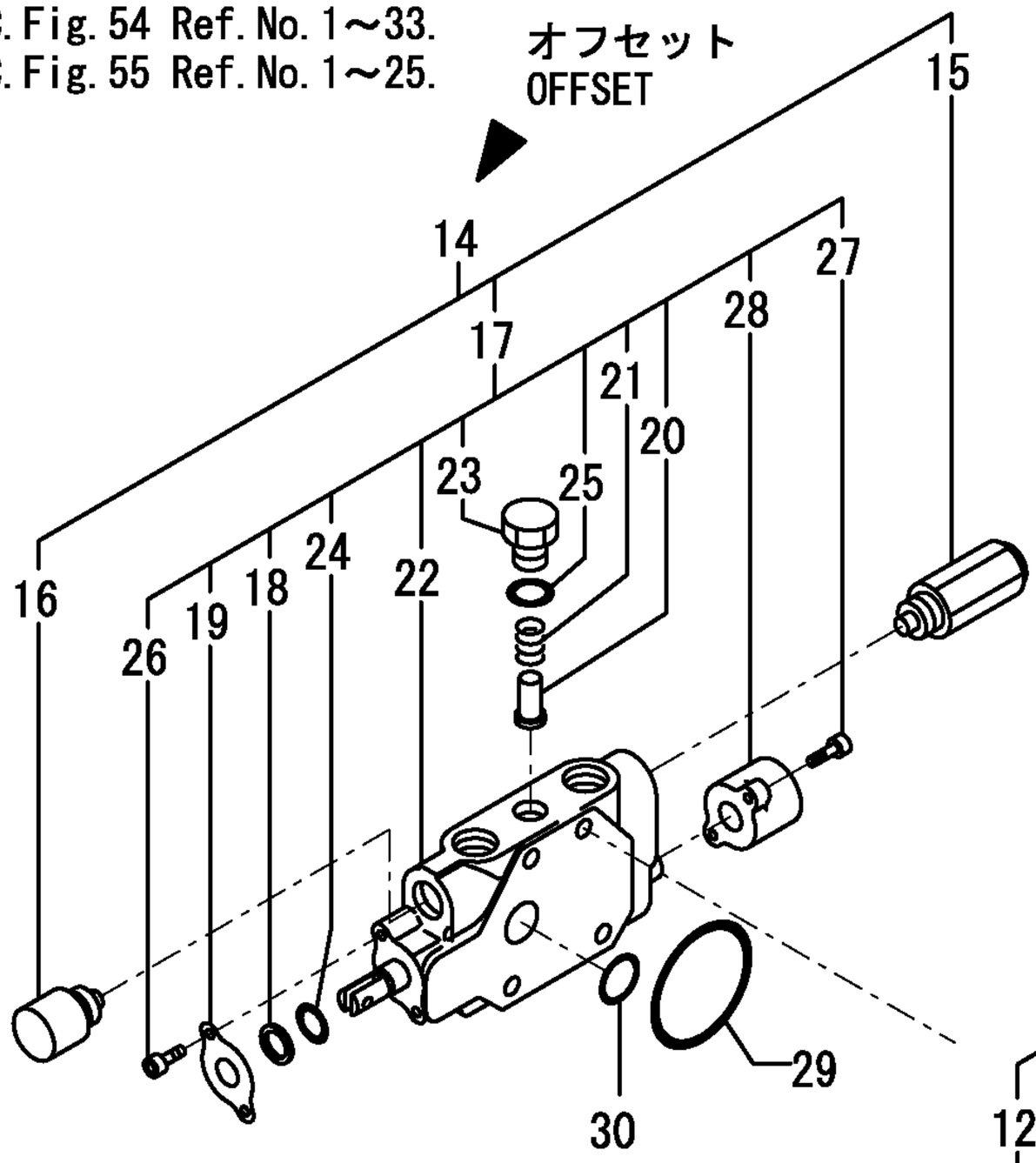

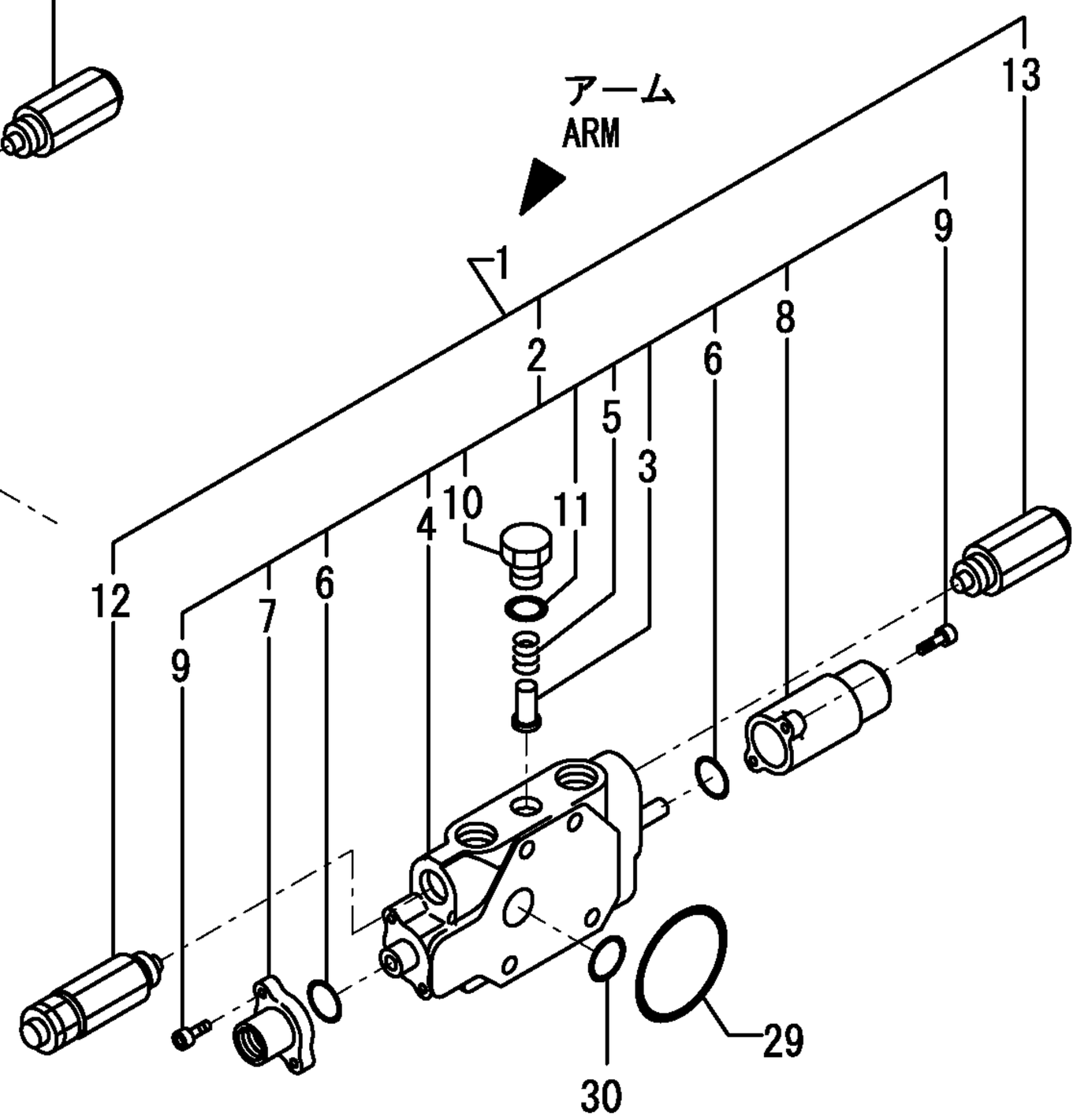

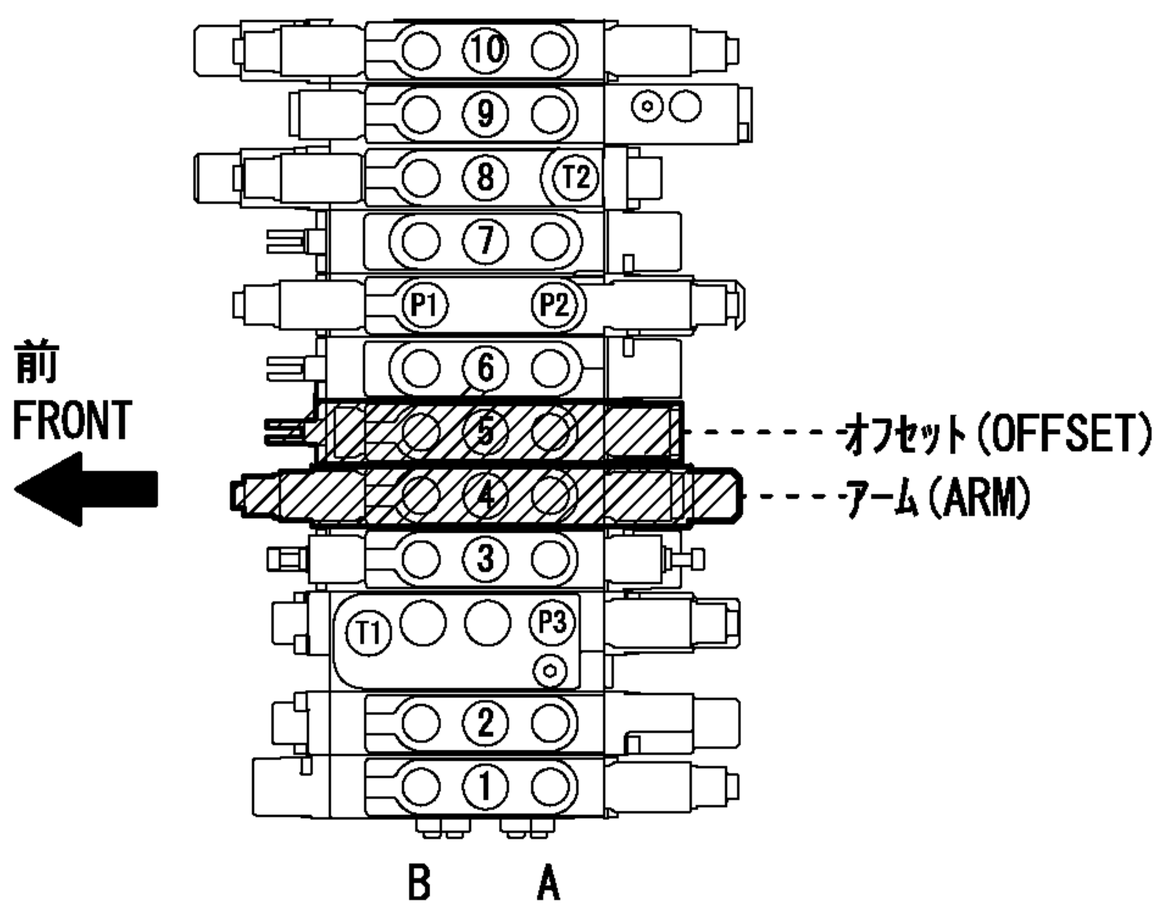

https://truckmanualshub.com/

```
1,2,,172487-74310,,"COMBINED FLOW DIV.",1,1,,,,,,,,,,,,,,,,
2,3,,172487-74130,,"COMBINED FLOW SEC.",1,1,,,,,,,,,,,,,,,,
3,4,,172487-74140,,"SPOOL ASSY,JOIN",1,1,,,,,,,,,,,,,,,,,,,I
4,4,,172458-74230,,"PACKING  S 22",2,2,,,,,,,,,,,,,,,,
5,4,,172458-74240,,"COVER B1, PILOT",1,1,,,,,,,,,,,,,,,,,,,I
6,4,,172458-74250,,"COVER A1, PILOT",1,1,,,,,,,,,,,,,,,,,,,I
7,4,,172458-74260,,"SWP HEX.BOLT 5X20",4,4,,,,,,,,,,,,,,,,,,,I
8,4,,172458-74290,,"CHECK VALVE",2,2,,,,,,,,,,,,,,,,,,,I
9,4,,172458-74360,,"SPRING, CHECK VALVE",2,2,,,,,,,,,,,,,,,,,,,I
10,4,,172458-74640,,"STAY, CHECK VALVE",2,2,,,,,,,,,,,,,,,,,,,I
11,4,,172458-74660,,"PLUG NPT1/16,SCREW",2,2,,,,,,,,,,,,,,,,,,,I
12,4,,172458-74670,,"PLUG,PF1/8",2,2,,,,,,,,,,,,,,,,,,,I
13,4,,24315-000080,,"O-RING 1B P-8.0",2,2,,,,,,,,,,,,,,,,
14,4,,24315-000110,,"O-RING 1B P-11.0",2,2,,,,,,,,,,,,,,,,
15,3,,172456-74270,,"VALVE, RELIEF 170/20",1,1,,,,,,,,,,,,,,,,
16,2,,172458-74720,,"PACKING  G  4",2,2,,,,,,,,,,,,,,,,
17,2,,172458-74780,,"PTO CHANGE-OVER",1,1,,,,,,,724560323,,724560323,,,,,,,,,I
18,3,,172458-74380,,"PTO SEC. ASSY",1,1,,,,,,,,,,,,,,,,
19,4,,172458-74130,,"DUST WIPER",1,1,,,,,,,,,,,,,,,,
20,4,,172458-74140,,"BRACKET, OIL SEAL",1,1,,,,,,,,,,,,,,,,,,,I
21,4,,172458-74150,,"CHECK VALVE",1,1,,,,,,,,,,,,,,,,,,,I
22,4,,172458-74160,,"SPRING, CHECK VALVE",1,1,,,,,,,,,,,,,,,,,,,I
23,4,,172458-74170,,"CAP,SPRING",1,1,,,,,,,,,,,,,,,,,,,I
24,4,,172458-74390,,"SPOOL ASSY,PTO",1,1,,,,,,,,,,,,,,,,,,,I
25,4,,172458-74630,,"STAY, CHECK VALVE",1,1,,,,,,,,,,,,,,,,,,,I
26,4,,172458-74650,,"STAY, CHECK VALVE",2,2,,,,,,,,,,,,,,,,,,,I
27,4,,24311-000120,,"O-RING 1A P 12.0",1,1,,,,,,,,,,,,,,,,
28,4,,24315-000110,,"O-RING 1B P-11.0",1,1,,,,,,,,,,,,,,,,
29,4,,24315-000140,,"O-RING 1B P-14.0",2,2,,,,,,,,,,,,,,,,
30,4,,26450-050102,,"BOLT M 5X 10",2,2,,,,,,,,,,,,,,,,,,,I
31,4,,26450-050182,,"BOLT  5* 18",2,2,,,,,,,,,,,,,,,,,,,I
32,3,,172458-74740,,"SHUT OFF VALVE",2,2,,,,,,,,,,,,,,,,
33,2,,24311-000180,,"O-RING 1A P-18.0",1,1,,,,,,,,,,,,,,,,
```

https://truckmanualshub.com/

コントロールバルブＡＳＳＹ
CONTROL VALVE ASSY
172487-74100

項目NO.50の見出しNO.1は、
項目NO.50の見出しNO.2～33と
項目NO.51の見出しNO.1～28と
項目NO.52の見出しNO.1～25と
項目NO.53の見出しNO.1～30と
項目NO.54の見出しNO.1～33と
項目NO.55の見出しNO.1～25を含みます。

Fig.50 Ref.No.1
INC.Fig.50 Ref.No.2～33.
INC.Fig.51 Ref.No.1～28.
INC.Fig.52 Ref.No.1～25.
INC.Fig.53 Ref.No.1～30.
INC.Fig.54 Ref.No.1～33.
INC.Fig.55 Ref.No.1～25.

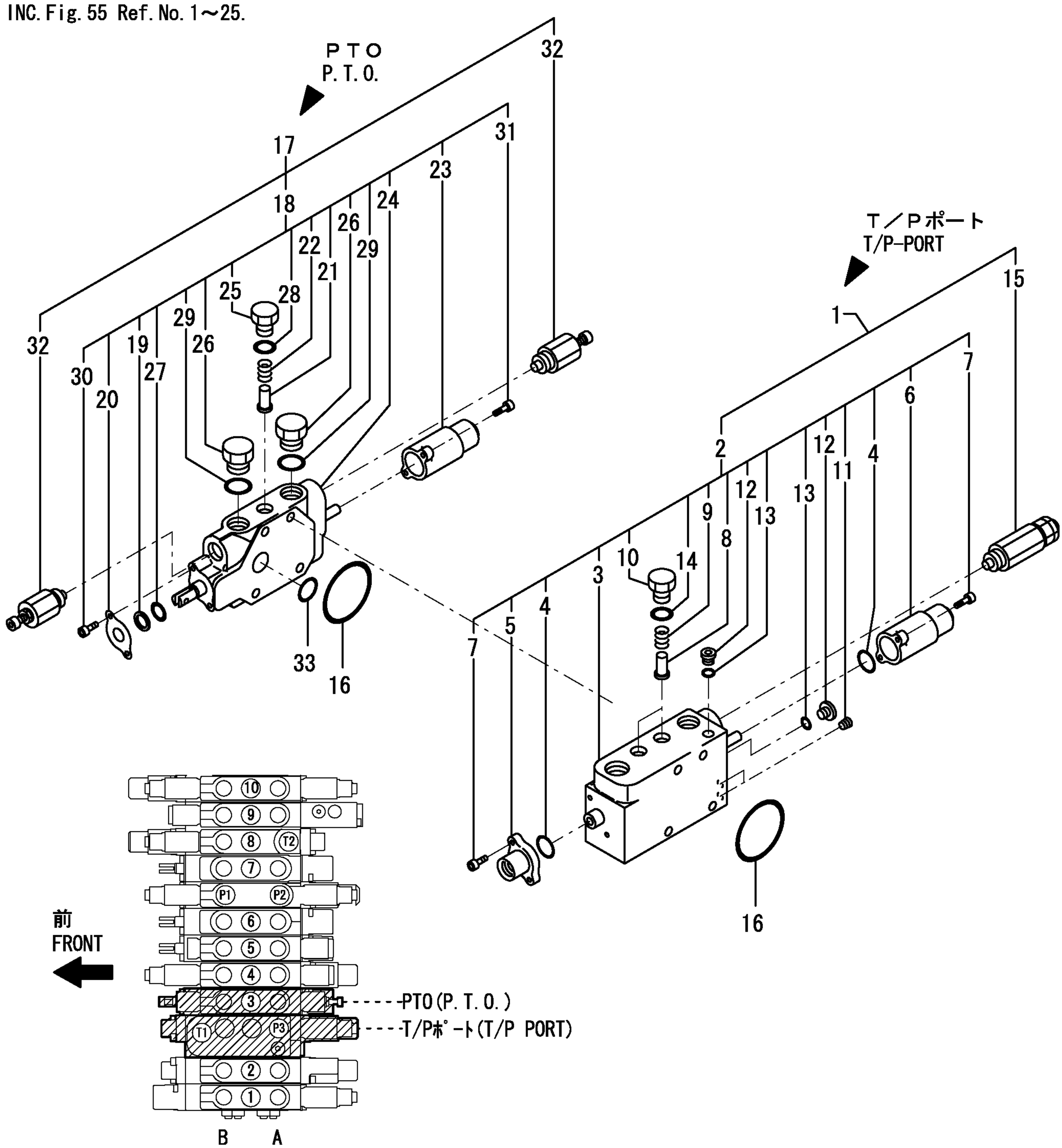

https://truckmanualshub.com/

```
1,2,,172487-74110,,"TURNING SEC.ASSY",1,1,,,,,,,,,,,,,,,,
2,3,,172487-74120,,"SPOOL ASSY,TURNING",1,1,,,,,,,,,,,,,,,,,,,,I
3,3,,172458-74150,,"CHECK VALVE",1,1,,,,,,,,,,,,,,,,,,,,I
4,3,,172458-74160,,"SPRING, CHECK VALVE",1,1,,,,,,,,,,,,,,,,,,,,I
5,3,,172458-74230,,"PACKING  S 22",2,2,,,,,,,,,,,,,,,,
6,3,,172458-74240,,"COVER B1, PILOT",1,1,,,,,,,,,,,,,,,,,,,,I
7,3,,172458-74250,,"COVER A1, PILOT",1,1,,,,,,,,,,,,,,,,,,,,I
8,3,,172458-74260,,"SWP HEX.BOLT 5X20",4,4,,,,,,,,,,,,,,,,,,,,I
9,3,,172458-74630,,"STAY, CHECK VALVE",1,1,,,,,,,,,,,,,,,,,,,,I
10,3,,24315-000110,,"O-RING 1B P-11.0",1,1,,,,,,,,,,,,,,,,
11,2,,172458-74720,,"PACKING  G  4",1,1,,,,,,,,,,,,,,,,
12,2,,172458-74750,,"BLADE CHANGE-OVER",1,1,,,,,,,,,,,,,,,,
13,3,,172458-74110,,"BLADE SEC. ASSY",1,1,,,,,,,,,,,,,,,,
14,4,,172458-74120,,"SPOOL ASSY,BLADE",1,1,,,,,,,,,,,,,,,,,,,,I
15,4,,172458-74130,,"DUST WIPER",1,1,,,,,,,,,,,,,,,,
16,4,,172458-74140,,"BRACKET, OIL SEAL",1,1,,,,,,,,,,,,,,,,,,,,I
17,4,,172458-74150,,"CHECK VALVE",1,1,,,,,,,,,,,,,,,,,,,,I
18,4,,172458-74160,,"SPRING, CHECK VALVE",1,1,,,,,,,,,,,,,,,,,,,,I
19,4,,172458-74170,,"CAP,SPRING",1,1,,,,,,,,,,,,,,,,,,,,I
20,4,,172458-74630,,"STAY, CHECK VALVE",1,1,,,,,,,,,,,,,,,,,,,,I
21,4,,24311-000120,,"O-RING 1A P 12.0",1,1,,,,,,,,,,,,,,,,
22,4,,24315-000110,,"O-RING 1B P-11.0",1,1,,,,,,,,,,,,,,,,
23,4,,26450-050102,,"BOLT M 5X 10",2,2,,,,,,,,,,,,,,,,,,,,I
24,4,,26450-050182,,"BOLT  5* 18",2,2,,,,,,,,,,,,,,,,,,,,I
25,3,,172458-74700,,"OVERLOAD 100",1,1,,,,,,,,,,,,,,,,
```

https://truckmanualshub.com/

コントロールバルブＡＳＳＹ
CONTROL VALVE ASSY
172487-74100

項目NO.50の見出しNO.1は、
項目NO.50の見出しNO.2～33と
項目NO.51の見出しNO.1～28と
項目NO.52の見出しNO.1～25と
項目NO.53の見出しNO.1～30と
項目NO.54の見出しNO.1～33と
項目NO.55の見出しNO.1～25を含みます。

Fig.50 Ref.No.1
INC.Fig.50 Ref.No.2～33.
INC.Fig.51 Ref.No.1～28.
INC.Fig.52 Ref.No.1～25.
INC.Fig.53 Ref.No.1～30.
INC.Fig.54 Ref.No.1～33.
INC.Fig.55 Ref.No.1～25.

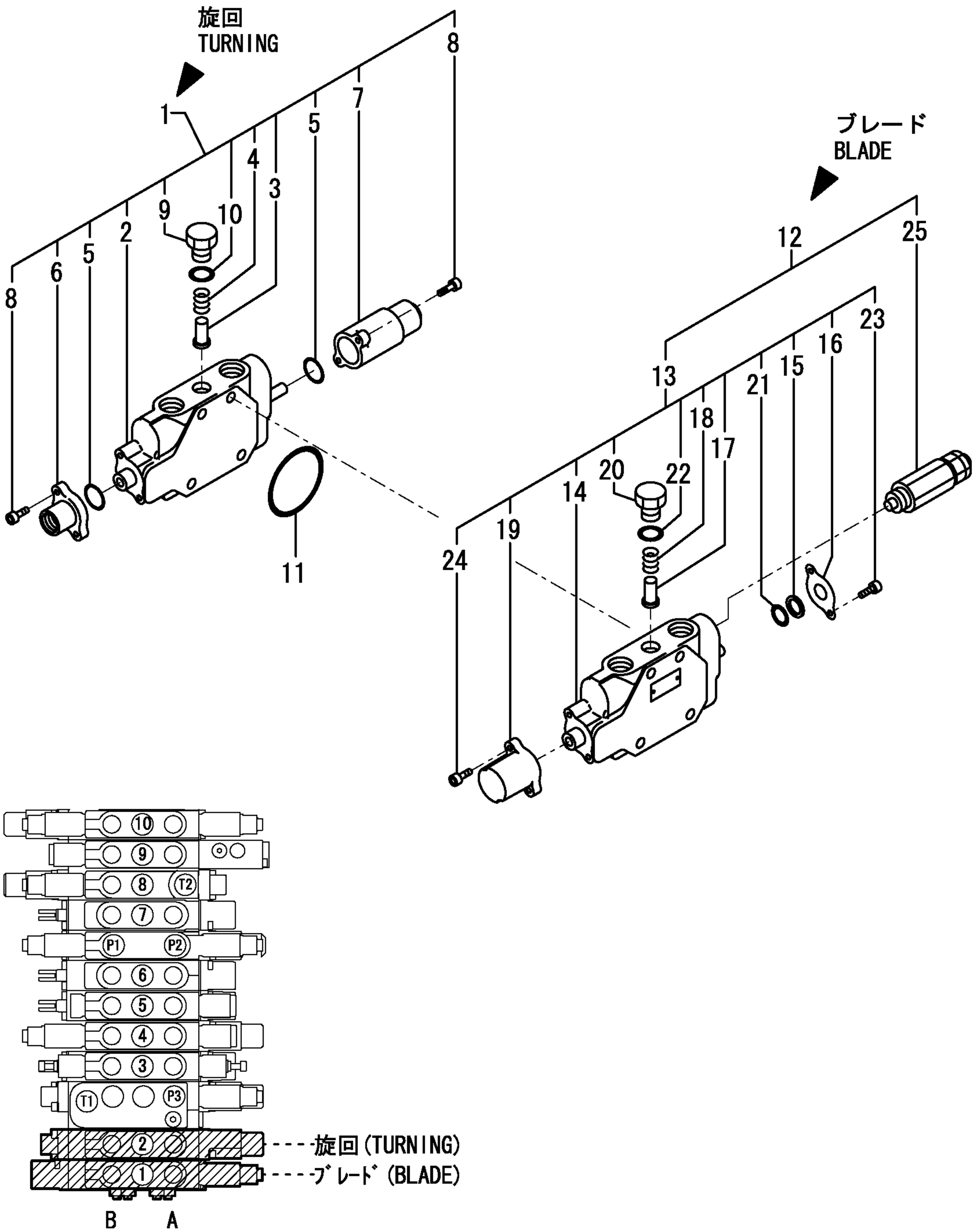

https://truckmanualshub.com/

```
1,1,,172151-74601,,VALVE,1,,,,,,,,,,,,,,,,,
2,2,,182900-16530,,"COVER,UNDER",1,,,,,,,,,,,,,,,,,
3,2,,182900-22300,,SPRING,1,,,,,,,,,,,,,,,,,
4,2,,172151-74740,,"PLATE, MARK",1,,,,,,,,,,,,,,,,,
5,2,,182900-77190,,BOLT,8,,,,,,,,,,,,,,,,,
6,2,,182900-77200,,BOLT,8,,,,,,,,,,,,,,,,,
7,2,,182900-77210,,"SEAL,DUST",1,,,,,,,,,,,,,,,,,
8,2,,182900-77220,,COVER,1,,,,,,,,,,,,,,,,,
9,2,,182900-77230,,"WING BOLT",1,,,,,,,,,,,,,,,,,
10,2,,182900-77240,,BOLT,2,,,,,,,,,,,,,,,,,
11,2,,182900-77250,,LEVER,1,,,,,,,,,,,,,,,,,
12,2,,24190-100001,,"BALL 5/16, STEEL",1,,,,,,,,,,,,,,,,,
13,2,,24311-000280,,"O-RING 1A P-28.0",1,,,,,,,,,,,,,,,,,
14,2,,24321-000600,,"O-RING 1A G-60.0",2,,,,,,,,,,,,,,,,,
15,2,,953KM0-00220,,WASHER,2,,,,,,,,,,,,,,,,,
16,2,,953KM0-00220,,WASHER,1,,,,,,,,,,,,,,,,,
17,2,,953KM0-10894,,"PLUG PT1/8",1,,,,,,,,,,,,,,,,,
18,1,,26013-100202,,"BOLT W/WASHER M10X20",3,,,,,,,,,,,,,,,,,
19,1,,172444-03290,,MAGNET,1,,,,,,,,,,,,,,,,,,,I
20,1,,172151-03551,,LABEL,1,,,,,,,,,,,,,,,,,,,I
```

https://truckmanualshub.com/

172487-08510
４ウェイマルチバルブキットは、
項目NO.82を参照下さい。
4-WAY MULTI VALVE KIT
is shown in Fig.82.

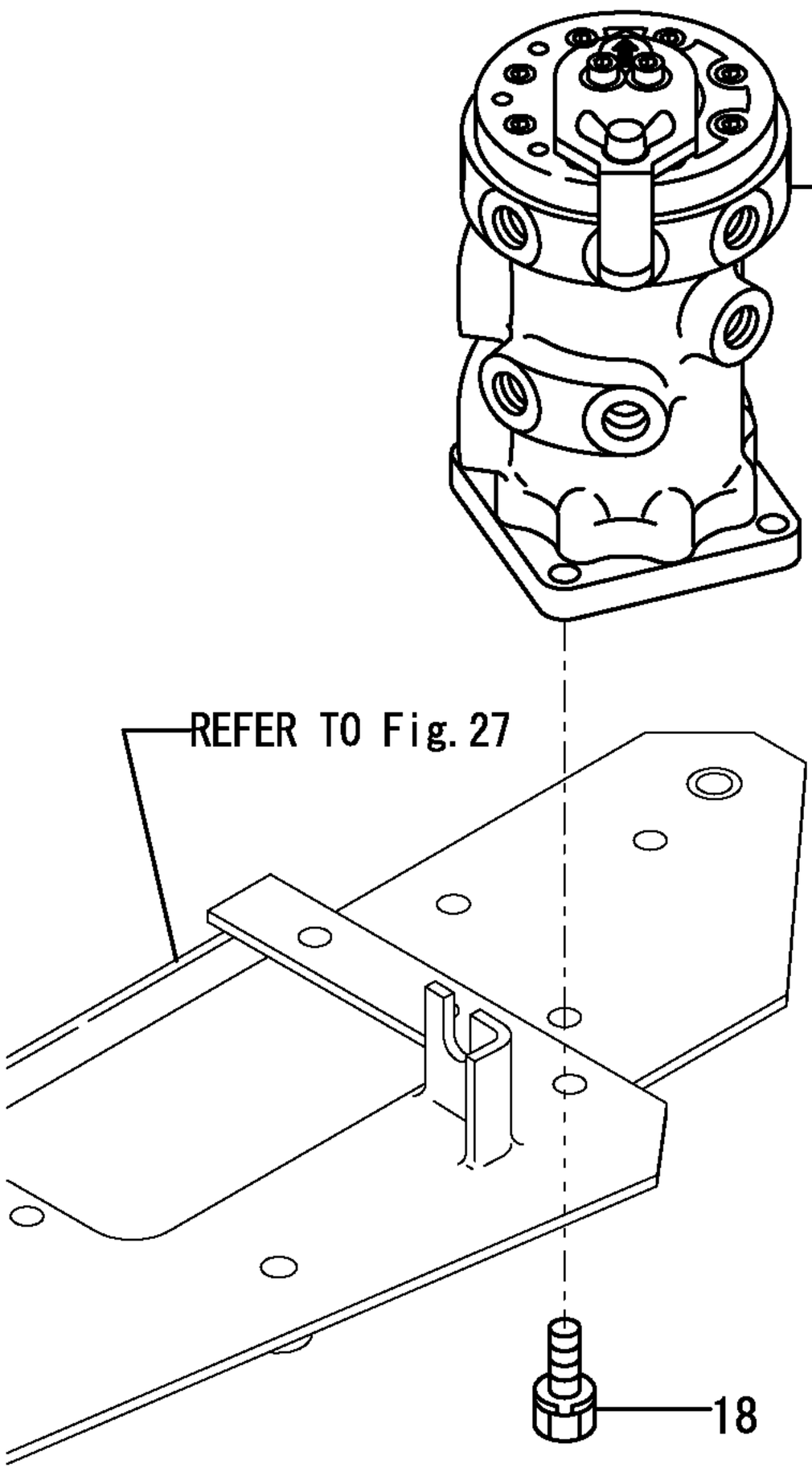

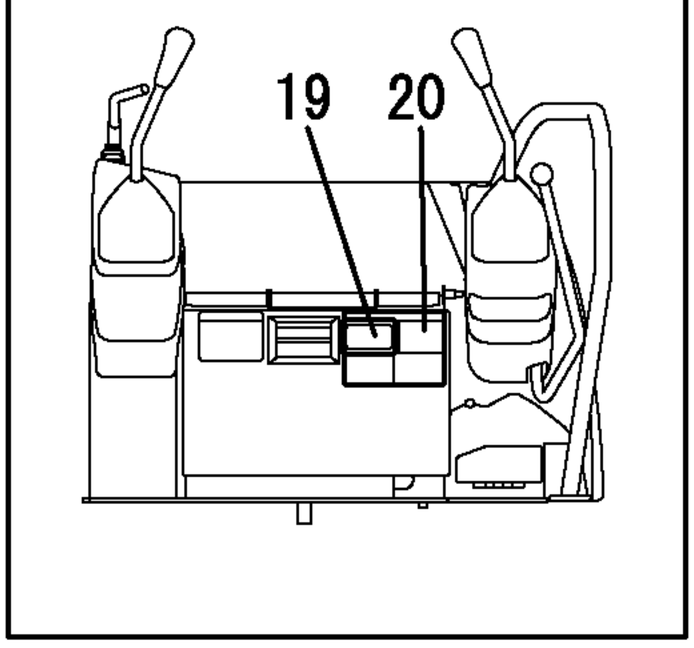

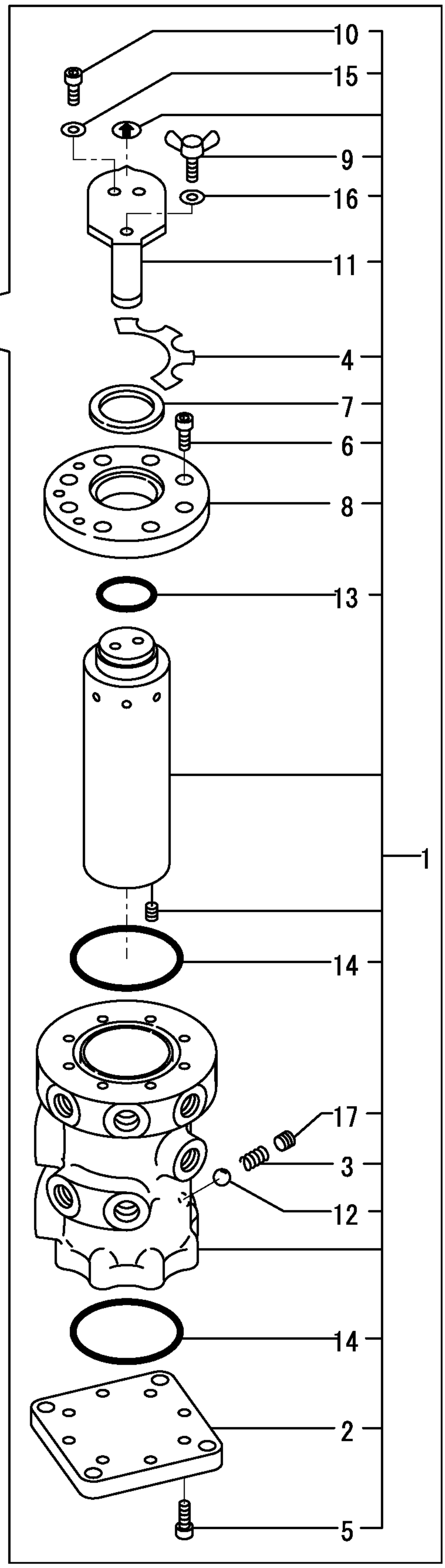

https://truckmanualshub.com/

```
1,1,,172455-74701,,"VALVE ASSY, REMO.CON",2,2,,,,,1,,,,,,,,,,,,I
2,2,,172455-74240,,SPRING,8,8,,,,,,,,,,,,,,,,,,I
3,2,,172455-74710,,BELLOWS,2,2,,,,,,,,,,,,,,,,
4,2,,172448-74760,,PLATE,2,2,,,,,,,,,,,,,,,,,,I
5,2,,172448-74770,,PLUG,8,8,,,,,,,,,,,,,,,,,,I
6,2,,172448-74780,,"ROD Q,PUSH",8,8,,,,,,,,,,,,,,,,,,I
7,2,,172448-74790,,SEAL,8,8,,,,,,,,,,,,,,,,,,I
8,2,,172448-74910,,"SEAT, SPRING",8,8,,,,,,,,,,,,,,,,,,I
9,2,,172448-74920,,WASHER,8,8,,,,,,,,,,,,,,,,,,I
10,2,,172448-74930,,SPRING,8,8,,,,,,,,,,,,,,,,,,I
11,2,,172448-74950,,"JOINT ASSY",2,2,,,,,,,,,,,,,,,,,,I
12,2,,172448-74960,,"PLATE, CIRCLE",2,2,,,,,,,,,,,,,,,,,,I
13,2,,172448-74970,,"NUT, ADJUST",2,2,,,,,,,,,,,,,,,,,,I
14,2,,24315-000200,,"O-RING 1B P-20.0",8,8,,,,,,,,,,,,,,,,,,I
```

https://truckmanualshub.com/

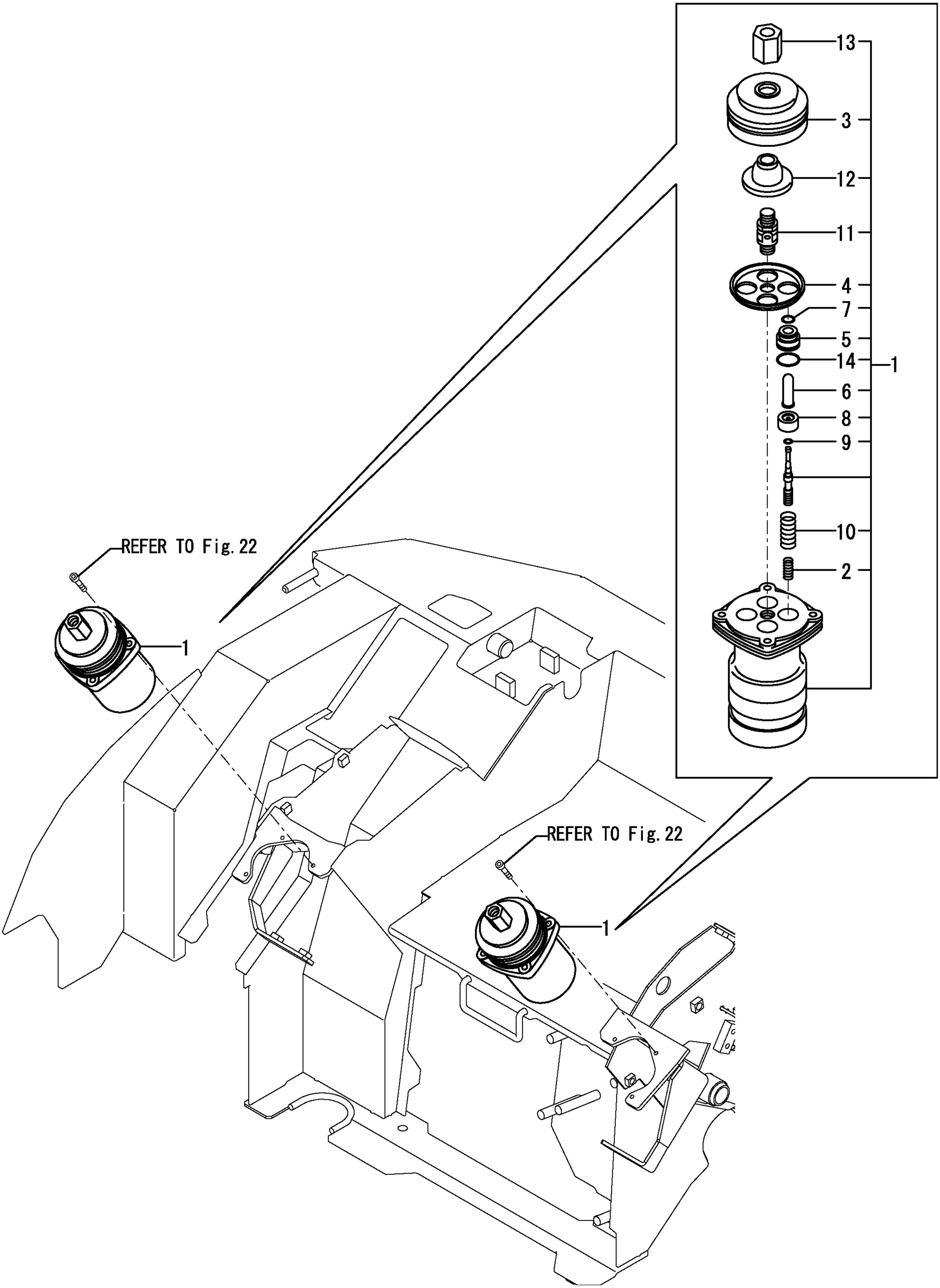

https://truckmanualshub.com/

```
1,1,,172458-74500,,"REMO-CON.VALVE M2",1,1,,,,,,,,,,,,,,,,,,,I
2,2,,172455-74240,,SPRING,4,4,,,,,,,,,,,,,,,,,,,I
3,2,,172455-74710,,BELLOWS,1,1,,,,,,,,,,,,,,,,,,,I
4,2,,172448-74720,,"SPOOL SLEEVE SUB",1,1,,,,,,,,,,,,,,,,,,,I
8,3,,22351-050010,,"SPRING PIN 5X10",1,1,,,,,,,,,,,,,,,,,,,I
9,2,,172448-74760,,PLATE,1,1,,,,,,,,,,,,,,,,,,,I
10,2,,172448-74770,,PLUG,4,4,,,,,,,,,,,,,,,,,,,I
11,2,,172448-74780,,"ROD Q,PUSH",4,4,,,,,,,,,,,,,,,,,,,I
12,2,,172448-74790,,SEAL,4,4,,,,,,,,,,,,,,,,,,,I
13,2,,172448-74810,,"PLATE, PORT",1,1,,,,,,,,,,,,,,,,,,,I
14,2,,172448-74820,,PACKING,2,2,,,,,,,,,,,,,,,,,,,I
15,2,,172448-74830,,ORING,1,1,,,,,,,,,,,,,,,,,,,I
16,2,,172448-74860,,ORING,2,2,,,,,,,,,,,,,,,,,,,I
17,2,,172448-74870,,ORING,1,1,,,,,,,,,,,,,,,,,,,I
18,2,,172448-74880,,ORING,1,1,,,,,,,,,,,,,,,,,,,I
19,2,,172448-74910,,"SEAT, SPRING",4,4,,,,,,,,,,,,,,,,,,,I
20,2,,172448-74920,,WASHER,4,4,,,,,,,,,,,,,,,,,,,I
21,2,,172448-74930,,SPRING,4,4,,,,,,,,,,,,,,,,,,,I
22,2,,172448-74950,,"JOINT ASSY",1,1,,,,,,,,,,,,,,,,,,,I
23,2,,172448-74960,,"PLATE, CIRCLE",1,1,,,,,,,,,,,,,,,,,,,I
24,2,,172448-74970,,"NUT, ADJUST",1,1,,,,,,,,,,,,,,,,,,,I
25,2,,172448-74980,,ORING,1,1,,,,,,,,,,,,,,,,,,,I
26,2,,172448-74990,,DISTANZBUCHSE,1,1,,,,,,,,,,,,,,,,,,,I
27,2,,24315-000200,,"O-RING 1B P-20.0",4,4,,,,,,,,,,,,,,,,,,,I
28,2,,26450-080652,,"BOLT M 8X 65",2,2,,,,,,,,,,,,,,,,,,,I
29,1,,172458-03550,,LABEL,1,,,,,,,1,,,,,,,,,,,,,I
30,1,,172458-03560,,LABEL,1,,,,,,,1,,,,,,,,,,,,,I
31,1,,172458-03570,,LABEL,1,,,,,,,1,,,,,,,,,,,,,I
32,1,,172458-08540,,"LEVER ASS,2W",1,,,,,,,1,,,,,,,,,,,,,I
33,2,,1C6141-35370,,"SPRING,LOCK",1,,,,,,,,,,,,,,,,,,,,I
34,2,,172458-74470,,SHAFT,1,,,,,,,,,,,,,,,,,,,,I
35,2,,172458-74480,,SLEEVE,1,,,,,,,,,,,,,,,,,,,,I
36,2,,172458-74490,,"LEVER KNOB BL",1,,,,,,,,,,,,,,,,,,,,I
37,2,,26712-080002,,"NUT M 8",1,,,,,,,,,,,,,,,,,,,,I
38,1,,172448-74730,,PLUG,1,1,,,,,2,,,,,,,,,,,,,I
```

https://truckmanualshub.com/

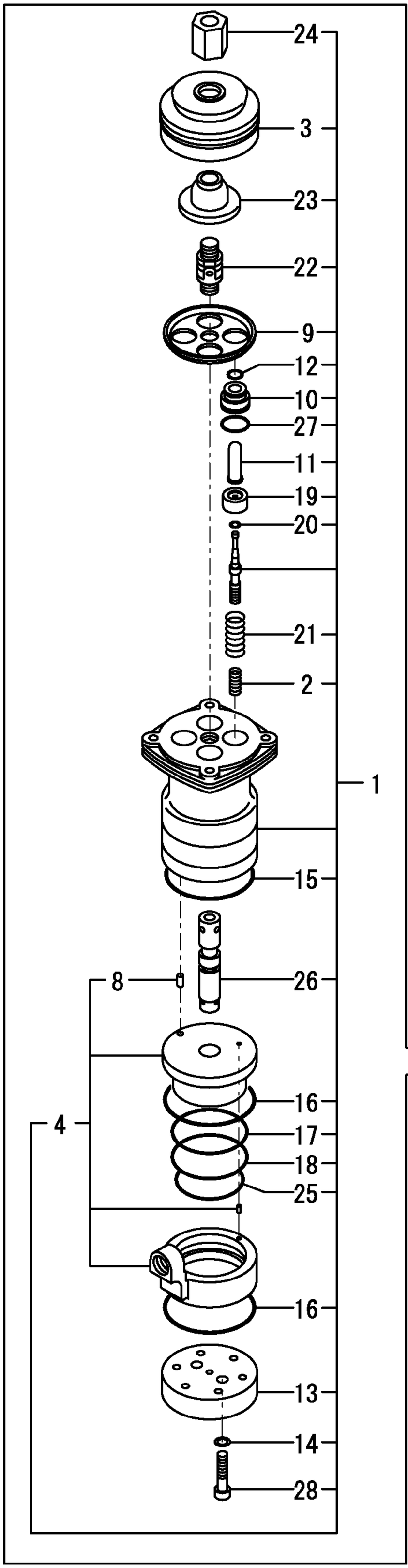

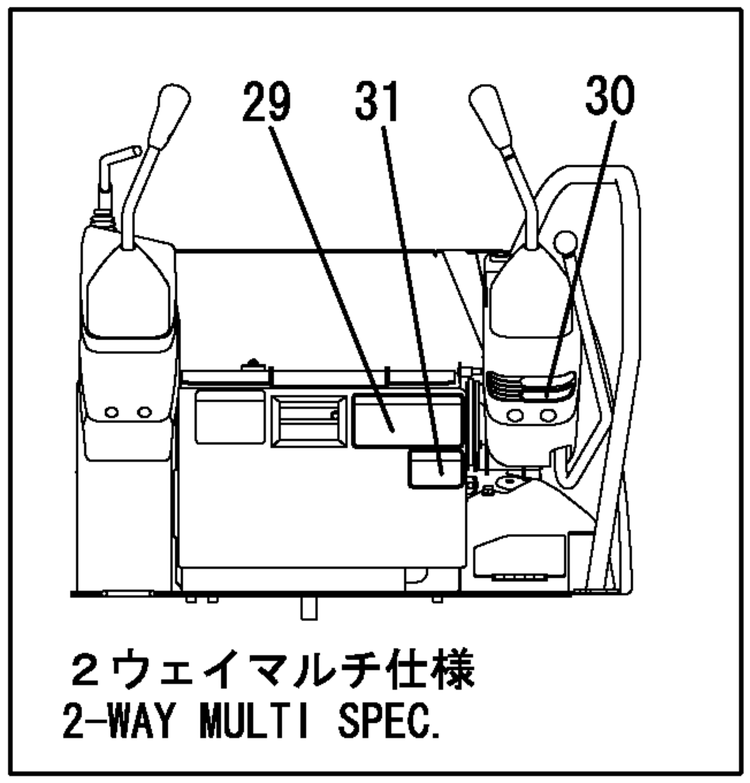

172458-08520
２ウェイマルチバルブキット
(標準：～M/#55500) は、
項目NO.83を参照下さい。
2-WAY MULTI VALVE KIT
(STANDARD:TO M/#55500)
is shown in Fig.83.

172458-08530
２ウェイマルチバルブキット
(標準：M/#55501～) は、
項目NO.84を参照下さい。
2-WAY MULTI VALVE KIT
(STANDARD:FROM M/#55501)
is shown in Fig.84.

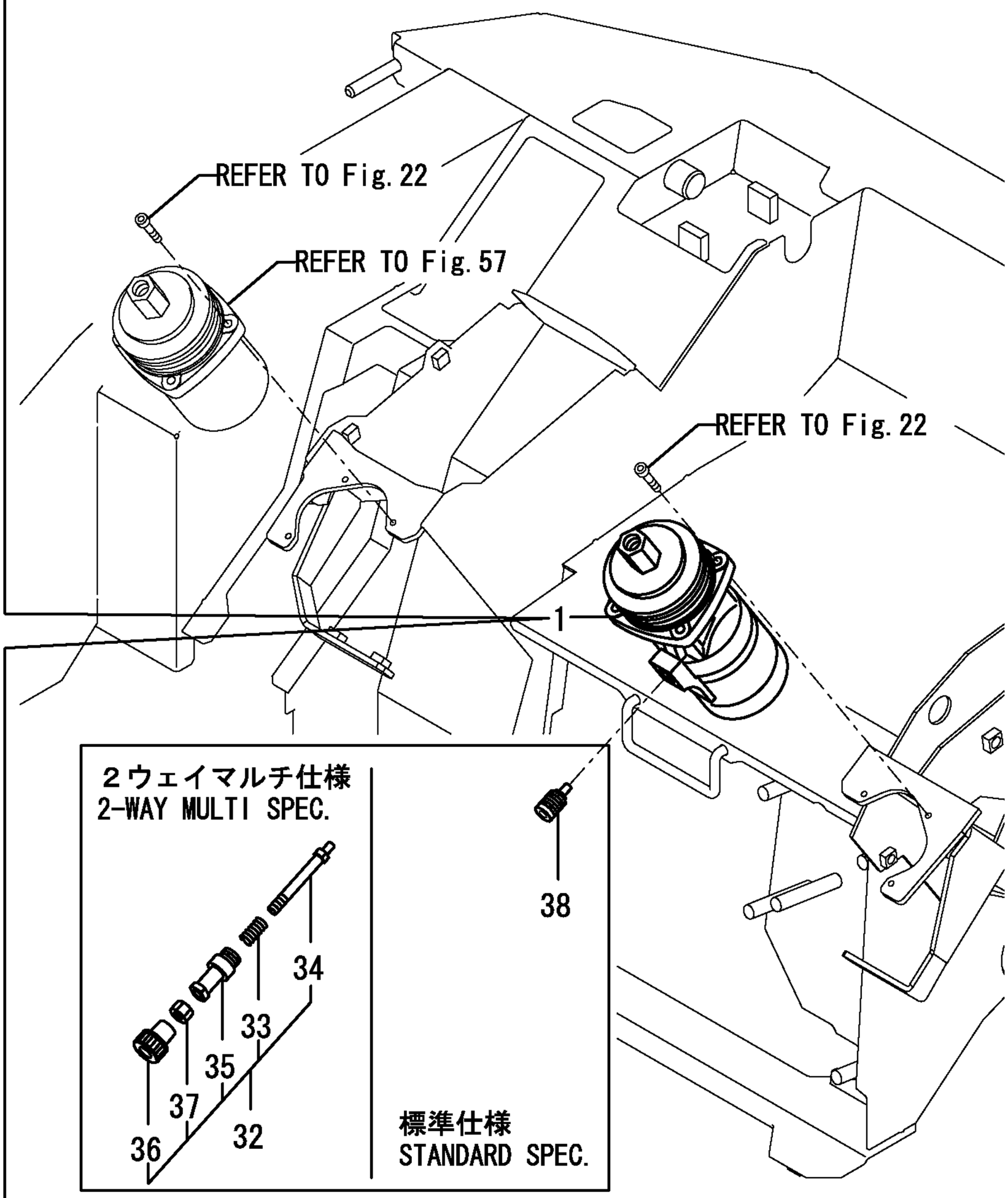

https://truckmanualshub.com/

```
1,1,,772458-73700,,"RESERVER ASSY   (96)",1,,,,,,,M,,,,,,,,,,
1-1,1,,772487-75090,,"RESERVER ASSY   (96)",1,1,,,,,,,,,,,,,,,,,,,I
2,2,,172175-73700,,"FILTER ASSY, RETURN",1,1,,,,,,,,,,,,,,,,
3,3,,172175-73710,,ELEMENT,1,1,,,,,,,,,,,,,,,,
4,3,,172141-73770,,"VALVE ASSY, BYPASS",1,1,,,,,,,,,,,,,,,,
5,2,,172146-73730,,"FILTER, SUCTION",1,1,,,,,,,,,,,,,,,,
6,2,,933152-02710,,"SPRING, SIDE CLUTCH",1,1,,,,,,,,,,,,,,,,
8,3,,172168-65750,,RUBBER,1,1,,,,,,,,,,,,,,,,
10,3,,172487-75300,,"HOSE G806YY010",1,1,,,,,,,,,,,,,,,,
11,3,,172456-75390,,"SEAL,RADIATOR F",1,1,,,,,,,,,,,,,,,,
12,2,,172446-75250,,CAP,1,1,,,,,,,,,,,,,,,,
13,2,,172455-75330,,"DRAIN PLIG 24",1,1,,,,,,,,,,,,,,,,
14,2,,172183-75410,,"FLANGE,SUCTION  (ZN)",1,1,,,,,,,,,,,,,,,,
15,2,,172460-75410,,"CAP,TANK",1,1,,,,,,,,,,,,,,,,
16,2,,172447-75600,,GAUGE,1,1,,,,,,,,,,,,,,,,
17,3,,172455-75290,,"BOLT M10",2,2,,,,,,,,,,,,,,,,
18,3,,172455-75300,,O-RING,4,4,,,,,,,,,,,,,,,,
21,2,,24321-001050,,"O-RING 1A G-105.0",2,2,,,,,,,,,,,,,,,,
22,2,,24341-000300,,"O-RING 1A S-30.0",1,1,,,,,,,,,,,,,,,,
23,2,,26013-080162,,"BOLT W/WASHER M8X16",4,4,,,,,,,,,,,,,,,,
24,2,,26013-080202,,"BOLT W/WASHER M8X20",3,3,,,,,,,,,,,,,,,,
25,1,,22137-140000,,"WASHER 14,POLISHED",4,4,,,,,,,,,,,,,,,,
26,1,,22217-140000,,"SPRING WASHER 14",4,4,,,,,,,,,,,,,,,,
27,1,,26116-140352,,"BOLT M14X 35 PLATED",4,4,,,,,,,,,,,,,,,,
```

https://truckmanualshub.com/

見出しNo.1は
見出しNo.(1)から24を含みます
1 inc.(1)～24

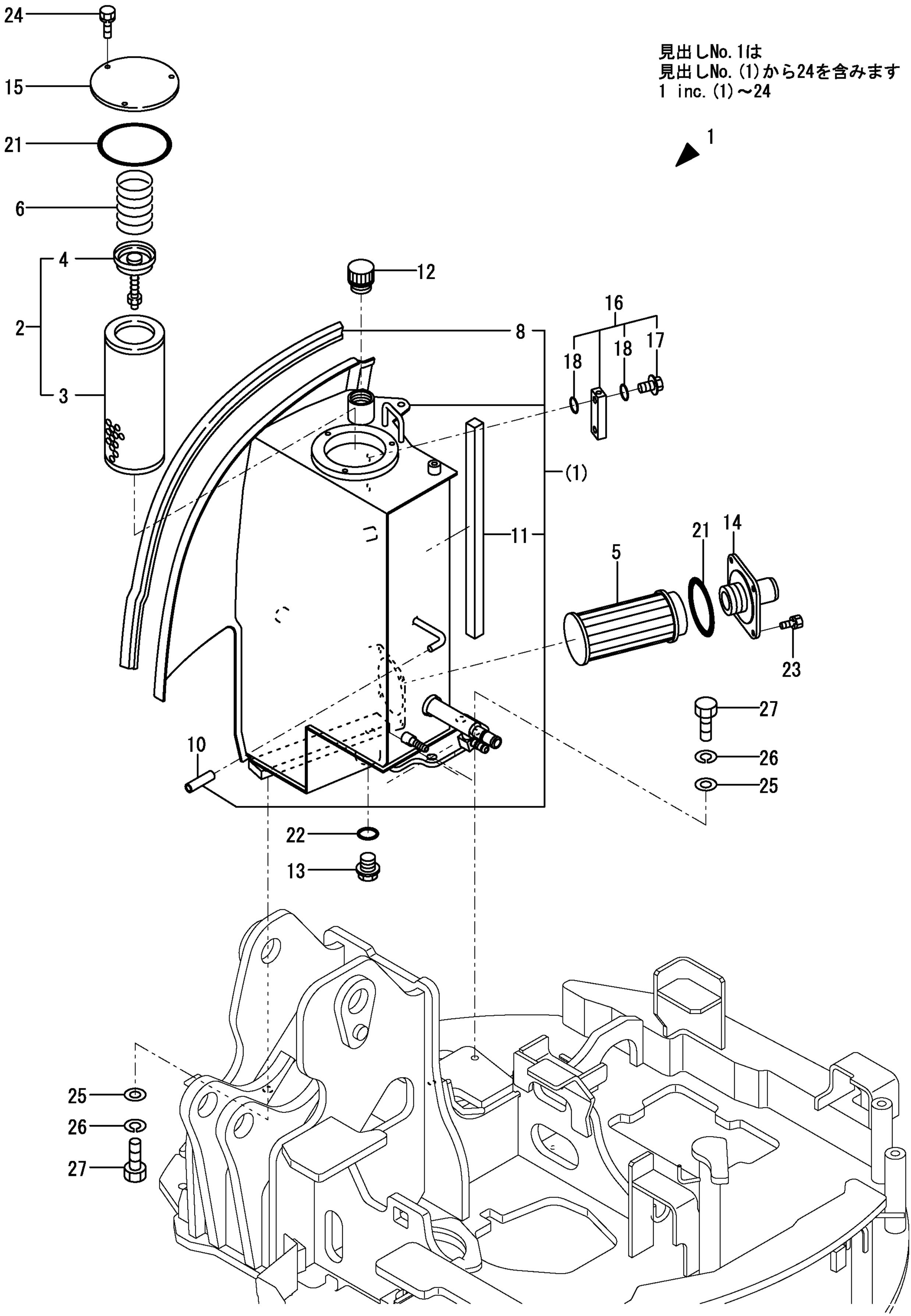

https://truckmanualshub.com/

```
1,1,,172730-75141,,JOINT,1,1,,,,,,,,,,,,,,,,
2,1,,172422-76100,,FLANGE,1,1,,,,,,,,,,,,,,,,
3,1,,172142-76181,,"JOINT 90-3/8 ASSY",2,2,,,,,,,,,,,,,,,,
4,2,,24315-000140,,"O-RING 1B P-14.0",2,2,,,,,,,,,,,,,,,,
5,1,,172142-76181,,"JOINT 90-3/8 ASSY",2,2,,,,,,,,,,,,,,,,
6,2,,24315-000140,,"O-RING 1B P-14.0",2,2,,,,,,,,,,,,,,,,
7,1,,172157-76300,,"ELBOW 3/8-1/2",1,1,,,,,,,,,,,,,,,,
8,2,,24315-000180,,"O-RING 1B P-18.0",1,1,,,,,,,,,,,,,,,,
9,1,,22117-100000,,"WASHER 10",4,4,,,,,,,,,,,,,,,,
10,1,,24315-000140,,"O-RING 1B P-14.0",1,1,,,,,,,,,,,,,,,,
11,1,,24321-000400,,"O-RING 1A G-40.0",1,1,,,,,,,,,,,,,,,,
12,1,,26013-100252,,"BOLT W/WASHER M10X25",4,4,,,,,,,,,,,,,,,,
13,1,,172487-76410,,"TUBE, SUCTION",1,1,,,,,,,,,,,,,,,,
14,1,,26013-100202,,"BOLT W/WASHER M10X20",2,2,,,,,,,,,,,,,,,,
15,1,,172458-78091,,"HOSE 39.5 X 52.5",1,1,,,,,,,,,,,,,,,,
16,1,,172456-78101,,"HOSE 38.1X50.2",1,1,,,,,,,,,,,,,,,,
17,1,,172456-78111,,"HOSE H206BZ080S",1,1,,,,,,,,,,,,,,,,
18,1,,172456-78120,,"HOSE H206BZ071S",1,1,,,,,,,,,,,,,,,,
19,1,,172456-78130,,"HOSE H206CZ061S",1,1,,,,,,,,,,,,,,,,
20,1,,172122-79930,,"CLAMP B",1,1,,,,,,,,,,,,,,,,
21,1,,23001-060000,,"CLIP,HOLELESS HOSE",4,4,,,,,,,,,,,,,,,,
22,1,,23001-070000,,CLIP,4,4,,,,,,,,,,,,,,,,
```

https://truckmanualshub.com/

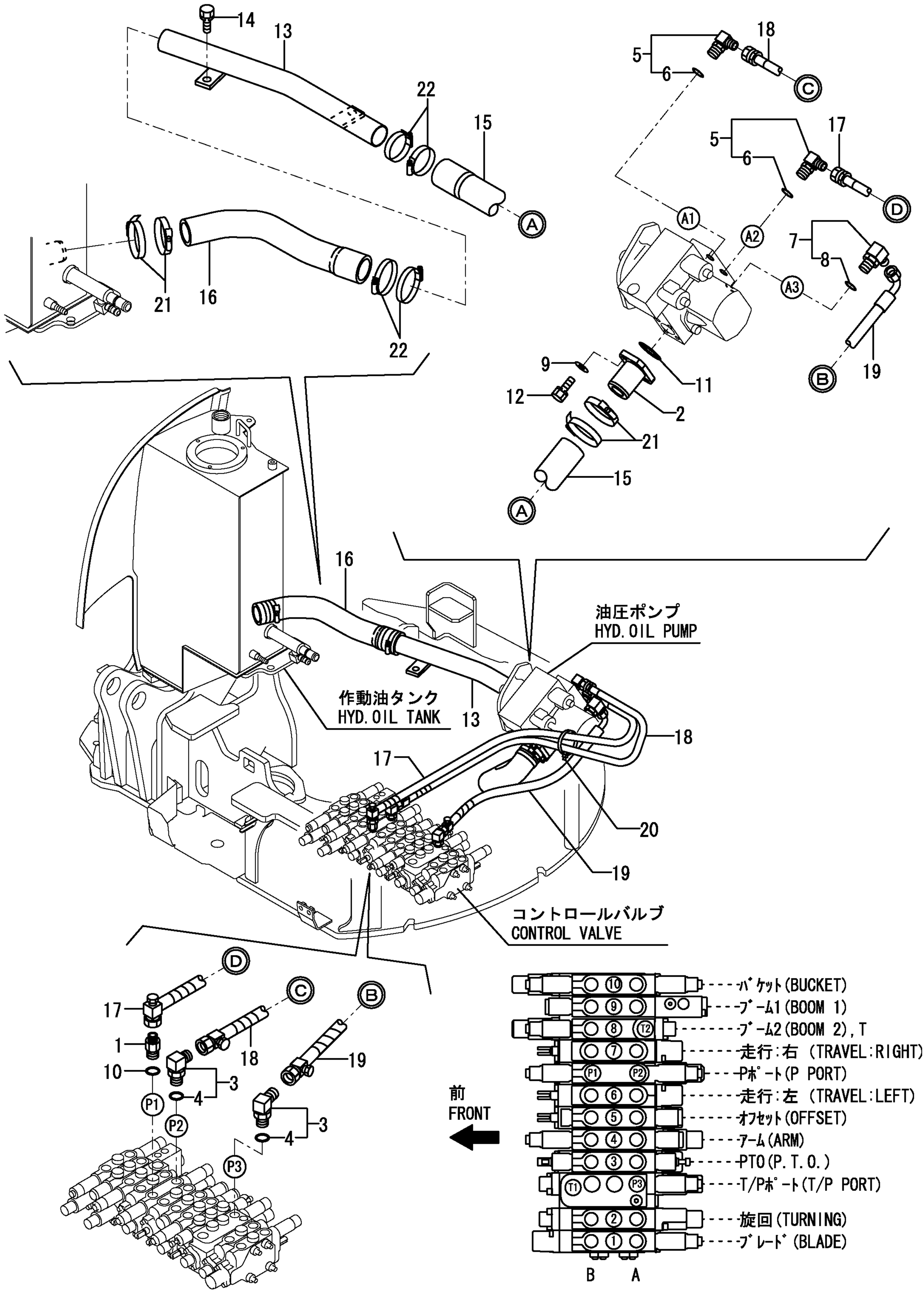

https://truckmanualshub.com/

```
1,1,,172730-75141,,JOINT,5,5,,,,,,,,,,,,,,,,
2,1,,172730-75141,,JOINT,2,2,,,,,,,,,,,,,,,,
3,1,,172173-76101,,"CONNECTOR PF1/4-45",1,1,,,,,,,,,,,,,,,,
4,2,,24315-000110,,"O-RING 1B P-11.0",1,1,,,,,,,,,,,,,,,,
5,1,,172162-76131,,ADAPTER,2,2,,,,,,,,,,,,,,,,
6,1,,172141-76180,,CONNECTOR,1,1,,,,,,,,,,,,,,,,
7,2,,24315-000110,,"O-RING 1B P-11.0",1,1,,,,,,,,,,,,,,,,
8,1,,172142-76181,,"JOINT 90-3/8 ASSY",1,1,,,,,,,,,,,,,,,,
9,2,,24315-000140,,"O-RING 1B P-14.0",1,1,,,,,,,,,,,,,,,,
10,1,,172147-76260,,CONNECTOR,1,1,,,,,,,,,,,,,,,,
11,1,,172141-76920,,"CONNECTOR 3/8-1/4L",1,1,,,,,,,,,,,,,,,,
12,2,,24315-000140,,"O-RING 1B P-14.0",1,1,,,,,,,,,,,,,,,,
13,1,,24315-000140,,"O-RING 1B P-14.0",2,2,,,,,,,,,,,,,,,,
14,1,,24315-000140,,"O-RING 1B P-14.0",1,1,,,,,,,,,,,,,,,,
15,1,,24315-000140,,"O-RING 1B P-14.0",3,3,,,,,,,,,,,,,,,,
16,1,,24315-000140,,"O-RING 1B P-14.0",1,1,,,,,,,,,,,,,,,,
17,1,,24315-000140,,"O-RING 1B P-14.0",2,2,,,,,,,,,,,,,,,,
18,1,,24315-000140,,"O-RING 1B P-14.0",1,1,,,,,,,,,,,,,,,,
19,1,,172456-78140,,"HOSE F403BB070S",1,1,,,,,,,,,,,,,,,,
20,1,,172487-78170,,"HOSE H206CX095",1,1,,,,,,,,,,,,,,,,
21,1,,172487-78180,,"HOSE H206CX086",1,1,,,,,,,,,,,,,,,,
22,1,,172487-78190,,"HOSE H206BC235",1,1,,,,,,,,,,,,,,,,
23,1,,172487-78200,,"HOSE H206BE224",1,1,,,,,,,,,,,,,,,,
24,1,,172422-78210,,"HOSE P206BC050S",2,2,,,,,,,,,,,,,,,,
25,1,,172487-78210,,"HOSE H206BC207",1,1,,,,,,,,,,,,,,,,
26,1,,172487-78220,,"HOSE H204BB242",1,1,,,,,,,,,,,,,,,,
27,1,,172487-78230,,"HOSE H204BC252",1,1,,,,,,,,,,,,,,,,
28,1,,172487-78310,,"HOSE H206BC207",1,1,,,,,,,,,,,,,,,,
29,1,,172444-78900,,SUPPORT,1,1,,,,,,,,,,,,,,,,
30,1,,172444-78950,,"SUPPORT AL,HOSE",1,1,,,,,,,,,,,,,,,,
31,1,,172122-79930,,"CLAMP B",3,3,,,,,,,,,,,,,,,,
32,1,,172487-78800,,"SUPPORT,HOSE",1,1,,,,,,,,,,,,,,,,,,,,I
```

https://truckmanualshub.com/

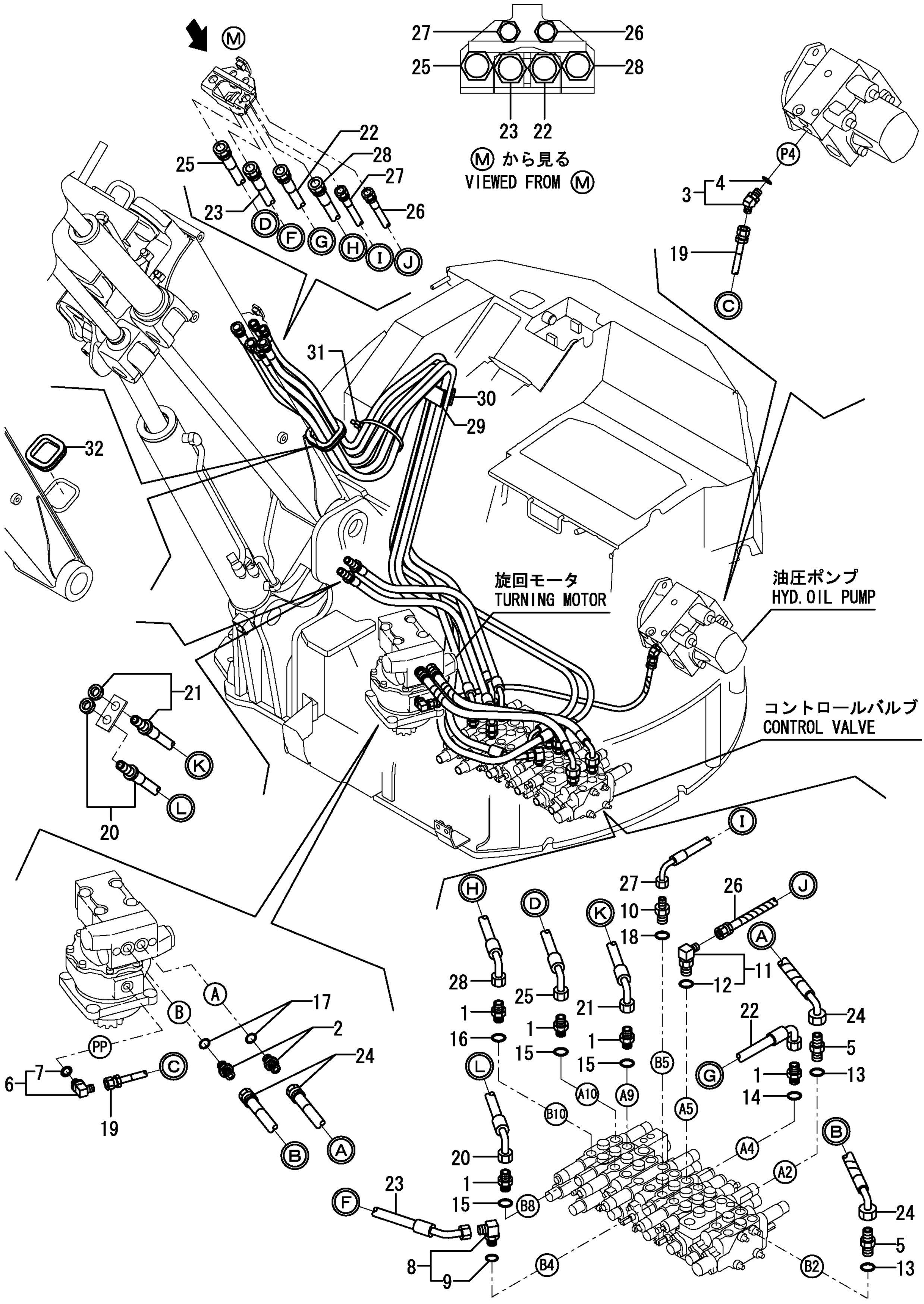

https://truckmanualshub.com/

```
1,1,,172162-76131,,ADAPTER,1,1,,,,,,,,,,,,,,,,
2,1,,172422-76130,,CONNECTOR,2,2,,,,,,,,,,,,,,,,
3,1,,172141-76180,,CONNECTOR,3,3,,,,,,,,,,,,,,,,
4,2,,24315-000110,,"O-RING 1B P-11.0",3,3,,,,,,,,,,,,,,,,
5,1,,172141-76180,,CONNECTOR,1,1,,,,,,,,,,,,,,,,
6,2,,24315-000110,,"O-RING 1B P-11.0",1,1,,,,,,,,,,,,,,,,
7,1,,172142-76181,,"JOINT 90-3/8 ASSY",4,4,,,,,,,,,,,,,,,,
8,2,,24315-000140,,"O-RING 1B P-14.0",4,4,,,,,,,,,,,,,,,,
9,1,,172116-76381,,"ADAPTER 64",3,3,,,,,,,,,,,,,,,,
10,1,,24315-000140,,"O-RING 1B P-14.0",2,2,,,,,,,,,,,,,,,,
11,1,,24315-000140,,"O-RING 1B P-14.0",3,3,,,,,,,,,,,,,,,,
12,1,,24315-000140,,"O-RING 1B P-14.0",1,1,,,,,,,,,,,,,,,,
13,1,,172456-78150,,"HOSE F403BC090S",1,1,,,,,,,,,,,,,,,,
14,1,,172456-78170,,"HOSE P204BC067S",2,2,,,,,,,,,,,,,,,,
15,1,,172422-78200,,"HOSE P206BC048S",4,4,,,,,,,,,,,,,,,,
```

https://truckmanualshub.com/

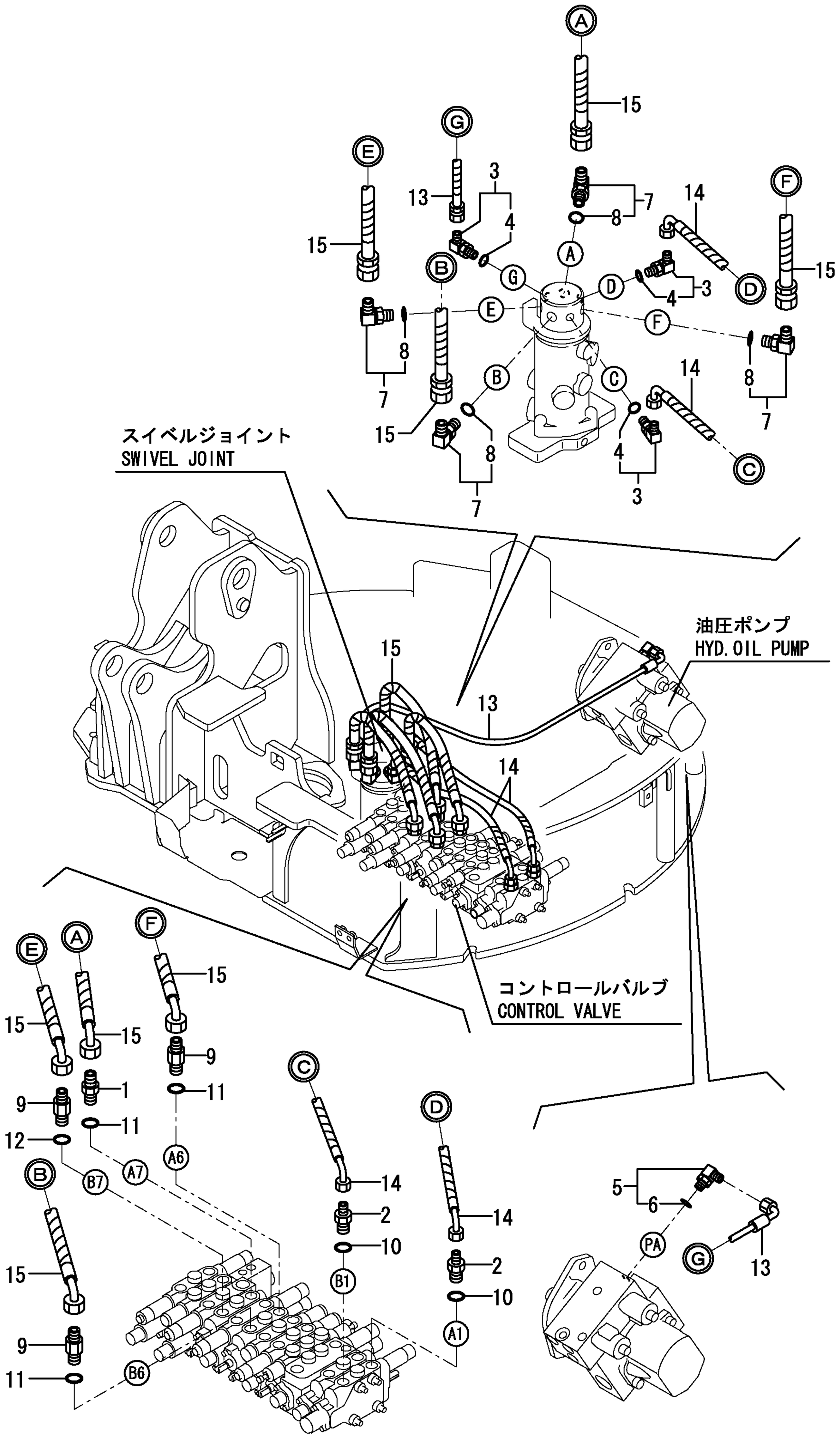

https://truckmanualshub.com/

```
1,1,,172450-76100,,ELBOW,1,1,,,,,,,,,,,,,,,,
2,2,,24315-000180,,"O-RING 1B P-18.0",1,1,,,,,,,,,,,,,,,,
3,2,,24315-000240,,"O-RING 1B P-24.0",1,1,,,,,,,,,,,,,,,,
4,1,,172123-76121,,"JOINT PF1/4",1,1,,,,,,,,,,,,,,,,
5,1,,172458-76130,,"CONNECTOR PF1/2-1/2",1,1,,,,,,,,,,,,,,,,
6,1,,23001-035000,,"HOSE CLAMP  35",2,2,,,,,,,,,,,,,,,,
7,1,,172422-76140,,CONNECTOR,1,1,,,,,,,,,,,,,,,,
8,1,,172444-76150,,J0INT,1,1,,,,,,,,,,,,,,,,
9,1,,172458-76150,,"NIPPLE PF1/4,ELBOW",1,1,,,,,,,,,,,,,,,,
10,2,,24315-000110,,"O-RING 1B P-11.0",1,1,,,,,,,,,,,,,,,,
11,1,,172141-76180,,CONNECTOR,1,1,,,,,,,,,,,,,,,,
12,2,,24315-000110,,"O-RING 1B P-11.0",1,1,,,,,,,,,,,,,,,,
13,1,,172162-76180,,"JOINT 3-1/4 COMPL.",3,3,,,,,,,,,,,,,,,,
14,2,,24315-000110,,"O-RING 1B P-11.0",3,3,,,,,,,,,,,,,,,,
15,1,,172162-76180,,"JOINT 3-1/4 COMPL.",1,1,,,,,,,,,,,,,,,,
16,2,,24315-000110,,"O-RING 1B P-11.0",1,1,,,,,,,,,,,,,,,,
17,1,,172487-76200,,ELBOW,1,1,,,,,,,,,,,,,,,,
18,2,,24315-000140,,"O-RING 1B P-14.0",1,1,,,,,,,,,,,,,,,,
19,1,,172141-76220,,NIPPLE,1,1,,,,,,,,,,,,,,,,
20,1,,172164-76330,,"JOINT PF1/4-0.7",2,2,,,,,,,,,,,,,,,,
21,1,,23393-040000,,"JOINT 90RGI 1/2",1,1,,,,,,,,,,,,,,,,
22,1,,24315-000110,,"O-RING 1B P-11.0",1,1,,,,,,,,,,,,,,,,
23,1,,24315-000110,,"O-RING 1B P-11.0",2,2,,,,,,,,,,,,,,,,
24,1,,24315-000110,,"O-RING 1B P-11.0",1,1,,,,,,,,,,,,,,,,
25,1,,24315-000180,,"O-RING 1B P-18.0",1,1,,,,,,,,,,,,,,,,
26,1,,26013-100202,,"BOLT W/WASHER M10X20",2,2,,,,,,,,,,,,,,,,
27,1,,172456-78160,,"HOSE F403CC806",1,1,,,,,,,,,,,,,,,,
28,1,,172487-78250,,"HOSE G806YY052S",1,1,,,,,,,,,,,,,,,,
29,1,,172456-78260,,"HOSE G608CC067S",1,1,,,,,,,,,,,,,,,,
30,1,,172487-78260,,"HOSE G806YY026",1,1,,,,,,,,,,,,,,,,
31,1,,172456-78270,,"HOSE G612YY055S",1,1,,,,,,,,,,,,,,,,
32,1,,172487-78270,,"HOSE G804YY029",1,1,,,,,,,,,,,,,,,,
33,1,,172487-78280,,"HOSE G804YY016",1,1,,,,,,,,,,,,,,,,
34,1,,172458-78290,,"HOSE F403CC042",1,1,,,,,,,,,,,,,,,,
35,1,,172458-78300,,"HOSE F403CC074",1,1,,,,,,,,,,,,,,,,
36,1,,172458-78310,,"HOSE F403BC053",1,1,,,,,,,,,,,,,,,,
37,1,,172122-79930,,"CLAMP B",1,1,,,,,,,,,,,,,,,,
38,1,,172122-79930,,"CLAMP B",1,1,,,,,,,,,,,,,,,,
39,1,,23000-013000,,"CLAMP 13",2,2,,,,,,,,,,,,,,,,
40,1,,23000-013000,,"CLAMP 13",2,2,,,,,,,,,,,,,,,,
41,1,,23001-016000,,"HOSE CLAMP 16",2,2,,,,,,,,,,,,,,,,
42,1,,23001-016000,,"HOSE CLAMP 16",2,2,,,,,,,,,,,,,,,,
```

https://truckmanualshub.com/

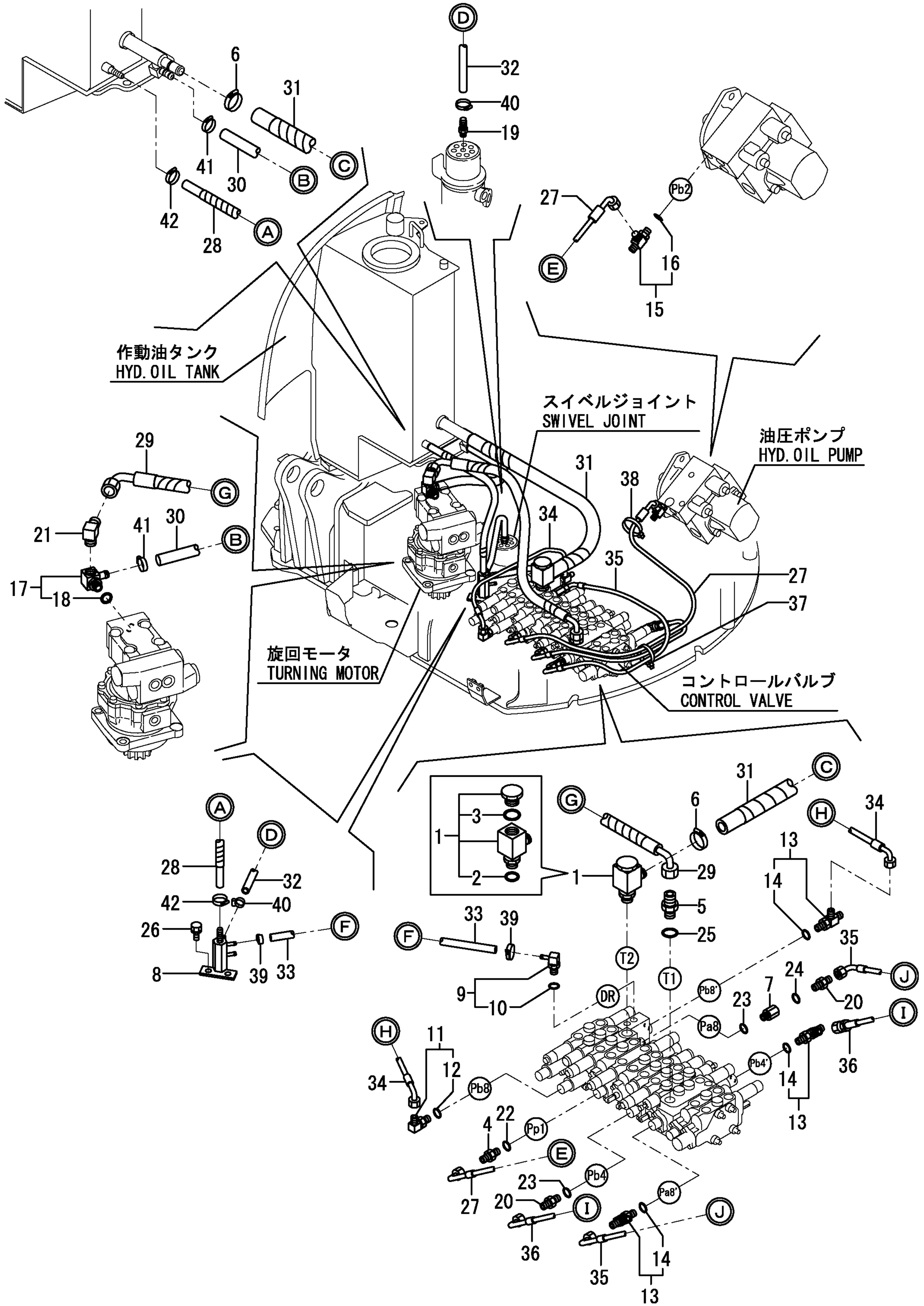

https://truckmanualshub.com/

```
1,1,,172487-64950,,"COVER,HOSE P.T.O.(73",1,1,,,,,,,,,,,,,,,,,
2,1,,172487-74900,,"PLATE,P.T.O.(GREEN97",1,1,,,,,,,,,,,,,,,,,
3,1,,172162-76130,,"ADAPTER,DOUBLE MALE",1,1,,,,,,,,,,,,,,,,,
4,1,,172422-76180,,CONNECTOR,1,1,,,,,,,,,,,,,,,,,
5,1,,172487-78620,,"HOSE H208CX125S",1,1,,,,,,,,,,,,,,,,,
6,1,,172487-78630,,"HOSE H206CX125S",1,1,,,,,,,,,,,,,,,,,
7,1,,172122-79930,,"CLAMP B",2,2,,,,,,,,,,,,,,,,,
8,1,,24315-000140,,"O-RING 1B P-14.0",2,2,,,,,,,,,,,,,,,,,
9,1,,26013-100202,,"BOLT W/WASHER M10X20",4,4,,,,,,,,,,,,,,,,,
```

https://truckmanualshub.com/

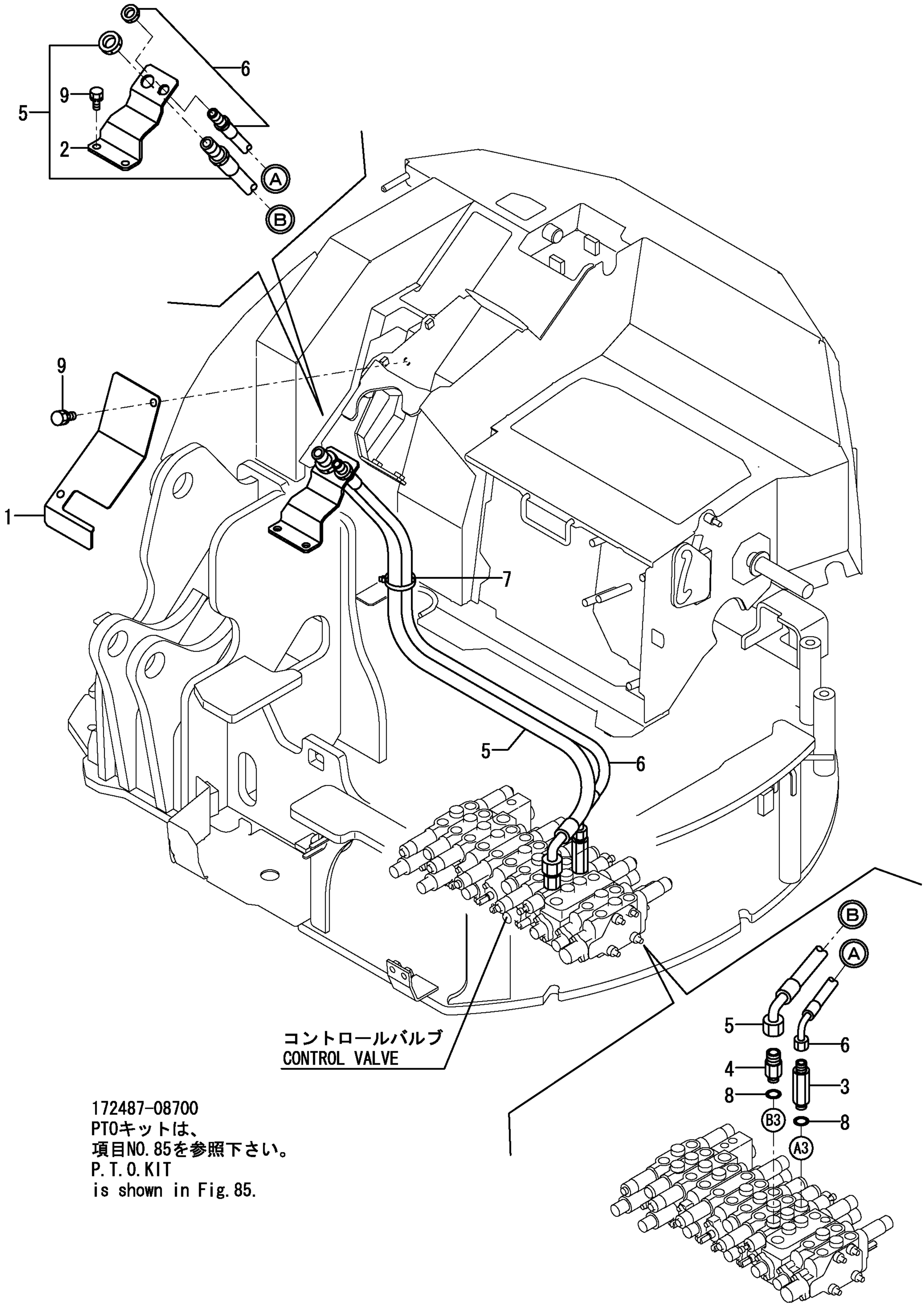

172487-08700
PTOキットは、
項目NO.85を参照下さい。
P.T.O.KIT
is shown in Fig.85.

https://truckmanualshub.com/

```
1,1,,172730-75141,,JOINT,2,2,,,,,,,,,,,,,,,,
2,1,,172730-75141,,JOINT,4,4,,,,,,,,,,,,,,,,
3,1,,172173-76101,,"CONNECTOR PF1/4-45",4,4,,,,,,,,,,,,,,,,
4,2,,24315-000110,,"O-RING 1B P-11.0",4,4,,,,,,,,,,,,,,,,
5,1,,172421-76100,,CONNECTOR,1,1,,,,,,,,,,,,,,,,
6,1,,172123-76121,,"JOINT PF1/4",2,2,,,,,,,,,,,,,,,,
7,1,,172644-76161,,"ADJUST ELBOW 45ß",2,2,,,,,,,,,,,,,,,,
8,2,,24315-000140,,"O-RING 1B P-14.0",2,2,,,,,,,,,,,,,,,,
9,1,,172141-76180,,CONNECTOR,2,2,,,,,,,,,,,,,,,,
10,2,,24315-000110,,"O-RING 1B P-11.0",2,2,,,,,,,,,,,,,,,,
11,1,,23393-020000,,"JOINT 90RGI1/4",1,1,,,,,,,,,,,,,,,,
12,1,,24315-000110,,"O-RING 1B P-11.0",2,2,,,,,,,,,,,,,,,,
13,1,,24315-000140,,"O-RING 1B P-14.0",4,4,,,,,,,,,,,,,,,,
14,1,,24315-000140,,"O-RING 1B P-14.0",2,2,,,,,,,,,,,,,,,,
15,1,,172421-78120,,"HOSE F204BB059W",2,2,,,,,,,,,,,,,,,,
16,1,,172421-78130,,"HOSE F206BB073W",2,,,,,,,,,,,,,,,,,,
16-1,1,,172421-78131,,"HOSE
F206BB087W",2,2,,,,,N,,724560294,M/#55542,,,,,,,,,,I
17,1,,172456-78290,,"HOSE F206BC090W",2,,,,,,,,,,,,,,,,,,
17-1,1,,172456-78291,,"HOSE
F206BC087W",2,2,,,,,N,,724560294,M/#55542,,,,,,,,,,I
18,1,,172456-78300,,"HOSE F204BC100W",2,,,,,,,,,,,,,,,,,,
18-1,1,,172456-78301,,"HOSE
F204BC100W",2,2,,,,,N,,724560294,M/#55542,,,,,,,,,,I
19,1,,172456-78311,,"HOSE G704BB083W",2,,,,,,,,,,,,,,,,,,
19-1,1,,172456-78312,,"HOSE
F204BB083W",2,2,,,,,N,,724560294,M/#55542,,,,,,,,,,I
```

https://truckmanualshub.com/

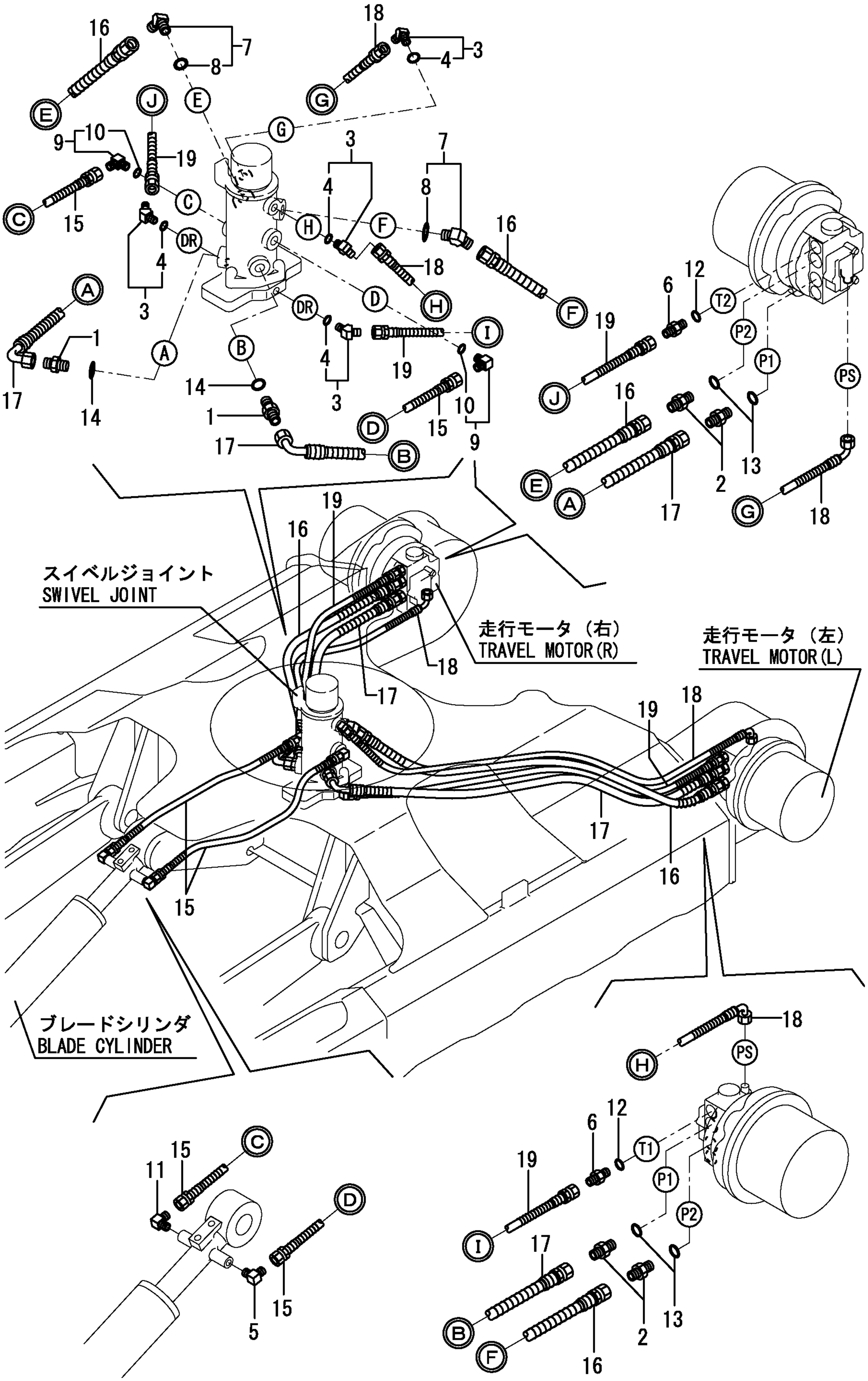

https://truckmanualshub.com/

```
1,1,,172487-78101,,"HOSE H206BD046W",1,1,,,,,,,,,,,,,,,,
2,1,,172487-78111,,"HOSE H206BC052W",1,1,,,,,,,,,,,,,,,,
3,1,,172487-78120,,"HOSE F206BX208K",1,1,,,,,,,,,,,,,,,,
4,1,,172487-78130,,"HOSE F206BX239K",1,1,,,,,,,,,,,,,,,,
5,1,,172487-78140,,"HOSE F206XX241K",1,1,,,,,,,,,,,,,,,,
6,1,,172487-78150,,"HOSE H204BX130K",1,1,,,,,,,,,,,,,,,,
7,1,,172487-78160,,"HOSE H204BX130K",1,1,,,,,,,,,,,,,,,,
8,1,,172487-78300,,"HOSE F206XX241K",1,1,,,,,,,,,,,,,,,,
9,1,,172487-78320,,"HOSE H206BB070K",2,2,,,,,,,,,,,,,,,,
10,1,,172122-79930,,"CLAMP B",1,1,,,,,,,,,,,,,,,,
```

https://truckmanualshub.com/

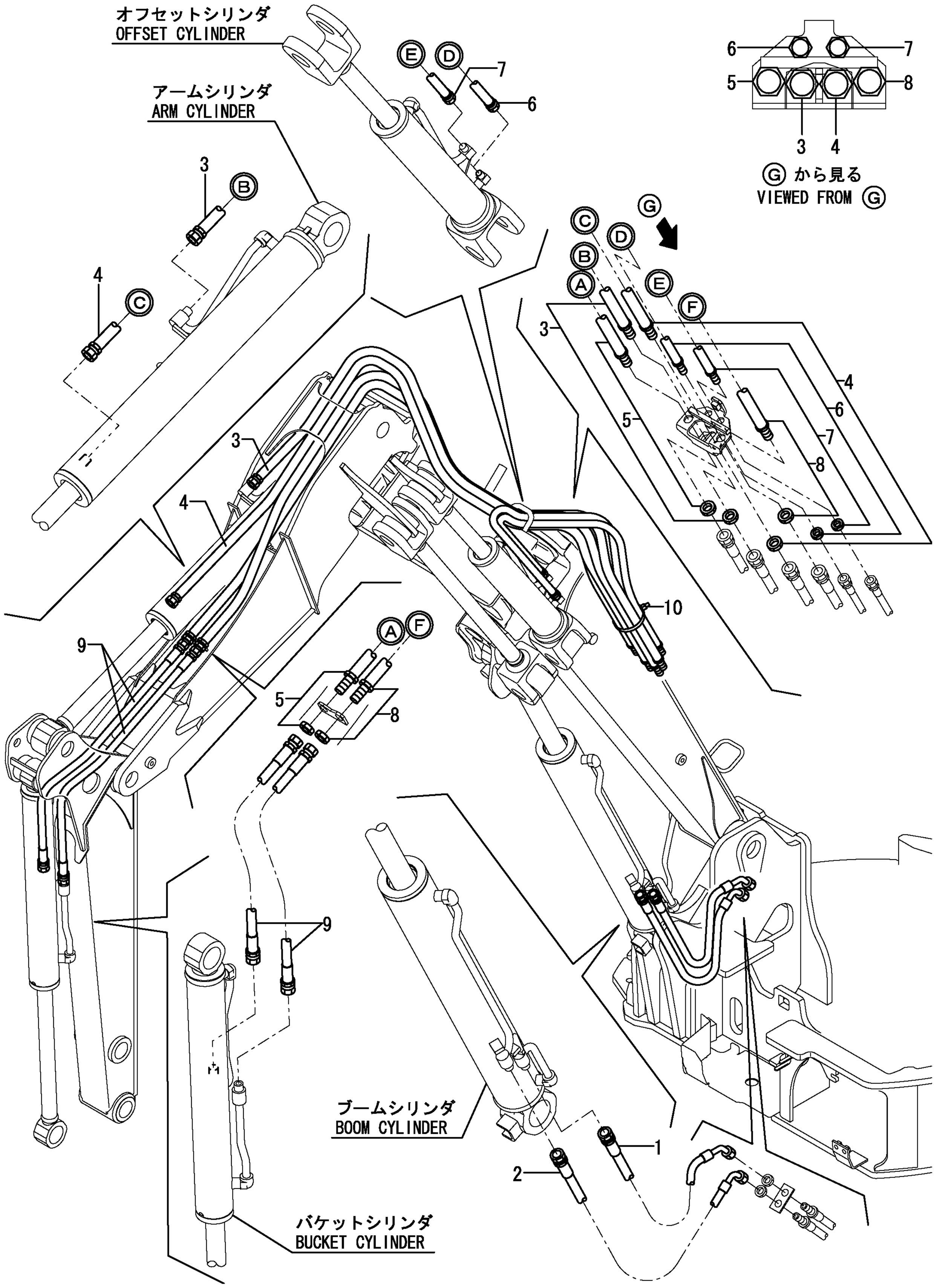

https://truckmanualshub.com/

```
1,1,,172183-74820,,"STOP VALVE",2,2,,,,,,,,,,,,,,,,
2,1,,172487-76550,,"TUBE,P.T.O.(GREEN:97",1,1,,,,,,,,,,,,,,,,
3,1,,172487-76600,,"TUBE L,P.T.O(GREEN97",1,1,,,,,,,,,,,,,,,,
4,1,,172487-76650,,"TUBE R,P.T.O(GREEN97",1,1,,,,,,,,,,,,,,,,
5,1,,172487-78600,,"HOSE H206BB155K",1,1,,,,,,,,,,,,,,,,
6,1,,172487-78610,,"HOSE H208BB155K",1,1,,,,,,,,,,,,,,,,
7,1,,172487-78640,,"HOSE H208BC067K",1,1,,,,,,,,,,,,,,,,
8,1,,172487-78650,,"HOSE H206BC067K",1,1,,,,,,,,,,,,,,,,
9,1,,172456-78910,,"HOSE H208AB060W",2,2,,,,,,,,,,,,,,,,
10,1,,23871-040000,,"PLUG PT1/2,SCREW",2,2,,,,,,,,,,,,,,,,
11,1,,26013-100162,,"BOLT M10X 16",2,2,,,,,,,,,,,,,,,,
12,1,,26013-100252,,"BOLT W/WASHER M10X25",4,4,,,,,,,,,,,,,,,,
13,1,,26013-100252,,"BOLT W/WASHER M10X25",4,4,,,,,,,,,,,,,,,,
```

https://truckmanualshub.com/

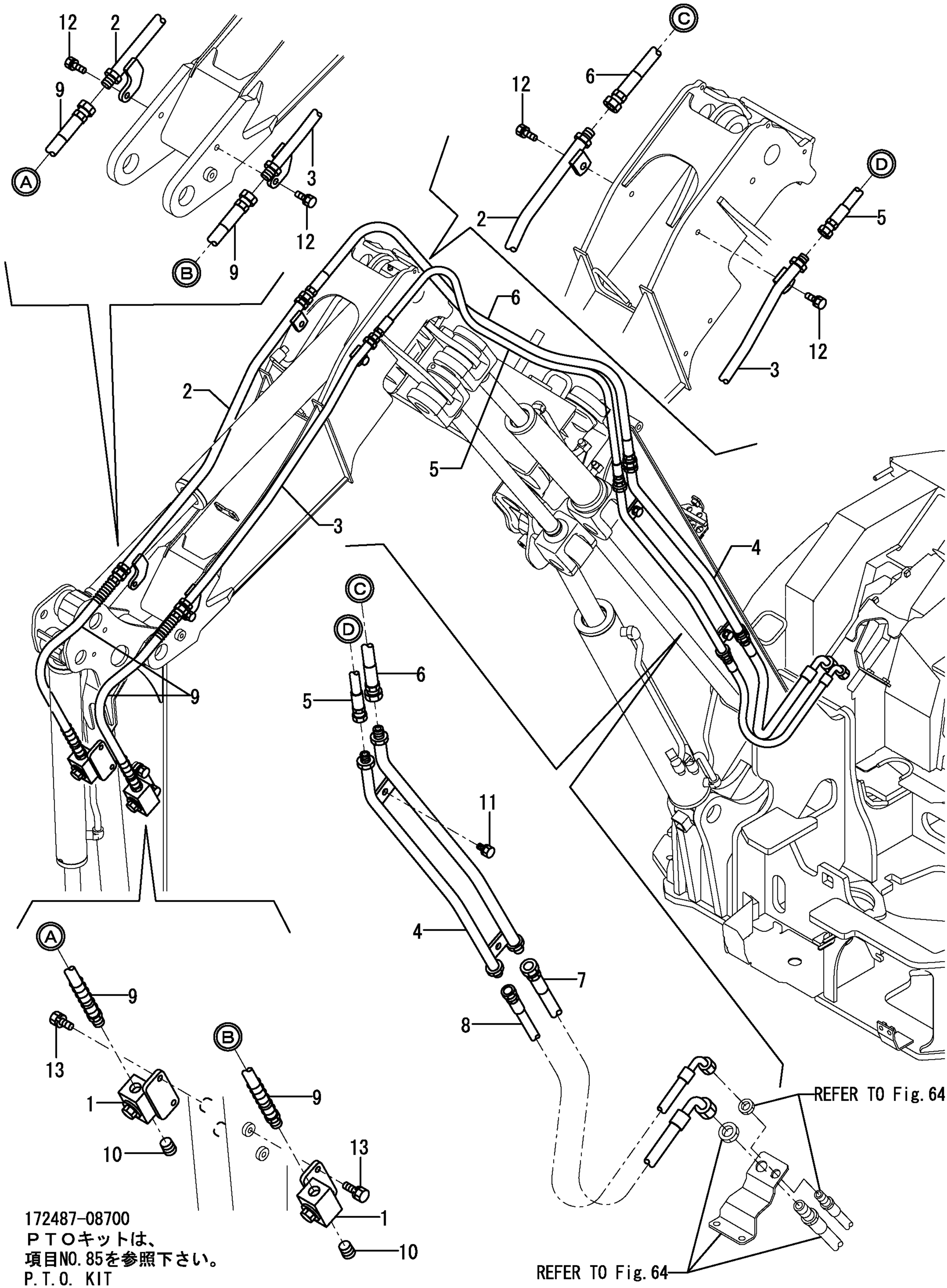

172487-08700
ＰＴＯキットは、
項目NO.85を参照下さい。
P.T.O. KIT
is shown in Fig.85.

https://truckmanualshub.com/

```
1,1,,172123-76121,,"JOINT PF1/4",2,2,,,,,,,,,,,,,,,,
2,1,,172187-76210,,ELBOW,1,1,,,,,,,,,,,,,,,,
3,2,,24315-000110,,"O-RING 1B P-11.0",1,1,,,,,,,,,,,,,,,,
4,1,,172455-76220,,"CONNECTOR PF1/4",2,2,,,,,,,,,,,,,,,,
5,1,,24315-000110,,"O-RING 1B P-11.0",4,4,,,,,,,,,,,,,,,,
6,1,,172487-78290,,"HOSE G804BY113S",2,2,,,,,,,,,,,,,,,,
7,1,,172456-78350,,"HOSE F403BB120S",1,1,,,,,,,,,,,,,,,,
8,1,,172456-78410,,"HOSE F403BB102S",1,1,,,,,,,,,,,,,,,,
9,1,,23000-013000,,"CLAMP 13",2,2,,,,,,,,,,,,,,,,
```

https://truckmanualshub.com/

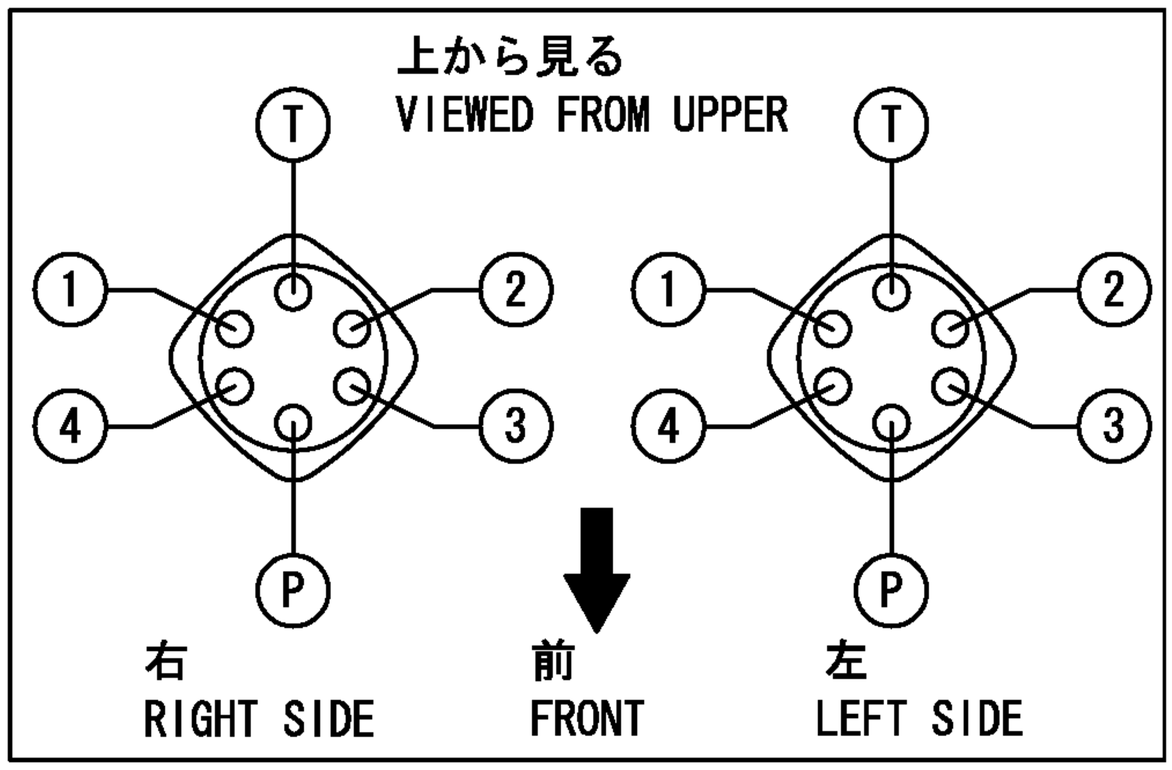

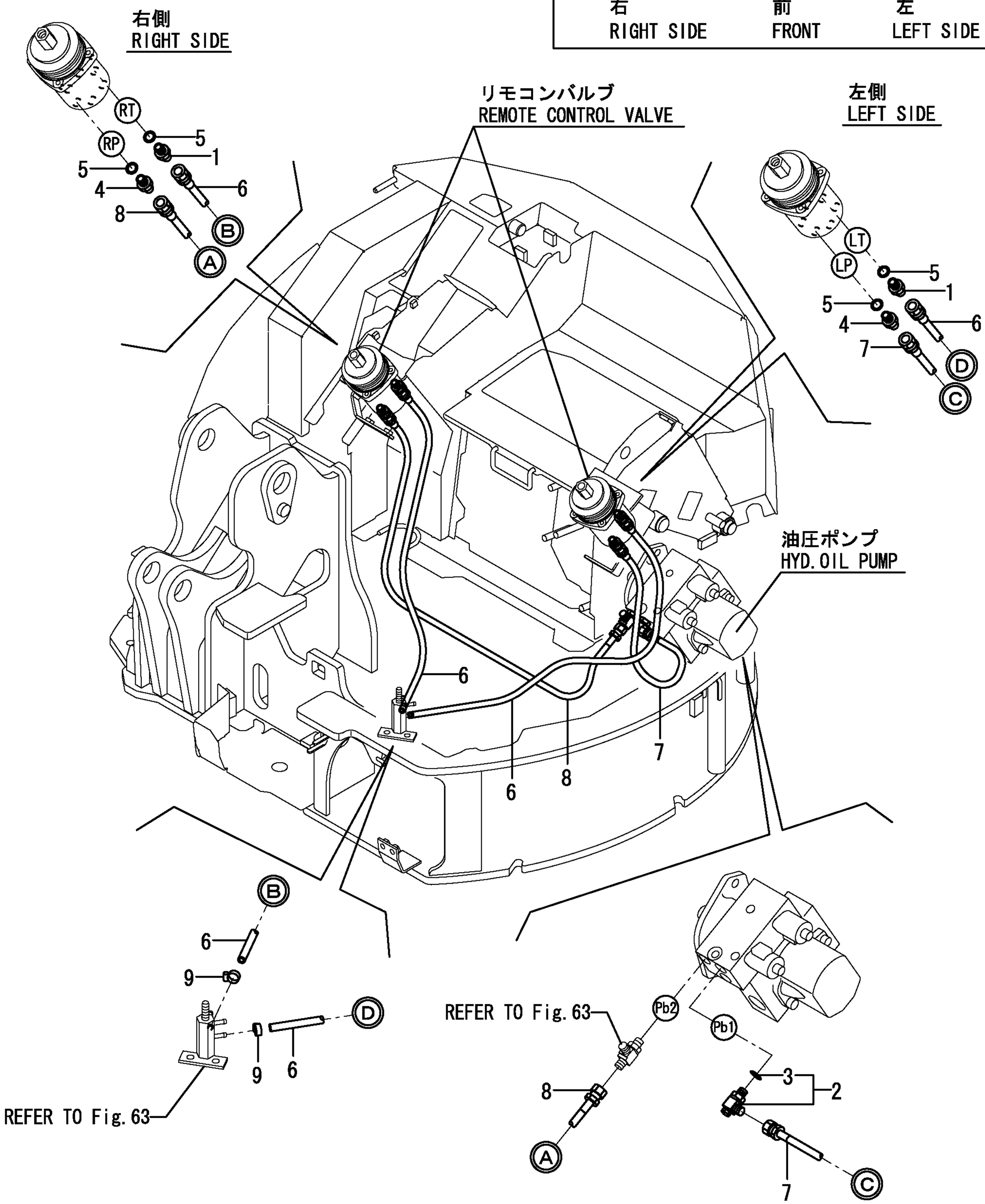

https://truckmanualshub.com/

```
1,1,,172123-76121,,"JOINT PF1/4",1,1,,,,,,,,,,,,,,,,
2,1,,172123-76121,,"JOINT PF1/4",1,1,,,,,,,,,,,,,,,,
3,1,,172123-76121,,"JOINT PF1/4",8,8,,,,,,,,,,,,,,,,
4,1,,172141-76180,,CONNECTOR,2,2,,,,,,,,,,,,,,,,
5,2,,24315-000110,,"O-RING 1B P-11.0",2,2,,,,,,,,,,,,,,,,
6,1,,172183-76200,,"CONNECTOR 1/4-1/4",1,1,,,,,,,,,,,,,,,,
7,1,,24315-000110,,"O-RING 1B P-11.0",1,1,,,,,,,,,,,,,,,,
8,1,,24315-000110,,"O-RING 1B P-11.0",1,1,,,,,,,,,,,,,,,,
9,1,,24315-000110,,"O-RING 1B P-11.0",1,1,,,,,,,,,,,,,,,,
10,1,,24315-000110,,"O-RING 1B P-11.0",8,8,,,,,,,,,,,,,,,,
11,1,,172126-11510,,"BAND 300",4,4,,,,,,,,,,,,,,,,
12,1,,172458-78390,,"HOSE F403BB097S",1,1,,,,,,,,,,,,,,,,
13,1,,172458-78420,,"HOSE F403BB097S",1,1,,,,,,,,,,,,,,,,
14,1,,172456-78430,,"HOSE F403BB156S",1,1,,,,,,,,,,,,,,,,
15,1,,172456-78440,,"HOSE F403BB110S",1,1,,,,,,,,,,,,,,,,
16,1,,172456-78450,,"HOSE F403BB110S",1,1,,,,,,,,,,,,,,,,
17,1,,172456-78460,,"HOSE F403BB110S",1,1,,,,,,,,,,,,,,,,
18,1,,172456-78470,,"HOSE F403BB142S",1,1,,,,,,,,,,,,,,,,
19,1,,172456-78500,,"HOSE F403BC132S",1,1,,,,,,,,,,,,,,,,
20,1,,172458-78570,,"SPONGE,HOSE",1,1,,,,,,,,,,,,,,,,
21,1,,172444-78800,,"SPONGE, HOSE",1,1,,,,,,,,,,,,,,,,
22,1,,172122-79930,,"CLAMP B",2,2,,,,,,,,,,,,,,,,
```

https://truckmanualshub.com/

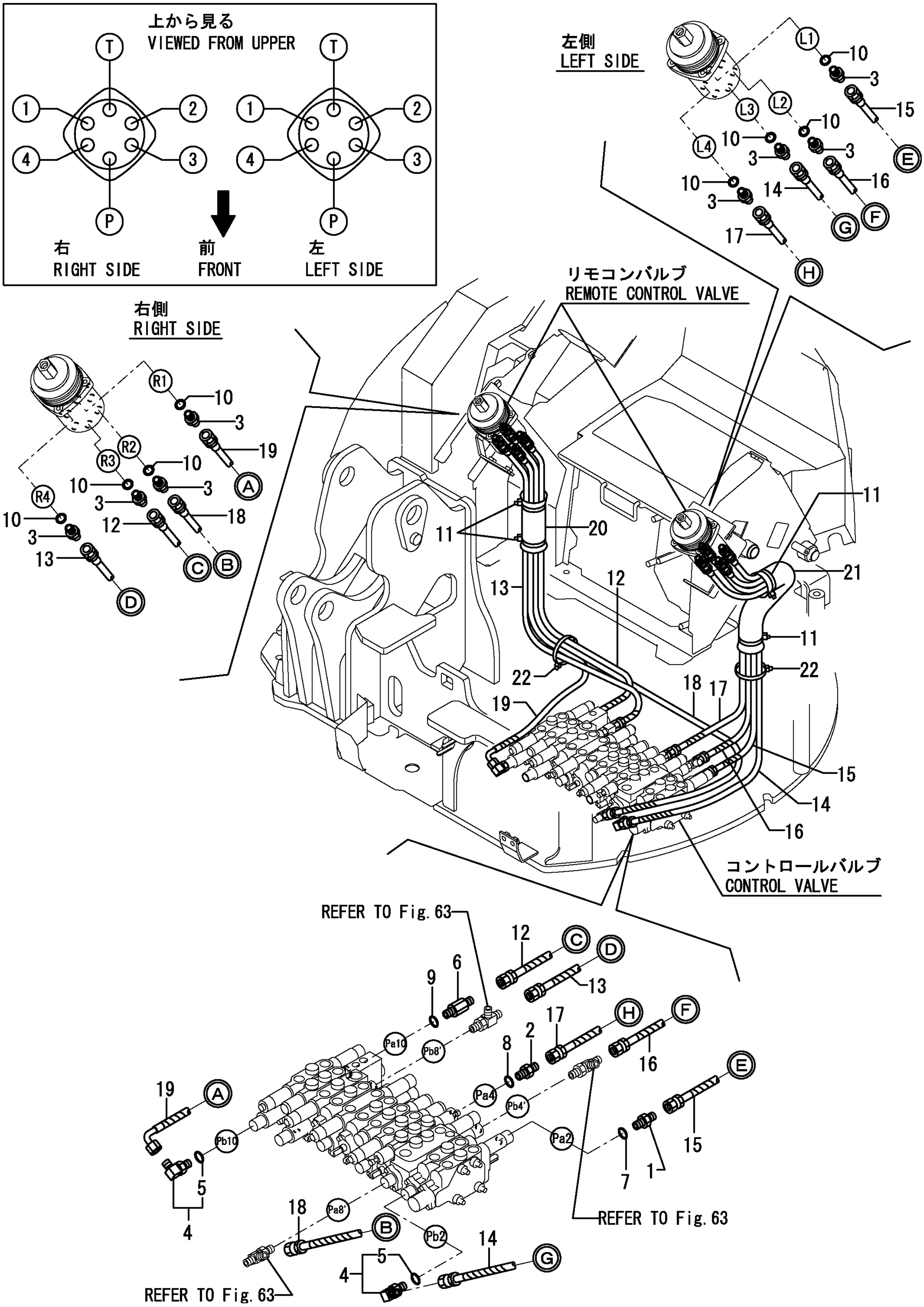

https://truckmanualshub.com/

```
1,1,,172123-76121,,"JOINT PF1/4",8,,,,,,,,,,,,,,,,,
2,1,,24315-000110,,"O-RING 1B P-11.0",8,,,,,,,,,,,,,,,,,
3,1,,172173-76101,,"CONNECTOR PF1/4-45",2,,,,,,,,,,,,,,,,,,,
4,2,,24315-000110,,"O-RING 1B P-11.0",2,,,,,,,,,,,,,,,,,
5,1,,172141-76180,,CONNECTOR,6,,,,,,,,,,,,,,,,,
6,2,,24315-000110,,"O-RING 1B P-11.0",6,,,,,,,,,,,,,,,,,
7,1,,172126-11510,,"BAND 300",4,,,,,,,,,,,,,,,,,
8,1,,172456-78320,,"HOSE F403BB107S",1,,,,,,,,,,,,,,,,,
9,1,,172456-78330,,"HOSE F403BB100S",1,,,,,,,,,,,,,,,,,
10,1,,172456-78340,,"HOSE F403BB125S",1,,,,,,,,,,,,,,,,,
11,1,,172456-78370,,"HOSE F403BB156S",1,,,,,,,,,,,,,,,,,
12,1,,172456-78380,,"HOSE F403BB117S",1,,,,,,,,,,,,,,,,,
13,1,,172456-78390,,"HOSE F403BB152S",1,,,,,,,,,,,,,,,,,
14,1,,172456-78400,,"HOSE F403BB112S",1,,,,,,,,,,,,,,,,,
15,1,,172458-78570,,"SPONGE,HOSE",1,,,,,,,,,,,,,,,,,
16,1,,172458-78790,,"HOSE F403BB116S",1,,,,,,,,,,,,,,,,,
17,1,,172444-78800,,"SPONGE, HOSE",1,,,,,,,,,,,,,,,,,
18,1,,172122-79930,,"CLAMP B",3,,,,,,,,,,,,,,,,,
```

https://truckmanualshub.com/

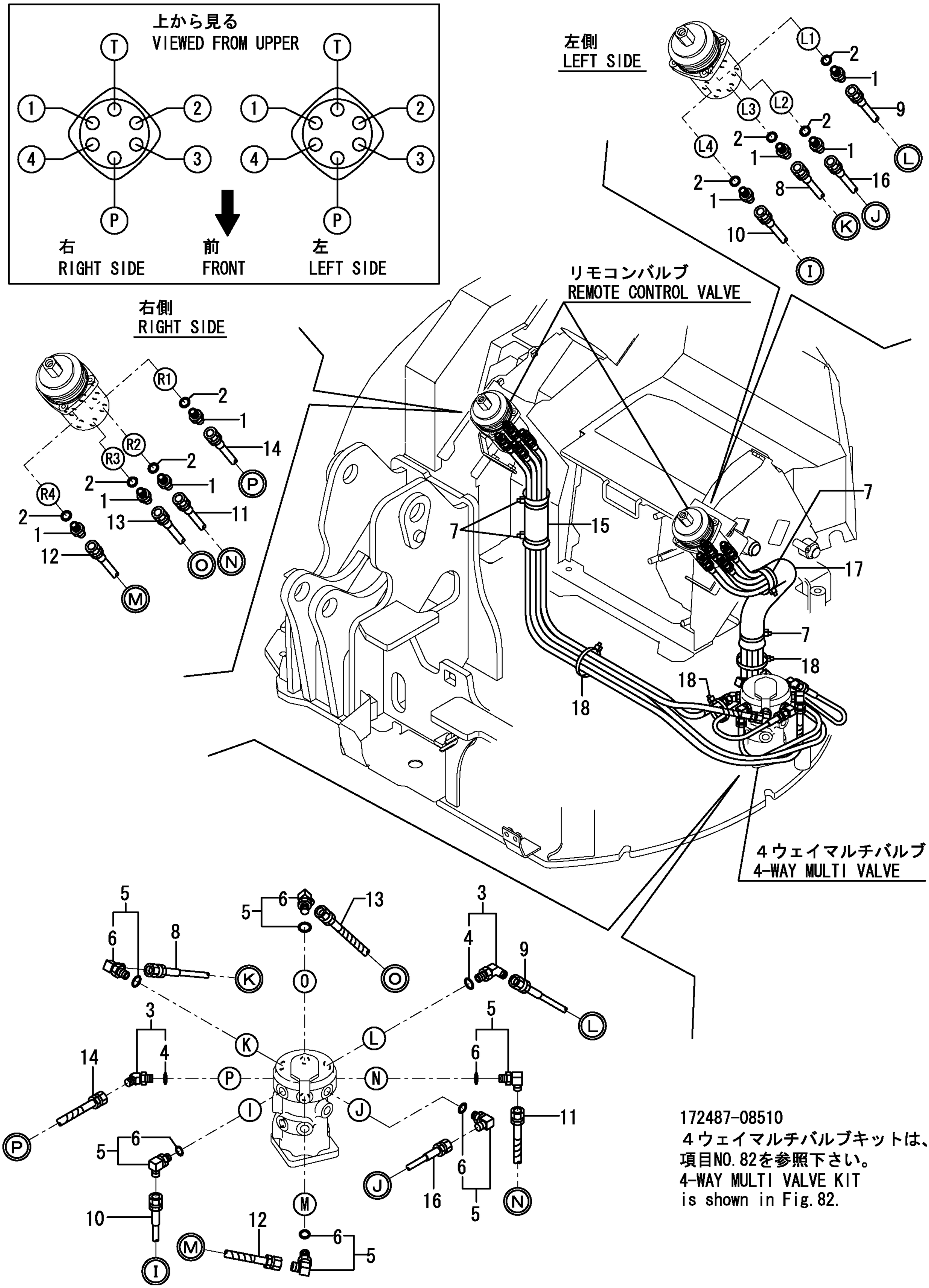

172487-08510
4ウェイマルチバルブキットは、
項目NO.82を参照下さい。
4-WAY MULTI VALVE KIT
is shown in Fig.82.

https://truckmanualshub.com/

```
1,1,,172123-76121,,"JOINT PF1/4",1,,,,,,,,,,,,,,,,,
2,1,,172123-76121,,"JOINT PF1/4",1,,,,,,,,,,,,,,,,,
3,1,,172141-76180,,CONNECTOR,2,,,,,,,,,,,,,,,,,
4,2,,24315-000110,,"O-RING 1B P-11.0",2,,,,,,,,,,,,,,,,,
5,1,,172183-76200,,"CONNECTOR 1/4-1/4",1,,,,,,,,,,,,,,,,,
6,1,,24315-000110,,"O-RING 1B P-11.0",1,,,,,,,,,,,,,,,,,
7,1,,24315-000110,,"O-RING 1B P-11.0",1,,,,,,,,,,,,,,,,,
8,1,,24315-000110,,"O-RING 1B P-11.0",1,,,,,,,,,,,,,,,,,
9,1,,172173-76101,,"CONNECTOR PF1/4-45",1,,,,,,,,,,,,,,,,,,
10,2,,24315-000110,,"O-RING 1B P-11.0",1,,,,,,,,,,,,,,,,,
11,1,,172123-76121,,"JOINT PF1/4",2,,,,,,,,,,,,,,,,,
12,1,,172141-76180,,CONNECTOR,5,,,,,,,,,,,,,,,,,
13,2,,24315-000110,,"O-RING 1B P-11.0",5,,,,,,,,,,,,,,,,,
14,1,,24315-000110,,"O-RING 1B P-11.0",2,,,,,,,,,,,,,,,,,
15,1,,172456-78420,,"HOSE F403CE065S",1,,,,,,,,,,,,,,,,,
16,1,,172458-78610,,"HOSE F403BE057",1,,,,,,,,,,,,,,,,,
17,1,,172458-78620,,"HOSE F403BC030",1,,,,,,,,,,,,,,,,,
18,1,,172458-78630,,"HOSE F403BC027",1,,,,,,,,,,,,,,,,,
19,1,,172458-78640,,"HOSE F403BC027",1,,,,,,,,,,,,,,,,,
20,1,,172458-78650,,"HOSE F403BB055",1,,,,,,,,,,,,,,,,,
21,1,,172458-78660,,"HOSE F403BC030",1,,,,,,,,,,,,,,,,,
22,1,,172458-78670,,"HOSE F403BC065S",1,,,,,,,,,,,,,,,,,,
```

https://truckmanualshub.com/

172487-08510
４ウェイマルチバルブキットは、
項目NO.82を参照下さい。
4-WAY MULTI VALVE KIT
is shown in Fig.82.

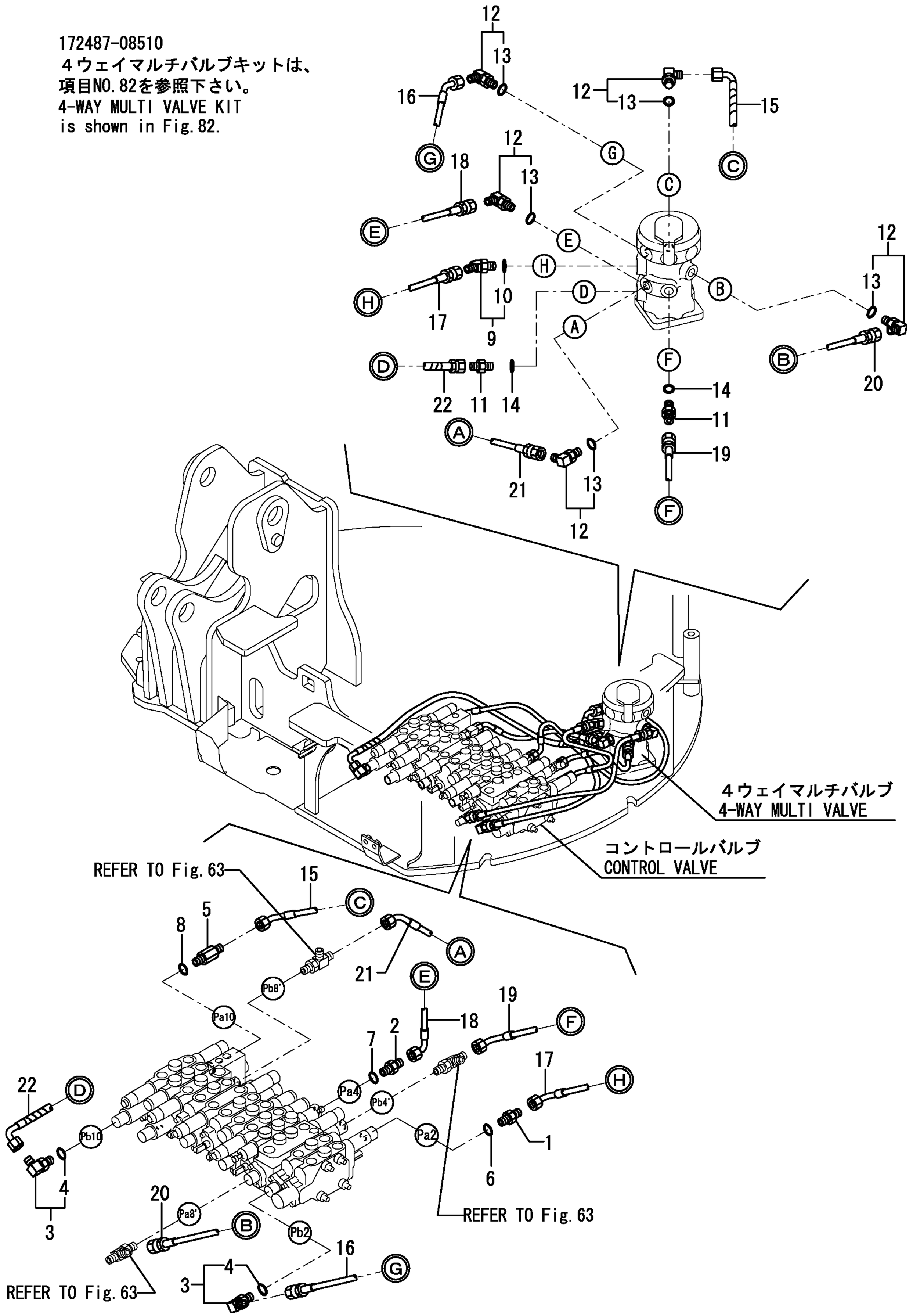

1,1,,172141-77800,,"JOINT, GREASE",4,4,,,,,,,,,,,,,,,,,
2,1,,172175-77800,,HOSE,2,2,,,,,,,,,,,,,,,,,
3,1,,24761-020000,,"NIPPLE PT1/8,GREASE",2,2,,,,,,,,,,,,,,,,,

https://truckmanualshub.com/

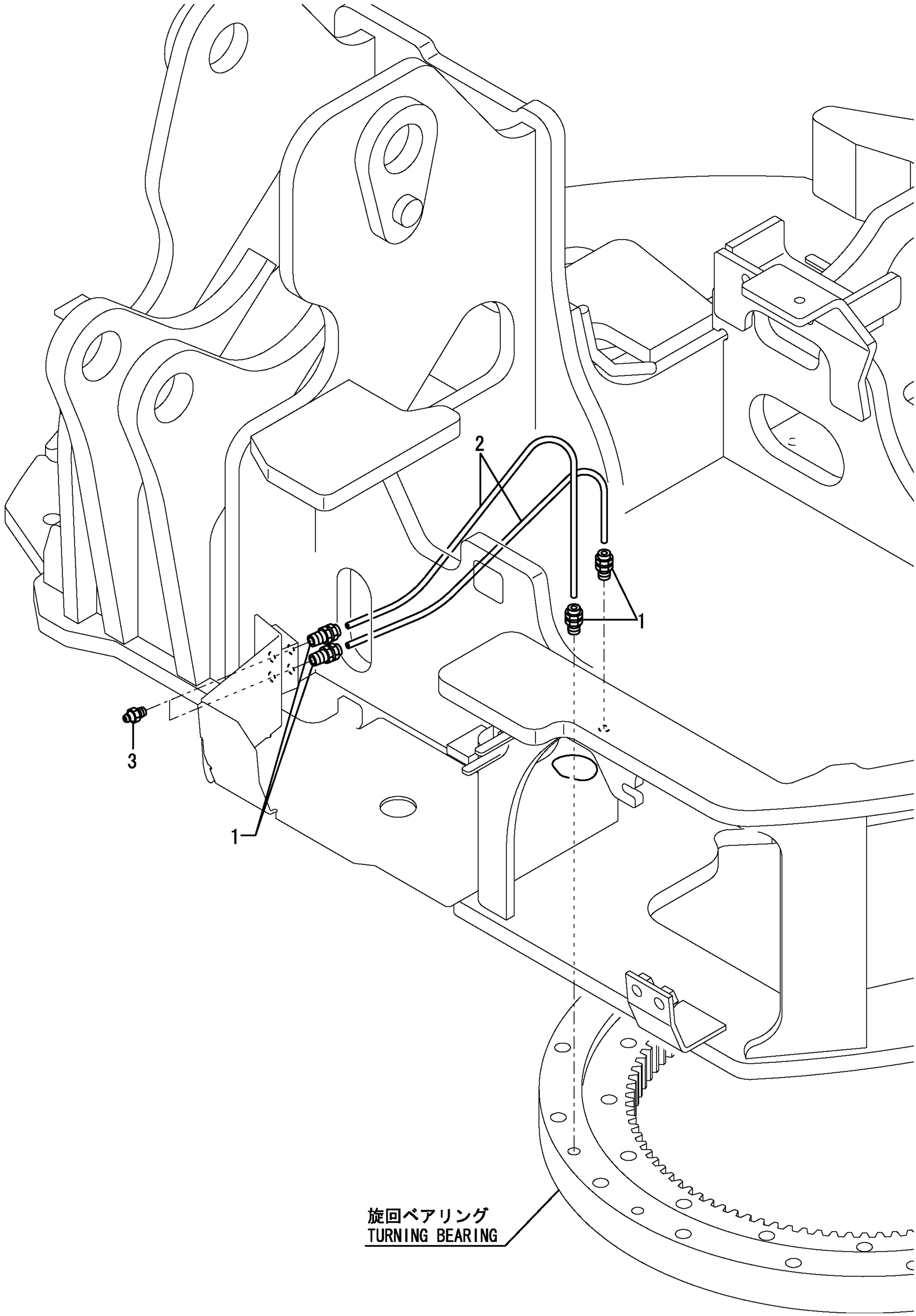

https://truckmanualshub.com/

```
1,1,,172487-81100,,"BOOM A    (GREEN:97)",1,1,,,,,,,,,,,,,,,,
2,2,,172168-72410,,"BUSH 40X50X40",2,2,,,,,,,,,,,,,,,,
3,2,,172448-72650,,"SEAL 40X50X4,DUST",4,4,,,,,,,,,,,,,,,,
4,2,,172146-81300,,"BUSH 45 60",2,2,,,,,,,,,,,,,,,,
5,2,,172168-81410,,"SEAL 45X55X4, DUST",2,2,,,,,,,,,,,,,,,,
6,1,,172183-81160,,"TREE CLIP",4,4,,,,,,,,,,,,,,,,
7,1,,172444-81390,,"SHIM 50X110X0.8",1,1,,,,,,,,,,,,,,,,
8,1,,172164-81670,,SPACER,2,2,,,,,,,,,,,,,,,,
9,1,,172147-82140,,WASHER,1,1,,,,,,,,,,,,,,,,
10,1,,172487-82200,,"PIN 45X241",1,1,,,,,,,,,,,,,,,,
11,1,,172487-82220,,"PIN 45X112",1,1,,,,,,,,,,,,,,,,
12,1,,172487-82240,,"PIN 50X312",1,1,,,,,,,,,,,,,,,,
13,1,,172165-82550,,"SHIM 45X1.2",3,3,,,,,,,,,,,,,,,,
14,1,,172165-82560,,"SHIM 45X80X1.2",3,3,,,,,,,,,,,,,,,,
15,1,,172165-82570,,"SHIM 45X80X1.6",3,3,,,,,,,,,,,,,,,,
16,1,,172165-82580,,"SHIM 40X75X0.5",1,1,,,,,,,,,,,,,,,,
17,1,,172165-82590,,"SHIM 40X75X1.2",1,1,,,,,,,,,,,,,,,,
18,1,,172165-82600,,"SHIM 40X75X1.6",1,1,,,,,,,,,,,,,,,,
19,1,,172444-82750,,"PIN 40X100B CMP (97)",1,1,,,,,,,,,,,,,,,,
20,1,,172444-82990,,WASHER,2,2,,,,,,,,,,,,,,,,
21,1,,172422-83420,,"PIN 45X138",1,1,,,,,,,,,,,,,,,,
22,1,,172162-83540,,"SHIM 50X110X0.5",1,1,,,,,,,,,,,,,,,,
23,1,,172162-83550,,"SHIM 50X110X1.2",1,1,,,,,,,,,,,,,,,,
24,1,,22157-120000,,"WASHER 12",3,3,,,,,,,,,,,,,,,,
25,1,,24761-020000,,"NIPPLE PT1/8,GREASE",1,1,,,,,,,,,,,,,,,,
26,1,,24761-050000,,"NIPPLE C,GREASE",1,1,,,,,,,,,,,,,,,,
27,1,,26013-120252,,"BOLT M12X 25",6,6,,,,,,,,,,,,,,,,
```

https://truckmanualshub.com/

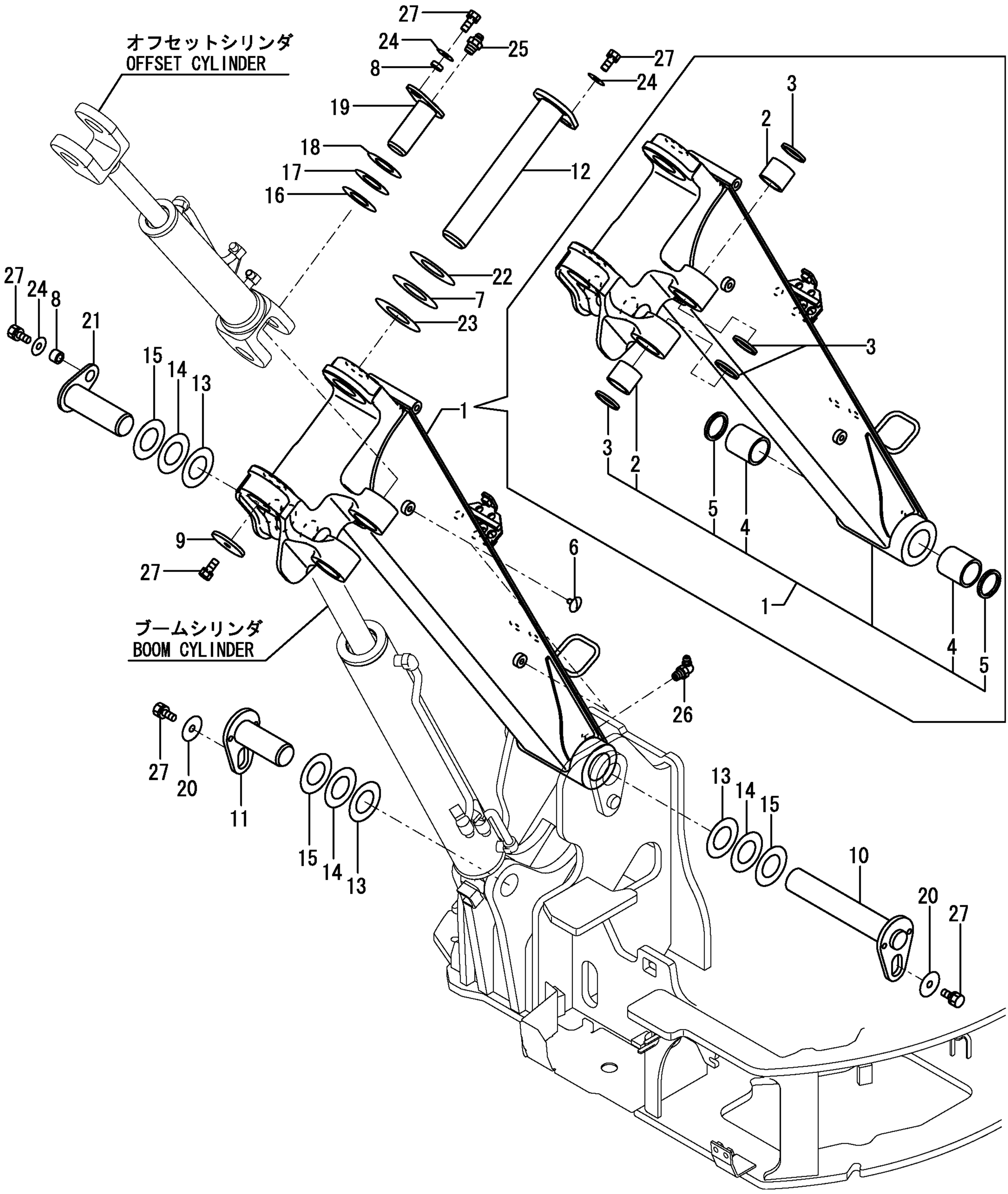

https://truckmanualshub.com/

```
1,1,,172487-81400,,"BOOM B    (GREEN:97)",1,1,,,,,,,,,,,,,,,,,
2,2,,172448-54120,,"SEAL 50X60X4,DUST",4,4,,,,,,,,,,,,,,,,,
3,2,,172168-72410,,"BUSH 40X50X40",1,1,,,,,,,,,,,,,,,,,
4,2,,172448-72650,,"SEAL 40X50X4,DUST",2,2,,,,,,,,,,,,,,,,,
5,2,,172487-81470,,"BUSH 50X70",2,2,,,,,,,,,,,,,,,,,
6,2,,933125-37600,,"BUSH 50 70, PIN",2,2,,,,,,,,,,,,,,,,,
7,1,,172164-81670,,SPACER,1,1,,,,,,,,,,,,,,,,,
8,1,,172165-82580,,"SHIM 40X75X0.5",1,1,,,,,,,,,,,,,,,,,
9,1,,172165-82590,,"SHIM 40X75X1.2",1,1,,,,,,,,,,,,,,,,,
10,1,,172165-82600,,"SHIM 40X75X1.6",1,1,,,,,,,,,,,,,,,,,
11,1,,172444-82750,,"PIN 40X100B CMP (97)",1,1,,,,,,,,,,,,,,,,,,
12,1,,22157-120000,,"WASHER 12",1,1,,,,,,,,,,,,,,,,,
13,1,,24761-020000,,"NIPPLE PT1/8,GREASE",5,5,,,,,,,,,,,,,,,,,
14,1,,26013-120252,,"BOLT M12X 25",1,1,,,,,,,,,,,,,,,,,
```

https://truckmanualshub.com/

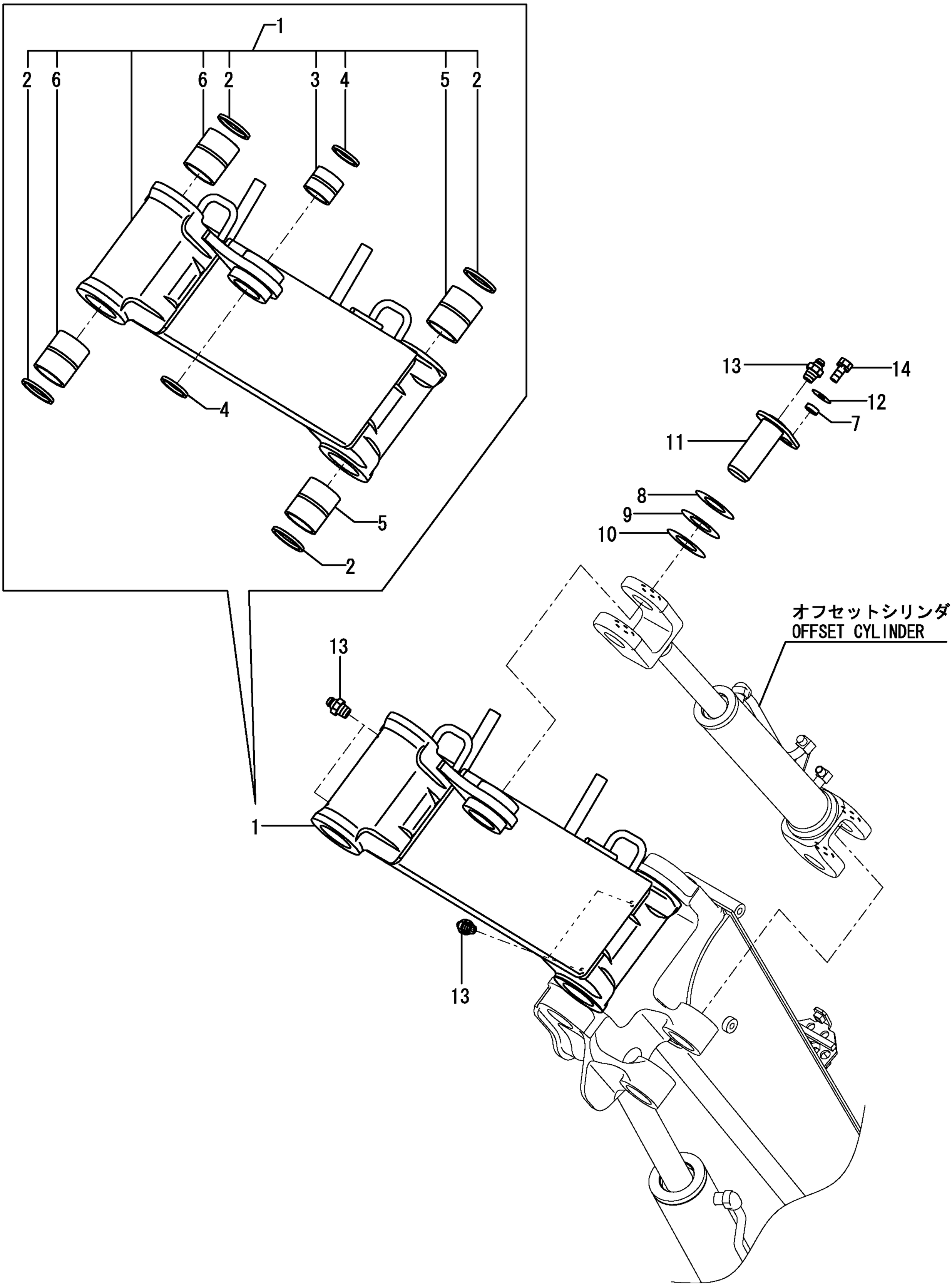

```
1,1,,172183-81160,,"TREE CLIP",2,2,,,,,,,,,,,,,,,
2,1,,172444-81390,,"SHIM 50X110X0.8",1,1,,,,,,,,,,,,,,,
3,1,,172164-81670,,SPACER,3,3,,,,,,,,,,,,,,,
4,1,,172487-81700,,"BOOM C    (GREEN:97)",1,1,,,,,,,,,,,,,,,
5,2,,172168-72410,,"BUSH 40X50X40",1,1,,,,,,,,,,,,,,,
6,2,,172448-72650,,"SEAL 40X50X4,DUST",2,2,,,,,,,,,,,,,,,
7,1,,172456-81710,,"PIN 40X134",1,1,,,,,,,,,,,,,,,
8,1,,172456-81740,,"PIN 40X167.5 ASSY",1,1,,,,,,,,,,,,,,,
9,1,,172147-82140,,WASHER,1,1,,,,,,,,,,,,,,,
10,1,,172487-82240,,"PIN 50X312",1,1,,,,,,,,,,,,,,,
11,1,,172487-82500,,"ROD,OFFSET(GREEN:97)",1,1,,,,,,,,,,,,,,,
12,1,,172165-82580,,"SHIM 40X75X0.5",4,4,,,,,,,,,,,,,,,
13,1,,172165-82590,,"SHIM 40X75X1.2",4,4,,,,,,,,,,,,,,,
14,1,,172165-82600,,"SHIM 40X75X1.6",4,4,,,,,,,,,,,,,,,
15,1,,172444-82770,,"PIN 40X100 C    (97)",2,2,,,,,,,,,,,,,,,
16,1,,172146-82910,,SPACER,1,1,,,,,,,,,,,,,,,
17,1,,172444-82980,,WASHER,2,2,,,,,,,,,,,,,,,
18,1,,172444-82990,,WASHER,1,1,,,,,,,,,,,,,,,
19,1,,172162-83540,,"SHIM 50X110X0.5",1,1,,,,,,,,,,,,,,,
20,1,,172162-83550,,"SHIM 50X110X1.2",1,1,,,,,,,,,,,,,,,
21,1,,22157-120000,,"WASHER 12",2,2,,,,,,,,,,,,,,,
22,1,,22217-100000,,"SPRING WASHER 10",2,2,,,,,,,,,,,,,,,
23,1,,24761-020000,,"NIPPLE PT1/8,GREASE",2,2,,,,,,,,,,,,,,,
24,1,,26013-120252,,"BOLT M12X 25",7,7,,,,,,,,,,,,,,,
25,1,,26116-100604,,"BOLT M10X 60 PLATED",2,2,,,,,,,,,,,,,,,
```

https://truckmanualshub.com/

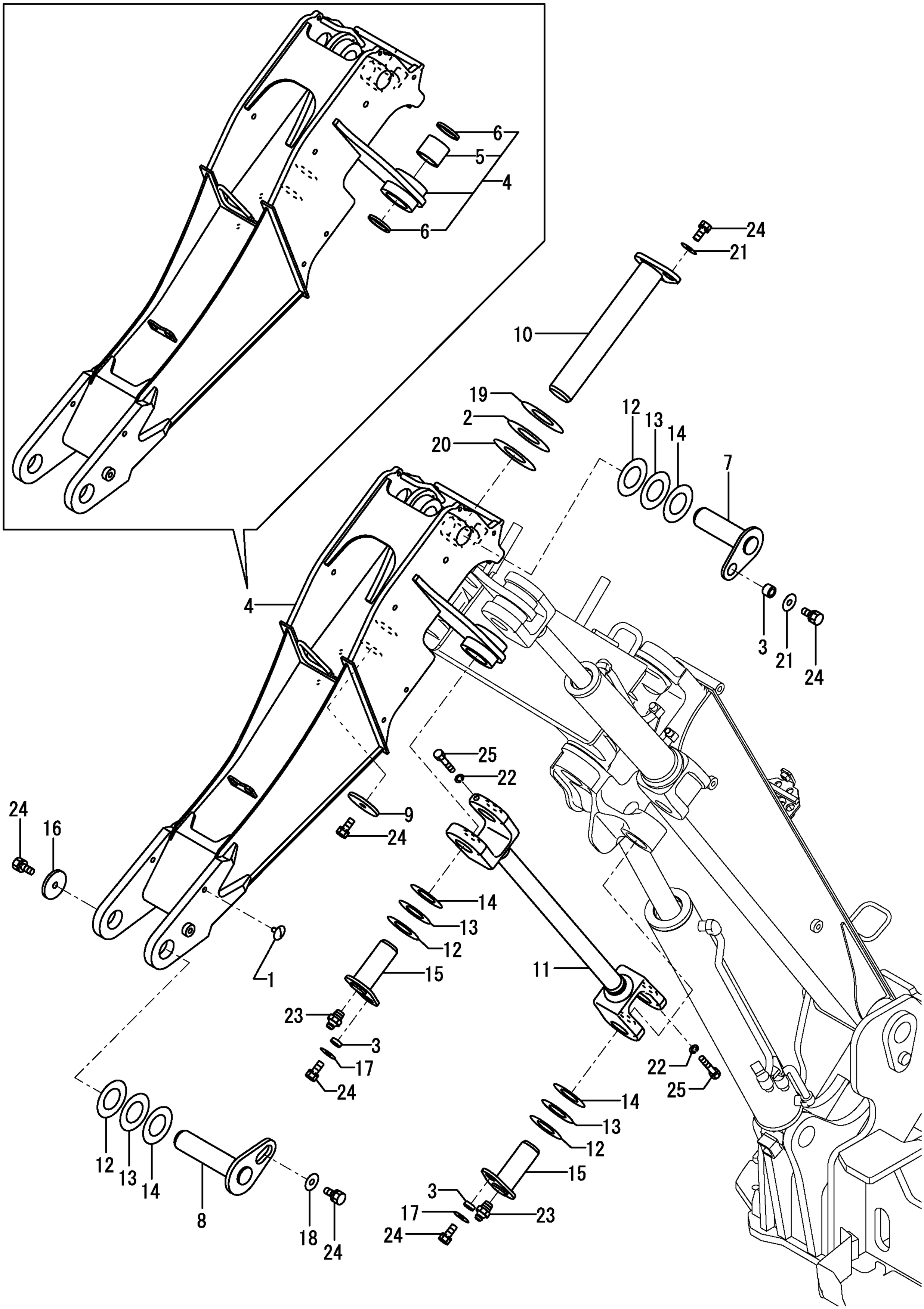

https://truckmanualshub.com/

```
1,1,,172010-01640,,SPACER,1,1,,,,,,,,,,,,,,,,,
2,1,,172183-81160,,"TREE CLIP",4,4,,,,,,,,,,,,,,,,,
3,1,,172171-81270,,O-RING,2,2,,,,,,,,,,,,,,,,,
4,1,,172487-81500,,"ARM,950   (GREEN:97)",1,1,,,,,,,,,,,,,,,,,
5,2,,172448-72650,,"SEAL 40X50X4,DUST",2,2,,,,,,,,,,,,,,,,,
6,2,,172448-81610,,"SEAL 35X45X4,DUST",4,4,,,,,,,,,,,,,,,,,
7,2,,172456-81650,,"BUSHING 40X50X45",2,2,,,,,,,,,,,,,,,,,
8,2,,172141-82270,,"BUSH 35 45",2,2,,,,,,,,,,,,,,,,,
9,2,,172141-82270,,"BUSH 35 45",2,2,,,,,,,,,,,,,,,,,
10,1,,172164-81670,,SPACER,1,1,,,,,,,,,,,,,,,,,
11,1,,172456-81770,,"PIN 40X116 ASSY",1,1,,,,,,,,,,,,,,,,,
12,1,,172456-81810,,"PIN 35X116 ASSY",1,1,,,,,,,,,,,,,,,,,
13,1,,172165-82580,,"SHIM 40X75X0.5",1,1,,,,,,,,,,,,,,,,,
14,1,,172165-82590,,"SHIM 40X75X1.2",1,1,,,,,,,,,,,,,,,,,
15,1,,172165-82600,,"SHIM 40X75X1.6",1,1,,,,,,,,,,,,,,,,,
16,1,,172141-84601,,"SHIM 35",1,1,,,,,,,,,,,,,,,,,
20,1,,22157-100000,,"WASHER 10",1,1,,,,,,,,,,,,,,,,,
21,1,,22157-120000,,"WASHER 12",1,1,,,,,,,,,,,,,,,,,
22,1,,24761-040000,,"NIPPLE B,GREASE",1,1,,,,,,,,,,,,,,,,,
23,1,,26013-100252,,"BOLT W/WASHER M10X25",2,2,,,,,,,,,,,,,,,,,
```

https://truckmanualshub.com/

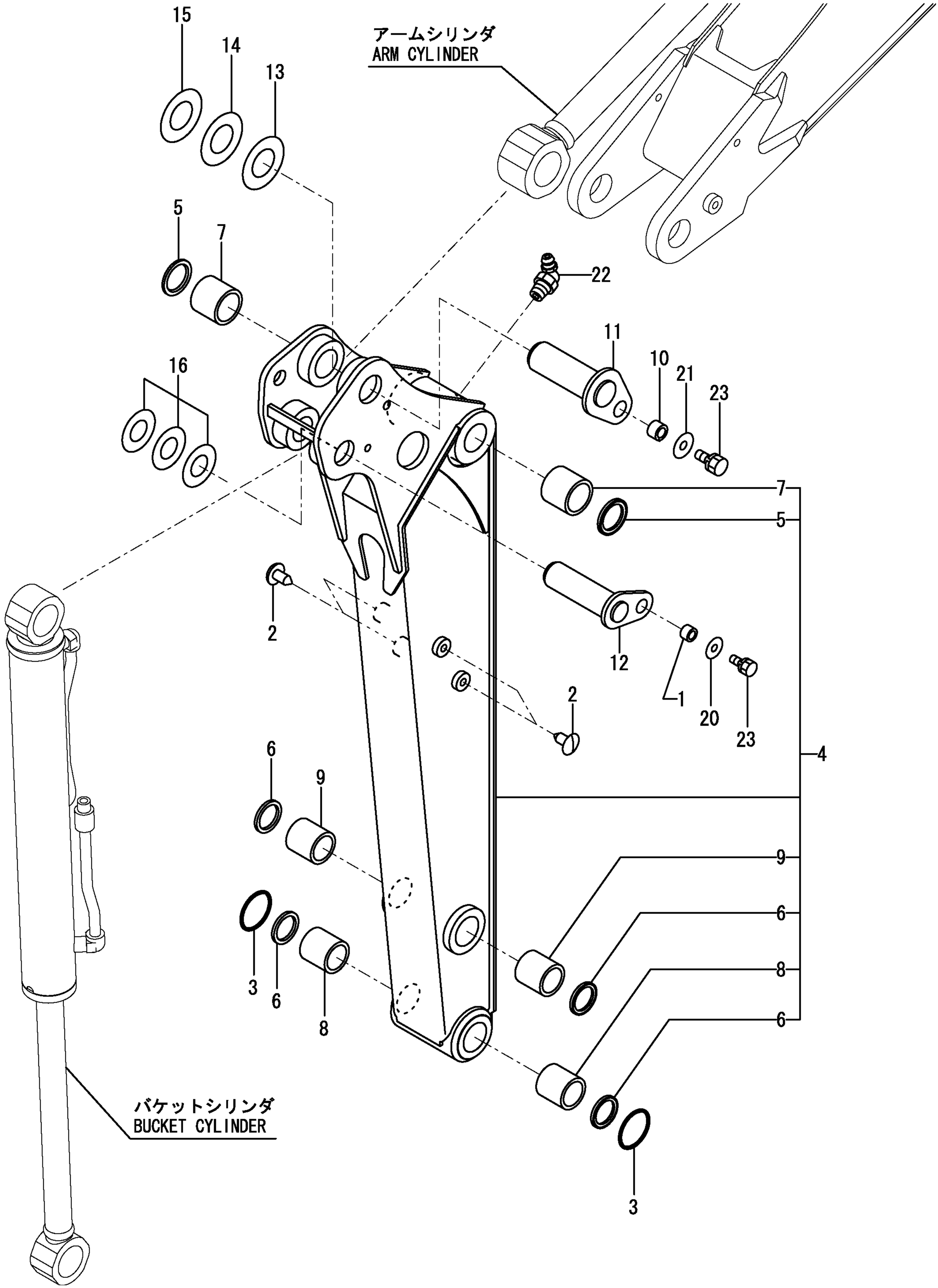

https://truckmanualshub.com/

```
1,1,,172456-82700,,"ARM,BUCKET(GREEN:97)",1,,,,,,,,,,,,,,,,,,
1-1,1,,172456-
82710,,"ARM,BUCKET(GREEN:97)",1,1,,,,,S,1,72456272,M/#50773,,,,,,,,,,I
2,1,,172456-82710,,"ARM,BUCKET(GREEN:97)",1,,,,,,,,,,,,,,,,,,
2-1,1,,172456-82701,,"ARM ASSY,
BUCKET(97)",1,1,,,,,S,1,72456272,M/#50773,,,,,,,,,,I
3,1,,172456-82830,,"PIN 35X160 ASSY",2,,,,,,,,,,,,,,,,,,
3-1,1,,172456-82831,,"PIN 35X160 ASSY",2,2,,,,,S,1,72456272,M/#50773,,,,,,,,,,I
4,1,,172141-84403,,"LINK ASSY,BUCKET(97)",1,1,,,,,,,,,,,,,,,,
5,2,,172141-72561,,"BUSH (35-45-30",2,2,,,,,,,,,,,,,,,,
6,2,,172448-81610,,"SEAL 35X45X4,DUST",6,6,,,,,,,,,,,,,,,,
7,2,,172141-82270,,"BUSH 35 45",2,2,,,,,,,,,,,,,,,,
9,1,,24761-020000,,"NIPPLE PT1/8,GREASE",2,2,,,,,,,,,,,,,,,,
10,1,,24761-020000,,"NIPPLE PT1/8,GREASE",2,2,,,,,,,,,,,,,,,,
11,1,,26116-100752,,"BOLT M10X 75 PLATED",2,,,,,,,,,,,,,,,,,,
11-1,1,,26116-100652,,"BOLT M10X 65
PLATED",2,2,,,,,S,1,72456272,M/#50773,,,,,,,,,,I
12,1,,26716-100002,,"NUT 10",4,4,,,,,,,,,,,,,,,,
13,1,,172171-81500,,"COLLAR
35X48.6X22",2,2,,,,,W,1,72456272,M/#50773,,,,,,,,,,I
14,1,,172141-84601,,"SHIM 35",2,2,,,,,,,,,,,,,,,,,,
```

https://truckmanualshub.com/

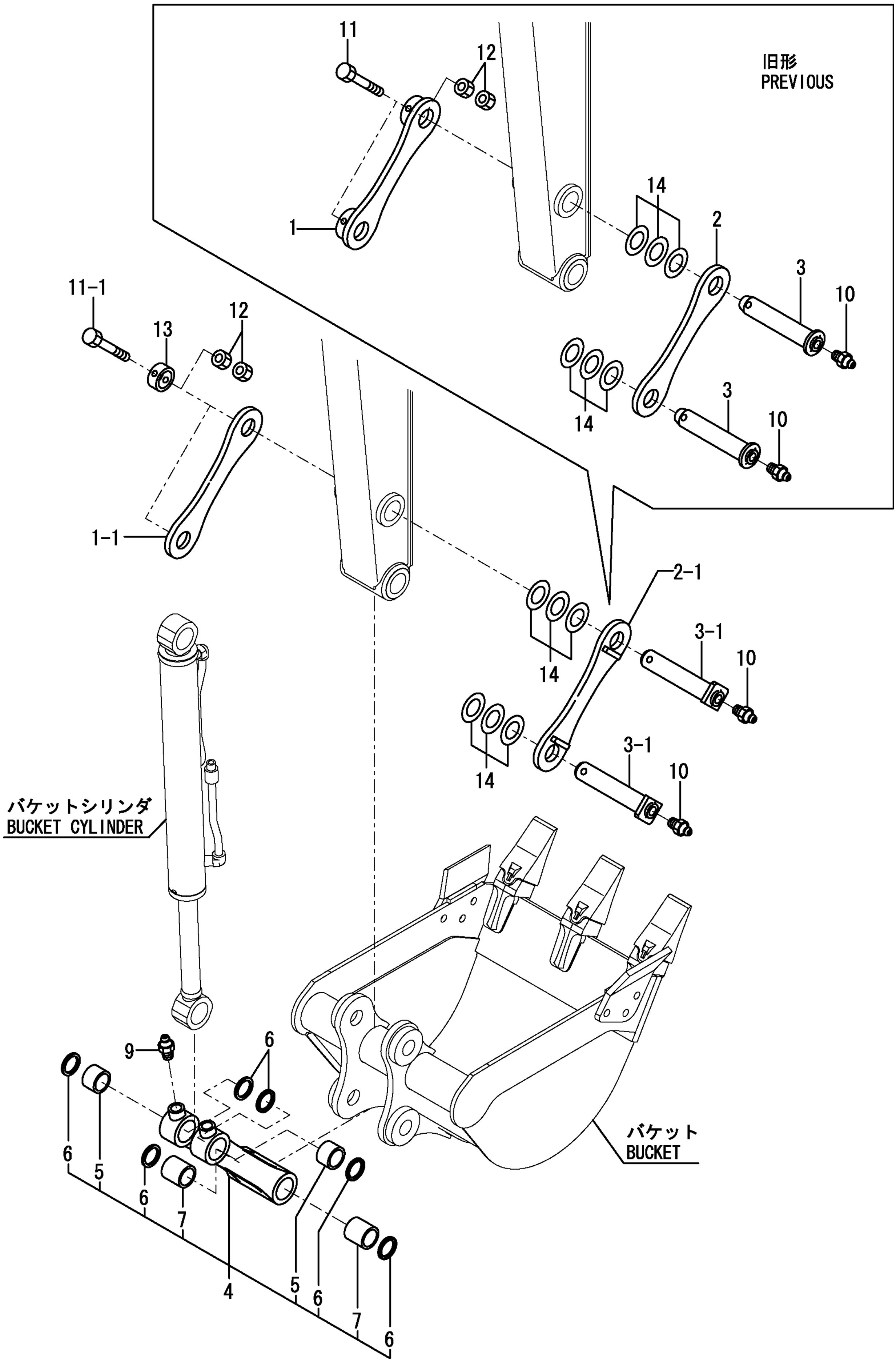

https://truckmanualshub.com/

```
1,1,,172456-82900,,"PIN KIT,BUCKET",2,,,,,,,,,,,,,,,,,
2,2,,172171-81500,,"COLLAR 35X48.6X22",2,,,,,,,,,,,,,,,,,,
3,2,,172141-84601,,"SHIM 35",2,,,,,,,,,,,,,,,,,
7,2,,172141-86252,,"PIN 35-195",2,,,,,,,,,,,,,,,,,,
8,2,,24761-020000,,"NIPPLE PT1/8,GREASE",2,,,,,,,,,,,,,,,,,
9,2,,26116-100652,,"BOLT M10X 65 PLATED",2,,,,,,,,,,,,,,,,,,
10,2,,26716-100002,,"NUT 10",4,,,,,,,,,,,,,,,,,
11,1,,172456-82501,,"BUCKET(490S)    (97)",1,,,,,,,,,,,,,,,,,
12,2,,172458-82240,,"CUTTER L  (GREEN:97)",1,,,,,,,,,,,,,,,,,
13,2,,172458-82260,,"CUTTER R  (GREEN:97)",1,,,,,,,,,,,,,,,,,
14,2,,172458-82280,,"BOLT 14X40",6,,,,,,,,,,,,,,,,,
15,2,,172458-82290,,"NUT 14",6,,,,,,,,,,,,,,,,,
17,3,,172448-82530,,"ADAPTER 16(GREEN:97)",3,,,,,,,,,,,,,,,,,
18,2,,172448-82950-1,,"TOOTH KIT, POINT(97)",3,,,,,,,,,,,,,,,,,,
19,3,,172448-82570,,"POINT,TOOTH 18S (97)",3,,,,,,,,,,,,,,,,,
20,3,,172448-82960,,"PIN ASSY, LOCK",3,,,,,,,,,,,,,,,,,
21,4,,172448-82580,,"PIN,LOCK",3,,,,,,,,,,,,,,,,,
22,4,,172448-82590,,"RUBBER,PIN",3,,,,,,,,,,,,,,,,,
23,2,,22217-140000,,"SPRING WASHER 14",6,,,,,,,,,,,,,,,,,
24,1,,772448-82530,,"TOOTH ASSY(GREEN:97)",3,,,,,,,1,,,,,,,,,,
29,1,,172142-86500,,"KIT,SIDE CUTTER
(97)",1,,,,,,W,2,724580553,M/#50501,,,,,,,,,,I
30,2,,172142-86510-4,,"CUTTER(L),SIDE
(97)",1,,,,,,W,,724580553,M/#50501,,,,,,,,,,I
31,2,,172142-86520-4,,"CUTTER(R),SIDE
(97)",1,,,,,,W,,724580553,M/#50501,,,,,,,,,,I
32,2,,172142-86540,,"BOLT M14X 30",6,,,,,,W,,724580553,M/#50501,,,,,,,,,,I
33,2,,22217-140000,,"SPRING WASHER 14",6,,,,,,W,,724580553,M/#50501,,,,,,,,,,I
```

https://truckmanualshub.com/

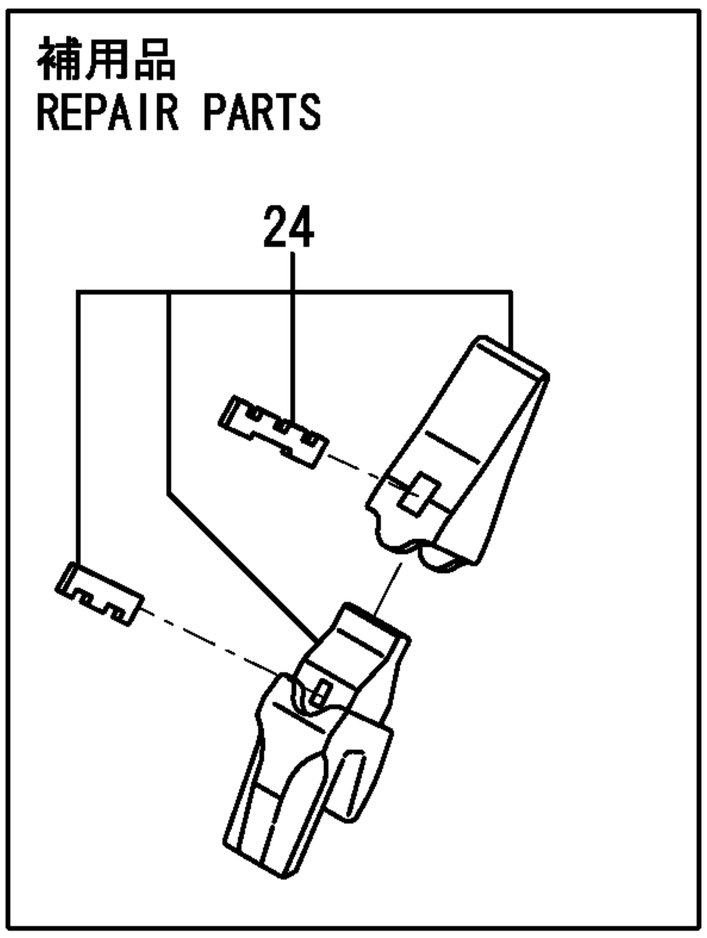

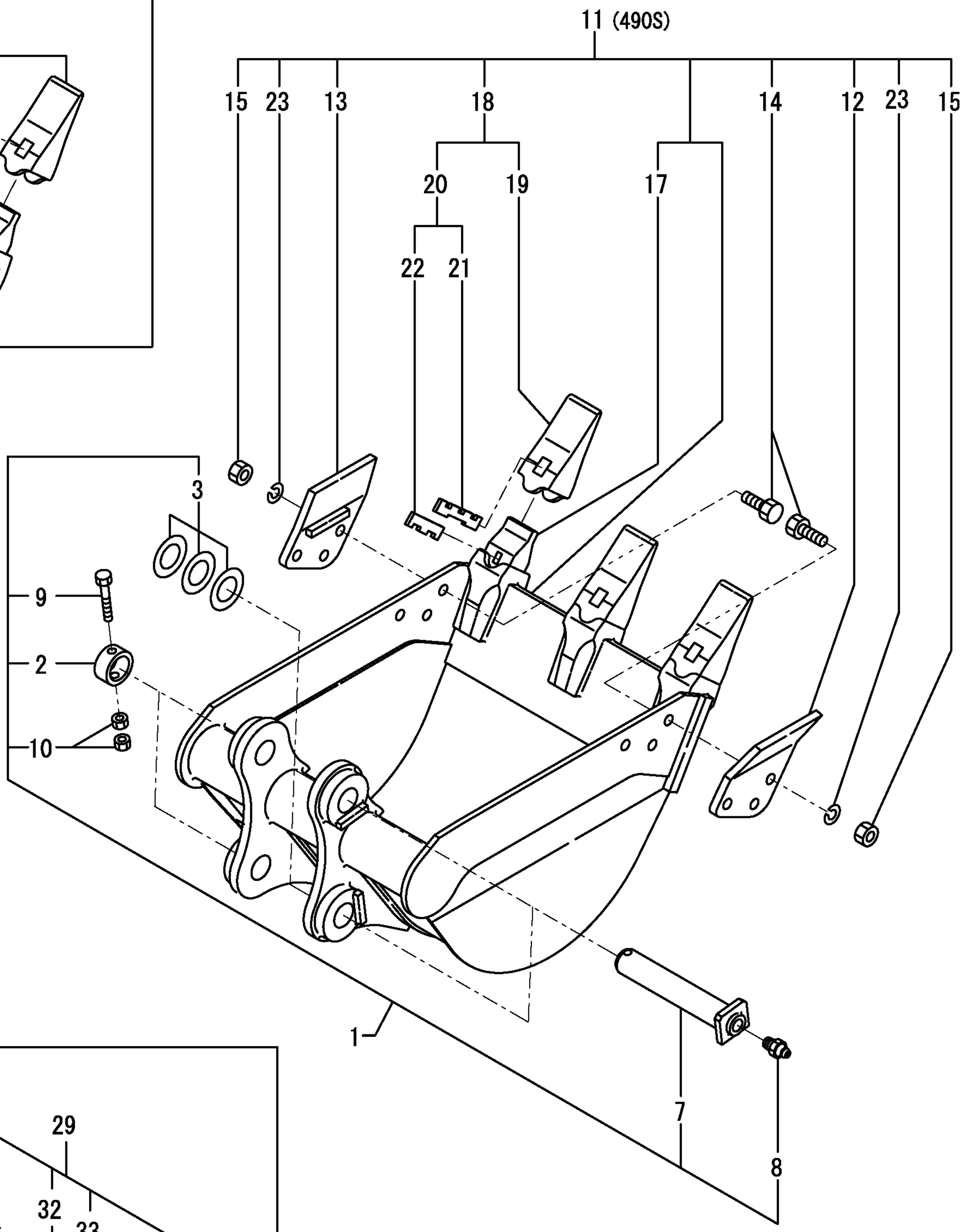

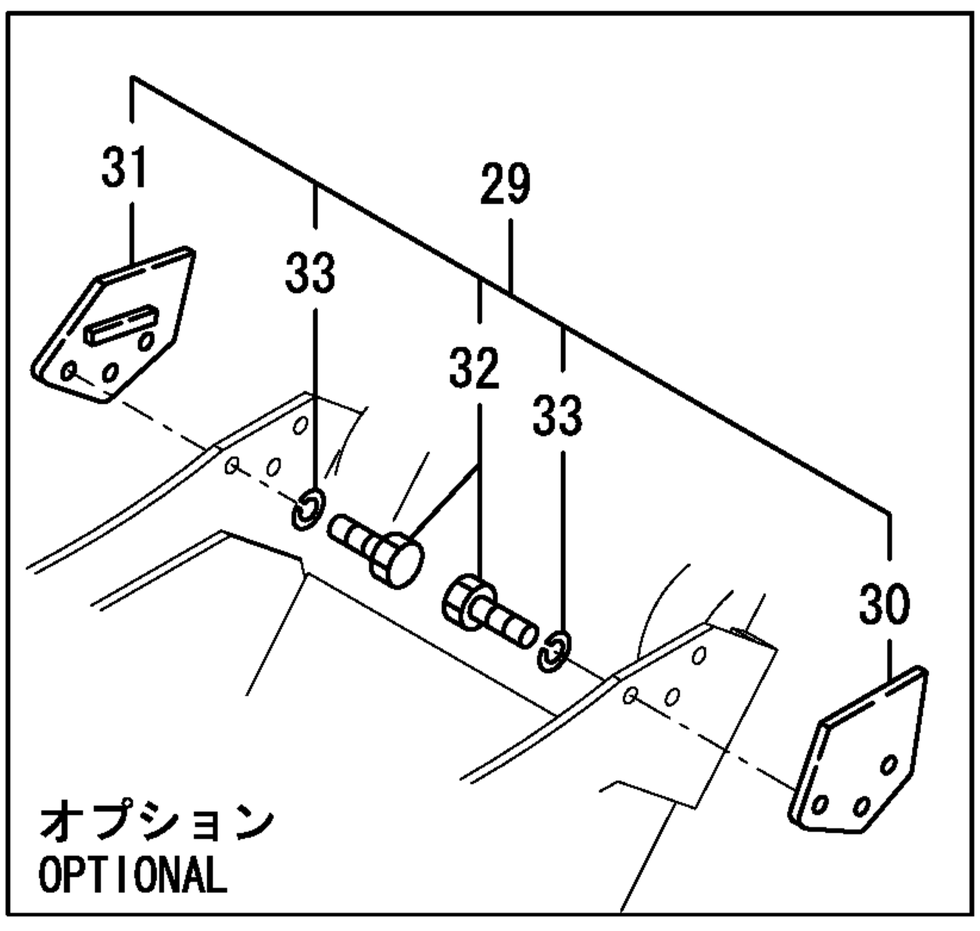

https://truckmanualshub.com/

```
1,1,,172456-82900,,"PIN KIT,BUCKET",,2,,,,,,,,,,,,,,,,,,I
2,2,,172171-81500,,"COLLAR 35X48.6X22",,2,,,,,,,,,,,,,,,,,,I
3,2,,172141-84601,,"SHIM 35",,2,,,,,,,,,,,,,,,,,,I
7,2,,172141-86252,,"PIN 35-195",,2,,,,,,,,,,,,,,,,,,I
8,2,,24761-020000,,"NIPPLE PT1/8,GREASE",,2,,,,,,,,,,,,,,,,,,I
9,2,,26116-100652,,"BOLT M10X 65 PLATED",,2,,,,,,,,,,,,,,,,,,I
10,2,,26716-100002,,"NUT 10",,4,,,,,,,,,,,,,,,,,,I
```

https://truckmanualshub.com/

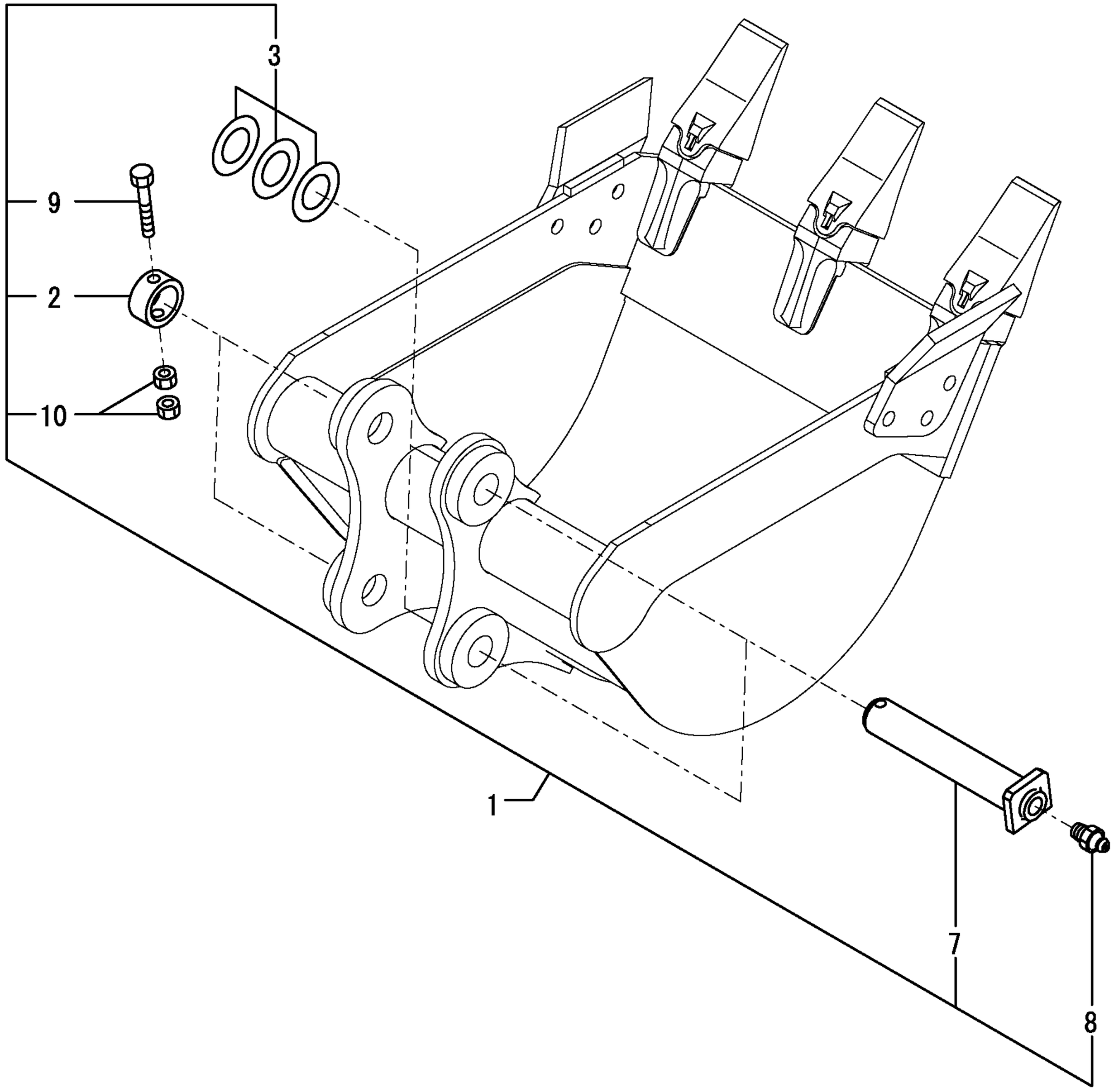

https://truckmanualshub.com/

```
1,1,,172164-81670,,SPACER,2,2,,,,,,,,,,,,,,,,,
2,1,,172456-94101,,"BLADE ASSY(GREEN:88)",1,1,,,,,,,,,,,,,,,,,
2-1,1,,172A23-94090,,"BLADE
ASSY(GREEN:88)",1,1,,,,,N,,724870139,M/#55625,724870139,M/#55625,,,,,,,,,I
3,2,,172168-72240,,"BUSH 38X50X40",2,2,,,,,,,,,,,,,,,,,
4,2,,172168-81270,,"SEAL,DUST 38X50X4",4,4,,,,,,,,,,,,,,,,,
5,1,,172422-94210,,"PIN 38X 114",2,2,,,,,,,,,,,,,,,,,
6,1,,172141-94271,,"PIN 38-94",2,2,,,,,,,,,,,,,,,,,
7,1,,172124-94310-1,,"PLATE     (GREEN:88)",2,2,,,,,,,,,,,,,,,,,
8,1,,22157-120000,,"WASHER 12",2,2,,,,,,,,,,,,,,,,,
9,1,,24761-020000,,"NIPPLE PT1/8,GREASE",2,2,,,,,,,,,,,,,,,,,
10,1,,24761-040000,,"NIPPLE B,GREASE",2,2,,,,,,,,,,,,,,,,,
11,1,,26013-100252,,"BOLT W/WASHER M10X25",4,4,,,,,,,,,,,,,,,,,
12,1,,26013-120302,,"BOLT W/WASHER M12X30",2,2,,,,,,,,,,,,,,,,,
13,1,,933171-29751,,"SHIM SET,38X(0.8,1.2",4,4,,,,,,,,,,,,,,,,,
```

https://truckmanualshub.com/

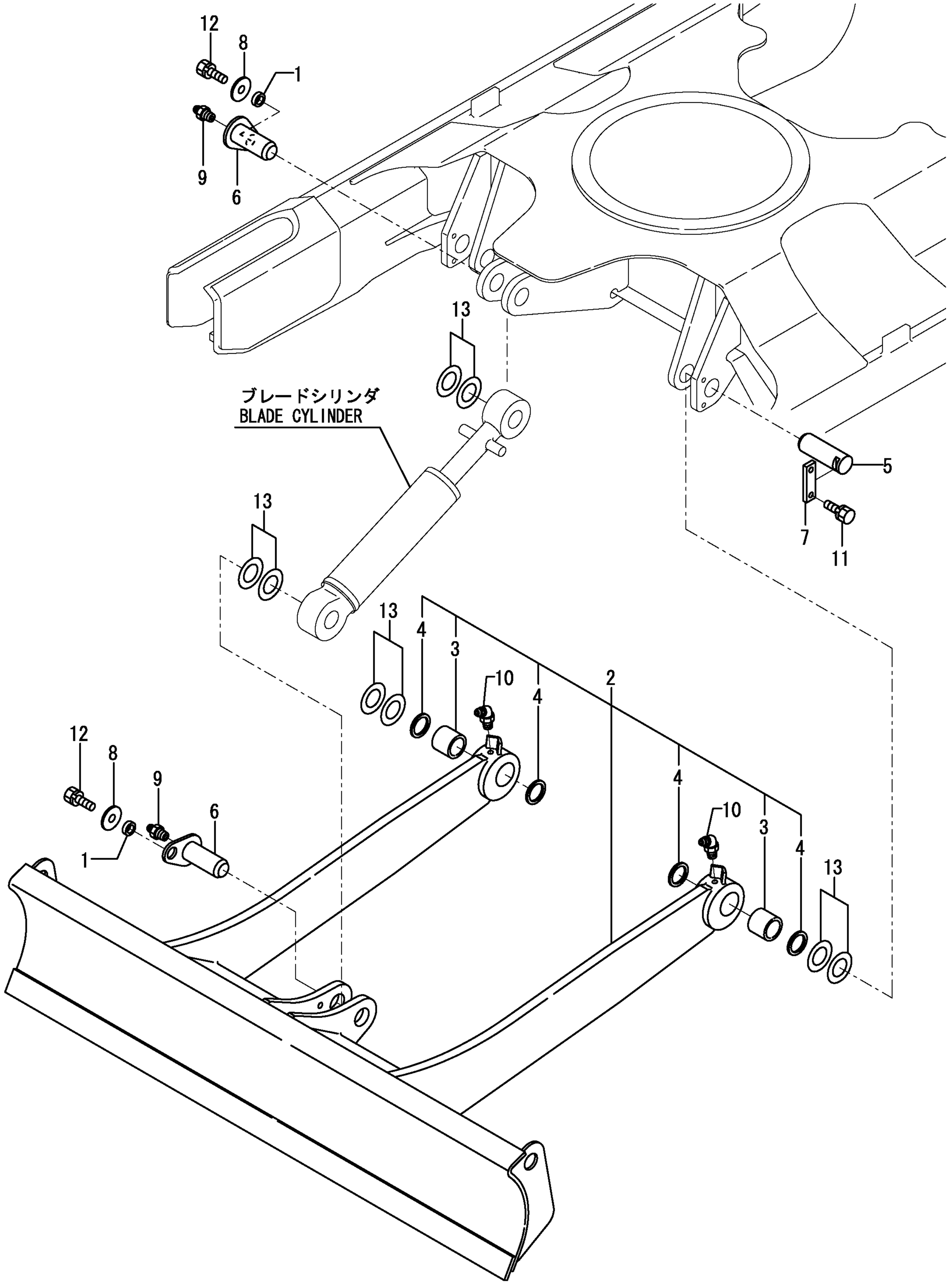

https://truckmanualshub.com/

```
1,1,,172487-08200,,"DECCEL. KIT",1,,,,,,1,,,,,,,,,,,,I
2,2,,172456-12100,,"CABEL, ACCEL. OD",1,,,,,,,,,,,,,,,,,,,I
3,2,,172164-12160,,"LINK B CMP",1,,,,,,,,,,,,,,,,,,,I
5,3,,24550-014200,,"BUSH 14X20",1,,,,,,,,,,,,,,,,,,,I
6,2,,172164-12200,,"SHAFT CMP",1,,,,,,,,,,,,,,,,,,,I
7,2,,172456-12201,,"BASE ASSY",1,,,,,,,,,,,,,,,,,,,I
9,3,,24550-014200,,"BUSH 14X20",1,,,,,,,,,,,,,,,,,,,I
10,2,,172175-12230,,"LINK A",1,,,,,,,,,,,,,,,,,,,I
11,2,,172175-12350,,"SPRING, RETURN",1,,,,,,,,,,,,,,,,,,,I
12,2,,172190-12360,,CABLE,1,,,,,,,,,,,,,,,,,,,I
13,2,,172175-12370,,PLATE,1,,,,,,,,,,,,,,,,,,,I
14,2,,172456-14660,,BRACKET,1,,,,,,,,,,,,,,,,,,,I
15,2,,172137-16560,,BAND,1,,,,,,,,,,,,,,,,,,,I
16,2,,172460-16570,,"HARNESS DECEL ASSY",1,,,,,,,,,,,,,,,,,,,I
18,3,,29420-200000,,HUSE,2,,,,,,,,,,,,,,,,,,,I
19,2,,172162-17180,,SOLENOID,1,,,,,,,,,,,,,,,,,,,I
20,2,,172190-17220,,"RELEY, TIMER",1,,,,,,,,,,,,,,,,,,,I
21,2,,172487-17540,,BRACKET,1,,,,,,,,,,,,,,,,,,,I
22,2,,172190-45080,,"LEVER L CMP(DECEL",1,,,,,,,,,,,,,,,,,,,I
23,2,,172176-47870,,KNOB,1,,,,,,,,,,,,,,,,,,,I
24,2,,1C6281-52310,,"PIN 6,COME-OFF SNAP",6,,,,,,,,,,,,,,,,,,,I
25,2,,1A3809-56915,,"PIN 6X 20",1,,,,,,,,,,,,,,,,,,,I
26,2,,119620-66820,,JOINT,1,,,,,,,,,,,,,,,,,,,I
27,2,,22137-060000,,"WASHER 6, POLISHED",7,,,,,,,,,,,,,,,,,,,I
28,2,,22217-100000,,"SPRING WASHER 10",1,,,,,,,,,,,,,,,,,,,I
29,2,,22351-040025,,"PIN 4X25,SPRING",1,,,,,,,,,,,,,,,,,,,I
30,2,,24311-000210,,"O-RING 1A P-21.0",4,,,,,,,,,,,,,,,,,,,I
31,2,,26013-060162,,"BOLT M 6X 16",2,,,,,,,,,,,,,,,,,,,I
32,2,,26013-080202,,"BOLT W/WASHER M8X20",2,,,,,,,,,,,,,,,,,,,I
33,2,,26013-120252,,"BOLT M12X 25",2,,,,,,,,,,,,,,,,,,,I
34,2,,26022-060252,,"SCREW M 6X 25",2,,,,,,,,,,,,,,,,,,,I
35,2,,26116-100162,,"BOLT M10X 16 PLATED",1,,,,,,,,,,,,,,,,,,,I
36,2,,26587-040062,,"SCREW M 4X  6",1,,,,,,,,,,,,,,,,,,,I
37,2,,26716-060002,,"NUT 6",1,,,,,,,,,,,,,,,,,,,I
38,2,,933152-09280,,"BAND 170",6,,,,,,,,,,,,,,,,,,,I
39,2,,933166-17730,,"WASHER 10.5X30",1,,,,,,,,,,,,,,,,,,,I
40,2,,933168-55770,,"BAND 146",2,,,,,,,,,,,,,,,,,,,I
```

https://truckmanualshub.com/

Fig. 8 ワンタッチデセル
ONE TOUCH DECEL

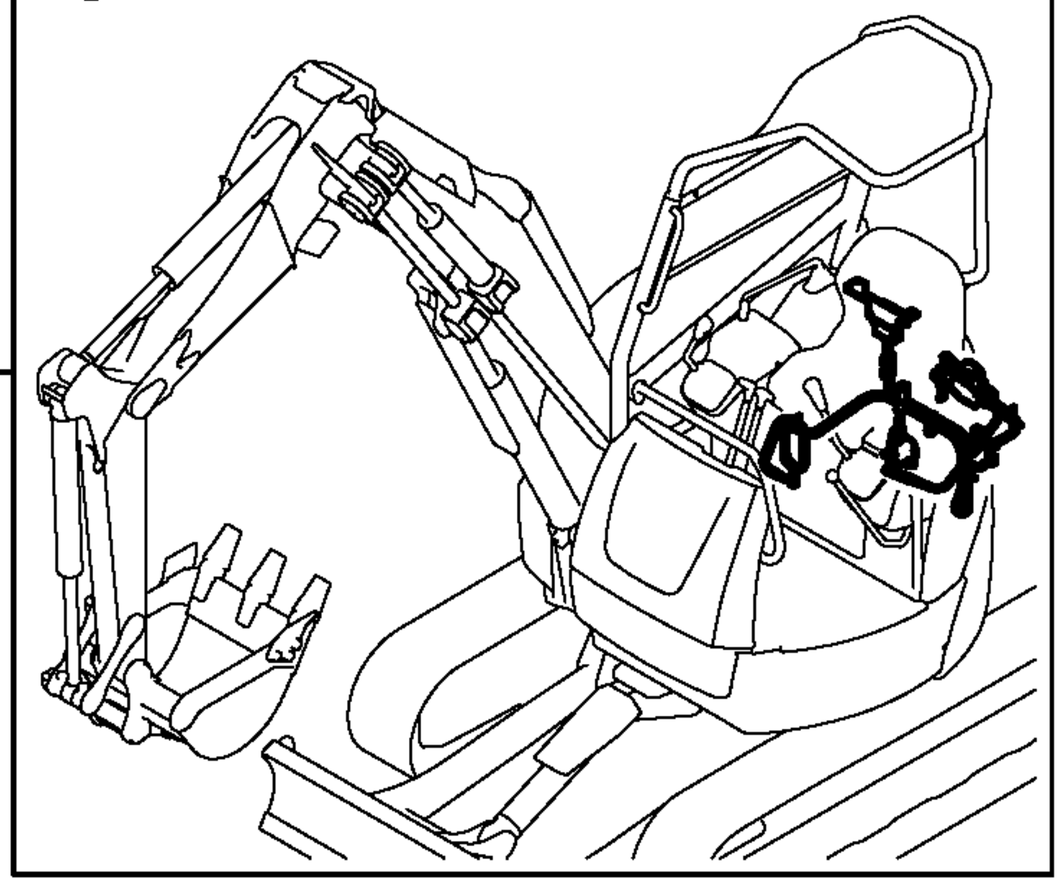

172487-08200
デセルキット
DECEL KIT

1

エンジンコントロールの標準仕様に
ワンタッチデセル機能を追加する為の
リンクとワイヤーの改装部品です。
LINK & WIRE PARTS IN ORDER
TO ADD ONE-TOUCH DECEL
SYSTEM TO STANDARD SPEC.
OF ENGINE CONTROL.

Fig. 22 操縦装置(作業ﾚﾊﾞｰ)
CONTROL EQUIPMENT(OPERATION LEVER)

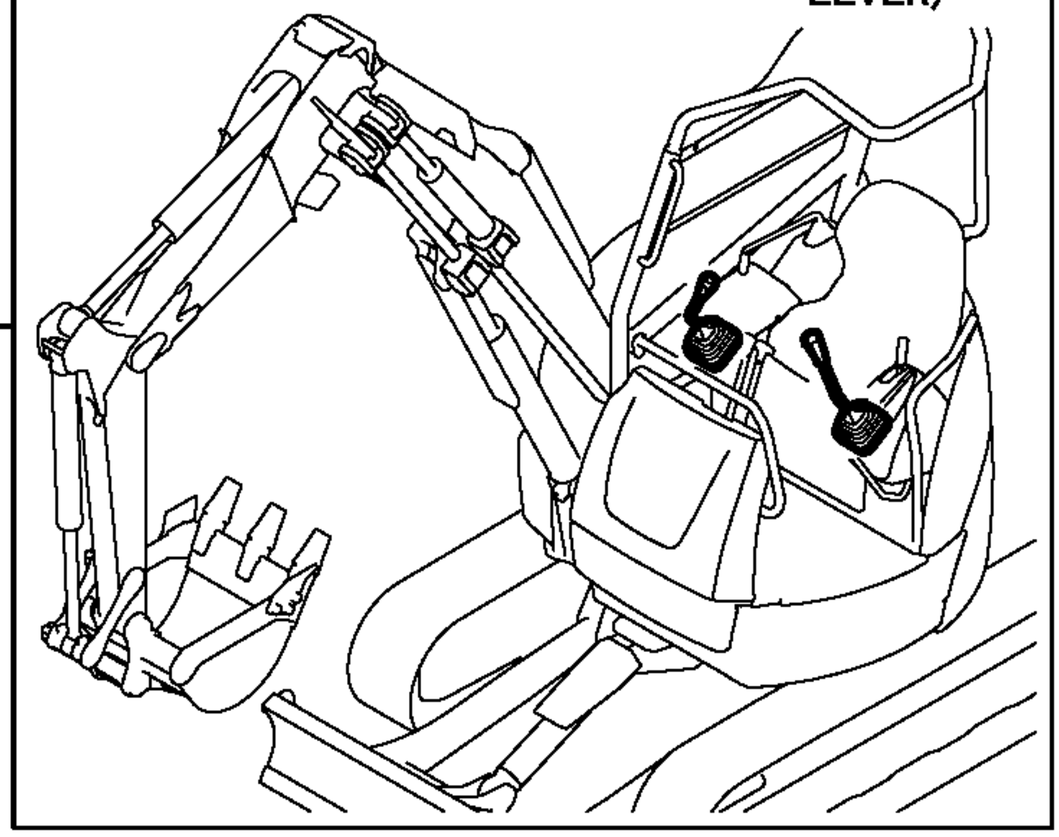

https://truckmanualshub.com/

```
1,1,,172487-08510,,"MULTI VALVE KIT",1,,,,,,1,,,,,,,,,,,,I
2,2,,172444-03290,,MAGNET,1,,,,,,,,,,,,,,,,,,,I
3,2,,172151-03551,,LABEL,1,,,,,,,,,,,,,,,,,,,I
4,2,,172487-74200,,"BRACKET,MULTI",1,,,,,,,,,,,,,,,,,,,I
5,2,,172151-74601,,VALVE,1,,,,,,,,,,,,,,,,,,,I
6,3,,182900-16530,,"COVER, UNDER",1,,,,,,,,,,,,,,,,,,,I
7,3,,182900-22300,,SPRING,1,,,,,,,,,,,,,,,,,,,I
8,3,,172151-74740,,"PLATE, MARK",1,,,,,,,,,,,,,,,,,,,I
9,3,,182900-77190,,BOLT,8,,,,,,,,,,,,,,,,,,,I
10,3,,182900-77200,,BOLT,8,,,,,,,,,,,,,,,,,,,I
11,3,,182900-77210,,"DUST SEAL",1,,,,,,,,,,,,,,,,,,,I
12,3,,182900-77220,,COVER,1,,,,,,,,,,,,,,,,,,,I
13,3,,182900-77230,,"WING BOLT",1,,,,,,,,,,,,,,,,,,,I
14,3,,182900-77240,,BOLT,2,,,,,,,,,,,,,,,,,,,I
15,3,,182900-77250,,LEVER,1,,,,,,,,,,,,,,,,,,,I
16,3,,24190-100001,,"BALL 5/16, STEEL",1,,,,,,,,,,,,,,,,,,,I
17,3,,24311-000280,,"O-RING 1A P-28.0",1,,,,,,,,,,,,,,,,,,,I
18,3,,24321-000600,,"O-RING 1A G-60.0",2,,,,,,,,,,,,,,,,,,,I
19,3,,953KM0-00220,,WASHER,2,,,,,,,,,,,,,,,,,,,I
20,3,,953KM0-00220,,WASHER,1,,,,,,,,,,,,,,,,,,,I
21,3,,953KM0-10894,,"PLUG, PT1/8",1,,,,,,,,,,,,,,,,,,,I
22,2,,172173-76101,,"CONNECTOR PF1/4-45",3,,,,,,,,,,,,,,,,,,,I
23,2,,172123-76121,,"JOINT PF1/4",2,,,,,,,,,,,,,,,,,,,I
24,2,,172141-76180,,CONNECTOR,11,,,,,,,,,,,,,,,,,,,I
25,3,,24315-000110,,"O-RING 1B P-11.0",11,,,,,,,,,,,,,,,,,,,I
26,2,,172456-78320,,"HOSE F403BB107S",1,,,,,,,,,,,,,,,,,,,I
27,2,,172456-78330,,"HOSE F403BB100S",1,,,,,,,,,,,,,,,,,,,I
28,2,,172456-78340,,"HOSE F403BB125S",1,,,,,,,,,,,,,,,,,,,I
29,2,,172456-78370,,"HOSE F403BB156S",1,,,,,,,,,,,,,,,,,,,I
30,2,,172456-78380,,"HOSE F403BB117S",1,,,,,,,,,,,,,,,,,,,I
31,2,,172456-78390,,"HOSE F403BB152S",1,,,,,,,,,,,,,,,,,,,I
32,2,,172456-78400,,"HOSE F403BB112S",1,,,,,,,,,,,,,,,,,,,I
33,2,,172456-78420,,"HOSE F403CE065S",1,,,,,,,,,,,,,,,,,,,I
34,2,,172458-78610,,"HOSE F403BE057",1,,,,,,,,,,,,,,,,,,,I
35,2,,172458-78620,,"HOSE F403BC030",1,,,,,,,,,,,,,,,,,,,I
36,2,,172458-78630,,"HOSE F403BC027",1,,,,,,,,,,,,,,,,,,,I
37,2,,172458-78640,,"HOSE F403BC027",1,,,,,,,,,,,,,,,,,,,I
38,2,,172458-78650,,"HOSE F403BB055",1,,,,,,,,,,,,,,,,,,,I
39,2,,172458-78660,,"HOSE F403BC030",1,,,,,,,,,,,,,,,,,,,I
40,2,,172458-78670,,"HOSE F403BC065S",1,,,,,,,,,,,,,,,,,,,I
41,2,,172458-78790,,"HOSE F403BB116S",1,,,,,,,,,,,,,,,,,,,I
42,2,,24315-000110,,"O-RING 1B P-11.0",4,,,,,,,,,,,,,,,,,,,I
43,2,,26013-100202,,"BOLT W/WASHER M10X20",3,,,,,,,,,,,,,,,,,,,I
44,2,,26013-100202,,"BOLT W/WASHER M10X20",3,,,,,,,,,,,,,,,,,,,I
45,2,,26013-100352,,"BOLT M10X 35",1,,,,,,,,,,,,,,,,,,,I
```

https://truckmanualshub.com/

172487-08510
４ウェイマルチバルブキット　1
4-WAY MULTI VALVE KIT

標準操作パターン(JIS.ヤンマーパターン)を
ワンタッチで他社パターンに変更可能な切替
えバルブ等を追加する為の部品です。
CUTOFF VALVE PARTS,ECT. WHICH CAN CHANGE
FROM STANDARD OPERATION PATTERN
(JIS.YANMAR PATTERN) TO ANOTHER CORPORATION
PATTERN PROMPTLY.

Fig. 27 コントロールバルブ台
CONTROL VALVE PLATE

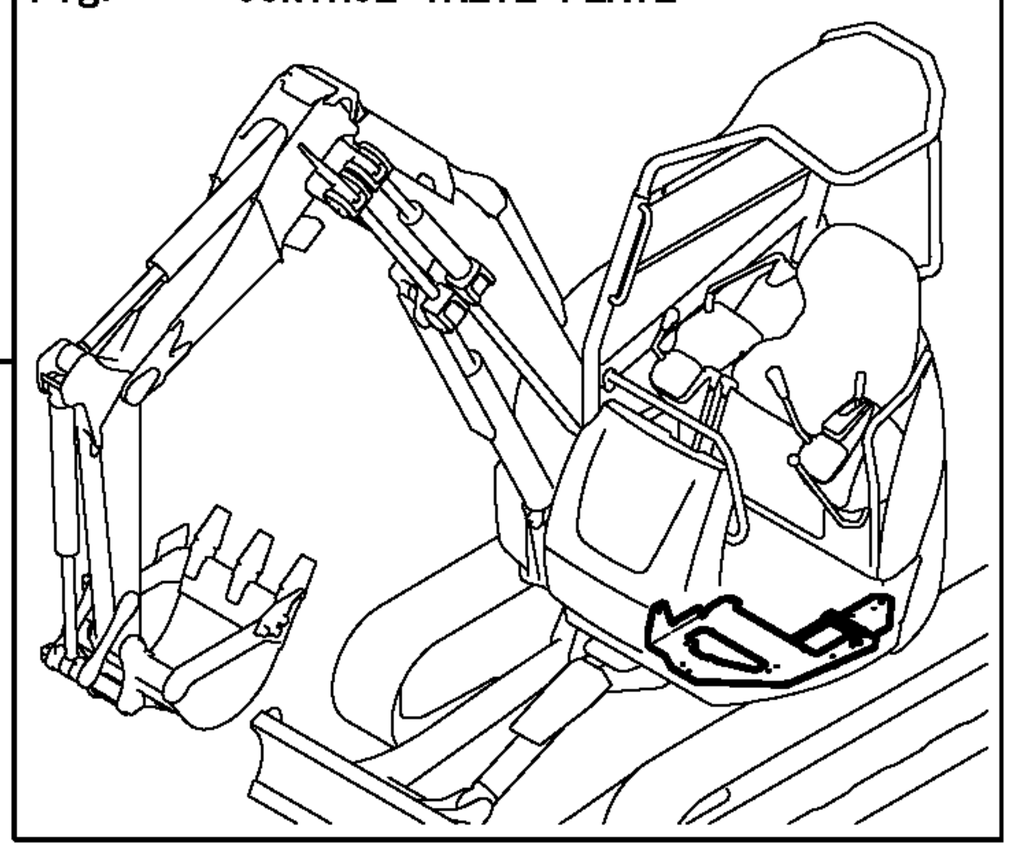

Fig. 56 ロータリバルブ(4ｳｪｲ仕様)
ROTARY VALVE(4-WAY SPEC.)

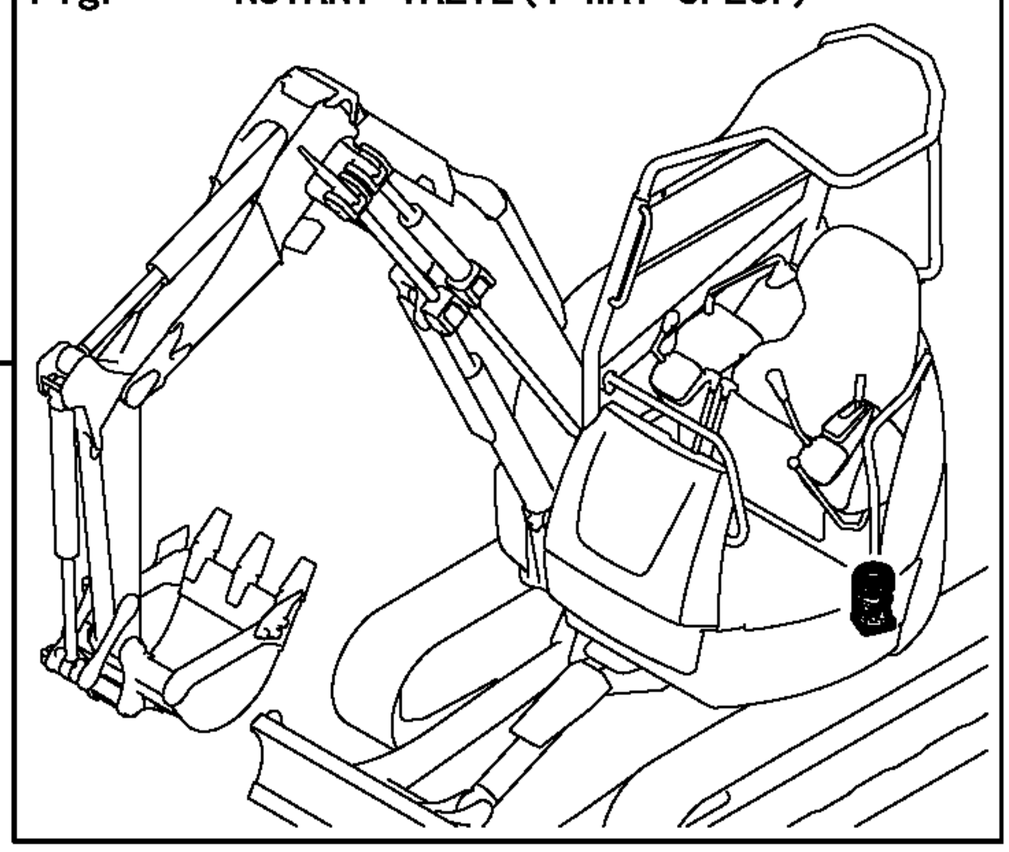

Fig. 70 コントロール配管
(ﾘﾓｺﾝV～ﾏﾙﾁV:4ｳｪｲ仕様)
CONTROL PIPING(REMOTE CONTROL V.
～MULTI V.:4-WAY SPEC.)

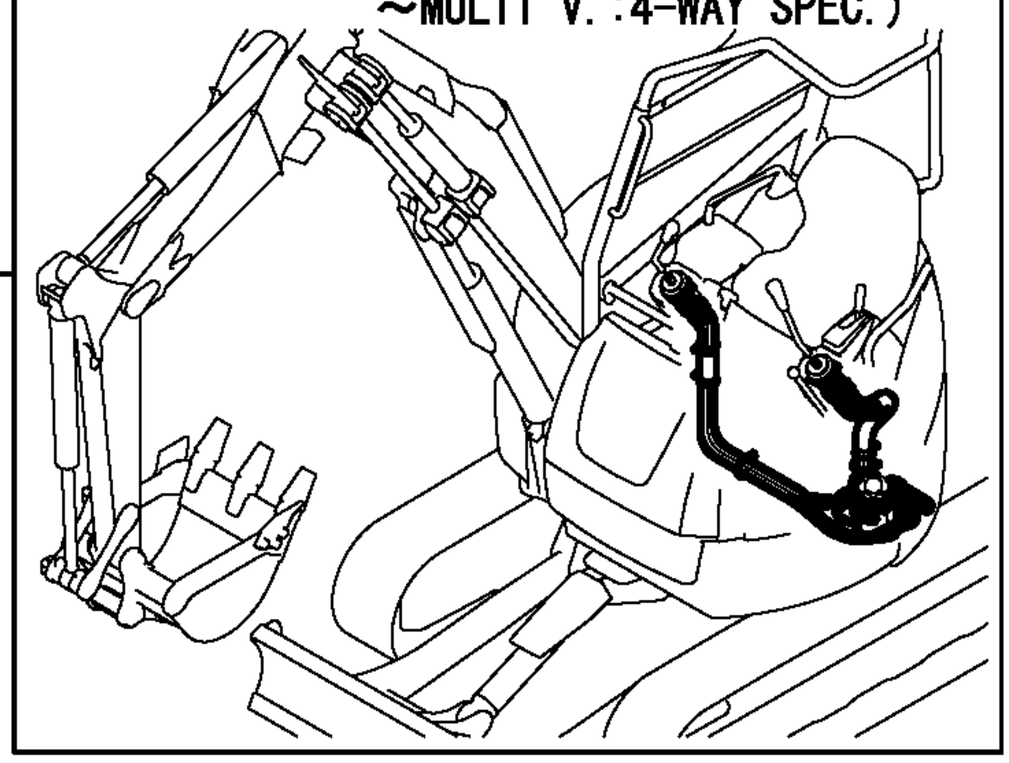

Fig. 71 コントロール配管
(ﾏﾙﾁV～ｺﾝﾄﾛｰﾙV:4ｳｪｲ仕様)
CONTROL PIPING(MULTI V.～
CONTROL VALVE:4-WAY SPEC.)

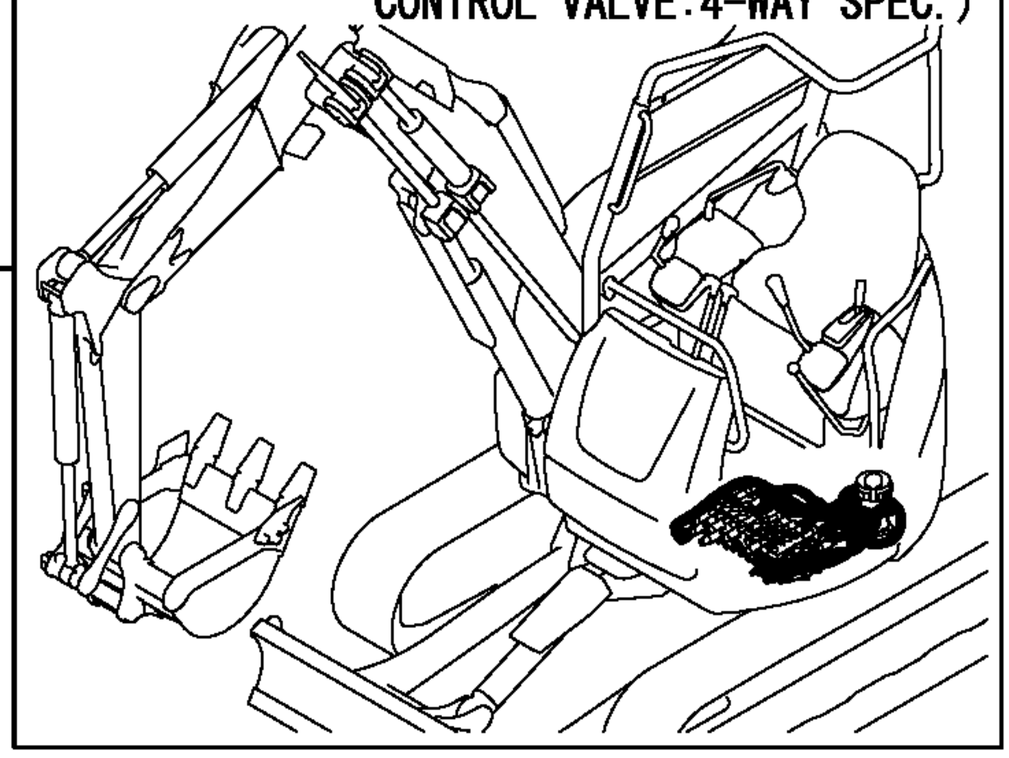

https://truckmanualshub.com/

```
1,1,,172458-08520,,"2-WAY MULTIVALVE KIT",1,,,,,,,1,,,,,,,,,,,,I
2,2,,172458-03550,,LABEL,1,,,,,,,,,,,,,,,,,,I
3,2,,172458-03560,,LABEL,1,,,,,,,,,,,,,,,,,,I
4,2,,172458-03570,,LABEL,1,,,,,,,,,,,,,,,,,,I
5,2,,1C6141-35370,,"SPRING,LOCK",1,,,,,,,,,,,,,,,,,,I
6,2,,172458-63110,,"INSTRUMENT PANEL L,2",1,,,,,,,,,,,,,,,,,,,I
7,2,,172458-74470,,SHAFT,1,,,,,,,,,,,,,,,,,,I
8,2,,172458-74480,,SLEEVE,1,,,,,,,,,,,,,,,,,,I
9,2,,172458-74490,,"LEVER KNOB BL",1,,,,,,,,,,,,,,,,,,I
10,2,,172458-74500,,"REMO-CON.VALVE M2",1,,,,,,,,,,,,,,,,,,I
11,3,,172455-74240,,SPRING,4,,,,,,,,,,,,,,,,,,I
12,3,,172455-74710,,BELLOWS,1,,,,,,,,,,,,,,,,,,I
13,3,,172448-74720,,"SPOOL SLEEVE SUB",1,,,,,,,,,,,,,,,,,,I
17,4,,22351-050010,,"SPRING PIN 5X10",1,,,,,,,,,,,,,,,,,,I
18,3,,172448-74760,,PLATE,1,,,,,,,,,,,,,,,,,,I
19,3,,172448-74770,,PLUG,4,,,,,,,,,,,,,,,,,,I
20,3,,172448-74780,,"ROD Q,PUSH",4,,,,,,,,,,,,,,,,,,I
21,3,,172448-74790,,SEAL,4,,,,,,,,,,,,,,,,,,I
22,3,,172448-74810,,"PLATE, PORT",1,,,,,,,,,,,,,,,,,,I
23,3,,172448-74820,,PACKING,2,,,,,,,,,,,,,,,,,,I
24,3,,172448-74830,,ORING,1,,,,,,,,,,,,,,,,,,I
25,3,,172448-74860,,ORING,2,,,,,,,,,,,,,,,,,,I
26,3,,172448-74870,,ORING,1,,,,,,,,,,,,,,,,,,I
27,3,,172448-74880,,ORING,1,,,,,,,,,,,,,,,,,,I
28,3,,172448-74910,,"SEAT, SPRING",4,,,,,,,,,,,,,,,,,,I
29,3,,172448-74920,,WASHER,4,,,,,,,,,,,,,,,,,,I
30,3,,172448-74930,,SPRING,4,,,,,,,,,,,,,,,,,,I
31,3,,172448-74950,,"JOINT ASSY",1,,,,,,,,,,,,,,,,,,I
32,3,,172448-74960,,"PLATE, CIRCLE",1,,,,,,,,,,,,,,,,,,I
33,3,,172448-74970,,"NUT, ADJUST",1,,,,,,,,,,,,,,,,,,I
34,3,,172448-74980,,ORING,1,,,,,,,,,,,,,,,,,,I
35,3,,172448-74990,,DISTANZBUCHSE,1,,,,,,,,,,,,,,,,,,I
36,3,,24315-000200,,"O-RING 1B P-20.0",4,,,,,,,,,,,,,,,,,,I
37,3,,26450-080652,,"BOLT M 8X 65",2,,,,,,,,,,,,,,,,,,I
38,2,,26712-080002,,"NUT M 8",1,,,,,,,,,,,,,,,,,,I
```

https://truckmanualshub.com/

Fig. 34 インパネ
INSTRUMENT PANEL

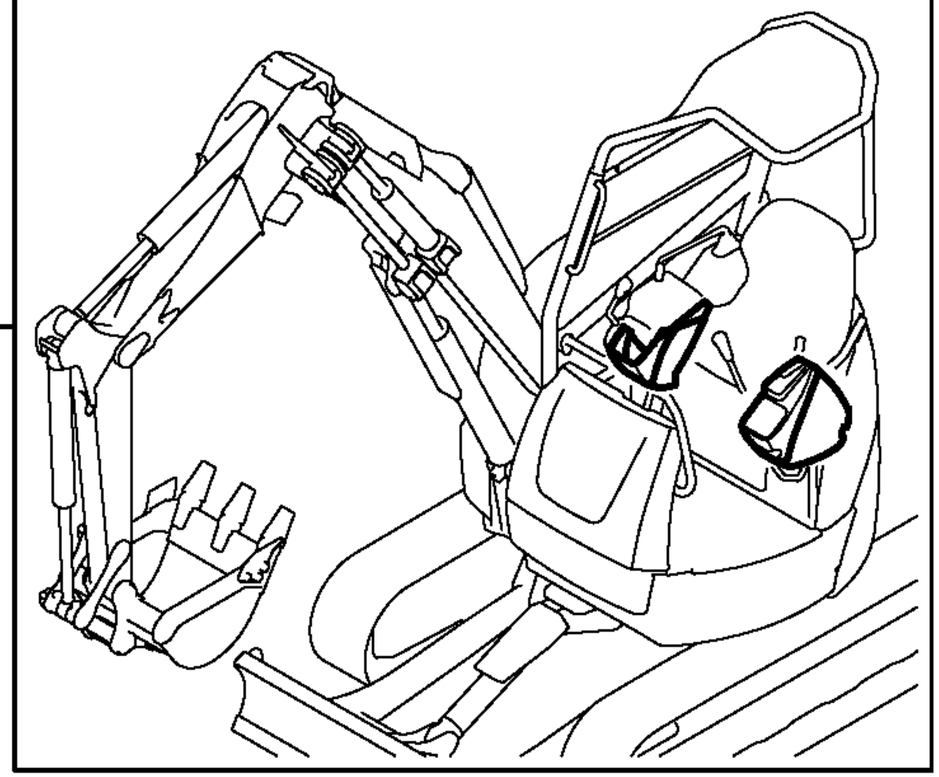

172458-08520
２ウェイマルチバルブキット（標準：～M/#55500） 1
2-WAY MULTI VALVE KIT(STANDARD:TO M/#55500)

標準操作パターン(JIS.ヤンマーパターン)を
ワンタッチで小松パターンに変更可能な切替
えバルブ等を追加する為の部品です。
CUTOFF VALVE PARTS,ECT. WHICH CAN CHANGE
FROM STANDARD OPERATION PATTERN
(JIS.YANMAR PATTERN) TO KOMATSU
PATTERN PROMPTLY.

Fig. 58 リモコンバルブ(標準:M/#55501～)
REMOTE CONTROL VALVE
(STANDARD:FROM M/#55501)

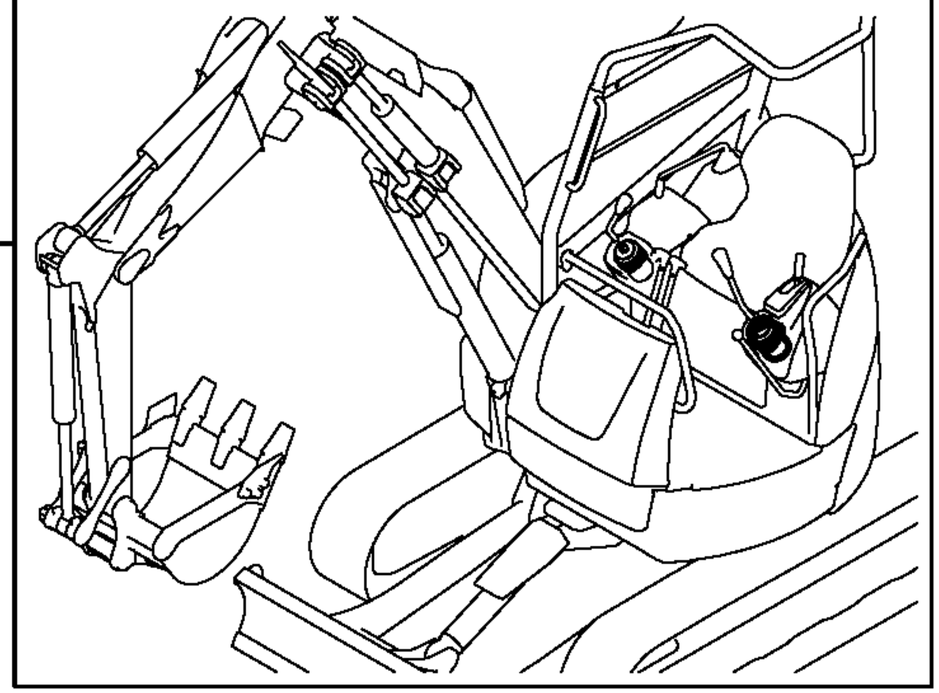

https://truckmanualshub.com/

```
1,1,,172458-08530,,"2-WAY KIT",1,,,,,,1,,,,,,,,,,
2,2,,172458-03550,,LABEL,1,,,,,,,,,,,,,,,,
3,2,,172458-03560,,LABEL,1,,,,,,,,,,,,,,,,
4,2,,172458-03570,,LABEL,1,,,,,,,,,,,,,,,,
5,2,,172458-08540,,"LEVER ASS,2W",1,,,,,,,,,,,,,,,,
6,3,,1C6141-35370,,"SPRING,LOCK",1,,,,,,,,,,,,,,,,
7,3,,172458-74470,,SHAFT,1,,,,,,,,,,,,,,,,
8,3,,172458-74480,,SLEEVE,1,,,,,,,,,,,,,,,,
9,3,,172458-74490,,"LEVER KNOB BL",1,,,,,,,,,,,,,,,,
10,3,,26712-080002,,"NUT M 8",1,,,,,,,,,,,,,,,,
```

https://truckmanualshub.com/

172458-08530
２ウェイマルチバルブキット（標準：M/#55501～） 1
2-WAY MULTI VALVE KIT(STANDARD:FROM M/#55501)

標準操作パターン(JIS.ヤンマーパターン)を
ワンタッチで小松パターンに変更可能な切替
えバルブ等を追加する為の部品です。
CUTOFF VALVE PARTS,ECT. WHICH CAN CHANGE
FROM STANDARD OPERATION PATTERN
(JIS.YANMAR PATTERN) TO KOMATSU
PATTERN PROMPTLY.

Fig. 58 リモコンバルブ(標準:M/#55501～)
REMOTE CONTROL VALVE
(STANDARD:FROM M/#55501)

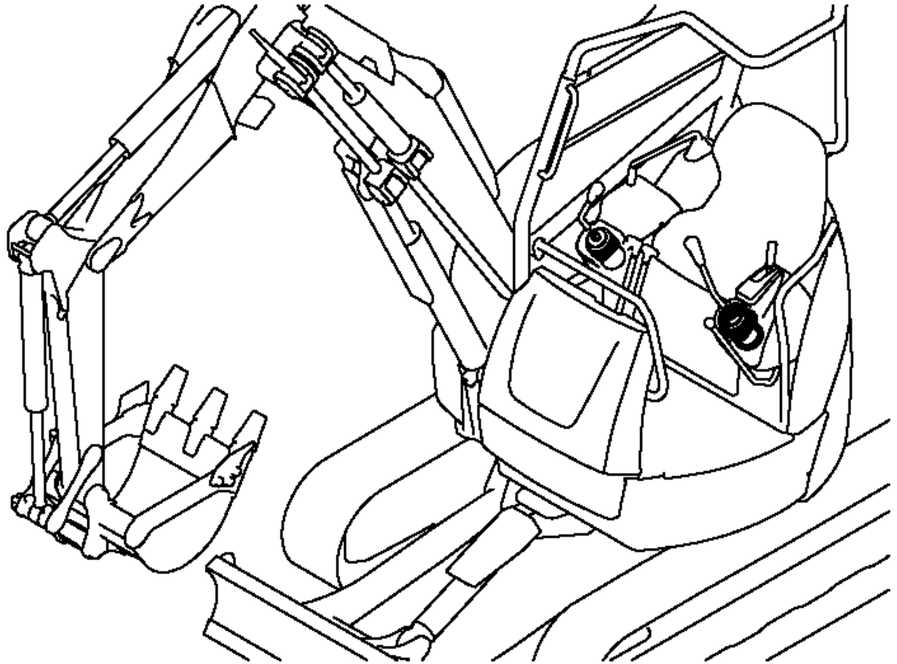

https://truckmanualshub.com/

```
1,1,,172487-08700,,"VAE KIT",1,,,,,,1,,,,,,,,,,,,I
2,2,,172490-03210,,"LABEL, P.T.O.",1,,,,,,,,,,,,,,,,,,,I
3,2,,172068-28490,,"SPRING  8",2,,,,,,,,,,,,,,,,,,,I
4,2,,194200-37780,,"LS-NUT 8",1,,,,,,,,,,,,,,,,,,,I
5,2,,172734-41300,,"LINK BALL 8L",1,,,,,,,,,,,,,,,,,,,I
6,2,,172732-42450,,ROD,1,,,,,,,,,,,,,,,,,,,I
7,2,,172823-45000,,"ROD 54, SPOOL",1,,,,,,,,,,,,,,,,,,,I
8,2,,172487-45220,,"LINK,P.T.O.(GLAY:72)",1,,,,,,,,,,,,,,,,,,,I
9,3,,172141-41360,,"BUSH 1415",2,,,,,,,,,,,,,,,,,,,I
11,2,,172458-45230,,"SHAFT,PEDAL(GRAY:72)",1,,,,,,,,,,,,,,,,,,,I
12,2,,172472-45300,,"LINK A,P.T.O.(GRAY72",1,,,,,,,,,,,,,,,,,,,I
13,3,,172141-41370,,"BUSH 2015",2,,,,,,,,,,,,,,,,,,,I
15,2,,172458-45521,,"PEDAL,SWING(GRAY:72)",1,,,,,,,,,,,,,,,,,,,I
16,2,,172458-45540,,"COVER,PEDAL(GRAY:72)",1,,,,,,,,,,,,,,,,,,,I
17,2,,172187-45651,,"SHAFT, PEDAL COVER",1,,,,,,,,,,,,,,,,,,,I
18,2,,172187-45760,,"COVER PAD",1,,,,,,,,,,,,,,,,,,,I
19,2,,172448-45800,,"PLATE,LOCK(PTO  (11)",1,,,,,,,,,,,,,,,,,,,I
20,2,,172487-45800,,"LINK BASE,PTO   (12)",1,,,,,,,,,,,,,,,,,,,I
21,2,,1A1040-45890,,"WASHER 10 36 4.5",1,,,,,,,,,,,,,,,,,,,I
22,2,,172157-45990,,"BOOTS, PEDAL",1,,,,,,,,,,,,,,,,,,,I
23,2,,172458-46150,,"BRACKET,P.T.O.  (72)",1,,,,,,,,,,,,,,,,,,,I
24,2,,172124-46200,,"O-RING 27X5.7",2,,,,,,,,,,,,,,,,,,,I
25,2,,172462-46230,,"BOLT 8X10",1,,,,,,,,,,,,,,,,,,,I
26,2,,172165-46340,,BOLT,2,,,,,,,,,,,,,,,,,,,I
27,2,,172122-46590,,"ELBALL 8",2,,,,,,,,,,,,,,,,,,,I
28,2,,172458-61500,,"RUBBER,SEAL 120",1,,,,,,,,,,,,,,,,,,,I
29,2,,172487-62310,,"MAT B,P.T.O",1,,,,,,,,,,,,,,,,,,,I
30,2,,172487-64950,,"COVER,HOSE P.T.O.(73",1,,,,,,,,,,,,,,,,,,,I
31,2,,172458-65390,,"RUBBER,SEAL 210",1,,,,,,,,,,,,,,,,,,,I
32,2,,172183-74820,,"STOP VALVE",2,,,,,,,,,,,,,,,,,,,I
33,2,,172487-74900,,"PLATE,P.T.O.(GREEN97",1,,,,,,,,,,,,,,,,,,,I
34,2,,172162-76130,,"ADAPTER,DOUBLE MALE",1,,,,,,,,,,,,,,,,,,,I
35,2,,172422-76180,,CONNECTOR,1,,,,,,,,,,,,,,,,,,,I
36,2,,172487-76550,,"TUBE,P.T.O.(GREEN:97",1,,,,,,,,,,,,,,,,,,,I
37,2,,172487-76600,,"TUBE L,P.T.O(GREEN97",1,,,,,,,,,,,,,,,,,,,I
38,2,,172487-76650,,"TUBE R,P.T.O(GREEN97",1,,,,,,,,,,,,,,,,,,,I
39,2,,172487-78600,,"HOSE H206BB155K",1,,,,,,,,,,,,,,,,,,,I
40,2,,172487-78610,,"HOSE H208BB155K",1,,,,,,,,,,,,,,,,,,,I
41,2,,172487-78620,,"HOSE H208CX125S",1,,,,,,,,,,,,,,,,,,,I
42,2,,172487-78630,,"HOSE H206CX125S",1,,,,,,,,,,,,,,,,,,,I
43,2,,172487-78640,,"HOSE H208BC067K",1,,,,,,,,,,,,,,,,,,,I
44,2,,172487-78650,,"HOSE H206BC067K",1,,,,,,,,,,,,,,,,,,,I
45,2,,172456-78910,,"HOSE H208AB060W",2,,,,,,,,,,,,,,,,,,,I
46,2,,172122-79930,,"CLAMP B",2,,,,,,,,,,,,,,,,,,,I
47,2,,22117-080000,,"WASHER  8",3,,,,,,,,,,,,,,,,,,,I
48,2,,22137-080000,,"WASHER 8, POLISHED",1,,,,,,,,,,,,,,,,,,,I
49,2,,22137-100000,,"WASHER 10,POLISHED",1,,,,,,,,,,,,,,,,,,,I
50,2,,22217-100000,,"SPRING WASHER 10",1,,,,,,,,,,,,,,,,,,,I
51,2,,22417-160160,,"COTTER PIN 1.6X16",1,,,,,,,,,,,,,,,,,,,I
52,2,,22417-250200,,"COTTER PIN 2.5X20",1,,,,,,,,,,,,,,,,,,,I
53,2,,23871-040000,,"PLUG PT1/2,SCREW",2,,,,,,,,,,,,,,,,,,,I
54,2,,24311-000210,,"O-RING 1A P-21.0",2,,,,,,,,,,,,,,,,,,,I
55,2,,24315-000140,,"O-RING 1B P-14.0",2,,,,,,,,,,,,,,,,,,,I
56,2,,24761-040000,,"NIPPLE B,GREASE",1,,,,,,,,,,,,,,,,,,,I
57,2,,24761-050000,,"NIPPLE C,GREASE",1,,,,,,,,,,,,,,,,,,,I
58,2,,26013-080162,,"BOLT W/WASHER M8X16",2,,,,,,,,,,,,,,,,,,,I
59,2,,26013-100162,,"BOLT M10X 16",2,,,,,,,,,,,,,,,,,,,I
60,2,,26013-100202,,"BOLT W/WASHER M10X20",4,,,,,,,,,,,,,,,,,,,I
61,2,,26013-100202,,"BOLT W/WASHER M10X20",2,,,,,,,,,,,,,,,,,,,I
62,2,,26013-100202,,"BOLT W/WASHER M10X20",2,,,,,,,,,,,,,,,,,,,I
63,2,,26013-100252,,"BOLT W/WASHER M10X25",4,,,,,,,,,,,,,,,,,,,I
64,2,,26013-100252,,"BOLT W/WASHER M10X25",4,,,,,,,,,,,,,,,,,,,I
65,2,,26051-080002,,"NUT M 8",5,,,,,,,,,,,,,,,,,,,I
```

https://truckmanualshub.com/

```
66,2,,26116-080254,,"BOLT M 8X 25 PLATED",2,,,,,,,,,,,,,,,,,,,,I
67,2,,26116-100202,,"BOLT M10X 20 PLATED",1,,,,,,,,,,,,,,,,,,,,I
68,2,,26347-080002,,"U-NUT,  8",1,,,,,,,,,,,,,,,,,,,,I
69,2,,26716-080002,,"NUT M 8",2,,,,,,,,,,,,,,,,,,,,I
70,2,,26757-100002,,"NUT, 10",1,,,,,,,,,,,,,,,,,,,,I
71,2,,933110-54100,,"PIN 4.75X14",1,,,,,,,,,,,,,,,,,,,,I
72,2,,172458-03240,,"LABEL,LOCK",1,,,,,,,,,,,,,,,,,,,,I
```

https://truckmanualshub.com/

172487-08700
ＰＴＯキット
P.T.O. KIT

ＰＴＯ配管のまったく付いていない
標準仕様に配管、リンク及びカバー
を加える改装部品です。
PARTS IN ORDER TO ADD PIPING,
LINK & COVER TO STANDARD SPEC.
WITH NO P.T.O. PIPING.

1

Fig.21 操縦装置(走行ﾚﾊﾞｰ & ﾘﾝｸ台)
CONTROL EQUIPMENT(DRIVE LEVER & LINK STAND)

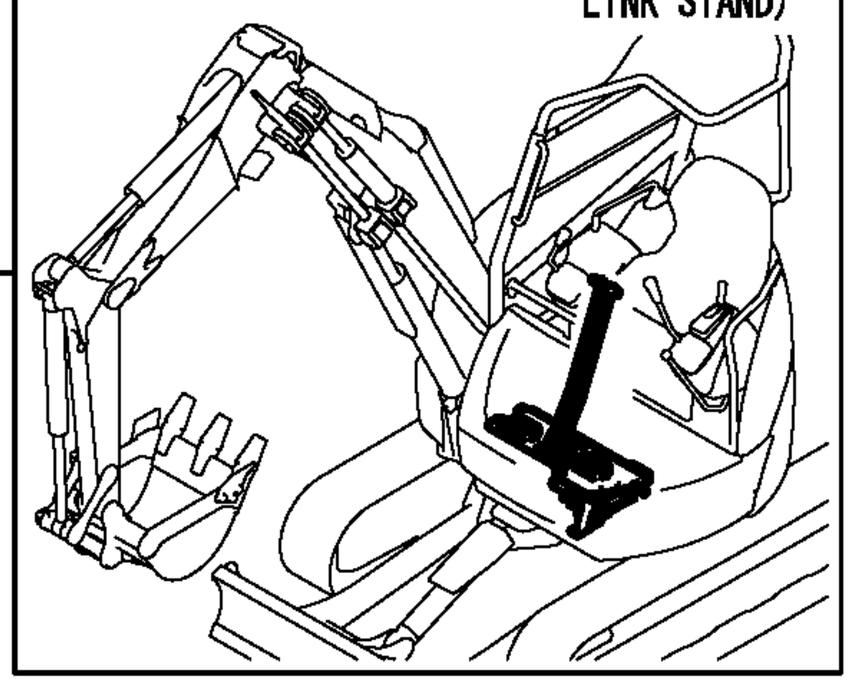

Fig.26 操縦装置(PTO)
CONTROL EQUIPMENT(P.T.O.)

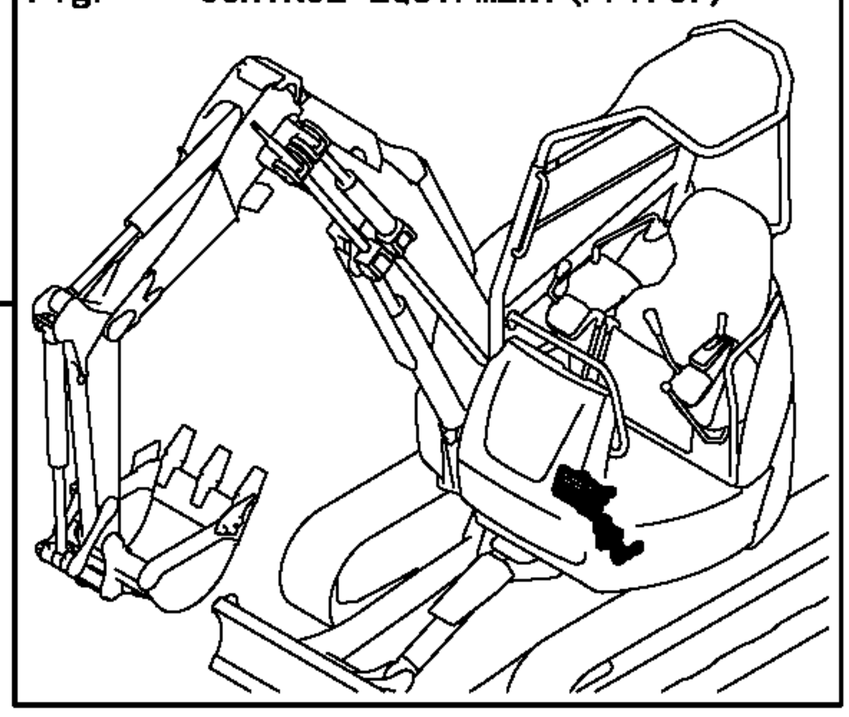

Fig.33 ステップ & フロアマット
STEP & FLOOR MAT

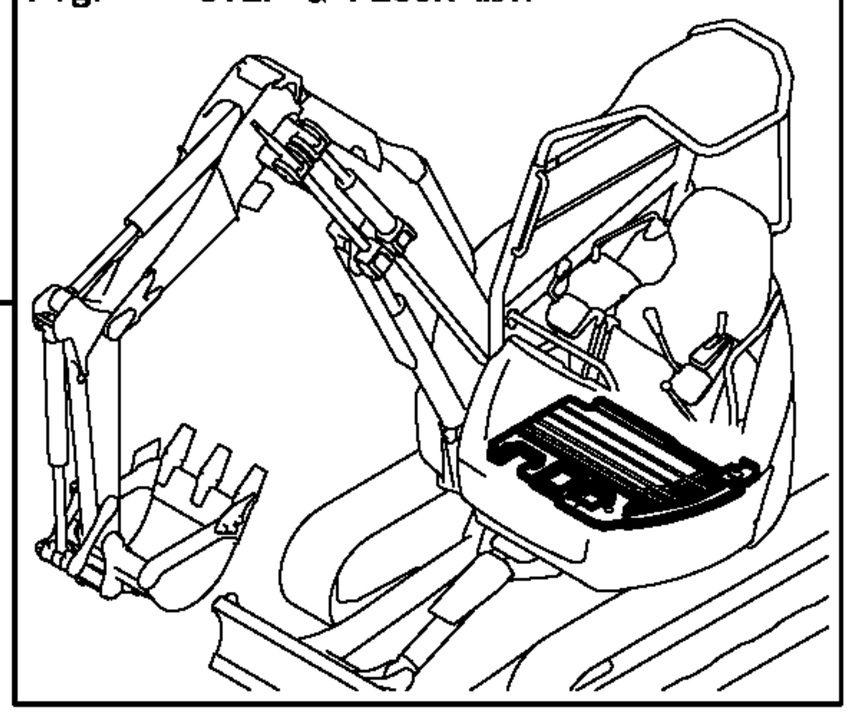

Fig.64 油圧配管(PTO:ﾌﾚｰﾑｴﾝﾄﾞ)
HYD.OIL PIPING(P.T.O.:FRAME END)

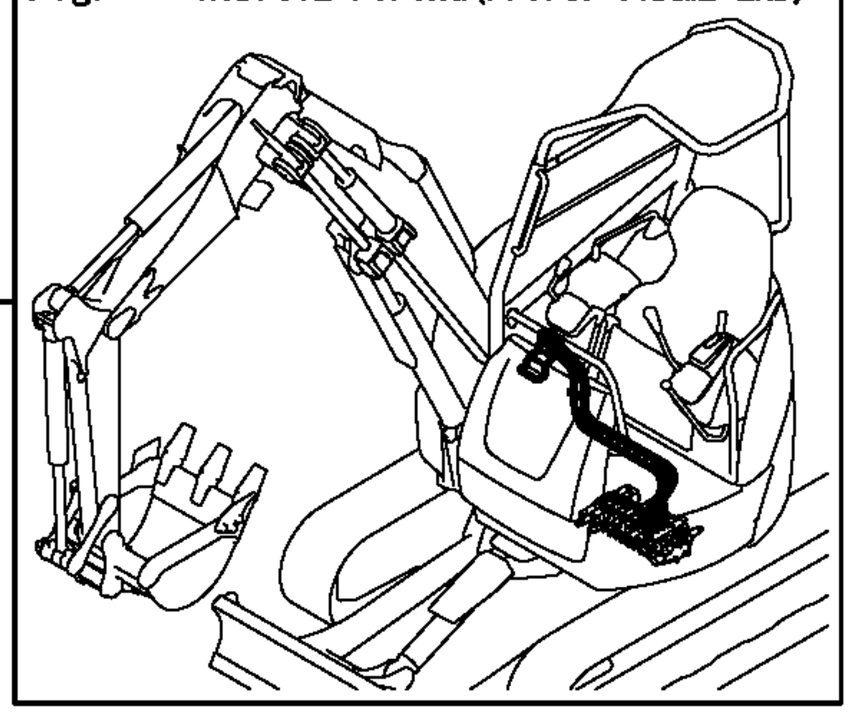

Fig.67 油圧配管(PTO:ｱｰﾑｴﾝﾄﾞ)
HYD.OIL PIPING(P.T.O.:ARM END)

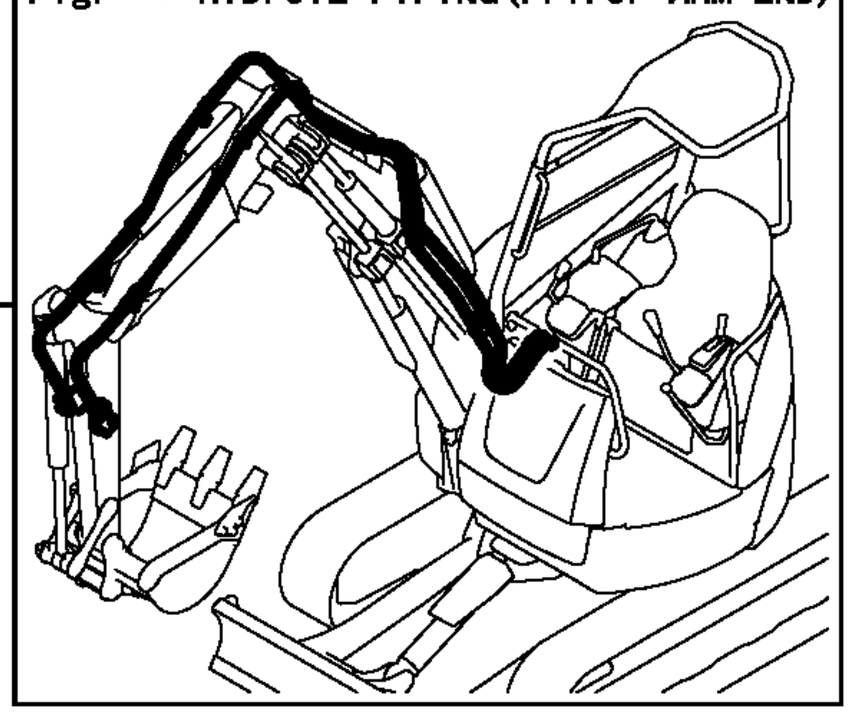

https://truckmanualshub.com/

```
[Info]
PcNo=Y00K3841
PcName=B2-5(JP,EX)
JpnUse=1
JpnSec1=Œš‹@
JpnSec2=ƒoƒbƒNƒz[
JpnSec3=B
JpnPreface=1
EngUse=1
EngSec1=CONSTRUCTION
EngSec2=EXCAVATOR (B)
EngSec3=B
EngPreface=1
```

https://truckmanualshub.com/

```
0,Y00K3841
1,001,,"VEHICLE B2-5(JP,EX)"
2,1,,LABEL(JP),"B2-5 (JP)","B2-5 (EX)",,
2,2,,LABEL(EX),"B2-5 (JP)","B2-5 (EX)",,
2,3,,"SAFETY LABEL(JP)","B2-5 (JP)","B2-5 (EX)",,
2,4,,"SAFETY LABEL(EX)","B2-5 (JP)","B2-5 (EX)",,
2,5,,ACCESSORY,"B2-5 (JP)","B2-5 (EX)",,
2,6,,"SUCTION PIPE & EXHAUST PIPE","B2-5 (JP)","B2-5 (EX)",,
2,7,,ACCELERATOR,"B2-5 (JP)","B2-5 (EX)",,
2,8,,"ONE TOUCH DECEL","B2-5 (JP)","B2-5 (EX)",,
2,9,,"ENGINE MOUNT","B2-5 (JP)","B2-5 (EX)",,
2,10,,"RADIATOR & MOUNT","B2-5 (JP)","B2-5 (EX)",,
2,11,,"FUEL TANK","B2-5 (JP)","B2-5 (EX)",,
2,12,,"FUEL LINE","B2-5 (JP)","B2-5 (EX)",,
2,13,,BATTERY,"B2-5 (JP)","B2-5 (EX)",,
2,14,,"ELECTRIC PART(WIRING)","B2-5 (JP)","B2-5 (EX)",,
2,15,,"ELECTRIC PART(EQUIPMENT)","B2-5 (JP)","B2-5 (EX)",,
2,16,,LAMP,"B2-5 (JP)","B2-5 (EX)",,
2,17,,"SPROCKET & ROLLER","B2-5 (JP)","B2-5 (EX)",,
2,18,,"IDLER & ADJUST","B2-5 (JP)","B2-5 (EX)",,
2,19,,CRAWLER,"B2-5 (JP)","B2-5 (EX)",,
2,20,,"CONTROL EQUIPMENT(LOCK LEVER & STAND)","B2-5 (JP)","B2-5 (EX)",,
2,21,,"CONTROL EQUIPMENT(TRAVEL LEVER & LINK STAND)","B2-5 (JP)","B2-5 (EX)",,
2,22,,"CONTROL EQUIPMENT(OPERATION LEVER)","B2-5 (JP)","B2-5 (EX)",,
2,23,,"CONTROL EQUIPMENT(BLADE LEVER)","B2-5 (JP)","B2-5 (EX)",,
2,24,,"CONTROL EQUIPMENT(SWING PEDAL)","B2-5 (JP)","B2-5 (EX)",,
2,25,,"CONTROL EQUIPMENT(LOW-HIGH PEDAL)","B2-5 (JP)","B2-5 (EX)",,
2,26,,"CONTROL EQUIPMENT(P.T.O.)","B2-5 (JP)","B2-5 (EX)",,
2,27,,"CONTROL VALVE PLATE","B2-5 (JP)","B2-5 (EX)",,
2,28,,"TURNING FRAME","B2-5 (JP)","B2-5 (EX)",,
2,29,,"TRACK FRAME & TURNING BEARING","B2-5 (JP)","B2-5 (EX)",,
2,30,,COVER(FRAME),"B2-5 (JP)","B2-5 (EX)",,
2,31,,"COVER(AROUND CONTROL)","B2-5 (JP)","B2-5 (EX)",,
2,32,,COVER(BOOM),"B2-5 (JP)","B2-5 (EX)",,
2,33,,"STEP & FLOOR MAT","B2-5 (JP)","B2-5 (EX)",,
2,34,,"INSTRUMENT PANEL","B2-5 (JP)","B2-5 (EX)",,
2,35,,"SEAT & SEAT MOUNT","B2-5 (JP)","B2-5 (EX)",,
2,36,,BONNET(1),"B2-5 (JP)","B2-5 (EX)",,
2,37,,BONNET(2),"B2-5 (JP)","B2-5 (EX)",,
2,38,,BONNET(3),"B2-5 (JP)","B2-5 (EX)",,
2,39,,DUCT,"B2-5 (JP)","B2-5 (EX)",,
2,40,,CANOPY,"B2-5 (JP)","B2-5 (EX)",,
2,41,,"HYD.OIL PUMP & JOINT","B2-5 (JP)","B2-5 (EX)",,
2,42,,"BOOM CYLINDER","B2-5 (JP)","B2-5 (EX)",,
2,43,,"ARM CYLINDER","B2-5 (JP)","B2-5 (EX)",,
2,44,,"BUCKET CYLINDER","B2-5 (JP)","B2-5 (EX)",,
2,45,,"BLADE CYLINDER","B2-5 (JP)","B2-5 (EX)",,
2,46,,"OFFSET CYLINDER","B2-5 (JP)","B2-5 (EX)",,
2,47,,"TRAVEL MOTOR","B2-5 (JP)","B2-5 (EX)",,
2,48,,"TURNING MOTOR","B2-5 (JP)","B2-5 (EX)",,
2,49,,"SWIVEL JOINT","B2-5 (JP)","B2-5 (EX)",,
2,50,,"CONTROL VALVE(BUCKET & BOOM 1)","B2-5 (JP)","B2-5 (EX)",,
2,51,,"CONTROL VALVE(BOOM 2 & TRAVEL : RIGHT)","B2-5 (JP)","B2-5 (EX)",,
2,52,,"CONTROL VALVE(P PORT & TRAVEL : LEFT)","B2-5 (JP)","B2-5 (EX)",,
2,53,,"CONTROL VALVE(OFFSET & ARM)","B2-5 (JP)","B2-5 (EX)",,
2,54,,"CONTROL VALVE(P.T.O. & T/P PORT)","B2-5 (JP)","B2-5 (EX)",,
2,55,,"CONTROL VALVE(TURNING & BLADE)","B2-5 (JP)","B2-5 (EX)",,
2,56,,"MULTI VALVE(4-WAY SPEC.)","B2-5 (JP)","B2-5 (EX)",,
2,57,,"REMOTE CONTROL VALVE(STANDARD : TO M/#55500,4-WAY SPEC.)","B2-5
(JP)","B2-5 (EX)",,
2,58,,"REMOTE CONTROL VALVE(STANDARD : FROM M/#55501)","B2-5 (JP)","B2-5 (EX)",,
2,59,,"HYD.OIL TANK","B2-5 (JP)","B2-5 (EX)",,
2,60,,"HYD.OIL PIPING(TANK - PUMP - VALVE)","B2-5 (JP)","B2-5 (EX)",,
```

https://truckmanualshub.com/

2,61,,"HYD.OIL PIPING(PUMP,VALVE - TURNING MOTOR,FRAME END)","B2-5 (JP)","B2-5 (EX)",,
2,62,,"HYD.OIL PIPING(VALVE - SWIVEL)","B2-5 (JP)","B2-5 (EX)",,
2,63,,"HYD.OIL PIPING(RETURN)","B2-5 (JP)","B2-5 (EX)",,
2,64,,"HYD.OIL PIPING(P.T.O. : FRAME END)","B2-5 (JP)","B2-5 (EX)",,
2,65,,"HYD.OIL PIPING(TRACK FRAME)","B2-5 (JP)","B2-5 (EX)",,
2,66,,"HYD.OIL PIPING(BOOM)","B2-5 (JP)","B2-5 (EX)",,
2,67,,"HYD.OIL PIPING(P.T.O. : ARM END)","B2-5 (JP)","B2-5 (EX)",,
2,68,,"CONTROL PIPING(PUMP - VALVE - RETURN)","B2-5 (JP)","B2-5 (EX)",,
2,69,,"CONTROL PIPING(REMOTE CONTROL V. - CONTROL V.:STD,2-WAY SPEC.)","B2-5 (JP)","B2-5 (EX)",,
2,70,,"CONTROL PIPING(REMOTE CONTROL V. - MULTI V.:4-WAY SPEC.)","B2-5 (JP)","B2-5 (EX)",,
2,71,,"CONTROL PIPING(MULTI V. - CONTROL V. : 4-WAY SPEC.)","B2-5 (JP)","B2-5 (EX)",,
2,72,,GREASING,"B2-5 (JP)","B2-5 (EX)",,
2,73,,BOOM(A),"B2-5 (JP)","B2-5 (EX)",,
2,74,,BOOM(B),"B2-5 (JP)","B2-5 (EX)",,
2,75,,BOOM(C),"B2-5 (JP)","B2-5 (EX)",,
2,76,,ARM,"B2-5 (JP)","B2-5 (EX)",,
2,77,,"BUCKET ARM & LINK","B2-5 (JP)","B2-5 (EX)",,
2,78,,BUCKET,"B2-5 (JP)","B2-5 (EX)",,
2,79,,"BUCKET PIN","B2-5 (JP)","B2-5 (EX)",,
2,80,,BLADE,"B2-5 (JP)","B2-5 (EX)",,
2,81,,"ONE TOUCH DECEL KIT(OPTIONAL)","B2-5 (JP)","B2-5 (EX)",,
2,82,,"4-WAY MULTI VALVE KIT(OPTIONAL)","B2-5 (JP)","B2-5 (EX)",,
2,83,,"2-WAY MULTI VALVE KIT(STANDARD : TO M/#55500,OPTIONAL)","B2-5 (JP)","B2-5 (EX)",,
2,84,,"2-WAY MULTI VALVE KIT(STANDARD : FROM M/#55501,OPTIONAL)","B2-5 (JP)","B2-5 (EX)",,
2,85,,"P.T.O. KIT(OPTIONAL)","B2-5 (JP)","B2-5 (EX)",,