https://truckmanualshub.com/

PEN00101-04

Operation & Maintenance Manual

ARTICULATED
DUMP TRUCK

GALEO

HM300-2

SERIAL NUMBERS 2001 and up

ecot3

NOTICE

Komatsu has Operation & Maintenance Manuals written in some other languages. if a foreign language manual is necessary, contact your local distributor for availability.

WARNING

Unsafe Use of this machine may cause serious injury or Death.Operators and maintenance personnel must read this manual before operating or maintaining this machine. This manual should be kept near the machine for reference and periodically reviewed by all personnel who will come into contact with it.

KOMATSU

https://truckmanualshub.com/

FOREWORD

CALIFORNIA

Proposition 65 Warning

Diesel engine exhaust and some of its constituents are known to the State of California to cause cancer, birth defects, and other reproductive harm.

CALIFORNIA

Proposition 65 Warning

Battery posts, terminals and related accessories contain lead and lead compounds, chemicals known to the State of California to cause cancer and birth defects or other reproductive harm.

Wash hands after handling.

https://truckmanualshub.com/

FOREWORD

This manual provides rules and guidelines which will help you use this machine safely and effectively. The precautions in this manual must be followed at all times when performing operation and maintenance. Most accidents are caused by the failure to follow fundamental safety rules for the operation and maintenance of machines. Accidents can be prevented by knowing beforehand conditions that may cause a hazard when performing operation and maintenance.

⚠ WARNING

Operators and maintenance personnel must always do as follows before beginning operation or maintenance.

- **Always be sure to read and understand this manual thoroughly before performing operation and maintenance.**
- **Read the safety messages given in this manual and the safety labels affixed to the machine thoroughly and be sure that you understand them fully.**

Keep this manual in the storage location for the operation and maintenance manual given below, and have all personnel read it periodically.

If this manual has been lost or has become dirty and cannot be read, request a replacement manual immediately from Komatsu or your Komatsu distributor.

If you sell the machine, be sure to give this manual to the new owners together with the machine.

Komatsu delivers machines that comply with all applicable regulations and standards of the country to which it has been shipped. If this machine has been purchased in another country or purchased from someone in another country, it may lack certain safety devices and specifications that are necessary for use in your country. If there is any question about whether your product complies with the applicable standards and regulations of your country, consult Komatsu or your Komatsu distributor before operating the machine.

Storage location for the Operation and Maintenance Manual:
On inside of left door

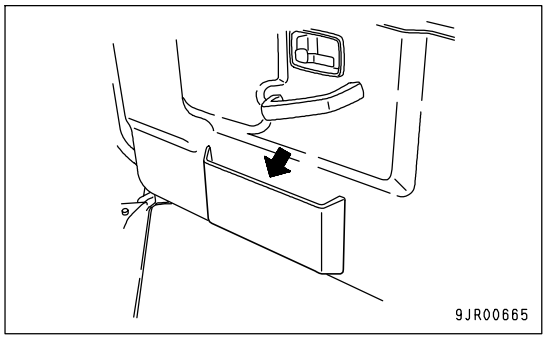

https://truckmanualshub.com/

EMISSION CONTROL WARRANTY

EMISSION CONTROL WARRANTY STATEMENT (APPLIES TO CANADA ONLY)

1. **Products Warranted**

Komatsu America International Company, Komatsu Mining Systems Inc. and Komatsu Utility Corporation (collectively "Komatsu") produce and/or market products under brand names of Komatsu, Dresser, Dressta, Haulpak and Galion. This emissions warranty applies to new engines bearing the Komatsu name installed in these products and used in Canada in machines designed for industrial off-highway use. This warranty applies only to these engines produced on or after January 1, 2000. This warranty will be administered by Komatsu distribution in Canada.

2. **Coverage**

Komatsu warrants to the ultimate purchaser and each subsequent purchaser that the engine is designed, built and equipped so as to conform, at the time of sale by Komatsu, with all U.S. Federal emission regulations applicable at the time of manufacture and that it is free from defects in workmanship or material which would cause it not to meet these regulations within five years or 3,000 hours of operation, whichever occurs first, as measured from the date of delivery of the engine to the ultimate purchaser.

3. **Limitations**

Failures, other than those resulting from defects in materials or workmanship, are not covered by this warranty. Komatsu is not responsible for failures or damage resulting from what Komatsu determines to be abuse or neglect, including, but not limited to: operation without adequate coolant or lubricants; over fueling; over speeding; lack of maintenance of lubricating, cooling or intake systems; improper storage, starting, warm-up, run-in or shutdown practices; unauthorized modifications of the engine. Komatsu is also not responsible for failures caused by incorrect fuel or by water, dirt or other contaminants in the fuel. Komatsu is not responsible for non-engine repairs, "downtime" expense, related damage, fines, all business costs or other losses resulting from a warrantable failure.

KOMATSU IS NOT RESPONSIBLE FOR INCIDENTAL OR CONSEQUENTIAL DAMAGES.

This warranty, together with the express commercial warranties, are the sole warranties of Komatsu. **THERE ARE NO OTHER WARRANTIES, EXPRESS OR IMPLIED, OR OF MERCHANTABILITY OR FITNESS FOR A PARTICUALR PURPOSE.**

GARANTIE SUR LE CONTRÔLE DES ÉMISSIONS

ÉNONCÉ DE GARANTIE SUR LE CONTRÔLE DES ÉMISSIONS (APPLICABLE AU CANADA SEULEMENT):

1. **Produits garantis**:

Komatsu America International Company, Komatsu Mining Systems Inc. et Komatsu Utility Corporation (collectivement Komatsu) produisent et/ou font la mise en marché de produits portant les noms de marque Komatsu, Dresser, Dressta, Haulpak et Galion. Cette garantie sur les émissions s'applique à tous les nouveaux moteurs portant le nom Komatsu, installés dans ces produits et utilisés au Canada dans des machines conçues pour utilisation industrielle non-routière. Cette garantie s'applique seulement sur les moteurs produits à partir du 1er Janvier 2000. Cette garantie sera administrée par la distribution de Komatsu au Canada.

2. **Couverture:**

Komatsu garantit à l'acheteur ultime et chaque acheteur subséquent que le moteur est conçu, construit et équipé en toute conformité, au moment de la vente par Komatsu, avec toutes les Réglementations fédérales américaines sur les émissions applicables au moment de la fabrication et qu'il est exempt de défauts de construction ou de matériaux qui auraient pour effet de contrevenir à ces réglementations en dedans de 5 ans ou 3000 heures d'opération, mesuré à partir de la date de livraison du moteur au client ultime.

3. **Limitations:**

Les bris, autres que ceux résultant de défauts de matériaux ou de construction, ne sont pas couverts par cette Garantie. Komatsu n'est pas responsable pour bris ou dommages résultant de ce que Komatsu détermine comme étant de l'abus ou négligence, incluant mais ne se limitant pas à: l'opération sans lubrifiants ou agent refroidissants adéquats; la suralimentation d'essence; la survitesse; le manque d'entretien des systèmes de lubrification, de refroidissement ou d'entrée; de pratiques non-propices d'entreposage, de mise en marche, de réchauffement, de conditionnement ou d'arrêt; les modifications non-autorisées du moteur. De plus, Komatsu n'est pas responsable de bris causés par de l'essence inadéquate ou de l'eau, des saletés ou autres contaminants dans l'essence. Komatsu n'est pas responsable des réparations non-reliées au moteur, des dépenses encourues suite aux temps d'arrêts, des dommages relatifs, amendes, et de tout autre coût d'affaires ou autres pertes résultant d'un bris couvert par la garantie.

KOMATSU N'EST PAS RESPONSABLE DES INCIDENTS OU DOMMAGES CONSÉQUENTS.

Cette garantie, ainsi que les garanties expresses commerciales, sont les seules garanties de Komatsu. **IL N'Y A AUCUNE AUTRE GARANTIE, EXPRESSE OU SOUS-ENTENDUE, MARCHANDABLE OU PROPICE A UNE UTILISATION PARTICULIÈRE.**

CEKQ000600 - Komatsu America International Company 12/99

https://truckmanualshub.com/

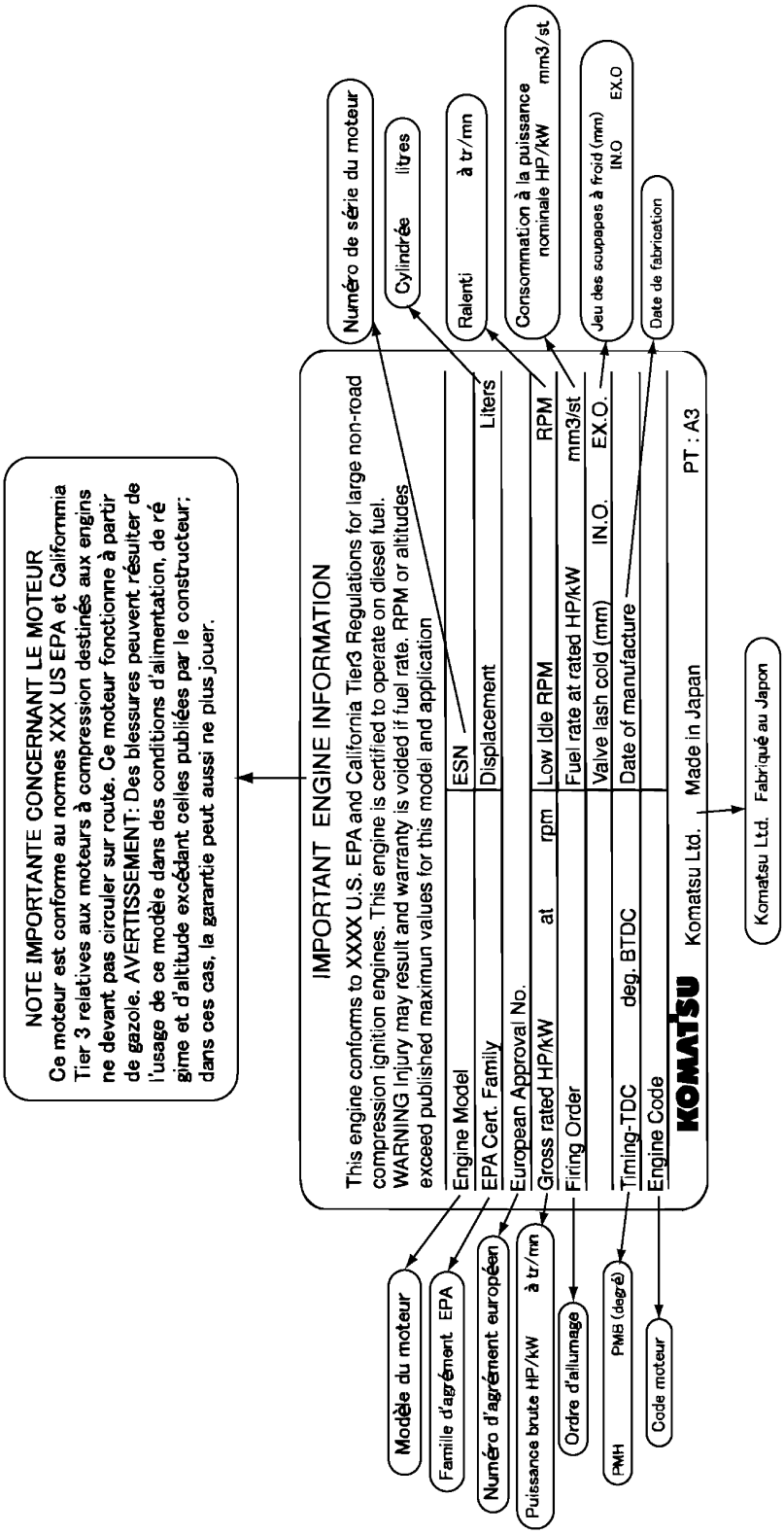

ENGINE DATEPLATE - ENGLISH / FRENCH

https://truckmanualshub.com/

SAFETY INFORMATION

To enable you to use this machine safely, safety precautions and labels are given in this manual and affixed to the machine to give explanations of situations involving potential hazards and of the methods of avoiding such situations.

Signal words

The following signal words are used to inform you that there is a potential hazardous situation that may lead to personal injury or damage.
In this manual and on machine labels, the following signal words are used to express the potential level of hazard.

⚠ DANGER Indicates an imminently hazardous situation which, if not avoided, will result in death or serious injury.

⚠ WARNING Indicates a potentially hazardous situation which, if not avoided, could result in death or serious injury.

⚠ CAUTION Indicates a potentially hazardous situation which, if not avoided, may result in minor or moderate injury. This word is used also to alert against unsafe practices that may cause property damage.

Example of safety message using signal word

⚠ WARNING

When standing up from the operator's seat, always place the lock lever in the LOCK position.
If you accidentally touch the control levers when they are not locked, this may cause a serious injury or death.

Other signal words

In addition to the above, the following signal words are used to indicate precautions that should be followed to protect the machine or to give information that is useful to know.

NOTICE This word is used for precautions that must be taken to avoid actions which could shorten the life of the machine.

REMARKS This word is used for information that is useful to know.

https://truckmanualshub.com/

- **Safety labels**

Safety labels are affixed to the machine to inform the operator or maintenance worker on the spot when carrying out operation or maintenance of the machine that may involve hazard.
This machine uses "Safety labels using words" and "Safety labels using pictograms" to indicate safety procedures.

Example of safety label using words

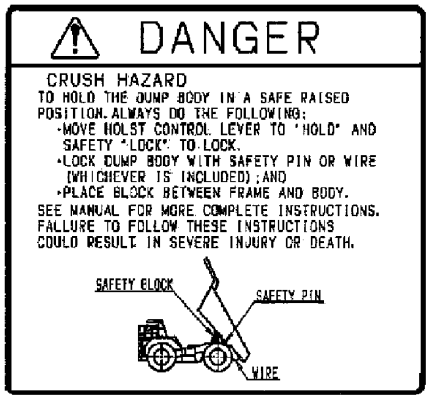

Safety labels using pictogram

Safety pictograms use a picture to express a level of hazardous condition equivalent to the signal word. These safety pictograms use pictures in order to let the operator or maintenance worker understand the level and type of hazardous condition at all times. Safety pictograms show the type of hazardous condition at the top or left side, and the method of avoiding the hazardous condition at the bottom or right side. In addition, the type of hazardous condition is displayed inside a triangle and the method of avoiding the hazardous condition is shown inside a circle.

Komatsu cannot predict every circumstance that might involve a potential hazard in operation and maintenance. Therefore, the safety messages in this manual and on the machine may not include all possible safety precautions. If any procedures or actions not specifically recommended or allowed in this manual are used, it is your responsibility to take the necessary steps to ensure safety.
In no event should you engage in prohibited uses or actions described in this manual.

The explanations, values, and illustrations in this manual were prepared based on the latest information available at that time. Continuing improvements in the design of this machine can lead to changes in detail which may not be reflected in this manual. Consult Komatsu or your Komatsu distributor for the latest available information of your machine or for questions regarding information in this manual.

The numbers in circles in the illustrations correspond to the numbers in ( ) in the text. (For example: ① → (1))

https://truckmanualshub.com/

INTENDED USE

DIRECTIONS OF MACHINE

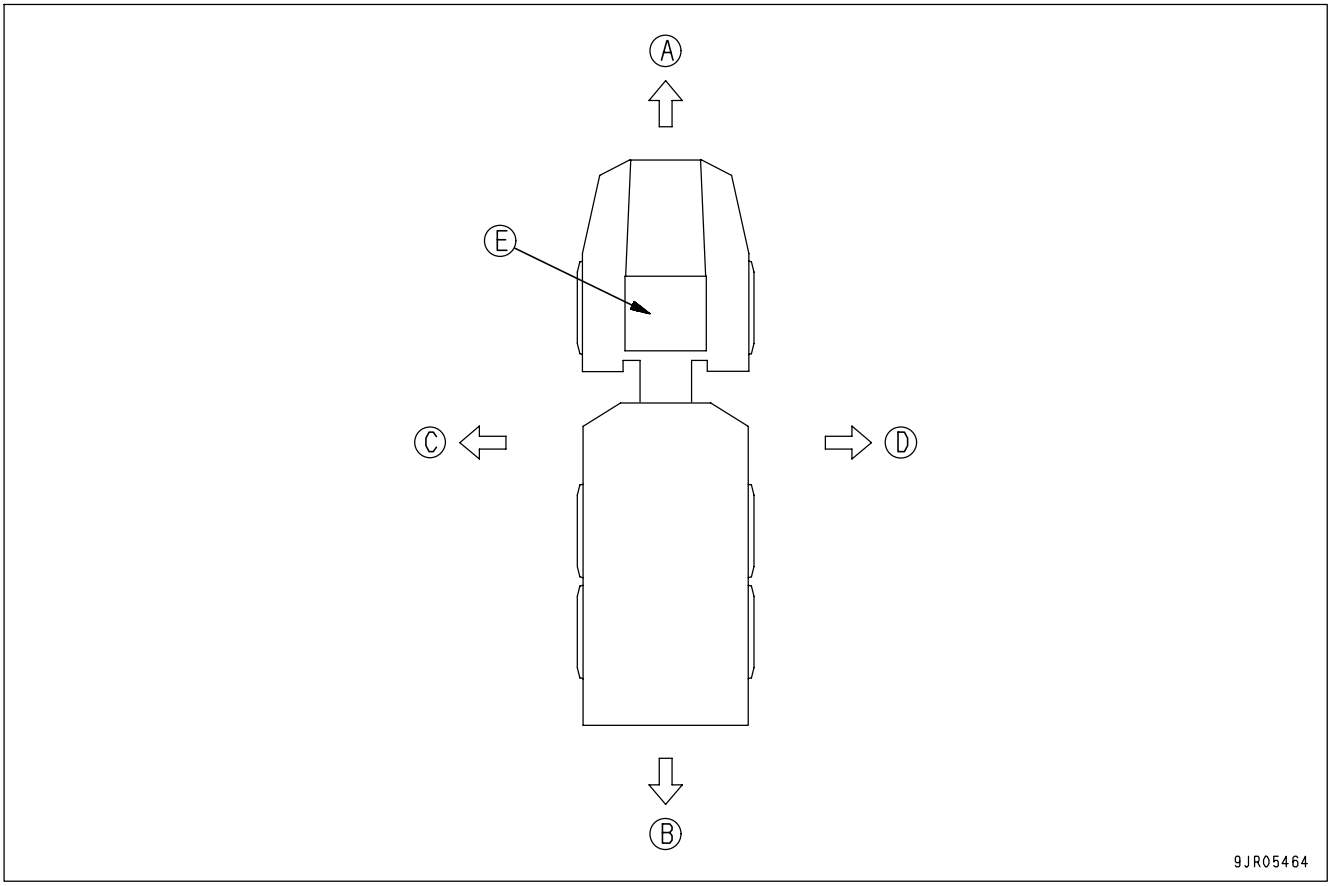

In this manual, the directions of the machine (front, rear, left, right) are determined according to the view from the operator's seat in the direction of travel (front) of the machine.

(A) FRONT
(B) REAR
(C) LEFT
(D) RIGHT
(E) OPERATOR'S SEAT

https://truckmanualshub.com/

LOCATION OF PLATES, TABLE TO ENTER SERIAL NO. AND DISTRIBUTOR

When requesting service or ordering replacement parts, please inform your Komatsu distributor of the following items.

PRODUCT IDENTIFICATION NUMBER (PIN)/MACHINE SERIAL NO. PLATE

This is at the rear right of the cab.
The design of the nameplate differs according to the territory.

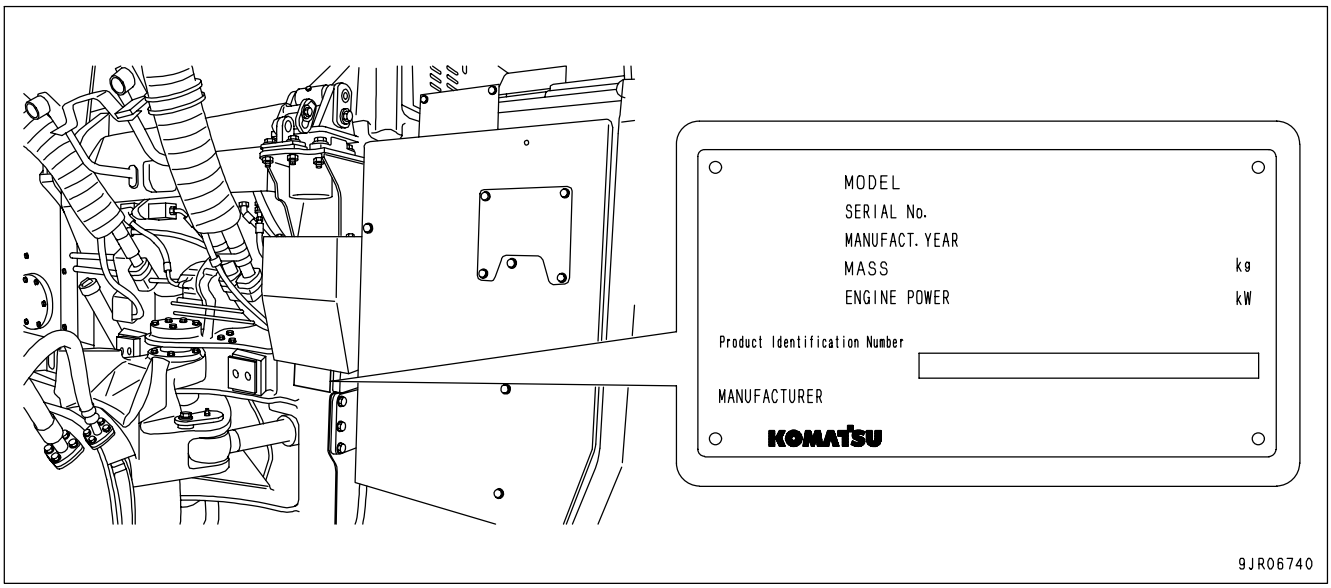

EPA REGULATIONS, ENGINE NUMBER PLATE

It is located on the upper left side of the engine cylinder block if you look from the fan side.

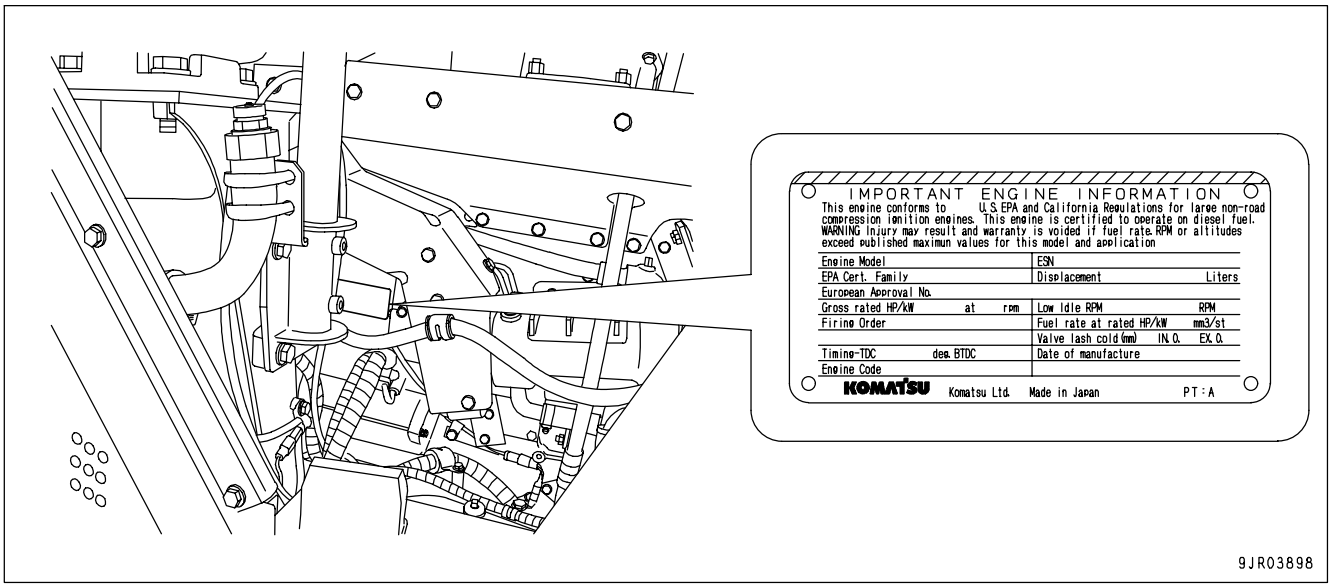

EPA: Environmental Protection Agency, U.S.A.

https://truckmanualshub.com/

SERVICE METER POSITION

It is at the center bottom of the machine monitor.

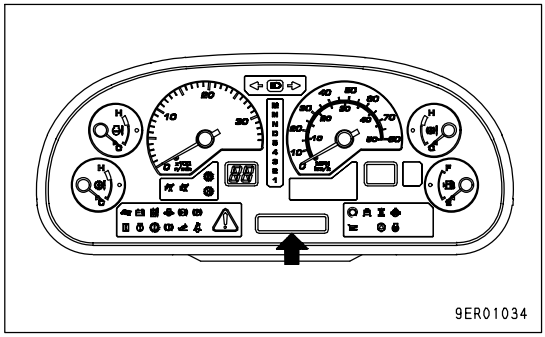

TABLE TO ENTER SERIAL NO. AND DISTRIBUTOR

Machine serial No.	
Engine serial No.	
Product identification number (PIN)	
Distributor name	
Address	
Service Personnel	
Phone/Fax	

https://truckmanualshub.com/

CONTENTS

FOREWORD ---------- 1- 1
FOREWORD ---------- 1- 2
SAFETY INFORMATION ---------- 1- 5
INTENDED USE ---------- 1- 7
DIRECTIONS OF MACHINE ---------- 1- 7
LOCATION OF PLATES, TABLE TO ENTER SERIAL NO. AND DISTRIBUTOR ---------- 1- 8
PRODUCT IDENTIFICATION NUMBER (PIN)/MACHINE SERIAL NO. PLATE ---------- 1- 8
EPA REGULATIONS, ENGINE NUMBER PLATE ---------- 1- 8
SERVICE METER POSITION ---------- 1- 9
TABLE TO ENTER SERIAL NO. AND DISTRIBUTOR ---------- 1- 9
SAFETY ---------- 2- 1
SAFETY ---------- 2- 2
SAFETY LABELS ---------- 2- 4
POSITION FOR ATTACHING SAFETY LABELS ---------- 2- 5
SAFETY LABELS ---------- 2- 6
GENERAL PRECAUTIONS ---------- 2- 11
PRECAUTIONS DURING OPERATION ---------- 2- 20
STARTING ENGINE ---------- 2- 20
OPERATION ---------- 2- 22
TRANSPORTATION ---------- 2- 26
BATTERY ---------- 2- 27
TOWING ---------- 2- 29
PRECAUTIONS FOR MAINTENANCE ---------- 2- 30
PRECAUTIONS WITH TIRES ---------- 2- 37
OPERATION ---------- 3- 1
GENERAL VIEW ---------- 3- 2
GENERAL VIEW OF MACHINE ---------- 3- 2
GENERAL VIEW OF CONTROLS AND GAUGES ---------- 3- 3
EXPLANATION OF COMPONENTS ---------- 3- 5
MACHINE MONITOR ---------- 3- 5
OTHER FUNCTIONS OF MACHINE MONITOR ---------- 3- 26
SWITCHES ---------- 3- 30
CONTROL LEVERS AND PEDALS ---------- 3- 40
BODY PIVOT PIN ---------- 3- 45
ARTICULATE LOCK ---------- 3- 45
LOCATION OF FIRE EXTINGUISHER ---------- 3- 46
DUST INDICATOR ---------- 3- 46
CIRCUIT BREAKER ---------- 3- 46
FUSES ---------- 3- 47
CAR RADIO ---------- 3- 50
CAR STEREO ---------- 3- 56
AIR CONDITIONER ---------- 3- 64
OPERATION ---------- 3- 70
CHECK BEFORE STARTING ENGINE ---------- 3- 70
STARTING ENGINE ---------- 3- 85
OPERATIONS, CHECKS AFTER STARTING ENGINE ---------- 3- 87
STOPPING ENGINE ---------- 3- 88
CHECKS AFTER STOPPING ENGINE ---------- 3- 88
MOVING MACHINE OFF (FORWARD, REVERSE), STOPPING ---------- 3- 89

https://truckmanualshub.com/

SHIFTING GEAR ---- 3- 94
TRAVELING DOWNHILL ---- 3- 96
STEERING THE MACHINE ---- 3-102
OPERATION USING DIFFERENTIAL LOCK ---- 3-103
LOADING OPERATIONS ---- 3-104
DUMP OPERATIONS ---- 3-105
CAB TILT OPERATION ---- 3-107
PRECAUTIONS FOR OPERATION ---- 3-110
PARKING MACHINE ---- 3-111
CHECKS AFTER COMPLETION OF WORK ---- 3-112
LOCKING ---- 3-112
HANDLING TIRES ---- 3-113
DETERMINING AND MAINTAINING TRAVEL ROAD ---- 3-114
DETERMINING TRAVEL ROAD ---- 3-114
MAINTAINING TRAVEL ROAD ---- 3-114
TRANSPORTATION ---- 3-115
PRECAUTIONS WHEN TRANSPORTING ---- 3-115
STEPS FOR TRANSPORTATION ---- 3-115
METHOD OF SECURING MACHINE ---- 3-116
METHOD OF LIFTING MACHINE ---- 3-117
COLD WEATHER OPERATION ---- 3-121
PRECAUTIONS FOR LOW TEMPERATURE ---- 3-121
PRECAUTIONS AFTER COMPLETION OF WORK ---- 3-122
AFTER COLD WEATHER ---- 3-123
LONG-TERM STORAGE ---- 3-124
BEFORE STORAGE ---- 3-124
DURING STORAGE ---- 3-124
AFTER STORAGE ---- 3-124
PRECAUTIONS BEFORE TRAVELING AFTER LONG-TERM STORAGE ---- 3-124
TROUBLESHOOTING ---- 3-125
AFTER RUNNING OUT OF FUEL ---- 3-125
IF TRANSMISSION HAS TROUBLE ---- 3-126
METHOD OF LOWERING DUMP BODY IN EMERGENCY ---- 3-126
METHOD OF TOWING MACHINE ---- 3-127
IF BATTERY IS DISCHARGED ---- 3-131
OTHER TROUBLE ---- 3-135
MAINTENANCE ---- 4- 1
GUIDES TO MAINTENANCE ---- 4- 2
OUTLINE OF SERVICE ---- 4- 4
HANDLING OIL, FUEL, COOLANT, AND PERFORMING OIL CLINIC ---- 4- 4
OUTLINE OF ELECTRIC SYSTEM ---- 4- 8
WEAR PARTS ---- 4- 9
WEAR PARTS LIST ---- 4- 9
RECOMMENDED FUEL, COOLANT, AND LUBRICANT ---- 4- 10
USE OF FUEL, COOLANT AND LUBRICANTS ACCORDING TO AMBIENT TEMPERATURE ---- 4- 11
RECOMMENDED BRANDS, RECOMMENDED QUALITY FOR PRODUCTS OTHER THAN KOMATSU GENUINE OIL ---- 4- 12
STANDARD TIGHTENING TORQUES FOR BOLTS AND NUTS ---- 4- 13
TORQUE LIST ---- 4- 13
PERIODIC REPLACEMENT OF SAFETY CRITICAL PARTS ---- 4- 15

https://truckmanualshub.com/

SAFETY CRITICAL PARTS ---- 4- 16
MAINTENANCE SCHEDULE CHART ---- 4- 17
MAINTENANCE SCHEDULE CHART ---- 4- 17
SERVICE PROCEDURE ---- 4- 19
INITIAL 250 HOURS SERVICE (ONLY AFTER THE FIRST 250 HOURS) ---- 4- 19
WHEN REQUIRED ---- 4- 20
CHECK BEFORE STARTING ---- 4- 39
EVERY 50 HOURS SERVICE ---- 4- 40
EVERY 250 HOURS SERVICE ---- 4- 41
EVERY 500 HOURS SERVICE ---- 4- 53
EVERY 1000 HOURS SERVICE ---- 4- 60
EVERY 2000 HOURS SERVICE ---- 4- 71
EVERY 4000 HOURS SERVICE ---- 4- 77
EVERY 6000 HOURS SERVICE ---- 4- 79
EVERY 8000 HOURS SERVICE ---- 4- 80
SPECIFICATIONS ---- 5- 1
SPECIFICATIONS ---- 5- 2
ATTACHMENTS, OPTIONS ---- 6- 1
HANDLING AUTOMATIC RETARDER, ACCELERATOR CONTROL(ARAC) ---- 6- 2
EXPLANATION OF COMPONENTS ---- 6- 2
METHOD OF OPERATION ---- 6- 3
USE OF REAR VIEW MONITOR ---- 6- 4
NAME AND FUNCTON OF EACH PART OF REAR VIEW MONITOR ---- 6- 4
SETTING OF REAR VIEW MONITOR ---- 6- 7
CAUTIONS WHEN USING REAR VIEW MONITOR ---- 6- 7
HANDLING DUMPING COUNTER ---- 6- 8
HANDLING MACHINES EQUIPPED WITH KOMTRAX ---- 6- 9
BASIC PRECAUTIONS ---- 6- 9
INDEX ---- 7- 1

https://truckmanualshub.com/

SAFETY

⚠ WARNING

Please read and make sure that you fully understand the precautions described in this manual and the safety labels on the machine. When operating or servicing the machine, always follow these precautions strictly.

https://truckmanualshub.com/

SAFETY

SAFETY LABELS ---------- 2- 4
POSITION FOR ATTACHING SAFETY LABELS ---------- 2- 5
SAFETY LABELS ---------- 2- 6

GENERAL PRECAUTIONS ---------- 2- 11
SAFETY RULES ---------- 2- 11
IF ABNORMALITIES ARE FOUND ---------- 2- 11
CLOTHING AND PERSONAL PROTECTIVE ITEMS ---------- 2- 11
FIRE EXTINGUISHER AND FIRST AID KIT ---------- 2- 11
SAFETY FEATURES ---------- 2- 12
KEEP MACHINE CLEAN ---------- 2- 12
INSIDE OPERATOR'S COMPARTMENT ---------- 2- 12
ALWAYS APPLY LOCK WHEN LEAVING OPERATOR'S SEAT ---------- 2- 12
HANDRAILS AND STEPS ---------- 2- 13
MOUNTING AND DISMOUNTING ---------- 2- 13
CRUSHING OR CUTTING PREVENTION ---------- 2- 13
PREVENTION OF BURNS ---------- 2- 14
FIRE PREVENTION ---------- 2- 15
ACTION IF FIRE OCCURS ---------- 2- 15
WINDOW WASHER LIQUID ---------- 2- 16
PRECAUTIONS WHEN USING ROPS (Roll Over Protective Structure) ---------- 2- 16
PRECAUTIONS FOR ATTACHMENTS, OPTIONS ---------- 2- 16
UNAUTHORIZED MODIFICATION ---------- 2- 16
SAFETY AT WORKSITE ---------- 2- 16
WORKING ON LOOSE GROUND ---------- 2- 17
DO NOT GO CLOSE TO HIGH-VOLTAGE CABLES ---------- 2- 17
ENSURE GOOD VISIBILITY ---------- 2- 18
PRECAUTIONS RELATED TO VENTILATION OF EXHAUST GAS ---------- 2- 18
CHECKING SIGNALMAN'S SIGNALS AND SIGNS ---------- 2- 18
EMERGENCY ESCAPE FROM OPERATOR'S CAB ---------- 2- 18
ASBESTOS DUST HAZARD PREVENTION ---------- 2- 19

https://truckmanualshub.com/

PRECAUTIONS DURING OPERATION ---------- 2- 20
STARTING ENGINE ---------- 2- 20
CHECKS BEFORE STARTING ENGINE, ADJUST ---------- 2- 20
PRECAUTIONS WHEN STARTING ---------- 2- 20
PRECAUTIONS IN COLD AREAS ---------- 2- 21
OPERATION ---------- 2- 22
CHECKS BEFORE STARTING OPERATION ---------- 2- 22
PRECAUTIONS WHEN TRAVELING IN FORWARD OR REVERSE ---------- 2- 22
PRECAUTIONS WHEN TRAVELING ---------- 2- 23
PRECAUTIONS WHEN TRAVELING ON SLOPES ---------- 2- 23
PRECAUTIONS WHEN OPERATING DUMP BODY ---------- 2- 24
PRECAUTIONS WHEN OPERATING ---------- 2- 24
PRECAUTIONS FOR ACCUMULATED SNOW, ICE ---------- 2- 24
PARKING MACHINE ---------- 2- 25
TRANSPORTATION ---------- 2- 26
LOADING AND UNLOADING ---------- 2- 26
SHIPPING ---------- 2- 26
BATTERY ---------- 2- 27
BATTERY HAZARD PREVENTION ---------- 2- 27
STARTING WITH BOOSTER CABLES ---------- 2- 28
TOWING ---------- 2- 29
WHEN TOWING ---------- 2- 29

PRECAUTIONS FOR MAINTENANCE ---------- 2- 30
WARNING TAG ---------- 2- 30
KEEP WORK PLACE CLEAN AND TIDY ---------- 2- 30
APPOINT LEADER WHEN WORKING WITH OTHERS ---------- 2- 30
STOP ENGINE BEFORE CARRYING OUT INSPECTION AND MAINTENANCE ---------- 2- 31
TWO WORKERS FOR MAINTENANCE WHEN ENGINE IS RUNNING ---------- 2- 32
PROPER TOOLS ---------- 2- 33
HANDLING SUSPENSION CYLINDER, ACCUMULATOR ---------- 2- 33
PERSONNEL ---------- 2- 33
WORK UNDER THE MACHINE ---------- 2- 33
NOISE ---------- 2- 33
PRECAUTIONS WHEN USING HAMMER ---------- 2- 34
REPAIR WELDING ---------- 2- 34
REMOVING BATTERY TERMINAL ---------- 2- 34
PRECAUTIONS WITH HIGH-PRESSURE OIL ---------- 2- 34
PRECAUTIONS FOR HIGH-PRESSURE FUEL ---------- 2- 34
HANDLING HIGH-PRESSURE HOSES, PIPING ---------- 2- 35
PRECAUTIONS FOR HIGH VOLTAGE ---------- 2- 35
WASTE MATERIALS ---------- 2- 35
MAINTENANCE OF AIR CONDITIONER ---------- 2- 35
COMPRESSED AIR ---------- 2- 35
PERIODIC REPLACEMENT OF SAFETY-CRITICAL PARTS ---------- 2- 36

PRECAUTIONS WITH TIRES ---------- 2- 37
HANDLING TIRES ---------- 2- 37
PRECAUTIONS WHEN STORING TIRE ---------- 2- 37

https://truckmanualshub.com/

SAFETY LABELS

The following warning signs and safety labels are used on this machine.

- Be sure that you fully understand the correct position and content of labels.
- To ensure that the content of labels can be read properly, be sure that they are in the correct place and always keep them clean. When cleaning them, do not use organic solvents or gasoline. These may cause the labels to peel off.
- There are also other labels in addition to the warning signs and safety labels. Handle those labels in the same way.
- If the labels are damaged, lost, or cannot be read properly, replace them with new ones. For details of the part numbers for the labels, see this manual or the actual label, and place an order with Komatsu distributor.

https://truckmanualshub.com/

POSITION FOR ATTACHING SAFETY LABELS

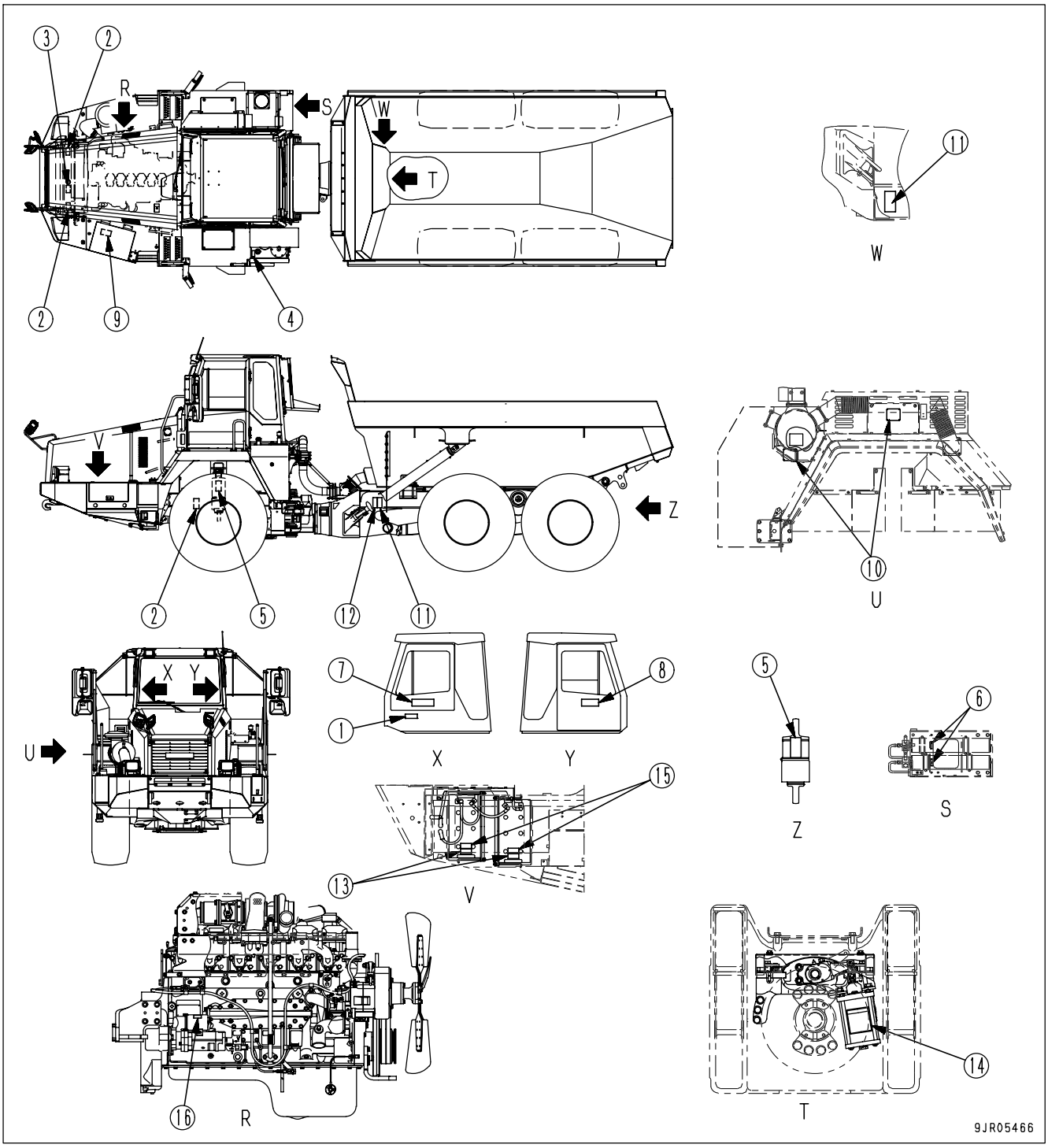

https://truckmanualshub.com/

SAFETY LABELS

(1) Caution for modification of ROPS/FOPS (09620-A2000)

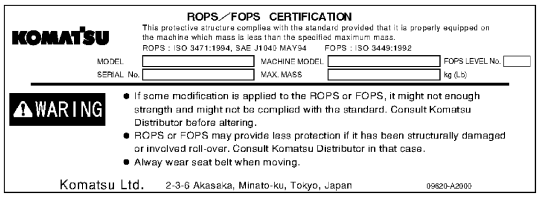

(2) Caution for checking engine room (09667-A0880)

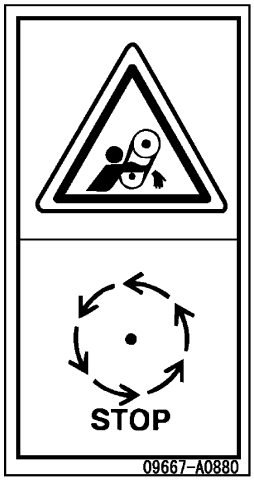

Sign indicates a hazard of rotating parts, such as belt.

Turn off before inspection and maintenance.

(3) Caution when releasing radiator cap (09653-A0641)

Sign indicates a burn hazard from spurting hot water or oil if radiator or hydraulic tank is uncapped while hot.

Allow radiator or hydraulic tank to cool before removing cap.

(4) Caution when releasing hydraulic tank cap (09653-A0641)

Sign indicates a burn hazard from spurting hot water or oil if radiator or hydraulic tank is uncapped while hot.

Allow radiator or hydraulic tank to cool before removing cap.

https://truckmanualshub.com/

(5) Caution when handling suspension (09659-A0641)

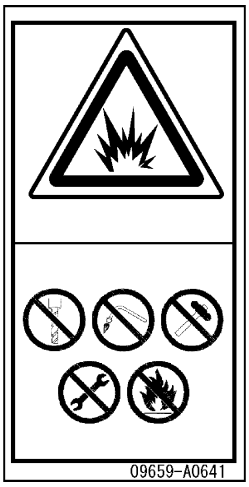

There is the hazard of explosion causing injury.

Do not disassemble the accumulator, make holes in it, weld it, cut it, hit it, roll it or bring it near flame.

(6) Caution for handling accumulator (09659-A057B)

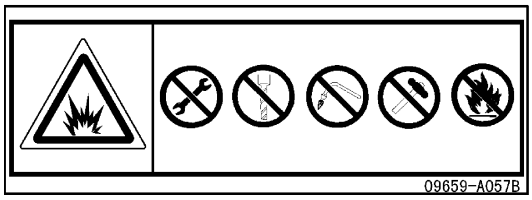

There is the hazard of explosion causing injury.

Do not disassemble the accumulator, make holes in it, weld it, cut it, hit it, roll it or bring it near flame.

(7) Warnings for electric wire
Warnings for crush hazard when inspection and maintenance
(56B-93-12980)

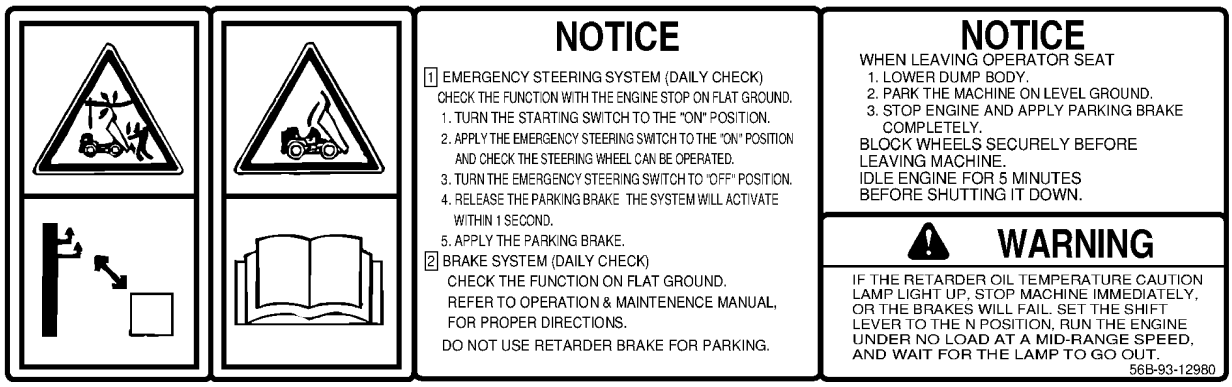

- If the machine comes too close to electric cables, there is danger of electrocution.
  Always keep a safe distance from electric cables.
- There is danger that the dump body may come down.
  Before carrying out inspection or maintenance with the dump body raised, always read the Operation and Maintenance Manual and take the correct action.

https://truckmanualshub.com/

(8) Cautions before starting
Cautions when traveling in reverse
(569-93-61720)

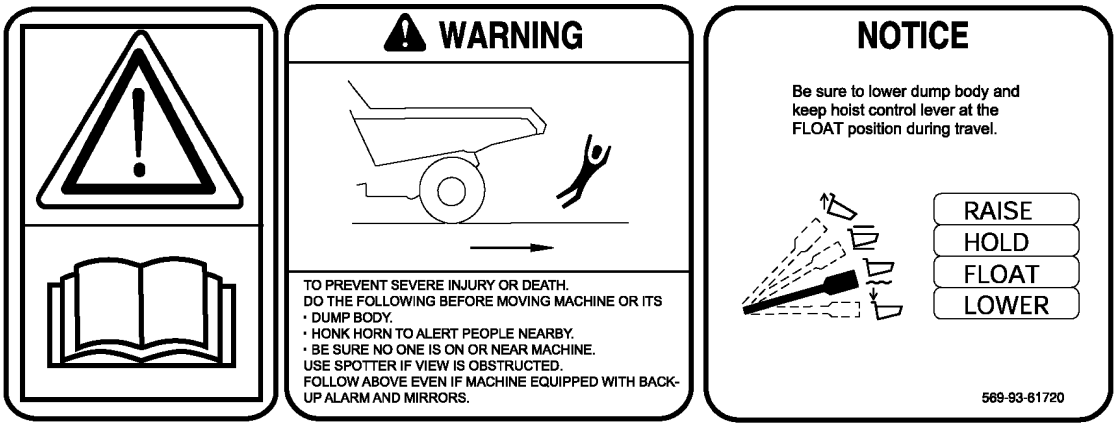

! WARNING
Always read the Operation and Maintenance Manual before carrying out operation, maintenance, disassembly, assembly, or transportation of the machine.

(9) Caution when handling battery cable (09808-A1681)

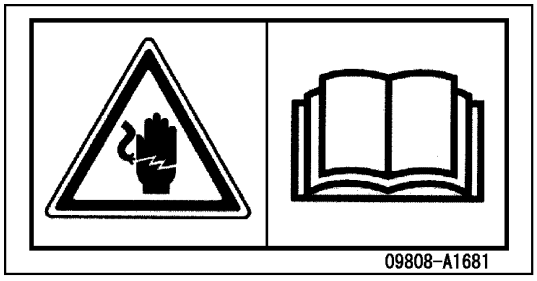

Sign indicates an electric hazard from handling the cable.

Read manual for safe and proper handling.

(10) Exhaust pipe is hot! (09817-A1103)

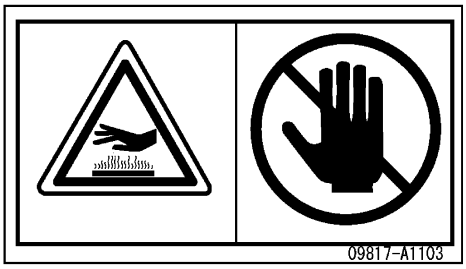

Sign indicates a burn hazard from touching heated parts, such as engine, motor, or muffler during or right after operation.

Never touch when hot.

https://truckmanualshub.com/

(11) Prohibited to enter (09162-C0881)

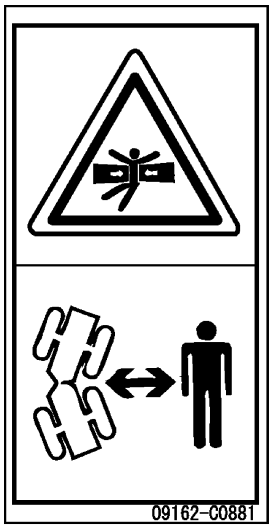

Sign indicates a crush hazard between the articulating parts of vehicle.

Keep away from the vehicle when it is moving.

(12) Cation for articulate lock (09161-C0881)

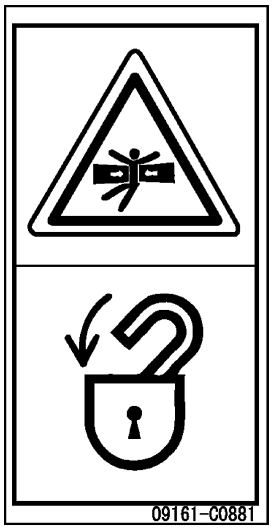

Sign indicates a crush hazard between the articulating parts of vehicle.

Lock vehicle with lock bar to avoid movement of the vehicle during maintenance, transportation and traveling.

(13)Precautions when handling battery

(The battery manufacturer sticks this caution plate on the battery.)

https://truckmanualshub.com/

(14) Caution for parking brake
(This plate is fixed in position by the chamber maker)

(15) Prohibited to jump start (09842-A0481)
(This plate is fixed to the starting motor)

Start the engine only after sitting down in the operator's seat.

Do not attempt to start the engine by short-circuiting the engine starting circuit. Such an act may cause a serious bodily injury or fire.

https://truckmanualshub.com/

GENERAL PRECAUTIONS

SAFETY RULES

- Only trained and authorized personnel can operate and maintain the machine.
- Follow all safety rules, precautions and instructions in this manual when operating or performing maintenance on the machine.
- If you are not feeling well, or if you are under the influence of alcohol or medication, your ability to safely operate or repair your machine may be severely impaired, putting yourself and everyone else on your job site in danger.
- When working with another operator or with the person on the worksite traffic duty, discuss the content of the operation beforehand and use the determined signals when carrying out the operation.

IF PROBLEMS ARE FOUND

If you find any problems in the machine during operation or maintenance (noise, vibration, smell, incorrect gauges, smoke, oil leakage, etc., or any abnormal display on the warning devices or monitor), report to the person in charge and have the necessary action taken. Do not operate the machine until the problem has been corrected.

CLOTHING AND PERSONAL PROTECTIVE ITEMS

- Do not wear loose clothing and accessories. There is a hazard that they may catch on dump lever or other protruding parts.
- If you have long hair and it hangs out from your hard hat, there is a hazard that it may get caught up in the machine, so tie your hair up and be careful not to let it get caught.
- Always wear a hard hat and safety shoes. If the nature of the work requires it, wear safety glasses, mask, gloves, ear plugs, and safety belt when operating or maintaining the machine.
- Check that all protective equipment functions properly before using it.

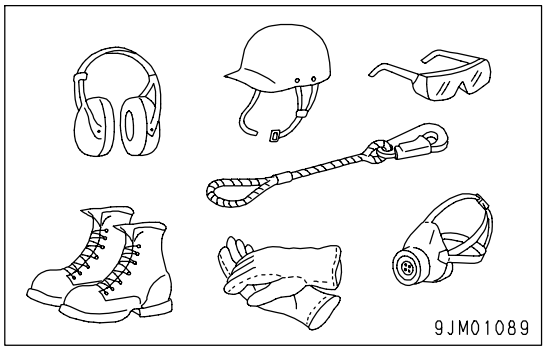

FIRE EXTINGUISHER AND FIRST AID KIT

Always follow the precautions below to prepare for action if any injury or fire should occur.

- Be sure that fire extinguishers have been provided and read the labels to ensure that you know how to use them in emergencies.
- Carry out periodic inspection and maintenance to ensure that the fire extinguisher can always be used.
- Provide a first aid kit in the storage point. Carry out periodic checks and add to the contents if necessary.

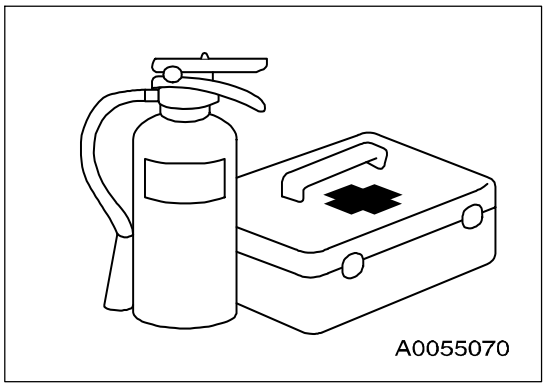

https://truckmanualshub.com/

SAFETY FEATURES

- Be sure that all guards, covers and mirrors are in their proper position. Have guards and covers repaired immediately if they are damaged.
- Understand the method of use of safety features and use them properly.
- Never remove any safety features. Always keep them in good operating condition.

KEEP MACHINE CLEAN

- If water gets into the electrical system, there is a hazard that it will cause malfunctions or misoperation. Do not use water or steam to wash the electrical system (sensors, connectors).
- If inspection and maintenance is carried out when the machine is still dirty with mud or oil, there is a hazard that you will slip and fall, or that dirt or mud will get into your eyes. Always keep the machine clean.

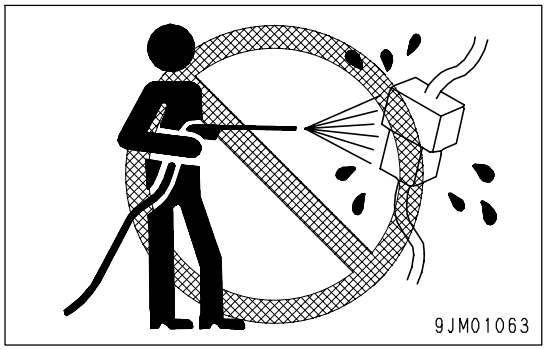

INSIDE OPERATOR'S COMPARTMENT

- When entering the operator's compartment, always remove all mud and oil from the soles of your shoes. If you operate the pedal with mud or oil affixed to your shoes, your foot may slip and this may cause a serious accident.
- Do not leave parts or tools lying around the operator's compartment.
- Do not stick suction pads to the window glass. Suction pads act as a lens and may cause fire.
- Do not use cellular telephones inside the operator's compartment when driving or operating the machine.
- Never bring any dangerous objects such as flammable or explosive items into the operator's compartment.

ALWAYS APPLY LOCK WHEN LEAVING OPERATOR'S SEAT

- Before adjusting or standing up from the operator's seat, always set shift lever (1) to the N position and parking brake switch (2) to the PARKING position, then stop the engine.
- If the gear shift lever or dump lever are touched by mistake, there is danger that the machine may suddenly move and cause serious personal injury or damage.
- When leaving the machine, always place shift lever (1) at neutral and set parking brake switch (2) to the PARKING position. Lower the dump body, set the dump lever to the HOLD position, and lock with the dump lever lock knob. Apply all the locks and always remember to take the key with you and keep it in the fixed place.

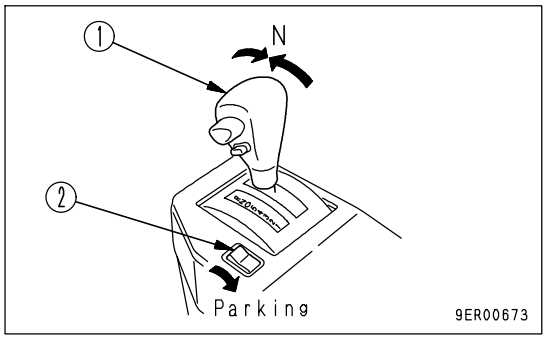

https://truckmanualshub.com/

HANDRAILS AND STEPS

To prevent personal injury caused by slipping or falling off the machine, always do as follows.

- Use the parts marked by arrows in the diagram when getting on or off the machine.
  A: For getting on or off machine using left door
  B: For getting on or off machine using right door

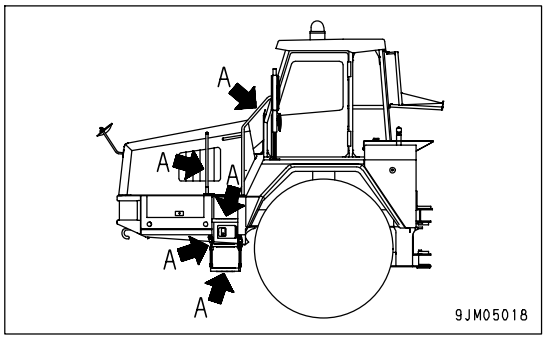

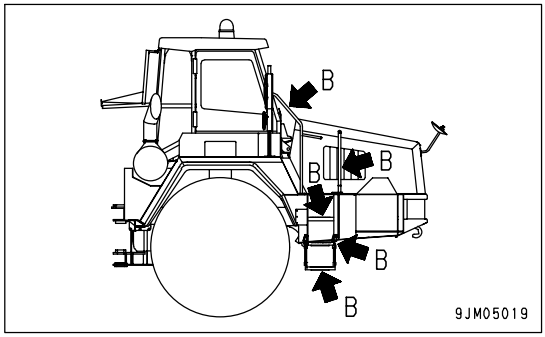

- To ensure safety, always face the machine and maintain three-point contact (both feet and one hand, or both hands and one foot) with the handrails and steps to ensure that you support yourself.
- Do not grip the dump lever when getting on or off the machine.
- Never climb on the engine hood or covers where there are no non-slip pads.
- Before getting on or off the machine, check the handrails and steps, and if there is any oil, grease, or mud on them, wipe it off immediately. In addition, repair any damage and tighten any loose bolts.
- Do not get on or off the machine while holding tools in your hand.

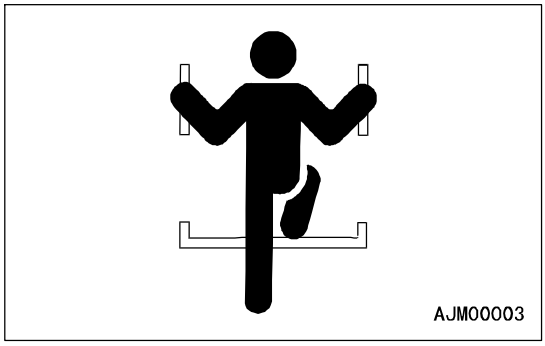

MOUNTING AND DISMOUNTING

- Never jump on or off the machine. Never get on or off a moving machine.
- If the machine starts to move when there is no operator on the machine, do not jump on to the machine and try to stop it.

CRUSHING OR CUTTING PREVENTION

- If the clearance at the articulating portion changes, it will lead to serious personal injury.
  Do not allow anyone to come inside the articulation range.
- The clearance in the area around the dump body changes according to the movement of the dump body. If you are caught, you will suffer serious injury. Do not allow anyone near any of the rotating or telescoping parts.

https://truckmanualshub.com/

PREVENTION OF BURNS

Hot coolant

- To prevent burns from hot water or steam spurting out when checking or draining the coolant, wait for the water to cool to a temperature where it is possible to touch the radiator cap by hand before starting the operation. Even when the coolant has cooled down, loosen the cap slowly to relieve the pressure inside the radiator before removing the cap.

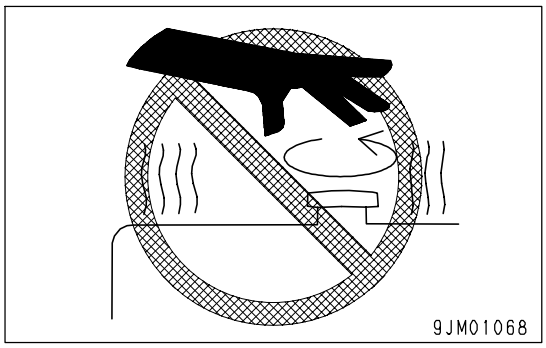

Hot oil

- To prevent burns from hot oil spurting out when checking or draining the oil, wait for the oil to cool to a temperature where it is possible to touch the cap or plug by hand before starting the operation. Even when the oil has cooled down, loosen the cap or plug slowly to relieve the internal pressure before removing the cap or plug.

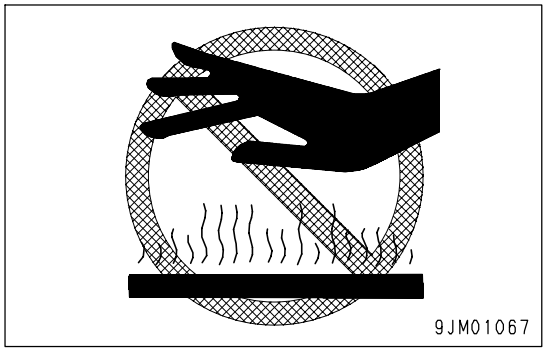

https://truckmanualshub.com/

FIRE PREVENTION

- **Fire caused by fuel or oil**

  Fuel, oil, antifreeze, and window washer liquid are particularly flammable and can be hazardous. To prevent fire, always observe the following:
  - Do not smoke or use any flame near fuel or oil.
  - Stop the engine before refueling.
  - Do not leave the machine while adding fuel or oil.
  - Tighten all fuel and oil caps securely.
  - Do not spill fuel on overheated surfaces or on parts of the electrical system.
  - Use well-ventilated areas for adding or storing oil and fuel.
  - Keep oil and fuel in the determined place and do not allow unauthorized persons to enter.
  - After adding fuel or oil, wipe up any spilled fuel or oil.
  - When carrying out grinding or welding work on the chassis, move any flammable materials to a safe place before starting.
  - When washing parts with oil, use a non-flammable oil. Diesel oil and gasoline may catch fire, so do not use them.
  - Put greasy rags and other flammable materials into a safe container to maintain safety at the work place.
  - Do not weld or use a cutting torch to cut any pipes or tubes that contain flammable liquids.

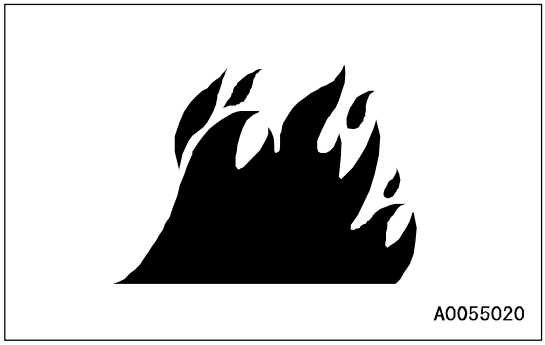

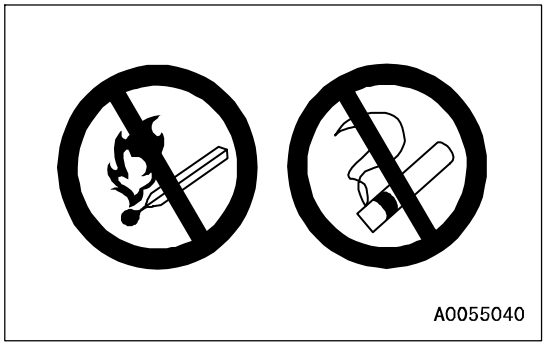

- **Fire caused by accumulation of flammable material.**

  Remove any dry leaves, chips, pieces of paper, dust, or any other flammable materials accumulated or affixed around the engine, exhaust manifold, muffler, or battery, or inside the undercovers.

- **Fire coming from electric wiring**

  Short circuits in the electrical system can cause fire.
  - Always keep electric wiring connections clean and securely tightened.
  - Check the wiring every day for looseness or damage. Tighten any loose connectors or wiring clamps. Repair or replace any damaged wiring.

- **Fire coming from hydraulic line**

  Check that all the hose and tube clamps, guards, and cushions are securely fixed in position.
  If they are loose, they may vibrate during operation and rub against other parts. This may lead to damage to the hoses, and cause high-pressure oil to spurt out, leading to fire damage or serious injury.

- **Explosion caused by lighting equipment**
  - When checking fuel, oil, battery electrolyte, window washer fluid, or coolant, always use lighting with anti-explosion specifications. If such lighting equipment is not used, there is danger of explosion that may cause serious injury.
  - When taking the electrical power for the lighting from the machine itself, follow the instructions in this manual.

ACTION IF FIRE OCCURS

If a fire occurs, escape from the machine as follows.
- Turn the start switch OFF to stop the engine.
- Use the handrails and steps to get off the machine.

https://truckmanualshub.com/

WINDOW WASHER LIQUID

Use an ethyl alcohol base washer liquid.

Methyl alcohol base washer liquid may irritate your eyes, so do not use it.

PRECAUTIONS WHEN USING ROPS (Roll Over Protective Structure)

The operator's cab has a ROPS structure. In addition to supporting of the load if the machine tips over, it also absorbs the impact energy and protects the operator. If the function of ROPS is reduced, it cannot protect the operator and he may be injured. Always do the following.

- Do not weld, drill holes, or make any other modification to the operator's cab structure.
- Repair or replace the operator's cab if it is deformed by falling objects or when the machine tips over. For details of repair, please consult your Komatsu distributor.

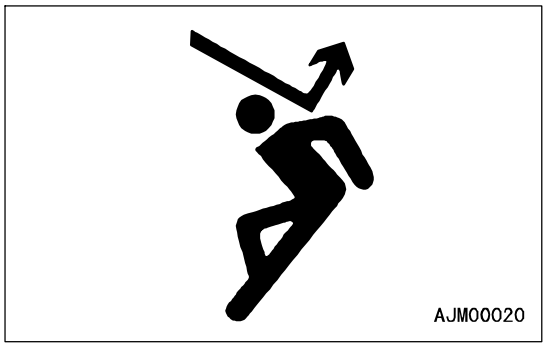

Even when the ROPS is installed, if you do not fasten your seat belt securely, it cannot protect you properly. Always fasten your seat belt when operating the machine.

PRECAUTIONS FOR ATTACHMENTS, OPTIONS

- When installing optional parts or attachments, there may be problems with safety or legal restrictions. Therefore contact your Komatsu distributor for advice.
- Any injuries, accidents, product failures or other property damages resulting from the use of unauthorized attachments or parts will not be the responsibility of Komatsu.
- Always read the instruction manual for the attachment.

UNAUTHORIZED MODIFICATION

If this machine is modified without permission from Komatsu, there is danger that problems may occur with safety and that this may lead to serious personal injury. Modifications may have an adverse effect on items such as machine strength and visibility. Before making any modifications, please consult your Komatsu distributor. Komatsu cannot take any responsibility for accidents, failures, or damage caused by modifications not authorized by Komatsu.

SAFETY AT WORKSITE

Before starting operations, thoroughly check the area for any unusual conditions that could be dangerous.

- Check the terrain and condition of the ground at the worksite, and determine the safest method of operation. Do not operate where there is a hazard of landslides or falling rocks.
- Take necessary measures to prevent any unauthorized person from entering the operating area.
- When traveling or operating in shallow water or on soft ground, check the shape and condition of the bedrock, and the depth and speed of flow of the water before starting operations.
- Always design and maintain the roads on the jobsite so that the machines can travel safely.

https://truckmanualshub.com/

WORKING ON LOOSE GROUND

- Avoid traveling or operating your machine too close to the edge of cliffs, overhangs, and deep ditches. The ground may be weak in such areas. If the ground should collapse under the weight or vibration of the machine, there is a hazard that the machine may fall or tip over. Remember that the soil after heavy rain or blasting or after earthquakes is weak in these areas.
- When working on embankments or near excavated ditches, there is a hazard that the weight and vibration of the machine will cause the soil to collapse. Before starting operations, take steps to ensure that the ground is safe and to prevent the machine from rolling over or falling.

DO NOT GO CLOSE TO HIGH-VOLTAGE CABLES

Do not travel or operate the machine near electric cables. There is a hazard of electric shock, which may cause serious personal injury or death. On jobsites where the machine may go close to electric cables, always do as follows.

- Before starting work near electric cables, inform the local power company of the work to be performed, and ask them to take the necessary action.

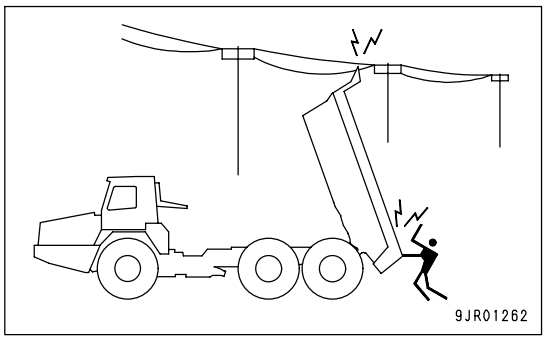

- Even going close to high-voltage cables can cause electric shock, which may cause serious burns or even death. Always maintain a safe distance (see the table on the right) between the machine and the electric cable. Check with the local power company about safe operating procedure before starting operations.
- To prepare for any possible emergencies, wear rubber shoes and gloves. Lay a rubber sheet on top of the seat, and be careful not to touch the chassis with any exposed part of your body.
- Use a signalman to give warning if the machine approaches too close to the electric cables.
- When carrying out operations near high voltage cables, do not let anyone near the machine.

Voltage of Cables	Safety Distance
100 V - 200 V	Over 2 m (7 ft)
6,600 V	Over 2 m (7 ft)
22,000 V	Over 3 m (10 ft)
66,000 V	Over 4 m (14 ft)
154,000 V	Over 5 m (17 ft)
187,000 V	Over 6 m (20 ft)
275,000 V	Over 7 m (23 ft)
500,000 V	Over 11 m (36 ft)

- If the machine should come too close or touch the electric cable, to prevent electric shock, the operator should not leave the operator's compartment until it has been confirmed that the electricity has been shut off.
  Also, do not let anyone near the machine.

https://truckmanualshub.com/

ENSURE GOOD VISIBILITY

This machine is equipped with mirrors to improve the visibility, but even with mirrors, there are places, which cannot be seen from the operator's seat, so always be careful when operating.

When operating or traveling in places with poor visibility, if it is impossible to confirm the condition of the job side or obstacle is in the area around the machine, there is danger that the machine may suffer damage or the operator may suffer serious personal injury. When operating or traveling in places with poor visibility, always observe the following items strictly.

- If the visibility cannot be sufficiently assured, position a flagman if necessary. The operator should pay careful attention to the signs and follow the instructions of the flagman.
- The signals should be given only by one flagman.
- When working in dark places, turn on the working lamps and front lamps of the machine, and if necessary, set up additional lighting in the area.
- Stop operations if there is poor visibility, such as in fog, snow, rain, or sand storms.
- Check the mirrors on the machine before starting operations every day. Clean off any dirt and adjust the view to ensure good visibility.
- In areas where it is impossible to confirm the area behind the machine and observation cameras have been set up, clean off any dirt from the lens and make sure that the camera gives a clear view of the rear.

PRECAUTIONS RELATED TO VENTILATION OF EXHAUST GAS

The engine exhaust gas contains substances that may damage your health or even cause death. Start or operate the engine in a place where there is good ventilation. If the engine or machine must be operated inside a building or under ground, where the ventilation is poor, take steps to ensure that the engine exhaust gas is removed and that ample fresh air is brought in.

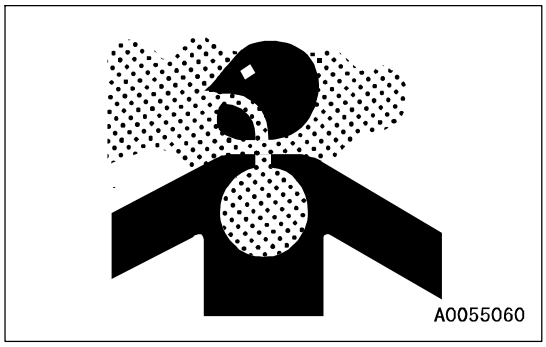

CHECKING SIGNALMAN'S SIGNALS AND SIGNS

- Set up signs to inform of road shoulders and soft ground. If the visibility is not good, position a signalman if necessary. Operators should pay careful attention to the signs and follow the instructions from the signalman.
- Only one signalman should give signals.
- Make sure that all workers understand the meaning of all signals and signs before starting work.

EMERGENCY ESCAPE FROM OPERATOR'S CAB

- The cab installed on this machine has doors on the left and right sides. If the door on one side does not open, escape through the door on the other side.

https://truckmanualshub.com/

ASBESTOS DUST HAZARD PREVENTION

Asbestos dust in the air can cause lung cancer if it is inhaled. There is danger of inhaling asbestos when working on jobsites handling demolition work or work handling industrial waste. Always observe the following.

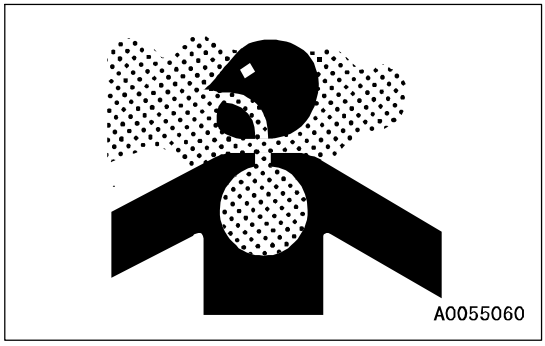

- Spray water to keep down the dust when cleaning. Do not use compressed air for cleaning.
- If there is danger that there may be asbestos dust in the air, always operate the machine from an upwind position. All workers should use an approved respirator.
- Do not allow other persons to approach during the operation.
- Always observe the rules and regulations for the work site and environmental standards.

This machine does not use asbestos, but there is a danger that imitation parts may contain asbestos, so always use genuine Komatsu parts.

https://truckmanualshub.com/

PRECAUTIONS DURING OPERATION

STARTING ENGINE

If there is a warning tag hanging from the shift lever, do not start the engine or touch the levers.

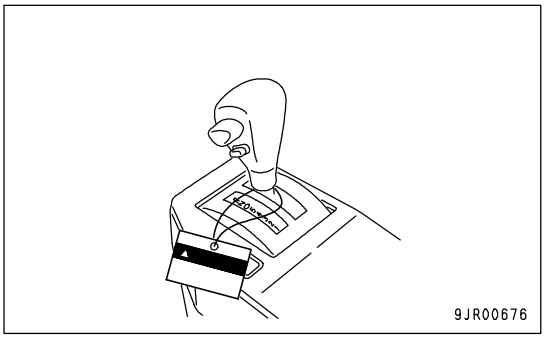

CHECKS BEFORE STARTING ENGINE, ADJUST

Carry out the following checks before starting the engine at the beginning of the day's work.

- Remove all dirt from the surface of the window glass to ensure a good view.
- Remove all dirt from the surface of the lens of the front lamps, working lamps, and rear combination lamp, and check that they light up correctly.
- Check the coolant level, fuel level, and oil level in engine oil pan, check for clogging of the air cleaner, and check for damage to the electric wiring.
- Check that there is no mud or dust accumulated around the movable parts of the accelerator pedal or brake pedal, and check that the pedals work properly.
- Adjust the operator's seat to a position where it is easy to carry out operations, and check that there is no damage or wear to the seat belt or mounting clamps.
- Check that the gauges and instruments work properly, check the angle of the mirror, and check that the gearshift lever is at neutral and the dump lever is at HOLD.
- Before starting the engine, make sure that the dump lever lock knob is in the LOCK position.
- Adjust the mirrors so that the rear of the machine can be seen clearly from the operator's seat.
  Refer to "WALK-AROUND CHECK (PAGE 3-70)".
- Check that there are no persons or obstacles above, below, or in the area around the machine.
- Check that the parking brake switch is in the PARKING position.

PRECAUTIONS WHEN STARTING

- Start and operate the machine only while seated.
- Do not attempt to start the engine by short-circuiting the engine starting circuit. Such an act may cause a serious bodily injury or fire.
- When starting the engine, sound the horn as a warning.
- If another person is allowed on the machine, that person may sit only in the assistant's seat.
- For machines equipped with a backup alarm, check that the warning device works properly.

https://truckmanualshub.com/

PRECAUTIONS IN COLD AREAS

- Carry out the warming-up operation thoroughly. If the machine is not thoroughly warmed up before the gear shift lever or dump lever are operated, the reaction of the machine will be slow or may change suddenly, and this may cause an accident.
- If the battery electrolyte is frozen, do not charge the battery or start the engine with a different power source. There is a hazard that this will ignite the battery and cause the battery to explode.
  Before charging or starting the engine with a different power source, melt the battery electrolyte and check that there is no leakage of electrolyte before starting.

https://truckmanualshub.com/

OPERATION

CHECKS BEFORE STARTING OPERATION

When carrying out the checks, move the machine to a wide area where there are no obstructions, and operate slowly. Do not allow anyone near the machine.

- Always fasten your seat belt.
- Check the operation of the steering, travel, and brake systems.
- Check for any problem in the sound of the machine, vibration, heat, smell, or gauges; check also that there is no leakage of oil or fuel.
- If any problem is found, carry out repairs immediately.
- Before traveling or carrying out operations, check that articulation lock (1) is securely at the FREE position.

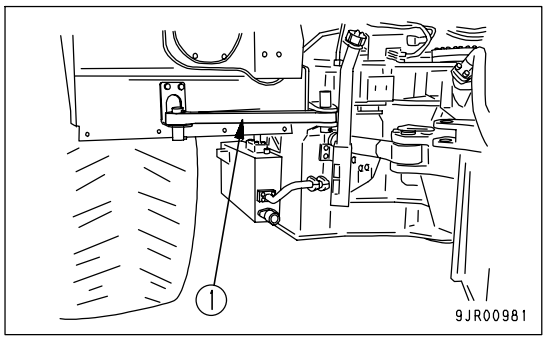

PRECAUTIONS WHEN TRAVELING IN FORWARD OR REVERSE

- Before travelling, check again that there is no one in the surrounding area, and that there are no obstacles.
- Before travelling, sound the horn to warn people in the area.
- Always operate the machine only when seated.
- If another person is allowed on the machine, that person may sit only in the assistant's seat.
- Check that the backup alarm (backup warning buzzer) works properly.
- Always close the door and the window of the operator's compartment and check that the door lock is applied.
- If there is an area to the rear of the machine which cannot be seen, position a signal person. Take special care not to hit other machines or people when turning or swinging the machine.

Always be sure to carry out the above precautions even when the machine is equipped with mirrors.

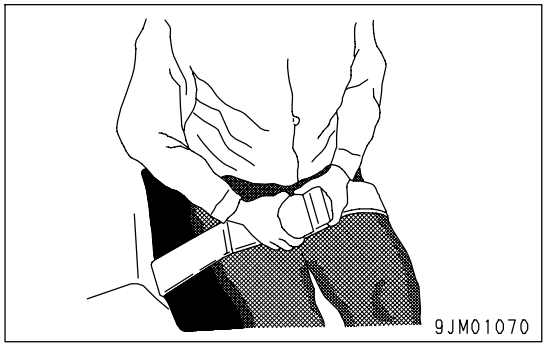

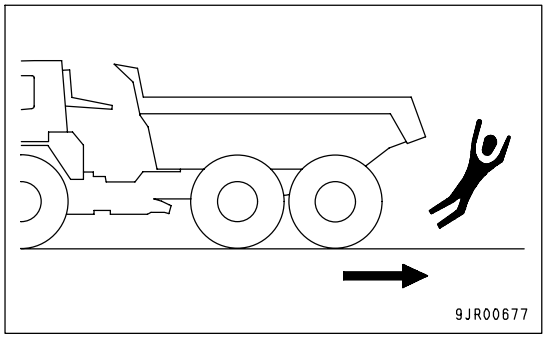

https://truckmanualshub.com/

PRECAUTIONS WHEN TRAVELING

- Do not load the dump body above the maximum payload. The brakes will lose their effect.
- Never turn the starting switch to the OFF position. It is dangerous if the engine stops when the machine is traveling, because the steering becomes heavy.
- Lower the dump body, setting the dump lever at FLOAT position, then travel.
- Never transport anyone riding on the body or carry out any other operation besides the main use for the machine. This is dangerous.
- When traveling on rough ground, travel at low speed and avoid sudden changes in direction to prevent the machine from turning over.
- When traveling or carrying out operations, always keep a safe distance from people, structures, or other machines to avoid coming into contact with them.
- When passing over bridges or structures, check first that the structure is strong enough to support the weight of the machine.
- When operating in tunnels, inside buildings, or under bridges or electric wires, or other places where the height is limited, operate slowly and be extremely careful not to let the machine or dump body contact anything.
- Continuous long time traveling at high speed may cause tires to heat up, abnormally increasing the inflation pressure inside the tires, and to blow up. The explosion of the tire is very destructive, and it can lead to serious injury or death.
- Contact with your Komatsu distributor before doing long continuous traveling.
- Do not move the gear shift lever to the N position when the machine is traveling or when it is traveling down a slope. Always place the transmission in gear before traveling.
  - If the transmission is in Neutral, the engine cannot provide any braking effect and the steering wheel will become heavier. In addition, there will be lack of cooling oil for the retarder, so there is danger that it will overheat or that the actuation of the brake will be poor.
  - There may also be damage to the transmission or other parts of the power train, and there is danger of unexpected accidents.

PRECAUTIONS WHEN TRAVELING ON SLOPES

To prevent the machine from tipping over or slipping to the side, always do as follows.

- When traveling downhill, use the retarder brake to reduce speed. Do not turn the steering wheel suddenly.
- Travel on grass, fallen leaves, or wet steel plates with low speed. Even with slight slopes there is a hazard that the machine may slip.
- If the engine should stop on a slope, apply the brakes fully and apply the parking brake also to stop the machine.
- Do not shift gear while traveling downhill or travel downhill with the transmission in neutral.
  It is dangerous if the engine has no braking effect. Always set the transmission to a lower gear before starting to travel downhill.

https://truckmanualshub.com/

PRECAUTIONS WHEN OPERATING DUMP BODY

- Before starting the dumping operation, check to be sure there is no person or object behind the machine.
- Stop the machine in the correct position, and check again that there is no person or object behind the machine. Give the determined signal, then slowly operate the dump body.
  If necessary, use blocks for the wheels or position a flagman.
- Do not carry out dumping operations on slopes. The machine stability will become poor and there is the danger that it could tip over.
- Do not travel with the body raised.
- Do not leave or return to the operator's seat during loading work.
- When carrying out dumping operations, set the machine facing straight forward. If dumping operations are carried out with the machine articulated, the stability of the machine will be reduced and there is danger that it may tip over.
- When the dump body is raised, the center of gravity of the machine moves continuously. At this time, if the ground is soft, the stability of the machine changes. Take care.
- Take care particularly when dumping sticky material (wet clay, frozen material, etc.) on a soft ground. The stability of the machine is reduced and there is danger that it may tip over.

PRECAUTIONS WHEN OPERATING

- When using the machine, to prevent the machine from overturning due to overloading and to avoid damage to the dump body, do not exceed the performance or maximum load specified for the machine structure.
- When operating in tunnels, or under bridges or electric wires, or in other places where the height is limited, operate slowly and be extremely careful not to let the dump body contact anything.
- To prevent accidents caused by hitting other objects, always operate the machine at a speed which is safe for operation, particular in confined spaces, indoors, and in places where there are other machines.

PRECAUTIONS FOR ACCUMULATED SNOW, ICE

- Snow-covered or frozen surfaces are slippery, so be extremely careful when traveling or operating the machine, and do not operate the levers suddenly. Even a slight slope may cause the machine to slip, so be particularly careful when working on slopes.
- With frozen ground surfaces, the ground becomes soft when the temperature rises, and this may cause the machine to tip over or make it impossible for the machine to escape.
- If the machine enters deep snow, there is a hazard that it may tip over or become buried in the snow. Be careful not to leave the road shoulder or to get trapped in a snow drift.
- When traveling on snow-covered roads, always fit tire chains.
- When traveling on snow-covered roads, never use the foot brake to make sudden stops. Shift down to use the engine brake and carry out double braking (depress the brake pedal several times) to stop the machine.
- When the loaded materials in the dump body are frozen, do not dump. There is a danger that the machine could tip over.

https://truckmanualshub.com/

PARKING MACHINE

- Park the machine on firm, level ground.
- Select a place where there is no hazard of landslides, falling rocks, or flooding.

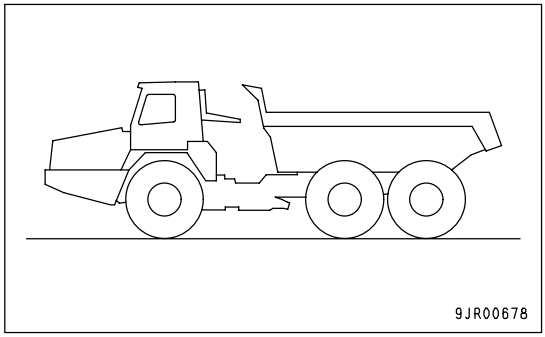

- When leaving the machine, always place shift lever (1) at neutral and set parking brake switch (2) to the PARKING position. Lower the dump body, set the dump lever to the HOLD position, lock with the dump lever lock knob, then stop the engine.
- Always close the operator's cab door, and use the key to lock all the equipment in order to prevent any unauthorized person from moving the machine. Always remove the key, take it with you, and leave it in the specified place.
- If it is necessary to park the machine on a slope, set blocks under the wheels to prevent the machine from moving.

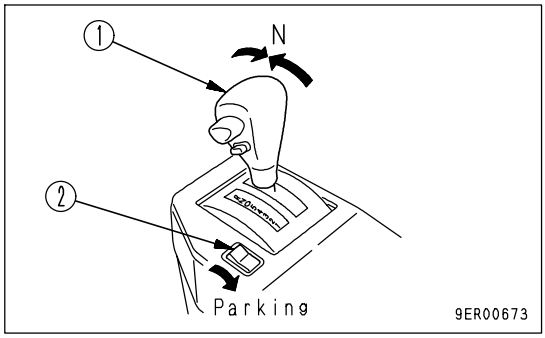

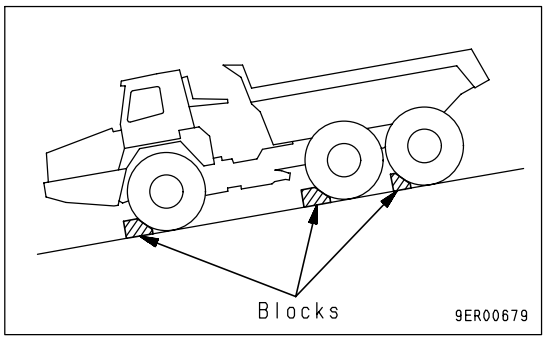

https://truckmanualshub.com/

TRANSPORTATION

This machine must be disassembled for transportation. When transporting the machine, please consult your Komatsu distributor.

LOADING AND UNLOADING

When loading or unloading the machine, mistaken operation may bring the hazard of the machine tipping over or falling, so particular care is necessary. Always do as follows.

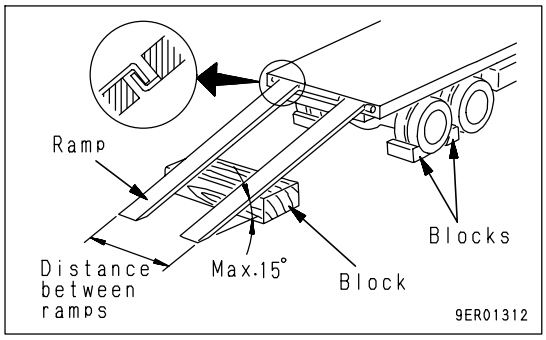

- Perform loading and unloading on firm, level ground only. Maintain a safe distance from the edge of the road or cliff.
- Always use ramps of adequate strength. Be sure that the ramps are wide, long, and thick enough to provide a safe loading slope. Take suitable steps to prevent the ramps from moving out of position or coming off.
- Be sure the ramp surface is clean and free of grease, oil, ice and loose materials. Remove dirt from machine-tracks. On a rainy day, in particular, be extremely careful since the ramp surface is slippery.
- Run the engine at low speed, drive the machine at low speed, and operate slowly.
- Never correct your steering on the ramps. If necessary, drive off the ramps, correct the direction, then enter the ramps again.
- When loading or unloading to an embankment or platform, make sure that it has suitable width, strength, and grade.
- After loading the machine, always lock the door. There is danger that the door may open during transportation. For details, see "TRANSPORTATION (PAGE 3-115)".

SHIPPING

When shipping the machine on a trailer, do as follows.

- The weight, transportation height, and overall length of the machine differ according to the attachment, so be sure to confirm the dimensions.
- When passing over bridges or structures on private land, check first that the structure is strong enough to support the weight of the machine. When traveling on public roads, check first with the relevant authorities and follow their instructions.
- Lock the articulation lock to prevent the machine from articulating.
- For details of the transportation procedure, see "TRANSPORTATION (PAGE 3-115)" in the Operation Section.

https://truckmanualshub.com/

BATTERY

BATTERY HAZARD PREVENTION

Battery electrolyte contains sulphuric acid, and batteries generate flammable hydrogen gas, which may explode. Mistaken handling can lead to serious injury or fire. For this reason, always observe the following precautions.

- Do not use or charge the battery if the battery electrolyte level is below the LOWER LEVEL line. This may cause an explosion. Check the battery electrolyte level periodically and add distilled water to bring the electrolyte level to the UPPER LEVEL line.
- When working with batteries, always wear safety glasses and rubber gloves.
- Never smoke or use any flame near the battery.

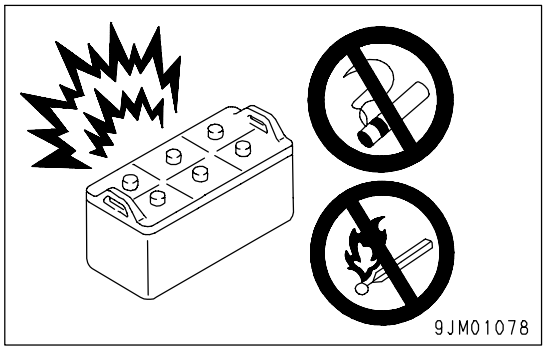

- If you spill acid on your clothes or skin, immediately flush the area with large amount of water.
- If acid gets into your eyes, flush them immediately with large amount of water and seek medical attention.

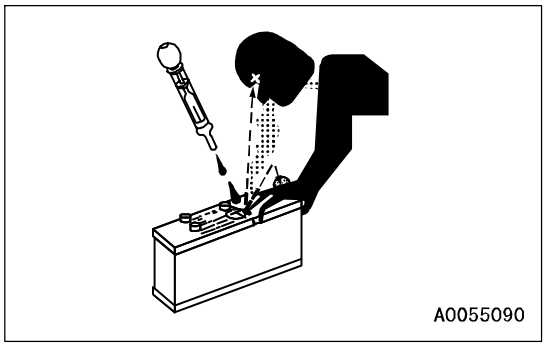

- Before working with batteries, turn the starting switch to the OFF position.

As there is a hazard that sparks will be generated, always do as follows.

- Do not let tools or other metal objects make any contact between the battery terminals. Do not leave tools or other metal objects lying around near the battery.
- Always disconnect the negative (-) terminal (ground side) first when removing the battery; when installing the battery, connect the positive (+) terminal first, and connect the ground last. Tighten the battery terminals securely.
- Flammable hydrogen gas is generated when the battery is charged, so remove the battery from the chassis, take it to a well-ventilated place, and remove the battery caps before charging it.
- Tighten the battery caps securely.
- Install the battery securely to the determined place.

https://truckmanualshub.com/

STARTING WITH BOOSTER CABLES

If any mistake is made in the method of connecting the booster cables, it may cause the battery to explode, so always do as follows.

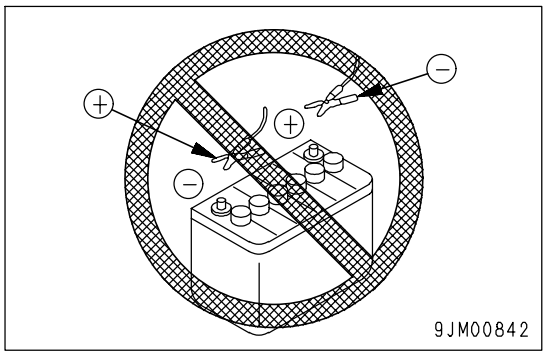

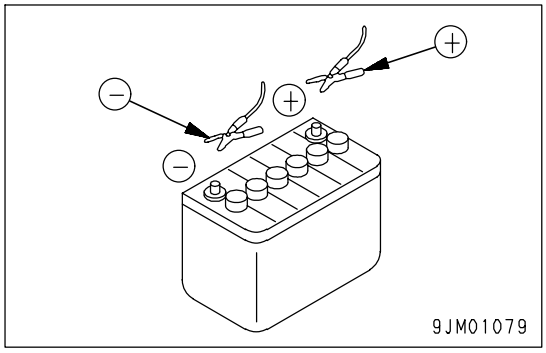

- When starting with a booster cable, carry out the starting operation with two workers (one worker sitting in the operator's seat and the other working with the battery).
- When starting from another machine, do not allow the two machines to touch.
- When connecting the booster cables, turn the starting switch OFF position for both the normal machine and problem machine. There is a hazard that the machine will move when the power is connected.
- Be sure to connect the positive (+) cable first when installing the booster cables. Disconnect the negative (-) cable (ground side) first when removing them.
- When removing the booster cables, be careful not to let the booster cable clips touch each other or to let the clips touch the machine.
- Always wear safety glasses and rubber gloves when starting the engine with booster cables.
- When connecting a normal machine to a problem machine with booster cables, always use a normal machine with the same battery voltage as the problem machine.
- For details of the starting procedure when using booster cables, see "STARTING ENGINE WITH BOOSTER CABLE (PAGE 3-133)" in the OPERATION section.

https://truckmanualshub.com/

TOWING

WHEN TOWING

When towing or being towed, mistakes in the method of selecting and inspecting the wire rope or drawbar, or in the method of towing may lead to serious personal injury.

For details of the procedure for towing, see the "METHOD OF TOWING MACHINE (PAGE 3-127)"

- Always confirm that the wire rope or drawbar used for towing has ample strength for the weight of the machine being towed.
- Never use a wire rope which has cut strands (A), reduced diameter (B), or kinks (C). There is danger that the rope may break during the towing operation.
- Always wear leather gloves when handling wire rope.
- Never tow a machine on a slope.
- During the towing operation, never stand between the towing machine and the machine being towed.

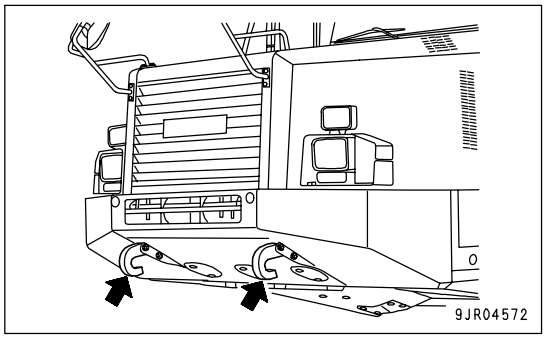

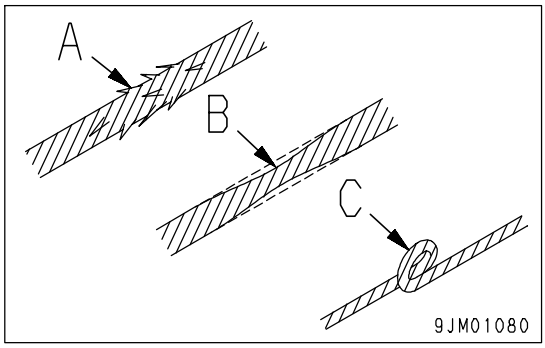

https://truckmanualshub.com/

PRECAUTIONS FOR MAINTENANCE

WARNING TAG

- Attach the DO NOT OPERATE warning tag to shift lever in the operator's cab during the inspection and maintenance. Attach additional warning tags around the machine if necessary.
  Warning tag Part No. 09963-03001
  Keep the warning tag in the tool box when it is not used. If the tool box is unavailable, keep it in the case for operation manual.
- If any person other than the serviceman starts the engine, or touches or operates the gear shift lever or dump lever while the serviceman is carrying out service or maintenance of the machine, it may lead to serious injury.

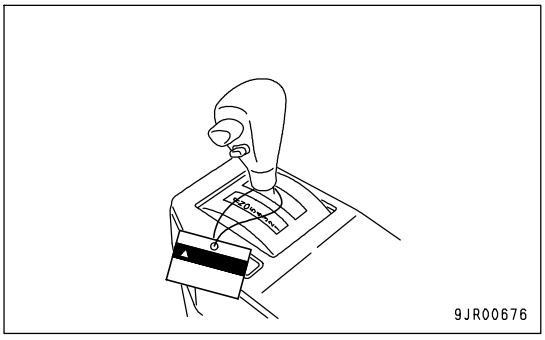

KEEP WORK PLACE CLEAN AND TIDY

- Do not leave hammers or other tools lying around in the work place. Wipe up all grease, oil, or other substances that will cause you to slip. Always keep the work place clean and tidy to enable you to carry out operations safely. If the work place is not kept claen and tidy, there is the danger that you will trip, slip, or fall over and injure yourself.

APPOINT LEADER WHEN WORKING WITH OTHERS

- When repairing the machine or when removing and installing the attachment, appoint a leader and follow his instructions during the operation.
  When working with others, misunderstandings between workers can lead to serious accidents.

https://truckmanualshub.com/

STOP ENGINE BEFORE CARRYING OUT INSPECTION AND MAINTENANCE

- Stop the machine on firm, level ground.
- Select a place where there is no hazard of landslides, falling rocks, or flooding.

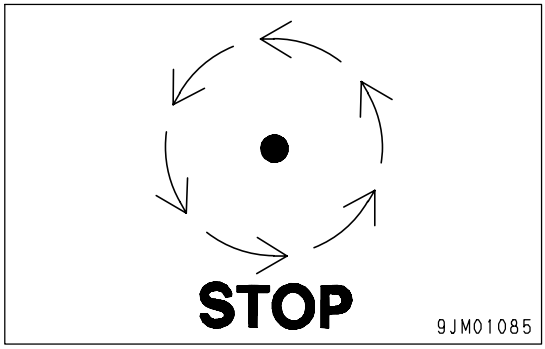

- Lower the dump body, set dump lever (1) to the HOLD position, lock with dump lever lock knob (2), then stop the engine.

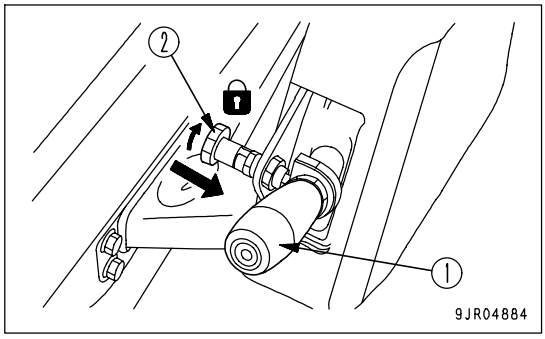

- Set parking brake switch to the PARKING position and put blocks (3) under the tires to prevent the machine from moving.

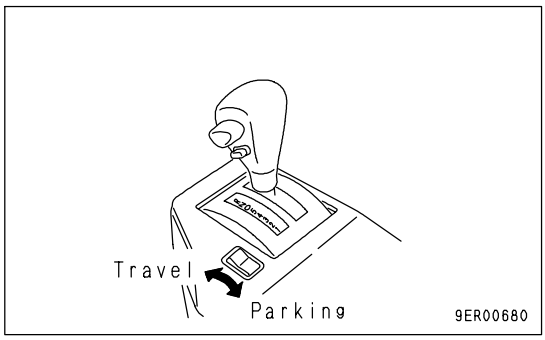

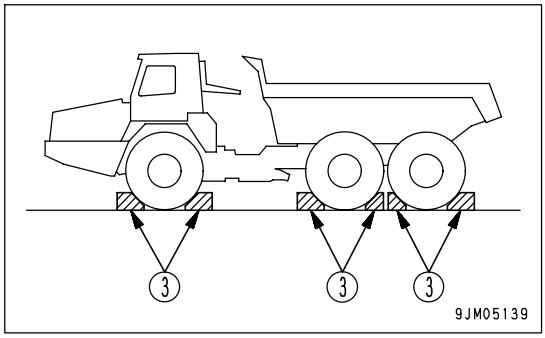

https://truckmanualshub.com/

- Lock with articulation lock (4) so that the machine that does not articulate.

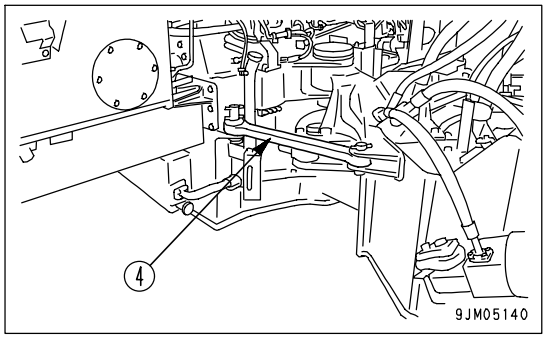

TWO WORKERS FOR MAINTENANCE WHEN ENGINE IS RUNNING

To prevent personal injury, do not carry out maintenance with the engine running. If maintenance must be carried out with the engine running, carry out the operation with at least two workers and do as follows.

- One worker must always sit in the operator's seat and be ready to stop the engine at any time. All workers must maintain contact with the other workers.
- Set dump lever (1) to the HOLD position, lock with dump lever lock knob (2), then set parking brake switch (3) to the PARKING position.

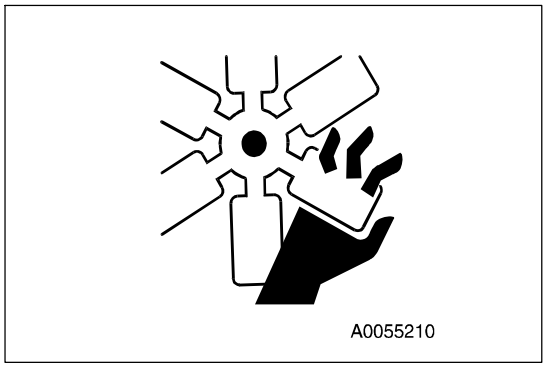

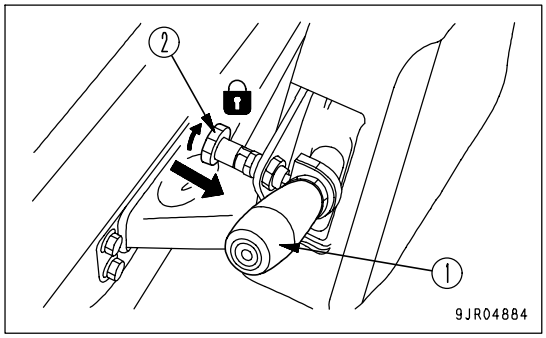

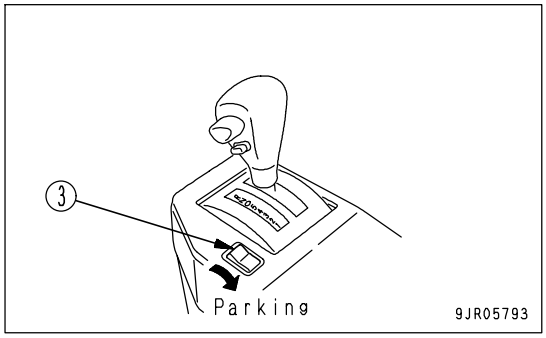

- When carrying out operations near the fan, fan belt, or other rotating parts, there is a hazard of being caught in the parts, so be careful not to come close.
- Do not touch the gear shift lever or dump lever. If the gear shift lever or dump lever must be operated, give a signal to the other workers to warn them to move to a safe place.
- Never drop or insert tools or other objects into the fan or fan belt. Parts may break or be sent flying.

https://truckmanualshub.com/

PROPER TOOLS

Use only tools suited to the task and be sure to use the tools correctly. Using damaged, low quality, faulty, makeshift tools or improper use of the tools could cause serious personal injury.

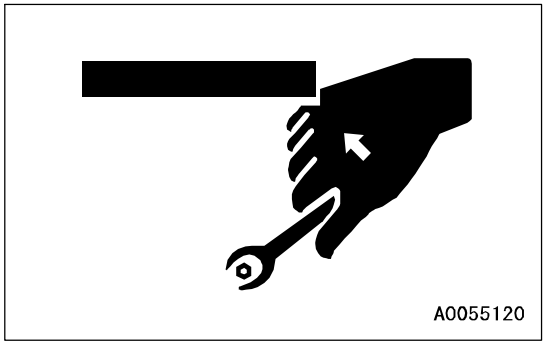

HANDLING SUSPENSION CYLINDER, ACCUMULATOR

The suspension cylinders and accumulator are charged with high-pressure nitrogen gas. If any mistake is made in handling, it may cause serious personal injury. To prevent this, always follow the procedure below.

- Do not remove or disassemble the cylinder.
- Do not bring it near flame or dispose of it in fire.
- Do not make holes in it, weld it, or use a cutting torch.
- Do not bear any shock by hammering, rolling or similar activity.
- Ask for your Komatsu distributor when sealing gas into the cylinder or releasing gas from it.

PERSONNEL

Do not allow any unauthorized personnel into the area when servicing the machine. If necessary, employ a guard.

WORK UNDER THE MACHINE

- If it is necessary to go under the machine when it is raised in order to carry out service or maintenance, support the machine securely with blocks and stands strong enough to support the weight of the machine.
- When carrying out inspection of the machine with the dump body raised, always set the dump lever to the HOLD position, lock with the dump lever lock knob, then use the body pivot pin. For details of using the body pivot pin, see "BODY PIVOT PIN (PAGE 3-45)".

NOISE

When carrying out maintenance of the engine and you are exposed to noise for long periods of time, wear ear covers or ear plugs while working.

If the noise from the machine is too loud, it may cause temporary or permanent hearing problems.

https://truckmanualshub.com/

PRECAUTIONS WHEN USING HAMMER

When using a hammer, pins may fly out or metal particles may be scattered. This may lead to serious injury. Always do as follows.

- If hard metal parts such as pins, and bearings are hit with a hammer, there is danger that small pieces will fly off; this may lead to seious injury. Wear protective glasses, hard hat, and other protective equipment.
- If pins are hit with a hammer, there is a hazard that the metal particles may fly out and injure people in the surrounding area. Always make sure that no-one is in the surrounding area before using the hammer.
- There is a hazard that the pin hit with strong force may fly out and injure people in the surrounding area.

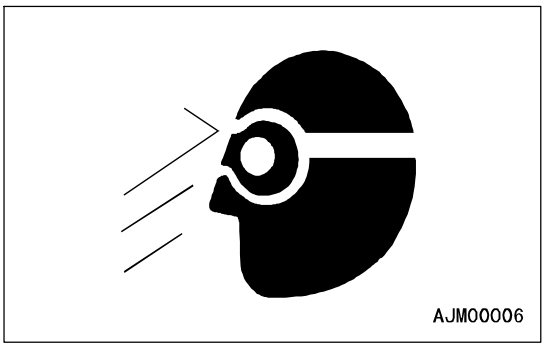

REPAIR WELDING

Welding operations must always be carried out by a qualified welder and in a place equipped with proper equipment. There is a hazard of gas, fire, or electrocution when carrying out welding, so never allow any unqualified personnel to carry out welding.

REMOVING BATTERY TERMINAL

When repairing the electrical system or when carrying out electrical welding, remove the negative (-) terminal of the battery to prevent the flow of current.

PRECAUTIONS WITH HIGH-PRESSURE OIL

The hydraulic system is always under internal pressure. When inspecting or replacing piping or hoses, always check that the pressure in the hydraulic circuit has been released. If the circuit is still under pressure, it will lead to serious personal injury, so always do as follows.

- For details of the method of releasing the pressure: see the section on "INSPECTION AND ADJUSTMENT". Do not carry out any inspection or replacement operation before the pressure has been completely removed.
- If there is any leakage from the piping or hoses, the surrounding area will be wet, so check for cracks in the piping and hoses and for swelling in the hoses.
  When carry out inspection, wear safety glasses and leather gloves.
- There is a hazard that high-pressure oil leaking from small holes may penetrate your skin or cause blindness if it contacts your eyes directly. If you are hit by a jet of high-pressure oil and suffer injury to your skin or eyes, wash the place with clean water, and consult a doctor immediately for medical attention.

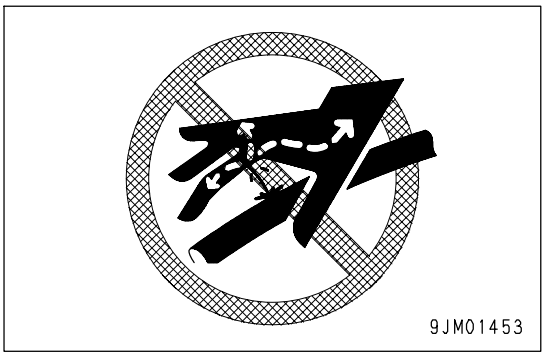

PRECAUTIONS FOR HIGH-PRESSURE FUEL

When the engine is running, high-pressure is generated in the engine fuel piping. When carrying out inspection or maintenance of the fuel piping system, stop the engine and wait for at least 30 seconds to allow the internal pressure to go down before starting the operation.

https://truckmanualshub.com/

HANDLING HIGH-PRESSURE HOSES, PIPING

- If oil or fuel leaks from high-pressure hoses, it may cause fire or defective operation, which may lead to serious injury. If any loose bolts are found, stop work and tighten to the specified torque. If any damaged hoses are found, stop operations immediately and contact your Komatsu distributor.

Replace the hose if any of the following problems are found.

- Damaged or leaking hydraulic fitting.
- Frayed or cut covering or exposed reinforcement wire layer.
- Covering swollen in places.
- Twisted or crushed movable portion.
- Foreign material embedded in covering.

PRECAUTIONS FOR HIGH VOLTAGE

When the engine is running or immediately after it has stopped, high voltage is generated at the injector terminal and inside the engine controller, so there is danger of electrocution. Never touch the injector terminal or the inside of the engine controller.
If it is necessary to touch the injector terminal or the inside of the engine controller, please contact your Komatsu distributor.

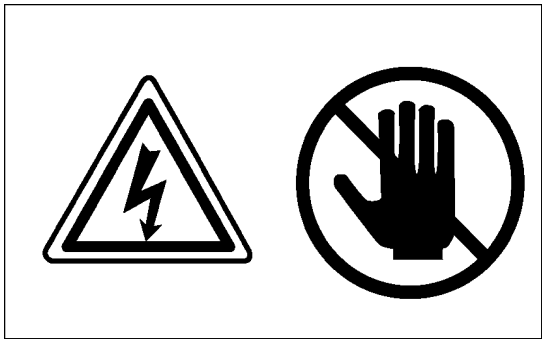

WASTE MATERIALS

To prevent pollution, pay careful attention to the method of disposing of waste materials.

- Always put oil drained from your machine in containers. Never drain oil directly onto the ground or dump into the sewage system, rivers, the sea, or lakes.
- Obey appropriate laws and regulations when disposing of harmful objects such as oil, fuel, coolant, solvent, filters, and batteries.

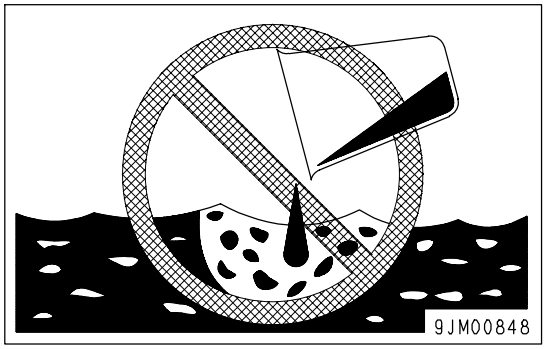

MAINTENANCE OF AIR CONDITIONER

If air conditioner refrigerant gets into your eyes, it may cause blindness; if it touches your skin, it may cause frostbite. Never touch refrigerant.

COMPRESSED AIR

- When carrying out cleaning with compressed air, there is a hazard of serious injury caused by flying particles.
- When using compressed air to clean elements or the radiator, always wear safety glasses, dust mask, gloves, and other protective equipment.

https://truckmanualshub.com/

PERIODIC REPLACEMENT OF SAFETY-CRITICAL PARTS

- In order for the machine to be operated safely for a long time, it is necessary to add oil and to carry out service and maintenance at periodic intervals. In order to further increase safety, components with a strong relationship to safety, such as hoses and seat belts, must be replaced at periodic intervals.
  Replacement of safety-critical parts: See "PERIODIC REPLACEMENT OF SAFETY CRITICAL PARTS (PAGE 4-15)".
- The material of these components naturally changes over time, and repeated use causes deterioration, wear, and fatigue. As a result, there is a hazard that these components may fail and cause serious injury or death. It is difficult to judge the remaining life of these components from external inspection or the feeling when operating, so always replace them at the specified interval.
- Replace or repair safety-critical parts if any defect is found, even when they have not reached the specified replacement time.

https://truckmanualshub.com/

PRECAUTIONS WITH TIRES

HANDLING TIRES

If tires or rims are handled mistakenly, there is danger that the tire may explode or be damaged, or that the rim may fly off and cause serious personal injury or death.

To maintain safety, always do as follows.

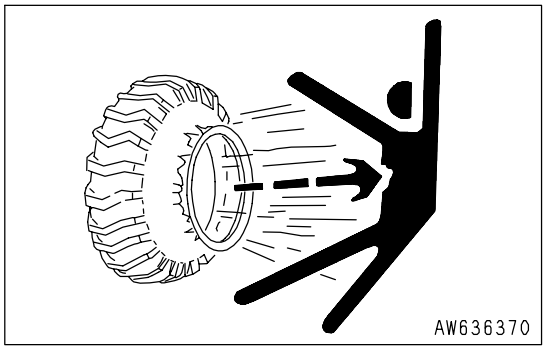

- Maintenance, disassembly, repair, and assembly of the tires and rims requires special equipment and special technology, so always ask your Komatsu distributor to carry out these operations.
- Use only the specified tires and inflate them to the specified pressure.
  Suitable inflation pressure: see "SELECTION AND INSPECTION OF TIRES (PAGE 4-35)".

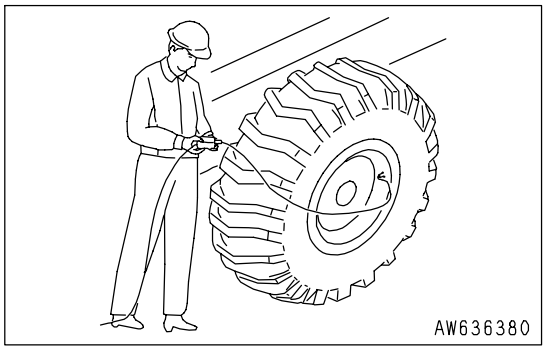

- When pumping up the tires, check that no other person is standing near the tire, and install an air chuck with a clip that can be secured to the air valve.
  To prevent the tire inflation pressure from becoming too high, measure the pressure from time to time with an air gauge while pumping up the tire.
- If the tire pressure goes down abnormally or the rim parts do not fit the tire, there is a problem with the tire or rim parts. Always contact your Komatsu distributor for repairs.
- If the rim parts are not fitted properly when the tire is being pumped up, there is danger that the rim parts may fly off, so set up a protective fence around the tire, and do not stand directly in front of the rim. Stand beside the tread when pumping up the tire.
- Do not adjust the tire inflation pressure immediately after traveling at high speed or carrying out operations under heavy load.
- Never carry out welding or light a fire near the tire.

PRECAUTIONS WHEN STORING TIRE

Tires for construction equipment are extremely heavy, so trying to hold the tire may lead to serious injury.

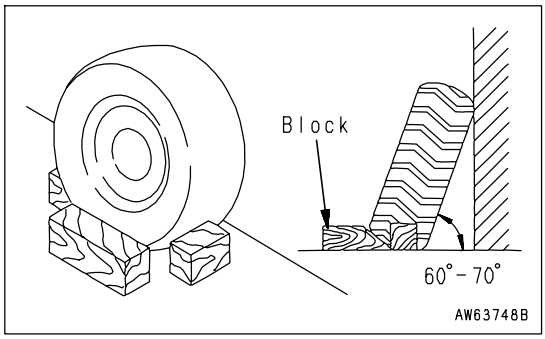

- As a basic rule, store the tires in a warehouse which unauthorized persons cannot enter.
  If the tires must be stored outside, always erect a fence and put up "No Entry" signs.
- Stand the tire on level ground, and block it securely so that it cannot roll or fall over if any person should touch it.
  Do not lay the tire on its side. This will deform the tire and cause it to deteriorate.
- If the tire should fall over, do not attempt to stop it. Get out of the way quickly.

https://truckmanualshub.com/

https://truckmanualshub.com/

OPERATION

⚠ WARNING

Please read and make sure that you understand the SAFETY section before reading this section.

https://truckmanualshub.com/

GENERAL VIEW

GENERAL VIEW OF MACHINE

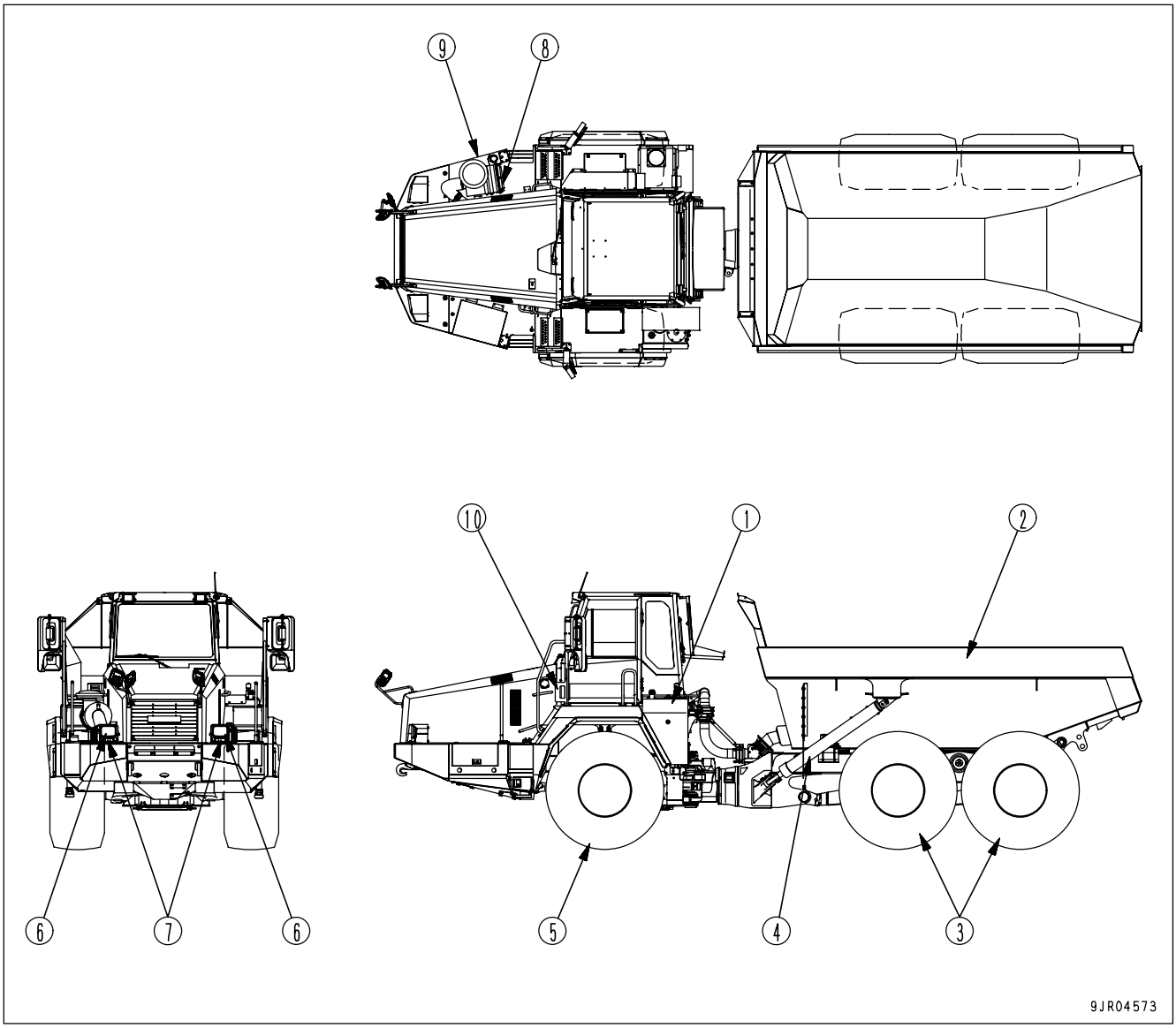

(1) Hydraulic tank
(2) Dump body
(3) Rear wheel
(4) Hoist cylinder
(5) Front wheel
(6) Turn signal lamp
(7) Head lamp
(8) Air cleaner
(9) Fuel tank
(10) Fire extinguisher (if equipped)

https://truckmanualshub.com/

GENERAL VIEW OF CONTROLS AND GAUGES

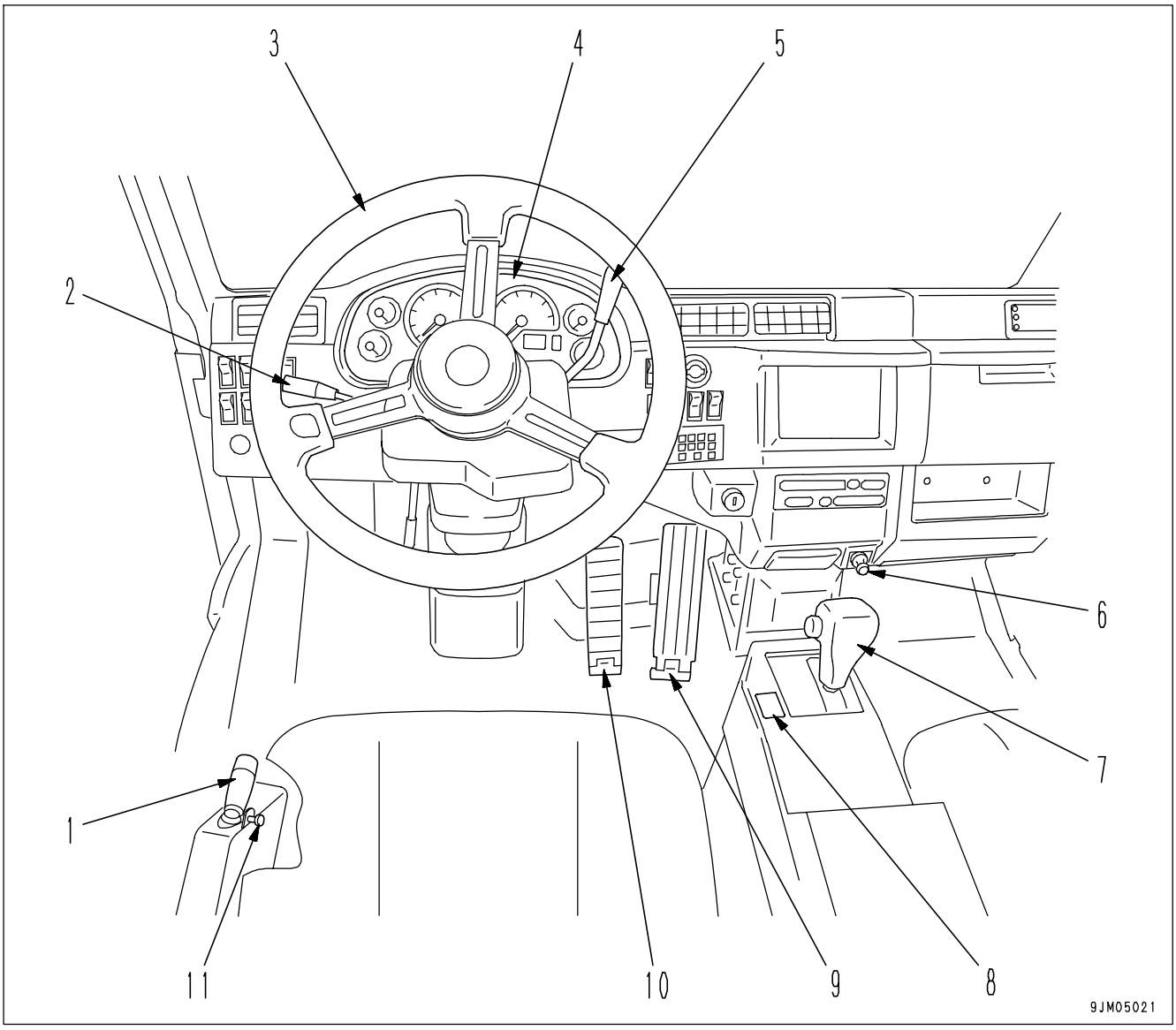

(1) Dump lever
(2) Lamp switch, Turn signal lever, Dimmer switch
(3) Steering wheel
(4) Machine monitor
(5) Retarder control lever
(6) Cigarette lighter
(7) Shift lever
(8) Parking brake switch
(9) Accelerator pedal
(10) Brake pedal
(11) Dump lever lock knob

https://truckmanualshub.com/

- Enlargement of machine monitor

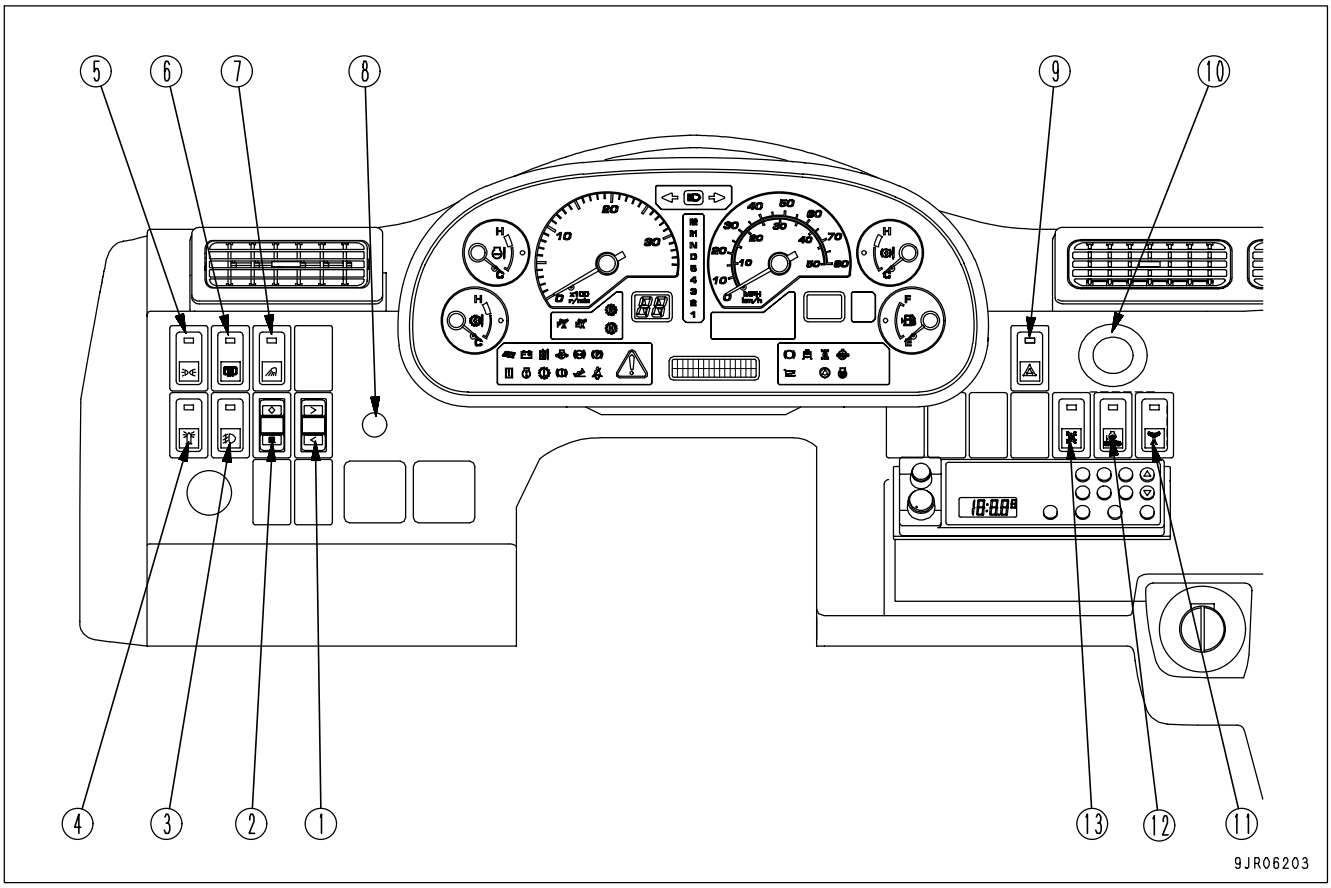

(1) Machine monitor mode selector switch 2
(2) Machine monitor mode selector switch 1
(3) Fog lamp switch (if equipped)
(4) Yellow rotating lamp switch (if equipped)
(5) Side lamp switch (if equipped)
(6) Switch for rear window glass with heated wire
(7) Working lamp (front) switch
(8) Night lighting dimmer switch
(9) Hazard lamp switch
(10) Emergency steering switch
(11) Power mode selector switch
(12) AISS LOW switch
(13) Inter-axle differential lock switch

https://truckmanualshub.com/

EXPLANATION OF COMPONENTS

The following is an explanation of devices needed for operating the machine.
To perform suitable operations correctly and safely, it is important to completely understand methods of operating the equipment, and the meanings of the displays.

MACHINE MONITOR

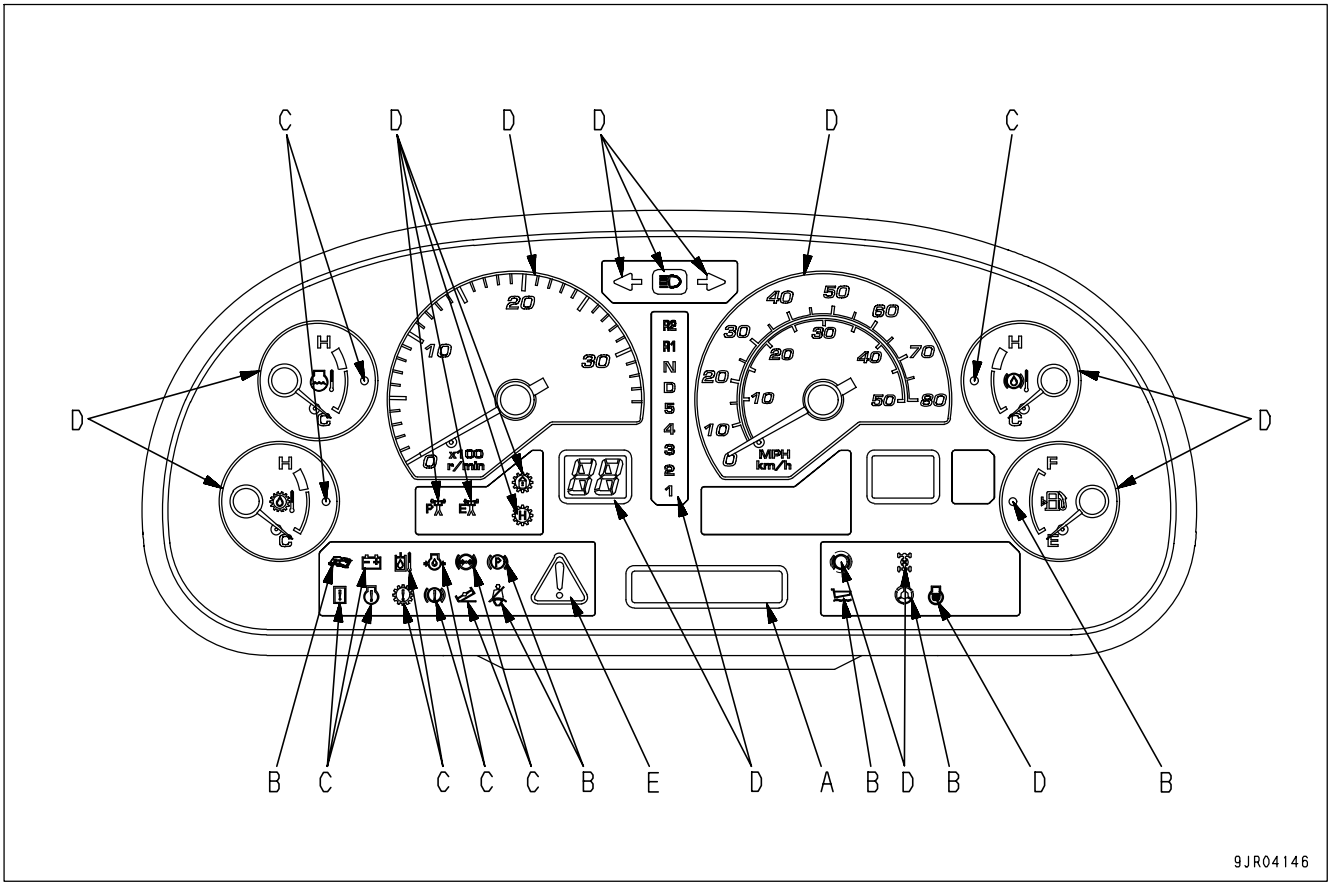

A: Character display
B: Caution items
C: Emergency stop item
D: Meter display portion
E: Central warning lamp

NOTICE

When the engine starting switch is turned to the ON position before starting the engine, a system check is carried out for 3 seconds.

- **The central warning lamp lights up for 2 seconds, and then goes out.**
- **The alarm buzzer sounds for 2 seconds, and then stops.**
- **The monitor lamp lights up for 2 seconds and then goes out for 1 second.**
- **The shift indicator displays 88 for 2 seconds and then goes out for 1 second.**
- **After a 3-second system check, the meter starts to function.**
- **The character display shows "KOMATSU" for 3 seconds.**
- **If the lamps do not work, there is probably a failure or disconnection, so please contact your Komatsu distributor for inspection.**
- **When the starting switch is turned ON, if the shift lever is not at the neutral position, after completion of the system check, the shift lever position pilot lamp and the central warning lamp will light up, and the alarm buzzer will continue to sound intermittently. When this happens, if the shift lever is set at neutral, N is displayed, the central warning lamp goes out, and the buzzer stops.**

https://truckmanualshub.com/

Check central warning lamp, alarm buzzer, monitor lamps, and meters.
Before starting the engine, set the starting switch in the ON position and check that the machine monitor operates as follows.

- The central warning lamp lights up for 2 seconds, then goes off.
- The alarm buzzer sounds for 2 seconds, then stops.
- The monitor lamps light up for 2 seconds, then go off for 1 second.
- The gearshift indicator displays "88" for 2 seconds, then goes off for 1 second.
- The meters start the operations after the system is checked for 3 seconds.
- The character display displays "KOMATSU" for 3 seconds.

If the machine monitor does not operate as explained above, there is probably a failure, so please contact your Komatsu distributor for inspection.

https://truckmanualshub.com/

CHARACTER DISPLAY

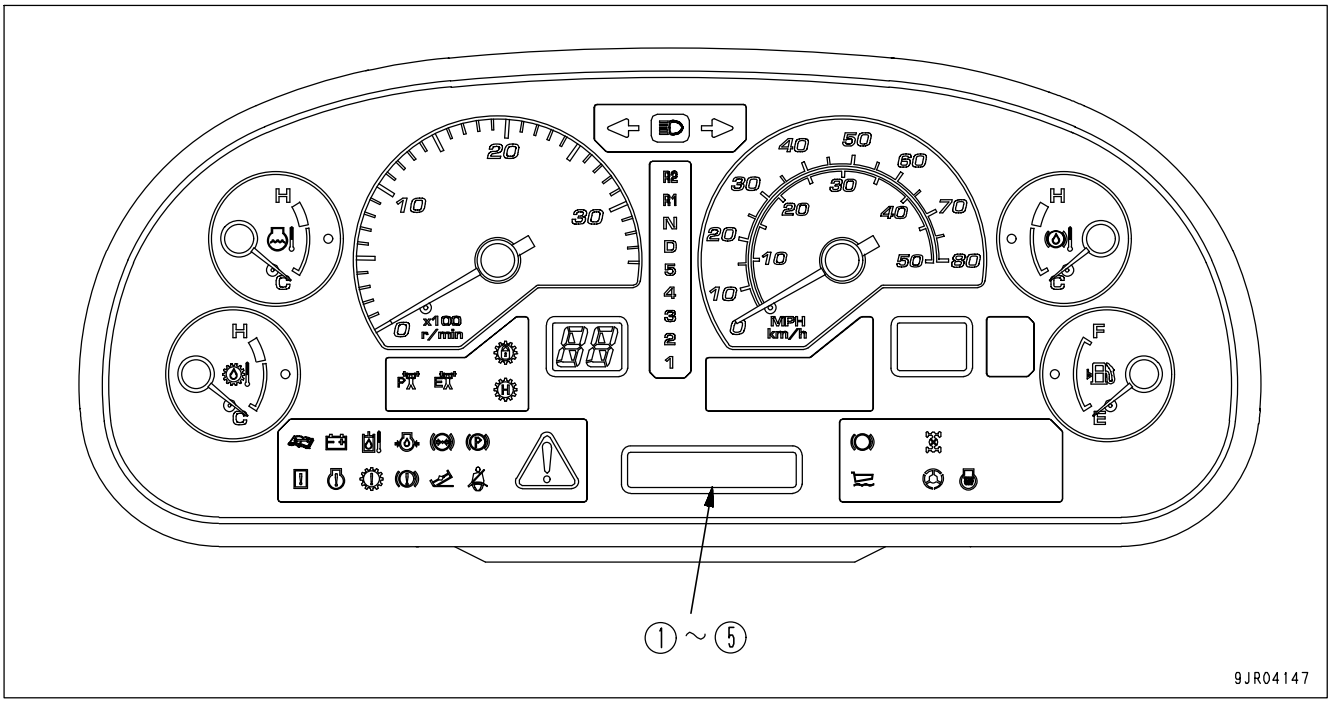

The character display can display the following items.

(1) Service meter
(2) Odometer
(3) Reverse travel odometer
(4) Action code display
(5) Filter, oil replacement time display

Normally, the service meter/odometer is displayed on the character display.
If the machine has failed, or if there has been excessive load on the machine, or if it is necessary to carry out inspection and maintenance, an action code is displayed to recommend suitable action.
When the time for replacing the filter or changing the oil is reached, after completion of the system check with the starting switch at the ON position, the maintenance monitor caution lamps flash or light up, and at the same time, the filter or oil to be replaced is displayed.

NOTICE

Information regarding the failure of the machine or maintenance is displayed on the character display when the starting switch is at the ON position, check the display to confirm that there is no problem before starting to travel.

https://truckmanualshub.com/

SERVICE METER

This meter (1) shows the total time that the machine has been operating.

While the engine is running, the service meter advances even if the machine is not moving.

The meter advances by 1 for every hour of operation, regardless of the engine speed.

Even if the starting switch is at the OFF position, the service meter will display as long as the top part (◇) of machine monitor mode selector switch 1 is being pressed.

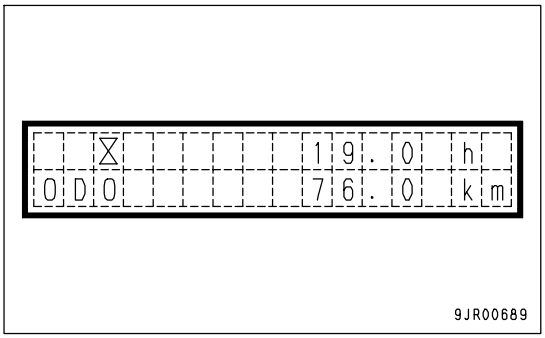

NOTICE

When the starting switch is at the OFF position, if the service meter is displayed even though the top (◇) of machine monitor mode selector switch 1 is not being pressed, there is probably a failure in the machine, so please contact your Komatsu distributor for inspection.

ODOMETER

This meter (2) indicates the total distance traveled in kilometers.

Even when the starting switch is at the OFF position, while the top (◇) of machine monitor mode selector switch 1 is being pressed, it indicates the total distance traveled.

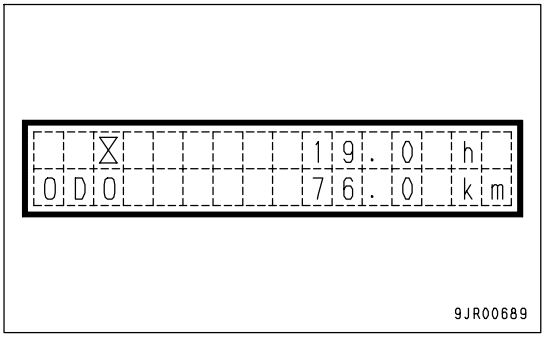

NOTICE

When the starting switch is at the OFF position, if the total distance is displayed even although the top (◇) of machine monitor mode selector switch 1 is not being pressed, there is probably a failure in the machine, so please contact your Komatsu distributor for inspection.

REVERSE TRAVEL ODOMETER

This meter (3) indicates the total distance traveled in reverse in kilometers.

For details of the method of displaying the total distance traveled in reverse, see "OTHER FUNCTIONS OF MACHINE MONITOR (PAGE 3-26)".

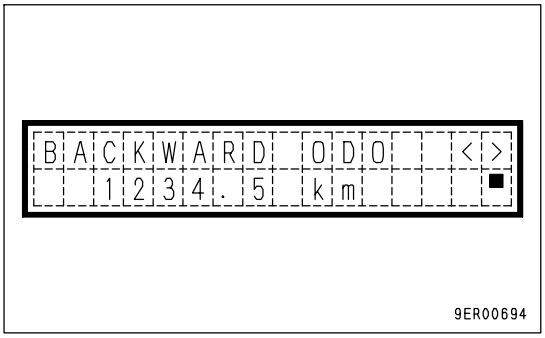

https://truckmanualshub.com/

ACTION CODE DISPLAY

CAUTION

If action code E03 is displayed, stop the machine immediately. Then see "ACTION CODE (PAGE 3-140)" and contact your Komatsu distributor for repairs.

If the machine has failed, or if there has been excessive load on the machine, or if it is necessary to carry out inspection and maintenance, an action code is displayed on this panel (4) to recommend suitable action.
If more than one failure occurs at the same time, the most important action code is displayed. The order of importance, starting from the highest, is E03, E02, and E01. If failures of equal importance occur at the same time, the latest one is displayed.
When action codes E02 or E03 occur, the alarm buzzer sounds intermittently and the central warning lamp lights up.

E03: When this code is displayed, stop the machine immediately, check the failure code, and contact your Komatsu distributor for repairs.

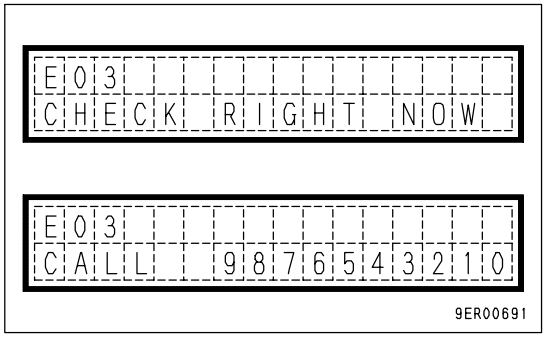

REMARK

- The top line of the character display displays "E03" and the bottom line displays "CHECK RIGHT NOW" and "CALL" in turn for 3 seconds each.
- The telephone number is displayed on the right of the "CALL" display. If the telephone number has not been set, there is a blank. For details of the method of setting the telephone number, see "INPUT METHOD FOR TELEPHONE NUMBER (PAGE 3-28)".

E02: If overrun related information is displayed, reduce the engine speed and the speed of the machine while continuing operations.
If the overheat related display is given, stop the machine and run the engine under no load at a mid-range speed.
If an action code is still displayed after doing this, check the failure code and contact your Komatsu distributor for repairs.

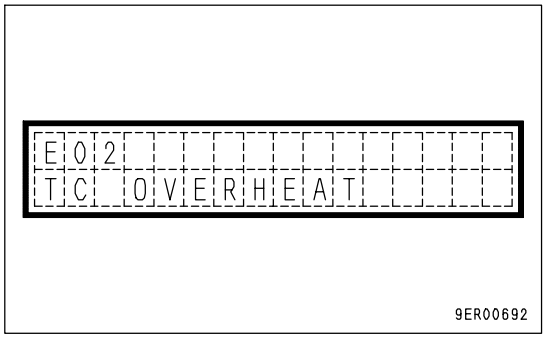

REMARK
The top line of the character display displays "E02" and the bottom line displays the condition of the machine related to overrun or overheat.

https://truckmanualshub.com/

E01: If maintenance location is displayed and the maintenance caution lamp lights up, carry out inspection and maintenance of the displayed item after the completion of operations or when the shift changes.
If "MAINTENANCE" is displayed together with E01, check the failure code and contact your Komatsu distributor for repairs.

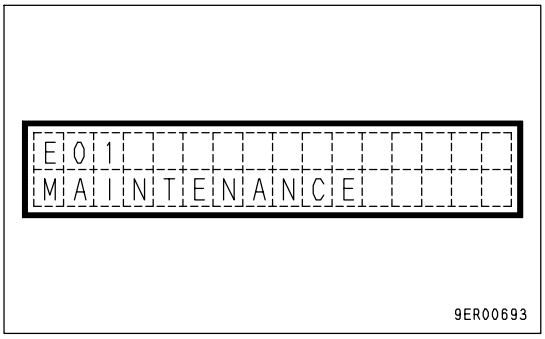

REMARK
"E01" is displayed on the top line of the character display and "MAINTENANCE" or the part of the machine requiring inspection, filling of fluid, or replacement is displayed on the bottom line.

FILTER, OIL REPLACEMENT TIME DISPLAY
After completion of the system check, this display (5) shows for 30 seconds the filters and oil which are near the replacement interval. The maintenance caution lamp also flashes or lights up at the same time.
After replacing the filter or changing the oil, reset the replacement interval. For details, see "RESET METHOD FOR FILTER, OIL REPLACEMENT TIME (PAGE 3-27)".

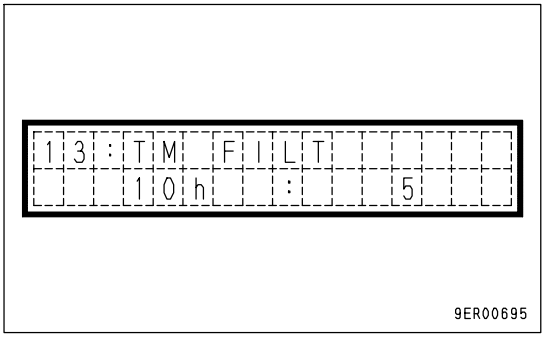

REMARK
- The top line of the character display shows the name and ID number of the item needing replacement. The line at the bottom shows the remaining time until replacement and the total number of times the item has been replaced.
- After giving the display for 30 seconds, the display does not appear again until the starting switch is turned again to the ON position.
- If the action code is being displayed, the message in the diagram above is not displayed on the character display.
- If there two or more items to be displayed, they are displayed every three seconds.
- If there are more than 10 items to be displayed, all the items are displayed once each.
- The display is given when the time reaches 30 hours before the filter and oil replacement interval.
- When the replacement interval approaches, the maintenance caution lamp flashes, and if the replacement interval has passed, the lamp lights up.

https://truckmanualshub.com/

Items for display of filter, oil replacement time

Item	Replacement interval	Character display	ID number
Fuel prefilter	500	FUEL P FILT	41
Engine oil filter	500	ENG FILT	02
Engine oil	500	ENG OIL	01
Fuel main filter	1000	FUEL FILT	03
Corrosion resistor	1000	CORR RES	06
Transmission oil	1000	TM OIL	12
Transmission oil filter	1000	TM FILT	13
Brake oil filter	1000	BK OIL FILT	14
Brake cooling oil filter	1000	BK C FILT	16
Hydraulic filter	2000	HYD FILT	04
Differential case oil	2000	DIFF OIL	11
Final drive oil	2000	FNL OIL	08
Hydraulic oil	4000	HYD OIL	10

REMARK

See the section below for details of the procedure for replacing the filter and oil.

- Fuel prefilter
  "REPLACE FUEL PREFILTER CARTRIDGE (PAGE 4-54)"
- Engine oil filter
  "CHANGE OIL IN ENGINE OIL PAN, REPLACE ENGINE OIL FILTER CARTRIDGE (PAGE 4-53)"
- Engine oil
  "CHANGE OIL IN ENGINE OIL PAN, REPLACE ENGINE OIL FILTER CARTRIDGE (PAGE 4-53)"
- Fuel main filter
  "REPLACE FUEL MAIN FILTER CARTRIDGE (PAGE 4-60)"
- Corrosion resistor
  "REPLACE CORROSION RESISTOR CARTRIDGE (PAGE 4-61)"
- Transmission oil
  "CHANGE OIL IN TRANSMISSION CASE (PAGE 4-63)"
- Transmission oil filter
  "REPLACE TRANSMISSION OIL FILTER ELEMENT - VALVE SIDE (PAGE 4-62)"
- Brake oil filter
  "CHANGE OIL IN BRAKE OIL TANK, REPLACE BRAKE OIL FILTER ELEMENT (PAGE 4-65)"
- Brake cooling oil filter
  "REPLACE TRANSMISSION OIL FILTER ELEMENT - BRAKE COOLING SIDE (PAGE 4-62)"
- Hydraulic filter
  "REPLACE HYDRAULIC FILTER ELEMENT (PAGE 4-73)"
- Differential case oil
  "CHANGE OIL IN DIFFERENTIAL CASE (PAGE 4-72)"
- Final drive oil
  "CHANGE OIL IN FINAL DRIVE CASE (PAGE 4-71)"
- Hydraulic oil
  "CHANGE OIL IN HYDRAULIC TANK (PAGE 4-77)"

https://truckmanualshub.com/

CAUTION ITEMS

CAUTION

If the monitor lights up during travel, inspect the location of the problem quickly and take the necessary action.

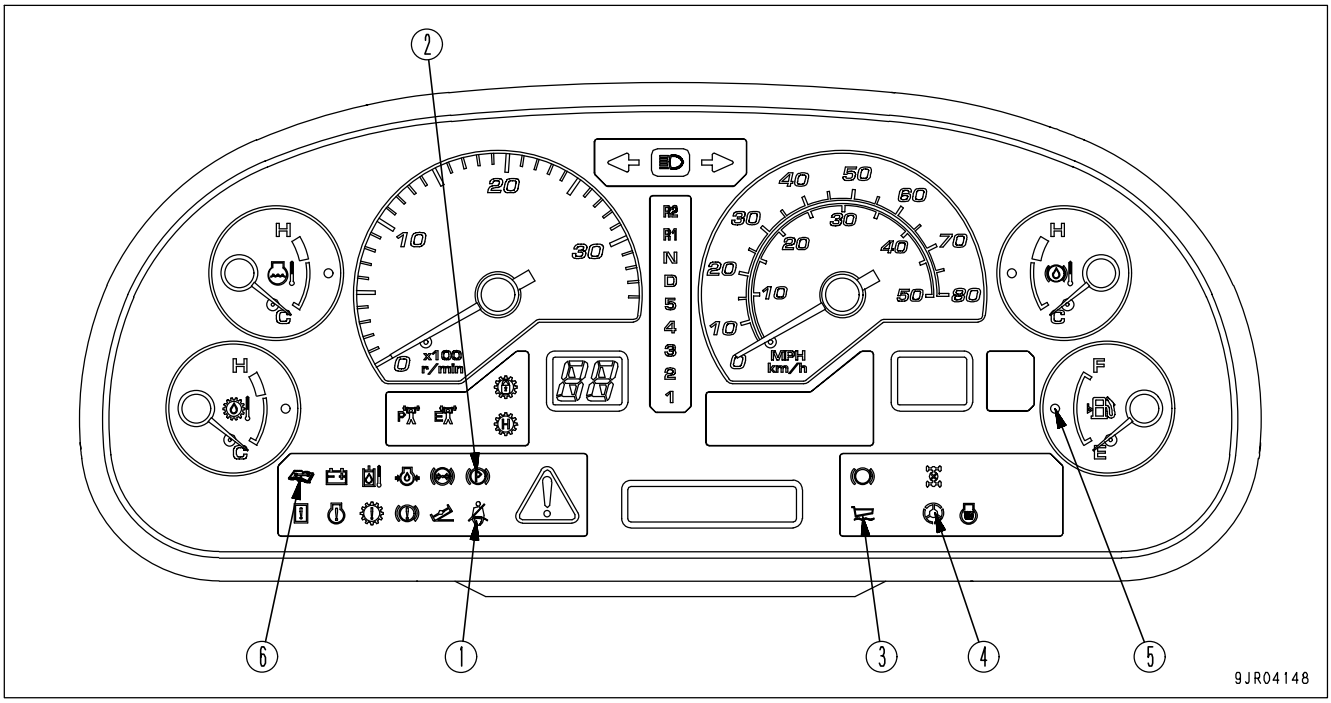

(1) Seat belt caution lamp
(2) Parking brake pilot lamp
(3) Dump body pilot lamp
(4) Emergency steering pilot lamp
(5) Fuel level caution lamp
(6) Maintenance caution lamp

SEAT BELT CAUTION LAMP

This monitor (1) lights up if the seat belt is not fastened.
There is danger when traveling, so always fasten your seat belt.

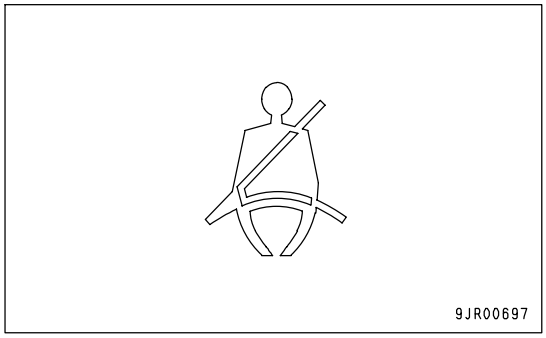

https://truckmanualshub.com/

PARKING BRAKE PILOT LAMP

This monitor (2) lights up when the parking brake is applied.

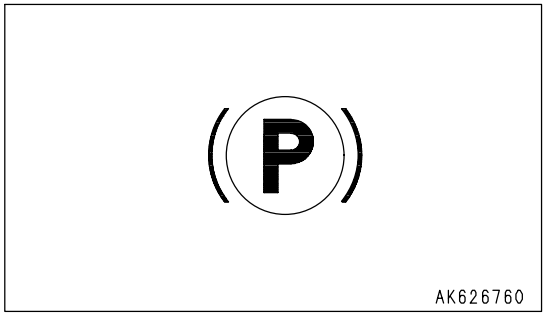

DUMP BODY PILOT LAMP

This monitor (3) lights up when the dump body is raised or the dump body lever is at any position other than "FLOAT".

After the starting switch has been turned to the ON position, the dump body is held in position regardless of the position of the dump lever, so when canceling, turn the lamp off (see "CANCELING DUMP BODY HOLD CONDITION (PAGE 3-88)" for details).

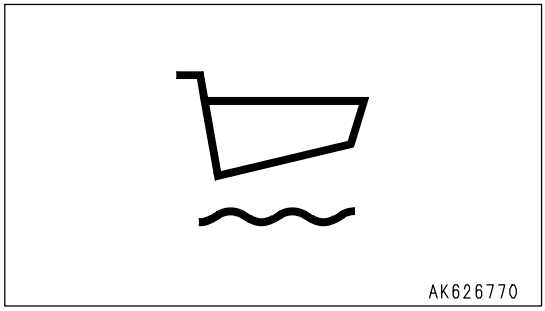

EMERGENCY STEERING PILOT LAMP

This monitor (4) lights up when the emergency steering is actuated.

If any abnormality should occur in the steering oil pressure circuit when the machine is traveling, the auto emergency steering is actuated and the related lamp lights up.

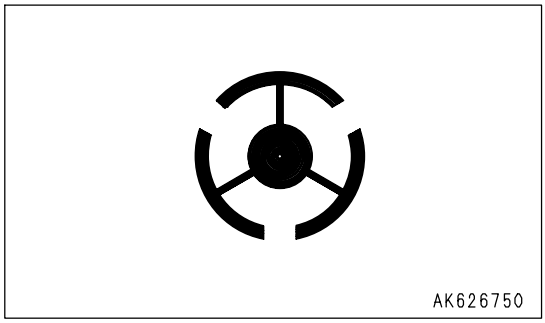

FUEL LEVEL CAUTION LAMP

This monitor (5) lights up when the level of the fuel remaining in the fuel tank goes below 57 liters (15.06 US gal).

If it lights up, check the fuel level and add fuel.

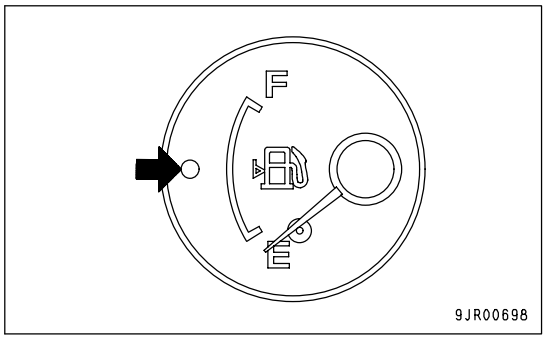

https://truckmanualshub.com/

MAINTENANCE CAUTION LAMP

This monitor (6) lights up if any of the the following are applicable. When it lights up, action code "E01" and the location needing maintenance are displayed on the character display at the same time, so carry out inspection, filling, or replacement.

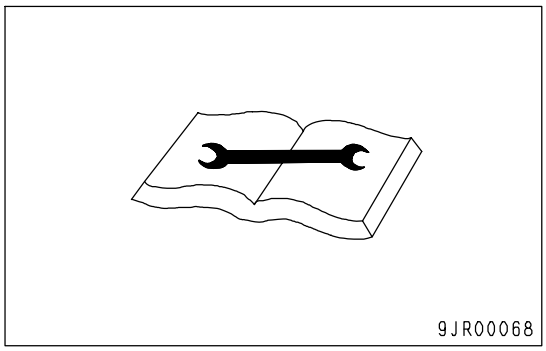

- Drop in engine oil level
- Clogged engine oil filter (if equipped)
- Drop in hydraulic oil level (if equipped)
- Clogged air cleaner
- Clogged hydraulic filter (if equipped)
- Clogged transmission oil filter
- Drop in engine cooling water level
- Clogged brake cooling oil filter (if equipped)

REMARK

In addition to the above, if the filter or oil replacement time is displayed on the character display, the lamp will flash or light up.

https://truckmanualshub.com/

EMERGENCY STOP ITEM

CAUTION

If the monitor lights up, stop operations immediately, then check the corresponding area and carry out the action.

If any problem is found in the emergency stop items, the alarm buzzer will sound intermittently, and the monitor for the location of the problem and the central warning lamp will light up.

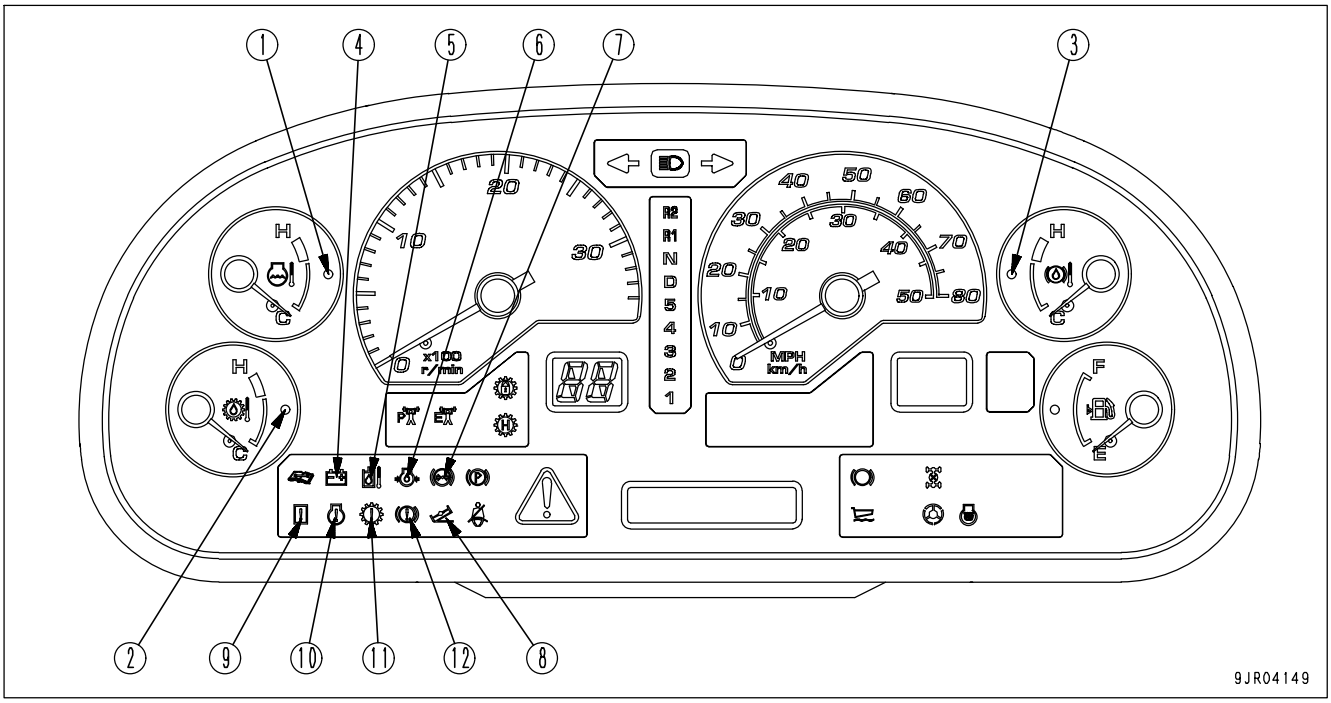

(1) Engine water temperature caution lamp
(2) Torque converter oil temperature caution lamp
(3) Retarder oil temperature caution lamp
(4) Battery charge circuit caution lamp
(5) Steering oil temperature caution lamp
(6) Engine oil pressure caution lamp
(7) Brake oil pressure caution lamp
(8) Tilt caution lamp
(9) Machine monitor, option system caution lamp
(10) Engine system caution lamp
(11) Transmission system caution lamp
(12) Retarder system caution lamp

ENGINE WATER TEMPERATURE CAUTION LAMP

This monitor (1) warns the operator that the engine coolant temperature has risen.

When it lights up, "E02 ENGINE OVERHEAT" is displayed on the character display at the same time, and the engine output is automatically limited.

Run the engine under no load at a mid-range speed until the lamp goes out.

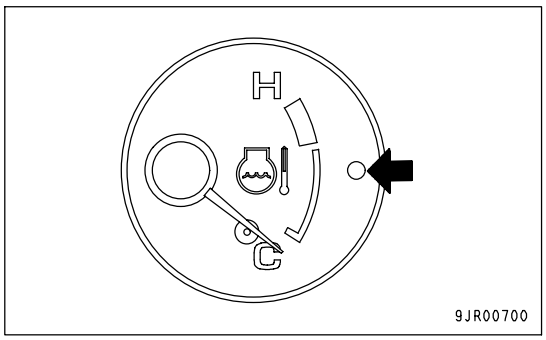

https://truckmanualshub.com/

TORQUE CONVERTER OIL TEMPERATURE CAUTION LAMP

This monitor (2) warns the operator that the torque converter oil temperature has risen.

When it lights up, "E02 TC OVERHEAT" is displayed on the character display at the same time, so stop the machine in a safe place, set the shift lever to the N position, and run the engine under no load at a mid-range speed until the lamp goes out.

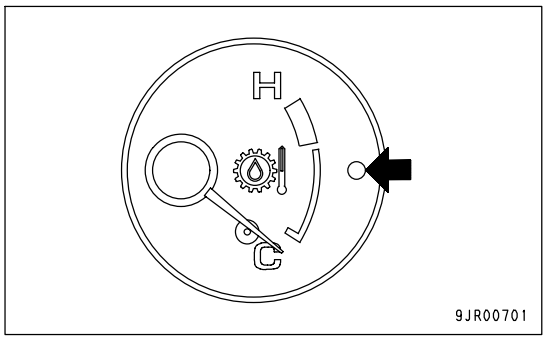

RETARDER OIL TEMPERATURE CAUTION LAMP

This monitor (3) warns the operator that the brake oil temperature has risen.

When it lights up, "E02 BRAKE OVERHEAT" is displayed on the character display at the same time , so stop the machine in a safe place, set the shift lever to the N position, and run the engine under no load at a mid-range speed until the lamp goes out.

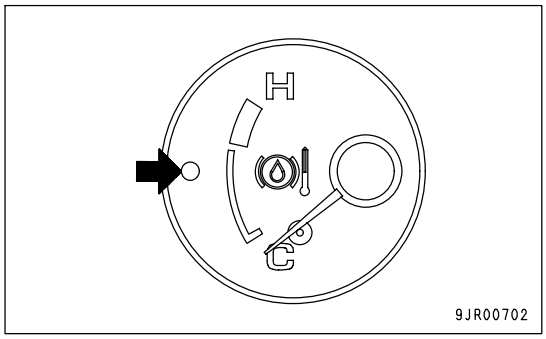

BATTERY CHARGE CIRCUIT CAUTION LAMP

This monitor (4) lights up when the engine is running to warn the operator of a problem in the charging system.

When it lights up, "E03 CHECK RIGHT NOW" is displayed on the character display at the same time, so stop the machine immediately at a safe place, then stop the engine and check the charging circuit.

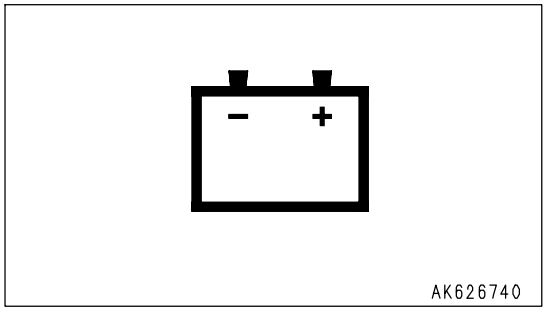

STEERING OIL TEMPERATURE CAUTION LAMP

This monitor (5) lights up to warn the operator that the steering oil temperature has risen.

When it lights up, "E02 STRG OVERHEAT" is displayed on the character display at the same time, so stop the machine in a safe place, set the shift lever to the N position, and run the engine under no load at a mid-range speed until the lamp goes out.

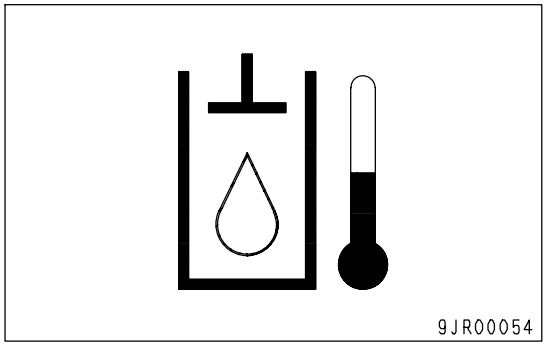

https://truckmanualshub.com/

ENGINE OIL PRESSURE CAUTION LAMP

This monitor (6) lights up to warn the operator that the engine lubricating oil pressure has dropped.
When it lights up, "E03 CHECK RIGHT NOW" is displayed on the character display, and the engine output is automatically limited. Stop the machine immediately at a safe place, then stop the engine and carry out inspection.

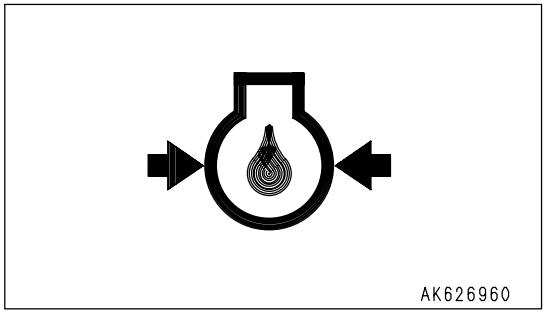

The lamp lights up if the engine lubricating oil pressure goes below the specified value when the engine is running,
If the engine is not running, the lamp does not light up.

BRAKE OIL PRESSURE CAUTION LAMP

This monitor (7) lights up to warn the operator that the brake oil pressure has dropped.
The central warning lamp and alarm buzzer are not actuated when the engine is stopped.
If the brake oil pressure is lower than the specified value 30 seconds after the engine has been started, "E03 CHECK RIGHT NOW" is displayed on the character display, so stop the machine immediately at a safe place, then stop the engine and carry out inspection.

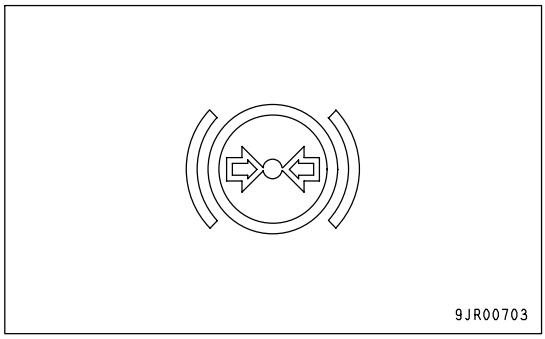

TILT CAUTION LAMP

This monitor (8) lights up if the rear of the machine is tilted beyond the safety range to the left or right when the dump lever is at the RAISE position.
Lower the body and move the machine to a safe place where the machine is stable.

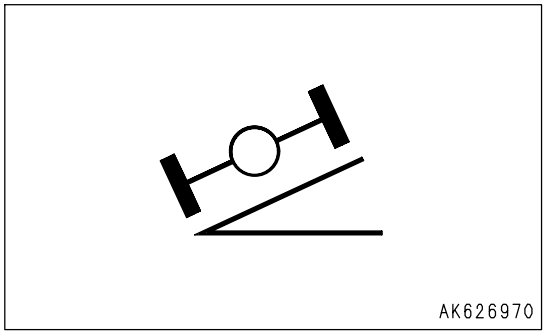

MACHINE MONITOR, OPTION SYSTEM CAUTION LAMP

This monitor (9) lights up when a problem has been detected in the machine monitor or in the system for an installed option.
When it lights up, "E03 CHECK RIGHT NOW" is displayed on the character display at the same time, so stop the machine immediately at a safe place, then stop the engine and carry out inspection.

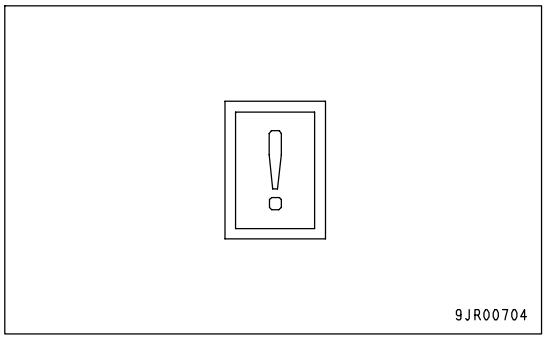

https://truckmanualshub.com/

ENGINE SYSTEM CAUTION LAMP

This monitor (10) lights up when a problem has been detected in the system controlled by the engine controller.
When it lights up, "E03 CHECK RIGHT NOW" is displayed on the character display at the same time, so stop the machine immediately at a safe place, then stop the engine and carry out inspection.

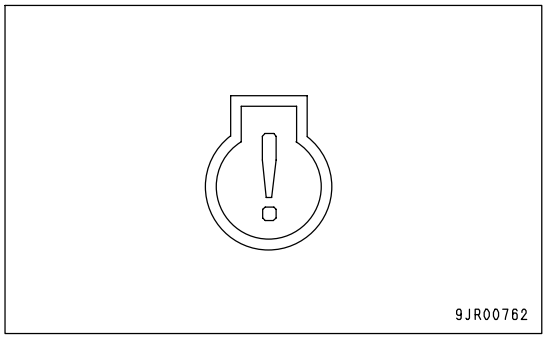

TRANSMISSION SYSTEM CAUTION LAMP

This monitor (11) lights up when a problem has been detected in the system controlled by the transmission controller.
When it lights up, "E03 CHECK RIGHT NOW" is displayed on the character display at the same time, so stop the machine immediately at a safe place, then stop the engine and carry out inspection.

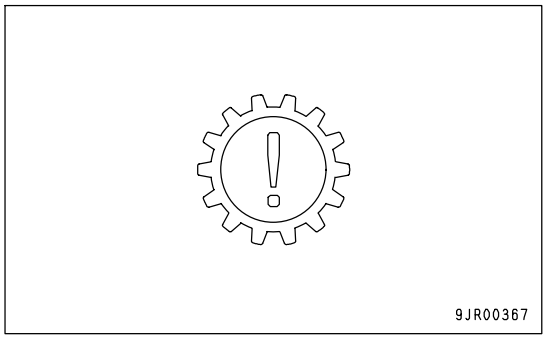

RETARDER SYSTEM CAUTION LAMP

This monitor (12) lights up when a problem has been detected in the system controlled by the retarder controller.
When it lights up, "E03 CHECK RIGHT NOW" is displayed on the character display at the same time, so stop the machine immediately at a safe place, then stop the engine and carry out inspection.

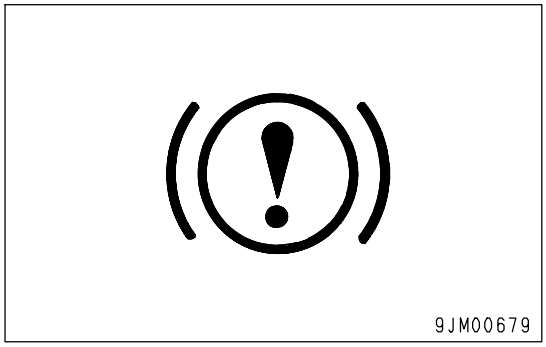

https://truckmanualshub.com/

METER DISPLAY PORTION

PILOT DISPLAY PORTION

When the starting switch is ON, the pilot display lights up when the display items are functioning.

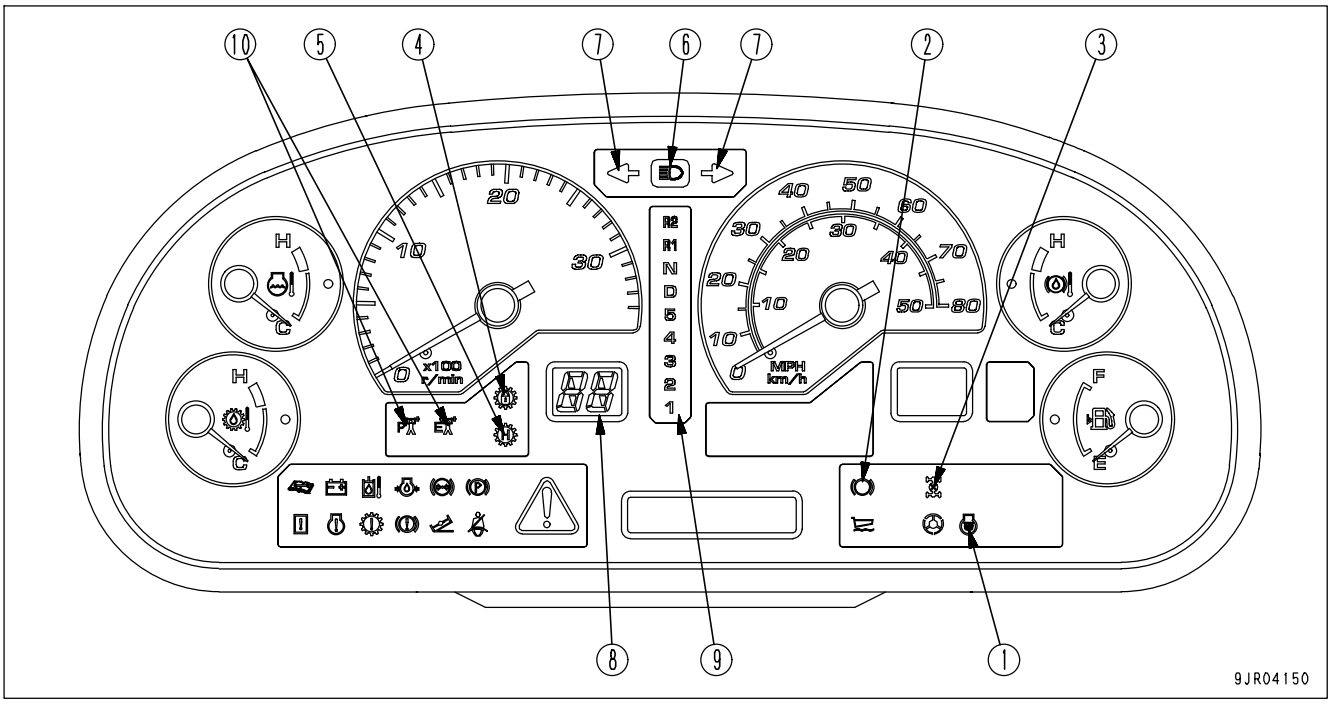

(1) Engine pre-heating pilot lamp
(2) Retarder pilot lamp
(3) Inter-axle differential lock pilot lamp
(4) Lock-up pilot lamp
(5) Shift hold pilot lamp
(6) Head lamp high beam pilot lamp
(7) Turn signal pilot lamp
(8) Shift indicator
(9) Shift lever position pilot lamp
(10) Power mode pilot lamp

ENGINE PRE-HEATING PILOT LAMP

This monitor (1) lights up when the electrical heater for pre-heating the engine is being actuated. When the starting switch is turned to the ON position in cold weather, the monitor lights up. It goes out after 20 to 30 seconds to indicate that the pre-heating has been completed.

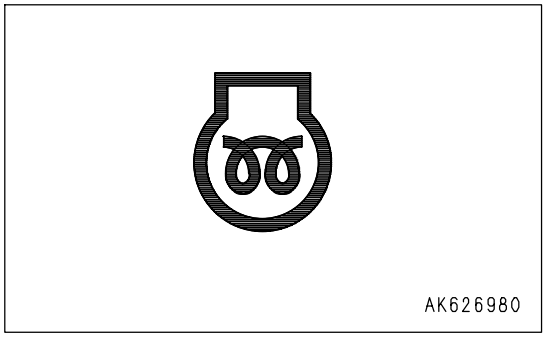

https://truckmanualshub.com/

RETARDER PILOT LAMP

This monitor (2) lights up when the retarder control lever is pulled and the retarder is actuated.

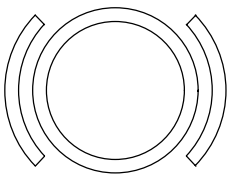

9JR00706

INTER-AXLE DIFFERENTIAL LOCK PILOT LAMP

This monitor (3) lights up when the inter-axle differential lock is actuated.

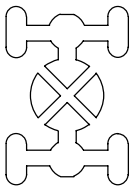

9JR00707

LOCKUP PILOT LAMP

This pilot lamp (4) lights up when the torque converter lockup is engaged and the transmission is shifted to direct drive.

AD132480

SHIFT HOLD PILOT LAMP

This monitor (5) lights up when the shift hold switch is actuated.

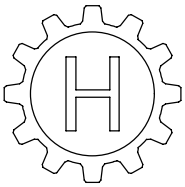

9JR00708

https://truckmanualshub.com/

HEAD LAMP HIGH BEAM PILOT LAMP

This monitor (6) lights up when the head lamps are set to high beam.

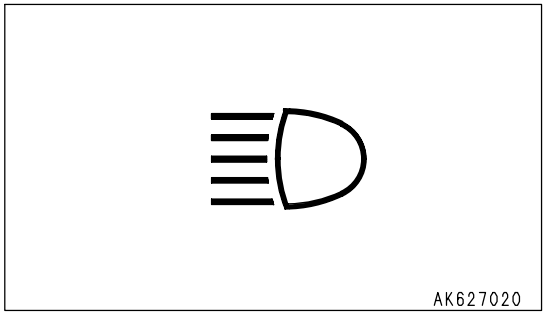

TURN SIGNAL PILOT LAMP

This pilot lamp (7) flashes at the same time as the turn signal lamp flashes.

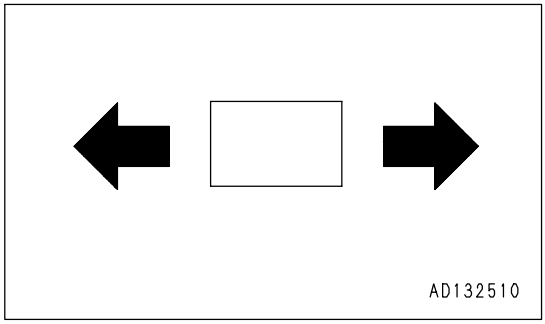

SHIFT INDICATOR

This monitor (8) shows the transmission shift range (speed range).

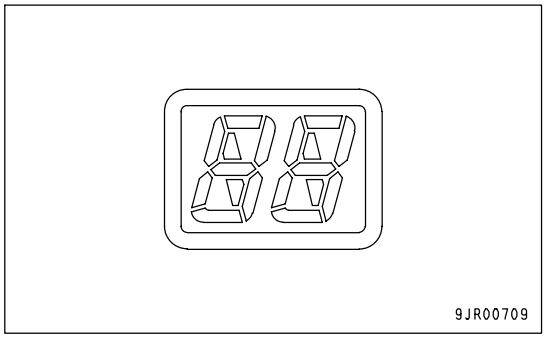

SHIFT LEVER POSITION PILOT LAMP

This monitor (9) displays the position of the shift lever.

The letter or number for the speed range selected by the shift lever lights up.

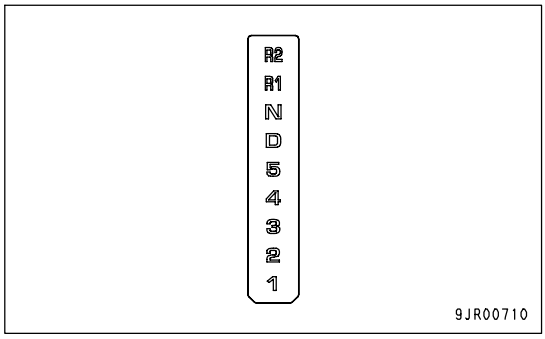

https://truckmanualshub.com/

POWER MODE PILOT LAMP

This monitor (10) displays the power mode.

When the mode is selected with the power mode selector switch, either High Power (P) or Economy (E) lights up.

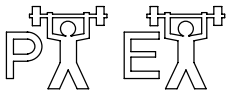

9JR00711

https://truckmanualshub.com/

METERS

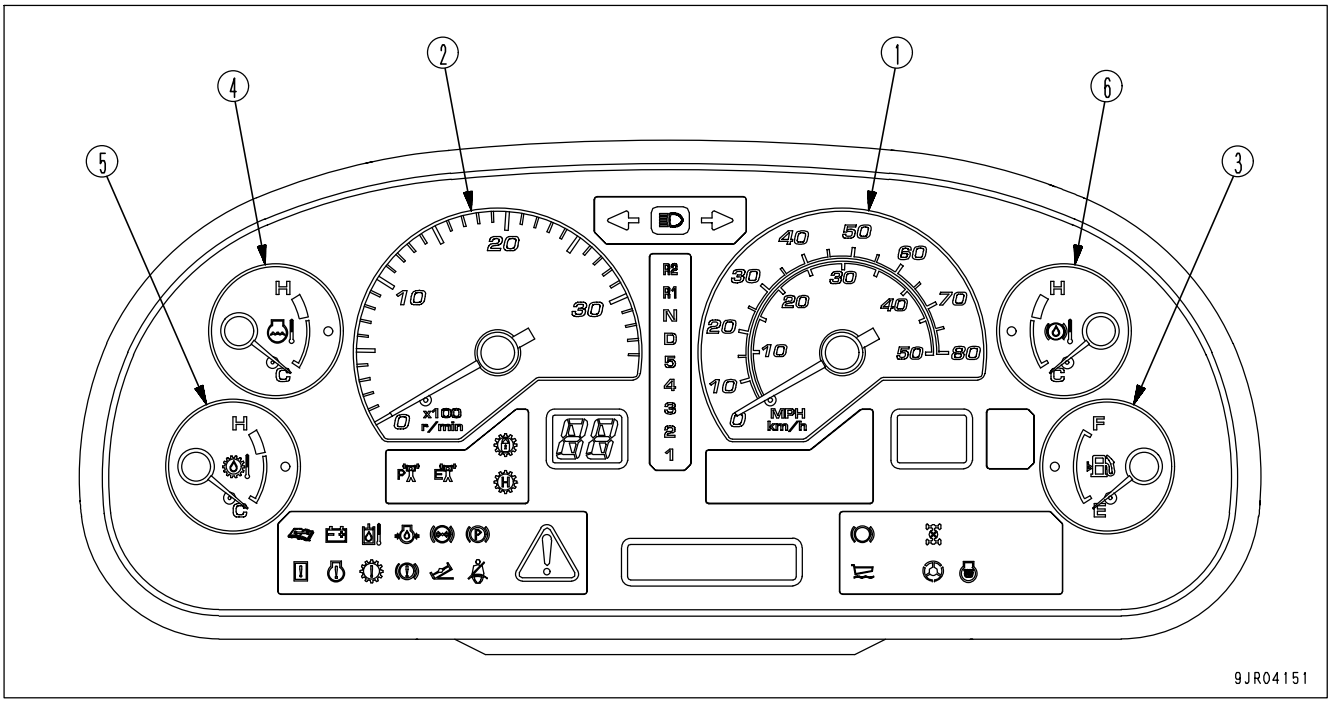

(1) Speedometer
(2) Engine tachometer
(3) Fuel gauge
(4) Engine water temperature gauge
(5) Torque converter oil temperature gauge
(6) Retarder oil temperature gauge

SPEEDOMETER

This meter (1) indicates the travel speed of the machine.

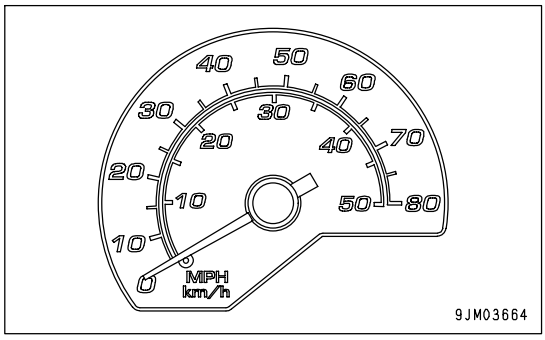

ENGINE TACHOMETER

This meter (2) shows the engine speed.

If the gauge indicator the red range during operations, the alarm buzzer will sound and the central warning lamp will light up at the same time, so reduce the engine speed and the machine travel speed.

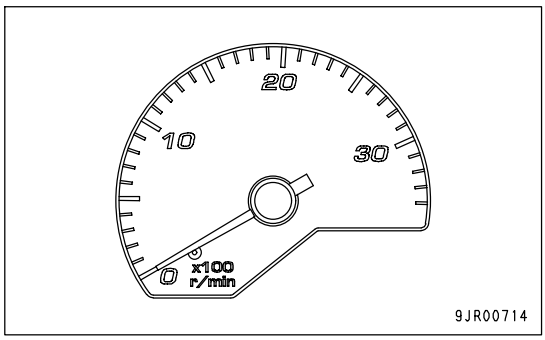

https://truckmanualshub.com/

FUEL GAUGE

This meter (3) shows the amount of fuel remaining in the fuel tank. When the fuel level caution lamp lights up, it indicates that there is less than 57 liters (15.06 US gal) of fuel remaining in the tank, so check and add fuel.

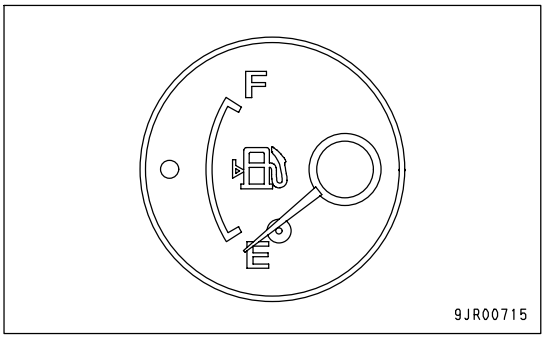

ENGINE WATER TEMPERATURE GAUGE

This meter (4) indicates the engine water temperature.
It should be in the white range during operation.
If it is in the red range during operation, the alarm buzzer will sound and the central warning lamp will light up at the same time. "E02 ENGINE OVERHEAT" is displayed on the character display, so run at the engine under no load at a mid-range speed and wait until the meter enters the white range.
If it is in the red range, the engine output is automatically limited.

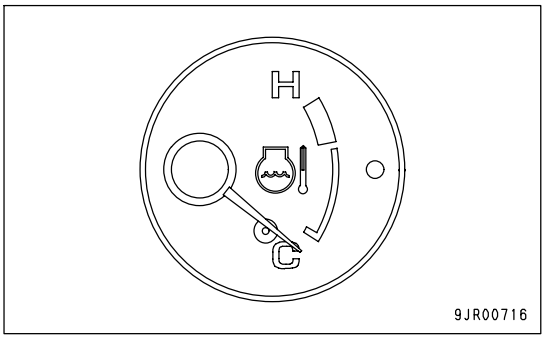

TORQUE CONVERTER OIL TEMPERATURE GAUGE

This meter (5) indicates the torque converter oil temperature.
It should be in the white range during operation.
If it is in the red range during operation, the alarm buzzer will sound and the central warning lamp will light up. "E02 TC OVERHEAT" is displayed on the character display, so run the engine under no load at a mid-range speed and wait until the meter enters the white range.

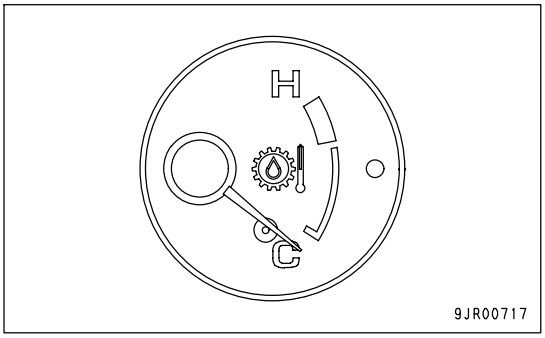

RETARDER OIL TEMPERATURE GAUGE

This meter (6) indicates the retarder oil temperature.
It should be in the white range during operation.
If it is in the red range during operation, the alarm buzzer will sound and the central warning lamp will light up at the same time. "E02 BRAKE OVERHEAT" is displayed on the character display, so stop the machine in a safe place, set the shift lever to the N position, run the engine under no load at a mid-range speed and wait until the lamp goes out.

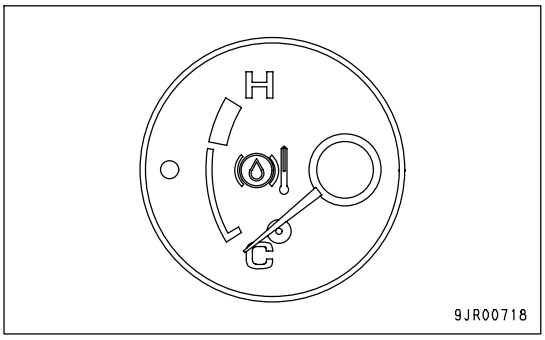

https://truckmanualshub.com/

CENTRAL WARNING LAMP

If the machine is in the following condition, this lamp will flash, and at the same time, the alarm buzzer will sound intermittently.

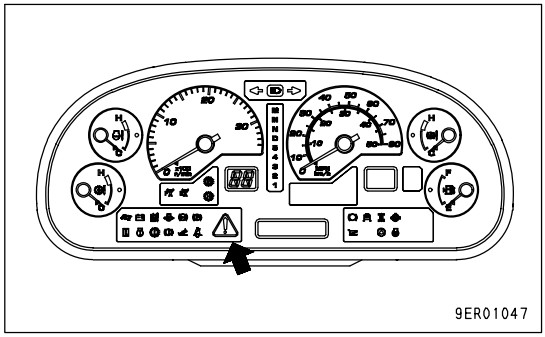

- When a problem has occurred in any of "EMERGENCY STOP ITEM (PAGE 3-15)".
- When action code "E02" or "E03" is displayed on the character display.
- If the parking brake is applied, but the shift lever is not at the N position.
- When the dump lever is not at the FLOAT position or the dump body is raised and the shift lever is not at the N position.
- When the engine tachometer indicates the red range.

https://truckmanualshub.com/

OTHER FUNCTIONS OF MACHINE MONITOR

DISPLAY METHOD FOR REVERSE TRAVEL ODOMETER

Use this when checking the total travel distance in reverse.

1. Check that the character display is showing the service meter/odometer, or the action code. If it is giving any other display, turn the starting switch OFF, then turn the starting switch to the ON position and wait for the above display to be given.
2. Press the (◇) of machine monitor mode selector switch 1. It displays the overall distance traveled in reverse.
3. When completing the operation, press (■) of machine monitor mode selector switch 1 or turn the starting switch OFF.

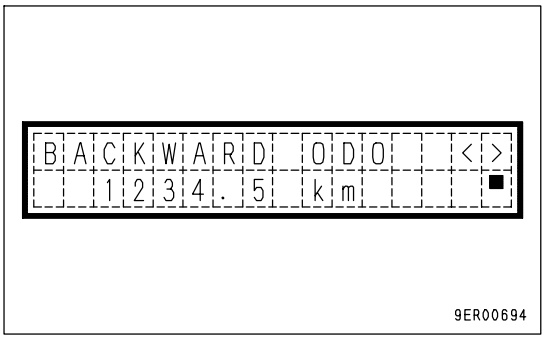

https://truckmanualshub.com/

RESET METHOD FOR FILTER, OIL REPLACEMENT TIME

The filter and oil replacement time is displayed on the character display, so if the filter and oil have been replaced, reset the filter and oil change time.

1. Press the (◇) of machine monitor mode selector switch 1, and display the reverse travel in odometer.
2. Press (>) or (<) of machine monitor mode selector switch 2 and display "MAINTENANCE MONITOR".

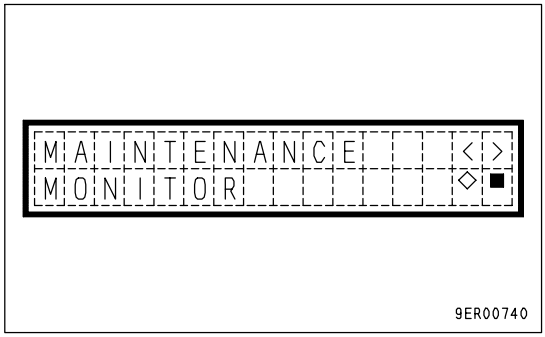

3. Press the (◇) of machine monitor mode selector switch 1. It will change to the display in the diagram on the right.
   The bottom line shows two items: the replacement time on the left and the total number of times the item has been replaced on the right.
4. Press (>) or (<) of machine monitor mode selector switch 2 and display the item to be reset.

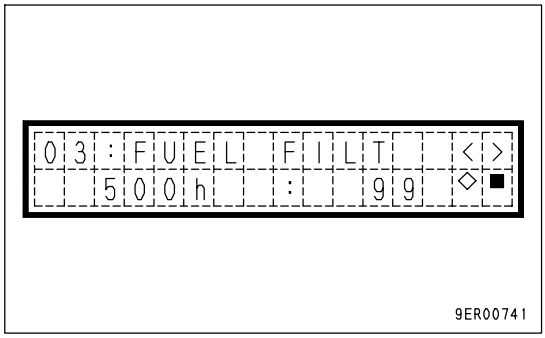

5. Press the (◇) of machine monitor mode selector switch 1. It will change to the display in the diagram on the right.
   The top line shows [Reset] and [Item to be reset] in turn.
6. When resetting the replacement time, press (>) or (<) of machine monitor mode selector switch 2, align the cursor with "YES", then press (■) of machine monitor mode selector switch 1. It will reset and returned to the previous screen.
   To abandon, align the cursor with "NO", then press (■) of machine monitor mode selector switch 1.

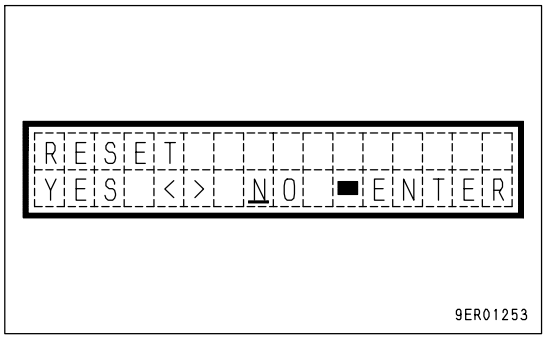

7. When resetting the replacement time for another item, carry out the procedure from Step 4. After completing, press (■) of machine monitor mode selector switch 1 twice or turn the starting switch OFF.

https://truckmanualshub.com/

INPUT METHOD FOR TELEPHONE NUMBER

When an error for action code "E03" occurs, it is possible to display the telephone number.

1. Press the (◇) of machine monitor mode selector switch 1 and display the reverse travel odometer.
2. Press (>) or (<) of machine monitor mode selector switch 2 and display "TEL".

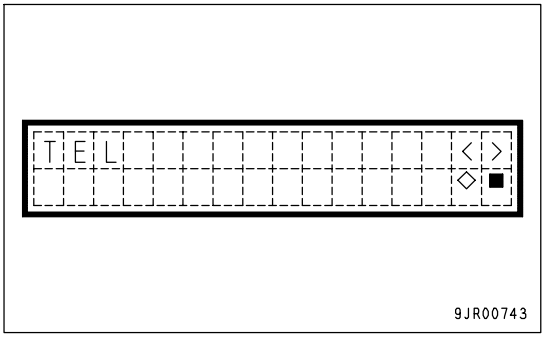

3. Press (◇) of machine monitor mode selector switch 1. It will change to the display in the diagram on the right.

   Once the telephone number is input, the input number will be displayed next time.

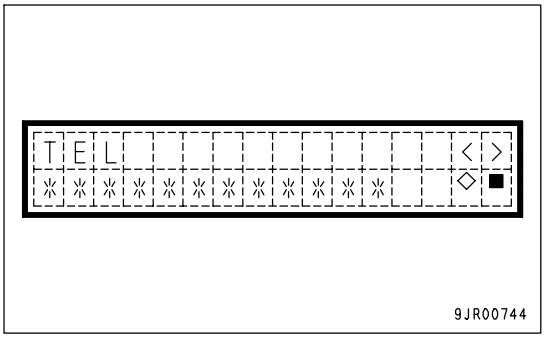

4. Up to 12 digits can be displayed for the telephone number. Input from the first digits.
   The cursor is displayed at the input position. Press (>) or (<) of machine monitor mode selector switch 2 and display "0 - 9 ". To leave a blank, select "*".
   When the input value is decided, press (◇) of machine monitor mode selector switch 1. The cursor will move to the next position.
5. Repeat the procedure in Step 4 until the last digit. At the last digit, press (◇) of machine monitor mode selector switch 1 to return to the previous screen.
   If there is a mistake in the input or the input is to be stopped, press (■) of machine monitor mode selector switch 1 to return to the previous screen.
6. When completing the operation, press (■) of machine monitor mode selector switch 1 twice or turn the starting switch OFF.

https://truckmanualshub.com/

METHOD FOR SELECTING LANGUAGE

Use this when switching the language displayed on the character display.

1. Press the (◇) of machine monitor mode selector switch 1 and display the reverse travel odometer.
2. Press (>) or (<) of machine monitor mode selector switch 2 and display "LANGUAGE".

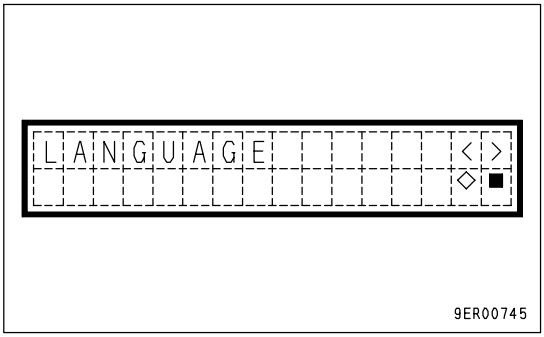

3. Press the (◇) of machine monitor mode selector switch 1. The presently selected language is displayed.
4. Press (>) or (<) of machine monitor mode selector switch 2 and select the language.

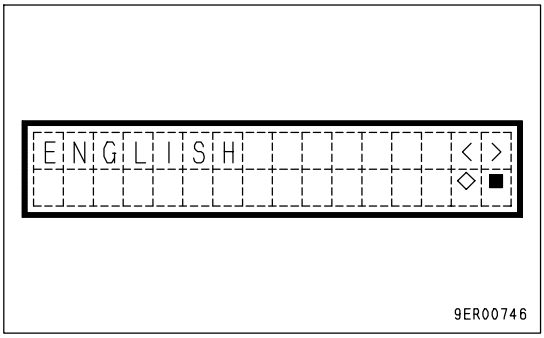

The available languages are English, Japanese, German, French, Italian, Spanish, and Swedish.

Language	Display
English	ENGLISH
Japanese	ﾆﾎﾝｺﾞ
German	DEUTSCH
Franch	FRANCAIS
Italian	ITALIANO
Spanish	Español
Swedish	SVENSKA

5. When the (◇) of machine monitor mode selector switch 1 is pressed, the language is set and the screen returns to the previous screen.
6. When completing the operation, press (■) of machine monitor mode selector switch 1 twice or turn the starting switch OFF.

https://truckmanualshub.com/

SWITCHES

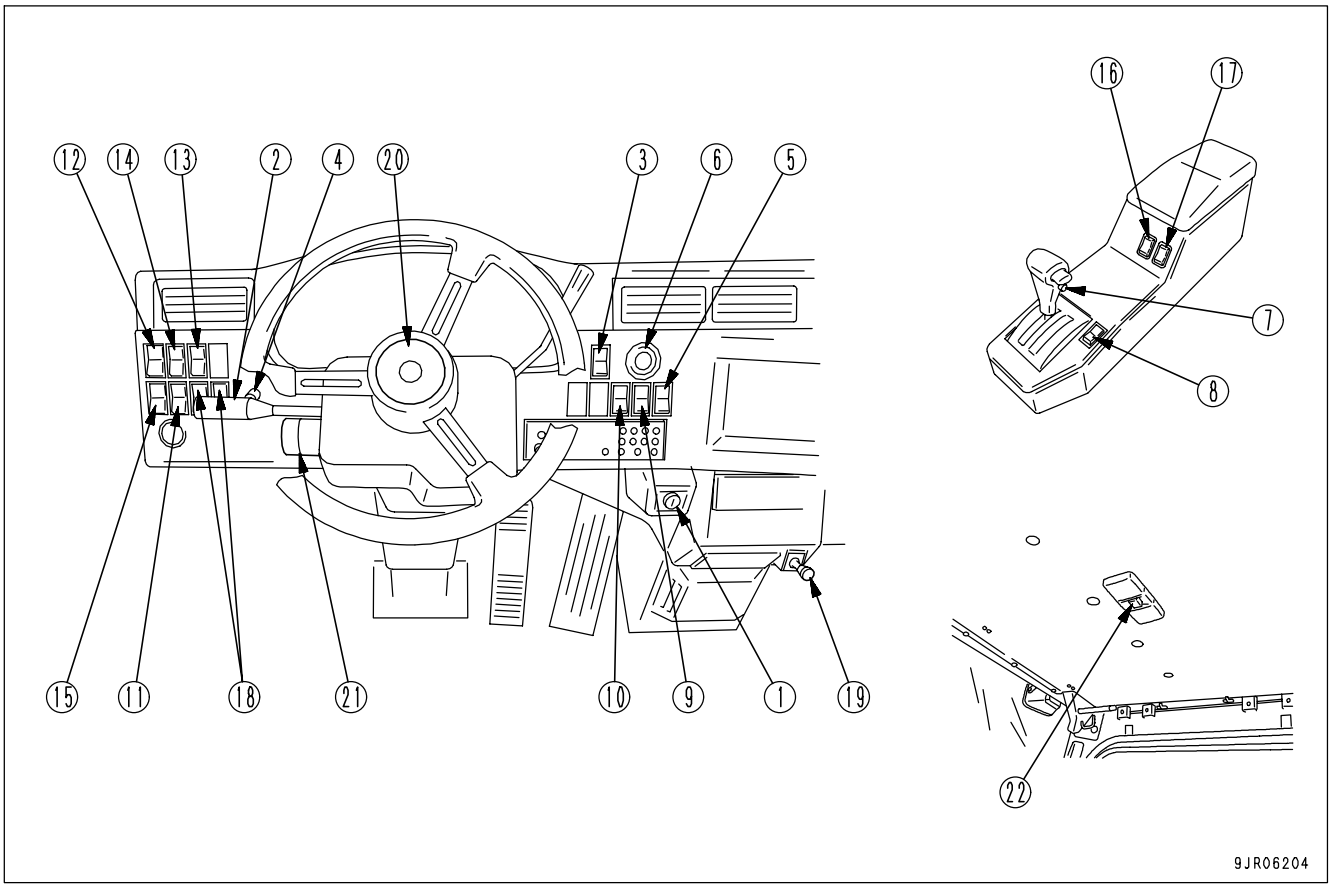

(1) Starting switch
(2) Lamp switch
Turn signal lever
Dimmer switch
(3) Hazard lamp switch
(4) Night lighting dimmer switch
(5) Power mode selector switch
(6) Emergency steering switch
(7) Shift hold switch
(8) Parking brake switch
(9) AISS LOW switch
(10) Inter-axle differential lock switch
(11) Fog lamp switch (if equipped)
(12) Side lamp switch (if equipped)
(13) Working lamp (front) switch
(14) Switch for rear window glass with heated wire
(15) Yellow rotating lamp switch (if equipped)
(16) Power window switch (right) (if equipped)
(17) Power window switch (left)
(18) Machine monitor mode selector switch 1, 2
(19) Cigarette lighter
(20) Horn button
(21) Wiper, window washer switch
(22) Room lamp switch

https://truckmanualshub.com/

STARTING SWITCH

This switch (1) is used to start or stop the engine.

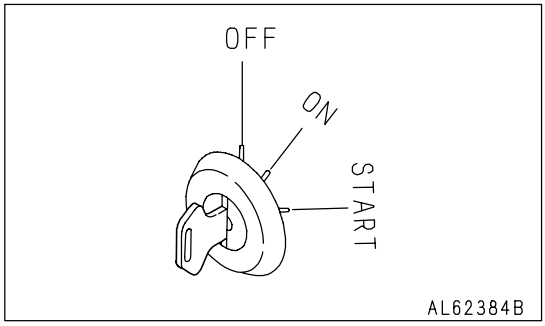

OFF position :
At this position, the starting switch key can be inserted or removed. When the key is turned to this position, all the electric circuits are switched off and the engine stops.

ON position :
In this position, electric current flows in the charging and lamp circuits.
Keep the starting switch key at the ON position while the engine is running.
When turning the starting switch ON or OFF, if the starting switch is held at a position between ON and OFF, the controller may detect this as a problem. If this happens, return the starting switch to the OFF position, then operate it as usual to the ON position.

In cold weather, if the starting switch is turned to the ON position, pre-heating is automatically started and the engine pre-heating pilot lamp lights up. After the pre-heating is completed, the engine pre-heating pilot lamp goes out.

START position :
This is the position to start the engine. Hold the key at this position while cranking. Release the key immediately after the engine has been started. The key will return to the ON position when released.

LAMP SWITCH

This switch (2) lights up the head lamps, side clearance lamps, tail lamps, machine monitor lighting, and rear lamps.
Position (a): OFF
Position (b): Side clearance lamps, tail lamps, real lamps, and machine monitor lighting light up
Position (c): Front lamps light up in addition to lamps at position (b)
The lamp switch can be operated regardless of the position of the lever.

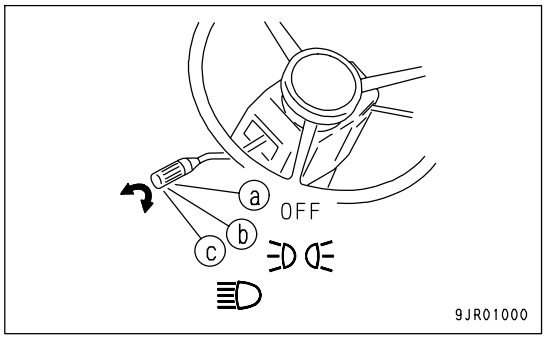

TURN SIGNAL LEVER

This lever (2) operates the turn signal lamp.
(a)Right turn: Push the lever forward
(b)Left turn: Push the lever back
When the lever is operated, the turn signal pilot lamp also flashes. The lever is automatically returned when the steering wheel is turned back. If the lever does not return, move it by hand.

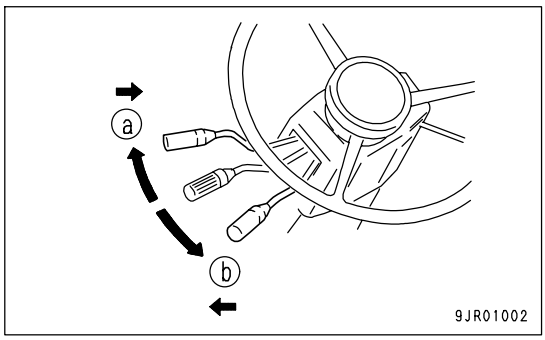

https://truckmanualshub.com/

DIMMER SWITCH

This switch (2) is used to switch the head lamps between high beam and low beam.

Each time switch (2) is moved up in direction (a), the head lamps switch between high beam and low beam. When the switch is released, it automatically returns to its original position (b).

When the lamp switch is OFF, if the switch is operated in direction (a), the head lamps light up at the high beam position.

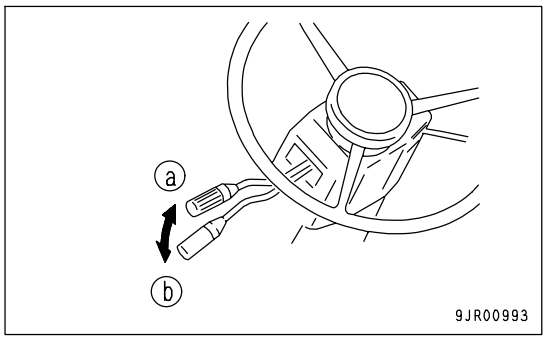

HAZARD LAMP SWITCH

This switch (3) is used to make the left and right turn signal indicators flash.

(a): OFF

(b): Turn signal lamp and turn signal pilot lamp flash

When working at night, the symbol inside the switch lights up regardless of the selected position of the switch.

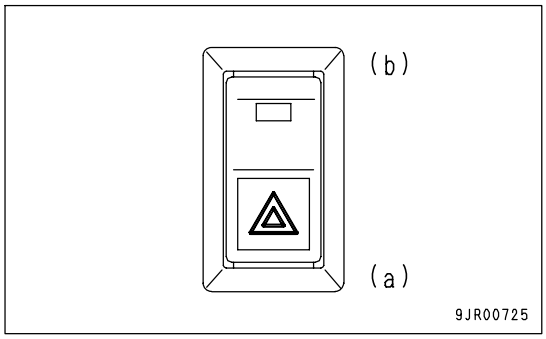

NIGHT LIGHTING DIMMER SWITCH

This switch (4) is used to adjust the brightness of the lighting inside the machine monitor and the pilot lamp display. Turn it to the right to make the display brighter; turn it to the left to make the display dimmer.

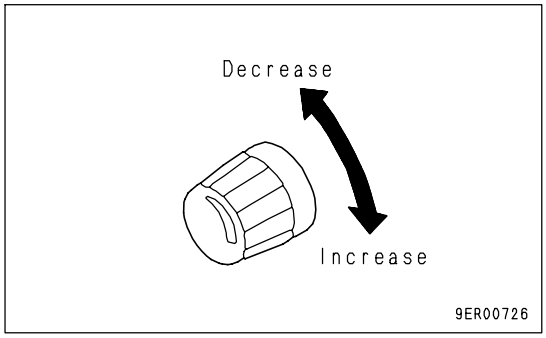

https://truckmanualshub.com/

POWER MODE SELECTOR SWITCH

This switch (5) is used to switch the power mode. This makes it possible to travel economically in a way suited to the operating conditions.
If portion (a) of the switch is pressed, high-power mode pilot lamp (P) lights up and the system is switched to the high-power mode.
If portion (b) of the switch is pressed, economy mode pilot lamp (E) lights up and the system is switched to the economy mode.

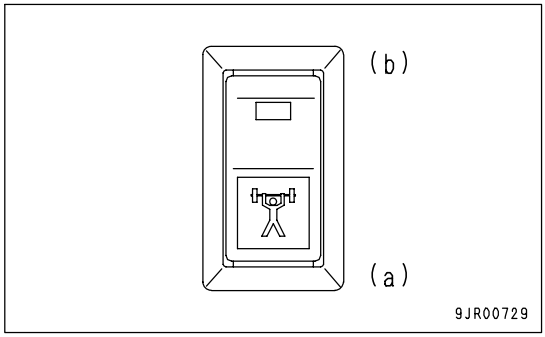

(a): High power mode (general operations)
Normal standard operating conditions
(b): Economy mode (operations on flat ground)
Work with emphasis on fuel consumption, such as work on flat ground where the maximum power is not needed

When working at night, the symbol inside the switch lights up regardless of the selected position of the switch.

EMERGENCY STEERING SWITCH

This switch (6) is used to actuate the emergency steering pump.
When the switch is pressed, the emergency pump is actuated to make it possible to operate the steering.
When the switch is ON, the pilot lamp (red) inside the switch and the pilot lamp on the machine monitor light up.

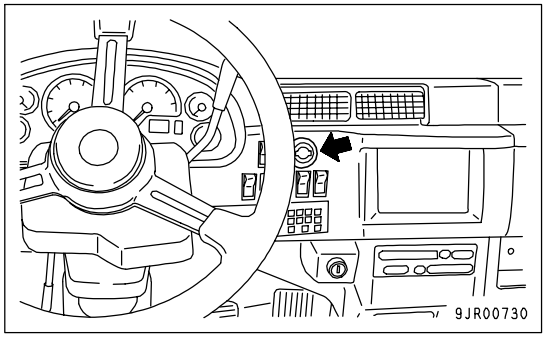

The emergency steering pump can be used for a maximum of 90 seconds.
When the emergency steering is being used, keep the travel speed to a maximum of 5 km/h (3.1 MPH).
The emergency steering is actuated automatically in the following cases.

- When the steering hydraulic pump fails
- When the engine has stopped during operation

When the emergency steering is actuated, stop the machine promptly and perform inspection.

If the starting switch is at the ON position and the parking brake switch is at the TRAVEL position when the machine is stopped, the automatic emergency steering is actuated after 1 second, so set the parking brake switch to the PARKING position.

https://truckmanualshub.com/

SHIFT HOLD SWITCH

This switch (7) actuates the gearshift limiter.

Activating the shift hold function will restrict the automatic shifting of the transmission to gear speeds below the gearshift lever gear shifting.

The shift hold function can be canceled by [1] moving the gearshift lever or [2] activating the shift hold switch located on the gearshift lever.

The shift hold pilot lamp located on the machine instrument panel will indicated the status of the shift hold function.

Before starting either up or down a range, pre-select the transmission gear and maintain a machine travel speed which will give you full control under all the anticipated conditions.

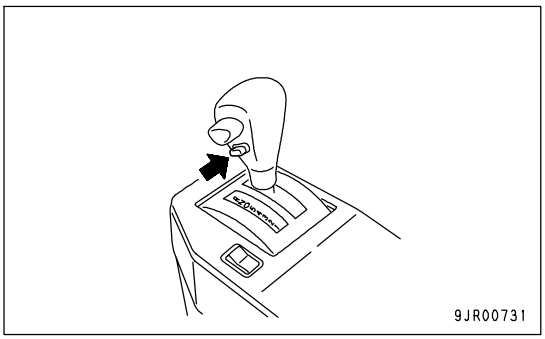

When the machine is running, the transmission may cause hunting (a repetition of shifting up and shifting down in a short span of time), depending on the road condition, load condition and slope grade. In that case, press the shift hold switch and run, holding a low gear speed, in order to protect the transmission as well as to ensure operator's comfortability.

https://truckmanualshub.com/

PARKING BRAKE SWITCH

WARNING

When parking or leaving the machine, always apply the parking brake.

This switch (8) is used to actuate and release the parking brake valve.

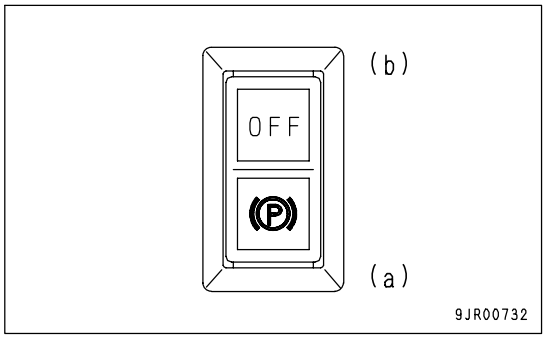

(a): Parking
The parking brake is applied.
(b): Travel
The parking brake is released.

When the switch is set to the PARKING position, the parking brake pilot lamp lights up.
When the switch is set to the PARKING position, if the shift lever is at any position other than N, the central warning lamp will flash and the alarm buzzer will sound.
If the pressure saved in the accumulator drops and goes below 5.4 MPa {55 kg/cm^2, 781 PSI}, the brake and parking brake are automatically applied. For details of the method of releasing the brake, see "WHEN PARKING BRAKE HAS BEEN ACTUATED IN EMERGENCY (PAGE 3-130)".

When working at night, the symbol inside the switch lights up regardless of the selected position of the switch.

REMARK
If the engine is stopped with the parking brake switch at TRAVEL, the parking brake will be applied automatically even though the parking brake switch is at TRAVEL. When starting the engine again, operate the parking brake switch to PARKING, and then move it back to TRAVEL to cancel the parking brake.

NOTICE
During loading operations, do not apply the parking brake. Apply the retarder brake.

https://truckmanualshub.com/

AISS LOW SWITCH

Using this switch (9), it is possible to switch the AISS freely between AUTO and LOW. Use each position as follows.

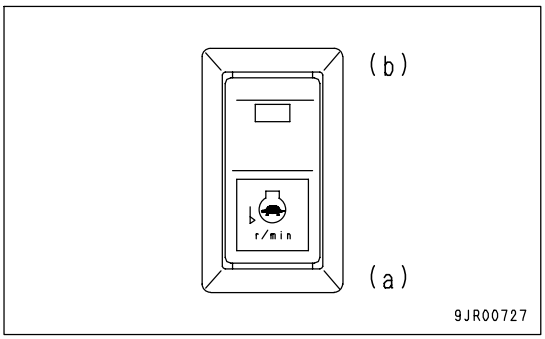

(a): AUTO position
For normal operations
(b): LOW position
When fine control of the machine is needed, such as when putting it into a garage.

If the switch is at AUTO position:

- When stopping the machine, if the parking brake or retarder brake are operated, the idling is automatically adjusted to low speed; when starting the machine, if the parking brake is canceled, the idling is automatically adjusted to high-speed.
- The water temperature is detected, and when it is at low temperature, the idle is automatically adjusted to high speed to reduce the warming-up time.

When working at night, the symbol inside the switch lights up regardless of the selected position of the switch.

INTER-AXLE DIFFERENTIAL LOCK SWITCH

This switch (10) can be used to switch the actuating conditions for the inter-axle differential lock.
When this switch is pressed, the system is switched to MANUAL. When the switch is not pressed or is pressed to return it, the system is switched to AUTO.

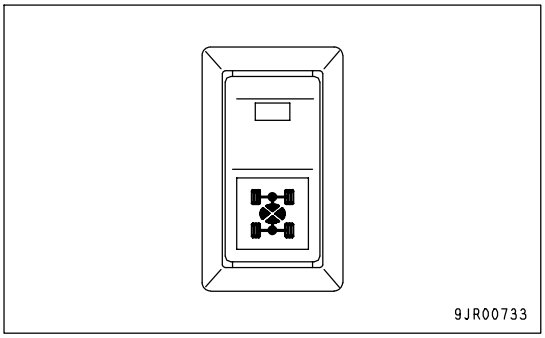

AUTO: The slippage of the front axle is detected and the inter-axle differential lock is automatically actuated.
MANUAL: When the shift lever is at the F3, F2, F1, N, R1, or R2 position, the inter-axle differential lock is actuated.

Regardless of the position of the switch, when the differential lock is actuated, the inter-axle differential lock pilot lamp lights up.

When working at night, the symbol inside the switch lights up regardless of the selected position of the switch.

For details when using the differential lock, see "OPERATION USING DIFFERENTIAL LOCK (PAGE 3-103)".

FOG LAMP SWITCH

(If equipped)
This switch (11) is used to switch on the fog lamp.

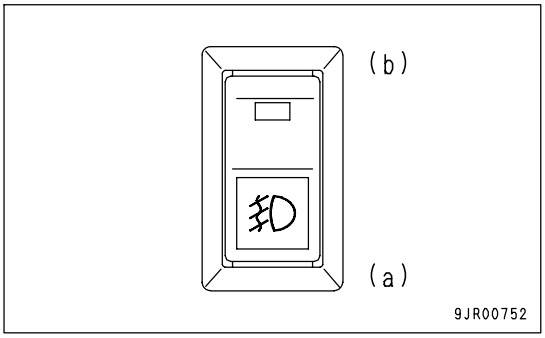

(a): Fog lamp goes out
(b): Fog lamp lights up

When working at night, the symbol inside the switch lights up regardless of the selected position of the switch.

https://truckmanualshub.com/

SIDE LAMP SWITCH
(If equipped)
This switch (12) is used to switch on the side lamp.

(a): Side lamp goes out
(b): Side lamp lights up

When working at night, the symbol inside the switch lights up regardless of the selected position of the switch.

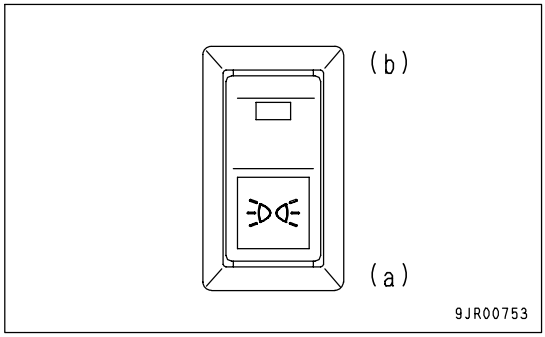

WORKING LAMP (FRONT) SWITCH
This switch (13) is used to switch on the working lamp (front).

(a): Working lamp goes out
(b): Working lamp lights up

When working at night, the symbol inside the switch lights up regardless of the selected position of the switch.

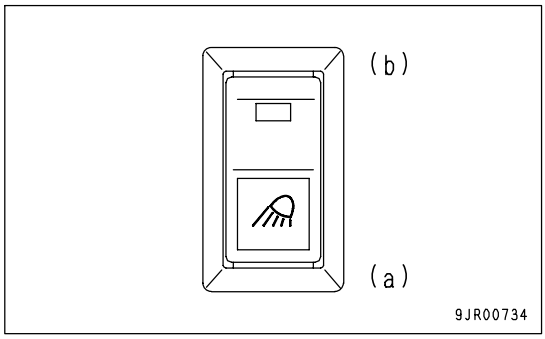

SWITCH FOR REAR WINDOW GLASS WITH HEATED WIRE
Use this switch (14) to turn the heater for the rear glass ON/OFF.
(a): Wire heater OFF
(b): Wire heater ON

When working at night, the symbol inside the switch lights up regardless of the selected position of the switch.

REMARK
The wire heater does not automatically turn OFF when it becomes hot, so when it is not needed, turn the switch manually to the OFF position.

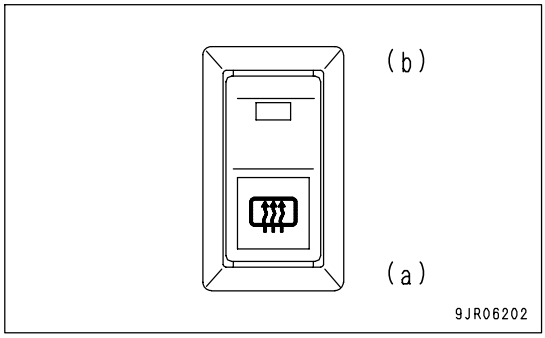

YELLOW ROTATING LAMP SWITCH
(If equipped)
This switch (15) is used to switch the yellow rotating lamp on and off. When the lamp is switched on, it lights up and rotates.

(a): Yellow rotating lamp goes out
(b): Yellow rotating lamp lights up

When working at night, the symbol inside the switch lights up regardless of the selected position of the switch.

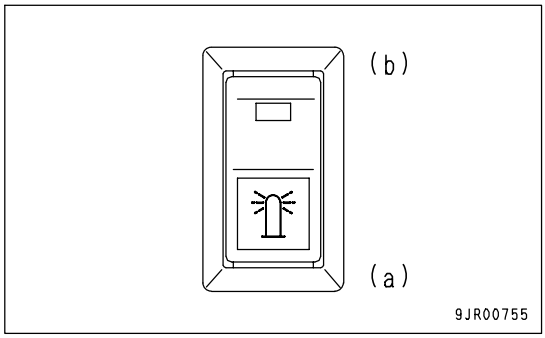

https://truckmanualshub.com/

POWER WINDOW SWITCH (RIGHT) (LEFT)
(The right power window is optional.)

WARNING

When closing the window glass, be careful not to get anyone's hands or head caught.
There is danger of serious injury if anyone is caught in the window glass.

CAUTION

After fully opening or fully closing the window glass, release the switch immediately. If the switch is kept operated, it may cause failure of the power window.

Switches (16) and (17) are used to open and close the window glass. The switches can only be used when the starting switch is at the ON position.

(A): Glass goes down
(B): Glass goes up

When the glass reaches the top or bottom and stops, release the switch.

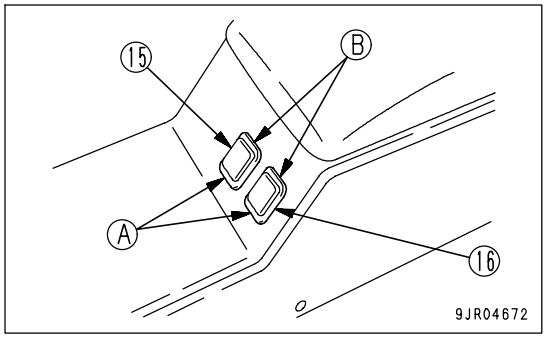

MACHINE MONITOR MODE SELECTOR SWITCH 1, 2
This switch (18) is used to operate the character display.

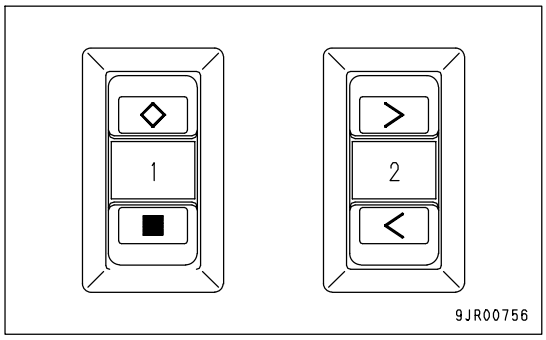

CIGARETTE LIGHTER
This switch (19) is used to light cigarettes.
When the cigarette lighter is pushed in, it will return to its original position after several seconds, then pull it out and use it to light your cigarette.

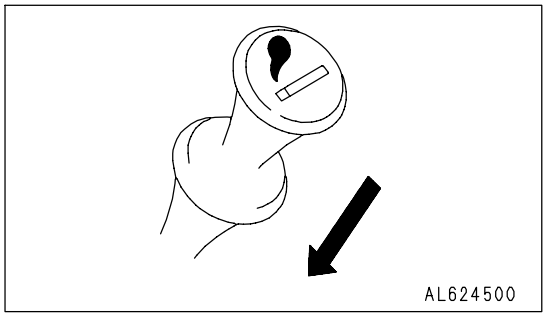

https://truckmanualshub.com/

HORN BUTTON

When the horn button (20) in the center of the steering wheel is pressed, the horn will sound.

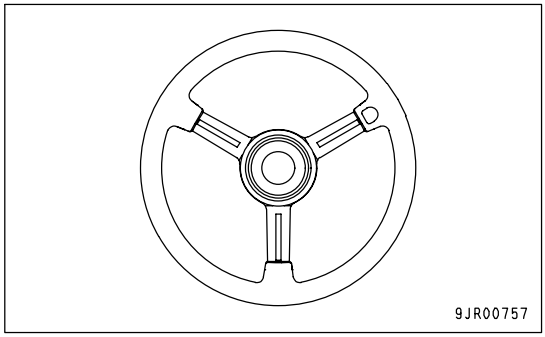

WIPER, WINDOW WASHER SWITCH

This switch (21) is used to operate the wiper for the front glass and rear glass.

Using the wiper when the glass is dry will scratch the glass. Spray with window washer fluid before actuating the wiper.

Front wiper

Position (a) (OFF): Stopped

Position (b) (INT): Wiper moves once every 4 to 7 seconds

Position (c) (LOW): Wiper moves at low speed

Position (d) (Hi): Wiper moves at high speed

When the button at the tip of the switch is pressed, washer fluid is sprayed out.

Do not keep the button pressed for more than 10 seconds.

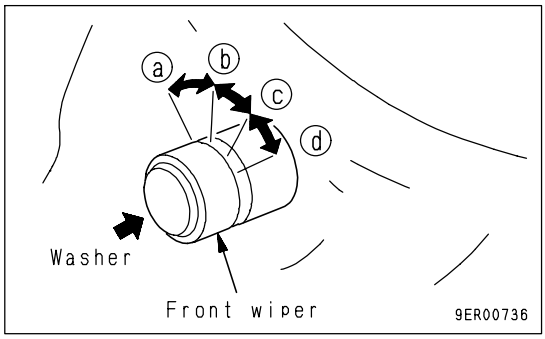

Rear wiper

Position (a): Washer fluid is sprayed out

Position (b) (OFF): Stopped

Position (c): Wiper is actuated

Position (d): Wiper is actuated and washer fluid is sprayed out

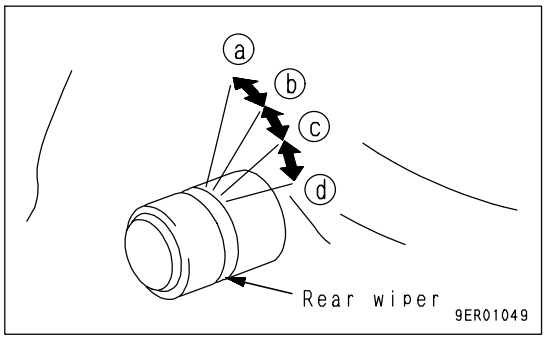

ROOM LAMP SWITCH

The switch (22) is used to turn the room lamp ON and OFF.

Position (a): OFF

Position (b): Lights up when the door opens

Position (c): Lights up

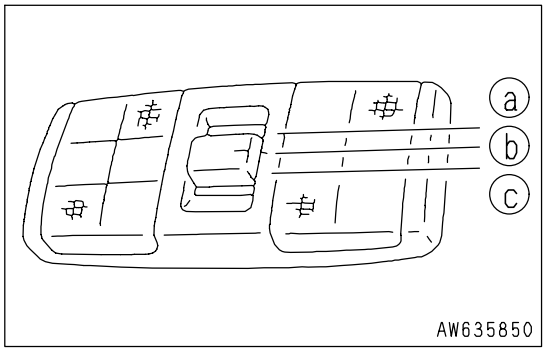

REMARK

- The room lamp lights up even when the main switch is OFF, so when leaving the operator's seat, set the switch to position (a) or (b).
- When carrying out operations with the door fully opened, set the switch to position (a) (OFF).

https://truckmanualshub.com/

CONTROL LEVERS AND PEDALS

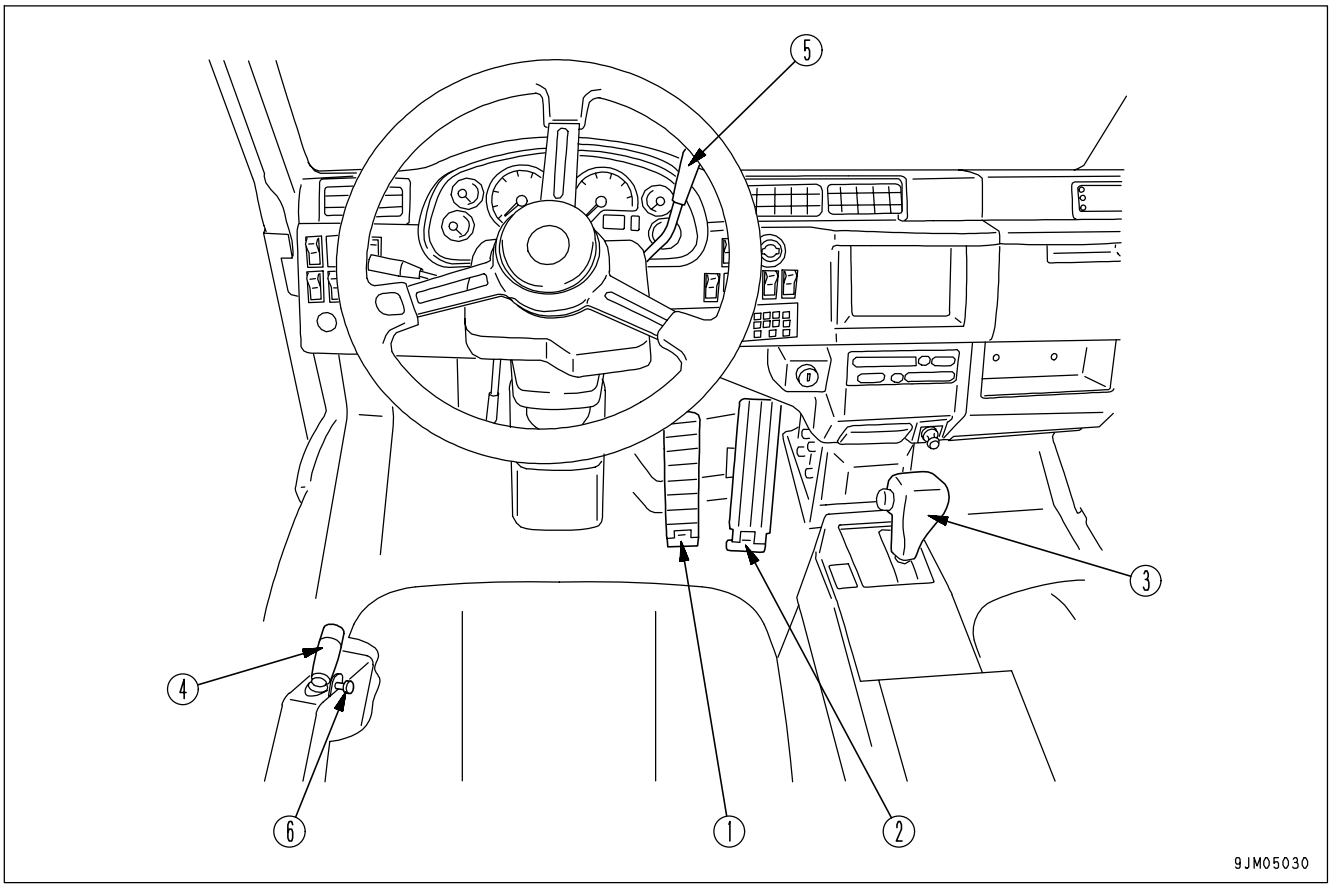

(1) Brake pedal
(2) Accelerator pedal
(3) Shift lever
(4) Dump lever
(5) Retarder control lever
(6) Dump lever lock knob

BRAKE PEDAL

This pedal (1) is used to apply the wheel brakes.

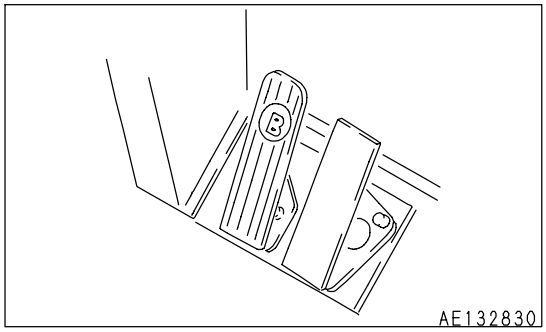

https://truckmanualshub.com/

ACCELERATOR PEDAL

This pedal (2) is used to adjust the engine speed.
It can be operated freely between the engine low idle position and the full throttle position.

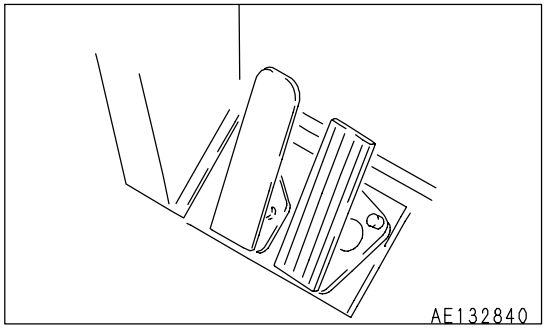

GEAR SHIFT LEVER

The gear range can be selected with this lever (3) to match the travel conditions.

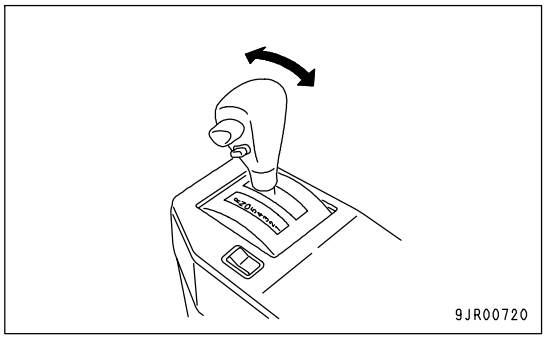

Position D:
This is used when traveling normally. When this position is used, the transmission is set automatically between the 2nd torque converter drive and 6th gear according to the travel speed. While the dump body is raised, however, the transmission is fixed to the 2nd gear and is not changed. Keep the dump body lowered during travel. The maximum travel speed in this position is 58.6 km/h (36.4 MPH).

REMARK
In conformity with the EU safety rule (EN474-6 5.1.3), the gear shift lever is restricted to the 2nd speed and cannot be shifted in the D position, when the machine is running while the dump body is not fully lowered to its seat.

Position R1:
This is used when traveling in reverse. When this position is used, the transmission is fixed in R1 and the travel is carried out in torque converter drive or direct drive according to the travel speed. The maximum travel speed in this position is 7.6 km/h (4.7 MPH).

Position R2:
This is used when traveling in reverse. When this position is used, the transmission is fixed in R2 and the travel is carried out in torque converter drive or direct drive according to the travel speed. The maximum travel speed in this position is 18.1 km/h (11.2 MPH).
The machine cannot travel in reverse while the dump body is raised. Lower the dump body and set the dump lever in the "FLOAT" position, and then set it in the "R1" or "R2" position.

https://truckmanualshub.com/

5 - 1 position:
These positions are used in places where it is difficult to travel at high speed, or when traveling on soft ground, or when starting the machine off on a slope when it is loaded. They are also used
when going downhill if it is needed to use the braking force of the engine.
While the dump body is raised, the transmission is fixed to the 1st gear and is not changed. Keep the dump body lowered during travel.

REMARK
In conformity with the EU safety rule (EN474-6 5.1.3), the gear shift lever is restricted to the 1st speed and cannot be shifted if it is anywhere between 1 to 5 positions, when the machine is running while the dump body is not fully lowered to its seat.

- The speed ranges for each position are as follows.

Position	Speed range	Max. speed [km/h (MPH)]
R2	R2nd torque converter - direct	18.1 (11.2)
R1	R1st torque converter - direct	7.6 (4.7)
D	2nd torque converter - 6th direct	58.6 (36.4)
5	1st torque converter - 5th direct	38.4 (23.9)
4	1st torque converter - 4th direct	25.5 (15.8)
3	1st torque converter - 3rd direct	16.2 (10.1)
2	1st torque converter - 2nd direct	10.7 (6.6)
1	1st torque converter - 1st direct	6.8 (4.2)

When operating the shift lever, be sure to set it in position securely.
If the lever is not placed in position properly, the shift position display on the panel may go out and the Transmission system caution lamp may light up.
Before shifting between forward and reverse, stop the machine completely and then run the engine at low idle.
When starting the engine, if the shift lever is not at the N (neutral) position, the engine will not start.
When the starting switch is at the ON position, if the shift lever is not at the N (neutral) position, the shift lever position pilot lamp will flash, the central warning lamp will light up, and the alarm buzzer will sound.

If the parking brake is applied or the shift lever is not at the N (neutral) position, the central warning lamp will light up and the alarm buzzer will sound.

If the shift lever is set to any position other than N (neutral) when the dump lever is at a position other than FLOAT or the body is still raised, the central warning lamp will light up and the alarm buzzer will sound.

The shift lever must not be returned to the N (neutral) position while traveling.

Release the accelerator pedal and run the engine at low idle when moving the shift lever from the N position to the forward or reverse position.

https://truckmanualshub.com/

When moving the shift lever from the N (neutral) position to the R1 (reverse) position or from the N position to the D position, press the lock button on the shift lever before operating it.

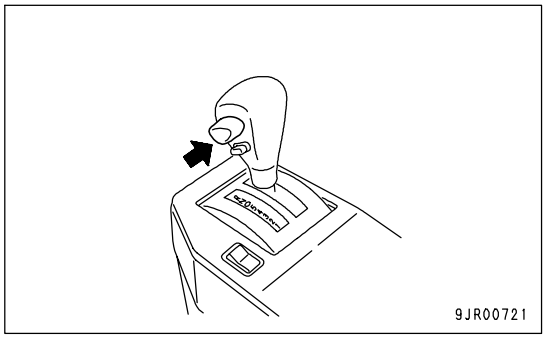

Activating the shift hold function will restrict the automatic shifting of the transmission to gear speeds below the gearshift lever gear shifting.
The shift hold function can be canceled by [1] moving the gearshift lever or [2] activating the shift hold switch located on the gearshift lever.
The shift hold pilot lamp located on the machine instrument panel will indicated the status of the shift hold function.
Before starting either up or down a range, pre-select the transmission gear and maintain a machine travel speed which will give you full control under all the anticipated conditions.

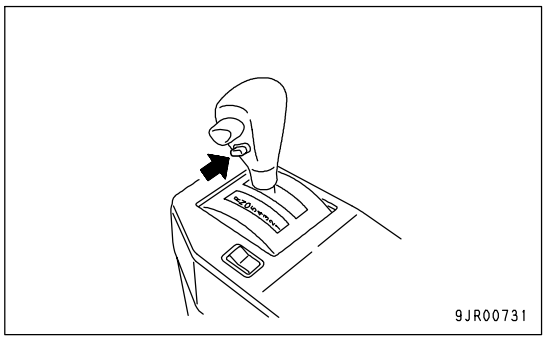

DUMP LEVER

CAUTION

To prevent damage to the dump body through vibration from the road surface, always lower the dump body before traveling.

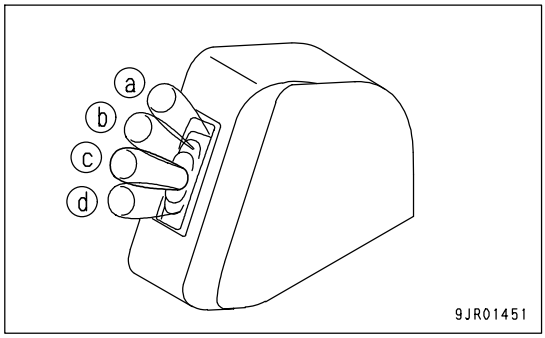

This lever (4) is used to operate the dump body.
(a) RAISE
(b) HOLD: The dump body stops and is held in position.
(c) FLOAT: The dump body moves freely under external force.
(d) LOWER
Always set to the FLOAT position when traveling.

It is impossible to travel in reverse if the dump body is raised.
If the engine stops during the dump operation, the dump body is held in position, regardless of the position of the dump lever. Even when the engine starts again, the dump body is held in position. For details of the method of canceling the hold function, see "CANCELING DUMP BODY HOLD CONDITION (PAGE 3-88)".

https://truckmanualshub.com/

RETARDER CONTROL LEVER

CAUTION

The retarder must not be used as a parking brake.

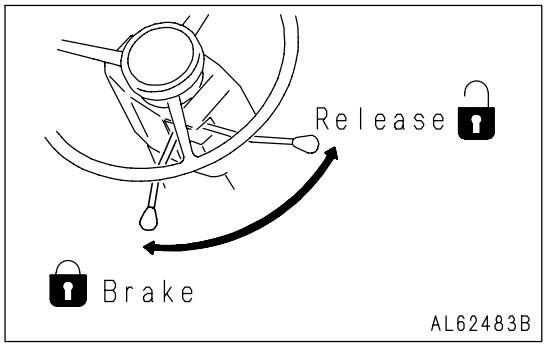

Use this lever (5) to operate the retarder when traveling downhill. The more the lever is pulled, the greater the braking force becomes.
When the retarder is operated, the retarder operation lamp lights up.

When leaving the operator's seat, always apply the parking brake.

DUMP LEVER LOCK KNOB

WARNING

When carrying out inspection of the machine with the dump body raised, always set the dump lever to the HOLD position, lock with the dump lever lock knob, then use the body pivot pin.

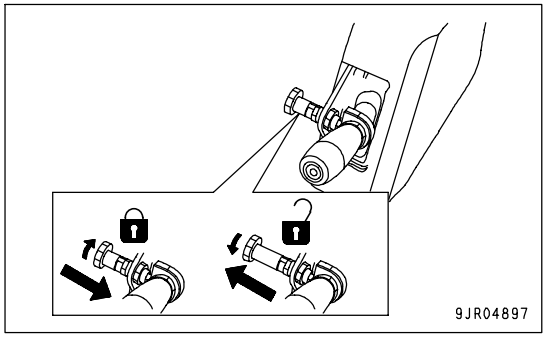

This device (6) is used to lock the dump lever.

To set to the FREE position, pull the lock knob up until it stops, then turn it to lock it in position.
To set to the LOCK position, pull the lock knob up, then turn it to release the lock. The knob will be pushed in by the force of the spring, and the lock will be applied. After doing this, check that the dump lever is locked.

https://truckmanualshub.com/

BODY PIVOT PIN

WARNING

When carrying out inspection of the machine with the dump body raised, always set the dump lever to the HOLD position, lock with the dump lever lock knob, then use the body pivot pin.

This is a safety device for the dump body, and is used when carrying out inspection or maintenance with the dump body raised. Raise the dump body fully, insert body pivot pins (1). Always insert the body pivot pins on both sides.

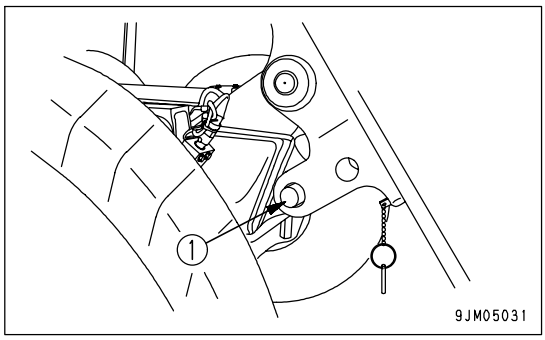

STOWING BODY PIVOT PIN

Store the body pivot pin under the rear of the dump body.
Insert body pivot pin (1), then insert lock pin (2) to stow the body pivot pin.

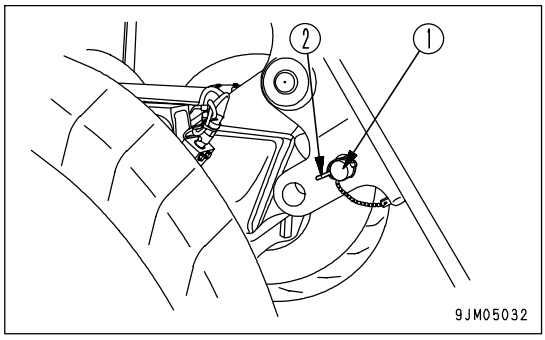

ARTICULATE LOCK

WARNING

If the machine is transported or raised without applying the articulation lock, the machine may suddenly articulate. This may cause serious injury to persons in the surrounding area.

- **When transporting or raising the machine, always apply the articulation lock.**
- **Apply the articulation lock if necessary when carrying out maintenance.**

The articulation lock is a device to lock the front frame and rear frame to prevent the machine from articulating.

LOCK position: Always set to this position when transporting or raising the machine.
Set to the LOCK position if necessary when carrying out maintenance.

FREE position: Always set to this position when traveling

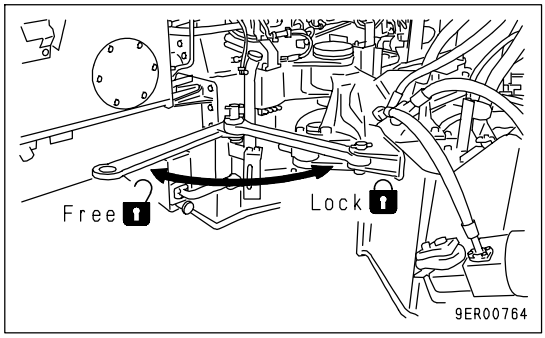

https://truckmanualshub.com/

LOCATION OF FIRE EXTINGUISHER

Fire extinguisher (1) is installed to the left front of the machine.

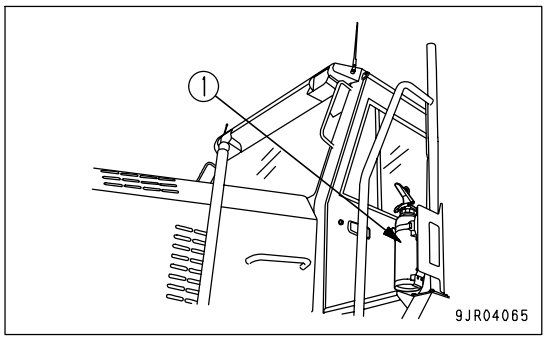

DUST INDICATOR

This device indicates clogging of the air cleaner.

Depending on the degree of clogging of the element, red line (1) appears in the transparent portion. If red line (1) indicates 7.5 kPa (30 INCHES H_2O) (0.076 kg/cm^2, 1.1 PSI), clean the element immediately.

After cleaning, press top portion (2) of the indicator to return red line (1) to its original position.

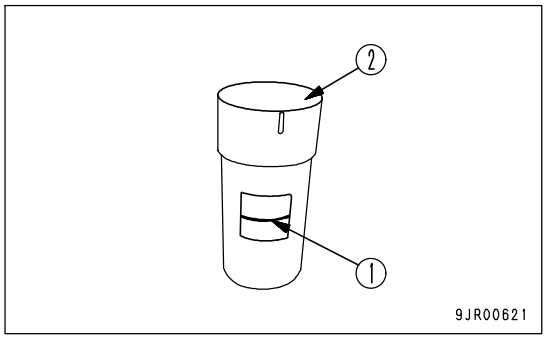

CIRCUIT BREAKER

After the circuit breaker operates, it can be reset by pushing in the reset button. If the reset button comes out soon after it is pushed in, there may be a short circuit in the electric circuit. In this case, ask your Komatsu distributor for repair.

(1) For primary power supply (30 A)
(2) For primary power supply (Direct) and engine controller (30 A)
(3) For secondary power supply (Accessory power) (80 A)

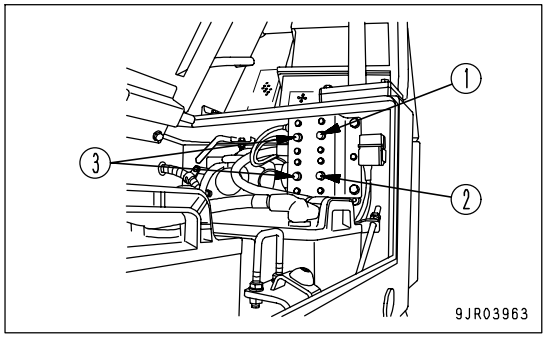

https://truckmanualshub.com/

FUSES

The fuses protect the electrical equipment and wiring from burning out.

If the fuse becomes corroded, or white powder can be seen, or the fuse is loose in the fuse holder, replace the fuse.

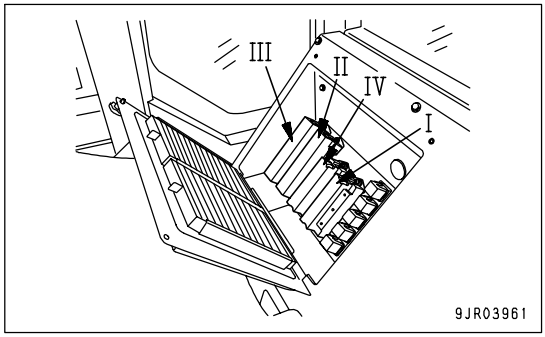

NOTICE

- **When replacing any fuse, always turn the power off (turn the starting switch to OFF).**
- **When replacing the fuse, always use a fuse of the same capacity and type.**

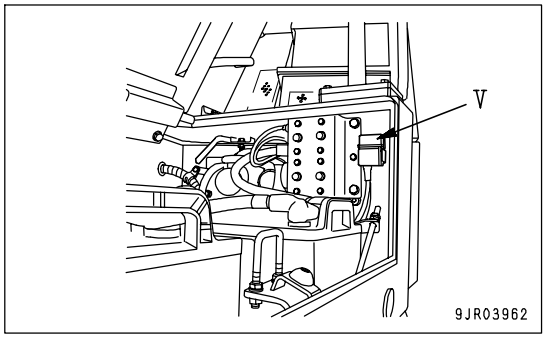

FUSE CAPACITY AND CIRCUIT NAME

Fuse BOX I (BT1)

No.	Capacity	Name of circuit
(1)	20A	Main lamp
(2)	10A	Turn signal lamp
(3)	20A	Head lamp (right)
(4)	20A	Head lamp (left)
(5)	10A	Side lamp (right)
(6)	10A	Side lamp (left)
(7)	10A	Stop lamp
(8)	20A	Backup lamp, backup buzzer
(9)	20A	Working lamp (front)
(10)	20A	–

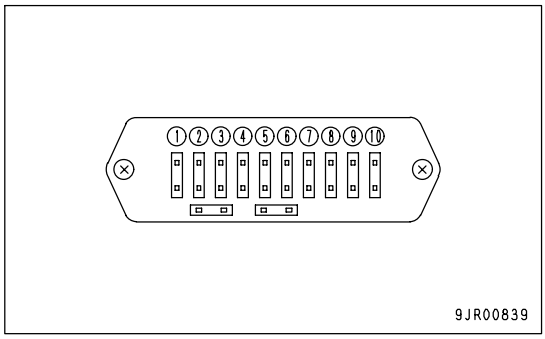

https://truckmanualshub.com/

Fuse box II (BT2)

No.	Capacity	Name of circuit
(11)	5A	Engine controller
(12)	10A	KOMTRAX
(13)	10A	Machine monitor
(14)	10A	Parking brake
(15)	10A	Rear view monitor
(16)	20A	Front wiper
(17)	20A	Rear wiper
(18)	10A	Machine monitor, KOMTRAX
(19)	10A	Retarder controller
(20)	20A	Terminal a
(21)	10A	Transmission controller
(22)	20A	Hazard lamp
(23)	10A	Emergency steering
(24)	10A	Room lamp
(25)	20A	Direct from battery (spare)

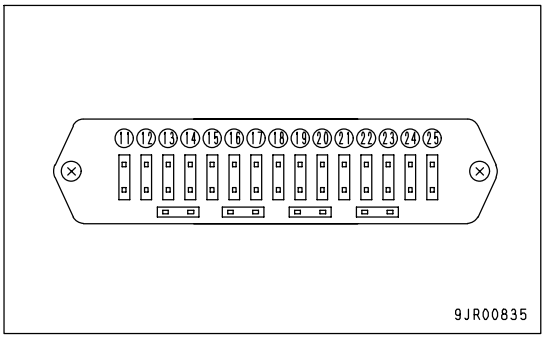

Fuse box III (BT3)

No.	Capacity	Name of circuit
(26)	20A	Fog lamp (if equipped)
(27)	20A	Air conditioner controller (if equipped)
(28)	10A	Heater
(29)	10A	Heater
(30)	10A	Machine monitor
(31)	10A	Retarder controller
(32)	10A	Transmission controller
(33)	10A	Emergency steering, Parking brake relay
(34)	20A	Power window (right)
(35)	20A	Power window (left)
(36)	20A	
(37)	20A	
(38)	20A	
(39)	30A	Rear heater
(40)	30A	Engine controller

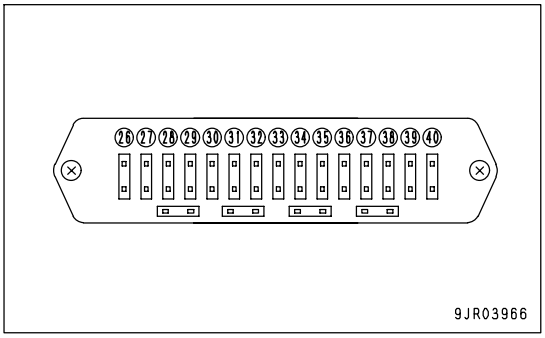

https://truckmanualshub.com/

Fuse box IV (BT4)

No.	Capacity	Name of circuit
(41)	10A	Spot Light (if equipped), Room lamp 2
(42)	10A	Radio
(43)	10A	Yellow rotating lamp (if equipped) Step lamp (if equipped)
(44)	20A	Side lamp (if equipped)
(45)	10A	Auto-preheater
(46)	10A	Horn
(47)	10A	Tachograph (if equipped)
(48)	10A	Cigarette lighter
(49)	10A	Air suspension seat
(50)	10A	Air conditioner

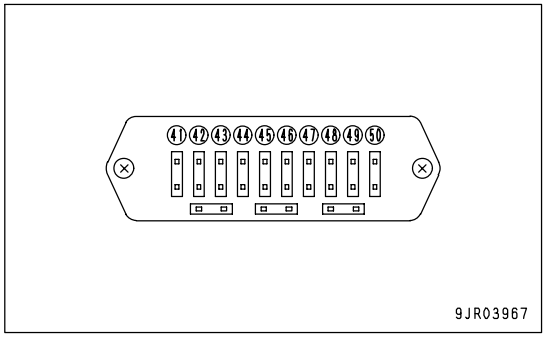

Fuse box V

No.	Capacity	Name of circuit
(51)	120A	Power supply for electrical intake air heater

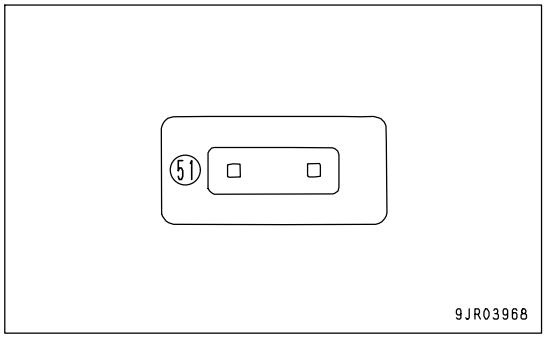

Precautions when adding electrical equipment

CAUTION

If the electrical equipment system is changed, problems may occur in the machine control. Do not make any changes to the electrical system.

If you want to make any change to the electrical system, please contact your Komatsu distributor.

https://truckmanualshub.com/

CAR RADIO
(If equipped)

EXPLANATION OF COMPONENTS

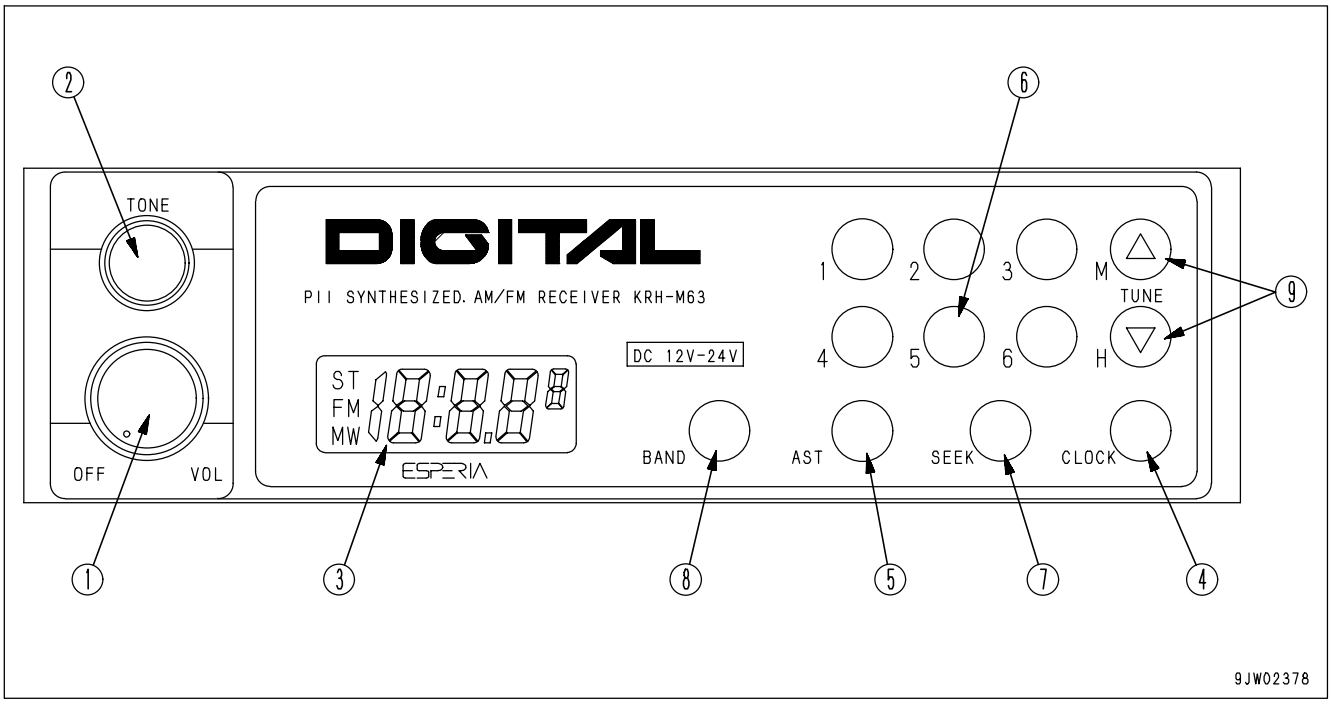

(1) Power switch/Volume
(2) Tone control knob
(3) Display
(4) Clock button/Displaying frequency
(5) AST
(6) Preset switch
(7) Seek
(8) Band selector switch
(9) Tuning switch

POWER SWITCH/VOLUME
When this switch (1) is turned to the right, it clicks and the power is turned on. If it is turned further, the speaker volume is adjusted.

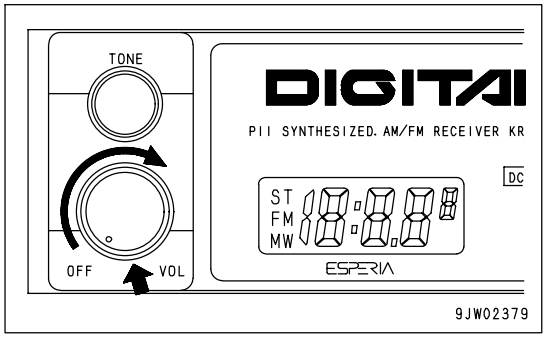

https://truckmanualshub.com/

TONE CONTROL KNOB

If this knob (2) is turned to the right, the high tone is emphasized; if it is turned to the left, the high tone is reduced.

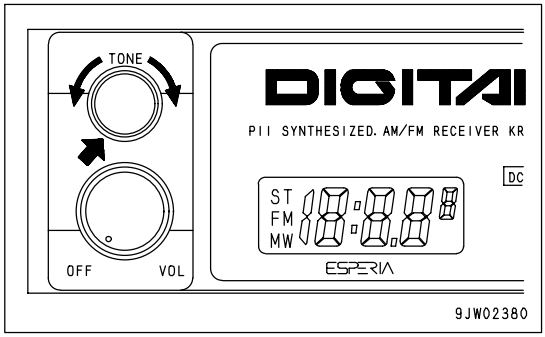

DISPLAY

This display (3) shows the radio reception frequency and the operating mode.

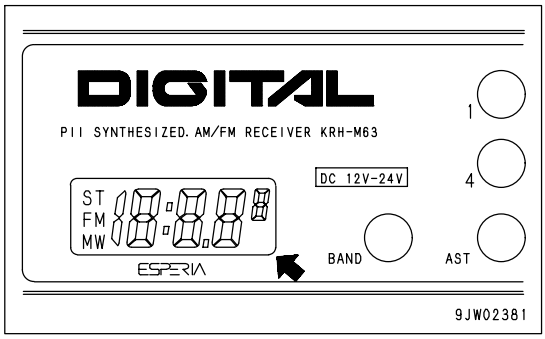

CLOCK BUTTON/DISPLAYING FREQUENCY

When this button (4) is pressed, the display changes to the time. If it is pressed again, it displays the frequency.

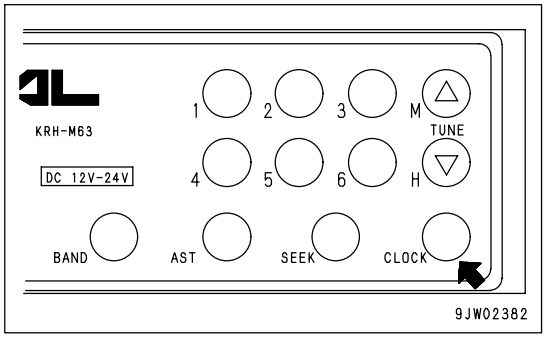

AST

When this button (5) is pressed, the preset stations are called up in turn.

When the desired broadcasting station is reached, press the button again to stop it.

If the button is kept pressed continuously for 2 seconds, it is set to auto memory.

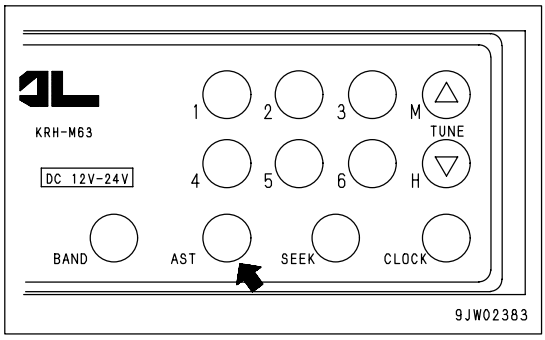

https://truckmanualshub.com/

PRESET SWITCH

With this switch (6), each button can be set to one station each for FM and MW (AM). (For details of the method of resetting, see "METHOD OF PRESET (PAGE 3-54)".)

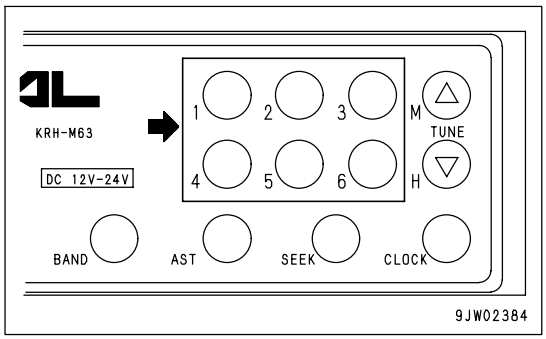

SEEK

When this switch (7) ("SEEK") is pressed, it automatically searches for stations that can be received, and when it receives a station, it stops.

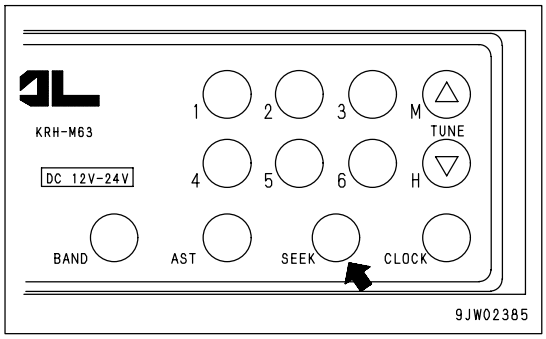

BAND SELECTOR SWITCH

When this switch (8) ("BAND") is pressed, the band is switched between FM and MW (AM).
The reception band and frequency are displayed on the display.

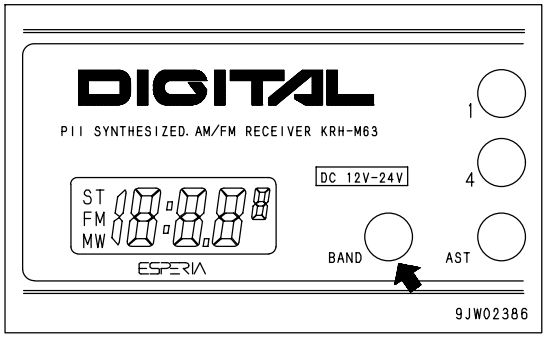

TUNING SWITCH

When the "TUNE" button △ of switch (9) is pressed, the frequency goes up; when the ▽ button is pressed, the frequency goes down. If it is kept pressed, the frequency changes continuously.

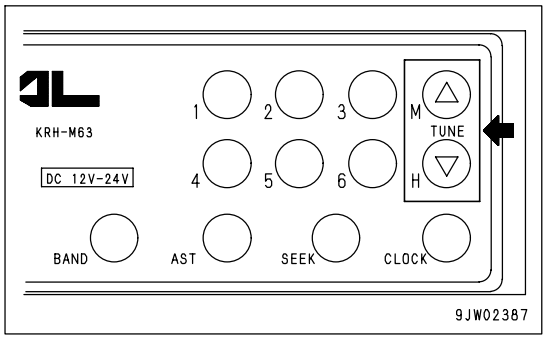

https://truckmanualshub.com/

METHOD OF OPERATION

LISTENING TO RADIO

1. This switches on power (1) for the radio.
2. "BAND" switch (2) is used to select MW (AM) or FM.
3. Use the preset switch or tuning switch (3) to select the station.
4. Adjust the volume and tone as desired.
5. To turn the radio OFF, turn VOL knob (1) to the left until a click is heard.

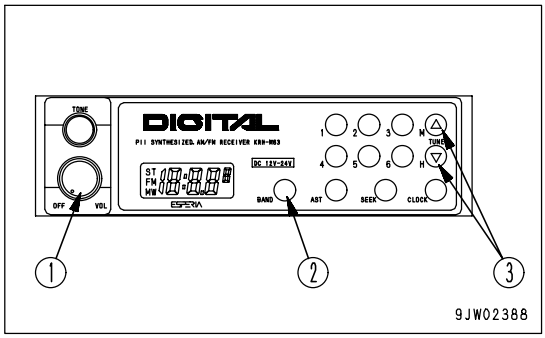

METHOD OF AUTOMATIC TUNING

When the "SEEK" switch is pressed, it moves up to higher frequencies and when it finds a station that can be received, it stops automatically.

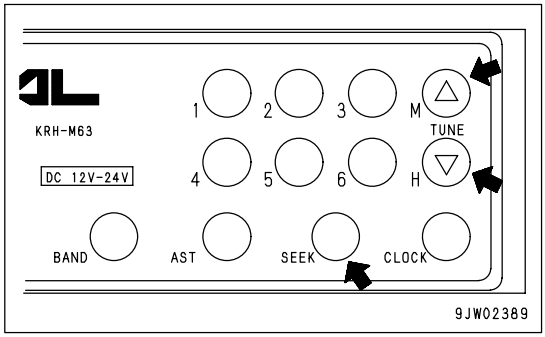

METHOD OF MANUAL TUNING

When the TUNE button △ is pressed, the frequency goes up; when the ▽ button is pressed, the frequency goes down. If it is kept pressed, the frequency changes continuously.

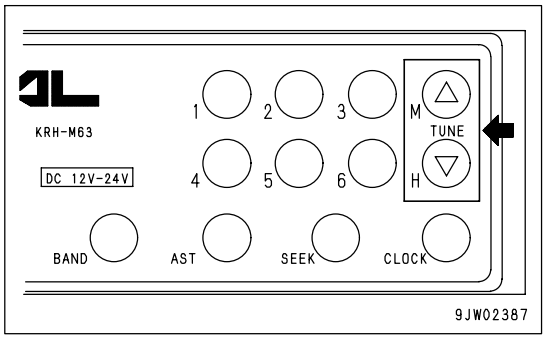

https://truckmanualshub.com/

METHOD OF PRESET

1. Select the desired preset station.
   Use the "BAND" button to select MW (AM) or FM, and use the "TUNE" button to select the frequency of the broadcasting station.
2. Decide the number of the button to be preset, and keep it pressed for 2 seconds. The number of the button will be displayed and the presetting is completed.
3. Repeat Steps 1 to 2 to preset other broadcasting stations.
   - To change the setting of a preset switch to another station, repeat Steps 1 to 2.
   - If the battery is replaced or the power is switched off, all the preset settings are deleted. Carry out the presetting operation again.
   - It is possible to preset 6 AM (MW) stations and 6 FM stations.

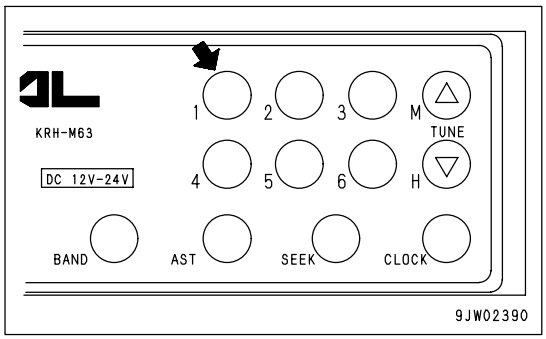

METHOD OF AUTOMATIC MEMORY

If the "AST" button is pressed for 2 seconds, the broadcasting stations that can be received in the area are called up in turn, and the broadcasting stations are automatically saved in the preset memory.

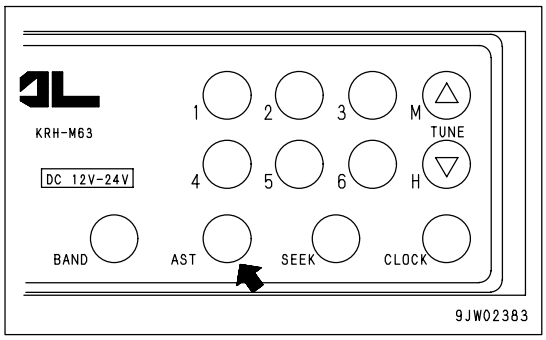

AUTOMATIC SWITCHING RECEPTION OF MONAURAL/STEREO

If the reception of the FM stereo broadcast being received is weak (when you are far from the broadcasting station or are surrounded by hills), the radio is automatically switched from stereo to monaural to reduce the interference. When the stereo broadcast becomes stronger, it automatically switches back to stereo broadcasting.

https://truckmanualshub.com/

ADJUSTING TIME

1. Turn the radio power ON. If the display shows the frequency, set the CLOCK button to the time display.
2. To set the time, keep the CLOCK button pressed and
   Press the △ button to change the minutes
   Press the ▽ button to change the hours

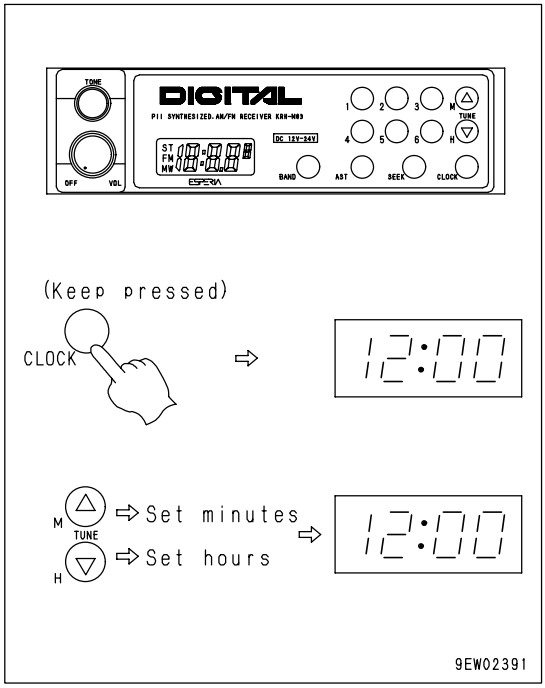

PRECAUTIONS FOR USE

- Stow the antenna when traveling in places with low overhead clearance.
- To ensure safety, always keep the sound to a level where it is possible to hear outside sounds during operation.
- If water gets into the speaker case or radio, it may lead to an unexpected failure, so be careful not to get water on the equipment.
- Do not wipe the scales or buttons with solvent such as benzene or thinner. Wipe with a dry soft cloth. If the dirt cannot be removed easily, soak the cloth with alcohol.

https://truckmanualshub.com/

CAR STEREO

(If equipped)

EXPLANATION OF COMPONENTS

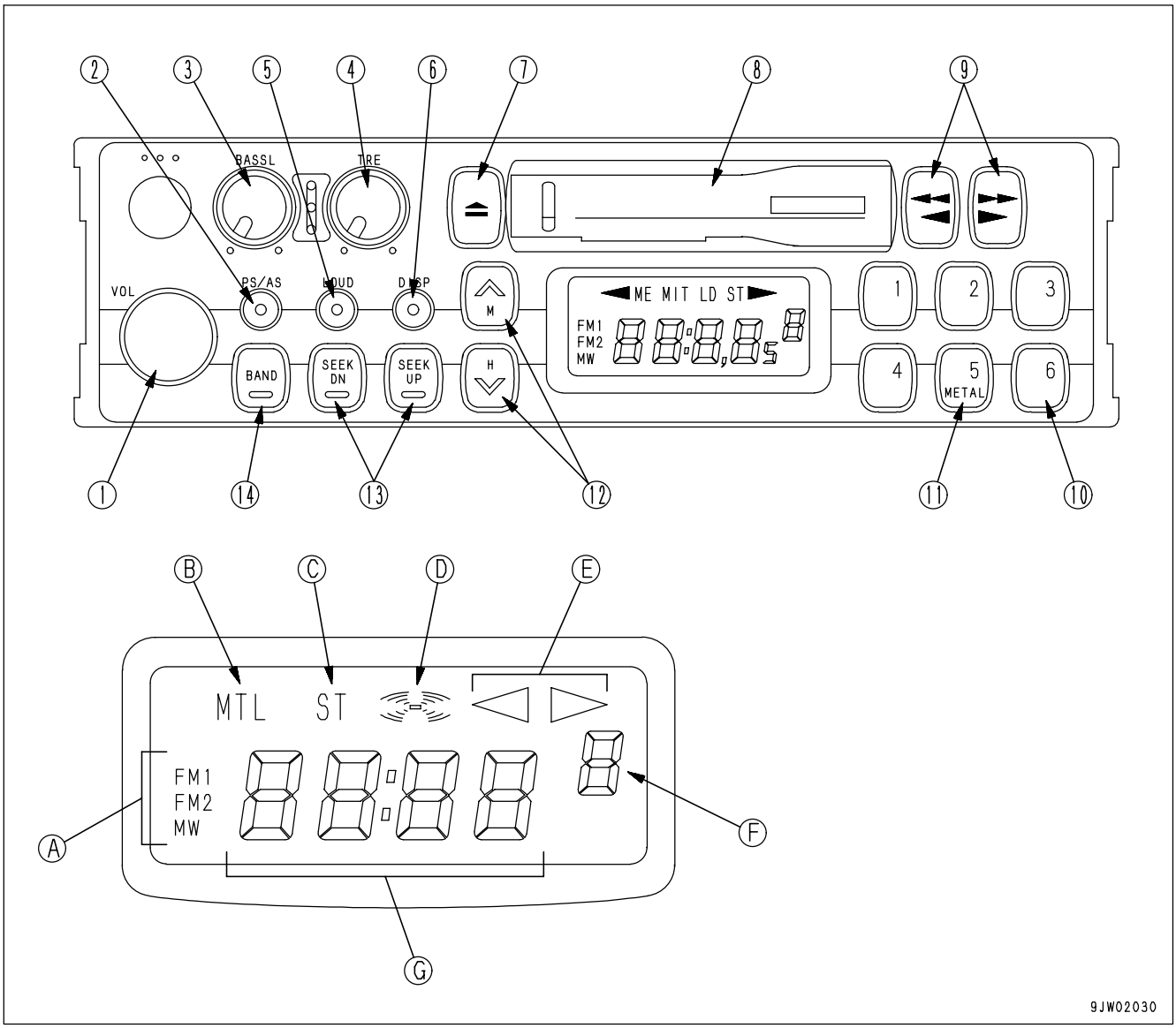

(1) Power switch/Volume
(2) Auto-store/Preset scan button
(3) Bass control knob
(4) Treble control knob
(5) Loudness button
(6) Time/Radio display selector button
(7) Tape eject button
(8) Cassette door
(9) Fast forward, rewind buttons
(10) Preset buttons
(11) Metal tape button
(12) Manual tuning buttons
(13) Seek tuning buttons
(14) Band selector button

(A) Band display
(B) Metal tape display
(C) FM stereo reception display
(D) Loudness display
(E) Tape direction display
(F) Preset channel display
(G) Time/Frequency display

https://truckmanualshub.com/

POWER SWITCH/VOLUME

Turn this knob (1) to the right until it clicks to turn the power on.
Turn it further to increase the volume.

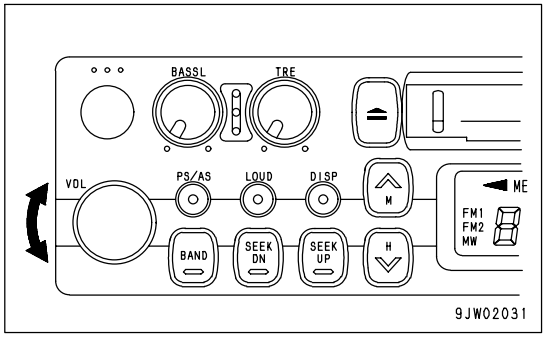

AUTO-STORE/PRESET SCAN BUTTON

Use this button (2) to actuate the preset scan and auto-store functions.

- Auto-store
  Each time this button is pressed for more than 2 seconds while in radio reception, this auto-store function automatically starts to search for the desired station within a receivable band, and memorize the frequency in the preset memory. During this scanning process, the frequency shown in the right side of display continues to change. This indicates that each frequency is memorized in the auto-store.

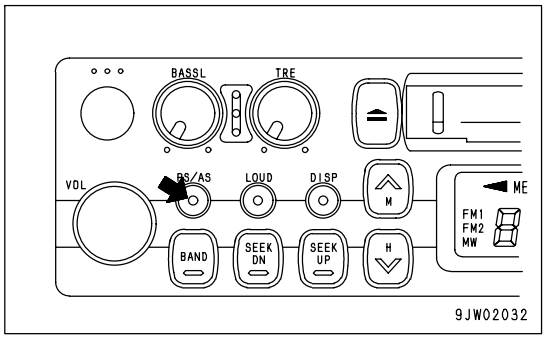

REMARK

The auto-store function cannot be used when the channel display is flashing.
When the display is flashing, the preset scan function is being used.

- Preset scan
  If this button is pressed for less than 0.5 second while in radio reception, programs from the six preset stations in the same band will be broadcast one after another for 5 seconds each, starting from No. 1 through No. 6 stations consecutively.
  When the desired station is found, press the button again. This stops the preset scan tuning process and switches to ordinary broadcasting. The same process will be repeated continuously until the button is pressed again.

BASS CONTROL KNOB

Turn this button (3) to the left to reduce the low tones; turn it to the right to emphasize the low tones.
Direction (a): Low tone reduced
Direction (b): Low tone emphasized

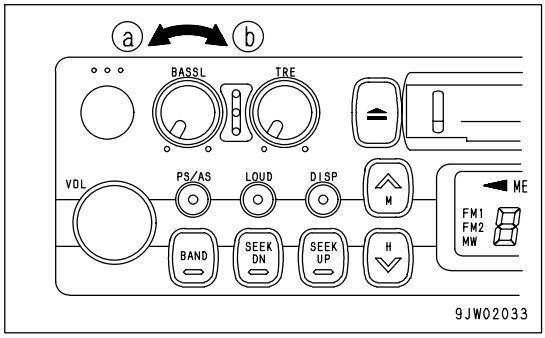

https://truckmanualshub.com/

TREBLE CONTROL KNOB

Turn this button (4) to the left to reduce the low tones; turn it to the right to emphasize the high tones.
Direction (a): High tone reduced
Direction (b): High tone emphasized

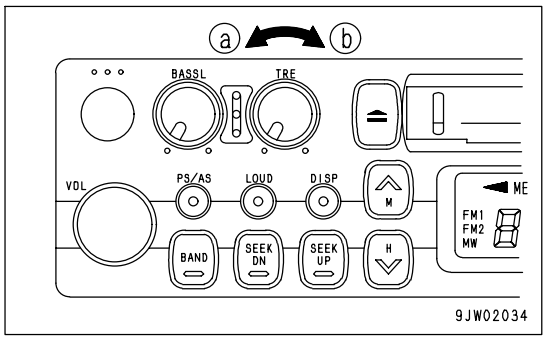

LOUDNESS BUTTON

This button (5) is used when playing at low volume. It makes it possible to hear more easily by emphasizing the low tone when the low tones are weak.
Push button: Actuated (ON)
Push button again: Canceled (OFF)

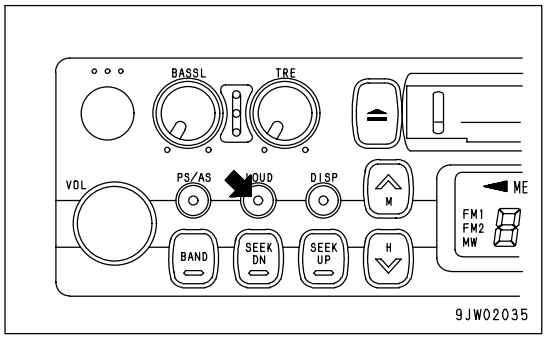

TIME/RADIO DISPLAY SELECTOR BUTTON

This button (6) is used to switch between the "Radio/tape display" and the "Time display".

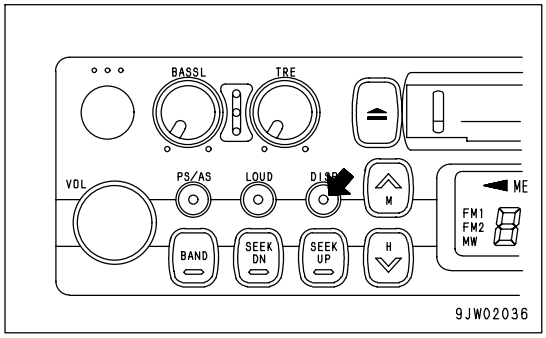

- Correcting the time
  Press the button to set the time display.
  (A) Correcting hour:
  Keep the DISP button pressed and press the bottom (H) of the TUNING button to correct the hour.
  (B) Correcting minute:
  Keep the DISP button pressed and press the top (M) of the TUNING button to correct the minute.

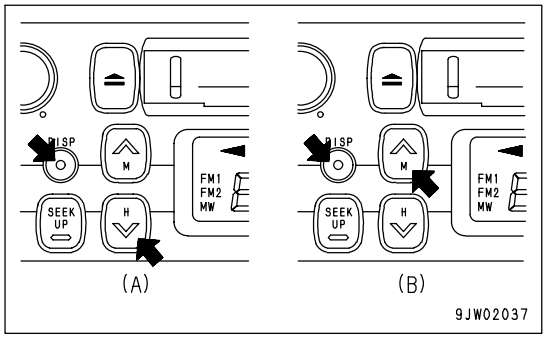

https://truckmanualshub.com/

TAPE EJECT BUTTON

This button (7) is used to stop the tape and to eject the cassette. When this button is pressed, the tape is ejected and the radio plays.

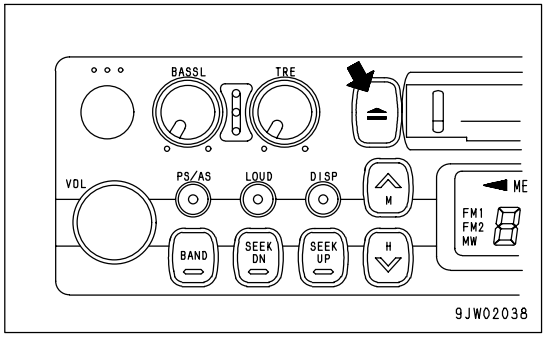

CASSETTE DOOR

Set the cassette with the exposed portion of the tape on the right side and insert it through the cassette door (8).

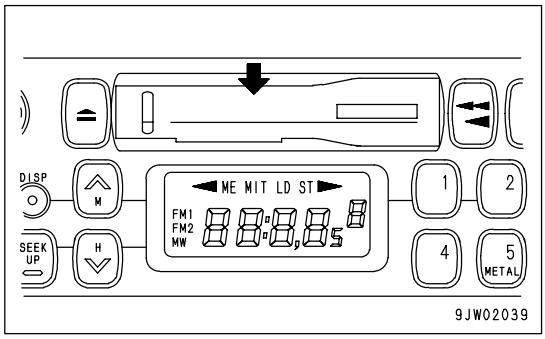

FAST FORWARD, REWIND BUTTONS

These buttons (9) are used to fast-forward or rewind the tape.

- Fast-forward/rewind
  If you press the button pointing in the same direction as the lighted arrow indicating the direction of play, the tape will be fast-forwarded; if you press the button pointing in the opposite direction, the tape will rewind.
  To stop the tape, lightly press the button that is not locked. The fast-forward or rewind operation will be canceled.
  If the fast forward and rewind buttons are pressed at the same time, the tape will change sides.

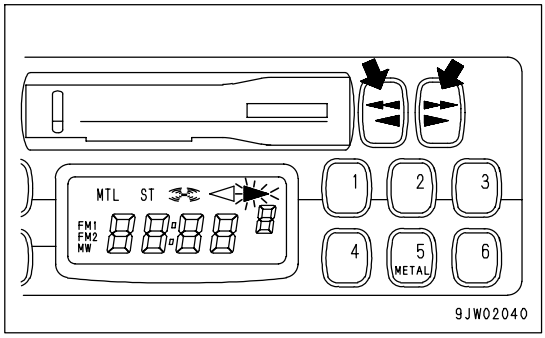

PRESET BUTTONS

These buttons (10) are used to call up the broadcast station frequencies preset in memory for each of buttons No. 1 to No. 6. It is possible to preset 18 stations (FM: 12; AM: 6) with these buttons.

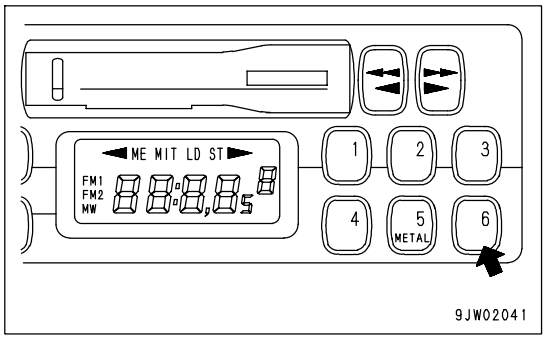

https://truckmanualshub.com/

METAL TAPE BUTTON

(used also for preset button No. 5)

This button (11) is used when playing a metal or chrome tape. This button is also used for preset button No. 5. When it is pressed, "MTL" appears on the display.

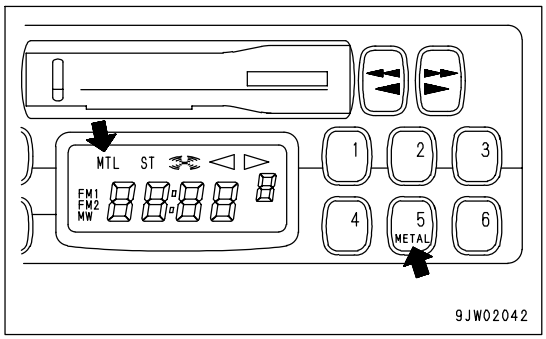

MANUAL TUNING BUTTONS

These buttons (12) are used for manual tuning.

When "TUN ∧" button is pressed, the frequency goes up 9 kHz for AM or 0.1 MHz for FM; when "TUN ∨" button is pressed, the frequency goes down 9 kHz for AM or 0.1 MHz for FM.

If the button is pressed down and held, the frequency will change continuously.

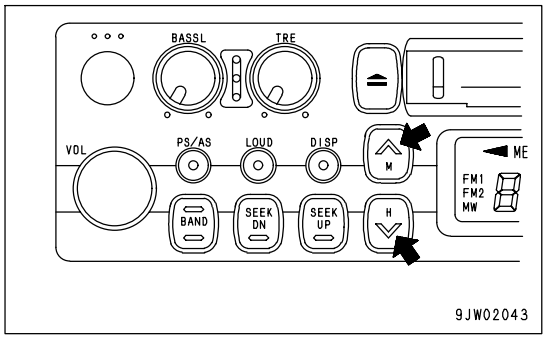

SEEK TUNING BUTTONS

These buttons (13) are used to seek tuning.

When the "SEEK UP" button is pressed, the search automatically goes up; when the "SEEK DOWN" button is pressed, the search automatically goes down.

When the next station that can be received is found, it automatically stops.

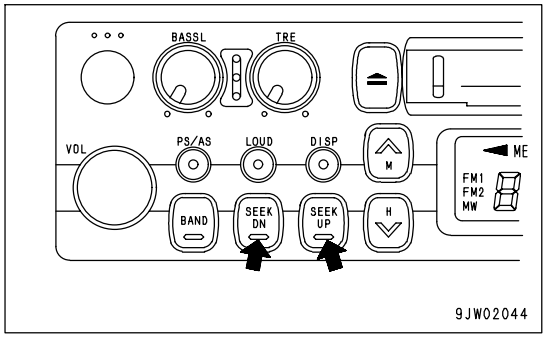

BAND SELECTOR BUTTON

When this button (14) is pressed, the band is switched between FM1, FM2, and MW (AM). The band is shown on the display.

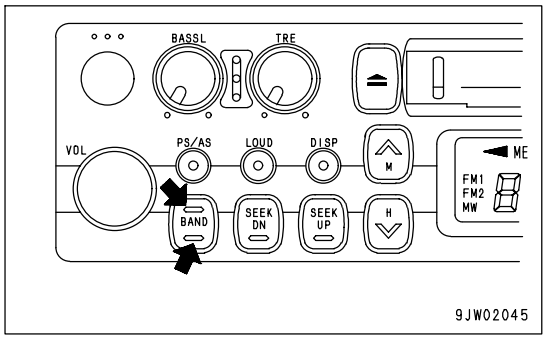

https://truckmanualshub.com/

METHOD OF OPERATION

METHOD OF SETTING PRESET BUTTONS

To listen to a preset station, use band selector button (1) to select AM, FM1, or FM2, then press the preset switch number to listen to the desired station.
It is possible to preset six AM stations and 12 FM stations (FM1: 6, FM2: 6).

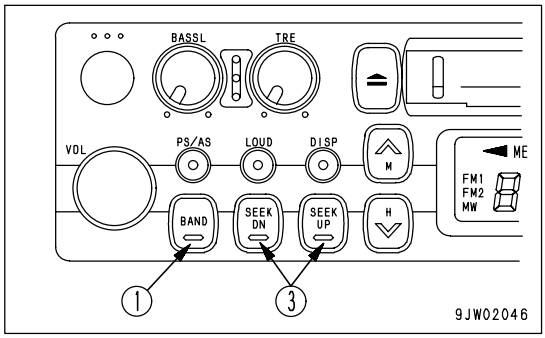

1. If you are playing a cassette, press the tape eject button to stop the tape.
2. Select the station to be preset.
   Use band selector button (1) to select MW (AM), FM1, or FM2, then use the manual tuning button to select the frequency of the broadcasting station.
3. Press manual memory button (2) or seek tuning button (3).
4. Press preset button (4) of the number to be preset for 2 seconds while the frequency display is being shown on the display. (The preset channel and frequency are displayed and the presetting is completed).
5. Repeat Steps 2 to 4 to preset other stations.

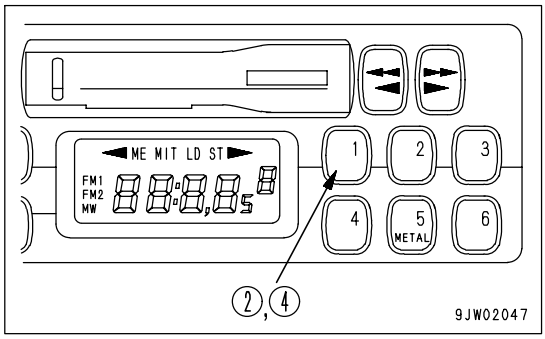

REMARK

- Use Steps 2 to 4 also when changing the setting of a preset switch to another station.
- When the power is disconnected, such as when the battery is replaced, all the settings are deleted, so preset the stations again.

MANUAL MEMORY BUTTON

Select the station to be preset with manual tuning button (1) or seek tuning button (2), then keep button No.1 to button No.6 of button (3) pressed for 2 seconds while the frequency is being displayed to preset the station.

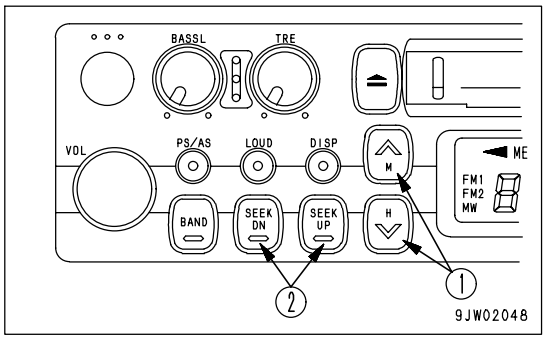

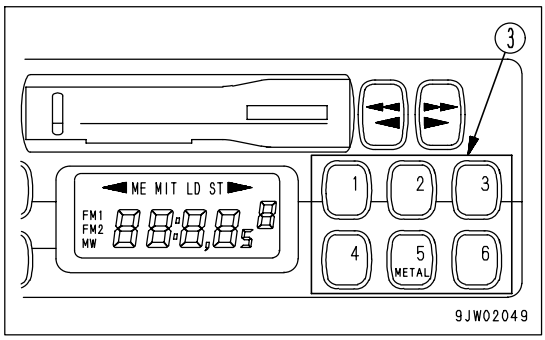

https://truckmanualshub.com/

LISTENING TO RADIO

1. Turn the starting switch ON, then turn power switch (1) ON.
2. Set band selector button (2) to AM or FM.
3. Select the station with the preset buttons or manual tuning button (3).
4. Adjust the volume, balance, and tone as desired.
5. When turning the radio OFF, turn power switch (1) to the left until it clicks.

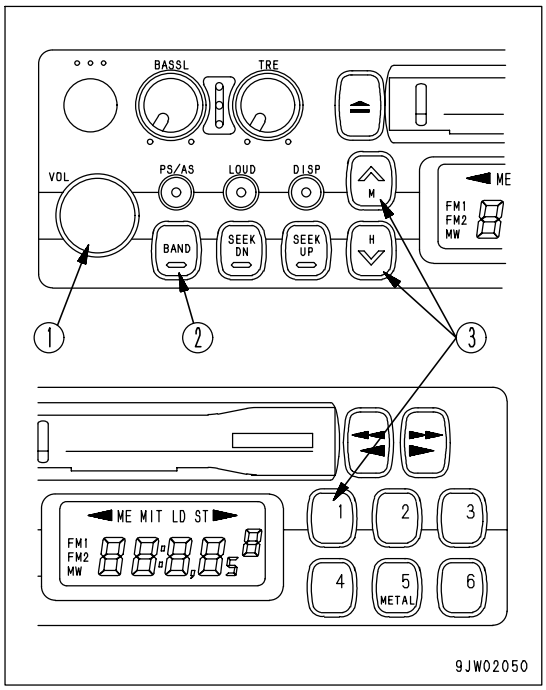

REMARK

- To switch to the radio when listening to a cassette, press the cassette eject button to stop the tape.
- If you insert a cassette when listening to the radio, the tape will start to play.

LISTENING TO CASSETTE TAPE

1. Turn the starting switch ON, then turn power switch (1) ON.
2. Set the cassette with the exposed portion of the tape on the right side and push it past the cassette door. The tape will automatically start playing.
   If the arrow indicating the direction of play is pointing to the right, the top side is being played; if the arrow is pointing to the left, the bottom side is being played.
   When the tape reaches the end, it is automatically reversed and the other side starts to play.
3. When finished with the tape, press the cassette eject button to eject the tape and automatically switch to the radio.

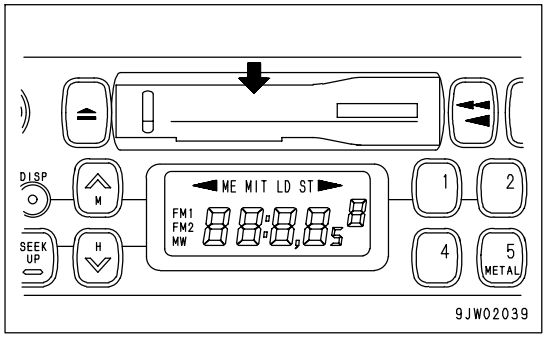

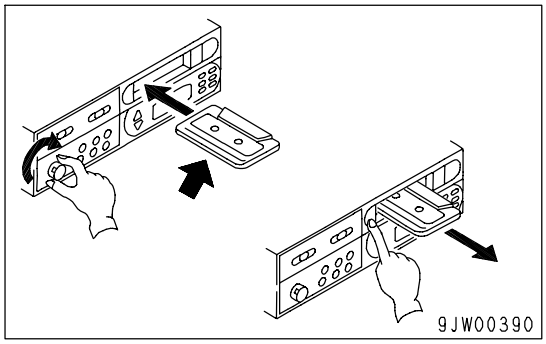

https://truckmanualshub.com/

REVERSING TAPE

When listening to the tape, press both FAST FORWARD, REWIND buttons (A) and (B) at the same time lightly.
When this is done, the tape direction display will be reversed.

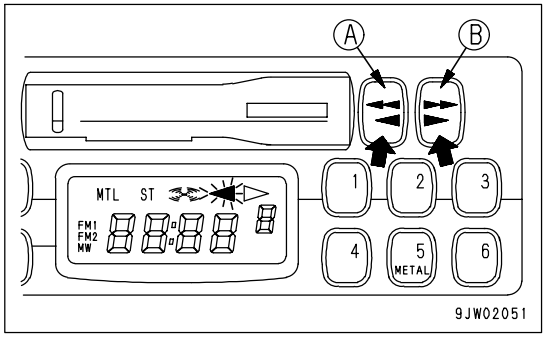

PRECAUTIONS FOR USE

- Stow the antenna when traveling in places with low overhead clearance.
- To ensure safety during operations, keep the volume at a level where it is possible to hear other machines.
- If water gets inside the speaker case or radio (auto tuning), it may cause a serious problem, take care not to let water get in these items.
- Do not wipe the scales or buttons with solvent such as benzene or thinner. Wipe with a dry soft cloth. If the dirt cannot be removed easily, soak the cloth with alcohol.

NOTICE

Handling cassette tape

- **Clean the tape head approx. once a month with a commercially available head cleaning tape.**
- **Do not leave the tape any place where it is exposed to direct sunlight, any place that is excessively dusty, or any place where there is a magnetic field.**
- **Do not use 120-minute tapes. The tape is thin and it easily gets caught up inside the machine.**
- **If the tape is slack, it easily gets caught up inside the machine. Use a pencil to wind in the tape to remove any slack.**
- **Do not use any cassette tape if the label has started to come off. It may cause defective rotation, or it may be impossible to get the tape out of the machine.**

https://truckmanualshub.com/

AIR CONDITIONER

By taking fresh air into the cab through a filter, it is possible to raise the pressure inside the cab. This makes it possible to provide a pleasant working environment even on dusty jobsites.

GENERAL LOCATIONS ON CONTROL PANEL

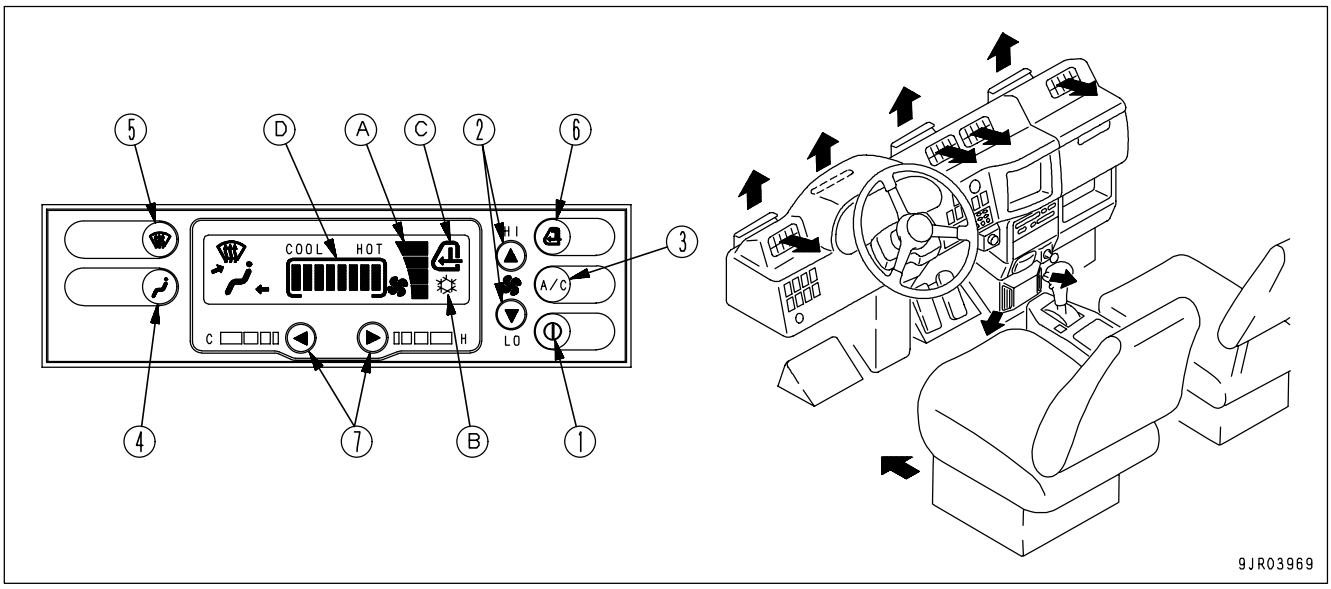

(1) ON/OFF switch
(2) Fan switch
(3) Air conditioner switch
(4) Mode selector switch
(5) DEF switch
(6) RECIRC/FRESH selector switch
(7) Temperature control switch

Air conditioner monitor

(A) Air flow bar
(B) Air conditioner operation symbol
(C) RECIRC/FRESH selector symbol
(D) Temperature bar

ON/OFF SWITCH

Use this switch (1) to turn the air conditioner ON/OFF.
When the switch is turned ON, the air conditioner monitor displays the setting being used when the switch was previously turned OFF.

FAN SWITCH

With this switch (2) it is possible to adjust the air flow from the fan to 4 levels.
Press the ∧ switch to increase the air flow; press the ∨ switch to reduce the air flow.
The air flow is shown in air flow bar (A) on the air conditioner monitor.

AIR CONDITIONER SWITCH

Use this switch (3) to actuate the cooling, heating, or dehumidifying functions, or to stop the air conditioner.
When the switch is pressed, air conditioner operation symbol (B) is displayed on the air conditioner monitor. When the switch is pressed again, the air conditioner is switched OFF and the operation symbol goes out.

https://truckmanualshub.com/

MODE SELECTOR SWITCH

Use this switch (4) to select the vents.

There are three combinations of vents: FACE, FACE/FOOT, and FOOT.

Each time the switch is pressed, the vent display on the air conditioner monitor changes in the order FACE, FACE/FOOT, FOOT, FACE.

Air conditioner monitor display	Condition of vents
	FACE
	FACE/FOOT
	FOOT

REMARK

Air also blows out from the defroster vent in FOOT mode.

DEF SWITCH

Use this switch (5) to change the vents to the DEF mode.

When the switch is pressed, the vent display on the air conditioner monitor changes as shown in the diagram on the right.

Air conditioner monitor display	Condition of vents
	DEF

When the DEF switch is pressed in any of the FACE, FACE/FOOT, or FOOT modes, the system changes to the DEF mode. In addition, when the DEF mode is being used, if the mode selector switch is pressed, it will return to the mode being used before switching to the DEF mode.

REMARK

Air also blows out from the foot vent in DEF mode.

RECIRC/FRESH SELECTOR SWITCH

Use this switch (6) to switch between recirculation of the internal air (RECIRC) or intake of external air (FRESH). When the switch is pressed, the display of RECIRC/FRESH selector symbol (C) on the air conditioner monitor changes.

(It changes in the order RECIRC, FRESH, RECIRC.)

Air conditioner monitor display	Condition of vents
	RECIRC
	FRESH

RECIRC: Only the air inside the cab is circulated. Use this position when it is needed to carry out quick heating or cooling of the cab, or when the outside air is dirty (smells or is dusty).

FRESH: Fresh air is taken in from the outside for normal heating or cooling of the cab. Use this position to make the air inside the cab fresh or to remove the mist from the cab windows. When the air conditioner takes in fresh air from the outside, the pressure inside the cab rises and this prevents the entry of dirt. The higher the position of the fan switch, the more efficient this becomes.

https://truckmanualshub.com/

TEMPERATURE CONTROL SWITCH

Use this switch (7) to adjust the temperature of the air blowing out from the vents. The adjustment can be made to 8 levels from low temperature to high temperature.
The temperature of the air blowing out from the vents is displayed on temperature bar (D) on the monitor. The lower the number of segments lighted up on the bar, the lower the temperature is.

Press the > switch to raise the temperature; press the < switch to lower the temperature.

Even when the starting switch is turned OFF, the settings of each mode are retained in memory. However, in the following cases, the settings must be made again.

- When the machine has not been used for more than seven days
- When the battery voltage is extremely low
- When there is abnormal interference from the surrounding area
- When the fan switch has been turned OFF (only the air conditioner switch setting is retained)

https://truckmanualshub.com/

METHOD OF OPERATION

With the FACE vents, it is possible to adjust the direction of the air flow and to turn it on or off.
However, do not set to the FACE mode with the vents closed.

COOLING

1. Press ON/OFF switch (1) to turn on the air conditioner power.
2. Press fan switch (2) to set the air flow to the maximum.
3. Press temperature control switch (3) to lower the temperature.
4. Press air conditioner switch (4) to set to COOLING.
5. Press RECIRC/FRESH selector switch (5) to set to RECIRC.
6. Press mode selector switch (6) to set the vents to FACE.
7. When the temperature inside the cab goes down, set to the desired temperature and air flow.

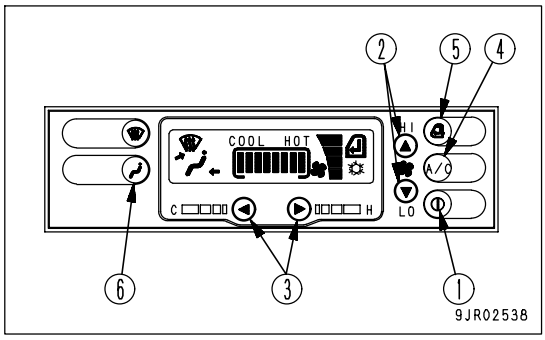

NOTICE

If operations are continued for a long time with the air conditioner set to the lowest temperature and minimum air flow, there is danger that the receiver drier may freeze.
If it freezes and no cold air comes out, stop using the cooling, and set to a higher temperature and the maximum air flow. Run for a short time under these conditions, then return to the cooling operation.

HEATING

1. Press ON/OFF switch (1) to turn on the air conditioner power.
2. Press fan switch (2) to set the air flow to the maximum.
3. Press temperature control switch (3) to raise the temperature.
4. Press RECIRC/FRESH selector switch (4) to set to FRESH.
5. Press mode selector switch (5) to set the vents to FOOT.
6. When the temperature inside the cab goes up, set to the desired temperature and air flow.

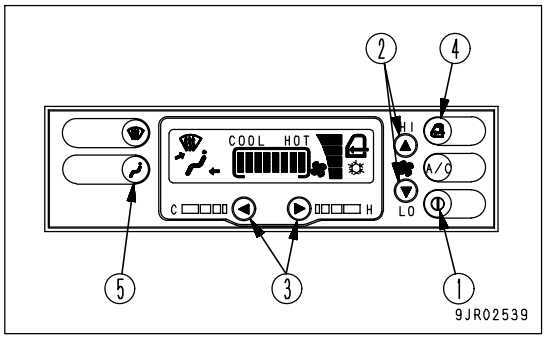

REMARK

The heating uses the heat from the engine cooling water, so it is effective only when the cooling water is hot.

https://truckmanualshub.com/

DEHUMIDIFYING, DEFROSTING

1. Press ON/OFF switch (1) to turn on the air conditioner power.
2. Press fan switch (2) to set to the desired air flow.
3. Press temperature control switch (3) to set to the desired temperature.
4. Press RECIRC/FRESH selector switch (4) to set to FRESH.
5. Press mode selector switch (5) or DEF switch (6) to set the vents to the desired position.
6. Press air conditioner switch (7) to operate the cooling.

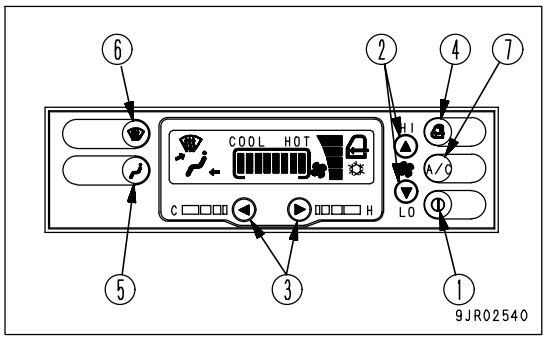

REMARK

- If the ambient temperature is below 0°C (32°F), the air conditioner cooling may not work. In this case, set to RECIRC and warm up the inside of the cab, then turn the air conditioner switch ON to operate the cooling.
- When defrosting, if the temperature control switch is pressed to set the temperature bar to the maximum (all 8 segments on the bar light up), this will improve the efficiency of removing the frost and preventing mist.

https://truckmanualshub.com/

PRECAUTIONS WHEN USING AIR CONDITIONER

To prevent putting any excessive load on the engine or compressor, turn the air conditioner ON only when the engine is running.

Carry out ventilation from time to time when using the cooling.

- When turning the cooling on, if the temperature inside the cab is high, open the doors and windows to bring in fresh air before starting the air conditioner.
- If you smoke when using the cooling, your eyes may sting. If this happens, switch temporarily to cooling and ventilation to remove the smoke.
- When using the air conditioner for a long time, carry out ventilation and cooling once every hour.

Be careful not to cool the cab too much.

For reasons of health, the optimum setting for cooling is considered to be when it feels slightly cool (5 or 6°C (9 or 10.8°F) lower than the ambient temperature) when you enter the cab. Do not make the temperature inside the cab too low or direct the air flow directly onto your skin.
Be extremely careful to select the appropriate temperature.

When cooling is not being used (off-season)

To prevent leakage of the refrigerant from the air conditioner cooling circuit, operate the air conditioner for several minutes 2 or 3 times a month during the off-season. If the air conditioner is left for a long time when the refrigerant is leaking, it may cause internal rust.

INSPECTION AND MAINTENANCE

Even when not using the air conditioner, run the compressor at low speed for several minutes once a week to prevent the loss of the oil film at various parts of the compressor. (Run the engine at low speed and set the temperature control lever to the central position.)

Clean the air filter and check the refrigerant. For details, see "CLEAN AIR CONDITIONER AIR FILTER (PAGE 4-29)" and "CHECK REFRIGERANT (GAS) LEVEL (PAGE 4-30)".

To enable the air conditioner to perform to the full and to maintain a pleasant working environment, always contact your Komatsu distributor to have the air conditioner refilled with refrigerant and to carry out other checks.

https://truckmanualshub.com/

OPERATION

CHECK BEFORE STARTING ENGINE

WALK-AROUND CHECK

Before starting the engine, look around the machine and under the machine to check for loose nuts or bolts, or leakage of oil, fuel, or coolant, and check the condition of the hydraulic system.
Check also for loose wiring, play, and accumulation of dust in places that get very hot and are exposed to extremely high temperatures.

WARNING

- **Always hang the warning tag from the shift lever.**
- **Leakage of oil or fuel, or accumulation of flammable material around the battery or high temperature parts of the engine, such as the engine muffler or turbocharger, may cause fire. Check carefully, and if any problem is found, repair it or contact your Komatsu distributor.**

Always carry out the following items before starting the engine each day.

1. Check the dump body, frame, tires, cylinders, linkage, and hoses for cracks or excessive wear or play.

Check the dump body, frame, tires, cylinders, linkage, and hoses for cracks or excessive wear or play, and carry out repairs if any problem is found.

2. Remove dirt from around engine, battery, radiator, and aftercooler.

Check that there is no dirt or dust accumulated around the engine, radiator or aftercooler. Check also that there is no flammable material (dry leaves, twigs, etc.) accumulated around the battery, or engine, muffler, turbocharger, or other high temperature parts of the engine. Remove any dirt or flammable materials that are found.

3. Check for leakage of water or oil around engine

Check that there is no oil leakage from the engine or coolant leakage from the cooling system. If any problem is found, repair it.

4. Check for oil leakage from transmission case, differential case, final drive case, hydraulic tank, brake control oil tank, hoses, and joints

Check that there is no oil leakage. If any problem is found, repair the place where the oil is leaking.
Check for leakage of oil from the undercover. Check the ground for traces of oil leakage.

5. Check for loose air cleaner mounting bolts.

Check for the loose bolts. If loose, tighten them.

6. Check dump body mount rubber

Check for any cracks, embedded foreign objects, or loose bolts.

7. Check for damage to handrail, loose bolts

Repair any damage and tighten any loose bolts.

8. Check for damage to gauges, lamps on the instrument panel and loose bolts.

Check for damage to the panel, gauges and lamps. If any problem is found, replace the parts. Clean off any dirt on the surface. Tighten any loose bolts.

https://truckmanualshub.com/

9. Check rear view mirror, under view mirror

Check that the mirrors are not damaged. Replace them if they are damaged. Clean the surface of the mirrors and adjust the angle so that the operator can see the area to the rear and under the machine from the operator's seat.

10. Check for damage to the seat belt and mounting clamps.

Check for damage to seat belt and mounting clamps. If damages are found, replace with the new one.

- Check for any loose bolts of the clamps mounting the equipment to the machine. Tighten any loose bolts.
- When the belt has been used for a long time, if any external damage or fraying of the belt can be seen, or if the clamps are broken or deformed, replace the seat belt.

11. Inspect tires.

WARNING

If worn or damaged tires are used, they may burst and cause serious injury or death.
To ensure safety, do not use the following tires.
Wear:

- **Tires with a tread grooves of less than 15% of that of a new tire**
- **Tires with extreme uneven wear or with stepped-type wear**

Damage:

- **Tires with damage that has reached the cords, or with cracks in the rubber**
- **Tires with cut or pulled cords**
- **Tires with peeled (separated) surface**
- **Tires with damaged bead**
- **Leaking or improperly repaired tubeless tires**
- **Deteriorated, deformed or abnormally damaged tires, which do not seem usable**

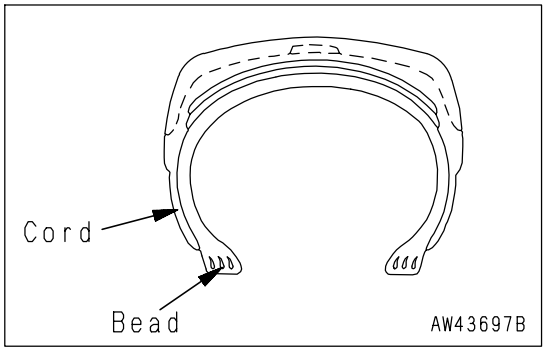

12. Inspect rims.

WARNING

Check the rims (wheels) and rings for deformation, corrosion and cracks.
In particular, check the side rings, lock rings and rim flanges thoroughly.

https://truckmanualshub.com/

CHECK BEFORE STARTING

Perform the contents of this section before starting the work of each day.

CHECK COOLANT LEVEL, ADD COOLANT

WARNING

- **Do not open the radiator cap unless necessary. When checking the coolant, always wait for the engine to cool down and check the reservoir tank.**
- **Immediately after the engine is stopped, the coolant is at a high temperature and the radiator is under high internal pressure. If the cap is removed to check the coolant level in this condition, there is a hazard of burns. Wait for the temperature to go down, then turn the cap slowly to release the pressure and remove it carefully.**

1. Open the engine hood and check that the coolant in reservoir tank (1) is between the FULL and LOW marks.
2. If the level is LOW, remove cap (2) and add the engine coolant up to the FULL mark.

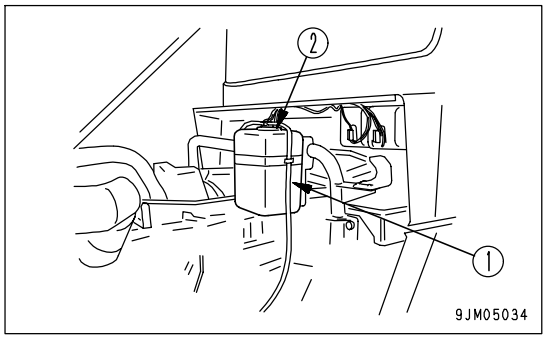

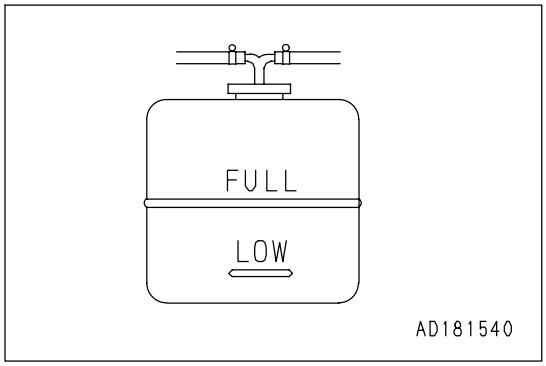

3. If there is no coolant in the reservoir tank, add water to the radiator through water filler (3) at the top of the radiator, then add water to the reservoir tank.
4. Check that there is no oil in the engine coolant or any other problem.
5. After adding coolant, tighten the cap securely.
6. If more coolant is added than normal, then check for water leakage.

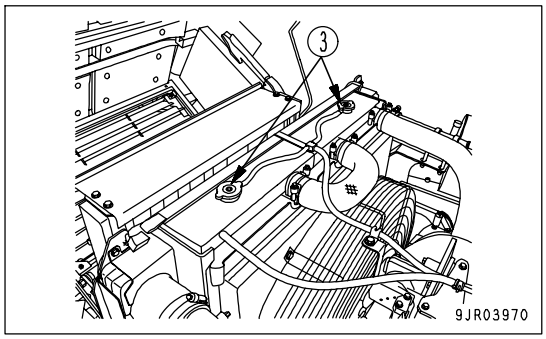

https://truckmanualshub.com/

CHECK DUST INDICATOR

1. Check that the red line in the transparent portion of dust indicator (1) does not indicate 7.5 kPa (30 INCHES H_2O) (0.076 kg/cm^2, 1.1 PSI).
2. If the red line indicates 7.5 kPa (30 INCHES H_2O) (0.076 kg/cm^2, 1.1 PSI), clean or replace the air cleaner element immediately.
   For details of the method of cleaning the element, see "CHECK, CLEAN OR REPLACE AIR CLEANER (PAGE 4-20)".
3. After checking, cleaning, or replacing, press the top of dust indicator (1) to return the red line to its original position.

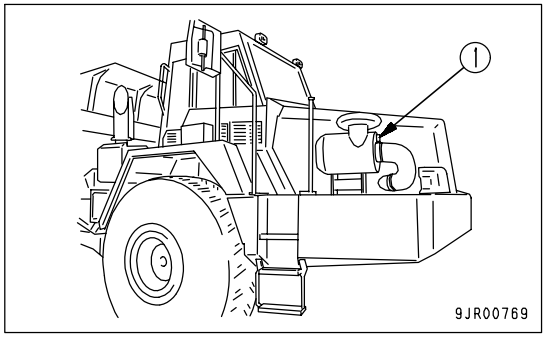

https://truckmanualshub.com/

CHECK OIL LEVEL IN ENGINE OIL PAN, ADD OIL

WARNING

Parts and oil are at high temperature immediately after the engine is stopped and may cause serious burns. Wait for the oil temperature to go down before performing this operation.

1. Open the engine hood cover and check the oil level with the dipstick (G).
2. Take out the dipstick (G) and wipe off the oil with cloth.
3. Fully insert dipstick (G) into filler pipe (F), then remove it.
4. The oil level should be between the H and L marks on dipstick (G).
   If the oil level is below the L mark, add oil through oil filler (F).

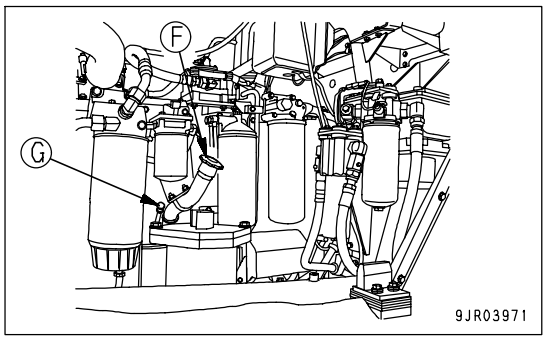

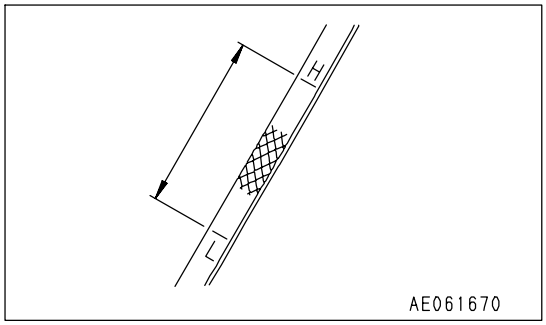

5. If the oil level is above the H mark, open the underguard of the engine, remove drain plug (1), and loosen drain valve (2) to drain the excessive oil, and then check the oil level again.
6. If the oil level is correct, tighten the handle of the oil filler cap securely.

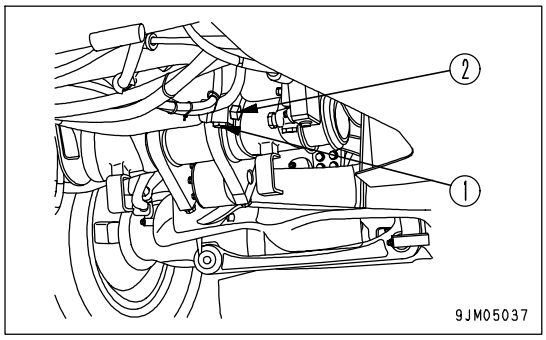

REMARK

- When checking the oil level after the engine has been operated, wait for at least 15 minutes after stopping the engine before checking.
- If the machine is at an angle, make it horizontal before checking.

https://truckmanualshub.com/

CHECK OIL LEVEL IN TRANSMISSION CASE, ADD OIL

1. Keeping the engine running at low idling after startup, check the engine oil level with sight gauge (G) while it still remains at a low temperature (LOW TEMP).
2. If the oil level is low, add oil through oil filler (F).

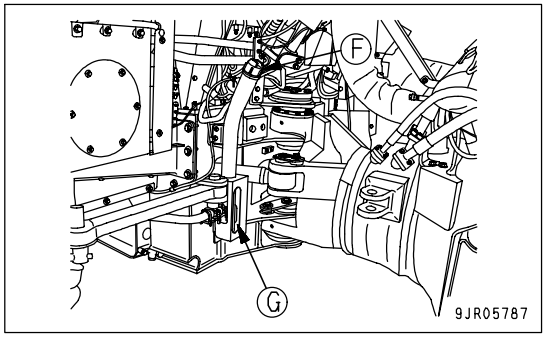

NOTICE

- **The oil level changes according to the oil temperature, so check the oil level after completing the warming-up operation.**
- **When idling during operations or after operations, use the HI TEMP scale.**

CHECK OIL LEVEL IN HYDRAULIC TANK, ADD OIL

WARNING

If the oil filler cap is removed without releasing the internal pressure, oil will spurt out, so turn the oil filler cap slowly to release the internal pressure, then remove it carefully.

1. Check with sight gauge (G1).
2. If the oil level does not reach the window of gauge (G1), add oil through oil filler (F).
3. When checking the oil level after adding oil, check with dipstick (G2).

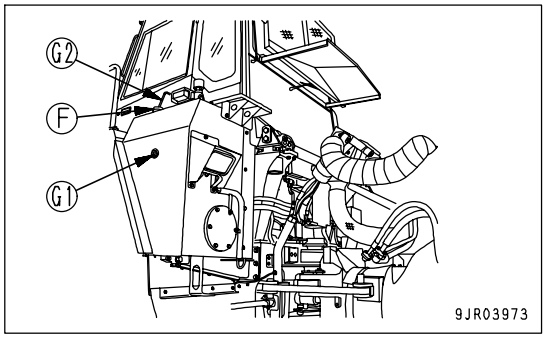

DRAIN WATER, SEDIMENT FROM FUEL TANK

Loosen valve (1) at the bottom of the fuel tank, and drain the water and sediment collected at the bottom of the tank together with the fuel.

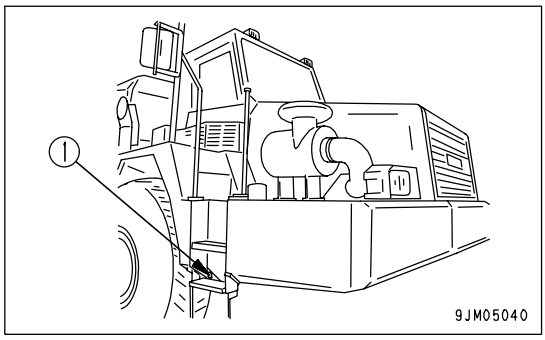

https://truckmanualshub.com/

CHECK FUEL LEVEL, ADD FUEL

WARNING

- **When adding fuel, take care that it will not overflow. Overflow of fuel can cause a fire. If any fuel spills, wipe it off.**
- **If fuel spills onto dirt and sand sticking to the machine, remove it and dirt and sand together.**
- **Since fuel is flammable and dangerous, do not bring fire near it.**

1. Check with fuel gauge (1) on the machine monitor.
2. After completing operations, add fuel through fuel filler (F) to fill the tank.
   Fuel tank capacity: 384 liters (101.45 US gal)
3. After adding fuel, tighten the cap securely.

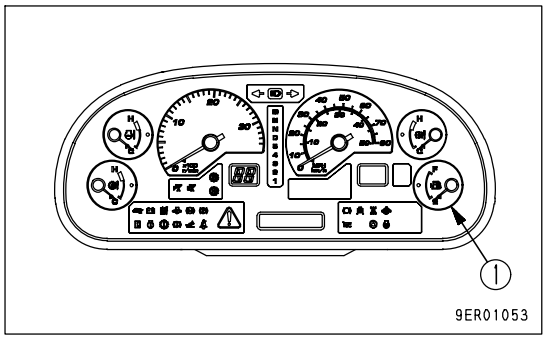

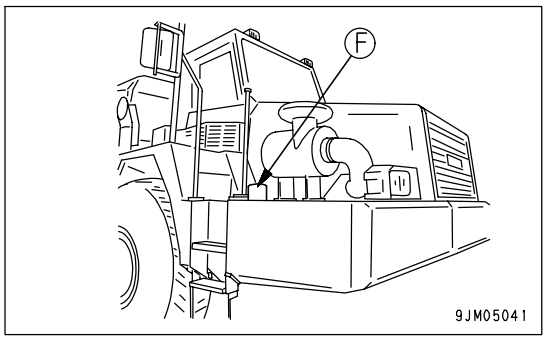

REMARK

- If the breather hole in the cap becomes clogged, the pressure inside the tank will go down and the fuel may not flow, therefore clean the breather hole from time to time.
- To prevent air from being sucked into the engine, do not let the level in the fuel tank go down too low.

CHECK WHEEL HUB BOLTS, TIGHTEN

Check for loose wheel hub bolts (1). If any are found, tighten them.
Tightening torque: 824 to 1030 Nm
(84 to 105 kgm, 607.6 to 759.5 lbft)

Insert a socket wrench in a pipe, and apply a force of 932 N (95 kg) at a point 1 m from the fulcrum to give a tightening torque of 932 Nm (95 kgm, 687.1 lbft).

When tightening the hub bolts after replacing the tires, travel for 5 to 6 km, then check the tightening torque to ensure that there are no loose bolts.

If any wheel bolt is broken, replace all the wheel bolts for that wheel.

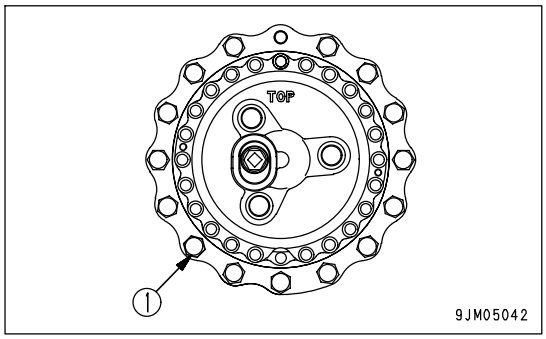

https://truckmanualshub.com/

CHECK CENTRAL WARNING LAMP, ALARM BUZZER, MONITOR LAMPS AND METERS

Before starting the engine, set the starting switch in the ON position and check that the machine monitor operates as follows.

- The central warning lamp lights up for 2 seconds, then goes off.
- The alarm buzzer sounds for 2 seconds, then stops.
- The monitor lamps light up for 2 seconds, then go off for 1 second.
- The gearshift indicator displays "88" for 2 seconds, then goes off for 1 second.
- The meters start the operations after the system is checked for 3 seconds.
- The character display displays "KOMATSU" for 3 seconds.

If the machine monitor does not operate as explained above, there is probably a failure, so please contact your Komatsu distributor for inspection.

CHECK BRAKING EFFECT

Check if the braking capacity of the parking brake, foot brake, and retarder brake.
If any abnormality is found, ask Komatsu distributor to repair.

CHECK EMERGENCY STEERING

Check manual emergency steering

1. Turn starting switch key to the ON position.
2. Turn emergency steering switch (1) ON, and check that the steering wheel can be operated.
   If the steering wheel cannot be operated, please contact your Komatsu distributor.

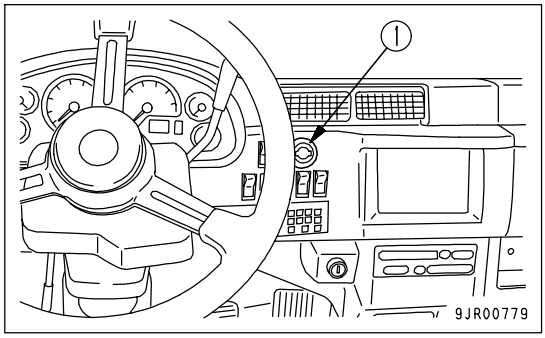

Check auto-emergency steering

1. Turn the starting switch key to the START position and start the engine.
2. Check that the brake oil pressure caution lamp is OFF, then pull retarder control lever (2) fully and stop the engine.
3. Turn starting switch key to the ON position.
4. Check that the emergency steering motor is actuated and the steering can be operated 1 sec. after parking brake switch (3) is set to the TRAVEL position.

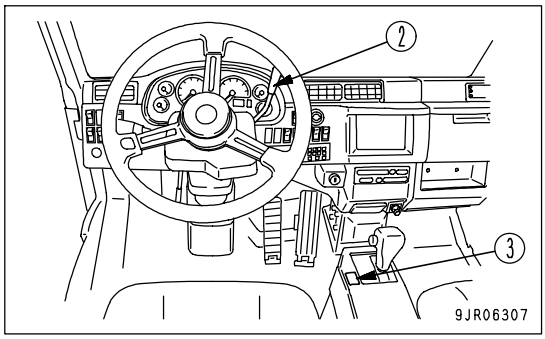

CHECK BACKUP ALARM

1. Turn the engine starting switch to the ON position.
2. Place the gear shift lever in the R position and check that the backup alarm is working.

https://truckmanualshub.com/

CHECK ELECTRIC WIRING

WARNING

- **If the fuses frequently blow or if there are traces of short circuits in the electrical wiring, locate the cause and immediately perform repairs, or contact your Komatsu distributor for repairs.**
- **Keep the top surface of the battery clean and check the breather hole in the battery cap. If it is clogged with dirt or dust, wash the battery cap to clean the breather hole.**

Check for damage and wrong capacity of the fuse and any sign of disconnection or short circuit in the electrical wiring. Check also for loose terminals and tighten any loose parts.
Check the wiring of the "battery", "starting motor"and "alternator"carefully, in particular.
Always check if there is any accumulation of flammable material around the battery, and remove such flammable material.
Please contact your Komatsu distributor for investigation and correction of any problems found.

CHECK INFLATION PRESSURE OF TIRES

Measure the inflation pressure with a tire pressure gauge, while the tires are cool, before starting work.
Check for damage or wear to the tires and the rims.
Check for loose wheel hub bolts.
The proper inflation pressure is shown below.

Tire size	Inflation pressure [MPa (kg/cm^2, PSI)]		
	Front	Center	Rear
23.5-R25 (standard)	0.44 (4.5, 63.9)	0.44 (4.5, 63.9)	0.44 (4.5, 63.9)
750/65 R25 (30/65 R25) (if equipped)	0.34 (3.5, 49.7)	0.40 (4.1, 58.2)	0.40 (4.1, 58.2)

NOTICE

If the tires are used when the inflation pressure is less than the value given in the table above, the rim may be damaged.
Always keep the tire inflation pressure within +0 to +0.03 MPa (0.3 kg/cm^2, 4.3 PSI) of the value in the table above.

CHECK WATER SEPARATOR

The water separator and fuel prefilter (1) are made one and composed of (2) to (4) in the lower section.

1. Water and sediment on the bottom can be checked through transparent cap (2). If there is water or sediment, prepare a container to receive it under drain hose (4).
2. Loosen drain valve (3) to drain the water.
3. If fuel starts flowing out through drain hose (4), close valve (3) immediately.

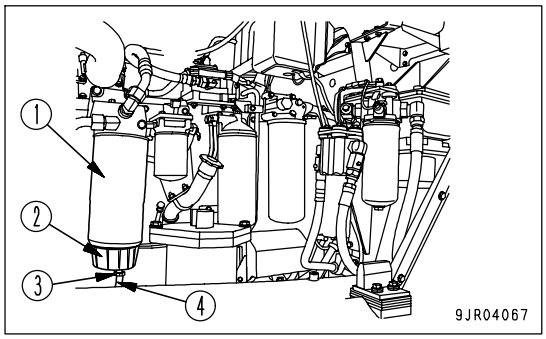

https://truckmanualshub.com/

DOES BODY POSITIONER OPERATE NORMALLY?

1. Turn the starting switch key to the START position and start the engine.
2. Operate the dump control lever to the RAISE position, then release it.
   Check that the dump body stops before the end of the stroke.

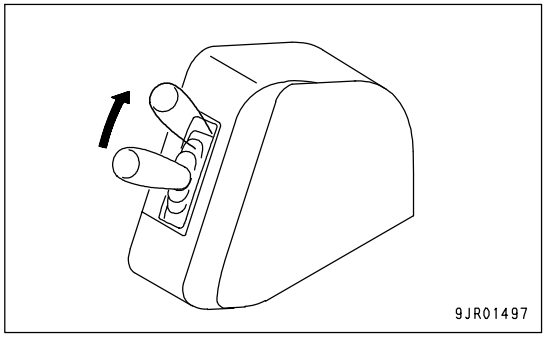

REMARK

If the dump body reaches the end of the stroke, the contact of the body will cause an impact. The body positioner is functioning, so the dump body stops without any impact.

ARE THE CAB MOUNTING BOLTS AND PINS ARE FREE FROM LOOSENESS AND BREAKAGE?

Check that there are no loose cab mounting bolts (1) (left, right: 4 each). Tighten any loose bolts.

Tightening torque: 245 to 309 Nm{25 to 31.5 kgm, 180 to 227 lbft}

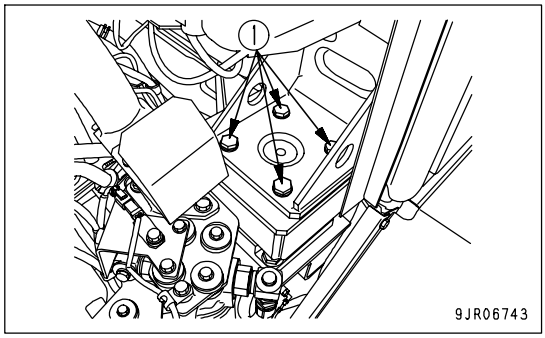

Check that there are no loose or broken cab mount pins (2) (left, right: 1 each).

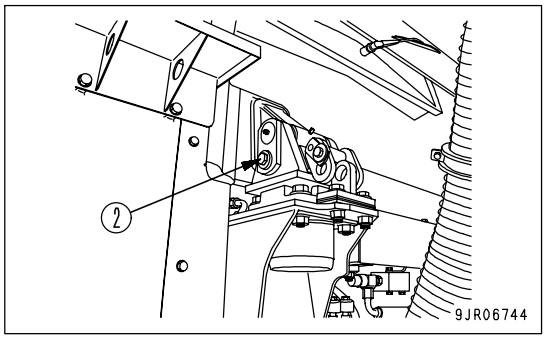

https://truckmanualshub.com/

ADJUSTMENT BEFORE OPERATION

ADJUSTING OPERATOR'S SEAT

WARNING

- **Park the machine in a safe place and stop the engine when carrying out adjustment of the operator's seat.**
- **Adjust the seat before starting operations or when changing operators.**
- **Adjust the position of the operator's seat so that you can depress the brake pedal fully with your back against the seat backrest.**

(A) Fore-and-aft adjustment
Move lever (1) up, move the seat to the desired position, then release the lever.
Fore-and-aft adjustment:180 mm (7.1 in)
[10 mm (0.4 in) x 18 stages]

(B) Adjusting seat angle
Move lever (2) up and push down on the rear of the seat to tilt it backward.
Move lever (2) down and push down on the front of the seat to tilt it forward.
Adjustment range: 13 degrees (Front tilt, rear tilt: 4 stages each)

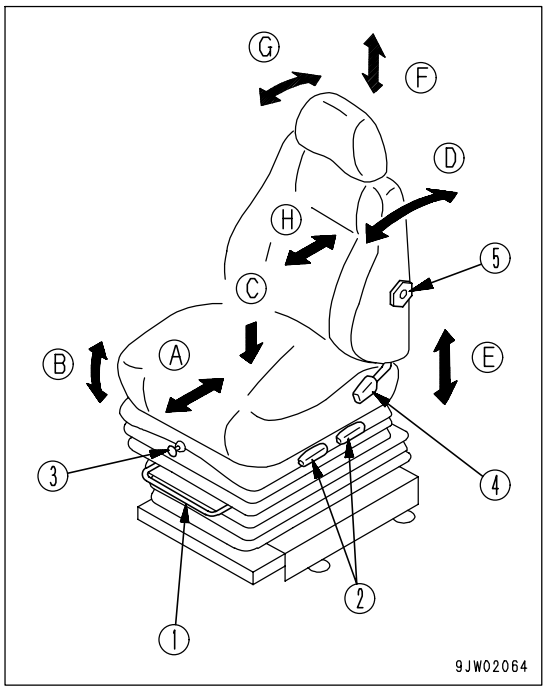

(C) Setting seat for operator’s weight
Sit on the seat and adjust the strength of the suspension with valve (3).
Adjustment range (Target): 50 kg (110 lb) to 120 kg (265 lb)
Push: Suspension is strengthened.
Pull: Suspension is weakened.

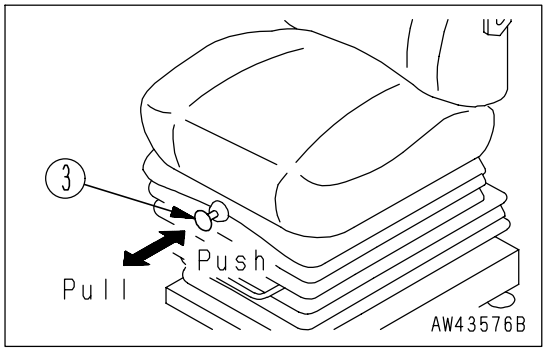

(D) Adjusting backrest angle
Move lever (4) up and move the backrest to the front or rear.
When doing this, keep your back pressed against the seat back.
If your back is not against the seat back, the seat back may spring back suddenly.
Adjustment range: 66° to the front (3° x 22 stages)
72° to rear (3° x 24 stages)

NOTICE

If the seat back is reclined too far, the headrest may hit the rear glass, so move it to a position where it does not contact the glass.

https://truckmanualshub.com/

(E) Seat height adjustment
Move lever (2) up or down to move the seat up or down as desired. Lever (2) is also used for adjusting the seat angle, so set the seat to the desired height while adjusting the angle.
Adjustment range: 60 mm (2.4 in)

(F) Adjusting headrest height
Move the headrest up or down to the desired height.
Adjustment range: 50 mm (2.0 in)

(G) Adjusting headrest angle
Rotate the headrest to the front or rear.

(H) Lumbar support
Turn grip (5) to adjust the tension applied to the lower back.

https://truckmanualshub.com/

ADJUST SEAT BELT

WARNING

- **Before fastening the seat belt, check that there is no problem in the securing brackets or belt. If there is any wear or damage, replace.**
- **Even if there appears to be no problem in the seat belt, replace the seat belt once every 3 years. The date of manufacture is woven on the reverse side of the belt.**
- **Adjust and fasten the seatbelt before starting to travel.**
- **Always use the seatbelt when traveling.**
- **Do not use the seat belt with either half of the belt twisted.**

Fastening and removing belt

Fasten the belt so that it is tight without being too tight.

1. Sit on the seat, depress the brake pedal fully, and adjust the seat so that your back is pressed against the backrest.
2. Sit in the seat, pull the right side of the belt, then insert tongue (1) into buckle (2) until a click is heard.
3. When removing the belt, press the red button in buckle (2) to free the belt.
   Fit the belt so that it follows your body and is not twisted.

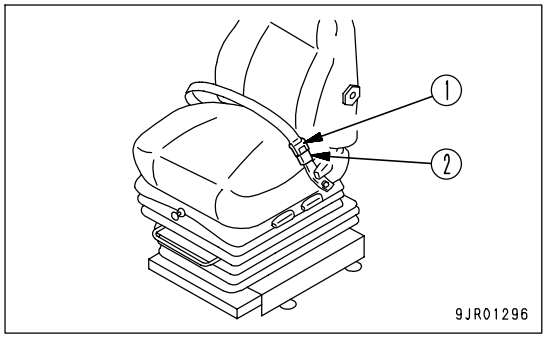

ADJUST STEERING WHEEL TILT

WARNING

Always stop the machine before adjusting the tilt of the steering wheel.

The tilt of the steering wheel can be adjusted to the front and rear, and up and down. Pull lever up and set the steering wheel to the desired position, then push lever down to lock the steering wheel securely in position.

Amount of adjustment: Front/rear: 80 mm/80 mm (3.2 in/3.2 in)
(from center of steering wheel)
Up: 33 mm (1.3 in)
Down: 17 mm (0.7 in)

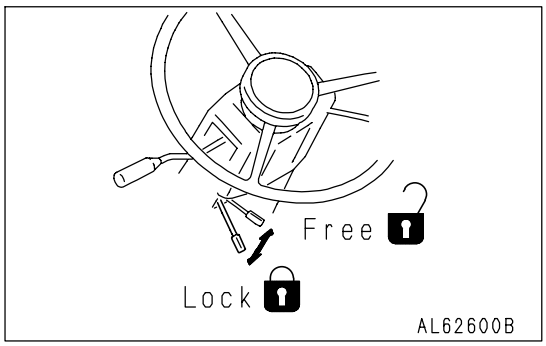

https://truckmanualshub.com/

ADJUSTING MIRROR

WARNING

Be sure to adjust the mirrors before starting work. If they are not adjusted properly, you cannot secure the visibility and may be injured or may injure someone seriously.

Loosen mirror securing bolt (1), screw (2) and nut (3) and adjust the mirror position the way it assures the best view from the operator's seat.

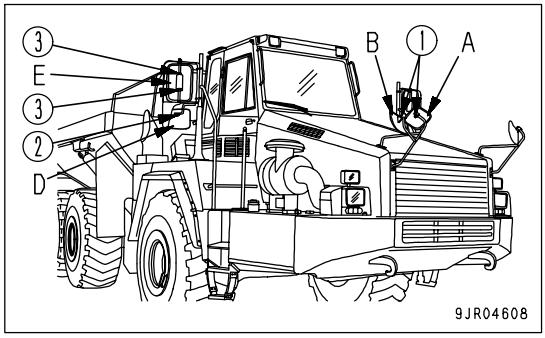

- Adjust the position and angle of each mirror so that it reflects a sight 200 mm above the ground and up to 1500 mm. In the adjustment, make sure that part of the dump truck's image also comes into view.

- View Range
  Mirror A: Shaded area (A) should be in view.
  Mirror B: Shaded area (B) should be in view.
  Mirror C: Shaded area (C) should be in view.
  Mirror D: Shaded area (D) should be in view.
  Mirror E: Shaded area (E), tire's ground contact point (G') and ground (G'') should be in view.
  Mirror F: Shaded area (F) should be in view.
  Mirror G: Shaded area (G), tire's ground contact point (G') and ground (G'') should be in view.

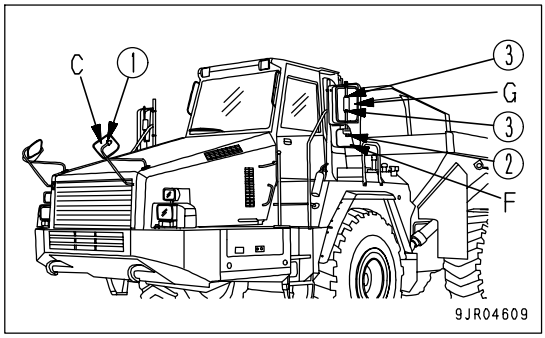

Rear Monitor (optional): Shaded area (H) should be in view.

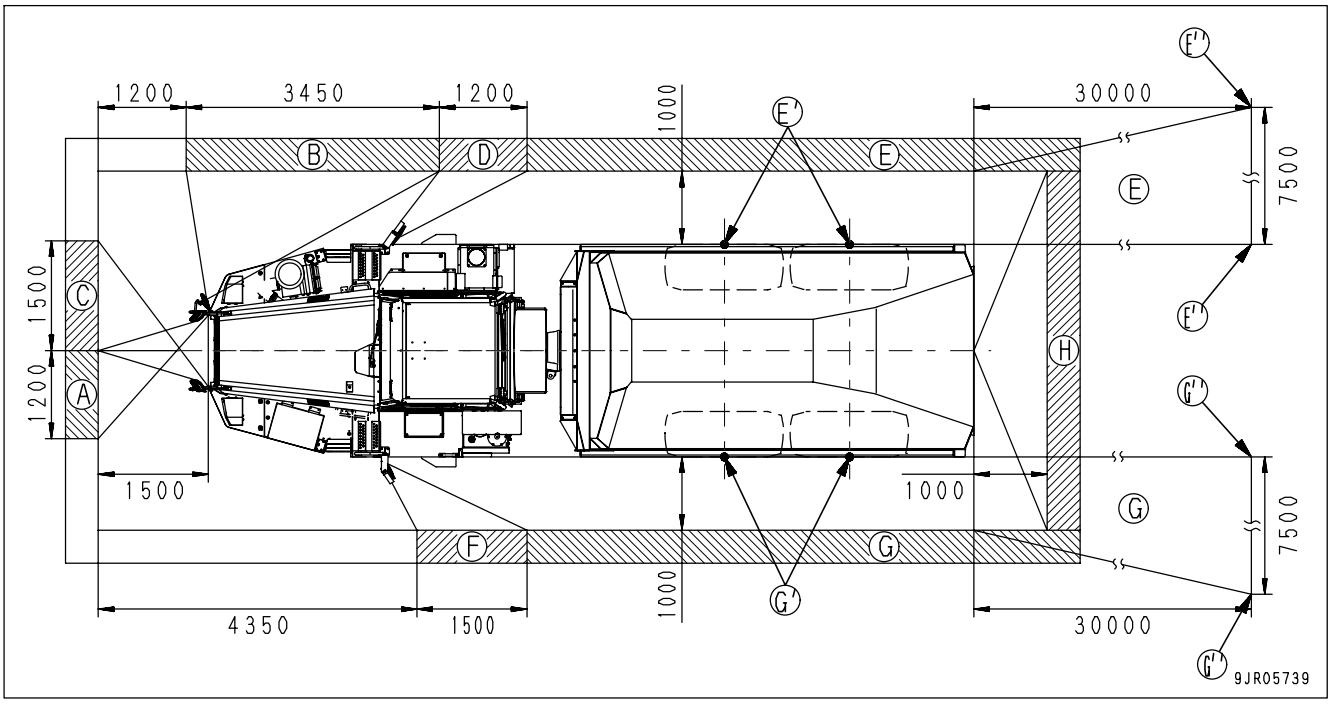

https://truckmanualshub.com/

OPERATIONS, CHECKS BEFORE STARTING

WARNING

- **When starting the engine, check that the shift lever is set in the N (neutral) position and that the parking brake switch is at PARKING position.**
- **Before standing up from the operator's seat, place the shift lever at N (neutral) position, and set the parking brake switch to the PARKING position.**

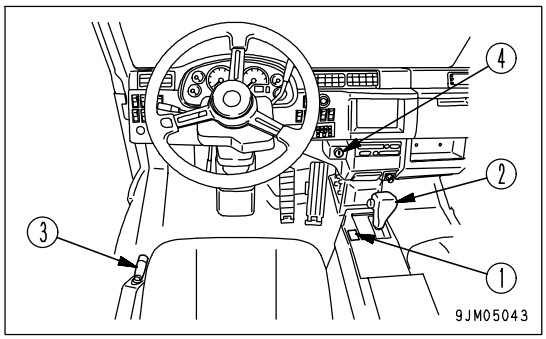

1. Check that parking brake switch (1) is in the PARKING position.

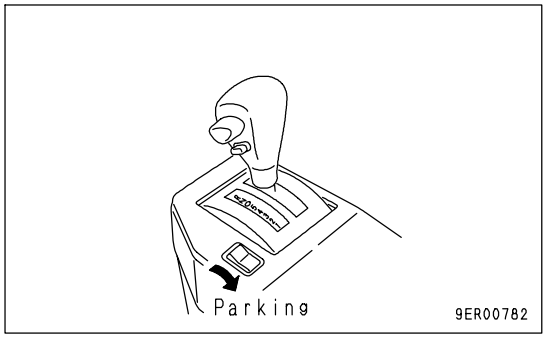

2. Check that gear shift lever (2) is at the N position.

REMARK
If the starting switch is turned to the ON position when the shift lever is not at the N position, the shift lever position pilot lamp and central warning lamp will flash, and the alarm buzzer will sound.

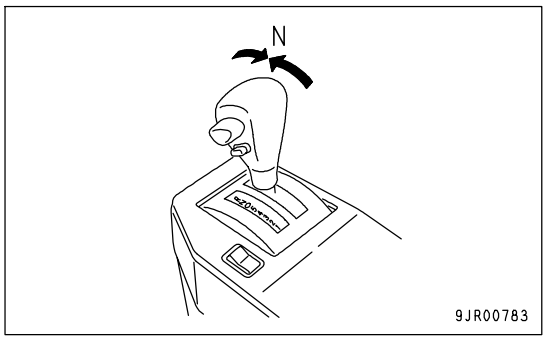

3. Check that dump lever (3) is at the HOLD position.

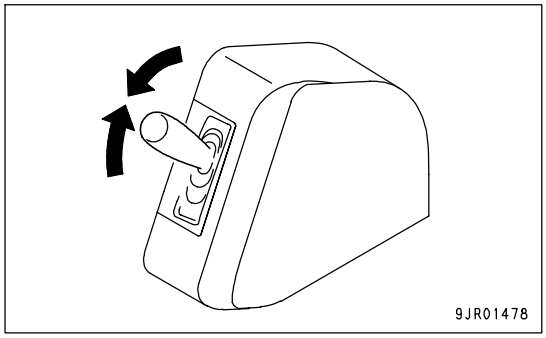

4. Check that there is no abnormality in the machine monitor when starting switch (4) is turned to the ON position.

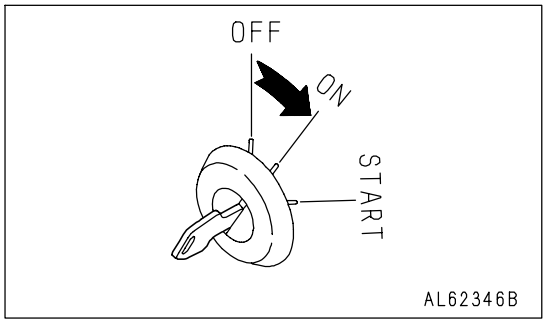

https://truckmanualshub.com/

STARTING ENGINE

WARNING

- **Start the engine only after sitting down in the operator's seat.**
- **Do not attempt to start the engine by short-circuiting the engine starting circuit. Such an act may cause a serious bodily injury or fire.**
- **Check that there are no persons or obstacles in the surrounding area, then sound the horn and start the engine.**
- **Never use starting aid fluids as they may cause explosions.**
- **Exhaust gas is toxic. When starting the engine in confined spaces, be particularly careful to ensure good ventilation.**

NOTICE

- **Do not accelerate the engine sharply until it is warmed up.**
- **Do not operate the starting motor continuously for more than 20 seconds.**
- **If the engine fails to start, wait for 2 minutes or so, and then try to start again.**
- **When starting the engine, do not depress the accelerator pedal. Even if the accelerator pedal is depressed just after the engine is started, the engine speed is limited by the turbo protect function. After the turbo protect time, however, the engine speed rises sharply and the turbocharger may be damaged.**

1. Turn the key of starting switch (1) to the ON position.
   The preheater pilot lamp lights up, depending on the engine water temperature, and the engine is preheated. After the pre-heating time, the preheater pilot lamp goes off.

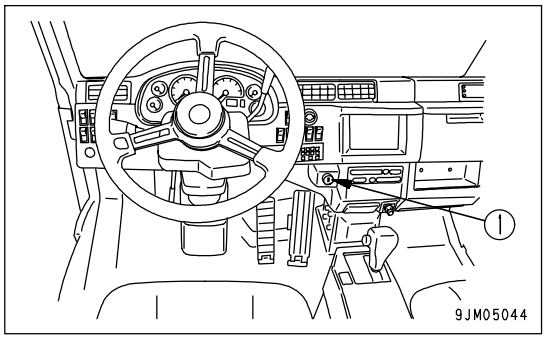

The pre-heating times are as shown below.

Engine water temperature	Pre-heating time
above - 5°C (23°F)	–
- 5°C to - 20°C (23°F to - 4°F)	20 to 40 sec
below - 20°C (- 4°F)	40 sec

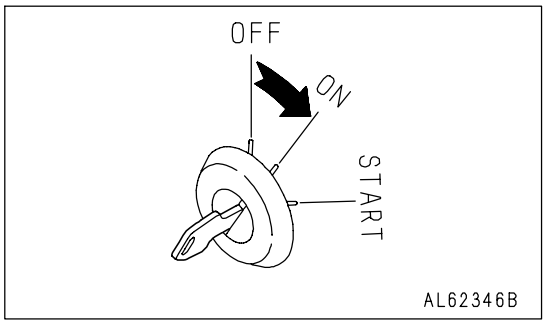

REMARK

When the key of the starting switch is turned to the ON position, if the engine water temperature is -5 °C or higher, the engine is not pre-heated. At this time, the engine can be started without pre-heating operation.

https://truckmanualshub.com/

2. After the preheater pilot lamp goes off, turn the key of the starting switch to the START position, and the engine will start.

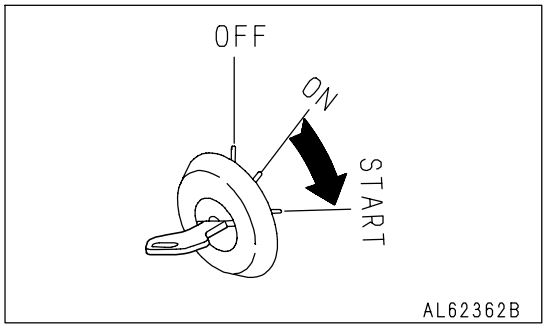

REMARK
When starting the engine, the monitor may flash while the starting motor is turning, but if the monitor lamp goes out after the engine is started, there is no problem.

3. After the engine starts, release the key of the starting switch.

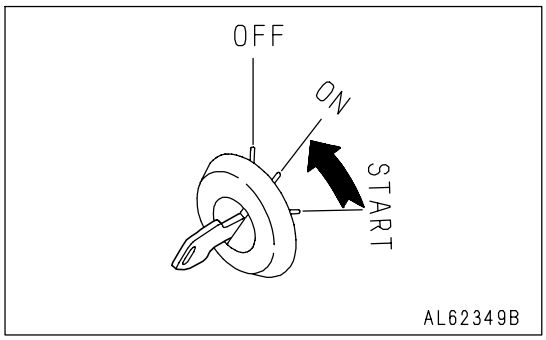

REMARK
If the engine fails to start, return the key of the starting switch to the OFF position, and then start the operation again from step 1. If the starting switch is not returned to the OFF position, the automatic preheater does not operate.

4. Just after the engine starts, do not depress the accelerator pedal but run the engine idle at low speed for at least 15 seconds.
   When the engine is started for the first time after the engine oil or engine oil filter is replaced, continue the low idle run for at least 20 seconds to circulate the engine oil in the engine.

REMARK
- Since the turbocharger rotates at very high speed, it is seized if not lubricated well. To prevent this, the turbo protect mechanism works for a certain time just after the engine starts, depending on the engine water temperature.

Engine water temperature	Turbo protect time
above 10°C (50°F)	0 sec
-10°C to 10°C (14°F to 50°F)	0 to 5 sec
below -10°C (14°F)	5 sec

- Just after the engine starts, the injection characteristics are changed for a certain time to keep the low idle speed a little high, depending on the engine water temperature. The engine acceleration characteristics are also changed so that the engine will be accelerated moderately.

Engine water temperature	Injection characteristics change time
above 20°C (68°F)	0 sec
0°C to 20°C (32°F to 68°F)	0 to 6 sec
-20°C to 0°C (-4°F to 32°F)	6 to 12 sec
-30°C to -20°C (-22°F to -4°F)	12 to 15 sec

https://truckmanualshub.com/

OPERATIONS, CHECKS AFTER STARTING ENGINE

BREAKING-IN THE MACHINE

CAUTION

Your Komatsu machine has been thoroughly adjusted and tested before shipment. However, operating the machine under severe conditions at the beginning can adversely affect the performance and shorten the machine life.
Be sure to break-in the machine for the initial 100 hours (as indicated by the service meter).
During break-in operations, follow the precautions described in this manual.

- Idle the engine for 5 minutes after starting it up.
- Avoid operation with heavy loads or at high speeds.
- Immediately after starting the engine, avoid sudden starts, sudden acceleration, unnecessary sudden stops, and sudden changes in direction.

WARMING-UP OPERATION

NOTICE
- **Do not accelerate the engine sharply during the warming-up operation. Sharp acceleration can shorten the service life of the engine parts.**
- **Do not continue the low idle or high idle operation for more than 20 minutes. It can cause oil leakage from the turbocharger.**

1. After the engine starts, run it for 5 minutes in the range between low idling and medium speed to warm it up.
2. Check that the engine water temperature gauge pointer is in the white range (above (A)).
   If the engine water temperature gauge pointer is in the white range (above (A)), the engine is warmed up.
   If the engine water temperature gauge pointer has not reached the white range (above (A)), continue the warming-up operation more.
   After finishing the warming-up operation, check that the machine monitor is normal.
   If the machine monitor is abnormal, ask your Komatsu distributor for inspection/repair.

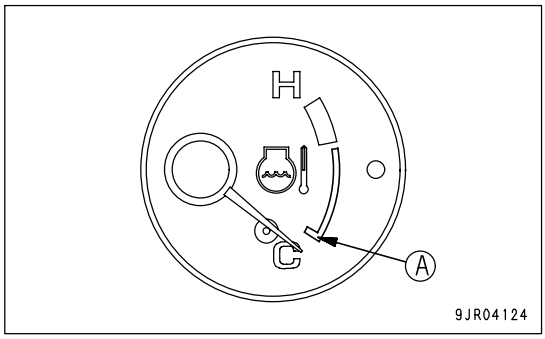

REMARK
While the AISS switch is in the AUTO position and the engine water temperature is low, the low idle speed is set a little high automatically.

3. Check that the steering operation is normal, the lamps light up and go off normally, the horn sounds, and the exhaust gas color, sound, and vibration are normal. If any of them is abnormal, ask your Komatsu distributor for inspection/repair.

https://truckmanualshub.com/

CANCELING DUMP BODY HOLD CONDITION

WARNING

If the HOLD is canceled when the dump body is raised, the body will go down under its own weight. This is very dangerous. Always lower the dump body before stopping the engine.

After the engine has been started, if the dump lever is operated to HOLD, the dump body is held in position until the lever is operated to FLOAT, RAISE, or LOWER.
After starting the engine, the body pilot lamp lights up, so operate the dump lever from HOLD to FLOAT to cancel the body hold condition. With this operation, when the dump body moves to the FLOAT condition, the body pilot lamp goes out.

STOPPING ENGINE

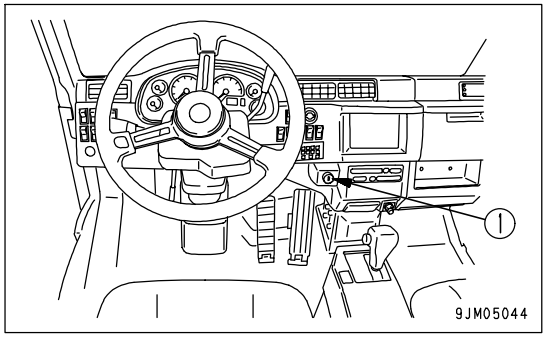

NOTICE

- **If the engine is suddenly stopped without allowing it to cool down, there is danger that the life of the engine parts will be shortened, so never stop the engine suddenly except in emergency.**
  Allow the engine to cool down gradually before stopping it.
- **After the engine is stopped, the dump body is held at the same position, regardless of the position of the dump lever. Set the dump lever to the FLOAT position, lower the dump body, then stop the engine.**

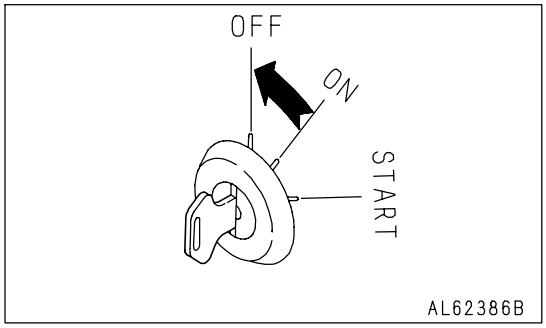

1. Set the shift lever to the N position, then set the parking brake switch to the PARKING position.
2. Lower the dump body and set the dump lever to the HOLD position.
3. Run the engine at low idle for about 5 minutes to cool down gradually.
4. Turn the key of starting switch (1) to the OFF position to stop the engine.
5. Remove the key from starting switch (1).

CHECKS AFTER STOPPING ENGINE

1. Walk around the machine and check the work equipment, bodywork, and undercarriage, and check also for oil and water leakage.
2. Fill the fuel tank.
3. Check the engine compartment for paper and debris. Clean out any paper and debris to avoid a fire hazard.
4. Remove any mud affixed to the undercarriage.

https://truckmanualshub.com/

MOVING MACHINE OFF (FORWARD, REVERSE), STOPPING

MOVING MACHINE FORWARD

WARNING

- **When moving the machine off, check that the area around the machine is safe, then sound the horn before starting.**
- **Do not allow people to get near the machine.**
- **Clear the machine's travel path of any obstacle.**
- **Pay a particular attention to the blind spot at the rear of the machine, when traveling the machine in reverse.**

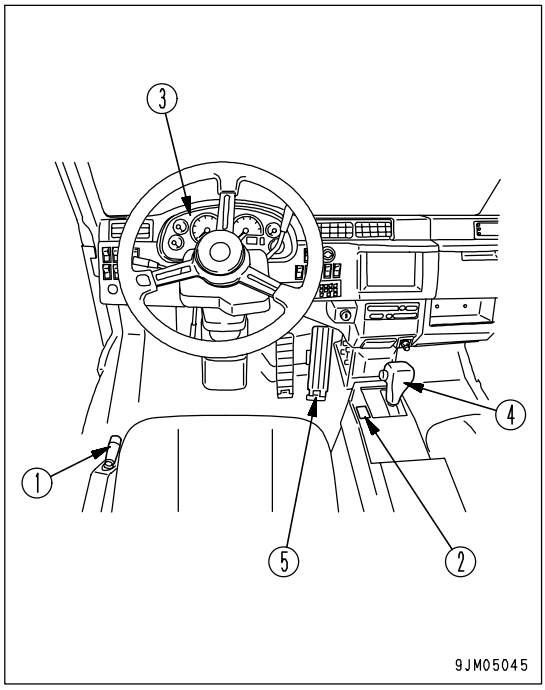

1. Check that there is no warning display on the machine monitor.
2. Fasten the seat belt.

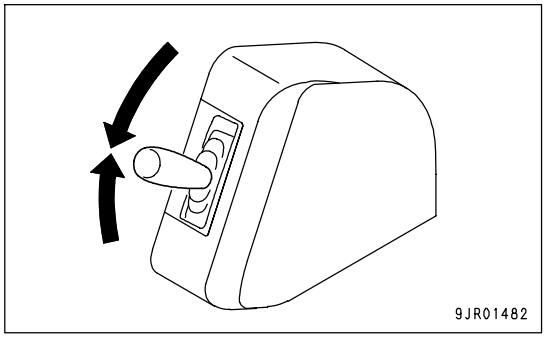

3. Check that dump lever (1) is at the FLOAT position and that the dump body pilot lamp is out.
   If the dump body pilot lamp is lighted up, operate the dump lever to the HOLD position, then operate it to the FLOAT position to cancel the dump body HOLD condition.

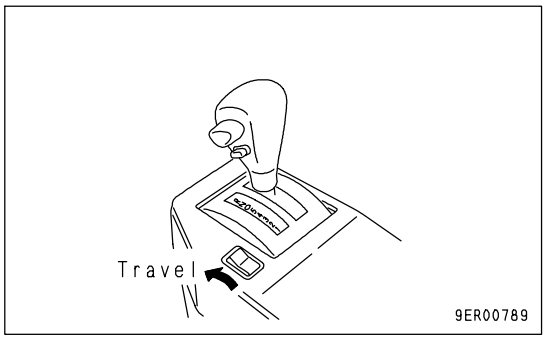

4. Depressed the brake pedal fully. Then set parking brake switch (2) to the TRAVEL position to release the parking brake.

REMARK

If the engine is stopped with the parking brake switch at TRAVEL, the parking brake will be applied even though the switch is at TRAVEL. In this case, operate the switch to PARKING, and then move it back to TRAVEL to cancel the parking brake.

https://truckmanualshub.com/

5. Check that retarder pilot lamp (3) is not lighted up, then set shift lever (4) to the desired position.

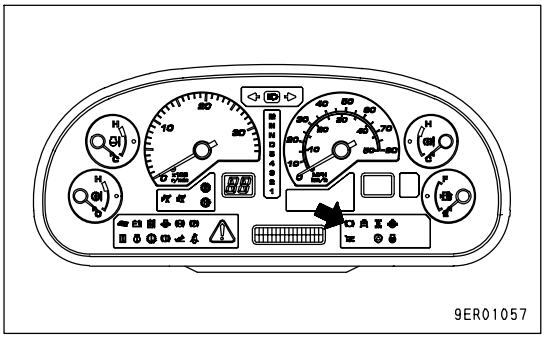

NOTICE

- **When operating the shift lever, be sure to set it in position securely. If the lever is not placed in position properly, the shift position display on the panel may go out and the transmission warning monitor lamp may light up.**
- **Always release the accelerator pedal before shifting from N to R or F.**

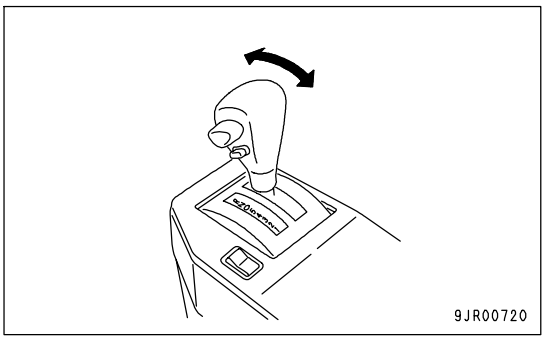

6. Depress accelerator pedal (5) to move the machine off.

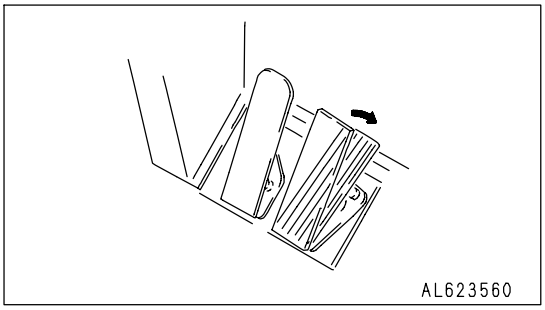

NOTICE

- **If the gearshift lever is shifted to a position other than N when the parking brake has not been released, the central warning lamp will flash and the alarm buzzer will sound.**
- **If the gearshift lever is shifted to a position other than N when the dump lever is at a position other than FLOAT or the body is raised, the central warning lamp will flash and the alarm buzzer will sound.**
- **Do not operate the gearshift lever with the accelerator pedal depressed. This will cause a big shock and will also reduce the service life of the machine.**

https://truckmanualshub.com/

MOVING MACHINE IN REVERSE

WARNING

- **When switching between FORWARD and REVERSE, check that the new direction of travel is safe.**
  There is a blind spot behind the machine, so use extreme caution when reversing the machine.
- **Always stop the machine completely before shifting between FORWARD and REVERSE.**

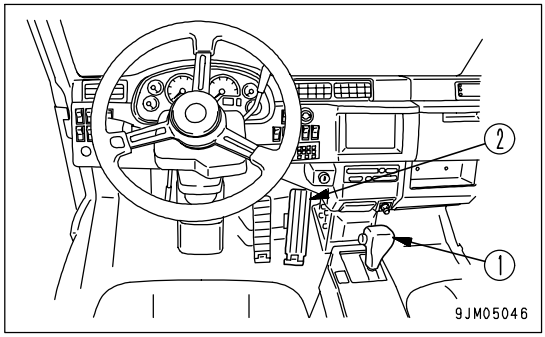

Operate shift lever (1) to the R1 or R2 position, then gradually depress accelerator panel (2) to move the machine off.

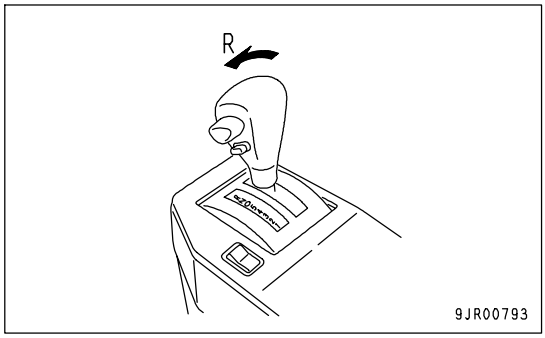

NOTICE

- **The machine cannot travel in reverse if the dump body is raised. Lower the dump body, set the dump lever to the FLOAT position, then operate the shift lever to the "R1" or "R2" position.**
- **When shifting between FORWARD and REVERSE, stop the machine completely and run the engine at low idling when shifting the lever.**
  After moving the shift lever, do not accelerate until you detect that the transmission clutch has engaged.
- **Do not operate the shift lever with the accelerator pedal depressed.**
  This will cause a big shock and will also reduce the service life of the machine.

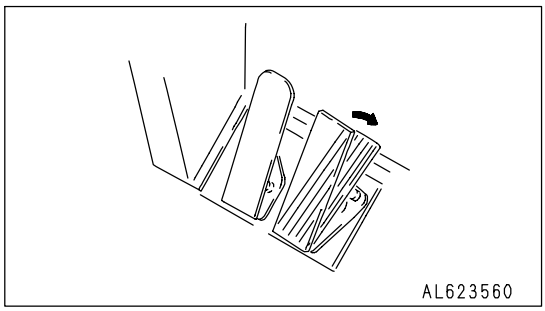

https://truckmanualshub.com/

STOPPING MACHINE

WARNING

- **Avoid stopping suddenly. Give yourself ample room when stopping.**
- **If the foot brake is used repeatedly or is kept depressed for a long time, the brake may overheat and its life will be shortened.**
- **If the parking brake is used to stop the machine, the brake will be damaged. Do not use the parking brake except when stopping in emergencies or when parking the machine after stopping it.**

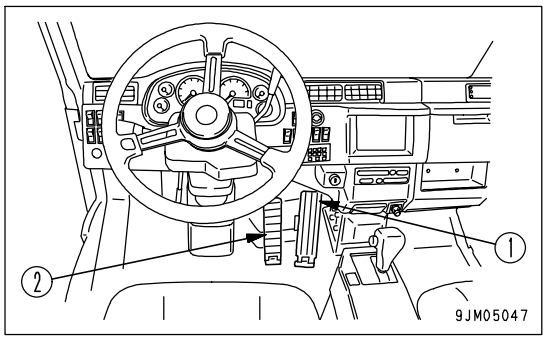

NORMAL STOPPING

Release accelerator pedal (1), and depress brake pedal (2) to stop the machine.

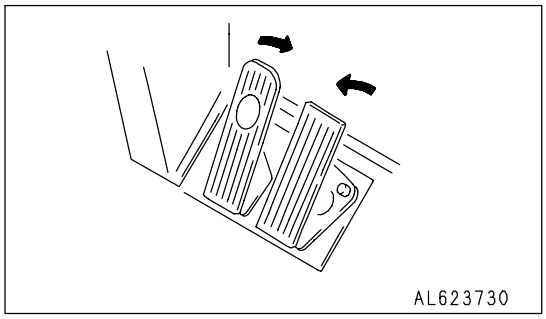

https://truckmanualshub.com/

STOPPING IN EMERGENCY

If there should be a failure in the foot brake, stop the machine as follows.

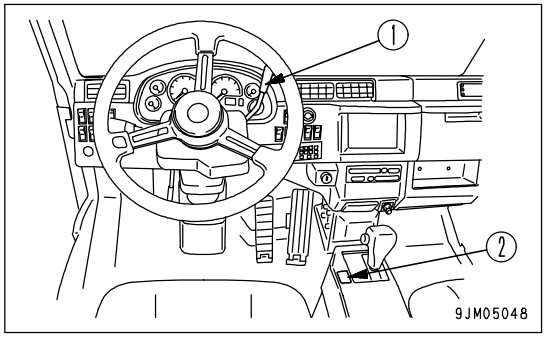

WARNING

- **When the machine stops, put blocks under the tires immediately.**
- **Immediately after making an emergency stop, the parking brake disc will be at high temperature, so wait for it to cool before carrying out repair or adjustment. Ask Komatsu distributor for repair and adjustment.**

1. Pull retarder control lever (1) fully to apply the retarder.

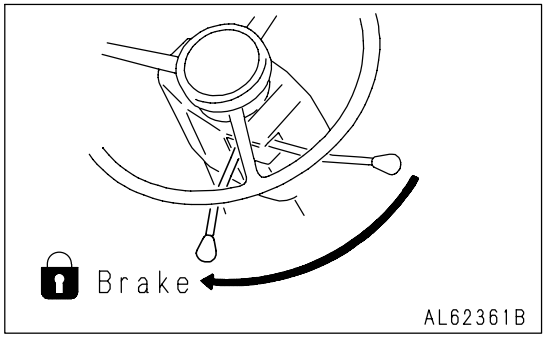

2. If operating retarder control lever (1) does not give enough braking force, set parking brake switch (2) to PARKING to apply the parking brake.

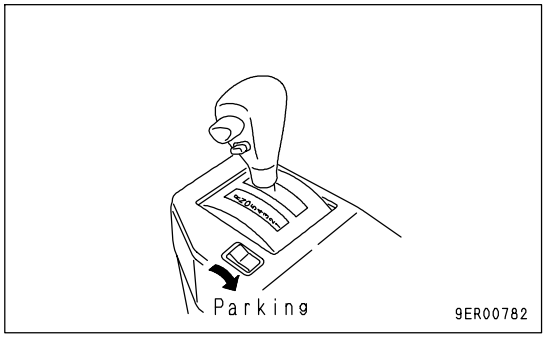

3. If an emergency stop has been made, put blocks under the tires immediately, then try to find the cause, and repair it on site.

If the parking brake has been used to make an emergency stop, it is necessary to re-adjust the parking brake. Contact your Komatsu distributor for adjustment.

https://truckmanualshub.com/

SHIFTING GEAR

WARNING

Do not move the gear shift lever to the N position when the machine is traveling or when it is traveling down a slope. Always place the transmission in gear before traveling.

- **If the transmission is in Neutral, the engine cannot provide any braking effect and the steering wheel will become heavier. In addition, there will be lack of cooling oil for the retarder, so there is danger that it will overheat or that the actuation of the brake will be poor.**
- **There may also be damage to the transmission or other parts of the power train, and there is danger of unexpected accidents.**

When shifting gear, do as follows.
This machine has an automatic transmission, so set gear shift lever (1) to the desired position, and the transmission will automatically shift to a position to match the travel speed.
When the dump body is raised, if the shift lever is at the D position, the transmission is fixed in 2nd, and if it is at positions 1 - 5, the transmission is fixed in 1st. Keep the dump body lowered when traveling.

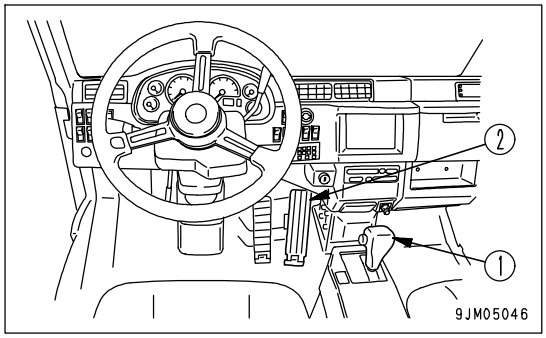

NOTICE

- **When shifting between FORWARD and REVERSE, stop the machine completely, and run the engine at low idle when shifting the lever. After moving the gear shift lever, do not depress the accelerator until you detect that the transmission clutch has engaged.**
- **Do not operate the gear shift lever with the accelerator pedal depressed. This will cause a big shock, and will also reduce the service life of the machine.**

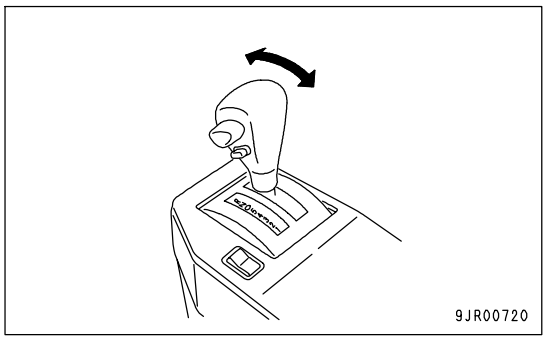

SHIFTING UP

1. When accelerator pedal (2) is depressed to accelerate the machine, the lockup clutch is engaged to shift the transmission to direct drive.
2. If the machine is accelerated further, the transmission will automatically shift up.

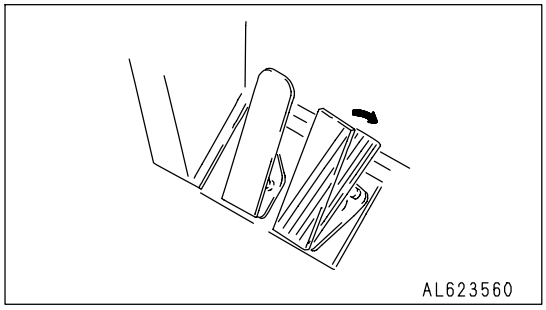

https://truckmanualshub.com/

SHIFTING DOWN

If accelerator pedal (2) is released, the machine speed will be reduced, and the transmission will automatically shift down.

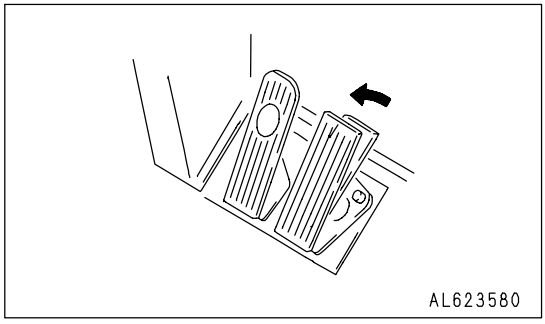

DOWN SHIFT INHIBIT

If the shift lever is operated when the machine is traveling, and the travel speed is faster than the maximum speed for each gear position, the transmission is not shifted immediately but is shifted down when the travel speed drops. This prevents overrunning of the engine.

SHIFTING DOWN WHEN USING FOOTBRAKE

When using the footbrake to reduce the travel speed, the transmission is kept in 3rd speed for longer than normal to reduce the shock when shifting gear.

OVERRUN PROTECTION DEVICE

If the engine speed reaches the red range on the engine tachometer during operation, the warning lamp and buzzer will give a warning signal. If the machine travel and engine speed continues to increase the brakes will automatically apply and slow the travel speed of machine to prevent over-speeding condition of the engine.

https://truckmanualshub.com/

TRAVELING DOWNHILL

When traveling downhill, travel at a safe speed which matches the width of the road, the condition of the road surface, and other conditions of the jobsite.

WARNING

- **When the machine stops, put blocks under the tires immediately.**
- **For the maximum permissible speed when traveling downhill using the retarder, see the brake performance graph for the downhill distance and grade. Traveling continuously downhill at a speed greater than the maximum permitted speed on the brake performance graph is dangerous as the retarder brake may be damaged.**
- **If the retarder oil temperature caution lamp on the machine monitor lights up when the retarder is being used, shift down to travel downhill. (When this happens, the central warning lamp lights up and the alarm buzzer sounds.)**
  If the caution lamp does not go out even when the transmission is shifted down, stop the machine immediately, set the shift lever to the N position, run the engine at 1800 rpm, and wait for the caution lamp to go out.
- **If the retarder loses its effect when it is used for traveling downhill, do as follows.**
  1. Release the retarder control lever completely, then operate the retarder control lever again.
  2. If the retarder still has no effect even when the retarder control lever is operated again, return the retarder control lever completely to the released position, then depress the brake pedal to stop the machine, and contact your Komatsu distributor for repairs.
- **Operate the retarder slowly. If the brake is applied suddenly, there is danger that the tires will slip.**
- **Do not move the gear shift lever to the N position when the machine is traveling or when it is traveling down a slope. Always place the transmission in gear before traveling.**
  o If the transmission is in Neutral, the engine cannot provide any braking effect and the steering wheel will become heavier. In addition, there will be lack of cooling oil for the retarder, so there is danger that it will overheat or that the actuation of the brake will be poor.
  o There may also be damage to the transmission or other parts of the power train, and there is danger of unexpected accidents.

NOTICE

- **If the retarder control lever is operated when traveling downhill, the transmission can be shifted down sooner than with normal deceleration. It is also possible to travel without shifting up.**
- **Do not accelerate or shift up when using the retarder. The engine speed will rise and this may cause the alarm buzzer to sound and the central warning lamp to flash.**

https://truckmanualshub.com/

1. Before starting to travel downhill, release accelerator pedal (1) and operate retarder control lever (2) to slow the machine down.

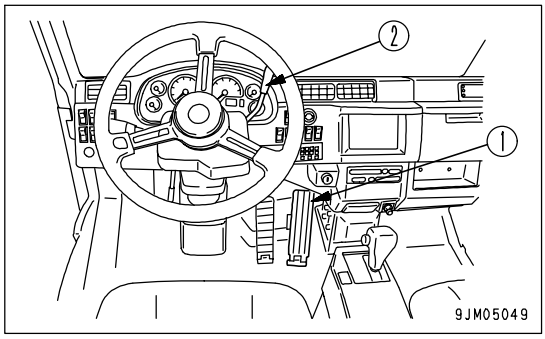

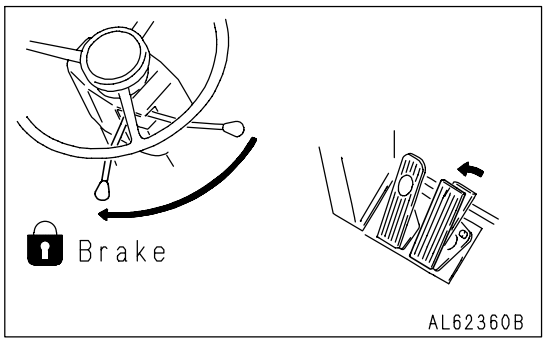

2. Move the shift lever to a position (5, 4, 3, 2) that matches the maximum permissible speed for the retarder brake performance.

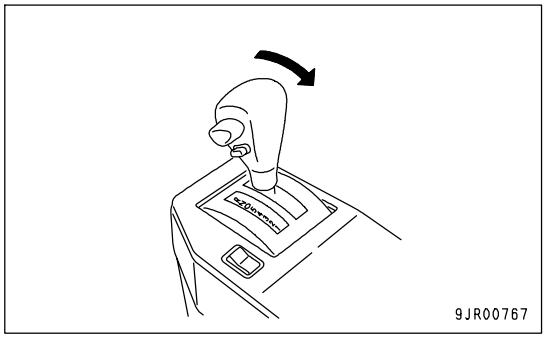

3. When traveling downhill, operate retarder control lever (2), run the engine at a speed of at least 1800 rpm, and travel so that the retarder brake oil temperature gauge is in the white range.

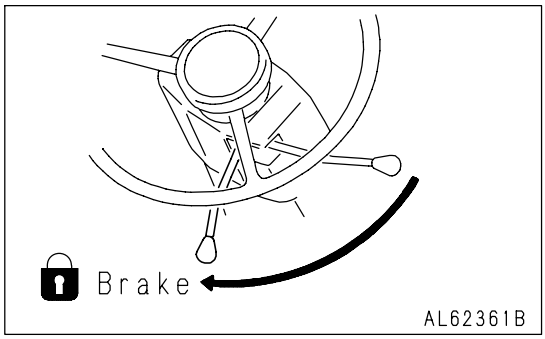

https://truckmanualshub.com/

BRAKE PERFORMANCE CURVE

- Method of using graph

  Example: Machine equipped with exhaust brake
  Downhill distance: 1500 m (4921 ft)
  Travel resistance: -11% [grade resistance: -13%, rolling resistance: 2%]
  Load: 27 tons

Obtain the maximum permissible speed and the transmission speed range from the graph when traveling downhill under the above conditions.

1. Use the brake performance curve for downhill distance of 1,500 m (4,921 ft).
2. Starting from point (A) which corresponds to the overall weight of the machine, draw a perpendicular line down.
3. Take the point where it crosses the line for travel resistance -11% as (B) and draw a horizontal line.
4. Take the point where it crosses the performance curve as (C), and draw a perpendicular line down. Take the point where this line crosses the travel speed scale as (D).
5. The following information can be obtained from this procedure.
   From point (D): Maximum permissible speed = 24 km/h (14.9 MPH)
   From point (C): Speed range = F4

This maximum permissible speed is one guideline determined from the retarder brake performance, so on an actual jobsite, determine a safe travel speed below the maximum permissible speed to match the conditions of the jobsite so that the retarder brake oil temperature gauge is always in the white range when traveling.

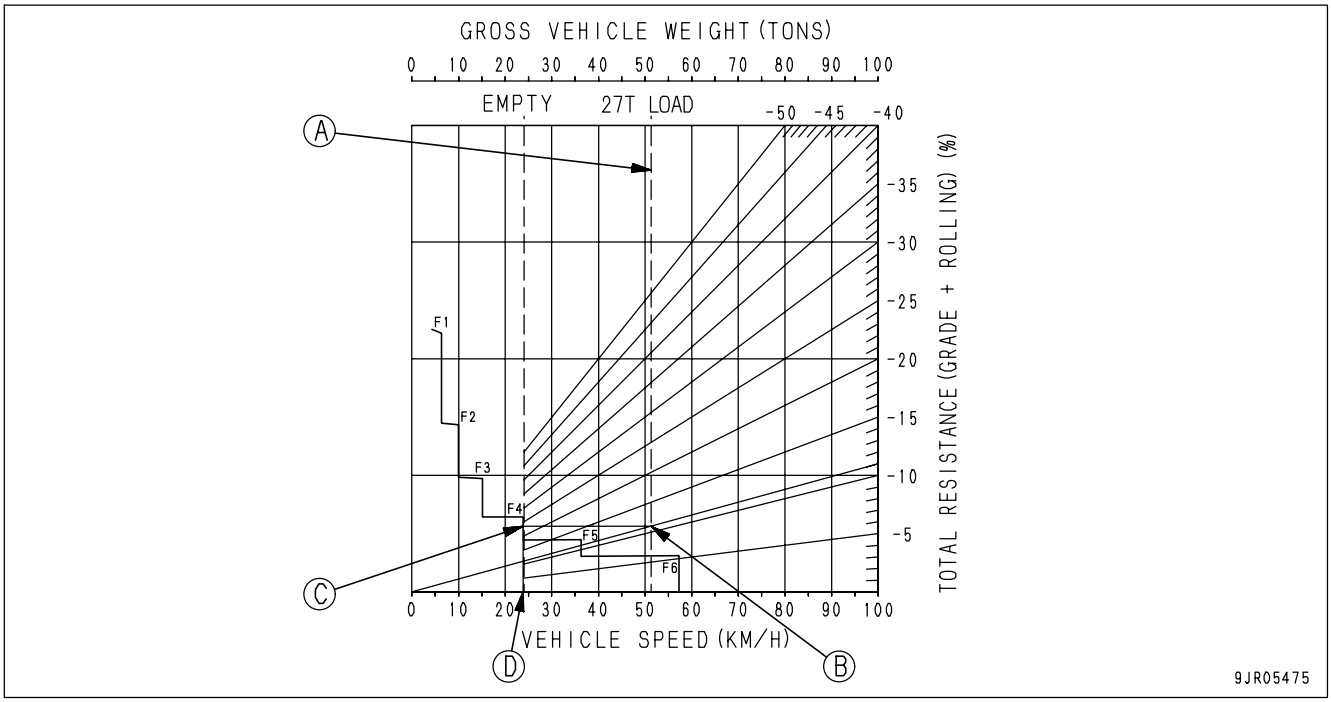

https://truckmanualshub.com/

- Brake performance
  [Downhill distance: 450 m (1476 ft)]

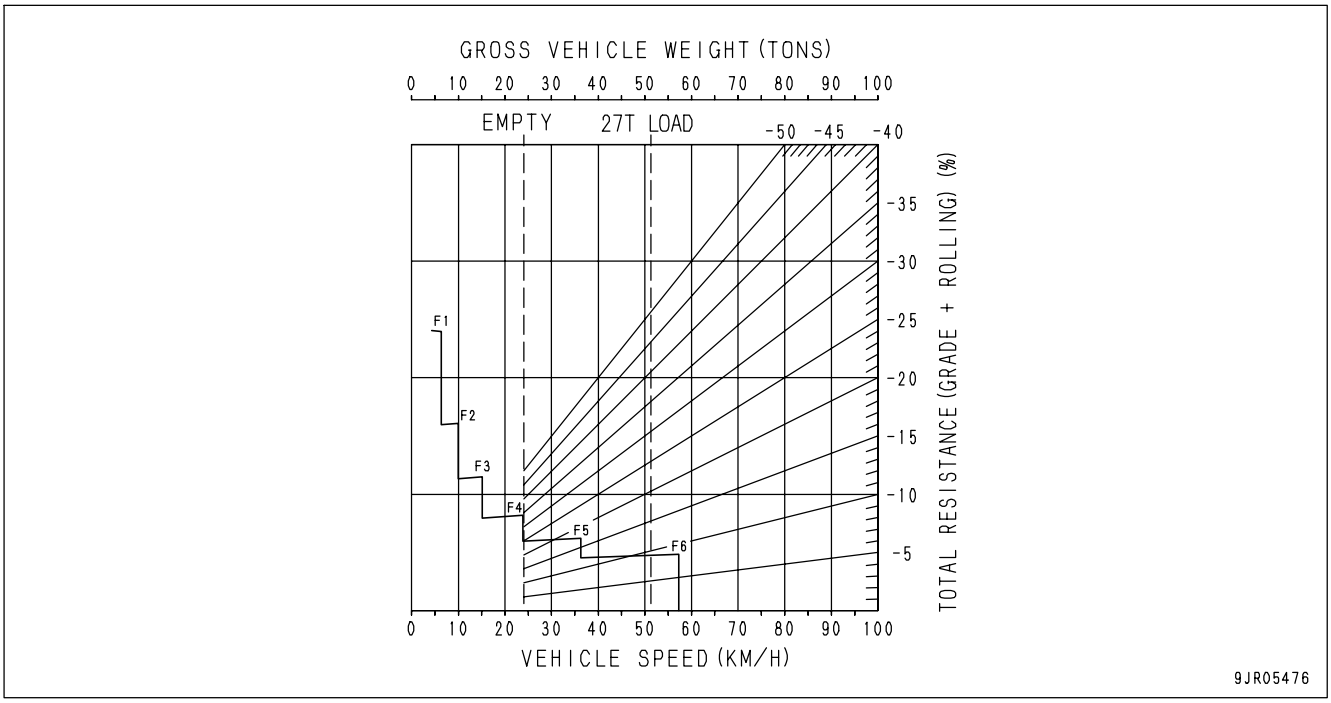

- Brake performance
  [Downhill distance: 600 m (1968 ft)]

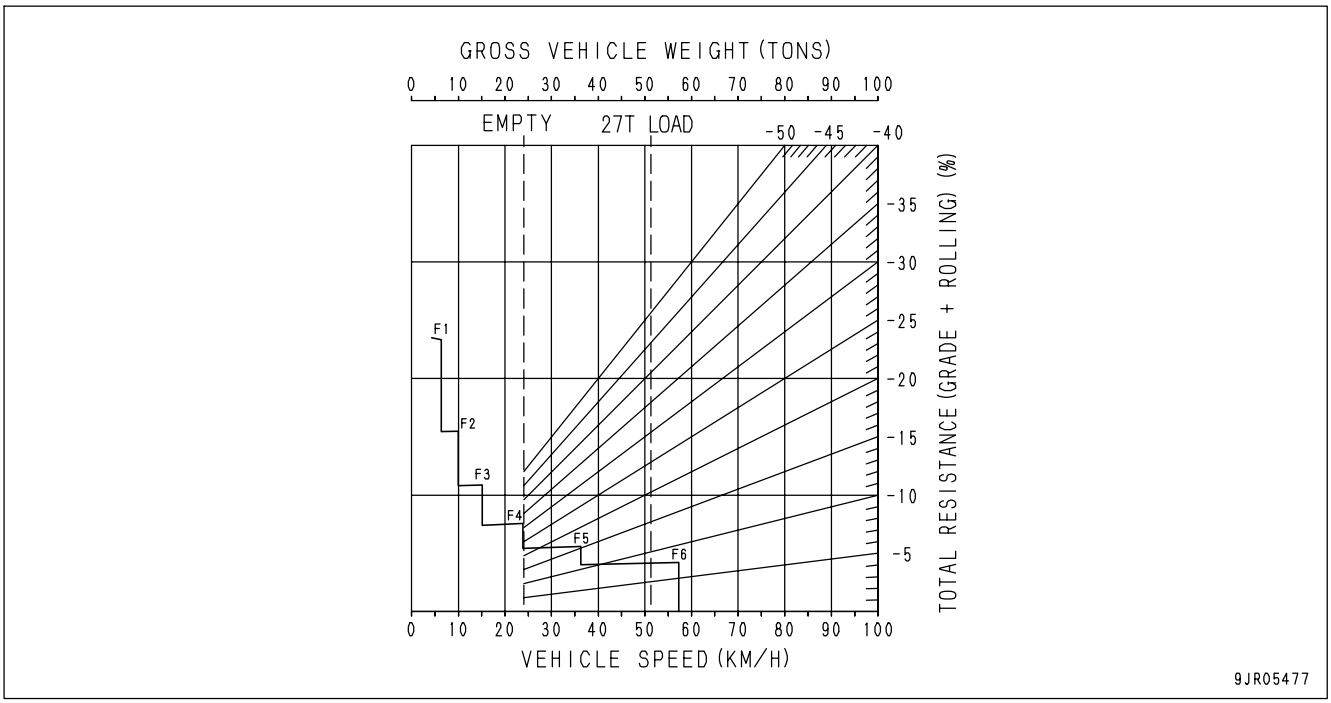

https://truckmanualshub.com/

- Brake performance
  [Downhill distance: 900 m (2952 ft)]

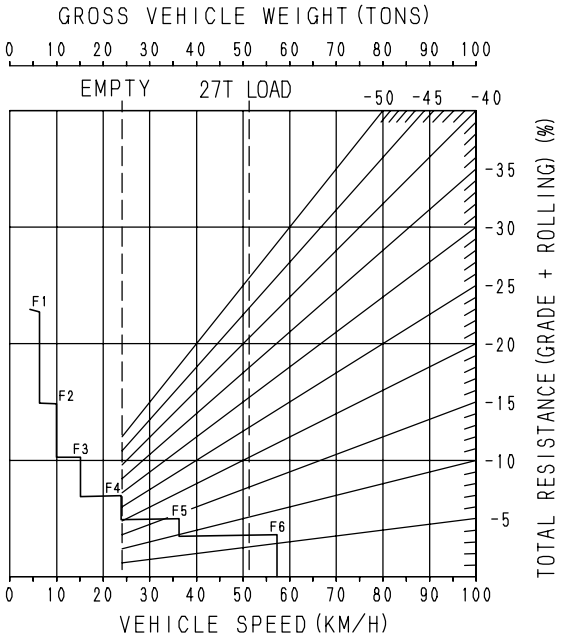

- Brake performance
  [Downhill distance: 1500 m (4921 ft)]

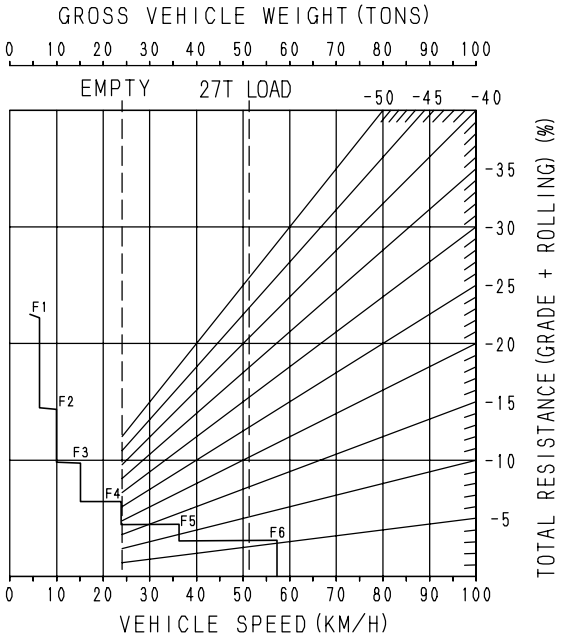

https://truckmanualshub.com/

- Brake performance
  [Downhill distance: Continuous]

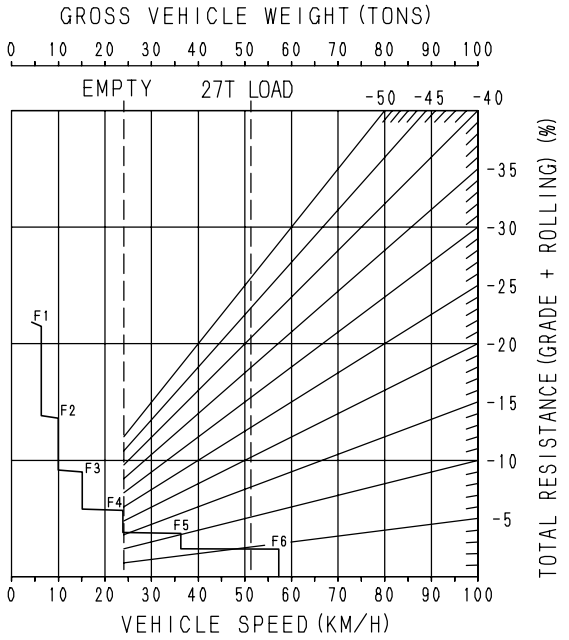

https://truckmanualshub.com/

STEERING THE MACHINE

WARNING

If the machine is turned at high speed or on a steep slope, there is danger that it will turn over, so do not operate the steering in such conditions.

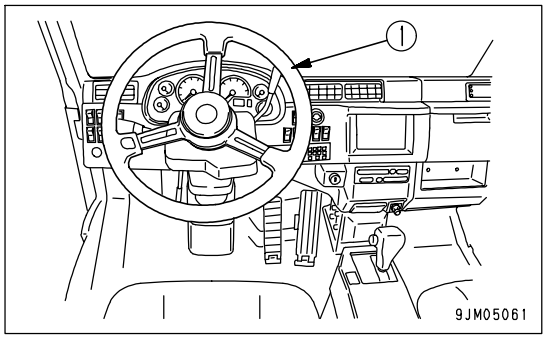

CAUTION

- **Do not continue to turn the steering wheel when it has been turned fully to the left or right. Continuing to turn the steering wheel will make the oil temperature in the circuit rise and cause overheating.**
- **When the steering nears the end of the turn on the left or right, turn the steering wheel more slowly. Turning the steering wheel suddenly to the end of the turn will cause damage to the machine.**

To turn the machine when traveling, turn steering wheel (1) in the direction of the turn.
When traveling around a curve, release the accelerator pedal before entering the curve, shift down to a lower speed range, then depress the accelerator pedal to travel around the curve. Never coast around the curves at high speed.

REMARK

- The angle of the steering wheel may change (the position of the spoke may change slightly) when the machine is traveling, but this is not a failure.
- If force is applied to the steering wheel when the tires have been turned fully to the left or right, the steering wheel will turn a little at a time, but this is not a failure.

https://truckmanualshub.com/

OPERATION USING DIFFERENTIAL LOCK

When traveling on roads where the tires are likely to slip, avoid sudden changes in speed, and use the differential lock (inter-axle differential lock) when traveling.
Operate the inter-axle differential lock switch to actuate the differential lock 5 to 10 m (16 ft 5 in to 32 ft 10 in) before entering a road surface where the tires are likely to slip.
It is important to actuate the differential lock before the tires slip in order to obtain the full ability of the differential lock and also to reduce wear of the tires.

NOTICE

As far as possible, do not use the differential lock (inter-axle differential lock) when turning.
If the differential lock is used when turning:

- **It will be more difficult to operate the steering wheel.**
- **It will become more difficult to turn than when the differential lock is not used, and in some cases, it may not be possible to steer around curves which were previously possible.**
- **When the differential lock is actuated, the wheel on the inside of the curve tries to turn at the same speed as the wheel on the outside, so the tire may spin and there may be premature wear of the tire or damage to the road surface.**

METHOD OF USING INTER-AXLE DIFFERENTIAL LOCK

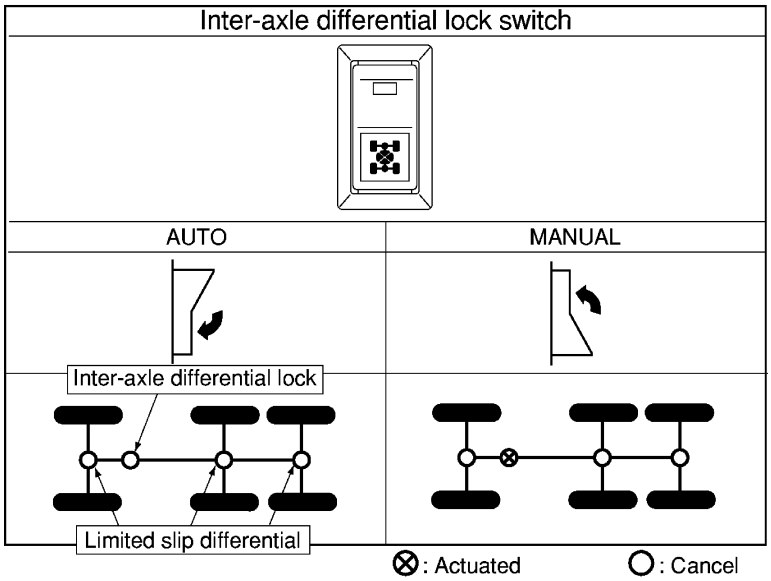

Set the inter-axle differential lock switch to MANUAL before entering soft ground or a road surface where the tires are likely to slip, and actuate the inter-axle differential lock. When traveling again on hard ground, cancel the switch.

REMARK

When the inter-axle differential lock is at AUTO, if the tires slip and there is a difference in rotation between the front and rear tires, the inter-axle differential lock is automatically actuated.

https://truckmanualshub.com/

WHEN TIRES ARE STUCK IN GROUND

If the wheels get stuck, to stop the wheels from spinning, do as follows.
If it is impossible to get the machine out even when repeating the procedure below, use a bulldozer to tow the machine out.

1. Release the accelerator pedal to stop the wheels from spinning.
2. Actuate the inter-axle differential lock.
3. Set the shift lever to position "5" and raise the engine speed.
4. Release the accelerator pedal and brake pedal.
5. Set the shift lever to position R1 and raise the engine speed.
6. Repeat Steps 1 - 5 to move the machine backwards and forwards until it can escape.

LOADING OPERATIONS

When using a large wheel loader to load large rocks, if the rocks are loaded directly into the dump body parts of the dump body may be deformed. To prevent this, when loading large rocks, first load sand or soil to act as a cushion, then load the rocks on top of this to reduce the impact on the dump body.
In addition, when loading rocks that exceed the following conditions, install the optional dump body reinforcement plate.

- Rocks with one side over 0.3 m (11.8 in)
- Rocks of hardness more than 4.5 (Mohs scale)
- Rocks with a weight of more than 150 kg (331 lb)
- When transporting steel ingots

NOTICE

- **When traveling, always set the dump lever to the FLOAT position regardless of whether the dump body is empty or loaded.**
- **If the dump lever is not at the FLOAT position and the shift lever is not at the N position, the central warning lamp will flush and the alarm buzzer will sound.**

https://truckmanualshub.com/

DUMP OPERATIONS

WARNING

- **When dumping a load, always carry out the dumping operation in accordance with the signals from the flagman.**
- **When dumping large rocks, operate the dump body slowly.**
- **Do not load the dump body while it is still raised.**
- **When carrying out inspection with the dump body raised, always use the body pivot pins, set the dump lever to the HOLD position and lock it securely. For details, see "BODY PIVOT PIN (PAGE 3-45)".**

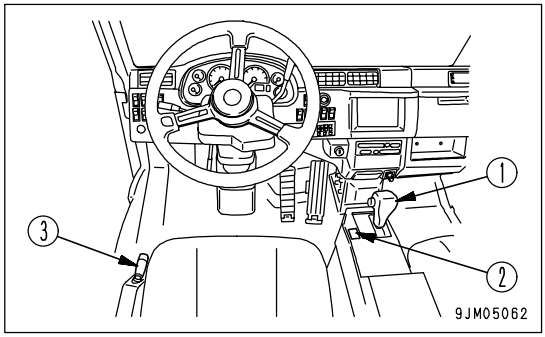

Operate the dump body as follows.

1. Place shift lever (1) at the N position, and set parking brake switch (2) to the PARKING position.

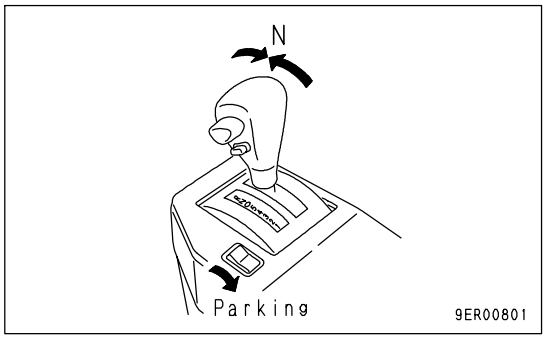

2. Move dump lever (3) to the RAISE position, then depress the accelerator pedal to raise the dump body.
   If the dump lever is released when it is at the RAISE position, it is held at the RAISE position and the dump body will continue to rise.
   The dumping speed increases in proportion to the engine speed.

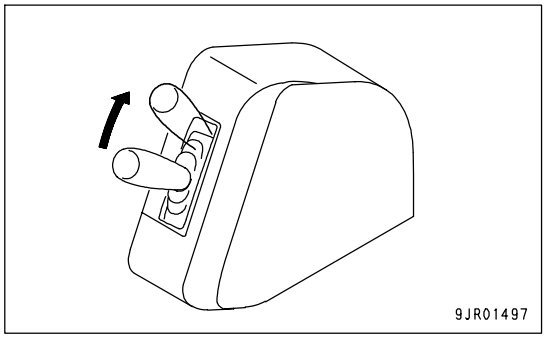

3. When the dump body rises to the previously set position, dump lever (3) returns to the HOLD position. The dump body is held at that position.
   If it is necessary to raise the dump body further, operate dump lever (3) to the RAISE position and the dump body will rise. If dump lever (3) is released, dump lever (3) will return to the HOLD position and the dump body will stop at that position.

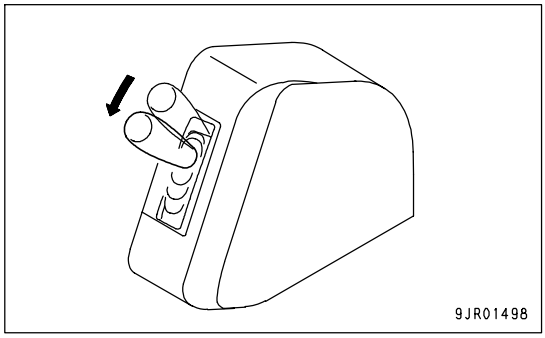

https://truckmanualshub.com/

4. When dump lever (3) is moved to the LOWER position, the dump body will start to move down.

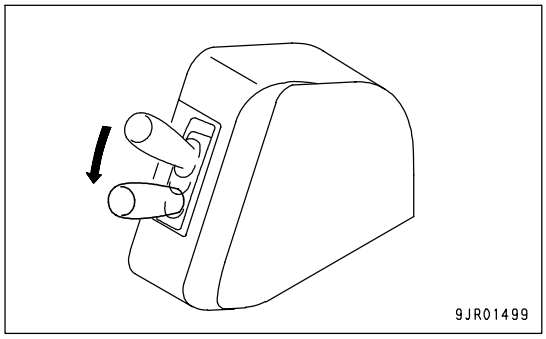

5. When the dump body has moved down a certain distance, move dump lever (3) to the FLOAT position. (When the lever is released, it will return to the FLOAT position.) The dump body will then move down under its own weight.
   When raising the dump body, let the accelerator pedal back near the maximum angle to avoid any impact load on the hydraulic circuit or hoist cylinders.

   When the dump body is raised, if the shift lever is at the D position, the transmission is fixed in 2nd, and if it is at positions 1 - 5, the transmission is fixed in 1st. Keep the dump body lowered when traveling.

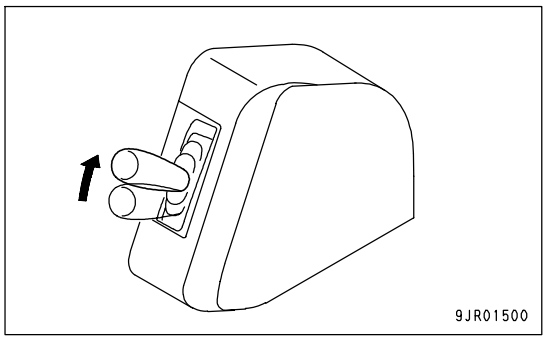

https://truckmanualshub.com/

CAB TILT OPERATION

WARNING

To prevent serious injury or death if the cab comes down, always observe the following strictly when tilting the cab.

Precautions before performing cab tilt operation

- **Perform the cab tilt operation on a flat place.**
- **To prevent interference between the cab and machine body when performing the tilt operation, set the machine facing directly to the front and secure the front and rear frames with the articulation lock.**
- **Set the parking brake switch to the "PARKING" position to apply the parking brake.**
- **Lock the dump control lever with the dump lever lock knob.**
- **Put blocks under the tires to prevent the machine from moving.**
- **Do not perform the cab tilt operation in the strong wind.**

Precautions when performing cab tilt operation

- **Do not operate the cab tilt when the machine is loaded.**
- **Do not stand under the cab during the cab tilt operation.**
- **While the cab is tilted up, fix it with the lock bar securely.**
- **While the cab is tilted up, do not ride on or get off it.**
- **While the cab is tilted up, do not operate the gear shift lever or dump control lever.**
- **Do not start the engine while the cab is tilted up. If it is necessary to start the engine when carrying out inspection, check first that there is no one under the cab.**
- **Do not subject to the machine to any large impact force while the cab is tilted up.**
- **When lowering the cab by using the tilt cylinder, do not lower the hydraulic pressure at a time but lower it gradually to adjust the lowering speed of the cab.**
- **The lock bar is set on the left inside of the engine hood. After using it, be sure to return it.**

https://truckmanualshub.com/

WHEN USING CRANE

1. Remove lock bolt (2) from guard (1) at the rear of the cab, then lock guard (1) in position with rod (3).

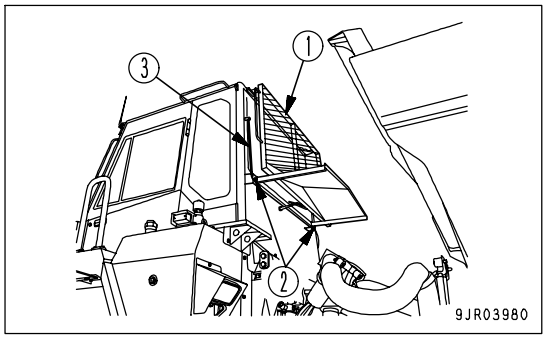

2. Remove pin (4) in the mount at the rear of the cab, and insert it in hole (6).

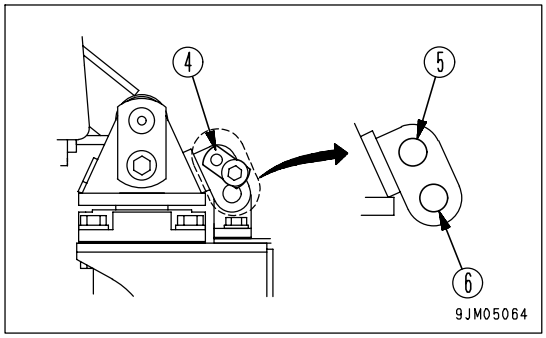

3. Remove cab mounting bolts (7) (8 pieces).
4. Install the sling to hooks (8) installed to the front of the cab (on both right and left sides) and lift up the cab.
5. After tilting up the cab, fix it with lock bar (9).
6. Make sure that lock bar (9) is installed in the correct direction and lock it securely with lock (10).
7. After returning the cab to its original position, insert pin (4) in hole (5).

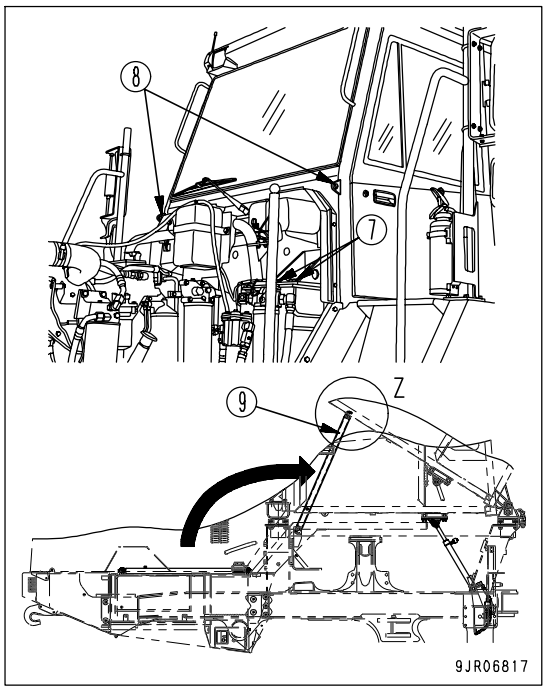

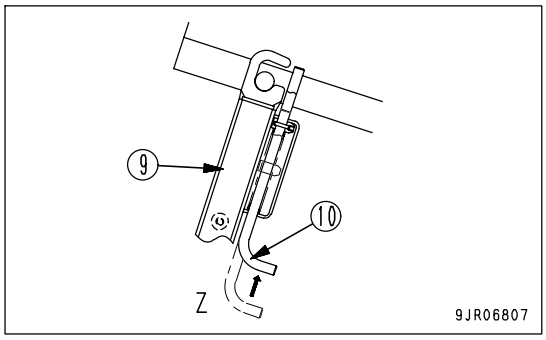

https://truckmanualshub.com/

WHEN USING TILT CYLINDER

(If equipped)

1. Remove lock bolt (2) from guard (1) at the rear of the cab, then lock guard (1) in position with rod (3).

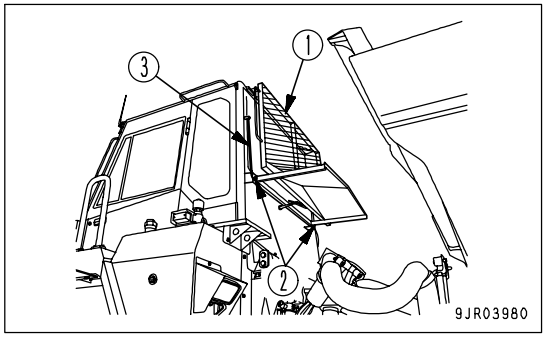

2. Remove pin (4) in the mount at the rear of the cab, and insert it in hole (6).

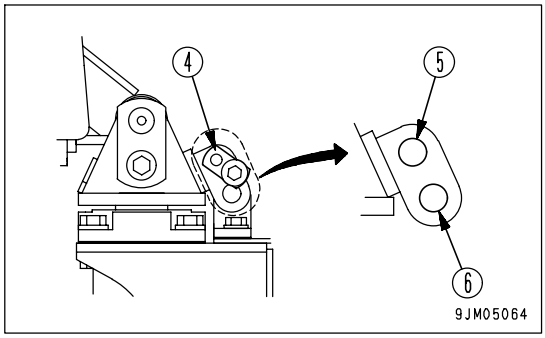

3. Remove the cab mounting bolts (8 pieces).
4. Apply hydraulic pressure (20.6 to 34.3 MPa (210 to 350 kg/cm ^{2}, 2980 to 4970 PSI) to hose (7) behind the front right wheel and raise the cab.
5. After tilting up, fixed the cab in position with lock bar (8).
6. Make sure that lock bar (8) is installed in the correct direction and lock it securely with lock (9).
7. After returning the cab to its original position, insert pin (4) in hole (5).

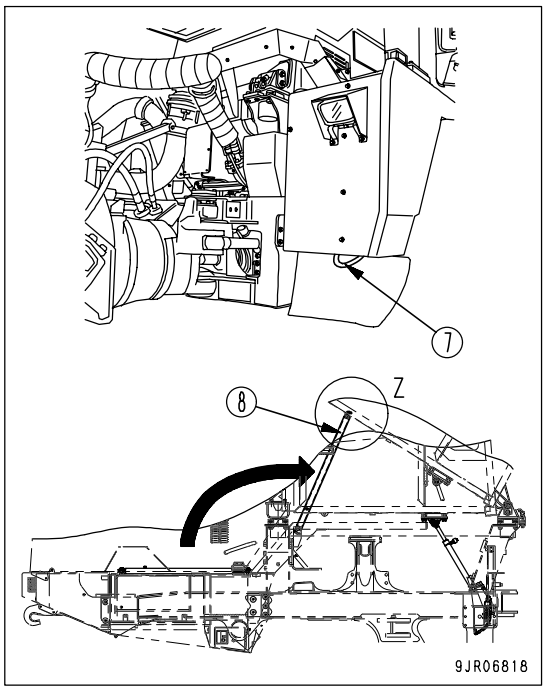

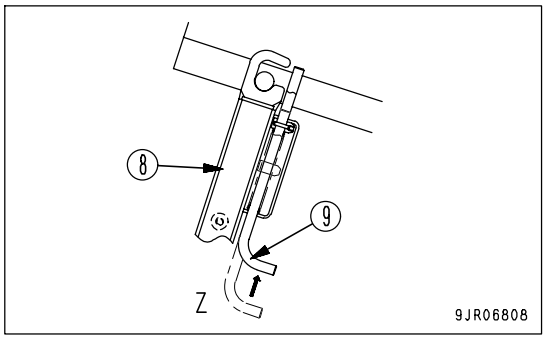

https://truckmanualshub.com/

PRECAUTIONS FOR OPERATION

- When traveling on roads in rain or snow, or when traveling on muddy or soft ground, consider the loaded condition of the machine and be extremely careful not to let the tires slip or the machine spin and sink into the ground.
- If the engine should stop when the machine is traveling, stop the machine immediately, then move the gear shift lever to the N position, and start the engine again.
- If the central warning lamp and pilot lamp for any EMERGENCY item on the machine monitor should flash and the buzzer sounds during operation, stop the machine immediately and investigate the cause.
  For details, see "TROUBLESHOOTING (PAGE 3-125)".
- When loading, be careful to load the dump body uniformly, and be particularly careful to avoid loading too much at the front.
- On slippery road surfaces, apply the retarder control lever slowly and shift the transmission down to prevent the wheels from locking.

PERMISSIBLE WATER DEPTH

Do not travel in swampy ground or water deeper than the permissible water depth (bottom of differential case (1)). After finishing work, wash the machine and supply grease to the parts which have been soaked in water.

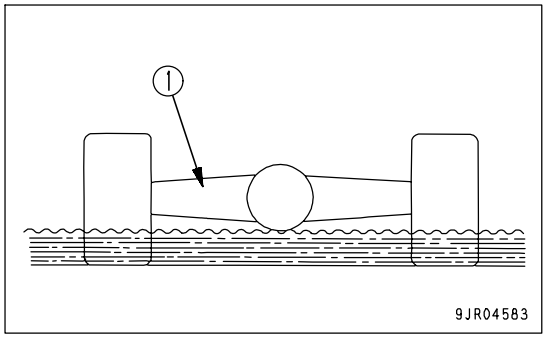

If the machine travels in water or swampy ground, water may enter the drain tank. Referring to "RECOVER OIL LEAKING FROM FLOATING SEAL (PAGE 4-58)", draw up the water with the attached hand pump.

https://truckmanualshub.com/

PARKING MACHINE

WARNING

- **Avoid stopping suddenly. Give yourself ample room when stopping.**
- **Park the machine on firm, horizontal ground.**
  Do not park the machine on a slope.
  If it is unavoidably necessary to park the machine on a slope, put blocks under the tires to prevent the machine from moving.
- **If the shift lever is touched by mistake, the machine may move suddenly, and this may lead to a serious injury or death. Before standing up from the operator's seat, always set the parking brake switch securely to the PARKING position.**
- **The retarder must not be used as a parking brake.**
- **Do not use the retarder for long-term parking, regardless of the engine speed.**

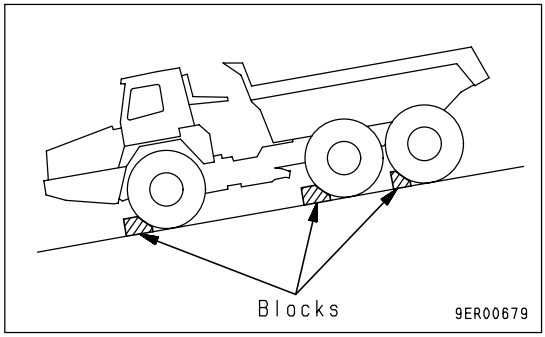

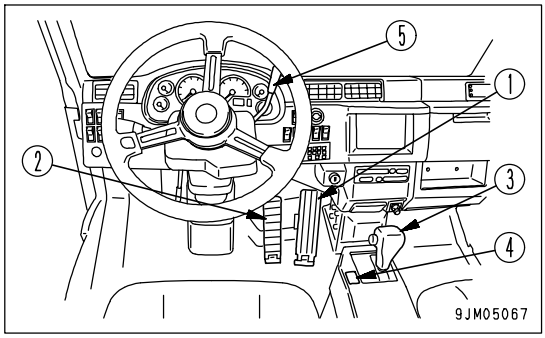

CAUTION

To prevent damage to the parking brake, apply the parking brake only when parking the machine or carrying out dumping operations.

1. Release accelerator pedal (1), then depress brake pedal (2) to stop the machine.

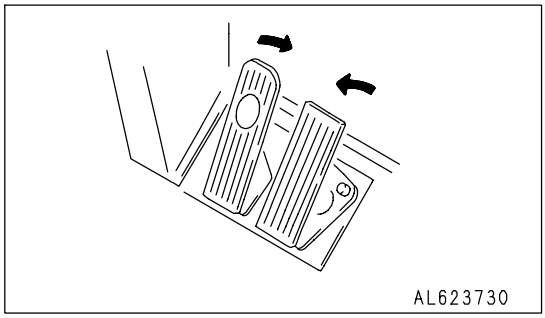

2. Move shift lever (3) to the N position, then set parking brake switch (4) to the PARKING position to apply the parking brake.

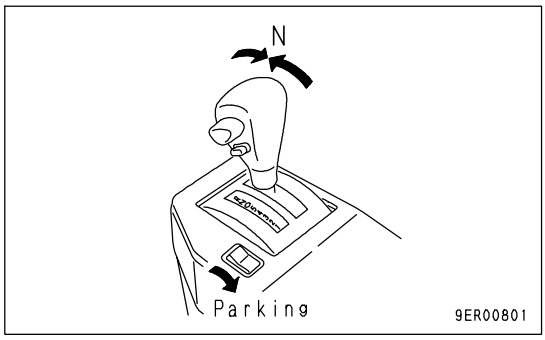

https://truckmanualshub.com/

3. When in the operator's compartment, pull retarder control lever (5) fully to apply the retarder.

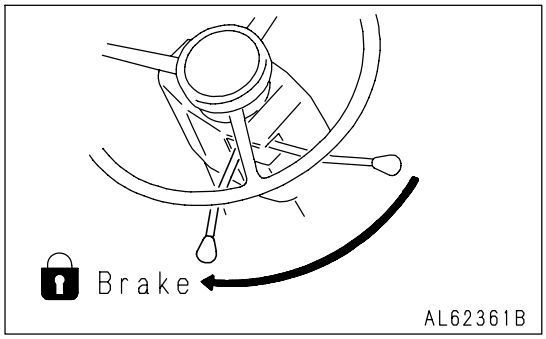

NOTICE

- **The retarder must not be used as a parking brake.**
- **Do not use the retarder for long-term parking, regardless of the engine speed.**

CHECKS AFTER COMPLETION OF WORK

Use the machine monitor to check the engine water temperature, engine oil pressure, and fuel level. If the engine has overheated, do not stop the engine suddenly. Run it at a mid-range speed to cool it gradually before stopping.

LOCKING

Always lock the following places.

(1) Fuel filler cap of fuel tank
(2) Cab door (left, right)
(3) Engine hood
(4) Tool box
(5) Battery box

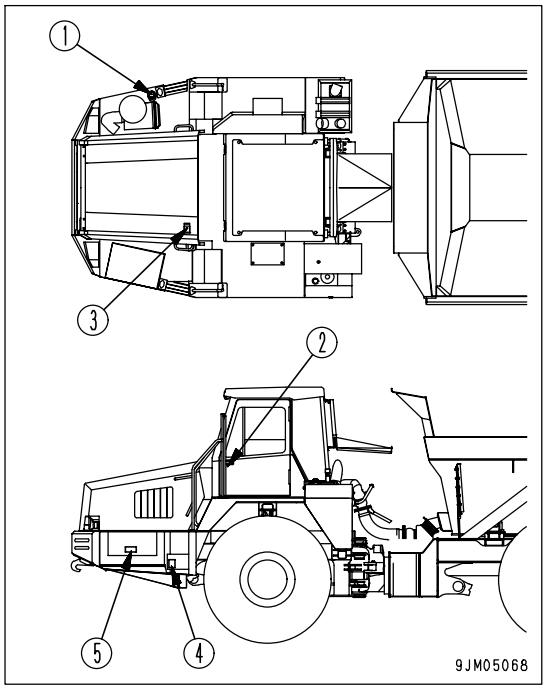

REMARK

The starting switch key is used for locking places (1), (2), (3), (4) and (5).

https://truckmanualshub.com/

HANDLING TIRES

PRECAUTIONS WHEN HANDLING TIRES

WARNING

To ensure safety, the defective tires given below must be replaced with new tires.

- **Tires where the bead wire has been cut, broken, or greatly deformed**
- **Excessively worn tires where more than 1/4 of the circumference of the carcass ply (excluding the breaker) is exposed**
- **Tires where damage to the carcass exceeds 1/3 of the tire width**
- **Tires where ply separation has occurred**
- **Tires where radial cracks extend to the carcass**
- **Tires where there is abnormal deterioration, deformation, and damage, and the tire cannot withstand use.**

Please contact your Komatsu distributor when replacing the tires. It is dangerous to jack up the machine without taking due care.

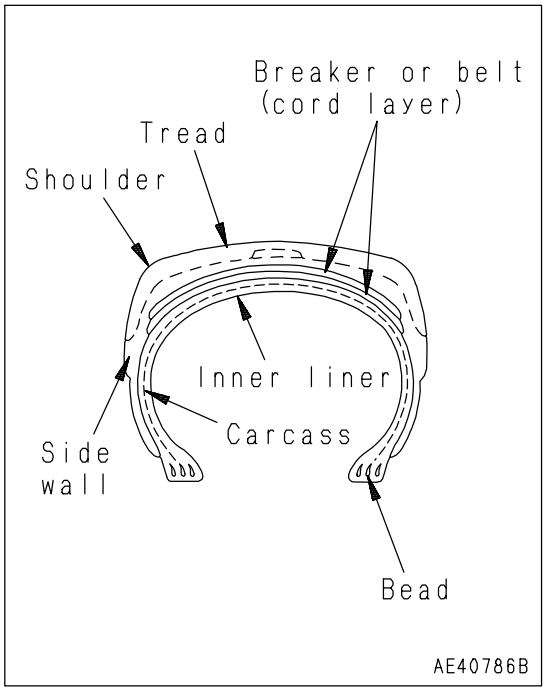

PRECAUTIONS FOR LONG DISTANCE TRAVEL

If the machine travels continuously at high speed for a long distance, there will be a marked increase in the generation of heat in the tire. This may cause premature damage to the tire, so be careful of the following points.

- Travel only when empty.
- Check the tire inflation pressure before starting for the day when the tires are cold, and adjust to the following inflation pressure.
- Do not reduce the tire inflation pressure when traveling.

Tire size	Inflation pressure [MPa (kg/cm^2, PSI)]		
	Front	Center	Rear
23.5-R25 (standard)	0.44 (4.5, 63.9)	0.44 (4.5, 63.9)	0.44 (4.5, 63.9)
750/65 R25 (30/65 R25) (if equipped)	0.34 (3.5, 49.7)	0.40 (4.1, 58.2)	0.40 (4.1, 58.2)

NOTICE

If the tires are used when the inflation pressure is less than the value given in the table above, the rim may be damaged. Always keep the tire inflation pressure within +0 to +0.03 MPa (0.3 kg/cm^2, 4.3 PSI) of the value in the table above.

- The maximum travel speed must be kept to less than 40 km/h (24.9 MPH). Stop for at least one hour for every one hour of travel to allow the tires and other components to cool down.
- Never travel with water or dry ballast in the tires.

https://truckmanualshub.com/

DETERMINING AND MAINTAINING TRAVEL ROAD

Determining and traveling the road in the jobsite is an extremely important factor both for reasons of safety and for reducing the cycle time.To ensure safety in operations, do as follows.

DETERMINING TRAVEL ROAD

- As far as possible, restrict the travel road to one-way travel.
- If it is impossible to keep to one-way traffic, make the road with ample width to enable trucks traveling in opposite directions to pass each other. If it is impossible to provide a sufficient road width, provide passing places at various points along the road.
- Always design the road so that the loaded truck passes on the side closest to the hill face.
- If there are curves with poor visibility along the road, set up mirrors.
- In places where the road should is weak or likely to collapse, set up a sign at a point at least 1.5 m (4 ft 11 in) from the road shoulder to warn of the danger.
- It is important to set up lighting or reflectors to enable the road to be traveled at night.
- The grade of slope should be kept within 10% (approx. 6°) as far as possible, and emergency escape points should be set up on downhill slopes in case of any brake failure.
- Make the road as straight as possible, and particularly in intermediate areas with curves, where the machine is traveling at high speed, make the radius of the curve as large as possible.
- Small S curves are particularly dangerous, so avoid such curves. The radius of the curve must be a minimum of 12 to 15 m (39 ft 4 in to 49 ft 3 in).
- Make the radius of curves as large as possible.
- Make the road wider at curves than it is in straight areas.
- Make the outside of the curve slightly higher.
- Be particularly careful to strengthen the road shoulder on the outside of curve.
- As far as possible, design the road so that no other roads cross it. In particular, if roads cross at an angle on slopes, a stepped difference is formed in the road. This is extremely dangerous, as it causes the machine to roll when traveling at high speed.
- Cut the slope face to provide a special road for the trucks.

MAINTAINING TRAVEL ROAD

Carry out the necessary action according to the conditions to insure that the road can always be traveled in safety.

- Remove any unevenness in the travel surface, sloping to the left or right, or drooping of the road shoulder. Make the road of ample strength and remove such obstacles as rocks and tree stumps.
- Maintain the road from time to time with a bulldozer or motor grader.
- Spray the road with water at suitable intervals to prevent dust from rising and reducing the visibility.

https://truckmanualshub.com/

TRANSPORTATION

PRECAUTIONS WHEN TRANSPORTING

Always obey the traffic regulations when transporting the machine by road.

WARNING

This machine must be disassembled for transportation. When transporting the machine, please consult your Komatsu distributor.

STEPS FOR TRANSPORTATION

As a basic rule, always transport the machine on a trailer.
When selecting the trailer, see the weights and dimensions given in "SPECIFICATIONS (PAGE 5-2)".
Note that the specifications for the weights and dimensions for transportation differ according to the type of tires and type of dump body.

https://truckmanualshub.com/

METHOD OF SECURING MACHINE

After loading the machine in the specified position, secure it in place as follows.

1. Set the parking brake switch to the PARKING position to apply the parking brake.

2. Turn the key in the starting switch to the OFF position to stop the engine.

3. Remove the key from the starting switch.

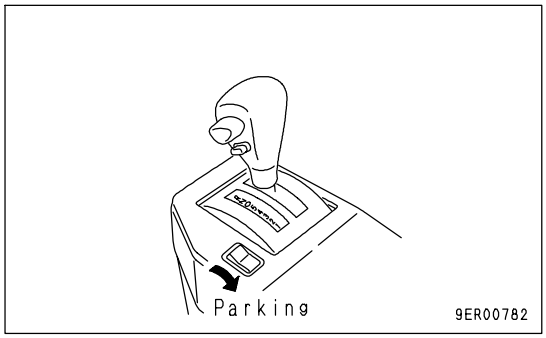

4. Lock the front frame and rear frame with the articulation lock.

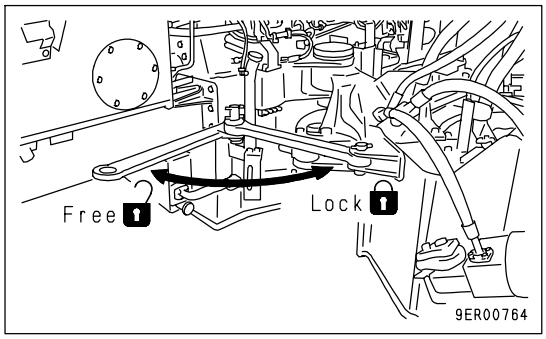

5. Put blocks in front of and behind the wheels and secure the machine with chains or wire rope of a suitable strength to prevent the machine from moving during transportation.

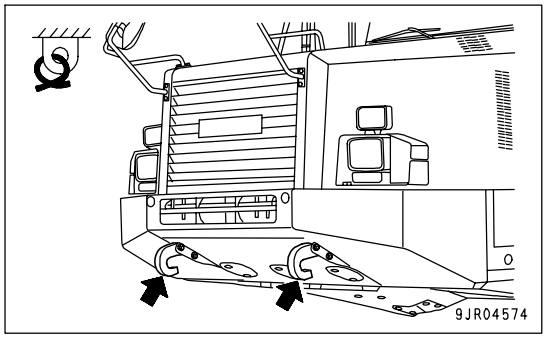

NOTICE

Always retract the antenna and reassemble the mirrors so that they are within the width of the machine.

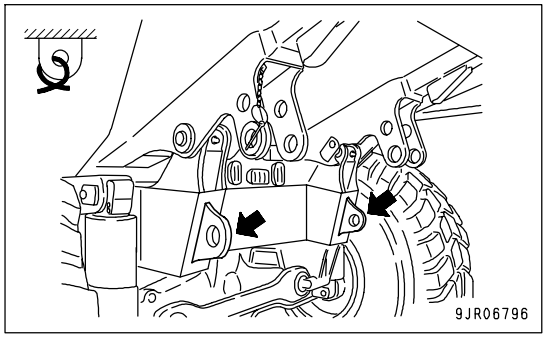

https://truckmanualshub.com/

METHOD OF LIFTING MACHINE

When lifting the machine at a port or any other place, always use the following procedure to lift it.

WARNING

- **The operator carrying out the lifting operation using a crane must be a properly qualified crane operator.**
- **Never raise the machine with any worker on it.**
- **Always make sure that the wire rope is of ample strength for the weight of this machine.**
- **When lifting, keep the machine horizontal.**
- **Before starting the lifting operation, always stop the engine, apply the parking brake, and use the articulation lock to prevent the front frame from articulating.**
- **Never enter the area around or under the machine when it is raised.**

Never try to lift the machine in any posture other than the posture given in the procedure below or using lifting equipment other than in the procedure below.
There is a hazard that the machine may lose its balance.

NOTICE
This method of lifting applies to the standard specification machine.
The method of lifting differs according to the attachments and options installed.
For details of the procedure for machines that are not the standard specification, please consult your Komatsu distributor.

For the weight of the standard specification machine, see "WEIGHT TABLE (PAGE 3-118)".

NOTICE
- **Use protectors to prevent the wire rope from being cut on sharp corners and to prevent the wire rope from cutting into the machine bodywork.**
- **When using a spreader bar, select an ample width to prevent contact with the machine.**

Please consult your Komatsu distributor before carrying out lifting work.

https://truckmanualshub.com/

LOCATION OF LIFTING POSITION MARK

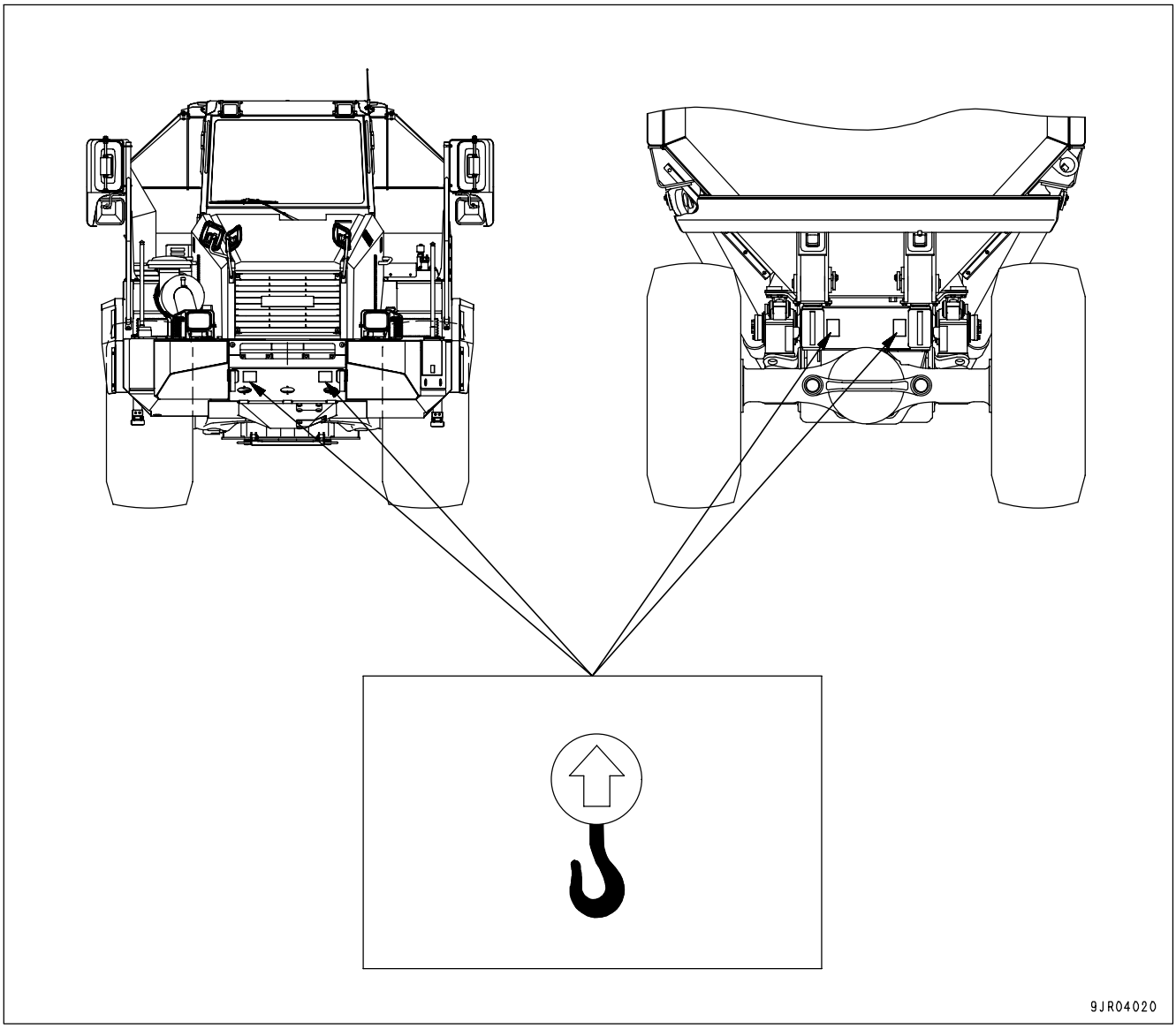

WEIGHT TABLE

	Machine weight	Front wheel load	Center wheel load	Rear wheel load	Center of gravity (from front axle)
HM300-2	24040 kg (53008 lb)	13410 kg (29569 lb)	5670 kg (12502 lb)	4960 kg (10937 lb)	2165 mm (7 ft 1 in)

https://truckmanualshub.com/

LIFTING PROCEDURE

Lifting work can be carried out only with machines displaying a lifting mark.

When carrying out the lifting operation, stop the machine on firm level ground, and do as follows.

1. Start the engine, set the machine facing directly to the front, place the dump lever at the FLOAT position, and check that the dump body pilot lamp goes out.

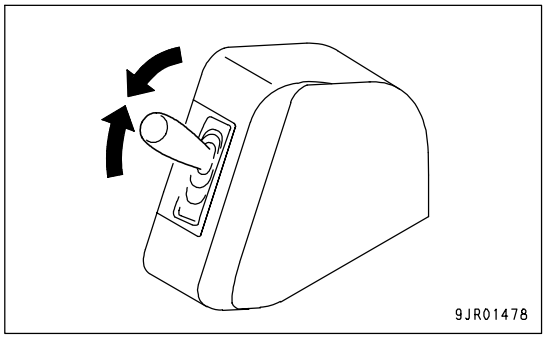

2. Stop the engine, apply the brake, check that the area around the operator's compartment is safe, then lock with the articulation lock to prevent the front frame and rear frame from articulating.

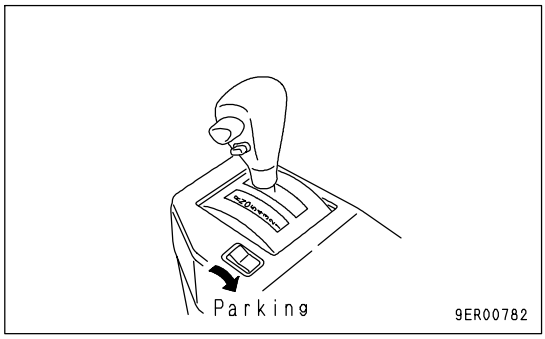

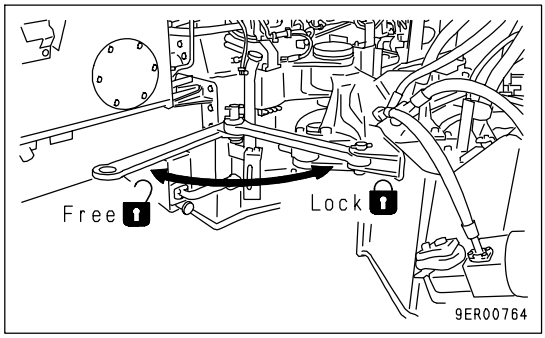

3. To prevent damage to front grill (1) during lifting operations, remove front grill (1) before starting.

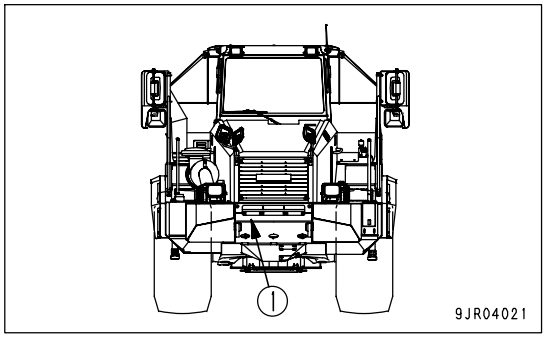

https://truckmanualshub.com/

4. Select wire ropes, slings, spreader bars and other lifting equipment to match the weight of the machine, and fit the wire ropes to the lifting hooks at the front of the front frame and the rear of the rear frame (lifting hook marks).

5. Fit protector blocks at contact points (2) between the lifting equipment and the body to prevent damage to the lifting equipment.

6. When the machine comes off the ground (raised 10 to 20 cm(3.9 to 7.9 in)), stop the lifting operation, check carefully that the machine is balanced and that the wire ropes are not loose, then continue the lifting operation slowly.

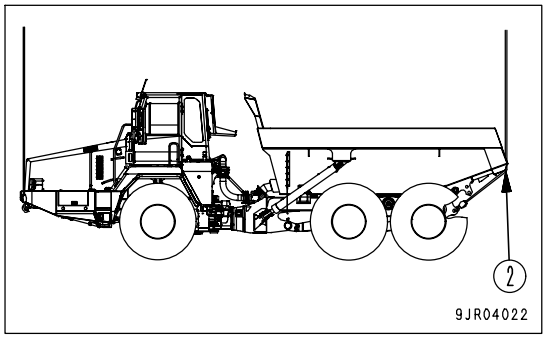

https://truckmanualshub.com/

COLD WEATHER OPERATION

PRECAUTIONS FOR LOW TEMPERATURE

If the temperature becomes low, it becomes difficult to start the engine, and the coolant may freeze, so do as follows.

FUEL AND LUBRICANTS

Change to fuel and oil with low viscosity for all components. For details of the specified visicosity, see "RECOMMENDED FUEL, COOLANT, AND LUBRICANT (PAGE 4-10)".

COOLANT

WARNING

- **Antifreeze is toxic. Be careful not to get it into your eyes or on your skin. If it should get into your eyes or on your skin, wash it off with large amounts of fresh water and see a doctor at once.**
- **When changing the coolant or when handling coolant containing antifreeze that has been drained when repairing the radiator, please contact your Komatsu distributor or request a specialist company to carry out the operation. Antifreeze is toxic. Do not let it flow into drainage ditches or spray it onto the ground surface.**
- **Antifreeze is flammable. Do not bring any flame close. Do not smoke when handling antifreeze.**

NOTICE

- **Use Komatsu Supercoolant (AF-NAC) wherever available, or use permanent type antifreeze coolant.**
- **Never use methanol, ethanol, or propanol-based antifreeze.**
- **Do not use any water leakage prevention agent, either alone, or in combination with antifreeze.**
- **Do not mix one brand of antifreeze with a different brand.**
- **When using Komatsu Supercoolant (AF-NAC), there is no need to use a corrosion resistor. For details, see "CLEAN INSIDE OF COOLING SYSTEM (PAGE 4-26)".**

For details on the amount of antifreeze mixture and on when to change the coolant, see "CLEAN INSIDE OF COOLING SYSTEM (PAGE 4-26)".

https://truckmanualshub.com/

BATTERY

WARNING

- **The battery generates flammable gas. Do not bring fire or sparks near the battery.**
- **Battery electrolyte is dangerous. If it gets in your eyes or on your skin, wash it off with a large amount of water and consult a doctor.**
- **Battery electrolyte dissolves paint. If it gets on the bodywork, wash it off immediately with water.**
- **If the battery electrolyte is frozen, do not charge the battery or start the engine with a different power source. There is danger that the battery may explode.**
- **Battery electrolyte is toxic. Do not let it flow into drainage ditches or spray it on to the ground surface.**

When the ambient temperature drops, the capacity of the battery will also drop. If the battery charge ratio is low, the battery electrolyte may freeze. Maintain the battery charge as close as possible to 100%. Insulate it against cold temperature to ensure the machine can be started easily the next morning.
Measure the specific gravity and calculate the rate of charge from the following conversion table.

Charging Rate (%) \ Electrolyte Temperature (°C)	20	0	-10	-20
100	1.28	1.29	1.30	1.31
90	1.26	1.27	1.28	1.29
80	1.24	1.25	1.26	1.27
75	1.23	1.24	1.25	1.26

When adding distilled water in cold weather, add it before starting operations in the morning to prevent the electrolyte from freezing.

INSTALLATION OF RADIATOR CURTAIN

(If equipped)
If the display for the engine water temperature gauge does not enter the white range, install a radiator curtain.
It is possible to adjust the degree of opening of the radiator curtain (fully closed, one side open, and both sides open).
Adjust to a suitable condition to match the ambient temperature so that the engine water temperature gauge display enters the white range.

PRECAUTIONS AFTER COMPLETION OF WORK

To prevent mud, water, or the undercarriage from freezing and making it impossible for the machine to move on the following morning, observe the following precautions.

- Mud and water on the machine body should be completely removed. This is to prevent damage to the seal caused by water in mud or dirt getting inside the seal and freezing.
- Park the machine on hard, dry ground.
  If this is impossible, park the machine on wooden boards.
  The boards help protect the tracks from being frozen in soil and the machine can start next morning.
- Open the drain valve and drain any water collected in the fuel system to prevent it from freezing.
- As the battery capacity drops markedly in low temperatures, cover the battery or remove it from the machine, keep it in a warm place, and install it again the next morning.
- If the electrolyte level is low, add distilled water in the morning before beginning work. Do not add water after the day's work to prevent diluted electrolyte in the battery from freezing during the night.

https://truckmanualshub.com/

AFTER COLD WEATHER

When the season changes and the weather becomes warmer, do as follows.

- Replace the fuel and oil for all parts with oil of the viscosity specified.
  For details, see "RECOMMENDED FUEL, COOLANT, AND LUBRICANT (PAGE 4-10)".

https://truckmanualshub.com/

LONG-TERM STORAGE

BEFORE STORAGE

When keeping in long-term storage (more than one month), store as follows.

- After every part is washed and dried, house the machine in a dry building. Never leave it outdoors.
  In case it is indispensable to leave it outdoors, park the machine on the flat ground and cover it with canvas etc.
- Completely fill the fuel tank. This prevents moisture from collecting.
- Lubricate and change the oil before storage.
- Coat the exposed portion of the hydraulic cylinder piston rod with grease.
- Disconnect the negative terminals of the battery and cover it or remove it from the machine and store it separately.
- Apply the parking brake.
- Set the tire inflation pressure for each tire to within the range of the specified inflation pressure for the type of tire.
- Push the retarder control lever forward to the OFF position.
- Place the gear shift lever at the N position and turn the starting switch OFF.
- To prevent corrosion, be sure to fill the cooling system with Supercoolant (AF-NAC) or permanent type antifreeze (density between 30% and 68%).

DURING STORAGE

WARNING

If it is necessary to perform the rust-prevention operation while the machine is indoors, open the doors and windows to improve ventilation and prevent gas poisoning.

During the storage period, operate the machine once a month to prevent loss of the oil film at the lubricated parts. At the same time, charge the battery.
Before operating the work equipment, wipe off all the grease from hydraulic piston rods.

AFTER STORAGE

NOTICE

If the machine has been stored without carrying out the monthly rust-prevention operation, consult your Komatsu distributor before using it.

When using the machine after long-term storage, do as follows before using it.

- Wipe off the grease from the hydraulic cylinder rods.
- Add oil and grease at all lubrication points.
- When the machine is stored for a long period, moisture in the air will mix with the oil. Check the oil before and after starting the engine. If there is water in the oil, change all the oil.

PRECAUTIONS BEFORE TRAVELING AFTER LONG-TERM STORAGE

1. Check all the oil and water levels before traveling.
2. When traveling after long-term storage, travel forward at a speed of 10 to 15 km/h (6.2 to 9.3 MPH) for 5 minutes or 1 km to run the machine in, then change to normal travel.

https://truckmanualshub.com/

TROUBLESHOOTING

AFTER RUNNING OUT OF FUEL

If you have run out of fuel, add fuel to the fuel tank and bleed air from the fuel system and then start the engine.

PROCEDURE FOR BLEEDING AIR

CAUTION

- **The fuel injection pump and nozzle of this engine consist of more precise parts than the conventional ones. If foreign matter enters them, it can cause a trouble. Accordingly, if dust sticks to the fuel system, wash it off with clean fuel.**
- **When opening the air bleeding plug at the fuel filter head, take care. Fuel may spout because of residual pressure.**

1. Fill the fuel tank with fuel.
2. Loosen air bleeding plug (1) at the fuel main filter head.
   Do not loosen the plug at the filter stand of the fuel prefilter. If it is loosened, air is not bled.
3. Loosen wing bolt (3) which is fixing lever (4) of priming pump (2). Move lever (4) up and down to let fuel flow out of air bleeding plug (1) until bubbles do not come out any more.
4. Tighten air bleeding plug (1) and then tighten wing bolt (3) of priming pump (2) securely to lock lever (4).
   - Tightening torque for air bleeding plug
     7.8 to 9.8Nm{0.8 to 1kgm}
   - Tightening torque for wing screw
     6.9 to 12.7Nm{0.7 to 1.3kgm}
5. Turn the key in the starting switch to the START position and start the engine.
   When doing this, do not crank the starting motor continuously for more than 20 seconds. If the engine does not start, wait for at least 2 minutes, then try again. Perform this operation a maximum of 4 times.
6. If the engine does not start, repeat the procedure from Step 2.

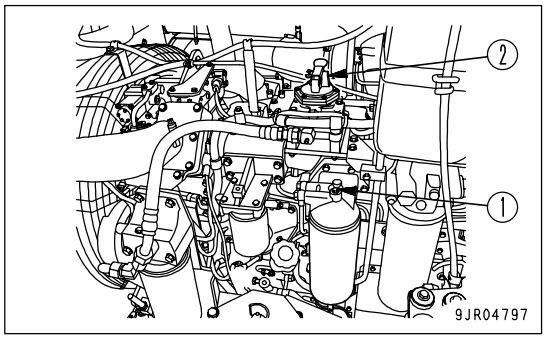

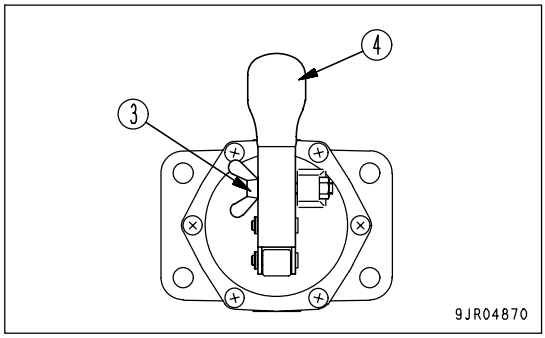

https://truckmanualshub.com/

IF TRANSMISSION HAS TROUBLE

If the transmission has any trouble, operate the machine according to the following procedure.

1. Decelerate the machine with the brake and stop it on a safe place.
2. Set the shift lever to the N position, then set the parking brake switch to the PARKING position.
3. In some trouble modes, the gear is not shifted even if the shift lever is operated.
   In this case, perform the following procedure.

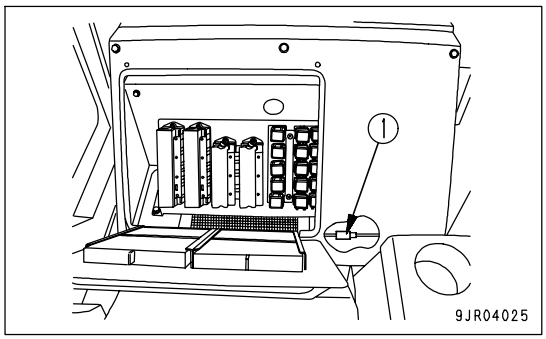

   1) Disconnect emergency escape connectors (1) (No. A-1, A-2, 1-pole White connector) and connect them again.
   2) Set the parking brake switch to the TRAVEL position.
   3) Operate the shift lever to move the machine to a safe place without depressing the accelerator pedal.

If the gear shift lever is operated with the accelerator pedal depressed, the emergency escape function will not work. In addition, the emergency escape function may not work for some failure codes.

While the emergency escape function is working, the shift indicator of the machine monitor displays "E" and the shift range (gear speed) of the transmission alternately.

METHOD OF LOWERING DUMP BODY IN EMERGENCY

When the dump body needs to be lowered to the seat while the engine cannot be started for some trouble, perform the following procedure.

1. Remove cover (2) from the rear of hydraulic tank (1).
2. Loosen locknut (4) of manual lower valve (3).
3. Turn grip (5) of valve (3) counterclockwise.
   The oil in the hoist cylinder is drained into the hydraulic tank and the dump body lowers.
4. Tighten grip (5) and locknut (4) and install cover (2).

   If the dump body does not go down even when the above method is used, please consult your Komatsu distributor.

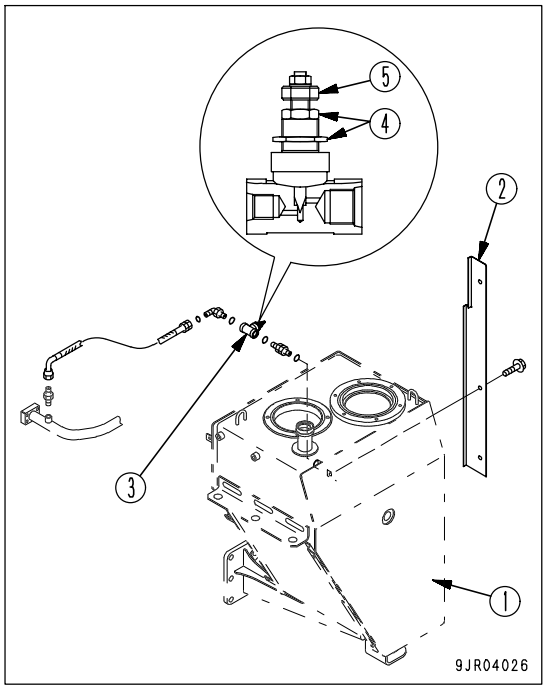

https://truckmanualshub.com/

METHOD OF TOWING MACHINE

WARNING

Injury or death could result if a disabled machine is towed incorrectly or if there is a mistake in the selection of the wire rope or drawbar.

- **Always confirm that the wire rope or drawbar used for towing has ample strength for the weight of the machine being towed.**
- **Never use a wire rope which has cut strands (A), reduced diameter (B), or kinks (C). There is danger that the rope may break during the towing operation.**
- **Always wear leather gloves when handling wire rope.**
- **Never tow a machine on a slope.**
- **Never go between the towing machine and the towed machine during the towing operation.**
- **If the machine moves suddenly, a load is applied suddenly to the towing wire or drawbar, and the towing wire or drawbar may break. Move the machine gradually to a constant speed.**
- **Be extremely careful if there is a failure in the engine or brake system: the brakes will not work.**
- **If the steering and the brakes on the disabled machine cannot be operated, do not let anyone ride on the disabled machine.**

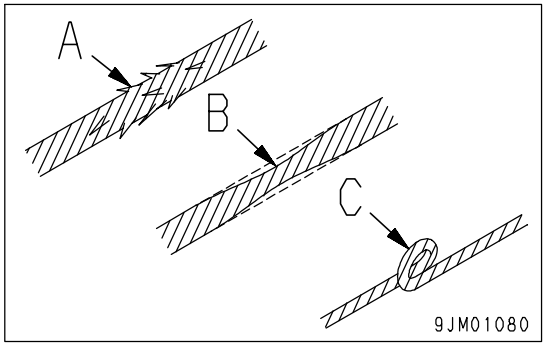

NOTICE

- **The permissible towing capacity for this machine is 176800N (18030 kg). Do not tow any load greater than this.**
- **Towing is only permitted in order to move a disabled machine to a place where it is possible to carry out inspection and maintenance. It must not be towed for long distances.**
- **Please consult your Komatsu distributor for information about towing a disabled machine.**

https://truckmanualshub.com/

This machine must not be towed except in emergencies. When towing the machine, take the following precautions.

- When towing a machine, tow it at a low speed of less than 2 km/h (1.2 MPH), and for a distance of a few meters to a place where repairs can be carried out. The machine should be towed only in emergencies. If the machine must be moved long distances, use a transporter.
- Use a towing machine of the same class as the machine being towed.
  Check that the towing machine has ample braking power, weight, and rimpull to allow it to control both machines on slopes or on the tow road.
- When towing, set the articulate lock of the towed machine to the LOCK position. However, when towing in places where it is needed to steer, set the articulate lock to the FREE position. Use two towing machines of the same class or larger than the machine being towed: connect one machine each to the front and rear of the machine being towed.
- Use the specified hook for both the towing machine and the machine being towed.
- To protect the operator if the towing wire or towing bar breaks, install protective plates on both the towing machine and the machine being towed.
- There are towing hooks under the front frame and at the rear of the rear frame. Use only these hooks when towing. Do not use any other place for towing.
- When fitting the towing wire, check the condition of the hook to make sure that there is no problem.
- Keep the angle of the towing wire as small as possible.
  Keep the angle between the center lines of the two machines to within 30 degrees.
- Towing may be carried out under various differing conditions, so it is impossible to determine beforehand the requirements for towing.
  Towing on flat horizontal roads will require the minimum rimpull, while towing on slopes or on uneven road surfaces will require the maximum rimpull.
- If the pressure in a hydraulic circuit has dropped because of leakage of oil, the parking brake will be applied, so release the parking brake before towing.
- Before releasing the parking brake, always put blocks under all four wheels. If the wheels are not blocked, there is danger that the machine may move.
  Connect with the towing wire or drawbar, and remove the blocks from the wheels when the disabled machine is in a condition where it cannot run away.
- When carrying out the operation to release the parking brake, check that the surrounding area is safe.
- If the parking brake is released, the brakes will not work, so pay careful attention to safety.
- When towing down a slope, use two towing machines. One machine should be uphill from the disabled machine and should be connected with towing wire or a drawbar to pull the disabled machine back and keep it stable. The other machine should tow the disabled machine downhill.

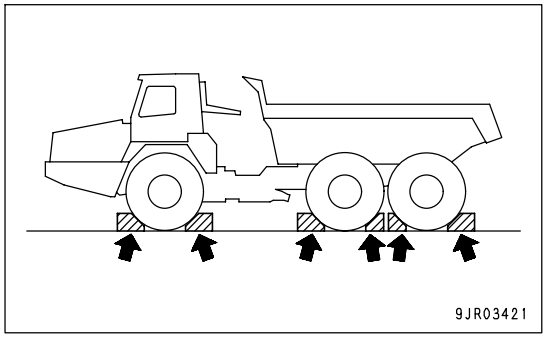

https://truckmanualshub.com/

WHEN ENGINE RUNS

- If the transmission and steering wheel can be operated, and the engine is running, it is possible to tow the machine out of mud or to move it for a short distance to the edge of the road.
- Check the effect of the brakes, and if the brakes do not work properly, take the action given in "When engine does not run".
- Check if it is possible to steer the machine. If the machine cannot be steered, follow the procedure given in "WHEN ENGINE DOES NOT RUN".
- The operator should sit on the machine being towed and operate the steering in the direction that the machine is towed.
- Always run the engine to allow the steering and brakes to be used.

WHEN ENGINE DOES NOT RUN

- The brakes will not work, so be extremely careful.
- Connect the towing machine securely to the towed machine. Use two towing machines of the same class or larger than the machine being towed: connect one machine each to the front and rear of the machine being towed.
- If it is necessary to change the direction of the machine being towed, it is possible to use the emergency steering, but it can be used for a maximum of only 90 seconds.
- If the emergency steering cannot be used, disconnect two hydraulic hoses each on the left and right from the steering cylinders, then carry out the towing operation. When removing the hoses, block the hoses with plugs and fit oil containers to the mouthpiece of the cylinder to prevent oil from draining to the ground.

https://truckmanualshub.com/

WHEN PARKING BRAKE HAS BEEN ACTUATED IN EMERGENCY

If the pressure in the hydraulic circuit goes down abnormally because of oil leakage or some other cause, the parking brake is automatically applied.
It is necessary to tow or move the machine, the parking brake must be released. Release the parking brake as follows.

METHOD OF RELEASING PARKING BRAKE

Please ask your Komatsu distributor to release the parking brake.

WARNING

- **If any abnormality occurs in the hydraulic circuit, there is danger that the wheel brakes may not be applied properly, so always travel at low speed when towing the machine.**
- **When carrying out the operation to release the parking brake, check that the surrounding area is safe, and always put blocks under all four wheels before starting the operation. If the wheels are not blocked, there is danger that the machine may suddenly move.**
- **Always stop the engine before starting the operation to release the parking brake.**

1. Stop the engine.
2. Put blocks under the wheels.

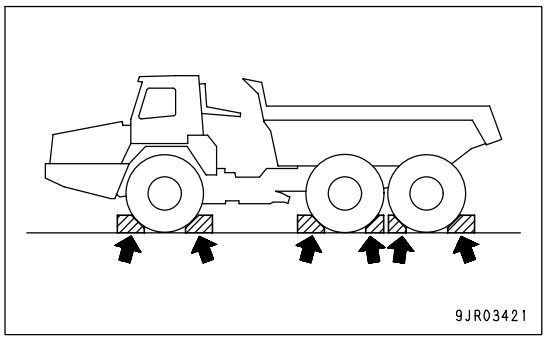

3. Turn parking brake adjustment screw (1) counterclockwise.
4. Check that there is a clearance between the parking brake pad and disc brake.
5. When the parking brake is released, tow the machine immediately to a safe position.
   For details of the method of towing, see "METHOD OF TOWING MACHINE (PAGE 3-127)".

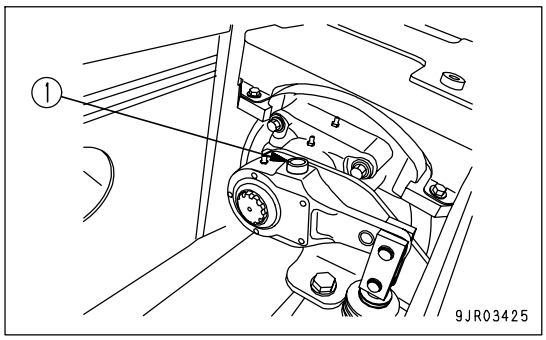

https://truckmanualshub.com/

IF BATTERY IS DISCHARGED

WARNING

- **It is dangerous to charge a battery when mounted on a machine. Make sure that it is dismounted before charging.**
- **When checking or handling the battery, stop the engine and turn the starting switch key to the OFF position.**
- **The battery generates hydrogen gas, so there is a hazard of explosion. Do not bring lighted cigarettes near the battery, or do anything that will cause sparks.**
- **Battery electrolyte is dilute sulfuric acid, and it will attack your clothes and skin. If it gets on your clothes or on your skin, immediately wash it off with a large amount of water. If it gets in your eyes, wash it out with fresh water and consult a doctor.**
- **When handling batteries, always wear safety glasses and rubber gloves.**
- **When removing the battery, first disconnect the cable from the ground (normally the negative (-) terminal). When installing, install the positive (+) terminal first.**
  If a tool touches the positive terminal and the chassis, there is danger that it will cause a spark, so be extremely careful.
- **If the terminals are loose, there is danger that the defective contact may generate sparks that will cause an explosion.**
- **When removing or installing the terminals, check which is the positive (+) terminal and which is the negative (-) terminal.**

REMOVAL AND INSTALLATION OF BATTERY

- Before removing the battery, remove the ground cable (normally connected to the negative (-) terminal).
  If any tool touches between the positive terminal and the chassis, there is a hazard of sparks being generated.

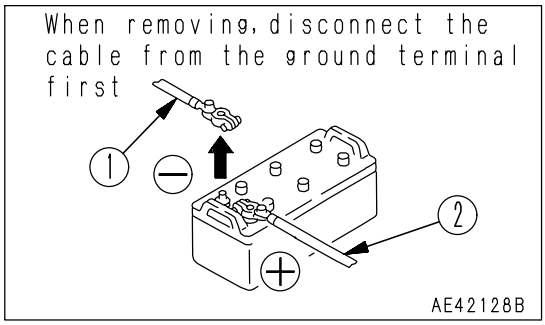

- When installing the battery, connect the ground cable last.

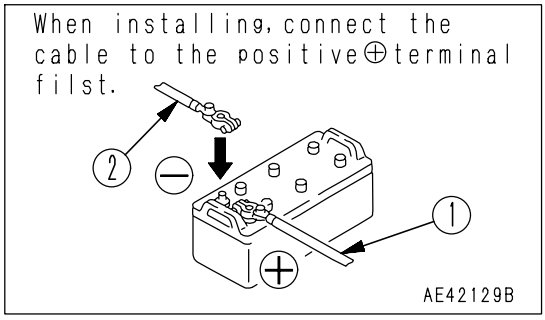

https://truckmanualshub.com/

PRECAUTIONS FOR CHARGING BATTERY

CHARGING BATTERY WHEN MOUNTED ON MACHINE

When the charging the battery, if the battery is mistakenly handled, there is danger of explosion. Follow the precautions in "IF BATTERY IS DISCHARGED (PAGE 3-131)" and the instructions given in the charger manual, and always do as follows.

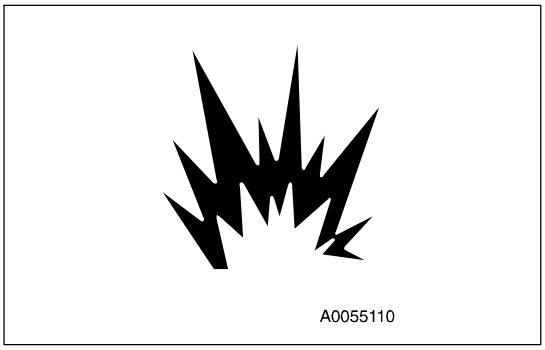

- Set the voltage of the charger to match the voltage of the battery to be charged. If the correct voltage is not selected, the charger may overheat and cause an explosion.
- Connect the positive (+) charger clip of the charger to the positive (+) terminal of the battery, then connect the negative (-) charger clip of the charger to the negative (-) terminal of the battery. Be sure to attach the clips securely.
- Set the charging current to 1/10 of the value of the rated battery capacity; when carrying out rapid charging, set it to less than the rated battery capacity.
  If the charger current is too high, the electrolyte will leak or dry up, and this may cause the battery to catch fire and explode.
- If the battery electrolyte is frozen, do not charge the battery or start the engine with a different power source. There is a danger that this will ignite the battery electrolyte and cause the battery to explode.
- Do not use or charge the battery if the battery electrolyte level is below the LOWER LEVEL line. This may cause an explosion. Check the battery electrolyte level periodically and add distilled water to bring the electrolyte level to the UPPER LEVEL line.

https://truckmanualshub.com/

STARTING ENGINE WITH BOOSTER CABLE

When starting the engine with a booster cable, do as follows.

PRECAUTIONS WHEN CONNECTING AND DISCONNECTING BOOSTER CABLE

WARNING

- **When connecting the cables, never contact the positive (+) and negative (-) terminals.**
- **When starting the engine with a booster cable, wear safety glasses and rubber gloves.**
- **Be careful not to let the normal machine and problem machine contact each other. This prevents sparks from generating near the battery which could ignite the hydrogen gas given off by the battery.**
- **Make sure that there is no mistake in the booster cable connections. The final connection is to the engine block of the problem machine, but sparks will be generated when this is done, so connect to a place as far as possible from the battery.**
- **When disconnecting the booster cable, take care not to bring the clips in contact with each other or with the machine body.**

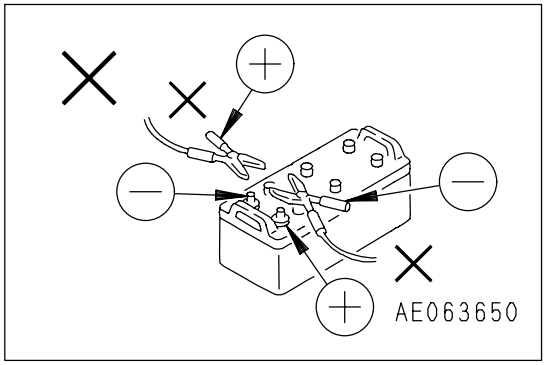

NOTICE

- **The size of the booster cable and clip should be suitable for the battery size.**
- **The battery of the normal machine must be the same capacity as that of the problem machine.**
- **Check the cables and clips for damage or corrosion.**
- **Make sure that the cables and clips are firmly connected.**

CONNECTING THE BOOSTER CABLES

Keep the starting switch of the normal machine and problem machine in the OFF position.

Connect the booster cable as follows, in the order of the numbers marked in the diagram.

1. Connect one clip of booster cable (A) to the positive (+) terminal of the problem machine.
2. Connect the other clip of booster cable (A) to the positive (+) terminal of the normal machine.
3. Connect one clip of booster cable (B) to the negative (-) terminal of the normal machine.
4. Connect the other clip of booster cable (B) to the engine block of the problem machine.

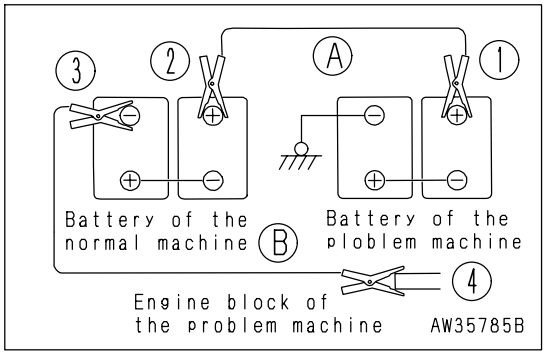

https://truckmanualshub.com/

STARTING THE ENGINE

CAUTION

Make sure that the parking brake switch is at PARKING position and the shift lever is at N (neutral) position for both normal machine and the problem machine.

1. Make sure the clips are firmly connected to the battery terminals.
2. Start engine of the normal machine and run it at high idle speed.
3. Turn the starting switch of the problem machine to the START position and start the engine.
   If the engine doesn't start at first, try again after 2 minutes or so.

DISCONNECTING THE BOOSTER CABLES

After the engine has started, disconnect the booster cables in the reverse of the order in which they were connected.

1. Remove one clip of booster cable (B) from the engine block of the problem machine.
2. Remove the other clip of booster cable (B) from the negative (-) terminal of the normal machine.
3. Remove one clip of booster cable (A) from the positive (+) terminal of the normal machine.
4. Remove the other clip of booster cable (A) from the positive (+) terminal of the problem machine.

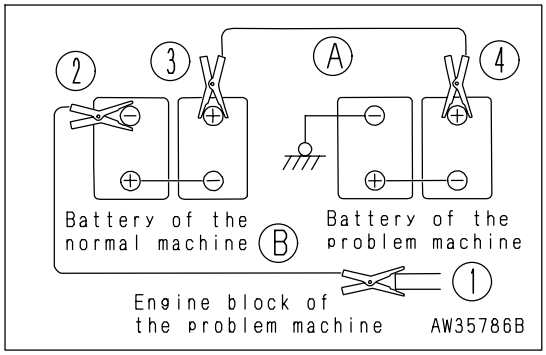

https://truckmanualshub.com/

OTHER TROUBLE

ELECTRICAL SYSTEM

- ( ): Always contact your Komatsu distributor when dealing with these items.
- In cases of problems or causes which are not listed below, contact your Komatsu distributor for repairs.

Problem	Main causes	Remedy
Lamp does not glow brightly even when engine runs at high speed	• Defective wiring • Insufficient battery charge • Defective adjustment of belt tension	(• Check, repair loose terminals, disconnections) • Charge, Add distilled water • Adjust alternator belt tension See EVERY 250 HOURS SERVICE
Lamp flickers while engine is running		
Battery charge system caution pilot lamp lights up while engine is running	• Defective alternator • Defective wiring	(• Replace) (• Check, repair)
Abnormal noise is generated from alternator	• Defective alternator	(• Replace)
Starting motor does not turn when starting switch is turned to ON	• Defective wiring • Defective starting switch • Insufficient battery charge • Defective battery switch	(• Check, repair) (• Replace switch) • Charge (• Replace switch)
Starting motor turns engine sluggishly	• Defective wiring • Insufficient battery charge	(• Check, repair) • Charge
Starting motor disengages before engine starts	• Defective wiring • Insufficient battery charge	(• Check, repair) • Charge

https://truckmanualshub.com/

CHASSIS

- ( ): Always contact your Komatsu distributor when dealing with these items.
- In cases of problems or causes which are not listed below, contact your Komatsu distributor for repairs.

Problem	Main causes	Remedy
Torque converter oil temperature caution lamp flashes	• Leakage of oil or entry of air due to damage or defective tightening of oil pipe, pipe joint	(• Check, repair)
	• Wear, scuffing of gear pump	(• Check, repair)
	• Insufficient oil in transmission case	• Add oil to specified level. See CHECK BEFORE STARTING
	• Loose fan belt	• Replace belt. See EVERY 250 HOURS SERVICE
	• Clogged oil cooler	(• Clean or replace)
	• Long distance traveled in torque converter range	• Drive in direct range
	• Disconnected, broken wiring to sensor	(• Repair, connect wiring)
Steering wheel is heavy	• Lack of grease at link	• Add grease
	• Internal leakage inside steering cylinder	(• Replace cylinder seal)
Steering wheel pulls	• Tire inflation pressure not uniform on left and right	• Make tire inflation pressure uniform. See CHECK BEFORE STARTING
	• Dragging, pulling of front brake	• Check wear of brake disc For details, see EVERY 1000 HOURS SERVICE
Braking effect is poor when brake pedal is depressed	• Disc has reached wear limit	(• Replace disc)
	• Rear disc has reached wear limit	(• Replace disc)
	• Insufficient oil pressure	• Charge to specified pressure
Brake pulls to one side	• Insufficient brake oil	• Add oil to the transmission case See CHECK BEFORE STARTING
	• Air in brake circuit	• Bleed air See WHEN REQUIRED
Dump body speed is slow	• Defective gear pump	(• Replace gear pump)
	• Insufficient oil	• Add oil to specified level. See CHECK BEFORE STARTING
Suspension is hard	• Entry of soil or sand due to breakage of dust seal, gas leakage due to breakage of U-packing	(• Replace U-packing)
	• Gas leaking from valve core	(• Replace valve core)
Wheel on one side tends to slip	• Air in brake circuit (between slack adjuster and brake)	• Bleed air from brakes (left, right). See WHEN REQUIRED.
	• Excessive difference in wear between left and right tires	(• Replace tires)
	• Excessive difference in division of load between left and right wheels (unbalanced load)	• Make load uniform
	• Excessive deformation of disc	(• Disassemble and adjust brake)

https://truckmanualshub.com/

IF ACCELERATOR PEDAL HAS FAILED

In addition to the potentiometer detecting the pedal depression depth, the switch (check switch) is installed on the accelerator pedal assembly in order to detect whether the accelerator pedal is depressed or not.
If the pedal depression depth is not detected correctly due to a failure of the accelerator pedal or incorrect electric wiring, the engine controller controls the engine speed responding to the signal from this check switch. The engine runs at 1500 rpm when the accelerator pedal is depressed, while the engine runs at low idle when the pedal is released. The engine speed varies depending on the load.
After using the accelerator pedal to move the machine to a safe place, check the service code and contact your Komatsu distributor.
There are two methods when operating the accelerator pedal: either release the pedal (check switch is OFF, low idle), or depress the pedal fully (1500 rpm).
If the accelerator pedal is held at an intermediate position, the system may not be able to judge if the accelerator pedal is being operated or not.

REMARK

If the engine controller cannot perform normal reception of the signal of the accelerator pedal depth, the central warning lamp flashes and simultaneously the alarm buzzer sounds and user code 02 appears.

https://truckmanualshub.com/

ENGINE

- ( ): Always contact your Komatsu distributor when dealing with these items.
- In cases of problems or causes which are not listed below, contact your Komatsu distributor for repairs.

Problem	Main causes	Remedy
Engine oil pressure monitor lights up	• Insufficient oil in oil pan • Clogged oil filter cartridge • Oil leakage due to damage caused by defective tightening of oil pan, pipe joint • Disconnection, broken wiring to sensor	• Add oil to specified level. See CHECK BEFORE STARTING • Replace cartridge, see EVERY 500 HOURS SERVICE (• Check, repair) (• Repair, connect wiring)
Steam spurts out from top of radiator (pressure valve)	• Insufficient coolant, water leakage • Loose fan belt	• Check, add cooling water. See CHECK BEFORE STARTING • Replace belt. See EVERY 250 HOURS SERVICE
Radiator cooling water level monitor lights up	• Dirt or scale accumulated in cooling system • Radiator fins clogged or damaged	• Change coolant, clean inside of cooling system. See WHEN REQUIRED • Clean or repair. See EVERY 500 HOURS SERVICE
Engine water temperature gauge is in red range	• Defective water temperature gauge • Defective thermostat	(• Replace water temperature gauge) (• Replace thermostat)
Engine water temperature monitor flashes	• Defective thermostat seal • Loose radiator filler cap • Disconnection, broken wiring to sensor	(• Replace thermostat seal) • Tighten or replace cap (• Repair, connect wiring)
Engine water temperature gauge display stays at lowest level and does not rise	• Defective water temperature gauge monitor • Defective thermostat • In cold weather, cold wind is blowing strongly against engine	(• Replace water temperature gauge monitor) (• Replace thermostat) (• Install radiator curtain)
Engine does not start even when starting motor is turned	• Insufficient fuel • Air in fuel system • No fuel in fuel filter • Starting motor cranks engine too slowly • Starting motor does not turn • Defective valve clearance (defective compression)	• Add fuel. See CHECK BEFORE STARTING (• Repair place where air is leaking in) • Fill filter with fuel. See EVERY 500 HOURS SERVICE • See electrical components • See electrical components (• Adjust valve clearance)
Fuel stops from time to time	• Crushed fuel tank breather tube	(• Replace breather tube)

https://truckmanualshub.com/

Problem	Main causes	Remedy
Excessive oil consumption	• Oil leakage • Excessive oil in oil pan	(• Check, repair) • Add oil to specified level. See CHECK BEFORE STARTING
Exhaust gas is white or bluish	• Worn piston, ring, cylinder liner • Improper fuel • Defective turbocharger	(• Replace) • Replace with specified fuel (• Check, replace)
Exhaust gas is black	• Clogged air cleaner element • Worn piston, ring, cylinder liner • Defective compression • Defective turbocharger • Defective exchaust brake • Defective injector	• Clean or replace. See WHEN REQUIRED (• Check, repair) • See adjustment of clearance above (• Check, replace) (• Check, replace, repair) (• Check, adjust, repair)
Engine hunts	• Air entering suction side of fuel line	(• Repair place where air is leaking in)
Combustion noise occasionally makes breathing sound	• Defective nozzle	(• Replace nozzle)
There is knocking (combustion or mechanical)	• Poor quality fuel being used • Overheating	• Replace with specified fuel • See "Engine water temperature gauge is in red range" above

https://truckmanualshub.com/

ACTION CODE

If any problem occurs, stop the machine, apply the parking brake and check the service code, then contact your Komatsu distributor for repairs.

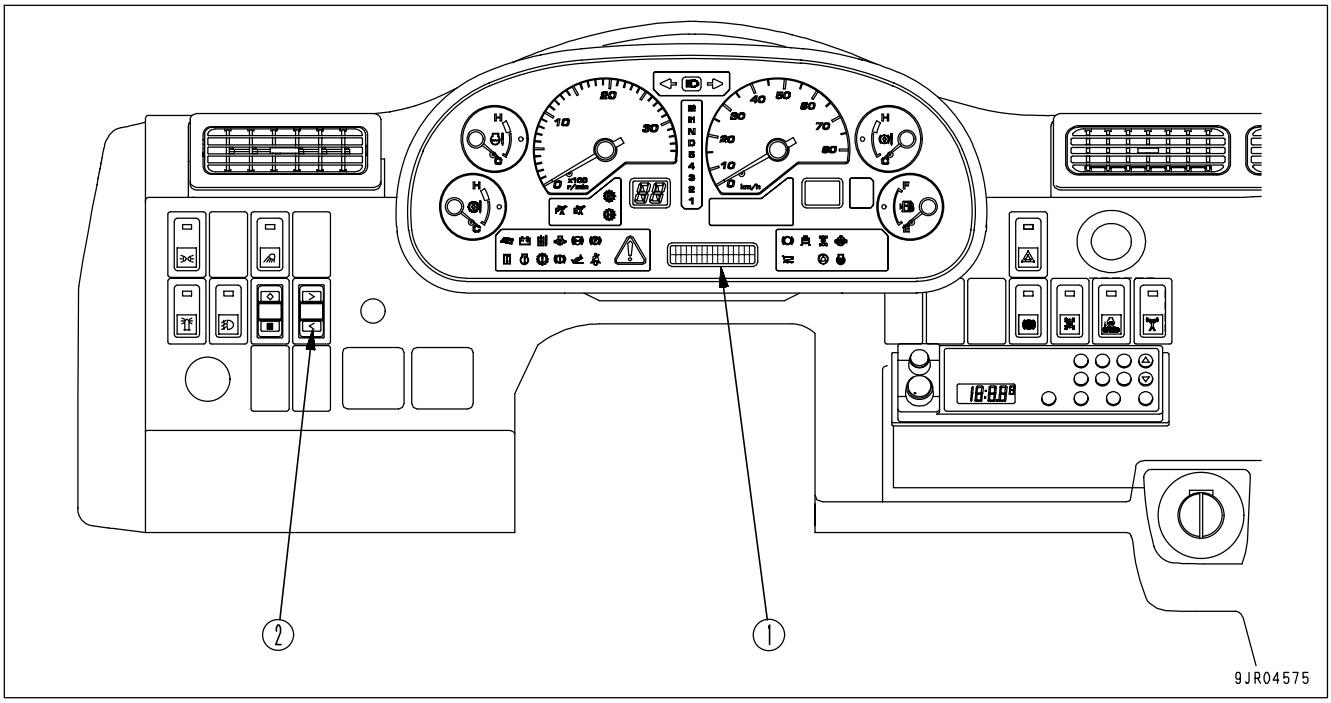

If action code "E03" is displayed on the character display (1), or if an action code is displayed after taking the remedy when action code "E02" was displayed, or if "MAINTENANCE" is displayed together with action code "E01", do as follows to check the failure code.

1. If an action code is displayed, pressed the top (>) portion of machine monitor mode selector switch (2) and check the failure code. The failure code is displayed on character display (1).
2. Press the top (>) portion of machine monitor mode selector switch (2) again. The service meter and odometer will be displayed for several seconds, and the screen will then return to the action code screen.
   If more than one failure has occurred, the next failure code is displayed.
3. Check the failure code, then contact your Komatsu distributor for repairs.

REMARK

- The 6-digit code displayed on the left of the line at the top of the character display is the failure code.
- The code displayed at the right side of the failure code shows the controller that detected the failure code.
  MON: Machine monitor
  TM: Transmission controller
  ENG: Engine controller
  BK: Retarder controller
- The line at the bottom of the character display shows the system where the failure was generated.

https://truckmanualshub.com/

MAINTENANCE

⚠ WARNING

Please read and make sure that you understand the SAFETY section before reading this section.

https://truckmanualshub.com/

GUIDES TO MAINTENANCE

Do not perform any inspection and maintenance operation that is not found in this manual.

CHECK SERVICE METER:
Check the service meter reading every day to see if the time has come for any necessary maintenance to be performed.

KOMATSU GENUINE REPLACEMENT PARTS:
Use Komatsu genuine parts specified in the Parts Book as replacement parts.

KOMATSU GENUINE OILS:
For lubrication of the machine, use the Komatsu genuine lubricants. Moreover use oil of the specified viscosity according to the ambient temperature.

ALWAYS USE CLEAN WASHER FLUID:
Use automobile window washer fluid, and be careful not to let any dirt get into it.

ALWAYS USE CLEAN OIL AND GREASE:
Use clean oil and grease. Also, keep the containers of the oil and grease clean. Keep foreign materials away from oil and grease.

CHECKING FOREIGN MATERIALS IN DRAINED OIL AND ON FILTERS:
After changing the oil or replacing the filter, check the drained oil and filter for metal particles and foreign materials. If large quantities of metal particles or foreign materials are found, always report to the person in charge and carry out suitable action. In addition, when replacing the engine oil filter, fill the new filter with the specified clean oil, then install it.

OIL CHANGE:
If your machine is equipped with a fuel strainer, do not remove it while fueling.

WELDING INSTRUCTIONS:
- Turn off the engine starting switch.
- Do not apply more than 200 V continuously.
- Connect grounding the cable within 1 m (3.28 ft) from the area to be welded. Connecting grounding cable near meters and connectors will lead to the failure of meters.
- If a seal or bearing happens to come between the part being welded and grounding point, change the grounding point to avoid such parts.
- Do not use the area around the pins or the hydraulic cylinders as the grounding point.
  Sparks will cause damage to the plated portion.

DO NOT DROP THINGS INSIDE MACHINE:
- When opening inspection windows or the oil filler port of the tank to carry out inspection, be careful not to drop nuts, bolts, or tools inside the machine.
  If such things are dropped inside the machine, it may cause damage and/or malfunction of the machine, and will lead to failure. If you drop anything inside the machine, always remove it immediately.
- Do not put unnecessary things in your pockets. Carry only things which are necessary for inspection.

https://truckmanualshub.com/

DUSTY WORKSITES:
When working at dusty worksites, do as follows:
- Inspect the dust indicator frequently to see if the air cleaner is clogged.
  Clean the air cleaner element at a shorter interval than specified.
- Clean the radiator core frequently to avoid clogging.
- Clean and replace the fuel filter frequently.
- Clean electrical components, especially the starting motor and alternator, to avoid accumulation of dust.
- When inspecting or changing the oil, move the machine to a place that is free of dust to prevent dirt from getting into the oil.

AVOID MIXING OILS:
If a different brand or grade of oil has to be added, drain the old oil and replace all the oil with the new brand or grade of oil. Never mix different brand or grade of oil.

LOCKING INSPECTION COVERS:
Lock inspection cover securely into position with the lock bar. If inspection or maintenance is performed with inspection cover not locked in position, there is a danger that it may be suddenly blow shut by the wind and cause injury to the worker.

BLEEDING AIR FROM HYDRAULIC CIRCUIT:
If the hydraulic components have been repaired or replaced and if the hydraulic hoses, pipes, etc. have been disconnected, it is necessary to bleed air in the circuit. See "WHEN REQUIRED (PAGE 4-20)".

PRECAUTIONS WHEN INSTALLING HYDRAULIC HOSES:
- When removing parts at locations where there are O-rings or gasket seals, clean the mounting surface, and replace with new parts.
  When doing this, be careful not to forget to assemble the O-rings and gaskets.
- When installing the hoses, do not twist them or bend them sharply. If they are installed so, their service life will be shortened extremely and they may be damaged.

CHECKS AFTER INSPECTION AND MAINTENANCE:
If you forget to perform the checks after inspection and maintenance, unexpected problems may occur, and this may lead to serious injury or property damage. Always do the following:
- Checks after operation (with engine stopped)
  - Have any inspection and maintenance points been forgotten?
  - Have all inspection and maintenance items been performed correctly?
  - Have any tools or parts been dropped inside the machine? It is particularly dangerous if parts are dropped inside the machine and get caught in the lever linkage mechanism.
  - Are there any leakage of coolant or oil? Have all nuts and bolts been tightened?
- Check when the engine is running
  - See "TWO WORKERS FOR MAINTENANCE WHEN ENGINE IS RUNNING (PAGE 2-32)" in the section on safety for checking when the engine is running. Pay enough attention for safety.
  - Check if the inspected and serviced area is normally operated.
  - Increase the engine speed to check for the leak of fuel and oil.

https://truckmanualshub.com/

OUTLINE OF SERVICE

- Always use Komatsu genuine parts for replacement parts, grease or oil.
- When changing the oil or adding oil, do not mix different types of oil. When changing the type of oil, drain all the old oil and fill completely with the new oil. Always replace the filter at the same time. (There is no problem if the small amount of oil remaining in the piping mixes with the new oil.)
- Unless otherwise specified, when the machine is shipped from the factory, it is filled with the oil and coolant listed in the table below.

Item	Type
Engine oil pan	Engine oil EO15W40DH (Komatsu genuine parts)
Transmission case (incl. brake oil tank)	Power train oil TO10 (Komatsu genuine parts)
Hydraulic tank	Power train oil TO10 (Komatsu genuine parts)
Front suspension Rear suspension	Hydraulic oil HO-MVK (Komatsu genuine parts)
Front differential case Center differential case Rear differential case Front final drive case Center final drive case Rear final drive case	Axle oil AXO80 (Komatsu genuine parts)
Radiator	Supercoolant AF-NAC (Density:30% or above)(Komatsu genuine parts)

HANDLING OIL, FUEL, COOLANT, AND PERFORMING OIL CLINIC

OIL

- Oil is used in the engine and hydraulic equipment under extremely severe conditions (high temperature, high pressure), and deteriorates with use.
  Always use oil that matches the grade and maximum and minimum ambient temperatures recommended in the Operation and Maintenance Manual. Even if the oil is not dirty, always change the oil at the specified interval.
- Oil corresponds to blood in the human body, always be careful when handling it to prevent any impurities (water, metal particles, dirt, etc.) from getting in.
  The majority of problems with the machine are caused by the entry of such impurities.
  Take particular care not to let any impurities get in when storing or adding oil.
- Never mix oils of different grades or brands.
- Always add the specified amount of oil.
  Having too much oil or too little oil are both causes of problems.
- If the oil in the work equipment is not clear, there is probably water or air getting into the circuit. In such cases, please contact your Komatsu distributor.
- When changing the oil, always replace the related filters at the same time.
- We recommend you have an analysis made of the oil periodically to check the condition of the machine. For those who wish to use this service, please contact your Komatsu distributor.
- When using commercially available oil, it may be necessary to reduce the oil change interval.
  We recommend that you use the Komatsu oil clinic to carry out a detailed checks of the characteristics of the oil.

https://truckmanualshub.com/

FUEL

- To prevent the moisture in the air from condensing and forming water inside the fuel tank, always fill the fuel tank after completing the day's work.
- The fuel pump is a precision instrument, and if fuel containing water or dirt is used, it cannot work properly.
- Be extremely careful not to let impurities get in when storing or adding fuel.
- Always use the fuel specified for the temperature in the Operation and Maintenance Manual.
  - If the fuel is used at temperatures lower than the specified temperature (particularly at temperatures below -15 °C (5°F), the fuel will solidify.
  - If the fuel is used at temperatures higher than the specified temperature, the viscosity will drop, and this may result in problems such as a drop in output.
- Before starting the engine, or when 10 minutes have passed after adding fuel, drain the sediment and water from the fuel tank.
- If the engine runs out of fuel, or if the filters have been replaced, it is necessary to bleed the air from the circuit.
- If there is any foreign material in the fuel tank, wash the tank and fuel system.

NOTICE

Always use diesel fuel. Never use any other fuel.

The engine on this machine uses electronic control and high-pressure fuel injection equipment to enable it to provide good fuel consumption and good exhaust gas characteristics. For this reason, high-precision parts and lubricating ability are demanded. Using low-viscosity fuel with poor lubricating ability will cause a marked reduction in the durability of the engine.

COOLANT AND WATER FOR DILUTION

- The coolant has the important function of preventing corrosion as well as preventing freezing.
  Even in the areas where freezing is not an issue, the use of antifreeze coolant is essential.
  Komatsu machines are supplied with Komatsu Supercoolant (AF-NAC). Komatsu Supercoolant (AF-NAC) has excellent anticorrosion, antifreeze and cooling properties and can be used continuously for 2 years or 4000 hours. Komatsu Supercoolant (AF-NAC) is strongly recommended wherever available.
- When using Komatsu Supercoolant (AF-NAC), there is no need to use a corrosion resistor. For details, see "CLEAN INSIDE OF COOLING SYSTEM (PAGE 4-26)".
- When diluting the antifreeze coolant, use distilled water or tap water (soft water).
  Natural water, such as a river water or well water (hard water), contains large amounts of minerals (calcium, magnesium, etc.), and this makes it easier for scale to form inside the engine or radiator. Once scale is deposited inside the engine or radiator, it is extremely difficult to remove. It also causes overheating due to poor heat exchange, so when you dilute the coolant, we recommend that you use water with an overall hardness of less than 100 PPM.
- When using antifreeze, always observe the precautions given in the Operation and Maintenance Manual.
- Antifreeze coolant is flammable, so be sure to keep it away from flame.
- The ratio of Supercoolant (AF-NAC) to water differs according to the ambient temperature.
  For details of the ratio when mixing, see "CLEAN INSIDE OF COOLING SYSTEM (PAGE 4-26)".
  Supercoolant (AF-NAC) may be supplied already mixed. In such cases, never dilute with water.
- If the engine overheats, wait for the engine to cool before adding coolant.
- If the coolant level is low, it will cause overheating, and will also cause problems with corrosion due to air entering the coolant.

https://truckmanualshub.com/

GREASE

- Grease is used to prevent seizure and noises at the joints.
- This construction equipment is used under heavy-duty conditions. Always use the recommended grease and follow the change intervals and recommended ambient temperatures given in this Operation and Maintenance Manual.
- The nipples not included in the maintenance section are nipples for overhaul, so they do not need grease.
  If any part becomes stiff after being used for long time, add grease.
- Always wipe off all of the old grease that is pushed out when greasing.
  Be particularly careful to wipe off the old grease in places where sand or dirt sticking in the grease would cause wear of the rotating parts.

https://truckmanualshub.com/

CARRYING OUT KOWA (Komatsu Oil Wear Analysis)

KOWA is a maintenance service that makes it possible to prevent machine failures and downtime. With KOWA, the oil is periodically sampled and analyzed. This enables early detection of wear of the machine drive parts and other problems.

We strongly recommend you to use this service. The oil analysis is carried out at actual cost, so the cost is low, and the results of the analysis are reported together with recommendations which will reduce repair costs and machine downtime.

KOWA ANALYSIS ITEMS

- Measurement of density of metal wear particles
  This uses an ICP (Inductively Coupled Plasma) analyzer to measure the density of iron, copper, and other metal wear particles in the oil.

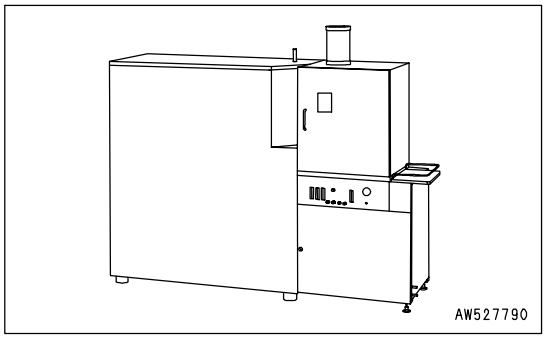

- Measurement of quantity of particles
  This uses a PQI (Particle Quantifier Index) measurer to measure the quantity of iron particles of 5μm or more, enabling early detection of failures.

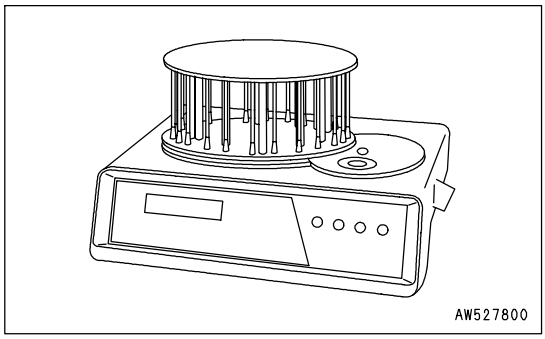

- Others
  Measurements are made of items such as the ratio of water in the oil, density of the antifreeze coolant, ratio of fuel in the oil, and dynamic viscosity, enabling a highly precise diagnosis of the machine's health.

OIL SAMPLING

- Sampling interval
  250 hours: Engine
  500 hours: Other components

- Precautions when sampling
  - Make sure that the oil is well mixed before sampling.
  - Perform sampling at regular fixed intervals.
  - Do not perform sampling on rainy or windy days when water or dust can get into the oil.

For further details of KOWA, please contact your Komatsu distributor.

https://truckmanualshub.com/

STORING OIL AND FUEL

- Keep indoors to prevent any water, dirt, or other impurities from getting in.
- When keeping drum cans for a long period, put the drum on its side so that the filler port of the drums is at the side to prevent moisture from being sucked in.
  If drums have to be stored outside, cover them with a waterproof sheet or take other measures to protect them.
- To prevent any change in quality during long-term storage, be sure to use in the order of first in - first out (use the oldest oil or fuel first).

FILTERS

- Filters are extremely important safety parts. They prevent impurities in the fuel and air circuits from entering important equipment and causing problems.
  Replace all filters periodically. For details, see the Operation and Maintenance Manual.
  However, when working in severe conditions, replace the filters at shorter intervals according to the oil and fuel (sulfur content) being used.
- Never try to clean the filters (cartridge type) and use them again. Always replace with new filters.
- When replacing oil filters, check if any metal particles are attached to the old filter. If any metal particles are found, contact your Komatsu distributor.
- When replacing the engine oil filter, fill the new filter with the specified clean oil, then install it.
- Do not open packs of spare filters until just before they are to be used.
- Always use Komatsu genuine filters.

OUTLINE OF ELECTRIC SYSTEM

- It is extremely dangerous if the electrical equipment becomes wet or the covering of the wiring is damaged. This will cause an electrical short circuit and may lead to malfunction of the machine. Do not wash the inside of the operator's cab with water. When washing the machine, be careful not to let water get into the electrical components.
- Service relating to the electric system is checking fan belt tension, checking damage or wear to the fan belt and checking battery fluid level.
- Never install any electric components other than those specified by Komatsu.
- External electro-magnetic interference may cause malfunction of the control system controller, before installing a radio receiver or other wireless equipment, contact your Komatsu distributor.
- When working at the seashore, carefully clean the electric system to prevent corrosion.
- When installing an operator's cab cooler or any other electrical equipment, connect it to an independent power source connector. The cables to supply power to the optional equipment must never be connected to the fuse, starting switch, or battery relay.

https://truckmanualshub.com/

WEAR PARTS

Wear parts such as the filter element, air cleaner element, etc. are to be replaced at the time of periodic maintenance or before their abrasion limits.
The wear parts should be changed correctly in order to use the machine economically.
For part change, Komatsu genuine parts of excellent quality should be used.
When ordering parts, please check the part number in the parts book.

WEAR PARTS LIST

The parts in parentheses are to be replaced at the same time.

Item	Part No.	Part Name	Q'ty	Replacement frequency
Engine oil filter	600-211-1340	Cartridge	1	EVERY 500 HOURS
Fuel prefilter	600-319-3440	Cartridge	1	
Fuel main filter	600-319-3520	Cartridge	1	EVERY 1000 HOURS
Corrosion resistor	600-411-1151	Cartridge	1	
Transmission oil filter (Valve side)	714-07-28712	Cartridge	1	
Transmission oil filter (Brake cooling side)	07063-51210 (07000-F5180)	Element (O-ring)	1 (1)	
Brake oil filter	569-43-83920 (07000-12065) (07001-02065)	Element (O-ring) (Back-up ring)	1 (1) (1)	
Hydraulic filter	07063-51142 (07000-F5180)	Element (O-ring)	1 (1)	EVERY 2000 HOURS
Air cleaner	600-185-6100	Element Ass'y	1	-
	600-185-6110	Outer element	1	-

https://truckmanualshub.com/

RECOMMENDED FUEL, COOLANT, AND LUBRICANT

- Komatsu genuine oils are adjusted to maintain the reliability and durability of Komatsu construction equipment and components.
  In order to keep your machine in the best conditioner for long periods of time, it is essential to follow the instructions in this Operation and Maintenance Manual.
- Failure to follow these recommendations may result in shortened life or excess wear of the engine, power train, cooling system, and/or other components.
- Commercially available lubricant additives may be good for the machine, but they may also cause harm. Komatsu does not recommend any commercially available lubricant additive.
- Use the oil recommended according to the ambient temperature in the chart below.
- Specified capacity means the total amount of oil including the oil in the tank and the piping. Refill capacity means the amount of oil needed to refill the system during inspection and maintenance.
- When starting the engine in temperatures below 0°C (32°F), be sure to use the recommended multi-grade oil, even if the ambient temperature may become higher during the course of the day.
- If the machine is operated at a temperature below -20°C (-4°F), a separate device is needed, so consult your Komatsu distributor.
- When the fuel sulfur content is less than 0.2%, change the engine oil according to the period inspection table given in this Operation and Maintenance Manual.
  If the fuel sulfur content is more than 0.2%, change the oil according to the following table.

Sulfur content (%)	Oil change interval
Less than 0.2%	500 hours
0.2 to 0.5%	250 hours
0.5% and up	Not recommendable (*)

* If these fuels are used, there is danger that serious trouble may occur because of early deterioration of the engine oil or early wear of the internal parts of the engine. If the local situation makes it necessary to use these fuels, always remember the following.
  1) Be sure to check Total Basic Number (TBN) of oil frequently by TBN handy checker etc., and change oil based on the result.
  2) Always be aware that oil change interval is extremely shorter than standard.
  3) Be sure to carry out periodic engine inspection by distributor's expert since change interval of periodic replacement parts and overhaul interval are also shorter.

https://truckmanualshub.com/

USE OF FUEL, COOLANT AND LUBRICANTS ACCORDING TO AMBIENT TEMPERATURE

Reservoir	Fluid Type	Ambient Temperature, degrees Celsius -22 -4 14 32 50 68 86 104 122 °F -30 -20 -10 0 10 20 30 40 50 °C	Recommended Komatsu Fluids
Engine oil pan	Engine oil	(Note.1)	Komatsu EOS0W30
		(Note.1)	Komatsu EOS5W40
			Komatsu EO10W30DH
			Komatsu EO15W40DH
			Komatsu EO30DH
Transmission Case (incl. brake oil tank)	Power train oil (Note.2)		TO10
Hydraulic tank	Power train oil		TO10
	Hydraulic oil		HO46-HM HO-MVK
Front suspension Rear suspension	Hydraulic oil		HO-MVK
Front differential case Center differential case Rear differential case Front final drive case Center final drive case Rear final drive case	Axle oil		AXO80
Grease fitting	Hyper grease (Note.3)		G2-T, G2-TE
	Lithium EP grease		G2-LI
Cooling system	Supercoolant AF-NAC (Note.4)		AF-NAC
Fuel tank	Diesel fuel		ASTM Grade No.1-D S15 ASTM Grade No.1-D S500
			ASTM Grade No.2-D S15 ASTM Grade No.2-D S500

- ASTM: American Society of Testing and Material

https://truckmanualshub.com/

Capacity \ Reservoir		Engine oil pan	Transmission case (Incl. brake oil tank)	Hydraulic tank	Front suspension (each)	Rear suspension (each)	Front differential
Specified	Liters	44	165	171	3	2.2	14
	US gal	11.62	43.59	45.18	0.79	0.58	3.70
Refill	Liters	37	77.5	120	3	2.2	14
	US gal	9.78	20.48	31.70	0.79	0.58	3.70

Capacity \ Reservoir		Front final drive case (each)	Center differential case	Center final drive case (each)	Rear differential case	Rear final drive case (each)	Fuel tank	Cooling system
Specified	Liters	4.5	25	4.0	25	5.0	384	65
	US gal	1.19	6.61	1.06	6.61	1.32	101.45	17.17
Refill	Liters	4.0	24.5	3.5	25	4.5	–	59
	US gal	1.06	6.47	0.92	6.61	1.19	–	15.59

NOTICE

Always use diesel oil for the fuel.

To ensure good fuel consumption characteristics and exhaust gas characteristics, the engine mounted on this machine uses an electronically controlled high-pressure fuel injection device. This device requires high precision parts and lubrication, so if low viscosity fuel with low lubricating ability is used, the durability may drop markedly.

Note 1: HTHS (High-Temperature High-Shear Viscosity 150°C), specified by ASTM D4741 must be equal to or higher than 3.5 mPa-S. Komatsu EOS0W30 and EOS5W40 are the most suitable oils.

Note 2: Powertrain oil has different properties from engine oil. Be sure to use the recommended oils.

Note 3: Hyper grease (G2-T, G2-TE) has a high performance.
When it is necessary to improve the lubricating ability of the grease in order to prevent squeaking of pins and bushings, the use of G2-T or G2-TE is recommended.

Note 4: Supercoolant (AF-NAC)

1) Coolant has the important function of anticorrosion as well as antifreeze.
   Even in the areas where freezing is not an issue, the use of antifreeze coolant is essential.
   Komatsu machines are supplied with Komatsu Supercoolant AF-NAC. Komatsu Supercoolant AF-NAC has excellent anticorrosion, antifreeze and cooling properties and can be used continuously for 2 years or 4000 hours. Komatsu Supercoolant AF-NAC is strongly recommended wherever available.
2) For details of the ratio when diluting super coolant with water, see "CLEAN INSIDE OF COOLING SYSTEM (PAGE 4-26)".
   Supercoolant AF-NAC may be supplied in premix. In this case, always top off with premix solution. (never dilute with water)
3) To maintain the anticorrosion properties of Supercoolant AF-NAC, always keep the density of Supercoolant between 30% and 68%.

RECOMMENDED BRANDS, RECOMMENDED QUALITY FOR PRODUCTS OTHER THAN KOMATSU GENUINE OIL

When using commercially available oils other than Komatsu genuine oil, consult your Komatsu distributor.

https://truckmanualshub.com/

STANDARD TIGHTENING TORQUES FOR BOLTS AND NUTS

TORQUE LIST

Unless otherwise specified, tighten the metric nuts and bolts to the torque shown in the table below.
The tightening torque is determined by the width across the flats (b) of the nut and bolt.
If it is necessary to replace any nut or bolt, always use a Komatsu genuine part of the same size as the part that was replaced.

Thread diameter of bolt (a)(mm)	Width across flats (b)(mm)	Tightening torque					
		Target value			Service limit		
		Nm	kgm	lbft	Nm	kgm	lbft
6	10	13.2	1.35	9.8	11.8-14.7	1.2-1.5	8.7-10.8
8	13	31	3.2	23.1	27-34	2.8-3.5	20.3-25.3
10	17	66	6.7	48.5	59-74	6.0-7.5	43.4-54.2
12	19	113	11.5	83.2	98-123	10.0-12.5	72.3-90.4
14	22	177	18	130.2	157-196	16.0-20.0	115.7-144.7
16	24	279	28.5	206.1	245-309	25.0-31.5	180.8-227.8
18	27	382	39	282.1	343-425	35.0-43.5	253.2-314.6
20	30	549	56	405.0	490-608	50.0-62.0	361.7-448.4
22	32	745	76	549.7	662-829	67.5-84.5	488.2-611.2
24	36	927	94.5	683.5	824-1030	84.0-105.0	607.6-759.5
27	41	1320	135.0	976.5	1180-1470	120.0-150.0	868.0-1085.0
30	46	1720	175.0	1265.8	1520-1910	155.0-195.0	1121.1-1410.4
33	50	2210	225.0	1627.4	1960-2450	200.0-250.0	1446.6-1808.3
36	55	2750	280.0	2025.2	2450-3040	250.0-310.0	1808.3-2242.2
39	60	3280	335.0	2423.1	2890-3630	295.0-370.0	2133.7-2676.2

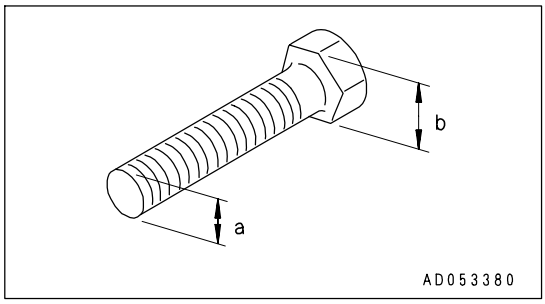

NOTICE

When tightening panels or other parts having tightening fixtures made of plastic, be careful not to use excessive torque: doing so will damage the plastic parts. Pay enough attention when you tighten up.

Apply the following table for Hydraulic Hose.

- Taper seal

Thread diameter of bolt (a)(mm)	Width across flats (b)(mm)	Tightening torque					
		Target value			Service limit		
		Nm	kgm	lbft	Nm	kgm	lbft
10	14	14.7	1.5	10.8	12.7-16.7	1.3-1.7	9.4-12.3
14	19	29.4	3.0	21.7	27.5-39.2	2.8-4.0	20.3-28.9
18	24	78.5	8.0	57.3	58.8-98.1	6.0-10.0	43.4-72.3
22	27	117.7	12.0	86.8	88.3-137.3	9.0-14.0	65.1-101.3
24	32	147.1	15.0	108.5	117.7-176.5	12.0-18.0	86.8-130.2
30	36	215.7	22.0	159.1	176.5-245.2	18.0-25.0	130.2-180.8
33	41	255.0	26.0	188.1	215.7-284.4	22.0-29.0	159.1-209.8

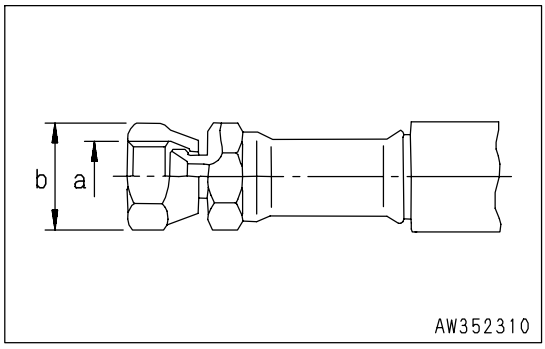

https://truckmanualshub.com/

- Face seal

Nominal - No. of threads (a)	Width across flats (b) (mm)	Tightening torque					
		Target value			Permissible range		
		Nm	kgm	lbft	Nm	kgm	lbft
9/16 -18UNF	19	44	4.5	32.5	35 - 63	3.5 - 6.5	25.3 - 47.0
11/16 -16UN	22	74	7.5	54.2	54 - 93	5.5 - 9.5	39.8 - 68.7
13/16 -16UN	27	103	10.5	75.9	84 - 132	8.5 - 13.5	61.5 - 97.6
1 -14UNS	32	157	16.0	115.7	128 - 186	13.0 - 19.0	94.0 - 137.4
13/16 -12UN	36	216	22.0	159.1	177 - 245	18.0 - 25.0	130.2 - 180.8

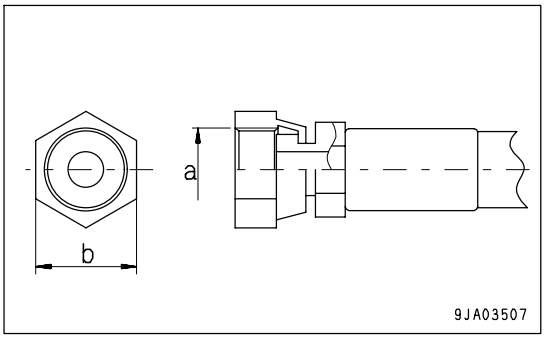

https://truckmanualshub.com/

PERIODIC REPLACEMENT OF SAFETY CRITICAL PARTS

To ensure safety at all times when operating or driving the machine, the user of the machine must always carry out periodic maintenance. In addition, to further improve safety, the parts in the safety-critical parts list on the next page must also be replaced at the specified interval. These parts are particularly closely connected to safety and fire prevention, so please contact your Komatsu distributor to have them replaced.

Material quality of these parts can change as time passes and they are likely to wear out or deteriorate. However, it is difficult to determine the extent of wear or deterioration at the time of periodic maintenance. Hence, it is required to replace them with new ones regardless of their condition after a certain period of usage. This is important to ensure that these parts maintain their full performance at all times.

Furthermore, should anything abnormal be found on any of these parts, replace it with a new one even if the periodic replacement time for the part has not yet arrived.

If any of the hose clamps show deterioration like deformation or cracking, replace the clamps at the same time as the hoses.

Also perform the following checks with hydraulic hoses which need to be replaced periodically. Tighten all loose clamps and replace defective hoses, as required.

When replacing hoses, always replace O-rings, gaskets, and other such parts at the same time.

https://truckmanualshub.com/

SAFETY CRITICAL PARTS

No.	Safety critical parts for periodic replacement	Replacement interval	Remarks
1	Fuel hose (fuel tank - injection pump)	Every 4000 hours or 2 years, whichever comes sooner	
2	Fuel hose (injection pump - fuel tank)		
3	Spill hose (engine output connector - fuel tank)		
4	Water separator (case, O-ring, plug)		
5	Rubber hose for brake piping		
6	High-pressure hose in steering oil pressure circuit (pump ←→ demand valve ←→ steering valve ←→ steering cylinder)		
7	High-pressure hose in hoist circuit (pump ←→ demand valve ←→ hoist valve ←→ hoist cylinder)		
8	Hose at discharge side of retarder cooling pump		
9	Hose at discharge side of transmission pump		
10	High-pressure hose in brake control circuit (pump ←→ accumulator charge valve ←→ accumulator)	Every 2000 hours or 1 year, whichever comes sooner	
11	Brake valve parts		Replace as service kit
12	Parking brake valve parts		
13	Accumulator charge valve parts		
14	Retarder control valve parts		
15	Parking brake chamber parts		
16	Slack adjuster parts		
17	Seat belt	Every 3 years	Replace

https://truckmanualshub.com/

MAINTENANCE SCHEDULE CHART

MAINTENANCE SCHEDULE CHART

INITIAL 250 HOURS SERVICE (ONLY AFTER THE FIRST 250 HOURS)
Change oil in engine oil pan, replace engine oil filter cartridge ---------- 4- 53
Replace fuel prefilter cartridge ---------- 4- 54
Replace fuel main filter cartridge ---------- 4- 60
Replace transmission filter element (valve side, brake cooling side) ---------- 4- 62
Change oil in transmission case ---------- 4- 63
Change oil in brake oil tank, replace brake oil filter element ---------- 4- 65
Change oil in final drive case ---------- 4- 71
Change oil in differential case ---------- 4- 72
Replace hydraulic filter element ---------- 4- 73
Change oil in hydraulic tank ---------- 4- 77

WHEN REQUIRED
Check, clean or replace air cleaner ---------- 4- 20
Clean inside of cooling system ---------- 4- 26
Check level of window washer fluid, add fluid ---------- 4- 29
Clean air conditioner air filter ---------- 4- 29
Check refrigerant (gas) level ---------- 4- 30
Check dump body ---------- 4- 31
Check length of suspension cylinder ---------- 4- 31
Bleed air from front brake ---------- 4- 32
Bleed air from center brake ---------- 4- 33
Check play of output coupling of output shaft ---------- 4- 34
Selection and inspection of tires ---------- 4- 35
Adjust parking brake ---------- 4- 37
Cleaning hydraulic tank strainer ---------- 4- 38

CHECK BEFORE STARTING

EVERY 50 HOURS SERVICE
Lubrication ---------- 4- 40

EVERY 250 HOURS SERVICE
Lubrication ---------- 4- 41
Check drive shaft ---------- 4- 43
Clean overflow hose ---------- 4- 44
Check level of battery electrolyte ---------- 4- 45
Check fan belt and alternator belt tension, adjust ---------- 4- 47
Check air conditioner compressor belt tension, adjust ---------- 4- 48
Check frame, A-arm ---------- 4- 49
Check braking capacity of foot brake ---------- 4- 50
Check braking capacity of retarder brake ---------- 4- 50
Check braking capacity of parking brake ---------- 4- 51
Check wear of parking brake pads ---------- 4- 51
Check of accumulator gas pressure ---------- 4- 52

https://truckmanualshub.com/

EVERY 500 HOURS SERVICE

Change oil in engine oil pan, replace engine oil filter cartridge ---------- 4- 53
Replace fuel prefilter cartridge ---------- 4- 54
Lubricate cab mount pin (left and right: 1 place each) ---------- 4- 55
Check oil level in final drive case, add oil ---------- 4- 55
Check oil level in differential case, add oil ---------- 4- 56
Clean, check radiator fins and after cooler fins ---------- 4- 57
Recover oil leaking from floating seal ---------- 4- 58

EVERY 1000 HOURS SERVICE

Replace fuel main filter cartridge ---------- 4- 60
Replace corrosion resistor cartridge ---------- 4- 61
Replace transmission filter element ---------- 4- 62
Change oil in transmission case ---------- 4- 63
Change oil in brake oil tank, replace brake oil filter element ---------- 4- 65
Lubrication ---------- 4- 68
Check wear of brake disc ---------- 4- 69
Check of engine air intake piping clamps for looseness ---------- 4- 70

EVERY 2000 HOURS SERVICE

Change oil in final drive case ---------- 4- 71
Change oil in differential case ---------- 4- 72
Replace hydraulic filter element ---------- 4- 73
Clean transmission case strainer ---------- 4- 74
Clean breather ---------- 4- 74
Check accumulator gas pressure ---------- 4- 76
Check alternator ---------- 4- 76
Check, adjust engine valve clearance ---------- 4- 76
Check vibration damper ---------- 4- 76

EVERY 4000 HOURS SERVICE

Change oil in hydraulic tank ---------- 4- 77
Check starting motor ---------- 4- 77
Check water pump ---------- 4- 77
Check air compressor ---------- 4- 77
Check fan pulley and tension pulley ---------- 4- 77
Checking for looseness of high-pressure clamp, hardening of rubber ---------- 4- 78
Checking for missing fuel spray prevention cap, hardening of rubber ---------- 4- 78

EVERY 6000 HOURS SERVICE

Lubricate drive shaft ---------- 4- 79

EVERY 8000 HOURS SERVICE

Replace high-pressure piping clamp ---------- 4- 80
Replace fuel spray prevention cap ---------- 4- 80
Overhaul starting motor and alternator ---------- 4- 80

https://truckmanualshub.com/

SERVICE PROCEDURE

INITIAL 250 HOURS SERVICE (ONLY AFTER THE FIRST 250 HOURS)

Perform the following maintenance only after the first 250 hours.

- Change oil in engine oil pan, replace engine oil filter cartridge
- Replace fuel prefilter cartridge
- Replace fuel main filter cartridge
- Replace transmission filter element (valve side, brake cooling side)
- Change oil in transmission case
- Change oil in brake oil tank, replace brake oil filter element
- Change oil in final drive case
- Change oil in differential case
- Replace hydraulic filter element
- Change oil in hydraulic tank

For details of the method of replacing or maintaining, see EVERY 500 HOURS, EVERY 1000 HOURS, EVERY 2000 HOURS SERVICE and EVERY 4000 HOURS SERVICE.

https://truckmanualshub.com/

WHEN REQUIRED

CHECK, CLEAN OR REPLACE AIR CLEANER

After the outer element has been cleaned 6 times, or if the air cleaner element has been used for one year, replace the outer element, inner element, and O-ring. For details of the procedure for replacement, see "REPLACE ELEMENT (PAGE 4-24)".
If the maintenance caution lamp lights up and the character display displays action code "E01" and "AIR FILTER" during operation immediately after the outer element is cleaned, replace the element even if the outer element has not been cleaned 6 times or the air cleaner element has not been used more than 1 year.

CHECKING

NOTICE
Do not replace the element before the dust indicator reaches 7.5 kPa. If it is cleaned frequently, the filtering effect of the air cleaner will drop, and this will reduce the service life of the engine.

1. Check if the dust indicator (1) displays 7.5 kPa. If it is displaying 7.5 kPa, clean the outer element.

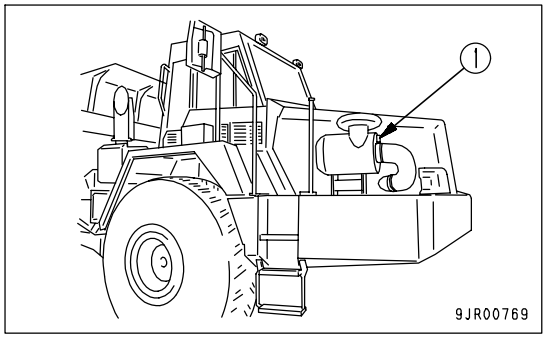

REMARK
There is maintenance caution lamp (2) on the machine monitor. If the maintenance caution lamp lights up and the character display (3) displays "E01" and "AIR FILTER" during operation, the air cleaner is clogged. Clean the air cleaner element in this case, too.

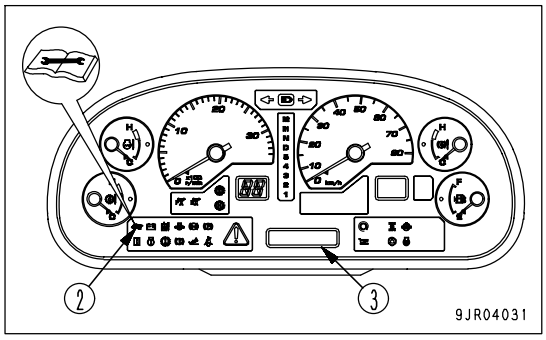

https://truckmanualshub.com/

CLEAN OUTER ELEMENT

WARNING

- **Dirt will fly if compressed air is used for cleaning. If dirt gets into your eyes it may cause blindness, and if you breathe in the dust it may damage your lungs. To prevent these problems, always wear safety glasses, dust mask, and other protective equipment.**
- **When pulling out the air cleaner element, make sure that you are standing on a firm place. If your footing is not secure when you carry out the operation, there is danger of falling and suffering injury.**

NOTICE

When cleaning the element, clean only the outer element. Do not clean the inner element. There is danger that dirt and dust may get inside the engine when the outer element is being cleaned, and this will damage the engine.

1. Stop the engine.
2. Remove 6 hooks (5) of dust cup (4), then remove the dust cup.

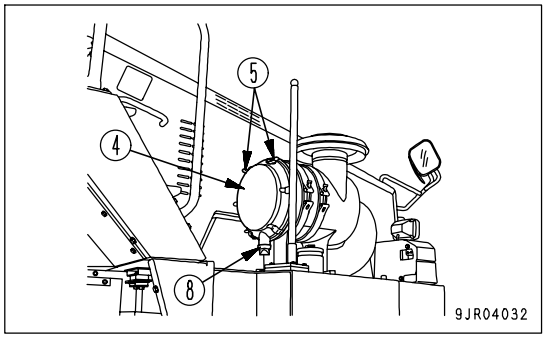

3. Hold outer element (6) with both hands, and move it up and down and to the left and right while pulling it out.
4. Hold inner element (7) so that it does not come out, and clean the inside of the air cleaner body with a dry cloth.
5. Use a dry cloth or compressed air to clean off the dirt stuck to dust cup (4) and vacuator valve (8).
6. Check that there are no cracks in the lip of the vacuator valve (8). If any cracks are found, replace with a new part.

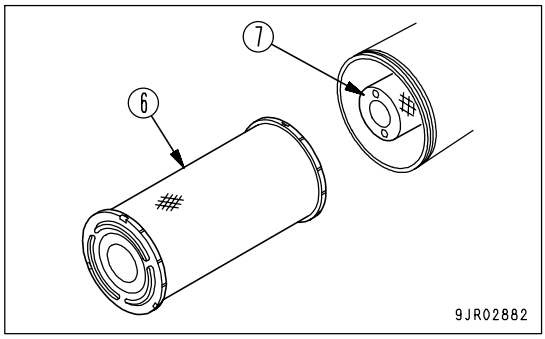

NOTICE

- **If a damaged element is used, dust will pass the air cleaner filter and be sucked into the engine. Do not use any cleaning method that will damage the element. If the element is damaged, replace it with a new element.**
- **Never tap or hit the element against any other object when cleaning it.**
- **Do not use an element with damaged folds or a damaged gasket or seal.**

https://truckmanualshub.com/

7. Blow dry compressed air (0.69 MPa {7 kg/cm^2}) from the inside of outer element (6) along the folds. Next, blow along the folds from the outside, then blow again from the inside.

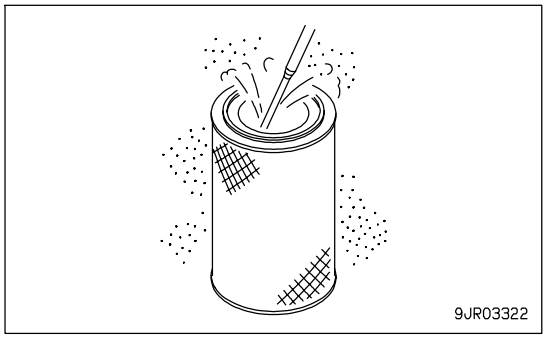

8. After cleaning, shine a light bulb from inside outer element (6) to check. If any holes or thin places are found, replace the outer element.

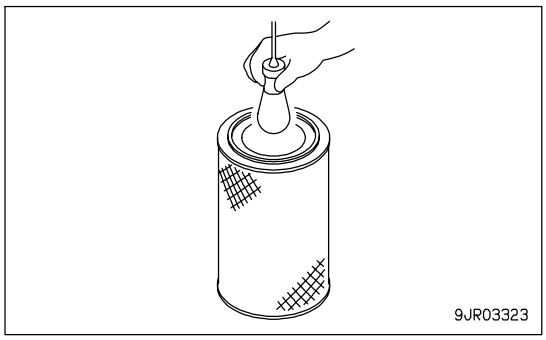

9. Install outer element (6) in the air cleaner body.

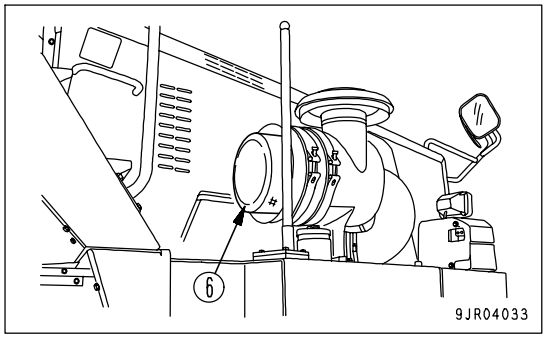

10. Check that O-ring (9) is fitted to dust cup (4).
Next, set so that vacuator valve (8) of dust cup (4) is at the bottom, and insert it into the air cleaner body.

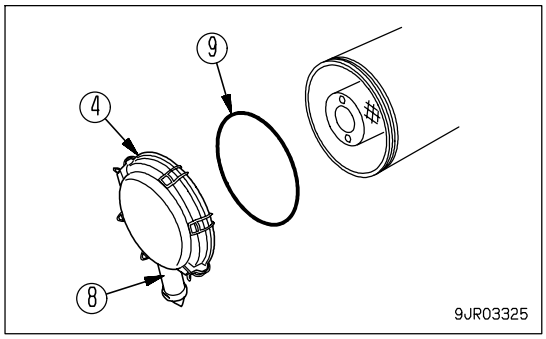

11. Clip hooks (5) of dust cup (4) to the protruding parts of the air cleaner body to lock in position.

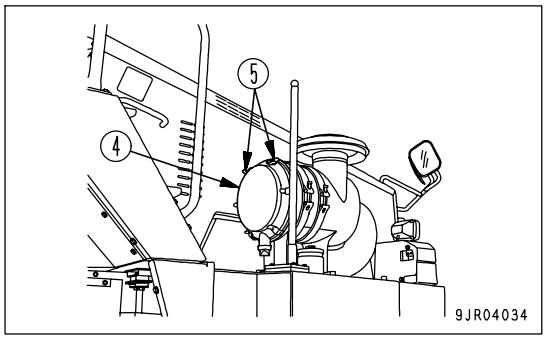

https://truckmanualshub.com/

12. Push the head of dust indicator (1) to cancel the clogging display.

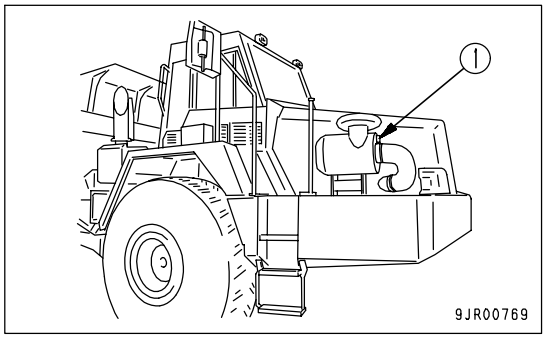

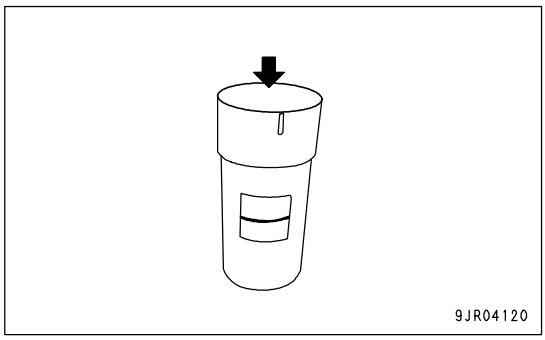

https://truckmanualshub.com/

REPLACE ELEMENT

WARNING

When pulling out the air cleaner element, make sure that you are standing on a firm place. If your footing is not secure when you carry out the operation, there is danger of falling and suffering injury.

1. Stop the engine.
2. Remove 6 hooks (5) of dust cup (4), then remove the dust cup.

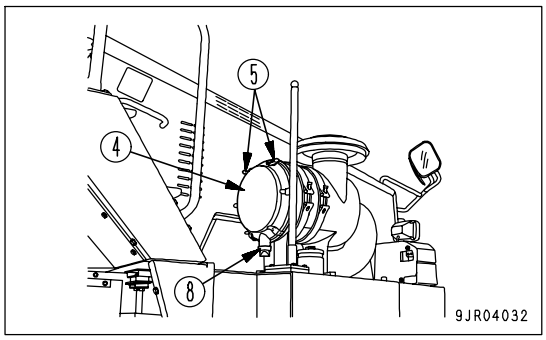

3. Hold outer element (6) with both hands, and move it up and down and to the left and right while pulling it out.
4. Hold inner element (7) so that it does not come out, and clean the inside of the air cleaner body with a dry cloth.
5. Use a dry cloth or compressed air to clean off the dirt stuck to dust cup (4) and vacuator valve (8).
6. Check that there are no cracks in the lip of the vacuator valve (8). If any cracks are found, replace with a new part.
7. Pull out inner element (7) and install a new inner element.
8. Install outer element (6) in the air cleaner body.

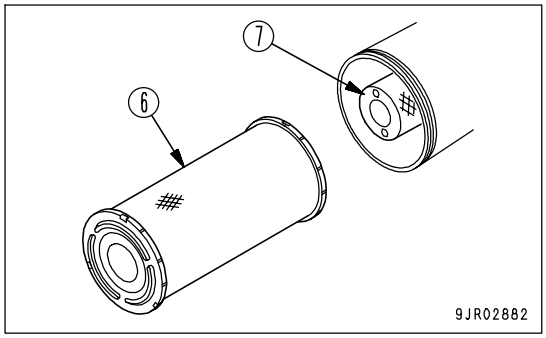

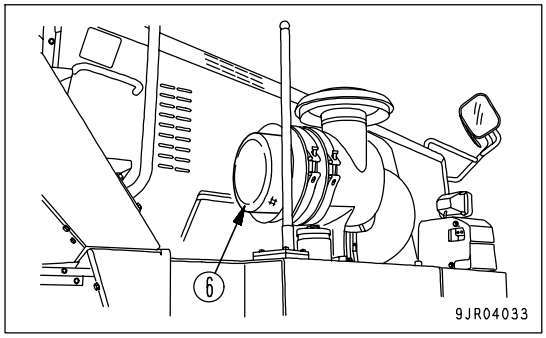

https://truckmanualshub.com/

9. Replace O-ring (9) with a new part.
   Next, set so that vacuator valve (8) of dust cup (4) is at the bottom, and insert it into the air cleaner body.

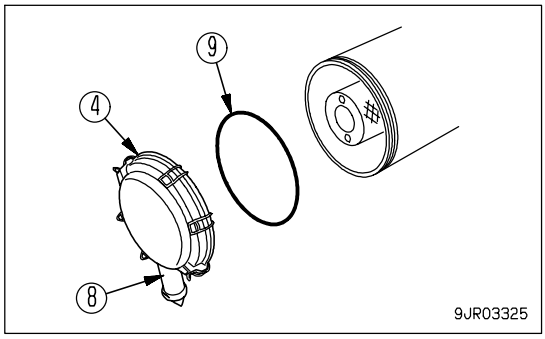

10. Clip hooks (5) of dust cup (4) to the protruding parts of the air cleaner body to lock in position.

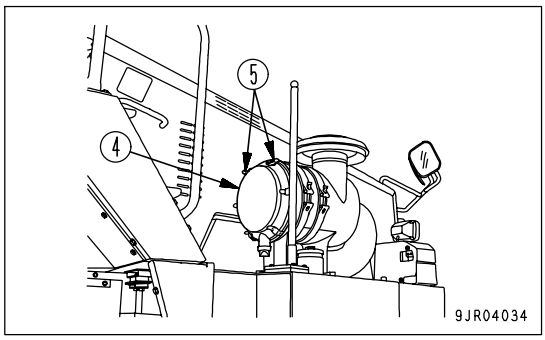

11. Push the head of dust indicator (1) to cancel the clogging display.

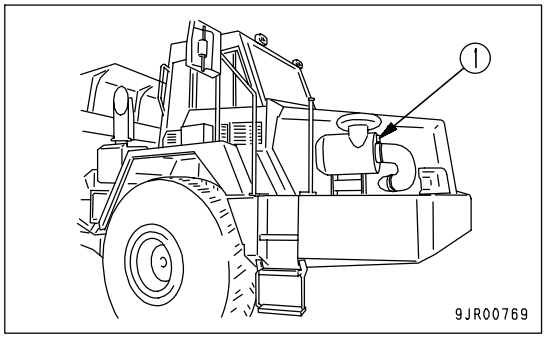

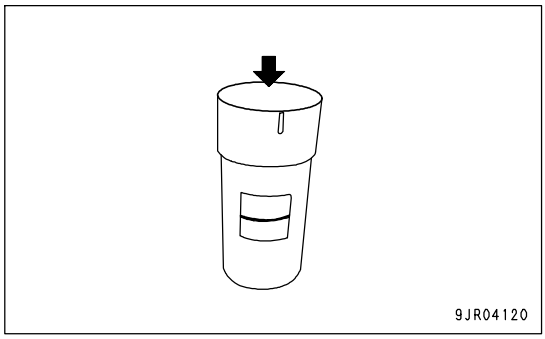

https://truckmanualshub.com/

CLEAN INSIDE OF COOLING SYSTEM

WARNING

- **Immediately after the engine is stopped, the engine coolant is hot and the pressure inside the radiator is high. Removing the cap and draining the water under this condition could cause burns. Allow the engine to cool down, then turn the cap slowly to release the pressure.**
- **Start the engine and flush the system. When standing up or leaving the operator's seat, set the shift lever to the N position and set the parking brake switch to the PARKING position.**
- **For details of starting the engine, see "OPERATIONS, CHECKS BEFORE STARTING (PAGE 3-84)" and "STARTING ENGINE (PAGE 3-85)" in the OPERATION section of the Operation and Maintenance Manual.**
- **When the undercover is removed, there is danger of touching the fan.**
  Never go to the front of the machine when the engine is running.

Clean the inside of the cooling system, change the coolant and replace the corrosion resistor according to the table below.

Antifreeze coolant	Interval for cleaning inside of cooling system and changing antifreeze coolant	Replacing corrosion resistor
Komatsu supercoolant (AF-NAC)	Every two years or every 4000 hours whichever comes first	unnecessary
Permanent type antifreeze (All-season type, *)	Every year (autumn) or every 2000 hours whichever comes first	Every 1000 hours and when cleaning the inside of the cooling system and when changing coolant

*: Permanent type antifreeze shall meet the requirements of ASTM D3306-03.

Stop the machine on level ground when cleaning or changing the coolant.
The coolant has the important function of preventing corrosion as well as preventing freezing.
Even in the areas where freezing is not an issue, the use of antifreeze coolant is essential.
Komatsu machines are supplied with Komatsu Supercoolant (AF-NAC). Komatsu Supercoolant (AF-NAC) has excellent anticorrosion, antifreeze and cooling properties and can be used continuously for 2 years or 4000 hours.
Komatsu Supercoolant (AF-NAC) is strongly recommended wherever available.
To maintain the anticorrosion properties of Supercoolant (AF-NAC), always keep the density of Supercoolant between 30% and 68%.

When using Komatsu Supercoolant (AF-NAC), there is no need to use a corrosion resistor.
When no corrosion resistor is used, use the special cover (600-411-9000). Please consult your Komatsu distributor about the method of installing.

https://truckmanualshub.com/

When deciding the ratio of antifreeze to water, check the lowest temperature in the past, and decide from the mixing table given below.
It is actually better to estimate and temperature about 10°C (18°F) lower when deciding the mixing ratio.
The mixing ratio depends on the ambient temperature, but it should always be a minimum of 30% by volume (antifreeze/total amount of coolant x 100).
The freezing temperature of undiluted antifreeze is -15°C (5°F). Do not store undiluted antifreeze at a temperature of below -15°C (5°F).

Mixing rate of water and antifreeze

Min. atmospheric temperature	°C	-10	-15	-20	-25	-30
	°F	14	5	-4	-13	-22
Amount of antifreeze	Liters	17.5	20.5	23.5	26.5	29.5
	US gal	4.62	5.42	6.21	7.00	7.79
Amount of water	Liters	41.5	38.5	35.5	32.5	29.5
	US gal	10.97	10.17	9.38	8.59	7.80
Volume ratio	%	30	35	40	45	50

WARNING

Antifreeze coolant is flammable, so keep it away from flame.
Antifreeze coolant is toxic. When removing the drain plug, be careful not to get water containing antifreeze coolant on you. If it gets in your eyes, flush your eyes with large amount of fresh water and see a doctor at once.

Use antifreeze and appropriate water for diluting (for details, see "COOLANT AND WATER FOR DILUTION (PAGE 4-5)")
We recommend use of an antifreeze density gauge to control the mixing proportions.
Prepare a container whose capacity is larger than the specified coolant volume to catch drained coolant.
Prepare a hose to supply antifreeze coolant and water.

1. Stop the engine.
2. Open the underguard (1) of the engine and take out coolant drain hoses (3 pieces).

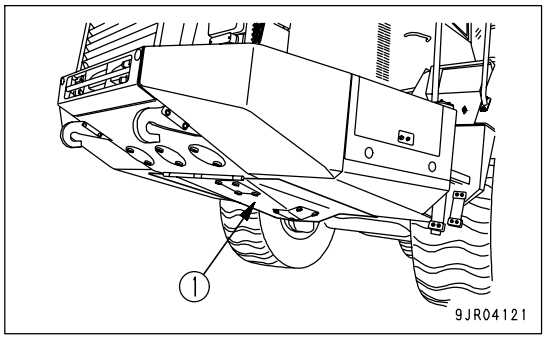

3. Turn and close valve (2) of the corrosion resistor.

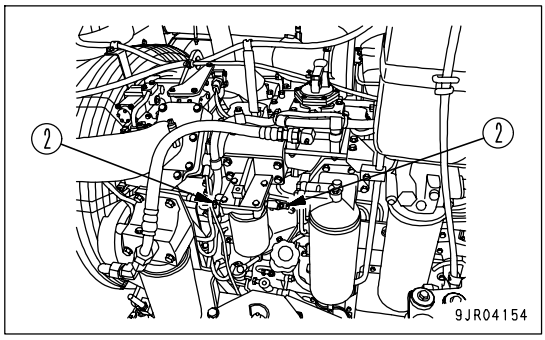

https://truckmanualshub.com/

4. Loosen radiator cap (3) a little to release the residual pressure and then remove it.

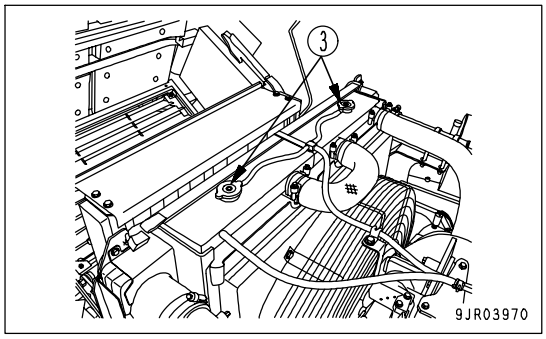

5. Open drain valve (4) at the bottom of the radiator and drain valve (5) of the oil cooler and drain the coolant.
6. After draining the coolant, close drain valves (4) and (5), and fill with city water.
7. When the radiator is full, start the engine, and run it at low idling.
   Keep the engine running at low idling for 10 minutes until the water temperature reaches more than 90°C (194°F) (guideline: the indicator on the engine water temperature gauge is horizontal).

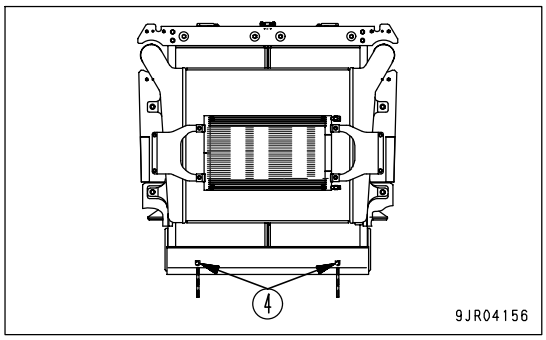

8. Stop the engine, open drain valves (4) and (5), and drain the water. After draining the water, close them.
9. Replace the corrosion resistor, then turn valve (2) to open it.
   For replacing corrosion resistor, see "REPLACE CORROSION RESISTOR CARTRIDGE (PAGE 4-61)".
10. Add coolant mixed with antifreeze until it overflows from the water filler.
    Decide the proportions of antifreeze and water according to the table for the mixing rate of water and antifreeze.

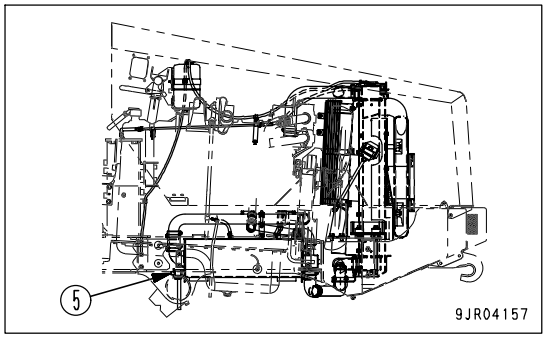

11. To remove the air contained in the coolant, run the engine at low idle for 5 minutes, then run for another 5 minutes at high idle. (When doing this, leave the coolant filler cap OFF.)
12. Stop the engine. About 3 minutes later, supply the coolant up to the coolant filler, then close radiator cap.
13. Drain the coolant from inside of reservoir tank (6), flush the inside of the reservoir tank, then fill with the coolant to a point between the FULL and LOW marks.

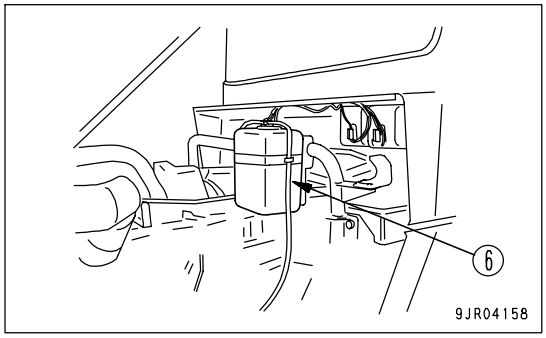

https://truckmanualshub.com/

CHECK LEVEL OF WINDOW WASHER FLUID, ADD FLUID

Carry out this check if there is air in the window washer fluid.

Check the level of the fluid in window washer tank (1), and if it is low, fill with automobile window washer fluid.
Be careful not to let dirt or dust get in when adding fluid.

When operating at below freezing point, use fluid with antifreeze.

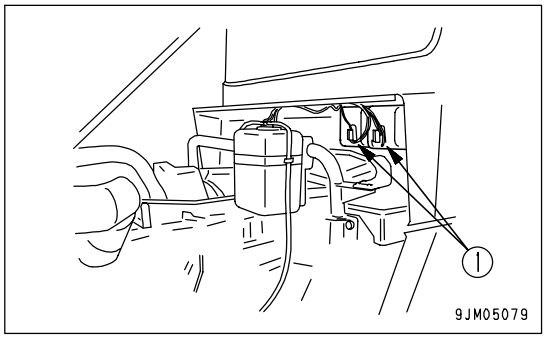

CLEAN AIR CONDITIONER AIR FILTER

If the air filter at the suction port of the air conditioner unit or the air filter at the fresh air intake port become clogged, the cooling or heating capacity will drop, so clean the filters once a week.

1. Open cover (1) on the side of the cab.
2. Pull out the air filter (FRESH filter) and clean it with compressed air.

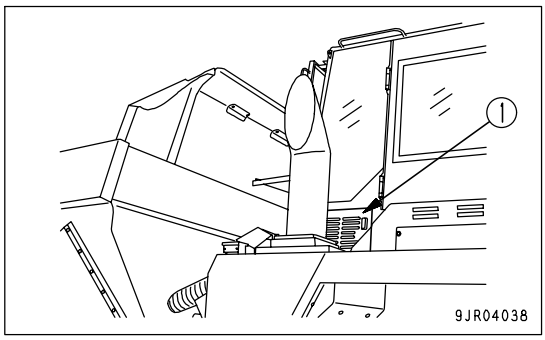

3. Open cover (2) at the right side at the rear of the operator's seat.
4. Pull out the air filter (RECIRC filter), then use a weak jet of compressed air to blow off the dust or clean with a soft brush.

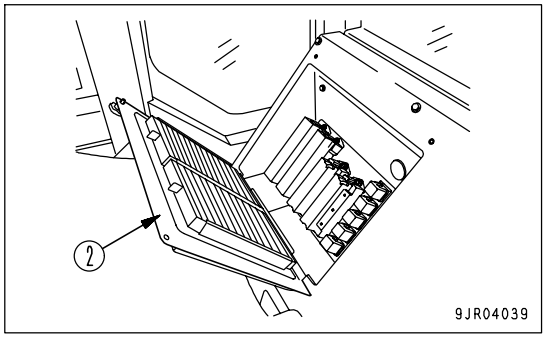

https://truckmanualshub.com/

CHECK REFRIGERANT (GAS) LEVEL

WARNING

If the refrigerant used in the air conditioner gets into your eyes or on your hands, it may cause loss of sight or frostbite. Do not touch the refrigerant. Never loosen any part of the refrigerant circuit.
Do not bring any flame close to any point where the refrigerant gas is leaking.

If the cooling effect is poor, there is probably lack of refrigerant (gas).
In this case, check sight glass (2) of receiver drier (1) near the left side of the radiator guard.

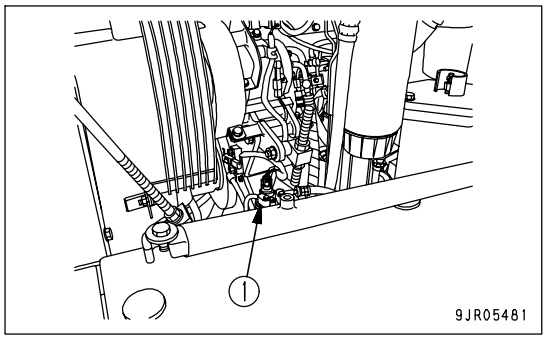

Before carrying out inspection, set to the following conditions.
- Start the engine and run it at approx. 1,500 rpm.
- Turn the air conditioner ON/OFF switch to the ON position.
- Set the air flow to the maximum position.
- Set the temperature to the lowest position.
- Open the doors and windows fully.
- Turn the air conditioner switch ON.

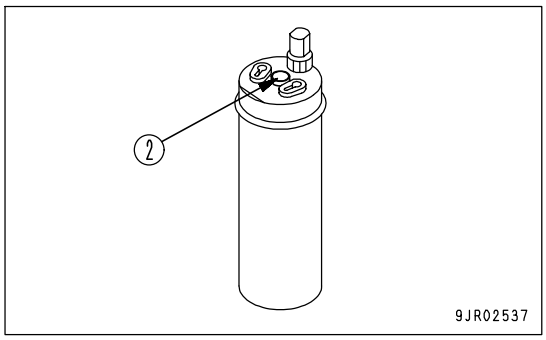

If the condition of sight glass (2) is "correct" as shown in the diagram on the right, the condition is normal. (After the air conditioner switch is turned ON, a small number of bubbles will be seen, but after that, the fluid becomes a transparent, milky white color.)

If the condition of sight glass (2) is "insufficient" as shown in the diagram on the right, there is lack of refrigerant, so ask your Komatsu distributor to charge with refrigerant. (After the air conditioner switch is turned ON, bubbles can be seen continuously.)

Refrigerant	Condition in sight glass
Correct	A → B → C
Insufficient	A → A → A

A: Bubbles mixed with liquid refrigerant
B: All refrigerant is clear liquid
C: Oil and refrigerant are separated; liquid is thin milky white

https://truckmanualshub.com/

CHECK DUMP BODY

Check that there are no cracks in the dump body.

1. Clean the dump body to make it easier to check.
2. Check all parts of the dump body for damage.
   If any cracks or abnormal wear are found, carry out repairs.
   Contact your Komatsu distributor for details of the repair procedure.

CHECK LENGTH OF SUSPENSION CYLINDER

When traveling, if the unevenness of the road surface is transmitted directly to the chassis (the machine bounces or the cylinders retract and hit the stopper), carry out the following checks.

CHECK LENGTH OF CYLINDER

When checking front suspension (1) and rear suspension (2), carry out the inspection with the machine unloaded.

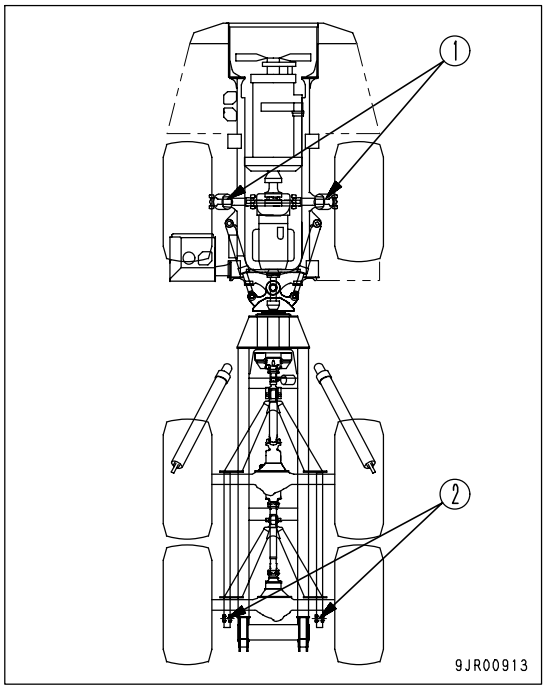

1. Remove cover (3).
2. Measure distance (A) from the shoulder at the head end of the suspension cylinder rod to the top surface of the flange.

   Front suspension dimension (A): 153 to 173 mm (6.0 to 6.8 in)
   Rear suspension dimension (A): 96 to 106 mm (3.8 to 4.2 in)

3. If any abnormality is found when checking the front and rear suspension, please contact your Komatsu distributor for inspection.

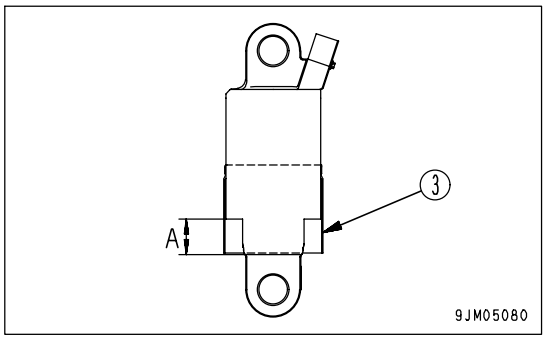

https://truckmanualshub.com/

BLEED AIR FROM FRONT BRAKE

WARNING

Stop the machine on level ground and put blocks under the wheels before bleeding the air.

To make it easier to bleed the air, warm the oil up to a temperature of at least 40°C (104°F) before bleeding the air. Bleed the air from the front brakes in the same way on both the left and right sides.

1. Start the engine, check that the oil in the transmission case is the specified level, and check if the retarder oil pressure caution lamp is out.
2. Remove the cap installed to bleeder screw (1) of the slack adjuster, then insert a vinyl hose.
   Prepare a container with oil in it and insert the other end of the hose approx. 50 mm (2.0 in) below the surface of the oil.
   (Use any commercially available vinyl hose.)
3. Depress the brake pedal and loosen bleeder screw (1) approx. 3/4 turns. Keep the pedal depressed until no more bubbles come out from the vinyl hose.
4. Pull the retarder control lever and loosen bleeder screw (1) approx. 3/4 turns. Keep the retarder control lever depressed until no more bubbles come out from the vinyl hose.
5. After bleeding the air, tighten bleeder screw (1) securely and fit the cap.
6. The procedure for bleeder screw (2) of the front brake is the same as for the slack adjuster (with Step 4 excluded).

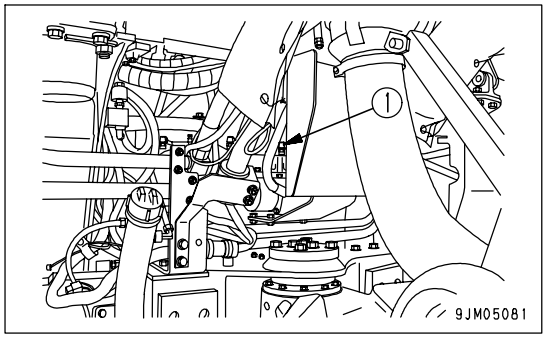

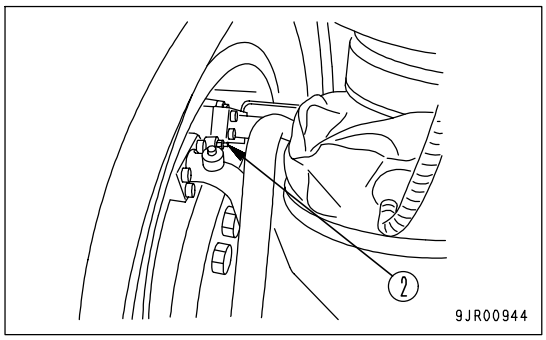

NOTICE

The brake oil pressure caution lamp may light on during air bleeding. In that case, tighten the bleeder screw and depress the brake pedal 8 to 10 times to charge pressure to the accumulator.

In addition, check sight gauge (H) to see if some oil remains in the brake oil tank. If there is no oil left, stop the engine and add oil. (When the engine stops, the oil level rises and the brake oil tank is automatically refilled with oil.)

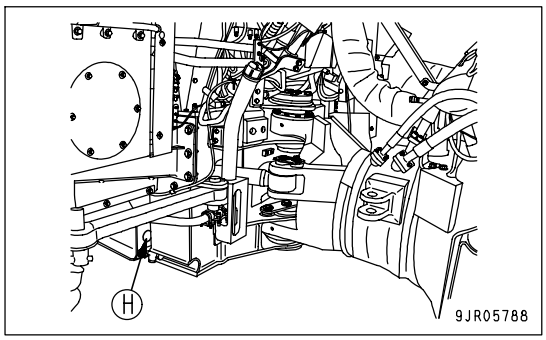

7. After finishing air bleeding, stop the engine (for 2 to 3 minutes), and adjust the oil level so that it reaches the specified level. For details, see "CHECK OIL LEVEL IN TRANSMISSION CASE, ADD OIL (PAGE 3-75)".

https://truckmanualshub.com/

BLEED AIR FROM CENTER BRAKE

WARNING

Stop the machine on level ground and put blocks under the wheels before bleeding the air.

To make it easier to bleed the air, warm the oil up to a temperature of at least 40°C (104°F) before bleeding the air. Bleed the air from the center brakes in the same way on both the left and right sides.

1. Start the engine, check that the oil in the transmission case is the specified level, and check if the retarder oil pressure caution lamp is out.
2. Remove the cap installed to bleeder screw (1) of the slack adjuster, then insert a vinyl hose.
   Prepare a container with oil in it and insert the other end of the hose approx. 50 mm (2.0 in) below the surface of the oil.
   (Use any commercially available vinyl hose.)
3. Depress the brake pedal and loosen bleeder screw (1) approx. 3/4 turns. Keep the pedal depressed until no more bubbles come out from the vinyl hose.
4. Pull the retarder control lever and loosen bleeder screw (1) approx. 3/4 turns. Keep the retarder control lever depressed until no more bubbles come out from the vinyl hose.
5. After bleeding the air, tighten bleeder screw (1) securely and fit the cap.
6. The procedure for bleeder screw (2) of the center brake is the same as for the slack adjuster (with Step 4 excluded).

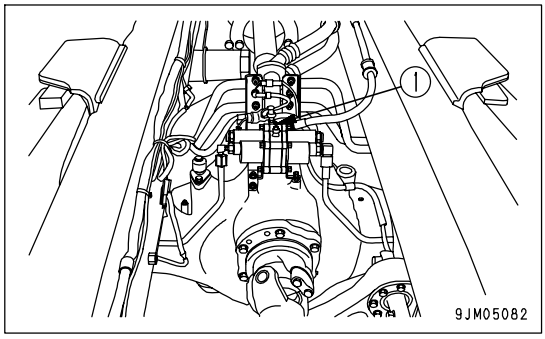

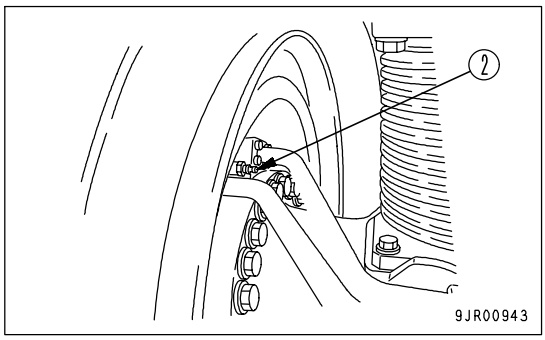

NOTICE

The brake oil pressure caution lamp may light on during air bleeding. In that case, tighten the bleeder screw and check sight gauge (H) to see if some oil remains in the brake oil tank. If there is no oil left, stop the engine and fill with oil. (When the engine stops, the oil level rises and the brake oil tank is automatically refilled with oil.)

7. After finishing air bleeding, stop the engine (for 2 to 3 minutes), and adjust the oil level so that it reaches the specified level. For details, see "CHECK OIL LEVEL IN TRANSMISSION CASE, ADD OIL (PAGE 3-75)".

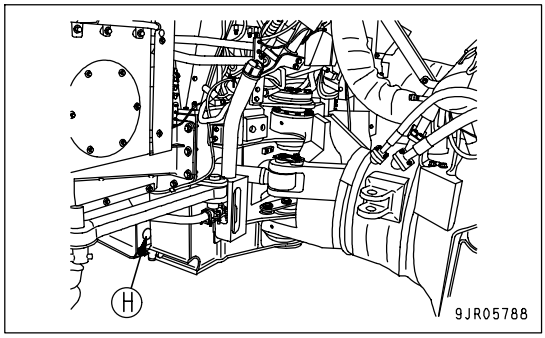

https://truckmanualshub.com/

CHECK PLAY OF OUTPUT COUPLING OF OUTPUT SHAFT

If any abnormal noise occurs around the output shaft or front drive shaft, the rubber inside the output shaft may be deteriorated or damaged, so check the play of the coupling as follows.

Play in circumferential direction
Using a bar, move the coupling in the direction of the circumference and check the play in the circumferential direction at the outside diameter of the coupling.
Standard: Max. 12 mm (0.5 in)

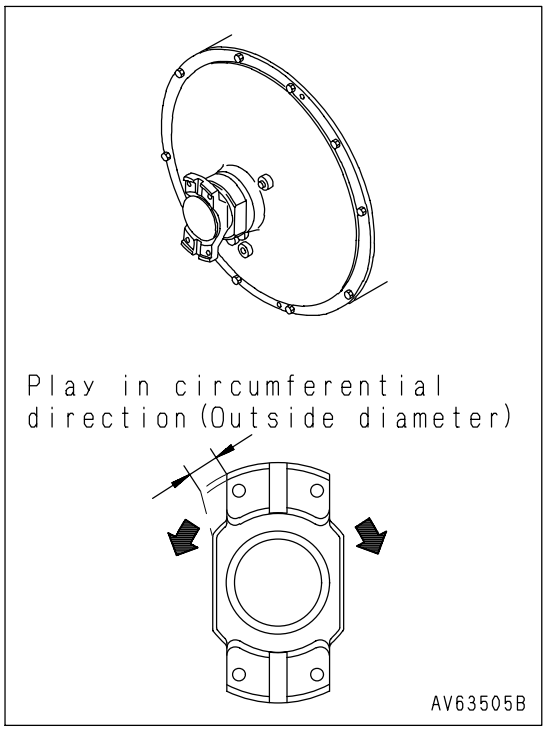

REMARK
If the play range is exceeded, the engine fan will start to rotate, so when inspecting the play, check first that the engine fan is not rotating.

If the result of the measurement shows that it is greater than the standard value, please contact your Komatsu distributor for disassembly and inspection.

https://truckmanualshub.com/

SELECTION AND INSPECTION OF TIRES

WARNING

If a tire or a rim is handled improperly, the tire may burst or may be damaged and the rim may be broken and scattered, and that can cause serious injury or death.

- **Since maintenance, disassembly, repair and assembly of the tires and rims require special equipment and skill, be sure to ask a tire repair shop to do the work.**
- **Do not heat or weld the rim to which the tire is installed. Do not make a fire near the tire.**

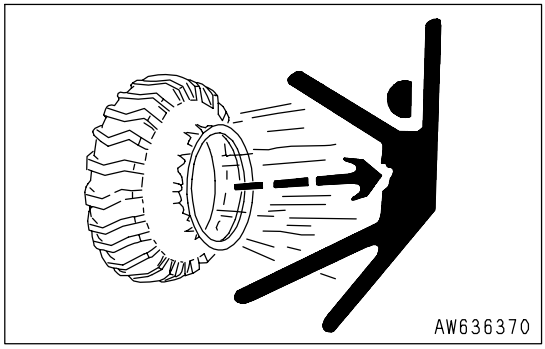

SELECTION OF TIRES

WARNING

Select the tires according to the conditions of use and the weight of the attachments on the machine. Use only specified tires and inflate them to the specified pressure.

Select the tires according to the conditions of use and the weight of the attachments of the machine. Use the following table.
Since the travel speed indicated on the speedometer varies with the tire size, consult your Komatsu distributor when using optional tires.

	Maximum load [kg (lb)]	Tire size	Remarks
Front wheel	8250 (18191)	23.5-R25	Type 1 for construction equipment
Center wheel	8250 (18191)	23.5-R25	
Rear wheel	8250 (18191)	23.5-R25	

https://truckmanualshub.com/

CHECK OF INFLATION PRESSURE OF TIRES AND INFLATION OF THEM

WARNING

- **When inflating a tire, check that any person will not enter the working area and use an air chuck which has a clip and which can be fixed to the air valve.**
- **While inflating the tire, check the inflation pressure occasionally so that it will not rise too high.**
- **If the rim is not fitted normally, it may be broken and scattered while the tire is inflated. Accordingly, place a guard around the tire and do not work in front of the rim but work on the tread side of the tire.**
- **Abnormal drop of inflation pressure and abnormal fitting of the rim indicate a trouble in the tire or rim. In this case, be sure to ask a tire repair shop for repair.**
- **Be sure to observe the specified inflation pressure.**
- **Do not adjust the inflation pressure of the tires just after high-speed travel or heavy-load work.**

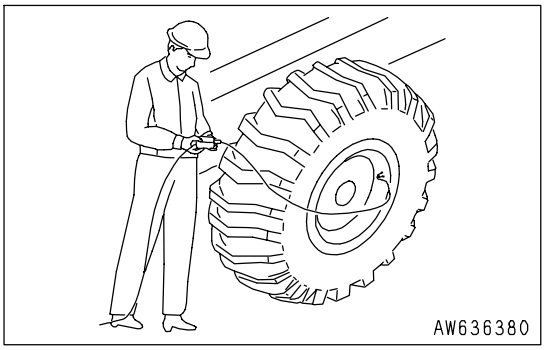

Check

Measure the inflation pressure with a tire pressure gauge, while the tires are cool, before starting work.

Inflation of tires

Adjust the inflation pressure properly.

When inflating a tire, use an air chuck which can be fixed to the air valve of the tire as shown in the figure. Do not work in front of the rim but work on the tread side of the tire.

The proper inflation pressure is shown below.

Tire size	Inflation pressure [MPa (kg/cm^2, PSI)]		
	Front	Center	Rear
23.5-R25 (standard)	0.44 (4.5, 63.9)	0.44 (4.5, 63.9)	0.44 (4.5, 63.9)
750/65 R25 (30/65 R25) (if equipped)	0.34 (3.5, 49.7)	0.40 (4.1, 58.2)	0.40 (4.1, 58.2)

NOTICE

If the tires are used when the inflation pressure is less than the value given in the table above, the rim may be damaged.

Always keep the tire inflation pressure within +0 to +0.03 MPa (0.3 kg/cm^2, 4.3 PSI) of the value in the table above.

PRECAUTIONS WHEN REPLACING TIRE

After tightening hub bolts (1) when replacing the tire, travel for 5 to 6 km, tighten the bolts again to settle all the contacting parts.

In particular, there are more contacting parts on the rear wheels than on the front wheels, so it will take time for the parts to settle. For this reason, repeat the tightening process during the first 50 hours after installation.

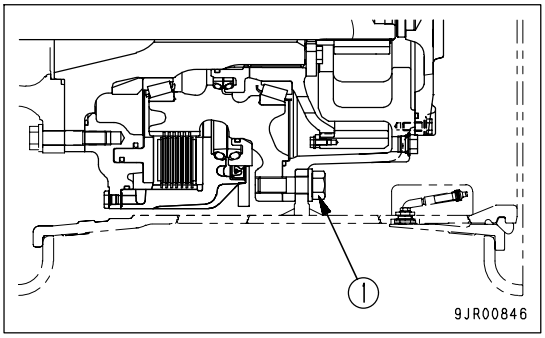

https://truckmanualshub.com/

ADJUST PARKING BRAKE

WARNING

- **When carrying out the adjustment, raise the air pressure high enough to prevent the parking brake from being applied automatically, and hang a warning sign on the parking brake valve lever to prevent any other person from operating it.**
- **Never put any oil or grease on the surface of the pad or disc.**

If the parking brake effect is poor, adjust as follows.

1. Check that the brake oil pressure caution lamp is turned OFF (the brake accumulator pressure is sufficiently high), and then release the parking brake.
2. Turn bolt (1) counterclockwise and bring in the pad into tight contact with the disc.
3. Turn bolt (1) clockwise by 240° ± 15°(turn by 2/3 turn).

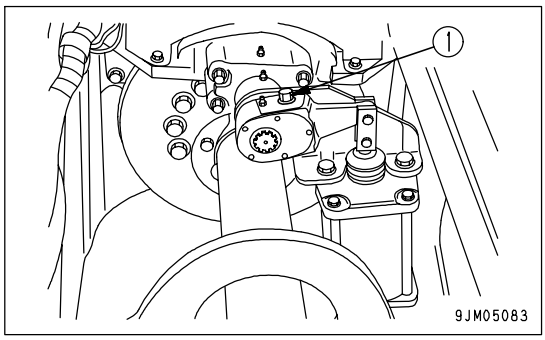

Measure the thickness of the pad, and if it is less than 1.5 mm (0.06 in), contact your Komatsu distributor to have it replaced.

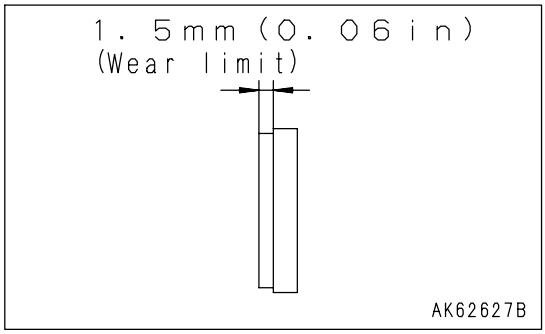

When making an adjustment for the first time after replacing the pads, turn bolt (1) counterclockwise by 360° ± 15°(turn by full 1 turn).

After adjusting, check the braking capacity of the parking brake. See "CHECK BRAKING CAPACITY OF PARKING BRAKE (PAGE 4-51)". If the machine moves, contact your Komatsu distributor for inspection.

https://truckmanualshub.com/

CLEAN HYDRAULIC TANK STRAINER

WARNING

- **The parts and oil are at high temperature immediately after the engine is stopped, and may cause burns. Wait for the temperature to go down before starting the work.**
- **When removing the oil filler cap, turn it slowly to release the internal pressure, then remove it.**

1. Raise the front side of the cab. For details, see "CAB TILT OPERATION (PAGE 3-107)".
2. Turn the cap of oil filler (F) to release the internal pressure before removing the cap.

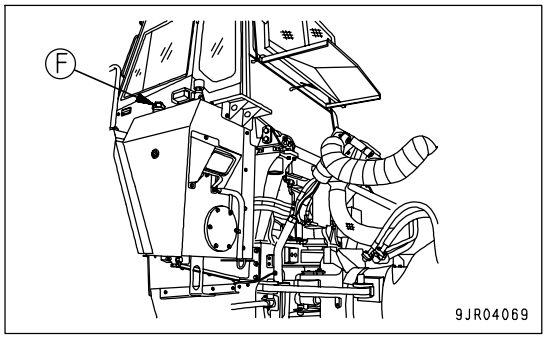

3. Remove cap (1) of the hydraulic tank strainer and clean the strainer and strainer case.
4. After checking and cleaning, set the strainer in the case and tighten cap (1).
5. Install the cap of oil filler (F).

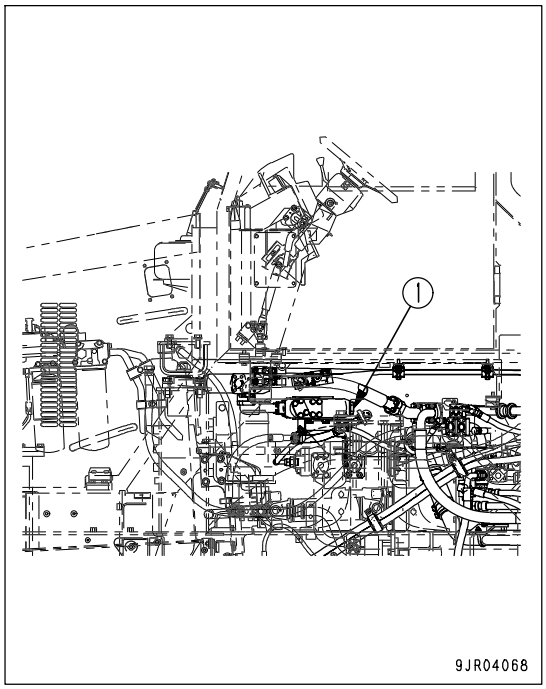

https://truckmanualshub.com/

CHECK BEFORE STARTING

For details of the following items, see "CHECK BEFORE STARTING (PAGE 3-72)".

- Check coolant level, add coolant
- Check dust indicator
- Check oil level in engine oil pan, add oil
- Check oil level in transmission case, add oil
- Check oil level in hydraulic tank, add oil
- Drain water, sediment from fuel tank
- Check fuel level, add fuel
- Check wheel hub bolts, tighten
- Check central warning lamp, alarm buzzer, monitor lamps and meters
- Check braking effect
- Check manual emergency steering
- Check auto-emergency steering
- Check backup alarm
- Check electric wiring
- Check inflation pressure of tires
- Check water separator
- Does body positioner operate normally?
- Are the cab mounting bolts and pins are free from looseness and breakage?

https://truckmanualshub.com/

EVERY 50 HOURS SERVICE

LUBRICATION

1. Stop the engine.
2. Use the grease pump to pump in grease through the grease fitting marked by the arrow.
3. Check visually that the greasing has been carried out properly.
4. After greasing, wipe off any old grease that was pushed out.

Carry out the greasing operation every day when operating in places where the grease flows out easily, such as when traveling through mud or water.

(1) Front suspension (left) (2 places)

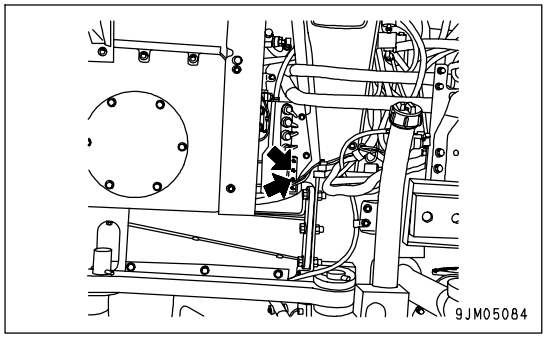

(2) Front suspension (right) (2 places)

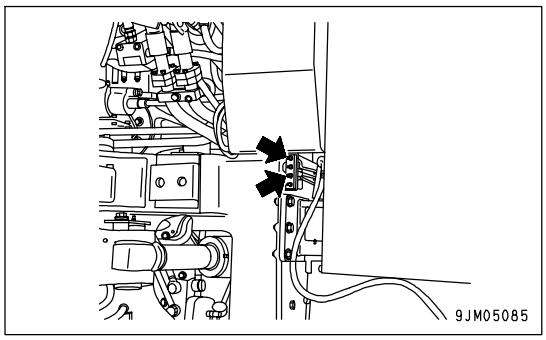

(3) Rear suspension (left and right: 2 places each)

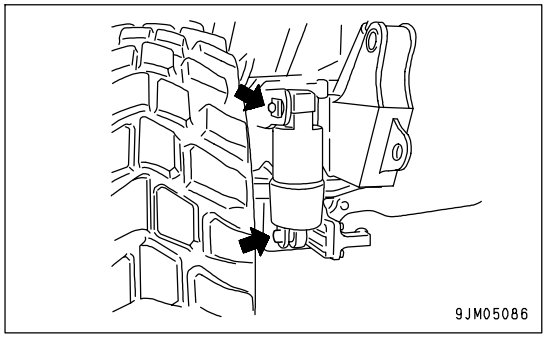

https://truckmanualshub.com/

EVERY 250 HOURS SERVICE

Maintenance for every 50 hours service should be carried out at the same time.

LUBRICATION

1. Stop the engine.
2. Using a grease pump, pump in grease through the grease fittings shown by arrows.
3. Check visually that the greasing has been carried out properly.
4. After greasing, wipe off any old grease that was pushed out.

Carry out the greasing operation every day when operating in places where the grease flows out easily, such as when traveling through mud or water.

(1) Steering cylinder (left) (2 places)

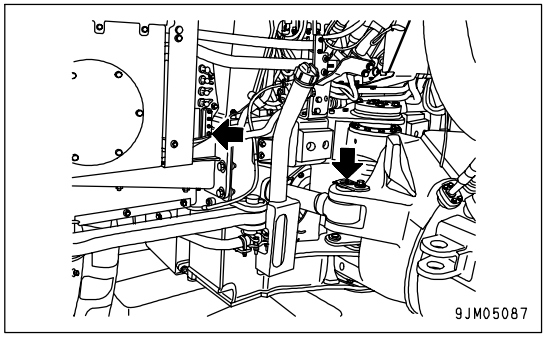

(2) Steering cylinder (right) (2 places)

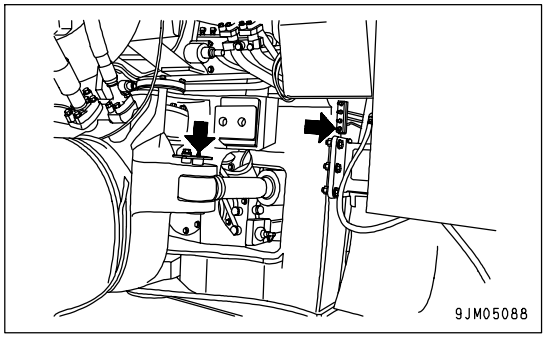

(3) Hoist cylinder (left and right: 2 places each)

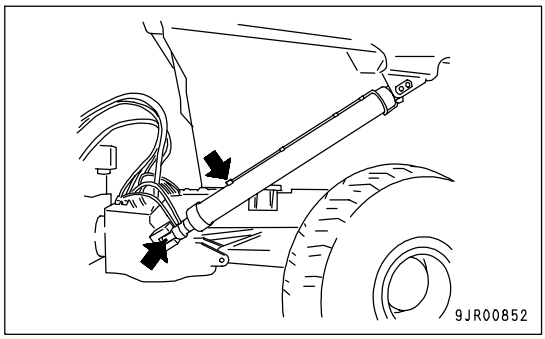

https://truckmanualshub.com/

(4) Body hinge pin (2 places)

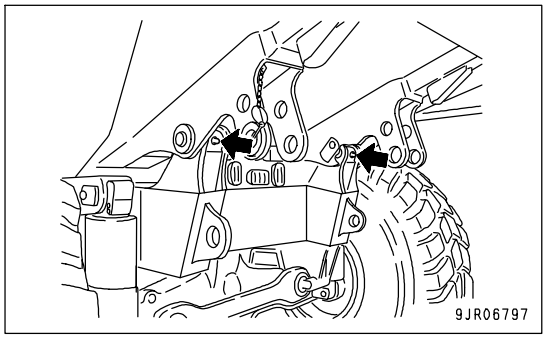

(5) Hitch bearing (2 place)

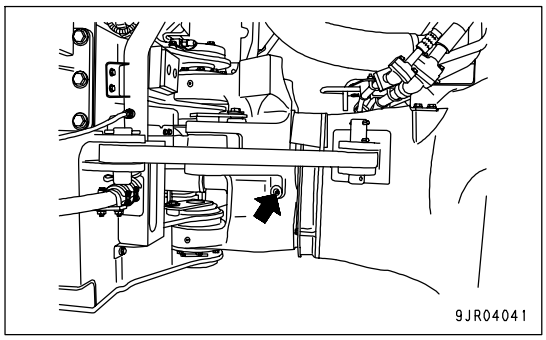

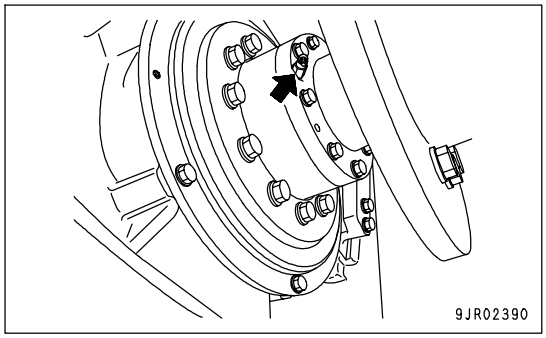

https://truckmanualshub.com/

CHECK DRIVE SHAFT

If there is any problem, such as looseness of the drive shaft connection, play in the spline or bearing portion, or runout of the shaft, please contact your Komatsu distributor for repair.

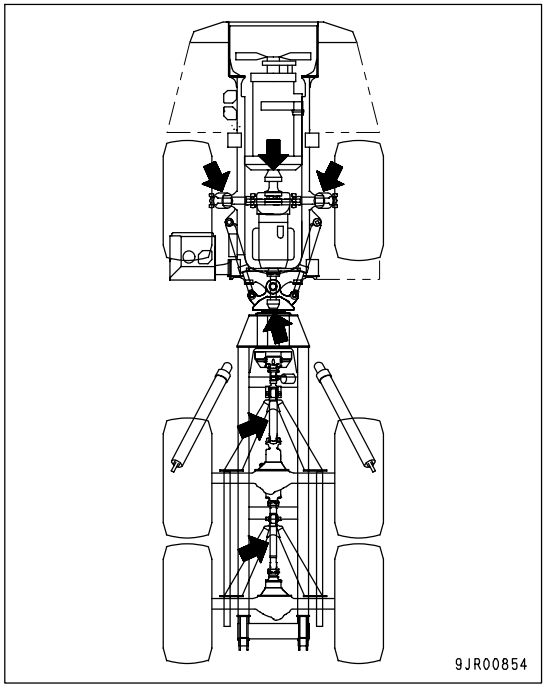

https://truckmanualshub.com/

CLEAN OVERFLOW HOSE

WARNING

If compressed air scattered around dust and debris, there is danger of injury. Always wear protective equipment such as protective glasses and mask.

The overflow hoses are installed to the front and center wheels. Remove and clean all of the 4 hoses.

1. Remove overflow hose (1).
2. After removing the tube, use compressed air to blow out the soil and dirt from the tube.
3. Install overflow hose (1).

Front

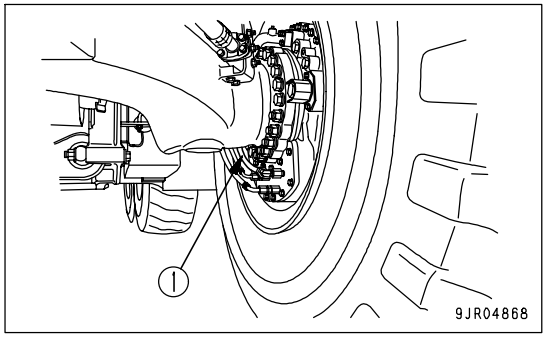

Center

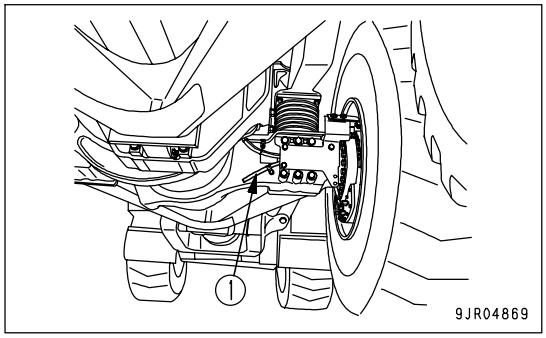

https://truckmanualshub.com/

CHECK LEVEL OF BATTERY ELECTROLYTE

Carry out this procedure before operating the machine.

WARNING

- **Do not use the battery if the battery electrolyte level is below the LOWER LEVEL line. This will accelerate deterioration of the inside of the battery and reduce the service life of the battery. In addition, it may cause an explosion.**
- **The battery generates flammable gas and there is danger of explosion, do not bring fire or sparks near the battery.**
- **Battery electrolyte is dangerous. If it gets in your eyes or on your skin, wash it off with a large amount of water and consult a doctor.**
- **When adding distilled water to the battery, do not allow the battery electrolyte to go above the UPPER LEVEL line. If the electrolyte level is too high, it may leak and cause damage to the paint surface or corrode other parts.**

NOTICE

If there is a fear that the battery water may freeze after refilling with purified water (e.g. commercially available replenishment water for a battery), do the replenishment before the day's work on the next day.

Inspect the battery electrolyte level at least once a month and follow the basic safety procedures given below.

WHEN CHECKING ELECTROLYTE LEVEL FROM SIDE OF BATTERY

If it is possible to check the electrolyte level from the side of the battery, check as follows.

1. Use a wet cloth to clean the area around the electrolyte level lines and check that the electrolyte level is between the UPPER LEVEL (U.L.) and LOWER LEVEL (L.L.) lines.
   If the battery is wiped with a dry cloth, static electricity may cause a fire or explosion.

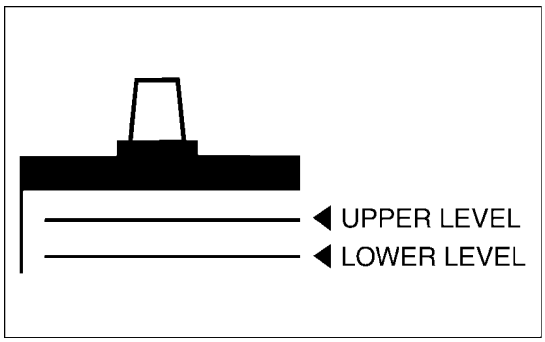

2. If the electrolyte level is below the midway point between the U.L and L.L lines, remove cap (1) and add distilled water to the U.L line.
3. After adding distilled water, tighten cap (1) securely.

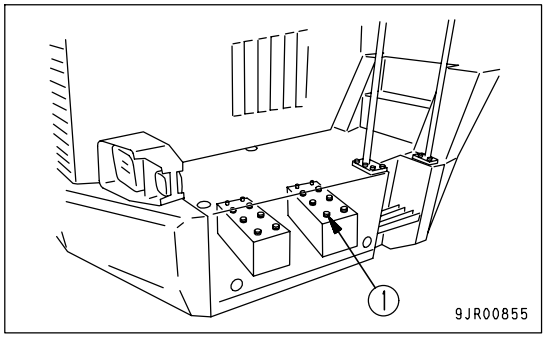

REMARK

If distilled water is added to above the U.L. line, use a syringe to lower the level to the U.L. line. Neutralize the removed fluid with baking soda (sodium bicarbonate), then flush it away with a large amount of water or consult your Komatsu distributor or battery maker.

https://truckmanualshub.com/

WHEN IT IS IMPOSSIBLE TO CHECK ELECTROLYTE LEVEL FROM SIDE OF BATTERY

If it is impossible to check the electrolyte level from the side of the battery, or there is no display of the UPPER LEVEL line on the side of the battery, check as follows.

1. Remove cap (1) at the top of the battery, look through the water filler port, and check the electrolyte surface. If the electrolyte does not reach the sleeve, add distilled water so that the level reaches the bottom of the sleeve (UPPER LEVEL line) without fail.

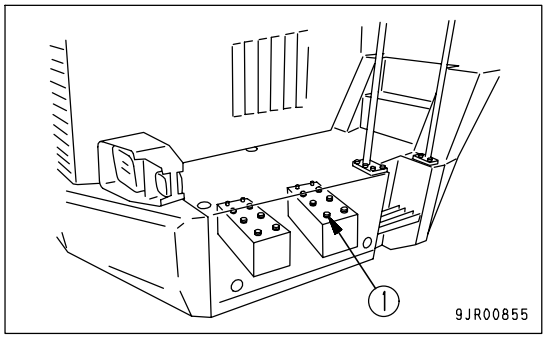

Use the diagram below for reference, and check if the electrolyte reaches the bottom of the sleeve.

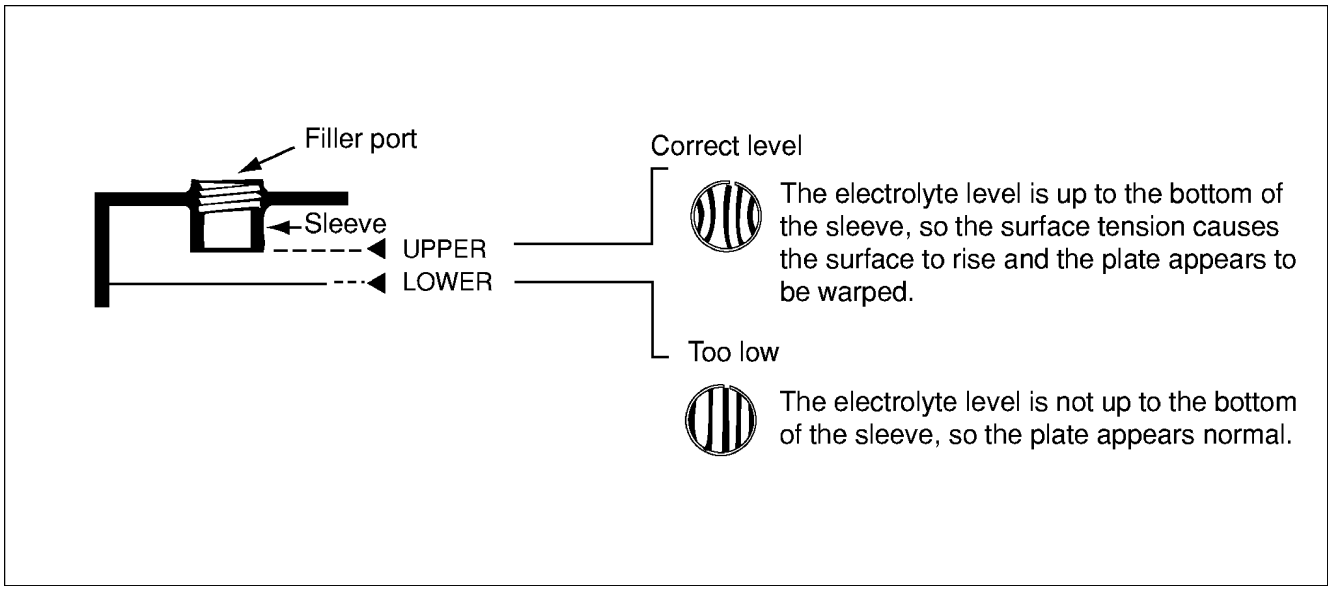

2. After adding distilled water, tighten cap (1) securely.

REMARK

If water is added to above the bottom tip of the sleeve, use a pipette to remove electrolyte. Neutralize the removed electrolyte with sodium bicarbonate, then flush it away with a large amount of water. If necessary, contact your Komatsu distributor or your battery maker.

WHEN IT IS POSSIBLE TO USE INDICATOR TO CHECK ELECTROLYTE LEVEL

If it is possible to use an indicator to check the electrolyte level, follow the instructions given.

https://truckmanualshub.com/

CHECK FAN BELT AND ALTERNATOR BELT TENSION, ADJUST

CHECKING

The deflection should be approx. 13 to 16 mm (0.51 to 0.63 in) when the belt is pressed at a point midway between the fan pulley and alternator pulley with a finger pressure of approx. 58.8 N (6 kg).

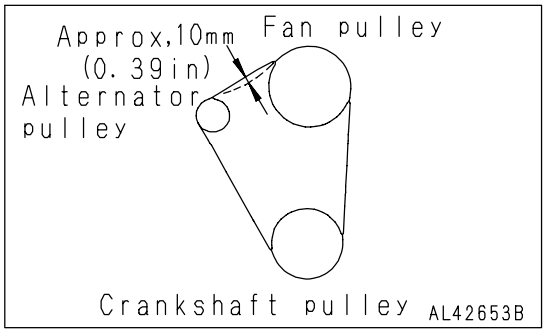

ADJUSTING

1. Loosen bolts and nuts (1), (2) and (3), then turn nut (4) to adjust the tension of the belt.
2. After adjusting, tighten bolts and nuts (1), (2) and (3) to secure alternator (5).

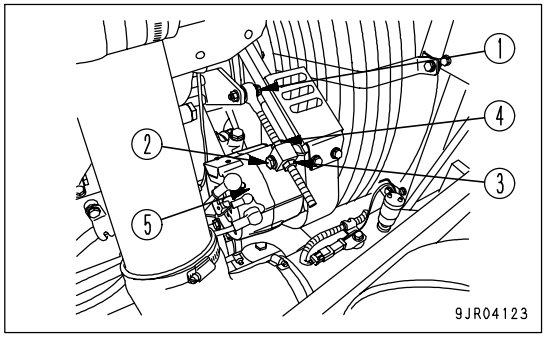

REMARK

- Check each pulley for breakage and wear of the V-groove. In particular, check that the V-belt does not touch the bottom of the V-groove.
- If any abnormality is found, ask your Komatsu distributor for replacement of the pulley.
- If the V-belt is so lengthened that it cannot be adjusted any more or if it has any cuts or cracks, replace it.
- If the V-belt has been replaced with a new part, there will be initial elongation, so inspect and adjust it again after one-hour of operation.
- Be careful not to tighten the belt too much.

https://truckmanualshub.com/

CHECK AIR CONDITIONER COMPRESSOR BELT TENSION, ADJUST

CHECKING

Press the middle of the belt between the air conditioner compressor pulley (1) and drive pulley (2) with the thumb (about 58.8 N {6 kg}).
If deflection (A) is 10 mm, the belt tension is normal.

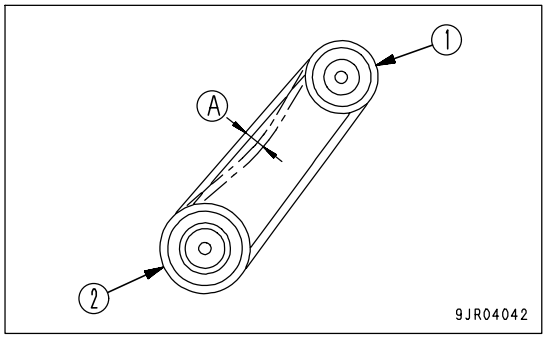

ADJUSTING

1. Loosen bolt (1).
2. Turn nut (2) to adjust so that the belt deflects approx. 10 mm (0.4 in) when pressed with the thumb at a point midway between the air compressor pulley and drive pulley with a force of approx. 58.8 N (6 kg).
3. Tighten bolt (1) and nut (2) to secure the compressor in position.
4. Check each pulley for damage, wear of the V-groove, and wear of the V-belt. In particular, be sure to check that the V-belt is not touching the bottom of the V-groove.
5. If the V-belt is so lengthened that it cannot be adjusted any more or if it has any cuts or cracks, replace it.
6. If the V-belt has been replaced with a new part, there will be initial elongation, so adjust the belt again after operating for 2 to 3 days.

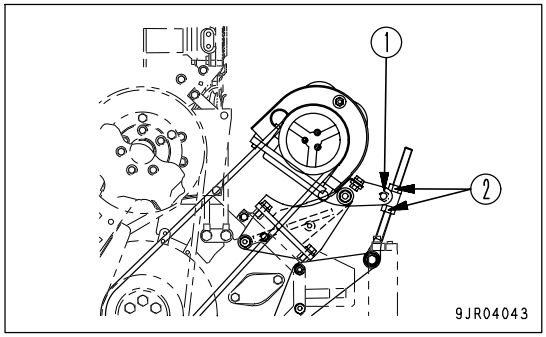

https://truckmanualshub.com/

CHECK FRAME, A-ARM

WARNING

When carrying out inspection of the machine with the dump body raised, always set the dump lever to the HOLD position, lock with the dump lever lock knob, then use the body pivot pin.

1. Wash the frame and A-frame to make it easier to check.
2. Check all parts of the frame and A-frame for damage.
   In particular, check the hatched portions in the diagram, and if any cracks or damage are found, repair the damage.
   Please contact your Komatsu distributor for details of the repair procedure.

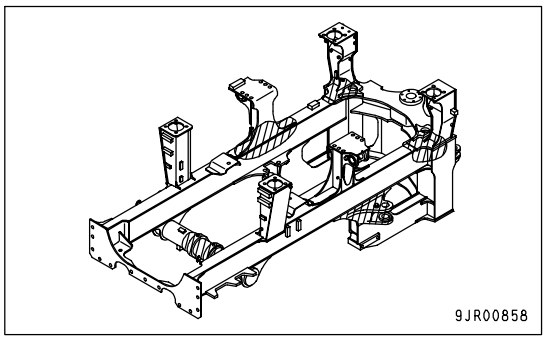

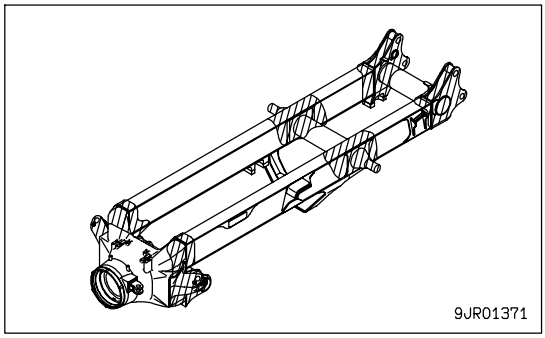

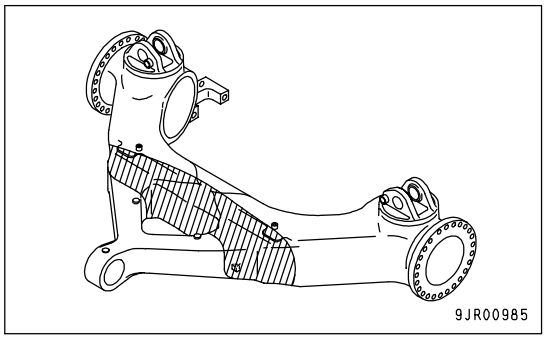

https://truckmanualshub.com/

CHECK BRAKING CAPACITY OF FOOT BRAKE

WARNING

If the machine moves, it will lead to serious injury. If machine begins to move during the inspection of braking capacity, lower the engine speed immediately, set shift lever at N position, and then set parking brake switch at PARKING position.

Check the braking capacity of the foot brake as follows.

1. Stop the machine on flat ground and depress service brake (1).
2. Set shift lever (2) to the D position, gradually raise the engine speed. If the machine does not move even when the engine speed reaches 1440 rpm, it is normal.
3. Lower the engine speed, set shifting lever at N position, and then set parking brake at PARKING position.
   If any abnormality is found, ask your Komatsu distributor for repair.

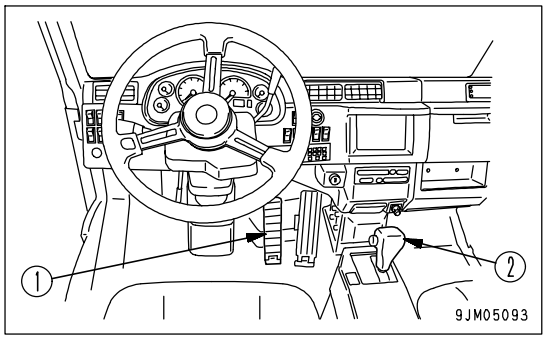

NOTICE

There is danger of damage inside the transmission, so always do this with the shift lever at the "D" position. Do not use any other position.

CHECK BRAKING CAPACITY OF RETARDER BRAKE

WARNING

If the machine moves, it will lead to serious injury. If machine begins to move during the inspection of braking capacity, lower the engine speed immediately, set shifting lever at N position, and then depress the foot brake.

Check the braking capacity of the retarder brake as follows.

1. Stop the machine on flat ground and pull retarder control lever (1) fully.
2. Set shift lever (2) to the D position, gradually raise the engine speed. If the machine does not move even when the engine speed reaches 1440 rpm, it is normal.
3. Lower the engine speed, set gear shift lever at N position. If any problem is found, ask your Komatsu distributor for repair.

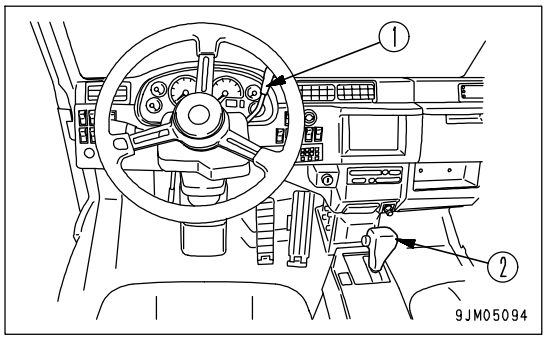

NOTICE

There is danger of damage inside the transmission, so always do this with the shift lever at the "D" position. Do not use any other position.

https://truckmanualshub.com/

CHECK BRAKING CAPACITY OF PARKING BRAKE

WARNING

If the machine moves, it will lead to serious injury. If machine begins to move during the inspection of braking capacity, lower the engine speed immediately, set shifting lever at N position, and then depress the foot brake.

Check the braking capacity of the parking brake as follows.

1. Stop the machine on flat ground and set parking brake switch (1) to PARKING.
2. Set shift lever (2) to the D position, gradually raise the engine speed. If the machine does not move even when the engine speed reaches 1490 rpm, it is normal.
3. Lower the engine speed, set gear shift lever at N position. If any problem is found, ask your Komatsu distributor for repair.

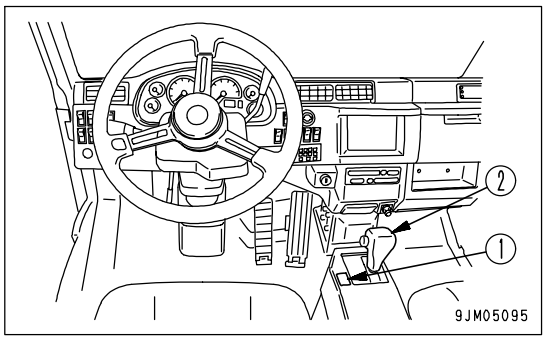

NOTICE

There is danger of damage inside the transmission, so always do this with the shift lever at the "D" position. Do not use any other position.

CHECK WEAR OF PARKING BRAKE PADS

WARNING

Never put any oil or grease on the surface of the pad or disc.

Measure the thickness of the pad, and if it is less than 1.5 mm (0.06 in), contact your Komatsu distributor.

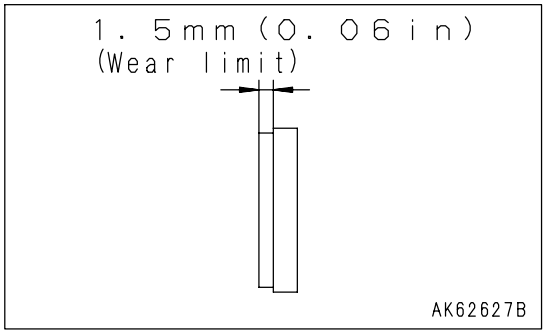

https://truckmanualshub.com/

CHECK OF ACCUMULATOR GAS PRESSURE

For handling of the accumulator, see "HANDLING SUSPENSION CYLINDER, ACCUMULATOR (PAGE 2-33)".

REMARK

If the engine stops during travel, the brake can be operated with the oil pressure in the accumulator temporarily.

CHECK OF FUNCTION

1. Stop the machine on a flat place and set the parking brake switch to the PARKING position.
2. Start the engine and run it at medium speed for 1 minute, and then stop it.
3. Turn the starting switch to the ON position and depress the brake pedal several times. After the brake pedal is depressed some times, the brake oil pressure caution lamp lights up.
   - If the brake oil pressure caution lamp lights up when the brake pedal is depressed 4 times or less, the gas pressure in the accumulator may be low. Ask your Komatsu distributor for inspection.
   - If the brake oil pressure caution lamp does not light up when the brake pedal is depressed 5 times, the gas pressure in the accumulator is normal.

REMARK

Check the function within 5 minutes after stopping the engine. If the engine is kept stopped, the gas pressure in the accumulator lowers and cannot be checked.

https://truckmanualshub.com/

EVERY 500 HOURS SERVICE

Maintenance for every 50 and 250 hours service should be carried out at the same time.

CHANGE OIL IN ENGINE OIL PAN, REPLACE ENGINE OIL FILTER CARTRIDGE

WARNING

- **The parts and oil are at high temperature after the engine is stopped, and may cause burns. Wait for the temperature to go down before starting the work.**

- Refill capacity: 37 liters (9.78 US gal)
- Prepare a filter wrench

1. Remove the bolts and cover (1).
2. Place a drain oil container just under the drain valve.

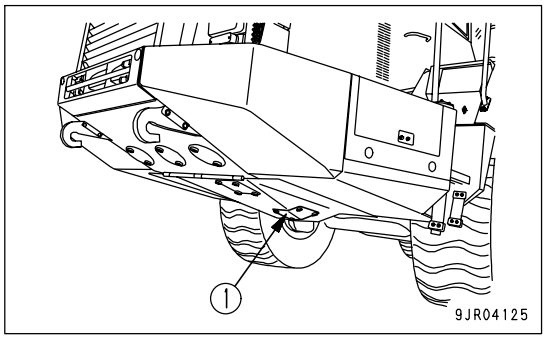

3. Remove drain plug (2), then loosen drain valve (3) slowly to avoid getting oil on yourself, and drain the oil. Be careful not to loosen the drain valve too far and deform the stopper pin inside the valve.
4. Check the drained oil, and if there are excessive metal particles or foreign material, please contact your Komatsu distributor.
5. Tighten drain valve (3) and drain plug (2).
   Tighten both of drain plug (2) and drain valve (3) to 68.6 ± 9.8 Nm {7 ± 1 kgm, 50.6 ± 7.2 lbft}.

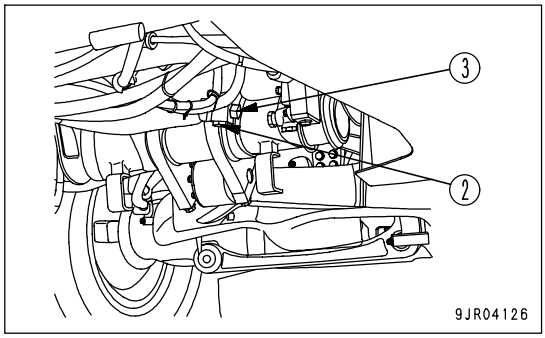

6. Using the filter wrench, turn filter cartridge (4) to the left to remove it.
   When doing this, to prevent getting oil on yourself, do not carry out this operation from immediately under the cartridge.
   In particular, if this operation is carried out immediately after stopping the engine, a large amount of oil will come out, so wait for 10 minutes before starting the operation.
7. Clean the filter holder, fill the new filter cartridge with oil, coat the packing face and thread with oil (or coat thinly with grease), then install the filter cartridge.

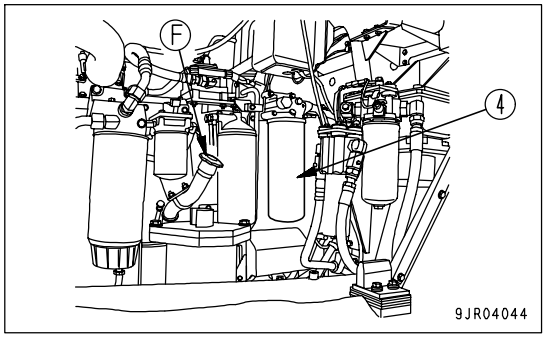

8. Install the filter cartridge. When doing this, be careful not to damage the outside cylinder of the cartridge.
   When installing the filter cartridge, tighten until the packing face is in contact with the filter holder, then tighten a further 3/4 to 1 turn.
9. Pour in the specified amount of engine oil from oil filler (F).
10. Run the engine for a short time at idle, then check the oil if it is filled up to a specified level. For details, see "CHECK OIL LEVEL IN ENGINE OIL PAN, ADD OIL (PAGE 3-74)".

https://truckmanualshub.com/

REPLACE FUEL PREFILTER CARTRIDGE

WARNING

- **After the engine has been operated, all parts are at high temperature, so do not replace the filter immediately. Wait for all parts to cool down before starting the operation.**
- **High pressure is generated inside the engine fuel piping system when the engine is running.**
  When replacing the filter, wait for at least 30 seconds after stopping the engine to let the internal pressure go down before replacing the filter.
- **Do not bring any fire or flame close.**

NOTICE

- **Genuine Komatsu fuel filter cartridges use a special filter that has highly efficient filtering ability. When replacing the filter cartridge, always use a genuine Komatsu part.**
- **The common rail fuel injection system used on this machine consists of more precise parts than the conventional injection pump and nozzle.**
  If any part other than a genuine Komatsu filter cartridge is used, dust or dirt may get in and cause problems with the injection system. Always avoid using substitute parts.
- **When carrying out inspection or maintenance of the fuel system, pay more attention than normal to the entry of dirt. If dirt is stuck to any part, use fuel to wash it off completely.**

- Container to catch the oil
- Prepare a filter wrench

1. Set an oil receiving container under the fuel prefilter cartridge.
2. Turn water separator cup (2) installed to the bottom of filter cartridge (1) to the left and remove it. (Use this cup again.)
3. Using a filter wrench, turn filter cartridge (1) counterclockwise to remove it.
4. Install cup (2) removed before to the underside of the new fuel prefilter cartridge. (At this time, be sure to replace the O-ring with new one.)
   - Tightening torque of cup: 10 Nm {1.0 kgm, 7.2 lbft}
5. Clean the filter holder.

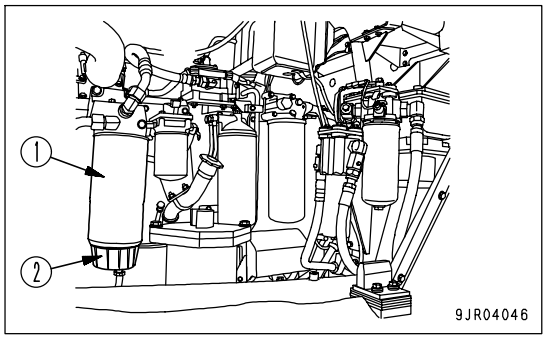

NOTICE

When filling the filter cartridge with fuel, carry out the filling operation with cap (A) fitted.
Cap (A) acts to prevent the entry of dirt or dust into the filter cartridge.

6. Fill the filter cartridge with clean fuel through the 8 small holes (B) in the new filter cartridge.
7. Coat the packing surface of the filter cartridge with oil.

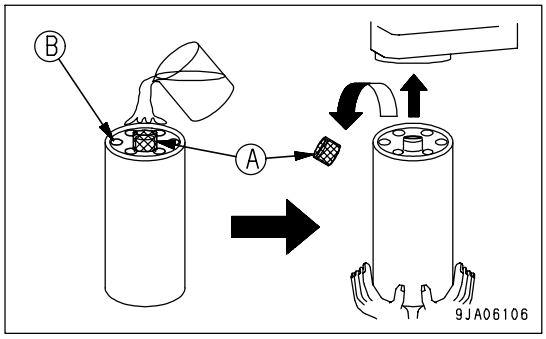

8. Remove filter cartridge cap (A) and install to the filter holder.

https://truckmanualshub.com/

9. When installing, tighten until the packing surface contacts the seal surface of the filter holder, then tighten it 3/4 of a turn.
   If the filter cartridge is tightened too far, the packing will be damaged and this will lead to leakage of fuel. If the filter cartridge is too loose, fuel will also leak from the packing, so always tighten the correct amount.
   - When tightening with a filter wrench, be extremely careful not to dent or damage the filter.
10. Check that the drain plug at the bottom of the water separator cup is tightened securely.
    Tightening torque: 0.2 to 0.45 Nm (0.02 to 0.046 kgm, 0.1 to 0.3 lbft)
11. After replacing the fuel main filter cartridge (at intervals of 1,000 hours), bleed air. For details, see "REPLACE FUEL MAIN FILTER CARTRIDGE (PAGE 4-60)". Do not add fuel to the fuel main filter cartridge, however.
12. Start the engine, check that there is no leakage of fuel from the filter seal surface or water separator mounting surface, then run for approx. 10 minutes at low idling.

LUBRICATE CAB MOUNT PIN (LEFT AND RIGHT: 1 PLACE EACH)

1. Stop the engine.
2. Using a grease pump, pump in grease through the grease fittings shown by arrows.
3. After greasing, wipe off any old grease that was pushed out.

   Carry out the greasing operation every day when operating in places where the grease flows out easily, such as when traveling through mud or water.

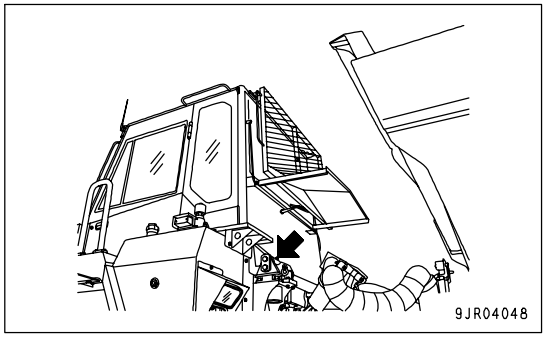

CHECK OIL LEVEL IN FINAL DRIVE CASE, ADD OIL

WARNING

- **The parts and oil are at high temperature after the engine is stopped, and may cause serious burns. Wait for the temperature to go down before starting the operation.**
- **If there is still pressure remaining inside the case, the oil or plug may fly out. Turn the plug slowly to release the pressure, then remove it carefully.**

1. Stop the machine so that the TOP casting mark is at the top and drain plug (P) is at the bottom.
2. Remove plug (G) and check that the oil level is near the bottom of the plug hole.
3. If the oil level is too low, add oil through the plug hole until the oil overflows.
4. Repeat the procedure in Steps 1 - 3 and check the oil level and add oil to all the final drive cases (front, center, rear).

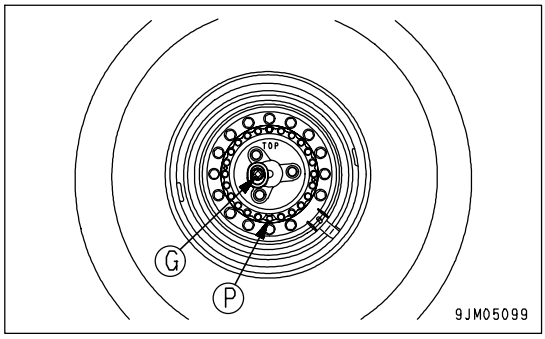

https://truckmanualshub.com/

CHECK OIL LEVEL IN DIFFERENTIAL CASE, ADD OIL

WARNING

- **The parts and oil are at high temperature after the engine is stopped, and may cause burns.Wait for the temperature to go down before starting the work.**
- **When removing the plug, oil may spurt out, so turn the plug slowly to release the internal pressure, then remove it carefully.**

1. Remove plug (G) and check that the oil level is near the bottom of the plug hole.
2. If the oil level in the front differential case is low, add oil through oil filler port (F) until oil overflows from the plug hole.
3. If the oil level in the center or rear differential case is low, add oil through the plug hole until oil overflows from the plug hole.

Front

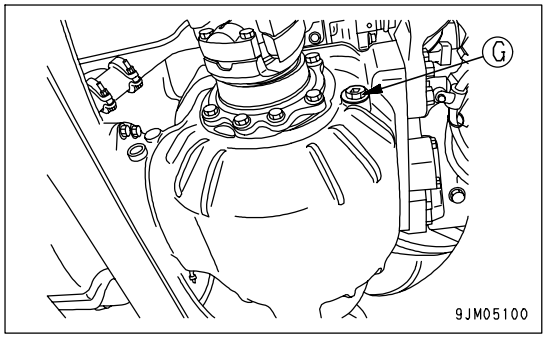

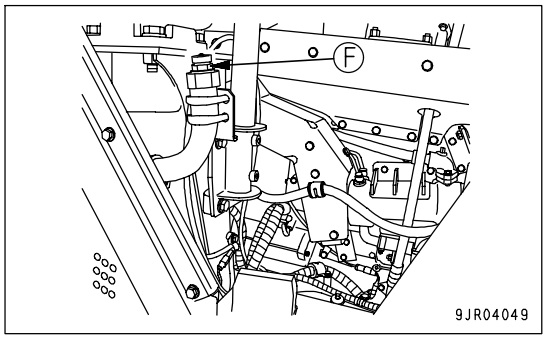

Center

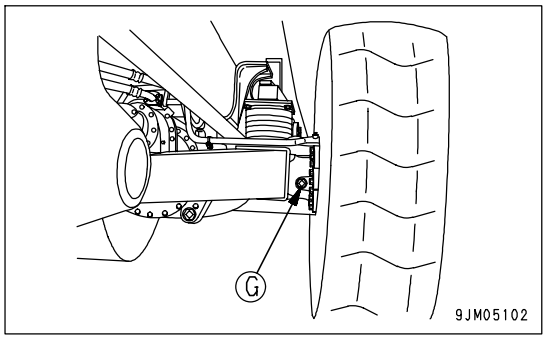

https://truckmanualshub.com/

Rear

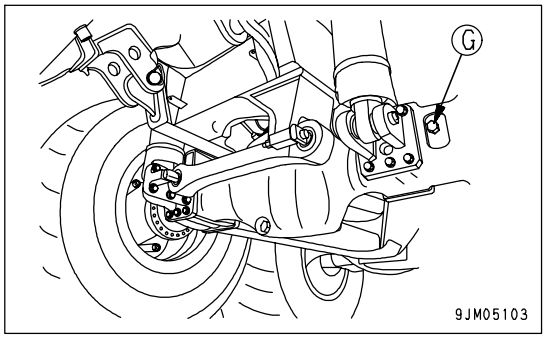

CLEAN, CHECK RADIATOR FINS AND AFTER COOLER FINS

WARNING

If compressed air scattered around dust and debris, there is danger of injury. Always wear protective equipment such as protective glasses and mask.

If the radiator fins become clogged or bent, this may cause overheating of the engine, so always clean or carry out inspection and take the necessary actions.

- Cleaning can be carried out by using jets of air, steam, or water, but be careful not to let the nozzle contact the fin.
- When using compressed air or steam, keep the nozzle at a right angle to the radiator and after cooler.
- Examine the rubber hose, and if any cracks or brittle places are found, replace the hose. In addition, check also for loose hose clamps.

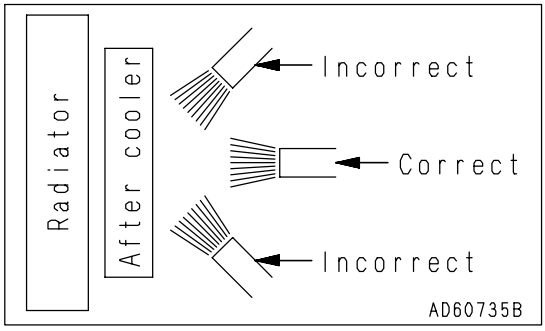

NOTICE

If steam jet nozzle (1) is brought too close to fins (2), the fins can be damaged, so keep a good distance in between when cleaning.

Use the following values as a benchmark.

- **Jet pressure: Lower than 9.8 MPa (100 kg/cm^2)**
- **Nozzle diameter: Less than 2 mm (0.08 in)**
- **Distance between nozzle and fin (A): More than 100 mm (4 in)**

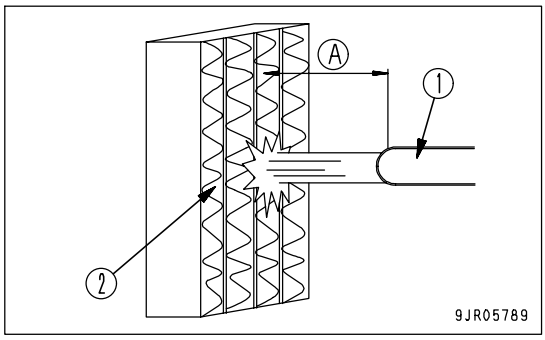

https://truckmanualshub.com/

RECOVER OIL LEAKING FROM FLOATING SEAL

There are 4 oil suction openings. Collect all oil with the hand pump attached to the machine.

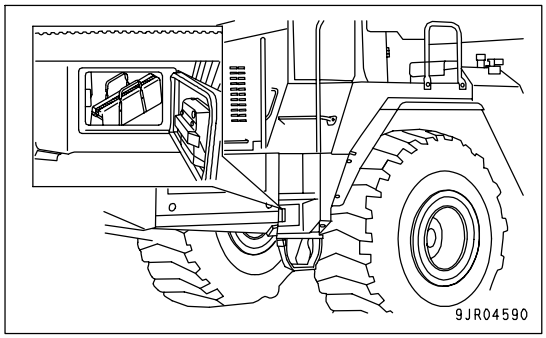

REMARK

If oil is flowing out of the overflow hose, collect the oil, even if before 500 hours.

1. Remove the cap of an oil suction opening.
2. Connect the coupler (female) of the attached hand pump to the coupler (male) of the suction opening.
3. Put the oil outlet hose of the hand pump in the oil receiving container.
4. Operate the hand pump at least 10 times to pump up the oil.

Front axle (left)

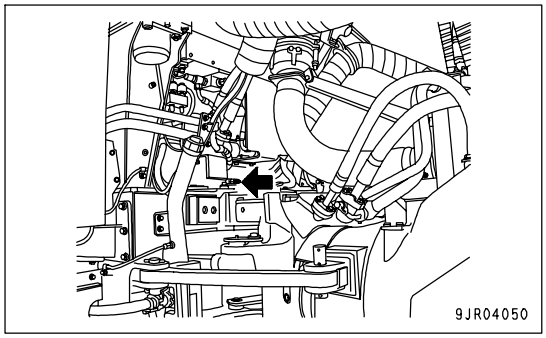

Front axle (right)

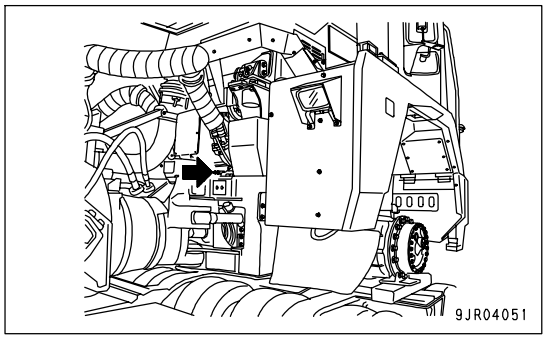

https://truckmanualshub.com/

Center axle (left, right)

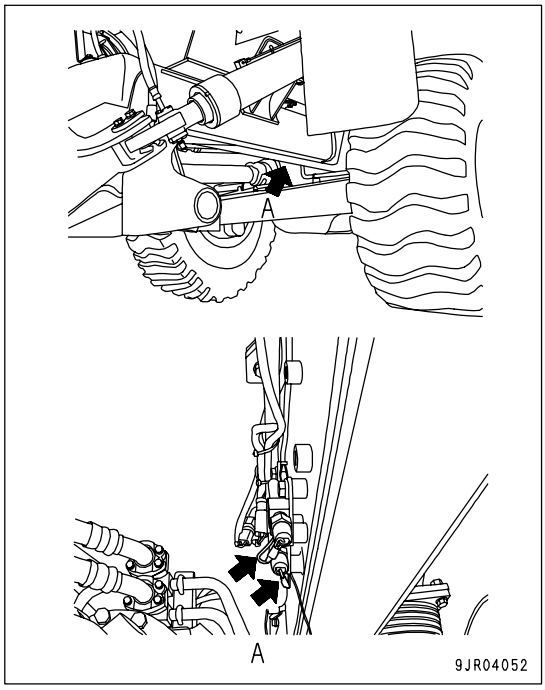

https://truckmanualshub.com/

EVERY 1000 HOURS SERVICE

Maintenance for every 50, 250 and 500 hours should be carried out at the same time.

REPLACE FUEL MAIN FILTER CARTRIDGE

WARNING

- **After the engine has been operated, all parts are at high temperature, so do not replace the filter immediately. Wait for all parts to cool down before starting the operation.**
- **High pressure is generated inside the engine fuel piping system when the engine is running.**
  When replacing the filter, wait for at least 30 seconds after stopping the engine to let the internal pressure go down before replacing the filter.
- **Do not bring any fire or flame close.**

NOTICE

- **Genuine Komatsu fuel filter cartridges use a special filter that has highly efficient filtering ability. When replacing the filter cartridge, always use a genuine Komatsu part.**
- **The common rail fuel injection system used on this machine consists of more precise parts than the conventional injection pump and nozzle.**
  If any part other than a genuine Komatsu filter cartridge is used, dust or dirt may get in and cause problems with the injection system. Always avoid using substitute parts.
- **When carrying out inspection or maintenance of the fuel system, pay more attention than normal to the entry of dirt. If dirt is stuck to any part, use fuel to wash it off completely.**

- Prepare a filter wrench

After replacing the fuel pre-filter cartridge, replace the fuel main filter cartridge.

1. Set the container to catch the fuel under the filter cartridge.
2. Using a filter wrench, turn filter cartridge (1) counterclockwise on remove it.
3. Clean the filter holder, coat the packing surface of the new filter cartridge thinly with oil, then install the filter cartridge to the filter holder.

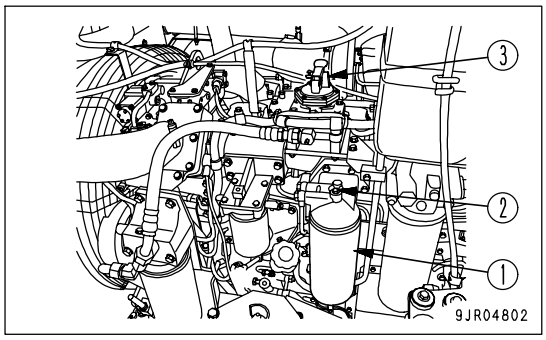

NOTICE

Do not add fuel to the fuel main filter cartridge.

4. When installing, tighten until the packing surface contacts the seal surface of the filter holder, then tighten it 3/4 of a turn.
   If the filter cartridge is tightened too far, the packing will be damaged and this will lead to leakage of fuel. If the filter cartridge is too loose, fuel will also leak from the packing, so always tighten the correct amount.
   - When tightening with a filter wrench, be extremely careful not to dent or damage the filter.
5. After replacing filter cartridge (1), loosen air bleed plug (2).
   Do not loosen the plug at the filter stand of the fuel prefilter. If it is loosened, air is not bled.
6. Fill the fuel tank with fuel.

https://truckmanualshub.com/

7. Loosen wing bolt (4) which is fixing lever (5) of priming pump (3). Move lever (5) up and down to let fuel flow out of air bleeding plug (2) until bubbles do not come out any more.
8. Tighten air bleeding plug (2) and then tighten wing bolt (4) of priming pump (3) securely to lock lever (5).
   - Tightening torque for air bleeding plug
     7.8 to 9.8Nm{0.8 to 1kgm}
   - Tightening torque for wing screw
     6.9 to 12.7Nm{0.7 to 1.3kgm}
9. After replacing the filter cartridge, start the engine and check that there is no leakage of fuel from the filter seal surface. If there is any leakage of fuel, check the tightening of the filter cartridge. If there is still leakage of fuel, follow Step 1 and 2 to remove the filter cartridge, then check the packing surface for damage or foreign material. If any damage or foreign material is found in the packing, replace the cartridge with a new part, then repeat Steps 3 - 9 to install the filter cartridge.

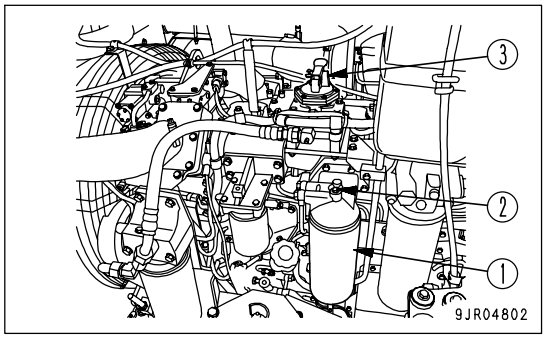

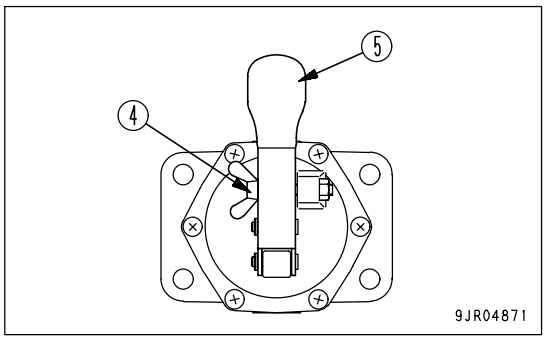

REPLACE CORROSION RESISTOR CARTRIDGE

WARNING

All the engine parts are at high temperature after the engine has been operated, so never replace the cartridge immediately after finishing operations.
Wait for the oil to cool down before replacing the cartridge.

- Prepare a filter wrench

1. Turn valve (1) at the top of the corrosion resistor to close it.
2. Set the container to catch the water under the cartridge.
3. Using a filter wrench, remove cartridge (2).
4. Clean the filter holder, coat the steel surface of the new filter cartridge with clean engine oil, then install it.
5. When installing, tighten until the gasket contacts the seal surface of the filter holder, then tighten a further 2/3 turns.
   If the filter cartridge is tightened too far, the gasket will be damaged and this will lead to leakage of water. If the filter is too loose, water will also leak from the gap at the gasket, so always tighten the correct amount.
6. Turn valve (1) to open it.
7. After replacing the cartridge, start the engine and check that there is no leakage of water from the filter seal surface. If there is any leakage of water, check the tightening of the filter cartridge.

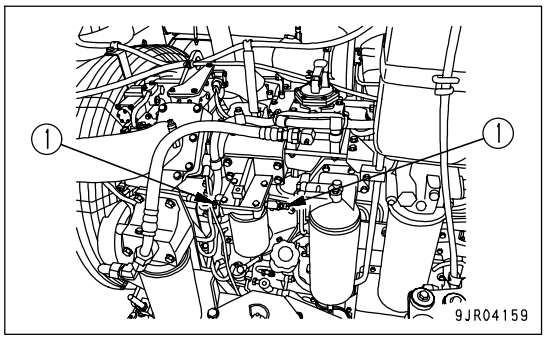

https://truckmanualshub.com/

REPLACE TRANSMISSION FILTER ELEMENT

WARNING

- **The parts and oil are at high temperature immediately after the engine is stopped, and may cause burns. Wait for the temperature to go down before starting the work.**
- **When removing the oil filler cap, turn it slowly to release the internal pressure, then remove it.**

VALVE SIDE

- Prepare a filter wrench

1. Set the container to catch the oil under the filter case.
2. Remove drain plug (1) at the filter head, drain the oil, then tighten the plug again.
3. Using a filter wrench, turn filter cartridge (2) to the left to remove it.
4. Clean the filter head, coat the seal surface of the new filter cartridge thinly with clean oil, then install it.
   Tightening torque: 49 to 59 Nm (5 to 6 kgm, 36.2 to 43.4 lbft)

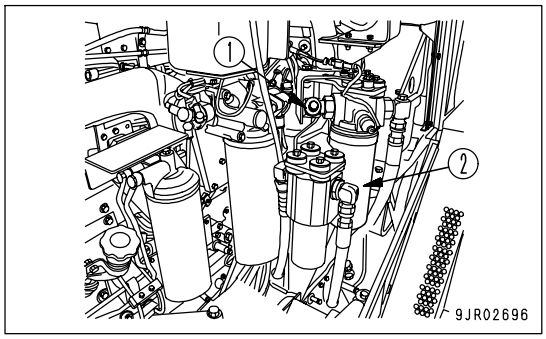

5. Add oil. For details, see "CHECK OIL LEVEL IN TRANSMISSION CASE, ADD OIL (PAGE 3-75)".

BRAKE COOLING SIDE

1. Remove bolt (1), then remove cover (2).
2. Set the container to catch the oil directly under the drain plug (P).
   Remove drain plug (P), drain the oil, then tighten the plug again.
3. Take out the element, then clean the inside of the case, the strainer at the bottom of the case, and the removed parts.
4. Install the new element, then install cover (2) with bolt (1).
5. Add oil. For details, see "CHECK OIL LEVEL IN TRANSMISSION CASE, ADD OIL (PAGE 3-75)".
6. Remove the cap installed to bleeder screw (3), then insert a vinyl hose. Prepare a container with oil in it and insert the other end of the hose approx. 50 mm (2.0 in) below the surface of the oil. (Use any commercially available vinyl hose.)
7. Start the engine, loosen bleeder screw (3) approx. 3/4 turns, and keep the engine running at idling until fewer bubbles come out from the vinyl hose.
8. Tighten bleeder screw (3) properly, then install the cap.
9. Check that the oil level in the transmission case is up to the specified level.
10. Add oil if the level is low.

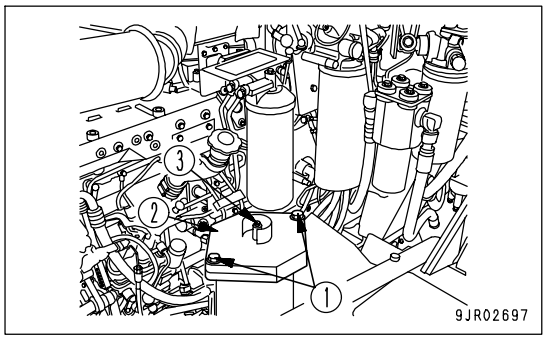

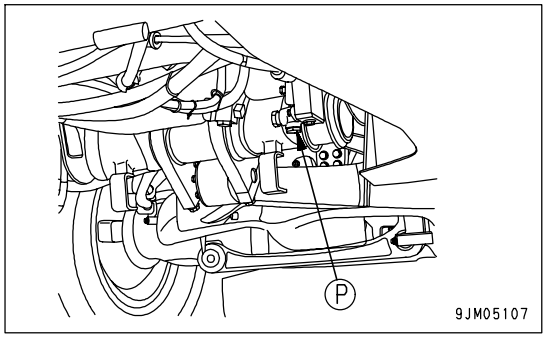

REMARK

When the air is bled from inside the case, the transmission oil level becomes stable.

https://truckmanualshub.com/

CHANGE OIL IN TRANSMISSION CASE

WARNING

- **The parts and oil are at high temperature immediately after the engine is stopped, and may cause burns. Wait for the temperature to go down before starting the work.**
- **When removing the oil filler cap, turn it slowly to release the internal pressure, then remove it.**

- Refill capacity: 77.5 liters (20.48 US gal) (including oil in the brake oil tank and each filter case)

Carry out the following items at the same time in order to drain oil completely.
- REPLACE TRANSMISSION FILTER ELEMENT (PAGE 4-62)
- CHANGE OIL IN TRANSMISSION CASE (PAGE 4-63)
- CHANGE OIL IN BRAKE OIL TANK, REPLACE BRAKE OIL FILTER ELEMENT (PAGE 4-65)

1. Set the container to catch the oil directly under the drain plug (P).
   Remove 2 drain plugs (P), drain the oil, then tighten the plug again.

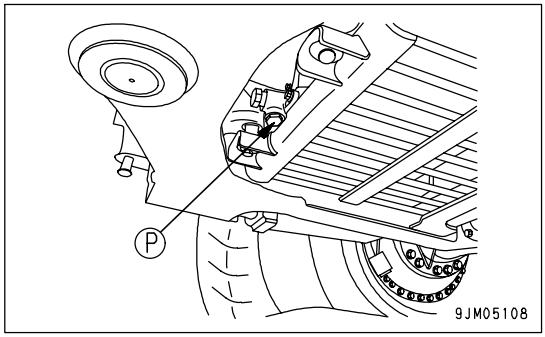

REMARK
When changing oil in the brake oil tank and replacing the brake filter element, carry out steps 1 to 5 mentioned in "CHANGE OIL IN BRAKE OIL TANK, REPLACE BRAKE OIL FILTER ELEMENT (PAGE 4-65)".

NOTICE
Do not start up the engine without the transmission being filled with oil. If the engine is started up while the transmission is empty or short of oil, the transmission hydraulic pump will suffer damage.

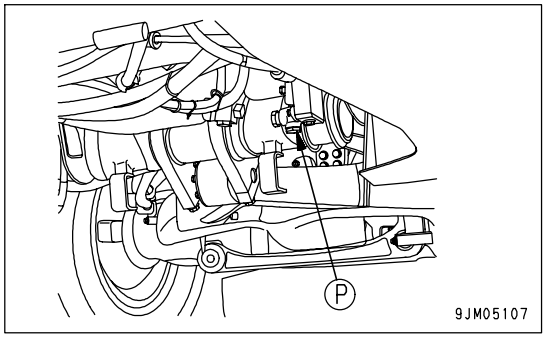

2. Before starting the engine, add 80 liters (21.14 US gal) of oil through oil filler port (F).
   When oil is added, the level will temporarily go above the oil level on sight gauge (G), but this does not indicate any abnormality.
3. Start the engine and run at low idling.
4. Add oil through oil filler port (F) until the oil level is between the H and L marks on sight gauge (G).

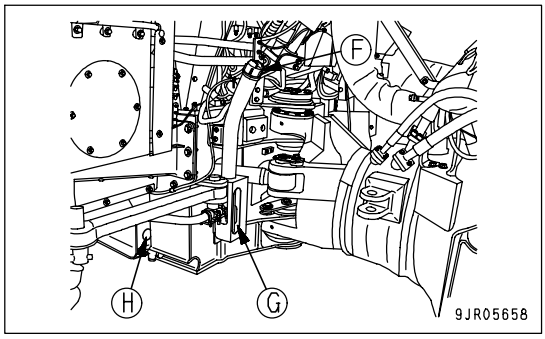

https://truckmanualshub.com/

Make sure that the oil level in the brake oil tank does not go down below the mark in the sight gauge (H) while the engine is running at low idling. If the oil level goes down below (H) mark, stop the engine and raise the oil level in the brake oil tank.

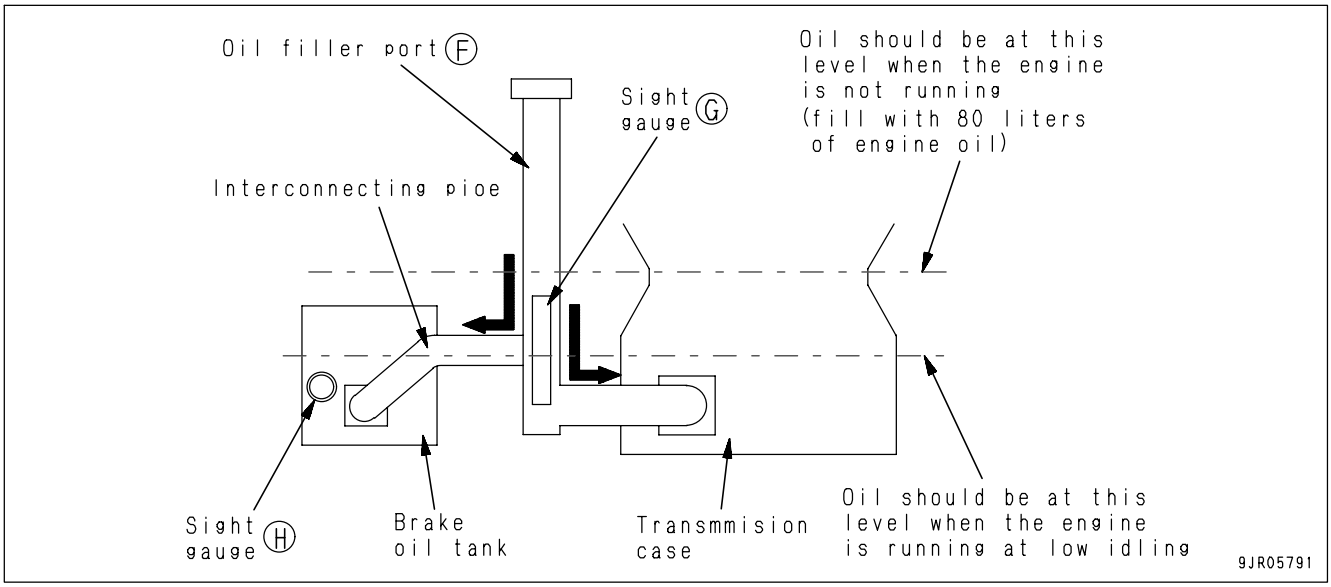

5. Remove the cap from bleeder screw (1) and insert a vinyl hose. (Use a commercially available vinyl hose.)
6. Put the other end of the vinyl hose approx. 50 mm into a container of oil.
7. Loosen bleeder screw (1) approx. 3/4 turns and run the engine at low idling until no more bubbles come out from the vinyl hose.
8. When no more bubbles come out, tighten bleeder screw (1) securely, remove the vinyl hose, then install the cap.

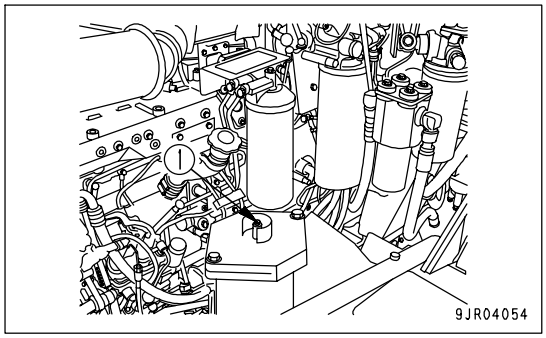

9. Carry out the warming-up operation of the engine until the torque converter oil temperature gauge goes above 40°.
10. When the torque converter oil temperature gauge rises to 40°, bleed the air from the brakes.
    Front brake:See "BLEED AIR FROM FRONT BRAKE (PAGE 4-32)".
    Center brake:See "BLEED AIR FROM CENTER BRAKE (PAGE 4-33)".

NOTICE

- **Do not attempt to use the oil drained during air bleeding again. Such a practice can cause damage on the machine's tool and equipment.**
- **Make sure that the oil level in the brake oil tank does not go down below (H) level in the sight gauge during air bleeding. If it does, the brake oil pump could be damaged.**

11. After finishing air bleeding, stop the engine (for 2 to 3 minutes), and adjust the oil level so that it reaches the specified level. For details, see "CHECK OIL LEVEL IN TRANSMISSION CASE, ADD OIL (PAGE 3-75)".

https://truckmanualshub.com/

CHANGE OIL IN BRAKE OIL TANK, REPLACE BRAKE OIL FILTER ELEMENT

WARNING

- **The parts and oil are at high temperature immediately after the engine is stopped, and may cause burns. Wait for the temperature to go down before starting the work.**
- **When removing the oil filler cap, turn it slowly to release the internal pressure, then remove it.**

- Prepare a filter wrench
- Refill capacity: 77.5 liters (20.48 US gal) (including oil in the transmission case and each filter case)

Carry out the following items at the same time in order to drain oil completely.
- REPLACE TRANSMISSION FILTER ELEMENT (PAGE 4-62)
- CHANGE OIL IN TRANSMISSION CASE (PAGE 4-63)
- CHANGE OIL IN BRAKE OIL TANK, REPLACE BRAKE OIL FILTER ELEMENT (PAGE 4-65)

1. Depress the brake pedal at least 20 times to reduce the pressure inside the brake control accumulator to 0.
2. Set the container to catch the oil directly under drain plug (P). Remove drain plug (P), drain the oil, then tighten the plug again.

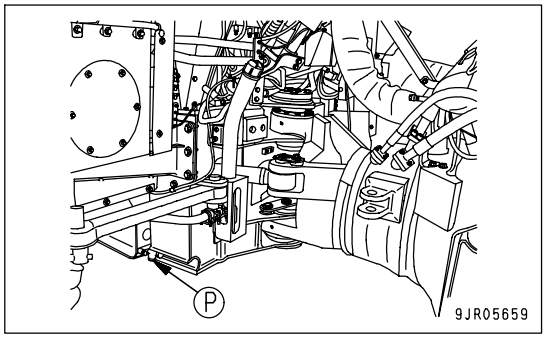

3. Set a container to catch the oil immediately under the filter case (1), then remove filter case (1).

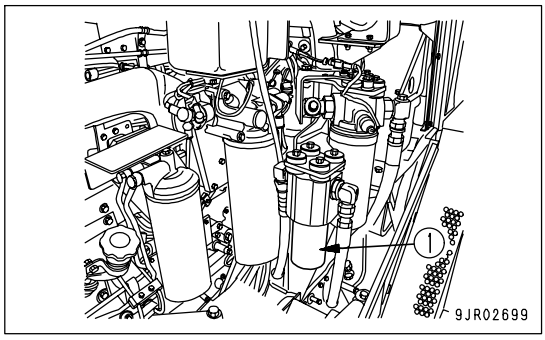

4. Take out the element and wash the inside of the filter case. Replace O-ring (2) and backup ring (3) on the filter case with new parts, coat thinly with clean oil, then install.
5. Assemble a new element in the filter case, coat the O-ring of the element thinly with clean oil, then install.
   Tightening torque: 78.4 to 98 Nm
   {8 to 10 kgm, 57.9 to 72.3 lbft}

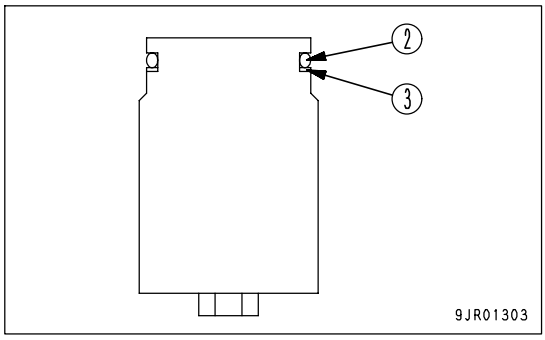

https://truckmanualshub.com/

REMARK
Steps 6 to 8 are identical with those in "CHANGE OIL IN TRANSMISSION CASE (PAGE 4-63)".

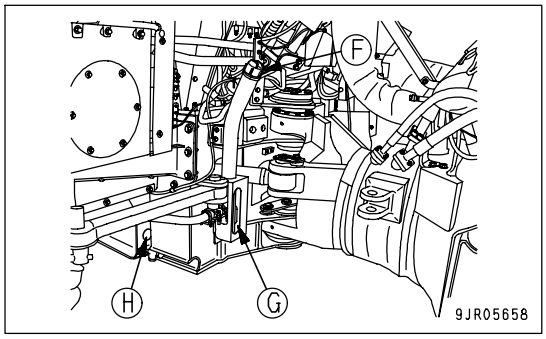

NOTICE
Do not start up the engine without the transmission being filled with oil. If the engine is started up while the transmission is empty or short of oil, the transmission hydraulic pump will suffer damage.

6. Before starting the engine, add 80 liters (21.14 US gal) of oil through oil filler port (F).
   When oil is added, the level will temporarily go above the oil level on sight gauge (G), but this does not indicate any abnormality.
7. Start the engine and run at low idling.
8. Add oil through oil filler port (F) until the oil level is between the H and L marks on sight gauge (G).

   Make sure that the oil level in the brake oil tank does not go down below the mark in the sight gauge (H) while the engine is running at low idling. If the oil level goes down below (H) mark, stop the engine and raise the oil level in the brake oil tank.

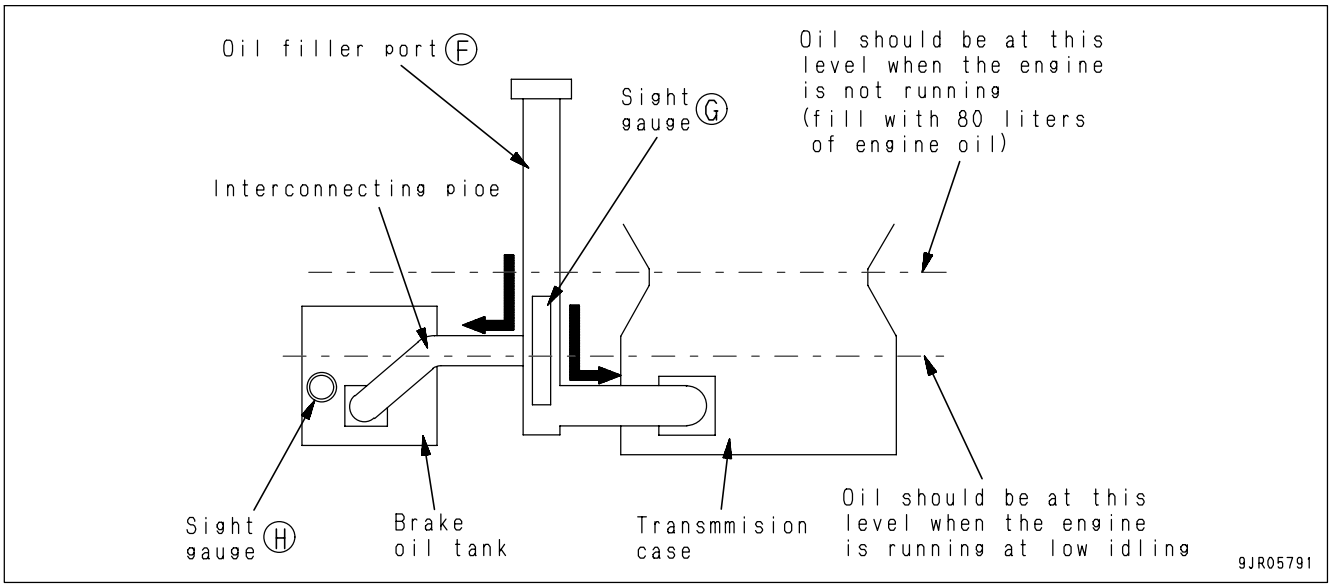

REMARK
Steps 9 through 11 are identical with those in "CHANGE OIL IN TRANSMISSION CASE (PAGE 4-63)".

9. Carry out the warming-up operation of the engine until the torque converter oil temperature gauge goes above 40°.
10. When the torque converter oil temperature gauge rises to 40°, bleed the air from the brakes.
    Front brake:See "BLEED AIR FROM FRONT BRAKE (PAGE 4-32)".
    Center brake:See "BLEED AIR FROM CENTER BRAKE (PAGE 4-33)".

NOTICE
- **Do not attempt to use the oil drained during air bleeding again. Such a practice can cause damage on the machine's tool and equipment.**
- **Make sure that the oil level in the brake oil tank does not go down below (H) level in the sight gauge during air bleeding. If it does, the brake oil pump could be damaged.**

https://truckmanualshub.com/

11. After finishing air bleeding, stop the engine (for 2 to 3 minutes), and adjust the oil level so that it reaches the specified level. For details, see "CHECK OIL LEVEL IN TRANSMISSION CASE, ADD OIL (PAGE 3-75)".

https://truckmanualshub.com/

LUBRICATION

1. Using a grease pump, pump in grease through grease fittings marked by arrows.
2. After greasing, wipe off any old grease that was pushed out.

Carry out the greasing operation every day when operating in places where the grease flows out easily, such as when traveling through mud or water.

(1) Transmission front mount (1 place)

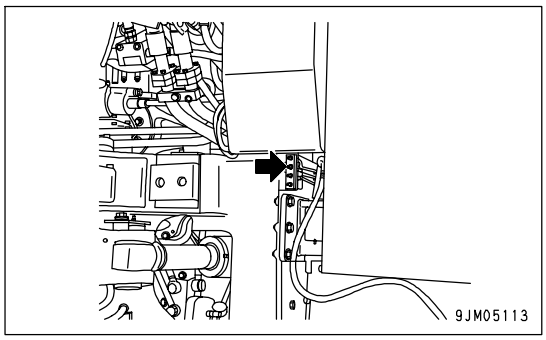

(2) Transmission rear mount (1 place)

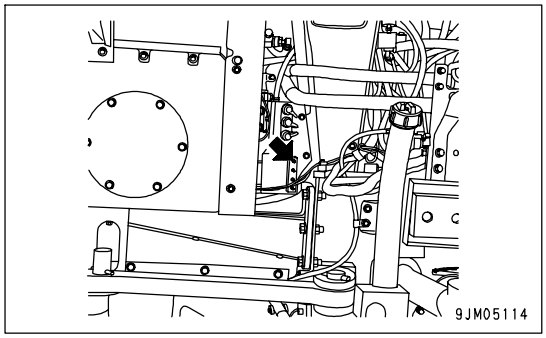

(3) Center hinge pin (2 places)

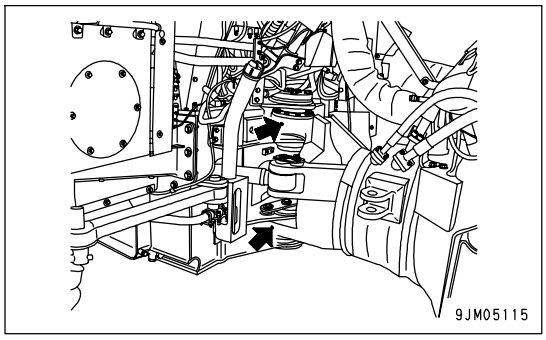

(4) Parking brake (3 places)

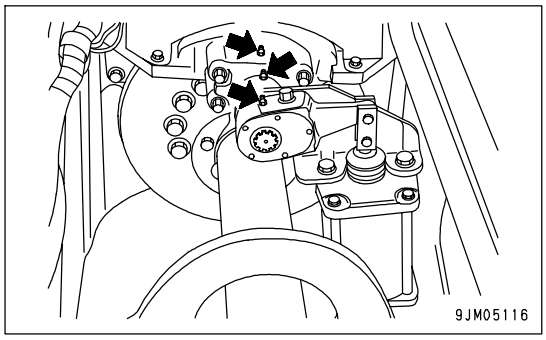

https://truckmanualshub.com/

CHECK WEAR OF BRAKE DISC

WARNING

- **Carry out this check when the brake oil temperature is below 60°C (140°F).**
- **If the disc wear approaches the wear limit, check the condition frequently, regardless of the maintenance interval. In addition, check the retarder capacity carefully.**

1. Stop the machine on level ground, set the parking brake switch to the PARKING position, then check that the other brakes are not applied before starting inspection.
2. Turn the starting switch ON and check that the retarder oil pressure caution lamp is out.
   If the retarder oil pressure caution lamp is lighted up, start the engine, run the engine at 2000 rpm, and if the lamp goes out, turn the starting switch OFF.
3. Remove cap nut (1).

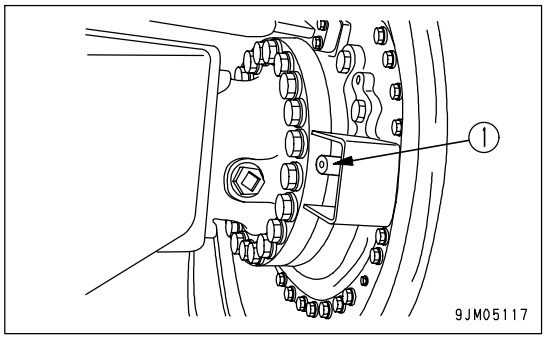

4. Depress the brake pedal, keep it depressed, and push in the rod (2) of the gauge until contacts the piston.
5. If mark (3) at position "A" of rod (2) enters beyond guide end face (4), it means that the disc has reached the wear limit.
   For the front brake, use the mark at position "A", and for the center brake, use the mark at position "B".
   If the disc has reached the wear limit, please contact your Komatsu distributor for inspection and maintenance.
6. Tighten cap nut (1) removed in Step 3.
   Tightening torque: 14.7 to 19.6 Nm
   (1.5 to 2.0 kgm, 10.8 to 14.5 lbft)

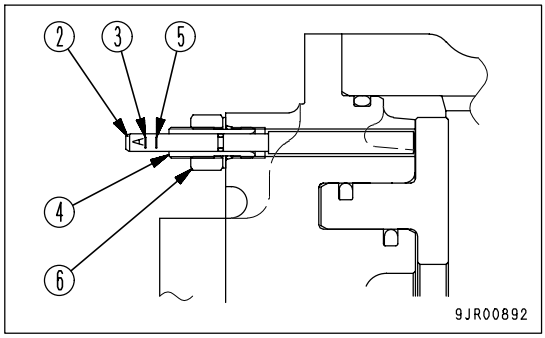

REMARK

- With new machines, the position of the guide is adjusted so that mark (5) comes to end face (4) of the guide, so do not loosen locknut (6) except when replacing the disc.
- Carry out the operation with two workers. One worker depresses the brake pedal and the other pushes in the rod.
- If the rod is pushed in when the engine is running, the rod will be pushed back by the brake cooling oil pressure, so always carry out this operation with the engine stopped.
- There are marks on the rod at three places (A, B, C), but for the front brake, use the mark at position "A", and for the center brake, use the mark at position "B".

https://truckmanualshub.com/

CHECK OF ENGINE AIR INTAKE PIPING CLAMPS FOR LOOSENESS

Check the clamps between the air cleaner, turbocharger, aftercooler, and engine for looseness. If any clamp is loosened, retighten it.

Tightening torque of clamp (1): 8.8 ± 0.5 Nm {0.9 ± 0.05 kgm, 6.5 ± 0.4 lbft}
Tightening torque of clamp (2): 9.8 ± 0.5 Nm {1.0 ± 0.05 kgm, 7.2 ± 0.4 lbft}

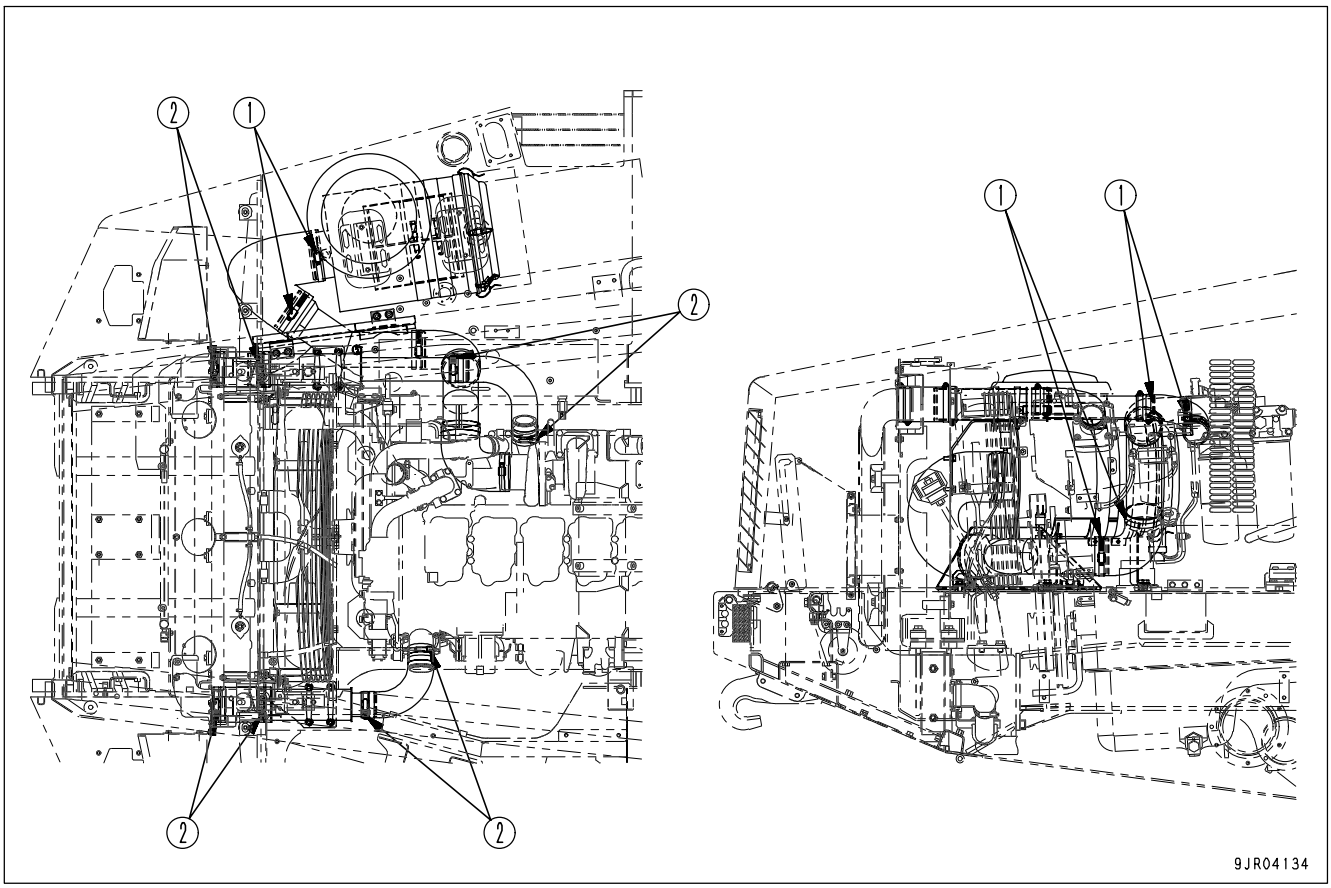

https://truckmanualshub.com/

EVERY 2000 HOURS SERVICE

Maintenance for every 50, 250, 500 and 1000 hours service should be carried out at the same time.

CHANGE OIL IN FINAL DRIVE CASE

WARNING

- **The parts and oil are at high temperature after the engine is stopped, and may cause serious burns. Wait for the temperature to go down before starting the operation.**
- **If there is still pressure remaining inside the case, the oil or plug may fly out. Turn the plug slowly to release the pressure, then remove it carefully.**

- Refill capacity: Front left, right 4.0 liters (1.06 US gal) each
  Center left, right 3.5 liters (0.92 US gal) each
  Rear left, right 4.5 liters (1.19 US gal) each

1. Stop the machine so that the TOP casting mark is at the top and drain plug (P) is at the bottom.
2. Remove drain plug (P), drain the oil, then tighten the plug again.
3. Add oil through the hole for plug (G) to the specified level.
4. After adding oil, check that the oil is at the specified level. See "CHECK OIL LEVEL IN FINAL DRIVE CASE, ADD OIL (PAGE 4-55)".
5. Repeat the procedure in Steps 1 - 4 and change the oil to all the final drive cases (front, center, rear).

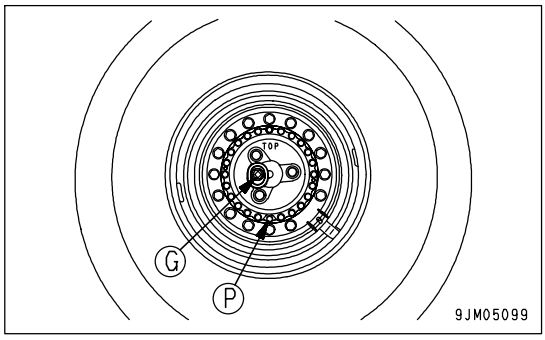

https://truckmanualshub.com/

CHANGE OIL IN DIFFERENTIAL CASE

WARNING

- **The parts and oil are at high temperature after the engine is stopped, and may cause serious burns. Wait for the temperature to go down before starting the operation.**
- **If there is still pressure remaining inside the case, the oil or plug may fly out. Turn the plug slowly to release the pressure, then remove it carefully.**

- Refill capacity: Front 14.0 liters (3.70 US gal)
  Center 24.5 liters (6.47 US gal)
  Rear 25.0 liters (6.61 US gal)

1. Remove drain plug (P), drain the oil, then tighten the plug again.
2. Add oil to the specified level through the hole for plug (G) or oil filler port (F).
3. After adding oil, check that the oil is at the specified level. See "CHECK OIL LEVEL IN DIFFERENTIAL CASE, ADD OIL (PAGE 4-56)".
4. Repeat the procedure in Steps 1 - 3 and change the oil to all the differential cases (front, center, rear).

Front

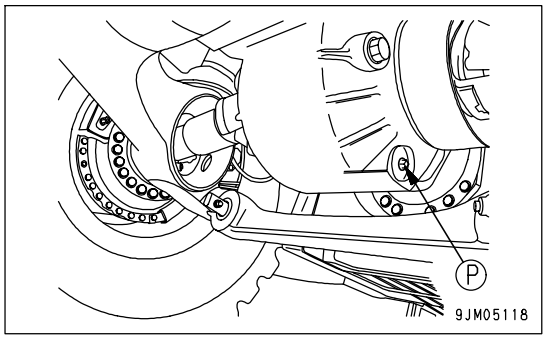

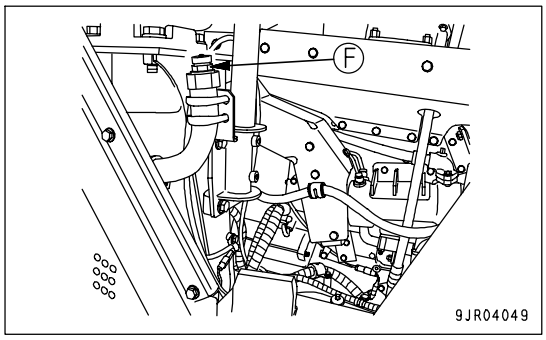

Center

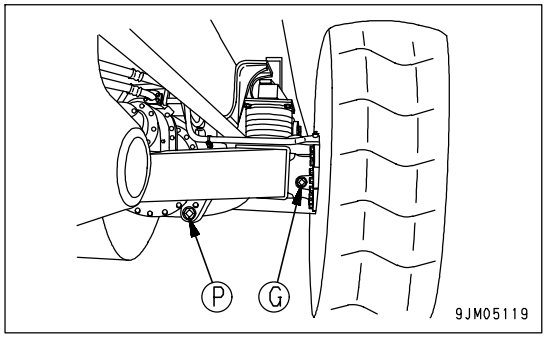

https://truckmanualshub.com/

Rear

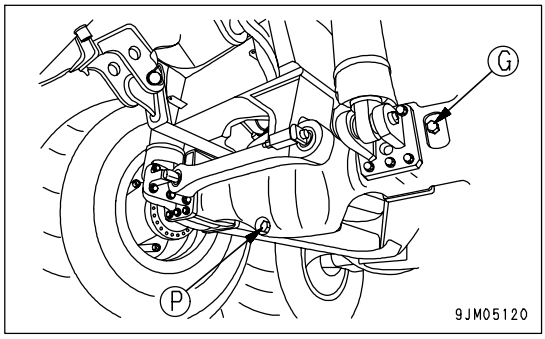

REPLACE HYDRAULIC FILTER ELEMENT

WARNING

- **The parts and oil are at high temperature immediately after the engine is stopped, and may cause burns. Wait for the temperature to go down before starting the work.**
- **When removing the oil filler cap, turn it slowly to release the internal pressure, then remove it.**

1. Remove bolt (1), then remove cover (2).
2. Turn the cap of oil filler (F) slowly to release the internal pressure, then remove the cap.
3. Remove bolts (3), then remove cover (4).
4. Take out the element, then wash the inside of the case and the removed parts.
5. Install the new element, then install cover (4) with bolts (3).
6. Install cover (2) with bolts (1).

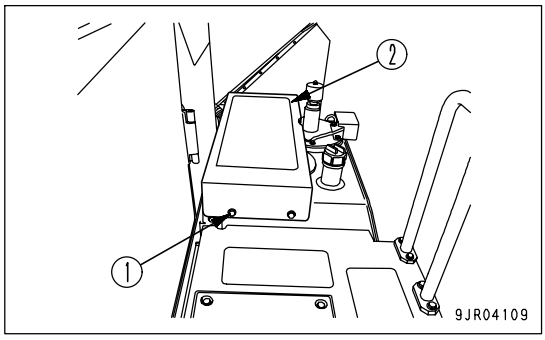

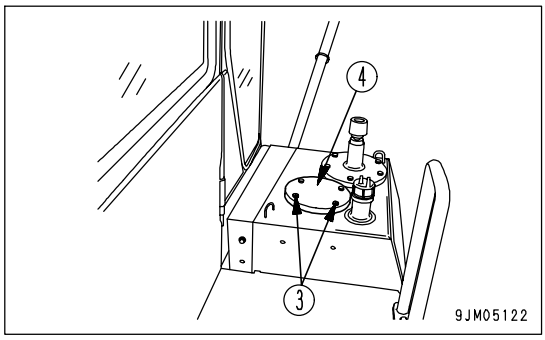

https://truckmanualshub.com/

CLEAN TRANSMISSION CASE STRAINER

WARNING

- **The parts and oil are at high temperature immediately after the engine is stopped, and may cause burns. Wait for the temperature to go down before starting the work.**
- **When removing the oil filler cap, turn it slowly to release the internal pressure, then remove it.**

Drain the oil from the transmission case before starting the operation. For details, see Section "CHANGE OIL IN TRANSMISSION CASE (PAGE 4-63)".

1. Remove bolt (1), then remove cover (2) and take out the strainer.
2. Remove any dirt stuck to the strainer, then wash in clean diesel fuel or flushing oil. If the strainer is damaged, replace it.
3. Install the strainers in their original position.

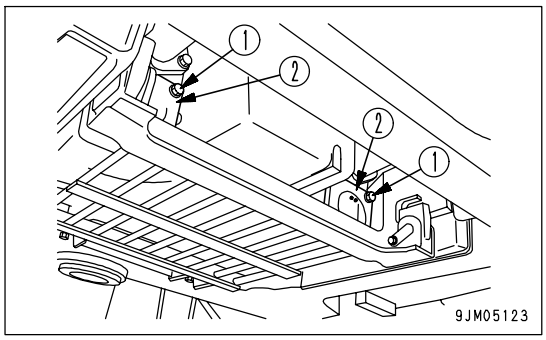

CLEAN BREATHER

WARNING

- **The parts and oil are at high temperature after the engine is stopped, and may cause serious burns. Wait for the temperature to go down before cleaning the engine breather.**
- **When using compressed air, there is a hazard that dirt may be blown up and cause serious injury.**
  Always use safety glasses, dust mask, or other protective equipment.

Remove the mud and dirt from around the breather, then remove the breather and wash out the dirt from inside with clean diesel oil or flushing oil.

- Transmission

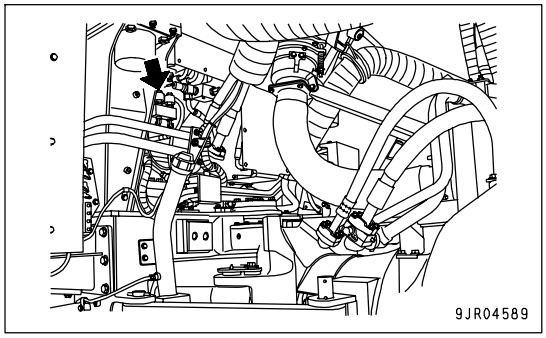

https://truckmanualshub.com/

- Hydraulic tank

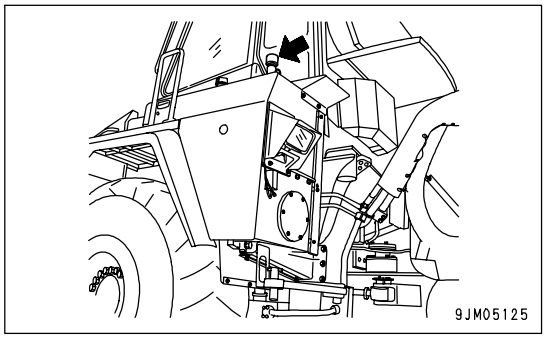

- Differential case (front)

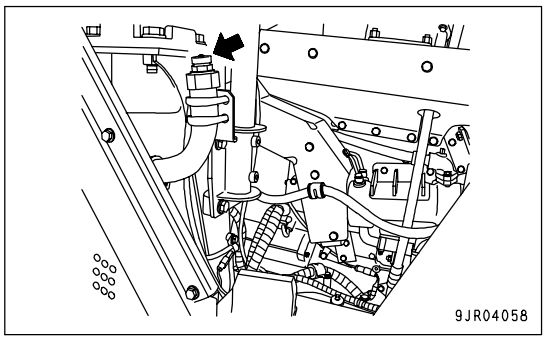

- Differential case (center)

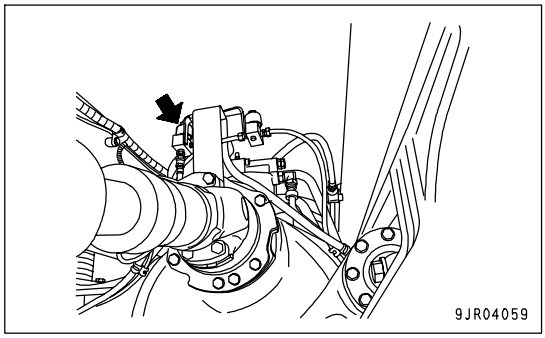

- Differential case (rear)

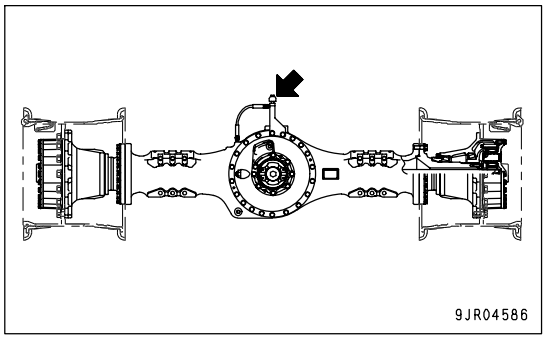

- Final drive case (front, left)

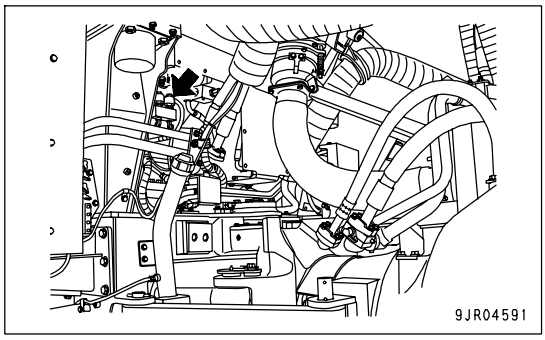

https://truckmanualshub.com/

- Final drive case (front, right)

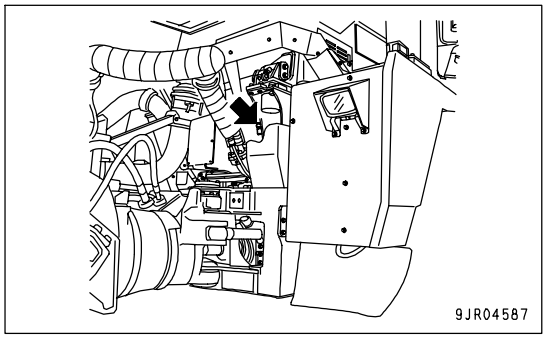

- Final drive case (canter)

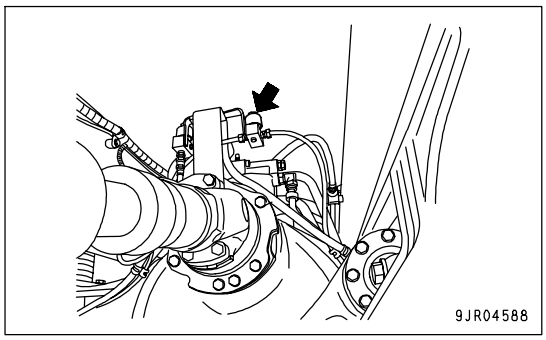

CHECK ACCUMULATOR GAS PRESSURE

Please contact your Komatsu distributor to have the gas pressure checked when making periodically replacement of safety parts or carrying out the legally required 2000 hour or every year service.

CHECK ALTERNATOR

There is the possibility that the brush has worn out, or the bearing has run short of grease, so call on your Komatsu distributor for an inspection or repairs.

CHECK, ADJUST ENGINE VALVE CLEARANCE

Special tools are needed for inspection and maintenance, so contact your Komatsu distributor.

CHECK VIBRATION DAMPER

Check that there are no cracks or peeling in the outside surface of the rubber.
If any cracks or peeling are found, contact your Komatsu distributor to have the parts replaced.

https://truckmanualshub.com/

EVERY 4000 HOURS SERVICE

Maintenance for every 50, 250, 500, 1000 and 2000 hours service should be carried out at the same time.

CHANGE OIL IN HYDRAULIC TANK

WARNING

- **The parts and oil are at high temperature immediately after the engine is stopped, and may cause burns. Wait for the temperature to go down before starting the work.**
- **When removing the oil filler cap, turn it slowly to release the internal pressure, then remove it.**

- Refill capacity: 120 liters (31.70 US gal)

1. Lower the dump body and stop the engine.
2. Turn the cap of oil filler (F) to release the internal pressure before removing the cap.
3. Taking care not to get any oil on you, remove drain plug (P), drain the oil, then tighten the plug again.
4. Pour in the specified amount of engine oil from oil filler (F).
5. After adding oil, check that the oil is at the specified level. For details of the oil to use, see "CHECK OIL LEVEL IN HYDRAULIC TANK, ADD OIL (PAGE 3-75)".

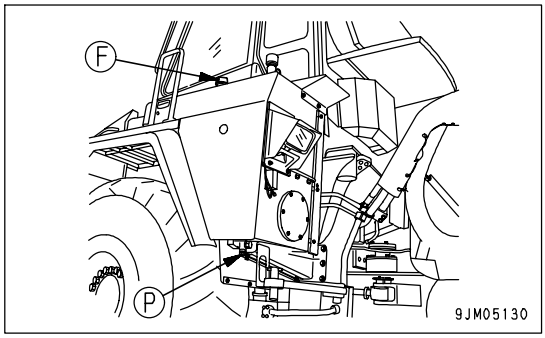

CHECK STARTING MOTOR

The brush may be worn or have no grease on the bearing, so contact your Komatsu distributor for inspection or repair.
If the engine is started frequently, carry out inspection every 1000 hours.

CHECK WATER PUMP

Check around the water pump for water leakage. If any part is leaking, ask your Komatsu distributor for inspection/repair.

CHECK AIR COMPRESSOR

Ask your Komatsu distributor to carry out this work.

CHECK FAN PULLEY AND TENSION PULLEY

Check for play of the pulley and leakage of grease. If any problem is found, please contact your Komatsu distributor.

https://truckmanualshub.com/

CHECKING FOR LOOSENESS OF HIGH-PRESSURE CLAMP, HARDENING OF RUBBER

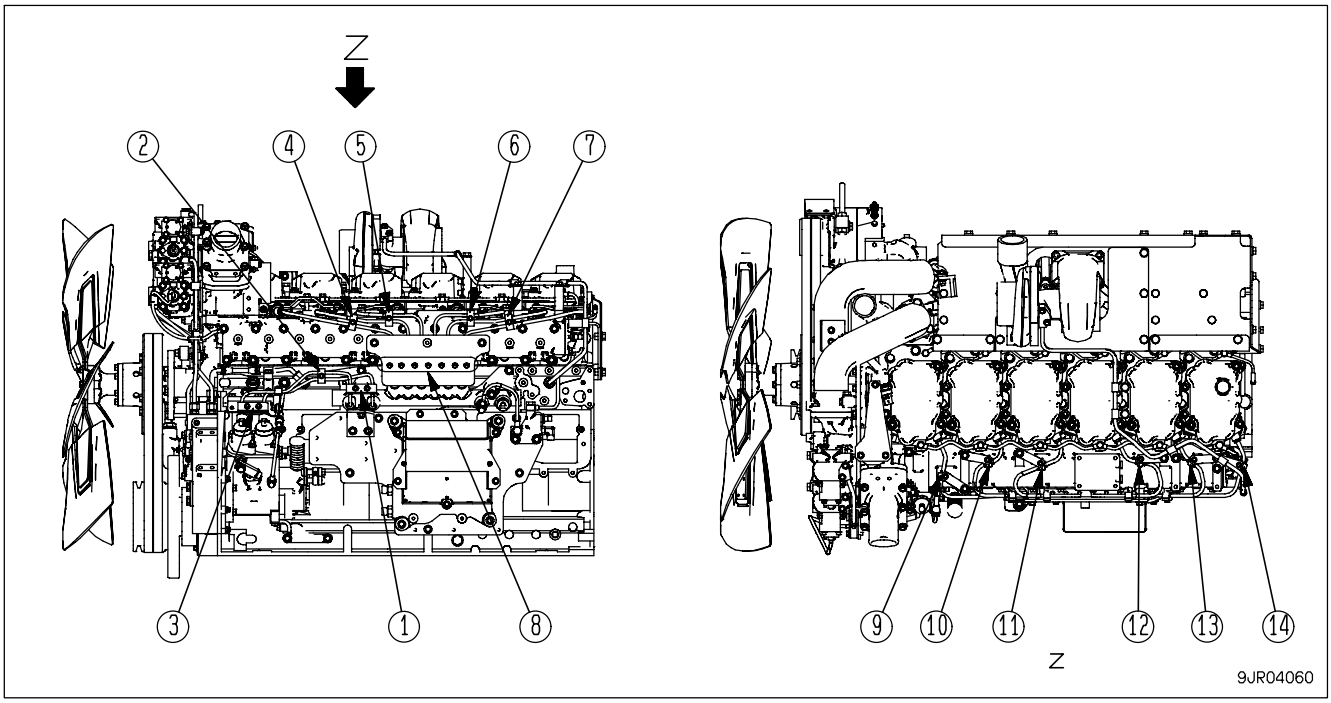

Check visually and touch with your fingers to check that there are no loose bolts or hardening of rubber parts at clamps (1) to (14). If there is any looseness or hardened rubber, contact your Komatsu distributor for replacement.

CHECKING FOR MISSING FUEL SPRAY PREVENTION CAP, HARDENING OF RUBBER

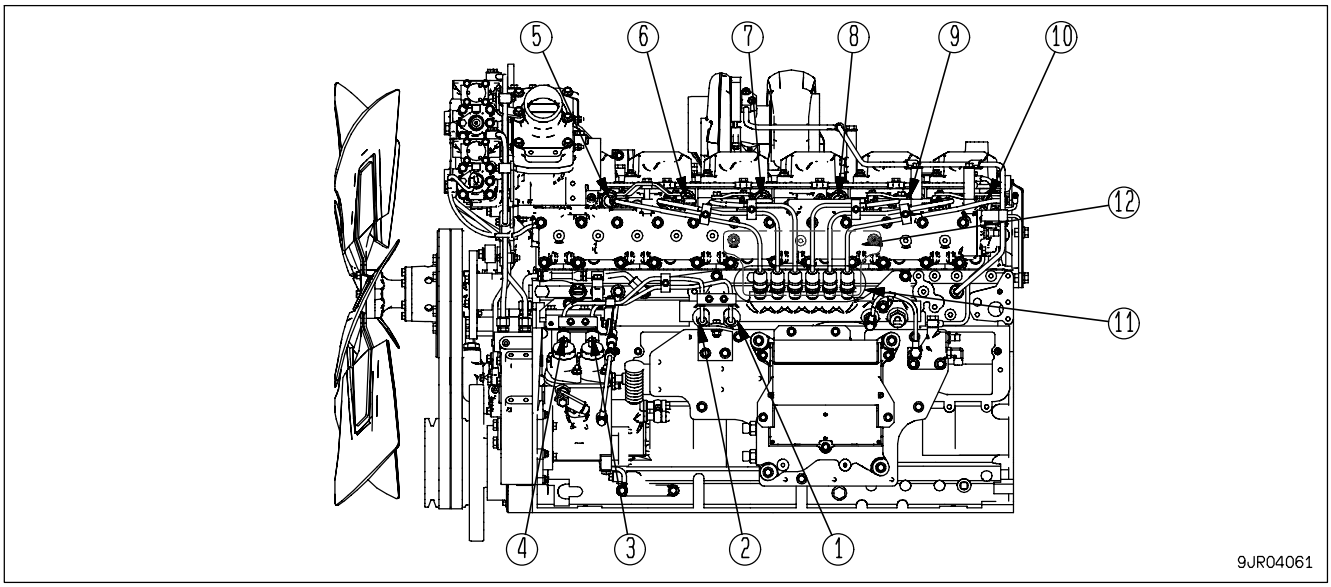

Check for any missing fuel spray prevention caps (1) to (11) or fuel spray prevention cover (12), and check also for any hardened rubber portions. If there are any missing caps or cover or the rubber is hardened, please contact your Komatsu distributor for repairs.

https://truckmanualshub.com/

EVERY 6000 HOURS SERVICE

Maintenance for every 50, 250, 500, 1000, 2000 and 4000 hours service should be carried out at the same time.

LUBRICATE DRIVE SHAFT

When greasing, use lithium grease (G2-LI), and carry out the greasing every 6000 hours or every 2 years.

1. Using a grease pump, pump in grease through the grease fittings marked by the arrows.
2. Grease the spider portion until grease comes out from the cap seal.
3. After greasing, wipe off any old grease that was pushed out.

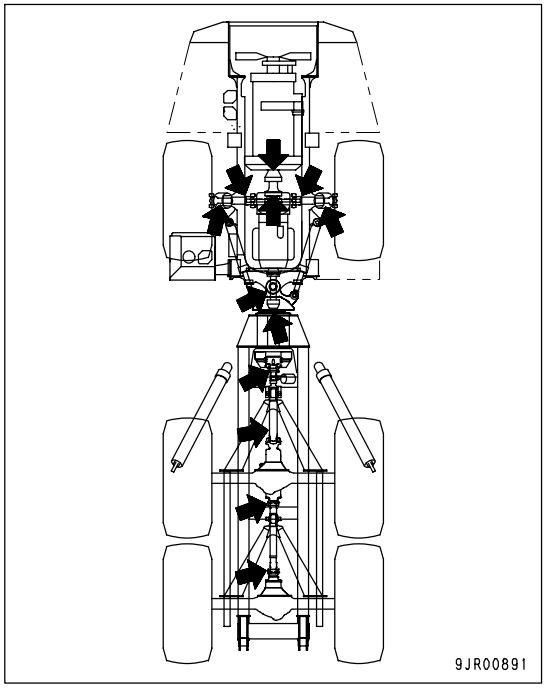

https://truckmanualshub.com/

EVERY 8000 HOURS SERVICE

Maintenance for every 50, 250, 500, 1000, 2000, 4000 and 6000 hours service should be carried out at the same time.

REPLACE HIGH-PRESSURE PIPING CLAMP

Ask your Komatsu distributor to carry out this work.

REPLACE FUEL SPRAY PREVENTION CAP

Ask your Komatsu distributor to carry out this work.

OVERHAUL STARTING MOTOR AND ALTERNATOR

Ask your Komatsu distributor to carry out this work.

https://truckmanualshub.com/

SPECIFICATIONS

https://truckmanualshub.com/

SPECIFICATIONS

	Item			Unit	HM300-2
	Overall weight (unladen weight + max. payload + 1 operator (75kg (165 lb))			kg (lb)	51415 (113370)
	Unladen weight			kg (lb)	24040 (53008)
	Max. payload			kg (lb)	27300 (60197)
	Dump body capacity	Struck		m^3 (cu.yd)	12.9 (16.9)
		Heaped (2 : 1)		m^3 (cu.yd)	16.6 (21.7)
	Dumping speed (at 2000 rpm) (raised)			sec	12
	Name of engine			–	Komatsu SAA6D125E-5 diesel engine
	Flywheel horsepower			kW (HP)/rpm	254 (340)/2000
	Max. torque			Nm (kgm, lbft)/rpm	1706 (174, 1258)/1400
A	Overall length			mm (ft in)	10440 (34’ 3’’)
B	Overall height			mm (ft in)	3520 (11’ 7")
C	Overall height when dumping			mm (ft in)	6430 (21’ 1")
D	Overall width			mm (ft in)	2900 (9’ 6")
E	Min. ground clearance (bottom of rear axle)			mm (ft in)	510 (1’ 8")
	Min. turning radius			mm (ft in)	7960 (26’ 1")
	Travel speed	Forward	1st	km/h (MPH)	6.8 (4.2)
			2nd	km/h (MPH)	10.7 (6.6)
			3rd	km/h (MPH)	16.2 (10.1)
			4th	km/h (MPH)	25.5 (15.8)
			5th	km/h (MPH)	38.4 (23.9)
			6th	km/h (MPH)	58.6 (36.4)
		Reverse	1st	km/h (MPH)	7.6 (4.7)
			2nd	km/h (MPH)	18.1 (11.2)
	Temperature range when using			°C (°F)	-20 to 40°C (-4 to 104°F)

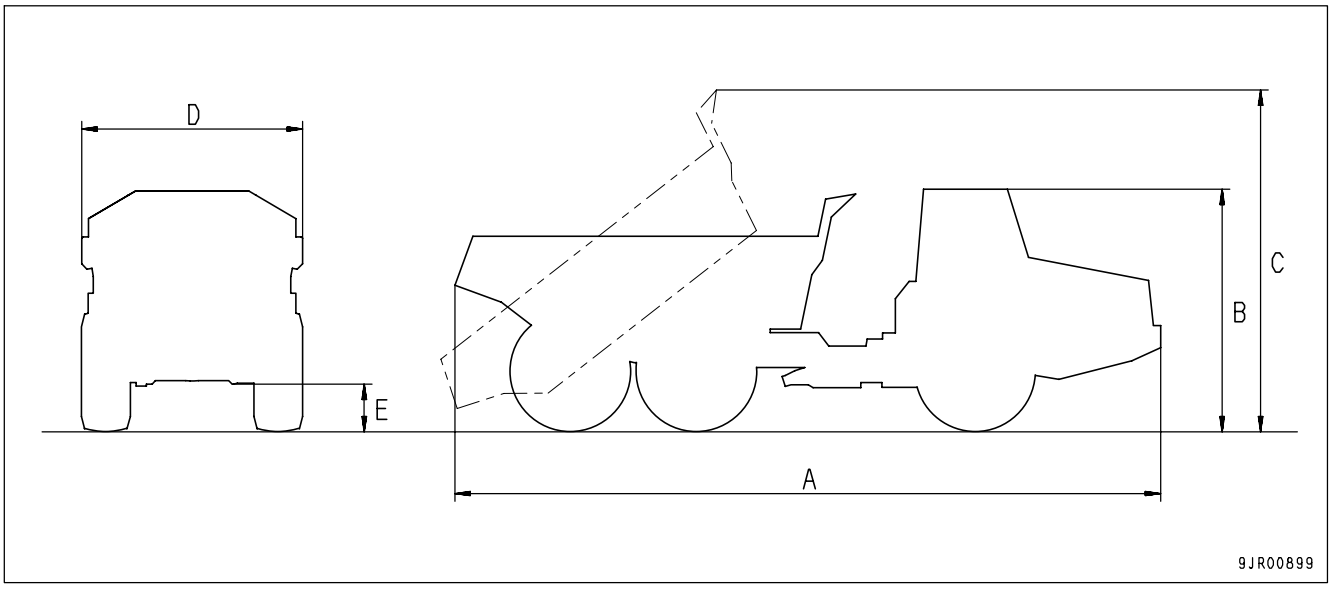

https://truckmanualshub.com/

ATTACHMENTS, OPTIONS

⚠ WARNING

Please read and make sure that you understand the SAFETY section before reading this section.

https://truckmanualshub.com/

HANDLING AUTOMATIC RETARDER, ACCELERATOR CONTROL(ARAC)

This is a system to automatically activate the retarder when an operator wants to use it on a downslope or slow down on a flat hauling road. It enables the retarder to automatically function according to the present selected gear speed and engine revolution, thus making it easier for an operator to use the retarder.

WARNING

- **The ARAC system begins to function when the automatic retarder, accelerator control switch is in the ON position. Check that this switch is turned on before running down on a slope.**
- **The ARAC system may not assure thorough braking force to slow down, depending on a slope inclination, load weight and selected gear speed. In that case, use the retarder control lever and brake pedal to slow down to a safety speed.**
- **The tires may be locked when the dump truck is running on a slippery hauling road and the ARAC system is in service. If that happens, stop using the ARAC system.**
- **Should some anomaly happen on the ARAC system and disable an operator from secure control of the dump truck, the system is put in the OFF condition and released, while the alarm buzzer sounds. In that case, keep control of the dump truck, using the retarder control lever and brake pedal, bring the truck to a halt in a safe place and turn off the automatic retarder, accelerator control switch.**

EXPLANATION OF COMPONENTS

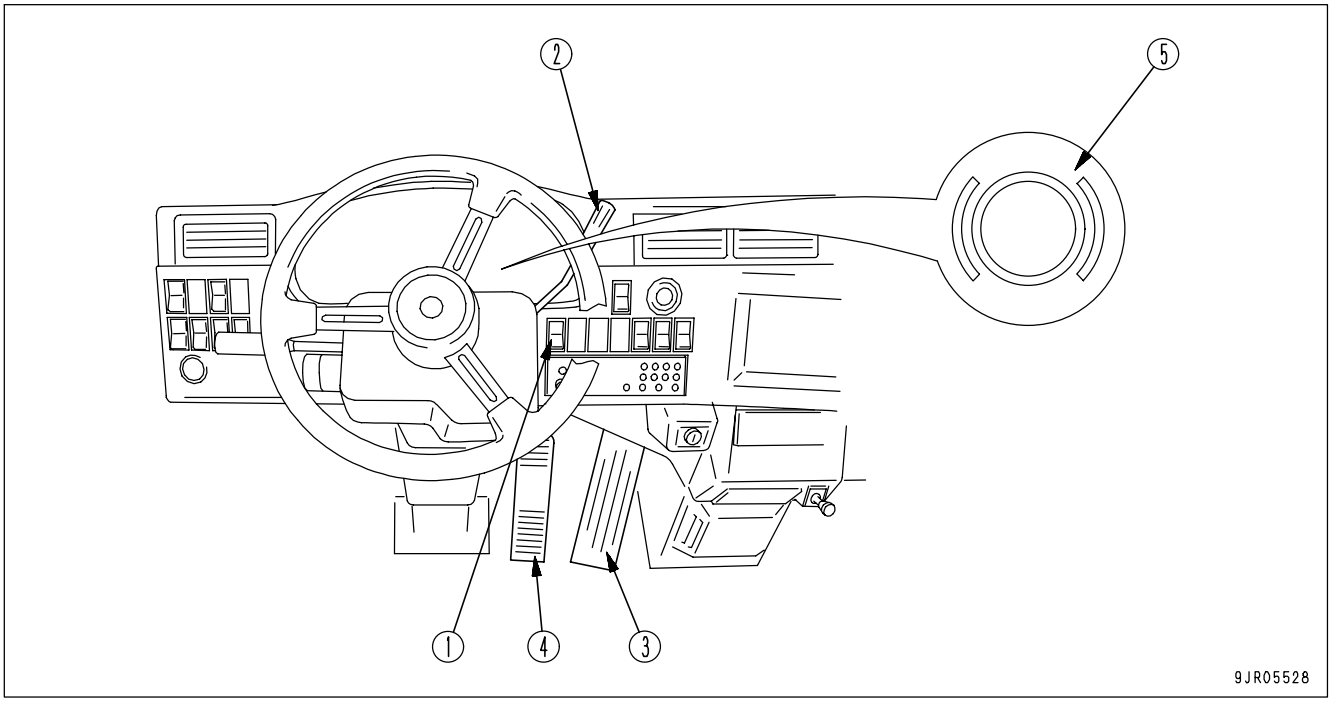

(1) Automatic retarder, accelerator control switch
(2) Retarder control lever
(3) Accelerator pedal
(4) Brake pedal
(5) Retarder pilot lamp

https://truckmanualshub.com/

AUTOMATIC RETARDER, ACCELERATOR CONTROL SWITCH

This switch (1) is used to turn on and off the ARAC system.

(A): The ARAC system begins to function when a travel speed is over 7 km/h and the accelerator pedal is released, and the retarder pilot lamp lights on. (In a lower range of engine revolution, the retarder pilot lamp may not light on even though the ARAC system is in service.)

(B): The ARAC system does not function.

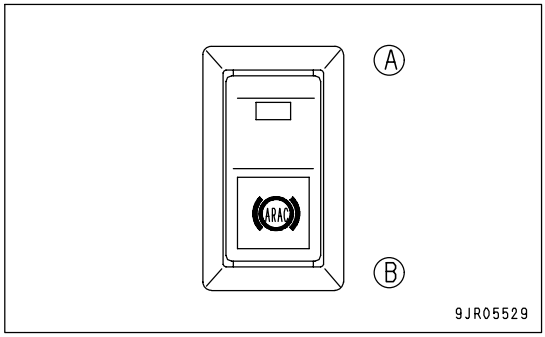

RETARDER CONTROL LEVER

This lever (2) activates the retarder even while the ARAC system is in service.

REMARK

When the ARAC system is in service, the retarder control lever has some play. It does not mean that the retarder does not work, but that the ARAC system is in service.

ACCELERATOR PEDAL

The ARAC system functions only while accelerator pedal (3) is released.

BRAKE PEDAL

This pedal (4) can activate the wheel brakes even while the ARAC system is in service.

RETARDER PILOT LAMP

This lamp (5) lights on when the ARAC system begins to function and when the retarder is operated with the retarder control lever.

METHOD OF OPERATION

ACTUATION OF ARAC SYSTEM

The ARAC system begins to function when the automatic retarder, accelerator control switch is turned to the ON position.

When the automatic retarder, accelerator control switch is turned to the ON position, the retarder automatically works according to the present gear speed selected and engine revolution.

If the brake pedal is depressed while the ARAC system is in service, the system stops functioning, accelerating the truck's travel speed.

If the brake pedal is depressed, or the retarder control lever is used, while the ARAC system is in service, then the dump truck can be slowed down or brought to a halt just as in normal braking operation.

https://truckmanualshub.com/

USE OF REAR VIEW MONITOR

WARNING

- **Never operate any of the switches while in running. If you do so, there is the fear that you may make an error in the truck operation, or neglect to watch the hauling road ahead for safety, and as a result cause a serious personal injury.**
- **The rear view monitor is an aid for checking obstacles in the rear. An image appearing on the monitor is limited. So when backing up the dump truck, be sure to make a visual check, not relying solely on the monitor.**
- **An image on the rear view monitor does not show an actual distance, so drive the dump truck slowly, when backing it up.**

When the dump truck is backed up and the rear view monitor is set in operation, a monitor display enables the driver to check the rear for safety.

NAME AND FUNCTON OF EACH PART OF REAR VIEW MONITOR

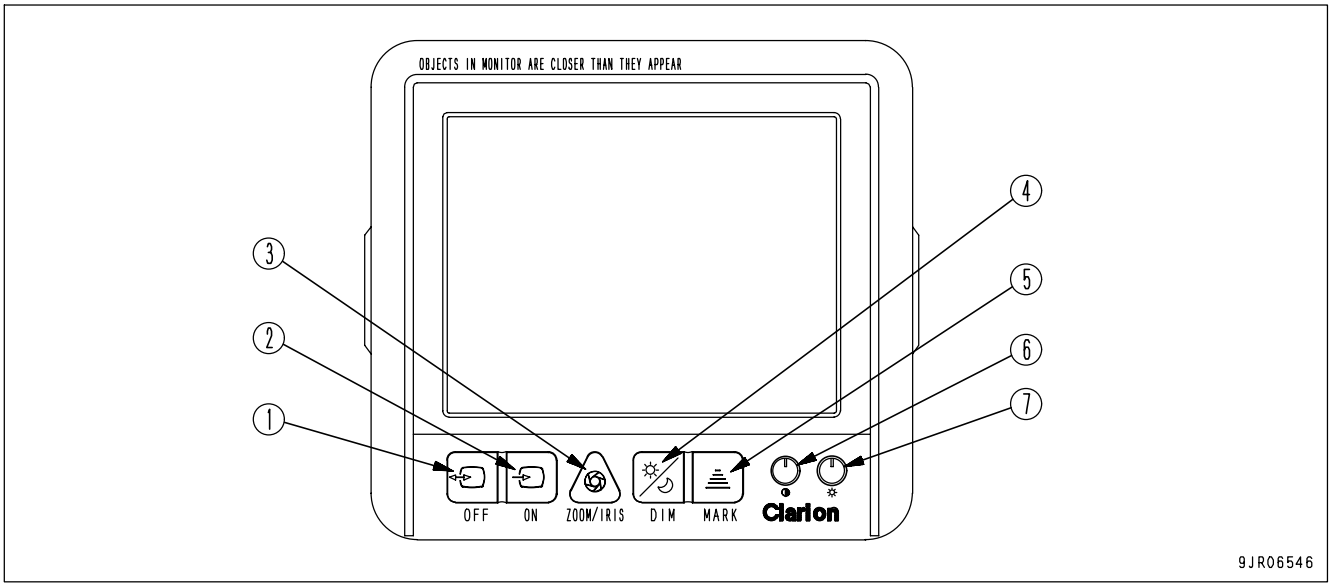

(1) Auto Switch
(2) Manual Switch
(3) Zoom / Iris Switch (Reverse Light Compensation Switch)
(4) Bright / Dim Light Selector Switch
(5) Mark Switch (not operable with this machine)
(6) Contrast Adjustment Knob
(7) Brightness Adjustment Knob

AUTO SWITCH

When an image of a camera is shown on the monitor display and this switch (1) is pressed, the camera image disappears and the display turns into a waiting condition.
When the gearshift lever is put into the "R" position while the display is in the waiting condition, an image of the rear view automatically appears.

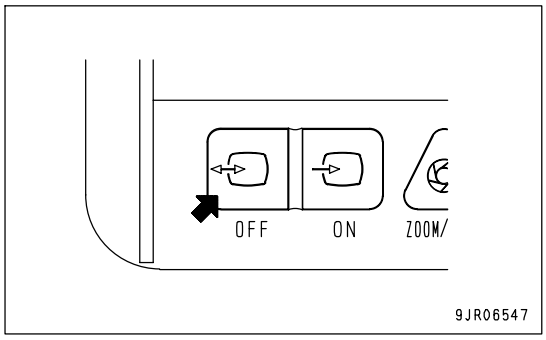

https://truckmanualshub.com/

MANUAL SWITCH

When this switch (2) is pressed, an image of a camera appears on the monitor display.
At that time, a mark "CAM1" appears on the upper left side of the display and a figure "5" on the upper right side of the display.

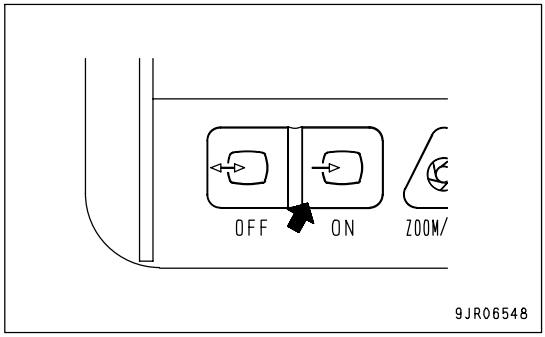

REMARK

- When the manual switch is pressed to call an image and the operation is suspended thereafter, the image disappears in approx. 5 minutes, turning the display into a waiting condition. This is a function in case the operator forgets to switch off the display (timer function).
- The time until the monitor display is automatically switched off is shown on the upper right side of the display. It changes by minute and in the descending order as 5→4 →3 → 2 → 1. Moreover, when the remaining time comes down to just 10 seconds before the monitor display goes off, the last figure "1" on the upper right side begins to flash.
- When the manual switch is pressed to call an image and it is pressed again while the image is shown on the monitor display, it remains on the display for approx. 5 more minutes from the moment the switch is pressed.
- When the gearshift lever is in the "R" position, the timer function does not work.

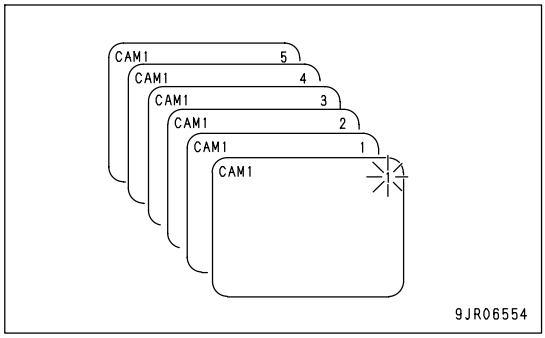

ZOOM/IRIS SWITCH (REVERSE LIGHT COMPENSATION SWITCH)

Zoom Function (press the switch)
By pressing this switch (3), an image on the monitor display can be enlarged by 1.4 times.
At that time, a mark of "ZOOM" is shown on the upper right side of the display.
When the switch is pressed again, "ZOOM" disappears and the display returns to the original image.

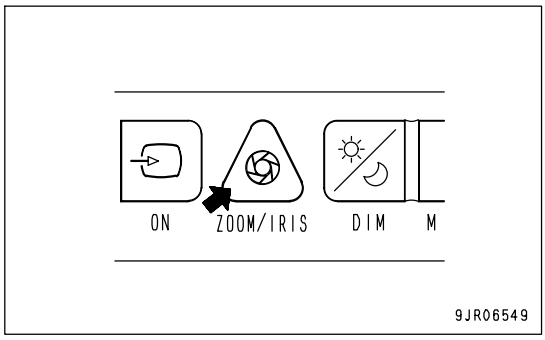

Iris Function (Reverse Light Compensation Function) (Keep the switch pressed for more than 1 second.)

WARNING

When the iris function is activated (turned "ON"), the whole monitor display becomes brighter. As a result, some portion on the display becomes difficult to read or discern, while it is easy to do so with the iris function turned "OFF". Therefore do not use this function except when it is necessary to read or see a dim portion.

When it is difficult to see a monitor display due to a reverse light, keep this switch (3) for more than 1 second, and then the iris function (reverse light compensation function) is turned "ON", turning the display brighter and making it easier to see.
At that time, a mark of "IRIS" appears on the upper left side of the display.
If the switch is further kept pressed for more than 1 second, the iris function (reverse light compensation function) is turned "OFF" and "IRIS" mark goes off.

https://truckmanualshub.com/

BRIGHT/DIM LIGHT SELECTOR SWITCH

When this switch is pressed, the brightness of the monitor display lowers.
A mark of "DIM" appears on the upper left side of the display then. When the switch is pressed again, the brightness returns to the original level, and "DIM" mark goes off.

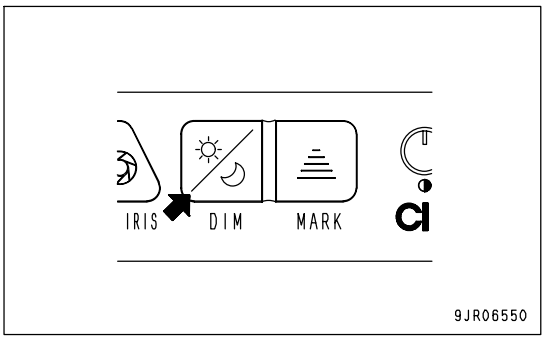

MARK SWITCH

The shown mark position does not correspond with the machine. Do not use this function.

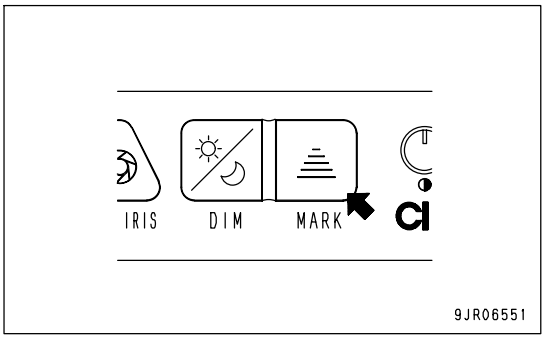

CONTRAST ADJUSTMENT KNOB

With this knob (6), contrast on the monitor display can be adjusted to be either stronger or weaker.
To side (A): Contrast becomes stronger.
To side (B): Contrast becomes weaker.

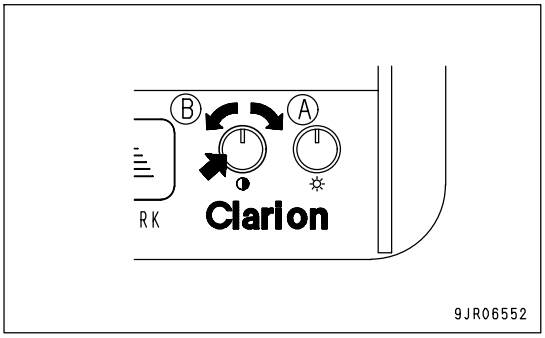

BRIGHTNESS ADJUSTMENT KNOB

With this knob (7), brightness (luminance) on the monitor display can be adjusted.
To side (A): Brightness increases.
To side (B): Brightness decreases.

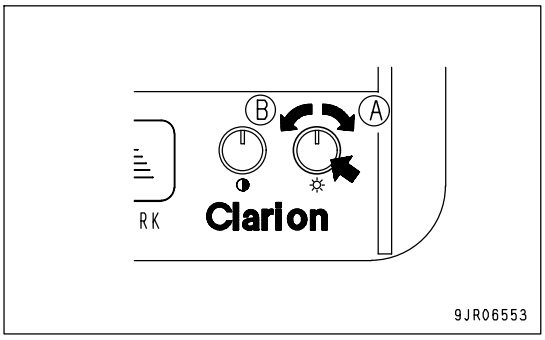

https://truckmanualshub.com/

SETTING OF REAR VIEW MONITOR

HOW TO SET DISPLAY MODE

A mark of "CAM1", "DIM", "IRIS" and "ZOOM" appears on the upper left side of the monitor display, depending on the sort of ongoing operation.
Every mark is set to go off in approx. 2 seconds after it lights up (2- second display mode).
The display can be changed to a constantly lighted condition by the following method (continuous display mode).

1. Press mark switch (2) while pressing manual switch (1) at the same time.
   A "Cam1" mark lights up on the upper left side of the monitor display, and the display mode changes to the continuous display mode.
2. When it is required to return to the 2- second display mode, press mark switch (2), while pressing manual switch (1) at the same time, the same way as in step 1 above.
   After a "Cam1" mark remains lighted for approx. 2 seconds on the upper left side of the monitor display, only the mark disappears, and the display mode changes to the 2- second display mode.

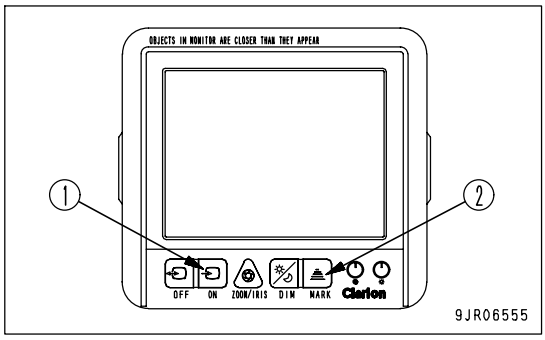

REMARK

In either case of the 2- second display mode and continuous display mode, the display remains lighted all the time in the remaining time after the mark goes off and before the monitor display goes off, too.

CAUTIONS WHEN USING REAR VIEW MONITOR

WARNING

- **Do not attempt to disassemble or modify the monitor. There is a danger of electric shock or fire.**
- **Do not attempt to open the monitor backside cover. There is a danger of electric shock, as high voltage power is conducted internally.**
- **Do not use the monitor if it is suspected of defect. There is a fear of electric shock or fire, should it be used in spite of a defect. In that case, ask your Komatsu distributor for repair or replacement.**
- **In case a foreign material has got into the monitor or it gets wet, or if a smoke comes out of the monitor or it gives a bad smell, stop the use immediately. It poses a big danger to use the monitor when any such abnormality exists. In that case, consult your Komatsu distributor.**
- **When replacing a fuse, be sure to use one with the specified capacity of 3A. Should a fuse with a higher- than- specified capacity be used, it can cause fire.**

- As a general rule, this product should be replaced after a total usage time of approximately 3000 hours (or approximately 3 years), though this may differ according to usage conditions.
- When cleaning the monitor, use dry soft cloth or wet cloth after having well wrung the water out.
  If it is very dirty, use neutral detergent. Do not use thinner or alcohol.
- Sometimes an image on the monitor display is blurred due to the camera lens being smeared. In that case, clean the camera lens with dry soft cloth or wet cloth after having well wrung the water out.

https://truckmanualshub.com/

HANDLING DUMPING COUNTER

The dumping counter is an automatic counting function to count the number of loads that have been dumped.
The number of loads dumped is displayed on the character display.

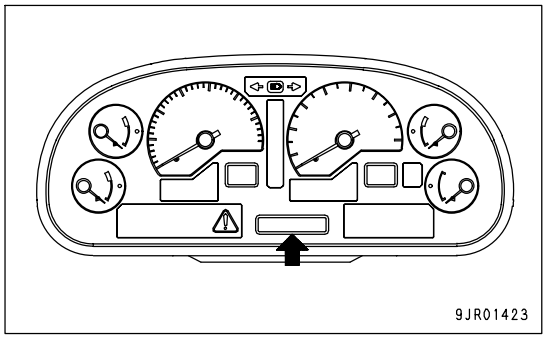

METHOD OF DISPLAYING, RESETTING DUMPING COUNTER

1. Check that the character display is showing the service meter/odometer, or the action code. If it is giving any other display, turn the starting switch OFF, then turn the starting switch to the ON position and wait for the above display to be given.
2. Press (◇) of machine monitor mode selector switch 1. The character display shows the dumping counter.

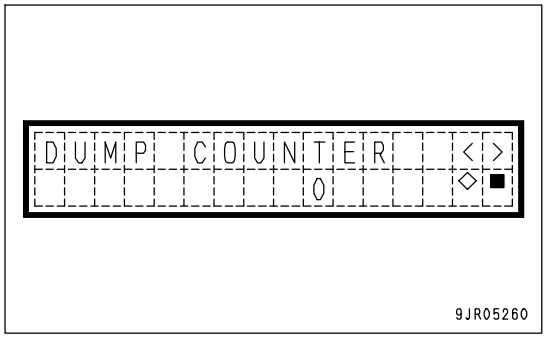

3. When resetting the number of loads dumped, press (◇) of machine monitor mode selector switch 1. The display shows the screen on the right.
4. Press (◇) of machine monitor mode selector switch 1. The number of loads dumped is reset and the display returns to the previous screen.
   To abandon the resetting operation, press (■) of machine monitor mode selector switch 1 to return to the previous screen.
5. When completing the operation, press (■) of machine monitor mode selector switch 1 or turn the starting switch OFF.

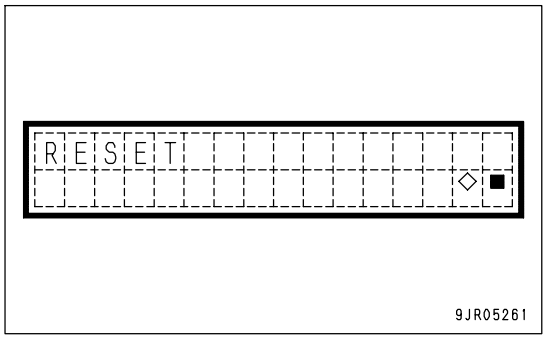

https://truckmanualshub.com/

HANDLING MACHINES EQUIPPED WITH KOMTRAX

- KOMTRAX is a machine management system that uses wireless communications.
- A contract with your Komatsu distributor is necessary before the KOMTRAX system can be used. Any customers desiring to use the KOMTRAX system should consult their Komatsu distributor.
- The KOMTRAX equipment is a wireless device using radio waves, so it is necessary to obtain authorization and conform to the laws of the country or territory where the machine equipped with KOMTRAX is being used. Always contact your Komatsu distributor before selling or exporting any machine equipped with KOMTRAX.
- When selling or exporting the machine or at other times when your Komatsu distributor considers it necessary, it may be necessary for your Komatsu distributor to remove the KOMTRAX equipment or to carry out action to stop communications.
- If you do not obey the above precautions, neither Komatsu nor your Komatsu distributor can take any responsibility for any problem that is caused or for any loss that results.

BASIC PRECAUTIONS

WARNING

- **Never disassemble, repair, modify, or move the communications terminal, antenna, or cables. This may cause failure or fire on the KOMTRAX equipment or the machine itself. (Your Komatsu distributor will carry out removal and installation of KOMTRAX.)**
- **Do not allow cables or cords to become caught; do not damage or pull cables or cords by force. Short circuits or disconnected wires may cause failure or fire on the KOMTRAX equipment or the machine itself.**
- **For anyone wearing a pacemaker, make sure that the communications antenna is at least 22 cm (8.7 in) from the pacemaker. The radio waves may have an adverse effect on the operation of the pacemaker.**

NOTICE

- **Even when the key in the starting switch of the KOMTRAX system is at the OFF position, a small amount of electric power is consumed. When putting the machine into long-term storage, take the action given in "LONG-TERM STORAGE (PAGE 3-124)".**
- **Please contact your Komatsu distributor before installing a top guard or other attachment that covers the cab roof.**
- **Be careful not to get water on the communications terminal or wiring.**

REMARK

- The KOMTRAX system uses wireless communications, so it cannot be used inside tunnels, underground, inside buildings, or in mountain areas where radio waves cannot be received. Even when the machine is outside, it cannot be used in areas where the radio signal is weak or in areas outside the wireless communication service area.
- There is absolutely no need to inspect or operate the KOMTRAX communications terminal, but if any abnormality is found, please consult your Komatsu distributor.

https://truckmanualshub.com/

https://truckmanualshub.com/

INDEX

<A>
AIR CONDITIONER ---------- 3- 64
ARTICULATE LOCK ---------- 3- 45

<B>
BODY PIVOT PIN ---------- 3- 45

<C>
CAB TILT OPERATION ---------- 3-107
CAR RADIO ---------- 3- 50
CAR STEREO ---------- 3- 56
CHECK BEFORE STARTING ENGINE ----- 3- 70
CHECKS AFTER COMPLETION OF WORK ---------- 3-112
CHECKS AFTER STOPPING ENGINE ----- 3- 88
CIRCUIT BREAKER ---------- 3- 46
COLD WEATHER OPERATION ---------- 3-121
AFTER COLD WEATHER ---------- 3-123
PRECAUTIONS AFTER COMPLETION OF WORK ---------- 3-122
PRECAUTIONS FOR LOW TEMPERATURE ---------- 3-121
CONTROL LEVERS AND PEDALS --------- 3- 40

<D>
DETERMINING AND MAINTAINING TRAVEL ROAD ---------- 3-114
DETERMINING TRAVEL ROAD ---------- 3-114
MAINTAINING TRAVEL ROAD ---------- 3-114
DUMP OPERATIONS ---------- 3-105
DUST INDICATOR ---------- 3- 46

<E>
EXPLANATION OF COMPONENTS -------- 3- 5

<F>
FOREWORD ---------- 1- 2
FUSES ---------- 3- 47

<G>
GENERAL PRECAUTIONS ---------- 2- 11
GENERAL VIEW ---------- 3- 2
GENERAL VIEW OF CONTROLS AND GAUGES ---------- 3- 3
GENERAL VIEW OF MACHINE ---------- 3- 2
GUIDES TO MAINTENANCE ---------- 4- 2

<H>
HANDLING AUTOMATIC RETARDER, ACCELERATOR CONTROL(ARAC) -------- 6- 2
EXPLANATION OF COMPONENTS ----- 6- 2
METHOD OF OPERATION ---------- 6- 3
HANDLING DUMPING COUNTER ---------- 6- 8
HANDLING MACHINES EQUIPPED WITH KOMTRAX ---------- 6- 9
BASIC PRECAUTIONS ---------- 6- 9
HANDLING OIL, FUEL, COOLANT, AND PERFORMING OIL CLINIC ---------- 4- 4
HANDLING TIRES ---------- 3-113

<I>
IF TRANSMISSION HAS TROUBLE -------- 3-126
INTENDED USE ---------- 1- 7
DIRECTIONS OF MACHINE ---------- 1- 7

<L>
LOADING OPERATIONS ---------- 3-104
LOCATION OF FIRE EXTINGUISHER ----- 3- 46
LOCATION OF PLATES, TABLE TO ENTER SERIAL NO. AND DISTRIBUTOR ---------- 1- 8
PRODUCT IDENTIFICATION NUMBER (PIN)/MACHINE SERIAL NO. PLATE ---------- 1- 8
SERVICE METER POSITION ---------- 1- 9
TABLE TO ENTER SERIAL NO. AND DISTRIBUTOR ---------- 1- 9
LOCKING ---------- 3-112
LONG-TERM STORAGE ---------- 3-124
AFTER STORAGE ---------- 3-124
BEFORE STORAGE ---------- 3-124
DURING STORAGE ---------- 3-124
PRECAUTIONS BEFORE TRAVELING AFTER LONG-TERM STORAGE ---------- 3-124

<M>
MACHINE MONITOR ---------- 3- 5
MAINTENANCE SCHEDULE CHART ------ 4- 17
METHOD OF LIFTING MACHINE ---------- 3-117
METHOD OF LOWERING DUMP BODY IN EMERGENCY ---------- 3-126
METHOD OF SECURING MACHINE ------- 3-116

https://truckmanualshub.com/

MOVING MACHINE OFF (FORWARD, REVERSE), STOPPING ---------- 3- 89

<O>
OPERATION ---------- 3- 70
OPERATION USING DIFFERENTIAL LOCK ---------- 3-103
OPERATIONS, CHECKS AFTER STARTING ENGINE ---------- 3- 87
OTHER FUNCTIONS OF MACHINE MONITOR ---------- 3- 26
OUTLINE OF ELECTRIC SYSTEM ---------- 4- 8
OUTLINE OF SERVICE ---------- 4- 4

<P>
PARKING MACHINE ---------- 3-111
PERIODIC REPLACEMENT OF SAFETY CRITICAL PARTS ---------- 4- 15
PRECAUTIONS DURING OPERATION ---------- 2- 20
BATTERY ---------- 2- 27
OPERATION ---------- 2- 22
STARTING ENGINE ---------- 2- 20
TOWING ---------- 2- 29
TRANSPORTATION ---------- 2- 26
PRECAUTIONS FOR MAINTENANCE ---------- 2- 30
PRECAUTIONS FOR OPERATION ---------- 3-110
PRECAUTIONS WHEN TRANSPORTING ---------- 3-115
PRECAUTIONS WITH TIRES ---------- 2- 37

<R>
RECOMMENDED FUEL, COOLANT, AND LUBRICANT ---------- 4- 10
RECOMMENDED BRANDS, RECOMMENDED QUALITY FOR PRODUCTS OTHER THAN KOMATSU GENUINE OIL ---------- 4- 12
USE OF FUEL, COOLANT AND LUBRICANTS ACCORDING TO AMBIENT TEMPERATURE ---------- 4- 11

<S>
SAFETY ---------- 2- 2
SAFETY CRITICAL PARTS ---------- 4- 16
SAFETY INFORMATION ---------- 1- 5
SAFETY LABELS ---------- 2- 4
SERVICE PROCEDURE ---------- 4- 19
CHECK BEFORE STARTING ---------- 4- 39
EVERY 1000 HOURS SERVICE ---------- 4- 60
EVERY 2000 HOURS SERVICE ---------- 4- 71
EVERY 250 HOURS SERVICE ---------- 4- 41
EVERY 4000 HOURS SERVICE ---------- 4- 77
EVERY 50 HOURS SERVICE ---------- 4- 40
EVERY 500 HOURS SERVICE ---------- 4- 53
EVERY 6000 HOURS SERVICE ---------- 4- 79
EVERY 8000 HOURS SERVICE ---------- 4- 80
INITIAL 250 HOURS SERVICE (ONLY AFTER THE FIRST 250 HOURS) ---------- 4- 19
WHEN REQUIRED ---------- 4- 20
SHIFTING GEAR ---------- 3- 94
SPECIFICATIONS ---------- 5- 2
STANDARD TIGHTENING TORQUES FOR BOLTS AND NUTS ---------- 4- 13
STARTING ENGINE ---------- 3- 85
STEERING THE MACHINE ---------- 3-102
STEPS FOR TRANSPORTATION ---------- 3-115
STOPPING ENGINE ---------- 3- 88
SWITCHES ---------- 3- 30

<T>
TORQUE LIST ---------- 4- 13
TRANSPORTATION ---------- 3-115
TRAVELING DOWNHILL ---------- 3- 96
TROUBLESHOOTING ---------- 3-125
AFTER RUNNING OUT OF FUEL ---------- 3-125
IF BATTERY IS DISCHARGED ---------- 3-131
METHOD OF TOWING MACHINE ---------- 3-127
OTHER TROUBLE ---------- 3-135

<U>
USE OF REAR VIEW MONITOR ---------- 6- 4
CAUTIONS WHEN USING REAR VIEW MONITOR ---------- 6- 7
NAME AND FUNCTON OF EACH PART OF REAR VIEW MONITOR ---------- 6- 4
SETTING OF REAR VIEW MONITOR ---------- 6- 7

<W>
WEAR PARTS ---------- 4- 9
WEAR PARTS LIST ---------- 4- 9

https://truckmanualshub.com/

https://truckmanualshub.com/

HM300-2 GALEO ARTICULATED DUMP TRUCK

Form No. PEN00101-04

©2007 KOMATSU
All Rights Reserved
Printed in Japan 06-07