https://truckmanualshub.com/

PARTS LIST

零 件 手 冊

FD/FG 15/18/20/25/30/35

LPG 15/18/20/25/30/35

台品堆高機

TAIPIIN FORKLIFT TRUCKS

TAIPIIN CO.,LTD.
DEC013/04 2007

https://truckmanualshub.com/

零件手冊使用說明

一.本零件手冊適用於台品工業(股)公司所生產之1.5－3.5噸之FD＼FG＼LPG系列堆高機。
編制如下：系統索引、組件索引、編號、新碼、舊碼、規格、零件名稱、互換性、應用日期、數量、適用機型、機號等，以便用戶做為識別及維修或更換零件時之參考依據。

二.用戶欲訂購或更換零(組)件時，請務必詳細說明以下各項明細:
1.堆高機之機種型式、編號及製造日期。
2.零(組)件之零件號碼及詳細名稱、數量。
3.交貨之相關需求、交貨方式及交貨地點。

三.用戶欲訂購或更換零(組)件時，請務必使用《台品之原廠零件》。若非使用《台品之原廠零件》做為更換或維修之用，則其機器發生故障時，
，將不在台品工業(股)公司之品質保證範圍內。

四.本手冊為最新版『零件手冊』，其中包含所有已設變、增修、刪改之零件手冊內容及說明。

五.舊版零件手冊已不適用於目前台勵福(股)公司所生產之各系列堆高機，故不再使用所有舊版零件手冊做為參考依據。

六.本手冊依據中華民國96年01月後出廠編制，日後產品結構及相關零(組)件，若有設變修改時，本手冊將再版補充。

七.編制者經歷有限，手冊內容雖經再三校對，但疏漏繆誤之處在所難免，敬祈諸位同業先進不吝指正，俾再版時得以修訂，不勝感幸！

八. 查詢正確的零件號碼、名稱……等

A： 查詢零件號碼(當已知零件名稱、外觀、使用位置等)

準備適用於『待查詢零件』之零件手冊及該項零件樣品

⇩

找出相關之機構系統圖或零件明細頁

⇩

確認零件樣品是否與機構系統圖上相符

⇩

找出『待查詢零件』在機構系統圖上之相關裝配位置及所使用之編號

⇩

將機構系統圖上所使用之編號對照零件明細頁即可看到待查詢之零件號碼

B： 查詢零件名稱、外觀、使用位置等(當已知零件號碼)

翻至零件號碼索引頁即可得知頁次

⇩

找出此零件號碼之相關機構系統圖或零件明細頁

⇩

確認零件手冊上之零件號碼即可知零件名稱及使用數量或適用機型

⇩

將零件明細頁上之零件編號對照機構系統圖上所使用之編號即可知零件外觀及使用位置

https://truckmanualshub.com/

九.正確的使用零件明細(表)頁

前輪軸
A302-1
DRIVE AXLE

前輪軸系統
A302
DRIVE AXLE SYSTEM

B **A**

編號 NO.	零件名稱 PART NAME **C**						FD						FG						FD〔C〕						FG〔C〕							
	新碼 NEW PART NO.	舊碼 OLD PART NO.	規格 SPECIFICATION	互換性 ITC	應用日期 APPLIED DATE	數量 QTY	15 A	18 B	20 C	25 D	30 E	35 F	15 G	18 H	20 I	25 J	30 K	35 L	15 M	18 N	20 O	25 P	30 Q	35 R	15 S	18 T	20 U	25 V	30 W	35 X	機號 BODY NO.	備註 REMARK

D **E** **F** **G** **H** **I** **J** **K** **L** **M**

註解A：機構名稱。
註解B：組件名稱。
註解C：各零(組)件之名稱。
註解D：機構系統圖上所使用之編號。
註解E：新零件號碼。
註解F：舊零件號碼。新、舊碼可互相對照，但客戶需以新零件號碼為基準。
註解G：市購件規格。
註解H：新、舊零件可互換性。
註解I：此零件啟用日期。
註解J：各單元機構所需使用之數量(皆以一台份計之)。
註解K：各零(組)件之適用機型。
註解L：啟用車台號碼。
註解M：備註。

https://truckmanualshub.com/

INTRODUCTION

Ⅰ. This part manual is Taipiin Company Forklift Trucks of Model FD\FG\LPG Series 1.5~3.5 ton. It is categorized as index No, ASSY No., Part No., Old Part No., Part Name, Specification, changeable, applied date, Q'TY, Model, Series Number, and Reference.

Ⅱ. As placing parts orders. Please specify details of the following items.
1. Model, serial numbers and dates of manufacturing.
2. Parts number, parts name, and quantity.
3. Delivery requirements.

Ⅲ. Be sure to use《Taipiin genuine parts》when purchasing or replacing parts. If non-《Taipiin genuine parts》are used for replacement or maintenance, forklift failure is not under our quality warranty.

Ⅳ. The latest version covers the history of version in the old versions.

Ⅴ. We cannot meet the request for the old versions because they are out of use.

Ⅵ. This parts manual is applicable to models manufactured after January 2007. If there is any modification, we will issue a new edition.

Ⅶ. Due to my limited experience, though having revised repeatedly, I am afraid that still some errors exist. Therefore I wish those advancer would be so generous as giving me any corrections needed, so as that next publication of this manual could reach more perfect. I am very grateful for your help.

https://truckmanualshub.com/

Ⅷ. Locating part number, part name.

A : To know part number
(When the shape, name and location of part are known.)

Prepare “parts manual” for applicable model.

⇩

Find out relevant page by illus. index or table of contents.

⇩

Identify shape of part with illustrations.

⇩

Locate item No. of parts list section using item No. in illustration.

⇩

Confirm serial No. in machine drawing to know part number

B : To know part name, shape and location
(When part number is know)

Part number reference please turn at back of manual for corrected page.

⇩

Locate relevant page or machine drawing

⇩

Confirm part No. by parts list.To know part name, quantity, and applicable.

⇩

Confirm part No. by parts list.To know part shape and location.

https://truckmanualshub.com/

IX. How to use parts list.

前輪軸
A302-1
DRIVE AXLE

前輪軸系統
A302
DRIVE AXLE SYSTEM

B **A**

編號 NO.	零件名稱 PARE NAME **C**						FD						FG						FD〔C〕						FG〔C〕							
	新碼 NEW PART NO.	舊碼 OLD PART NO.	規格 SPECIFICATION	互換性 ITC	應用日期 APPLIED DATE	數量 QTY	1158 A	1180 B	2050 C	2350 D	3050 E	3550 F	1158 G	1180 H	2050 I	2350 J	3050 K	3550 L	1158 M	1180 N	2050 O	2350 P	3050 Q	3550 R	1158 S	1180 T	2050 U	2350 V	3050 W	3550 X	機號 BODY NO.	備註 REMARK

D **E** **F** **G** **H** **I** **J** **K** **L** **M**

Note A：Mechanism name.
Note B：Part unit.
Note C：Part name.
Note D：Serial No. In machine drawing.
Note E：New Part NO.
Note F：Old part NO. Old part number can be contrast with the new part number. Please use new part number list for standard.
Note G：Specification.
Note H：Old and new part is changeable.
Note I：Applied date.
Note J：Quantity.
Note K：Part for applicable model.
Note L：Body No.
Note M：Remark.

https://truckmanualshub.com/

機構排序
MECHANISM ORDER

順序 I	大機構 SYSTEM	小機構 ASSY
A301	變速箱系統 TRANSMISSION SYSTEM	A301-1手排變速箱組 (MT)TRANSMISSION
		A301-2手排撥桿組 (MT)GEARSHIFT LEVER ASSY
		A301-3手排傳動齒輪組 (MT)TRANSMISSION GEAR SET
		A301-4手排差速器組 (MT)DIFFERENTIAL ASSY
		A301-5手排離合器箱組 (MT)CLUTCH HOUSING
		A301-6自排差速器組 (AT)DIFFERENTIAL ASSY
		A301-7自排變速齒輪箱組 (AT)TRANSMISSION GEAR BOX
		A301-8自排變速箱體組 (AT)TRANSMISSION CASE ASSY
		A301-9自排油泵組 (AT)TRANSMISSION OIL PUMP
		A301-10自排離合器組 (AT)TRANSMISSION CLUTCH ASSY
		A301-11自排控制閥組 (AT)CONTROL VALVE ASSY
		A301-11A電子式自排控制閥組 (AT)ELECTRIC CONTROL VALVE
A302	前輪軸系統 DRIVE AXLE SYSTEM	A302-1前輪軸 DRIVE AXLE
		A302-2煞車襯板組 WHEEL BRAKE ASSY
		A302-3輪胎組 TIRE ASSY
A303	轉向系統 STEERING SYSTE	A303-1後輪樑組 STEERING AXLE ASSY
		A303-2轉向油壓缸組 STEERING CYLINDER
		A303-3懸吊組 STEERING WHEEL
		A303-4油壓方向機 POWER STEERING

https://truckmanualshub.com/

機構排序
MECHANISM ORDER

順序 I	大機構 SYSTEM	小機構 ASSY
A304	引擎系統 ENGINE SYSTEM	A304-1引擎組 ENGINE ISUZU C240
		A304-1A引擎組 ENGINE ISUZU 4JG2.4JG2PJ03
		A304-1B引擎組 ENGINE NISSAN H20.H25
		A304-2散熱器組 RADIATOR
		A304-3消音器組 EXHAUST
		A304-4空氣濾清器組 AIR CLEANER
A305	車身配件系統 CAR BOOY FITTING SYSTEM	A305-1車身與配件組 CAR BODY & FITTING
		A305-2引擎蓋與配重組 ENGING HOOD & COUNTER WEIGHT
		A305-3駕駛座椅組 DRIVER SEAT
		A305-4加速器連桿組 ACCELERATOR LINK
A306	制動系統 BRAKE SYSTEM	A306-1手煞車組 PARKING BRAKE
		A306-2手排臥式煞車組 (MT)HORIZONTAL-BRAKE PEDAL ASSY
		A306-3自排臥式含煞車輔助器組 (AT)HORIZONTAL-BRAKE AUXILIARY ASSY
		A306-3A自排臥式煞車組 (AT)HORIZONTAL-BRAKE PEDAL ASSY
A307	操縱系統 CONTROL SYSTEM	A307-1自排排檔開關組 (AT)SHIFT LEVER SWITCH
		A307-1A電子式自排排檔開關組 (AT)ELECTRIC SHIFT LEVER SWITCH
		A307-2操作桿組 LINKAGE LEVER ASSY

https://truckmanualshub.com/

機構排序
MECHANISM ORDER

順序 I	大機構 SYSTEM	小機構 ASSY
A308	升降系統 MAST SYSTEM	A308-1二截式桅桿配件組 MAST FITTING (TWO-STAGE)
		A308-1A二截式貨櫃型桅桿配件組 MAST FITTING(CONTAINER FORM)
		A308-1B三截式桅桿配件組 MAST FITTING (THREE-STAGE)
		A308-2滑軌組 MAST ASSY
		A308-3傾斜缸組 TILT CYLINDER
		A308-4二.三截式升降缸組(右) LIFT CYLINDER (TWO＆THREE-STAGE)(R.H.)
		A308-4A二.三截式升降缸組(左) LIFT CYLINDER (TWO＆THREE-STAGE)(L.H.)
		A308-4B二.三截式貨櫃型油壓缸組 LIFT CYLINDER (TWO＆THREE CONTAINER FORM)
		A308-4C二截式貨櫃型升降缸組(右) LIFT CYLINDER (CONTAINER FORM)(R.H.)
		A308-4D二截式貨櫃型升降缸組(左) LIFT CYLINDER (CONTAINER FORM)(L.H.)
		A308-5二截式升降缸配管組 LIFT CYLINDER FITTING (TWO-STAGE)
		A308-5A二截式貨櫃型升降缸配管組 LIFT CYLINDER FITTING (CONTAINER FORM)
		A308-5B三截式升降缸配管組 LIFT CYLINDER FITTING (THREE-STAGE)
		A308-6二截式貨叉架組 LIFT BRACKET (TWO-STAGE)
		A308-6A二.三截式貨櫃型貨叉架組 LIFT BRACKET (TWO＆THREE CONTAINER FORM)
		A308-7油壓管路組 HYDRAULIC LINE
A309	附件系統 ACCESSORY SYSTEM	A309-1儀錶與開關 METER ＆ SWITCH
		A309-2工具箱組 TOOLS BOX ASSY
		A309-3銘牌與貼紙 PLATE ＆ STICKER

https://truckmanualshub.com/

機構排序
MECHANISM ORDER

順序 I	大機構 SYSTEM	小機構 ASSY
A310	選配配件系統 CHOOSE HCCESSORY SYSTEM	A310-1側移組 SIDE SHIFT
		A310-2傾卸組 HINGED FORK
		A310-3二截式側移配管組 HOSE & ROLL FOR SIDE SHIFT (TWO-STAGE)
		A310-3A二截式貨櫃型側移配管組 HOSE & ROLL FOR SIDE SHIFT (CONTAINER FORM)
		A310-3B三截式側移配管組 HOSE & ROLL FOR SIDE SHIFT (THREE-STAGE)
		A310-3C二截式傾卸配管組 HOSE & ROLL FOR HINGED FORK (TWO-STAGE)
		A310-3D二截式貨櫃型傾卸配管組 HOSE & ROLL FOR HINGED FORK (CONTAINER FORM)
		A310-3E三截式傾卸配管組 HOSE & ROLL FOR DHINGED FORK (THREE-STAGE)
		A310-3F三截式四排配管組 HOSE & ROLL OF FOUR-ROW (THREE-STAGE)
		A310-3G二截式四排配管組 HOSE & ROLL OF FOUR-ROW (TWO-STAGE)
		A310-3H二截式貨櫃型四排配管組 HOSE & ROLL OF FOUR-ROW (TWO-STAGE CONTAINER)
		A310-4選附配件組 CHOOSE ACCESSORY OVERALL
		A310-5立式向上排氣管組 EXHAUST PIPE
		A310-5A向上排氣管組 UPWARD EXHAUST PIPE
		A310-6背式瓦斯桶架 CARRYING LPG TANK BRACKET ASSEMBLY
		A310-6A立式瓦斯桶架 UPRINGHT LPG TANK BRACKET ASSEMBLY
		A310-7雙燃料瓦斯轉換器組 LPG & GASOLING-FUEL SUPPLY SYSTEM
		A310-7A單燃料瓦斯轉換器組 LPG-FUEL SUPPLY SYSTEM
A311	修理包系統 REPAIR KIT SYSTEM	A311-1過濾器 FILTER & LOCK-OFF VALVE
		A311-2轉換器 LPG CONVERTER
		A311-3修理包總覽 REPAIR KIT OVERALL

圖解索引
ILLUSTRATION INDEX

變速箱系統 A301 TRANSMISSION SYSTEM

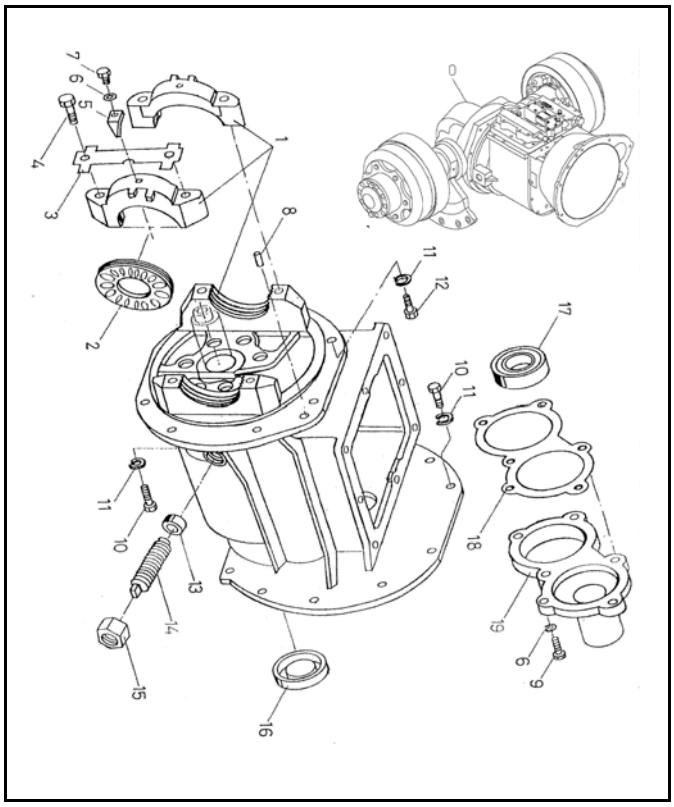

手排變速箱組
A301-1
(MT)TRANSMISSION

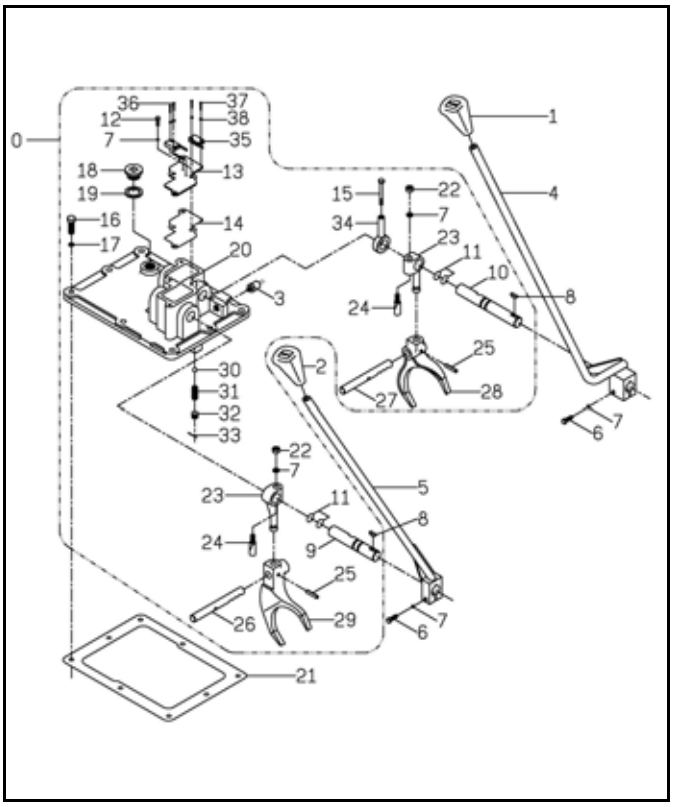

手排撥桿組
A301-2
(MT)GEARSHIFT LEVER ASSY

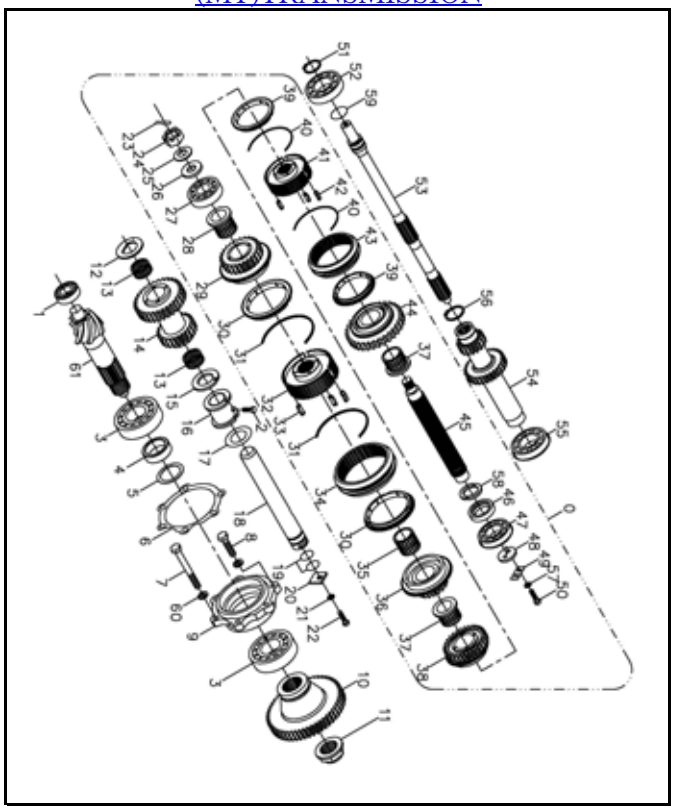

手排傳動齒輪組
A301-3
(MT)TRANSMISSION GEAR SET

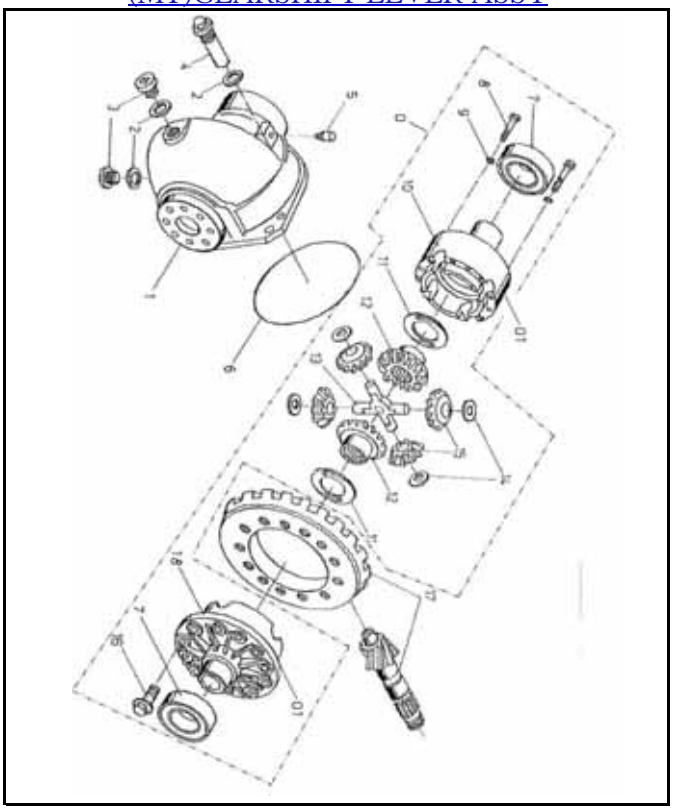

手排差速器組
A301-4
(MT)DIFFERENTIAL ASSY

圖解索引
ILLUSTRATION INDEX

變速箱系統 A301 TRANSMISSION SYSTEM

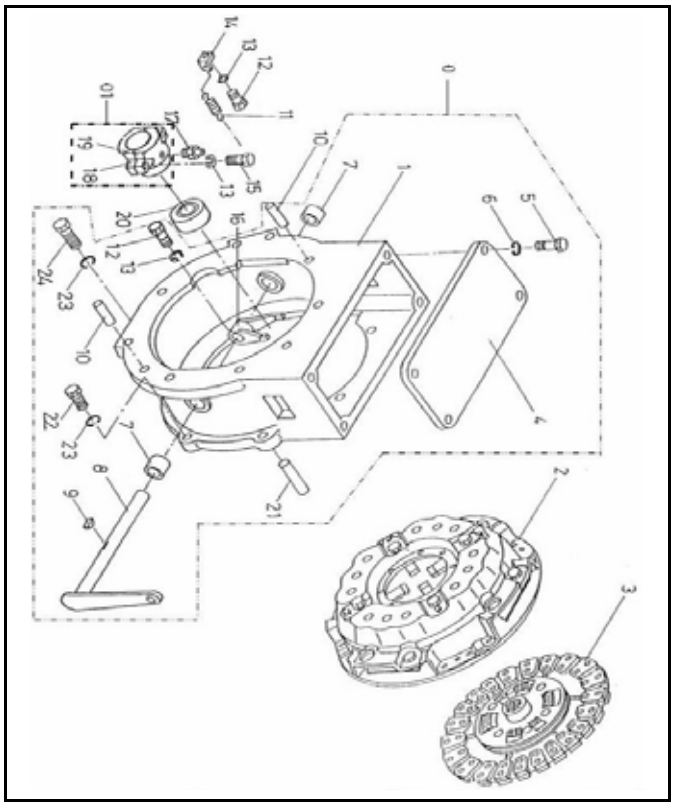

手排離合器箱組
A301-5
(MT)CLUTCH HOUSING

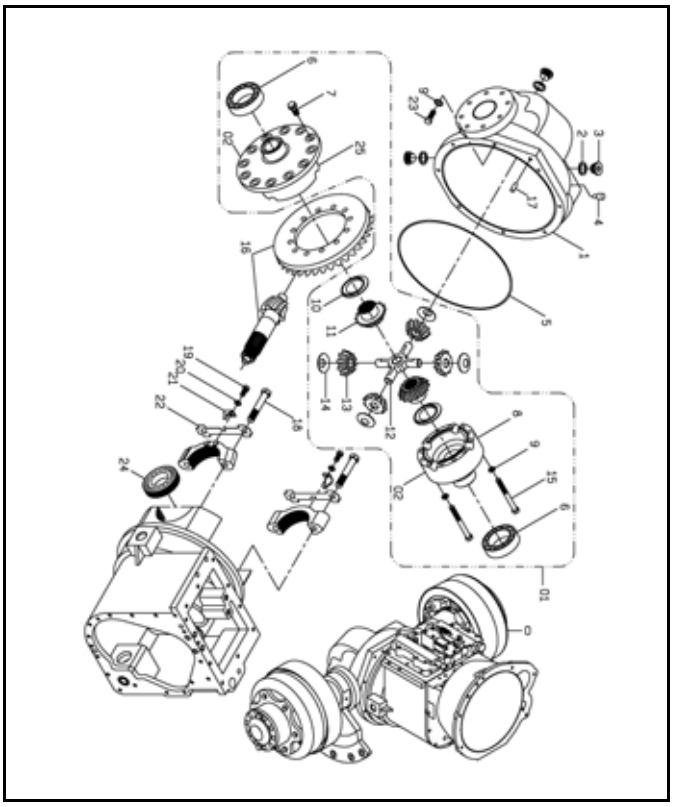

自排差速器組
A301-6
(AT)DIFFERENTIAL ASSY

自排變速齒輪箱組
A301-7
(AT)TRANSMISSION GEAR BOX

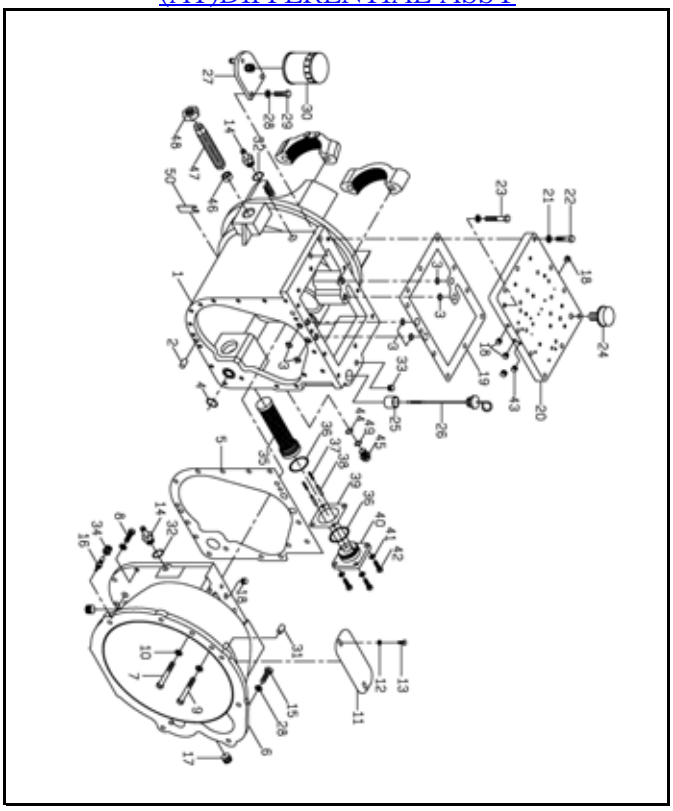

自排變速箱體組
A301-8
(AT)TRANSMISSION CASE ASSY

圖解索引
ILLUSTRATION INDEX

變速箱系統 A301 TRANSMISSION SYSTEM

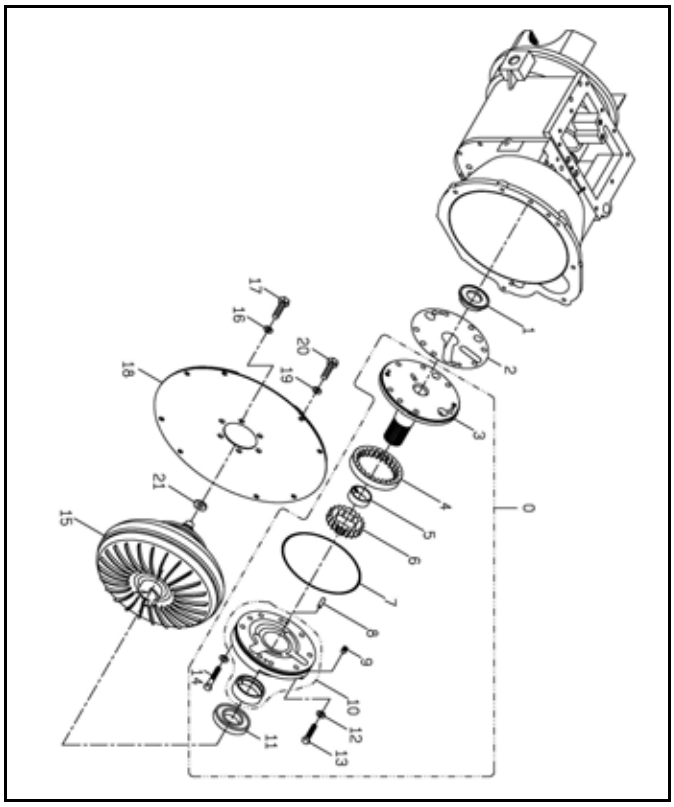

自排油泵組
A301-9
(AT)TRANSMISSION OIL PUMP

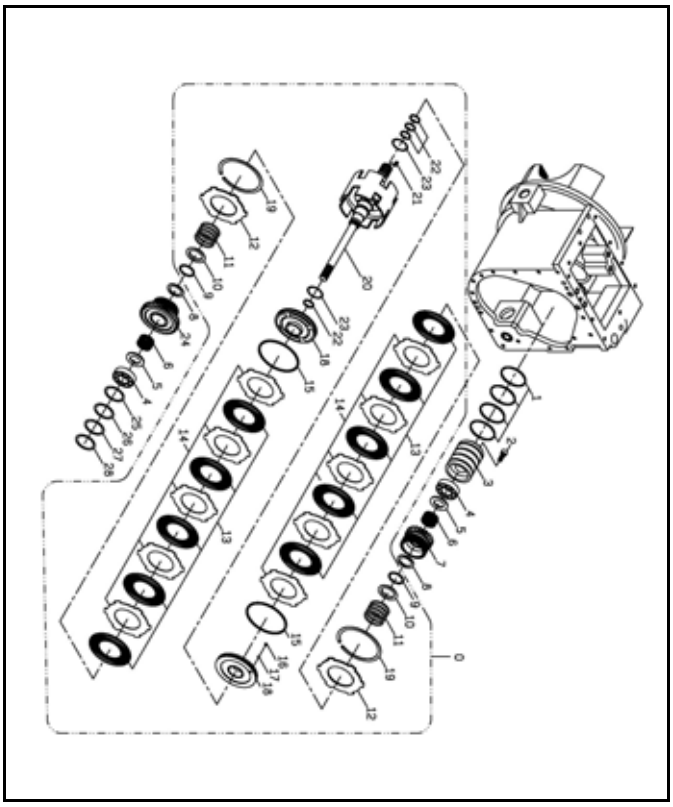

自排離合器組
A301-10
(AT)TRANSMISSION CLUTCH ASSY

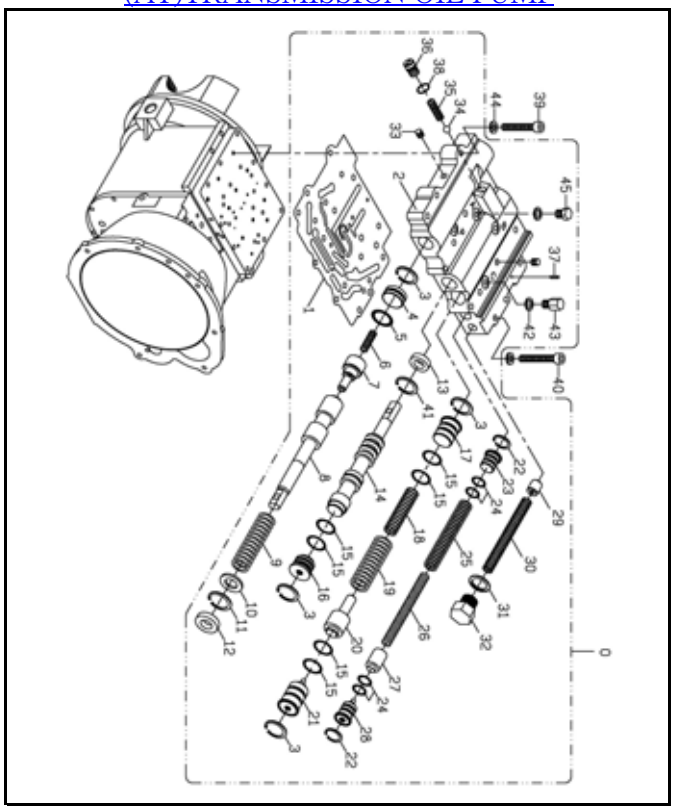

自排控制閥組
A301-11
(AT)CONTROL VALVE ASSY

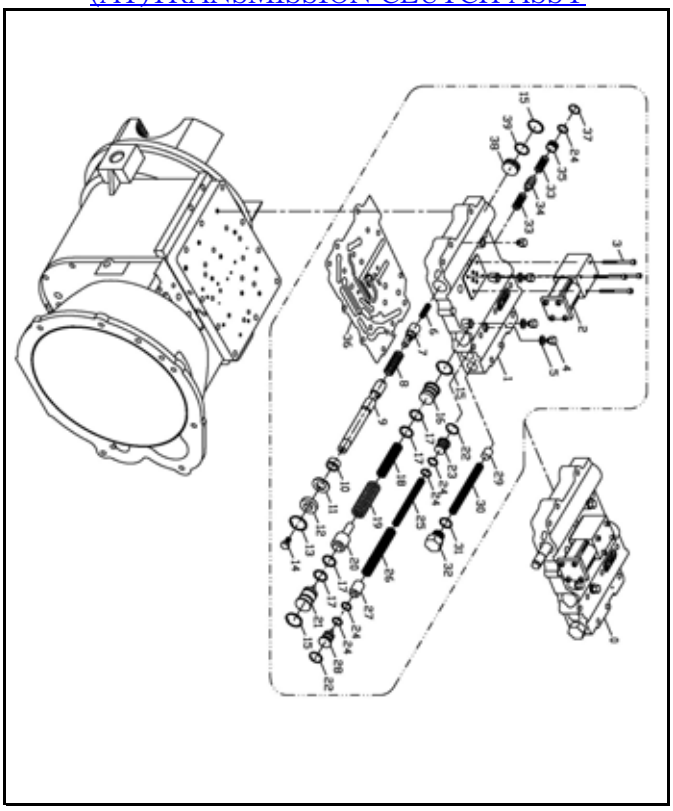

電子式自排控制閥組
A301-11A
(AT)ELECTRIC CONTROL VALVE

圖解索引
ILLUSTRATION INDEX

前輪軸系統 A302 DRIVE AXLE SYSTEM

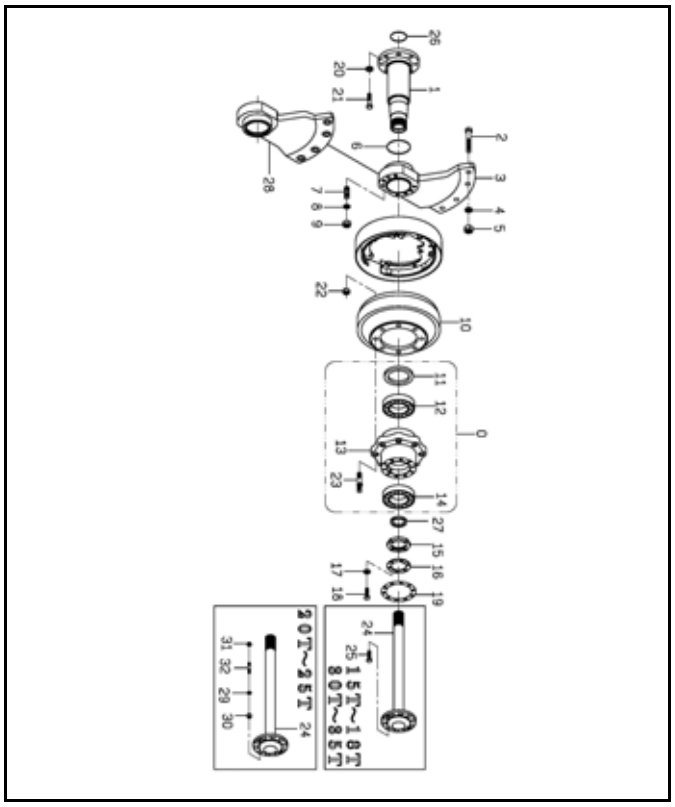

前輪軸
A302-1
DRIVE AXLE

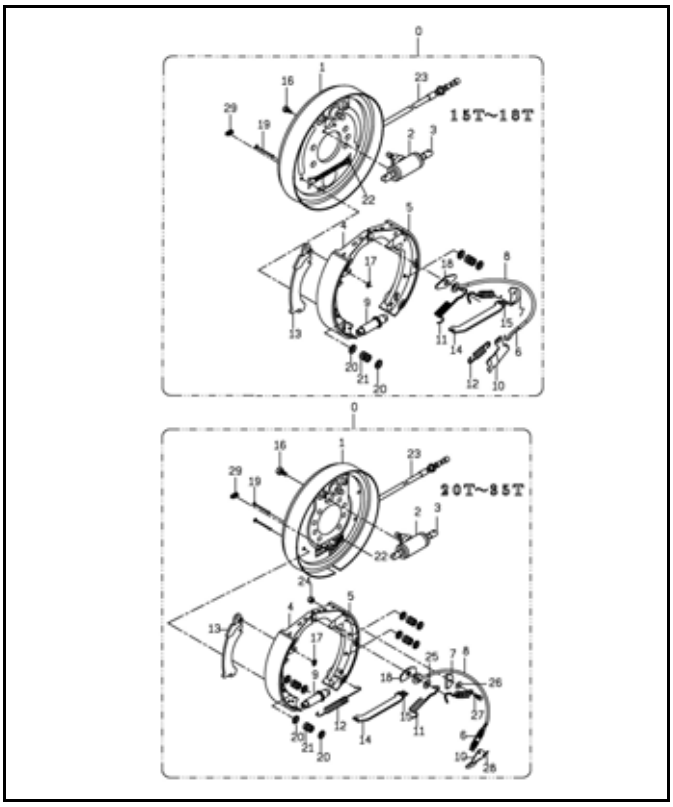

煞車襯板組
A302-2
WHEEL BRAKE ASSY

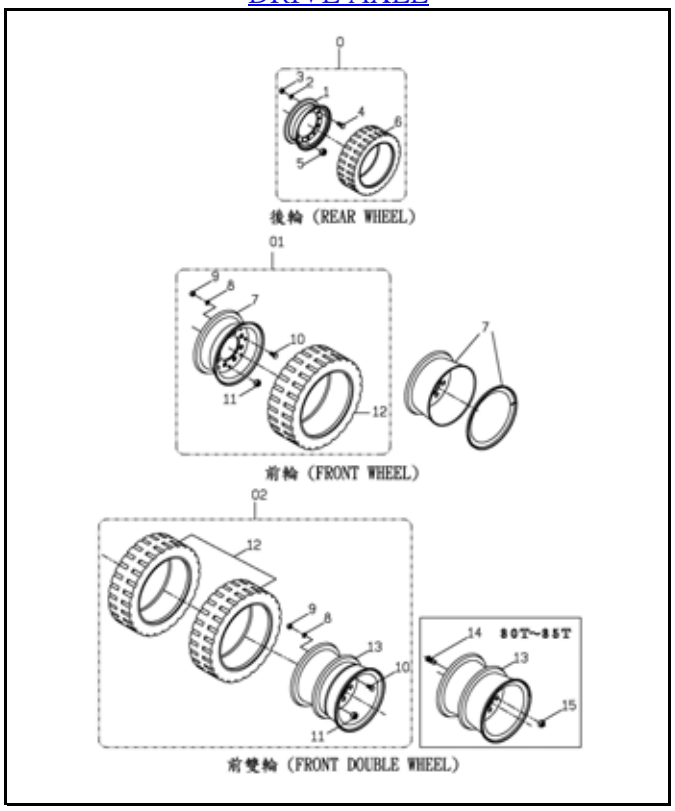

輪胎組
A302-3
TIRE ASSY

圖解索引
ILLUSTRATION INDEX

轉向系統 A303 STEERING SYSTEM

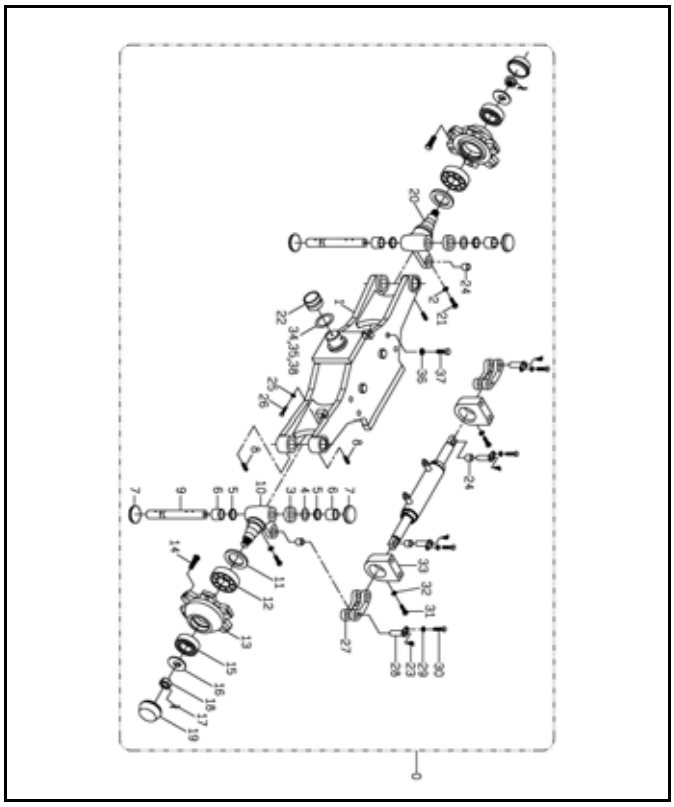

後輪樑組
A303-1
STEERING AXLE ASSY

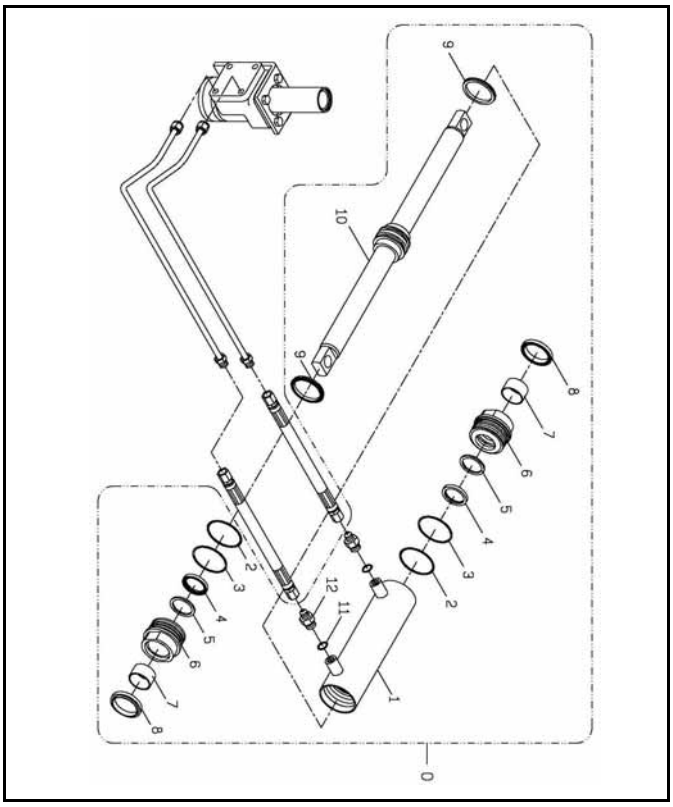

轉向油壓缸組
A303-2
STEERING CYLINDER

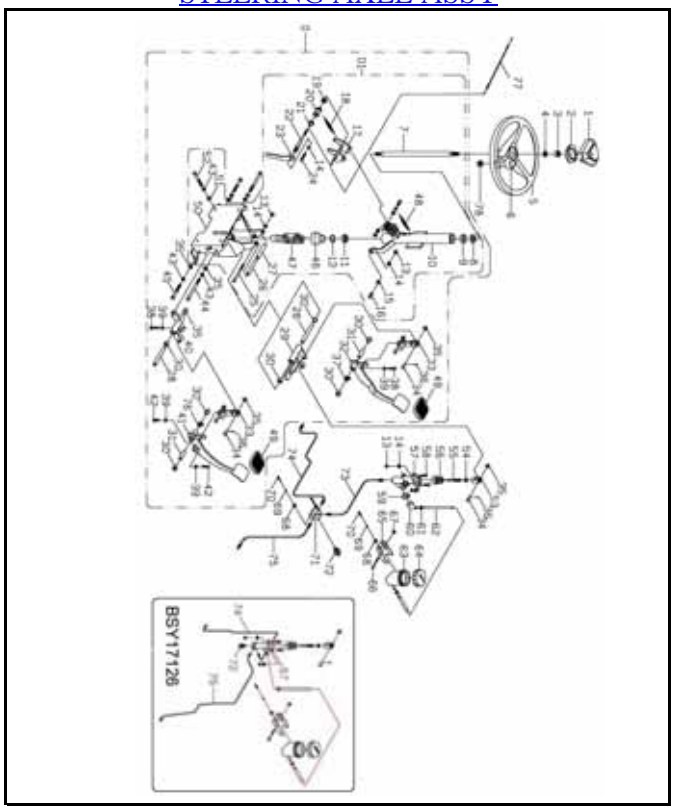

懸吊組
A303-3
STEERING WHEEL

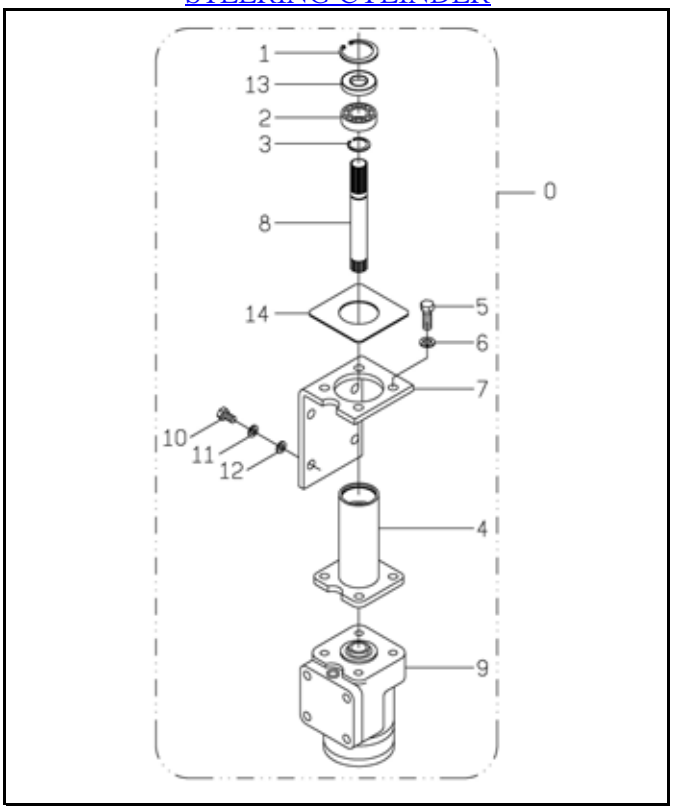

油壓方向機
A303-4
POWER STEERING

圖解索引
ILLUSTRATION INDEX

引擎系統 A304 ENGINE SYSTEM

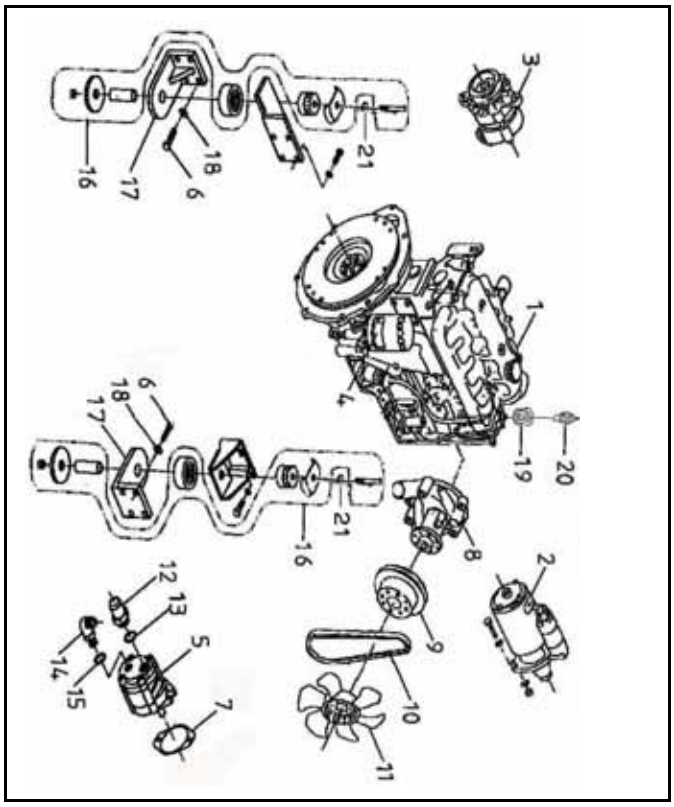

引擎組
A304-1
ENGINE ISUZU C240

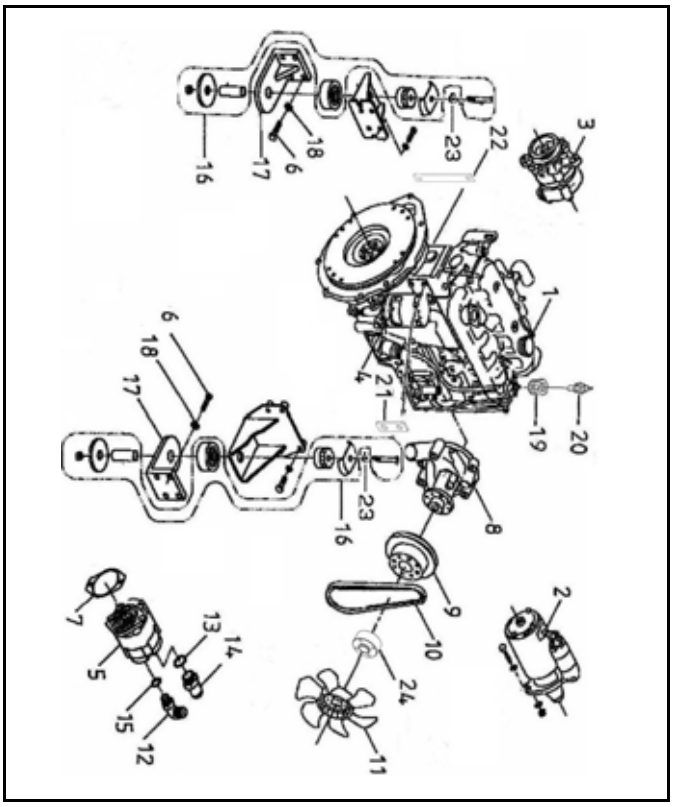

引擎組
A304-1A
ENGINE ISUZU 4JG2,4JG2PJ03

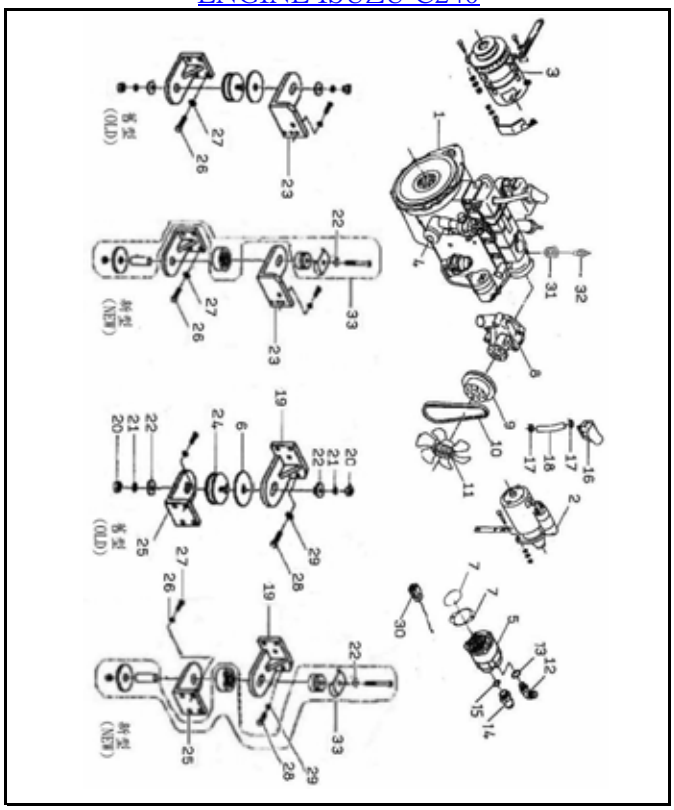

引擎組
A304-1B
ENGINE NISSAN H20.H25

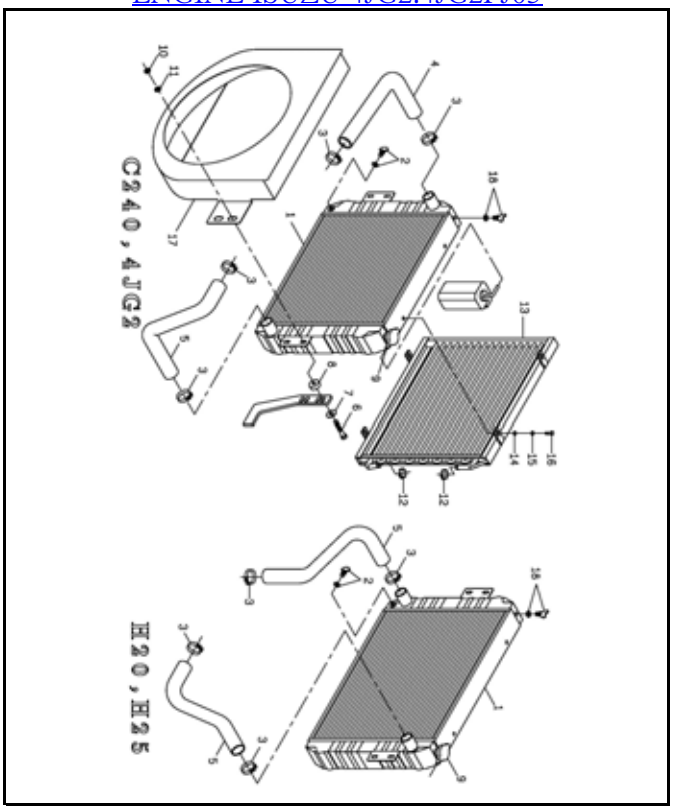

散熱器組
A304-2
RADIATOR

圖解索引
ILLUSTRATION INDEX

引擎系統 A304 ENGINE SYSTEM

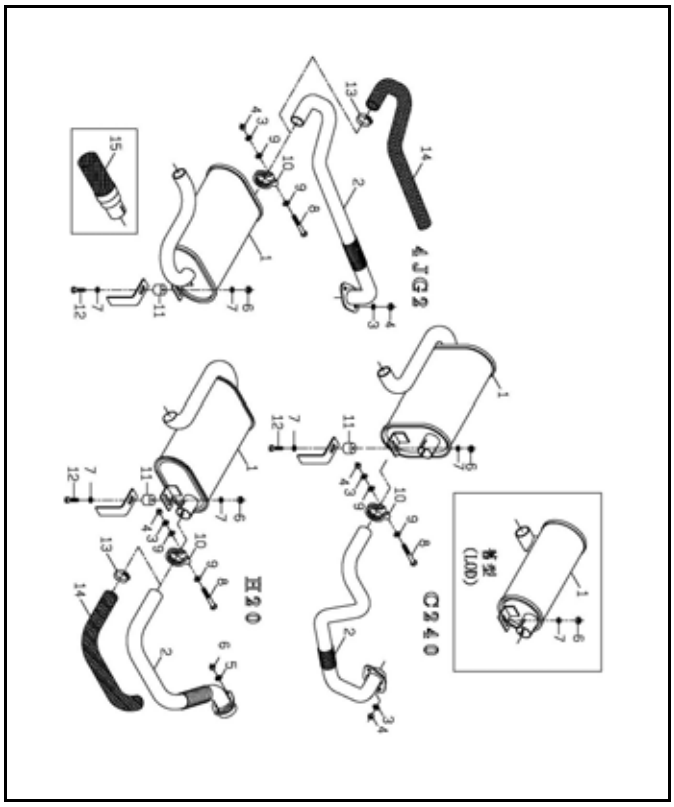

消音器組
A304-3
EXHAUST

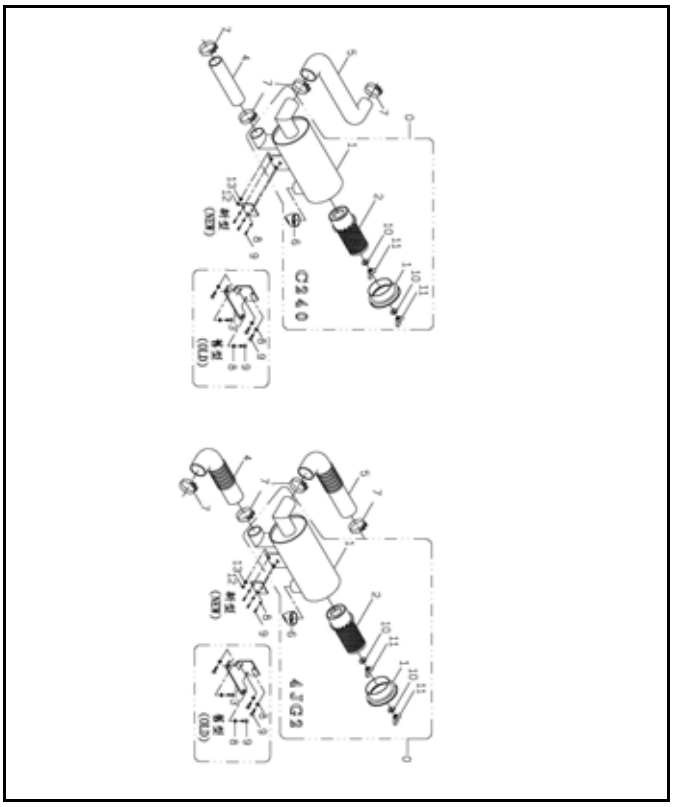

空氣濾清器組
A304-4
AIR CLEANER

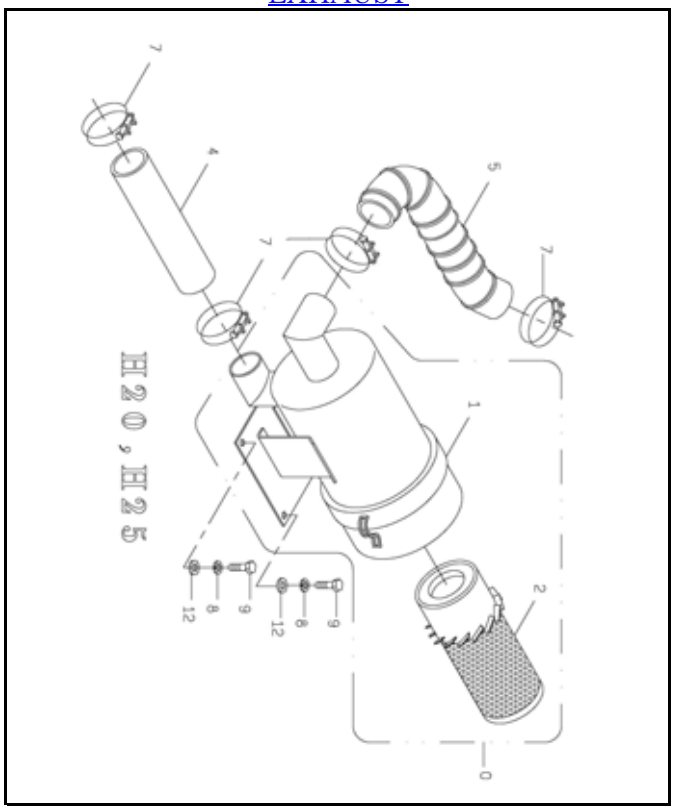

空氣濾清器組
A304-4
AIR CLEANER

圖解索引
ILLUSTRATION INDEX

車身配件系統 A305 CAR BOOY FITTING SYSTEM

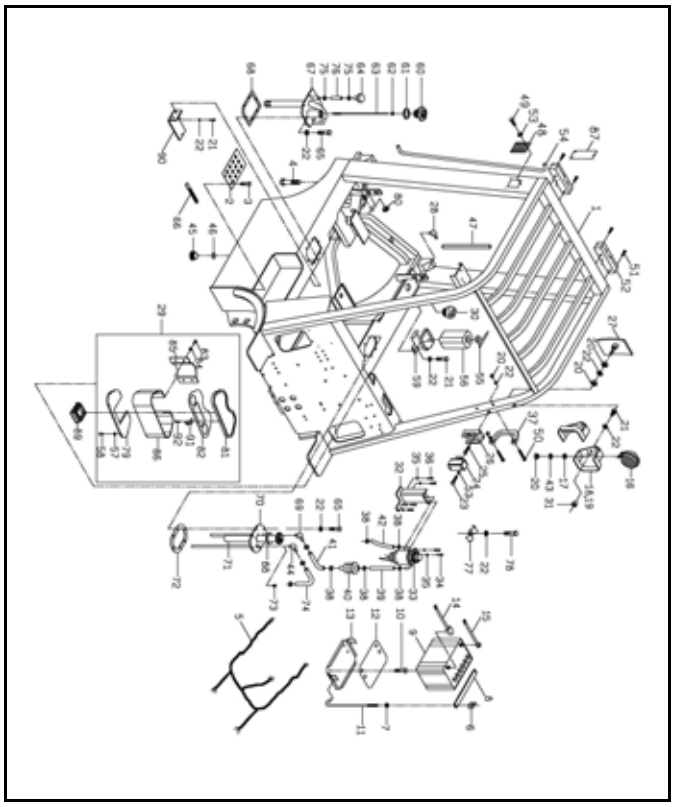

車身與配件組
A305-1
CAR BODY & FITTING

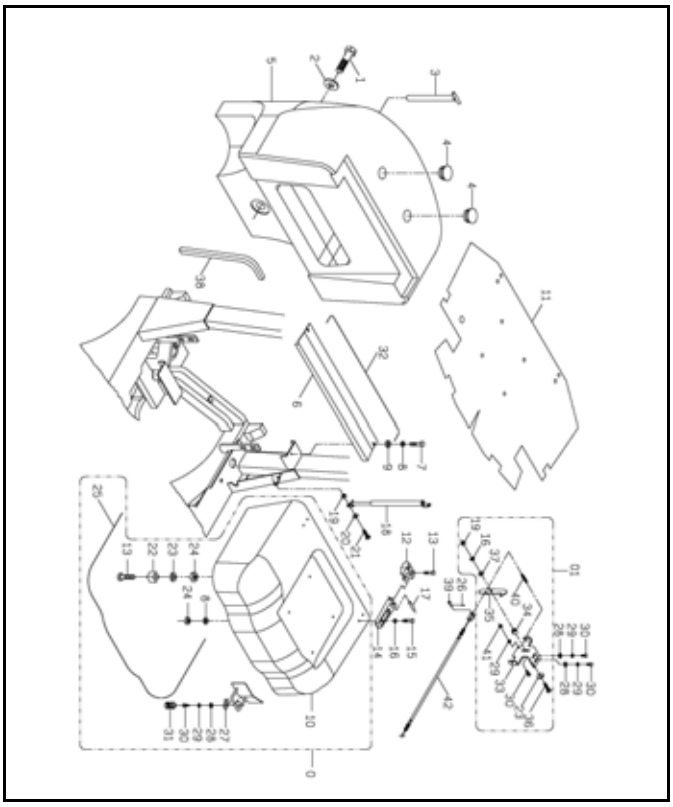

引擎蓋與配重組
A305-2
ENGING HOOD & COUNTER WEIGHT

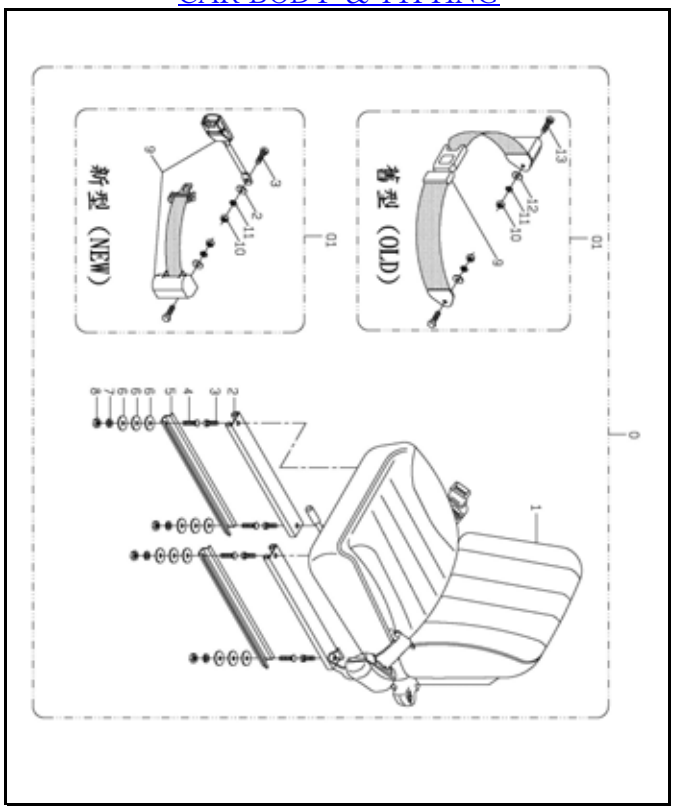

駕駛座椅組
A305-3
DRIVER SEAT

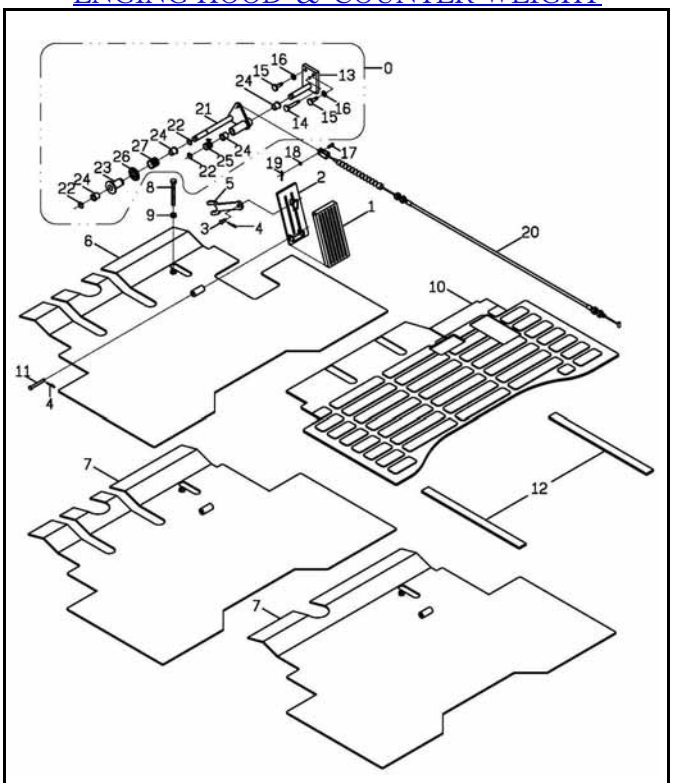

加速器連桿組
A305-4
ACCELERATOR LINK

圖解索引
ILLUSTRATION INDEX

制動系統 A306　BRAKE SYSTEM

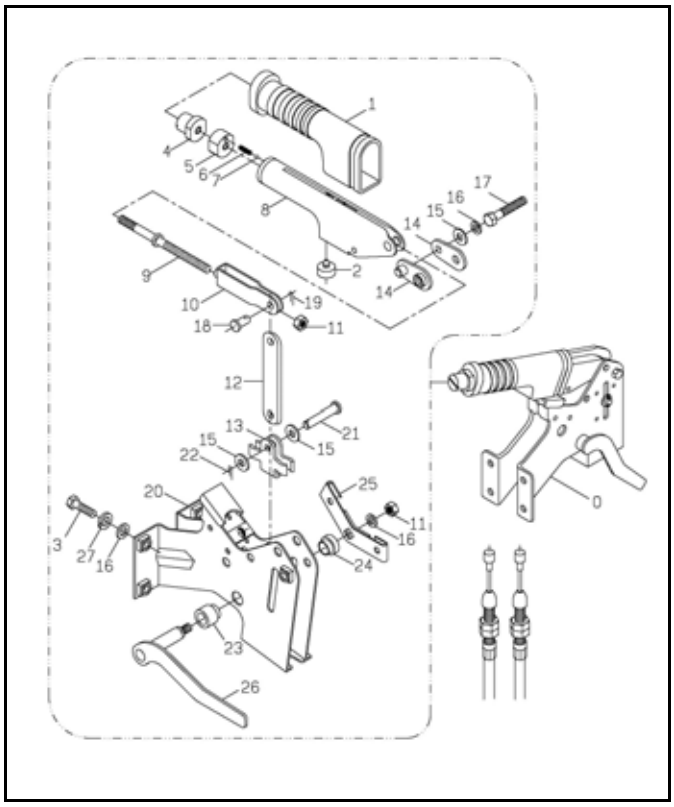

手煞車組
A306-1
PARKING BRAKE

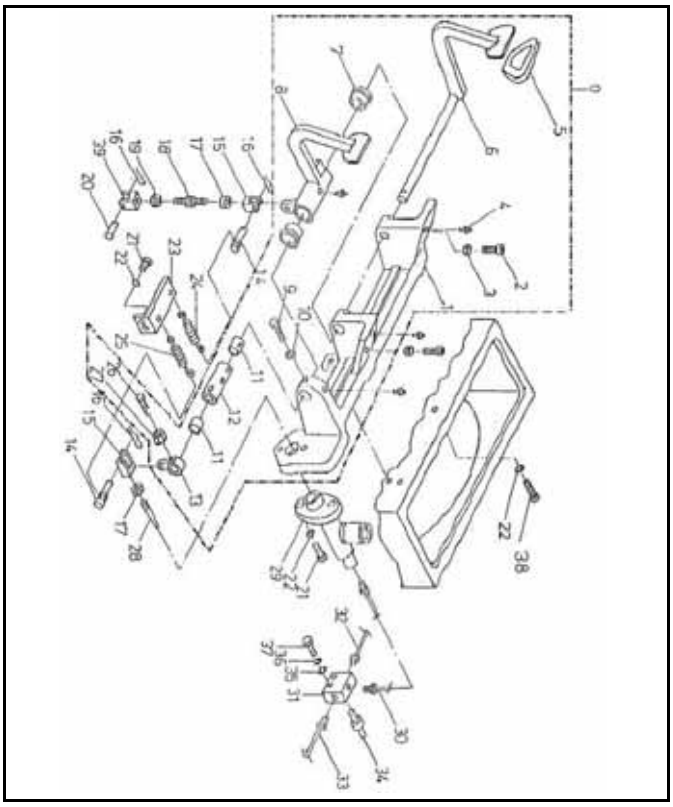

手排臥式煞車組
A306-2
(MT)HORIZONTAL-BRAKE PEDAL ASSY

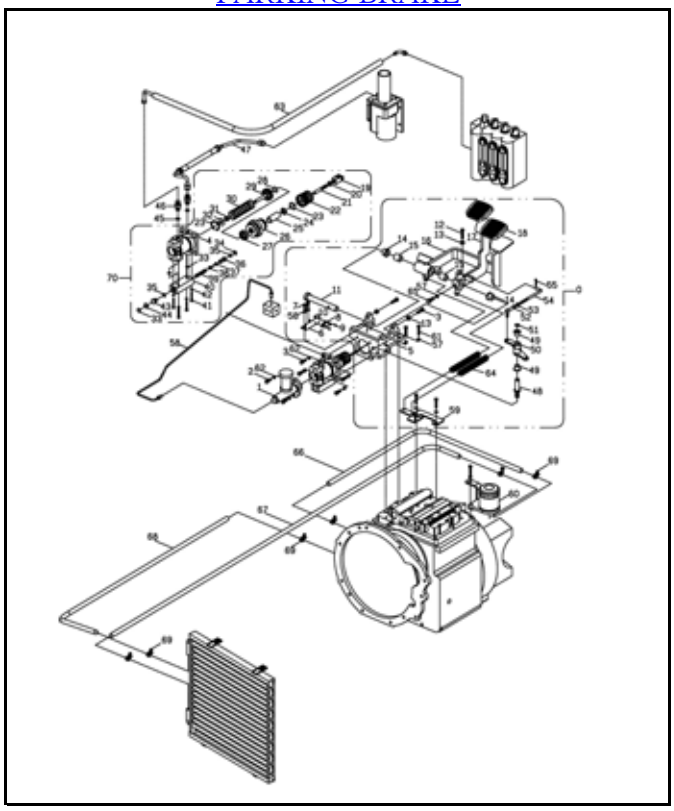

自排臥式含煞車輔助器組
A306-3
(AT)HORIZONTAL-BRAKE AUXILIARY ASSY

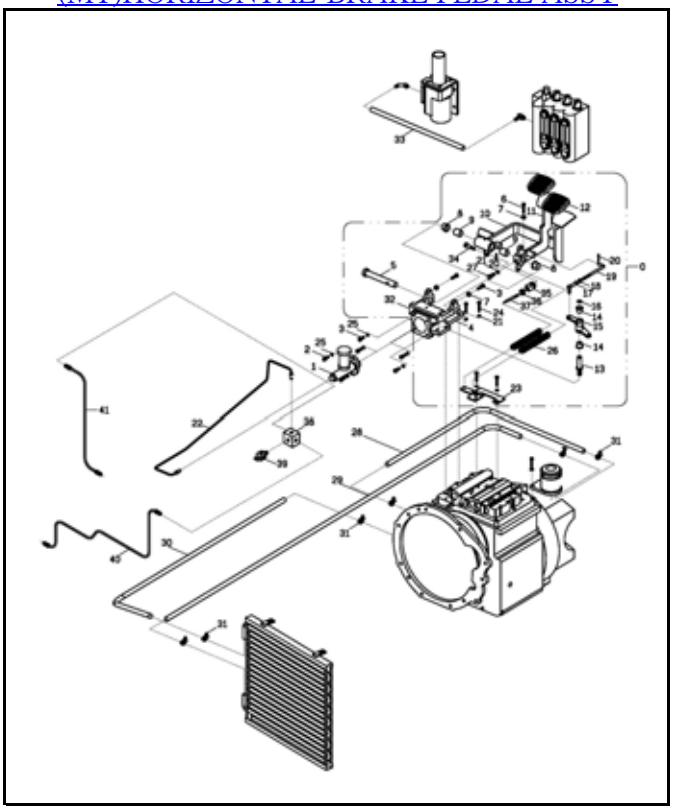

自排臥式煞車組
A306-3A
(AT)HORIZONTAL-BRAKE PEDAL ASSY

圖解索引
ILLUSTRATION INDEX

操縱系統 A307 CONTROL SYSTEM

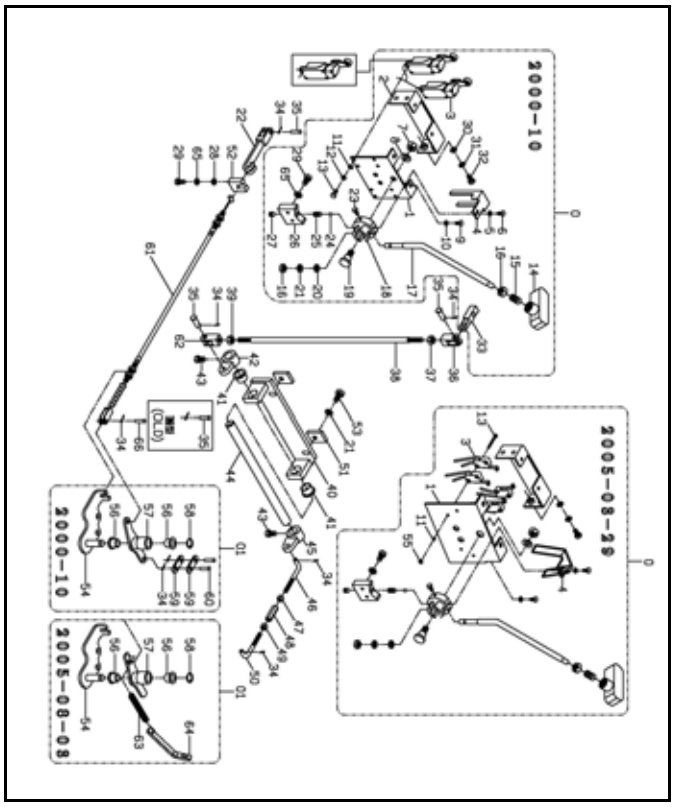

自排排檔開關組
A307-1
(AT)SHIFT LEVER SWITCH

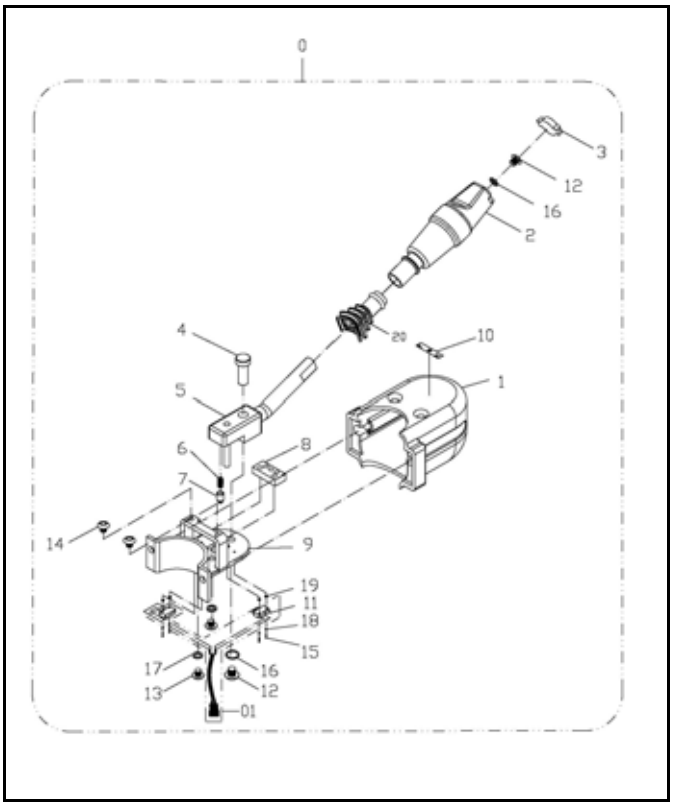

電子式自排排檔開關組
A307-1A
(AT)ELECTRIC SHIFT LEVER SWITCH

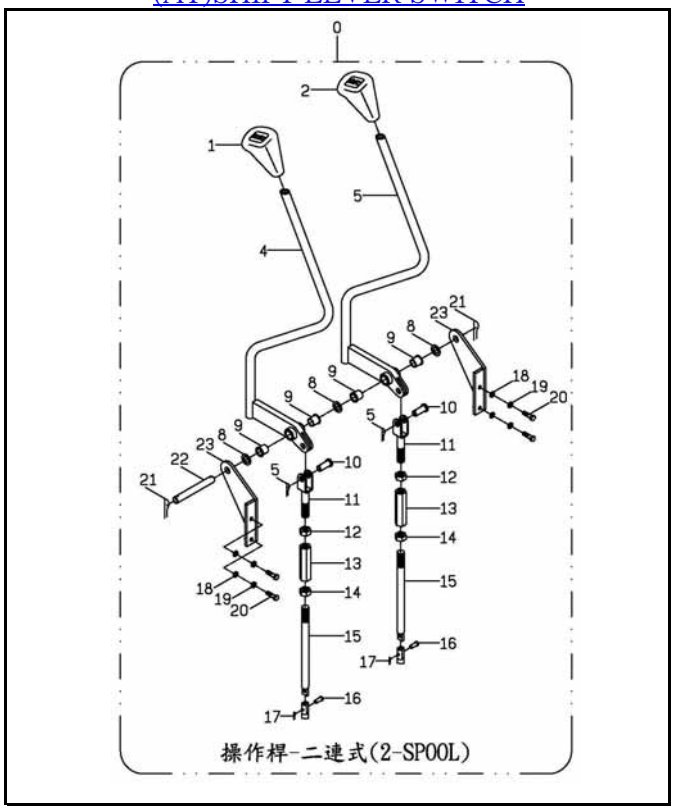

操作桿組
A307-2
LINKAGE LEVER ASSY

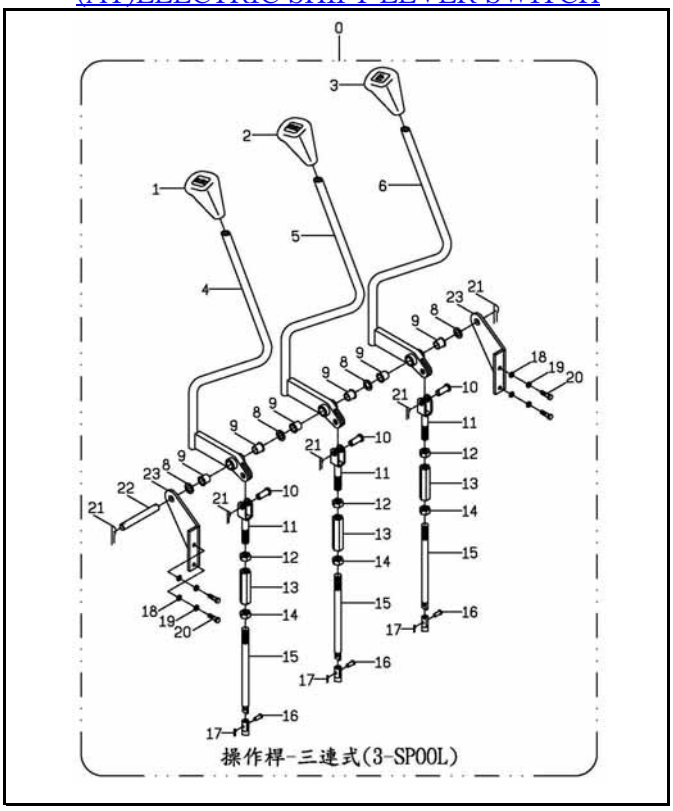

操作桿組
A307-2
LINKAGE LEVER ASSY

圖解索引
ILLUSTRATION INDEX

升降系統 A308 MAST SYSTEM

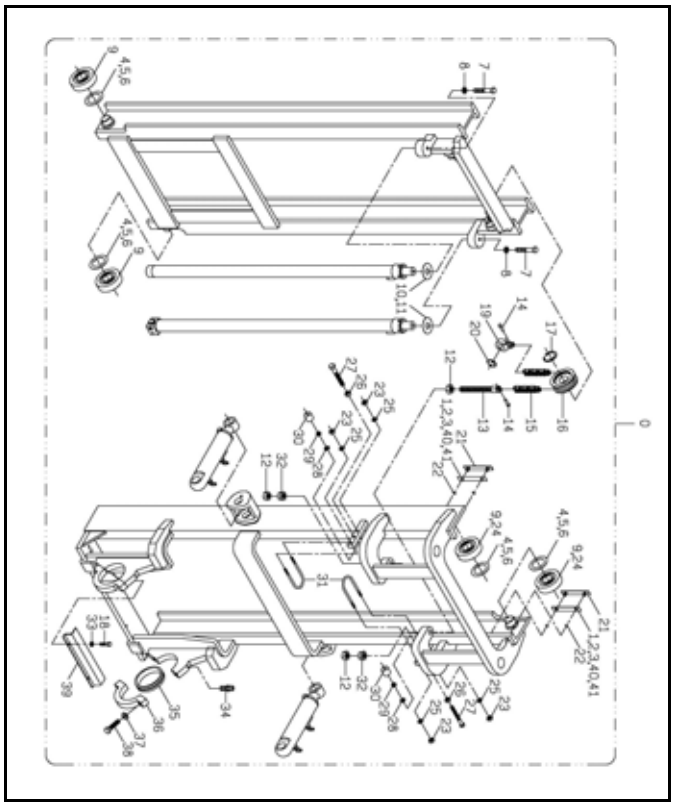

二截式桅桿配件組
A308-1
MAST FITTING (TWO-STAGE)

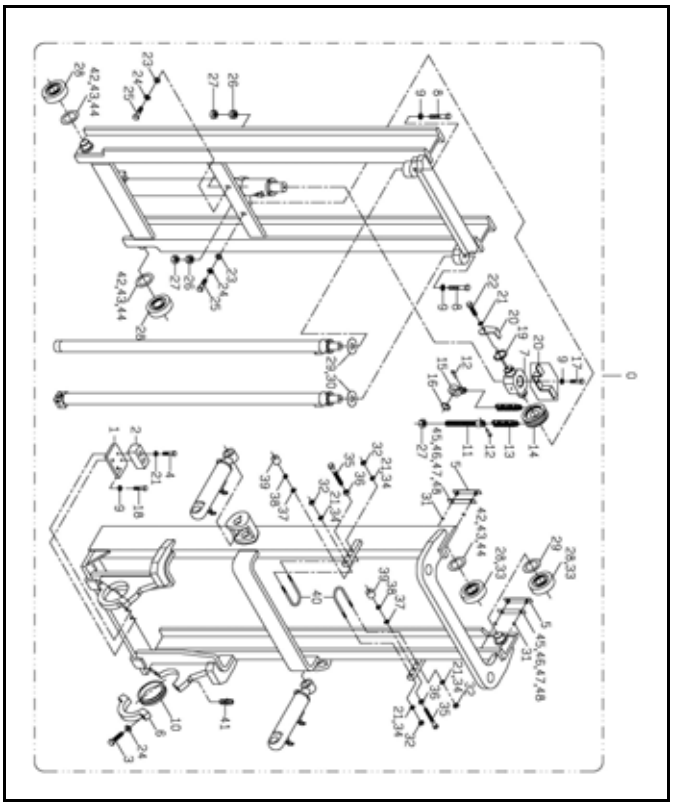

二截式貨櫃型桅桿配件組
A308-1A
MAST FITTING(CONTAINER FORM)

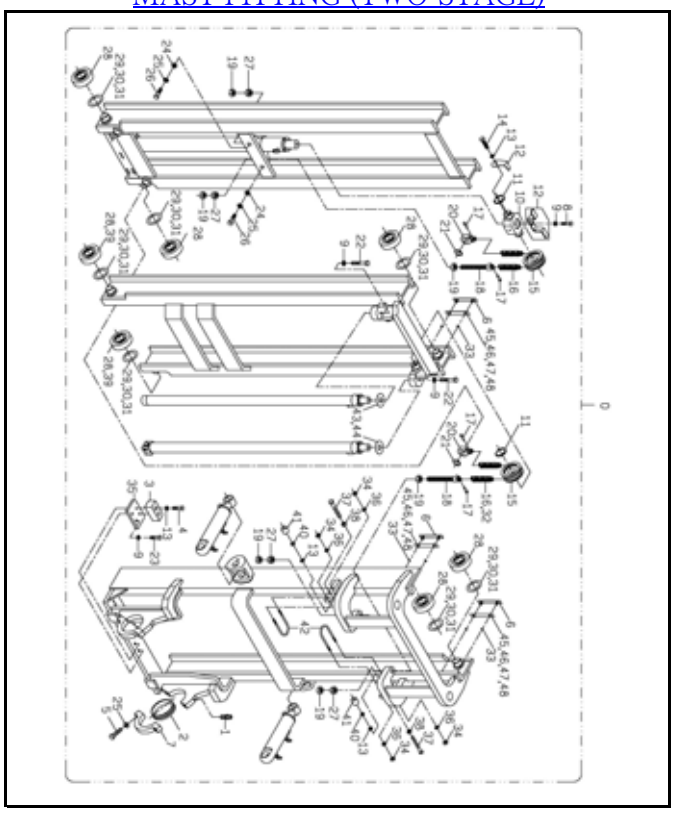

三截式桅桿配件組
A308-1B
MAST FITTING (THREE-STAGE)

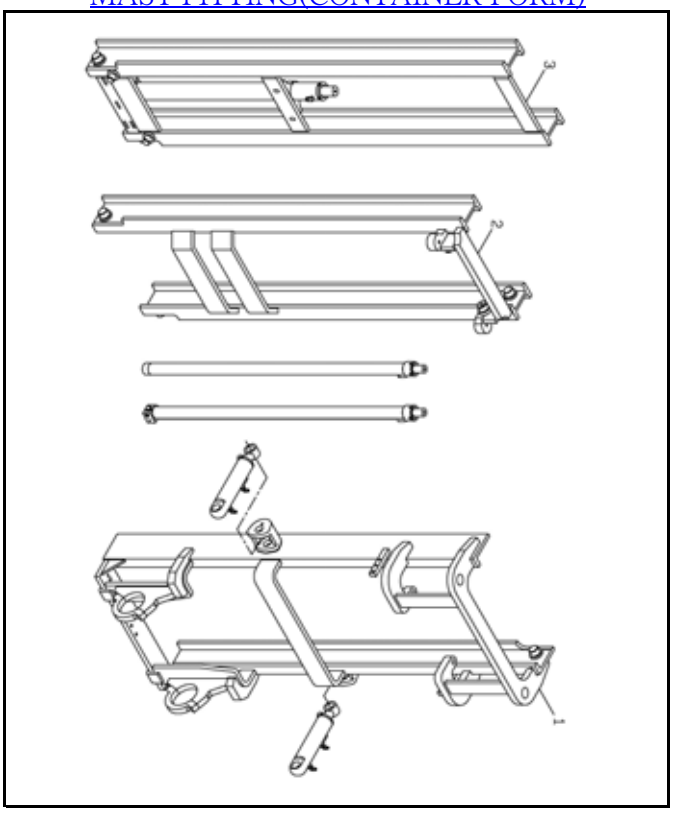

滑軌組
A308-2
MAST ASSY

圖解索引
ILLUSTRATION INDEX

升降系統 A308 MAST SYSTEM

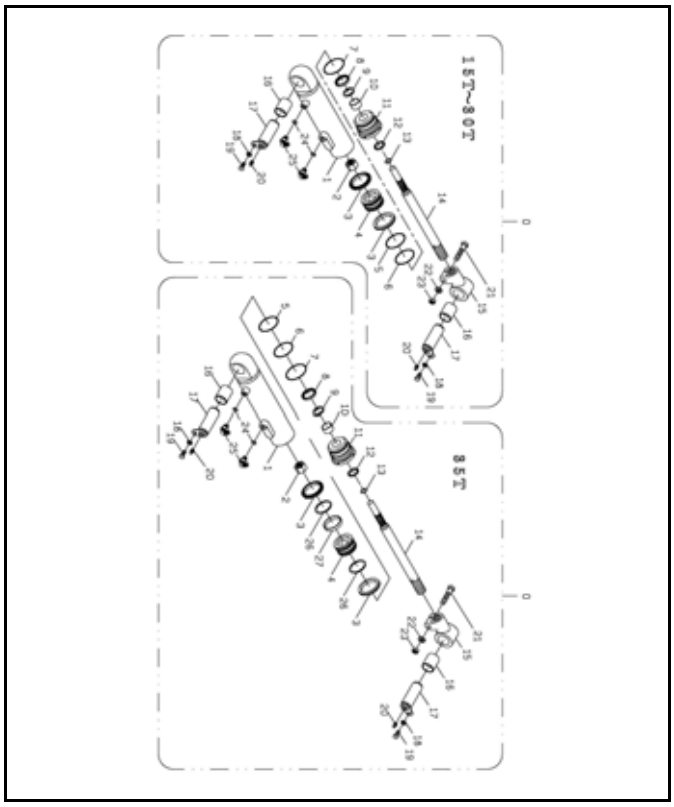

傾斜缸組
A308-3
TILT CYLINDER

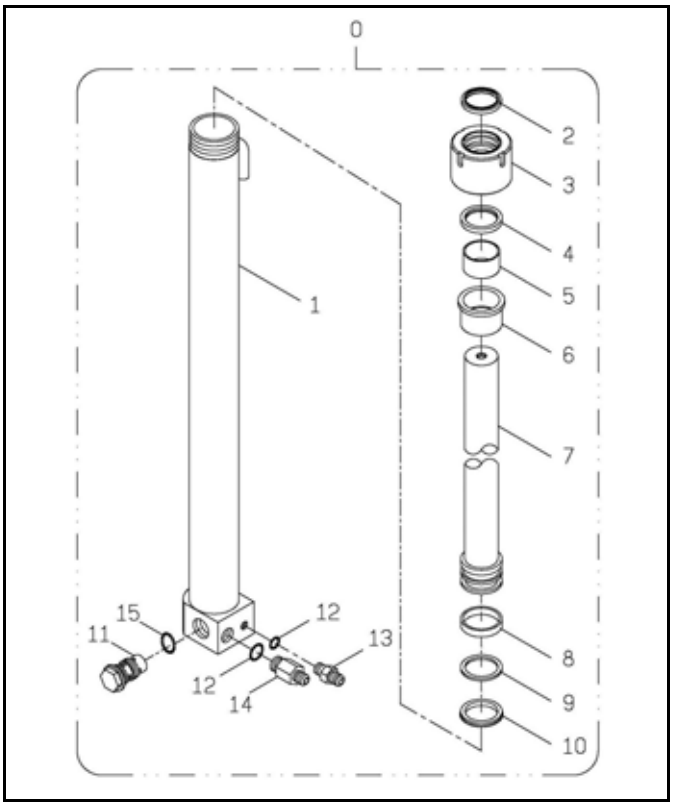

二.三截式升降缸組(右)
A308-4
LIFT CYLINDER (TWO＆THREE-STAGE)(R.H.)

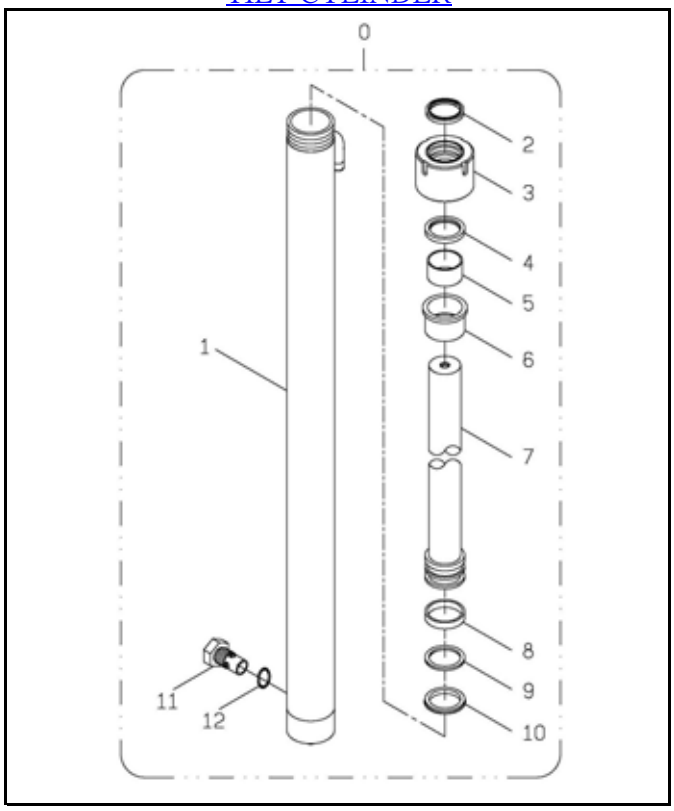

二.三截式升降缸組(左)
A308-4A
LIFT CYLINDER (TWO＆THREE-STAGE)(L.H.)

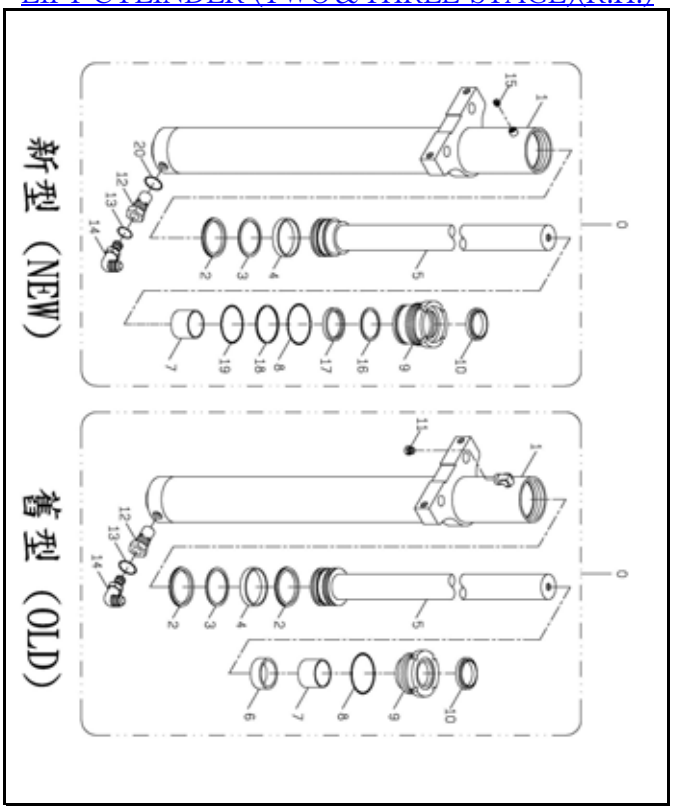

二.三截式貨櫃型油壓缸組
A308-4B
LIFT CYLINDER (TWO＆THREE CONTAINER FORM)

圖解索引
ILLUSTRATION INDEX

升降系統 A308 MAST SYSTEM

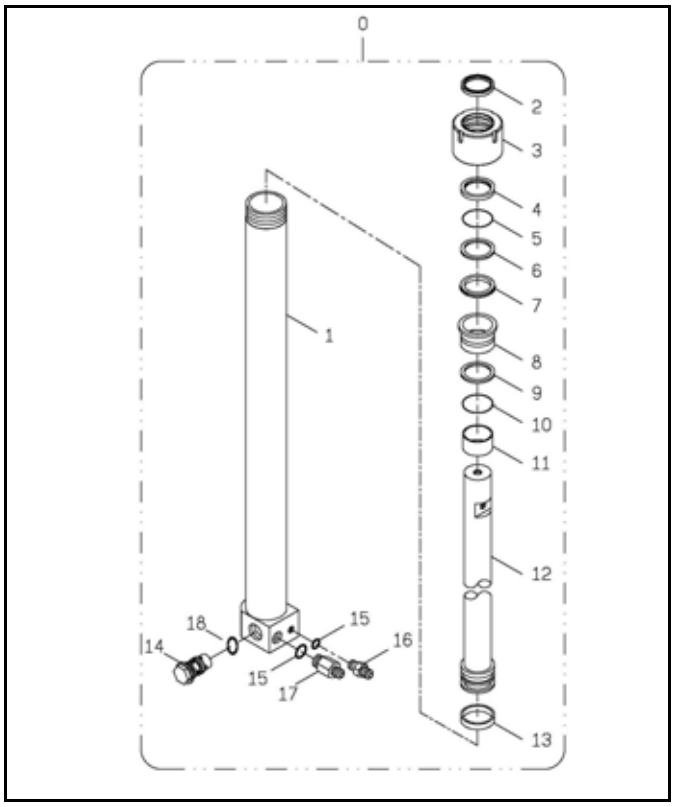

二截式貨櫃型升降缸組(右)
A308-4C
LIFT CYLINDER (CONTAINER FORM)(R.H.)

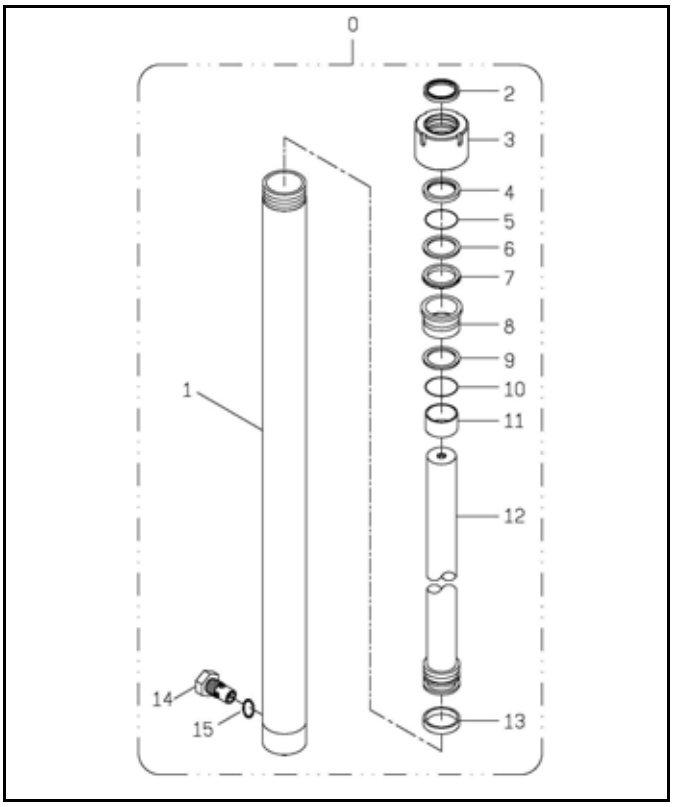

二截式貨櫃型升降缸組(左)
A308-4D
LIFT CYLINDER (CONTAINER FORM)(L.H.)

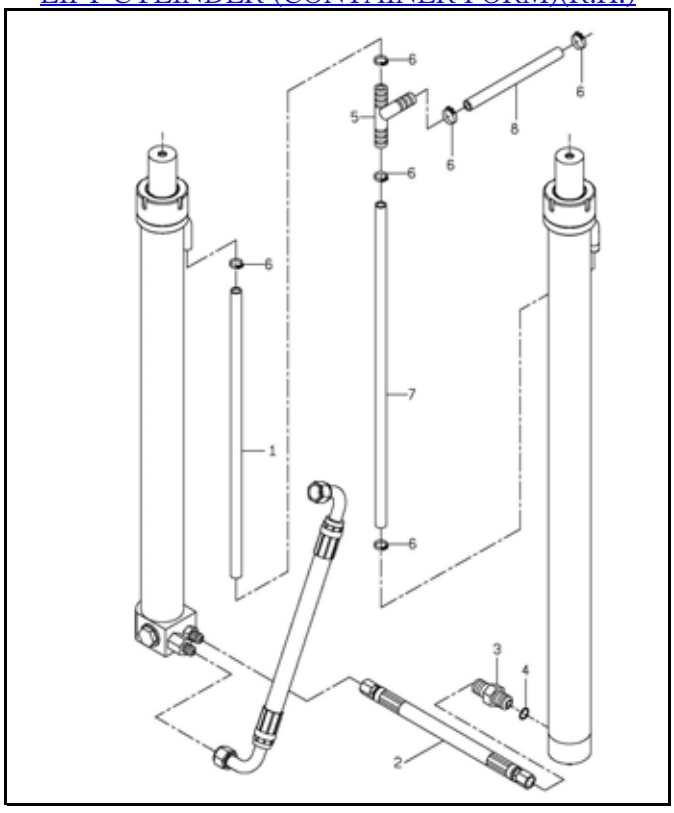

二截式升降缸配管組
A308-5
LIFT CYLINDER FITTING (TWO-STAGE)

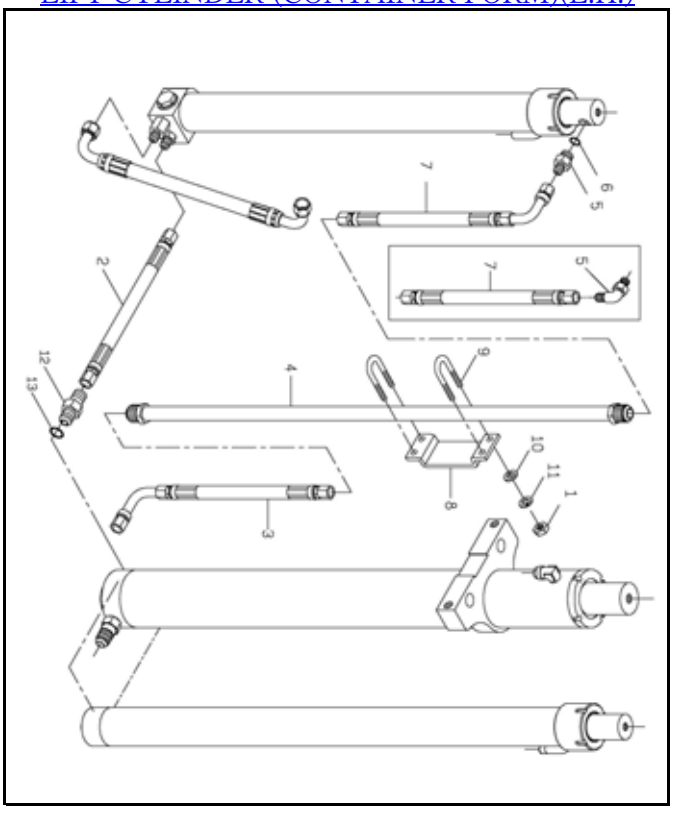

二截式貨櫃型升降缸配管組
A308-5A
LIFT CYLINDER FITTING (CONTAINER FORM)

圖解索引
ILLUSTRATION INDEX

升降系統 A308 MAST SYSTEM

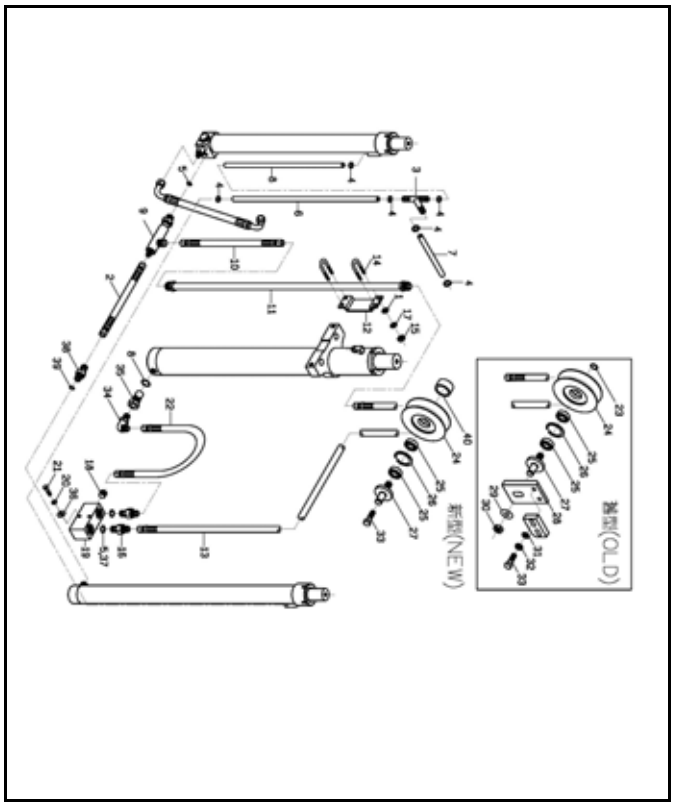

三截式升降缸配管組
A308-5B
LIFT CYLINDER FITTING (THREE-STAGE)

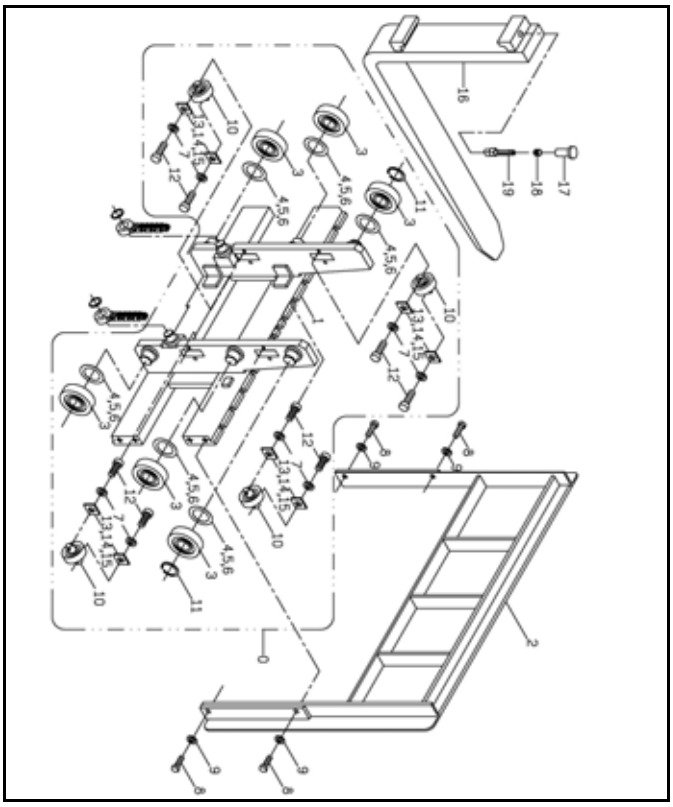

二截式貨叉架組
A308-6
LIFT BRACKET (TWO-STAGE)

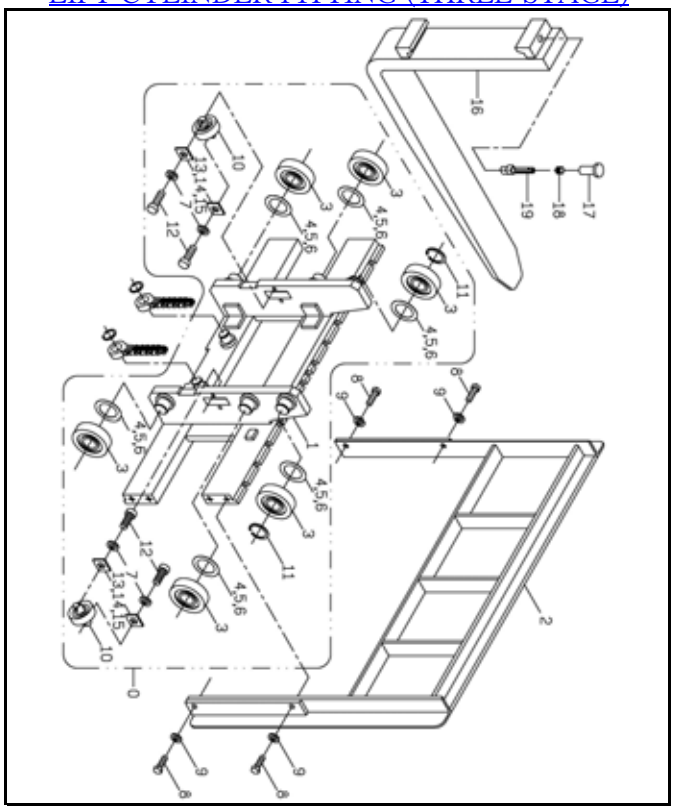

二.三截式貨櫃型貨叉架組
A308-6A
LIFT BRACKET (TWO＆THREE CONTAINER FORM)

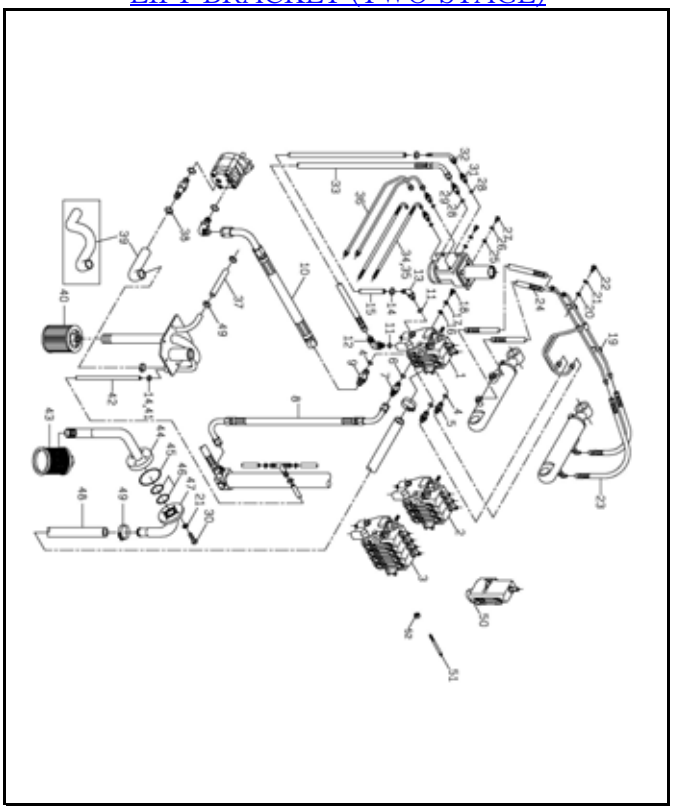

油壓管路組
A308-7
HYDRAULIC LINE

圖解索引
ILLUSTRATION INDEX

附件系統 A309 ACCESSORY STSTEM

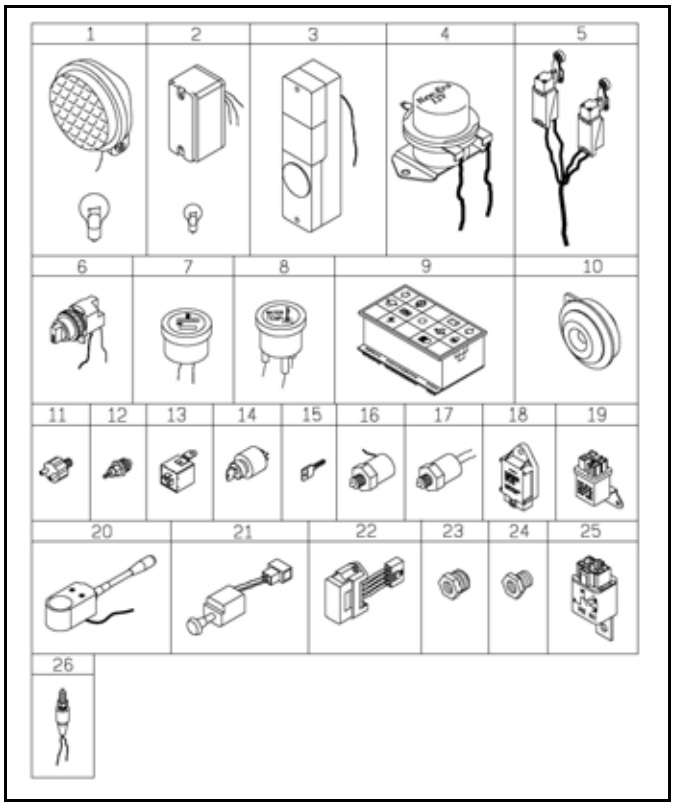

儀錶與開關
A309-1
METER & SWITCH

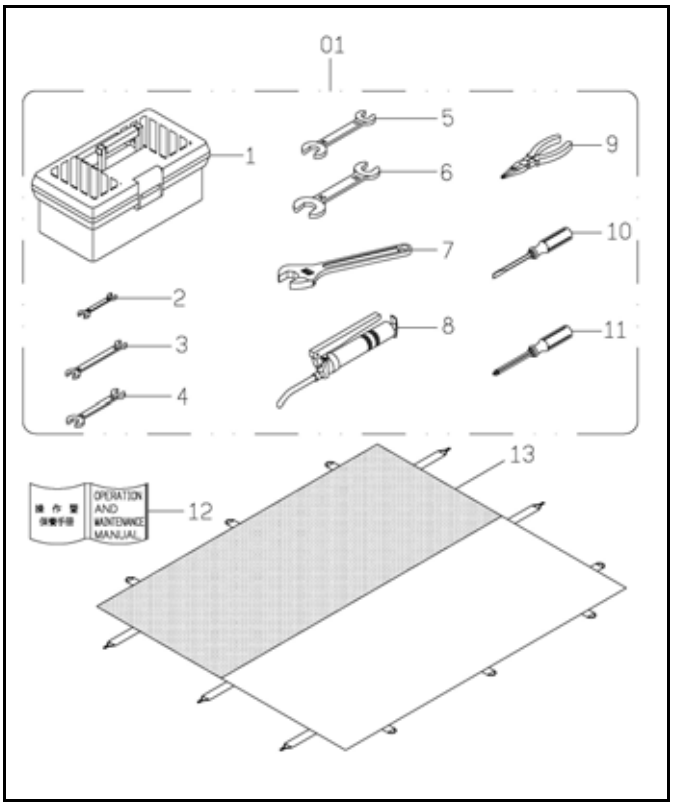

工具箱組
A309-2
TOOLS BOX ASSY

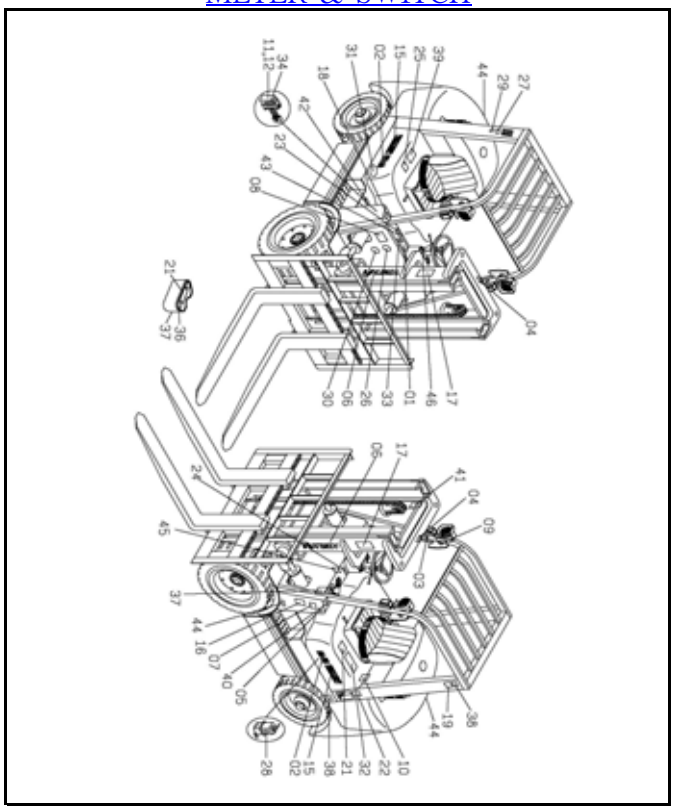

銘牌與貼紙
A309-3
PLATE & STICKER

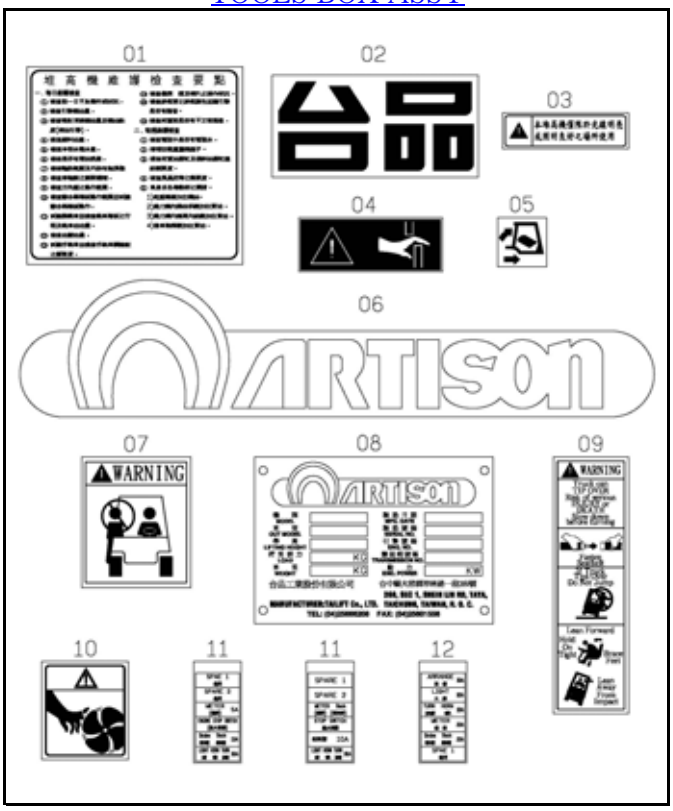

銘牌與貼紙
A309-3
PLATE & STICKER

圖解索引
ILLUSTRATION INDEX

選配配件系統 A310 CHOOSE HCCESSORY SYSTEM

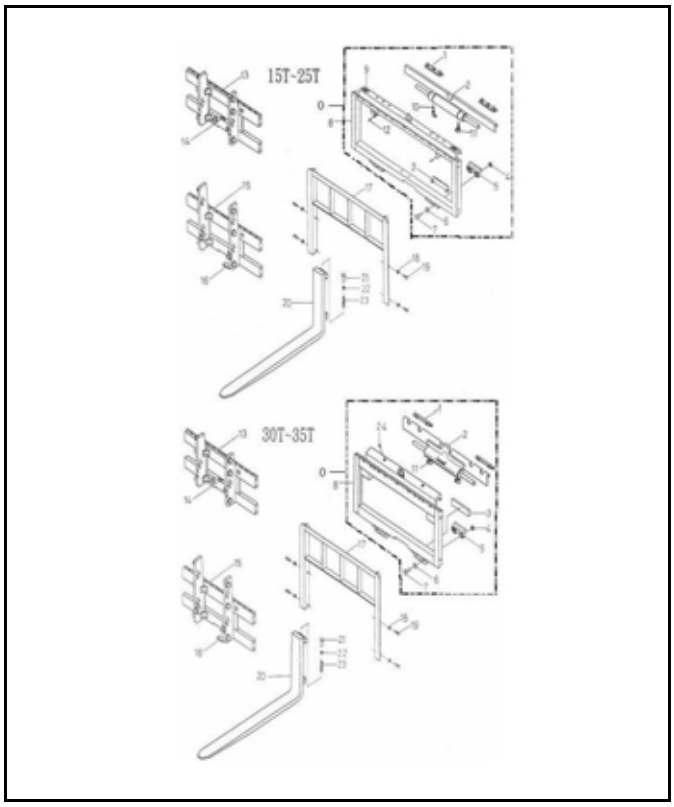

側移組
A310-1
SIDE SHIFT

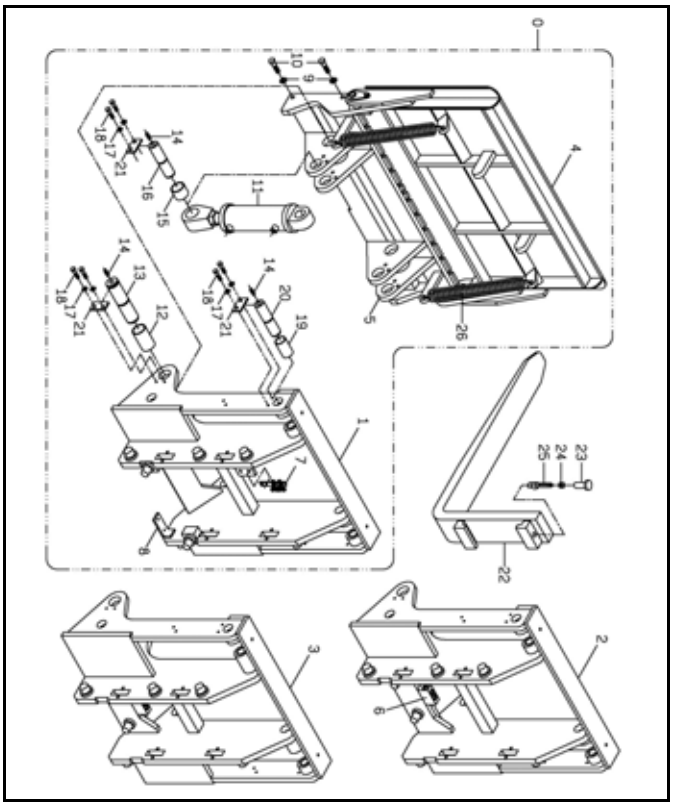

傾卸組
A310-2
HINGED FORK

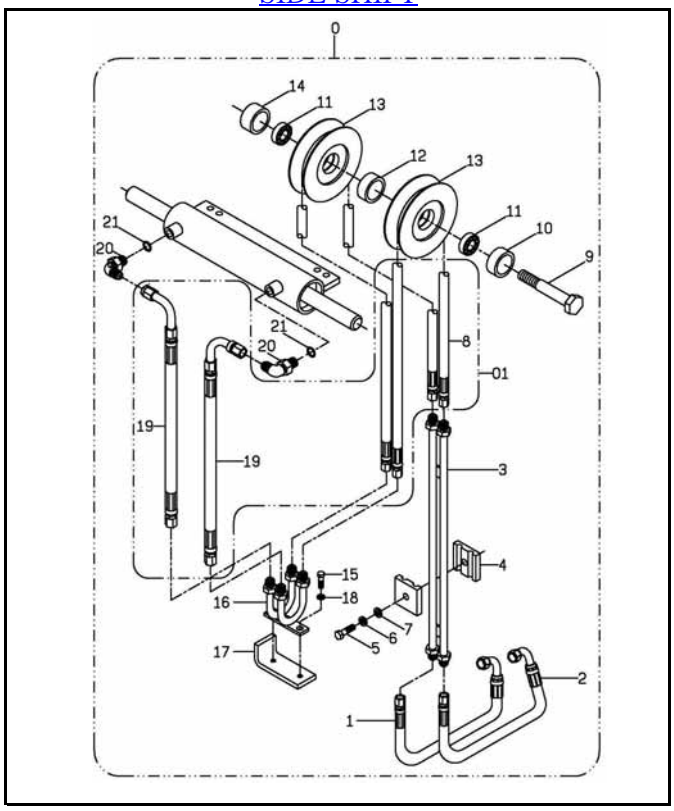

二截式側移配管組
A310-3
HOSE & ROLL FOR SIDE SHIFT (TWO-STAGE)

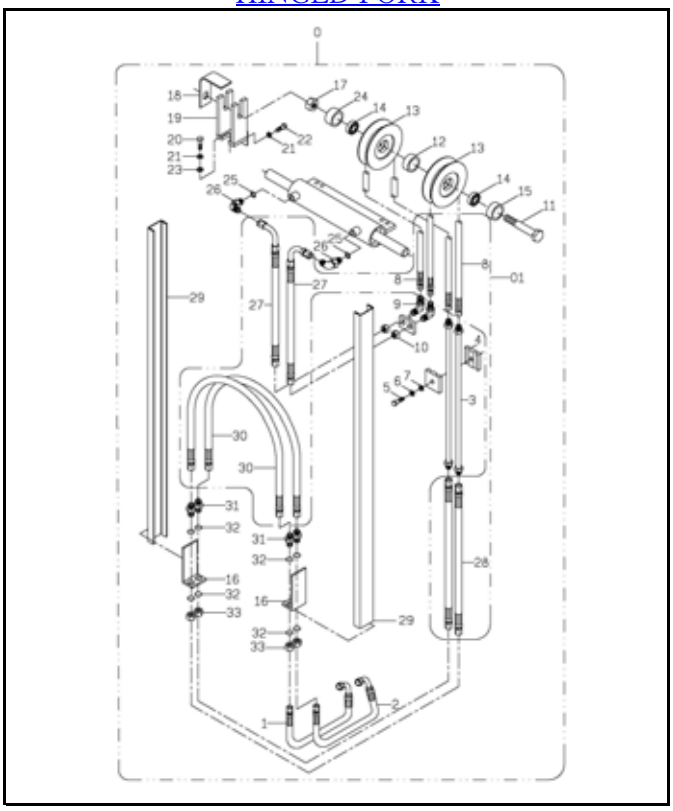

二截式貨櫃型側移配管組
A310-3A
HOSE & ROLL FOR SIDE SHIFT (CONTAINER FORM)

圖解索引
ILLUSTRATION INDEX

選配配件系統 A310 CHOOSE HCCESSORY SYSTEM

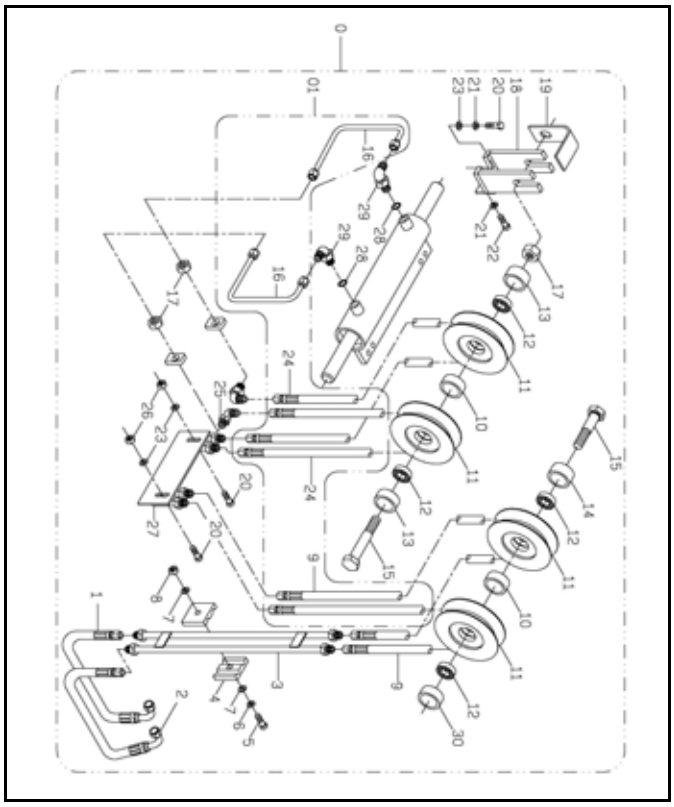

三截式側移配管組
A310-3B
HOSE & ROLL FOR SIDE SHIFT (THREE-STAGE)

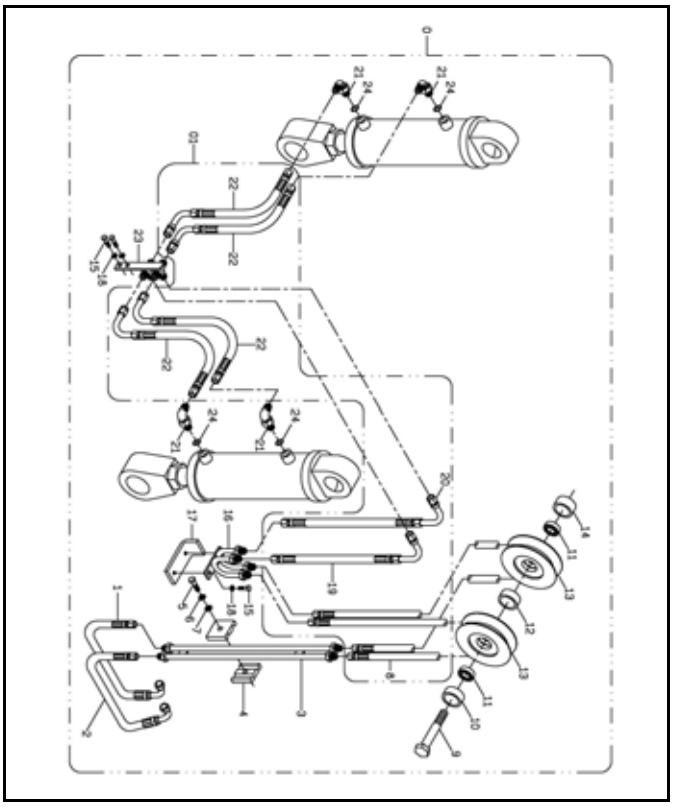

二截式傾卸配管組
A310-3C
HOSE & ROLL FOR HINGED FORK (TWO-STAGE)

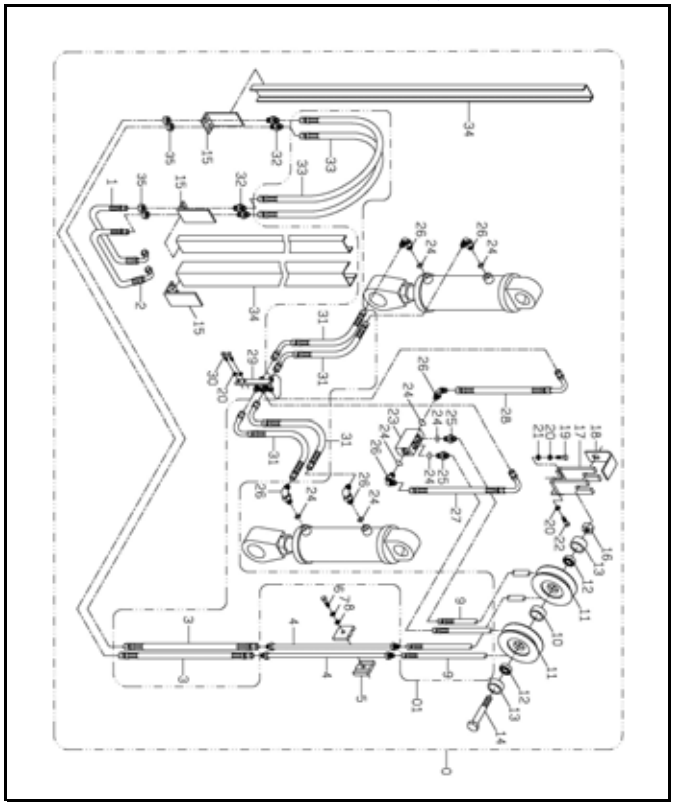

二截式貨櫃型傾卸配管組
A310-3D
HOSE & ROLL FOR HINGED FORK (CONTAINER FORM)

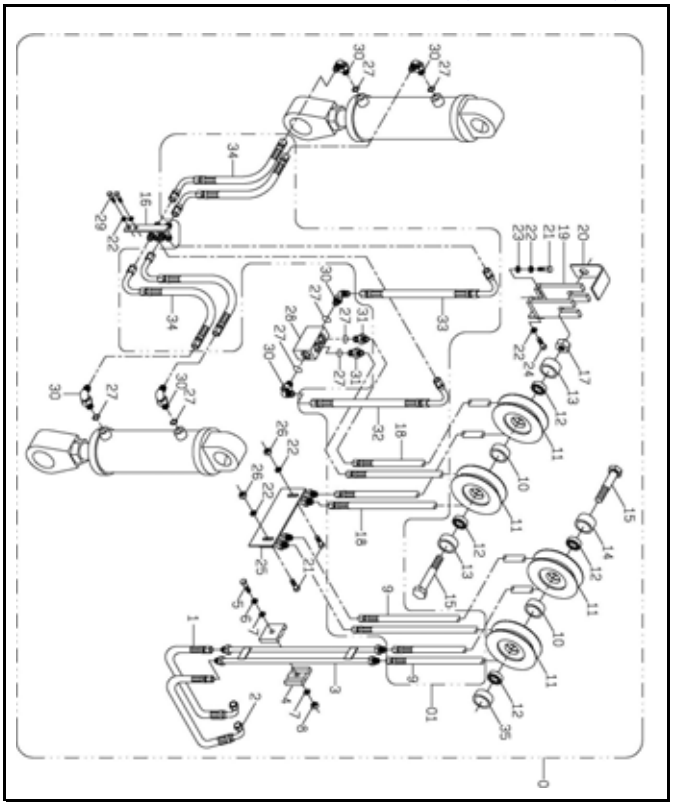

三截式傾卸配管組
A310-3E
HOSE & ROLL FOR DHINGED FORK (THREE-STAGE)

https://truckmanualshub.com/

圖解索引
ILLUSTRATION INDEX

選配配件系統 A310 CHOOSE HCCESSORY SYSTEM

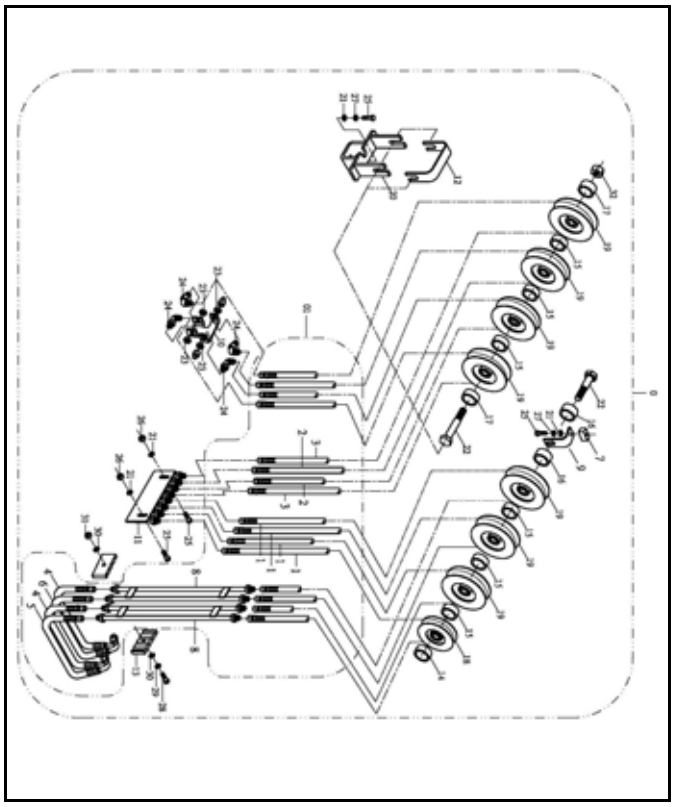

三截式四排配管組
A310-3F
HOSE & ROLL OF FOUR-ROW (THREE-STAGE)

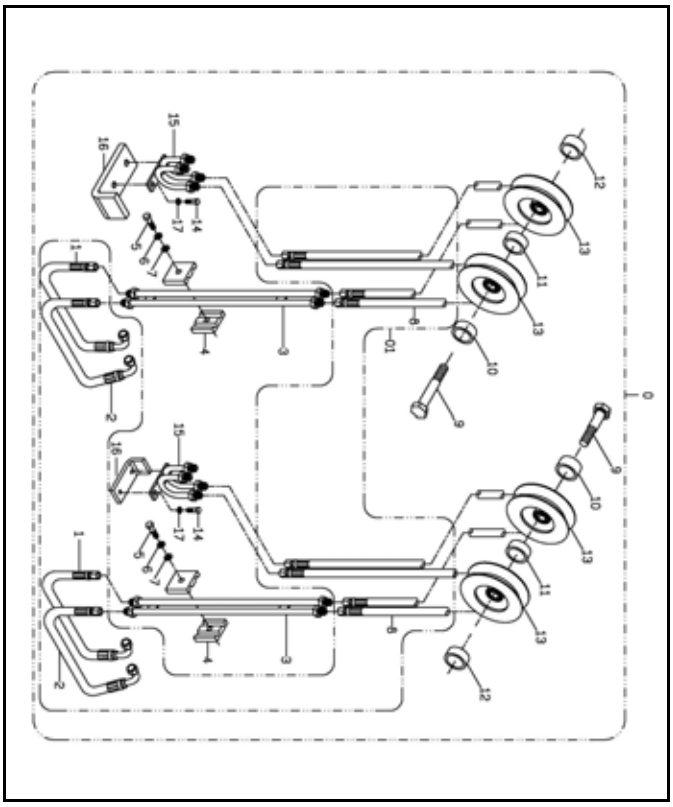

二截式四排配管組
A310-3G
HOSE & ROLL OF FOUR ROW (TWO-STAGE)

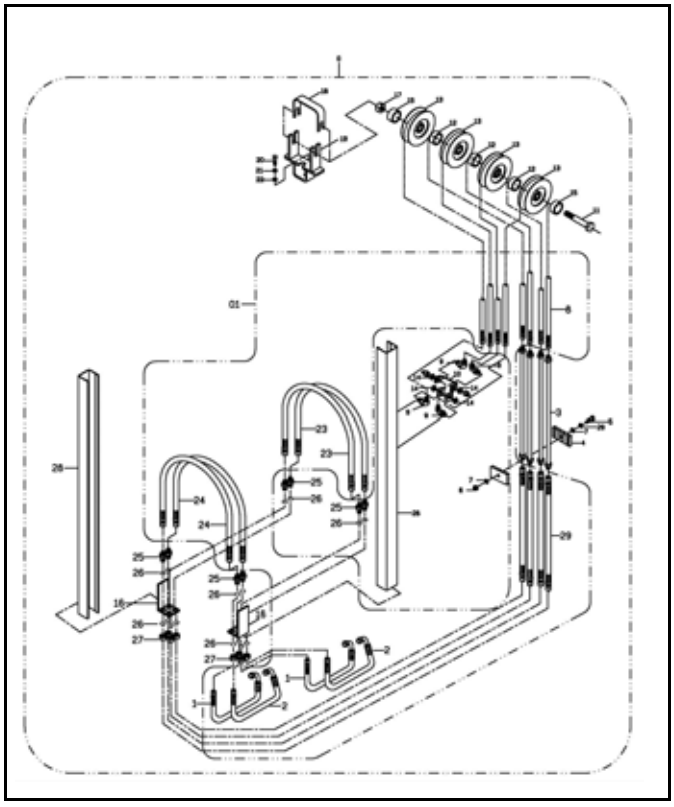

二截式貨櫃型四排配管組
A310-3H
HOSE & ROLL OF FOUR ROW (TWO-STAGE CONTAINER)

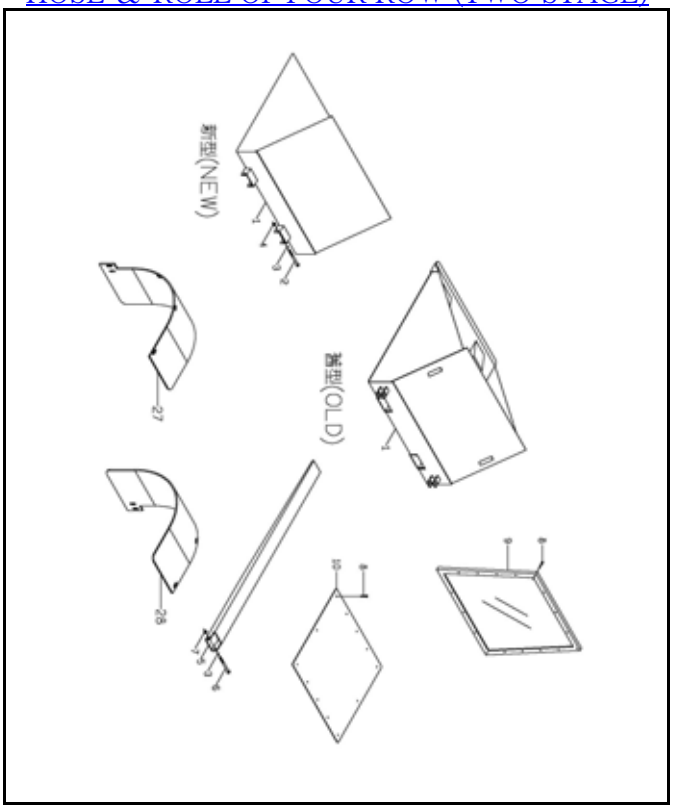

選附配件組
A310-4
CHOOSE ACCESSORY OVERALL

圖解索引
ILLUSTRATION INDEX

選配配件系統 A310 CHOOSE HCCESSORY SYSTEM

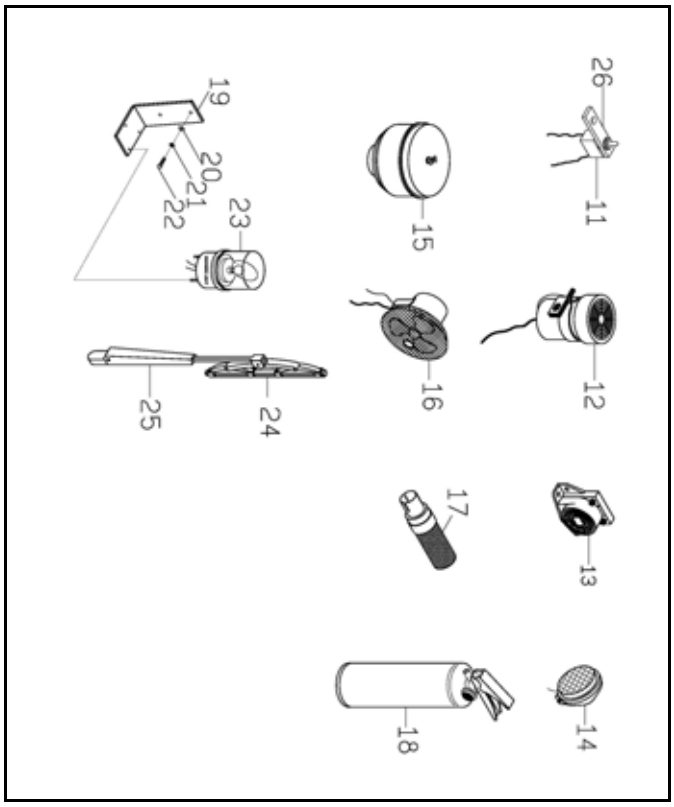

選附配件組
A310-4
CHOOSE ACCESSORY OVERALL

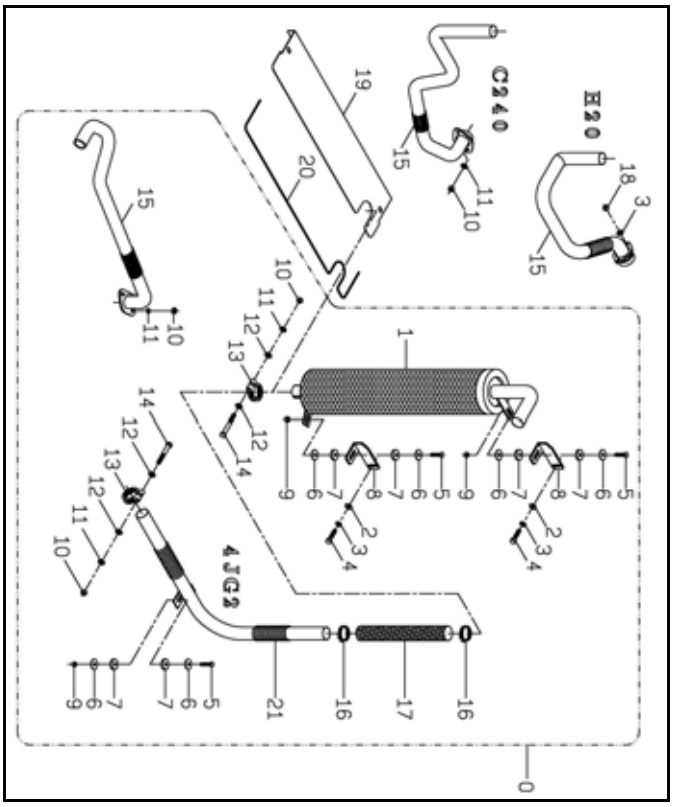

立式向上排氣管組
A310-5
EXHAUST PIPE

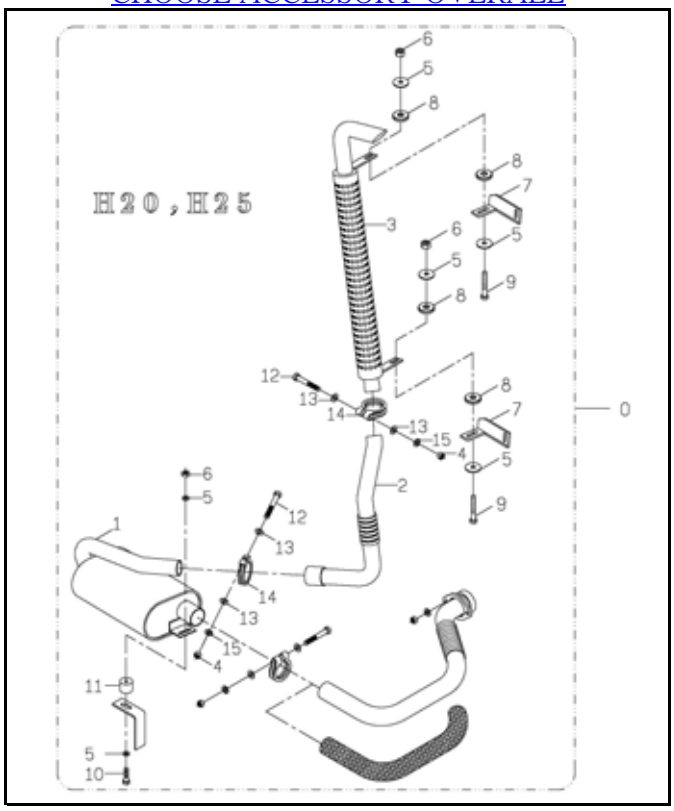

向上排氣管組
A310-5A
UPWARD EXHAUST PIPE

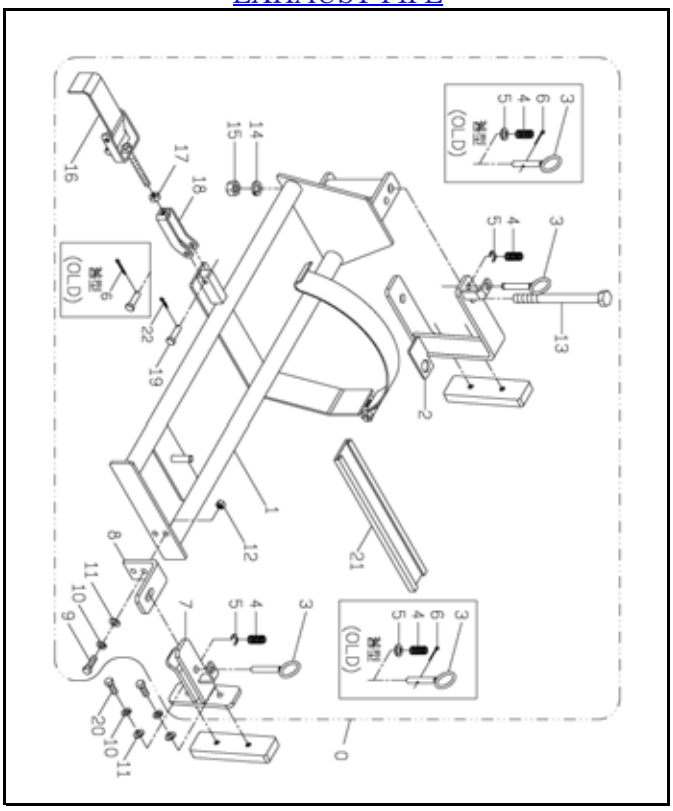

背式瓦斯桶架
A310-6
CARRYING LPG TANK BRACKET ASSEMBLY

圖解索引
ILLUSTRATION INDEX

選配配件系統 A310 CHOOSE HCCESSORY SYSTEM

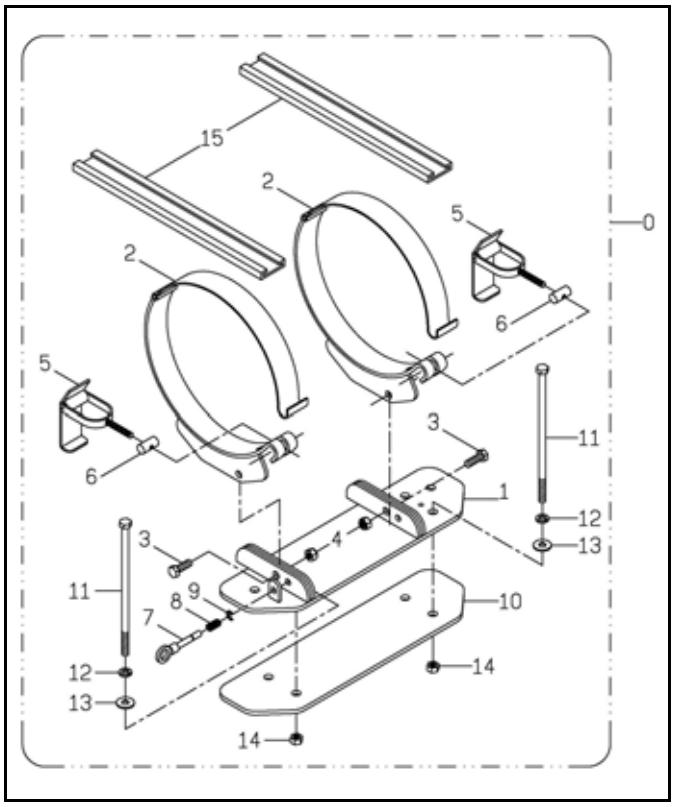

立式瓦斯桶架
A310-6A
UPRINGHT LPG TANK BRACKET ASSEMBLY

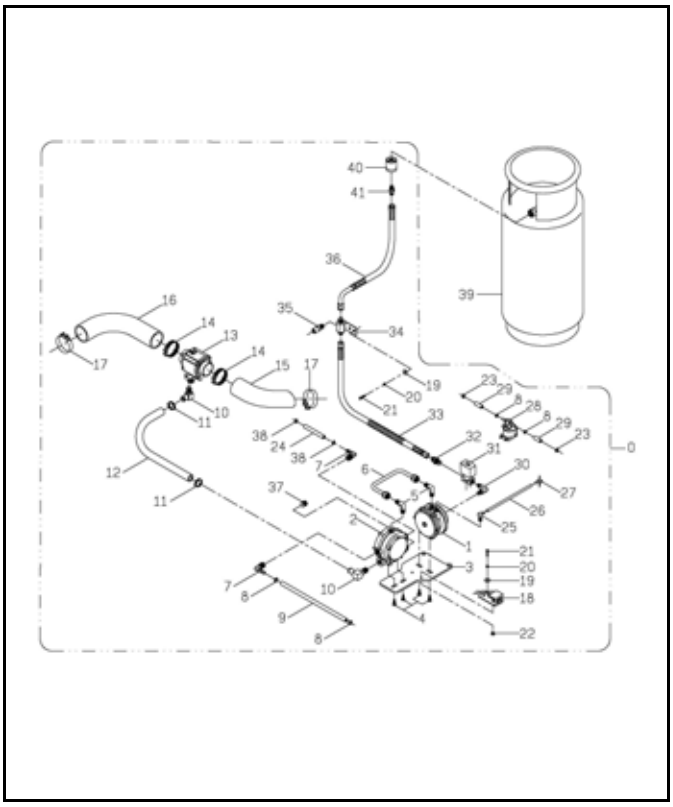

雙燃料瓦斯轉換器組
A310-7
LPG & GASOLING-FUEL SUPPLY SYSTEM

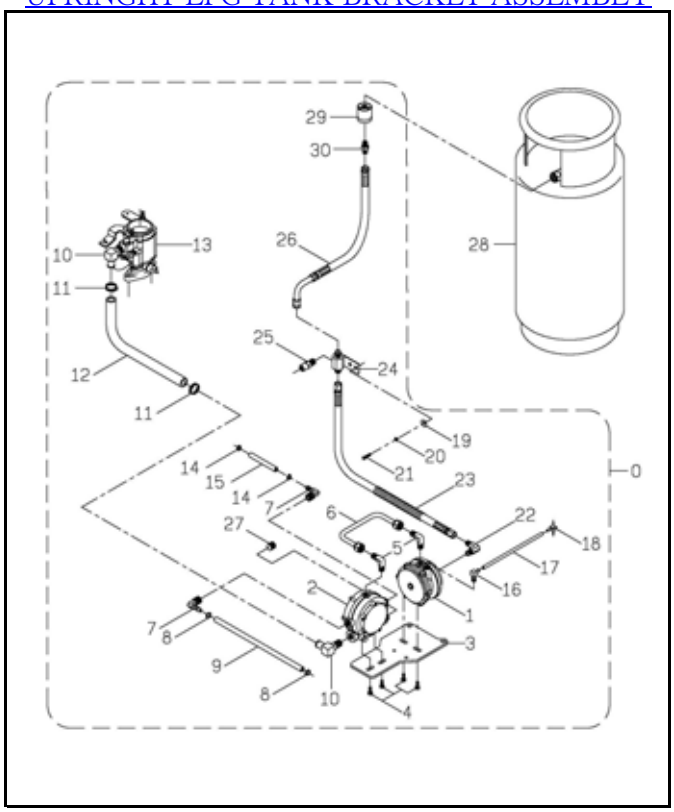

單燃料瓦斯轉換器組
A310-7A
LPG-FUEL SUPPLY SYSTEM

圖解索引
ILLUSTRATION INDEX

修理包系統 A311 REPAIR KIT SYSTEM

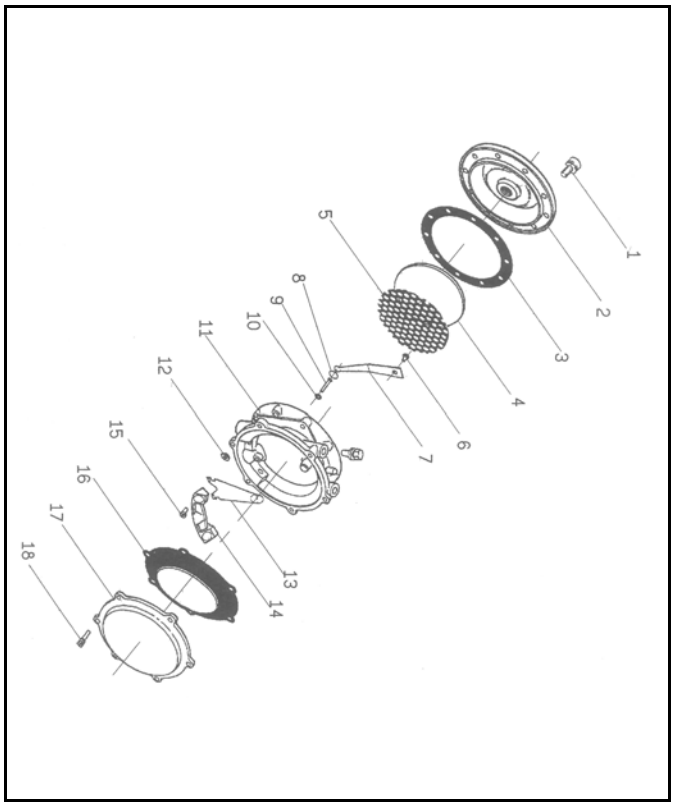

過濾器
A311-1
FILTER & LOCK-OFF VALVE

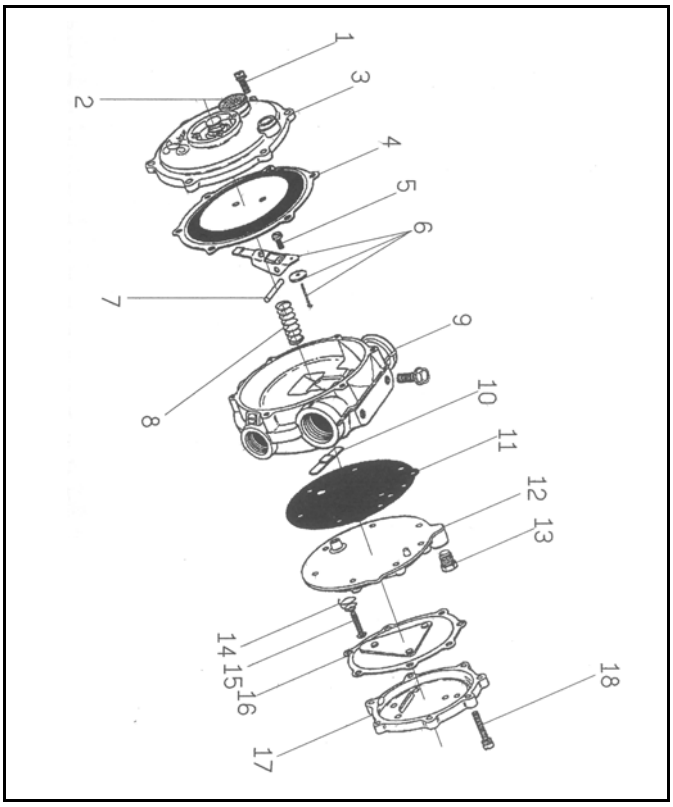

轉換器
A311-2
LPG CONVERTER

修理包總覽
A311-3
REPAIR KIT OVERALL

https://truckmanualshub.com/

變速箱系統
A301
TRANSMISSION SYSTEM

https://truckmanualshub.com/

變速箱系統
A301
TRANSMISSION SYSTEM

手排變速箱組

A301-1

(MT)TRANSMISSION

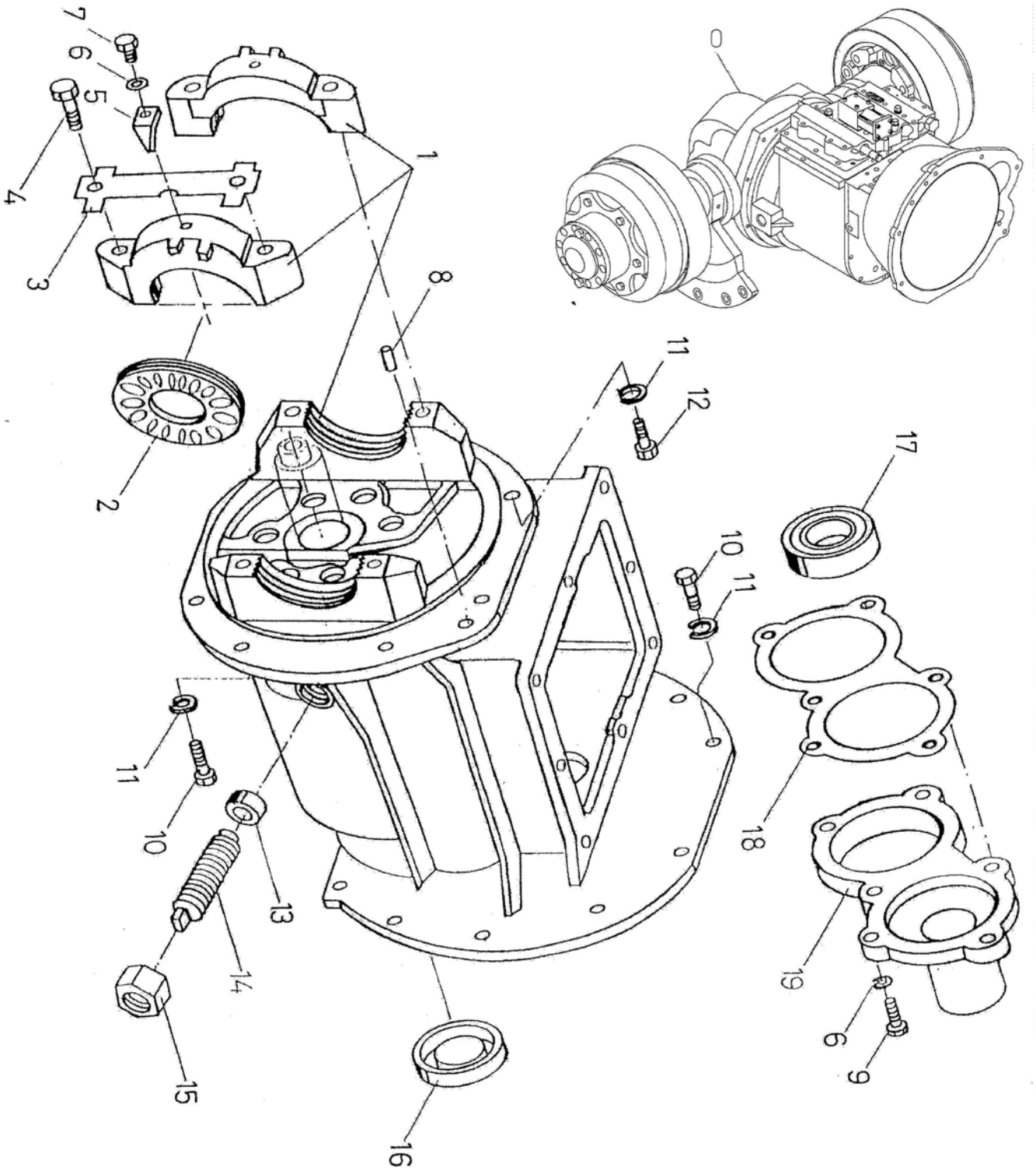

https://truckmanualshub.com/

變速箱系統
A301
TRANSMISSION SYSTEM

手排變速箱組
A301-1
(MT)TRANSMISSION

編號 NO.	零件名稱 PART NAME					數量 QTY	FD						FG						FD〔C〕						FG〔C〕						機號 BODY NO.	備註 REMARK
	新碼 NEW PART NO.	舊碼 OLD PART NO.	規格 SPECIFICATION	互換性 ITC	應用日期 APPLIED DATE		155 A	180 B	205 C	230 D	305 E	355 F	155 G	180 H	205 I	230 J	305 K	355 L	155 M	180 N	205 O	230 P	305 Q	355 R	155 S	180 T	205 U	230 V	305 W	355 X		
0	**手排變速箱總成((MT)TRANSMISSION GEAR BOX ASSY)**																															
	B350767					1	A	B					G	H																		
	B350768					1			C	D					I	J																
	B350769					1					E	F					K	L														
1	**變速箱(TRANSMISSION GEAR BOX)**																															
	32001	31501001				1	A	B					G	H																		
	32002	32501001				1			C	D					I	J																
	32003	33001001				1					E	F					K	L														
2	**調整螺絲(BOLT, ADJUSTING)**																															
	32004	32501012				2	A	B	C	D			G	H	I	J																
	32005	33001012A				2					E	F					K	L														
3	**防鬆片(PLATE, LOCK)**																															
	32006	32501011				2	A	B	C	D			G	H	I	J																
	32007	33001011				2					E	F					K	L														
4	**帶梢螺栓(BOLT, BEARING CAP)**																															
	32008	92501010A				4	A	B	C	D	E	F	G	H	I	J	K	L														
5	**固定壓板(PLATE)**																															
	32009	32501013				2	A	B	C	D			G	H	I	J																
	32010	33001013				2					E	F					K	L														
6	**彈簧華司(SPRING WASHER)**																															
	M1605-M8	92501019				9	A	B	C	D	E	F	G	H	I	J	K	L														
7	**螺栓(BOLT)**																															
	M1424-M8*16	92501014				2	A	B	C	D	E	F	G	H	I	J	K	L														
8	**直銷(PIN)**																															
	M1301-10*45	92501025				1	A	B	C	D	E	F	G	H	I	J	K	L														
9	**螺栓(BOLT)**																															
	32011	92560414				7	A	B	C	D	E	F	G	H	I	J	K	L														
10	**螺栓(BOLT)**																															
	M1424013	92501020				12	A	B	C	D	E	F	G	H	I	J	K	L														
11	**彈簧華司(SPRING WASHER)**																															
	M1605-M12	92501024				16	A	B	C	D	E	F	G	H	I	J	K	L														
12	**螺栓(BOLT)**																															
	32012	92501006				4	A	B	C	D	E	F	G	H	I	J	K	L														
13	**固定套(ANCHOR CASE)**																															
	32013	32501017				1	A	B	C	D	E	F	G	H	I	J	K	L														
14	**固定螺桿(ANCHOR, STUD)**																															
	32014	32501015				1	A	B	C	D	E	F	G	H	I	J	K	L														

https://truckmanualshub.com/

手排變速箱組
A301-1
(MT)TRANSMISSION

編號 NO.	零件名稱 PART NAME						FD						FG						FD〔C〕						FG〔C〕						機號 BODY NO.	備註 REMARK
	新碼 NEW PART NO.	舊碼 OLD PART NO.	規格 SPECIFICATION	互換性 ITC	應用日期 APPLIED DATE	數量 QTY	15 A	18 B	20 C	25 D	30 E	35 F	15 G	18 H	20 I	25 J	30 K	35 L	15 M	18 N	20 O	25 P	30 Q	35 R	15 S	18 T	20 U	25 V	30 W	35 X		
15	**止動螺帽(NUT)**																															
	32015	92501016				1	A	B	C	D	E	F	G	H	I	J	K	L														
16	**油蓋(COVER)**																															
	32016	32501005				1	A	B	C	D	E	F	G	H	I	J	K	L														
17	**塑膠油封(SEAL)**																															
	M0702028	92501018				1	A	B	C	D	E	F	G	H	I	J	K	L														
18	**防油墊片(GASKET)**																															
	32017	32501007				1	A	B	C	D	E	F	G	H	I	J	K	L														
19	**齒輪蓋(GEAR BOX COVER)**																															
	32018	31501008				1	A	B					G	H																		停用(NOT USED)
	32019	32501008				1			C	D	E	F			I	J	K	L														停用(NOT USED)
	32019	32501008				1	A	B	C	D	E	F																				
	32018	31501008				1							G	H	I	J	K	L														

https://truckmanualshub.com/

變速箱系統
A301
TRANSMISSION SYSTEM

手排撥桿組
A301-2
(MT)GEARSHIFT LEVER ASSY

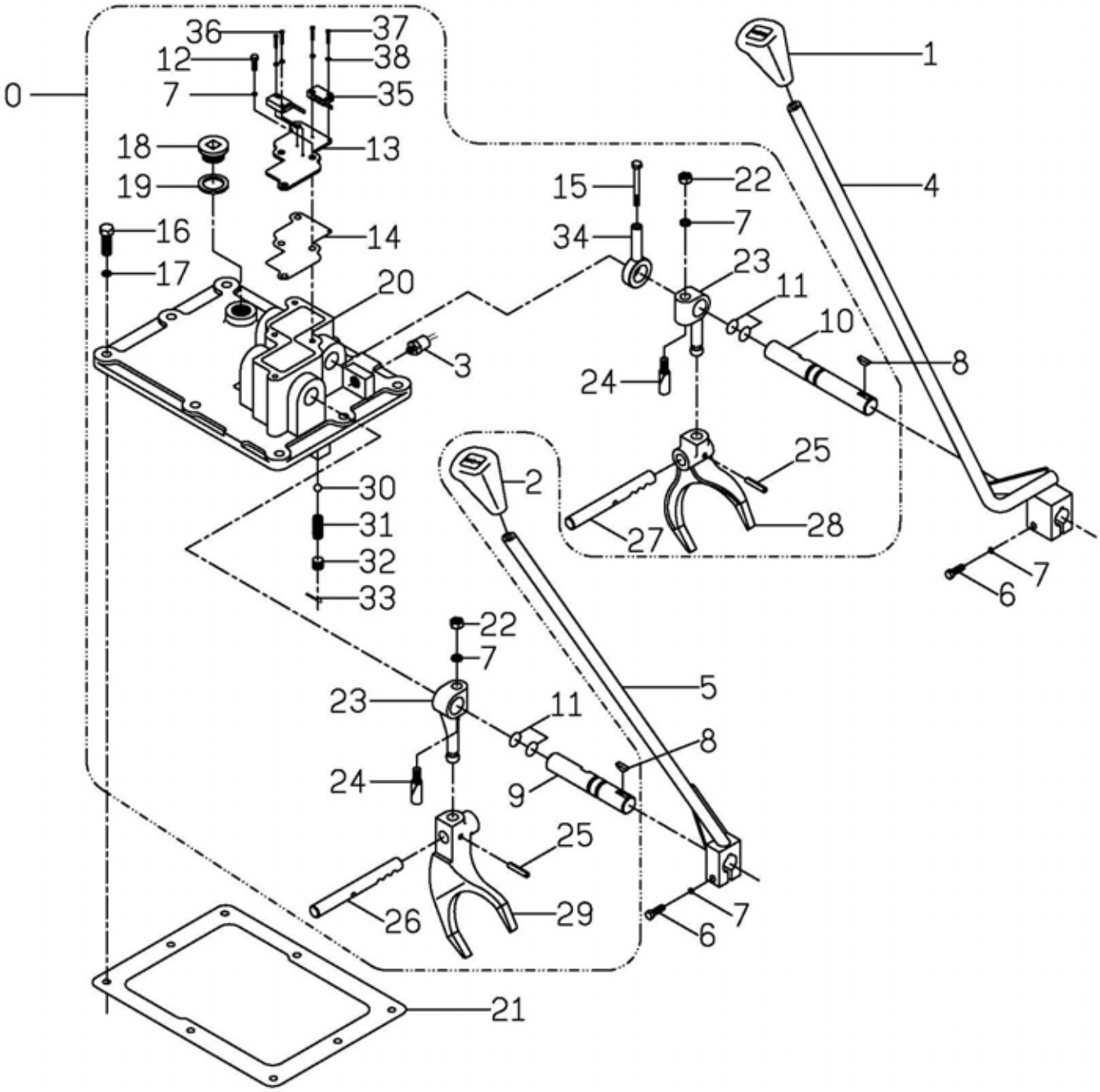

https://truckmanualshub.com/

手排撥桿組
A301-2
(MT)GEARSHIFT LEVER ASSY

編號 NO.	零件名稱 PART NAME						FD						FG						FD〔C〕						FG〔C〕						機號 BODY NO.	備註 REMARK
	新碼 NEW PART NO.	舊碼 OLD PART NO.	規格 SPECIFICATION	互換性 ITC	應用日期 APPLIED DATE	數量 QTY	1 5 A	1 8 B	2 0 C	2 5 D	3 0 E	3 5 F	1 5 G	1 8 H	2 0 I	2 5 J	3 0 K	3 5 L	1 5 M	1 8 N	2 0 O	2 5 P	3 0 Q	3 5 R	1 5 S	1 8 T	2 0 U	2 5 V	3 0 W	3 5 X		
0	手排變速箱蓋組(MANUAL TRANSMISSION ASSY)																															
	B350002					1	A	B	C	D	E	F	G	H	I	J	K	L															
1	把頭(KNOB, FORWARD & REVERSE SHIFT)																															
	32020	32501136				1	A	B	C	D	E	F	G	H	I	J	K	L															
2	把頭(KNOB, H-L SHIFT)																															
	32021	32501137				1	A	B	C	D	E	F	G	H	I	J	K	L															
3	倒車開關(SWITCH BACKWARD)																															
		92513011				1	A	B	C	D	E	F	G	H	I	J	K	L															停用(NOT USED)
4	前後變速桿(LEVER, FORWARD & REVERSE SHIFT)																															
	32022	32501126				1	A	B	C	D	E	F	G	H	I	J	K	L															
5	變速桿(1,2檔)(LEVER, SHIFT, H-L)																															
	32023	32501103				1	A	B	C	D	E	F	G	H	I	J	K	L															
6	螺栓(BOLT)																															
	M1424-M8*35	92501009				2	A	B	C	D	E	F	G	H	I	J	K	L															
7	彈簧華司(SPRING WASHER)																															
	M1605-M8	92501019				8	A	B	C	D	E	F	G	H	I	J	K	L															
8	半圓鍵(KEY, WOODRUFF)																															
	33644	92501132				2	A	B	C	D	E	F	G	H	I	J	K	L															
9	變速桿心軸(短)(LEVER, T/M CONTROL, SHORTER)																															
	32024	32501129				1	A	B	C	D	E	F	G	H	I	J	K	L															
10	變速桿心軸(長)(LEVER, T/M CONTROL, LONGER)																															
	32025	32501108				1	A	B	C	D	E	F	G	H	I	J	K	L															
11	O型環("O"RING)																															
	M0801-P18	92501107				4	A	B	C	D	E	F	G	H	I	J	K	L															
12	螺栓(BOLT)																															
	M1424-M8*25	92501104				4	A	B	C	D	E	F	G	H	I	J	K	L															
13	護蓋(COVER)																															
	32026	32501105A				1	A	B	C	D	E	F	G	H	I	J	K	L															
14	防油墊片(GASKET)																															
	32027	92501109				1	A	B	C	D	E	F	G	H	I	J	K	L															
15	螺栓(BOLT)																															
	M1401-M6*55					1	A	B	C	D	E	F	G	H	I	J	K	L															
16	螺栓(BOLT)																															
	M1424004	92501102				8	A	B	C	D	E	F	G	H	I	J	K	L															
17	彈簧華司(SPRING WASHER)																															
	M1605-M10	92501218				8	A	B	C	D	E	F	G	H	I	J	K	L															
18	油塞(PLUG, SCREW)																															
	32028	32501113A				1	A	B	C	D	E	F	G	H	I	J	K	L															

https://truckmanualshub.com/

變速箱系統
A301
TRANSMISSION SYSTEM

手排撥桿組
A301-2
(MT)GEARSHIFT LEVER ASSY

編號 NO.	零件名稱 PART NAME						FD						FG						FD〔C〕						FG〔C〕						機號 BODY NO.	備註 REMARK
	新碼 NEW PART NO.	舊碼 OLD PART NO.	規格 SPECIFICATION	互換性 ITC	應用日期 APPLIED DATE	數量 QTY	15 A	18 B	20 C	25 D	30 E	35 F	15 G	18 H	20 I	25 J	30 K	35 L	15 M	18 N	20 O	25 P	30 Q	35 R	15 S	18 T	20 U	25 V	30 W	35 X		
19	油塞華司(WASHER)																															
	32029	32501114				1	A	B	C	D	E	F	G	H	I	J	K	L														
20	變速箱蓋(COVER, TRANSMISSION CASE)																															
	32030	32501111B				1	A	B	C	D	E	F	G	H	I	J	K	L														
21	墊片(GASKET)																															
	32031	32501130A				1	A	B	C	D	E	F	G	H	I	J	K	L														
22	螺帽(NUT)																															
	M1501-M8	92501115				2	A	B	C	D	E	F	G	H	I	J	K	L														
23	搖桿(LEVER, SHIFT)																															
	32032	32501117A				2	A	B	C	D	E	F	G	H	I	J	K	L														
24	特殊螺栓(BOLT)																															
	32033	32501118				2	A	B	C	D	E	F	G	H	I	J	K	L														
25	彈簧銷(PIN, SPRING)																															
	M1305-6*30	92501119				2	A	B	C	D	E	F	G	H	I	J	K	L														
26	撥叉軸(長)(SHAFT)(RAIL, SHIFT, H-L)																															
	32034	32501133				1	A	B	C	D	E	F	G	H	I	J	K	L														
27	撥叉軸(短)(SHAFT)(RAIL, SHIFT, F-R)																															
	32035	32501121A				1	A	B	C	D	E	F	G	H	I	J	K	L														
28	變速叉(大)(FORK, SHIFT, F-R)																															
	32036	32501120				1	A	B	C	D	E	F	G	H	I	J	K	L														
29	變速叉(小)(FORK, SHIFT, H-L)																															
	32037	32501127				1	A	B	C	D	E	F	G	H	I	J	K	L														
30	定位鋼珠(STEEL BALL)																															
	M1323028	92501122				2	A	B	C	D	E	F	G	H	I	J	K	L														
31	定位彈簧(SPRING)																															
	32038	92501123B				2	A	B	C	D	E	F	G	H	I	J	K	L														
32	沉頭螺絲(SCREW, SET)																															
	32039	92501124A				2	A	B	C	D	E	F	G	H	I	J	K	L														
33	開口銷(SPLIT PIN)																															
	M1307001	92501125				2	A	B	C	D	E	F	G	H	I	J	K	L														
34	變速箱蓋檔桿(BRACKET)																															
	32040	32501140A				1	A	B	C	D	E	F	G	H	I	J	K	L														
35	微動開關(MICRO SWICTH)																															
	E0901019					3	A	B	C	D	E	F	G	H	I	J	K	L														
36	十字有槽機械螺釘(BOLT)																															
	M1414-M3*25					2	A	B	C	D	E	F	G	H	I	J	K	L														
37	十字有槽機械螺釘(BOLT)																															
	M1414-M3*15					2	A	B	C	D	E	F	G	H	I	J	K	L														

https://truckmanualshub.com/

手排撥桿組
A301-2
(MT)GEARSHIFT LEVER ASSY

編號 NO.	零件名稱 PART NAME						FD						FG						FD〔C〕						FG〔C〕						機號 BODY NO.	備註 REMARK
	新碼 NEW PART NO.	舊碼 OLD PART NO.	規格 SPECIFICATION	互換性 ITC	應用日期 APPLIED DATE	數量 QTY	1.5 A	1.8 B	2.0 C	2.5 D	3.0 E	3.5 F	1.5 G	1.8 H	2.0 I	2.5 J	3.0 K	3.5 L	1.5 M	1.8 N	2.0 O	2.5 P	3.0 Q	3.5 R	1.5 S	1.8 T	2.0 U	2.5 V	3.0 W	3.5 X		
38	**彈簧墊圈(SPRING WASHER)**																															
	M1606-M3					2	A	B	C	D	E	F	G	H	I	J	K	L														

https://truckmanualshub.com/

變速箱系統
A301
TRANSMISSION SYSTEM

手排傳動齒輪組

A301-3

(MT)TRANSMISSION GEAR SET

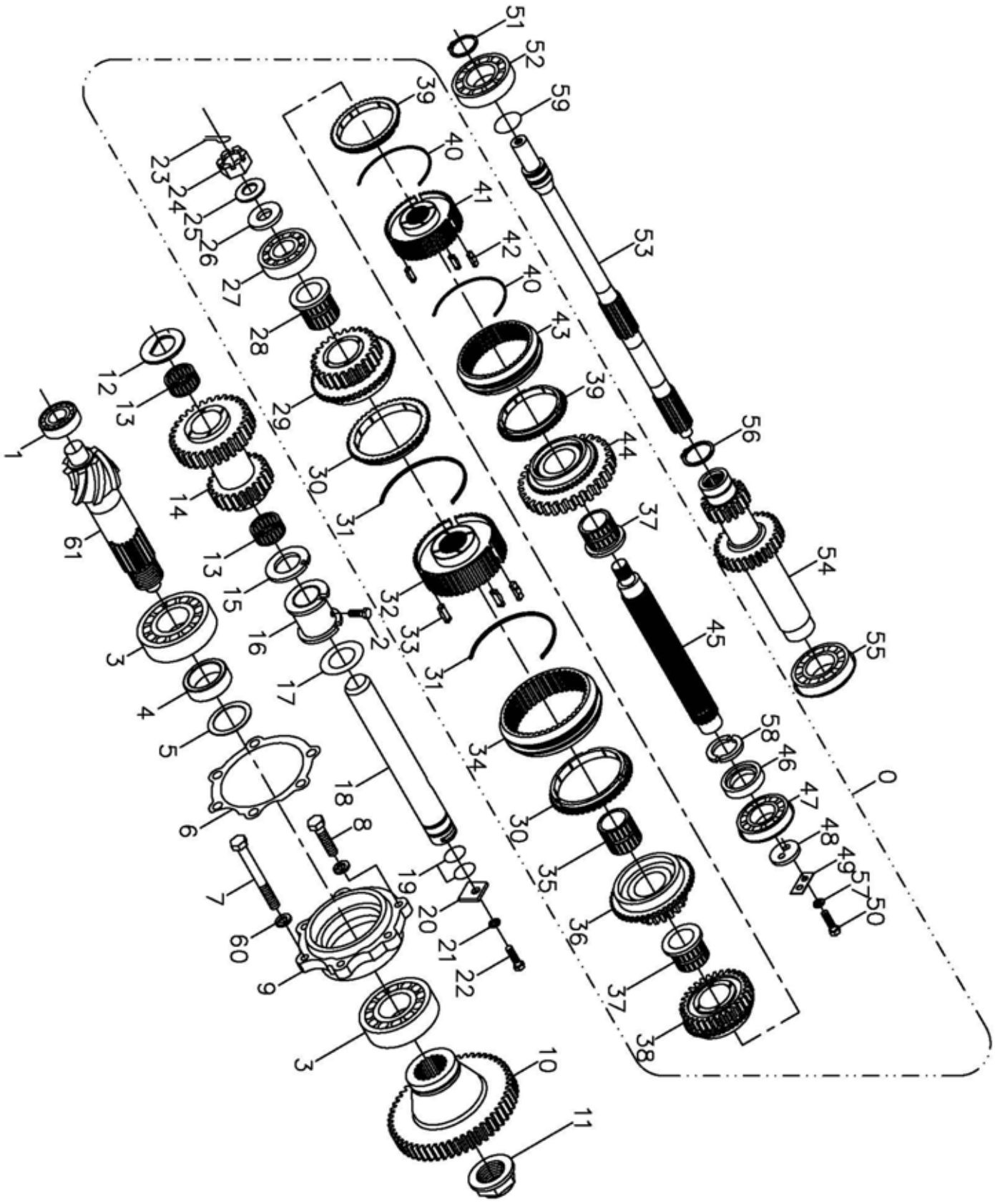

https://truckmanualshub.com/

手排傳動齒輪組
A301-3
(MT)TRANSMISSION GEAR SET

編號 NO.	零件名稱 PART NAME						FD						FG						FD〔C〕						FG〔C〕						機號 BODY NO.	備註 REMARK
	新碼 NEW PART NO.	舊碼 OLD PART NO.	規格 SPECIFICATION	互換性 ITC	應用日期 APPLIED DATE	數量 QTY	1 5 A	1 8 B	2 0 C	2 5 D	3 0 E	3 5 F	1 5 G	1 8 H	2 0 I	2 5 J	3 0 K	3 5 L	1 5 M	1 8 N	2 0 O	2 5 P	3 0 Q	3 5 R	1 5 S	1 8 T	2 0 U	2 5 V	3 0 W	3 5 X		
0	**手排變檔齒輪組(MANUAL SHIFT GEAR)**																															
	B350003					1	A	B					G	H																		
	B350329					1			C	D	E	F			I	J	K	L														
1	**軸承(BEARING)**																															
	M0904-NJ304	91501201				1	A	B					G	H																		
	M0904-MUB5205UM	92501201				1			C	D	E	F			I	J	K	L														
2	**螺栓(BOLT)**																															
	M1424-M8*12					1	A	B	C	D	E	F	G	H	I	J	K	L														
3	**軸承(BEARING)**																															
	M0909-30309D	92560207				2	A	B	C	D	E	F	G	H	I	J	K	L														
4	**隔圈(SPACER)**																															
	32041	31501204				1	A	B					G	H																		
	32042	32501204A				1			C	D	E	F			I	J	K	L														
5	**填隙片(SPACER)**																															
	32043	32501205				N	A	B	C	D	E	F	G	H	I	J	K	L														
6	**軸承座間隙片(GASKET)**																															
	32044	32501255				N	A	B	C	D	E	F	G	H	I	J	K	L														
7	**螺栓(BOLT)**																															
	M1423003	92501212				4	A	B	C	D	E	F	G	H	I	J	K	L														
8	**螺栓(BOLT)**																															
	M1423001	92501253				2	A	B	C	D	E	F	G	H	I	J	K	L														
9	**軸承座(BEARING SEAT)**																															
		32501206				1			C	D	E	F			I	J	K	L														停用(NOT USED)
	32045	31501206				1	A	B					G	H																		
	32046	32501206A			2005/12	1			C	D	E	F			I	J	K	L														
10	**齒輪(GEAR)**																															
	32047	32501207				1	A	B	C	D	E	F	G	H	I	J	K	L														
11	**特殊螺帽(NUT)**																															
	32048	32501208				1	A	B	C	D	E	F	G	H	I	J	K	L														
12	**銅華司(WASHER "Cu")**																															
	32049	32501209A				1	A	B	C	D	E	F	G	H	I	J	K	L														
13	**滾針軸承(BEARING)**																															
	M0905-KT354220	32501210				2	A	B	C	D	E	F	G	H	I	J	K	L														
14	**雙層齒輪(GEAR)**																															
	32050	32501211				1	A	B	C	D	E	F	G	H	I	J	K	L														
15	**銅華司(WASHER "Cu")**																															
	32051	32501213A				1	A	B	C	D	E	F	G	H	I	J	K	L														

https://truckmanualshub.com/

手排傳動齒輪組
A301-3
(MT)TRANSMISSION GEAR SET

編號 NO.	零件名稱 PART NAME						FD						FG						FD〔C〕						FG〔C〕						機號 BODY NO.	備註 REMARK
	新碼 NEW PART NO.	舊碼 OLD PART NO.	規格 SPECIFICATION	互換性 ITC	應用日期 APPLIED DATE	數量 QTY	15 A	18 B	20 C	25 D	30 E	35 F	15 G	18 H	20 I	25 J	30 K	35 L	15 M	18 N	20 O	25 P	30 Q	35 R	15 S	18 T	20 U	25 V	30 W	35 X		
16	隔圈(SPACER)																															
	32052	32501214				1	A	B	C	D	E	F	G	H	I	J	K	L														
17	間隙片(SPACER)																															
	32053	92501254				N	A	B	C	D	E	F	G	H	I	J	K	L														
18	心軸(SHAFT)																															
	32054	32501215C				1	A	B	C	D	E	F	G	H	I	J	K	L														
19	O型環("O"RING)																															
	M0801-P28	92501216				2	A	B	C	D	E	F	G	H	I	J	K	L														
20	止動板(PLATE)																															
	32055	32501217				1	A	B	C	D	E	F	G	H	I	J	K	L														
21	彈簧華司(SPRING WASHER)																															
	M1605-M10	92501218				1	A	B	C	D	E	F	G	H	I	J	K	L														
22	螺栓(BOLT)																															
	M1424002	92501219				1	A	B	C	D	E	F	G	H	I	J	K	L														
23	開口銷(SPLIT PIN)																															
	M1307002	92501220				1	A	B	C	D	E	F	G	H	I	J	K	L														
24	堡型螺帽(NUT)																															
	32056	32501221				1	A	B	C	D	E	F	G	H	I	J	K	L														
25	盤型華司(WASHER)																															
	32057	92501256				1	A	B	C	D	E	F	G	H	I	J	K	L														
26	墊圈(WASHER)																															
	32058	32501222				1	A	B	C	D	E	F	G	H	I	J	K	L														
27	軸承(BEARING)																															
		92501223			2000/10	1	A	B	C	D	E	F	G	H	I	J	K	L														
	M0901-6306				2003/02	1	A	B	C	D	E	F	G	H	I	J	K	L														
28	齒輪套筒(長)(SLEEVE)																															
	32059	32501225				1	A	B	C	D	E	F	G	H	I	J	K	L														
29	齒輪(GEAR)																															
	32060	32501226B				1	A	B	C	D	E	F	G	H	I	J	K	L														
30	調速銅錐環(RING)																															
	32061	32501227A				2	A	B	C	D	E	F	G	H	I	J	K	L														
31	特殊扣環(RING)																															
	32062	32501228				2	A	B	C	D	E	F	G	H	I	J	K	L														
32	離合齒(GEAR)																															
	32063	32501229				1	A	B	C	D	E	F	G	H	I	J	K	L														
33	調速鍵(KEY, SYNCHRONIZER)																															
	32064	32501231				3	A	B	C	D	E	F	G	H	I	J	K	L														

https://truckmanualshub.com/

手排傳動齒輪組
A301-3
(MT)TRANSMISSION GEAR SET

編號 NO.	零件名稱 PART NAME						FD						FG						FD〔C〕						FG〔C〕						機號 BODY NO.	備註 REMARK
	新碼 NEW PART NO.	舊碼 OLD PART NO.	規格 SPECIFICATION	互換性 ITC	應用日期 APPLIED DATE	數量 QTY	15 A	18 B	20 C	25 D	30 E	35 F	15 G	18 H	20 I	25 J	30 K	35 L	15 M	18 N	20 O	25 P	30 Q	35 R	15 S	18 T	20 U	25 V	30 W	35 X		
34	離合齒套(SLEEVE, TRANSMISSION CLUTCH)																															
	32065	32501230				1	A	B	C	D	E	F	G	H	I	J	K	L														
35	齒輪套筒(無緣)(BUSH)																															
	32066	32501233				1	A	B	C	D	E	F	G	H	I	J	K	L														
36	齒輪(GEAR)																															
	32067	32501232A				1	A	B	C	D	E	F	G	H	I	J	K	L														
37	齒輪套筒(短)(SLEEVE)																															
	32068	32501234				2	A	B	C	D	E	F	G	H	I	J	K	L														
38	齒輪(GEAR)																															
	32069	31501235A				1	A	B					G	H																		
	32070	32501235B				1			C	D	E	F			I	J	K	L														
39	調速銅錐環(RING)																															
	32071	32501236A				2	A	B	C	D	E	F	G	H	I	J	K	L														
40	特殊扣環(RING)																															
	32072	32501237				2	A	B	C	D	E	F	G	H	I	J	K	L														
41	離合齒(GEAR)																															
	32073	32501238				1	A	B	C	D	E	F	G	H	I	J	K	L														
42	調速鍵(KEY, SYNCHRONIZER)																															
	32074	32501252				3	A	B	C	D	E	F	G	H	I	J	K	L														
43	離合齒套(SLEEVE, TRANSMISSION CLUTCH)																															
	32075	32501239				2	A	B	C	D	E	F	G	H	I	J	K	L														
44	齒輪(GEAR)																															
	32076	31501240A				1	A	B					G	H																		
	32077	32501240A				1			C	D	E	F			I	J	K	L														
45	傳動心軸(SHAFT, MAIN)																															
	32078	32501224				1	A	B	C	D	E	F	G	H	I	J	K	L														
46	隔圈(SPACER)																															
	32079	32501241				1	A	B	C	D	E	F	G	H	I	J	K	L														
47	軸承(BEARING)																															
	M0901-6306NR	92501242				1	A	B	C	D	E	F	G	H	I	J	K	L														
48	止推華司(WASHER)																															
	32080	32501243				1	A	B	C	D	E	F	G	H	I	J	K	L														
49	止推板(PLATE)																															
		32501244				1	A	B	C	D	E	F	G	H	I	J	K	L														停用(NOT USED)
50	螺栓(BOLT)																															
	M1424-M8*20	92504208				2	A	B	C	D	E	F	G	H	I	J	K	L														
51	扣環(RING)																															
	M1312-S30	92501246				1	A	B	C	D	E	F	G	H	I	J	K	L														

https://truckmanualshub.com/

手排傳動齒輪組
A301-3
(MT)TRANSMISSION GEAR SET

編號 NO.	零件名稱 PART NAME						FD						FG						FD〔C〕						FG〔C〕						機號 BODY NO.	備註 REMARK
	新碼 NEW PART NO.	舊碼 OLD PART NO.	規格 SPECIFICATION	互換性 ITC	應用日期 APPLIED DATE	數量 QTY	135 A	180 B	205 C	230 D	305 E	335 F	135 G	180 H	205 I	230 J	305 K	335 L	135 M	180 N	205 O	230 P	305 Q	335 R	135 S	180 T	205 U	230 V	305 W	335 X		
52	**軸承(BEARING)**																															
	M0901-6208					1	A	B	C	D	E	F	G	H	I	J	K	L														
53	**輸入軸(SHAFT, INPUT)**																															
	32081	32501248				1	A	B	C	D			G	H	I	J																
	32082	33001248				1					E	F					K	L														
54	**變速軸(GEAR, INPUT)**																															
	31975	31501249B				1	A	B					G	H																		
	32083	32501249B				1			C	D	E	F			I	J	K	L														
55	**軸承(BEARING)**																															
		92501250			2000/10	1	A	B	C	D	E	F	G	H	I	J	K	L														
	M0901-6208NR	92501247			2003/02	1	A	B	C	D	E	F	G	H	I	J	K	L														
56	**扣環(RING)**																															
	M1312-S40	92501251				1	A	B	C	D	E	F	G	H	I	J	K	L														停用(NOT USED)
57	**彈簧華司(SPRING WASHER)**																															
	M1605-M8	92501019				2	A	B	C	D	E	F	G	H	I	J	K	L														
58	**傳動心軸扣環(RING)**																															
	32084	32501258				1	A	B	C	D	E	F	G	H	I	J	K	L														
59	**特殊扣環(CLIP)**																															
	32085	32501260				1	A	B	C	D	E	F	G	H	I	J	K	L														
60	**彈簧華司(SPRING WASHER)**																															
	M1605-M12	92501024				6	A	B	C	D	E	F	G	H	I	J	K	L														
61	**迴轉齒輪(PINION, HYPOID TRQ)**																															
	31962	71501202			2000/10	1	A	B					G	H																		
	31963	72501202			2000/10	1			C	D					I	J																
	31964	73001202			2000/10	1					E	F					K	L														

https://truckmanualshub.com/

變速箱系統
A301
TRANSMISSION SYSTEM

手排差速器組

A301-4

(MT)DIFFERENTIAL ASSY

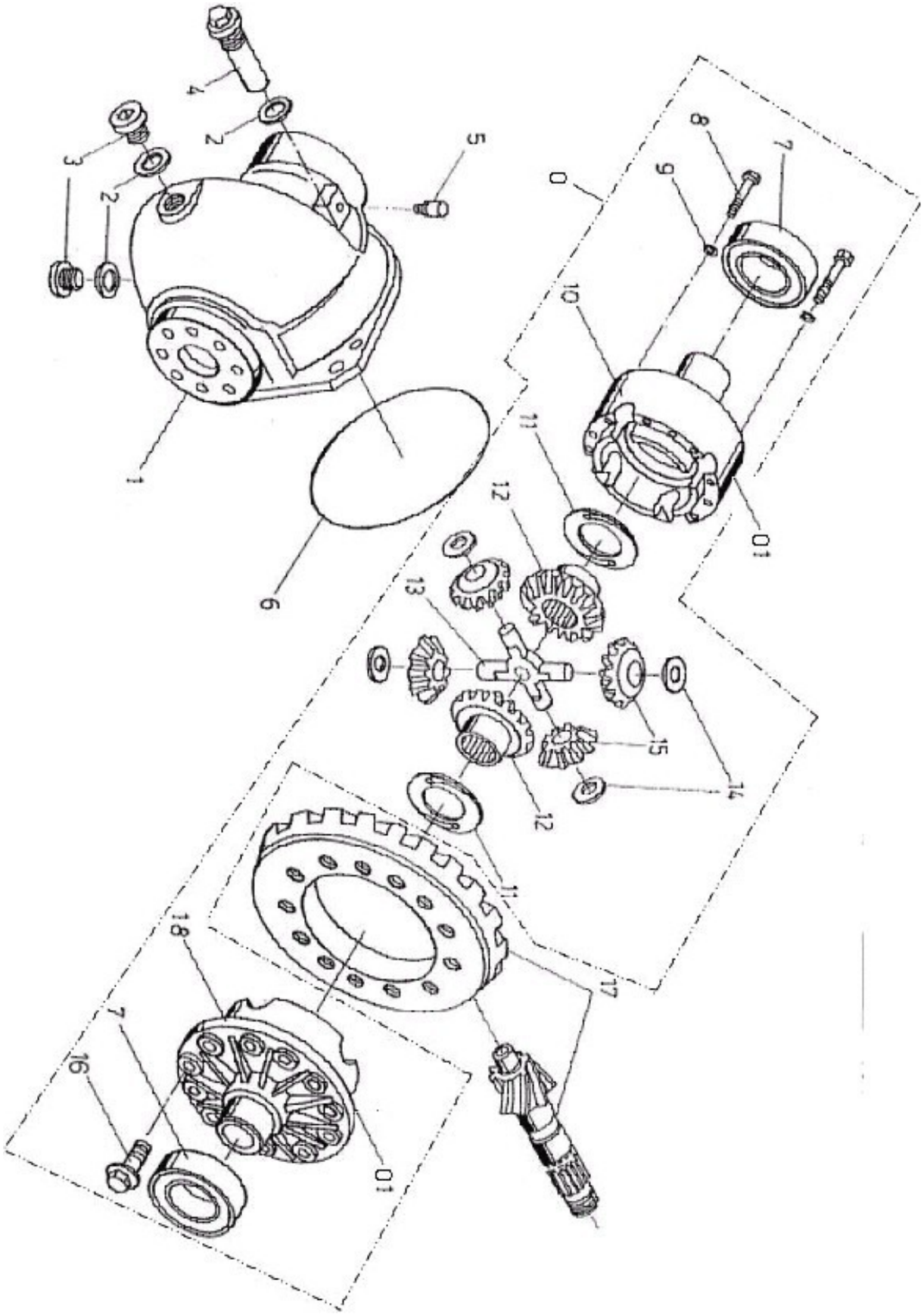

https://truckmanualshub.com/

手排差速器組
A301-4
(MT)DIFFERENTIAL ASSY

編號 NO.	零件名稱 PART NAME						FD						FG						FD〔C〕						FG〔C〕						機號 BODY NO.	備註 REMARK
	新碼 NEW PART NO.	舊碼 OLD PART NO.	規格 SPECIFICATION	互換性 ITC	應用日期 APPLIED DATE	數量 QTY	1 5 A	1 8 B	2 0 C	2 5 D	3 0 E	3 5 F	1 5 G	1 8 H	2 0 I	2 5 J	3 0 K	3 5 L	1 5 M	1 8 N	2 0 O	2 5 P	3 0 Q	3 5 R	1 5 S	1 8 T	2 0 U	2 5 V	3 0 W	3 5 X		
0	**差速器總成(DIFFERENTIAL)**																															
	B350004	21502020				1	A	B					G	H																		
	B350005	22502020				1			C	D					I	J																
	B350006	23002020				1					E	F					K	L														
01	**差速器殼組(CASE ASSY)**																															
	B350634					1	A	B					G	H																		
	B350635					1			C	D					I	J																
	B350636					1					E	F					K	L														
1	**差速箱(HOUSING, DIFFERENTIAL)**																															
	32086	31502001				1	A	B					G	H																		停用(NOT USED)
	32124	31560101B			2005/09	1	A	B					G	H																		
	32087	32502001				1			C	D					I	J																
	32088	33002001B				1					E	F					K	L														
2	**油塞華司(WASHER)**																															
	32029	32501114				3	A	B	C	D	E	F	G	H	I	J	K	L														
3	**螺栓油塞(PLUG, SCREW)**																															
	32089	32502003				2	A	B	C	D	E	F	G	H	I	J	K	L														
4	**特殊螺栓(BOLT)**																															
	32090	31502005				1	A	B					G	H																		
	32091	32502005				1			C	D	E	F			I	J	K	L														
5	**透氣栓(BREATHER)**																															
	32092	92502010A				1	A	B	C	D	E	F	G	H	I	J	K	L														
6	**O型環("O"RING)**																															
	M0801-AS275	91502004				1	A	B					G	H																		
	M0801-AS277	92502004				1			C	D					I	J																
	M0801-AS279	93002004				1					E	F					K	L														
7	**軸承(BEARING)**																															
	M0909-33013	92502006				2	A	B	C	D			G	H	I	J																
	M0909001	93002006				2					E	F					K	L														
8	**螺栓(BOLT)**																															
	M1424001	92502007				12	A	B	C	D			G	H	I	J																
	M1423002	93002007				12					E	F					K	L														
9	**彈簧華司(SPRING WASHER)**																															
	M1605-M10	92501218				12	A	B	C	D			G	H	I	J																
	M1605-M12	92501024				12					E	F					K	L														

https://truckmanualshub.com/

手排差速器組
A301-4
(MT)DIFFERENTIAL ASSY

編號 NO.	零件名稱 PART NAME						FD						FG						FD〔C〕						FG〔C〕						機號 BODY NO.	備註 REMARK
	新碼 NEW PART NO.	舊碼 OLD PART NO.	規格 SPECIFICATION	互換性 ITC	應用日期 APPLIED DATE	數量 QTY	1 5 A	1 8 0 B	2 0 5 C	2 5 D	3 0 E	3 5 F	1 5 G	1 8 0 H	2 0 5 I	2 5 J	3 0 K	3 5 L	1 5 M	1 8 0 N	2 0 5 O	2 5 P	3 0 Q	3 5 R	1 5 S	1 8 0 T	2 0 5 U	2 5 V	3 0 W	3 5 X		
10	差速器殼(小)(CASE)																															
	32093	31502012				1	A B						G H																			
	32094	32502012				1			C D						I J																	
	32095	33002012B				1				E F						K L																
11	銅墊片(WASHER, Cu)																															
	32096	32502009				2	A B C D						G H I J																			
	32097	33002009				2				E F						K L																
12	傘型齒輪(大)(GEAR)																															
	32098	32502017				2	A B C D						G H I J																			
	32099	33002017A				2				E F						K L																
13	十字軸(SPIDER)																															
	32100	32502016				1	A B C D						G H I J																			
	32101	33002016A				1				E F						K L																
14	止推墊圈(WASHER)																															
	32102	32502014				4	A B C D						G H I J																			
	32103	33002014				4				E F						K L																
15	傘型齒輪(小)(PINION)																															
	32104	32502015				4	A B C D						G H I J																			
	32105	33002015A				4				E F						K L																
16	帶帽螺栓(BOLT)																															
	32106	91502008				12	A B						G H																			
	32107	92502008				12			C D						I J																	
	32108	93002008				12				E F						K L																
17	戟齒輪組(HYPOID GEAR SET)																															
	B350007	71502013				1	A B						G H																			
	B350008	72502013				1			C D						I J																	
	B350009	73002013				1				E F						K L																
18	差速器殼(大)(CASE)																															
	31976	31502018				1	A B						G H																			
	31977	32502018				1			C D						I J																	
	31978	33002018B				1				E F						K L																

https://truckmanualshub.com/

變速箱系統
A301
TRANSMISSION SYSTEM

手排離合器箱組
A301-5
(MT)CLUTCH HOUSING

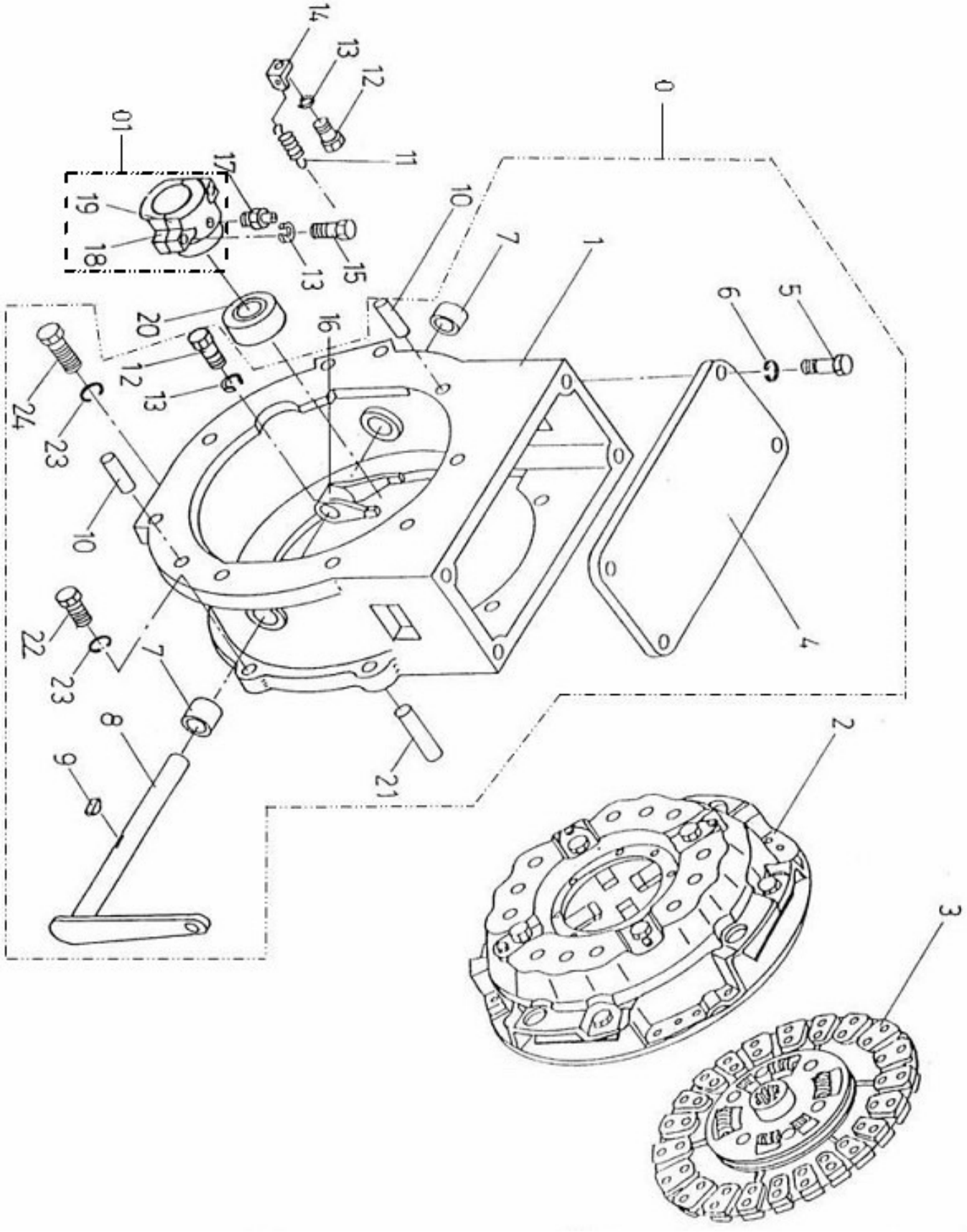

https://truckmanualshub.com/

變速箱系統
A301
TRANSMISSION SYSTEM

手排離合器箱組
A301-5
(MT)CLUTCH HOUSING

編號 NO.	零件名稱 PART NAME						FD						FG						FD〔C〕						FG〔C〕						機號 BODY NO.	備註 REMARK
	新碼 NEW PART NO.	舊碼 OLD PART NO.	規格 SPECIFICATION	互換性 ITC	應用日期 APPLIED DATE	數量 QTY	15 A	18 B	20 C	25 D	30 E	35 F	15 G	18 H	20 I	25 J	30 K	35 L	15 M	18 N	20 O	25 P	30 Q	35 R	15 S	18 T	20 U	25 V	30 W	35 X		
0	**離合器箱組立(CLUTCH HOUSING)**																															
	B350010	32503031	C240,4JG2			1	A	B	C	D	E	F																				
	B350011	32503032	H20,H25			1							G	H	I	J	K	L														
01	**釋放軸承座組(BEARING SEAT)**																															
	B350557		4JG2,C240			1	A	B	C	D	E	F																				
	B350558		H20,H25			1							G	H	I	J	K	L														
1	**離合器箱(CLUTCH HOUSING)**																															
	32109	32503022	C240,4JG2			1	A	B	C	D	E	F																				
	32110	32503023	H20,H25			1							G	H	I	J	K	L														
2	**壓板組(CLUTCH COVER)**																															
	32111	72503200				1	A	B	C	D	E	F	G	H	I	J	K	L														
3	**離合器片(CLUTCH, DISK)**																															
	32112	72503100				1	A	B	C	D																						
	32113	72503300				1			C	D	E	F																				
	32112	72503100				1							G	H	I	J	K	L														
4	**離合箱蓋(COVER)**																															
	32114	32503002	C240,4JG2			1	A	B	C	D	E	F																				
	32115	32503025	H20,H25			1							G	H	I	J	K	L														
5	**螺栓(BOLT)**																															
	M1424002	92501219				4	A	B	C	D	E	F	G	H	I	J	K	L														
6	**彈簧華司(SPRING WASHER)**																															
	M1605-M10	92501218				4	A	B	C	D	E	F	G	H	I	J	K	L														
7	**滾針軸承(BEARING)**																															
	M0905-TA2230Z	92503005				2	A	B	C	D	E	F	G	H	I	J	K	L														
8	**離合桿組立(SHAFT, CLUTCH)**																															
	32116	22503006				1	A	B	C	D	E	F	G	H	I	J	K	L														
9	**半圓鍵(KEY, WOODRUFF)**																															
	32733	92503007				1	A	B	C	D	E	F	G	H	I	J	K	L														
10	**直銷(PIN)**																															
	M1301-12*30	92503008				2	A	B	C	D	E	F	G	H	I	J	K	L														停用(NOT USED)
	M1301-12*28					2	A	B	C	D	E	F	G	H	I	J	K	L														
11	**拉伸彈簧(SPRING)**																															
	32117	92503009A				1	A	B	C	D	E	F	G	H	I	J	K	L														
12	**螺栓(BOLT)**																															
	M1424-M8*30	92503010				10	A	B	C	D	E	F	G	H	I	J	K	L														
13	**彈簧華司(SPRING WASHER)**																															
	M1605-M8	92501019				13	A	B	C	D	E	F	G	H	I	J	K	L														

https://truckmanualshub.com/

手排離合器箱組
A301-5
(MT)CLUTCH HOUSING

編號 NO.	零件名稱 PART NAME						FD						FG						FD〔C〕						FG〔C〕						機號 BODY NO.	備註 REMARK
	新碼 NEW PART NO.	舊碼 OLD PART NO.	規格 SPECIFICATION	互換性 ITC	應用日期 APPLIED DATE	數量 QTY	15A	18B	20C	25D	30E	35F	15G	18H	20I	25J	30K	35L	15M	18N	20O	25P	30Q	35R	15S	18T	20U	25V	30W	35X		
14	彈簧固定板(HOLDER, SPRING)																															
	32118	32503012A				1	A	B	C	D	E	F	G	H	I	J	K	L														
15	螺栓(BOLT)																															
	M1424-M8*35	92501009				3	A	B	C	D	E	F	G	H	I	J	K	L														
16	釋放叉(RELEASE FORK)																															
	32119	32503014				1	A	B	C	D	E	F	G	H	I	J	K	L														
17	黃油嘴(GREASE, CONNECTOR)																															
	M1321-M10	92503015				1	A	B	C	D	E	F	G	H	I	J	K	L														
18	釋放軸承座(BEARING SEAT)																															
	32120	32503016	4JG2,C240			1	A	B	C	D	E	F																				
	32121	32503026	H20,H25			1							G	H	I	J	K	L														
19	釋放軸承座(BEARING SEAT)																															
	32122	32503017	4JG2,C240			1	A	B	C	D	E	F																				
	32123	32503027	H20,H25			1							G	H	I	J	K	L														
20	釋放軸承(BEARING)																															
	M0921001	92503018				1	A	B	C	D	E	F	G	H	I	J	K	L														
21	直銷(PIN)																															
	M1301-10*30	92503019				2	A	B	C	D	E	F	G	H	I	J	K	L														停用(NOT USED)
	M1301-10*28					2	A	B	C	D	E	F	G	H	I	J	K	L														
22	螺栓(BOLT)																															
	M1401006	92503020				6	A	B	C	D	E	F	G	H	I	J	K	L														
23	彈簧華司(SPRING WASHER)																															
	M1605-M12	92501024				8	A	B	C	D	E	F	G	H	I	J	K	L														
24	螺栓(BOLT)																															
	M1424013	92501020				2	A	B	C	D	E	F	G	H	I	J	K	L														

https://truckmanualshub.com/

變速箱系統
A301
TRANSMISSION SYSTEM

自排差速器組

A301-6

(AT)DIFFERENTIAL ASSY

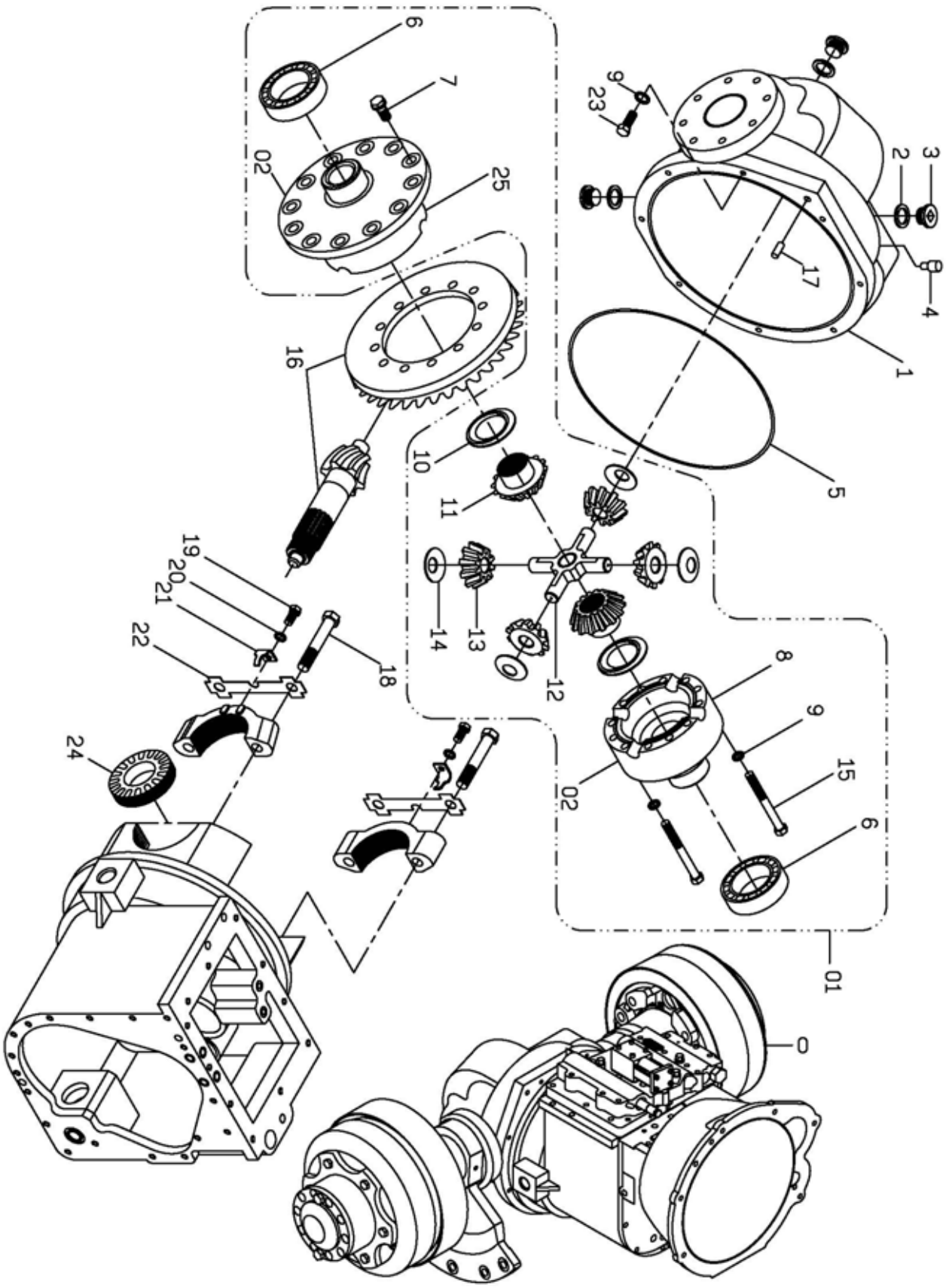

https://truckmanualshub.com/

變速箱系統
A301
TRANSMISSION SYSTEM

自排差速器組
A301-6
(AT)DIFFERENTIAL ASSY

編號 NO.	零件名稱 PART NAME						FD						FG						FD〔C〕						FG〔C〕						機號 BODY NO.	備註 REMARK
	新碼 NEW PART NO.	舊碼 OLD PART NO.	規格 SPECIFICATION	互換性 ITC	應用日期 APPLIED DATE	數量 QTY	1 5 A	1 8 B	2 0 C	2 5 D	3 0 E	3 5 F	1 5 G	1 8 H	2 0 I	2 5 J	3 0 K	3 5 L	1 5 M	1 8 N	2 0 O	2 5 P	3 0 Q	3 5 R	1 5 S	1 8 T	2 0 U	2 5 V	3 0 W	3 5 X		
0	**自排變速箱總成((AT)TRANSMISSION GEAR BOX ASSY)**																															
	B350770					1	A B						G H																			
	B350771					1			C D						I J																	
	B350772					1					E						K															
	B350773					1						F						L														
01	**差速器總成(DIFFERENTIAL)**																															
	B350012	21560110				1	A B						G H																		停用(NOT USED)	
	B350498					1					E F						K L														停用(NOT USED)	
	B350004	21502020				1	A B						G H																			
	B350013	22560110				1			C D						I J																	
	B350006	23002020				1					E F						K L															
02	**差速器殼組(CASE ASSY)**																															
	B350634					1	A B						G H																			
	B350640					1			C D						I J																	
	B350636					1					E F						K L															
1	**差速器箱(HOUSING, DIFFERENTIAL)**																															
		32560101			2000/10	1			C D E F						I J K L																停用(NOT USED)	
	32124	31560101B				1	A B						G H																			
	32125	32560101C			2003/02	1			C D E F						I J K L																	
2	**油塞華司(WASHER)**																															
	32029	32501114				3	A B C D E F						G H I J K L																			
3	**螺栓油塞(PLUG, SCREW)**																															
	32089	32502003				3	A B C D E F						G H I J K L																			
4	**透氣栓(BREATHER, AIR)**																															
	32092	92502010A				1	A B C D E F						G H I J K L																			
5	**O型環("O"RING)**																															
	M0801-AS277	92502004				1	A B C						G H																			
	M0801-AS279	93002004				1				D E F					I J K L																	
6	**軸承(BEARING)**																															
	M0909-33013	92502006				2	A B						G H																			
	M0909001	93002006				2			C D E F						I J K L																	
7	**帶帽螺栓(BOLT)**																															
	32106	91502008				12	A B						G H																			
	32108	93002008				12			C D E F						I J K L																	
8	**差速器殼(小)(CASE)**																															
	32093	31502012				1	A B						G H																			
	31990	32560102B				1			C D						I J																	
	32095	33002012B				1					E F						K L															

https://truckmanualshub.com/

自排差速器組
A301-6
(AT)DIFFERENTIAL ASSY

編號 NO.	零件名稱 PART NAME						FD						FG						FD〔C〕						FG〔C〕						機號 BODY NO.	備註 REMARK
	新碼 NEW PART NO.	舊碼 OLD PART NO.	規格 SPECIFICATION	互換性 ITC	應用日期 APPLIED DATE	數量 QTY	1535 A	1805 B	2055 C	2305 D	3055 E	3505 F	1535 G	1805 H	2055 I	2305 J	3055 K	3505 L	1535 M	1805 N	2055 O	2305 P	3055 Q	3505 R	1535 S	1805 T	2055 U	2305 V	3055 W	3505 X		
9	**彈簧華司(SPRING WASHER)**																															
	M1605-M10	92501218				12	A	B	C	D			G	H	I	J																
	M1605-M12	92501024				20					E	F					K	L														
10	**銅墊片(WASHER "Cu")**																															
	32096	32502009				2	A	B	C	D			G	H	I	J																
	32097	33002009				2					E	F					K	L														
11	**傘型齒輪(大)(GEAR)**																															
	32098	32502017				2	A	B	C	D			G	H	I	J																
	32099	33002017A				2					E	F					K	L														
12	**十字軸(SPIDER)**																															
	32100	32502016				1	A	B	C	D			G	H	I	J																
	32101	33002016A				1					E	F					K	L														
13	**傘型齒輪(小)(PINION)**																															
	32104	32502015				4	A	B	C	D			G	H	I	J																
	32105	33002015A				4					E	F					K	L														
14	**止推墊圈(WASHER)**																															
	32102	32502014				4	A	B	C	D			G	H	I	J																
	32103	33002014				4					E	F					K	L														
15	**螺栓(BOLT)**																															
	M1424001	92502007				12	A	B					G	H																		
	M1423002	93002007				12			C	D	E	F			I	J	K	L														
16	**盆型齒輪組(HYPOID GEAR SET)**																															
		71560206			2000/10	1	A	B					G	H																		停用(NOT USED)
		72560206			2000/10	1			C	D	E	F			I	J	K	L														停用(NOT USED)
	B350014	71560205			2003/02	1	A	B					G	H																		
	B350015	72560205			2003/02	1			C	D	E				I	J	K															
	B350016	73560205			2003/02	1						F						L														
17	**銷(PIN)**																															
	M1301-10*45	92501025				1	A	B	C	D	E	F	G	H	I	J	K	L														
18	**帶梢螺栓(BOLT)**																															
	32008	92501010A				4	A	B	C	D	E	F	G	H	I	J	K	L														
19	**螺栓(BOLT)**																															
	M1424-M8*16	92501014				2	A	B	C	D	E	F	G	H	I	J	K	L														
20	**彈簧華司(SPRING WASHER)**																															
	M1605-M8	92501019				2	A	B	C	D	E	F	G	H	I	J	K	L														
21	**固定壓板(PAWL)**																															
	32009	32501013				2	A	B				F	G	H				L														
	32010	33001013				2			C	D	E				I	J	K															

https://truckmanualshub.com/

自排差速器組
A301-6
(AT)DIFFERENTIAL ASSY

編號 NO.	零件名稱 PART NAME						FD						FG						FD〔C〕						FG〔C〕						機號 BODY NO.	備註 REMARK
	新碼 NEW PART NO.	舊碼 OLD PART NO.	規格 SPECIFICATION	互換性 ITC	應用日期 APPLIED DATE	數量 QTY	15 A	18 B	20 C	25 D	30 E	35 F	15 G	18 H	20 I	25 J	30 K	35 L	15 M	18 N	20 O	25 P	30 Q	35 R	15 S	18 T	20 U	25 V	30 W	35 X		
22	**防鬆片(PLATE, LOCK)**																															
	32006	32501011				2	A	B	C	D			G	H	I	J																
	32007	33001011				2					E	F					K	L														
23	**螺栓(BOLT)**																															
		92560106			2000/10	8	A	B	C	D	E	F	G	H	I	J	K	L													停用(NOT USED)	
	M1424013	92501020			2003/02	8	A	B	C	D	E	F	G	H	I	J	K	L														
24	**調整螺帽(NUT, ADJUSTING)**																															
	32004	32501012				2	A	B	C	D			G	H	I	J																
	32005	33001012A				2					E	F					K	L														
25	**差速器殼(大)(CASE)**																															
	31976	31502018				1	A	B					G	H																		
	32127	32560103B				1			C	D					I	J																
	31978	33002018B				1					E	F					K	L														

https://truckmanualshub.com/

變速箱系統
A301
TRANSMISSION SYSTEM

自排變速齒輪箱組

A301-7

(AT)TRANSMISSION GEAR BOX

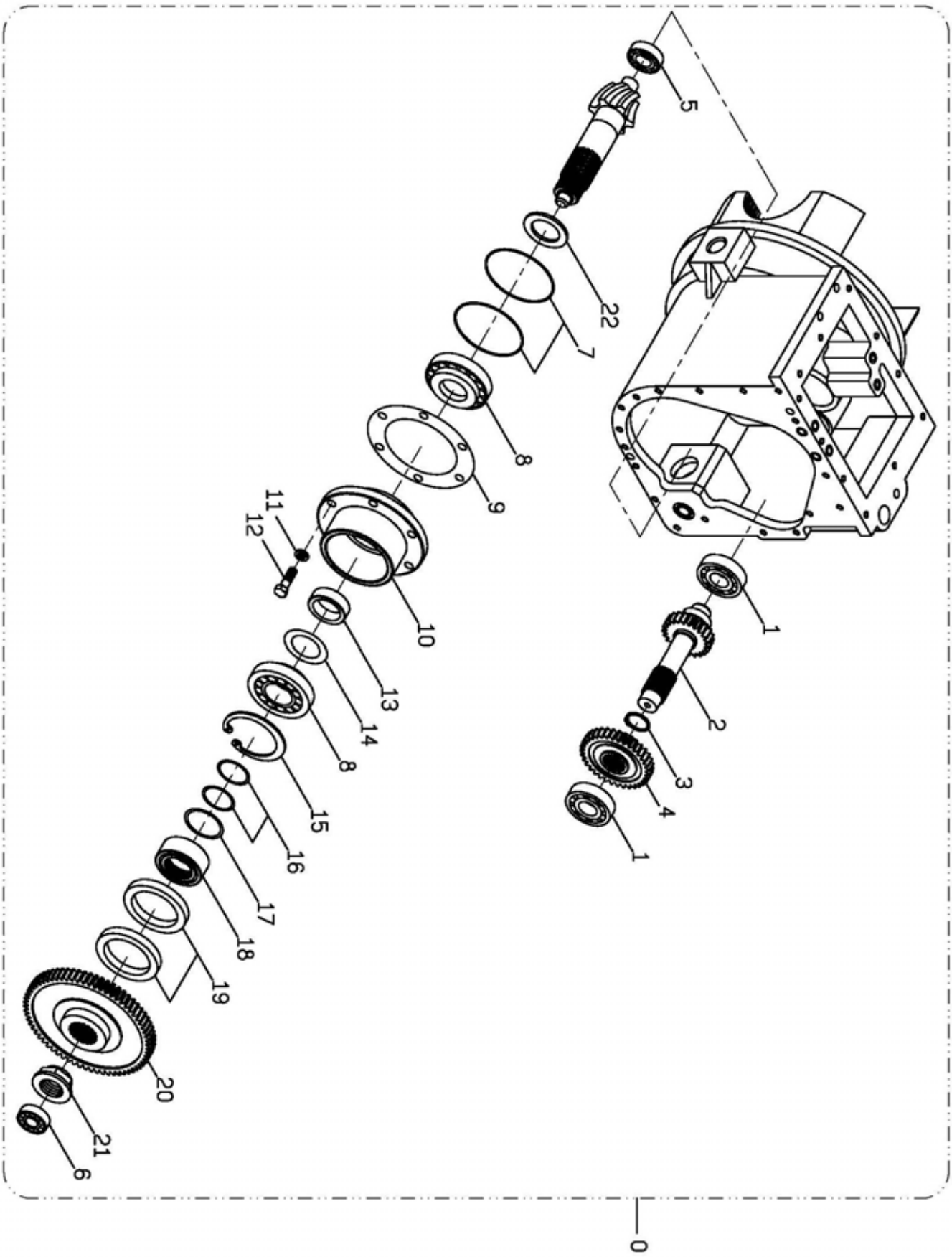

https://truckmanualshub.com/

自排變速齒輪箱組
A301-7
(AT)TRANSMISSION GEAR BOX

編號 NO.	新碼 NEW PART NO.	舊碼 OLD PART NO.	規格 SPECIFICATION	互換性 ITC	應用日期 APPLIED DATE	數量 QTY	FD 15 A	FD 18 B	FD 20 C	FD 25 D	FD 30 E	FD 35 F	FG 15 G	FG 18 H	FG 20 I	FG 25 J	FG 30 K	FG 35 L	FD〔C〕15 M	FD〔C〕18 N	FD〔C〕20 O	FD〔C〕25 P	FD〔C〕30 Q	FD〔C〕35 R	FG〔C〕15 S	FG〔C〕18 T	FG〔C〕20 U	FG〔C〕25 V	FG〔C〕30 W	FG〔C〕35 X	機號 BODY NO.	備註 REMARK
0	**變速齒輪箱總成(TRANSMISSION ASSY)**																															
	B350017	21560200				1	A	B					G	H																		
	B350018	22560200				1			C	D	E	F			I	J	K	L														
1	**軸承(BEARING)**																															
	M0901-6306	92520309				2	A	B	C	D	E	F	G	H	I	J	K	L														
2	**惰輪軸-慢速22齒(IDLER SHAFT,SLOW-22T)**																															
		32560220			2000/10	1	A	B	C	D	E	F	G	H	I	J	K	L														
2	**惰輪軸-標準23齒(IDLER SHAFT,STANDARD-23T)**																															
	32129	32560202D			2003/02	1	A	B	C	D	E	F	G	H	I	J	K	L														
3	**C型扣環(C-RING)**																															
		92560203			2000/10	1	A	B	C	D	E	F	G	H	I	J	K	L													停用(NOT USED)	
	M1312-S35	92512419			2003/02	1	A	B	C	D	E	F	G	H	I	J	K	L														
4	**惰齒輪(GEAR)**																															
	32130	32560204				1	A	B	C	D	E	F	G	H	I	J	K	L														
5	**軸承(BEARING)**																															
	M0904-NJ304	91501201				2	A	B					G	H																		
	M0904-MUB5205UM	92501201				2			C	D	E	F			I	J	K	L														
6	**軸承(BEARING)**																															
		92560219			2000/10	1	A	B	C	D	E	F	G	H	I	J	K	L													停用(NOT USED)	
	M0901-6304	42560219			2003/02	1	A	B	C	D	E	F	G	H	I	J	K	L														
7	**O型環("O"RING)**																															
	M0801-G110	92560206				2	A	B	C	D	E	F	G	H	I	J	K	L														
8	**軸承(BEARING)**																															
	M0909-30309D	92560207				2	A	B	C	D	E	F	G	H	I	J	K	L														
9	**軸承座填隙片(SPACER)**																															
		32560208				N	A	B	C	D	E	F	G	H	I	J	K	L													停用(NOT USED)	
10	**軸承座(BEARING)**																															
	32131	32560209B				1	A	B	C	D	E	F	G	H	I	J	K	L														
11	**彈簧華司(SPRING WASHER)**																															
	M1605-M12	92501024				6	A	B	C	D	E	F	G	H	I	J	K	L														
12	**螺栓(BOLT)**																															
	32012	92501006				6	A	B	C	D	E	F	G	H	I	J	K	L														
13	**間隔圈(SPACER)**																															
	32042	32501204A				1	A	B	C	D	E	F	G	H	I	J	K	L														
14	**套筒填隙片(SPACER)**																															
		32560212			2000/10	1	A	B	C	D	E	F	G	H	I	J	K	L													停用(NOT USED)	
	32043	32501205			2003/02	1	A	B	C	D	E	F	G	H	I	J	K	L														

https://truckmanualshub.com/

自排變速齒輪箱組
A301-7
(AT)TRANSMISSION GEAR BOX

編號 NO.	零件名稱 PART NAME						FD						FG						FD〔C〕						FG〔C〕						機號 BODY NO.	備註 REMARK
	新碼 NEW PART NO.	舊碼 OLD PART NO.	規格 SPECIFICATION	互換性 ITC	應用日期 APPLIED DATE	數量 QTY	135	180	205	230	305	335	135	180	205	230	305	335	135	180	205	230	305	335	135	180	205	230	305	335		
							A	B	C	D	E	F	G	H	I	J	K	L	M	N	O	P	Q	R	S	T	U	V	W	X		
15	C型扣環(C-RING)																															
	M1312-R100	92560213				1	A	B	C	D	E	F	G	H	I	J	K	L														
16	O型環("O"RING)																															
	M0801-P45	92560214				2	A	B	C	D	E	F	G	H	I	J	K	L														
17	O型環("O"RING)																															
	M0801-G55	92560215				1	A	B	C	D	E	F	G	H	I	J	K	L														
18	套筒(SLEEVE)																															
	32132	32560216A				1	A	B	C	D	E	F	G	H	I	J	K	L														
19	油封(SEAL)																															
	M0701008	92560217				2	A	B	C	D	E	F	G	H	I	J	K	L														
20	輸出齒輪-面速68齒(OUTPUT GEAR,SLOW-68T)																															
		32560221			2000/10	1	A	B	C	D	E	F	G	H	I	J	K	L														
20	輸出齒輪-標準67齒(OUTPUT GEAR,STANDARD-67T)																															
	32133	32560218			2003/02	1	A	B	C	D	E	F	G	H	I	J	K	L														
21	特殊螺帽(NUT)																															
	32048	32501208				1	A	B	C	D	E	F	G	H	I	J	K	L														
22	齒輪填隙片(SPACER)																															
	32134	31560222				1	A	B					G	H																		停用(NOT USED)
	34909	31560225A			2006/10	1	A	B					G	H																		

https://truckmanualshub.com/

變速箱系統
A301
TRANSMISSION SYSTEM

自排變速箱體組

A301-8

(AT)TRANSMISSION CASE ASSY

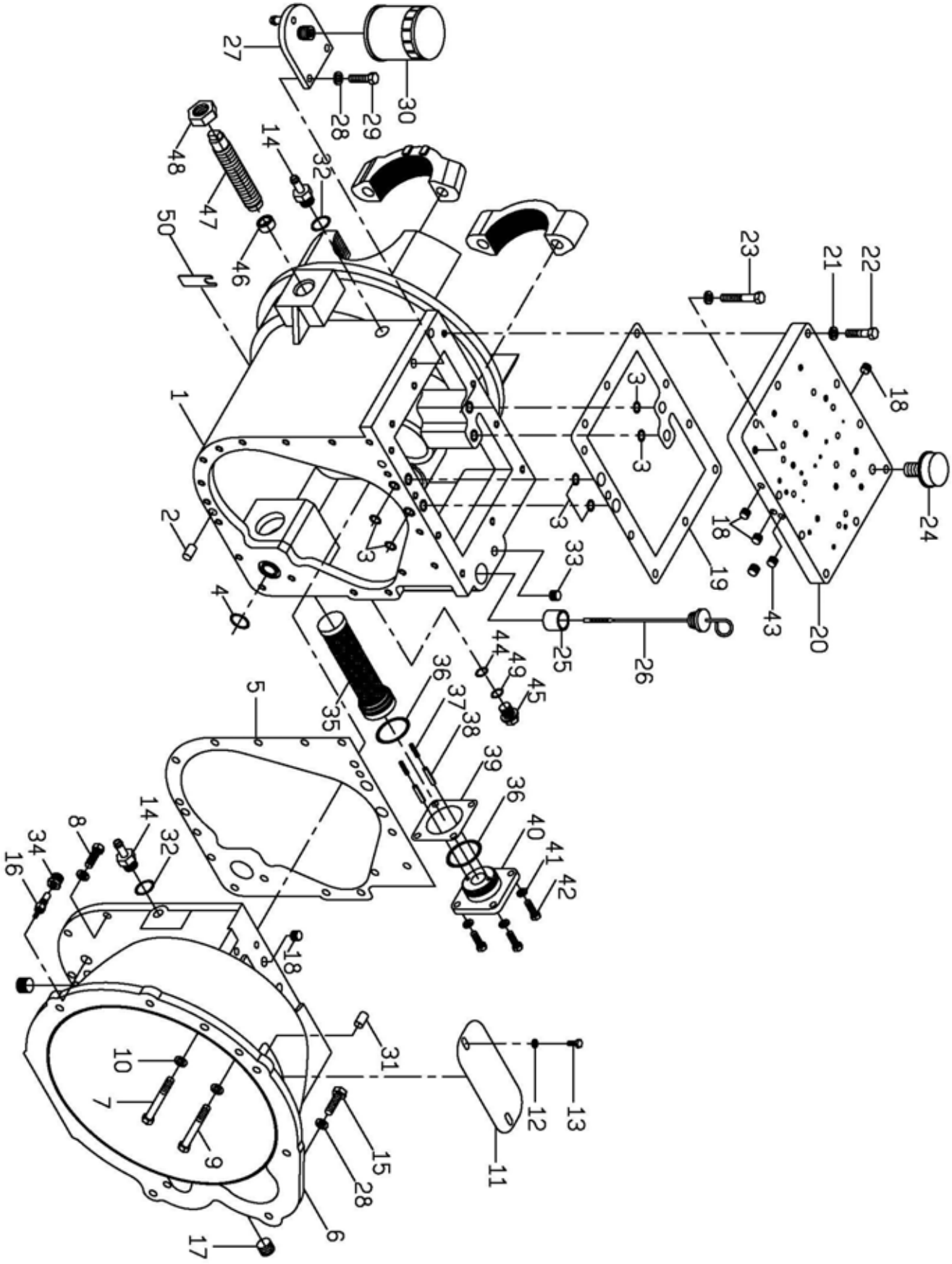

https://truckmanualshub.com/

自排變速箱體組
A301-8
(AT)TRANSMISSION CASE ASSY

編號 NO.	新碼 NEW PART NO.	舊碼 OLD PART NO.	規格 SPECIFICATION	互換性 ITC	應用日期 APPLIED DATE	數量 QTY	FD 15 A	FD 18 B	FD 20 C	FD 25 D	FD 30 E	FD 35 F	FG 15 G	FG 18 H	FG 20 I	FG 25 J	FG 30 K	FG 35 L	FD〔C〕15 M	FD〔C〕18 N	FD〔C〕20 O	FD〔C〕25 P	FD〔C〕30 Q	FD〔C〕35 R	FG〔C〕15 S	FG〔C〕18 T	FG〔C〕20 U	FG〔C〕25 V	FG〔C〕30 W	FG〔C〕35 X	機號 BODY NO.	備註 REMARK
1	**變速箱體(TRANSMISSION CASE)**																															
	32135	31560301				1	A	B					G	H																		
	32136	32560301C				1			C	D	E	F			I	J	K	L														
2	**銷(PIN)**																															
	M1301-12*32						2	A	B	C	D	E	F	G	H	I	J	K	L														
3	**O型環("O"RING)**																															
	M0801-P11	94012995				6	A	B	C	D	E	F	G	H	I	J	K	L														
4	**O型環("O"RING)**																															
	M0801-P24	92509052				1	A	B	C	D	E	F	G	H	I	J	K	L														
5	**密封墊(GASKET)**																															
		32560305			2000/10	1	A	B	C	D	E	F	G	H	I	J	K	L														停用(NOT USED)
		32560305A			2003/02	1	A	B	C	D	E	F	G	H	I	J	K	L														停用(NOT USED)
	32137	32560305B			2006/02	1	A	B	C	D	E	F	G	H	I	J	K	L														
6	**變矩器箱體(TORQUE CONVERTER)**																															
		32560306			2000/10	1	A	B	C	D	E	F	G	H	I	J	K	L														停用(NOT USED)
	32138	32560306A			2003/02	1	A	B	C	D	E	F	G	H	I	J	K	L														
7	**螺栓(BOLT)**																															
	M1424001	92502007				1	A	B	C	D	E	F	G	H	I	J	K	L														
8	**螺栓(BOLT)**																															
	M1424004	92501102				13	A	B	C	D	E	F	G	H	I	J	K	L														
9	**螺栓(BOLT)**																															
	M1424015	M1424-M10*55*P1.25				4	A	B	C	D	E	F	G	H	I	J	K	L														
10	**彈簧華司(SPRING WASHER)**																															
	M1605-M10	92501218				18	A	B	C	D	E	F	G	H	I	J	K	L														
11	**變速箱側蓋(COVER)**																															
		32560311			2000/10	1	A	B	C	D	E	F	G	H	I	J	K	L														停用(NOT USED)
	32139	32560311A			2003/02	1	A	B	C	D	E	F	G	H	I	J	K	L														
12	**彈簧華司(SPRING WASHER)**																															
	M1605-M6	92503218				2	A	B	C	D	E	F	G	H	I	J	K	L														
13	**螺栓(BOLT)**																															
	M1423-M6*16	92512513				2	A	B	C	D	E	F	G	H	I	J	K	L														
14	**回油接頭(CONNECTOR)**																															
	32140	32560314				2	A	B	C	D	E	F	G	H	I	J	K	L														
15	**螺栓(BOLT)**																															
	M1424007	92550105			2003/02	9	A	B	C	D	E	F	G	H	I	J	K	L														停用(NOT USED)
	M1424015	M1424-M10*55*P1.25			2006/01	9	A	B	C	D	E	F	G	H	I	J	K	L														

https://truckmanualshub.com/

變速箱系統
A301
TRANSMISSION SYSTEM

自排變速箱體組
A301-8
(AT)TRANSMISSION CASE ASSY

編號 NO.	零件名稱 PART NAME						FD						FG						FD〔C〕						FG〔C〕						機號 BODY NO.	備註 REMARK
	新碼 NEW PART NO.	舊碼 OLD PART NO.	規格 SPECIFICATION	互換性 ITC	應用日期 APPLIED DATE	數量 QTY	15 A	18 B	20 C	25 D	30 E	35 F	15 G	18 H	20 I	25 J	30 K	35 L	15 M	18 N	20 O	25 P	30 Q	35 R	15 S	18 T	20 U	25 V	30 W	35 X		
16	油溫器(OIL TEMPERATURE SENSOR)																															
		92520316			2000/10	1	●	●	●	●	●	●	●	●	●	●	●	●														停用(NOT USED)
	E3806001	92520318A			2003/02	1	●	●	●	●	●	●	●	●	●	●	●	●														停用(NOT USED)
	E3402003				2006/01	1	●	●	●	●	●	●	●	●	●	●	●	●														
17	螺塞(SCREW, SET)																															
	M0604005	92560315				2	●	●	●	●	●	●	●	●	●	●	●	●														
18	螺塞(SCREW, SET)																															
	M0604006	92560316				2	●	●	●	●	●	●	●	●	●	●	●	●														
19	密封墊(GASKET)																															
	32142	32560317				1	●	●	●	●	●	●	●	●	●	●	●	●														
20	變速箱蓋(PLATE)																															
	32143	32560318				1	●	●	●	●	●	●	●	●	●	●	●	●														
	31516					1	●	●	●	●	●	●	●	●	●	●	●	●														電子式(ELECTRONIC)
21	彈簧華司(SPRING WASHER)																															
	M1605-M10	92501218				11	●	●	●	●	●	●	●	●	●	●	●	●														
22	螺栓(BOLT)																															
	M1424006	92508024				9	●	●	●	●	●	●	●	●	●	●	●	●														
	M1424005	92502108				9	●	●	●	●	●	●	●	●	●	●	●	●														電子式(ELECTRONIC)
23	螺栓(BOLT)																															
	M1401004	92507512				1	●	●	●	●	●	●	●	●	●	●	●	●														
24	透氣栓(BREATHER BOLT)																															
	32144	32560322				1	●	●	●	●	●	●	●	●	●	●	●	●														
25	油尺座(DIPSTICK TUBE)																															
	32145	32560323				1	●	●	●	●	●	●	●	●	●	●	●	●														
26	油尺(DIPSTICK)																															
	32146	32560324				1	●	●	●	●	●	●	●	●	●	●	●	●														
27	濾油器接頭組(OIL STRAINER CONNECTOR)																															
	32147	32560325				1	●	●	●	●	●	●	●	●	●	●	●	●														
28	彈簧華司(SPRING WASHER)																															
	M1605-M10	92501218				11	●	●	●	●	●	●	●	●	●	●	●	●														
29	螺栓(BOLT)																															
	M1424005	92502108				2	●	●	●	●	●	●	●	●	●	●	●	●														
30	濾油器(OIL FILTER)																															
	32148	92560328				1	●	●	●	●	●	●	●	●	●	●	●	●														
31	銷(PIN)																															
	M1301-12*30	92503008				2	●	●	●	●	●	●	●	●	●	●	●	●														
32	O型環("O"RING)																															
	M0801-P16	92505211				2	●	●	●	●	●	●	●	●	●	●	●	●														

https://truckmanualshub.com/

變速箱系統
A301
TRANSMISSION SYSTEM

自排變速箱體組
A301-8
(AT)TRANSMISSION CASE ASSY

編號 NO.	零件名稱 PART NAME						FD						FG						FD〔C〕						FG〔C〕						機號 BODY NO.	備註 REMARK
	新碼 NEW PART NO.	舊碼 OLD PART NO.	規格 SPECIFICATION	互換性 ITC	應用日期 APPLIED DATE	數量 QTY	15A	18B	20C	25D	30E	35F	15G	18H	20I	25J	30K	35L	15M	18N	20O	25P	30Q	35R	15S	18T	20U	25V	30W	35X		
33	油塞(PLUG, OIL)																															
	M0604008	M0604-PT3/8"				1	A	B	C	D	E	F	G	H	I	J	K	L														
34	油溫器座(OIL TEMPERATURE SENSOR SEAT)																															
		92520317			2000/10	1	A	B	C	D	E	F	G	H	I	J	K	L														停用(NOT USED)
	32149	92520317A			2003/02	1	A	B	C	D	E	F	G	H	I	J	K	L														停用(NOT USED)
	34970				2006/11	1	A	B	C	D	E	F	G	H	I	J	K	L														
35	濾網(ELEMENT)																															
	32150	32560601				1	A	B	C	D	E	F	G	H	I	J	K	L														
36	O型環("O"RING)																															
	M0801-P44	92560602				2	A	B	C	D	E	F	G	H	I	J	K	L														
37	彈簧(SPRING)																															
	32151	92560603				2	A	B	C	D	E	F	G	H	I	J	K	L														
38	彈簧銷(SPRING PIN)																															
	M1305-5*30	92560612				2	A	B	C	D	E	F	G	H	I	J	K	L														
39	密封墊(GASKET)																															
	32152	32560605				1	A	B	C	D	E	F	G	H	I	J	K	L														
40	濾油器蓋(COVER)																															
	32153	32560607				1	A	B	C	D	E	F	G	H	I	J	K	L														
41	彈簧華司(SPRING WASHER)																															
	M1605-M8	92501019				4	A	B	C	D	E	F	G	H	I	J	K	L														
42	螺栓(BOLT)																															
	M1424-M8*20	92504208				4	A	B	C	D	E	F	G	H	I	J	K	L														
43	油塞(PLUG, OIL)																															
	M0604007	92560409				1	A	B	C	D	E	F	G	H	I	J	K	L														
44	O型環("O"RING)																															
	M0801-P14	92516406				1	A	B	C	D	E	F	G	H	I	J	K	L														
45	放油塞(PLUG, DRAIN)																															
	32154	92560611A				1	A	B	C	D	E	F	G	H	I	J	K	L														
46	固定套(ANCHOR BUSH)																															
	32013	32501017				1			C	D	E	F			I	J	K	L														
47	固定螺桿(ANCHOR NUT)																															
	32014	32501015				1			C	D	E	F			I	J	K	L														
48	止動螺帽(NUT)																															
	32015	92501016				1			C	D	E	F			I	J	K	L														
49	銅墊圈 (WASHER)																															
	34771	32560610			2006/10	1	A	B	C	D	E	F	G	H	I	J	K	L														
50	鋼索固定片(STEEL FIXING)																															
	34843	92512130A			2006/09	1	A	B	C	D	E	F	G	H	I	J	K	L														

https://truckmanualshub.com/

變速箱系統
A301
TRANSMISSION SYSTEM

自排油泵組

A301-9

(AT)TRANSMISSION OIL PUMP

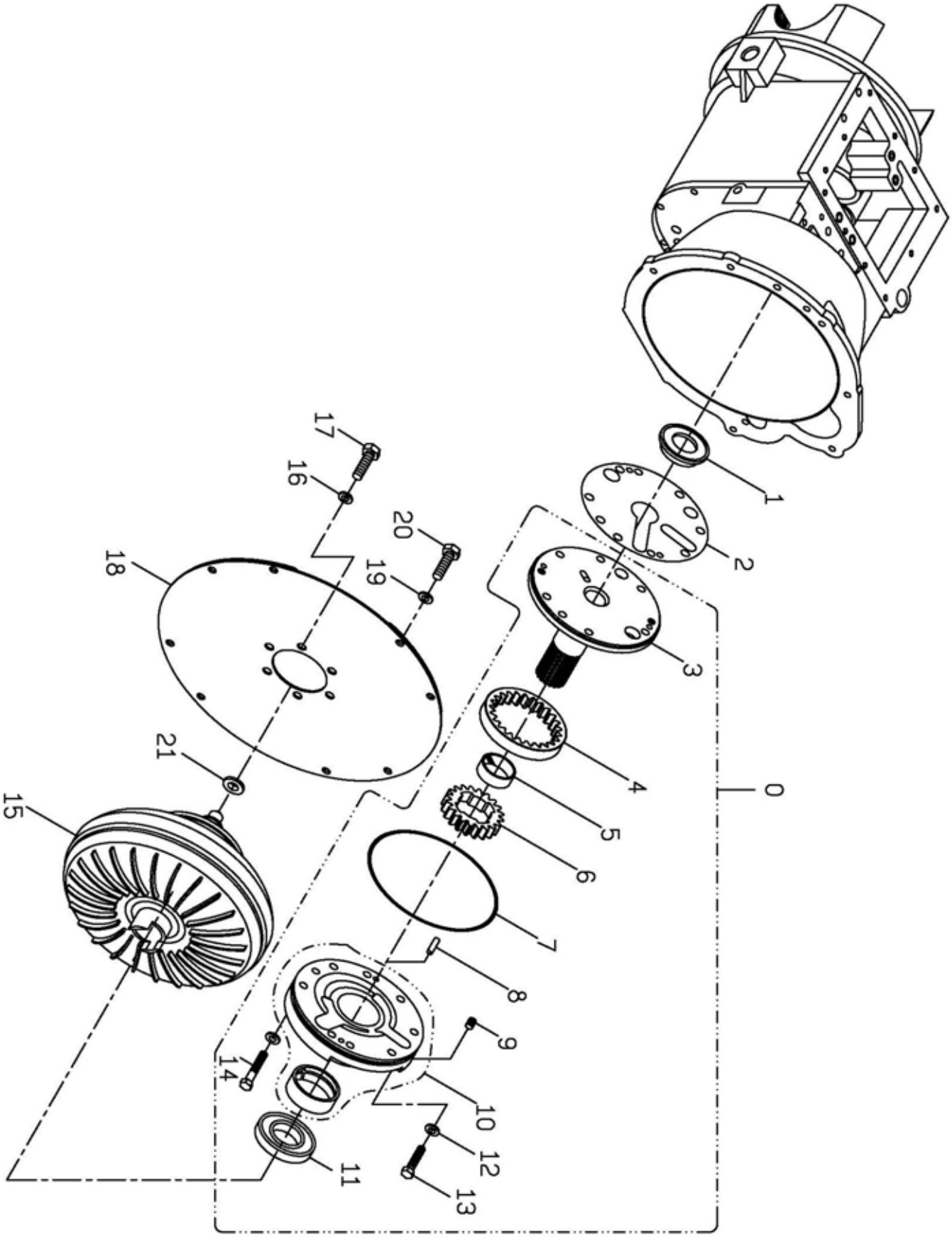

https://truckmanualshub.com/

自排油泵組
A301-9
(AT)TRANSMISSION OIL PUMP

編號 NO.	零件名稱 PART NAME						FD						FG						FD〔C〕						FG〔C〕						機號 BODY NO.	備註 REMARK
	新碼 NEW PART NO.	舊碼 OLD PART NO.	規格 SPECIFICATION	互換性 ITC	應用日期 APPLIED DATE	數量 QTY	15 A	18 B	20 C	25 D	30 E	35 F	15 G	18 H	20 I	25 J	30 K	35 L	15 M	18 N	20 O	25 P	30 Q	35 R	15 S	18 T	20 U	25 V	30 W	35 X		
0	泵浦總成(OIL PUMP)																															
	B350019	22560422				1	A	B	C	D	E	F	G	H	I	J	K	L														
1	鋼套(STEEL CASING)																															
	32155	32560401C				1	A	B	C	D	E	F	G	H	I	J	K	L														
2	密封墊(GASKET)																															
	32156	32560402				1	A	B	C	D	E	F	G	H	I	J	K	L														
3	扭力轉換器油泵輪(SHAFT STARTER)																															
	32157	32560403B				1	A	B	C	D	E	F	G	H	I	J	K	L														
4	油泵內齒輪(ANNULAR GEAR, OIL PUMP)																															
	32158	32560404A				1	A	B	C	D	E	F	G	H	I	J	K	L														
5	自潤軸承(BUSHING)																															
	32159	32560405				1	A	B	C	D	E	F	G	H	I	J	K	L														
6	油泵外齒輪(EXTERNAL GEAR, OIL PUMP)																															
	32160	32560406A				1	A	B	C	D	E	F	G	H	I	J	K	L														
7	O型環("O"RING)																															
	M0801011	92560407				1	A	B	C	D	E	F	G	H	I	J	K	L														
8	銷(PIN)																															
	M1301-6*19.8	92560408				2	A	B	C	D	E	F	G	H	I	J	K	L														
9	油塞(PLUG, OIL)																															
	M0604007	92560409				1	A	B	C	D	E	F	G	H	I	J	K	L														
10	油泵體(PUMP BODY)+自潤軸承(BEARING)																															
	B350020					1	A	B	C	D	E	F	G	H	I	J	K	L														
11	油封(SEAL)																															
	M0713001	92560412				1	A	B	C	D	E	F	G	H	I	J	K	L														
12	防油銅墊片(WASHER "Cu" OIL PROOF)																															
	32161	32560413				8	A	B	C	D	E	F	G	H	I	J	K	L														
13	螺栓(BOLT)																															
	M1424-M8*35	92501009				2	A	B	C	D	E	F	G	H	I	J	K	L														
14	螺栓(BOLT)																															
	M1424-M8*45	92560416				6	A	B	C	D	E	F	G	H	I	J	K	L														
15	變矩器(TORQUE CONVERTER)																															
	32162	22560417				1	A	B	C	D	E	F	G	H	I	J	K	L														
16	彈簧華司(SPRING WASHER)																															
	M1605-M10	92501218				6	A	B	C	D	E	F	G	H	I	J	K	L														
17	螺栓(BOLT)																															
	M1424002	92501219				6	A	B	C	D	E	F	G	H	I	J	K	L														

https://truckmanualshub.com/

自排油泵組
A301-9
(AT)TRANSMISSION OIL PUMP

編號 NO.	零件名稱 PART NAME						FD						FG						FD〔C〕						FG〔C〕						機號 BODY NO.	備註 REMARK
	新碼 NEW PART NO.	舊碼 OLD PART NO.	規格 SPECIFICATION	互換性 ITC	應用日期 APPLIED DATE	數量 QTY	15 A	18 B	20 C	25 D	30 E	35 F	15 G	18 H	20 I	25 J	30 K	35 L	15 M	18 N	20 O	25 P	30 Q	35 R	15 S	18 T	20 U	25 V	30 W	35 X		
18	**隕性板總成(FLEXIBLE PLATE ASSY)**																															
	32163	22560420	C240,4JG2			1	A	B	C	D	E	F																				
	32164	22560421	H20,H25			1							G	H	I	J	K	L														
19	**彈簧華司(SPRING WASHER)**																															
		92520129			2000/10	8	A	B	C	D	E	F	G	H	I	J	K	L														停用(NOT USED)
	M1605-M8	92501019			2003/02	8	A	B	C	D	E	F	G	H	I	J	K	L														
20	**螺栓(BOLT)**																															
		92520128			2000/10	8	A	B	C	D	E	F	G	H	I	J	K	L														停用(NOT USED)
	M1424-M8*16	92501014			2003/02	8	A	B	C	D	E	F	G	H	I	J	K	L														
21	**心軸套(MANDREL,SHEATH)**																															
	31470					1	A	B	C	D	E	F	G	H	I	J	K	L														

https://truckmanualshub.com/

變速箱系統
A301
TRANSMISSION SYSTEM

自排離合器組

A301-10

(AT)TRANSMISSION CLUTCH ASSY

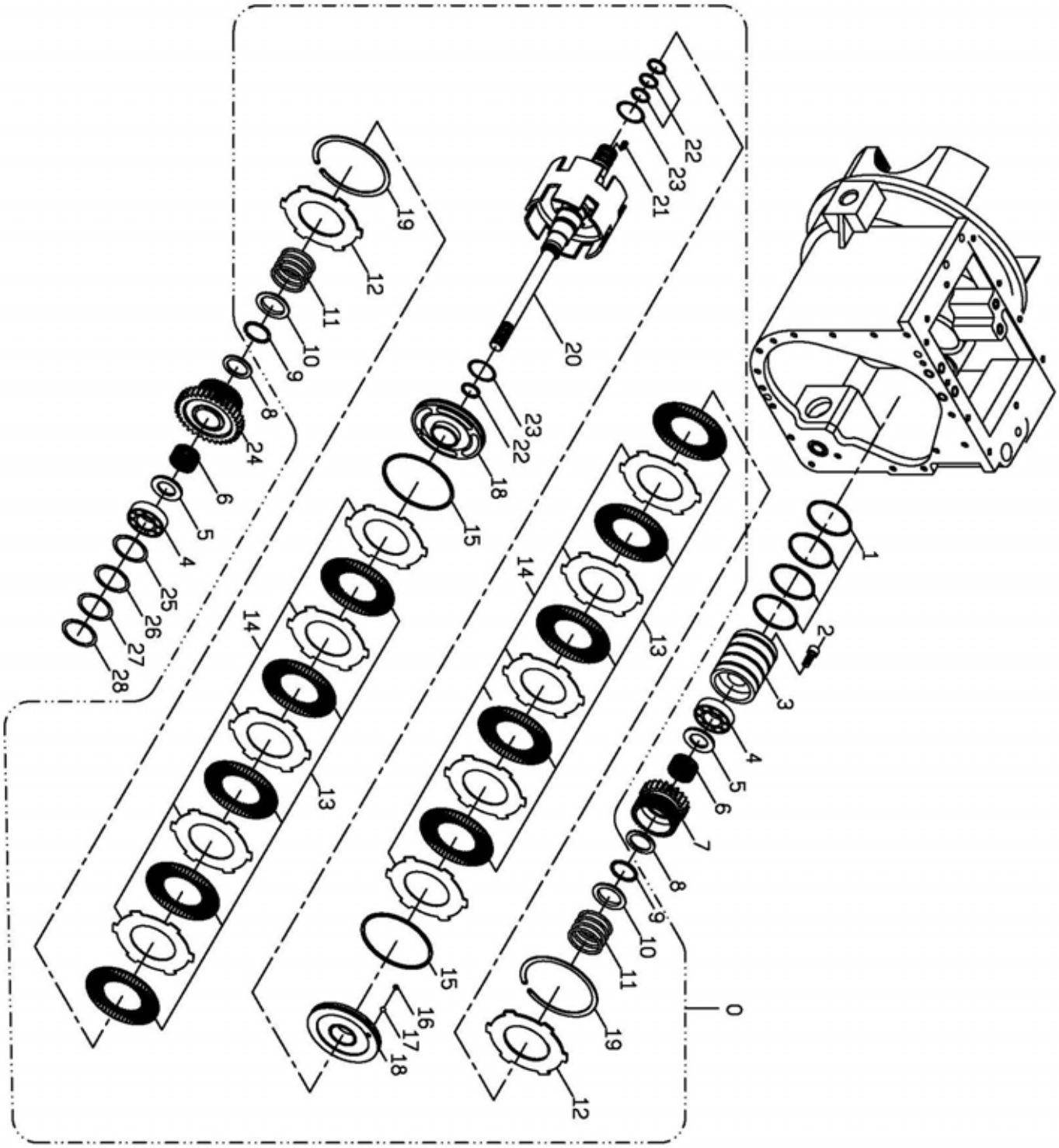

https://truckmanualshub.com/

自排離合器組
A301-10
(AT)TRANSMISSION CLUTCH ASSY

編號 NO.	新碼 NEW PART NO.	舊碼 OLD PART NO.	規格 SPECIFICATION	互換性 ITC	應用日期 APPLIED DATE	數量 QTY	FD 15 A	FD 18 B	FD 20 C	FD 25 D	FD 30 E	FD 35 F	FG 15 G	FG 18 H	FG 20 I	FG 25 J	FG 30 K	FG 35 L	FD〔C〕 15 M	FD〔C〕 18 N	FD〔C〕 20 O	FD〔C〕 25 P	FD〔C〕 30 Q	FD〔C〕 35 R	FG〔C〕 15 S	FG〔C〕 18 T	FG〔C〕 20 U	FG〔C〕 25 V	FG〔C〕 30 W	FG〔C〕 35 X	機號 BODY NO.	備註 REMARK
0	**輸入軸總成(SHAFT, INPUT ASSY)**																															
	B350021	21560530				1	A	B					G	H																		
	B350022	22560530				1			C	D	E	F			I	J	K	L														
1	**O型環("O"RING)**																															
	M0801-G70	93006038				4	A	B	C	D	E	F	G	H	I	J	K	L														
2	**螺栓(BOLT)**																															
	M1401-M10*25	92560502				2	A	B	C	D	E	F	G	H	I	J	K	L														
3	**輸入軸端套(BUSHING SHIFT INPUT)**																															
		32560503			2000/10	1	A	B	C	D	E	F	G	H	I	J	K	L														停用(NOT USED)
	32165	32560503A			2003/02	1	A	B	C	D	E	F	G	H	I	J	K	L														
4	**軸承(BEARING)**																															
	M0901-6206	92560504				2	A	B	C	D	E	F	G	H	I	J	K	L														
5	**止推墊片(WASHER)**																															
	32166	32560505				2	A	B	C	D	E	F	G	H	I	J	K	L														
6	**滾針軸承(BEARING)**																															
	M0905-KT354220	92501210				2	A	B	C	D	E	F	G	H	I	J	K	L														
7	**齒輪-22齒(GEAR-22T)**																															
		32560527			2000/10	1	A	B	C	D	E	F	G	H	I	J	K	L														
7	**齒輪-23齒(GEAR-23T)**																															
	32167	32560507			2003/02	1	A	B	C	D	E	F	G	H	I	J	K	L														
8	**止推墊片(WASHER, THRUST)**																															
	32168	32560508				2	A	B	C	D	E	F	G	H	I	J	K	L														
9	**特殊扣環(SNAP)**																															
	32169	32560509				2	A	B	C	D	E	F	G	H	I	J	K	L														
10	**套筒(BUSHING)**																															
	32170	32560510				2	A	B	C	D	E	F	G	H	I	J	K	L														
11	**壓縮彈簧(SPRING)**																															
	32171	92560511				2	A	B	C	D	E	F	G	H	I	J	K	L														
12	**磨擦壓片(PLATE, PRESSURE)**																															
	32172	32560512C				2	A	B	C	D	E	F	G	H	I	J	K	L														
13	**內磨擦片(PLATE, FRICTION)**																															
	32173	32560513B				8	A	B					G	H																		
	32173	32560513B				10			C	D	E	F			I	J	K	L														
14	**外磨擦片(PLATE, MATING)**																															
	32174	32560514D				8	A	B					G	H																		
	32174	32560514D				10			C	D	E	F			I	J	K	L														
15	**離合器活塞環(PISTON RING, CLUTCH)**																															
	32175	32560515				2	A	B	C	D	E	F	G	H	I	J	K	L														

https://truckmanualshub.com/

自排離合器組
A301-10
(AT)TRANSMISSION CLUTCH ASSY

編號 NO.	零件名稱 PART NAME						FD						FG						FD〔C〕						FG〔C〕						機號 BODY NO.	備註 REMARK
	新碼 NEW PART NO.	舊碼 OLD PART NO.	規格 SPECIFICATION	互換性 ITC	應用日期 APPLIED DATE	數量 QTY	135	180	205	230	255	305	135	180	205	230	255	305	135	180	205	230	255	305	135	180	205	230	255	305		
							A	B	C	D	E	F	G	H	I	J	K	L	M	N	O	P	Q	R	S	T	U	V	W	X		
16	鋼珠(STEEL BALL)																															
		92560516			2000/10	2	A	B	C	D	E	F	G	H	I	J	K	L														停用(NOT USED)
	32176	32560516			2003/02	2	A	B	C	D	E	F	G	H	I	J	K	L														
17	油塞(PLUG, OIL)																															
	32177	32560517				2	A	B	C	D	E	F	G	H	I	J	K	L														
18	離合器活塞(PISTON, CLUTCH)																															
	32178	32560518J				2	A	B	C	D	E	F	G	H	I	J	K	L														
19	同心內扣環(SNAP RING)																															
	32179	32560519				2	A	B	C	D	E	F	G	H	I	J	K	L														
20	輸入軸座(SEAT OF INPUT SHAFT)																															
	32180					1	A	B					G	H																		
	32181					1			C	D	E	F			I	J	K	L														
21	輸入軸螺塞(SCREW, SET)																															
	32182	32560523				2	A	B	C	D	E	F	G	H	I	J	K	L														
22	旋轉密封圈(RING, SEAL)																															
	32183	32560521				4	A	B	C	D	E	F	G	H	I	J	K	L														
23	O型環("O"RING)																															
	M0801-P34	92560522				2	A	B	C	D	E	F	G	H	I	J	K	L														
24	齒輪(GEAR)																															
	32184	32560526				1	A	B	C	D	E	F	G	H	I	J	K	L														
25	墊片(WASHER)																															
	34662	32560203				N	A	B	C	D	E	F	G	H	I	J	K	L														
26	墊片(WASHER)																															
	34663					N	A	B	C	D	E	F	G	H	I	J	K	L														
27	墊片(WASHER)																															
	34664					N	A	B	C	D	E	F	G	H	I	J	K	L														
28	墊片(WASHER)																															
	34665					N	A	B	C	D	E	F	G	H	I	J	K	L														

https://truckmanualshub.com/

變速箱系統
A301
TRANSMISSION SYSTEM

自排控制閥組

A301-11

(AT)CONTROL VALVE ASSY

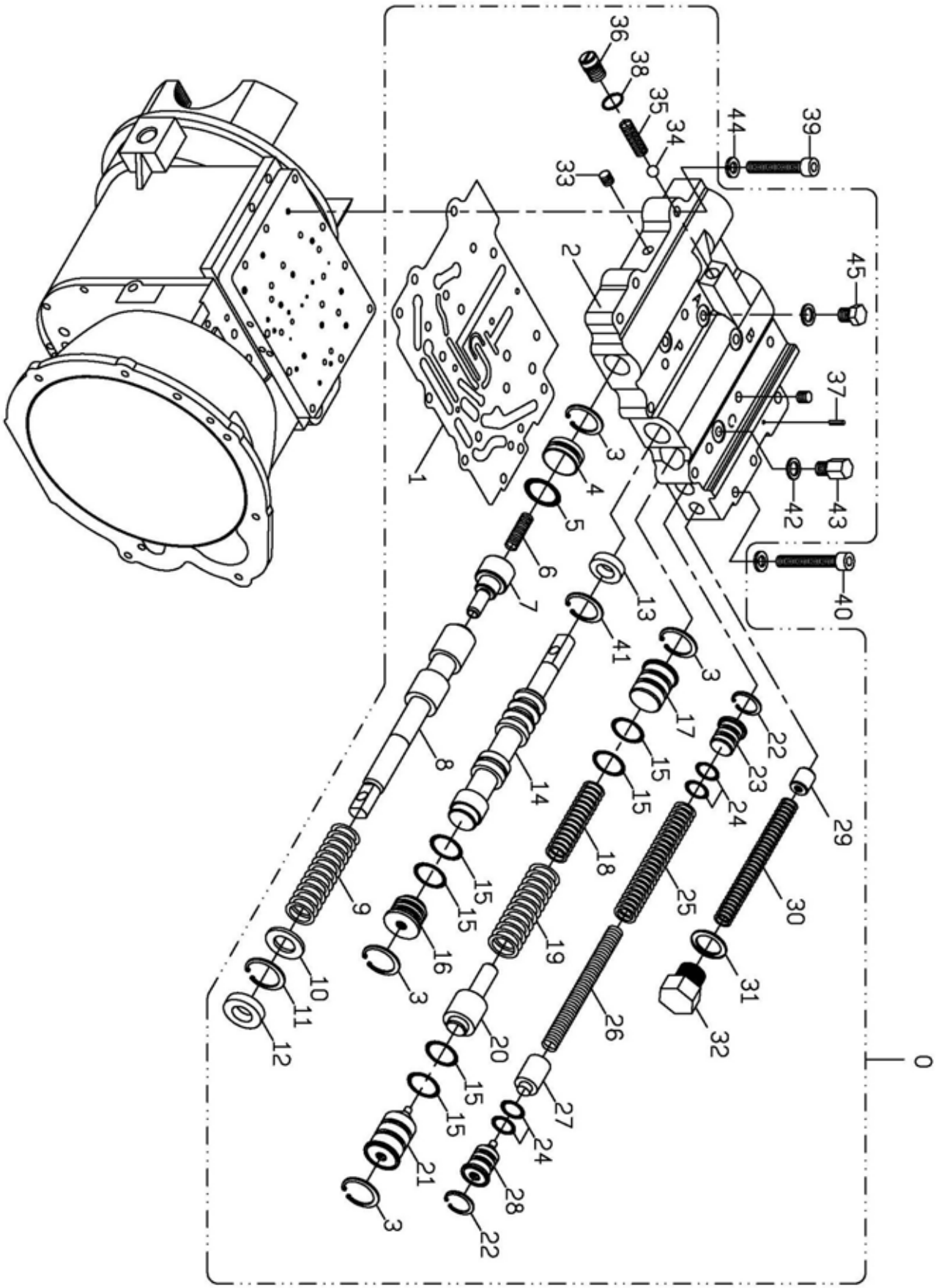

https://truckmanualshub.com/

自排控制閥組
A301-11
(AT)CONTROL VALVE ASSY

編號 NO.	零件名稱 PART NAME						FD						FG						FD〔C〕						FG〔C〕						機號 BODY NO.	備註 REMARK
	新碼 NEW PART NO.	舊碼 OLD PART NO.	規格 SPECIFICATION	互換性 ITC	應用日期 APPLIED DATE	數量 QTY	15A	18B	20C	25D	30E	35F	15G	18H	20I	25J	30K	35L	15M	18N	20O	25P	30Q	35R	15S	18T	20U	25V	30W	35X		
0	操縱閥總成(CONTROL VALVE ASSY)																															
	B350023	A2560700				1	A	B	C	D	E	F	G	H	I	J	K	L														
1	密封墊(GASKET)																															
	32837	A2560701				1	A	B	C	D	E	F	G	H	I	J	K	L														
2	操縱閥體(VALVE BODY)																															
	32838	A2560702				1	A	B	C	D	E	F	G	H	I	J	K	L														
3	C型扣環(C-RING)																															
	M1312-R28	92560703				4	A	B	C	D	E	F	G	H	I	J	K	L														
4	閥孔塞(PLUG, VALVE HOLE)																															
	32187	32560704				1	A	B	C	D	E	F	G	H	I	J	K	L														
5	O型環("O"RING)																															
	M0801-P24	92509052				1	A	B	C	D	E	F	G	H	I	J	K	L														
6	寸動彈簧(SPRING, INCHING VALVE)																															
	32188	92560706				1	A	B	C	D	E	F	G	H	I	J	K	L														
7	彈簧柱塞(PLUNGER, SPRING)																															
	32189	32560707				1	A	B	C	D	E	F	G	H	I	J	K	L														
8	寸動閥桿(PLUNGER, INCHING VALVE)																															
	32190	32560708				1	A	B	C	D	E	F	G	H	I	J	K	L														
9	寸動主彈簧(SPRING, MAIN INCHING VALVE)																															
	32191	92560709				1	A	B	C	D	E	F	G	H	I	J	K	L														
10	墊片(WASHER)																															
	32192	32560710				1	A	B	C	D	E	F	G	H	I	J	K	L														
11	C型扣環(C-RING)																															
	M1312-R30	92560711				1	A	B	C	D	E	F	G	H	I	J	K	L														
12	油封(OIL SEAL)																															
	M0702057	92560712				1	A	B	C	D	E	F	G	H	I	J	K	L														
13	油封(OIL SEAL)																															
	M0702056	92560713				1	A	B	C	D	E	F	G	H	I	J	K	L														
14	操縱桿(PLUNGER, OPERATION)																															
	32193	32560714				1	A	B	C	D	E	F	G	H	I	J	K	L														
15	O型環("O"RING)																															
	M0801-P21	92560715				6	A	B	C	D	E	F	G	H	I	J	K	L														
16	操縱管塞(PLUG, OPERATION TUBE)																															
	32194	32560716				1	A	B	C	D	E	F	G	H	I	J	K	L														
17	蓄壓閥塞(PLUG, ACCUMULATOR VALVE)																															
	32195	32560717				1	A	B	C	D	E	F	G	H	I	J	K	L														
18	蓄壓彈簧(SPRING, ACCUMULATOR)																															
	32196	92560718				1	A	B	C	D	E	F	G	H	I	J	K	L														

https://truckmanualshub.com/

自排控制閥組
A301-11
(AT)CONTROL VALVE ASSY

編號 NO.	零件名稱 PART NAME						FD						FG						FD〔C〕						FG〔C〕						機號 BODY NO.	備註 REMARK
	新碼 NEW PART NO.	舊碼 OLD PART NO.	規格 SPECIFICATION	互換性 ITC	應用日期 APPLIED DATE	數量 QTY	15A	18B	20C	25D	30E	35F	15G	18H	20I	25J	30K	35L	15M	18N	20O	25P	30Q	35R	15S	18T	20U	25V	30W	35X		
19	蓄壓主彈簧(SPRING, MAIN ACCUMULATOR)																															
	32197	92560719				1	A	B	C	D	E	F	G	H	I	J	K	L														
20	彈簧座(SEAT SPRING, ACCUMULATOR)																															
	32198	92560720				1	A	B	C	D	E	F	G	H	I	J	K	L														
21	錐型塞(PLUG CONICAL, ACCUMULATOR)																															
	32199	32560721				1	A	B	C	D	E	F	G	H	I	J	K	L														
22	C型扣環(C-RING)																															
	M1312-R22	92560722				2	A	B	C	D	E	F	G	H	I	J	K	L														
23	調壓閥塞(PLUG, RELIEF VALVE)																															
	32200	32560723				1	A	B	C	D	E	F	G	H	I	J	K	L														
24	O型環("O"RING)																															
	M0801-P14	92516406				4	A	B	C	D	E	F	G	H	I	J	K	L														
25	調壓主彈簧(SPRING, MAIN RELIEF)																															
	32201	92560725				1	A	B	C	D	E	F	G	H	I	J	K	L														
26	調壓彈簧(SPRING, RELIEF)																															
	32202	92560726				1	A	B	C	D	E	F	G	H	I	J	K	L														
27	調壓閥活塞(PLUG, RELIEF VALVE)																															
	32203	32560727				1	A	B	C	D	E	F	G	H	I	J	K	L														
28	錐型塞(CONICAL PLUG, RELIEF)																															
	32204	32560728				1	A	B	C	D	E	F	G	H	I	J	K	L														
29	彈簧座(SPRING SEAT, DECOMPRESSION)																															
	32205	32560729				1	A	B	C	D	E	F	G	H	I	J	K	L														
30	釋放彈簧(SPRING, DECOMPRESSION)																															
	32206	92560730				1	A	B	C	D	E	F	G	H	I	J	K	L														
31	墊圈(WASHER)																															
	32207	32560731				1	A	B	C	D	E	F	G	H	I	J	K	L														
32	彈簧螺塞(PLUG, SPRING)																															
	32208	32560732				1	A	B	C	D	E	F	G	H	I	J	K	L														
33	螺塞(SCREW, PRIFICE)																															
	M0604007	92560409				5	A	B	C	D	E	F	G	H	I	J	K	L														
34	鋼珠(STEEL BALL)																															
	M1323028	92560734				1	A	B	C	D	E	F	G	H	I	J	K	L														
35	定位彈簧(SPRING)																															
	32209	92560735				1	A	B	C	D	E	F	G	H	I	J	K	L														
36	定位螺栓(BOLT)																															
	32210	32560736				1	A	B	C	D	E	F	G	H	I	J	K	L														
37	銷(PIN)																															
	M1301-3*13	92560737				1	A	B	C	D	E	F	G	H	I	J	K	L														

https://truckmanualshub.com/

自排控制閥組
A301-11
(AT)CONTROL VALVE ASSY

編號 NO.	零件名稱 PART NAME						FD						FG						FD〔C〕						FG〔C〕						機號 BODY NO.	備註 REMARK
	新碼 NEW PART NO.	舊碼 OLD PART NO.	規格 SPECIFICATION	互換性 ITC	應用日期 APPLIED DATE	數量 QTY	135	180	205	230	305	335	135	180	205	230	305	335	135	180	205	230	305	335	135	180	205	230	305	335		
							A	B	C	D	E	F	G	H	I	J	K	L	M	N	O	P	Q	R	S	T	U	V	W	X		
38	O型環("O"RING)																															
	M0801-P10	92520909				1	A	B	C	D	E	F	G	H	I	J	K	L														
39	螺栓(BOLT)																															
	M1401-M8*45	92560739				7	A	B	C	D	E	F	G	H	I	J	K	L														
40	螺栓(BOLT)																															
	M1401-M8*50	92560740				7	A	B	C	D	E	F	G	H	I	J	K	L														
41	C型扣環(C-RING)																															
	M1312-R25	92560741				1	A	B	C	D	E	F	G	H	I	J	K	L														
42	銅墊片(WASHER “Cu”)																															
	32211	32560742				4	A	B	C	D	E	F	G	H	I	J	K	L														
43	測壓孔螺栓(BOLT)																															
	32212	32560743D				3	A	B	C	D	E	F	G	H	I	J	K	L														
44	彈簧華司(SPRING WASHER)																															
	M1605-M8	92501019				14	A	B	C	D	E	F	G	H	I	J	K	L														
45	測壓孔螺栓(BOLT)																															
	32213	32560745				1	A	B	C	D	E	F	G	H	I	J	K	L														

https://truckmanualshub.com/

變速箱系統
A301
TRANSMISSION SYSTEM

電子式自排控制閥組
A301-11A
(AT)ELECTRIC CONTROL VALVE

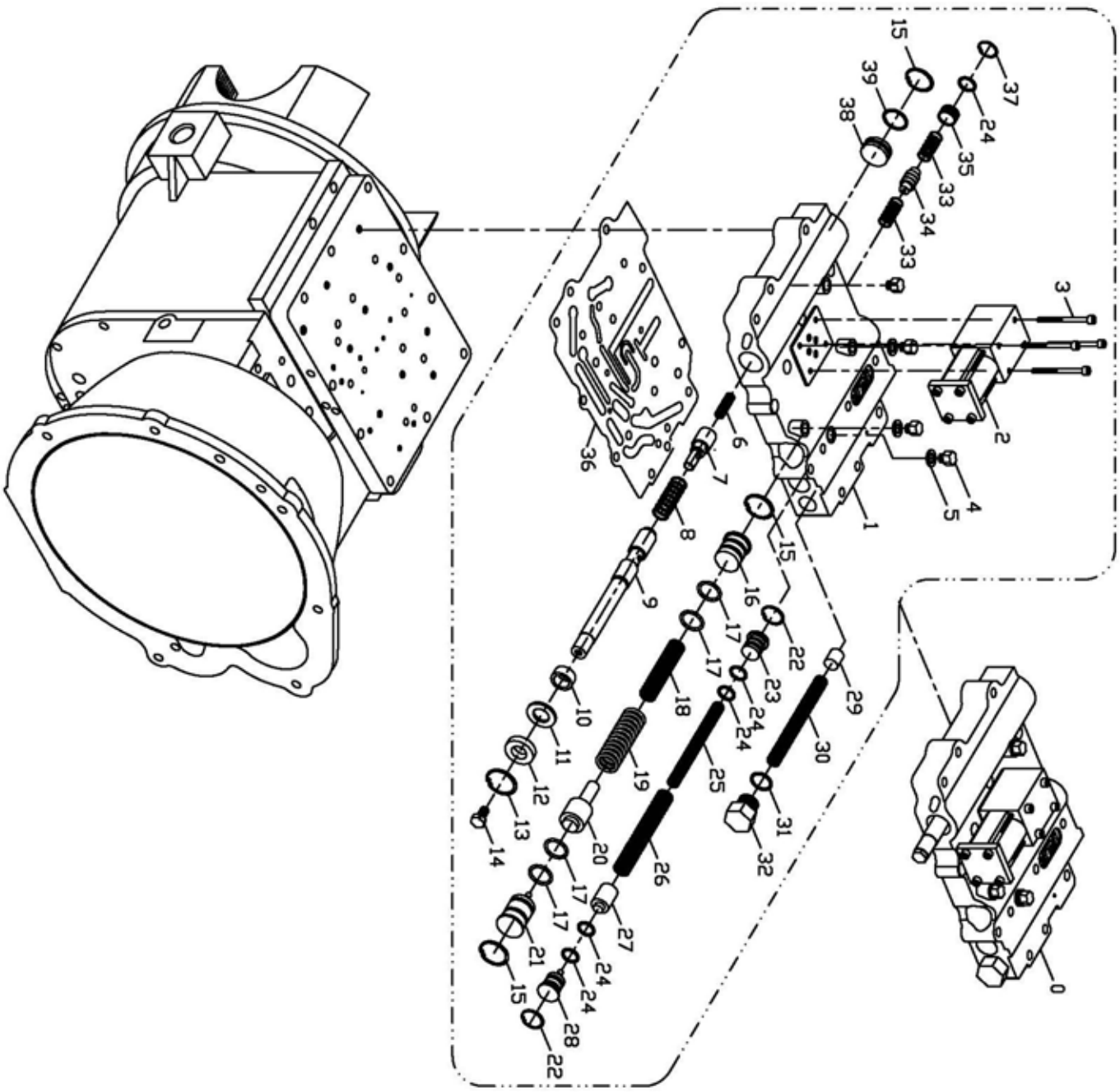

https://truckmanualshub.com/

電子式自排控制閥組
A301-11A
(AT)ELECTRIC CONTROL VALVE

編號 NO.	零件名稱 PART NAME						FD						FG						FD〔C〕						FG〔C〕						機號 BODY NO.	備註 REMARK
	新碼 NEW PART NO.	舊碼 OLD PART NO.	規格 SPECIFICATION	互換性 ITC	應用日期 APPLIED DATE	數量 QTY	1 5 A	1 8 B	2 0 C	2 5 D	3 0 E	3 5 F	1 5 G	1 8 H	2 0 I	2 5 J	3 0 K	3 5 L	1 5 M	1 8 N	2 0 O	2 5 P	3 0 Q	3 5 R	1 5 S	1 8 T	2 0 U	2 5 V	3 0 W	3 5 X		
0	操縱閥組(CONTROL VALVE ASSY)																															
	B350024	31646				1	A	B	C	D	E	F	G	H	I	J	K	L														
1	操縱閥體(CONTROL VALVE BODY)																															
	31505					1	A	B	C	D	E	F	G	H	I	J	K	L														
2	電磁閥(ELECTROMAGNETIC VALVE)																															
	31645					1	A	B	C	D	E	F	G	H	I	J	K	L														
3	六角承窩螺栓(BOLT)																															
	M1401-M5*45L					4	A	B	C	D	E	F	G	H	I	J	K	L														
4	測壓孔螺栓(BOLT)																															
	32213	32560745				4	A	B	C	D	E	F	G	H	I	J	K	L														
5	銅墊片(WASHER "Cu")																															
	32211	32560742				4	A	B	C	D	E	F	G	H	I	J	K	L														
6	寸動彈簧(SPRING, INCHING VALVE)																															
	31637					1	A	B	C	D	E	F	G	H	I	J	K	L														
7	寸動彈簧柱塞(INCHING VALVE PLUNGER SPRING)																															
	31636					1	A	B	C	D	E	F	G	H	I	J	K	L														
8	寸動主彈簧(SPRING, MAIN INCHING VALVE)																															
	31635					1	A	B	C	D	E	F	G	H	I	J	K	L														
9	寸動閥桿(PLUNGER, INCHING VALVE)																															
	31634A					1	A	B	C	D	E	F	G	H	I	J	K	L														
10	寸動滑套(INCHING VALVE WASHER)																															
	31640					1	A	B	C	D	E	F	G	H	I	J	K	L														
11	墊片(WASHER)																															
	32192	32560710				1	A	B	C	D	E	F	G	H	I	J	K	L														
12	油封(OIL SEAL)																															
	M0702057	92560712				1	A	B	C	D	E	F	G	H	I	J	K	L														
13	C型扣環(C-RING)																															
	M1312-R30	92560711				1	A	B	C	D	E	F	G	H	I	J	K	L														
14	六角頭螺栓(BOLT)																															
	M1402-M8*20L					1	A	B	C	D	E	F	G	H	I	J	K	L														
15	C型扣環(C-RING)																															
	M1312-R28	92560703				3	A	B	C	D	E	F	G	H	I	J	K	L														
16	蓄壓閥塞(PLUG, ACCUMULATOR VALVE)																															
	32195	32560717				1	A	B	C	D	E	F	G	H	I	J	K	L														
17	O型環("O"RING)																															
	M0801-P21	92560715				4	A	B	C	D	E	F	G	H	I	J	K	L														

https://truckmanualshub.com/

電子式自排控制閥組
A301-11A
(AT)ELECTRIC CONTROL VALVE

編號 NO.	零件名稱 PART NAME						FD						FG						FD〔C〕						FG〔C〕						機號 BODY NO.	備註 REMARK
	新碼 NEW PART NO.	舊碼 OLD PART NO.	規格 SPECIFICATION	互換性 ITC	應用日期 APPLIED DATE	數量 QTY	135	180	205	305	355	A B C D E F	135	180	205	305	355	G H I J K L	135	180	205	305	355	M N O P Q R	135	180	205	305	355	S T U V W X		
18	蓄壓彈簧(SPRING, ACCUMULATOR)																															
	32196	92560718				1						A B C D E F						G H I J K L														
19	蓄壓主彈簧(SPRING, MAIN ACCUMULATOR)																															
	32197	92560719				1						A B C D E F						G H I J K L														
20	彈簧座(SEAT SPRING, ACCUMULATOR)																															
	32198	92560720				1						A B C D E F						G H I J K L														
21	錐型塞(PLUG CONICAL, ACCUMULATOR)																															
	32199	32560721				1						A B C D E F						G H I J K L														
22	C型扣環(C-RING)																															
	M1312-R22	92560722				2						A B C D E F						G H I J K L														
23	調壓閥塞(PLUG, RELIEF VALVE)																															
	32200	32560723				1						A B C D E F						G H I J K L														
24	O型環("O"RING)																															
	M0801-P14	92516406				5						A B C D E F						G H I J K L														
25	調壓彈簧(SPRING, RELIEF)																															
	32202	92560726				1						A B C D E F						G H I J K L														
26	調壓主彈簧(SPRING, MAIN RELIEF)																															
	32201	92560725				1						A B C D E F						G H I J K L														
27	調壓閥活塞(PLUG, RELIEF VALVE)																															
	32203	32560727				1						A B C D E F						G H I J K L														
28	錐型塞(PLUG CONICAL, ACCUMULATOR)																															
	32204	32560728				1						A B C D E F						G H I J K L														
29	彈簧座(SPRING SEAT, DECOMPRESSION)																															
	32205	32560729				1						A B C D E F						G H I J K L														
30	釋放彈簧(SPRING, DECOMPRESSION)																															
	32206	92560730				1						A B C D E F						G H I J K L														
31	O型環("O"RING)																															
	M0801-P18	92501107				1						A B C D E F						G H I J K L														
32	彈簧螺塞(PLUG, SPRING)																															
	32208	32560732				1						A B C D E F						G H I J K L														
33	操縱活塞彈簧(CONTROL PISTON SPRING)																															
	31638					2						A B C D E F						G H I J K L														
34	操縱活塞(CONTROL PISTON)																															
	31639					1						A B C D E F						G H I J K L														
35	操縱管塞(PLUG ,CONTROL TUBE)																															
	31641					1						A B C D E F						G H I J K L														
36	密封墊(GASKET)																															
	31504					1						A B C D E F						G H I J K L														

https://truckmanualshub.com/

電子式自排控制閥組
A301-11A
(AT)ELECTRIC CONTROL VALVE

編號 NO.	零件名稱 PART NAME						FD						FG						FD〔C〕						FG〔C〕						機號 BODY NO.	備註 REMARK
	新碼 NEW PART NO.	舊碼 OLD PART NO.	規格 SPECIFICATION	互換性 ITC	應用日期 APPLIED DATE	數量 QTY	135	180	205	230	305	335	135	180	205	230	305	335	135	180	205	230	305	335	135	180	205	230	305	335		
							A	B	C	D	E	F	G	H	I	J	K	L	M	N	O	P	Q	R	S	T	U	V	W	X		
37	C型扣環(C-RING)																															
	M1312-R18						1	A	B	C	D	E	F	G	H	I	J	K	L														
38	閥孔塞(PLUG, VALVE HOLE)																															
	32187	32560704				1	A	B	C	D	E	F	G	H	I	J	K	L														
39	O型環("O"RING)																															
	M0801-P24	92509052				1	A	B	C	D	E	F	G	H	I	J	K	L														

https://truckmanualshub.com/

前輪軸系統
A302
DRIVE AXLE SYSTEM

https://truckmanualshub.com/

前輪軸系統
A302
DRIVE AXLE SYSTEM

前輪軸
A302-1

DRIVE AXLE

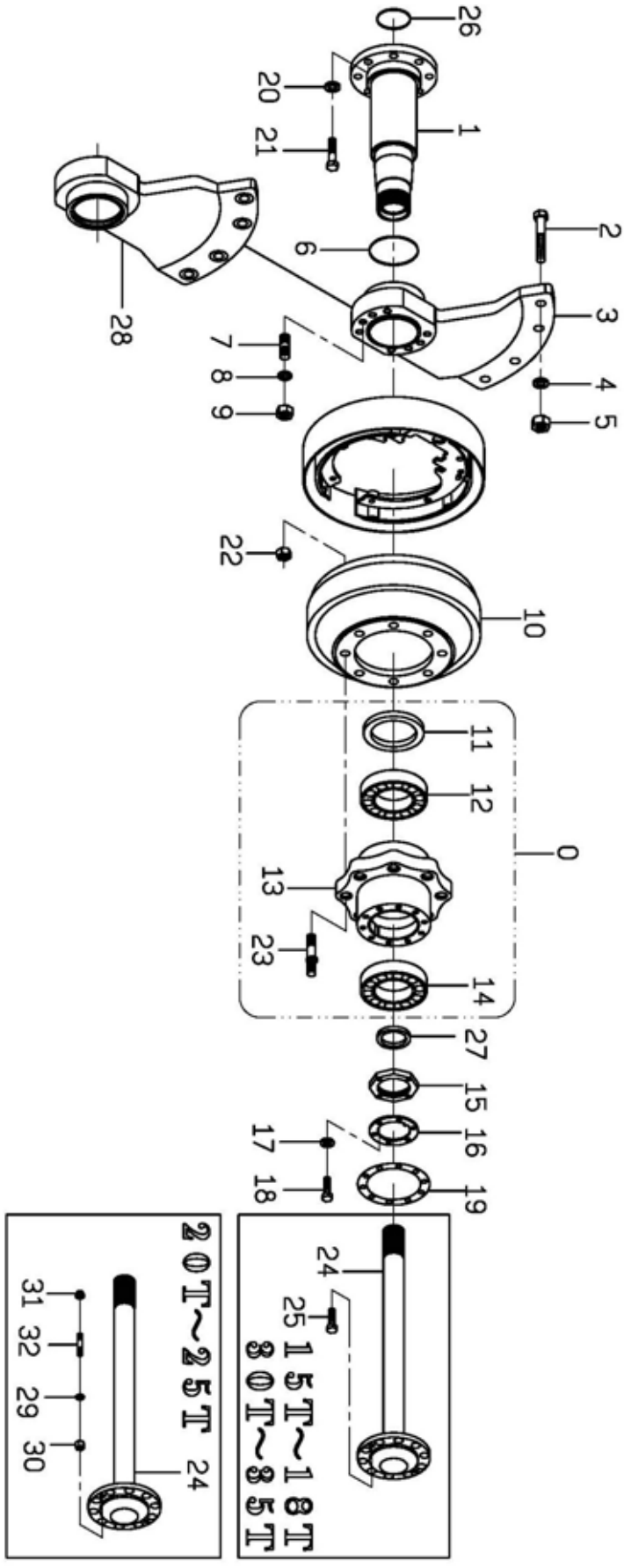

https://truckmanualshub.com/

前輪軸
A302-1
DRIVE AXLE

編號 NO.	新碼 NEW PART NO.	舊碼 OLD PART NO.	規格 SPECIFICATION	互換性 ITC	應用日期 APPLIED DATE	數量 QTY	FD 15 A	FD 18 B	FD 20 C	FD 25 D	FD 30 E	FD 35 F	FG 15 G	FG 18 H	FG 20 I	FG 25 J	FG 30 K	FG 35 L	FD〔C〕 15 M	FD〔C〕 18 N	FD〔C〕 20 O	FD〔C〕 25 P	FD〔C〕 30 Q	FD〔C〕 35 R	FG〔C〕 15 S	FG〔C〕 18 T	FG〔C〕 20 U	FG〔C〕 25 V	FG〔C〕 30 W	FG〔C〕 35 X	機號 BODY NO.	備註 REMARK
0	前輪鼓總成(FRONT DRUM ASSY)																															
	B350025					1	A	B					G	H																		
	B350026					1			C	D					I	J															
	B350027					1					E	F					K	L													
1	前輪基軸(HOUSING, DRIVE AXLE)																															
	32214	31506043				2	A	B					G	H																		
	32215	32506001				2			C	D					I	J															
	32216	33006041				2					E	F					K	L													
2	銷螺栓(BOLT)																															
	32220	32506002				8	A	B	C	D	E	F	G	H	I	J	K	L													
3	前輪托架(右)(SUPPORT, R.H.)																															
	32221	31506003				1	A	B					G	H																		
	32222	32506051				1			C	D					I	J															
	32223	33006051				1					E	F					K	L													
4	彈簧華司(SPRING WASHR)																															
	M1605-M18	92506004				8	A	B	C	D	E	F	G	H	I	J	K	L													
5	螺帽(NUT)																															
	M1513006	92506005				8	A	B	C	D	E	F	G	H	I	J	K	L													
6	O型環("O"RING)																															
	M0801-G75	42515305				2	A	B					G	H																		
	M0801-G90	92506040				2			C	D					I	J															
	M0801-G95	93006040				2					E	F					K	L													
7	螺栓(BOLT)																															
	M1423004	92506042				16	A	B	C	D	E	F	G	H	I	J	K	L													
8	皿型華司(SPRING WASHER)																															
	32226	32506008				16	A	B	C	D	E	F	G	H	I	J	K	L													
9	螺帽(NUT)																															
		92506009				16	A	B	C	D	E	F	G	H	I	J	K	L													
10	煞車鼓(DRUM, BRAKE)																															
	32227	31506010C				2	A	B					G	H																		
	32228	32506010A				2			C	D					I	J															
	32229	33006010				2					E	F					K	L													
11	油封(SEAL)																															
		92506011			2000/10	2			C	D					I	J															停用(NOT USED)
	M0706001	91506011				2	A	B					G	H																		
	M0706002	92506011			2003/02	2			C	D					I	J															
	M0706003	93006011				2					E	F					K	L													

https://truckmanualshub.com/

前輪軸
A302-1
DRIVE AXLE

編號 NO.	零件名稱 PART NAME						FD						FG						FD〔C〕						FG〔C〕						機號 BODY NO.	備註 REMARK
	新碼 NEW PART NO.	舊碼 OLD PART NO.	規格 SPECIFICATION	互換性 ITC	應用日期 APPLIED DATE	數量 QTY	15 A	18 B	20 C	25 D	30 E	35 F	15 G	18 H	20 I	25 J	30 K	35 L	15 M	18 N	20 O	25 P	30 Q	35 R	15 S	18 T	20 U	25 V	30 W	35 X		
12	**軸承(BEARING)**																															
	M0909-33013A	91506012				2	A	B					G	H																		
	M0909-32015	92506012				2				C	D					I	J															
	M0909-32016	93006012				2						E F						K L														
13	**前輪轂(HUB, DRIVE AXLE)**																															
	32233	32506044				2				C	D					I	J														停用(NOT USED)	
	32232	31506044				2	A	B					G	H																		
	34783	32506013A				2				C	D					I	J															
	32234	33006044				2						E F						K L														
14	**軸承(BEARING)**																															
	M0909-32016	93006012			2000/10	2						E F						K L													停用(NOT USED)	
	M0909-32012	91506045				2	A	B					G	H																		
	M0909-33013A	91506012				2				C	D					I	J															
	M0909-32015	92506012				2						E F						K L														
15	**鎖定螺帽(NUT)**																															
	32236	31506046				2	A	B					G	H																		
	32237	32506015				2				C	D					I	J															
	32238	33006015B				2						E F						K L														
16	**止動環(RING, LOCK)**																															
	32240	31506047				2	A	B					G	H																		
	32241	32506016				2				C	D					I	J															
	32242	33006016				2						E F						K L														
17	**彈簧華司(SPRING WASHER)**																															
	M1605-M8	92501019				8	A	B	C	D	E	F	G	H	I	J	K	L														
18	**螺栓(BOLT)**																															
	M1424-M8*16	92501014				8	A	B	C	D			G	H	I	J																
	M1424-M8*12				2003/02	4					E	F					K	L														
19	**防油襯墊(GASKET)**																															
	32243	72506019				2	A	B	C	D			G	H	I	J																
	32244	73006019A				2					E	F					K	L														
20	**彈簧華司(SPRING WASHER)**																															
	M1605-M14	92506020				16	A	B	C	D	E	F	G	H	I	J	K	L														
21	**螺栓(BOLT)**																															
		92506021			2000/10	16	A	B	C	D	E	F	G	H	I	J	K	L													停用(NOT USED)	
	M1423004	92506042			2003/02	16	A	B	C	D	E	F	G	H	I	J	K	L														

https://truckmanualshub.com/

前輪軸
A302-1
DRIVE AXLE

編號 NO.	零件名稱 PART NAME						FD						FG						FD〔C〕						FG〔C〕						機號 BODY NO.	備註 REMARK
	新碼 NEW PART NO.	舊碼 OLD PART NO.	規格 SPECIFICATION	互換性 ITC	應用日期 APPLIED DATE	數量 QTY	15 A	18 B	20 C	25 D	30 E	35 F	15 G	18 H	20 I	25 J	30 K	35 L	15 M	18 N	20 O	25 P	30 Q	35 R	15 S	18 T	20 U	25 V	30 W	35 X		
22	**螺帽(NUT)**																															
		91504026			2000/10	12	A	B					G	H																		停用(NOT USED)
	M1513004	92504026			2003/02	12	A	B					G	H																		
	M1513005	92506022				16			C	D	E	F			I	J	K	L														
23	**固定螺栓(BOLT, WHEEL)**																															
	32246	31506023				12	A	B					G	H																		
	32247	32506023				16			C	D	E	F			I	J	K	L														
24	**前輪軸(DRIVE AXLE)**																															
	32248	31506048				2	A	B					G	H																		
	32249	32506024A				2			C	D					I	J																
	32250	33006048				2					E	F					K	L														
25	**螺栓(BOLT)**																															
		32506049			36800	20	A	B	C	D			G	H	I	J																停用(NOT USED)
	32254	32506049			37653	20	A	B					G	H																		
	32255	33006049				20					E	F					K	L														
26	**O型環("O"RING)**																															
	M0801-G65	92506038				2	A	B	C	D	E	F	G	H	I	J	K	L														
27	**塑膠油封(SEAL)**																															
	M0702018	91506050				2	A	B					G	H																		
	M0702019	92506044				2			C	D					I	J																
	M0702045	93006035				2					E	F					K	L														
28	**前輪托架(左)(SUPPORT, L.H.)**																															
	32257	31506037				1	A	B					G	H																		
	32258	32506052				1			C	D					I	J																
	32259	33006052				1					E	F					K	L														
29	**彈簧華司(SPRING WASHER)**																															
	M1605-M10	92501218				20			C	D					I	J																
30	**螺帽(NUT)**																															
	M1502001	92504016				20			C	D					I	J																
31	**錐形墊圈(WASHER)**																															
	32262	32506025				26			C	D					I	J																
32	**螺栓(BOLT)**																															
	32263	32506026				20			C	D					I	J																

https://truckmanualshub.com/

前輪軸系統
A302
DRIVE AXLE SYSTEM

煞車襯板組
A302-2
WHEEL BRAKE ASSY

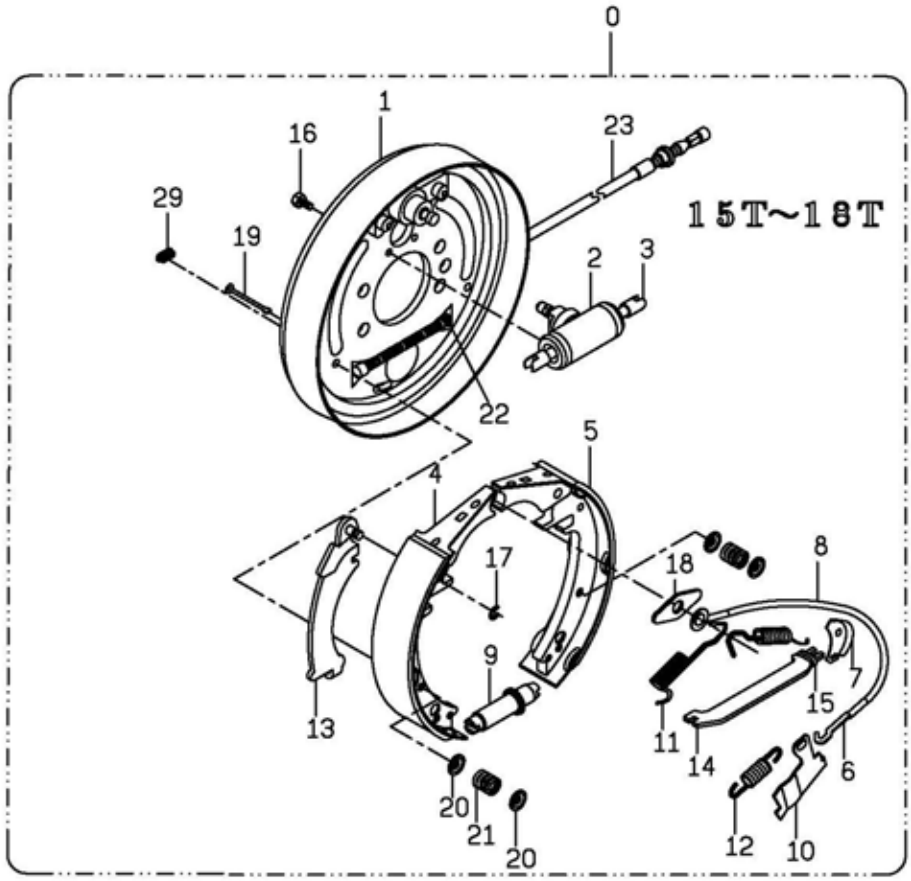

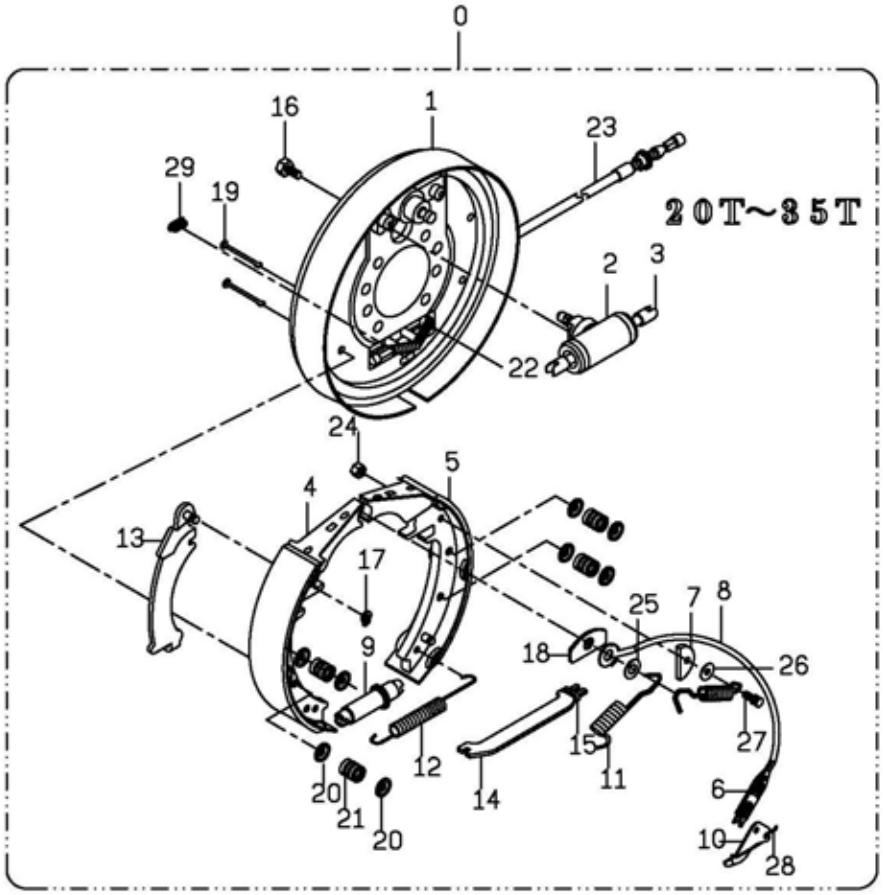

https://truckmanualshub.com/

煞車襯板組
A302-2
WHEEL BRAKE ASSY

編號 NO.	零件名稱 PART NAME						FD						FG						FD〔C〕						FG〔C〕						機號 BODY NO.	備註 REMARK
	新碼 NEW PART NO.	舊碼 OLD PART NO.	規格 SPECIFICATION	互換性 ITC	應用日期 APPLIED DATE	數量 QTY	1580A	1805B	2005C	2305D	3005E	3505F	1580G	1805H	2005I	2305J	3005K	3505L	1580M	1805N	2005O	2305P	3005Q	3505R	1580S	1805T	2005U	2305V	3005W	3505X		
0	煞車襯板總成(右)(WHEEL BRAKE ASSY, R.H.)																															
	B350031	41506006				1	A	B					G	H																		
	B350032	42506006				1			C	D	E	F			I	J	K	L														
0	煞車襯板總成(左)(WHEEL BRAKE ASSY, L.H.)																															
	B350033	41506039				1	A	B					G	H																		
	B350034	42506039				1			C	D	E	F			I	J	K	L														
1	煞車襯板(左)(BACKP-LATE L.H.)																															
	32279	71506201				1	A	B					G	H																		
	32280	72506201				1			C	D	E	F			I	J	K	L														
1	煞車襯板(右)(BACKP-LATE R.H.)																															
	32281	71506232				1	A	B					G	H																		
	32282	72506232				1			C	D	E	F			I	J	K	L														
2	煞車分泵(CYLINDER)																															
	32283	91506102				2	A	B					G	H																		
	32284	92506202				2			C	D	E	F			I	J	K	L														
3	頂桿(LINK)																															
	32285	32506207				4	A	B	C	D	E	F	G	H	I	J	K	L														
4	煞車蹄片(前)(SHOE & LINING)(FRONT)																															
	32286	91506128				4	A	B					G	H																		
	32287	92506210				2			C	D	E	F			I	J	K	L														
5	煞車蹄片(後-左)(SHOE & LINING) (REAR-L.H.)																															
	32288	92506211				1			C	D	E	F			I	J	K	L														
5	煞車蹄片(後-右)(SHOE & LINING) (REAR-R.H.)																															
	32289	92506233				1			C	D	E	F			I	J	K	L														
6	裝配彈簧(SPRING & CONNECTOR)																															
	32290	91506113				2	A	B					G	H																		
	32291	92506213				2			C	D	E	F			I	J	K	L														
7	引導板(GUIDE BOARD)																															
	32292	91506241				2	A	B					G	H																		
	32293	92506241				2			C	D	E	F			I	J	K	L														
8	引導桿(GUIDE)																															
	32294	91506212				2	A	B					G	H																		
	32295	92506212				2			C	D	E	F			I	J	K	L														
9	調整具(左)(ADJUSTER L.H.)																															
	32296	91506114				1	A	B					G	H																		
	32297	92506214				1			C	D	E	F			I	J	K	L														

https://truckmanualshub.com/

煞車襯板組
A302-2
WHEEL BRAKE ASSY

編號 NO.	零件名稱 PART NAME						FD						FG						FD〔C〕						FG〔C〕						機號 BODY NO.	備註 REMARK
	新碼 NEW PART NO.	舊碼 OLD PART NO.	規格 SPECIFICATION	互換性 ITC	應用日期 APPLIED DATE	數量 QTY	15A	18B	20C	25D	30E	35F	15G	18H	20I	25J	30K	35L	15M	18N	20O	25P	30Q	35R	15S	18T	20U	25V	30W	35X		
9	調整具(右)(ADJUSTER R.H.)																															
	32298	91506134				1	A	B					G	H																		
	32299	92506234				1			C	D	E	F			I	J	K	L														
10	引動板(左)(LEVER L.H.)																															
	32300	91506115				1	A	B					G	H																		
	32301	92506215				1			C	D	E	F			I	J	K	L														
10	引動板(右)(LEVER R.H.)																															
	32302	91506135				1	A	B					G	H																		
	32303	92506235				1			C	D	E	F			I	J	K	L														
11	彈簧(左)(SPRING L.H.)																															
	32304	91506117				2	A	B					G	H																		
	32305	92506217				2			C	D	E	F			I	J	K	L														
11	彈簧(右)(SPRING R.H.)																															
	32306	91506237				2	A	B					G	H																		
	32307	92506237				2			C	D	E	F			I	J	K	L														
12	彈簧(SPRING)																															
	32308	91506118				2	A	B					G	H																		
	32309	92506218				2			C	D	E	F			I	J	K	L														
13	調整板(左)(LEVER L.H.)																															
	32310	91506119				1	A	B					G	H																		
	32311	92506219				1			C	D	E	F			I	J	K	L														
13	調整板(右)(LEVER R.H.)																															
	32312	91506138				1	A	B					G	H																		
	32313	92506238				1			C	D	E	F			I	J	K	L														
14	支桿(左)(STRUT L.H.)																															
	32314	91506120				1	A	B					G	H																		
	32315	92506220				1			C	D	E	F			I	J	K	L														
14	支桿(右)(STRUT R.H.)																															
	32316	91506139				1	A	B					G	H																		
	32317	92506239				1			C	D	E	F			I	J	K	L														
15	彈簧(SPRING)																															
	32318	92506250				2	A	B					G	H																		
	32319	92506221				2			C	D	E	F			I	J	K	L														
16	螺栓(BOLT)																															
	32320	92561010				4	A	B					G	H																		
16	調整螺栓(BOLT & WASHER)																															
	M1424-M8*20	92504208				4			C	D	E	F			I	J	K	L														

https://truckmanualshub.com/

煞車襯板組
A302-2
WHEEL BRAKE ASSY

編號 NO.	零件名稱 PART NAME						FD						FG						FD〔C〕						FG〔C〕						機號 BODY NO.	備註 REMARK
	新碼 NEW PART NO.	舊碼 OLD PART NO.	規格 SPECIFICATION	互換性 ITC	應用日期 APPLIED DATE	數量 QTY	15 A	18 B	20 C	25 D	30 E	35 F	15 G	18 H	20 I	25 J	30 K	35 L	15 M	18 N	20 O	25 P	30 Q	35 R	15 S	18 T	20 U	25 V	30 W	35 X		
17	扣環(RETAINER)																															
	32321	92506125				2	A	B					G	H																		
	32322	92506224				2			C	D	E	F			I	J	K	L														
18	墊板(PLATE)																															
	32323	92506122				2	A	B					G	H																		
	32324	92506225				2			C	D	E	F			I	J	K	L														
19	銷(PIN)																															
	32325	92506113				4	A	B					G	H																		
	32326	92506226				8			C	D	E	F			I	J	K	L														
20	蓋(CAP)																															
	32327	92506227				8	A	B	C	D	E	F	G	H	I	J	K	L														
21	彈簧(SPRING)																															
	32328	92506228				4	A	B	C	D	E	F	G	H	I	J	K	L														
22	E型扣環(SNAP RING)																															
	32329	92506230				2	A	B	C	D	E	F	G	H	I	J	K	L														
23	手煞車線(左)(PARKING CABLE L.H.)																															
	32330	92512120				1	A	B					G	H																		
	32331	92512128				1			C	D	E	F			I	J	K	L														
23	手煞車線(右)(PARKING CABLE R.H.)																															
	32332	92512121				1	A	B					G	H																		
	32333	92512129				1			C	D	E	F			I	J	K	L														
24	螺帽(NUT)																															
	32334	92506242				1			C	D	E	F			I	J	K	L														
25	平華司(WASHER)																															
	32335	92506243				1			C	D	E	F			I	J	K	L														
26	平華司(WASHER)																															
	32336	92506244				1			C	D	E	F			I	J	K	L														
27	螺栓(BOLT)																															
	32337	92506245				1			C	D	E	F			I	J	K	L														
28	彈簧(左)(SPRING L.H.)																															
	32338	92506216				2			C	D	E	F			I	J	K	L														
28	彈簧(右)(SPRING L.H.)																															
	32339	92506236				2			C	D	E	F			I	J	K	L														
29	煞車孔塞(HOLE PLUNGER)																															
	34867	92506229			2006/09	2	A	B	C	D	E	F	G	H	I	J	K	L														

https://truckmanualshub.com/

前輪軸系統
A302
DRIVE AXLE SYSTEM

輪胎組
A302-3
TIRE ASSY

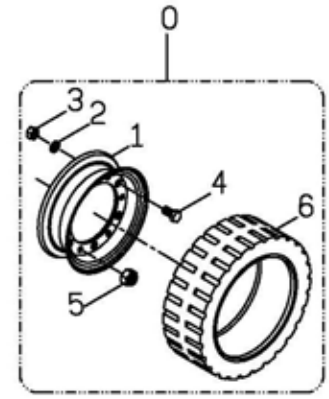

後輪 (REAR WHEEL)

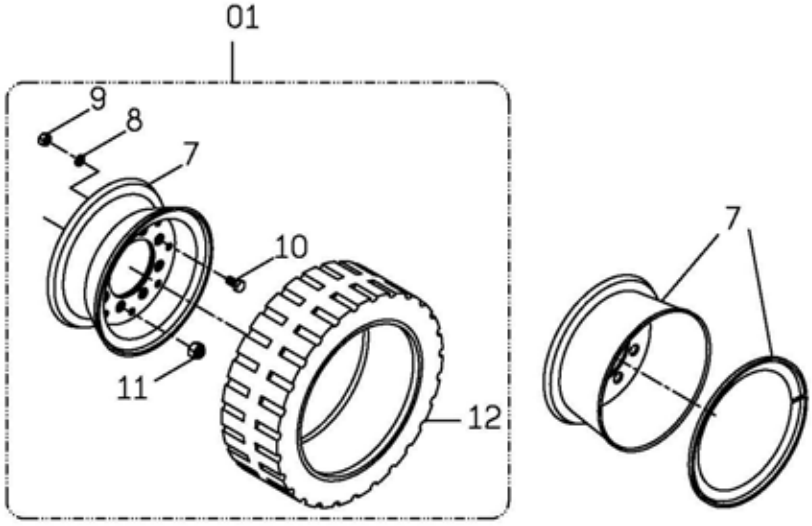

前輪 (FRONT WHEEL)

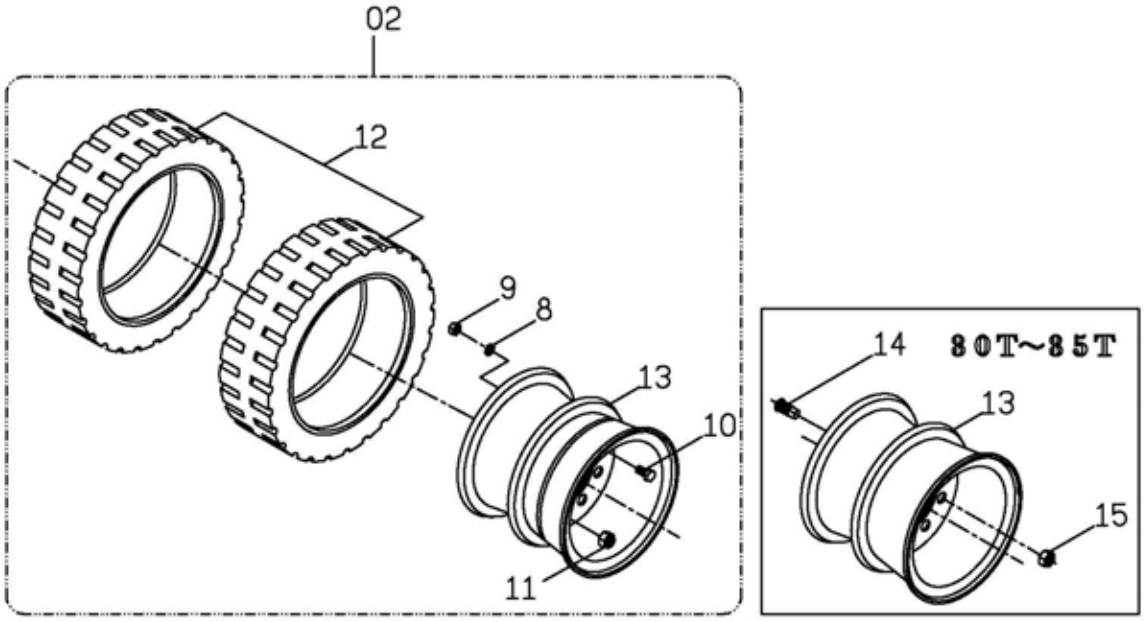

前雙輪 (FRONT DOUBLE WHEEL)

https://truckmanualshub.com/

輪胎組
A302-3
TIRE ASSY

編號 NO.	新碼 NEW PART NO.	舊碼 OLD PART NO.	規格 SPECIFICATION	互換性 ITC	應用日期 APPLIED DATE	數量 QTY	FD 15 18 20 25 30 35 A B C D E F	FG 15 18 20 25 30 35 G H I J K L	FD〔C〕 15 18 20 25 30 35 M N O P Q R	FG〔C〕 15 18 20 25 30 35 S T U V W X	機號 BODY NO.	備註 REMARK
	後輪 REAR WHEEL											
0	氣胎總成(AIR TIRE ASSY)											
	B350037					1	E F	K L				停用(NOT USED)
	B350035					1	A B	G H				
	B350036					1	C D	I J				
	B350500					1	E F	K L				
0	實心輪胎總成(SOLID TIRE ASSY)											
	B350038					1	A B	G H				
	B350039					1	C D	I J				
	B350040					1	E F	K L				
0	結構胎總成(STRUCTURAL TIRE ASSY)											
	B350794					1	C D	I J				
	B350795					1	E F	K L				
1	後輪鋼圈(RIM, REAR WHEEL)											
	32340	31504025				2	A B	G H				雙合式(DOUBLE COMBINE RIM)
	32341	32504025				2	C D	I J				雙合式(DOUBLE COMBINE RIM)
	32342	31506030				2	E F	K L				雙合式(DOUBLE COMBINE RIM)
2	彈簧華司(SPRING WASHER)											
	M1605-M10	92501218				12	A B	G H				
	M1605-M12	92501024				12	C D E F	I J K L				
3	螺帽(NUT)											
	M1502001	92504016				12	A B	G H				
	M1513004	92504026				12	C D E F	I J K L				
4	特殊螺栓(BOLT)											
		42504029			2000/10	12	A B	G H				停用(NOT USED)
	M1424003	92520301			2001/12	12	A B	G H				停用(NOT USED)
	M1423-M12*25	42504029			2003/02	12	C D E F	I J K L				停用(NOT USED)
	34588	91504029			2006/04	12	A B	G H				
	32353	91506032			2006/04	12	C D E F	I J K L				
5	特殊螺帽(NUT, REAR WHEEL)											
	32344	32504021				12	C D E F	I J K L				停用(NOT USED)
	32343	31504021				12	A B	G H				
	32344	32504021				12	C D	I J				
	32272	31506033				12	E F	K L				
6	氣胎(AIR TIRE, REAR WHEEL)											
	34697	93004030				2	E F	K L				停用(NOT USED)
	32345	91504030				2	A B	G H				

https://truckmanualshub.com/

輪胎組
A302-3
TIRE ASSY

編號 NO.	零件名稱 PART NAME 新碼 NEW PART NO.	舊碼 OLD PART NO.	規格 SPECIFICATION	互換性 ITC	應用日期 APPLIED DATE	數量 QTY	FD 15 18 20 25 30 35 A B C D E F	FG 15 18 20 25 30 35 G H I J K L	FD〔C〕 15 18 20 25 30 35 M N O P Q R	FG〔C〕 15 18 20 25 30 35 S T U V W X	機號 BODY NO.	備註 REMARK
6	**氣胎(AIR TIRE, REAR WHEEL)**											
	32346	92504030				2	C D	I J				
	32347	91506036				2	E F	K L				
6	**實心輪胎(SOLID TIRE, REAR WHEEL)**											
	32348	91504052				2	A B	G H				停用(NOT USED)
	M1211013					2	A B	G H				
	M1211017					2	C D	I J				
	32358	91506054				2	E F	K L				
6	**結構胎(STRUCTURAL TIRE, REAR WHEEL)**											
	32349	92504052				2	C D	I J				
	32350	93004052				2	E F	K L				

https://truckmanualshub.com/

輪胎組
A302-3
TIRE ASSY

編號 NO.	零件名稱 PART NAME						FD						FG						FD〔C〕						FG〔C〕						機號 BODY NO.	備註 REMARK
	新碼 NEW PART NO.	舊碼 OLD PART NO.	規格 SPECIFICATION	互換性 ITC	應用日期 APPLIED DATE	數量 QTY	15 A	18 B	205 C	205 D	305 E	305 F	15 G	18 H	205 I	205 J	305 K	305 L	15 M	18 N	205 O	205 P	305 Q	305 R	15 S	18 T	205 U	205 V	305 W	305 X		
	前輪 FRONT WHEEL																															
01	氣胎總成(AIR TIRE ASSY)																															
	B350500					1	A	B					G	H																		
	B350501					1			C	D					I	J																
	B350502					1					E						K															
	B350503					1						F						L														
01	實心輪胎總成(SOLID TIRE ASSY)																															
	B350513					1	A	B					G	H																		
	B350504					1			C	D					I	J																
	B350505					1					E	F					K	L														
01	結構胎總成(STRUCTURAL TIRE ASSY)																															
	B350792					1			C	D					I	J																
	B350793					1					E	F					K	L														
7	前輪鋼圈(RIM, FRONT WHEEL)																															
	32352	33006030				2					E						K														停用(NOT USED)	
	M1212001	33506030				2						F						L													停用(NOT USED)	
	32342	31506030				2	A	B					G	H																	雙合式(DOUBLE COMBINE RIM)	
	32351	32506030				2			C	D					I	J															雙合式(DOUBLE COMBINE RIM)	
	M1212001	33506030				2					E	F					K	L													鋼帶式(STEEL BELT RIM)	
8	彈簧華司(SPRING WASHER)																															
	M1605-M12	92501024				12	A	B					G	H																		
	M1605-M16	92504212				16			C	D	E	F			I	J	K	L														
9	螺帽(NUT)																															
	M1513004	92504026				12	A	B					G	H																		
	M1513005	92506022				16			C	D	E	F			I	J	K	L														
10	特殊螺栓(BOLT)																															
	32353	91506032				12	A	B					G	H																		
	32354	92506032A				16			C	D	E	F			I	J	K	L														
11	特殊螺帽(NUT)																															
	32272	31506033				12	A	B					G	H																		
	32274	32506033				16			C	D	E	F			I	J	K	L														
12	氣胎(AIR TIRE, FRONT WHEEL)																															
	32347	91506036				2	A	B					G	H																		
	32355	92506036				2			C	D					I	J																
	32356	93006036				2					E						K															
	32357	93506036				2						F						L														

https://truckmanualshub.com/

輪胎組
A302-3
TIRE ASSY

編號 NO.	零件名稱 PART NAME						FD						FG						FD〔C〕						FG〔C〕							
	新碼 NEW PART NO.	舊碼 OLD PART NO.	規格 SPECIFICATION	互換性 ITC	應用日期 APPLIED DATE	數量 QTY	15	180	205	230	255	305	15	180	205	230	255	305	15	180	205	230	255	305	15	180	205	230	255	305	機號 BODY NO.	備註 REMARK
							A	B	C	D	E	F	G	H	I	J	K	L	M	N	O	P	Q	R	S	T	U	V	W	X		
12	**實心輪胎(SOLID TIRE, FRONT WHEEL)**																															
	32358	91506054				2	A	B					G	H																		
	M1211015					2			C	D					I	J																
	M1211019					2					E	F					K	L														
12	**結構胎(STRUCTURAL TIRE, FRONT WHEEL)**																															
	32359	92506054				2			C	D					I	J																
	32360	93006054				2					E	F					K	L														

https://truckmanualshub.com/

前輪軸系統
A302
DRIVE AXLE SYSTEM

輪胎組
A302-3
TIRE ASSY

編號 NO.	零件名稱 PART NAME						FD						FG						FD〔C〕						FG〔C〕						機號 BODY NO.	備註 REMARK
	新碼 NEW PART NO.	舊碼 OLD PART NO.	規格 SPECIFICATION	互換性 ITC	應用日期 APPLIED DATE	數量 QTY	15	18	20	25	30	35	15	18	20	25	30	35	15	18	20	25	30	35	15	18	20	25	30	35		
							A	B	C	D	E	F	G	H	I	J	K	L	M	N	O	P	Q	R	S	T	U	V	W	X		
	**前雙輪 DRIVE DUAL WHEELS **																															
02	氣胎總成(AIR TIRE ASSY)																															
	B350821					1				D						J																
	B350510					1				E	F					K	L															
02	實心輪胎總成(SOLID TIRE ASSY)																															
	B350514					1				D						J																
	B350511					1				E	F					K	L															
12	氣胎(AIR TIRE, FRONT WHEEL)																															
	32355	92506036				4				D						J																
	32361	93006055				4				E	F					K	L															
12	實心輪胎(SOLID TIRE) (DUAL WHEEL)																															
	32362	92506065				4				D						J																停用(NOT USED)
	M1211015					4				D						J																
	32363	93006065				4				E	F					K	L															
13	前輪鋼圈(RIM, FRONT WHEEL) (DUAL WHEEL)																															
	32364	32506057				4				D						J																鋼帶式(STEEL BELT RIM)
	32365	33006057				4				E	F					K	L															鋼帶式(STEEL BELT RIM)
14	特殊螺栓(BOLT) (DUAL WHEEL)																															
	32366	93006061				16				E	F					K	L															
15	特殊螺帽(NUT) (DUAL WHEEL)																															
	32367	93006063				16				E	F					K	L															

https://truckmanualshub.com/

轉向系統
A303
STEERING SYSTEM

https://truckmanualshub.com/

轉向系統
A303
STEERING SYSTEM

後輪樑組
A303-1
STEERING AXLE ASSY

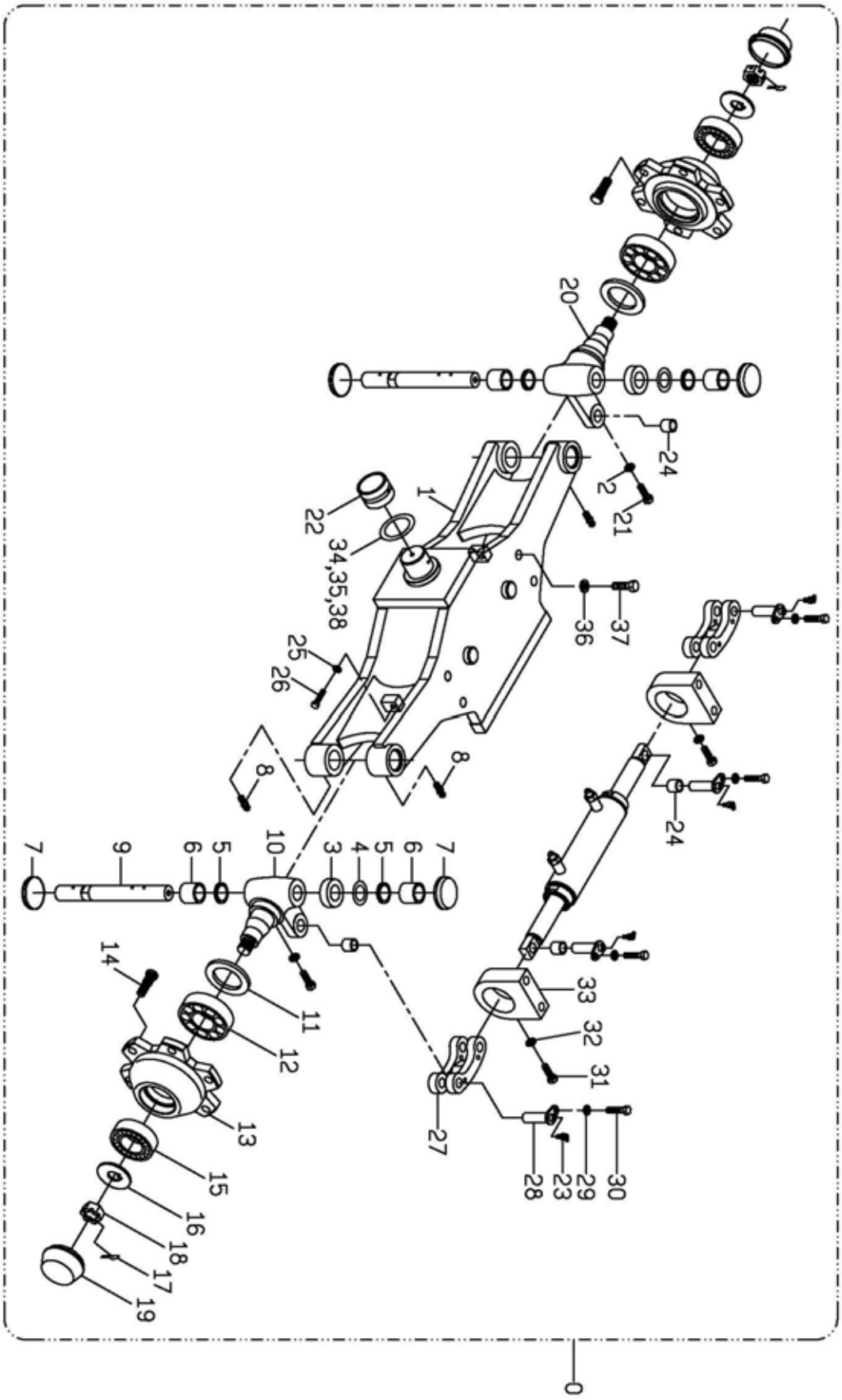

https://truckmanualshub.com/

轉向系統
A303
STEERING SYSTEM

後輪樑組
A303-1
STEERING AXLE ASSY

編號 NO.	零件名稱 PART NAME						FD						FG						FD〔C〕						FG〔C〕						機號 BODY NO.	備註 REMARK
	新碼 NEW PART NO.	舊碼 OLD PART NO.	規格 SPECIFICATION	互換性 ITC	應用日期 APPLIED DATE	數量 QTY	1 5 A	1 8 B	2 0 C	2 5 D	3 0 E	3 5 F	1 5 G	1 8 H	2 0 I	2 5 J	3 0 K	3 5 L	1 5 M	1 8 N	2 0 O	2 5 P	3 0 Q	3 5 R	1 5 S	1 8 T	2 0 U	2 5 V	3 0 W	3 5 X		
0	**後輪樑總成(STEERING AXLE ASSY)**																															
		22504220			2000/10	1				C	D	E F				I	J	K L														停用(NOT USED)
	B350045	21504220				1	A	B					G	H																		
	B350046	22504220			2003/02	1				C	D					I	J															
	B350047	23004220				1						E F						K L														
1	**後輪樑座(TRAIL)**																															
	32368	21504300				1	A	B					G	H																		
	32369	22504300				1				C	D	E F				I	J	K L														
2	**彈簧華司(SPRING WASHER)**																															
	M1605-M10	92501218				2	A	B	C	D	E	F	G	H	I	J	K	L														
3	**止推軸承(BEARING)**																															
	M0907002	42504002				2	A	B	C	D	E	F	G	H	I	J	K	L														
4	**填隙片(WASHER)**																															
	32373	42504003				2	A	B	C	D	E	F	G	H	I	J	K	L														
5	**油封(SEAL)**																															
	M0702027	42504005				4	A	B	C	D	E	F	G	H	I	J	K	L														
6	**滾針軸承(BEARING)**																															
	M0905-TA2830Z	42504004				4	A	B	C	D	E	F	G	H	I	J	K	L														
7	**防塵蓋(COVER)**																															
	32376	42504023				4	A	B	C	D	E	F	G	H	I	J	K	L														
8	**黃油嘴(GREASE, CONNECTOR)**																															
	M1321-M10	92503015				4	A	B	C	D	E	F	G	H	I	J	K	L														
9	**轉向主軸(PIN, STEERING KNUCKLE KING)**																															
	32379	42504024				2	A	B	C	D	E	F	G	H	I	J	K	L														
10	**轉向軸(左羊角)(KNUCKLE-L.H.)**																															
		32504201	Ø30		1995/12	1	A	B	C	D	E	F	G	H	I	J	K	L														停用(NOT USED)
		31504201	Ø28		1999/11	1	A	B																								停用(NOT USED)
		32504201	Ø30		1999/11	1			C	D	E	F																				停用(NOT USED)
	32383	41504217	Ø28		2000/12	1	A	B					G	H																		
	32384	42504217	Ø28		2000/12	1			C	D	E	F				I	J	K L														
11	**防塵油封(SEAL)**																															
	M0703001	92504011				2	A	B	C	D	E	F	G	H	I	J	K	L														
12	**錐型軸承(BEARING)**																															
	M0909-30209	91504012				2	A	B					G	H																		
	M0909-32209	92504012				2			C	D	E	F				I	J	K L														
13	**後輪轂(HUB, REAR)**																															
	32388	31504019				2	A	B					G	H																		
	32389	32504019				2			C	D	E	F				I	J	K L														

https://truckmanualshub.com/

轉向系統
A303
STEERING SYSTEM

後輪樑組
A303-1
STEERING AXLE ASSY

編號 NO.	零件名稱 PART NAME			互換性 ITC	應用日期 APPLIED DATE	數量 QTY	FD						FG						FD〔C〕						FG〔C〕						機號 BODY NO.	備註 REMARK
	新碼 NEW PART NO.	舊碼 OLD PART NO.	規格 SPECIFICATION				15 A	18 B	20 C	25 D	30 E	35 F	15 G	18 H	20 I	25 J	30 K	35 L	15 M	18 N	20 O	25 P	30 Q	35 R	15 S	18 T	20 U	25 V	30 W	35 X		
14	**特殊螺栓(BOLT)**																															
	32394	31504018				12	A	B					G	H																		
	32395	32504018				12			C	D	E	F			I	J	K	L														
15	**錐型滾針軸承(BEARING)**																															
	M0909-30306	92504020				2	A	B					G	H																		
	M0909-32207	42504020				2			C	D	E	F			I	J	K	L														
16	**固定華司(WASHER)**																															
	32396	32504022				2	A	B	C	D	E	F	G	H	I	J	K	L														
17	**開口銷(PIN, CLEVIS)**																															
	M1307003	92504024				2	A	B	C	D	E	F	G	H	I	J	K	L														
18	**堡型螺帽(NUT, CASTLE)**																															
	32397	32504023				2	A	B	C	D	E	F	G	H	I	J	K	L														
19	**防塵蓋(COVER)**																															
	32398	32504027				2	A	B	C	D	E	F	G	H	I	J	K	L														
20	**轉向軸(右羊角)(KNUCKLE-R.H.)**																															
		32504202	Ø30		1995/12	1	A	B	C	D	E	F	G	H	I	J	K	L														停用(NOT USED)
		31504202	Ø28		1999/11	1	A	B																								停用(NOT USED)
		32504202	Ø30		1999/11	1			C	D	E	F																				停用(NOT USED)
	32401	41504218	Ø28		2000/12	1	A	B					G	H																		
	32402	42504218	Ø28		2000/12	1			C	D	E	F			I	J	K	L														
21	**螺栓(BOLT)**																															
	32406	92504219				2	A	B	C	D	E	F	G	H	I	J	K	L														
22	**電木套筒(BUSHING)**																															
	32407	32504001				2	A	B	C	D	E	F	G	H	I	J	K	L														
23	**黃油嘴(GREASE, CONNECTOR UNIT)**																															
	M1321-M6*45	92504214				4	A	B	C	D	E	F	G	H	I	J	K	L														
24	**軸承套(BUSHING)**																															
		92504204			1997	4	A	B	C	D	E	F	G	H	I	J	K	L														停用(NOT USED)
	32408	42504204			1999/11	4	A	B	C	D	E	F	G	H	I	J	K	L														
25	**螺帽(NUT)**																															
	M1501-M12	94004014				2	A	B	C	D	E	F	G	H	I	J	K	L														
26	**螺栓(BOLT)**																															
	M1402-M12*50	94004013				2	A	B	C	D	E	F	G	H	I	J	K	L														
27	**油壓連桿(INTERMEDIATE LINK)**																															
		32504205			1997	2	A	B	C	D	E	F	G	H	I	J	K	L														停用(NOT USED)
	32410	42504205B			1999/11	2	A	B	C	D	E	F	G	H	I	J	K	L														

https://truckmanualshub.com/

轉向系統
A303
STEERING SYSTEM

後輪樑組
A303-1
STEERING AXLE ASSY

編號 NO.	零件名稱 PART NAME			互換性 ITC	應用日期 APPLIED DATE	數量 QTY	FD						FG						FD〔C〕						FG〔C〕						機號 BODY NO.	備註 REMARK
	新碼 NEW PART NO.	舊碼 OLD PART NO.	規格 SPECIFICATION				15 A	18 B	20 C	25 D	30 E	35 F	15 G	18 H	20 I	25 J	30 K	35 L	15 M	18 N	20 O	25 P	30 Q	35 R	15 S	18 T	20 U	25 V	30 W	35 X		
28	**支撐銷(BRACE PIN)**																															
		32504206			1997	4	A	B	C	D	E	F	G	H	I	J	K	L														停用(NOT USED)
	32412	42504206			2000/10	4	A	B	C	D	E	F	G	H	I	J	K	L														
29	**彈簧華司(SPRING WASHER)**																															
	M1605-M8	92501019				4	A	B	C	D	E	F	G	H	I	J	K	L														
30	**螺栓(BOLT)**																															
	M1424-M8*20	92504208				4	A	B	C	D	E	F	G	H	I	J	K	L														
31	**螺栓(BOLT)**																															
	M1424004	92501102				2	A	B	C	D	E	F	G	H	I	J	K	L														
32	**螺帽(NUT)**																															
	M1502001	92504016				2	A	B	C	D	E	F	G	H	I	J	K	L														
33	**油壓缸固定座(FASTENING SET, CYLINDER)**																															
	32414	32504211A				2	A	B	C	D	E	F	G	H	I	J	K	L														
34	**填隙片(WASHER)**																															
	32415	32504015				N	A	B	C	D	E	F	G	H	I	J	K	L														0.5t
35	**填隙片(WASHER)**																															
	32416	32504055				N	A	B	C	D	E	F	G	H	I	J	K	L														1.0t
36	**彈簧華司(SPRING WASHER)**																															
	M1605-M16	92504212				4	A	B	C	D	E	F	G	H	I	J	K	L														
37	**螺栓(BOLT)**																															
	M1423022	92504213				4	A	B	C	D	E	F	G	H	I	J	K	L														
38	**填隙片(WASHER)**																															
	34608					N	A	B	C	D	E	F	G	H	I	J	K	L														2.0t

https://truckmanualshub.com/

轉向系統
A303
STEERING SYSTEM

轉向油壓缸組
A303-2
STEERING CYLINDER

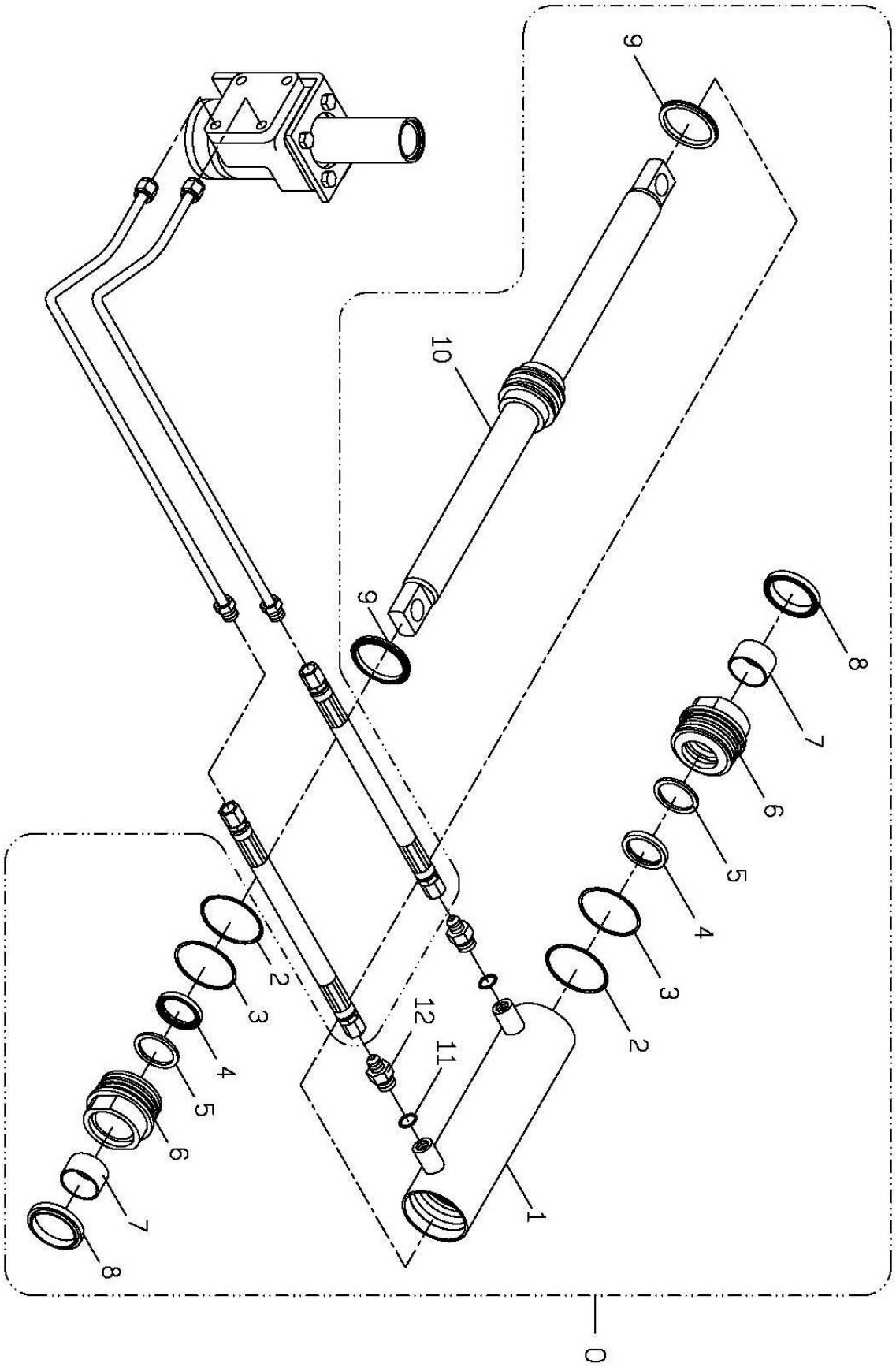

https://truckmanualshub.com/

轉向系統
A303
STEERING SYSTEM

轉向油壓缸組
A303-2
STEERING CYLINDER

編號 NO.	零件名稱 PART NAME						FD						FG						FD〔C〕						FG〔C〕						機號 BODY NO.	備註 REMARK
	新碼 NEW PART NO.	舊碼 OLD PART NO.	規格 SPECIFICATION	互換性 ITC	應用日期 APPLIED DATE	數量 QTY	1 5 A	1 8 0 B	2 0 5 C	2 5 D	3 0 E	3 5 F	1 5 G	1 8 0 H	2 0 5 I	2 5 J	3 0 K	3 5 L	1 5 M	1 8 0 N	2 0 5 O	2 5 P	3 0 Q	3 5 R	1 5 S	1 8 0 T	2 0 5 U	2 5 V	3 0 W	3 5 X		
0	**轉向油壓缸組(CYLINDER, STEERING ASSY)**																															
	B350051	41505200				1	A	B					G	H																		
	B350052	42505200				1			C	D					I	J																
	B350053	43005200				1					E	F					K	L														
1	**轉向油壓缸體(CYLINDER BODY)**																															
	32426	42505201				1	A	B	C	D			G	H	I	J																
	32427	43005201				1					E	F					K	L														
2	**O型環("O"RING)**																															
	M0801-G65B	42505204				2	A	B	C	D			G	H	I	J																
	M0801-G70B	44005220				2					E	F					K	L														
3	**背托環(RING, BACK UP)**																															
	M0802010	42505205				2	A	B	C	D			G	H	I	J																
	M0802011	44005205				2					E	F					K	L														
4	**油封(SEAL)**																															
	M0803004	42505203				2	A	B	C	D	E	F	G	H	I	J	K	L														
5	**背托環(RING, BACK UP)**																															
	M0802005	42505219				2	A	B	C	D	E	F	G	H	I	J	K	L														
6	**軸蓋(COLLAR, ROD)**																															
	32429	42505206				2	A	B	C	D			G	H	I	J																
	32430	43005206				2					E	F					K	L														
7	**自潤軸套(BUSH)**																															
	32432	42505202				2	A	B	C	D	E	F	G	H	I	J	K	L														
8	**防塵油封(SEAL)**																															
	M0807005	42505207				2	A	B	C	D	E	F	G	H	I	J	K	L														
9	**油封(SEAL)**																															
	M0803007	42505209				2	A	B	C	D			G	H	I	J																
	M0803008	42507403				2					E	F					K	L														
10	**油壓缸心軸(ROD, PISTON)**																															
	32433	41505208				1	A	B					G	H																		
	32434	42505208				1			C	D					I	J																
	32435	43005208				1					E	F					K	L														
11	**O型環("O"RING)**																															
		92505211			2000/10	2	A	B	C	D	E	F	G	H	I	J	K	L														停用(NOT USED)
	M0801-P12	92507304				2	A	B	C	D	E	F	G	H	I	J	K	L														
12	**接頭(CONNECTOR)**																															
		32505212			2000/10	2	A	B	C	D	E	F	G	H	I	J	K	L														停用(NOT USED)
	32437	92508019A				2	A	B	C	D	E	F	G	H	I	J	K	L														

https://truckmanualshub.com/

轉向系統
A303
STEERING SYSTEM

懸吊組

A303-3

STEERING WHEEL

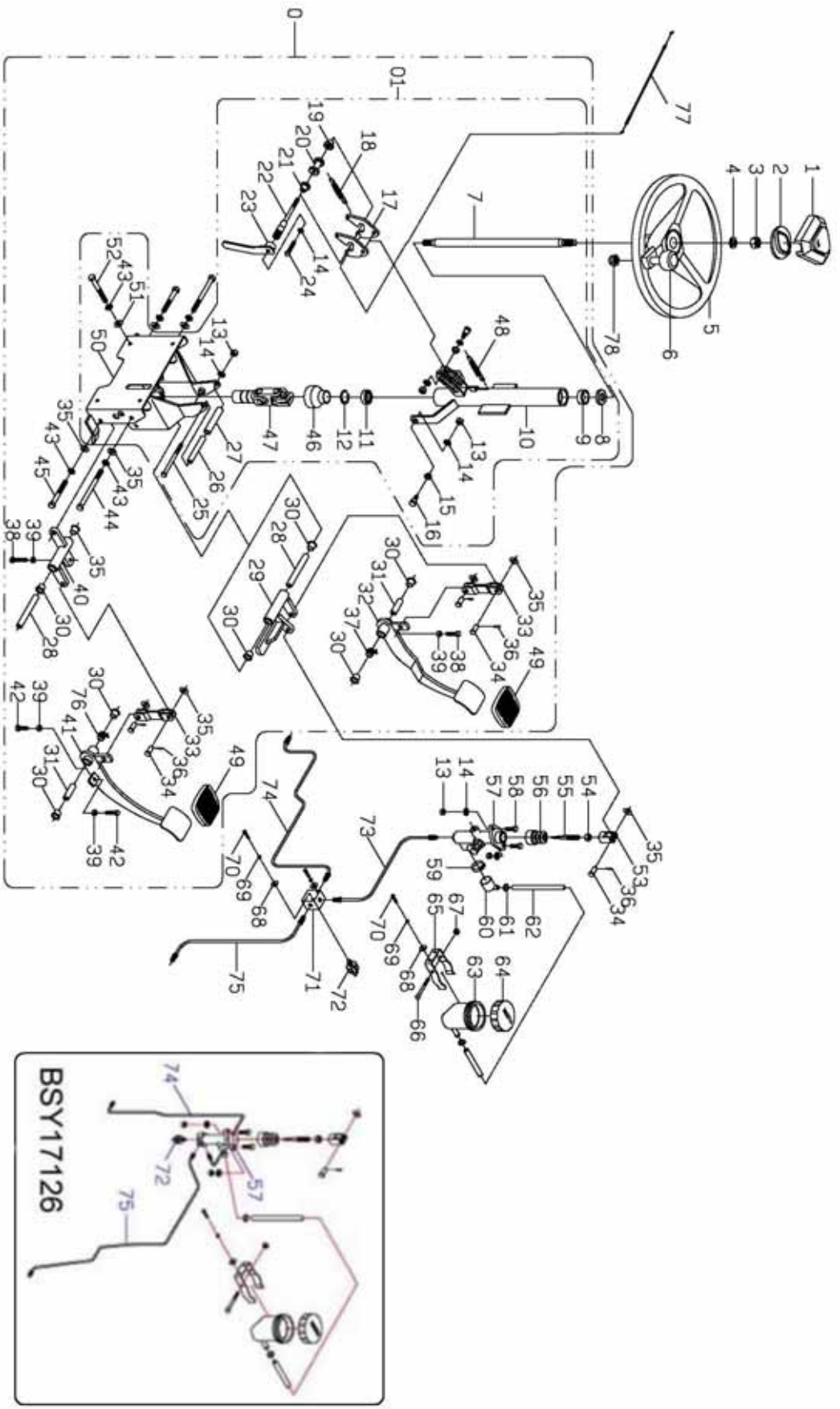

https://truckmanualshub.com/

懸吊組
A303-3
STEERING WHEEL

編號 NO.	零件名稱 PART NAME						FD						FG						FD〔C〕						FG〔C〕						機號 BODY NO.	備註 REMARK
	新碼 NEW PART NO.	舊碼 OLD PART NO.	規格 SPECIFICATION	互換性 ITC	應用日期 APPLIED DATE	數量 QTY	15 A	18 B	20 C	25 D	30 E	35 F	15 G	18 H	20 I	25 J	30 K	35 L	15 M	18 N	20 O	25 P	30 Q	35 R	15 S	18 T	20 U	25 V	30 W	35 X		
0	自排懸吊(AT)STEERING WHEEL																															
	B350766					1	●	●	●	●	●	●	●	●	●	●	●	●														
	B350766				2005/11	1	●	●					●	●																	Y318988	停用(NOT USED)
01	手排懸吊(MT)STEERING WHEEL																															
	B350765	22512494				1	●	●	●	●	●	●	●	●	●	●	●	●														
1	方向盤護蓋(COVER)																															
	32832	A2512481				1	●	●	●	●	●	●	●	●	●	●	●	●														
2	橡膠墊片(PARKING)																															
	32440	32512487				1	●	●	●	●	●	●	●	●	●	●	●	●														
3	螺帽(NUT)																															
		92516419				1	●	●	●	●	●	●	●	●	●	●	●	●														停用(NOT USED)
	M1502003	92507428				1	●	●	●	●	●	●	●	●	●	●	●	●														
4	彈簧華司(SPRING WASHER)																															
	M1605-M14	92506020				1	●	●	●	●	●	●	●	●	●	●	●	●														
5	方向盤(STEERING WHEEL)																															
	32441	92512482				1	●	●	●	●	●	●	●	●	●	●	●	●														
6	方向盤把頭(KNOB STEERING WHEEL)																															
	32442	92512480				1	●	●	●	●	●	●	●	●	●	●	●	●														
7	方向盤心軸(SHAFT)																															
	34847					1	●	●	●	●	●	●	●	●	●	●	●	●														
8	防塵套筒(BUSHING)																															
	32444	92512405				1	●	●	●	●	●	●	●	●	●	●	●	●														
9	套筒(BUSHING)																															
	32445	32512406				1	●	●	●	●	●	●	●	●	●	●	●	●														
10	方向套管組(COLUMN TOP)																															
	34846					1	●	●	●	●	●	●	●	●	●	●	●	●														
11	軸承(BEARING)																															
	M0901-6003ZZ	92516414				1	●	●	●	●	●	●	●	●	●	●	●	●														
12	內扣環(RING,SNAP)																															
	M1312-S35	92512419				1	●	●	●	●	●	●	●	●	●	●	●	●														
13	螺帽(NUT)																															
		92512436				3	●	●	●	●	●	●	●	●	●	●	●	●														
14	彈簧華司(SPRING WASHER)																															
	M1605-M8	92501019				6	●	●	●	●	●	●	●	●	●	●	●	●														
15	套筒(BUSHING)																															
	32447	32512409				2	●	●	●	●	●	●	●	●	●	●	●	●														

https://truckmanualshub.com/

轉向系統
A303
STEERING SYSTEM

懸吊組
A303-3
STEERING WHEEL

編號 NO.	零件名稱 PART NAME 新碼 NEW PART NO.	舊碼 OLD PART NO.	規格 SPECIFICATION	互換性 ITC	應用日期 APPLIED DATE	數量 QTY	FD 15A 18B 20C 25D 30E 35F	FG 15G 18H 20I 25J 30K 35L	FD〔C〕 15M 18N 20O 25P 30Q 35R	FG〔C〕 15S 18T 20U 25V 30W 35X	機號 BODY NO.	備註 REMARK
16	螺栓(BOLT)											
	M1424-M8*30	92503010				2	A B C D E F	G H I J K L				
17	固定夾(CLAMP)											
	32448	92512439				1	A B C D E F	G H I J K L				
18	拉力彈簧(SPRING)											
	32449	92512468				1	A B C D E F	G H I J K L				
19	固定螺帽(NUT)											
	32450	32512411				1	A B C D E F	G H I J K L				
20	套筒(BUSHING)											
	32451	32512412				1	A B C D E F	G H I J K L				
21	固定套筒(BUSHING)											
	32452	32512413				1	A B C D E F	G H I J K L				
22	固定螺栓(BOLT)											
	32453	32512414				1	A B C D E F	G H I J K L				
23	把手(固定)(KNOB)											
	32454	32512415				1	A B C D E F	G H I J K L				
24	螺栓(BOLT)											
	M1424-M8*16	92501014				1	A B C D E F	G H I J K L				
25	螺栓(BOLT)											
	32455	92512434				1	A B C D E F	G H I J K L				
26	套管(BUSHING)											
	32456	32512437				1	A B C D E F	G H I J K L				
27	塑膠管(HOSE)											
	32457	92512438				1	A B C D E F	G H I J K L				
28	套筒(BUSHING)											
	32458	32512451				2	A B C D E F	G H I J K L				停用(NOT USED)
	32458	32512451			2005/11	2	A B	G H			Y318988	自排(AT)
29	槓桿組(LINK-SUB-ASSY)											
	32459	22512424				1	A B C D E F	G H I J K L				停用(NOT USED)
	32459	22512424			2005/11	1	A B	G H			Y318988	自排(AT)
30	無給油軸承(BEARING)											
	32460	32512423				8	A B C D E F	G H I J K L				停用(NOT USED)
	32460	32512423			2005/11	8	A B	G H			Y318988	自排(AT)
31	套筒(BUSHING)											
	32461	32512440				2	A B C D E F	G H I J K L				停用(NOT USED)
	32461	32512440			2005/11	2	A B	G H			Y318988	自排(AT)

https://truckmanualshub.com/

懸吊組
A303-3
STEERING WHEEL

編號 NO.	零件名稱 PART NAME						FD						FG						FD〔C〕						FG〔C〕						機號 BODY NO.	備註 REMARK
	新碼 NEW PART NO.	舊碼 OLD PART NO.	規格 SPECIFICATION	互換性 ITC	應用日期 APPLIED DATE	數量 QTY	15 A	18 B	20 C	25 D	30 E	35 F	15 G	18 H	20 I	25 J	30 K	35 L	15 M	18 N	20 O	25 P	30 Q	35 R	15 S	18 T	20 U	25 V	30 W	35 X		
32	煞車踏板組(BRAKE PEDAL SUB-ASSY)																															
	32462	32512444				1	A	B	C	D	E	F	G	H	I	J	K	L														停用(NOT USED)
	32462	32512444			2005/11	1	A	B					G	H																	Y318988	自排(AT)
33	托拉座(LINK)																															
	32463	92512429				2	A	B	C	D	E	F	G	H	I	J	K	L														停用(NOT USED)
	32463	92512429			2005/11	2	A	B					G	H																	Y318988	自排(AT)
34	銷(PIN)																															
	M1306-10*25	92512309				5	A	B	C	D	E	F	G	H	I	J	K	L														停用(NOT USED)
	34602	92512309A				5	A	B	C	D	E	F	G	H	I	J	K	L														停用(NOT USED)
	34602	92512309A			2005/11	5	A	B					G	H																	Y318988	自排(AT)
35	平華司(WASHER)																															
	M1602014	92512455				9	A	B	C	D	E	F	G	H	I	J	K	L														停用(NOT USED)
	M1602014	92512455			2005/11	9	A	B					G	H																	Y318988	自排(AT)
36	開口銷(COTTER PIN)																															
	M1307006	92512304				5	A	B	C	D	E	F	G	H	I	J	K	L														停用(NOT USED)
	M1307006	92512304			2005/11	5	A	B					G	H																	Y318988	自排(AT)
37	煞車彈簧(右)(SPRING)(R.H)																															
	32464	92512443				1	A	B	C	D	E	F	G	H	I	J	K	L														停用(NOT USED)
	32464	92512443			2005/11	1	A	B					G	H																	Y318988	自排(AT)
38	螺栓(BOLT)																															
	M1424-M8*40	92512467				2	A	B	C	D	E	F	G	H	I	J	K	L														停用(NOT USED)
	M1424-M8*40	92512467			2005/11	2	A	B					G	H																	Y318988	自排(AT)
39	螺帽(NUT)																															
	M1502-M8	92509013				4	A	B	C	D	E	F	G	H	I	J	K	L														停用(NOT USED)
	M1502-M8	92509013			2005/11	4	A	B					G	H																	Y318988	自排(AT)
40	槓桿組(LINK-SUB-ASSY)																															
	32465	22512474				1	A	B	C	D	E	F	G	H	I	J	K	L														停用(NOT USED)
	32465	22512474			2005/11	1	A	B					G	H																	Y318988	自排(AT)
41	離合踏板組(CLUTCH PEDAL SUB-ASSY)																															
	32466	32512441				1	A	B	C	D	E	F	G	H	I	J	K	L														停用(NOT USED)
	32466	32512441			2005/11	1	A	B					G	H																	Y318988	自排(AT)
42	螺栓(BOLT)																															
	M1424-M8*30	92503010				2	A	B	C	D	E	F	G	H	I	J	K	L														停用(NOT USED)
	M1424-M8*30	92503010			2005/11	2	A	B					G	H																	Y318988	自排(AT)

https://truckmanualshub.com/

懸吊組
A303-3
STEERING WHEEL

編號 NO.	零件名稱 PART NAME						FD						FG						FD〔C〕						FG〔C〕							
	新碼 NEW PART NO.	舊碼 OLD PART NO.	規格 SPECIFICATION	互換性 ITC	應用日期 APPLIED DATE	數量 QTY	15 A	18 B	20 C	25 D	30 E	35 F	15 G	18 H	20 I	25 J	30 K	35 L	15 M	18 N	20 O	25 P	30 Q	35 R	15 S	18 T	20 U	25 V	30 W	35 X	機號 BODY NO.	備註 REMARK
43	**彈簧華司(SPRING WASHER)**																															
	M1605-M10	92501218				8	●	●	●	●	●	●	●	●	●	●	●	●														停用(NOT USED)
	M1605-M10	92501218			2005/11	8	●	●					●	●																		自排(AT)
	M1605-M10	92501218				4	●	●	●	●	●	●	●	●	●	●	●	●														手排(MT)
44	**螺栓(BOLT)**																															
	M1423027	92512425				2	●	●	●	●	●	●	●	●	●	●	●	●														停用(NOT USED)
	M1423027	92512425			2005/11	2	●	●					●	●																		自排(AT)
45	**螺栓(BOLT)**																															
	M1423028	92512464				2	●	●	●	●	●	●	●	●	●	●	●	●														停用(NOT USED)
	M1423028	92512464			2005/11	2	●	●					●	●																		自排(AT)
46	**方向機護套(CAP)**																															
	32467	32512478				1	●	●	●	●	●	●	●	●	●	●	●	●														
47	**萬向接頭(UNIVERSAL JOINT)**																															
	32468	92512422				1	●	●	●	●	●	●	●	●	●	●	●	●														
48	**拉力彈簧(SPRING)**																															
	32469	92512469A				1	●	●	●	●	●	●	●	●	●	●	●	●														
49	**踏板墊(PEDAL PAD)**																															
	32470	92512445				2	●	●	●	●	●	●	●	●	●	●	●	●														停用(NOT USED)
	32470	92512445			2005/11	2	●	●					●	●																		自排(AT)
50	**懸吊本體(HANGING BRACKET)**																															
	32471	32512433				1	●	●	●	●	●	●	●	●	●	●	●	●														自排(AT)
	34982					1	●	●	●	●	●	●	●	●	●	●	●	●														手排(MT)
51	**平華司(WASHER)**																															
	M1602013	92520420				4	●	●	●	●	●	●	●	●	●	●	●	●														
52	**螺栓(BOLT)**																															
	M1424009	92512470				4	●	●	●	●	●	●	●	●	●	●	●	●														
53	**U型塊(BLOCK OAK "U")**																															
	32472	32512430A				1	●	●	●	●	●	●	●	●	●	●	●	●														停用(NOT USED)
	32472	32512431A			2005/11	1	●	●					●	●																		自排(AT)
54	**螺帽(NUT)**																															
	M1501-M8	92501115				1	●	●	●	●	●	●	●	●	●	●	●	●														停用(NOT USED)
	M1501-M8	92501115			2005/11	1	●	●					●	●																		自排(AT)
55	**頂桿(COCKET)**																															
	32473	32512432				1	●	●	●	●	●	●	●	●	●	●	●	●														停用(NOT USED)
	32473	32512432			2005/11	1	●	●					●	●																		自排(AT)

https://truckmanualshub.com/

懸吊組
A303-3
STEERING WHEEL

編號 NO.	零件名稱 PART NAME						FD						FG						FD〔C〕						FG〔C〕							
	新碼 NEW PART NO.	舊碼 OLD PART NO.	規格 SPECIFICATION	互換性 ITC	應用日期 APPLIED DATE	數量 QTY	15 A	18 B	20 C	25 D	30 E	35 F	15 G	18 H	20 I	25 J	30 K	35 L	15 M	18 N	20 O	25 P	30 Q	35 R	15 S	18 T	20 U	25 V	30 W	35 X	機號 BODY NO.	備註 REMARK
56	護罩(BOOT CONTROL LEVER)																															
	32474	92512465				1	A	B	C	D	E	F	G	H	I	J	K	L														停用(NOT USED)
	32474	92512465			2005/11	1	A	B					G	H																	Y318988	自排(AT)
57	煞車總泵(BRAKE CYLINDER)																															
	32475	92512447				1	A	B	C	D	E	F	G	H	I	J	K	L														停用(NOT USED)
	31737				2005/04	1	A	B	C	D	E	F	G	H	I	J	K	L													317314 Y416478	
	31737				2005/11	1	A	B					G	H																	Y318988	自排(AT)
58	螺栓(BOLT)																															
	M1424-M8*25	92501104				2	A	B	C	D	E	F	G	H	I	J	K	L														停用(NOT USED)
	M1424-M8*25	92501104			2005/11	2	A	B					G	H																	Y318988	自排(AT)
59	管束(CLAMP)																															
	M1315006	92512458				1	A	B	C	D	E	F	G	H	I	J	K	L														停用(NOT USED)
	M1315006	92512458			2005/11	1	A	B					G	H																	Y318988	自排(AT)
60	油杯(CUP OIL)																															
	32476	92512466				1	A	B	C	D	E	F	G	H	I	J	K	L														停用(NOT USED)
	32476	92512466			2005/11	1	A	B					G	H																	Y318988	自排(AT)
61	管束(CLAMP)																															
	M1315024	92512485				2	A	B	C	D	E	F	G	H	I	J	K	L														停用(NOT USED)
	M1315024	92512485			2005/11	2	A	B					G	H																	Y318988	自排(AT)
62	煞車油管(BRAKE HOSE OIL)																															
	32477	92512450				1	A	B	C	D	E	F	G	H	I	J	K	L														停用(NOT USED)
	32477	92512450			2005/11	1	A	B					G	H																	Y318988	自排(AT)
63	油杯(CUP OIL)																															
	32478	92512459				1	A	B	C	D	E	F	G	H	I	J	K	L														停用(NOT USED)
	32478	92512459			2005/11	1	A	B					G	H																	Y318988	自排(AT)
64	油杯蓋(COVER-CUP OIL)																															
	32479	92512472				1	A	B	C	D	E	F	G	H	I	J	K	L														停用(NOT USED)
	32479	92512472			2005/11	1	A	B					G	H																	Y318988	自排(AT)
65	油杯固定座(CLAMP-CUP OIL)																															
	32480	22512460				1	A	B	C	D	E	F	G	H	I	J	K	L														停用(NOT USED)
	32480	22512460			2005/11	1	A	B					G	H																	Y318988	自排(AT)
66	螺栓(BOLT)																															
	M1401-M6*60	92512463				1	A	B	C	D	E	F	G	H	I	J	K	L														停用(NOT USED)
	M1401-M6*60	92512463			2005/11	1	A	B					G	H																	Y318988	自排(AT)
67	螺帽(NUT)																															
	M1513-M6	92515415				1	A	B	C	D	E	F	G	H	I	J	K	L														停用(NOT USED)
	M1513-M6	92515415			2005/11	1	A	B					G	H																	Y318988	自排(AT)

https://truckmanualshub.com/

懸吊組
A303-3
STEERING WHEEL

編號 NO.	零件名稱 PART NAME						FD						FG						FD〔C〕						FG〔C〕							
	新碼 NEW PART NO.	舊碼 OLD PART NO.	規格 SPECIFICATION	互換性 ITC	應用日期 APPLIED DATE	數量 QTY	15 A	18 B	20 C	25 D	30 E	35 F	15 G	18 H	20 I	25 J	30 K	35 L	15 M	18 N	20 O	25 P	30 Q	35 R	15 S	18 T	20 U	25 V	30 W	35 X	機號 BODY NO.	備註 REMARK
68	平華司(WASHER)																															
	M1602004	92510428				3	A	B	C	D	E	F	G	H	I	J	K	L														停用(NOT USED)
	M1602004	92510428			2005/11	3	A	B					G	H																	Y318988	自排(AT)
69	彈簧華司(SPRING WASHER)																															
	M1605-M6	92503218				3	A	B	C	D	E	F	G	H	I	J	K	L														停用(NOT USED)
	M1605-M6	92503218			2005/11	3	A	B					G	H																	Y318988	自排(AT)
70	螺栓(BOLT)																															
	M1423-M6*30	92512650				3	A	B	C	D	E	F	G	H	I	J	K	L														停用(NOT USED)
	M1423-M6*30	92512650			2005/11	3	A	B					G	H																	Y318988	自排(AT)
71	三通閥(CONNECTOR,3-WAY)																															
	34701	32512607				1	A	B	C	D	E	F	G	H	I	J	K	L														停用(NOT USED)
	32810	32512607				1	A	B	C	D	E	F	G	H	I	J	K	L														停用(NOT USED)
	32810	32512607			2005/11	1	A	B					G	H																	Y318988	自排(AT)
72	煞車開關(BRAKE SWITCH)																															
	E1609001	92513008				1	A	B	C	D	E	F	G	H	I	J	K	L														停用(NOT USED)
	E1609001	92513008			2005/11	1	A	B					G	H																	Y318988	自排(AT)
73	煞車鋼管(BRAKE TUBE)																															
		92512477				1	A	B	C	D	E	F	G	H	I	J	K	L														停用(NOT USED)
74	右煞車鋼管(STEEL TUBE,BRAKE R.H.)																															
	32482	MD-160			2005/04	1	A	B	C	D	E	F	G	H	I	J	K	L													317314 Y416478	停用(NOT USED)
	34827				2006/08	1	A	B					G	H																		自排(AT)
75	左煞車鋼管(STEEL TUBE,BRAKE L.H.)																															
	32483	MD-161			2005/04	1	A	B	C	D	E	F	G	H	I	J	K	L													317314 Y416478	停用(NOT USED)
	34828				2006/08	1	A	B					G	H																		自排(AT)
76	寸動彈簧(左)(SPRING)(L.H.)																															
	32484	92512444				1	A	B	C	D	E	F	G	H	I	J	K	L														停用(NOT USED)
	32484	92512444			2005/11	1	A	B					G	H																	Y318988	自排(AT)
77	懸吊拉線(SUSPENSORY WIRE PULL)																															
	34673					1	A	B	C	D	E	F	G	H	I	J	K	L														
78	螺帽(NUT)																															
	34157	92512479				1	A	B	C	D	E	F	G	H	I	J	K	L														

https://truckmanualshub.com/

轉向系統
A303
STEERING SYSTEM

油壓方向機
A303-4
POWER STEERING

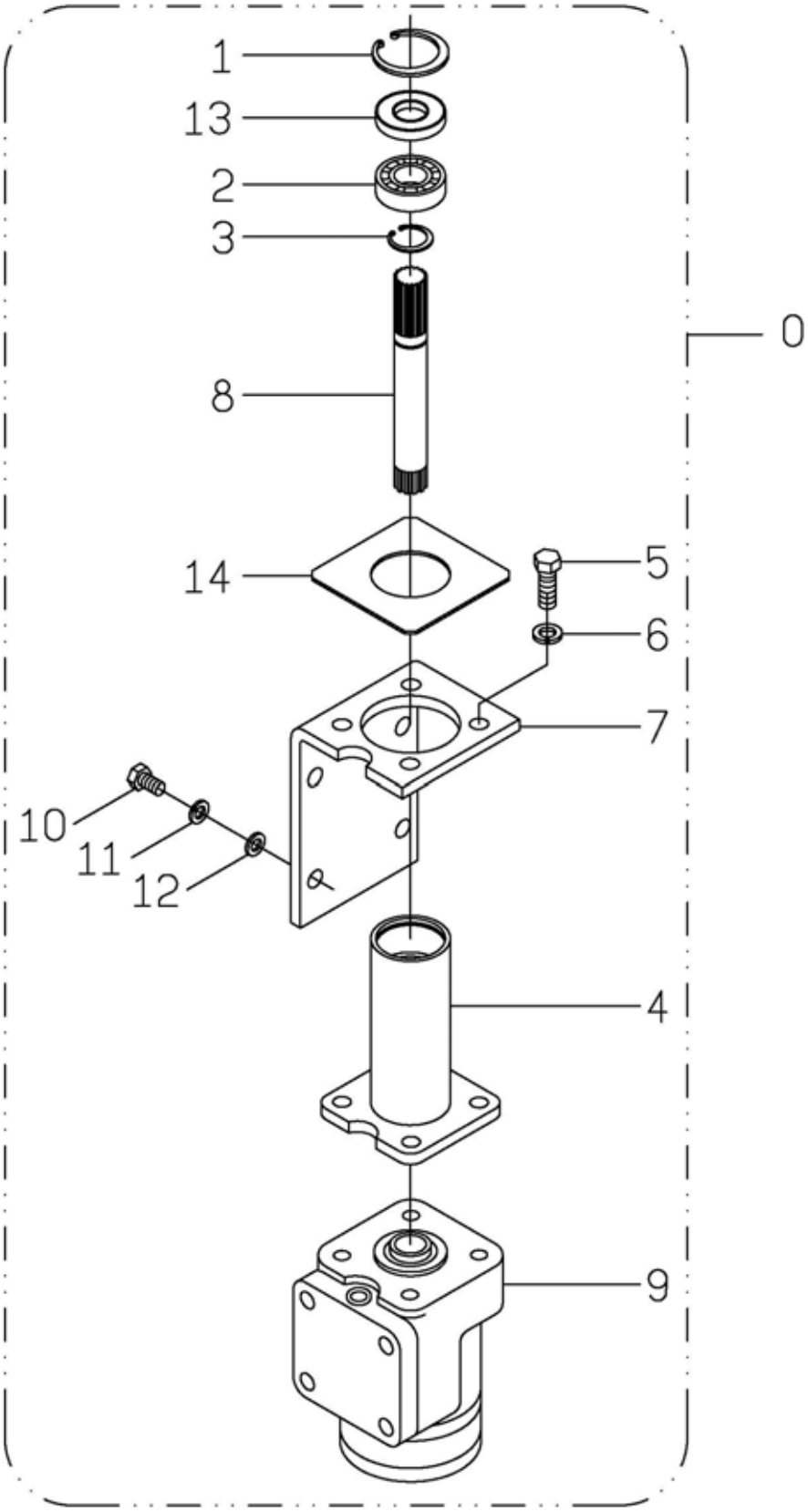

https://truckmanualshub.com/

轉向系統
A303
STEERING SYSTEM

油壓方向機
A303-4
POWER STEERING

編號 NO.	零件名稱 PART NAME						FD						FG						FD〔C〕						FG〔C〕						機號 BODY NO.	備註 REMARK
	新碼 NEW PART NO.	舊碼 OLD PART NO.	規格 SPECIFICATION	互換性 ITC	應用日期 APPLIED DATE	數量 QTY	1 5 A	1 8 B	2 0 C	2 5 D	3 0 E	3 5 F	1 5 G	1 8 H	2 0 I	2 5 J	3 0 K	3 5 L	1 5 M	1 8 N	2 0 O	2 5 P	3 0 Q	3 5 R	1 5 S	1 8 T	2 0 U	2 5 V	3 0 W	3 5 X		
0	**轉向閥組(STEERING VALVE ASSY)**																															
	B350055					1	A	B	C	D	E	F	G	H	I	J	K	L														
1	**扣環(RING, BUTTON)**																															
	M1312-R42	92512801				1	A	B	C	D	E	F	G	H	I	J	K	L														
2	**軸承(BEARING)**																															
	M0901-6004VV	92512802				1	A	B	C	D	E	F	G	H	I	J	K	L														
3	**扣環(RING, BUTTON)**																															
	M1312-S20	94012803				1	A	B	C	D	E	F	G	H	I	J	K	L														
4	**心軸座(SPINDLE BRACKET)**																															
	32485	32512808C				1	A	B	C	D	E	F	G	H	I	J	K	L														
5	**螺栓(BOLT)**																															
	32254	32506049				4	A	B	C	D	E	F	G	H	I	J	K	L														
6	**彈簧墊圈(SPRING WASHER)**																															
	M1605-M10	92501218				4	A	B	C	D	E	F	G	H	I	J	K	L														
7	**固定座(FIXED BRACKET)**																															
	32486	32512807				1	A	B	C	D	E	F	G	H	I	J	K	L														
8	**心軸(SPINDLE)**																															
	32487	72512804				1	A	B	C	D	E	F	G	H	I	J	K	L														
9	**本體(BODY STEIN)**																															
	33883	92512809				1	A	B	C	D	E	F	G	H	I	J	K	L														
10	**螺栓(BOLT)**																															
	M1424010	92512810				4	A	B	C	D	E	F	G	H	I	J	K	L														
11	**彈簧墊圈(SPRING WASHER)**																															
	M1605-M12	92501024				4	A	B	C	D	E	F	G	H	I	J	K	L														
12	**平墊圈(WASHER)**																															
	M1602021	92512812				4	A	B	C	D	E	F	G	H	I	J	K	L														
13	**油封(SEAL)**																															
	M0702026	92512813				1	A	B	C	D	E	F	G	H	I	J	K	L														
14	**墊片(PACKING)**																															
	32490	32512814				1	A	B	C	D	E	F	G	H	I	J	K	L														

https://truckmanualshub.com/

引擎系統
A304
ENGINE SYSTEM

https://truckmanualshub.com/

引擎系統
A304
EMENGINE SYSTEM

引擎組

A304-1

ENGINE ISUZU C240

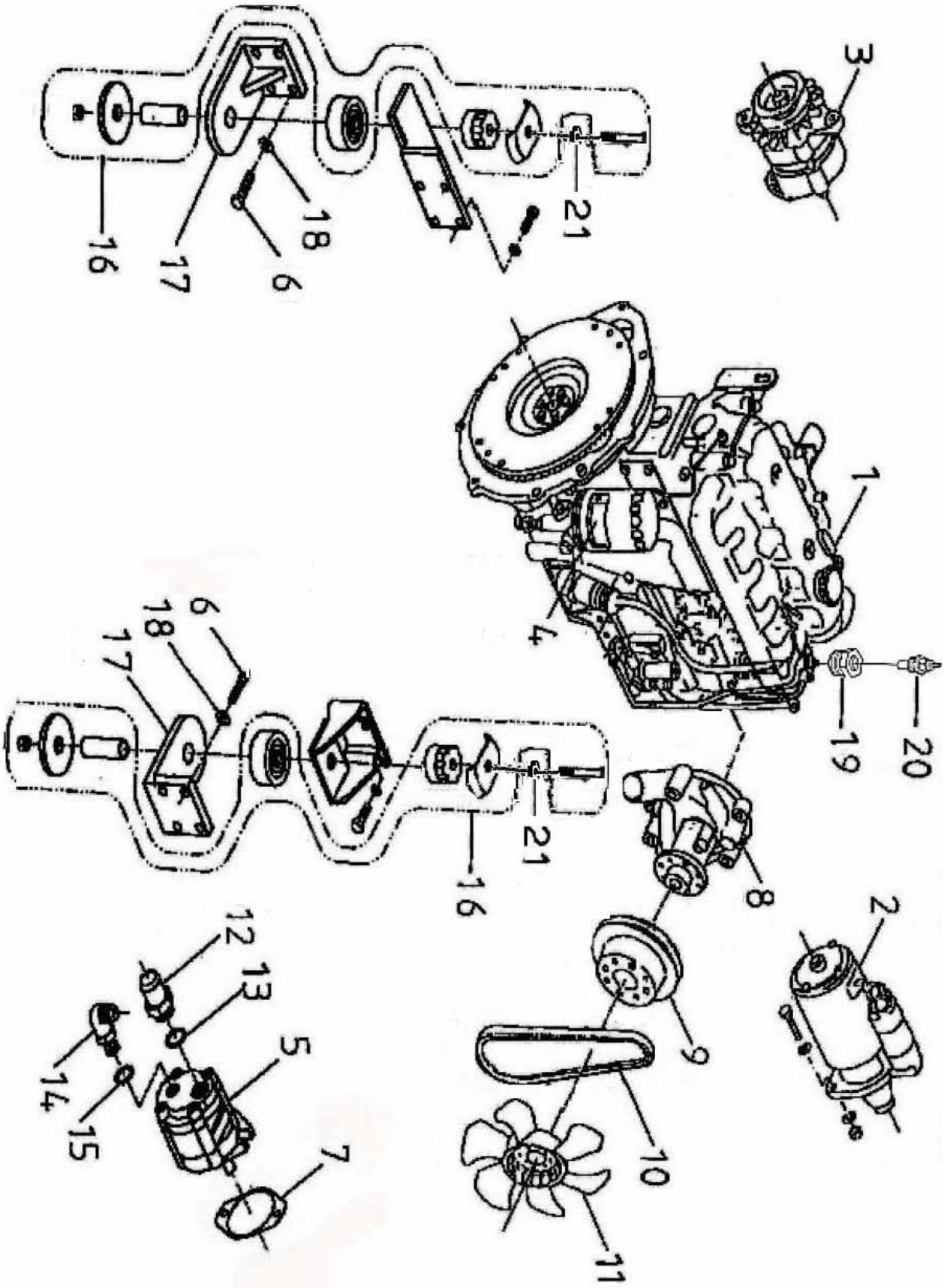

https://truckmanualshub.com/

引擎系統
A304
EMENGINE SYSTEM

引擎組
A304-1
ENGINE ISUZU C240

編號 NO.	零件名稱 PART NAME 新碼 NEW PART NO.	舊碼 OLD PART NO.	規格 SPECIFICATION	互換性 ITC	應用日期 APPLIED DATE	數量 QTY	FD 15A 18B 20C 25D 30E 35F	FG 15G 18H 20I 25J 30K 35L	FD〔C〕 15M 18N 20O 25P 30Q 35R	FG〔C〕 15S 18T 20U 25V 30W 35X	機號 BODY NO.	備註 REMARK
1	引擎總成(ENGINE)											
	32491	72510101				1	A B C D					
2	啟動馬達(STARTER)											
	32492	72510102				1	A B C D					
3	發電機(ALTERNATOR)											
	32493	72510103				1	A B C D					
4	機油濾心(CARTRIDGE ASSY)											
	32494	92510127				1	A B C D					
5	油壓泵浦(PUMP)											
	32495	72510105				1	A B C D					
6	螺栓(BOLT)											
	32012	92501006				8	A B C D					
7	墊片(PACKING)											
	32496	32510107				1	A B C D					
8	水泵浦(PUMP)											
	32497	92510129				1	A B C D					
9	皮帶輪(BELT PULLEY)											
	32498	92510130				1	A B C D					
10	皮帶(BELT)											
	32499	92510131				1	A B C D					
11	風扇(FAN, COOLING)											
	32500	92510128				1	A B C D					
12	接頭(CONNECTOR)											
		92510116			2000/10	1	A B C D					停用(NOT USED)
	32501	92510140			2003/02	1	A B C D					停用(NOT USED)
	32501A				2006/05	1	A B C D					
13	O型環("O"RING)											
	M0801-P28	92501216			2000/10	1	A B C D					停用(NOT USED)
	M0801-P30	94008226			2003/02	1	A B C D					停用(NOT USED)
	M0801-P28	92501216			2003/12	1	A B C D					
14	接頭(CONNECTOR)											
	32502	92510117			2003/02	1	A B C D					停用(NOT USED)
	32502A				2006/05	1	A B C D					
15	O型環("O"RING)											
	M0801-P24	92509052				1	A B C D					
16	防震墊組(SHOCK ABSORBER)											
	B350056	22510141				2	A B C D					

https://truckmanualshub.com/

引擎系統
A304
EMENGINE SYSTEM

引擎組
A304-1
ENGINE ISUZU C240

編號 NO.	零件名稱 PART NAME 新碼 NEW PART NO.	舊碼 OLD PART NO.	規格 SPECIFICATION	互換性 ITC	應用日期 APPLIED DATE	數量 QTY	FD 15 A	FD 18 B	FD 20 C	FD 25 D	FD 30 E	FD 35 F	FG 15 G	FG 18 H	FG 20 I	FG 25 J	FG 30 K	FG 35 L	FD〔C〕 15 M	FD〔C〕 18 N	FD〔C〕 20 O	FD〔C〕 25 P	FD〔C〕 30 Q	FD〔C〕 35 R	FG〔C〕 15 S	FG〔C〕 18 T	FG〔C〕 20 U	FG〔C〕 25 V	FG〔C〕 30 W	FG〔C〕 35 X	機號 BODY NO.	備註 REMARK
17	托架(SUPPORT, ENGINE)																															
		31510123A				2	A	B																								停用(NOT USED)
	32504	32510123				2			C	D																						停用(NOT USED)
	32503	31510123B			2005/09	1	A	B																								
	31966	31510139B				1	A	B																								
	32504A					2			C	D																						
18	彈簧華司(SPRING WASHER)																															
	M1605-M12	92501024				8	A	B	C	D																						
19	水溫器座(WATER TEMPERATURE SENSOR SEAT)																															
	32149	92520317A				1	A	B	C	D																						
20	水溫器(WATER TEMPERATURE SENSOR)																															
	31524					1	A	B	C	D																						停用(NOT USED)
	31525					1	A	B	C	D																						停用(NOT USED)
	E3402004				2006/01	1	A	B	C	D																						
21	平墊圈(WASHER)																															
	M1602028	92510121				2			C	D	E	F																				

https://truckmanualshub.com/

引擎系統
A304
EMENGINE SYSTEM

引擎組

A304-1A

ENGINE ISUZU 4JG2.4JG2PJ03

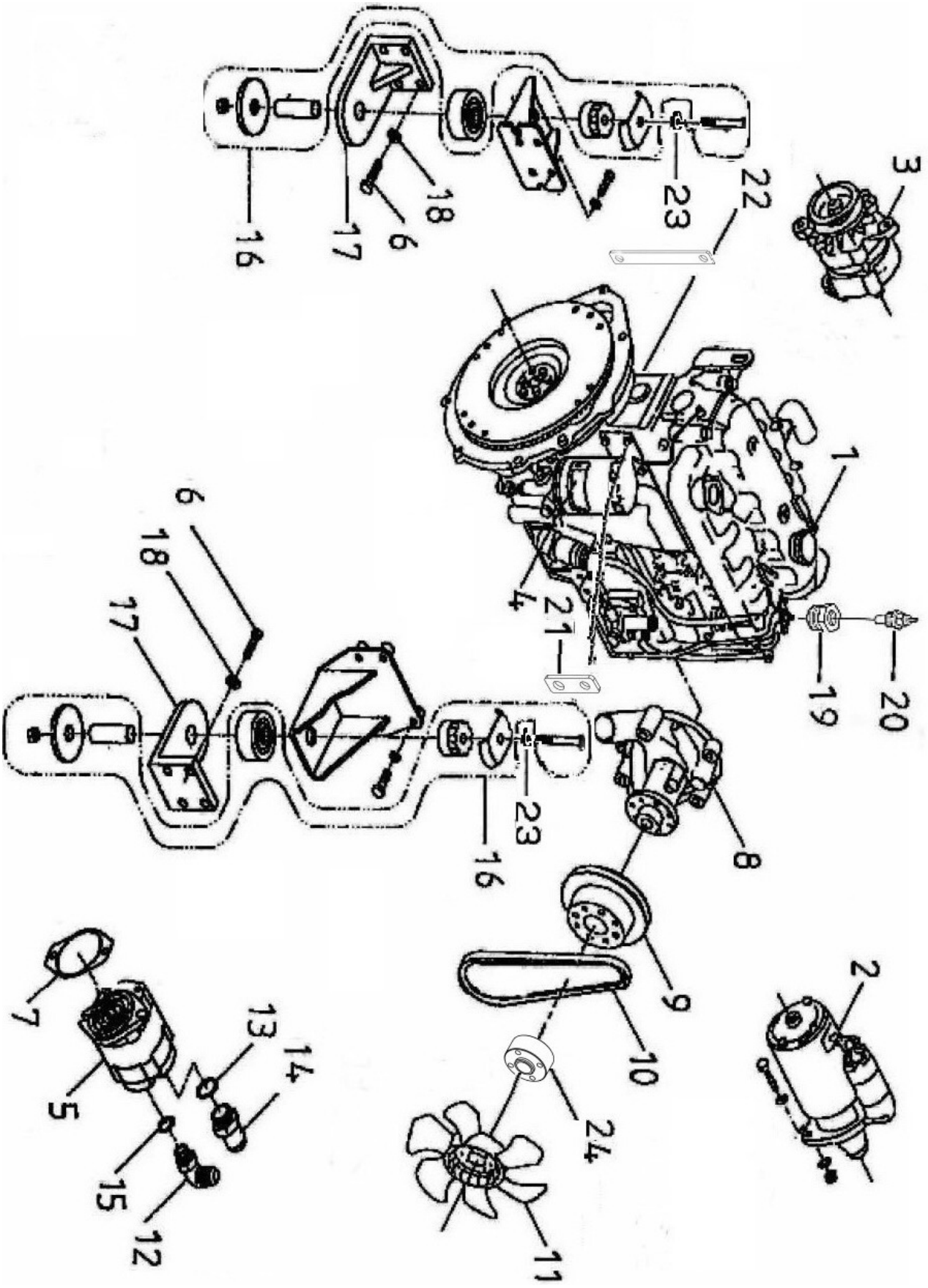

https://truckmanualshub.com/

引擎組
A304-1A
ENGINE ISUZU 4JG2.4JG2PJ03

編號 NO.	零件名稱 PART NAME						FD						FG						FD〔C〕						FG〔C〕						機號 BODY NO.	備註 REMARK
	新碼 NEW PART NO.	舊碼 OLD PART NO.	規格 SPECIFICATION	互換性 ITC	應用日期 APPLIED DATE	數量 QTY	15A	18B	20C	25D	30E	35F	15G	18H	20I	25J	30K	35L	15M	18N	20O	25P	30Q	35R	15S	18T	20U	25V	30W	35X		
1	引擎總成(ENGINE)																															
	32505	72510212	4JG2-PE			1	C	D	E	F																						
	32506	72510213	4JG2PJ03			1	C	D	E	F																						
2	啟動馬達(STARTER)																															
		72510202	4JG2-PE		2000/10	1	C	D	E	F																					停用(NOT USED)	
		72510214	4JG2PJ03		2000/10	1	C	D	E	F																					停用(NOT USED)	
	32507	72510202	4JG2-PE		2003/02	1	C	D	E	F																						
	32507	72510202	4JG2PJ03		2003/02	1	C	D	E	F																						
3	發電機(ALTERNATOR)																															
		72510103			2000/10	1	C	D	E	F																						
	32508	72510216			2003/02	1	C	D	E	F																						
4	機油濾心(CARTRIDGE ASSY)																															
	32509	92510207				1	C	D	E	F																						
5	油壓泵浦(PUMP)																															
		72510211	4JG2-PE		2000/10	1	C	D	E	F																					停用(NOT USED)	
		72510215	4JG2PJ03		2000/10	1	C	D	E	F																					停用(NOT USED)	
	32510	72510211	4JG2-PE		2003/02	1	C	D	E	F																						
	32510	72510211	4JG2PJ03		2003/02	1	C	D	E	F																						
6	螺栓(BOLT)																															
	32012	92501006				8	C	D	E	F																						
7	墊片(PACKING)																															
	32496	32510107				1	C	D	E	F																						
8	水泵浦(PUMP)																															
	32511	92510209				1	C	D	E	F																						
9	皮帶輪(BELT PULLEY)																															
		92510130			2000/10	1	C	D	E	F																						
	M1213001				2003/02	1	C	D	E	F																						
10	皮帶(BELT)																															
		92510131			2000/10	1	C	D	E	F																						
	M1203004				2003/02	1	C	D	E	F																						
11	風扇(FAN, COOLING)																															
	32512	92510208				1	C	D	E	F																						
12	接頭(CONNECTOR)																															
		92510206			2000/10	1	C	D	E	F																					停用(NOT USED)	
	32501	92510140			2003/02	1	C	D	E	F																					停用(NOT USED)	
	32501A				2006/05	1	C	D	E	F																						

https://truckmanualshub.com/

引擎系統
A304
EMENGINE SYSTEM

引擎組
A304-1A
ENGINE ISUZU 4JG2.4JG2PJ03

編號 NO.	零件名稱 PART NAME						FD						FG						FD〔C〕						FG〔C〕						機號 BODY NO.	備註 REMARK
	新碼 NEW PART NO.	舊碼 OLD PART NO.	規格 SPECIFICATION	互換性 ITC	應用日期 APPLIED DATE	數量 QTY	15 A	18 B	20 C	25 D	30 E	35 F	15 G	18 H	20 I	25 J	30 K	35 L	15 M	18 N	20 O	25 P	30 Q	35 R	15 S	18 T	20 U	25 V	30 W	35 X		
13	O型環("O"RING)																															
		92509052				1	C	D	E	F																						停用(NOT USED)
	M0801-P30	94008226			2003/02	1	C	D	E	F																						停用(NOT USED)
	M0801-P28	92501216			2003/12	1	C	D	E	F																						
14	接頭(CONNECTOR)																															
		92510210			2000/10	1	C	D	E	F																						停用(NOT USED)
	32502	92510117			2003/02	1	C	D	E	F																						停用(NOT USED)
	32502A				2006/05	1	C	D	E	F																						
15	O型環("O"RING)																															
		92501216			2000/10	1	C	D	E	F																						停用(NOT USED)
	M0801-P24	92509052			2003/02	1	C	D	E	F																						
16	防震墊組(SHOCK ABSORBER)																															
	B350056	22510141				2	C	D	E	F																						
17	托架(SUPPORT, ENGINE)																															
	32504	32510123				2	C	D	E	F																						停用(NOT USED)
	32504A				2006/11	2	C	D	E	F																						
18	彈簧華司(SPRING WASHER)																															
	M1605-M12	92501024				8	C	D	E	F																						
19	水溫器座(WATER TEMPERATURE SENSOR SEAT)																															
	32149	92520317A				1	C	D	E	F																						
20	水溫器(WATER TEMPERATURE SENSOR)																															
	31524					1	C	D	E	F																						停用(NOT USED)
	31525					1	C	D	E	F																						停用(NOT USED)
	E3402004				2006/01	1	C	D	E	F																						
21	油管固定片(FIXED SHICE OIL PIPE)																															
	34819	32510150			2006/08	1	C	D	E	F																						
22	固定片(FIXED SHICE)																															
	34820				2006/08	1	C	D	E	F																						
23	平墊圈(WASHER)																															
	M1602028	92510121				2	C	D	E	F																						
24	風扇墊圈(FAN WASHER)																															
	34837	32510216			2006/08	1	C	D	E	F																						手排(MT)

https://truckmanualshub.com/

引擎系統
A304
EMENGINE SYSTEM

引擎組

A304-1B

ENGINE NISSAN H20.H25

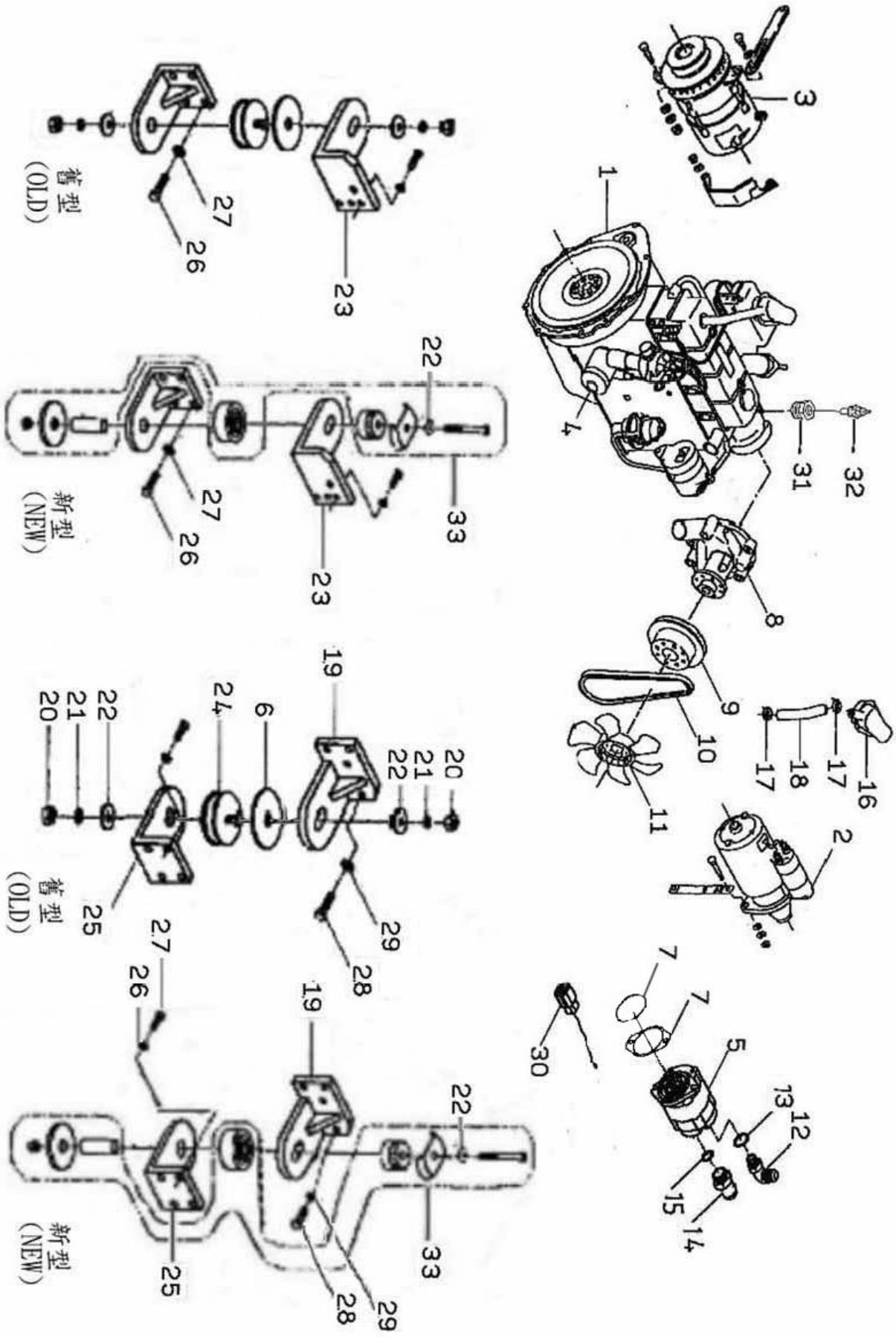

https://truckmanualshub.com/

引擎組
A304-1B
ENGINE NISSAN H20.H25

編號 NO.	零件名稱 PART NAME			互換性 ITC	應用日期 APPLIED DATE	數量 QTY	FD						FG						FD〔C〕						FG〔C〕						機號 BODY NO.	備註 REMARK
	新碼 NEW PART NO.	舊碼 OLD PART NO.	規格 SPECIFICATION				15 A	18 B	20 C	25 D	30 E	35 F	15 G	18 H	20 I	25 J	30 K	35 L	15 M	18 N	20 O	25 P	30 Q	35 R	15 S	18 T	20 U	25 V	30 W	35 X		
1	引擎總成(ENGINE)																															
	32513	72510301	H20			1							G	H	I	J																
	32514	72510322	H25			1										J	K	L														
2	啟動馬達(STARTER)																															
	32515	72510302	H20			1							G	H	I	J																
	32516	72510317	H25			1										J	K	L														
3	發電機(ALTERNATOR)																															
	32517	72510303				1							G	H	I	J	K	L														
4	機油濾心(CARTRIDGE ASSY)																															
	32518	92510310				1							G	H	I	J	K	L														
5	油壓泵浦(PUMP)																															
	32519	72510318	H20			1							G	H	I	J																
	32520	72510319	H25			1										J	K	L														
6	引擎支架墊片(PACKING)																															
	32521	92510108				N							G	H	I	J	K	L														停用(NOT USED)
7	墊片(PACKING)																															
	32496	32510107				1							G	H	I	J	K	L														
7	O型環("O"RING)																															
	M0801-G70	93006038				1							G	H	I	J	K	L														
8	水泵浦(PUMP)																															
	32522	92510314				1							G	H	I	J	K	L														
9	皮帶輪(BELT PULLEY)																															
	32523	92510315				1							G	H	I	J	K	L														
10	皮帶(BELT)																															
	32524	92510316				1							G	H	I	J	K	L														
11	風扇(FAN, COOLING)																															
	32525	92510311				1							G	H	I	J	K	L														
12	90°接頭(CONNECTOR)																															
	32526	92510206			1999/11	1							G	H	I	J	K	L														停用(NOT USED)
	32502	92510117			2003/02	1							G	H	I	J	K	L														停用(NOT USED)
	32502A				2006/05	1							G	H	I	J	K	L														
13	O型環("O"RING)																															
	M0801-P24	92509052				1							G	H	I	J	K	L														
14	接頭(CONNECTOR)																															
	32527	92510116			1999/11	1							G	H	I	J	K	L														停用(NOT USED)
	32501	92510140			2003/02	1							G	H	I	J	K	L														停用(NOT USED)
	32501A				2006/05	1							G	H	I	J	K	L														

https://truckmanualshub.com/

引擎組
A304-1B
ENGINE NISSAN H20.H25

編號 NO.	零件名稱 PART NAME						FD						FG						FD〔C〕						FG〔C〕						機號 BODY NO.	備註 REMARK
	新碼 NEW PART NO.	舊碼 OLD PART NO.	規格 SPECIFICATION	互換性 ITC	應用日期 APPLIED DATE	數量 QTY	15 A	18 B	20 C	25 D	30 E	35 F	15 G	18 H	20 I	25 J	30 K	35 L	15 M	18 N	20 O	25 P	30 Q	35 R	15 S	18 T	20 U	25 V	30 W	35 X		
15	O型環("O"RING)																															
	M0801-P28	92501216			2000/10	1							G	H	I	J	K	L														停用(NOT USED)
	M0801-P30	94008226			2003/02	1							G	H	I	J	K	L														停用(NOT USED)
	M0801-P28	92501216			2003/12	1							G	H	I	J	K	L														
16	進氣罩(HORN ASSY-AIR)																															
	32528	92510305				1							G	H	I	J	K	L														
17	管束(CLAMP, HOSE)																															
		92510306				2							G	H	I	J	K	L														
18	橡膠管(HOSE)																															
	32529	92510307				1							G	H	I	J	K	L														
19	托架(SUPPORT, ENGINE)																															
	32530	32510309				1							G	H	I	J	K	L														
20	螺帽(NUT)																															
		92510119				4							G	H	I	J	K	L														停用(NOT USED)
21	彈簧華司(SPRING WASHER)																															
	M1605-M12	92501024				4							G	H	I	J	K	L														停用(NOT USED)
22	平墊圈(WASHER)																															
	M1602028	92510121				4							G	H	I	J	K	L														停用(NOT USED)
	M1602028	92510121			2006/07	2							G	H	I	J	K	L														
23	托架(SUPPORT, ENGINE)																															
	32531	32510308				1							G	H	I	J	K	L														
24	防震墊圈(BRACKET ASSY)																															
	32532	92510122				2							G	H	I	J	K	L														停用(NOT USED)
25	托架(SUPPORT, ENGINE)																															
	32504	32510123				2							G	H	I	J	K	L														停用(NOT USED)
	32504A					1							G	H																		
	32503	31510123B				1							G	H																		
	32504A					2									I	J	K	L														
26	螺栓(BOLT)																															
	32012	92501006				8							G	H	I	J	K	L														
27	彈簧華司(SPRING WASHER)																															
	M1605-M12	92501024				8							G	H	I	J	K	L														
28	螺栓(BOLT)																															
		92510312				8							G	H	I	J	K	L														
29	彈簧華司(SPRING WASHER)																															
	M1605-M10	92501218				8							G	H	I	J	K	L														

https://truckmanualshub.com/

引擎系統
A304
EMENGINE SYSTEM

引擎組
A304-1B
ENGINE NISSAN H20.H25

編號 NO.	零件名稱 PART NAME						FD						FG						FD〔C〕						FG〔C〕						機號 BODY NO.	備註 REMARK
	新碼 NEW PART NO.	舊碼 OLD PART NO.	規格 SPECIFICATION	互換性 ITC	應用日期 APPLIED DATE	數量 QTY	1 5 A	1 8 0 2 0 5 B	2 0 5 C	2 5 D	3 0 5 E	3 5 F	1 5 G	1 8 0 2 0 5 H	2 0 5 I	2 5 J	3 0 5 K	3 5 L	1 5 M	1 8 0 2 0 5 N	2 0 5 O	2 5 P	3 0 5 Q	3 5 R	1 5 S	1 8 0 2 0 5 T	2 0 5 U	2 5 V	3 0 5 W	3 5 X		
30	**高壓線接頭(HIGH-HANDED LINE CONNECT)**																															
	32533	92510326				1							G	H	I	J	K	L														
31	**水溫器座(WATER TEMPERATURE SENSOR SEAT)**																															
	E3606002	34010214A				1							G	H	I	J	K	L														
32	**水溫器(WATER TEMPERATURE SENSOR)**																															
	31524					1							G	H	I	J	K	L													停用(NOT USED)	
	31525					1							G	H	I	J	K	L													停用(NOT USED)	
	E3402004				2006/01	1							G	H	I	J	K	L														
33	**防震墊組(SHOCK ABSORBER)**																															
	B350056	22510141			2006/07	2							G	H	I	J	K	L														

https://truckmanualshub.com/

引擎系統
A304
EMENGINE SYSTEM

散熱器組
A304-2
RADIATOR

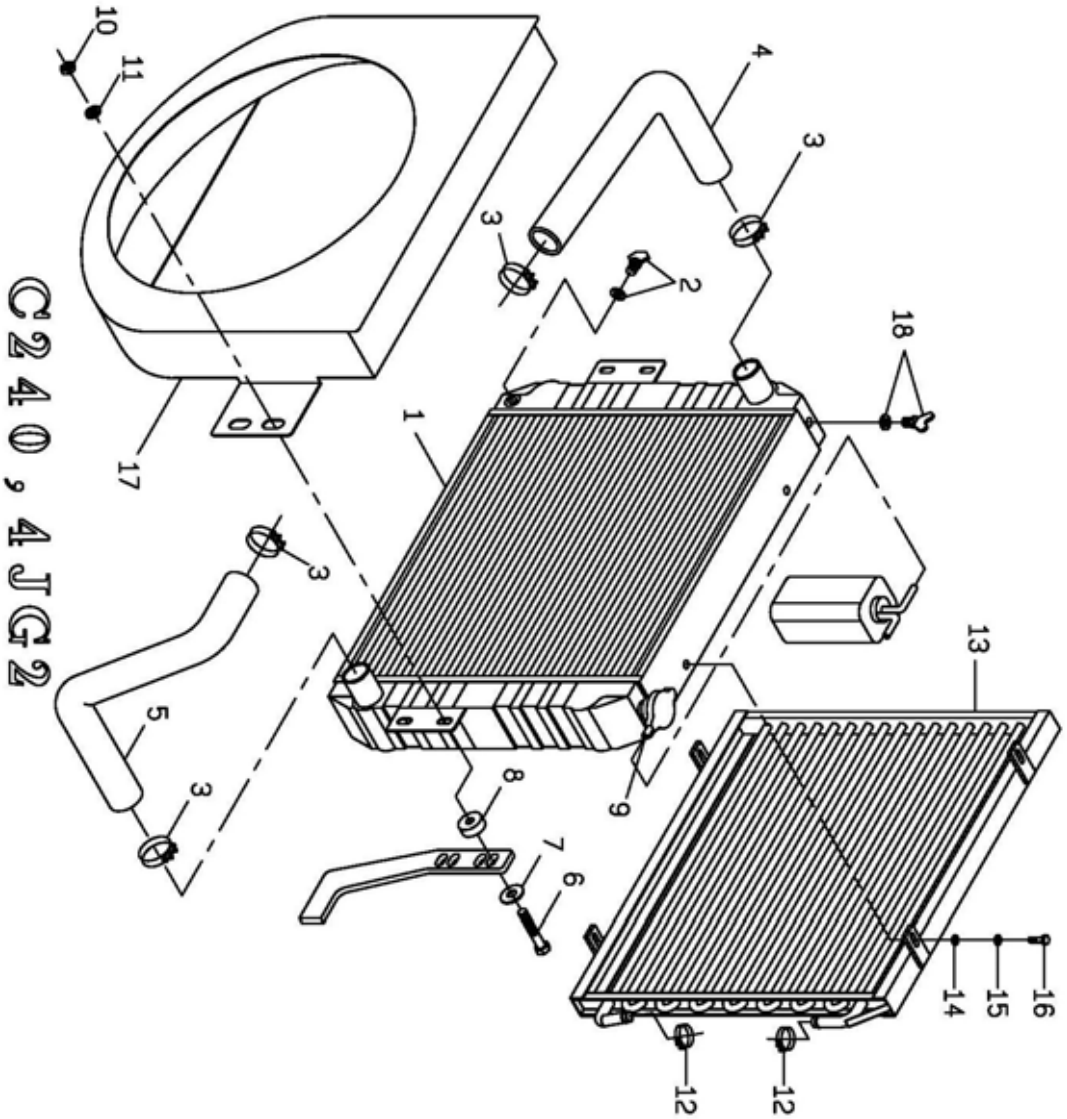

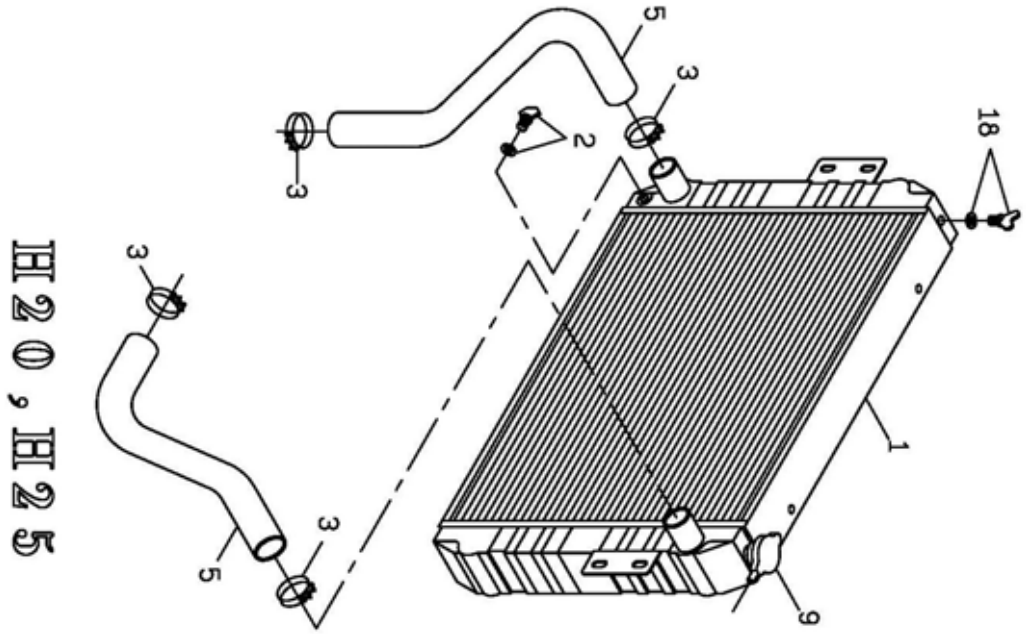

https://truckmanualshub.com/

散熱器組
A304-2
RADIATOR

編號 NO.	零件名稱 PART NAME						FD						FG						FD〔C〕						FG〔C〕						機號 BODY NO.	備註 REMARK
	新碼 NEW PART NO.	舊碼 OLD PART NO.	規格 SPECIFICATION	互換性 ITC	應用日期 APPLIED DATE	數量 QTY	1585 A	1805 B	2005 C	2305 D	2505 E	3005 F	1585 G	1805 H	2005 I	2305 J	2505 K	3005 L	1585 M	1805 N	2005 O	2305 P	2505 Q	3005 R	1585 S	1805 T	2005 U	2305 V	2505 W	3005 X		
1	冷卻水箱(RADIATOR)																															
		92510413	H20,H25		2000/10	1							G	H	I	J	K	L														停用(NOT USED)
	32539	92510404	C240			1	A	B	C	D																						手排(MT)
	32539	92510404	C240			1	A	B																								自排(AT)
	32540	92510414	C240			1			C	D																						自排(AT)
	32541	92510434	4JG2			1			C	D	E	F																				
	32542	92510430	H20,H25		2003/02	1							G	H	I	J	K	L														
2	翼型螺帽(BUTTERFLY BOLT)																															
	32559	92510412				1	A	B	C	D	E	F	G	H	I	J	K	L														
3	管束(CLAMP, HOSE)																															
	M1315013	92508003	C240			4	A	B	C	D																						
	M1315015	92510411	4JG2			4			C	D	E	F																				
	M1315013	92508003	H20,H25			4							G	H	I	J	K	L														
4	耐高溫水管(上)(RADIATOR HOSE, UPPER)																															
	32546	92510407	C240			1	A	B	C	D																						
	32547	92510420	4JG2			1			C	D	E	F																				
5	耐高溫水管(下)(RADIATOR HOSE, LOWER)																															
	32548	92510408	C240			1	A	B	C	D																						
	32549	92510418	4JG2			1			C	D	E	F																				
	32550	92510419	H20,H25			2							G	H	I	J	K	L														
6	螺栓(BOLT)																															
	M1424-M8*45	92560416				4	A	B	C	D	E	F	G	H	I	J	K	L														
7	平華司(WASHER)																															
	M1602010	92507027				4	A	B	C	D	E	F	G	H	I	J	K	L														
8	橡膠墊圈(WASHER, RUBBER)																															
	32551	92510403				4	A	B	C	D	E	F	G	H	I	J	K	L														
9	水箱蓋(COVER RADIATOR)																															
	32552	92510435				1	A	B	C	D	E	F	G	H	I	J	K	L														
10	螺帽(NUT)																															
	M1501-M8	92501115				4	A	B	C	D	E	F	G	H	I	J	K	L														
11	彈簧華司(SPRING WASHER)																															
	M1605-M8	92501019				4	A	B	C	D	E	F	G	H	I	J	K	L														
12	管束(CLAMP, HOSE)																															
	M1315011	92508007				2	A	B	C	D	E	F	G	H	I	J	K	L														
13	散熱器(RADIATOR)																															
	32553	92510425				1	A	B	C	D	E	F	G	H	I	J	K	L														
14	平華司(WASHER)																															
	M1602004	92510428				4	A	B	C	D	E	F	G	H	I	J	K	L														

https://truckmanualshub.com/

散熱器組
A304-2
RADIATOR

編號 NO.	零件名稱 PART NAME						FD						FG						FD〔C〕						FG〔C〕						機號 BODY NO.	備註 REMARK
	新碼 NEW PART NO.	舊碼 OLD PART NO.	規格 SPECIFICATION	互換性 ITC	應用日期 APPLIED DATE	數量 QTY	15 A	18 B	20 C	25 D	30 E	35 F	15 G	18 H	20 I	25 J	30 K	35 L	15 M	18 N	20 O	25 P	30 Q	35 R	15 S	18 T	20 U	25 V	30 W	35 X		
15	**彈簧華司(SPRING WASHER)**																															
	M1605-M6	92503218				4	A	B	C	D	E	F	G	H	I	J	K	L														
16	**螺栓(BOLT)**																															
	M1423-M6*10	92507015				4	A	B	C	D	E	F	G	H	I	J	K	L														
17	**風罩(SHROUD, FAN)**																															
	32555	92510431B	4JG2		1999/10	1			C	D	E	F																			停用(NOT USED)	
	32554	92510432	C240			1	A	B																								
	32555	92510431C	4JG2		2006/05	1			C	D	E	F																				
	35011		C240			1			C	D	E	F																				
	32556	92510433	H20,H25			1							G	H	I	J	K	L														
18	**翼型螺帽(BUTTERFLY BOLT)**																															
	32558	92510436				1	A	B	C	D	E	F	G	H	I	J	K	L														

https://truckmanualshub.com/

引擎系統
A304
EMENGINE SYSTEM

消音器組
A304-3
EXHAUST

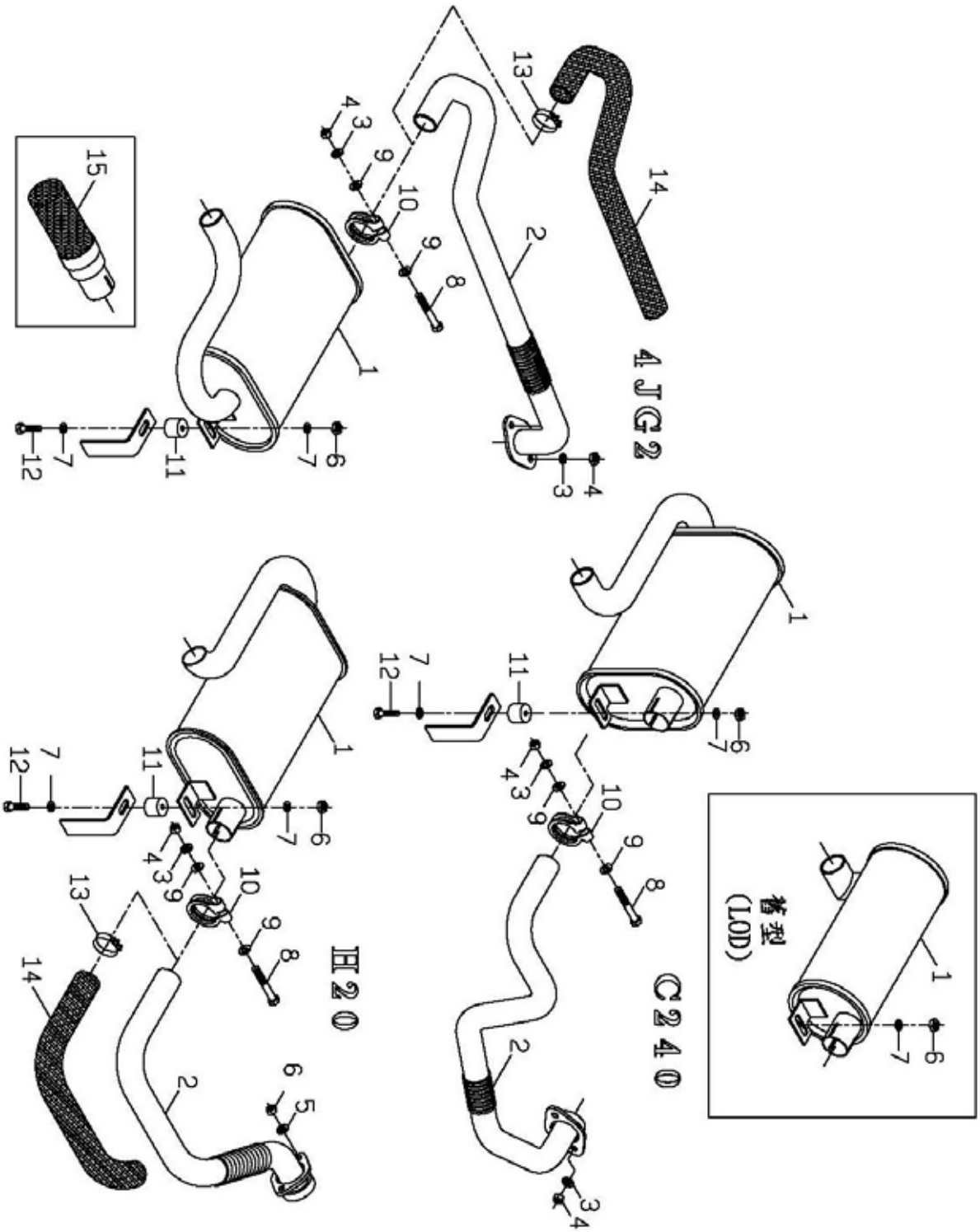

https://truckmanualshub.com/

消音器組
A304-3
EXHAUST

編號 NO.	零件名稱 PART NAME						FD						FG						FD〔C〕						FG〔C〕						機號 BODY NO.	備註 REMARK
	新碼 NEW PART NO.	舊碼 OLD PART NO.	規格 SPECIFICATION	互換性 ITC	應用日期 APPLIED DATE	數量 QTY	1585 A	1805 B	2005 C	2305 D	3005 E	3505 F	1585 G	1805 H	2005 I	2305 J	3005 K	3505 L	1585 M	1805 N	2005 O	2305 P	3005 Q	3505 R	1585 S	1805 T	2005 U	2305 V	3005 W	3505 X		
1	**消音器(MUFFLER)**																															
		32510501	C240		2000/10	1	A	B	C	D																						停用(NOT USED)
	30891		C240,H20		2003/02	1	A	B	C	D			G	H																		停用(NOT USED)
	32567	32510520	H20,H25			1									I	J	K	L														停用(NOT USED)
	30891		C240,H20		2003/02	1	A	B					G	H																		
	32566	32510517	4JG2			1			C	D	E	F																				
	32567	32510520	C240,H20,H25			1			C	D					I	J	K	L														
2	**排氣管(EXHAUST) ISUZU C240**																															
	32571	32510519				1	A	B																								停用(NOT USED)
	32570	32510503				1	A	B	C	D	E																					手排(MT)
	32572	32510521				1	A	B	C	D	E																					自排(AT)
2	**排氣管(EXHAUST) ISUZU 4JG2**																															
	32573	32510518				1			C	D	E	F																				手排(MT)
	32574	32510522				1			C	D	E	F																				自排(AT)
2	**排氣管(EXHAUST) NISSAN H20 & H25**																															
	32575	32510504				1							G	H	I	J	K	L														
3	**彈簧華司(SPRING WASHER)**																															
	M1605-M10	92501218				3	A	B	C	D	E	F	G	H	I	J	K	L														
4	**螺帽(NUT)**																															
		92506028				3	A	B	C	D	E	F	G	H	I	J	K	L														
5	**彈簧華司(SPRING WASHER)**																															
	M1605-M8	92501019	H20,H25			2							G	H	I	J	K	L														
6	**螺帽(NUT)**																															
	M1501-M8	92501115	C240,4JG2			2	A	B	C	D	E	F																				
	M1501-M8	92501115	H20,H25			4							G	H	I	J	K	L														
7	**平華司(WASHER)**																															
	M1602010	92507027				4	A	B	C	D	E	F	G	H	I	J	K	L														
8	**螺栓(BOLT)**																															
		92510511				1	A	B	C	D	E	F	G	H	I	J	K	L														
9	**平華司(WASHER)**																															
	M1602013	92520420				2	A	B	C	D	E	F	G	H	I	J	K	L														
10	**固定環(STAY-RING)**																															
	32578	92510513				1	A	B	C	D	E	F	G	H	I	J	K	L														
11	**橡膠墊圈(GASKET, RUBBER)**																															
	32579	92510514				2	A	B	C	D	E	F	G	H	I	J	K	L														
12	**螺栓(BOLT)**																															
	M1424-M8*55	92510515				2	A	B	C	D	E	F	G	H	I	J	K	L														

https://truckmanualshub.com/

消音器組
A304-3
EXHAUST

編號 NO.	零件名稱 PART NAME			互換性 ITC	應用日期 APPLIED DATE	數量 QTY	FD	FG	FD〔C〕	FG〔C〕	機號 BODY NO.	備註 REMARK
	新碼 NEW PART NO.	舊碼 OLD PART NO.	規格 SPECIFICATION				15 18 20 25 30 35 A B C D E F	15 18 20 25 30 35 G H I J K L	15 18 20 25 30 35 M N O P Q R	15 18 20 25 30 35 S T U V W X		
13	**管束(CLAMP, HOSE)**											
	M1315008	92508004				1	A B C D E F	G H I J K L				
14	**隔熱管(LAGGING MATERIAL)**											
	32581	92510525	C240			1	A B C D					
	32580	92510524	4JG2			1	C D E F					
	32583		H20,H25			1		G H I J K L				
15	**滅燄器(FIRE EXTINGUISHER)**											
	32584	92510526				1	A B C D E F	G H I J K L				選配件(CHOOSE)

https://truckmanualshub.com/

引擎系統
A304
EMENGINE SYSTEM

空氣濾清器組
A304-4
AIR CLEANER

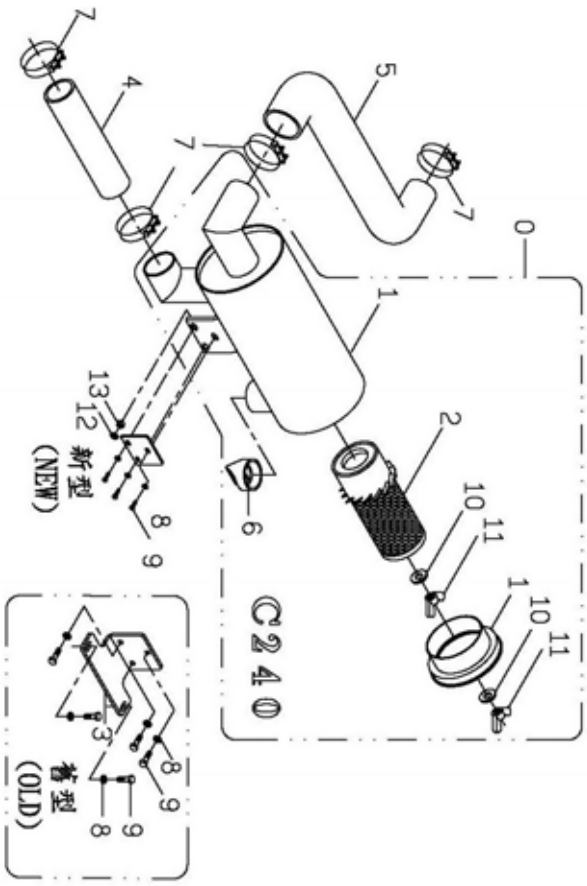

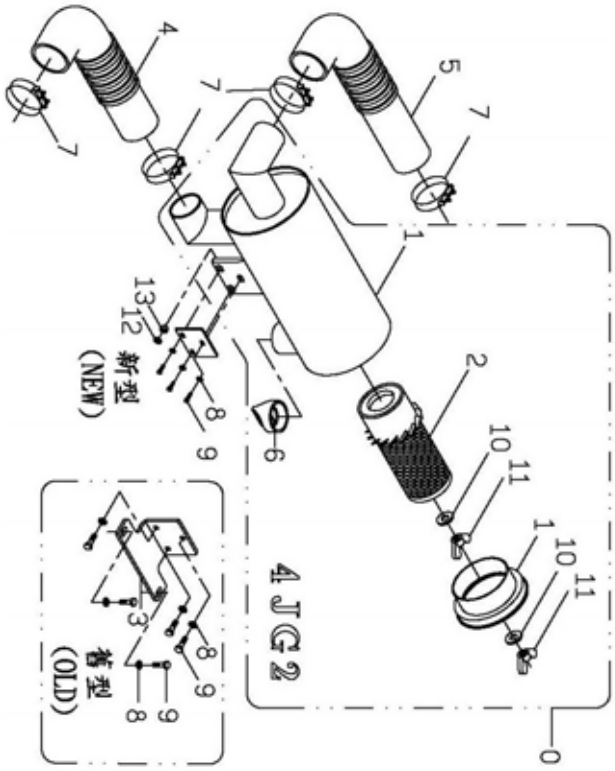

https://truckmanualshub.com/

空氣濾清器組
A304-4
AIR CLEANER

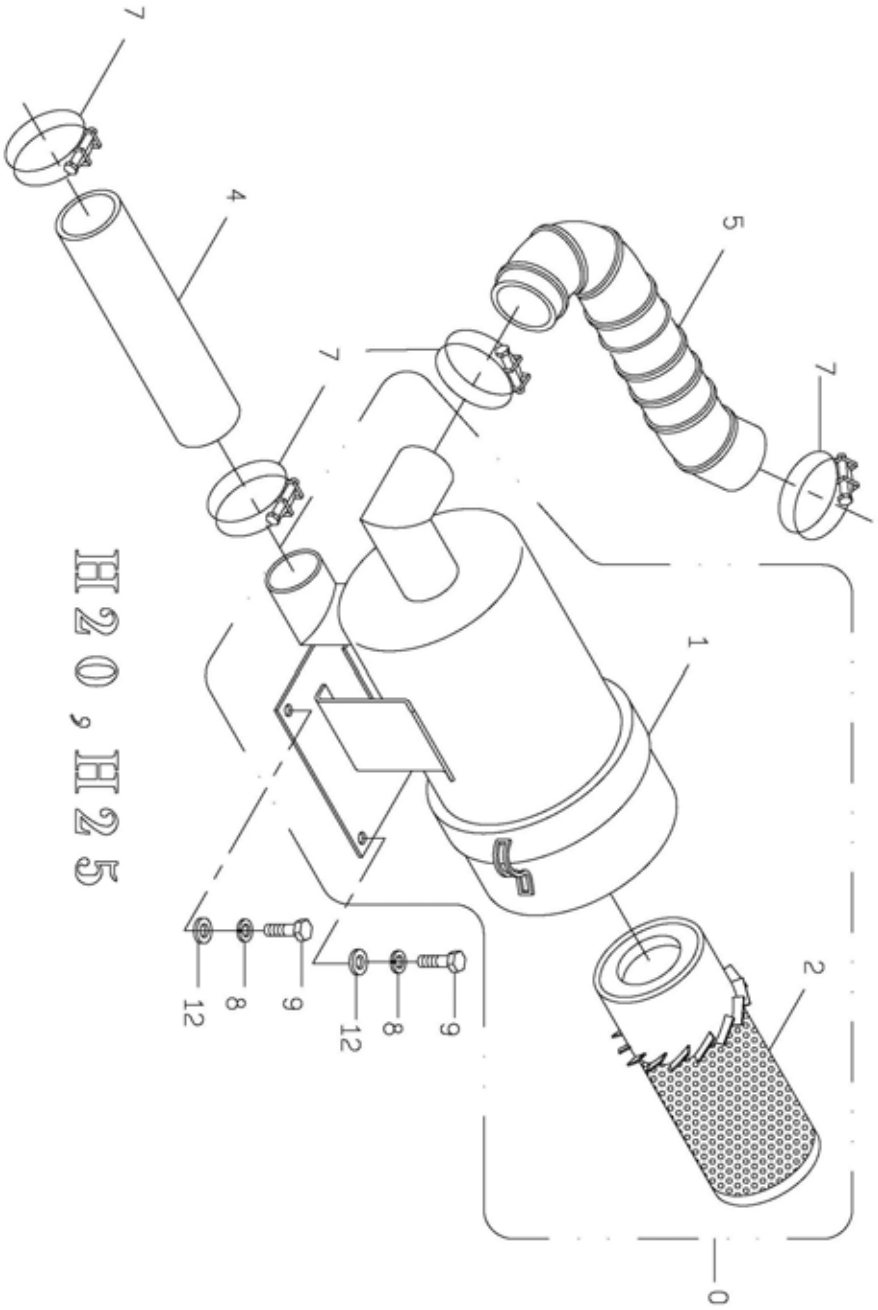

https://truckmanualshub.com/

空氣濾清器組
A304-4
AIR CLEANER

編號 NO.	零件名稱 PART NAME						FD						FG						FD〔C〕						FG〔C〕						機號 BODY NO.	備註 REMARK
	新碼 NEW PART NO.	舊碼 OLD PART NO.	規格 SPECIFICATION	互換性 ITC	應用日期 APPLIED DATE	數量 QTY	15 A	18 B	20 C	25 D	30 E	35 F	15 G	18 H	20 I	25 J	30 K	35 L	15 M	18 N	20 O	25 P	30 Q	35 R	15 S	18 T	20 U	25 V	30 W	35 X		
0	**空氣濾清器總成(CLEANER ASSY)**																															
	B350058	42510650	C240			1	A	B	C	D	E																					
	B350059	42510636	4JG2			1						F																				
	B350060	22510635	H20,H25			1							G	H	I	J	K	L														
1	**濾清器本體(CLEANER BODY)**																															
		92510602	C240		2000/10	1	A	B	C	D																						停用(NOT USED)
		92510626	4JG2		2000/10	1					E	F																				停用(NOT USED)
	32588	51510401	C240		2003/02	1	A	B	C	D	E																					
	32589	32510644	4JG2		2003/02	1						F																				
	32590	92510627	H20,H25			1							G	H	I	J	K	L														
2	**濾網(FILTER ASSY)**																															
		92510630	C240		2000/10	1	A	B	C	D																						
		92510631	4JG2		2000/10	1					E	F																				
	32591	51510404	C240		2003/02	1	A	B	C	D																						
	32592	32510632	4JG2		2003/02	1					E	F																				
	32593	92510632	H20,H25			1							G	H	I	J	K	L														
3	**固定板(BRACKET SUB-ASSY, PLATE)**																															
		32510629	C240		2000/10	1	A	B	C	D																						停用(NOT USED)
		32510608	4JG2		2000/10	1					E	F																				停用(NOT USED)
	32594	51510406	C240,4JG2		2003/02	1	A	B	C	D	E	F																				停用(NOT USED)
4	**引管(HOSE AIR CLEANER)**																															
		92510614	C240		2000/10	1	A	B	C	D																						停用(NOT USED)
	32595	51510407	C240,H20		2003/02	1	A	B	C	D																						
	32596	92510623	4JG2			1					E	F																				
	32597	92510625	H20,H25			1							G	H	I	J	K	L														
5	**吸氣接管(HOSE AIR CLEANER)**																															
		92510613	C240		2000/10	1	A	B	C	D																						停用(NOT USED)
	32598	32510645	C240		2003/02	1	A	B	C	D																						
	32599	92510628	4JG2			1					E	F																				
	32600	92510624	H20,H25			1							G	H	I	J	K	L														
6	**導管(HOSE)**																															
	32602	51510405	C240,4JG2			1	A	B	C	D	E	F																				
7	**管束(CLAMP, HOSE)**																															
	M1315014	92510612	C240			4	A	B	C	D																						
	M1315016	92510610	4JG2			4					E	F																				
	M1315014	92510612	H20,H25			4							G	H	I	J	K	L														

https://truckmanualshub.com/

空氣濾清器組
A304-4
AIR CLEANER

編號 NO.	零件名稱 PART NAME						FD						FG						FD〔C〕						FG〔C〕						機號 BODY NO.	備註 REMARK
	新碼 NEW PART NO.	舊碼 OLD PART NO.	規格 SPECIFICATION	互換性 ITC	應用日期 APPLIED DATE	數量 QTY	15 A	18 B	20 C	25 D	30 E	35 F	15 G	18 H	20 I	25 J	30 K	35 L	15 M	18 N	20 O	25 P	30 Q	35 R	15 S	18 T	20 U	25 V	30 W	35 X		
8	**彈簧華司(WASHER, SPRING)**																															
	M1605-M8	92501019	C240,4JG2			5	A	B	C	D	E	F																			停用(NOT USED)
	M1605-M8	92501019	H20,H25			5							G	H	I	J	K	L													停用(NOT USED)
	M1605-M8	92501019	C240,4JG2			3	A	B	C	D	E	F																				
	M1605-M8	92501019	H20,H25			2							G	H	I	J	K	L														
9	**螺栓(BOLT)**																															
		92501014	C240,4JG2		2000/10	6	A	B	C	D	E	F																				停用(NOT USED)
		92501014	H20,H25		2000/10	2							G	H	I	J	K	L														停用(NOT USED)
	M1424-M8*20	92504208	C240,4JG2		2003/02	5	A	B	C	D	E	F																				停用(NOT USED)
	M1424-M8*20	92504208	H20,H25		2003/02	5							G	H	I	J	K	L														停用(NOT USED)
	M1424-M8*25	92501104	C240,4JG2		2003/02	3	A	B	C	D	E	F																				
	M1424-M8*20	92504208	H20,H25		2003/02	2							G	H	I	J	K	L														
10	**襯墊(PACKING)**																															
	32603	51510403	C240,4JG2			2	A	B	C	D	E	F																				
11	**翼形螺帽(NUT-WING)**																															
	32604	51510402	C240,4JG2			2	A	B	C	D	E	F																				
12	**平華司(WASHER)**																															
	M1602006	92507009	C240,4JG2			3	A	B	C	D	E	F																				
	M1602006	92507009	H20,H25			2							G	H	I	J	K	L														
13	**螺帽(NUT)**																															
	M1501-M8	92501115	C240,4JG2			3	A	B	C	D	E	F																				

https://truckmanualshub.com/

車身配件系統
A305
CAR BODY FITTING SYSTEM

https://truckmanualshub.com/

車身配件系統
A305
CAR BODY FITTING SYSTEM

車身與配件組

A305-1

CAR BODY & FITTING

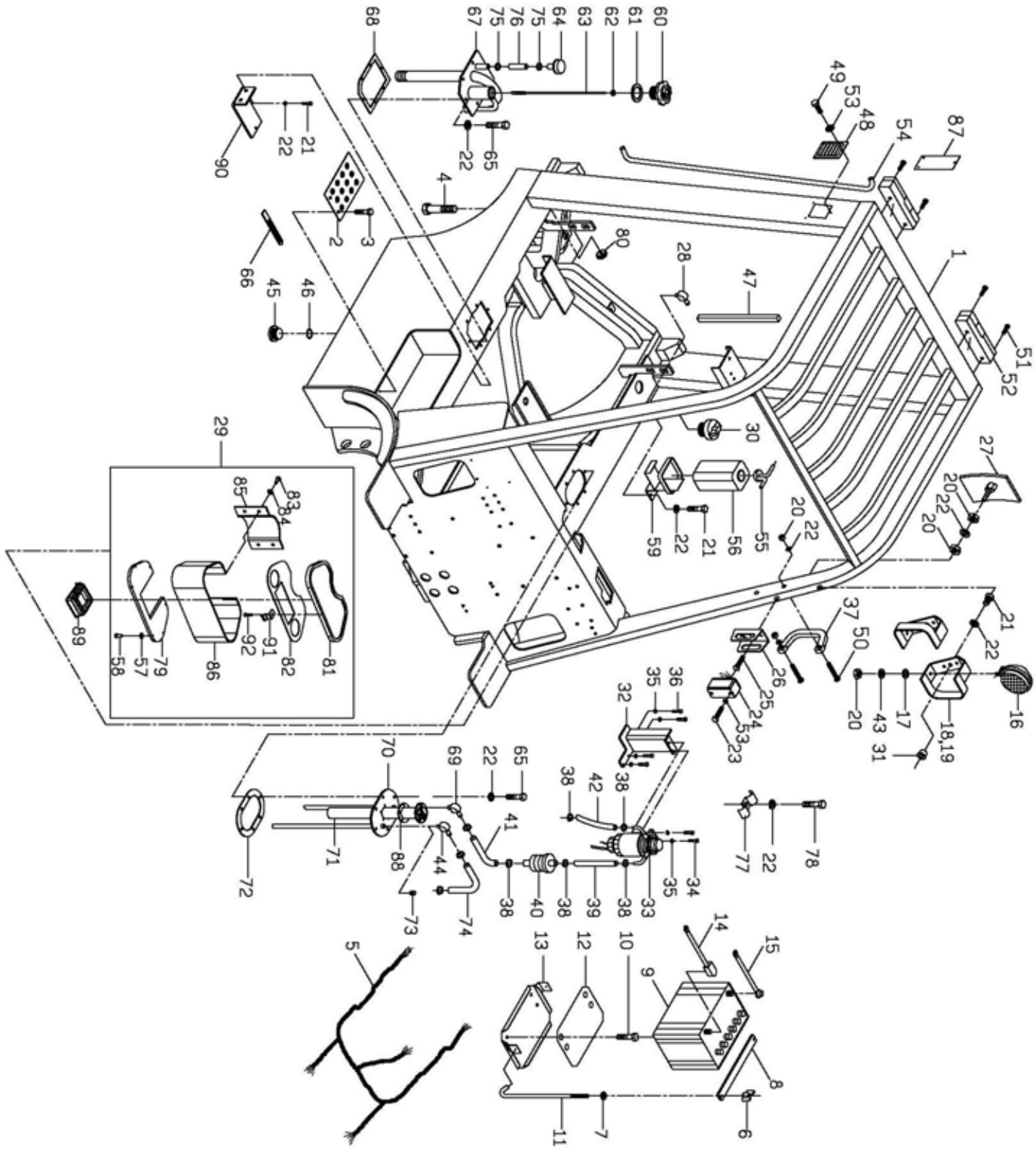

https://truckmanualshub.com/

車身配件系統
A305
CAR BODY FITTING SYSTEM

車身與配件組
A305-1
CAR BODY & FITTING

編號 NO.	新碼 NEW PART NO.	舊碼 OLD PART NO.	規格 SPECIFICATION	互換性 ITC	應用日期 APPLIED DATE	數量 QTY	FD 15 A	FD 18 B	FD 20 C	FD 25 D	FD 30 E	FD 35 F	FG 15 G	FG 18 H	FG 20 I	FG 25 J	FG 30 K	FG 35 L	FD〔C〕15 M	FD〔C〕18 N	FD〔C〕20 O	FD〔C〕25 P	FD〔C〕30 Q	FD〔C〕35 R	FG〔C〕15 S	FG〔C〕18 T	FG〔C〕20 U	FG〔C〕25 V	FG〔C〕30 W	FG〔C〕35 X	機號 BODY NO.	備註 REMARK
1	**車身總成(CAR BODY ASSY)**																															
	32409	A1509000	C240			1	A																									
	32848	A1809000	C240			1		B																								
	33757	A2509000	C240			1			C	D																						
	33860		4JG2			1			C	D																						
	32839	A3009000	4JG2			1					E																					
	32844	A3509000	4JG2			1						F																				
	33861		H20			1							G																			
	33862		H20			1								H																		
	33863		H20,H25			1									I	J																
	33864		H25			1											K															
	33865		H25			1												L														
2	**防滑踏板(ANTISKID BOARD)**																															
	32616	52509003				2	A	B					G	H																		
	32615	32509091				2			C	D	E	F	G	H	I	J	K	L														
3	**螺栓(BOLT)**																															
	M1408-M6*6	92509036				4	A	B	C	D	E	F	G	H	I	J	K	L														
4	**固定座螺栓(BOLT)**																															
		92509083				2	A	B	C	D	E	F	G	H	I	J	K	L														
5	**全車線總成(CABLE SUB-ASSY) C240手排(MT)**																															
	32617	91509075				1	A	B					G	H																		
	32618	92509075				1			C	D	E	F			I	J	K	L														
5	**全車線總成(CABLE SUB-ASSY) C240自排(AT)**																															
	32619	91509079				1	A	B					G	H																		
	32620	92509079				1			C	D	E	F			I	J	K	L														
5	**全車線總成(CABLE SUB-ASSY) 4JG2手排(MT)**																															
	32621	91509077				1	A	B					G	H																		
	32622	92509077				1			C	D	E	F			I	J	K	L														
5	**全車線總成(CABLE SUB-ASSY) 4JG2自排(AT)**																															
	32623	91509081				1	A	B					G	H																		
	32624	92509081				1			C	D	E	F			I	J	K	L														
5	**全車線總成(CABLE SUB-ASSY) H20,H25手排(MT)**																															
	32625	91509078				1							G	H																		
	32626	92509078				1									I	J	K	L														
5	**全車線總成(CABLE SUB-ASSY) H20,H25自排(AT)**																															
	32627	91509082				1	A	B					G	H																		
	32628	92509082				1			C	D	E	F			I	J	K	L														

https://truckmanualshub.com/

車身與配件組
A305-1
CAR BODY & FITTING

編號 NO.	新碼 NEW PART NO.	舊碼 OLD PART NO.	規格 SPECIFICATION	互換性 ITC	應用日期 APPLIED DATE	數量 QTY	FD 15A	FD 18B	FD 20C	FD 25D	FD 30E	FD 35F	FG 15G	FG 18H	FG 20I	FG 25J	FG 30K	FG 35L	FD〔C〕 15M	FD〔C〕 18N	FD〔C〕 20O	FD〔C〕 25P	FD〔C〕 30Q	FD〔C〕 35R	FG〔C〕 15S	FG〔C〕 18T	FG〔C〕 20U	FG〔C〕 25V	FG〔C〕 30W	FG〔C〕 35X	機號 BODY NO.	備註 REMARK
6	**電瓶螺帽(NUT)**																															
	32629	92509001				2	A	B	C	D	E	F	G	H	I	J	K	L														
7	**平華司(WASHER, PLATE)**																															
		92509002			2000/10	2	A	B	C	D	E	F	G	H	I	J	K	L														停用(NOT USED)
	M1602002	94020611			2003/02	2	A	B	C	D	E	F	G	H	I	J	K	L														
8	**電瓶壓條(CLAMP, BATTERY)**																															
	32630	32509003	C240,H20			1	A	B	C	D			G	H	I	J																
	32631	32509093	4JG2			1			C	D	E	F																				
	32630	32509003	H25			1							G	H	I	J	K	L														
9	**蓄電池(BATTERY ASSY)**																															
	E3801001	92509004	C240,H20			1	A	B	C	D			G	H	I	J																
	E3801002	92509074	4JG2			1			C	D	E	F																				
	E3801001	92509004	H25			1							G	H	I	J	K	L														
10	**螺栓(BOLT)**																															
	M1401-M8*8	92509008				4	A	B	C	D	E	F	G	H	I	J	K	L														
11	**勾型螺栓(BOLT "J")**																															
	32632	32509005				2	A	B	C	D	E	F	G	H	I	J	K	L														
12	**墊片(SHIM)**																															
	32633	32509006				1	A	B	C	D	E	F	G	H	I	J	K	L														
13	**電瓶座(CASE, BATTERY)**																															
		32509007	C240,H20		2000/10	1	A	B	C	D			G	H	I	J																停用(NOT USED)
	32634	51509007	C240,H20		2003/02	1	A	B	C	D			G	H	I	J																
	32635	32509073	4JG2			1			C	D	E	F																				
	32634	51509007	H25			1							G	H	I	J	K	L														
14	**電纜線(+)(CABLE,BATTERY STATER)**																															
	32636	32509016				1	A	B	C	D	E	F	G	H	I	J	K	L														
15	**電纜線(-)(BAND BATTERY, EARTH)**																															
	32637	32509055				1	A	B	C	D	E	F	G	H	I	J	K	L														
16	**大燈(LAMP ASSY HEAD)**																															
	E2302001	92509010				2	A	B	C	D	E	F	G	H	I	J	K	L														
17	**墊片(SHIM)**																															
	32638	92509009				2	A	B	C	D	E	F	G	H	I	J	K	L														
18	**前燈罩(左)(BRACKET L.H.)**																															
		42509011			2000/10	1	A	B	C	D	E	F	G	H	I	J	K	L														停用(NOT USED)
	32639	32509011			2003/02	1	A	B	C	D	E	F	G	H	I	J	K	L														
19	**前燈罩(右)(BRACKET R.H.)**																															
		42509095			2000/10	1	A	B	C	D	E	F	G	H	I	J	K	L														停用(NOT USED)
	32641	32509099			2003/02	1	A	B	C	D	E	F	G	H	I	J	K	L														

https://truckmanualshub.com/

車身配件系統
A305
CAR BODY FITTING SYSTEM

車身與配件組
A305-1
CAR BODY & FITTING

編號 NO.	零件名稱 PART NAME						FD						FG						FD〔C〕						FG〔C〕						機號 BODY NO.	備註 REMARK
	新碼 NEW PART NO.	舊碼 OLD PART NO.	規格 SPECIFICATION	互換性 ITC	應用日期 APPLIED DATE	數量 QTY	15A	18B	20C	25D	30E	35F	15G	18H	20I	25J	30K	35L	15M	18N	20O	25P	30Q	35R	15S	18T	20U	25V	30W	35X		
20	**螺帽(NUT)**																															
	M1501-M8	92501115				8	A	B	C	D	E	F	G	H	I	J	K	L														
21	**螺栓(BOLT)**																															
	M1424-M8*16	92501014				6	A	B	C	D	E	F	G	H	I	J	K	L														
22	**彈簧華司(WASHER, SPRING)**																															
	M1605-M8	92501019				24	A	B	C	D	E	F	G	H	I	J	K	L														
23	**螺栓(BOLT)**																															
	M1414-M5*55	92513113				4	A	B	C	D	E	F	G	H	I	J	K	L														
24	**方向燈(DIRECTION LIGHT)**																															
	E2302002	92509031				2	A	B	C	D	E	F	G	H	I	J	K	L														
25	**螺栓(BOLT)**																															
	M1408-M6*6	92509036				4	A	B	C	D	E	F	G	H	I	J	K	L														
26	**方向燈座(BRACKET)**																															
	32643	32509038				2	A	B	C	D	E	F	G	H	I	J	K	L														
27	**後視鏡(MIRROR, BACK)**																															
	32644	92509015				2	A	B	C	D	E	F	G	H	I	J	K	L														
28	**接頭(FITTING)**																															
	32645	92509094				1	A	B	C	D	E	F	G	H	I	J	K	L														
29	**電子儀錶箱(CONSOLE BOX)**																															
	B350499	A2509084				1	A	B	C	D	E	F	G	H	I	J	K	L														
	B350957					1	A	B	C	D	E	F	G	H	I	J	K	L														CE
30	**燃油蓋(CAP ASSY,FUEL)**																															
	32648	42509023				1	A	B	C	D	E	F	G	H	I	J	K	L														
31	**扣式護線套(BUCKLE IACKET)**																															
	32649	92509909				2	A	B	C	D	E	F	G	H	I	J	K	L														
32	**固定座(STOPPER, SEDIMENTER)**																															
	32650	32509033	C240			1	A	B	C	D																						停用(NOT USED)
	32651	32509070	4JG2,C240			1	A	B	C	D	E	F																				
33	**油水分離器(SEDIMENTER ASSY)**																															
	32652	92509039	4JG2,C240			1	A	B	C	D	E	F																				停用(NOT USED)
	32653	92509071	4JG2			1			C	D	E	F																				
34	**螺栓(BOLT)**																															
	M1423-M6*20	92509043				4	A	B	C	D	E	F	G	H	I	J	K	L														
35	**彈簧華司(WASHER, SPRING)**																															
	M1605-M6	92503218				6	A	B	C	D	E	F	G	H	I	J	K	L														
36	**螺栓(BOLT)**																															
	M1423-M6*10	92507015				4	A	B	C	D	E	F	G	H	I	J	K	L														

https://truckmanualshub.com/

車身配件系統
A305
CAR BODY FITTING SYSTEM

車身與配件組
A305-1
CAR BODY & FITTING

編號 NO.	零件名稱 PART NAME						FD						FG						FD〔C〕						FG〔C〕						機號 BODY NO.	備註 REMARK
	新碼 NEW PART NO.	舊碼 OLD PART NO.	規格 SPECIFICATION	互換性 ITC	應用日期 APPLIED DATE	數量 QTY	15A	18B	20C	25D	30E	35F	15G	18H	20I	25J	30K	35L	15M	18N	20O	25P	30Q	35R	15S	18T	20U	25V	30W	35X		
37	上手把手(HANDLE)																															
	32825	A2509911				1	A	B	C	D	E	F	G	H	I	J	K	L														
38	管束(CLAMP, HOSE)																															
	M1315019	92509042	C240,4JG2			6	A	B	C	D	E	F																				
	M1315019	92509042	H20,H25			4							G	H	I	J	K	L														
39	回油管(HOSE, LOW PRESSURE)																															
	M0501020	92509901	C240			1	A	B	C	D																						
	M0501018	92509051	4JG2			1					E	F																				
	M0501021	92509902	H20,H25			1							G	H	I	J	K	L														
40	燃油濾清器(FUEL FILTER)																															
	32655	92509057				1	A	B	C	D	E	F	G	H	I	J	K	L														
41	回油管(HOSE, LOW PRESSURE)																															
	M0501021	92509902	C240			1	A	B	C	D																						
	M0501016	92509040	4JG2			1					E	F																				
	M0501033	92509904	H20,H25			1							G	H	I	J	K	L														
42	回油管(HOSE, LOW PRESSURE)																															
	M0501019	92509058	C240			1	A	B	C	D																						
	M0501010	92509903	4JG2			1					E	F																				
43	平華司(WASHER, PLATE)																															
	M1602005	92520105				2	A	B	C	D	E	F	G	H	I	J	K	L														
44	接頭(FITTING)																															
	32656	92509090				1	A	B	C	D	E	F	G	H	I	J	K	L														
45	油塞(PLUG, OIL)																															
	32657	32509053				2	A	B	C	D	E	F	G	H	I	J	K	L														
46	O型環(O-RING)																															
	M0801-P24	92509052				2	A	B	C	D	E	F	G	H	I	J	K	L														
47	護條(INSULATOR)																															
	32658	92509059				2	A	B	C	D	E	F	G	H	I	J	K	L														
48	護蓋(LOUVER, AIR)																															
	32659	42509048				1	A	B	C	D	E	F	G	H	I	J	K	L														
49	螺栓(BOLT)																															
		92509049			1999/06	8	A	B	C	D	E	F	G	H	I	J	K	L														停用(NOT USED)
	M1414-M4*6	92509049			1999/06	4	A	B	C	D	E	F	G	H	I	J	K	L														
	M1412-M5*12				2001/07	3	A	B	C	D	E	F	G	H	I	J	K	L														
50	螺栓(BOLT)																															
	M1410003	92511009				2	A	B	C	D	E	F	G	H	I	J	K	L														停用(NOT USED)
	M1410-M8*50					2	A	B	C	D	E	F	G	H	I	J	K	L														

https://truckmanualshub.com/

車身配件系統
A305
CAR BODY FITTING SYSTEM

車身與配件組
A305-1
CAR BODY & FITTING

編號 NO.	零件名稱 PART NAME						FD						FG						FD〔C〕						FG〔C〕						機號 BODY NO.	備註 REMARK
	新碼 NEW PART NO.	舊碼 OLD PART NO.	規格 SPECIFICATION	互換性 ITC	應用日期 APPLIED DATE	數量 QTY	15A	18B	20C	25D	30E	35F	15G	18H	20I	25J	30K	35L	15M	18N	20O	25P	30Q	35R	15S	18T	20U	25V	30W	35X		
51	**螺栓(BOLT)**																															
	M1414-M4*45	92513107				4	A	B	C	D	E	F	G	H	I	J	K	L														
52	**後車燈(REAR LAMP ASSY)**																															
	E2302017	92509034				2	A	B	C	D	E	F	G	H	I	J	K	L														
53	**彈簧華司(WASHER, SPRING)**																															
	M1606-M5					5	A	B	C	D	E	F	G	H	I	J	K	L														
54	**排水管(HOSE)**																															
	M0501045	92509060				2	A	B	C	D	E	F	G	H	I	J	K	L														
55	**副水箱蓋(CAP ASSY)**																															
	32661	92509061				1	A	B	C	D	E	F	G	H	I	J	K	L														
56	**副水箱(WATER BOX, RESERVE)**																															
	32545	92509062				1	A	B	C	D	E	F	G	H	I	J	K	L														
57	**墊圈(WASHER)**																															
	M1605-M4	92509019				5	A	B	C	D	E	F	G	H	I	J	K	L														
58	**螺栓(BOLT)**																															
	M1408-M4*20					5	A	B	C	D	E	F	G	H	I	J	K	L														
59	**副水箱固定座(BRACKET, RESERVE TANK)**																															
	32663	22509065				1	A	B	C	D	E	F	G	H	I	J	K	L														
60	**機油蓋(COVER, OIL)**																															
	32666	42509025				1	A	B	C	D	E	F	G	H	I	J	K	L														
61	**墊圈(WASHER)**																															
	32667	32509097				1	A	B	C	D	E	F	G	H	I	J	K	L														
62	**螺帽(NUT)**																															
		92509028				1	A	B	C	D	E	F	G	H	I	J	K	L														
63	**油尺(OIL RULER)**																															
	32668	32509098				1	A	B	C	D	E	F	G	H	I	J	K	L														
64	**油箱透氣栓(PERMEAATION BOLT)**																															
	32669	32509096A				1	A	B	C	D	E	F	G	H	I	J	K	L														
65	**螺栓(BOLT)**																															
	M1424-M8*20	92504208				12	A	B	C	D	E	F	G	H	I	J	K	L														
66	**紮線帶(BIND BAND)**																															
	32670	92509910				17	A	B	C	D	E	F	G	H	I	J	K	L														
67	**液壓油蓋板組(OUTLET SUB-ASSY, OIL TANK)**																															
	32671	22509030	C240			1	A	B	C	D																						停用(NOT USED)
	32672	22509032	4JG2			1	A	B	C	D	E	F																				停用(NOT USED)
	32672A		4JG2, C240			1	A	B	C	D	E	F																				手排(MT), 自排(AT)
	34968		4JG2			1			C	D	E	F																				手排(MT)
	32673	22509035	H20, H25			1							G	H	I	J	K	L														

https://truckmanualshub.com/

車身與配件組
A305-1
CAR BODY & FITTING

編號 NO.	零件名稱 PART NAME						FD						FG						FD〔C〕						FG〔C〕						機號 BODY NO.	備註 REMARK
	新碼 NEW PART NO.	舊碼 OLD PART NO.	規格 SPECIFICATION	互換性 ITC	應用日期 APPLIED DATE	數量 QTY	15 A	18 B	20 C	25 D	30 E	35 F	15 G	18 H	20 I	25 J	30 K	35 L	15 M	18 N	20 O	25 P	30 Q	35 R	15 S	18 T	20 U	25 V	30 W	35 X		
68	橡膠墊片(PACKING)																															
	32677	32509067				1	A	B	C	D	E	F	G	H	I	J	K	L														
69	接頭(FITTING STRAIGHT)																															
	32678	92509068				2	A	B	C	D	E	F	G	H	I	J	K	L														
70	燃油蓋板組(COVER ASSY, TANK)																															
	32679	32509020				1	A	B	C	D	E	F	G	H	I	J	K	L														停用(NOT USED)
	31864				2006/01	1	A	B	C	D	E	F																				
	31938				2006/01	1							G	H	I	J	K	L														電子式(ELECTRONIC)
71	浮筒及開關(FUEL, UNIT)																															
	32680	92509017				1	A	B	C	D	E	F	G	H	I	J	K	L														停用(NOT USED)
	E1616002					1	A	B	C	D	E	F	G	H	I	J	K	L														停用(NOT USED)
	E1616003					1	A	B	C	D	E	F	G	H	I	J	K	L														停用(NOT USED)
	E3401006				2006/01	1	A	B	C	D	E	F	G	H	I	J	K	L														停用(NOT USED)
	E3401005				2006/01	1	A	B	C	D	E	F	G	H	I	J	K	L														電子式(ELECTRONIC)
72	橡膠墊片(PACKING)																															
	32681	32509022				1	A	B	C	D	E	F	G	H	I	J	K	L														
73	止塞(PLUG)																															
	32682	92509069	H20,H25			1							G	H	I	J	K	L														
74	回油管(HOSE, LOW PRESSURE)																															
	M0501017	92509041	C240,4JG2			1	A	B	C	D	E	F																				
	M0501023	92509906	C240			1			C	D																						
75	管束(CLAMP, HOSE)																															
	M1315007	92509907				2	A	B	C	D	E	F	G	H	I	J	K	L														
76	引管(HOSE AIR CLEANER)																															
		92509908	C240		2000/10	1	A	B	C	D																						停用(NOT USED)
	M0501013	92508005	C240		2003/02	1	A	B	C	D																						
77	固定夾(CLAMP)																															
	32683	32520924				2	A	B	C	D	E	F	G	H	I	J	K	L														
78	螺栓(BOLT)																															
		92520922				2	A	B	C	D	E	F	G	H	I	J	K	L														
79	儀錶箱固定板(FLANGE, CONSOLE BOX)																															
	32689	A2509091				1	A	B	C	D	E	F	G	H	I	J	K	L														
80	孔塞(PLUG)																															
	32684	32509054			2003/02	2	A	B	C	D	E	F	G	H	I	J	K	L														
81	儀錶箱固定板(FLANGE, CONSOLE BOX)																															
	32685	A2509086				1	A	B	C	D	E	F	G	H	I	J	K	L														
82	儀錶箱固定板(FLANGE, CONSOLE BOX)																															
	32686	A2509089				1	A	B	C	D	E	F	G	H	I	J	K	L														

https://truckmanualshub.com/

車身配件系統
A305
CAR BODY FITTING SYSTEM

車身與配件組
A305-1
CAR BODY & FITTING

編號 NO.	零件名稱 PART NAME						FD						FG						FD〔C〕						FG〔C〕						機號 BODY NO.	備註 REMARK
	新碼 NEW PART NO.	舊碼 OLD PART NO.	規格 SPECIFICATION	互換性 ITC	應用日期 APPLIED DATE	數量 QTY	15A	18B	20C	25D	30E	35F	15G	18H	20I	25J	30K	35L	15M	18N	20O	25P	30Q	35R	15S	18T	20U	25V	30W	35X		
83	儀錶箱螺栓(BOLT)																															
	M1408-M5*25					4	A	B	C	D	E	F	G	H	I	J	K	L														
84	墊圈(WASHER)																															
	M1605-M5	92512725				4	A	B	C	D	E	F	G	H	I	J	K	L														
85	儀錶箱蓋(CAP, CONSOLE BOX)																															
	32687	A2509088				1	A	B	C	D	E	F	G	H	I	J	K	L														
86	儀錶箱固定板(FLANGE, CONSOLE BOX)																															
	32688	A2509090				1	A	B	C	D	E	F	G	H	I	J	K	L														
87	進氣孔封板(VENTILATOR SEAL BOARD)																															
	34561					1	A	B	C	D	E	F	G	H	I	J	K	L														選配件(CHOOSE)
88	墊片(SPACER)																															
	34507					2006/01	1	A	B	C	D	E	F	G	H	I	J	K	L														
89	儀錶箱護套(CONSOLE BOX SHEATH)																															
	34784						1	A	B	C	D	E	F	G	H	I	J	K	L														
90	斷電器固定座(DISCONNECTION POWER FIXING)																															
	34790						1	A	B	C	D	E	F	G	H	I	J	K	L														
91	彈簧片(SPRING SLICE)																															
	34603						5	A	B	C	D	E	F	G	H	I	J	K	L														
92	自攻螺絲(BOLT)																															
	M1426004						5	A	B	C	D	E	F	G	H	I	J	K	L														

https://truckmanualshub.com/

車身配件系統
A305
CAR BODY FITTING SYSTEM

引擎蓋與配重組
A305-2
ENGING HOOD & COUNTER WEIGHT

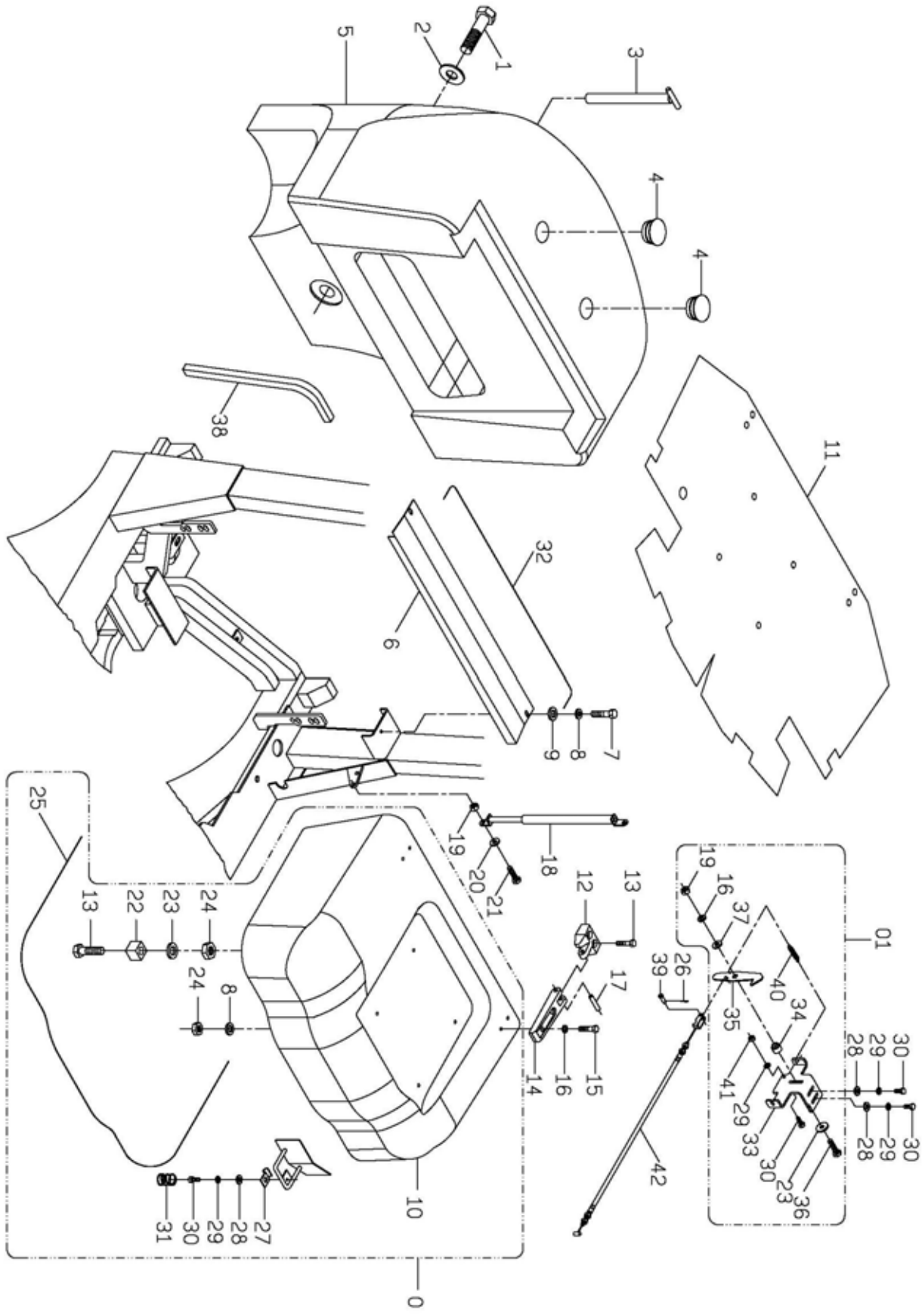

https://truckmanualshub.com/

引擎蓋與配重組
A305-2
ENGING HOOD & COUNTER WEIGHT

編號 NO.	新碼 NEW PART NO.	舊碼 OLD PART NO.	規格 SPECIFICATION	互換性 ITC	應用日期 APPLIED DATE	數量 QTY	FD 15A	FD 18B	FD 20C	FD 25D	FD 30E	FD 35F	FG 15G	FG 18H	FG 20I	FG 25J	FG 30K	FG 35L	FD〔C〕15M	FD〔C〕18N	FD〔C〕20O	FD〔C〕25P	FD〔C〕30Q	FD〔C〕35R	FG〔C〕15S	FG〔C〕18T	FG〔C〕20U	FG〔C〕25V	FG〔C〕30W	FG〔C〕35X	機號 BODY NO.	備註 REMARK
0	**引擎蓋組(ENGINE HOOD ASSY)**																															
	B350062					1	A	B					G	H																		
	B350063					1			C	D	E	F			I	J	K	L														
01	**引擎蓋扣勾組(ENGINE BONNET-FIXED HOOK)**																															
	B350066	22511050				1	A	B	C	D	E	F	G	H	I	J	K	L														
1	**螺栓(BOLT)**																															
	M1423-M30*120	42511001				1	A	B	C	D	E	F	G	H	I	J	K	L														
2	**平華司(WASHER, PLATE)**																															
	M1602027	32511002				1	A	B	C	D	E	F	G	H	I	J	K	L														
3	**拖拉桿(DRAWBAR SUB-ASSY)**																															
	32690	92511036				1	A	B	C	D	E	F	G	H	I	J	K	L														
4	**孔塞(PLUG)**																															
	32692	92511039				2	A	B	C	D	E	F	G	H	I	J	K	L														
5	**配重(BALANCE WEIGHT)**																															
	32693	41511012A				1	A						G																			
	32857	A1811012				1		B						H																		
	33430	A2011012				1			C						I																	
	32829	A2511012				1				D						J																
	32841	A3011012				1					E	F					K	L														
6	**水箱蓋(RADIATOR COVER)**																															
	32840	A3011004A				1					E	F					K	L													停用(NOT USED)	
	32704	41511004				1	A						G																			
	32849	A1811004A				1		B						H																		
	33425	A2011004				1			C						I																	
	32826	A2511004A				1				D						J																
	32840	A3011004A				1					E						K															
	34817	A3511004E				1						F						L														
7	**螺栓(BOLT)**																															
	M1317011	92511003				2	A	B	C	D	E	F	G	H	I	J	K	L														
	33930				2006/02	2					E	F					K	L														
8	**平墊圈(WASHER)**																															
	M1602010	92507027				6	A	B	C	D	E	F	G	H	I	J	K	L														
9	**墊圈(WASHER, PLATE)**																															
	32715	92511035				2	A	B	C	D	E	F	G	H	I	J	K	L														
10	**引擎蓋(ENGINE BONNET)**																															
	32716	41511014				1	A	B					G	H																		
	32717	42511014				1			C	D	E	F			I	J	K	L														

https://truckmanualshub.com/

引擎蓋與配重組
A305-2
ENGING HOOD & COUNTER WEIGHT

編號 NO.	新碼 NEW PART NO.	舊碼 OLD PART NO.	規格 SPECIFICATION	互換性 ITC	應用日期 APPLIED DATE	數量 QTY	FD 15 A	FD 18 B	FD 20 C	FD 25 D	FD 30 E	FD 35 F	FG 15 G	FG 18 H	FG 20 I	FG 25 J	FG 30 K	FG 35 L	FD〔C〕 15 M	FD〔C〕 18 N	FD〔C〕 20 O	FD〔C〕 25 P	FD〔C〕 30 Q	FD〔C〕 35 R	FG〔C〕 15 S	FG〔C〕 18 T	FG〔C〕 20 U	FG〔C〕 25 V	FG〔C〕 30 W	FG〔C〕 35 X	機號 BODY NO.	備註 REMARK
11	隔熱棉(HEAT INAULATION COTTON)																															
	32720	31511049				1	A	B					G	H																		
	32721	32511049				1			C	D	E	F			I	J	K	L														
12	引擎蓋扣(HINGE, ENGINE)																															
	32723	32511006				2	A	B	C	D	E	F	G	H	I	J	K	L														
13	螺栓(BOLT)																															
	M1410001	92511005				6	A	B	C	D	E	F	G	H	I	J	K	L														
14	引擎蓋扣(HINGE, ENGINE)																															
	32724	32511007				2	A	B	C	D	E	F	G	H	I	J	K	L														
15	螺栓(BOLT)																															
	M1410003	92511009				4	A	B	C	D	E	F	G	H	I	J	K	L														
16	彈簧華司(WASHER, SPRING)																															
	M1605-M8	92501019				5	A	B	C	D	E	F	G	H	I	J	K	L														
17	彈簧銷(PIN, SPRING)																															
	M1305-8*35	92511008				2	A	B	C	D	E	F	G	H	I	J	K	L														
18	氣壓缸(SPRING, GAS)																															
	32725	92511042				1	A	B	C	D	E	F	G	H	I	J	K	L														
19	螺帽(BOLT)																															
	M1501-M8	92501115				4	A	B	C	D	E	F	G	H	I	J	K	L														
20	墊圈(WASHER)																															
	M1602005	92520105				3	A	B	C	D	E	F	G	H	I	J	K	L														
21	螺栓(BOLT)																															
	M1424-M8*20	92504208				3	A	B	C	D	E	F	G	H	I	J	K	L														
22	支撐墊(RUBBER CUSHION)																															
	32727	32511017				2	A	B	C	D	E	F	G	H	I	J	K	L														
23	平華司(WASHER, PLATE)																															
	M1602009	92511016				2	A	B	C	D	E	F	G	H	I	J	K	L														
24	螺帽(NUT)																															
		92511015				6	A	B	C	D	E	F	G	H	I	J	K	L														
25	減震條(INSULATOR)																															
	32728	41511013				1	A	B					G	H																		
	32729	42511013				1			C	D	E	F			I	J	K	L														
26	開口銷(PIN,COTTER)																															
	M1307005	92511063				1	A	B	C	D	E	F	G	H	I	J	K	L														
27	固定勾(FIXED HOOK)																															
	32732	32511044				2	A	B	C	D	E	F	G	H	I	J	K	L														
28	平華司(WASHER)																															
		92511045				3	A	B	C	D	E	F	G	H	I	J	K	L														

https://truckmanualshub.com/

引擎蓋與配重組
A305-2
ENGING HOOD & COUNTER WEIGHT

編號 NO.	新碼 NEW PART NO.	舊碼 OLD PART NO.	規格 SPECIFICATION	互換性 ITC	應用日期 APPLIED DATE	數量 QTY	FD 15 A	FD 18 B	FD 20 C	FD 25 D	FD 30 E	FD 35 F	FG 15 G	FG 18 H	FG 20 I	FG 25 J	FG 30 K	FG 35 L	FD〔C〕 15 M	FD〔C〕 18 N	FD〔C〕 20 O	FD〔C〕 25 P	FD〔C〕 30 Q	FD〔C〕 35 R	FG〔C〕 15 S	FG〔C〕 18 T	FG〔C〕 20 U	FG〔C〕 25 V	FG〔C〕 30 W	FG〔C〕 35 X	機號 BODY NO.	備註 REMARK
29	**彈簧華司(WASHER SPRING)**																															
	M1605-M6	92503218				4	A	B	C	D	E	F	G	H	I	J	K	L														
30	**螺栓(BOLT)**																															
	M1423-M6*20	92509043				4	A	B	C	D	E	F	G	H	I	J	K	L														
31	**彈簧(SPRING)**																															
	32734	32511048				1	A	B	C	D	E	F	G	H	I	J	K	L														
32	**水箱蓋護條(RADIATOR COVER, INSULATOR)**																															
	32735	31511066				1	A						G																			
	32859	A1811066				1		B						H																		
	33431	A2011066				1			C						I																	
	32830	A2511066				1				D						J																
	32842	A3011066				1					E	F					K	L														
33	**扣勾固定座(HOOK-FIXED SEAT)**																															
	32741	32511051				1	A	B	C	D	E	F	G	H	I	J	K	L														
34	**套筒(BUSHING)**																															
	32742	32511052				1	A	B	C	D	E	F	G	H	I	J	K	L														
35	**扣勾(HOOK)**																															
	32743	32511053				1	A	B	C	D	E	F	G	H	I	J	K	L														
36	**螺栓(BOLT)**																															
	M1424-M8*30	92503010				1	A	B	C	D	E	F	G	H	I	J	K	L														
37	**平華司(WASHER)**																															
	M1602007	92511056				1	A	B	C	D	E	F	G	H	I	J	K	L														
38	**配重護條(BALANCE WEIGHT, INSULATOR)**																															
	32744	32511064				2	A	B	C	D	E	F	G	H	I	J	K	L														
39	**銷(PIN)**																															
	M1306002	92511062				1	A	B	C	D	E	F	G	H	I	J	K	L														停用(NOT USED)
	34814	92511062				1	A	B	C	D	E	F	G	H	I	J	K	L														
40	**拉伸彈簧(SPRING)**																															
	32745	32511059				1	A	B	C	D	E	F	G	H	I	J	K	L														
41	**螺帽(NUT)**																															
		92511060				1	A	B	C	D	E	F	G	H	I	J	K	L														
42	**引擎蓋拉線(ENGINE BONNET-DRAWING WIRE)**																															
	32746	32511061				1	A	B	C	D	E	F	G	H	I	J	K	L														

https://truckmanualshub.com/

車身配件系統
A305
CAR BODY FITTING SYSTEM

駕駛座椅組
A305-3
DRIVER SEAT

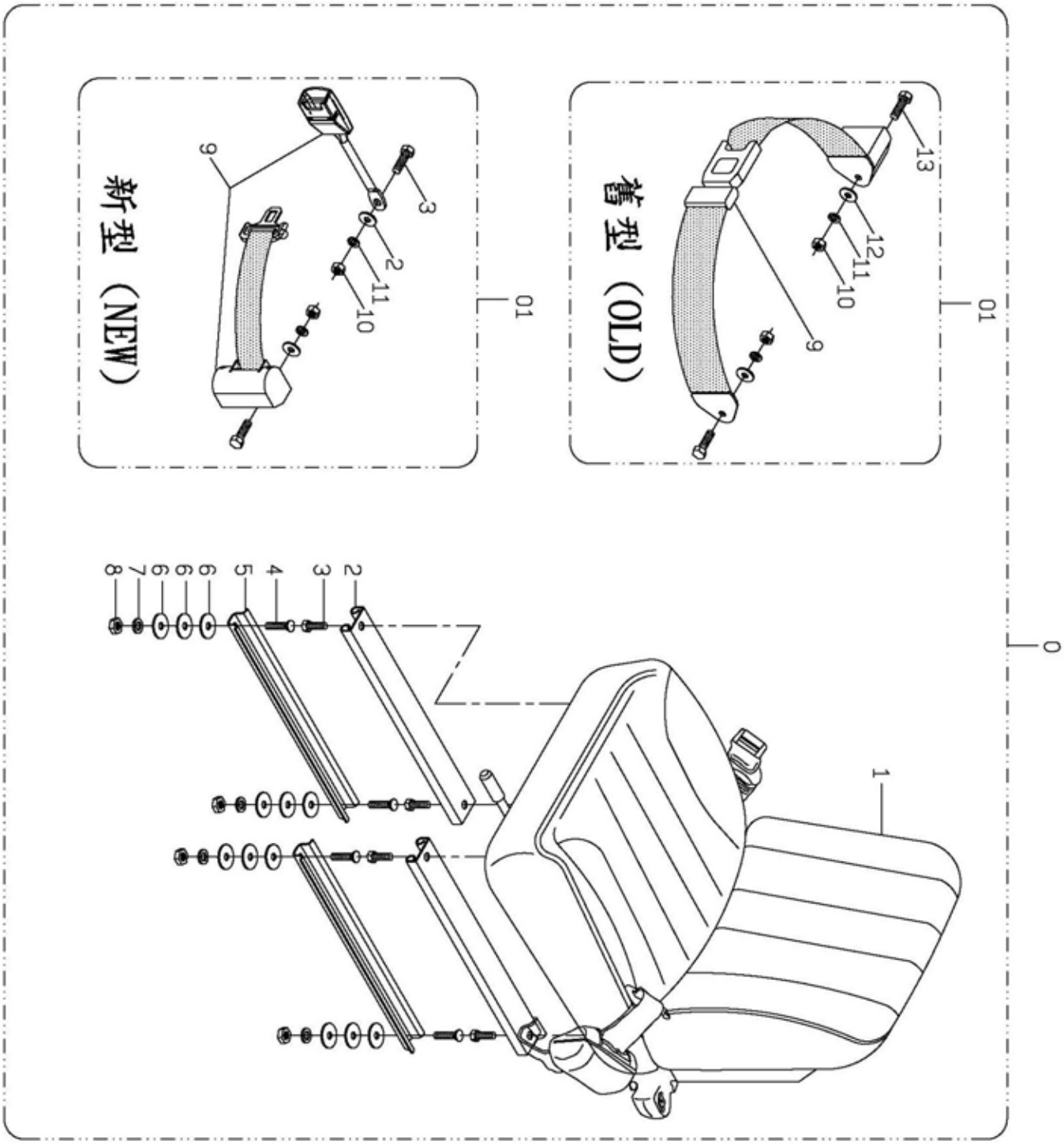

https://truckmanualshub.com/

駕駛座椅組
A305-3
DRIVER SEAT

編號 NO.	零件名稱 PART NAME						FD						FG						FD〔C〕						FG〔C〕						機號 BODY NO.	備註 REMARK
	新碼 NEW PART NO.	舊碼 OLD PART NO.	規格 SPECIFICATION	互換性 ITC	應用日期 APPLIED DATE	數量 QTY	15 A	18 B	20 C	25 D	30 E	35 F	15 G	18 H	20 I	25 J	30 K	35 L	15 M	18 N	20 O	25 P	30 Q	35 R	15 S	18 T	20 U	25 V	30 W	35 X		
0	**座椅組(DRIVER SEAT ASSY)**																															
	B350519	22511200				1	A	B	C	D	E	F	G	H	I	J	K	L														
0	**座椅組—無安全帶式(DRIVER SEAT ASSY-NO SAFETY BELT)**																															
	B350520	22511215				1	A	B	C	D	E	F	G	H	I	J	K	L														
01	**安全帶組(SAFETY BELT ASSY)**																															
	B350069	22511116				1	A	B	C	D	E	F	G	H	I	J	K	L														停用(NOT USED)
	B350069A					1	A	B	C	D	E	F	G	H	I	J	K	L														
1	**駕駛座椅(DRIVER SEAT)**																															
	33848	92511201				1	A	B	C	D	E	F	G	H	I	J	K	L														
2	**上滑軌(ORBITAL)**																															
	32749	92511102				2	A	B	C	D	E	F	G	H	I	J	K	L														
3	**六角頭螺栓(BOLT)**																															
	M1424-M8*30	92503010				4	A	B	C	D	E	F	G	H	I	J	K	L														
4	**圓頭螺栓(BOLT)**																															
	M1409-M8*30	92511104				4	A	B	C	D	E	F	G	H	I	J	K	L														
5	**下滑軌(ORBITAL)**																															
	32750	92511105				2	A	B	C	D	E	F	G	H	I	J	K	L														
6	**平華司(WASHER)**																															
	M1602010	92507027				12	A	B	C	D	E	F	G	H	I	J	K	L														
7	**彈簧華司(WASHER, SPRING)**																															
	M1605-M8	92501019				4	A	B	C	D	E	F	G	H	I	J	K	L														
8	**螺帽(NUT)**																															
	M1501-M8	92501115				4	A	B	C	D	E	F	G	H	I	J	K	L														
9	**安全帶(SAFETY BELT)**																															
	32751	92511108				1	A	B	C	D	E	F	G	H	I	J	K	L														停用(NOT USED)
	32751A					1	A	B	C	D	E	F	G	H	I	J	K	L														
10	**螺帽(NUT)**																															
		92506028				2	A	B	C	D	E	F	G	H	I	J	K	L														
11	**彈簧華司(WASHER, SPRING)**																															
	M1605-M10	92501218				2	A	B	C	D	E	F	G	H	I	J	K	L														
12	**平華司(WASHER)**																															
	M1602012	92511111				2	A	B	C	D	E	F	G	H	I	J	K	L														
13	**螺栓(BOLT)**																															
	M1424002	92501219				2	A	B	C	D	E	F	G	H	I	J	K	L														

https://truckmanualshub.com/

車身配件系統
A305
CAR BODY FITTING SYSTEM

加速器連桿組
A305-4
ACCELERATOR LINK

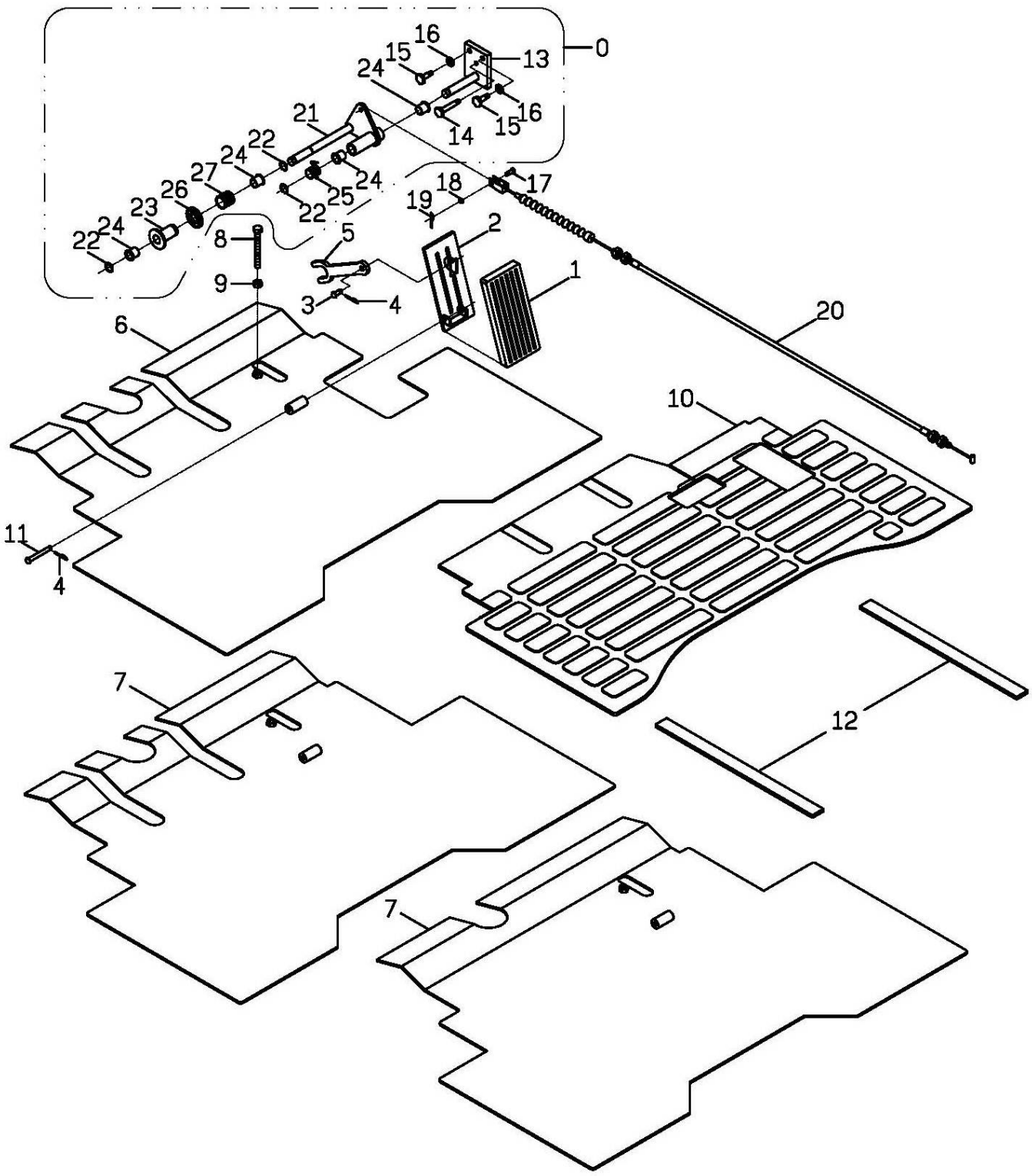

https://truckmanualshub.com/

加速器連桿組
A305-4
ACCELERATOR LINK

編號 NO.	新碼 NEW PART NO.	舊碼 OLD PART NO.	規格 SPECIFICATION	互換性 ITC	應用日期 APPLIED DATE	數量 QTY	FD 15 A	FD 18 B	FD 20 C	FD 25 D	FD 30 E	FD 35 F	FG 15 G	FG 18 H	FG 20 I	FG 25 J	FG 30 K	FG 35 L	FD〔C〕 15 M	FD〔C〕 18 N	FD〔C〕 20 O	FD〔C〕 25 P	FD〔C〕 30 Q	FD〔C〕 35 R	FG〔C〕 15 S	FG〔C〕 18 T	FG〔C〕 20 U	FG〔C〕 25 V	FG〔C〕 30 W	FG〔C〕 35 X	機號 BODY NO.	備註 REMARK
0	**加速器組(ACCELERATOR ASSY)**																															
	B350070					1	A	B					G	H																		
	B350071					1			C	D	E	F			I	J	K	L														
1	**加油踏板墊(REFUEL PEDAL PAD)**																															
	32752	32512501				1	A	B	C	D	E	F	G	H	I	J	K	L														
2	**加油踏板(REFUEL PEDAL)**																															
	32753	32512502				1	A	B	C	D	E	F	G	H	I	J	K	L														
3	**銷(PIN)**																															
	M1306004	92512503				1	A	B	C	D	E	F	G	H	I	J	K	L														停用(NOT USED)
	34848	92512503				1	A	B	C	D	E	F	G	H	I	J	K	L														
4	**開口銷(PIN, COTTER)**																															
		92512504				2	A	B	C	D	E	F	G	H	I	J	K	L														
5	**加速連桿(ACCELERATOR ROD)**																															
	32754	32512505				1	A	B	C	D	E	F	G	H	I	J	K	L														
6	**腳踏板組立(PEDAL)**																															
		21512507			2000/10	1	A	B					G	H																		停用(NOT USED)
		22512507			2000/10	1			C	D	E	F			I	J	K	L														停用(NOT USED)
	32755	41512507			2003/02	1	A	B					G	H																		手排(MT)
	32756	42512507			2003/02	1			C	D	E	F			I	J	K	L														手排(MT)
7	**腳踏板組立(PEDAL)**																															
		21512520			2000/10	1	A	B					G	H																		停用(NOT USED)
		22512520			2000/10	1			C	D	E	F			I	J	K	L														停用(NOT USED)
	32758	42512520			2003/02	1			C	D	E	F			I	J	K	L														停用(NOT USED)
	32757	41512520			2003/02	1	A	B					G	H																		自排(AT)
	31474				2005/11	1			C	D	E	F			I	J	K	L														自排(AT)
8	**螺栓(BOLT)**																															
	M1424-M8*70	92512521				1	A	B	C	D	E	F	G	H	I	J	K	L														
9	**螺帽(NUT)**																															
	M1501-M8	92501115				1	A	B	C	D	E	F	G	H	I	J	K	L														
10	**踏板墊(PEDAL PAD)**																															
	32762	42512530			1999/11	1			C	D	E	F			I	J	K	L														停用(NOT USED)
	33853				2005/03	1			C	D	E	F			I	J	K	L														停用(NOT USED)
	32764	52512503			1999/11	1	A	B					G	H																		手排(MT), 自排(AT)
	33853A				2006/06	1			C	D	E	F			I	J	K	L														自排(AT)
11	**銷(PIN)**																															
	M1306003	92512524				1	A	B	C	D	E	F	G	H	I	J	K	L														停用(NOT USED)
	34860	32512524			2006/09	1	A	B	C	D	E	F	G	H	I	J	K	L														

https://truckmanualshub.com/

加速器連桿組
A305-4
ACCELERATOR LINK

編號 NO.	新碼 NEW PART NO.	舊碼 OLD PART NO.	規格 SPECIFICATION	互換性 ITC	應用日期 APPLIED DATE	數量 QTY	FD 15 A	FD 18 B	FD 20 C	FD 25 D	FD 30 E	FD 35 F	FG 15 G	FG 18 H	FG 20 I	FG 25 J	FG 30 K	FG 35 L	FD〔C〕 15 M	FD〔C〕 18 N	FD〔C〕 20 O	FD〔C〕 25 P	FD〔C〕 30 Q	FD〔C〕 35 R	FG〔C〕 15 S	FG〔C〕 18 T	FG〔C〕 20 U	FG〔C〕 25 V	FG〔C〕 30 W	FG〔C〕 35 X	機號 BODY NO.	備註 REMARK
12	**防震膠帶(ADHESIVE TAPE)**																															
	32765	92512525				2	A	B	C	D	E	F	G	H	I	J	K	L														
13	**固定座(BRACKET)**																															
	32766	21512515				1	A	B					G	H																		
	32767	22512515				1			C	D	E	F			I	J	K	L														
14	**彈簧固定螺栓(SPRING BOLT FIXING)**																															
	M1423-M6*20	92509043				1	A	B	C	D	E	F	G	H	I	J	K	L														停用(NOT USED)
	34845	92512512			2006/09	1	A	B	C	D	E	F	G	H	I	J	K	L														
15	**螺栓(BOLT)**																															
	M1423-M6*16	92512513				2	A	B	C	D	E	F	G	H	I	J	K	L														
16	**彈簧華司(SPRING WASHER)**																															
	M1605-M6	92503218				2	A	B	C	D	E	F	G	H	I	J	K	L														
17	**銷(PIN)**																															
	M1306002	92511062				1	A	B	C	D	E	F	G	H	I	J	K	L														停用(NOT USED)
	34814	92511062				1	A	B	C	D	E	F	G	H	I	J	K	L														
18	**平華司(WASHER)**																															
	M1602003	92512516				1	A	B	C	D	E	F	G	H	I	J	K	L														
19	**開口銷(PIN, COTTER)**																															
	M1307004	92512310				1	A	B	C	D	E	F	G	H	I	J	K	L														
20	**加速鋼索組(REFUEL STEEL ROPE)**																															
	32769	32512526	C240			1	A	B	C	D																						
	32770	32512517A	4JG2			1			C	D	E	F																				
	32771	32512527	H20,H25			1							G	H	I	J	K	L														
21	**連桿座(LINKAGE)**																															
	32772	21512510				1	A	B					G	H																		
	32773	22512510				1			C	D	E	F			I	J	K	L														
22	**C型扣環(C-RING)**																															
	M1312-S12	92512506				3	A	B	C	D	E	F	G	H	I	J	K	L														
23	**滾輪(DOOR ROLLER)**																															
	32774	32512509				1	A	B	C	D	E	F	G	H	I	J	K	L														
24	**套筒(BUSHING)**																															
	32775	32512307				4	A	B	C	D	E	F	G	H	I	J	K	L														
25	**扭力彈簧(SPRING)**																															
	32776	92512511				1	A	B	C	D	E	F	G	H	I	J	K	L														
26	**活動片(LIVE SHIM)**																															
	32777	32512528				1	A	B	C	D	E	F	G	H	I	J	K	L														
27	**彈簧(SPRING)**																															
	32778	92512529A				1	A	B	C	D	E	F	G	H	I	J	K	L														

https://truckmanualshub.com/

制動系統
A306
BRAKE SYSTEM

https://truckmanualshub.com/

制動系統
A306
BRAKE SYSTEM

手煞車組
A306-1
PARKING BRAKE

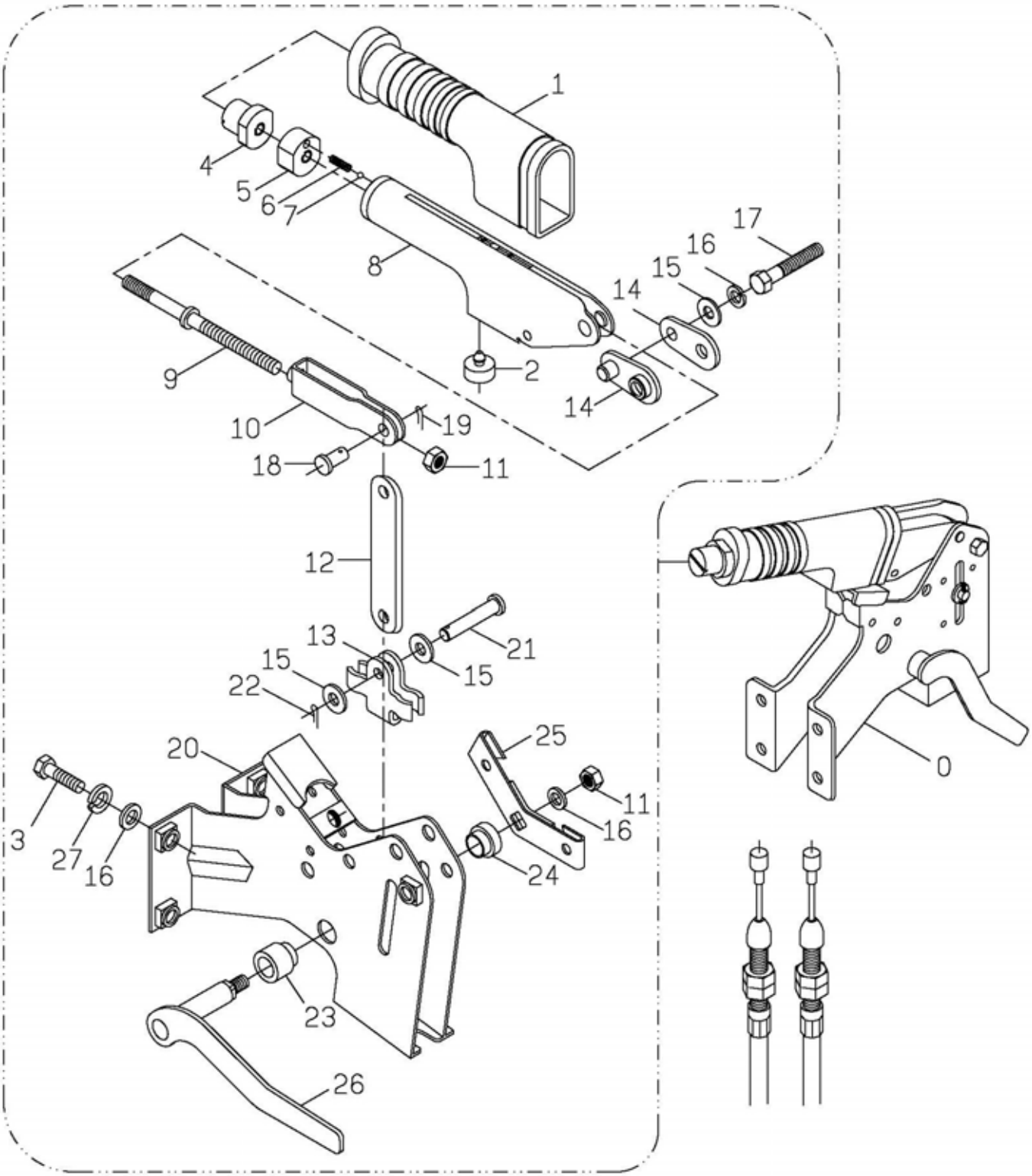

https://truckmanualshub.com/

制動系統
A306
BRAKE SYSTEM

手煞車組
A306-1
PARKING BRAKE

編號 NO.	零件名稱 PART NAME						FD						FG						FD〔C〕						FG〔C〕						機號 BODY NO.	備註 REMARK
	新碼 NEW PART NO.	舊碼 OLD PART NO.	規格 SPECIFICATION	互換性 ITC	應用日期 APPLIED DATE	數量 QTY	1 5 A	1 8 0 B	2 0 5 C	2 0 5 D	3 0 5 E	3 0 5 F	1 5 G	1 8 0 H	2 0 5 I	2 0 5 J	3 0 5 K	3 0 5 L	1 5 M	1 8 0 N	2 0 5 O	2 0 5 P	3 0 5 Q	3 0 5 R	1 5 S	1 8 0 T	2 0 5 U	2 0 5 V	3 0 5 W	3 0 5 X		
0	**電子式手煞車總成(ELECTRON HAND BRAKE ASSY)**																															
	B350796					1	A	B	C	D	E	F	G	H	I	J	K	L														
1	**把手護套(PROTECTIVE CASING)**																															
	32779	32518125				1	A	B	C	D	E	F	G	H	I	J	K	L														
2	**防震墊(DAMPER)**																															
	32780	32518126				4	A	B	C	D	E	F	G	H	I	J	K	L														
3	**螺栓(BOLT)**																															
	M1424-M8*20	92504208				4	A	B	C	D	E	F	G	H	I	J	K	L														
4	**把手頭(GRIP)**																															
	32781	32518101				1	A	B	C	D	E	F	G	H	I	J	K	L														
5	**調整螺帽(NUT, ADJUSTING)**																															
	32782	32518102				1	A	B	C	D	E	F	G	H	I	J	K	L														
6	**彈簧(SPRING)**																															
	32783	32518103A				1	A	B	C	D	E	F	G	H	I	J	K	L														
7	**鋼珠(STEEL BALL)**																															
	M1323034	32518104				1	A	B	C	D	E	F	G	H	I	J	K	L														
8	**把手(LEVER)**																															
	32784	32518105				1	A	B	C	D	E	F	G	H	I	J	K	L														
9	**調整螺桿(STUD, ADJUSTING)**																															
	32785	32518106				1	A	B	C	D	E	F	G	H	I	J	K	L														
10	**調整螺桿固定座(ADJUSTING, BRACKET)**																															
	32786	32518107				1	A	B	C	D	E	F	G	H	I	J	K	L														
11	**螺帽(NUT)**																															
	M1501-M8	92501115				2	A	B	C	D	E	F	G	H	I	J	K	L														
12	**連桿(LINK)**																															
	32787	32518109				1	A	B	C	D	E	F	G	H	I	J	K	L														
13	**拉線座(WIRE SEAT)**																															
	32788	32518110				1	A	B	C	D	E	F	G	H	I	J	K	L														
14	**定位板(LINK, FOR SUPPORTING)**																															
	32789	32518111				2	A	B	C	D	E	F	G	H	I	J	K	L														
15	**墊圈(WASHER)**																															
	32790	92511053				3	A	B	C	D	E	F	G	H	I	J	K	L														
16	**彈簧墊圈(SPRING WASHER)**																															
	M1605-M8	92501019				6	A	B	C	D	E	F	G	H	I	J	K	L														
17	**螺栓(BOLT)**																															
		92518114				1	A	B	C	D	E	F	G	H	I	J	K	L														
18	**銷(PIN)**																															
	M1306-8*15	92518115				1	A	B	C	D	E	F	G	H	I	J	K	L														

https://truckmanualshub.com/

制動系統
A306
BRAKE SYSTEM

手煞車組
A306-1
PARKING BRAKE

編號 NO.	零件名稱 PART NAME						FD						FG						FD〔C〕						FG〔C〕						機號 BODY NO.	備註 REMARK
	新碼 NEW PART NO.	舊碼 OLD PART NO.	規格 SPECIFICATION	互換性 ITC	應用日期 APPLIED DATE	數量 QTY	15 A	18 B	20 C	25 D	30 E	35 F	15 G	18 H	20 I	25 J	30 K	35 L	15 M	18 N	20 O	25 P	30 Q	35 R	15 S	18 T	20 U	25 V	30 W	35 X		
19	**開口銷(PIN, COTTER)**																															
	M1307005	92511063				1	A	B	C	D	E	F	G	H	I	J	K	L														
20	**固定座(BRACKET)**																															
	35048					1	A	B	C	D	E	F	G	H	I	J	K	L														
21	**銷(PIN)**																															
	M1306-8*42	32518118				1	A	B	C	D	E	F	G	H	I	J	K	L														
22	**開口銷(PIN, COTTER)**																															
	M1307005	92511063				1	A	B	C	D	E	F	G	H	I	J	K	L														
23	**襯套(BUSH)**																															
	32792	32518120				1	A	B	C	D	E	F	G	H	I	J	K	L														
24	**襯套(BUSH)**																															
	32793	32518121				1	A	B	C	D	E	F	G	H	I	J	K	L														
25	**把手螺栓帶動板(CATCH PLATE)**																															
	32794	32518122				1	A	B	C	D	E	F	G	H	I	J	K	L														
26	**把手螺栓(LEVER, BOLT)**																															
	32795	32518123A				1	A	B	C	D	E	F	G	H	I	J	K	L														
27	**平墊圈(WASHER)**																															
	M1602007	92511056				4	A	B	C	D	E	F	G	H	I	J	K	L														

https://truckmanualshub.com/

制動系統
A306
BRAKE SYSTEM

手排臥式煞車組

A306-2

(MT)HORIZONTAL-BRAKE PEDAL ASSY

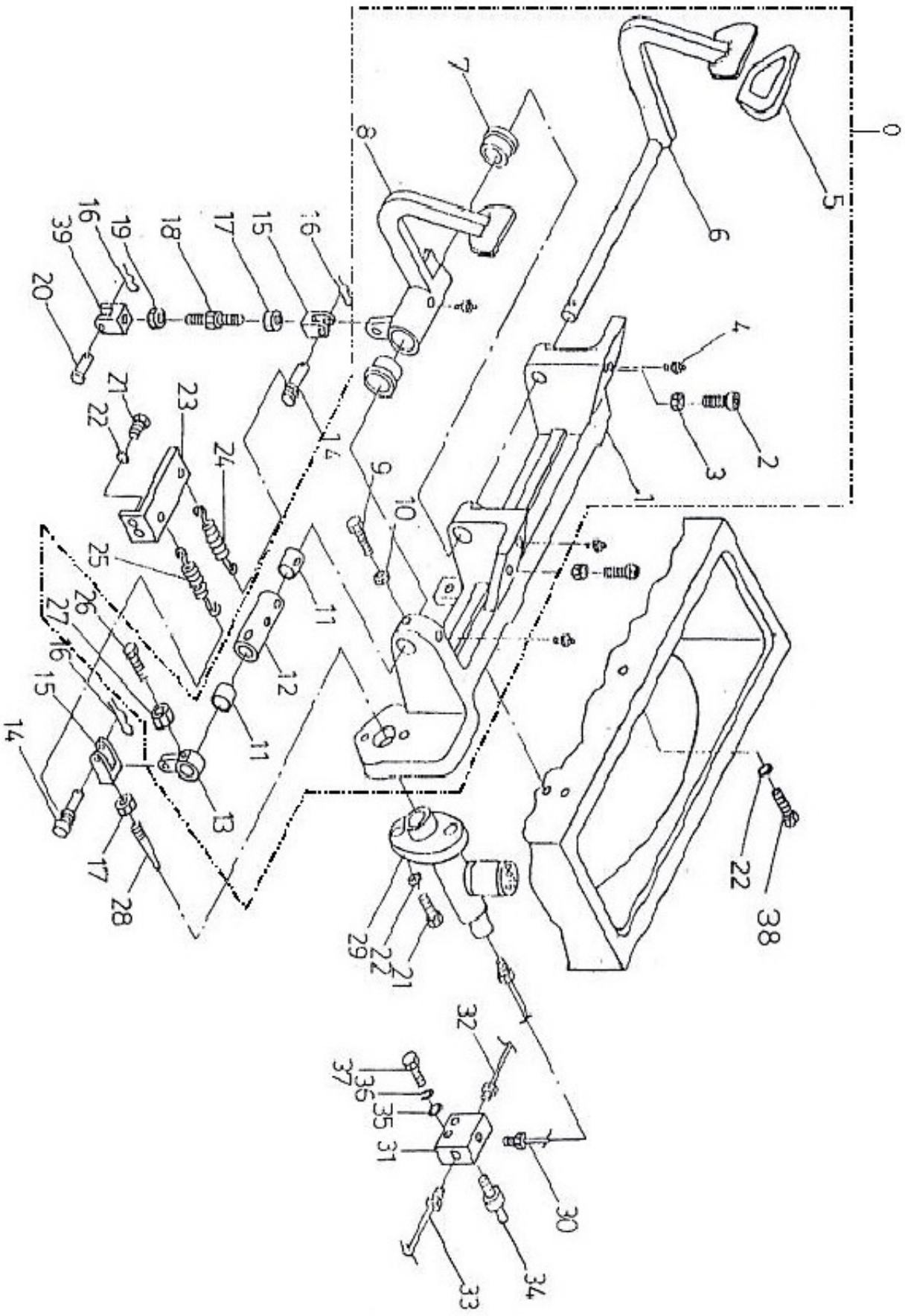

https://truckmanualshub.com/

制動系統
A306
BRAKE SYSTEM

手排臥式煞車組
A306-2
(MT)HORIZONTAL-BRAKE PEDAL ASSY

編號 NO.	零件名稱 PART NAME			互換性 ITC	應用日期 APPLIED DATE	數量 QTY	FD						FG						FD〔C〕						FG〔C〕						機號 BODY NO.	備註 REMARK
	新碼 NEW PART NO.	舊碼 OLD PART NO.	規格 SPECIFICATION				15 A	18 B	20 C	25 D	30 E	35 F	15 G	18 H	20 I	25 J	30 K	35 L	15 M	18 N	20 O	25 P	30 Q	35 R	15 S	18 T	20 U	25 V	30 W	35 X		
0	踏板組(PEDAL ASSY)																															
	B350073					1	A	B	C	D	E	F	G	H	I	J	K	L														
1	煞車固定座(BRAKE BRACKET)																															
	32796	32512601				1	A	B	C	D	E	F	G	H	I	J	K	L														
2	螺栓(BOLT)																															
	M1410003	92511009				2	A	B	C	D	E	F	G	H	I	J	K	L														
3	螺帽(NUT)																															
	M1501-M8	92501115				2	A	B	C	D	E	F	G	H	I	J	K	L														
4	黃油嘴(GREASE FITTING)																															
	M1321-M6	92512609				4	A	B	C	D	E	F	G	H	I	J	K	L														
5	踏板墊(PEDAL PAD)																															
	32470	92512445				2	A	B	C	D	E	F	G	H	I	J	K	L														
6	煞車踏板組立(BRAKE PEDAL)																															
	32797	32512604				1	A	B	C	D	E	F	G	H	I	J	K	L														
7	套筒(BUSHING)																															
	32798	32512610				2	A	B	C	D	E	F	G	H	I	J	K	L														
8	離合器踏板組立(CLUTCH PEDAL)																															
	32799	32512605				1	A	B	C	D	E	F	G	H	I	J	K	L														
9	螺栓(BOLT)																															
	M1423-M6*20	92509043				1	A	B	C	D	E	F	G	H	I	J	K	L														
10	螺帽(NUT)																															
	M1513-M6	92515415				1	A	B	C	D	E	F	G	H	I	J	K	L														
11	套筒(BUSHING)																															
	32800	32512611				2	A	B	C	D	E	F	G	H	I	J	K	L														
12	內套筒(INTERNAL BUSHING)																															
	32801	32512612				1	A	B	C	D	E	F	G	H	I	J	K	L														
13	連桿接頭組立(CONNECT, ROD)																															
	32802	32512630				1	A	B	C	D	E	F	G	H	I	J	K	L														
14	銷(PIN)																															
	31974	32512619				2	A	B	C	D	E	F	G	H	I	J	K	L														
15	U型塊(右牙)(BLOCK OAK "U")(R.H)																															
	32472	32512430A				2	A	B	C	D	E	F	G	H	I	J	K	L														
16	開口銷(PIN, COTTER)																															
	M1307006	92512304				3	A	B	C	D	E	F	G	H	I	J	K	L														
17	螺帽(NUT)																															
		92512431				2	A	B	C	D	E	F	G	H	I	J	K	L														停用(NOT USED)
	M1502001	92504016				2	A	B	C	D	E	F	G	H	I	J	K	L														

https://truckmanualshub.com/

制動系統
A306
BRAKE SYSTEM

手排臥式煞車組
A306-2
(MT)HORIZONTAL-BRAKE PEDAL ASSY

編號 NO.	零件名稱 PART NAME						FD						FG						FD〔C〕						FG〔C〕						機號 BODY NO.	備註 REMARK
	新碼 NEW PART NO.	舊碼 OLD PART NO.	規格 SPECIFICATION	互換性 ITC	應用日期 APPLIED DATE	數量 QTY	15 A	18 B	20 C	25 D	30 E	35 F	15 G	18 H	20 I	25 J	30 K	35 L	15 M	18 N	20 O	25 P	30 Q	35 R	15 S	18 T	20 U	25 V	30 W	35 X		
18	連桿(CONNECT ROD)																															
	32803	32512622				1	A	B	C	D	E	F	G	H	I	J	K	L														
19	螺帽(NUT)																															
	M1502002	92512623				1	A	B	C	D	E	F	G	H	I	J	K	L														
20	銷(PIN)																															
	M1306-10*25	92512309				1	A	B	C	D	E	F	G	H	I	J	K	L														停用(NOT USED)
	34602	92512309A				1	A	B	C	D	E	F	G	H	I	J	K	L														
21	螺栓(BOLT)																															
		92512446			2000/10	2	A	B	C	D	E	F	G	H	I	J	K	L														停用(NOT USED)
	M1424-M8*30	92503010			2003/02	2	A	B	C	D	E	F	G	H	I	J	K	L														
22	彈簧華司(SPRING WASHER)																															
	M1605-M8	92501019				4	A	B	C	D	E	F	G	H	I	J	K	L														
23	彈簧扣座(BRACKET SPRING)																															
	32804	32512615				1	A	B	C	D	E	F	G	H	I	J	K	L														
24	彈簧(SPRING)																															
	32805	92512617A				1	A	B	C	D	E	F	G	H	I	J	K	L														
25	彈簧(SPRING)																															
	32806	92512636				1	A	B	C	D	E	F	G	H	I	J	K	L														
26	螺栓(BOLT)																															
	M1424-M8*25	92501104				3	A	B	C	D	E	F	G	H	I	J	K	L														
27	螺帽(NUT)																															
		92512631				2	A	B	C	D	E	F	G	H	I	J	K	L														
28	頂桿(COCKET)																															
	32807	32512621				1	A	B	C	D	E	F	G	H	I	J	K	L														
29	煞車總泵(BRAKE CYLINDER)																															
	32808	92512651				1	A	B	C	D	E	F	G	H	I	J	K	L														
30	煞車鋼管(BRAKE TUBE)																															
	32809	92512606				1	A	B	C	D	E	F	G	H	I	J	K	L														
31	三通閥(CONNECTOR, 3-WAY)																															
	32810	32512607				1	A	B	C	D	E	F	G	H	I	J	K	L														
32	右煞車鋼管(STEEL TUBE, BRAKE R.H.)																															
		92512624			2000/10	1	A	B	C	D	E	F	G	H	I	J	K	L														停用(NOT USED)
	32811	92512624			2003/02	1	A	B	C	D			G	H	I	J																停用(NOT USED)
	34825				2006/08	1	A	B					G	H																		
	32811A				2006/11	1			C	D					I	J																手排(MT),自排(AT)
	32812	93012624			2003/02	1					E	F					K	L														

https://truckmanualshub.com/

制動系統
A306
BRAKE SYSTEM

手排臥式煞車組
A306-2
(MT)HORIZONTAL-BRAKE PEDAL ASSY

編號 NO.	新碼 NEW PART NO.	舊碼 OLD PART NO.	規格 SPECIFICATION	互換性 ITC	應用日期 APPLIED DATE	數量 QTY	FD 15 A	FD 18 B	FD 20 C	FD 25 D	FD 30 E	FD 35 F	FG 15 G	FG 18 H	FG 20 I	FG 25 J	FG 30 K	FG 35 L	FD〔C〕 15 M	FD〔C〕 18 N	FD〔C〕 20 O	FD〔C〕 25 P	FD〔C〕 30 Q	FD〔C〕 35 R	FG〔C〕 15 S	FG〔C〕 18 T	FG〔C〕 20 U	FG〔C〕 25 V	FG〔C〕 30 W	FG〔C〕 35 X	機號 BODY NO.	備註 REMARK
33	**左煞車鋼管(STEEL TUBE, BRAKE L.H.)**																															
		92512608			2000/10	1	A	B	C	D	E	F	G	H	I	J	K	L														停用(NOT USED)
	32813	92512608			2003/02	1	A	B	C	D			G	H	I	J																停用(NOT USED)
	34826				2006/08	1	A	B					G	H																		
	34821				2006/08	1			C	D					I	J																
	32814	93012608			2003/02	1					E	F					K	L														
34	**煞車開關(SWITCH BRAKE)**																															
	E1609001	92513008				1	A	B	C	D	E	F	G	H	I	J	K	L														
35	**平華司(WASHER)**																															
	M1602004	92510428				2	A	B	C	D	E	F	G	H	I	J	K	L														
36	**彈簧華司(SPRING WASHER)**																															
	M1605-M6	92503218				2	A	B	C	D	E	F	G	H	I	J	K	L														
37	**螺栓(BOLT)**																															
	M1423-M6*30	92512650				2	A	B	C	D	E	F	G	H	I	J	K	L														
38	**螺栓(BOLT)**																															
	M1424-M8*35	92501009				2	A	B	C	D	E	F	G	H	I	J	K	L														
39	**U型塊(左牙)(BLOCK OAK "U")(L.H.)**																															
	32815	32512431				1	A	B	C	D	E	F	G	H	I	J	K	L														

https://truckmanualshub.com/

制動系統
A306
BRAKE SYSTEM

自排臥式含煞車輔助器組
A306-3
(AT)HORIZONTAL-BRAKE AUXILIARY ASSY

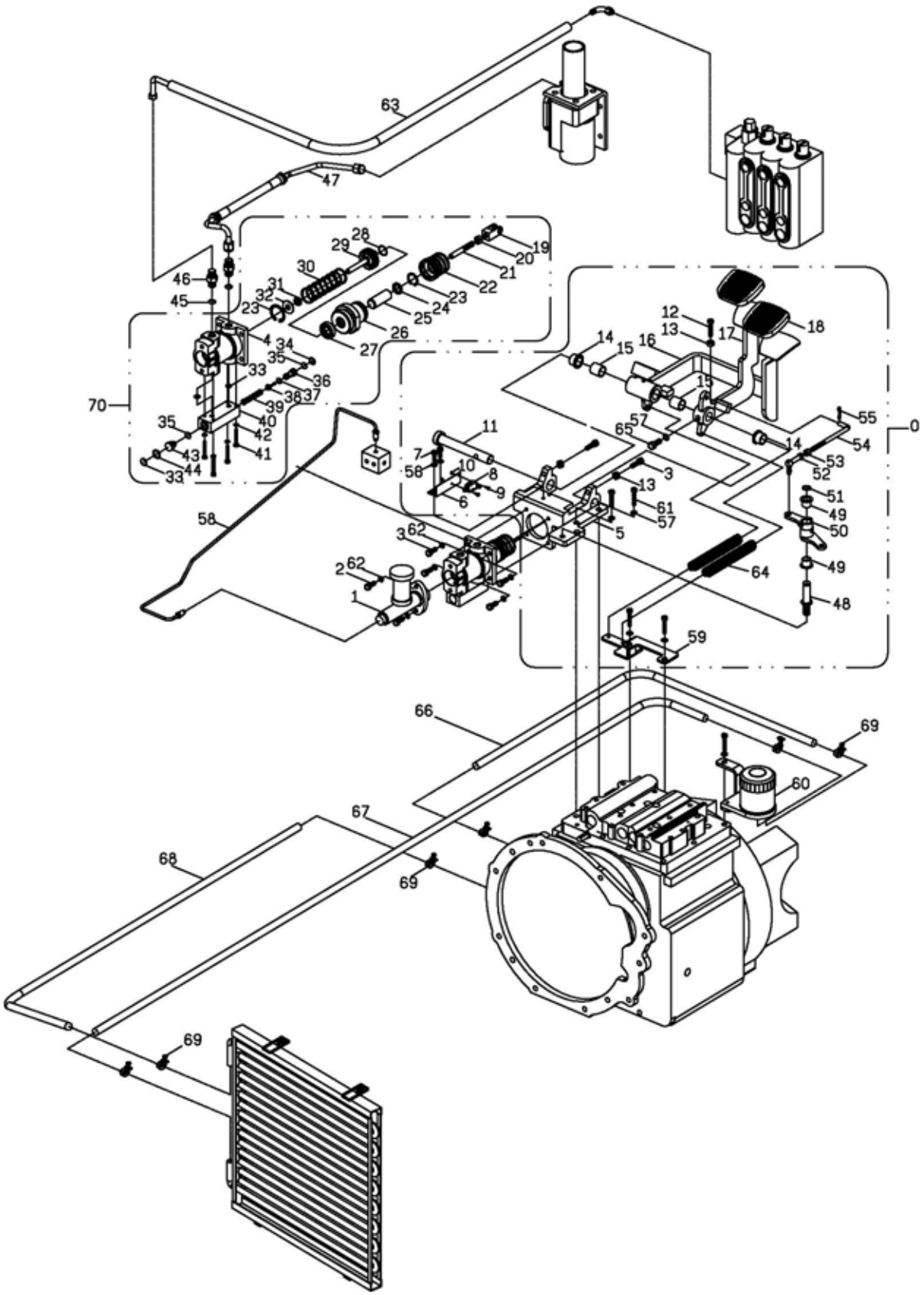

https://truckmanualshub.com/

制動系統
A306
BRAKE SYSTEM

自排臥式含煞車輔助器組
A306-3
(AT)HORIZONTAL-BRAKE AUXILIARY ASSY

編號 NO.	零件名稱 PART NAME						FD						FG						FD〔C〕						FG〔C〕						機號 BODY NO.	備註 REMARK
	新碼 NEW PART NO.	舊碼 OLD PART NO.	規格 SPECIFICATION	互換性 ITC	應用日期 APPLIED DATE	數量 QTY	15 A	18 B	20 C	25 D	30 E	35 F	15 G	18 H	20 I	25 J	30 K	35 L	15 M	18 N	20 O	25 P	30 Q	35 R	15 S	18 T	20 U	25 V	30 W	35 X		
0	踏板組(PEDAL ASSY)																															
	B350074					1	C	D	E	F			I	J	K	L																	停用(NOT USED)
1	煞車總泵(BRACK CYLINDER)																															
	32808	92512651				1	C	D	E	F			I	J	K	L																	
2	螺栓(BOLT)																															
	M1402-M8*25					2	C	D	E	F			I	J	K	L																	
3	螺栓(BOLT)																															
	M1402-M8*30					6	C	D	E	F			I	J	K	L																	
4	動力輔助缸(BRAKE BOOSTER)																															
	31477A					1	C	D	E	F			I	J	K	L																	停用(NOT USED)
5	煞車固定座(BRAKE BRACKET)																															
	31463C					1	C	D	E	F			I	J	K	L																	停用(NOT USED)
6	固定板(SMALL PLATE)																															
	31485A					1	C	D	E	F			I	J	K	L																	停用(NOT USED)
7	螺栓(BOLT)																															
	M1423-M6*16					2	C	D	E	F			I	J	K	L																	停用(NOT USED)
8	微動開關(MICRO SWICTH)																															
	E0901027					1	C	D	E	F			I	J	K	L																	停用(NOT USED)
9	螺栓(BOLT)																															
	M1414-M3*20					2	C	D	E	F			I	J	K	L																	停用(NOT USED)
10	螺帽(NUT)																															
	M1501-M3					2	C	D	E	F			I	J	K	L																	停用(NOT USED)
11	心軸(SPINDLE)																															
	31471					1	C	D	E	F			I	J	K	L																	
12	螺栓(BOLT)																															
	M1402-M8*35					1	C	D	E	F			I	J	K	L																	
13	螺帽(NUT)																															
	M1501-M8					3	C	D	E	F			I	J	K	L																	
14	銅套(BUSHING "Cu")																															
	32816	32518706				2	C	D	E	F			I	J	K	L																	
15	銅套(BUSHING "Cu")																															
	32800	32512611				2	C	D	E	F			I	J	K	L																	
16	離合器踏板(CLUTCH PEDAL)																															
	31464B					1	C	D	E	F			I	J	K	L																	
17	煞車踏板(BRAKE PEDAL)																															
	31465A					1	C	D	E	F			I	J	K	L																	
18	踏板墊(PEDAL PAD)																															
	32470	92512445				2	C	D	E	F			I	J	K	L																	

https://truckmanualshub.com/

自排臥式含煞車輔助器組
A306-3
(AT)HORIZONTAL-BRAKE AUXILIARY ASSY

編號 NO.	零件名稱 PART NAME						FD						FG						FD〔C〕						FG〔C〕						機號 BODY NO.	備註 REMARK
	新碼 NEW PART NO.	舊碼 OLD PART NO.	規格 SPECIFICATION	互換性 ITC	應用日期 APPLIED DATE	數量 QTY	15 A	18 B	20 C	25 D	30 E	35 F	15 G	18 H	20 I	25 J	30 K	35 L	15 M	18 N	20 O	25 P	30 Q	35 R	15 S	18 T	20 U	25 V	30 W	35 X		
19	U型塊(右牙)(BLOCK OAK "U" R.H.)																															
	32472	32512430A				1	C	D	E	F			I	J	K	L																停用(NOT USED)
20	螺帽(NUT)																															
	M1502001	92504016				1	C	D	E	F			I	J	K	L																停用(NOT USED)
21	頂桿(COCKET)																															
	31473					1	C	D	E	F			I	J	K	L																停用(NOT USED)
22	防塵套(DUST COVER)																															
	32817	34012965				1	C	D	E	F			I	J	K	L																停用(NOT USED)
23	C型扣環(C-RING)																															
		34012969				2	C	D	E	F			I	J	K	L																停用(NOT USED)
24	隔環(WASHER)																															
	31481					1	C	D	E	F			I	J	K	L																停用(NOT USED)
25	活塞(PLUNGER)																															
	31480A					1	C	D	E	F			I	J	K	L																停用(NOT USED)
26	輔助活塞頭(RETAINER)																															
	31478A					1	C	D	E	F			I	J	K	L																停用(NOT USED)
27	油封(SEAL)																															
	M0803025					1	C	D	E	F			I	J	K	L																停用(NOT USED)
28	O型環("O"RING)																															
		34012974				1	C	D	E	F			I	J	K	L																停用(NOT USED)
29	輔助活塞(PISTON)																															
	31479					1	C	D	E	F			I	J	K	L																停用(NOT USED)
30	彈簧(SPRING)																															
	32818	34012972				1	C	D	E	F			I	J	K	L																停用(NOT USED)
31	油封(SEAL)																															
	M0803019					1	C	D	E	F			I	J	K	L																停用(NOT USED)
32	墊圈(WASHER)																															
	M1602016	34012970				1	C	D	E	F			I	J	K	L																停用(NOT USED)
33	O型環("O"RING)																															
		92560724				3	C	D	E	F			I	J	K	L																停用(NOT USED)
34	C型扣環(C-RING)																															
		34012962				1	C	D	E	F			I	J	K	L																停用(NOT USED)
35	O型環("O"RING)																															
		34012954				2	C	D	E	F			I	J	K	L																停用(NOT USED)
36	閥體(VALVE BODY)																															
	32819	34012961				1	C	D	E	F			I	J	K	L																停用(NOT USED)
37	O型環("O"RING)																															
	M0801-P9	92507005				1	C	D	E	F			I	J	K	L																停用(NOT USED)

https://truckmanualshub.com/

制動系統
A306
BRAKE SYSTEM

自排臥式含煞車輔助器組
A306-3
(AT)HORIZONTAL-BRAKE AUXILIARY ASSY

編號 NO.	零件名稱 PART NAME						FD						FG						FD〔C〕						FG〔C〕						機號 BODY NO.	備註 REMARK
	新碼 NEW PART NO.	舊碼 OLD PART NO.	規格 SPECIFICATION	互換性 ITC	應用日期 APPLIED DATE	數量 QTY	1 15 A	1 18 B	2 05 C	2 05 D	3 05 E	3 05 F	1 15 G	1 18 H	2 05 I	2 05 J	3 05 K	3 05 L	1 15 M	1 18 N	2 05 O	2 05 P	3 05 Q	3 05 R	1 15 S	1 18 T	2 05 U	2 05 V	3 05 W	3 05 X		
38	閥桿(RELIEF PISTON)																															
	32820	34012960				1	C	D	E	F			I	J	K	L																停用(NOT USED)
39	彈簧(SPRING)																															
	31521					1	C	D	E	F			I	J	K	L																停用(NOT USED)
40	洩壓閥(BRAKE VALVE)																															
	32821	34012959				1	C	D	E	F			I	J	K	L																停用(NOT USED)
41	螺栓(BOLT)																															
	M1401-M5*35	94012998				4	C	D	E	F			I	J	K	L																停用(NOT USED)
42	彈簧華司(SPRING WASHER)																															
	M1605-M5	92512725				4	C	D	E	F			I	J	K	L																停用(NOT USED)
43	擋塊(PLUNGER)																															
	32822	34012957				1	C	D	E	F			I	J	K	L																停用(NOT USED)
44	C型扣環(C-RING)																															
		34012956				1	C	D	E	F			I	J	K	L																停用(NOT USED)
45	O型環("O"RING)																															
	M0801002	94008223				2	C	D	E	F			I	J	K	L																停用(NOT USED)
46	接頭(FITTING)																															
	32823	92508450				2	C	D	E	F			I	J	K	L																停用(NOT USED)
47	高壓鋼管(TUBE, HIGH PRESSURE)																															
	31522					1	C	D	E	F			I	J	K	L																停用(NOT USED)
48	心軸座(SPRING BRACKET)																															
	31486B					1	C	D	E	F			I	J	K	L																
49	銅套(BUSHING "Cu")																															
	32824	32518716				2	C	D	E	F			I	J	K	L																
50	連接曲柄軸(BOARD, CONNECTION)																															
	31472B					1	C	D	E	F			I	J	K	L																
51	C型扣環(C-RING)																															
	M1312-S15	92518715				1	C	D	E	F			I	J	K	L																
52	萬向接頭(UNIVERSAL JOINT)																															
	31581					1	C	D	E	F			I	J	K	L																
53	螺帽(NUT)																															
	M1501-M8	92501115				1	C	D	E	F			I	J	K	L																
54	拉桿-右牙(DRAWBAR R.H.)																															
	31482A					2	C	D	E	F			I	J	K	L																停用(NOT USED)
	31482B					2006/12 2	C	D	E	F			I	J	K	L																
55	開口銷(PIN, COTTER)																															
	M1307006	92512428				2	C	D	E	F			I	J	K	L																

https://truckmanualshub.com/

制動系統
A306
BRAKE SYSTEM

自排臥式含煞車輔助器組
A306-3
(AT)HORIZONTAL-BRAKE AUXILIARY ASSY

編號 NO.	零件名稱 PART NAME						FD						FG						FD〔C〕						FG〔C〕						機號 BODY NO.	備註 REMARK
	新碼 NEW PART NO.	舊碼 OLD PART NO.	規格 SPECIFICATION	互換性 ITC	應用日期 APPLIED DATE	數量 QTY	155 A	180 B	205 C	230 D	305 E	355 F	155 G	180 H	205 I	230 J	305 K	355 L	155 M	180 N	205 O	230 P	305 Q	355 R	155 S	180 T	205 U	230 V	305 W	355 X		
56	**彈簧華司(SPRING WASHER)**																															
	M1605-M6	92503218				2	C	D	E	F			I	J	K	L																停用(NOT USED)
57	**彈簧華司(SPRING WASHER)**																															
	M1605-M10	92501218				3	C	D	E	F			I	J	K	L																
58	**煞車鋼管(BRAKE TUBE)**																															
	31523					1	C	D	E	F			I	J	K	L																停用(NOT USED)
59	**彈簧固定座(SPRING FIXED BRACKET)**																															
	31476B					1	C	D	E	F			I	J	K	L																
60	**濾油器固定塊(BRACKET)**																															
	31475					2	C	D	E	F			I	J	K	L																停用(NOT USED)
61	**螺栓 (BOLT)**																															
	M1402-M10*50					3	C	D	E	F			I	J	K	L																
62	**彈簧華司(SPRING WASHER)**																															
	M1605-M8	92501019				6	C	D	E	F			I	J	K	L																
63	**回油管(TUBE)**																															
	31576					1	C	D	E	F			I	J	K	L																停用(NOT USED)
64	**彈簧(SPRING)**																															
	31665					2	C	D	E	F			I	J	K	L																
65	**螺栓(BOLT)**																															
	M1424-M8*25	92501104				1	C	D	E	F			I	J	K	L																
66	**油管(TUBE)**																															
	31577					1	C	D	E	F			I	J	K	L																
67	**油管(TUBE)**																															
	31578					1	C	D	E	F			I	J	K	L																
68	**油管(TUBE)**																															
	31579					1	C	D	E	F			I	J	K	L																
69	**束管(CLAMP)**																															
	M1315011	92508007				6	C	D	E	F			I	J	K	L																
70	**煞車輔助鋼組件(BRAKE BOOSTER ASSY)**																															
	B350078	31703				1	C	D	E	F			I	J	K	L																停用(NOT USED)

https://truckmanualshub.com/

制動系統
A306
BRAKE SYSTEM

[自排臥式煞車組](#)

[A306-3A](#)

(AT)HORIZONTAL-BRAKE PEDAL ASSY

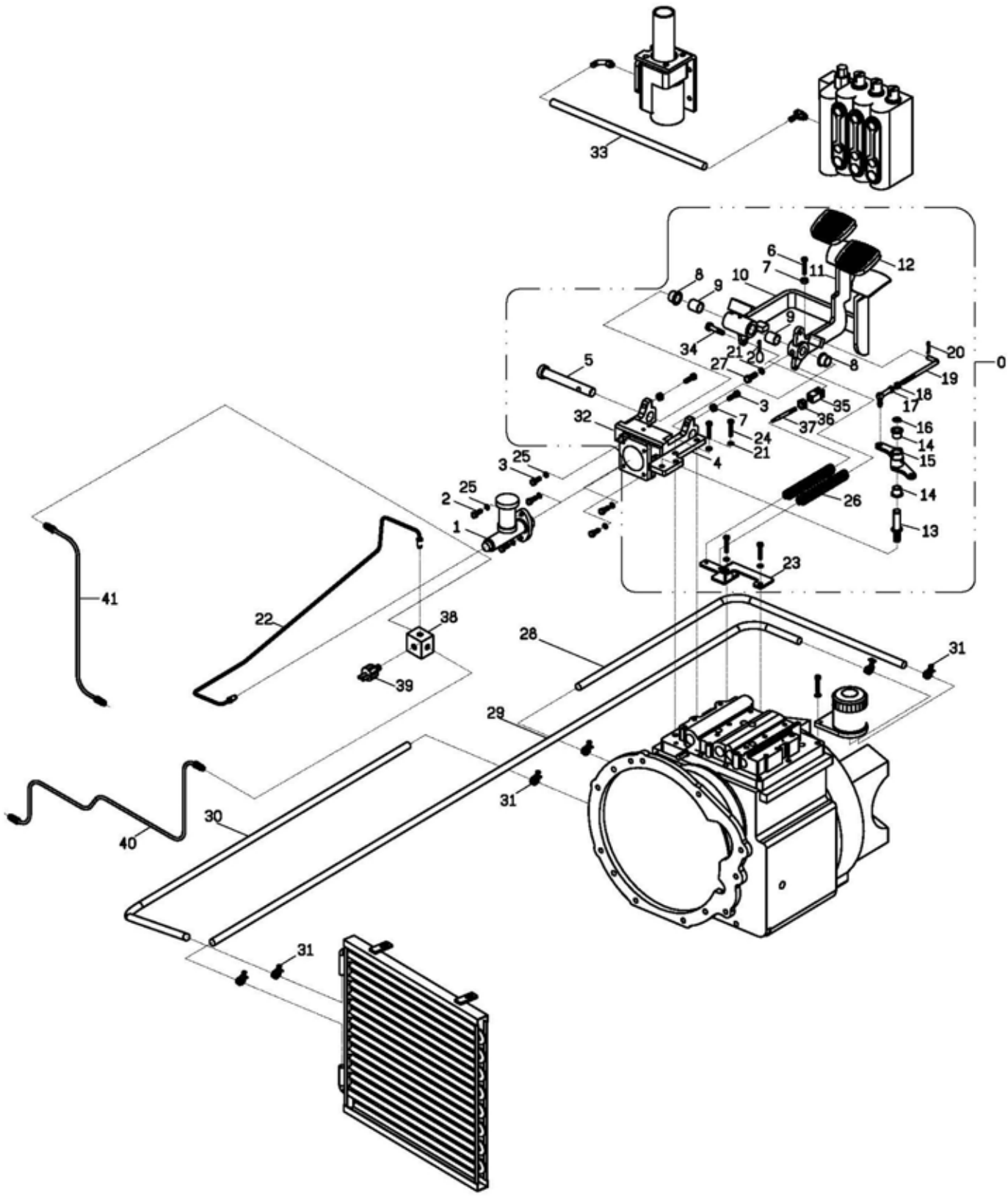

https://truckmanualshub.com/

制動系統
A306
BRAKE SYSTEM

自排臥式煞車組
A306-3A
(AT)HORIZONTAL-BRAKE PEDAL ASSY

編號 NO.	零件名稱 PART NAME			互換性 ITC	應用日期 APPLIED DATE	數量 QTY	FD 15 A	FD 18 B	FD 20 C	FD 25 D	FD 30 E	FD 35 F	FG 15 G	FG 18 H	FG 20 I	FG 25 J	FG 30 K	FG 35 L	FD〔C〕 15 M	FD〔C〕 18 N	FD〔C〕 20 O	FD〔C〕 25 P	FD〔C〕 30 Q	FD〔C〕 35 R	FG〔C〕 15 S	FG〔C〕 18 T	FG〔C〕 20 U	FG〔C〕 25 V	FG〔C〕 30 W	FG〔C〕 35 X	機號 BODY NO.	備註 REMARK
	新碼 NEW PART NO.	舊碼 OLD PART NO.	規格 SPECIFICATION																												
0	踏板組(PEDAL ASSY)																														
	B350753				2005/11	1	C	D	E	F			I	J	K	L														318894	
1	煞車總泵(BRACK CYLINDER)																														
	32808	92512651				1	C	D	E	F			I	J	K	L															
2	螺栓(BOLT)																														
	M1402-M8*25					2	C	D	E	F			I	J	K	L															
3	螺栓(BOLT)																														
	M1402-M8*30					6	C	D	E	F			I	J	K	L															
4	煞車固定座(BRAKE BRACKET)																														
	33929				2005/11	1	C	D	E	F			I	J	K	L														318894	
5	心軸(SPINDLE)																														
	31471					1	C	D	E	F			I	J	K	L															
6	螺栓(BOLT)																														
	M1402-M8*35					1	C	D	E	F			I	J	K	L															
7	螺帽(NUT)																														
	M1501-M8					3	C	D	E	F			I	J	K	L															
8	銅套(BUSHING "Cu")																														
	32816	32518706				2	C	D	E	F			I	J	K	L															
9	銅套(BUSHING "Cu")																														
	32800	32512611				2	C	D	E	F			I	J	K	L															
10	離合器踏板(CLUTCH PEDAL)																														
	31464B					1	C	D	E	F			I	J	K	L															
11	煞車踏板(BRAKE PEDAL)																														
	31465A					1	C	D	E	F			I	J	K	L															
12	踏板墊(PEDAL PAD)																														
	32470	92512445				2	C	D	E	F			I	J	K	L															
13	心軸座(SPRING BRACKET)																														
	31486B					1	C	D	E	F			I	J	K	L															
14	銅套(BUSHING "Cu")																														
	32824	32518716				2	C	D	E	F			I	J	K	L															
15	連接曲柄軸(BOARD, CONNECTION)																														
	31472B					1	C	D	E	F			I	J	K	L															
16	C型扣環(C-RING)																														
	M1312-S15	92518715				1	C	D	E	F			I	J	K	L															
17	萬向接頭(UNIVERSAL JOINT)																														
	31581					1	C	D	E	F			I	J	K	L															

https://truckmanualshub.com/

制動系統
A306
BRAKE SYSTEM

自排臥式煞車組
A306-3A
(AT)HORIZONTAL-BRAKE PEDAL ASSY

編號 NO.	零件名稱 PART NAME 新碼 NEW PART NO.	舊碼 OLD PART NO.	規格 SPECIFICATION	互換性 ITC	應用日期 APPLIED DATE	數量 QTY	FD 15A	FD 18B	FD 20C	FD 25D	FD 30E	FD 35F	FG 15G	FG 18H	FG 20I	FG 25J	FG 30K	FG 35L	FD〔C〕 15M	FD〔C〕 18N	FD〔C〕 20O	FD〔C〕 25P	FD〔C〕 30Q	FD〔C〕 35R	FG〔C〕 15S	FG〔C〕 18T	FG〔C〕 20U	FG〔C〕 25V	FG〔C〕 30W	FG〔C〕 35X	機號 BODY NO.	備註 REMARK
18	螺帽(NUT)																															
	M1501-M8	92501115				1	C	D	E	F			I	J	K	L																
19	拉桿-右牙(DRAWBAR R.H.)																															
	31482A					1	C	D	E	F			I	J	K	L																
20	開口銷(PIN, COTTER)																															
	M1307006	92512428				2	C	D	E	F			I	J	K	L																
21	彈簧華司(SPRING WASHER)																															
	M1605-M10	92501218				3	C	D	E	F			I	J	K	L																
22	煞車鋼管(BRAKE TUBE)																															
	31647				2005/11	1	C	D	E	F			I	J	K	L															318894	
23	彈簧固定座(SPRING FIXED BRACKET)																															
	31476B					1	C	D	E	F			I	J	K	L																
24	螺栓 (BOLT)																															
	M1402-M10*50					3	C	D	E	F			I	J	K	L																
25	彈簧華司(SPRING WASHER)																															
	M1605-M8	92501019				6	C	D	E	F			I	J	K	L																
26	彈簧(SPRING)																															
	31665					2	C	D	E	F			I	J	K	L																
27	螺栓(BOLT)																															
	M1424-M8*25	92501104				1	C	D	E	F			I	J	K	L																
28	油管(TUBE)																															
	31577					1	C	D	E	F			I	J	K	L																
29	油管(TUBE)																															
	31578					1	C	D	E	F			I	J	K	L																
30	油管(TUBE)																															
	31579					1	C	D	E	F			I	J	K	L																
31	束管(CLAMP)																															
	M1315011	92508007				6	C	D	E	F			I	J	K	L																
32	煞車總泵固定塊(BRACKEF OF BRAKE CLINDER)																															
	31484					1	C	D	E	F			I	J	K	L																停用(NOT USED)
33	回油管(HOSE, LOW PRESSURE)																															
	33907					1	C	D	E	F			I	J	K	L																停用(NOT USED)
	M0501014	92508008			2005/11	1	C	D	E	F			I	J	K	L															318894	
34	銷(PIN)																															
	31974	32512619				1	C	D	E	F			I	J	K	L																
35	U型塊(右牙)(BLOCK OAK "U" R.H.)																															
	32472	32512430A				1	C	D	E	F			I	J	K	L																

https://truckmanualshub.com/

制動系統
A306
BRAKE SYSTEM

自排臥式煞車組
A306-3A
(AT)HORIZONTAL-BRAKE PEDAL ASSY

編號 NO.	零件名稱 PART NAME						FD						FG						FD〔C〕						FG〔C〕						機號 BODY NO.	備註 REMARK
	新碼 NEW PART NO.	舊碼 OLD PART NO.	規格 SPECIFICATION	互換性 ITC	應用日期 APPLIED DATE	數量 QTY	15 A	18 B	20 C	25 D	30 E	35 F	15 G	18 H	20 I	25 J	30 K	35 L	15 M	18 N	20 O	25 P	30 Q	35 R	15 S	18 T	20 U	25 V	30 W	35 X		
36	**螺帽(NUT)**																															
	M1502001	92504016				1	C	D	E	F			I	J	K	L																
37	**頂桿(COCKET)**																															
	31487B				2006/04	1	C	D	E	F			I	J	K	L																
38	**三通閥(CONNECTOR,3-WAY)**																															
	32810	32512607A				1	C	D	E	F			I	J	K	L																
39	**煞車開關(BRAKE SWITCH)**																															
	E1609001	92513008				1	C	D	E	F			I	J	E	F																
40	**右煞車鋼管(STEEL TUBE,BRAKE R.H.)**																															
	32811	92512624			2003/02	1	C	D					I	J																		停用(NOT USED)
	32811A				2006/11	1	C	D					I	J																		手排(MT),自排(AT)
	32812					1			E	F					E	F																
41	**左煞車鋼管(STEEL TUBE,BRAKE L.H.)**																															
	34821					1	C	D					I	J																		
	32814					1			E	F					E	F																

https://truckmanualshub.com/

操縦系統
A307
CONTROL SYSTEM

https://truckmanualshub.com/

操縱系統
A307
CONTROL SYSTEM

自排排檔開關組
A307-1
(AT)SHIFT LEVER SWITCH

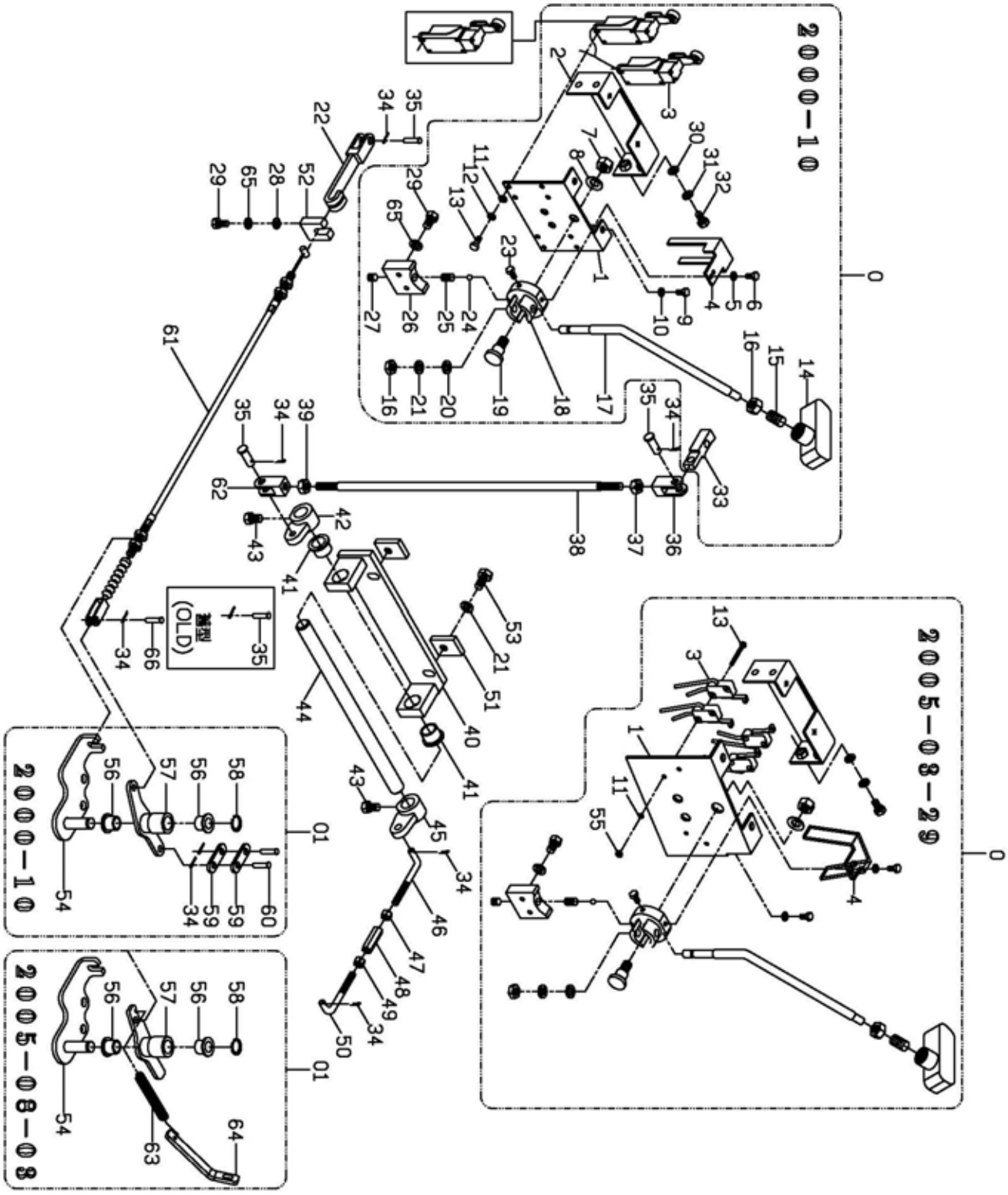

https://truckmanualshub.com/

自排排檔開關組
A307-1
(AT)SHIFT LEVER SWITCH

編號 NO.	零件名稱 PART NAME						FD		FG		FD〔C〕		FG〔C〕		機號 BODY NO.	備註 REMARK
	新碼 NEW PART NO.	舊碼 OLD PART NO.	規格 SPECIFICATION	互換性 ITC	應用日期 APPLIED DATE	數量 QTY	15 A	15 B	15 G	15 H	15 M	15 N	15 S	15 T		
							18 C	18 I	18 O	18 U						
							05 D	05 J	05 P	05 V						
							03 E	03 K	03 Q	03 W						
							05 F	05 L	05 R	05 X						
0	排檔變換組總成(SHIFT LEVER ASSY)															
		22518798			2000/10	1	A B C D E F		G H I J K L							停用(NOT USED)
		22518798A			2005/03	1	A B C D E F		G H I J K L							停用(NOT USED)
01	寸動拉線固定板組(STIR BARCKET ASSY)															
					2000/10	1	A B C D E F		G H I J K L							停用(NOT USED)
	B350080				2005/08	1	A B C D E F		G H I J K L							停用(NOT USED)
	B350080				2005/10	1	A B		G H							
1	變速固定座(TRANSMISSION BRACKET)															
		32512701			2000/10	1	A B C D E F		G H I J K L							停用(NOT USED)
	31711				2005/03	1	A B C D E F		G H I J K L							停用(NOT USED)
	34969	32512701A			2006/10	1	A B C D E F		G H I J K L							
2	變速桿支架(BRACKET, SHIFT LEVER)															
		42512773				1	A B C D E F		G H I J K L							停用(NOT USED)
	34930	32512773			2006/10	1	A B C D E F		G H I J K L							
3	微動開關(MICRO SWICTH)															
		92512748			2000/10	2	A B C D E F		G H I J K L							停用(NOT USED)
	E0211009				2005/03	4	A B C D E F		G H I J K L							停用(NOT USED)
3	微動開關組(MICRO SWICTH CONSTITUTE)															
	E0901025	92512776			2000/10	1	A B C D E F		G H I J K L							停用(NOT USED)
	31788				2005/03	1	A B C D E F		G H I J K L							停用(NOT USED)
4	搖臂(LEVER SHIFT)															
		32512741			2000/10	1	A B C D E F		G H I J K L							停用(NOT USED)
	31712				2005/03	1	A B C D E F		G H I J K L							停用(NOT USED)
5	彈簧華司(SPRING WASHER)															
	M1605-M4	92509019				2	A B C D E F		G H I J K L							停用(NOT USED)
6	螺栓(BOLT)															
	M1414-M4*10	92512742				2	A B C D E F		G H I J K L							停用(NOT USED)
7	螺帽(NUT)															
	M1513004	92504026				1	A B C D E F		G H I J K L							停用(NOT USED)
8	盤型華司(SPRING WASHER)															
	M1605-M12	92501024				1	A B C D E F		G H I J K L							停用(NOT USED)
9	螺栓(BOLT)															
	M1423-M6*16	92512513				2	A B C D E F		G H I J K L							停用(NOT USED)
10	彈簧華司(SPRING WASHER)															
	M1605-M6	92503218				2	A B C D E F		G H I J K L							停用(NOT USED)
11	平華司(WASHER)															
	M1602001	92512753			2000/10	8	A B C D E F		G H I J K L							停用(NOT USED)
	M1606-M3				2005/03	4	A B C D E F		G H I J K L							停用(NOT USED)

https://truckmanualshub.com/

自排排檔開關組
A307-1
(AT)SHIFT LEVER SWITCH

編號 NO.	零件名稱 PART NAME						FD		FG		FD〔C〕		FG〔C〕			
	新碼 NEW PART NO.	舊碼 OLD PART NO.	規格 SPECIFICATION	互換性 ITC	應用日期 APPLIED DATE	數量 QTY	1 1 2 2 3 3 5 5 A B C D E F		1 1 2 2 3 3 5 5 G H I J K L		1 1 2 2 3 3 5 5 M N O P Q R		1 1 2 2 3 3 5 5 S T U V W X		機號 BODY NO.	備註 REMARK
12	**彈簧華司(SPRING WASHER)**															
	M1605-M5	92512725			2000/10	8	A B C D E F		G H I J K L							停用(NOT USED)
13	**螺栓(BOLT)**															
	M1414-M5*10	92512740			2000/10	8	A B C D E F		G H I J K L							停用(NOT USED)
	M1414-M3*30L				2005/03	4	A B C D E F		G H I J K L							停用(NOT USED)
14	**排檔把頭(KNOB)**															
		32512743				1	A B C D E F		G H I J K L							停用(NOT USED)
15	**無頭螺栓(BOLT)**															
		32512775				1	A B C D E F		G H I J K L							停用(NOT USED)
16	**螺帽(NUT)**															
	M1502001	92504016				2	A B C D E F		G H I J K L							停用(NOT USED)
17	**排檔桿(SHIFTING LEVER)**															
		42512774				1	A B C D E F		G H I J K L							停用(NOT USED)
	34931	42512774			2006/10	1	A B C D E F		G H I J K L							
18	**排檔固定座(SHIFTING LEVER BRACKET)**															
		32512739				1	A B C D E F		G H I J K L							停用(NOT USED)
	34906	32512739B				1	A B C D E F		G H I J K L							
19	**固定螺栓(BOLT)**															
		92512738B				1	A B C D E F		G H I J K L							停用(NOT USED)
	34905	92512738B				1	A B C D E F		G H I J K L							
20	**平華司(WASHER)**															
	M1602013	92520420				1	A B C D E F		G H I J K L							停用(NOT USED)
21	**彈簧華司(SPRING WASHER)**															
	M1605-M10	92501218				3	A B C D E F		G H I J K L							停用(NOT USED)
22	**寸動連桿(ROCKER ROD)**															
	32835	32512769				1	A B C D E F		G H I J K L							停用(NOT USED)
	32835	32512769			2005/10	1	A B		G H							
23	**螺栓(BOLT)**															
	M1401-M6*10	92512736				1	A B C D E F		G H I J K L							停用(NOT USED)
24	**鋼珠(STEEL BALL)**															
	M1323031	92512730				1	A B C D E F		G H I J K L							停用(NOT USED)
25	**彈簧(SPRING)**															
		92512729				1	A B C D E F		G H I J K L							停用(NOT USED)
26	**鋼珠座(BALL STEEL CUP)**															
		32512727				1	A B C D E F		G H I J K L							停用(NOT USED)
	34903	32512727A				1	A B C D E F		G H I J K L							
27	**無頭螺栓(BOLT)**															
	M1403-M10*20	92512726				1	A B C D E F		G H I J K L							停用(NOT USED)

https://truckmanualshub.com/

自排排檔開關組
A307-1
(AT)SHIFT LEVER SWITCH

編號 NO.	零件名稱 PART NAME						FD		FG		FD〔C〕		FG〔C〕		機號 BODY NO.	備註 REMARK
	新碼 NEW PART NO.	舊碼 OLD PART NO.	規格 SPECIFICATION	互換性 ITC	應用日期 APPLIED DATE	數量 QTY	15 A	18 B	15 G	18 H	15 M	18 N	15 S	18 T		
							20 C	20 I	20 O	20 U						
							25 D	25 J	25 P	25 V						
							30 E	30 K	30 Q	30 W						
							35 F	35 L	35 R	35 X						
28	平華司(WASHER)															
	M1602007	92511056				2	A B C D E F		G H I J K L							停用(NOT USED)
29	螺栓(BOLT)															
	M1424-M8*20	92504208				4	A B C D E F		G H I J K L							停用(NOT USED)
	M1424-M8*20	92504208			2005/10	2	A B		G H							
30	平華司(WASHER)															
	M1602004	92510428				4	A B C D E F		G H I J K L							停用(NOT USED)
31	彈簧華司(SPRING WASHER)															
	M1609-M6	92520102				4	A B C D E F		G H I J K L							停用(NOT USED)
32	螺栓(BOLT)															
	M1423-M6*10	92507015				4	A B C D E F		G H I J K L							停用(NOT USED)
33	搖桿(LEVER SHIFT)															
		32512737				1	A B C D E F		G H I J K L							停用(NOT USED)
	34904	32512737A				1	A B C D E F		G H I J K L							
34	開口銷(PIN, COTTER)															
	M1307006	92512428				8	A B C D E F		G H I J K L							停用(NOT USED)
	M1307006	92512428			2005/10	2	A B		G H							
35	銷(PIN)															
	M1306-10*25	92512309				4	A B C D E F		G H I J K L							停用(NOT USED)
	34602	92512309A				1	A B		G H							
36	U型塊(右牙)(BLOCK OAK "U" R.H.)															
		32512430A				1	A B C D E F		G H I J K L							停用(NOT USED)
37	螺帽(NUT)															
		92512431				1	A B C D E F		G H I J K L							停用(NOT USED)
	M1502001	92504016				1	A B C D E F		G H I J K L							停用(NOT USED)
38	連桿(CONNECTING ROD)															
		32518701			2000/10	1	A B C D E F		G H I J K L							停用(NOT USED)
	34900	31512758			2006/09	1	A B		G H							停用(NOT USED)
		32518701			2003/02	1	C D E F		I J K L							停用(NOT USED)
39	螺帽(NUT)															
	M1502002	92512623				1	A B C D E F		G H I J K L							停用(NOT USED)
40	拉桿固定座(DRAWBAR LEVER)															
		32518705			2000/10	1	A B C D E F		G H I J K L							停用(NOT USED)
		31518705				1	A B		G H							停用(NOT USED)
		32518705			2003/02	1	C D E F		I J K L							停用(NOT USED)
41	銅套(BUSHING "Cu")															
		32518706				2	A B C D E F		G H I J K L							停用(NOT USED)
42	排檔桿搖臂(SHIFTING LEVER, ROCKER ARM)															
		32518707				1	A B C D E F		G H I J K L							停用(NOT USED)

https://truckmanualshub.com/

自排排檔開關組
A307-1
(AT)SHIFT LEVER SWITCH

編號 NO.	零件名稱 PART NAME						FD						FG						FD〔C〕						FG〔C〕						機號 BODY NO.	備註 REMARK
	新碼 NEW PART NO.	舊碼 OLD PART NO.	規格 SPECIFICATION	互換性 ITC	應用日期 APPLIED DATE	數量 QTY	15 A	18 B	20 C	25 D	30 E	35 F	15 G	18 H	20 I	25 J	30 K	35 L	15 M	18 N	20 O	25 P	30 Q	35 R	15 S	18 T	20 U	25 V	30 W	35 X		
43	螺栓(BOLT)																															
	M1424002	92501219				2	A	B	C	D	E	F	G	H	I	J	K	L														停用(NOT USED)
44	心軸(SHAFT)																															
		32518709			2000/10	1	A	B	C	D	E	F	G	H	I	J	K	L														停用(NOT USED)
		31518709				1	A	B					G	H																		停用(NOT USED)
		32518709			2003/02	1			C	D	E	F			I	J	K	L														停用(NOT USED)
45	拉桿搖臂(DRAWBAR, ROCKER ARM)																															
		32518710				1	A	B	C	D	E	F	G	H	I	J	K	L														停用(NOT USED)
46	拉桿(右牙)(DRAWBAR R.H.)																															
	32850	32518711				1	A	B	C	D	E	F	G	H	I	J	K	L														停用(NOT USED)
47	螺帽(右牙)(NUT R.H.)																															
	M1501-M8	92501115				1	A	B	C	D	E	F	G	H	I	J	K	L														停用(NOT USED)
48	調整連桿(ROD, ADJUSTING)																															
	32851	32518712				1	A	B	C	D	E	F	G	H	I	J	K	L														停用(NOT USED)
49	螺帽(左牙)(NUT L.H.)																															
	M1513008	92518723				1	A	B	C	D	E	F	G	H	I	J	K	L														停用(NOT USED)
50	拉桿(左牙)(DRAWBAR L.H.)																															
	32852	32518713				1	A	B	C	D	E	F	G	H	I	J	K	L														停用(NOT USED)
51	固定座定位板(LEVER BRACKET)																															
	32853	32518704				2	A	B	C	D	E	F	G	H	I	J	K	L														停用(NOT USED)
52	寸動拉線固定塊(BRACKET)																															
	32855	32512752				1	A	B	C	D	E	F	G	H	I	J	K	L														停用(NOT USED)
	32855	32512752			2005/10	1	A	B					G	H																		
53	螺栓(BOLT)																															
	M1424003	92520301				2	A	B	C	D	E	F	G	H	I	J	K	L														停用(NOT USED)
54	寸動拉線固定板(STIR TO WIRE PULL, BARCKET)																															
	32856	32518718D				1	A	B	C	D	E	F	G	H	I	J	K	L														停用(NOT USED)
	32856	32518718D			2005/10	1	A	B					G	H																		
55	螺帽(NUT)																															
	M1501-M3				2005/03	4	A	B	C	D	E	F	G	H	I	J	K	L														停用(NOT USED)
56	銅套(BUSHING "Cu")																															
	32824	32518716				2	A	B	C	D	E	F	G	H	I	J	K	L														停用(NOT USED)
	32824	32518716			2005/10	2	A	B					G	H																		
57	連接曲柄座(BOARD, CONNECTION)																															
	32858	32518717D			2000/10	1	A	B	C	D	E	F	G	H	I	J	K	L														停用(NOT USED)
	31892				2005/08	1	A	B	C	D	E	F	G	H	I	J	K	L														停用(NOT USED)
	31892				2005/10	1	A	B					G	H																		

https://truckmanualshub.com/

自排排檔開關組
A307-1
(AT)SHIFT LEVER SWITCH

編號 NO.	零件名稱 PART NAME						FD						FG						FD〔C〕						FG〔C〕						機號 BODY NO.	備註 REMARK
	新碼 NEW PART NO.	舊碼 OLD PART NO.	規格 SPECIFICATION	互換性 ITC	應用日期 APPLIED DATE	數量 QTY	15 A	18 B	20 C	25 D	30 E	35 F	15 G	18 H	20 I	25 J	30 K	35 L	15 M	18 N	20 O	25 P	30 Q	35 R	15 S	18 T	20 U	25 V	30 W	35 X		
58	C型扣環(C-RING)																															
	M1312-S15	92518715				1	A	B	C	D	E	F	G	H	I	J	K	L														停用(NOT USED)
	M1312-S15	92518715			2005/10	1	A	B					G	H																		
59	連接板(BOARD, CONNECTION)																															
		32518714				2	A	B	C	D	E	F	G	H	I	J	K	L														停用(NOT USED)
60	銷(PIN)																															
	M1306-8*26	92518725A				2	A	B	C	D	E	F	G	H	I	J	K	L														停用(NOT USED)
	34851	92518725A			2006/09	2	A	B	C	D	E	F	G	H	I	J	K	L														停用(NOT USED)
61	寸動拉線(MICRO WIRE PULL)																															
	32860	32518721				1	A	B	C	D	E	F	G	H	I	J	K	L														停用(NOT USED)
	32860	32518721			2005/10	1	A	B					G	H																		
62	U型塊(左牙)(BLOCK OAK "U" L.H.)																															
		32512431				1	A	B	C	D	E	F	G	H	I	J	K	L														停用(NOT USED)
63	彈簧(SPRING)																															
	32805	92512617A			2005/08	1	A	B	C	D	E	F	G	H	I	J	K	L														停用(NOT USED)
	32805	92512617A			2005/10	1	A	B					G	H																		
64	固定座(BRACKET)																															
	31615A				2005/08	1	A	B	C	D	E	F	G	H	I	J	K	L														停用(NOT USED)
	31615A				2005/10	1	A	B					G	H																		
65	彈簧華司(SPRING WASHER)																															
	M1605-M8	92501019				4	A	B	C	D	E	F	G	H	I	J	K	L														停用(NOT USED)
	M1605-M8	92501019				2	A	B					G	H																		
66	銷(PIN)																															
	34850	92518724				1	A	B					G	H																		

https://truckmanualshub.com/

操縱系統
A307
CONTROL SYSTEM

電子式自排排檔開關組
A307-1A
(AT)ELECTRIC SHIFT LEVER SWITCH

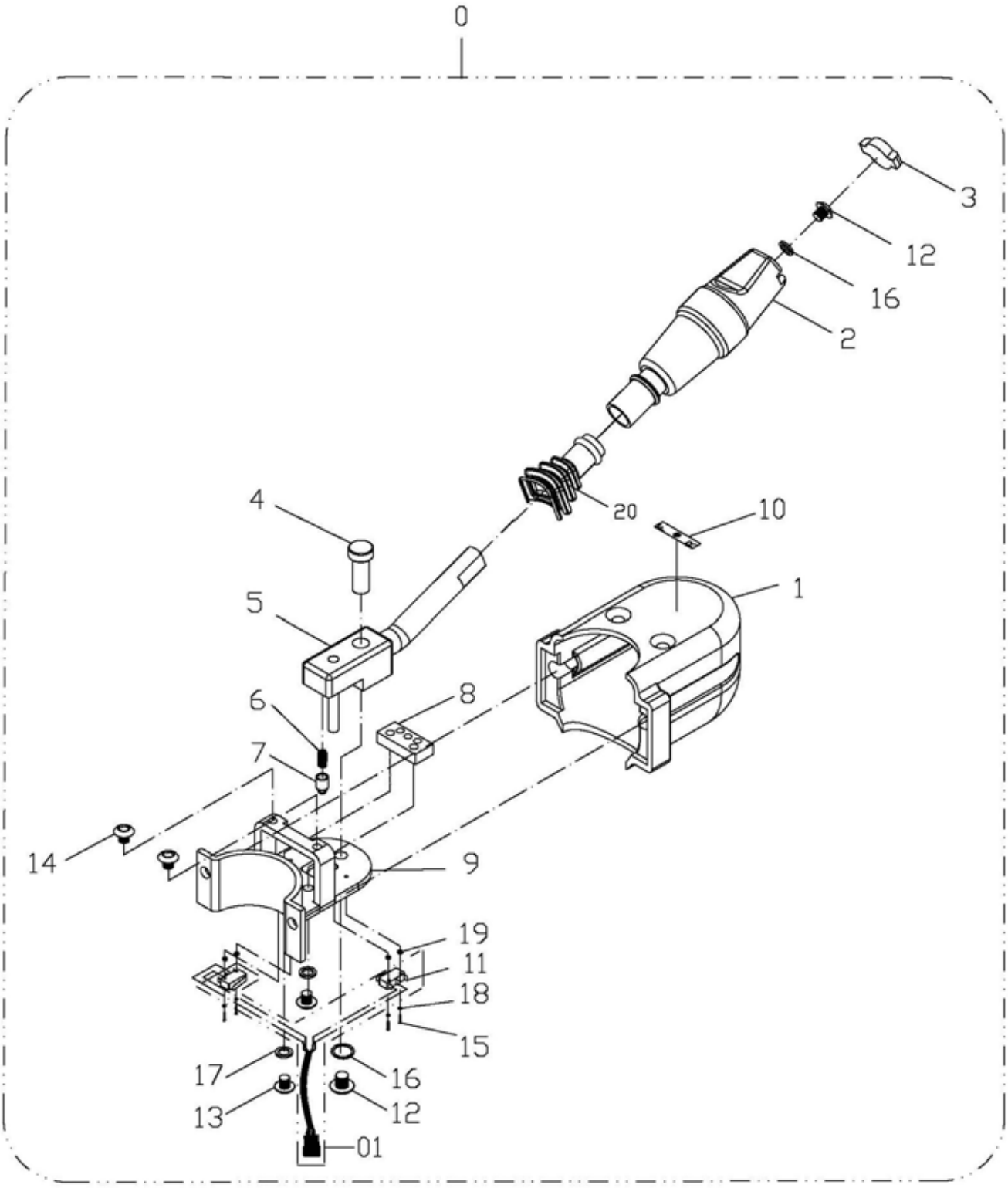

https://truckmanualshub.com/

電子式自排排檔開關組
A307-1A
(AT)ELECTRIC SHIFT LEVER SWITCH

編號 NO.	零件名稱 PART NAME						FD	FG	FD〔C〕	FG〔C〕	機號 BODY NO.	備註 REMARK
	新碼 NEW PART NO.	舊碼 OLD PART NO.	規格 SPECIFICATION	互換性 ITC	應用日期 APPLIED DATE	數量 QTY	15 18 20 25 30 35 A B C D E F	15 18 20 25 30 35 G H I J K L	15 18 20 25 30 35 M N O P Q R	15 18 20 25 30 35 S T U V W X		
0	**電子式自排排檔開關總成(ELECTRIC SHIFT LEVER SWITCH)**											
	B350001	31814			2005/05	1	A B C D E F	G H I J K L				
01	**微動開關組(MICRO SWITCH ASSY)**											
	B351057				2005/05	1	A B C D E F	G H I J K L				
1	**外殼(OUTER COVER)**											
	31777				2005/05	1	A B C D E F	G H I J K L				
2	**作動桿套(POLE SET)**											
	31773				2005/05	1	A B C D E F	G H I J K L				
3	**套塞(STOPPER)**											
	31774				2005/05	1	A B C D E F	G H I J K L				
4	**旋轉軸(ROTATION AXIS)**											
	31771				2005/05	1	A B C D E F	G H I J K L				
5	**搖桿(ROCKER)**											
	31752				2005/05	1	A B C D E F	G H I J K L				
6	**彈簧(SPRING)**											
	32783	32518103A			2005/05	1	A B C D E F	G H I J K L				
7	**定位軸(ORIENT THE AXLE)**											
	31772				2005/05	1	A B C D E F	G H I J K L				
8	**定位底板(ORIENT THE BASEPLATE)**											
	31775				2005/05	1	A B C D E F	G H I J K L				
9	**底板(BASEPLATE)**											
	31770				2005/05	1	A B C D E F	G H I J K L				
10	**指示貼紙(STICKER, GEAR SHIFTING)**											
	31776				2005/05	1	A B C D E F	G H I J K L				
11	**微動開關(MICRO SWICTH)**											
	E0211010				2005/05	2	A B C D E F	G H I J K L				
12	**螺栓(BOLT)**											
	M1410-M6*12				2005/05	2	A B C D E F	G H I J K L				
13	**螺栓(BOLT)**											
	M1410-M5*8				2005/05	2	A B C D E F	G H I J K L				
14	**螺栓(BOLT)**											
	M1409-M5*8				2005/05	2	A B C D E F	G H I J K L				
15	**螺栓(BOLT)**											
	M1414-M2*20				2005/05	4	A B C D E F	G H I J K L				
16	**彈簧華司(SPRING WASHER)**											
	M1605-M6	92503218			2005/05	2	A B C D E F	G H I J K L				
17	**彈簧華司(SPRING WASHER)**											
	M1605-M5	92512725			2005/05	2	A B C D E F	G H I J K L				

https://truckmanualshub.com/

電子式自排排檔開關組
A307-1A
(AT)ELECTRIC SHIFT LEVER SWITCH

編號 NO.	零件名稱 PART NAME						FD	FG	FD〔C〕	FG〔C〕		
	新碼 NEW PART NO.	舊碼 OLD PART NO.	規格 SPECIFICATION	互換性 ITC	應用日期 APPLIED DATE	數量 QTY	15 A 18 B 20 C 25 D 30 E 35 F	15 G 18 H 20 I 25 J 30 K 35 L	15 M 18 N 20 O 25 P 30 Q 35 R	15 S 18 T 20 U 25 V 30 W 35 X	機號 BODY NO.	備註 REMARK
18	**彈簧華司(SPRING WASHER)**											
	M1605-M2				2005/05	4	A B C D E F	G H I J K L				
19	**螺帽(NUT)**											
	M1501-M2				2005/05	4	A B C D E F	G H I J K L				
20	**防塵護套(DUST COVER)**											
	34902				2005/05	1	A B C D E F	G H I J K L				

https://truckmanualshub.com/

操縱系統
A307
CONTROL SYSTEM

操作桿組
A307-2
LINKAGE LEVER ASSY

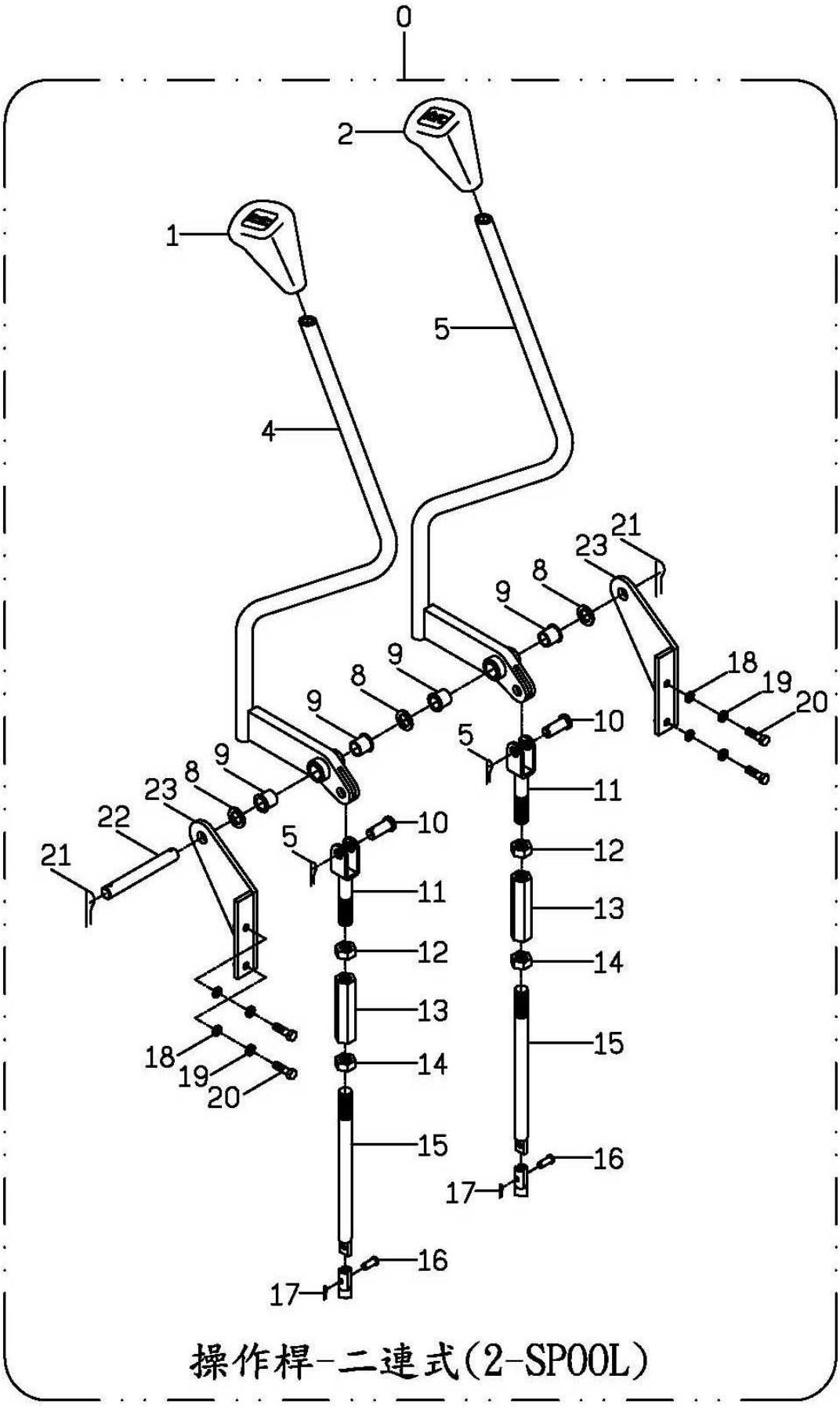

https://truckmanualshub.com/

操作桿組
A307-2
LINKAGE LEVER ASSY

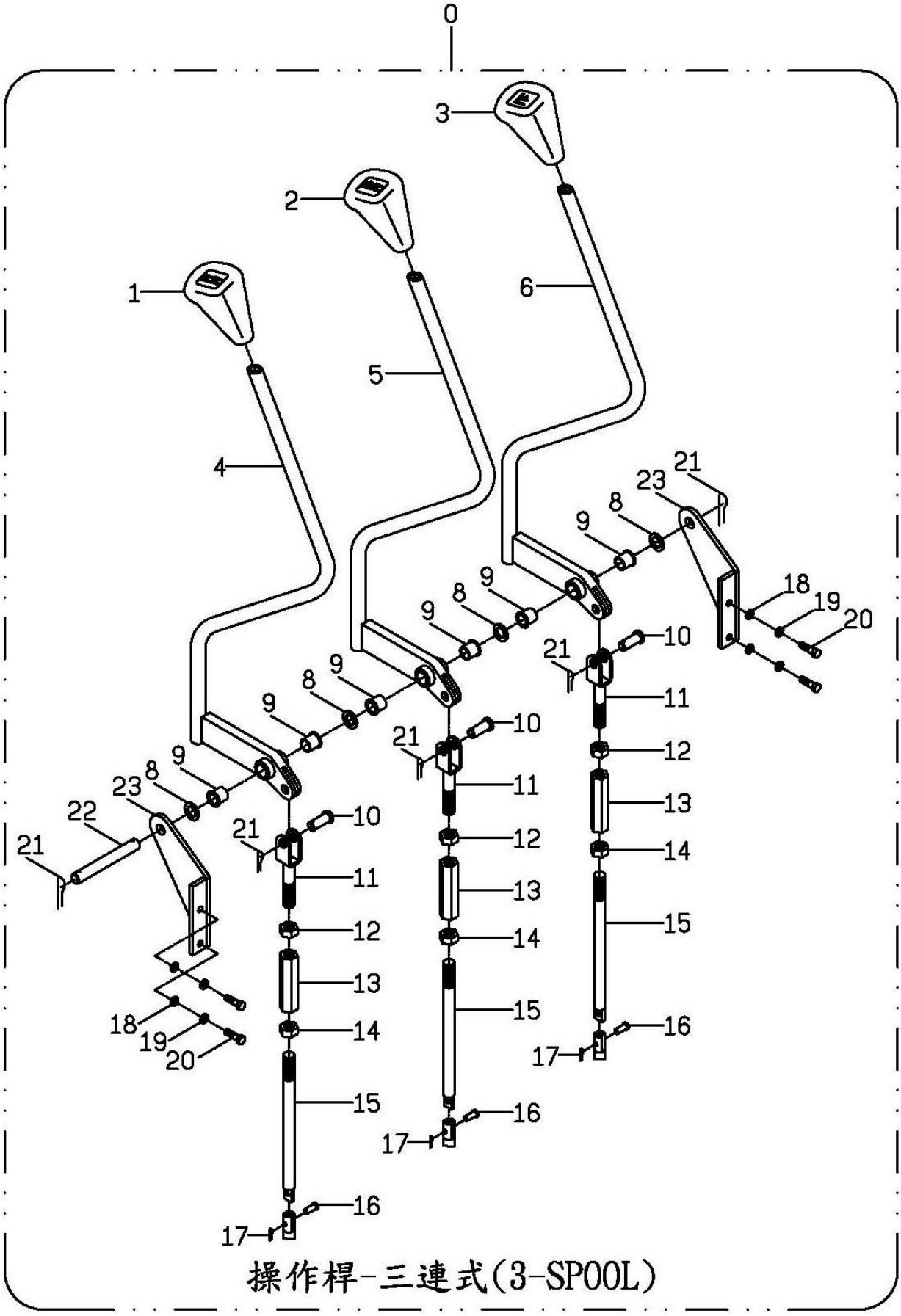

https://truckmanualshub.com/

操作桿組
A307-2
LINKAGE LEVER ASSY

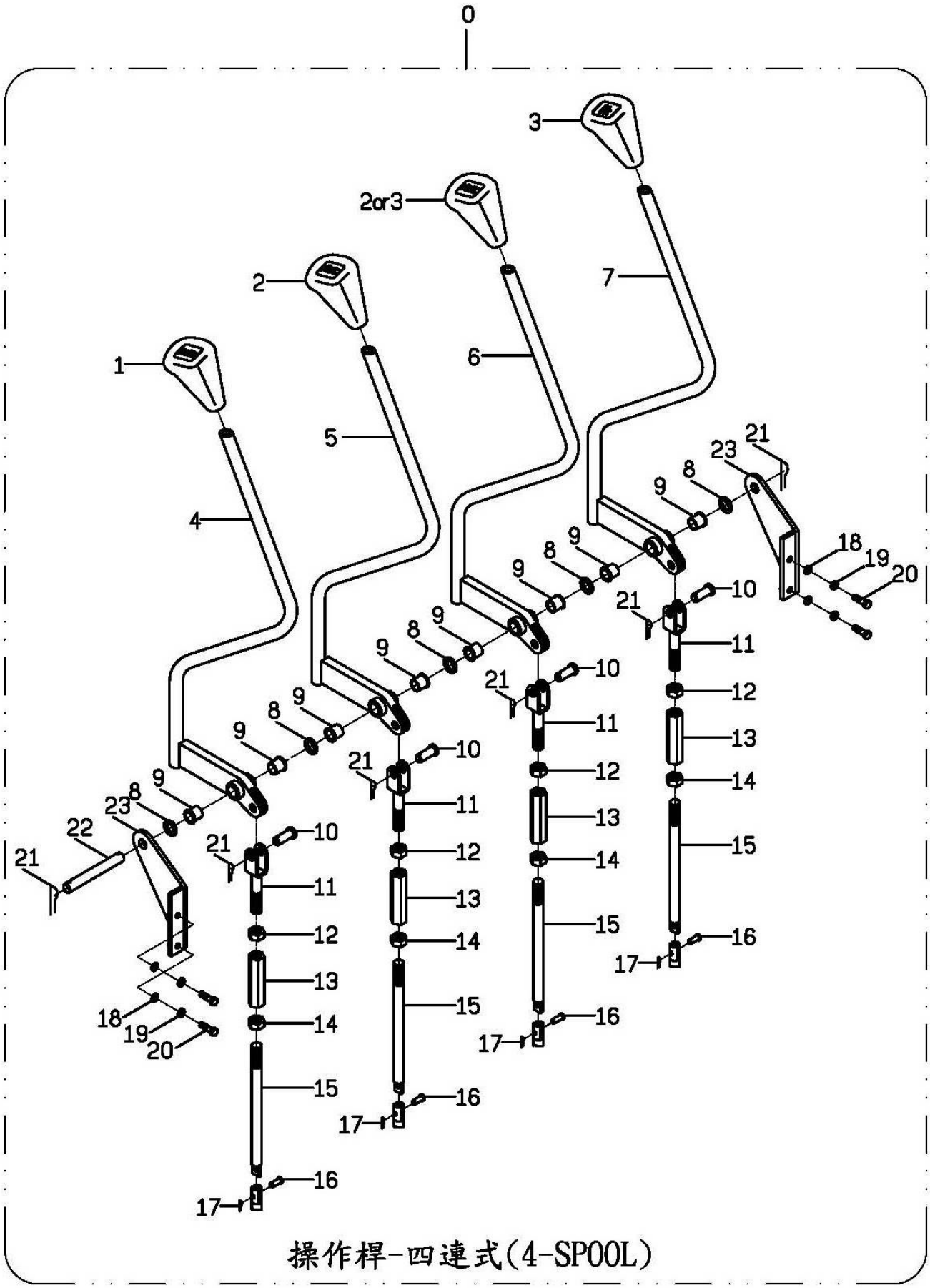

https://truckmanualshub.com/

操作桿組
A307-2
LINKAGE LEVER ASSY

編號 NO.	新碼 NEW PART NO.	舊碼 OLD PART NO.	規格 SPECIFICATION	互換性 ITC	應用日期 APPLIED DATE	數量 QTY	FD 15 A	FD 18 B	FD 20 C	FD 25 D	FD 30 E	FD 35 F	FG 15 G	FG 18 H	FG 20 I	FG 25 J	FG 30 K	FG 35 L	FD〔C〕 15 M	FD〔C〕 18 N	FD〔C〕 20 O	FD〔C〕 25 P	FD〔C〕 30 Q	FD〔C〕 35 R	FG〔C〕 15 S	FG〔C〕 18 T	FG〔C〕 20 U	FG〔C〕 25 V	FG〔C〕 30 W	FG〔C〕 35 X	機號 BODY NO.	備註 REMARK
0	**操作桿總成(二連式)(LINKAGE LEVER)(2-SPOOL)**																															
	B350075	22512370				1	A	B	C	D	E	F	G	H	I	J	K	L														
0	**操作桿總成(三連式)(LINKAGE LEVER)(3-SPOOL)**																															
	B350076	22512380				1	A	B	C	D	E	F	G	H	I	J	K	L														
0	**操作桿總成(四連式)(LINKAGE LEVER)(4-SPOOL)**																															
	B350077	22512390				1	A	B	C	D	E	F	G	H	I	J	K	L														
1	**把頭(KNOB)**																															
	32876	32512301				1	A	B	C	D	E	F	G	H	I	J	K	L														
2	**把頭(KNOB)**																															
	32877	32512302				1	A	B	C	D	E	F	G	H	I	J	K	L														
3	**把頭(KNOB)**																															
	32878	32512320				1	A	B	C	D	E	F	G	H	I	J	K	L														
4	**操控桿組(CONTROL ROD) (HOIST CONTROL)**																															
	32879	32512303				1	A	B	C	D	E	F	G	H	I	J	K	L														升降操控(LIFT)
5	**操控桿組(CONTROL ROD) (FRONT AND REAR CONTROL)**																															
	32880	32512323				1	A	B	C	D	E	F	G	H	I	J	K	L														前後操控(FRONT AND REAR)
6	**操控桿組(CONTROL ROD SUB-ASSY) (BRACKET CONTROL)**																															
	32881	32512324				1	A	B	C	D	E	F	G	H	I	J	K	L														貨叉架操控(FORK)
7	**操控桿組(CONTROL ROD) (SPECIAL CONTROL)**																															
	32882	32512325				1	A	B	C	D	E	F	G	H	I	J	K	L														特殊操控(SPECIAL)
8	**墊片(SHIM) (2-SPOOL)**																															
	32883	32512308				3	A	B	C	D	E	F	G	H	I	J	K	L														兩連式(2-SPOOL)
8	**墊片(SHIM) (3-SPOOL)**																															
	32883	32512308				4	A	B	C	D	E	F	G	H	I	J	K	L														三連式(3-SPOOL)
8	**墊片(SHIM) (4-SPOOL)**																															
	32883	32512308				5	A	B	C	D	E	F	G	H	I	J	K	L														四連式(4-SPOOL)
9	**套筒(BUSHING) (2-SPOOL)**																															
	32775	32512307				4	A	B	C	D	E	F	G	H	I	J	K	L														兩連式(2-SPOOL)
9	**套筒(BUSHING) (3-SPOOL)**																															
	32775	32512307				6	A	B	C	D	E	F	G	H	I	J	K	L														三連式(3-SPOOL)
9	**套筒(BUSHING) (4-SPOOL)**																															
	32775	32512307				8	A	B	C	D	E	F	G	H	I	J	K	L														四連式(4-SPOOL)
10	**銷(PIN) (2-SPOOL)**																															
	M1306-10*25	92512309				2	A	B	C	D	E	F	G	H	I	J	K	L														停用(NOT USED)
	34602	92512309A				2	A	B	C	D	E	F	G	H	I	J	K	L														兩連式(2-SPOOL)
10	**銷(PIN) (3-SPOOL)**																															
	M1306-10*25	92512309				3	A	B	C	D	E	F	G	H	I	J	K	L														停用(NOT USED)
	34602	92512309A				3	A	B	C	D	E	F	G	H	I	J	K	L														三連式(3-SPOOL)

https://truckmanualshub.com/

操作桿組
A307-2
LINKAGE LEVER ASSY

編號 NO.	零件名稱 PART NAME						FD						FG						FD〔C〕						FG〔C〕						機號 BODY NO.	備註 REMARK
	新碼 NEW PART NO.	舊碼 OLD PART NO.	規格 SPECIFICATION	互換性 ITC	應用日期 APPLIED DATE	數量 QTY	15 A	18 B	20 C	25 D	30 E	35 F	15 G	18 H	20 I	25 J	30 K	35 L	15 M	18 N	20 O	25 P	30 Q	35 R	15 S	18 T	20 U	25 V	30 W	35 X		
10	**銷(PIN) (4-SPOOL)**																															
	M1306-10*25	92512309				4	A	B	C	D	E	F	G	H	I	J	K	L														停用(NOT USED)
	34602	92512309A				4	A	B	C	D	E	F	G	H	I	J	K	L														四連式(4-SPOOL)
11	**拉桿組(LIFTING ROD) (2-SPOOL)**																															
	32884	32512311				2	A	B	C	D	E	F	G	H	I	J	K	L														兩連式(2-SPOOL)
11	**拉桿組(LIFTING ROD) (3-SPOOL)**																															
	32884	32512311				3	A	B	C	D	E	F	G	H	I	J	K	L														三連式(3-SPOOL)
11	**拉桿組(LIFTING ROD) (4-SPOOL)**																															
	32884	32512311				4	A	B	C	D	E	F	G	H	I	J	K	L														四連式(4-SPOOL)
12	**螺帽(NUT) (2-SPOOL)**																															
		92512312				2	A	B	C	D	E	F	G	H	I	J	K	L														兩連式(2-SPOOL)
12	**螺帽(NUT) (3-SPOOL)**																															
		92512312				3	A	B	C	D	E	F	G	H	I	J	K	L														三連式(3-SPOOL)
12	**螺帽(NUT) (4-SPOOL)**																															
		92512312				4	A	B	C	D	E	F	G	H	I	J	K	L														四連式(4-SPOOL)
13	**調整連桿(ROD, ADJUSTING) (2-SPOOL)**																															
	32885	32512313				2	A	B	C	D	E	F	G	H	I	J	K	L														兩連式(2-SPOOL)
13	**調整連桿(ROD, ADJUSTING) (3-SPOOL)**																															
	32885	32512313				3	A	B	C	D	E	F	G	H	I	J	K	L														三連式(3-SPOOL)
13	**調整連桿(ROD, ADJUSTING) (4-SPOOL)**																															
	32885	32512313				4	A	B	C	D	E	F	G	H	I	J	K	L														四連式(4-SPOOL)
14	**螺帽(NUT) (2-SPOOL)**																															
	M1501011	92510132				2	A	B	C	D	E	F	G	H	I	J	K	L														兩連式(2-SPOOL)
14	**螺帽(NUT) (3-SPOOL)**																															
	M1501011	92510132				3	A	B	C	D	E	F	G	H	I	J	K	L														三連式(3-SPOOL)
14	**螺帽(NUT) (4-SPOOL)**																															
	M1501011	92510132				4	A	B	C	D	E	F	G	H	I	J	K	L														四連式(4-SPOOL)
15	**拉伸桿(LIFTING ROD) (2-SPOOL)**																															
	32886	92512315				2	A	B	C	D	E	F	G	H	I	J	K	L														兩連式(2-SPOOL)
15	**拉伸桿(LIFTING ROD) (3-SPOOL)**																															
	32886	92512315				3	A	B	C	D	E	F	G	H	I	J	K	L														三連式(3-SPOOL)
15	**拉伸桿(LIFTING ROD) (4-SPOOL)**																															
	32886	92512315				4	A	B	C	D	E	F	G	H	I	J	K	L														四連式(4-SPOOL)
16	**銷(PIN) (2-SPOOL)**																															
	32887	92512318				2	A	B	C	D	E	F	G	H	I	J	K	L														兩連式(2-SPOOL)
16	**銷(PIN) (3-SPOOL)**																															
	32887	92512318				3	A	B	C	D	E	F	G	H	I	J	K	L														三連式(3-SPOOL)

https://truckmanualshub.com/

操作桿組
A307-2
LINKAGE LEVER ASSY

編號 NO.	零件名稱 PART NAME						FD						FG						FD〔C〕						FG〔C〕						機號 BODY NO.	備註 REMARK
	新碼 NEW PART NO.	舊碼 OLD PART NO.	規格 SPECIFICATION	互換性 ITC	應用日期 APPLIED DATE	數量 QTY	15 A	18 B	20 C	25 D	30 E	35 F	15 G	18 H	20 I	25 J	30 K	35 L	15 M	18 N	20 O	25 P	30 Q	35 R	15 S	18 T	20 U	25 V	30 W	35 X		
16	**銷(PIN) (4-SPOOL)**																															
	32887	92512318				4	A	B	C	D	E	F	G	H	I	J	K	L														四連式(4-SPOOL)
17	**開口銷(PIN, COTTER) (2-SPOOL)**																															
	M1307004	92512310				2	A	B	C	D	E	F	G	H	I	J	K	L														兩連式(2-SPOOL)
17	**開口銷(PIN, COTTER) (3-SPOOL)**																															
	M1307004	92512310				3	A	B	C	D	E	F	G	H	I	J	K	L														三連式(3-SPOOL)
17	**開口銷(PIN, COTTER) (4-SPOOL)**																															
	M1307004	92512310				4	A	B	C	D	E	F	G	H	I	J	K	L														四連式(4-SPOOL)
18	**平華司(WASHER)**																															
	M1602007	92511056				4	A	B	C	D	E	F	G	H	I	J	K	L														
19	**彈簧華司(SPRING WASHER)**																															
	M1605-M8	92501019				4	A	B	C	D	E	F	G	H	I	J	K	L														
20	**螺栓(BOLT)**																															
	M1424-M8*25	92501104				4	A	B	C	D	E	F	G	H	I	J	K	L														
21	**開口銷(PIN, COTTER) (2-SPOOL)**																															
	M1307006	92512304				4	A	B	C	D	E	F	G	H	I	J	K	L														兩連式(2-SPOOL)
21	**開口銷(PIN, COTTER) (3-SPOOL)**																															
	M1307006	92512304				5	A	B	C	D	E	F	G	H	I	J	K	L														三連式(3-SPOOL)
21	**開口銷(PIN, COTTER) (4-SPOOL)**																															
	M1307006	92512304				6	A	B	C	D	E	F	G	H	I	J	K	L														四連式(4-SPOOL)
22	**心軸(SHAFT) (2-SPOOL)**																															
	32888	92512305				1	A	B	C	D	E	F	G	H	I	J	K	L														兩連式(2-SPOOL)
22	**心軸(SHAFT) (3-SPOOL)**																															
	32889	92512321				1	A	B	C	D	E	F	G	H	I	J	K	L														三連式(3-SPOOL)
22	**心軸(SHAFT) (4-SPOOL)**																															
	32890	92512322				1	A	B	C	D	E	F	G	H	I	J	K	L														四連式(4-SPOOL)
23	**支撐板組(WING BRACKET)**																															
	32891	32512306				2	A	B	C	D	E	F	G	H	I	J	K	L														

https://truckmanualshub.com/

升降系統
A308
MAST
SYSTEM

https://truckmanualshub.com/

升降系統
A308
MAST SYSTEM

二截式桅桿配件組
A308-1
MAST FITTING (TWO-STAGE)

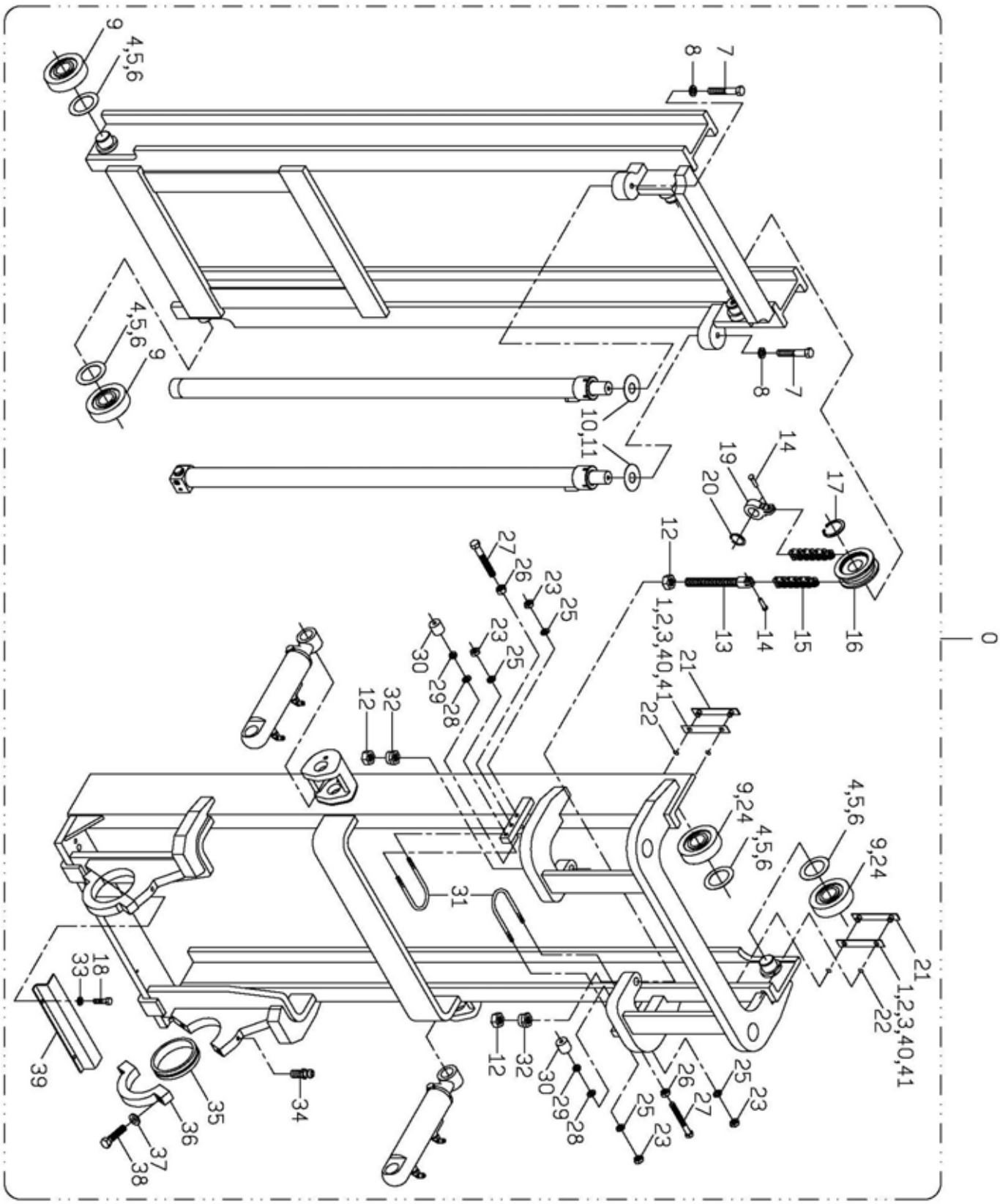

https://truckmanualshub.com/

升降系統
A308
MAST SYSTEM

二截式桅桿配件組
A308-1
MAST FITTING (TWO-STAGE)

編號 NO.	零件名稱 PART NAME						FD						FG						FD〔C〕						FG〔C〕						機號 BODY NO.	備註 REMARK
	新碼 NEW PART NO.	舊碼 OLD PART NO.	規格 SPECIFICATION	互換性 ITC	應用日期 APPLIED DATE	數量 QTY	15	18	20	25	30	35	15	18	20	25	30	35	15	18	20	25	30	35	15	18	20	25	30	35		
							A	B	C	D	E	F	G	H	I	J	K	L	M	N	O	P	Q	R	S	T	U	V	W	X		
0	**桅桿總成(MAST ASSY)**																															
	B350090					1	A	B	C	D			G	H	I	J																3M
	B350104					1					E	F					K	L														
	B350091					1	A	B	C	D			G	H	I	J																3.3M
	B350105					1					E	F					K	L														
	B350092					1	A	B	C	D			G	H	I	J																3.5M
	B350106					1					E	F					K	L														
	B350093					1	A	B	C	D			G	H	I	J																3.7M
	B350107					1					E	F					K	L														
	B350094					1	A	B	C	D			G	H	I	J																4M
	B350108					1					E	F					K	L														
	B350095					1	A	B	C	D			G	H	I	J																4.5M
	B350109					1					E	F					K	L														
	B350096					1	A	B	C	D			G	H	I	J																5M
	B350110					1					E	F					K	L														
1	**墊片(SHIM)**																															
	32892	32507004				N	A	B	C	D	E	F	G	H	I	J	K	L														0.5t
2	**墊片(SHIM)**																															
	32893	32507042				N	A	B	C	D	E	F	G	H	I	J	K	L														1t
3	**墊片(SHIM)**																															
	32894	32507043				N	A	B	C	D	E	F	G	H	I	J	K	L														2t
4	**墊片(SHIM)**																															
	32895	32507006				N	A	B	C	D	E	F	G	H	I	J	K	L														0.5t
5	**墊片(SHIM)**																															
	32896	32507044				N	A	B	C	D	E	F	G	H	I	J	K	L														1t
6	**墊片(SHIM)**																															
	32897	32507045				N	A	B	C	D	E	F	G	H	I	J	K	L														2t
7	**螺栓(BOLT)**																															
	M1423-M12*50	92507029				2	A	B	C	D	E	F	G	H	I	J	K	L														
8	**彈簧華司(SPRING WASHER)**																															
	M1605-M12	92501024				2	A	B	C	D	E	F	G	H	I	J	K	L														
9	**主滾輪(ROTARY WHEEL)**																															
	32900	93007007				2					E	F					K	L														停用(NOT USED)
	32899	92507007				4	A	B	C	D			G	H	I	J																
	32926	93007035			2006/06	2					E	F					K	L														
10	**墊片(SHIM)**																															
	32902	32507002				N	A	B	C	D	E	F	G	H	I	J	K	L														0.5t

https://truckmanualshub.com/

升降系統
A308
MAST SYSTEM

二截式桅桿配件組
A308-1
MAST FITTING (TWO-STAGE)

編號 NO.	新碼 NEW PART NO.	舊碼 OLD PART NO.	規格 SPECIFICATION	互換性 ITC	應用日期 APPLIED DATE	數量 QTY	FD 15	FD 18	FD 20	FD 25	FD 30	FD 35	FG 15	FG 18	FG 20	FG 25	FG 30	FG 35	FD〔C〕 15	FD〔C〕 18	FD〔C〕 20	FD〔C〕 25	FD〔C〕 30	FD〔C〕 35	FG〔C〕 15	FG〔C〕 18	FG〔C〕 20	FG〔C〕 25	FG〔C〕 30	FG〔C〕 35	機號 BODY NO.	備註 REMARK
							A	B	C	D	E	F	G	H	I	J	K	L	M	N	O	P	Q	R	S	T	U	V	W	X		
11	**墊片(SHIM)**																															
	32903	32507046				N	A	B	C	D	E	F	G	H	I	J	K	L														1t
12	**螺帽(NUT)**																															
	M1513007	92507019				4	A	B	C	D	E	F	G	H	I	J	K	L														
13	**鍊條調整螺栓(CHAIN-ADJUSTING BOLT)**																															
	32904	32507033				2	A	B	C	D			G	H	I	J																
	32905	33007033				2					E	F					K	L														
14	**銷(PIN)**																															
	M1325-8*25	92507014				4	A	B	C	D			G	H	I	J																
	M1325-10*35	93007014				4					E	F					K	L														
15	**鍊條(CHAIN)**																															
	32906	92507030				2	A	B	C	D			G	H	I	J															3M	
	32907	93007030				2					E	F					K	L														
	32908	92507036				2	A	B	C	D			G	H	I	J															3.3M	
	32909	93007036				2					E	F					K	L														
	32910	92507037				2	A	B	C	D			G	H	I	J															3.5M	
	32911	93007037				2					E	F					K	L														
	32912	92507040				2	A	B	C	D			G	H	I	J															3.7M	
	32913	93007040				2					E	F					K	L														
	32914	92507038				2	A	B	C	D			G	H	I	J															4M	
	32915	93007038				2					E	F					K	L														
	32916	92507039				2	A	B	C	D			G	H	I	J															4.5M	
	32917	93007039				2					E	F					K	L														
	32918	92507041				2	A	B	C	D			G	H	I	J															5M	
	32919	93007041				2					E	F					K	L														
16	**鍊條滾輪(WHEEL, CHAIN)**																															
	32920	32507031				2	A	B	C	D			G	H	I	J																
	32921	33007031				2					E	F					K	L														
17	**C型扣環(RING "C")**																															
	M1312-S38	92507032				2	A	B	C	D	E	F	G	H	I	J	K	L														
18	**螺栓(BOLT)**																															
	M1423-M6*10	92507015				2	A	B	C	D	E	F	G	H	I	J	K	L														
19	**鍊條固定座(ANCHOR, CHAIN)**																															
	32923	32507017				2	A	B	C	D			G	H	I	J																
	32924	33007017				2					E	F					K	L														
20	**C型扣環(RING "C")**																															
	M1312-S28	92507020				2	A	B	C	D	E	F	G	H	I	J	K	L														
21	**滑條組立(STRIP SUB-ASSY, OUTER MAST)**																															
	32925	22507003				2	A	B	C	D	E	F	G	H	I	J	K	L														

https://truckmanualshub.com/

升降系統
A308
MAST SYSTEM

二截式桅桿配件組
A308-1
MAST FITTING (TWO-STAGE)

編號 NO.	零件名稱 PART NAME						FD						FG						FD〔C〕						FG〔C〕						機號 BODY NO.	備註 REMARK
	新碼 NEW PART NO.	舊碼 OLD PART NO.	規格 SPECIFICATION	互換性 ITC	應用日期 APPLIED DATE	數量 QTY	15 A	18 B	20 C	25 D	30 E	35 F	15 G	18 H	20 I	25 J	30 K	35 L	15 M	18 N	20 O	25 P	30 Q	35 R	15 S	18 T	20 U	25 V	30 W	35 X		
22	O型環("O"RING)																															
	M0801-P9	92507005				4	A	B	C	D	E	F	G	H	I	J	K	L														
23	螺帽(NUT)																															
	M1501-M8	92501115				4	A	B	C	D	E	F	G	H	I	J	K	L														
24	主滾輪(ROTARY WHEEL)																															
	32926	93007035				2					E	F					K	L														停用(NOT USED)
	32900	93007007			2006/06	2					E	F					K	L														
25	平華司(WASHER)																															
	M1602006	92507009				4	A	B	C	D	E	F	G	H	I	J	K	L														
26	鎖定螺帽(NUT)																															
	M1502001	92504016				2	A	B	C	D	E	F	G	H	I	J	K	L														
27	固定螺栓(BOLT)																															
		32507010				2	A	B	C	D	E	F	G	H	I	J	K	L														
28	彈簧華司(SPRING WASHER)																															
	M1605-M8	92501019				2	A	B	C	D	E	F	G	H	I	J	K	L														
29	平華司(WASHER)																															
	M1602010	92507027				2	A	B	C	D	E	F	G	H	I	J	K	L														
30	橡膠套筒(BUSH, RUBBER)																															
	32927	32507012				2	A	B	C	D	E	F	G	H	I	J	K	L														
31	U型螺栓(BOLT "U")																															
	32928	32507013				2	A	B	C	D			G	H	I	J																
	32929	33007013				2					E	F					K	L														
32	特殊螺帽(NUT)																															
	32930	32507018				2	A	B	C	D	E	F	G	H	I	J	K	L														
33	彈簧華司(SPRING WASHER)																															
	M1605-M10	92501218				2	A	B	C	D	E	F	G	H	I	J	K	L														
34	黃油嘴(GREASE, CONNECTOR)																															
	M1321-M10	92503015				2	A	B	C	D	E	F	G	H	I	J	K	L														
35	電木套(BUSHING)																															
	32931	32507021				2	A	B	C	D			G	H	I	J																
	32932	33007021				2					E	F					K	L														
36	升降架固定座蓋(CAP, MAST SUPPORT)																															
	32933	32507022				2	A	B	C	D			G	H	I	J																
	32934	33007022				2					E	F					K	L														
37	彈簧華司(SPRING WASHER)																															
	M1605-M14	92506020				4	A	B	C	D	E	F	G	H	I	J	K	L														
38	螺栓(BOLT)																															
	M1423006	92507024				4	A	B	C	D	E	F	G	H	I	J	K	L														

https://truckmanualshub.com/

二截式桅桿配件組
A308-1
MAST FITTING (TWO-STAGE)

編號 NO.	零件名稱 PART NAME						FD						FG						FD〔C〕						FG〔C〕						機號 BODY NO.	備註 REMARK
	新碼 NEW PART NO.	舊碼 OLD PART NO.	規格 SPECIFICATION	互換性 ITC	應用日期 APPLIED DATE	數量 QTY	15 A	18 B	20 C	25 D	30 E	35 F	15 G	18 H	20 I	25 J	30 K	35 L	15 M	18 N	20 O	25 P	30 Q	35 R	15 S	18 T	20 U	25 V	30 W	35 X		
39	**蓋板(GUARD)**																															
	32937	32507001				1	A	B	C	D	E	F	G	H	I	J	K	L														
40	**墊片(SHIM)**																															
	34610					N	A	B	C	D	E	F	G	H	I	J	K	L														0.2t
41	**墊片(SHIM)**																															
	34865	32507215				N	A	B	C	D	E	F	G	H	I	J	K	L														3t

https://truckmanualshub.com/

升降系統
A308
MAST SYSTEM

二截式貨櫃型桅桿配件組
A308-1A
MAST FITTING (CONTAINER FORM)

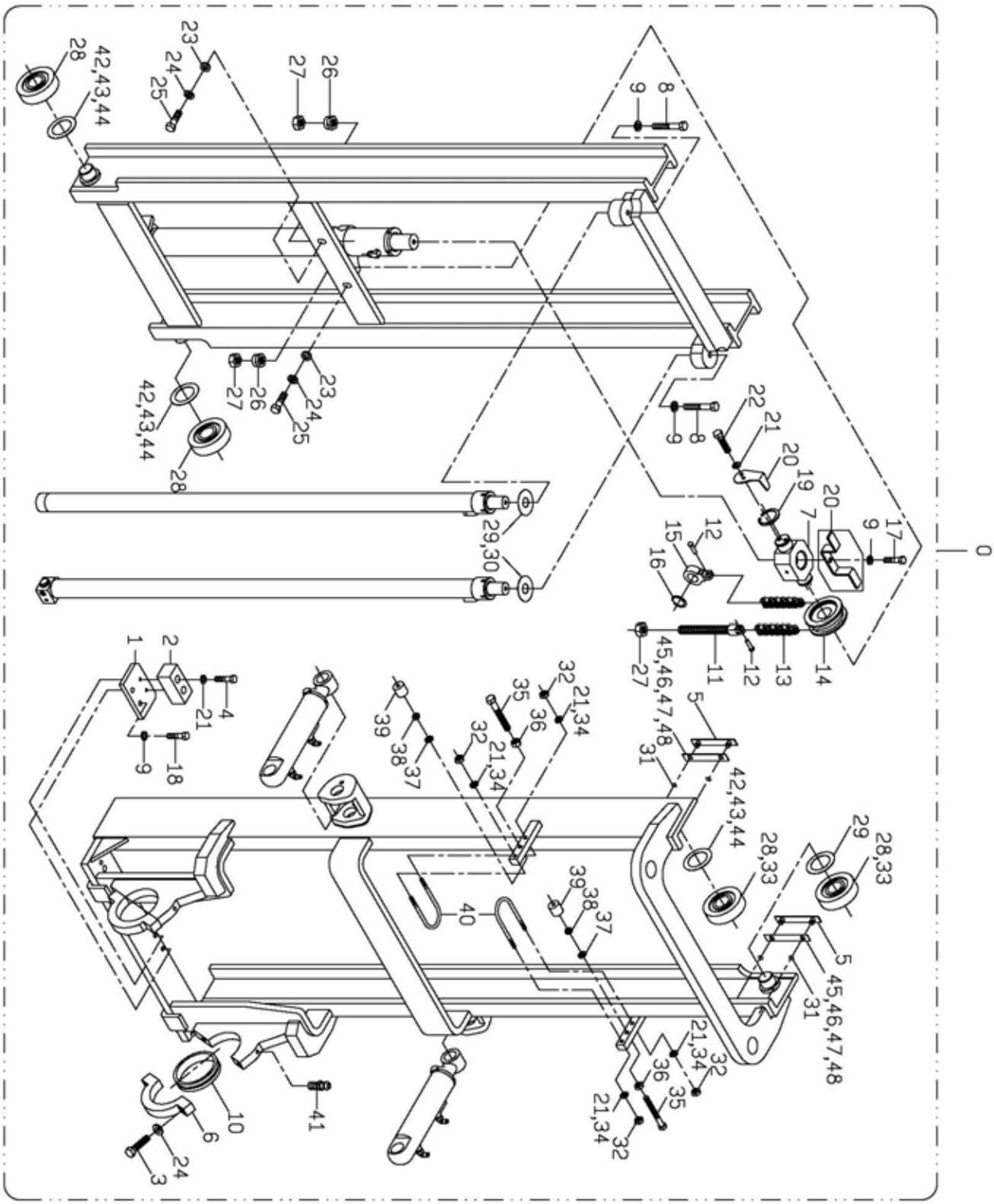

https://truckmanualshub.com/

升降系統
A308
MAST SYSTEM

二截式貨櫃型桅桿配件組
A308-1A
MAST FITTING (CONTAINER FORM)

編號 NO.	零件名稱 PART NAME						FD						FG						FD〔C〕						FG〔C〕						機號 BODY NO.	備註 REMARK
	新碼 NEW PART NO.	舊碼 OLD PART NO.	規格 SPECIFICATION	互換性 ITC	應用日期 APPLIED DATE	數量 QTY	15	18	20	25	30	35	15	18	20	25	30	35	15	18	20	25	30	35	15	18	20	25	30	35		
							A	B	C	D	E	F	G	H	I	J	K	L	M	N	O	P	Q	R	S	T	U	V	W	X		
0	**桅桿總成(MAST ASSY)**																															
	B350134					1	A	B	C	D			G	H	I	J																3M
	B350144					1					E	F					K	L														
	B350135					1	A	B	C	D			G	H	I	J																3.3M
	B350145					1					E	F					K	L														
	B350136					1	A	B	C	D			G	H	I	J																3.5M
	B350146					1					E	F					K	L														
	B350137					1	A	B	C	D			G	H	I	J																4M
	B350147					1					E	F					K	L														
	B350138					1	A	B	C	D			G	H	I	J																4.5M
	B350148					1					E	F					K	L														
1	**彈性墊固定座(SHIM, STOPPER)**																															
	32938	32515016				1	A	B	C	D	E	F	G	H	I	J	K	L														
2	**彈性墊(CUSHION)**																															
	32939	92515011A				1	A	B	C	D	E	F	G	H	I	J	K	L														
3	**螺栓(BOLT)**																															
	M1423006	92507024				4	A	B	C	D	E	F	G	H	I	J	K	L														
4	**螺栓(BOLT)**																															
	M1424-M8*30	92503010				2	A	B	C	D	E	F	G	H	I	J	K	L														
5	**滑條組立(STRIP SUB-ASSY, OUTER MAST)**																															
	32925	22507003				2	A	B	C	D	E	F	G	H	I	J	K	L														
6	**固定蓋座(CAP,MAST SUPPORT)**																															
	32933	32507022				2	A	B	C	D			G	H	I	J																
	32934	33007022				2					E	F					K	L														
7	**鍊條固定座(ANCHOR, CHAIN WHEEL)**																															
	32940	42515001				1	A	B	C	D			G	H	I	J																
	32941	43015001				1					E	F					K	L														
8	**螺栓(BOLT)**																															
	M1423-M12*50	92507029				2	A	B	C	D	E	F	G	H	I	J	K	L														
9	**彈簧華司(SPRING WASHER)**																															
	M1605-M12	92501024				5	A	B	C	D	E	F	G	H	I	J	K	L														
10	**電木套(BUSHING)**																															
	32931	32507021				2	A	B	C	D			G	H	I	J																
	32932	33007021				2					E	F					K	L														
11	**鍊條調整螺栓(CHAIN-ADJUSTING BOLT)**																															
	32904	32507033				2	A	B	C	D			G	H	I	J																
	32905	33007033				2					E	F					K	L														

https://truckmanualshub.com/

二截式貨櫃型桅桿配件組
A308-1A
MAST FITTING (CONTAINER FORM)

編號 NO.	零件名稱 PART NAME						FD						FG						FD〔C〕						FG〔C〕						機號 BODY NO.	備註 REMARK
	新碼 NEW PART NO.	舊碼 OLD PART NO.	規格 SPECIFICATION	互換性 ITC	應用日期 APPLIED DATE	數量 QTY	15	18	20	25	30	35	15	18	20	25	30	35	15	18	20	25	30	35	15	18	20	25	30	35		
							A	B	C	D	E	F	G	H	I	J	K	L	M	N	O	P	Q	R	S	T	U	V	W	X		
12	**銷(PIN)**																															
	M1325-8*25	92507014				4	A	B	C	D			G	H	I	J																
	M1325-10*35	93007014				4					E	F					K	L														
13	**鍊條(CHAIN)**																															
	32943	92515012				2	A	B	C	D			G	H	I	J															3M	
	32944	93015012				2					E	F					K	L														
	32945	92515013				2	A	B	C	D			G	H	I	J															3.3M	
	32946	93015013				2					E	F					K	L														
	32947	92515014				2	A	B	C	D			G	H	I	J															3.5M	
	32948	93015014				2					E	F					K	L														
	32949	92515015				2	A	B	C	D			G	H	I	J															4M	
	32950	93015015				2					E	F					K	L														
	32951	92515019				2	A	B	C	D			G	H	I	J															4.5M	
	32952	93015019				2					E	F					K	L														
14	**鍊條滾輪(WHEEL, CHAIN)**																															
	32920	32507031				2	A	B	C	D			G	H	I	J																
	32953	33015022				2					E	F					K	L														
15	**鍊條固定座(ANCHOR, CHAIN, WHEEL)**																															
	32923	32507017				2	A	B	C	D			G	H	I	J																
	32924	33007017				2					E	F					K	L														
16	**C型扣環(RING "C")**																															
	M1312-S28	92507020				2	A	B	C	D	E	F	G	H	I	J	K	L														
17	**螺栓(BOLT)**																															
	M1423034	92515021				1	A	B	C	D	E	F	G	H	I	J	K	L														
18	**螺栓(BOLT)**																															
	32012	92501006				2	A	B	C	D	E	F	G	H	I	J	K	L														
19	**C型扣環(RING "C")**																															
	M1312-S38	92507032				2	A	B	C	D	E	F	G	H	I	J	K	L														
20	**鍊條護蓋(GUARD, CHAIN)**																															
	32954	32515004				2	A	B	C	D			G	H	I	J																
	32955	33015004				1					E	F					K	L														
21	**彈簧華司(SPRING WASHER)**																															
	M1605-M8	92501019				6	A	B	C	D	E	F	G	H	I	J	K	L														
22	**螺栓(BOLT)**																															
	M1424-M8*16	92501014				4	A	B	C	D	E	F	G	H	I	J	K	L														
23	**平華司(WASHER)**																															
	M1602024	92515007				2	A	B	C	D	E	F	G	H	I	J	K	L														

https://truckmanualshub.com/

二截式貨櫃型桅桿配件組
A308-1A
MAST FITTING (CONTAINER FORM)

編號 NO.	新碼 NEW PART NO.	舊碼 OLD PART NO.	規格 SPECIFICATION	互換性 ITC	應用日期 APPLIED DATE	數量 QTY	FD 15 A	FD 18 B	FD 20 C	FD 25 D	FD 30 E	FD 35 F	FG 15 G	FG 18 H	FG 20 I	FG 25 J	FG 30 K	FG 35 L	FD〔C〕 15 M	FD〔C〕 18 N	FD〔C〕 20 O	FD〔C〕 25 P	FD〔C〕 30 Q	FD〔C〕 35 R	FG〔C〕 15 S	FG〔C〕 18 T	FG〔C〕 20 U	FG〔C〕 25 V	FG〔C〕 30 W	FG〔C〕 35 X	機號 BODY NO.	備註 REMARK
24	**彈簧華司(SPRING WASHER)**																															
	M1605-M14	92506020				6	A	B	C	D	E	F	G	H	I	J	K	L														
25	**螺栓(BOLT)**																															
		92507514				2	A	B	C	D	E	F	G	H	I	J	K	L														
26	**特殊螺帽(NUT)**																															
		92507018				2	A	B	C	D	E	F	G	H	I	J	K	L														
27	**螺帽(NUT)**																															
	M1513007	92507019				4	A	B	C	D	E	F	G	H	I	J	K	L														
28	**主滾輪(ROTARY, WHEEL)**																															
	32899	92507007				4	A	B	C	D			G	H	I	J																
	32926	93007035				2					E	F					K	L														
29	**墊片(SHIM)**																															
	32902	32507002				N	A	B	C	D	E	F	G	H	I	J	K	L														0.5t
30	**墊片(SHIM)**																															
	32903	32507046				N	A	B	C	D	E	F	G	H	I	J	K	L														1t
31	**O型環("O"RING)**																															
	M0801-P9	92507005				4	A	B	C	D	E	F	G	H	I	J	K	L														
32	**螺帽(NUT)**																															
	M1501-M8	92501115				4	A	B	C	D	E	F	G	H	I	J	K	L														
33	**主滾輪(ROTARY, WHEEL)**																															
	32900	93007007				2					E	F					K	L														
34	**平華司(WASHER)**																															
	M1602006	92507009				4	A	B	C	D	E	F	G	H	I	J	K	L														
35	**固定螺栓(BOLT)**																															
		32507010				2	A	B	C	D	E	F	G	H	I	J	K	L														
36	**鎖定螺帽(NUT)**																															
	M1502001	92504016				2	A	B	C	D	E	F	G	H	I	J	K	L														
37	**彈簧華司(SPRING WASHER)**																															
	M1605-M8	92501019				2	A	B	C	D	E	F	G	H	I	J	K	L														
38	**平華司(WASHER)**																															
	M1602010	92507027				2	A	B	C	D	E	F	G	H	I	J	K	L														
39	**橡膠套筒(BUSH)**																															
	32927	32507012				2	A	B	C	D	E	F	G	H	I	J	K	L														
40	**U型螺栓(BOLT "U")**																															
	32928	32507013				2	A	B	C	D			G	H	I	J																
	32929	33007013				2					E	F					K	L														

https://truckmanualshub.com/

二截式貨櫃型桅桿配件組
A308-1A
MAST FITTING (CONTAINER FORM)

編號 NO.	零件名稱 PART NAME						FD						FG						FD〔C〕						FG〔C〕						機號 BODY NO.	備註 REMARK
	新碼 NEW PART NO.	舊碼 OLD PART NO.	規格 SPECIFICATION	互換性 ITC	應用日期 APPLIED DATE	數量 QTY	15	18	20	25	30	35	15	18	20	25	30	35	15	18	20	25	30	35	15	18	20	25	30	35		
							A	B	C	D	E	F	G	H	I	J	K	L	M	N	O	P	Q	R	S	T	U	V	W	X		
41	**黃油嘴(GREASE CONNECTOR)**																															
	M1321-M10	92503015				2	A	B	C	D	E	F	G	H	I	J	K	L														
42	**墊片(SHIM)**																															
	32895	32507006				N	A	B	C	D	E	F	G	H	I	J	K	L														0.5t
43	**墊片(SHIM)**																															
	32896	32507044				N	A	B	C	D	E	F	G	H	I	J	K	L														1t
44	**墊片(SHIM)**																															
	32897	32507045				N	A	B	C	D	E	F	G	H	I	J	K	L														2t
45	**墊片(SHIM)**																															
	32892	32507004				N	A	B	C	D	E	F	G	H	I	J	K	L														0.5t
46	**墊片(SHIM)**																															
	32893	32507042				N	A	B	C	D	E	F	G	H	I	J	K	L														1t
47	**墊片(SHIM)**																															
	32894	32507043				N	A	B	C	D	E	F	G	H	I	J	K	L														2t
48	**墊片(SHIM)**																															
	34610					N	A	B	C	D	E	F	G	H	I	J	K	L														0.2t

https://truckmanualshub.com/

井降系統
A308
MAST SYSTEM

三截式桅桿配件組
A308-1B
MAST FITTING (THREE-STAGE)

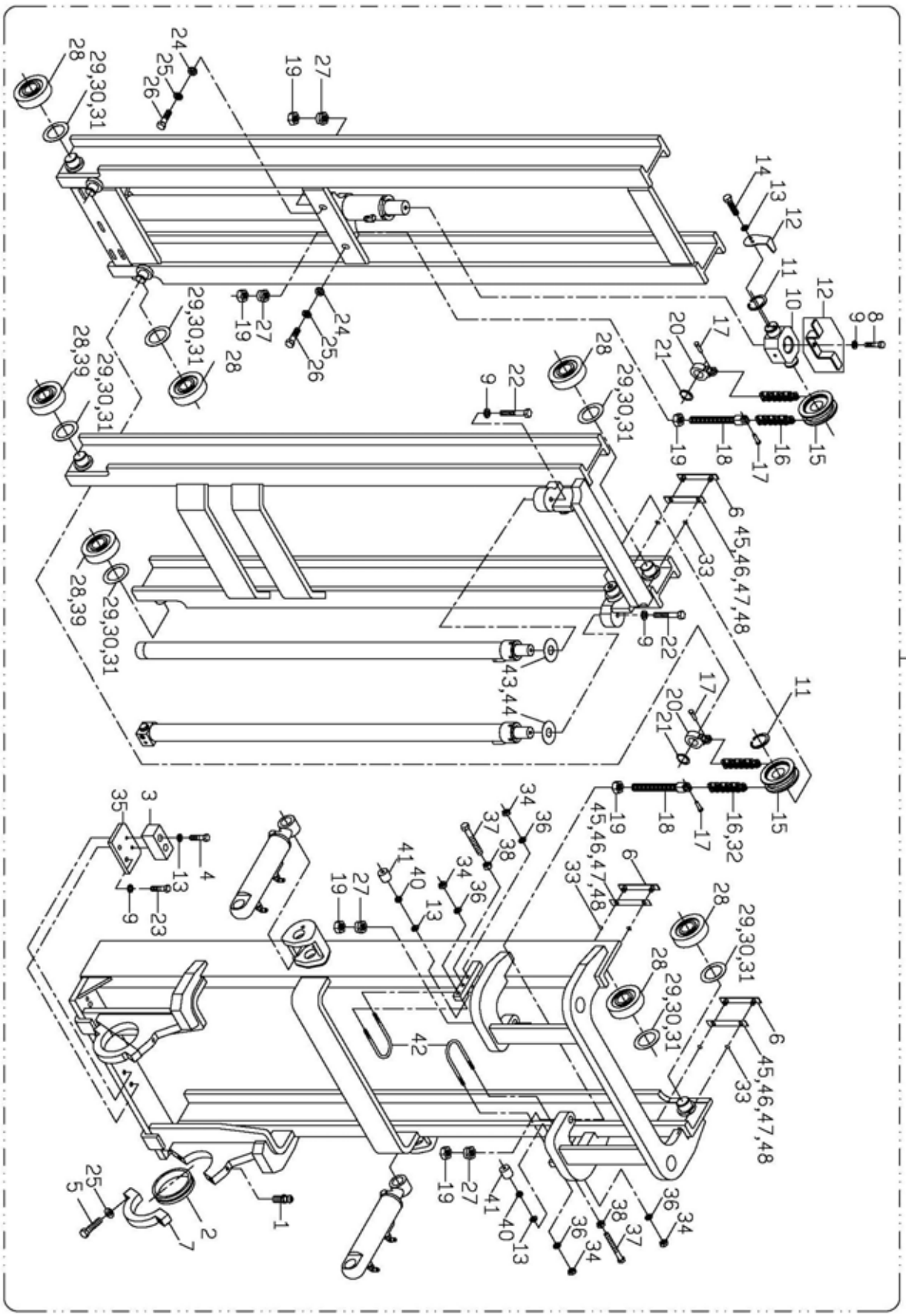

https://truckmanualshub.com/

升降系統
A308
MAST SYSTEM

三截式桅桿配件組
A308-1B
MAST FITTING (THREE-STAGE)

編號 NO.	零件名稱 PART NAME						FD						FG						FD〔C〕						FG〔C〕						機號 BODY NO.	備註 REMARK
	新碼 NEW PART NO.	舊碼 OLD PART NO.	規格 SPECIFICATION	互換性 ITC	應用日期 APPLIED DATE	數量 QTY	15	18	20	25	30	35	15	18	20	25	30	35	15	18	20	25	30	35	15	18	20	25	30	35		
							A	B	C	D	E	F	G	H	I	J	K	L	M	N	O	P	Q	R	S	T	U	V	W	X		
0	**桅桿總成(MAST ASSY)**																															
	B350170					1	A	B	C	D			G	H	I	J																4M
	B350184					1					E	F					K	L														
	B350171					1	A	B	C	D			G	H	I	J																4.5M
	B350185					1					E	F					K	L														
	B350173					1	A	B	C	D			G	H	I	J																4.7M
	B350187					1					E	F					K	L														
	B350172					1	A	B	C	D			G	H	I	J																4.8M & 5M
	B350186					1					E	F					K	L														
	B350175					1	A	B	C	D			G	H	I	J																5.5M
	B350189					1					E	F					K	L														
	B350176					1	A	B	C	D			G	H	I	J																6M
	B350190					1					E	F					K	L														
	B350191					1					E	F					K	L														6.5M
1	**黃油嘴(GREASE, CONNECTOR)**																															
	M1321-M10	92503015				2	A	B	C	D	E	F	G	H	I	J	K	L														
2	**電木套(BUSHING)**																															
	32931	32507021				2	A	B	C	D			G	H	I	J																
	32932	33007021				2					E	F					K	L														
3	**彈性墊(CUSHION)**																															
	32939	92515011A				1	A	B	C	D	E	F	G	H	I	J	K	L														停用(NOT USED)
4	**圓內六角螺栓(BOLT)**																															
	M1424-M8*30	92503010				2	A	B	C	D	E	F	G	H	I	J	K	L														停用(NOT USED)
5	**螺栓(BOLT)**																															
		92507514				4	A	B	C	D	E	F	G	H	I	J	K	L														
6	**滑條組立(STRIP SUB-ASSY, OUTER MAST)**																															
	32925	22507003				4	A	B	C	D	E	F	G	H	I	J	K	L														
7	**固定蓋座(CAP,MAST SUPPORT)**																															
	32933	32507022				2	A	B	C	D			G	H	I	J																
	32934	33007022				2					E	F					K	L														
8	**螺栓(BOLT)**																															
	M1423034	92515021				1	A	B	C	D	E	F	G	H	I	J	K	L														
9	**彈簧華司(SPRING WASHER)**																															
	M1605-M12	92501024				5	A	B	C	D	E	F	G	H	I	J	K	L														停用(NOT USED)
	M1605-M12	92501024				3	A	B	C	D	E	F	G	H	I	J	K	L														
10	**鍊條固定座(ANCHOR, CHAIN WHEEL)**																															
	32940	42515001				1	A	B	C	D			G	H	I	J																
	32941	43015001				1					E	F					K	L														

https://truckmanualshub.com/

三截式桅桿配件組
A308-1B
MAST FITTING (THREE-STAGE)

編號 NO.	零件名稱 PART NAME						FD						FG						FD〔C〕						FG〔C〕						機號 BODY NO.	備註 REMARK
	新碼 NEW PART NO.	舊碼 OLD PART NO.	規格 SPECIFICATION	互換性 ITC	應用日期 APPLIED DATE	數量 QTY	15	18	20	25	30	35	15	18	20	25	30	35	15	18	20	25	30	35	15	18	20	25	30	35		
							A	B	C	D	E	F	G	H	I	J	K	L	M	N	O	P	Q	R	S	T	U	V	W	X		
11	C型扣環(RING "C")																															
	M1312-S38	92507032				4	A	B	C	D	E	F	G	H	I	J	K	L														
12	鍊條護蓋(GUARD, CHAIN)																															
	32954	32515004				2	A	B	C	D			G	H	I	J																
	32955	33015004				2					E	F					K	L														
13	彈簧華司(SPRING WASHER)																															
	M1605-M8	92501019				4	A	B	C	D	E	F	G	H	I	J	K	L														停用(NOT USED)
	M1605-M8	92501019				3	A	B	C	D	E	F	G	H	I	J	K	L														
14	螺栓(BOLT)																															
	M1424-M8*16	92501014				4	A	B	C	D	E	F	G	H	I	J	K	L														
15	鍊條滾輪(WHEEL, CHAIN)																															
	32920	32507031				4	A	B	C	D			G	H	I	J																
	32953	33015022				4					E	F					K	L														
16	鍊條(CHAIN)																															
	32956	92516005				2	A	B	C	D			G	H	I	J															4M	
	32957	93010605				2					E	F					K	L														
	32943	92515012				2	A	B	C	D			G	H	I	J															4.5M	
	32944	93015012				2					E	F					K	L														
	32958					2	A	B	C	D			G	H	I	J															4.7M	
	32959					2					E	F					K	L														
	32947	92515014				2	A	B	C	D			G	H	I	J															4.8M & 5M	
	32948	93015014				2					E	F					K	L														
	32960	92516006				2	A	B	C	D			G	H	I	J															5.5M	
	32961	93016006				2					E	F					K	L														
	32949	92515015				2	A	B	C	D			G	H	I	J															6M	
	32950	93015015				2					E	F					K	L														
	32952	93015019				2					E	F					K	L													6.5M	
17	銷(PIN)																															
	M1325-8*25	92507014				8	A	B	C	D			G	H	I	J																
	M1325-10*35	93007014				8					E	F					K	L														
18	鍊條調整螺栓(CHAIN-ADJUSTING BOLT)																															
	32904	32507033				4	A	B	C	D			G	H	I	J																
	32905	33007033				4					E	F					K	L														
19	螺帽(NUT)																															
	M1513007	92507019				4	A	B	C	D	E	F	G	H	I	J	K	L														
20	鍊條固定座(ANCHOR, CHAIN WHEEL)																															
	32923	32507017				4	A	B	C	D			G	H	I	J																
	32924	33007017				4					E	F					K	L														

https://truckmanualshub.com/

升降系統
A308
MAST SYSTEM

三截式桅桿配件組
A308-1B
MAST FITTING (THREE-STAGE)

編號 NO.	新碼 NEW PART NO.	舊碼 OLD PART NO.	規格 SPECIFICATION	互換性 ITC	應用日期 APPLIED DATE	數量 QTY	FD 15	FD 18	FD 20	FD 25	FD 30	FD 35	FG 15	FG 18	FG 20	FG 25	FG 30	FG 35	FD〔C〕15	FD〔C〕18	FD〔C〕20	FD〔C〕25	FD〔C〕30	FD〔C〕35	FG〔C〕15	FG〔C〕18	FG〔C〕20	FG〔C〕25	FG〔C〕30	FG〔C〕35	機號 BODY NO.	備註 REMARK
	零件名稱 PART NAME						A	B	C	D	E	F	G	H	I	J	K	L	M	N	O	P	Q	R	S	T	U	V	W	X		
21	C型扣環(RING "C")																															
	M1312-S28	92507020				4	A	B	C	D	E	F	G	H	I	J	K	L														
22	螺栓(BOLT)																															
	M1423-M12*50	92507029				2	A	B	C	D	E	F	G	H	I	J	K	L														
23	螺栓(BOLT)																															
	32012	92501006				2	A	B	C	D	E	F	G	H	I	J	K	L														停用(NOT USED)
24	平華司(WASHER)																															
	M1602024	92515007				2	A	B	C	D	E	F	G	H	I	J	K	L														
25	彈簧華司(SPRING WASHER)																															
	M1605-M14	92506020				6	A	B	C	D	E	F	G	H	I	J	K	L														
26	螺栓(BOLT)																															
	32963	92515009				2	A	B	C	D	E	F	G	H	I	J	K	L														
27	特殊螺帽(NUT)																															
		92507018				4	A	B	C	D	E	F	G	H	I	J	K	L														
28	主滾輪(ROTARY, WHEEL)																															
		93007043			2000/10	6					E	F					K	L														停用(NOT USED)
	32899	92507007				8	A	B	C	D			G	H	I	J																
	32900	93007007			2003/02	6					E	F					K	L														
29	墊片(SHIM)																															
	32895	32507006				N	A	B	C	D	E	F	G	H	I	J	K	L														0.5t
30	墊片(SHIM)																															
	32896	32507044				N	A	B	C	D	E	F	G	H	I	J	K	L														1t
31	墊片(SHIM)																															
	32897	32507045				N	A	B	C	D	E	F	G	H	I	J	K	L														2t
32	鍊條(CHAIN)																															
	32964	92516007				2	A	B	C	D			G	H	I	J																4M
	32965	93016007				2					E	F					K	L														
	32966	92516001				2	A	B	C	D			G	H	I	J																4.5M
	32967	93016001				2					E	F					K	L														
	32968					2	A	B	C	D			G	H	I	J																4.7M
	32969					2					E	F					K	L														
	32970	92516002				2	A	B	C	D			G	H	I	J																4.8M & 5M
	32971	93016002				2					E	F					K	L														
	32972	92516003				2	A	B	C	D			G	H	I	J																5.5M
	32973	93016003				2					E	F					K	L														
	32974	92516004				2	A	B	C	D			G	H	I	J																6M
	32975	93016004				2					E	F					K	L														
	32976	93016008				2					E	F					K	L														6.5M

https://truckmanualshub.com/

三截式桅桿配件組
A308-1B
MAST FITTING (THREE-STAGE)

編號 NO.	新碼 NEW PART NO.	舊碼 OLD PART NO.	規格 SPECIFICATION	互換性 ITC	應用日期 APPLIED DATE	數量 QTY	FD 15 A	FD 18 B	FD 20 C	FD 20 D	FD 25 E	FD 30 F	FG 15 G	FG 18 H	FG 20 I	FG 20 J	FG 25 K	FG 30 L	FD〔C〕 15 M	FD〔C〕 18 N	FD〔C〕 20 O	FD〔C〕 20 P	FD〔C〕 25 Q	FD〔C〕 30 R	FG〔C〕 15 S	FG〔C〕 18 T	FG〔C〕 20 U	FG〔C〕 25 V	FG〔C〕 30 W	FG〔C〕 35 X	機號 BODY NO.	備註 REMARK
	零件名稱 PART NAME																														
33	O型環("O"RING)																														
	M0801-P9	92507005				8	A	B	C	D	E	F	G	H	I	J	K	L													
34	螺帽(NUT)																														
	M1501-M8	92501115				4	A	B	C	D	E	F	G	H	I	J	K	L													
35	彈性墊固定座(SHIM, STOPPER)																														
	32977	92515016				1	A	B	C	D	E	F	G	H	I	J	K	L													停用(NOT USED)
36	平華司(WASHER)																														
	M1602006	92507009				4	A	B	C	D	E	F	G	H	I	J	K	L													
37	固定螺栓(BOLT)																														
		32507010				2	A	B	C	D	E	F	G	H	I	J	K	L													
38	鎖定螺帽(NUT)																														
	M1502001	92504016				2	A	B	C	D	E	F	G	H	I	J	K	L													
39	主滾輪(ROTARY, WHEEL)																														
	32926	93007035				2					E	F					K	L													
40	平華司(WASHER)																														
	M1602010	92507027				2	A	B	C	D	E	F	G	H	I	J	K	L													
41	橡膠套筒(BUSH)																														
	32927	32507012				2	A	B	C	D	E	F	G	H	I	J	K	L													
42	U型螺栓(BOLT, "U")																														
	32928	32507013				2	A	B	C	D			G	H	I	J															
	32929	33007013				2					E	F					K	L													
43	墊片(SHIM)																														
	32978	92507002				N	A	B	C	D	E	F	G	H	I	J	K	L													0.5t
44	墊片(SHIM)																														
	32979	92507046				N	A	B	C	D	E	F	G	H	I	J	K	L													1t
45	墊片(SHIM)																														
	32892	32507004				N	A	B	C	D	E	F	G	H	I	J	K	L													0.5t
46	墊片(SHIM)																														
	32893	32507042				N	A	B	C	D	E	F	G	H	I	J	K	L													1t
47	墊片(SHIM)																														
	32894	32507043				N	A	B	C	D	E	F	G	H	I	J	K	L													2t
48	墊片(SHIM)																														
	34610					N	A	B	C	D	E	F	G	H	I	J	K	L													0.2t

https://truckmanualshub.com/

井降系統
A308
MAST SYSTEM

滑軌組
A308-2
MAST ASSY

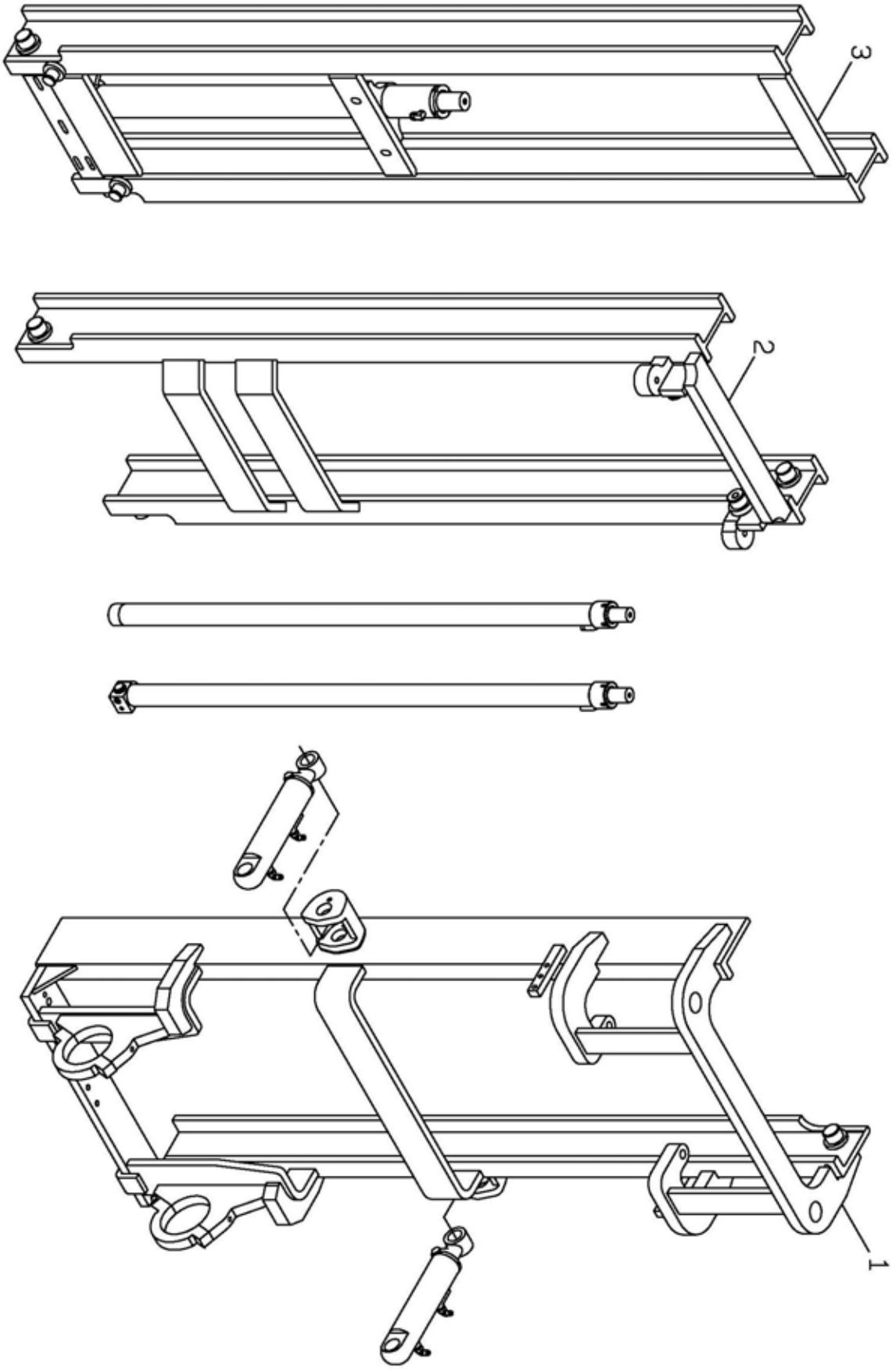

https://truckmanualshub.com/

升降系統
A308
MAST SYSTEM

滑軌組
A308-2
MAST ASSY

編號 NO.	零件名稱 PART NAME 新碼 NEW PART NO.	舊碼 OLD PART NO.	規格 SPECIFICATION	互換性 ITC	應用日期 APPLIED DATE	數量 QTY	FD 15 18 20 25 30 35 A B C D E F	FG 15 18 20 25 30 35 G H I J K L	FD〔C〕 15 18 20 25 30 35 M N O P Q R	FG〔C〕 15 18 20 25 30 35 S T U V W X	機號 BODY NO.	備註 REMARK
	二截式(TWO-STAGE)											
1	外滑軌組立(MAST SUB-ASSY, OUTER)											
	32980	21532100				1	A B	G H				3M
	32981	22532100				1	C D	I J				
	32982	23032100				1	E	K				
	32983	23532100				1	F	L				
	32988	21532200				1	A B	G H				3.3M
	32989	22532200				1	C D	I J				
	32990	23032200				1	E	K				
	32991	23532200				1	F	L				
	32996	21532300				1	A B	G H				3.5M
	32997	22532300				1	C D	I J				
	32998	23032300				1	E	K				
	32999	23532300				1	F	L				
	33004	21532700				1	A B	G H				3.7M
	33005	22532700				1	C D	I J				
	33006	23032700				1	E	K				
	33007	23532700				1	F	L				
	33008	21532400				1	A B	G H				4M
	33009	22532400				1	C D	I J				
	33010	23032400				1	E	K				
	33011	23532400				1	F	L				
	33016	21532500				1	A B	G H				4.5M
	33017	22532500				1	C D	I J				
	33018	23032500				1	E	K				
	33019	23532500				1	F	L				
	33020	21532600				1	A B	G H				5M
	33021	22532600				1	C D	I J				
	33022	23032600				1	E	K				
	33023	23532600				1	F	L				
2	內滑軌組立(MAST SUB-ASSY, INNER)											
	33024	21531100				1	A B	G H				3M
	33025	22531100				1	C D	I J				
	33026	23031100				1	E F	K L				
	33031	21531200				1	A B	G H				3.3M
	33032	22531200				1	C D	I J				
	33033	23031200				1	E F	K L				

https://truckmanualshub.com/

滑軌組
A308-2
MAST ASSY

編號 NO.	零件名稱 PART NAME						FD						FG						FD〔C〕						FG〔C〕						機號 BODY NO.	備註 REMARK
	新碼 NEW PART NO.	舊碼 OLD PART NO.	規格 SPECIFICATION	互換性 ITC	應用日期 APPLIED DATE	數量 QTY	15 A	18 B	20 C	25 D	30 E	35 F	15 G	18 H	20 I	25 J	30 K	35 L	15 M	18 N	20 O	25 P	30 Q	35 R	15 S	18 T	20 U	25 V	30 W	35 X		
2	**內滑軌組立(MAST SUB-ASSY, INNER)**																															
	33038	21531300				1	A	B					G	H																		
	33039	22531300				1			C	D					I	J																3.5M
	33040	23031300				1					E	F					K	L														
	33045	21531700				1	A	B					G	H																		
	33046	22531700				1			C	D					I	J																3.7M
	33047	23031700				1					E	F					K	L														
	33048	21531400				1	A	B					G	H																		
	33049	22531400				1			C	D					I	J																4M
	33050	23031400				1					E	F					K	L														
	33055	21531500				1	A	B					G	H																		
	33056	22531500				1			C	D					I	J																4.5M
	33057	23031500				1					E	F					K	L														
	33058	21531600				1	A	B					G	H																		
	33059	22531600				1			C	D					I	J																5M
	33060	23031600				1					E	F					K	L														

https://truckmanualshub.com/

滑軌組
A308-2
MAST ASSY

編號 NO.	新碼 NEW PART NO.	舊碼 OLD PART NO.	規格 SPECIFICATION	互換性 ITC	應用日期 APPLIED DATE	數量 QTY	FD 15	FD 18	FD 20	FD 25	FD 30	FD 35	FG 15	FG 18	FG 20	FG 25	FG 30	FG 35	FD〔C〕15	FD〔C〕18	FD〔C〕20	FD〔C〕25	FD〔C〕30	FD〔C〕35	FG〔C〕15	FG〔C〕18	FG〔C〕20	FG〔C〕25	FG〔C〕30	FG〔C〕35	機號 BODY NO.	備註 REMARK
	零件名稱 PART NAME						A	B	C	D	E	F	G	H	I	J	K	L	M	N	O	P	Q	R	S	T	U	V	W	X		
	二截式貨櫃型(CONTAINER FORM)																															
1	外滑軌組立(MAST SUB-ASSY, OUTER)																															
	33061	21534100				1	A	B					G	H																	3M	
	33062	22534100				1			C	D					I	J																
	33063	23034100				1					E						K															
	33064	23534100				1						F						L														
	33069	21534200				1	A	B					G	H																	3.3M	
	33070	22534200				1			C	D					I	J																
	33071	23034200				1					E						K															
	33072	23534200				1						F						L														
	33077	21534300				1	A	B					G	H																	3.5M	
	33078	22534300				1			C	D					I	J																
	33079	23034300				1					E						K															
	33080	23534300				1						F						L														
	33085	21534400				1	A	B					G	H																	4M	
	33086	22534400				1			C	D					I	J																
	33087	23034400				1					E						K															
	33088	23534400				1						F						L														
	33093	21534500				1	A	B					G	H																	4.5M	
	33094	22534500				1			C	D					I	J																
	33095	23034500				1					E						K															
	33096	23534500				1						F						L														
2	內滑軌組立(MAST SUB-ASSY, INNER)																															
	33097	21533100				1	A	B					G	H																	3M	
	33098	22533100				1			C	D					I	J																
	33099	23033100				1					E	F					K	L														
	33104	21533200				1	A	B					G	H																	3.3M	
	33105	22533200				1			C	D					I	J																
	33106	23033200				1					E	F					K	L														
	33111	21533300				1	A	B					G	H																	3.5M	
	33112	22533300				1			C	D					I	J																
	33113	23033300				1					E	F					K	L														
	33118	21533400				1	A	B					G	H																	4M	
	33119	22533400				1			C	D					I	J																
	33120	23033400				1					E	F					K	L														
	33125	21533500				1	A	B					G	H																	4.5M	
	33126	22533500				1			C	D					I	J																
	33127	23033500				1					E	F					K	L														

https://truckmanualshub.com/

滑軌組
A308-2
MAST ASSY

編號 NO.	零件名稱 PART NAME 新碼 NEW PART NO.	舊碼 OLD PART NO.	規格 SPECIFICATION	互換性 ITC	應用日期 APPLIED DATE	數量 QTY	FD 15 A	FD 18 B	FD 20 C	FD 25 D	FD 30 E	FD 35 F	FG 15 G	FG 18 H	FG 20 I	FG 25 J	FG 30 K	FG 35 L	FD〔C〕15 M	FD〔C〕18 N	FD〔C〕20 O	FD〔C〕25 P	FD〔C〕30 Q	FD〔C〕35 R	FG〔C〕15 S	FG〔C〕18 T	FG〔C〕20 U	FG〔C〕25 V	FG〔C〕30 W	FG〔C〕35 X	機號 BODY NO.	備註 REMARK
	三截式(THREE-STAGE)																														
1	外滑軌組立(MAST SUB-ASSY, OUTER)																														
	33128	21537100				1	A	B					G	H																	4M
	33129	22537100				1			C	D					I	J															
	33130	23037100				1					E						K														
	33131	23537100				1						F						L													
	32980	21532100				1	A	B					G	H																	4.5M
	32981	22532100				1			C	D					I	J															
	32982	23032100				1					E						K														
	32983	23532100				1						F						L													
	33136	21537400				1	A	B					G	H																	4.7M
	33137	22537400				1			C	D					I	J															
	33138	23037400				1					E						K														
	33139	23537400				1						F						L													
	33140	21537200				1	A	B					G	H																	4.8M
	33141	22537200				1			C	D					I	J															
	33142	23037200				1					E						K														
	33143	23537200				1						F						L													
	32988	21532200				1	A	B					G	H																	5M
	32989	22532200				1			C	D					I	J															
	32990	23032200				1					E						K														
	32991	23532200				1						F						L													
	32996	21532300				1	A	B					G	H																	5.5M
	32997	22532300				1			C	D					I	J															
	32998	23032300				1					E						K														
	32999	23532300				1						F						L													
	33147	21537300				1	A	B					G	H																	6M
	33148	22537300				1			C	D					I	J															
	33149	23037300				1					E						K														
	33150	23537300				1						F						L													
	33154	23037500				1					E						K														6.5M
	33155	23537500				1						F						L													
2	中滑軌組立(MAST SUB-ASSY, MIDDLE)																														
	33156	21536900				1	A	B					G	H																	4M
	33157	22536900				1			C	D					I	J															
	33158	23036900				1					E	F					K	L													

https://truckmanualshub.com/

滑軌組
A308-2
MAST ASSY

編號 NO.	零件名稱 PART NAME 新碼 NEW PART NO.	舊碼 OLD PART NO.	規格 SPECIFICATION	互換性 ITC	應用日期 APPLIED DATE	數量 QTY	FD 15 A	FD 18 B	FD 20 C	FD 25 D	FD 30 E	FD 35 F	FG 15 G	FG 18 H	FG 20 I	FG 25 J	FG 30 K	FG 35 L	FD〔C〕15 M	FD〔C〕18 N	FD〔C〕20 O	FD〔C〕25 P	FD〔C〕30 Q	FD〔C〕35 R	FG〔C〕15 S	FG〔C〕18 T	FG〔C〕20 U	FG〔C〕25 V	FG〔C〕30 W	FG〔C〕35 X	機號 BODY NO.	備註 REMARK
2	**中滑軌組立(MAST SUB-ASSY, MIDDLE)**																														
	33163	21536100				1	A	B					G	H																	
	33164	22536100				1			C	D					I	J															4.5M
	33165	23036100				1					E	F					K	L													
	33170	21536600				1	A	B					G	H																	
	33171	22536600				1			C	D					I	J															4.7M
	33172	23036600				1					E	F					K	L													
	33173	21536500				1	A	B					G	H																	
	33174	22536500				1			C	D					I	J															4.8M
	33175	23036500				1					E	F					K	L													
	33180	21536200				1	A	B					G	H																	
	33181	22536200				1			C	D					I	J															5M
	33182	23036200				1					E	F					K	L													
	33187	21536300				1	A	B					G	H																	
	33188	22536300				1			C	D					I	J															5.5M
	33189	23036300				1					E	F					K	L													
	33190	21536400				1	A	B					G	H																	
	33191	22536400				1			C	D					I	J															6M
	33192	23036400				1					E	F					K	L													
	33197	23036800				1					E	F					K	L													6.5M
3	**內滑軌組立(MAST SUB-ASSY, INNER)**																														
	33198	21535900				1	A	B					G	H																	
	33199	22535900				1			C	D					I	J															4M
	33200	23035900				1					E	F					K	L													
	33205	21535100				1	A	B					G	H																	
	33206	22535100				1			C	D					I	J															4.5M
	33207	23035100				1					E	F					K	L													
	33212	21535600				1	A	B					G	H																	
	33213	22535600				1			C	D					I	J															4.7M
	33214	23035600				1					E	F					K	L													
	33215	21535500				1	A	B					G	H																	
	33216	22535500				1			C	D					I	J															4.8M
	33217	23035500				1					E	F					K	L													
	33222	21535200				1	A	B					G	H																	
	33223	22535200				1			C	D					I	J															5M
	33224	23035200				1					E	F					K	L													

https://truckmanualshub.com/

滑軌組
A308-2
MAST ASSY

編號 NO.	零件名稱 PART NAME						FD						FG						FD〔C〕						FG〔C〕						機號 BODY NO.	備註 REMARK
	新碼 NEW PART NO.	舊碼 OLD PART NO.	規格 SPECIFICATION	互換性 ITC	應用日期 APPLIED DATE	數量 QTY	15 A	18 B	20 C	25 D	30 E	35 F	15 G	18 H	20 I	25 J	30 K	35 L	15 M	18 N	20 O	25 P	30 Q	35 R	15 S	18 T	20 U	25 V	30 W	35 X		
3	**內滑軌組立(MAST SUB-ASSY, INNER)**																															
	33229	21535300				1	A	B					G	H																		
	33230	22535300				1			C	D					I	J																5.5M
	33231	23035300				1					E	F					K	L														
	33232	21535400				1	A	B					G	H																		
	33233	22535400				1			C	D					I	J																6M
	33234	23035400				1					E	F					K	L														
	33239	23035700				1					E	F					K	L														6.5M

https://truckmanualshub.com/

升降系統
A308
MAST SYSTEM

傾斜缸組
A308-3
TILT CYLINDER

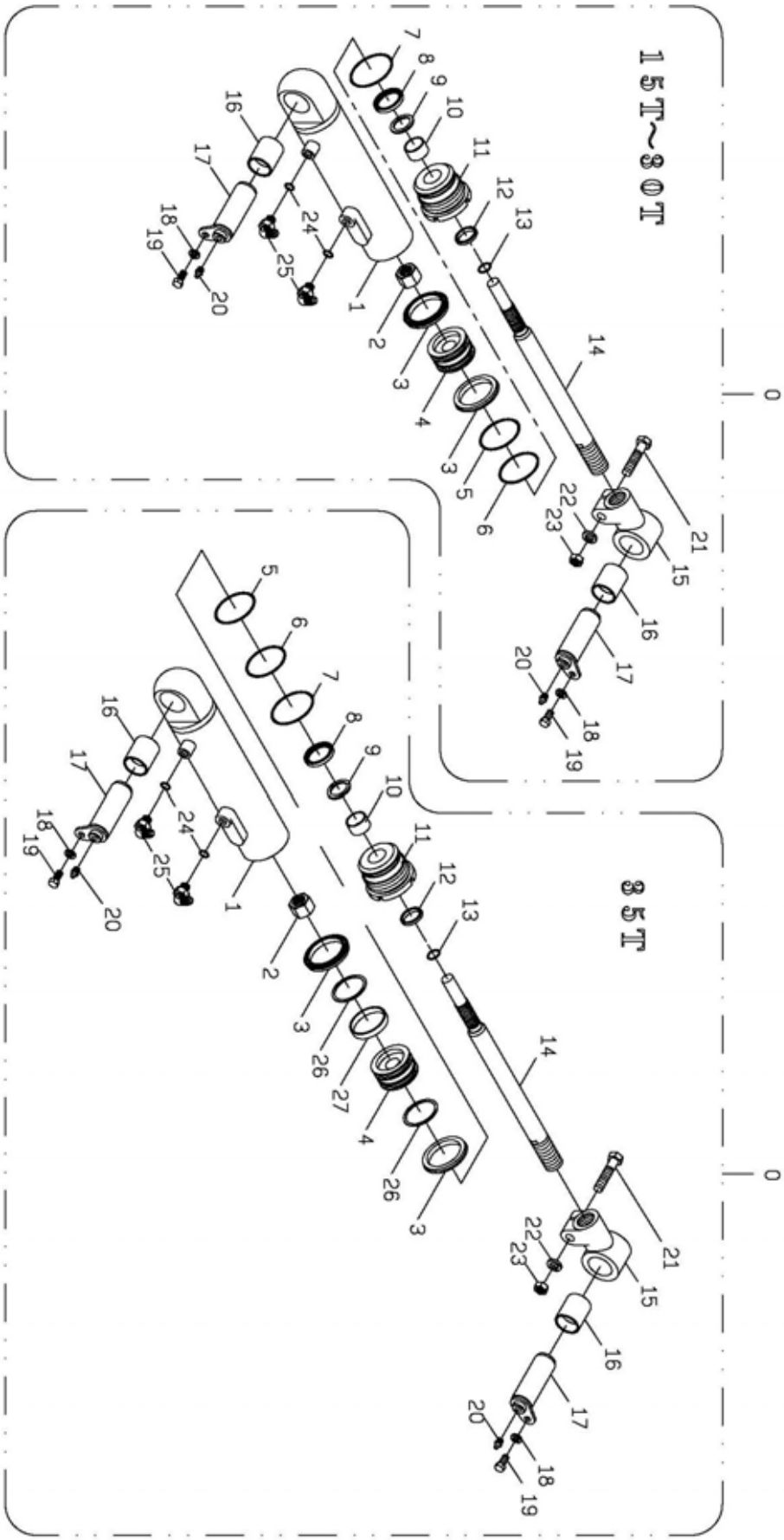

https://truckmanualshub.com/

升降系統
A308
MAST SYSTEM

傾斜缸組
A308-3
TILT CYLINDER

編號 NO.	零件名稱 PART NAME						FD						FG						FD〔C〕						FG〔C〕						機號 BODY NO.	備註 REMARK
	新碼 NEW PART NO.	舊碼 OLD PART NO.	規格 SPECIFICATION	互換性 ITC	應用日期 APPLIED DATE	數量 QTY	15 A	18 B	20 C	25 D	30 E	35 F	15 G	18 H	20 I	25 J	30 K	35 L	15 M	18 N	20 O	25 P	30 Q	35 R	15 S	18 T	20 U	25 V	30 W	35 X		
0	**傾斜缸組立(TILT CYLINDER)**																															
	B350219	42507400				2	●	●	●	●	●		●	●	●	●	●															3M-3.5M
	B350663	43507400				2						●						●														
		42507435			2000/10	2						●						●														
	B350664	43507435			2003/02	2	●	●	●	●	●		●	●	●	●	●															4M以上over
	B350222	44007435				2						●						●														
1	**傾斜油壓缸體(CYLINDER BODY)**																															
	33557	42507401				2	●	●	●	●	●		●	●	●	●	●															3M-3.5M
	33558	44007401				2						●						●														
2	**螺帽(NUT)**																															
		42507402				2	●	●	●	●	●		●	●	●	●	●															
		44007402				2						●						●														
3	**油封(SEAL)**																															
	M0803008	42507403				4	●	●	●	●	●		●	●	●	●	●															
	M0803010	43015319				4						●						●														
4	**活塞(PISTON)**																															
	33562	42507404				2	●	●	●	●	●		●	●	●	●	●															
	33563	44007404				2						●						●														
5	**O型環("O"RING)**																															
	M0801-G65B	42505204				2	●	●	●	●	●		●	●	●	●	●															
	M0801-G80B	44007434				2						●						●														
6	**背托環(RING, BACK UP)**																															
	M0802010	42505205				2	●	●	●	●	●		●	●	●	●	●															
	M0802014	44007433				2						●						●														
7	**O型環("O"RING)**																															
	M0801-G70	93006038				2	●	●	●	●	●		●	●	●	●	●															
	M0801-G85	43015305				2						●						●														
8	**油封(SEAL)**																															
	M0803002	42507411				2	●	●	●	●	●		●	●	●	●	●															
	M0803004	42505203				2						●						●														
9	**背托環(RING, BACK UP)**																															
	M0802002	42507422				2	●	●	●	●	●		●	●	●	●	●															
	M0802005	42505219				2						●						●														
10	**自潤軸承(BUSHING)**																															
	M0920-MB3020	42507416				2	●	●	●	●	●		●	●	●	●	●															
	M0920-MB4020	44007416				2						●						●														

https://truckmanualshub.com/

升降系統
A308
MAST SYSTEM

傾斜缸組
A308-3
TILT CYLINDER

編號 NO.	零件名稱 PART NAME						FD						FG						FD〔C〕						FG〔C〕						機號 BODY NO.	備註 REMARK
	新碼 NEW PART NO.	舊碼 OLD PART NO.	規格 SPECIFICATION	互換性 ITC	應用日期 APPLIED DATE	數量 QTY	15 A	18 B	20 C	25 D	30 E	35 F	15 G	18 H	20 I	25 J	30 K	35 L	15 M	18 N	20 O	25 P	30 Q	35 R	15 S	18 T	20 U	25 V	30 W	35 X		
11	油壓缸蓋(COVER, CYLINDER)																															
	33564	42507409				2	A	B	C	D	E		G	H	I	J	K															
	33565	44007409				2						F						L														
12	防塵油封(SEAL)																															
	M0807003	42507420				2	A	B	C	D	E		G	H	I	J	K															
	M0807005	42505207				2						F						L														
13	O型環("O"RING)																															
	M0801-P18	92501107				2	A	B	C	D	E		G	H	I	J	K															
	M0801-P24	92509052				2						F						L														
14	活塞桿(TILT CYLINDER PISTON ROD)																															
	33566	42507406				2	A	B	C	D	E		G	H	I	J	K															長long stroke
	33567	44007406				2						F						L														長long stroke
	33568	42507432				2	A	B	C	D	E		G	H	I	J	K															短stub shaft
	33569	44007432				2						F						L														短stub shaft
15	接頭(JOINT)																															
	33573	42507418				2	A	B	C	D	E		G	H	I	J	K															
	33574	44007418				2						F						L														
16	電木套(BUSHING)																															
	33575	32507421				4	A	B	C	D	E	F	G	H	I	J	K	L														
17	支撐銷(BRACE PIN)																															
	33576	92507423				4	A	B	C	D	E	F	G	H	I	J	K	L														
18	彈簧華司(SPRING WASHER)																															
	M1605-M10	92501218				4	A	B	C	D	E	F	G	H	I	J	K	L														
19	螺栓(BOLT)																															
	M1424002	92501219				4	A	B	C	D	E	F	G	H	I	J	K	L														
20	黃油嘴(AREASE, CONNECTOR)																															
	M1321-M8	92507424				4	A	B	C	D	E		G	H	I	J	K															
	M1321-M10	92503015				4						F						L														
21	螺栓(BOLT)																															
	M1423006	92507024				2	A	B	C	D	E		G	H	I	J	K															
		94007427				2						F						L														
22	彈簧華司(SPRING WASHER)																															
	M1605-M14	92506020				2	A	B	C	D	E	F	G	H	I	J	K	L														
23	螺帽(NUT)																															
	M1502003	92507428				2	A	B	C	D	E	F	G	H	I	J	K	L														

https://truckmanualshub.com/

傾斜缸組
A308-3
TILT CYLINDER

編號 NO.	零件名稱 PART NAME						FD						FG						FD〔C〕						FG〔C〕						機號 BODY NO.	備註 REMARK
	新碼 NEW PART NO.	舊碼 OLD PART NO.	規格 SPECIFICATION	互換性 ITC	應用日期 APPLIED DATE	數量 QTY	15 A	18 B	20 C	25 D	30 E	35 F	15 G	18 H	20 I	25 J	30 K	35 L	15 M	18 N	20 O	25 P	30 Q	35 R	15 S	18 T	20 U	25 V	30 W	35 X		
24	O型環("O"RING)																															
		92507304			2000/10	4	A	B	C	D	E		G	H	I	J	K															停用(NOT USED)
		94008223			2000/10	4						F						L													停用(NOT USED)
	M0801002	94008223			2003/02	4	A	B	C	D	E	F	G	H	I	J	K	L													
25	L型接頭(CONNECTOR "L")																															
		92507431			2000/10	4	A	B	C	D	E		G	H	I	J	K															停用(NOT USED)
		92508107			2000/10	4						F						L													停用(NOT USED)
	33426	92507431			2003/02	4	A	B	C	D	E	F	G	H	I	J	K	L													
26	背托環(RING, BACK UP)																															
	M0802009	43015320				4						F						L														
27	電木環(RING, WEAR)																															
	M0923007	43015313				2						F						L														

https://truckmanualshub.com/

升降系統
A308
MAST SYSTEM

二.三截式升降缸組(右)
A308-4
LIFT CYLINDER (TWO＆THREE-STAGE)(R.H.)

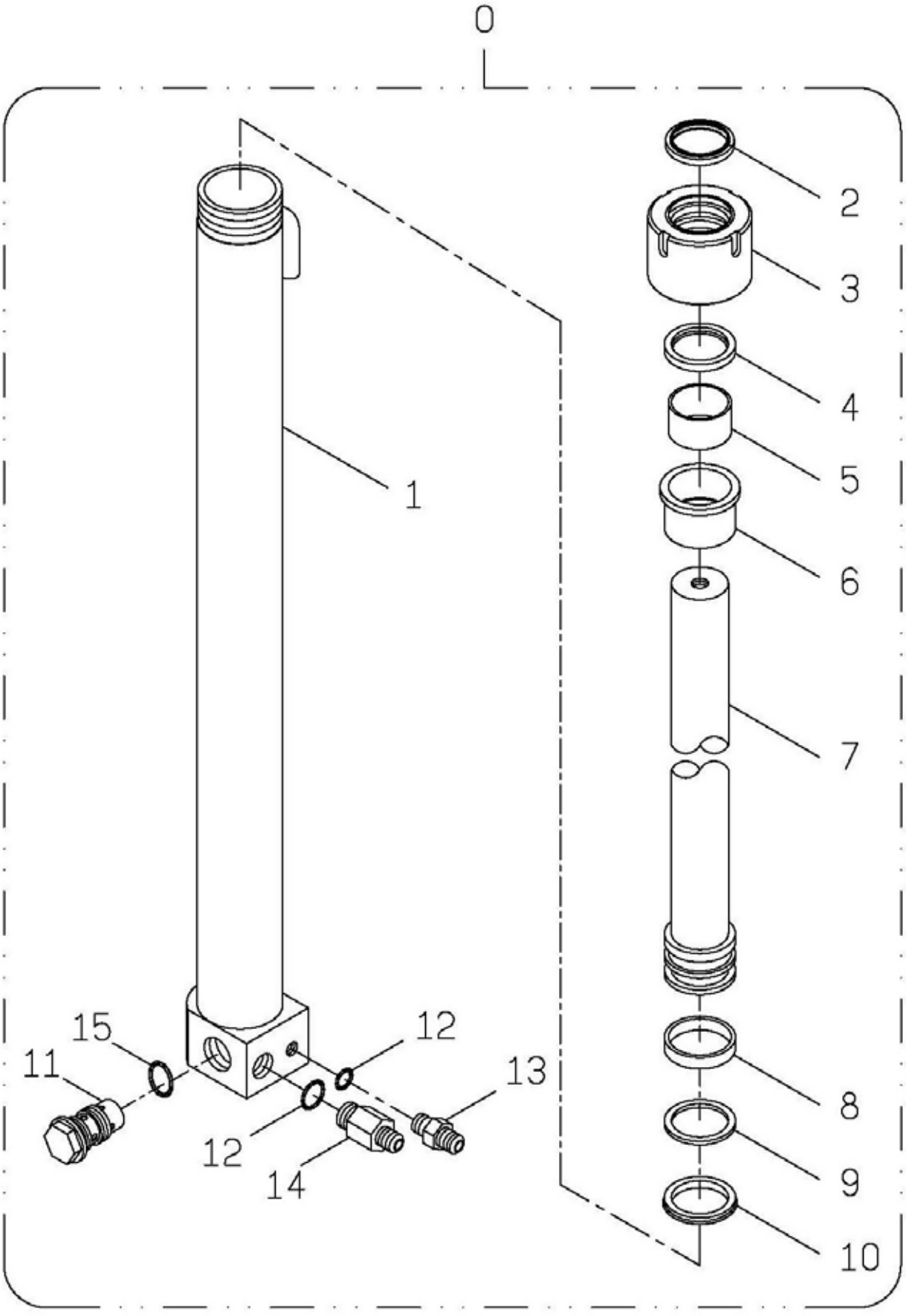

https://truckmanualshub.com/

二.三截式升降缸組(右)
A308-4
LIFT CYLINDER (TWO&THREE-STAGE)(R.H.)

編號 NO.	零件名稱 PART NAME 新碼 NEW PART NO.	舊碼 OLD PART NO.	規格 SPECIFICATION	互換性 ITC	應用日期 APPLIED DATE	數量 QTY	FD 15	FD 18	FD 20	FD 25	FD 30	FD 35	FG 15	FG 18	FG 20	FG 25	FG 30	FG 35	FD〔C〕 15	FD〔C〕 18	FD〔C〕 20	FD〔C〕 25	FD〔C〕 30	FD〔C〕 35	FG〔C〕 15	FG〔C〕 18	FG〔C〕 20	FG〔C〕 25	FG〔C〕 30	FG〔C〕 35	機號 BODY NO.	備註 REMARK
							A	B	C	D	E	F	G	H	I	J	K	L	M	N	O	P	Q	R	S	T	U	V	W	X		
0	**升降油壓缸組立(右)(LIFT CYLINDER)(R.H.)**																															
	B350226	42541100				1	A	B	C	D			G	H	I	J																3M,二截型 (TWO-STAGE)
	B350233	43041100				1					E	F					K	L														4.5M,三截型 (THREE-STAGE)
	B350227	42541200				1	A	B	C	D			G	H	I	J																3.3M,二截型 (TWO-STAGE)
	B350234	43041200				1					E	F					K	L														5M,三截型 (THREE-STAGE)
	B350228	42541300				1	A	B	C	D			G	H	I	J																3.5M,二截型 (TWO-STAGE)
	B350235	43041300				1					E	F					K	L														
	B350229	42541500				1	A	B	C	D			G	H	I	J																3.7M,二截型 (TWO-STAGE)
	B350236	43041500				1					E	F					K	L														5.5M,三截型 (THREE-STAGE)
	B350230	42541400				1	A	B	C	D			G	H	I	J																4M,二截型 (TWO-STAGE)
	B350237	43041400				1					E	F					K	L														6M,三截型 (THREE-STAGE)
	B350231	42541600				1	A	B	C	D			G	H	I	J																4.5M,二截型 (TWO-STAGE)
	B350238	43041600				1					E	F					K	L														
	B350232	42541700				1	A	B	C	D			G	H	I	J																5M,二截型 (TWO-STAGE)
	B350239	43041700				1					E	F					K	L														
	B350244	42541800				1	A	B	C	D			G	H	I	J																4M,三截型 (THREE-STAGE)
	B350250	43041800				1					E	F					K	L														
	B350245					1	A	B	C	D			G	H	I	J																4.7M,三截型 (THREE-STAGE)
	B350251					1					E	F					K	L														
	B350246	42541900				1	A	B	C	D			G	H	I	J																4.8M,三截型 (THREE-STAGE)
	B350252	43041900				1					E	F					K	L														
	B350256	43041000				1					E	F					K	L														6.5M,三截型 (THREE-STAGE)
1	**升降油壓缸體(LIFT CYLINDER BODY)**																															
	33577	42541101A				1	A	B	C	D			G	H	I	J																3M,二截型 (TWO-STAGE)
	33578	43041101A				1					E	F					K	L														4.5M,三截型 (THREE-STAGE)
	33580	42541201A				1	A	B	C	D			G	H	I	J																3.3M,二截型 (TWO-STAGE)
	33581	43041201A				1					E	F					K	L														5M,三截型 (THREE-STAGE)
	33583	42541301A				1	A	B	C	D			G	H	I	J																3.5M,二截型 (TWO-STAGE)
	33584	43041301A				1					E	F					K	L														
	33586	42541601A				1	A	B	C	D			G	H	I	J																3.7M,二截型 (TWO-STAGE)
	33587	43041601A				1					E	F					K	L														5.5M,三截型 (THREE-STAGE)
	33588	42541401A				1	A	B	C	D			G	H	I	J																4M,二截型 (TWO-STAGE)
	33589	43041401A				1					E	F					K	L														6M,三截型 (THREE-STAGE)
	33591					1	A	B	C	D			G	H	I	J																4.5M,二截型 (TWO-STAGE)
	33592					1					E	F					K	L														
	33593					1	A	B	C	D			G	H	I	J																5M,二截型 (TWO-STAGE)
	33594					1					E	F					K	L														

https://truckmanualshub.com/

二.三截式升降缸組(右)
A308-4
LIFT CYLINDER (TWO&THREE-STAGE)(R.H.)

編號 NO.	新碼 NEW PART NO.	舊碼 OLD PART NO.	規格 SPECIFICATION	互換性 ITC	應用日期 APPLIED DATE	數量 QTY	FD 15	FD 18	FD 20	FD 25	FD 30	FD 35	FG 15	FG 18	FG 20	FG 25	FG 30	FG 35	FD〔C〕15	FD〔C〕18	FD〔C〕20	FD〔C〕25	FD〔C〕30	FD〔C〕35	FG〔C〕15	FG〔C〕18	FG〔C〕20	FG〔C〕25	FG〔C〕30	FG〔C〕35	機號 BODY NO.	備註 REMARK
	零件名稱 PART NAME						A	B	C	D	E	F	G	H	I	J	K	L	M	N	O	P	Q	R	S	T	U	V	W	X		
1	**升降油壓缸體(LIFT CYLINDER BODY)**																															
	33595	42541701A				1	A	B	C	D			G	H	I	J																4M,三截型 (THREE-STAGE)
	33596	43041701A				1					E	F					K	L														
	33598					1	A	B	C	D			G	H	I	J																4.7M,三截型 (THREE-STAGE)
	33599					1					E	F					K	L														
	33600	42541501A				1	A	B	C	D			G	H	I	J																4.8M,三截型 (THREE-STAGE)
	33601	43041501A				1					E	F					K	L														
	33603	43041801A				1					E	F					K	L														6.5M,三截型 (THREE-STAGE)
2	**防塵油封(SEAL)**																															
	M0807007	42507602				1	A	B	C	D			G	H	I	J																
	M0807008	43007602				1					E	F					K	L														
3	**油壓缸蓋(COVER)**																															
	33604	42507603				1	A	B	C	D			G	H	I	J																
	33605	43007603				1					E	F					K	L														
4	**油封(SEAL)**																															
	M0803011	42507624				1	A	B	C	D			G	H	I	J																
	M0803012	43007624				1					E	F					K	L														
5	**自潤軸承(BUSH)**																															
	M0920-DU4025	42507604				1	A	B	C	D			G	H	I	J																
	M0920-DU4525	43007604				1					E	F					K	L														
6	**軸套(COLLAR, ROD)**																															
	33607	42507605				1	A	B	C	D			G	H	I	J																
	33608	43007605				1					E	F					K	L														
7	**油壓缸心軸(ROD, LIFT CYLINDER)**																															
	33610	42541102A				1	A	B	C	D			G	H	I	J																3M,二截型 (TWO-STAGE) 4.5M,三截型 (THREE-STAGE)
	33611	43041102A				1					E	F					K	L														
	33613	42541202A				1	A	B	C	D			G	H	I	J																3.3M,二截型 (TWO-STAGE) 5M,三截型 (THREE-STAGE)
	33614	43041202A				1					E	F					K	L														
	33616	42541302A				1	A	B	C	D			G	H	I	J																3.5M,二截型 (TWO-STAGE)
	33617	43041302A				1					E	F					K	L														
	33619	42541602A				1	A	B	C	D			G	H	I	J																3.7M,二截型 (TWO-STAGE) 5.5M,三截型 (THREE-STAGE)
	33620	43041602A				1					E	F					K	L														
	33621	42541402A				1	A	B	C	D			G	H	I	J																4M,二截型 (TWO-STAGE) 6M,三截型 (THREE-STAGE)
	33622	43041402A				1					E	F					K	L														
	33624					1	A	B	C	D			G	H	I	J																4.5M,二截型 (TWO-STAGE)
	33625					1					E	F					K	L														
	33626					1	A	B	C	D			G	H	I	J																5M,二截型 (TWO-STAGE)
	33627					1					E	F					K	L														

https://truckmanualshub.com/

二.三截式升降缸組(右)
A308-4
LIFT CYLINDER (TWO＆THREE-STAGE)(R.H.)

編號 NO.	新碼 NEW PART NO.	舊碼 OLD PART NO.	規格 SPECIFICATION	互換性 ITC	應用日期 APPLIED DATE	數量 QTY	FD 15	FD 1805	FD 2005	FD 2305	FD 2505	FG 15	FG 1805	FG 2005	FG 2305	FG 2505	FD〔C〕15	FD〔C〕1805	FD〔C〕2005	FD〔C〕2305	FD〔C〕2505	FG〔C〕15	FG〔C〕1805	FG〔C〕2005	FG〔C〕2305	FG〔C〕2505	機號 BODY NO.	備註 REMARK
		零件名稱 PART NAME					A	B	C	D	E	G	H	I	J	K	L	M	N	O	P	Q	R	S	T	U	V	W	X		
7	油壓缸心軸(ROD, LIFT CYLINDER)																												
	33628	42541702A				1	A	B	C	D		G	H	I	J														4M,三截型 (THREE-STAGE)
	33629	43041702A				1					E					K	L												
	33631					1	A	B	C	D		G	H	I	J														4.7M,三截型 (THREE-STAGE)
	33632					1					E					K	L												
	33633	42541502A				1	A	B	C	D		G	H	I	J														4.8M,三截型 (THREE-STAGE)
	33634	43041502A				1					E					K	L												
	33636	43041802A				1					E					K	L												6.5M,三截型 (THREE-STAGE)
8	電木環(RING, WEAR)																												
	M0923003	42507610				1	A	B	C	D		G	H	I	J														
	M0923005	43007610				1					E					K	L												
9	背托環(RING, BACK UP)																												
	M0802005	42505219				1	A	B	C	D		G	H	I	J														
	M0802007	43007613				1					E					K	L												
10	油封(SEAL)																												
	M0803005	42507612				1	A	B	C	D		G	H	I	J														
	M0803006	43007612				1					E					K	L												
11	減壓閥(DECOM PRESSION)																												
		42507615			2000/10	1	A	B	C	D	E	G	H	I	J	K	L												停用(NOT USED)
	33637	42507625			2003/02	1	A	B	C	D	E	G	H	I	J	K	L												
12	O型環("O"RING)																												
		92507304			2000/10	1	A	B	C	D	E	G	H	I	J	K	L												停用(NOT USED)
		92501107			2000/10	1	A	B	C	D	E	G	H	I	J	K	L												停用(NOT USED)
	M0801003	92515307			2003/02	2	A	B	C	D	E	G	H	I	J	K	L												
13	接頭(CONNECTOR)																												
		92507623			2000/10	1	A	B	C	D	E	G	H	I	J	K	L												停用(NOT USED)
	33639	92508104			2003/02	1	A	B	C	D	E	G	H	I	J	K	L												
14	接頭(CONNECTOR)																												
	33641	92507607A				1	A	B	C	D	E	G	H	I	J	K	L												
15	O型環("O"RING)																												
	M0801-P24	92509052				1	A	B	C	D	E	G	H	I	J	K	L												

https://truckmanualshub.com/

升降系統
A308
MAST SYSTEM

二.三截式升降缸組(左)
A308-4A
LIFT CYLINDER (TWO＆THREE-STAGE)(L.H.)

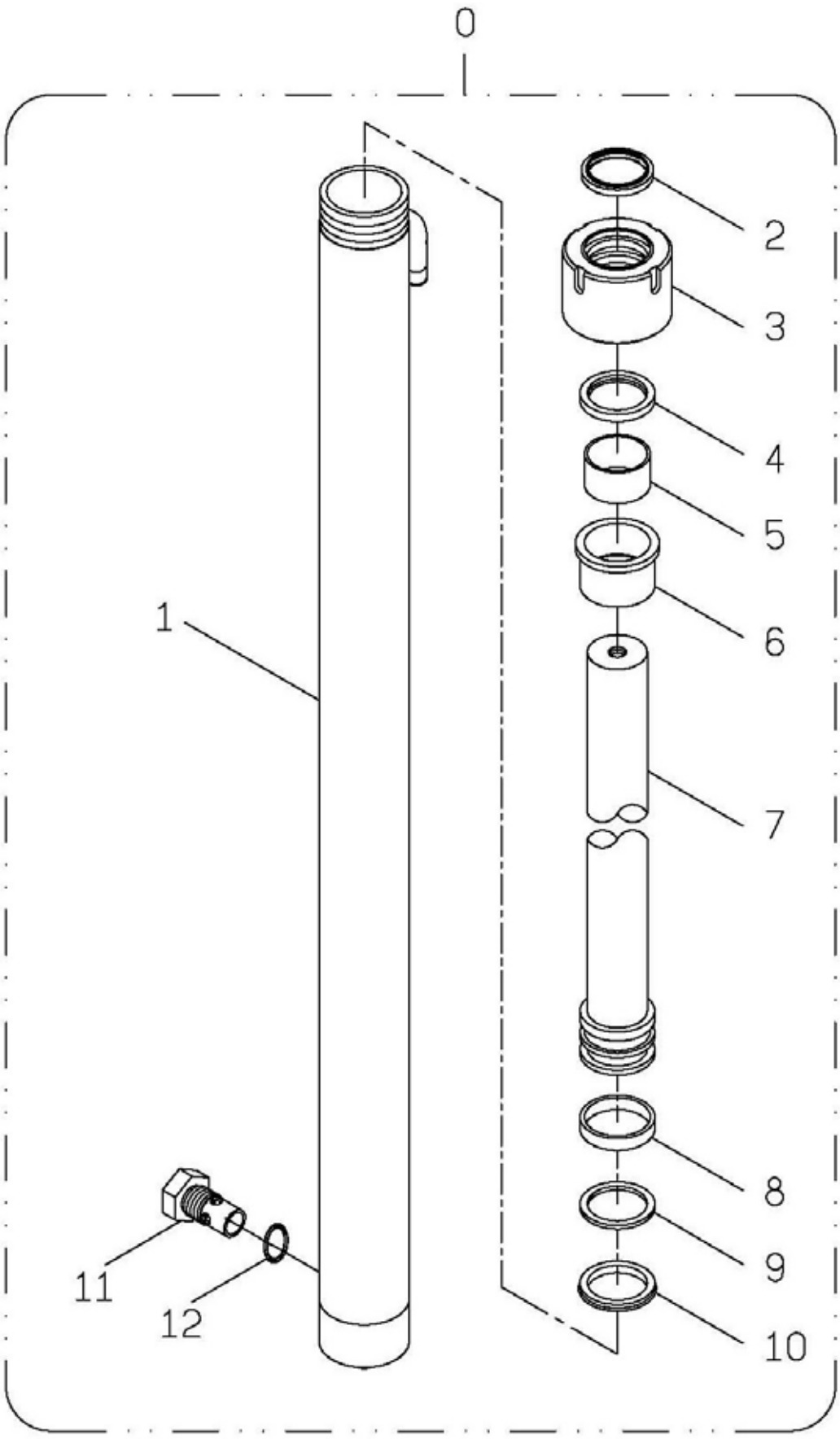

https://truckmanualshub.com/

二.三截式升降缸組(左)
A308-4A
LIFT CYLINDER (TWO&THREE-STAGE)(L.H.)

編號 NO.	零件名稱 PART NAME						FD						FG						FD〔C〕						FG〔C〕						機號 BODY NO.	備註 REMARK
	新碼 NEW PART NO.	舊碼 OLD PART NO.	規格 SPECIFICATION	互換性 ITC	應用日期 APPLIED DATE	數量 QTY	15	18	20	25	30	35	15	18	20	25	30	35	15	18	20	25	30	35	15	18	20	25	30	35		
							A	B	C	D	E	F	G	H	I	J	K	L	M	N	O	P	Q	R	S	T	U	V	W	X		
0	**升降油壓缸組立(左)(LIFT CYLINDER)(L.H.)**																															
	B350262	42544100				1	A	B	C	D			G	H	I	J																3M,二截型 (TWO-STAGE)
	B350269	43044100				1					E	F					K	L														4.5M,三截型 (THREE-STAGE)
	B350263	42544200				1	A	B	C	D			G	H	I	J																3.3M,二截型 (TWO-STAGE)
	B350270	43044200				1					E	F					K	L														5M,三截型 (THREE-STAGE)
	B350264	42544300				1	A	B	C	D			G	H	I	J																3.5M,二截型 (TWO-STAGE)
	B350271	43044300				1					E	F					K	L														
	B350265	42544500				1	A	B	C	D			G	H	I	J																3.7M,二截型 (TWO-STAGE)
	B350272	43044500				1					E	F					K	L														5.5M,三截型 (THREE-STAGE)
	B350266	42544400				1	A	B	C	D			G	H	I	J																4M,二截型 (TWO-STAGE)
	B350273	43044400				1					E	F					K	L														6M,三截型 (THREE-STAGE)
	B350267	42544600				1	A	B	C	D			G	H	I	J																4.5M,二截型 (TWO-STAGE)
	B350274	43044600				1					E	F					K	L														
	B350268	42544700				1	A	B	C	D			G	H	I	J																5M,二截型 (TWO-STAGE)
	B350275	43044700				1					E	F					K	L														
	B350280	42544800				1	A	B	C	D			G	H	I	J																4M,三截型 (THREE-STAGE)
	B350286	43044800				1					E	F					K	L														
	B350281					1	A	B	C	D			G	H	I	J																4.7M,三截型 (THREE-STAGE)
	B350287					1					E	F					K	L														
	B350282	42544900				1	A	B	C	D			G	H	I	J																4.8M,三截型 (THREE-STAGE)
	B350288	43044900				1					E	F					K	L														
	B350292	43044000				1					E	F					K	L														6.5M,三截型 (THREE-STAGE)
1	**升降油壓缸體(CYLINDER BODY)**																															
	33643	42541103A				1	A	B	C	D			G	H	I	J																3M,二截型 (TWO-STAGE)
	33645	43041103A				1					E	F					K	L														4.5M,三截型 (THREE-STAGE)
	33647	42541203A				1	A	B	C	D			G	H	I	J																3.3M,二截型 (TWO-STAGE)
	33648	43041203A				1					E	F					K	L														5M,三截型 (THREE-STAGE)
	33650	42541303A				1	A	B	C	D			G	H	I	J																3.5M,二截型 (TWO-STAGE)
	33651	43041303A				1					E	F					K	L														
	33653	42541603A				1	A	B	C	D			G	H	I	J																3.7M,二截型 (TWO-STAGE)
	33654	43041603A				1					E	F					K	L														5.5M,三截型 (THREE-STAGE)
	33655	42541403A				1	A	B	C	D			G	H	I	J																4M,二截型 (TWO-STAGE)
	33656	43041403A				1					E	F					K	L														6M,三截型 (THREE-STAGE)
	33658					1	A	B	C	D			G	H	I	J																4.5M,二截型 (TWO-STAGE)
	33659					1					E	F					K	L														
	33660					1	A	B	C	D			G	H	I	J																5M,二截型 (TWO-STAGE)
	33661					1					E	F					K	L														

https://truckmanualshub.com/

二.三截式升降缸組(左)
A308-4A
LIFT CYLINDER (TWO&THREE-STAGE)(L.H.)

編號 NO.	新碼 NEW PART NO.	舊碼 OLD PART NO.	規格 SPECIFICATION	互換性 ITC	應用日期 APPLIED DATE	數量 QTY	FD 15	FD 18	FD 20	FD 25	FD 30	FD 35	FG 15	FG 18	FG 20	FG 25	FG 30	FG 35	FD〔C〕 15	FD〔C〕 18	FD〔C〕 20	FD〔C〕 25	FD〔C〕 30	FD〔C〕 35	FG〔C〕 15	FG〔C〕 18	FG〔C〕 20	FG〔C〕 25	FG〔C〕 30	FG〔C〕 35	機號 BODY NO.	備註 REMARK
							A	B	C	D	E	F	G	H	I	J	K	L	M	N	O	P	Q	R	S	T	U	V	W	X		
1	**升降油壓缸體(CYLINDER BODY)**																															
	33662	42541703A				1	A	B	C	D			G	H	I	J																4M,三截型 (THREE-STAGE)
	33663	43041703A				1					E	F					K	L														
	33665					1	A	B	C	D			G	H	I	J																4.7M,三截型 (THREE-STAGE)
	33666					1					E	F					K	L														
	33667	42541503A				1	A	B	C	D			G	H	I	J																4.8M,三截型 (THREE-STAGE)
	33668	43041503A				1					E	F					K	L														
	33670	43041803A				1					E	F					K	L														6.5M,三截型 (THREE-STAGE)
2	**防塵油封(SEAL)**																															
	M0807007	42507602				1	A	B	C	D			G	H	I	J																
	M0807008	43007602				1					E	F					K	L														
3	**油壓缸蓋(COVER)**																															
	33604	42507603				1	A	B	C	D			G	H	I	J																
	33605	43007603				1					E	F					K	L														
4	**油封(SEAL)**																															
	M0803011	42507624				1	A	B	C	D			G	H	I	J																
	M0803012	43007624				1					E	F					K	L														
5	**自潤軸承(BUSH)**																															
	M0920-DU4025	42507604				1	A	B	C	D			G	H	I	J																
	M0920-DU4525	43007604				1					E	F					K	L														
6	**軸套(COLLAR, DOR)**																															
	33607	42507605				1	A	B	C	D			G	H	I	J																
	33608	43007605				1					E	F					K	L														
7	**油壓缸心軸(ROD, LIFT CYLINDER)**																															
	33610	42541102A				1	A	B	C	D			G	H	I	J																3M,二截型 (TWO-STAGE) 4.5M,三截型 (THREE-STAGE)
	33611	43041102A				1					E	F					K	L														
	33613	42541202A				1	A	B	C	D			G	H	I	J																3.3M,二截型 (TWO-STAGE) 5M,三截型 (THREE-STAGE)
	33614	43041202A				1					E	F					K	L														
	33616	42541302A				1	A	B	C	D			G	H	I	J																3.5M,二截型 (TWO-STAGE)
	33617	43041302A				1					E	F					K	L														
	33619	42541602A				1	A	B	C	D			G	H	I	J																3.7M,二截型 (TWO-STAGE) 5.5M,三截型 (THREE-STAGE)
	33620	43041602A				1					E	F					K	L														
	33621	42541402A				1	A	B	C	D			G	H	I	J																4M,二截型 (TWO-STAGE) 6M,三截型 (THREE-STAGE)
	33622	43041402A				1					E	F					K	L														
	33675					1	A	B	C	D			G	H	I	J																4.5M,二截型 (TWO-STAGE)
	33676					1					E	F					K	L														
	33677					1	A	B	C	D			G	H	I	J																5M,二截型 (TWO-STAGE)
	33678					1					E	F					K	L														

https://truckmanualshub.com/

升降系統
A308
MAST SYSTEM

二.三截式升降缸組(左)
A308-4A
LIFT CYLINDER (TWO＆THREE-STAGE)(L.H.)

編號 NO.	新碼 NEW PART NO.	舊碼 OLD PART NO.	規格 SPECIFICATION	互換性 ITC	應用日期 APPLIED DATE	數量 QTY	FD 15	FD 18	FD 20	FD 25	FD 30	FD 35	FG 15	FG 18	FG 20	FG 25	FG 30	FG 35	FD〔C〕15	FD〔C〕18	FD〔C〕20	FD〔C〕25	FD〔C〕30	FD〔C〕35	FG〔C〕15	FG〔C〕18	FG〔C〕20	FG〔C〕25	FG〔C〕30	FG〔C〕35	機號 BODY NO.	備註 REMARK
							A	B	C	D	E	F	G	H	I	J	K	L	M	N	O	P	Q	R	S	T	U	V	W	X		
7	**油壓缸心軸(ROD, LIFT CYLINDER)**																															
	33628	42541702A				1	A	B	C	D			G	H	I	J																4M,三截型 (THREE-STAGE)
	33629	43041702A				1					E	F					K	L														
	33679					1	A	B	C	D			G	H	I	J																4.7M,三截型 (THREE-STAGE)
	33680					1					E	F					K	L														
	33633	42541502A				1	A	B	C	D			G	H	I	J																4.8M,三截型 (THREE-STAGE)
	33634	43041502A				1					E	F					K	L														
	33636	43041802A				1					E	F					K	L														6.5M,三截型 (THREE-STAGE)
8	**電木環(RING, WEAR)**																															
	M0923003	42507610				1	A	B	C	D			G	H	I	J																
	M0923005	43007610				1					E	F					K	L														
9	**背托環(RING, BACK UP)**																															
	M0802005	42505219				1	A	B	C	D			G	H	I	J																
	M0802007	43007613				1					E	F					K	L														
10	**油封(SEAL)**																															
	M0803005	42507612				1	A	B	C	D			G	H	I	J																
	M0803006	43007612				1					E	F					K	L														
11	**安全閥(SAFETY VALVE)**																															
		42507702			2000/10	1	A	B	C	D	E	F	G	H	I	J	K	L														停用(NOT USED)
	33681	42507725			2003/02	1	A	B	C	D	E	F	G	H	I	J	K	L														
12	**O型環("O"RING)**																															
	M0801-P20	42507703				1	A	B	C	D	E	F	G	H	I	J	K	L														

https://truckmanualshub.com/

二.三截式貨櫃型油壓缸組
A308-4B
LIFT CYLINDER (TWO&THREE CONTAINER FORM)

新型 (NEW)

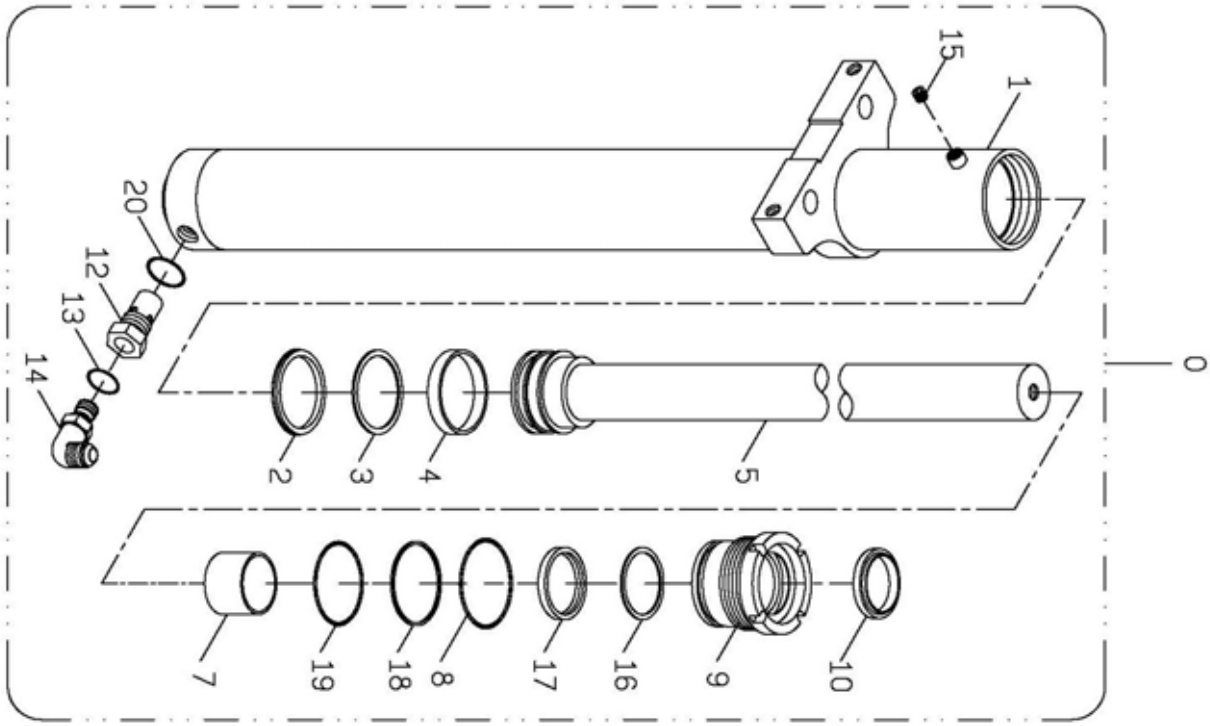

舊型 (OLD)

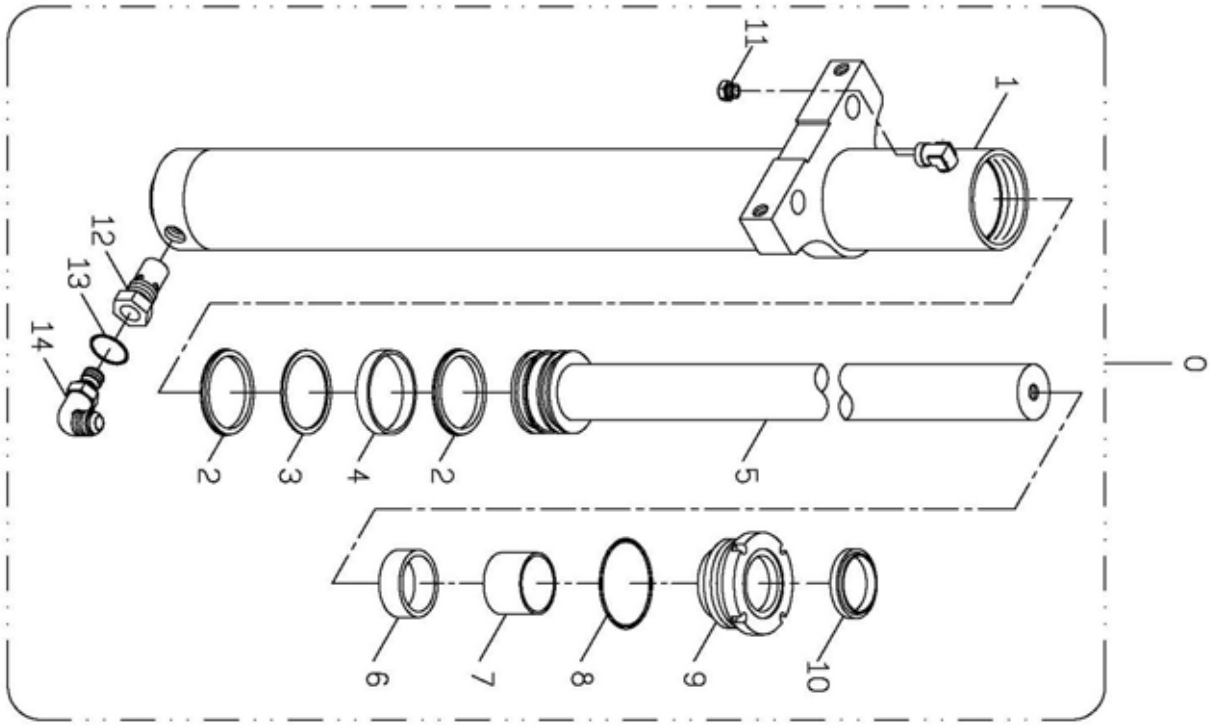

https://truckmanualshub.com/

二.三截式貨櫃型油壓缸組
A308-4B

LIFT CYLINDER (TWO&THREE CONTAINER FORM)

編號 NO.	新碼 NEW PART NO.	舊碼 OLD PART NO.	規格 SPECIFICATION	互換性 ITC	應用日期 APPLIED DATE	數量 QTY	FD 15	FD 18	FD 20	FD 25	FD 30	FD 35	FG 15	FG 18	FG 20	FG 25	FG 30	FG 35	FD〔C〕15	FD〔C〕18	FD〔C〕20	FD〔C〕25	FD〔C〕30	FD〔C〕35	FG〔C〕15	FG〔C〕18	FG〔C〕20	FG〔C〕25	FG〔C〕30	FG〔C〕35	機號 BODY NO.	備註 REMARK
							A	B	C	D	E	F	G	H	I	J	K	L	M	N	O	P	Q	R	S	T	U	V	W	X		
0	**貨櫃油壓缸(CYLINDER)**																															
	B350298	42543100		*	停用(NOT USED)	1	A	B	C	D			G	H	I	J																3M,貨櫃型
	B350298A			*	2006/06	1	A	B	C	D			G	H	I	J															Y320783	(CONTAINER)
	B350305	43043100		*	停用(NOT USED)	1					E	F					K	L														4.5M,三截型
	B350305A			*	2006/06	1					E	F					K	L													Y320783	(THREE-STAGE)
	B350299	42543200		*	停用(NOT USED)	1	A	B	C	D			G	H	I	J																3.3M,貨櫃型
	B350299A			*	2006/06	1	A	B	C	D			G	H	I	J															Y320783	(CONTAINER)
	B350306	43043200		*	停用(NOT USED)	1					E	F					K	L														5M,三截型
	B350306A			*	2006/06	1					E	F					K	L													Y320783	(THREE-STAGE)
	B350300	42543300		*	停用(NOT USED)	1	A	B	C	D			G	H	I	J																
	B350300A			*	2006/06	1	A	B	C	D			G	H	I	J															Y320783	3.5M,貨櫃型
	B350307	43043300		*	停用(NOT USED)	1					E	F					K	L														(CONTAINER)
	B350307A			*	2006/06	1					E	F					K	L													Y320783	
	B350304	42543600		*	停用(NOT USED)	1	A	B	C	D			G	H	I	J																3.7M,貨櫃型
	B350304A			*	2006/06	1	A	B	C	D			G	H	I	J															Y320783	(CONTAINER)
	B350311	43043600		*	停用(NOT USED)	1					E	F					K	L														5.5M,三截型
	B350311A			*	2006/06	1					E	F					K	L													Y320783	(THREE-STAGE)
	B350301	42543400		*	停用(NOT USED)	1	A	B	C	D			G	H	I	J																4M,貨櫃型
	B350301A			*	2006/06	1	A	B	C	D			G	H	I	J															Y320783	(CONTAINER)
	B350308	43043400		*	停用(NOT USED)	1					E	F					K	L														6M,三截型
	B350308A			*	2006/06	1					E	F					K	L													Y320783	(THREE-STAGE)
	B350302	42543700		*	停用(NOT USED)	1	A	B	C	D			G	H	I	J																
	B350302A			*	2006/06	1	A	B	C	D			G	H	I	J															Y320783	4.7M,三截型
	B350309	43043700		*	停用(NOT USED)	1					E	F					K	L														(THREE-STAGE)
	B350309A			*	2006/06	1					E	F					K	L													Y320783	
	B350303	42543500		*	停用(NOT USED)	1	A	B	C	D			G	H	I	J																
	B350303A			*	2006/06	1	A	B	C	D			G	H	I	J															Y320783	4.8M,三截型
	B350310	43043500		*	停用(NOT USED)	1					E	F					K	L														(THREE-STAGE)
	B350310A			*	2006/06	1					E	F					K	L													Y320783	
	B350312	43043800		*	停用(NOT USED)	1					E	F					K	L														6.5M,三截型
	B350312A			*	2006/06	1					E	F					K	L													Y320783	(THREE-STAGE)
1	**油壓缸體(LIFT CYLINDER BODY)**																															
	33683	42543101		*	停用(NOT USED)	1	A	B	C	D			G	H	I	J																3M,貨櫃型
	33683A			*	2006/06	1	A	B	C	D			G	H	I	J															Y320783	(CONTAINER)
	33684	43043101		*	停用(NOT USED)	1					E	F					K	L														4.5M,三截型
	33684A			*	2006/06	1					E	F					K	L													Y320783	(THREE-STAGE)

https://truckmanualshub.com/

二.三截式貨櫃型油壓缸組
A308-4B

LIFT CYLINDER (TWO&THREE CONTAINER FORM)

編號 NO.	新碼 NEW PART NO.	舊碼 OLD PART NO.	規格 SPECIFICATION	互換性 ITC	應用日期 APPLIED DATE	數量 QTY	FD 15	FD 18	FD 20	FD 25	FD 30	FD 35	FG 15	FG 18	FG 20	FG 25	FG 30	FG 35	FD〔C〕15	FD〔C〕18	FD〔C〕20	FD〔C〕25	FD〔C〕30	FD〔C〕35	FG〔C〕15	FG〔C〕18	FG〔C〕20	FG〔C〕25	FG〔C〕30	FG〔C〕35	機號 BODY NO.	備註 REMARK
							A	B	C	D	E	F	G	H	I	J	K	L	M	N	O	P	Q	R	S	T	U	V	W	X		
1	**油壓缸體(LIFT CYLINDER BODY)**																															
	33686	42543201		*	停用(NOT USED)	1	A	B	C	D			G	H	I	J																3.3M,貨櫃型
	33686A			*	2006/06	1	A	B	C	D			G	H	I	J															Y320783	(CONTAINER)
	33687	43043201		*	停用(NOT USED)	1					E	F					K	L														5M,三截型
	33687A			*	2006/06	1					E	F					K	L													Y320783	(THREE-STAGE)
	33689	42543301		*	停用(NOT USED)	1	A	B	C	D			G	H	I	J																
	33689A			*	2006/06	1	A	B	C	D			G	H	I	J															Y320783	3.5M,貨櫃型
	33690	43043301		*	停用(NOT USED)	1					E	F					K	L														(CONTAINER)
	33690A			*	2006/06	1					E	F					K	L													Y320783	
	33692	42543601		*	停用(NOT USED)	1	A	B	C	D			G	H	I	J																3.7M,貨櫃型
	33692A			*	2006/06	1	A	B	C	D			G	H	I	J															Y320783	(CONTAINER)
	33693	43043601		*	停用(NOT USED)	1					E	F					K	L														5.5M,三截型
	33693A			*	2006/06	1					E	F					K	L													Y320783	(THREE-STAGE)
	33694	42543401		*	停用(NOT USED)	1	A	B	C	D			G	H	I	J																4M,貨櫃型
	33694A			*	2006/06	1	A	B	C	D			G	H	I	J															Y320783	(CONTAINER)
	33695	43043401		*	停用(NOT USED)	1					E	F					K	L														6M,三截型
	33695A			*	2006/06	1					E	F					K	L													Y320783	(THREE-STAGE)
	33698	42543701		*	停用(NOT USED)	1	A	B	C	D			G	H	I	J																
	33698A			*	2006/06	1	A	B	C	D			G	H	I	J															Y320783	4.7M,三截型
	33699	43043701		*	停用(NOT USED)	1					E	F					K	L														(THREE-STAGE)
	33699A			*	2006/06	1					E	F					K	L													Y320783	
	33700	42543501		*	停用(NOT USED)	1	A	B	C	D			G	H	I	J																
	33700A			*	2006/06	1	A	B	C	D			G	H	I	J															Y320783	4.8M,三截型
	33701	43043501		*	停用(NOT USED)	1					E	F					K	L														(THREE-STAGE)
	33701A			*	2006/06	1					E	F					K	L													Y320783	
	33703	43043801		*	停用(NOT USED)	1					E	F					K	L														6.5M,三截型
	33703A			*	2006/06	1					E	F					K	L													Y320783	(THREE-STAGE)
2	**U型迫緊(PACKING)**																															
	M0803009	42515319				1	A	B	C	D			G	H	I	J																修理包
	M0803010	43015319				1					E	F					K	L														(REPAIR KIT)
3	**背托環(RING, BACKUP)**																															
	M0802008	42515320				1	A	B	C	D			G	H	I	J																修理包
	M0802009	43015320				1					E	F					K	L														(REPAIR KIT)
4	**電木環(RING, WEAR)**																															
	M0923006	42515313				1	A	B	C	D			G	H	I	J																修理包
	M0923004	43015313				1					E	F					K	L														(REPAIR KIT)

https://truckmanualshub.com/

升降系統
A308
MAST SYSTEM

二.三截式貨櫃型油壓缸組
A308-4B
LIFT CYLINDER (TWO&THREE CONTAINER FORM)

編號 NO.	新碼 NEW PART NO.	舊碼 OLD PART NO.	規格 SPECIFICATION	互換性 ITC	應用日期 APPLIED DATE	數量 QTY	FD 15 A	FD 18 B	FD 20 C	FD 25 D	FD 30 E	FD 35 F	FG 15 G	FG 18 H	FG 20 I	FG 25 J	FG 30 K	FG 35 L	FD〔C〕 15 M	FD〔C〕 18 N	FD〔C〕 20 O	FD〔C〕 25 P	FD〔C〕 30 Q	FD〔C〕 35 R	FG〔C〕 15 S	FG〔C〕 18 T	FG〔C〕 20 U	FG〔C〕 25 V	FG〔C〕 30 W	FG〔C〕 35 X	機號 BODY NO.	備註 REMARK
5	**油壓缸心軸(ROD, LIFT CYLINDER)**																															
	33704	42543102		*	停用(NOT USED)	1	A	B	C	D			G	H	I	J															3M,貨櫃型 (CONTAINER) 4.5M,三截型 (THREE-STAGE)
	33704A			*	2006/06	1	A	B	C	D			G	H	I	J															Y320783	
	33705	43043102		*	停用(NOT USED)	1					E	F					K	L														
	33705A			*	2006/06	1					E	F					K	L													Y320783	
	33707	42543202		*	停用(NOT USED)	1	A	B	C	D			G	H	I	J															3.3M,貨櫃型 (CONTAINER) 5M,三截型 (THREE-STAGE)
	33707A			*	2006/06	1	A	B	C	D			G	H	I	J															Y320783	
	33708	43043202		*	停用(NOT USED)	1					E	F					K	L														
	33708A			*	2006/06	1					E	F					K	L													Y320783	
	33710	42543302		*	停用(NOT USED)	1	A	B	C	D			G	H	I	J															3.5M,貨櫃型 (CONTAINER)
	33710A			*	2006/06	1	A	B	C	D			G	H	I	J															Y320783	
	33711	43043302		*	停用(NOT USED)	1					E	F					K	L														
	33711A			*	2006/06	1					E	F					K	L													Y320783	
	33713	42543602		*	停用(NOT USED)	1	A	B	C	D			G	H	I	J															3.7M,貨櫃型 (CONTAINER) 5.5M,三截型 (THREE-STAGE)
	33713A			*	2006/06	1	A	B	C	D			G	H	I	J															Y320783	
	33714	43043602		*	停用(NOT USED)	1					E	F					K	L														
	33714A			*	2006/06	1					E	F					K	L													Y320783	
	33715	42543402		*	停用(NOT USED)	1	A	B	C	D			G	H	I	J															4M,貨櫃型 (CONTAINER) 6M,三截型 (THREE-STAGE)
	33715A			*	2006/06	1	A	B	C	D			G	H	I	J															Y320783	
	33716	43043402		*	停用(NOT USED)	1					E	F					K	L														
	33716A			*	2006/06	1					E	F					K	L													Y320783	
	33719	42543702		*	停用(NOT USED)	1	A	B	C	D			G	H	I	J															4.7M,三截型 (THREE-STAGE)
	33719A			*	2006/06	1	A	B	C	D			G	H	I	J															Y320783	
	33720	43043702		*	停用(NOT USED)	1					E	F					K	L														
	33720A			*	2006/06	1					E	F					K	L													Y320783	
	33721	42543502		*	停用(NOT USED)	1	A	B	C	D			G	H	I	J															4.8M,三截型 (THREE-STAGE)
	33721A			*	2006/06	1	A	B	C	D			G	H	I	J															Y320783	
	33722	43043502		*	停用(NOT USED)	1					E	F					K	L														
	33722A			*	2006/06	1					E	F					K	L													Y320783	
	33724	43043802		*	停用(NOT USED)	1					E	F					K	L														6.5M,三截型 (THREE-STAGE)
	33724A			*	2006/06	1					E	F					K	L													Y320783	
6	**間隔圈(BUSH)**																															
	33725	42515321				1	A	B	C	D			G	H	I	J																停用(NOT USED)
	33726	43015321				1					E	F					K	L														停用(NOT USED)
7	**自潤軸承(BUSHING)**																															
	M0920-MB5040	42515304				1	A	B	C	D			G	H	I	J																
	M0920-MB6040	43015304				1					E	F					K	L														

https://truckmanualshub.com/

二.三截式貨櫃型油壓缸組
A308-4B
LIFT CYLINDER (TWO&THREE CONTAINER FORM)

編號 NO.	新碼 NEW PART NO.	舊碼 OLD PART NO.	規格 SPECIFICATION	互換性 ITC	應用日期 APPLIED DATE	數量 QTY	FD 15 A	FD 18 B	FD 20 C	FD 25 D	FD 30 E	FD 35 F	FG 15 G	FG 18 H	FG 20 I	FG 25 J	FG 30 K	FG 35 L	FD〔C〕15 M	FD〔C〕18 N	FD〔C〕20 O	FD〔C〕25 P	FD〔C〕30 Q	FD〔C〕35 R	FG〔C〕15 S	FG〔C〕18 T	FG〔C〕20 U	FG〔C〕25 V	FG〔C〕30 W	FG〔C〕35 X	機號 BODY NO.	備註 REMARK
8	O型環("O"RING)																															
	M0801-G75	42515305				1	A	B	C	D			G	H	I	J																修理包 (REPAIR KIT)
	M0801-G85	43015305				1					E	F					K	L														
9	油壓缸蓋(COVER)																															
	33727	42515315		*	停用(NOT USED)	1	A	B	C	D			G	H	I	J																	
	33727A			*	2006/06	1	A	B	C	D			G	H	I	J															Y320783		
	33728	43015315		*	停用(NOT USED)	1					E	F					K	L															
	33728A			*	2006/06	1					E	F					K	L													Y320783		
10	防塵油封(SEAL)																															
	M0807009	42515317				1	A	B	C	D			G	H	I	J																修理包 (REPAIR KIT)
	M0807010	43015317				1					E	F					K	L														
11	止塞(SCREW, SET)																															
	33730	42515316				1	A	B	C	D	E	F	G	H	I	J	K	L														停用(NOT USED)
12	安全閥(SAFETY VALVE)																															
		42515314			2000/10	1	A	B	C	D	E	F	G	H	I	J	K	L														停用(NOT USED)
	33731	42515322			2003/02	1	A	B	C	D	E	F	G	H	I	J	K	L														
13	O型環("O"RING)																															
	M0801003	92515307				1	A	B	C	D	E	F	G	H	I	J	K	L														
14	接頭(CONNECTOR)																															
	33642	92515306				1	A	B	C	D	E	F	G	H	I	J	K	L														
15	塞頭(PLUG)																															
	M0604007	92560409			2006/06	1	A	B	C	D	E	F	G	H	I	J	K	L														
16	背托環(RING, BACKUP)																															
	M0802033				2006/06	1	A	B	C	D			G	H	I	J																修理包 (REPAIR KIT)
	M0802022				2006/06	1					E	F					K	L														
17	軸心油封(ROD,BACKUP)																															
	M0803031				2006/06	1	A	B	C	D			G	H	I	J																修理包 (REPAIR KIT)
	M0803032				2006/06	1					E	F					K	L														
18	背托環(RING, BACKUP)																															
	M0802011	44005205			2006/06	1	A	B	C	D			G	H	I	J																修理包 (REPAIR KIT)
	M0802014	44007433			2006/06	1					E	F					K	L														
19	O型環("O"RING)																															
	M0801-G70	93006038			2006/06	1	A	B	C	D			G	H	I	J																修理包 (REPAIR KIT)
	M0801-G80	92508213			2006/06	1					E	F					K	L														
20	O型環("O"RING)																															
	M0801-P24	92509052			2006/06	1	A	B	C	D	E	F	G	H	I	J	K	L														修理包(REPAIRKIT)

https://truckmanualshub.com/

升降系統
A308
MAST SYSTEM

二截式貨櫃型升降缸組(右)
A308-4C
LIFT CYLINDER (CONTAINER FORM)(R.H.)

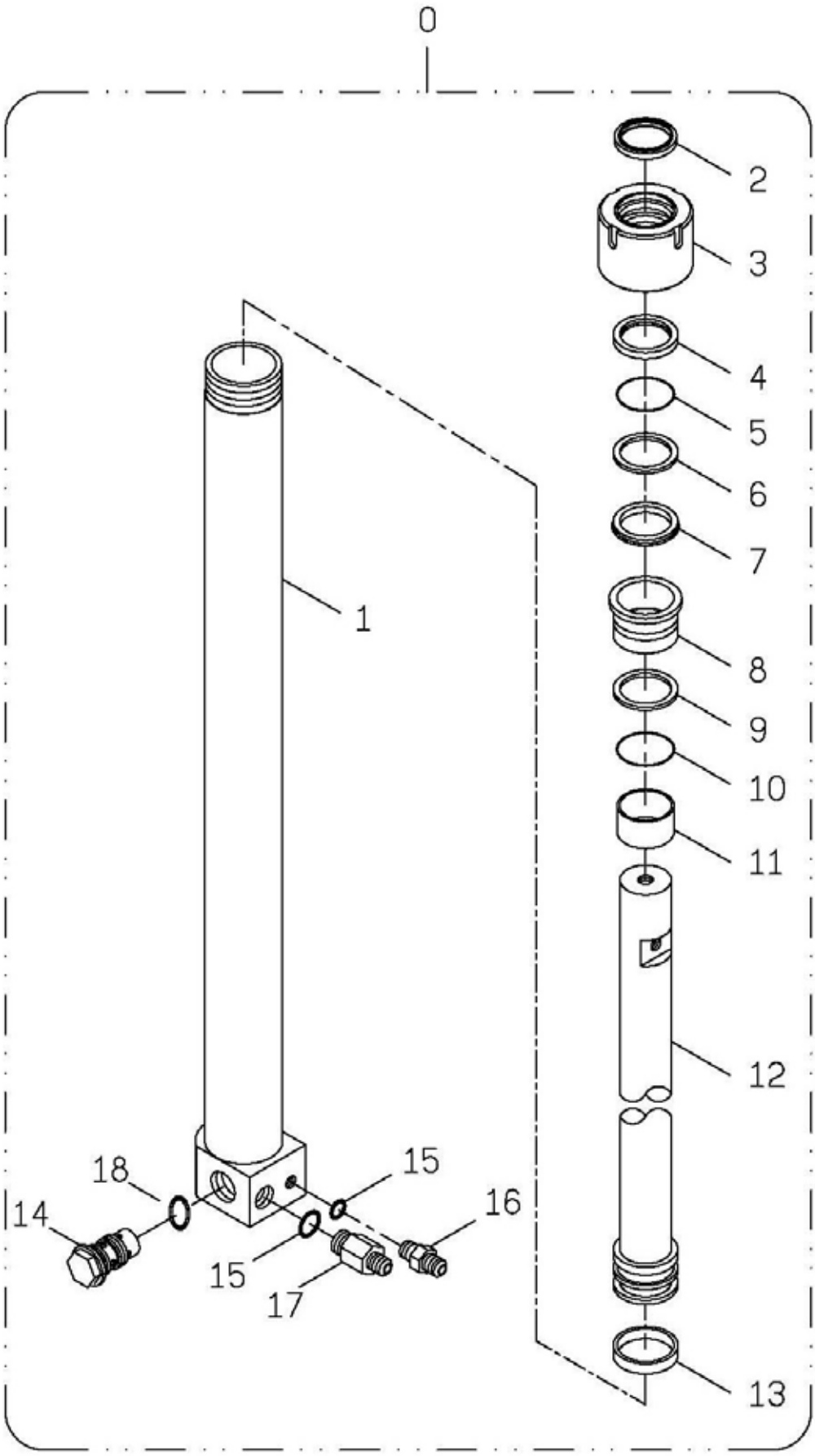

https://truckmanualshub.com/

升降系統
A308
MAST SYSTEM

二截式貨櫃型升降缸組(右)
A308-4C
LIFT CYLINDER (CONTAINER FORM)(R.H.)

編號 NO.	零件名稱 PART NAME						FD						FG						FD〔C〕						FG〔C〕						機號 BODY NO.	備註 REMARK
	新碼 NEW PART NO.	舊碼 OLD PART NO.	規格 SPECIFICATION	互換性 ITC	應用日期 APPLIED DATE	數量 QTY	15	18	20	25	30	35	15	18	20	25	30	35	15	18	20	25	30	35	15	18	20	25	30	35		
							A	B	C	D	E	F	G	H	I	J	K	L	M	N	O	P	Q	R	S	T	U	V	W	X		
0	**升降油壓缸(右)(LIFT CYLINDER)(R.H.)**																															
	B350319	42542100				1	A	B	C	D			G	H	I	J																3M
	B350324	43042100				1					E	F					K	L														
	B350320	42542200				1	A	B	C	D			G	H	I	J																3.3M
	B350325	43042200				1					E	F					K	L														
	B350321	42542300				1	A	B	C	D			G	H	I	J																3.5M
	B350326	43042300				1					E	F					K	L														
	B350322	42542400				1	A	B	C	D			G	H	I	J																4M
	B350327	43042400				1					E	F					K	L														
	B350323	42542500				1	A	B	C	D			G	H	I	J																4.5M
	B350328	43042500				1					E	F					K	L														
1	**升降油壓缸體(LIFT CYLINDER BODY)**																															
	33733	42542101A				1	A	B	C	D			G	H	I	J																3M
	33734	43042101A				1					E	F					K	L														
	33735	42542201A				1	A	B	C	D			G	H	I	J																3.3M
	33736	43042201A				1					E	F					K	L														
	33737	42542301A				1	A	B	C	D			G	H	I	J																3.5M
	33738	43042301A				1					E	F					K	L														
	33739	42542401A				1	A	B	C	D			G	H	I	J																4M
	33740	43042401A				1					E	F					K	L														
	33741	42542501A				1	A	B	C	D			G	H	I	J																4.5M
	33742	43042501A				1					E	F					K	L														
2	**防塵油封(SEAL)**																															
	M0807004	42515602				1	A	B	C	D			G	H	I	J																
	M0807005	42505207				1					E	F					K	L														
3	**油壓缸蓋(COVER)**																															
	33743	42515603				1	A	B	C	D			G	H	I	J																
	33744	43015603				1					E	F					K	L														
4	**電木環(RING, WEAR)**																															
	M0923001	42515604				1	A	B	C	D			G	H	I	J																
	M0923002	43015604				1					E	F					K	L														
5	**O型環("O"RING)**																															
	M0801-G55	92560215				1	A	B	C	D			G	H	I	J																
	M0801-G60	43015605				1					E	F					K	L														
6	**背托環(RING, BACK UP)**																															
	M0802001	42515606				1	A	B	C	D			G	H	I	J																
	M0802003	43015606				1					E	F					K	L														

https://truckmanualshub.com/

升降系統
A308
MAST SYSTEM

二截式貨櫃型升降缸組(右)
A308-4C
LIFT CYLINDER (CONTAINER FORM)(R.H.)

編號 NO.	新碼 NEW PART NO.	舊碼 OLD PART NO.	規格 SPECIFICATION	互換性 ITC	應用日期 APPLIED DATE	數量 QTY	FD 15	FD 18	FD 20	FD 25	FD 30	FD 35	FG 15	FG 18	FG 20	FG 25	FG 30	FG 35	FD〔C〕 15	FD〔C〕 18	FD〔C〕 20	FD〔C〕 25	FD〔C〕 30	FD〔C〕 35	FG〔C〕 15	FG〔C〕 18	FG〔C〕 20	FG〔C〕 25	FG〔C〕 30	FG〔C〕 35	機號 BODY NO.	備註 REMARK
							A	B	C	D	E	F	G	H	I	J	K	L	M	N	O	P	Q	R	S	T	U	V	W	X		
7	**油封(SEAL)**																															
	M0803003	42515607				1	A	B	C	D			G	H	I	J																
	M0803004	42505203				1					E	F					K	L														
8	**軸套(COLLAR, ROD)**																															
	33745	42515608				1	A	B	C	D			G	H	I	J																
	33746	43015608				1					E	F					K	L														
9	**背托環(RING, BACK UP)**																															
	M0802004	42515609				1	A	B	C	D			G	H	I	J																
	M0802006	43015609				1					E	F					K	L														
10	**O型環("O"RING)**																															
	M0801-G45	92508214				1	A	B	C	D			G	H	I	J																
	M0801-G50	43015610				1					E	F					K	L														
11	**自潤軸承(BUSHING)**																															
	M0920-DU3530	42515611				1	A	B	C	D			G	H	I	J																
	M0920-DU4030	43015611				1					E	F					K	L														
12	**油壓缸心軸(ROD, LIFT CYLINDER)**																															
	33747	42542102A				1	A	B	C	D			G	H	I	J																3M
	33748	43042102A				1					E	F					K	L														
	33749	42542202A				1	A	B	C	D			G	H	I	J																3.3M
	33750	43042202A				1					E	F					K	L														
	33751	42542302A				1	A	B	C	D			G	H	I	J																3.5M
	33752	43042302A				1					E	F					K	L														
	33753	42542402A				1	A	B	C	D			G	H	I	J																4M
	33754	43042402A				1					E	F					K	L														
	33755	42542502A				1	A	B	C	D			G	H	I	J																4.5M
	33756	43042502A				1					E	F					K	L														
13	**電木環(RING, WEAR)**																															
		43015612			2000/10	1					E	F					K	L														
	M0923003	42507610				1	A	B	C	D			G	H	I	J																
	M0923005	43007610				1					E	F					K	L														
14	**減壓閥(DECOMPRESSION VALVE)**																															
		42507615			2000/10	1	A	B	C	D	E	F	G	H	I	J	K	L														停用(NOT USED)
	33637	42507625			2003/02	1	A	B	C	D	E	F	G	H	I	J	K	L														
15	**O型環("O"RING)**																															
		92507304			2000/10	1	A	B	C	D	E	F	G	H	I	J	K	L														停用(NOT USED)
		92501107			2000/10	1	A	B	C	D	E	F	G	H	I	J	K	L														停用(NOT USED)
	M0801003	92515307			2003/02	2	A	B	C	D	E	F	G	H	I	J	K	L														

https://truckmanualshub.com/

二截式貨櫃型升降缸組(右)
A308-4C
LIFT CYLINDER (CONTAINER FORM)(R.H.)

編號 NO.	新碼 NEW PART NO.	舊碼 OLD PART NO.	規格 SPECIFICATION	互換性 ITC	應用日期 APPLIED DATE	數量 QTY	FD 15 A	FD 18 B	FD 20 C	FD 25 D	FD 30 E	FD 35 F	FG 15 G	FG 18 H	FG 20 I	FG 25 J	FG 30 K	FG 35 L	FD〔C〕15 M	FD〔C〕18 N	FD〔C〕20 O	FD〔C〕25 P	FD〔C〕30 Q	FD〔C〕35 R	FG〔C〕15 S	FG〔C〕18 T	FG〔C〕20 U	FG〔C〕25 V	FG〔C〕30 W	FG〔C〕35 X	機號 BODY NO.	備註 REMARK
16	**接頭(CONNECTOR)**																														
		92507607			2000/10	1	A	B	C	D	E	F	G	H	I	J	K	L													停用(NOT USED)
	33639	92508104				1	A	B	C	D	E	F	G	H	I	J	K	L													
17	**接頭(CONNECTOR)**																														
	33641	92507607A				1	A	B	C	D	E	F	G	H	I	J	K	L													
18	**O型環("O"RING)**																														
	M0801-P24	92509052				1	A	B	C	D	E	F	G	H	I	J	K	L													

https://truckmanualshub.com/

升降系統
A308
MAST SYSTEM

二截式貨櫃型升降缸組(左)
A308-4D
LIFT CYLINDER (CONTAINER FORM)(L.H.)

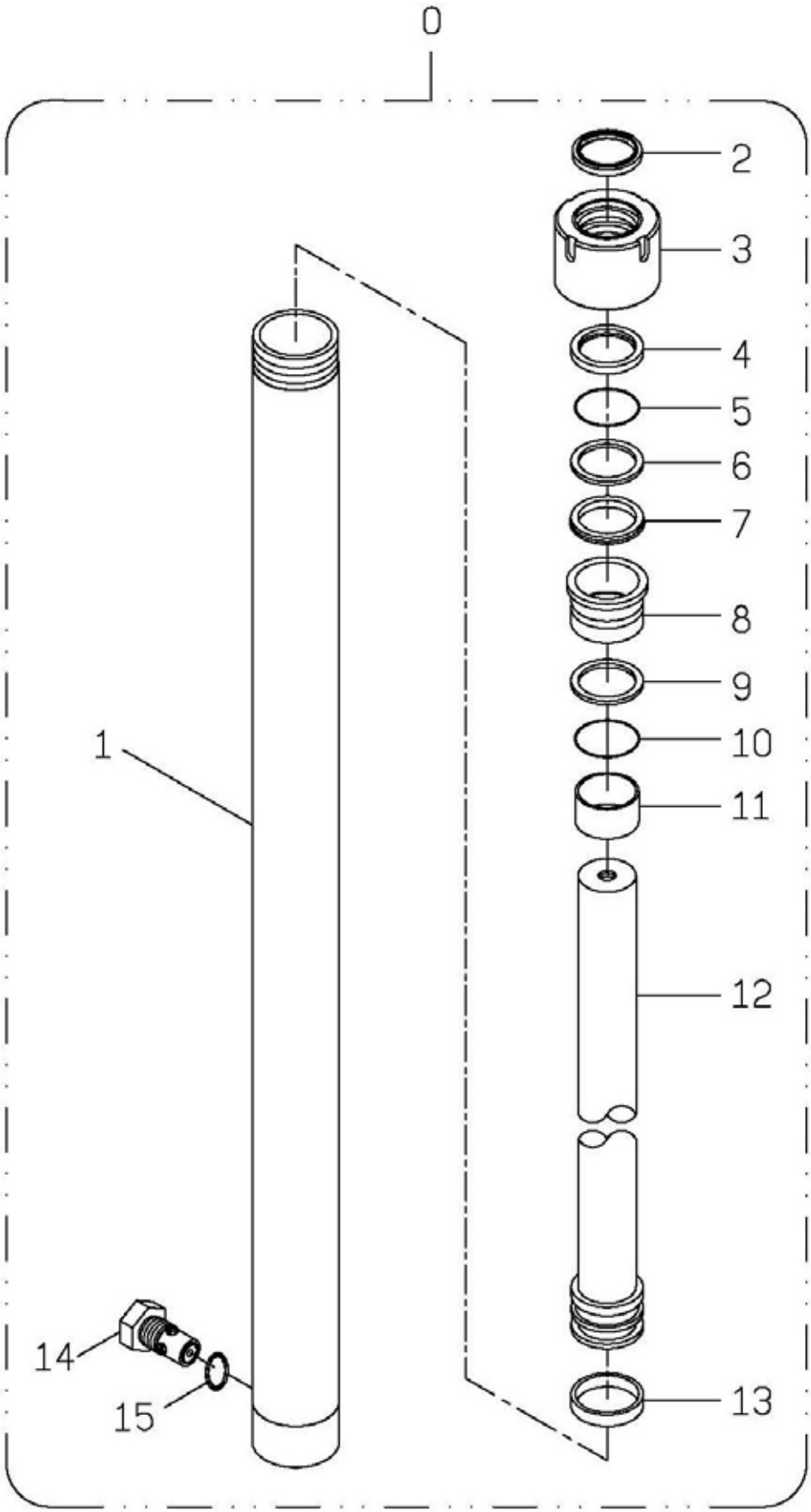

https://truckmanualshub.com/

升降系統
A308
MAST SYSTEM

二截式貨櫃型升降缸組(左)
A308-4D
LIFT CYLINDER (CONTAINER FORM)(L.H.)

編號 NO.	新碼 NEW PART NO.	舊碼 OLD PART NO.	規格 SPECIFICATION	互換性 ITC	應用日期 APPLIED DATE	數量 QTY	FD 15 A	FD 18 B	FD 20 C	FD 25 D	FD 30 E	FD 35 F	FG 15 G	FG 18 H	FG 20 I	FG 25 J	FG 30 K	FG 35 L	FD〔C〕 15 M	FD〔C〕 18 N	FD〔C〕 20 O	FD〔C〕 25 P	FD〔C〕 30 Q	FD〔C〕 35 R	FG〔C〕 15 S	FG〔C〕 18 T	FG〔C〕 20 U	FG〔C〕 25 V	FG〔C〕 30 W	FG〔C〕 35 X	機號 BODY NO.	備註 REMARK
0	**升降油壓缸(左)(LIFT CYLINDER)(L.H)**																															
	B350330	42545100				1	A	B	C	D			G	H	I	J																3M
	B350335	43045100				1					E	F					K	L														
	B350331	42545200				1	A	B	C	D			G	H	I	J																3.3M
	B350336	43045200				1					E	F					K	L														
	B350332	42545300				1	A	B	C	D			G	H	I	J																3.5M
	B350337	43045300				1					E	F					K	L														
	B350333	42545400				1	A	B	C	D			G	H	I	J																4M
	B350338	43045400				1					E	F					K	L														
	B350334	42545500				1	A	B	C	D			G	H	I	J																4.5M
	B350339	43045500				1					E	F					K	L														
1	**升降油壓缸體(LIFT CYLINDER BODY)**																															
	33758	42542103A				1	A	B	C	D			G	H	I	J																3M
	33759	43042103A				1					E	F					K	L														
	33760	42542203A				1	A	B	C	D			G	H	I	J																3.3M
	33761	43042203A				1					E	F					K	L														
	33762	42542303A				1	A	B	C	D			G	H	I	J																3.5M
	33763	43042303A				1					E	F					K	L														
	33764	42542403A				1	A	B	C	D			G	H	I	J																4M
	33765	43042403A				1					E	F					K	L														
	33766	42542503A				1	A	B	C	D			G	H	I	J																4.5M
	33767	43042503A				1					E	F					K	L														
2	**防塵油封(SEAL)**																															
	M0807004	42515602				1	A	B	C	D			G	H	I	J																
	M0807005	42505207				1					E	F					K	L														
3	**油壓缸蓋(COVER)**																															
	33743	42515603				1	A	B	C	D			G	H	I	J																
	33744	43015603				1					E	F					K	L														
4	**電木環(RING, WEAR)**																															
	M0923001	42515604				1	A	B	C	D			G	H	I	J																
	M0923002	43015604				1					E	F					K	L														
5	**O型環("O"RING)**																															
	M0801-G55	92560215				1	A	B	C	D			G	H	I	J																
	M0801-G60	43015605				1					E	F					K	L														
6	**背托環(RING, BACK UP)**																															
	M0802001	42515606				1	A	B	C	D			G	H	I	J																
	M0802003	43015606				1					E	F					K	L														

https://truckmanualshub.com/

二截式貨櫃型升降缸組(左)
A308-4D
LIFT CYLINDER (CONTAINER FORM)(L.H.)

編號 NO.	零件名稱 PART NAME						FD		FG		FD〔C〕		FG〔C〕			
	新碼 NEW PART NO.	舊碼 OLD PART NO.	規格 SPECIFICATION	互換性 ITC	應用日期 APPLIED DATE	數量 QTY	15 A	18 B	20 C	25 D	30 E	35 F	15 G	18 H	20 I	25 J	30 K	35 L	15 M	18 N	20 O	25 P	30 Q	35 R	15 S	18 T	20 U	25 V	30 W	35 X	機號 BODY NO.	備註 REMARK
7	油封(SEAL)																															
	M0803003	42515607				1	A	B	C	D			G	H	I	J																
	M0803004	42505203				1					E	F					K	L														
8	軸套(COLLAR, ROD)																															
	33745	42515608				1	A	B	C	D			G	H	I	J																
	33746	43015608				1					E	F					K	L														
9	背托環(RING, BACK UP)																															
	M0802004	42515609				1	A	B	C	D			G	H	I	J																
	M0802006	43015609				1					E	F					K	L														
10	O型環("O"RING)																															
	M0801-G45	92508214				1	A	B	C	D			G	H	I	J																
	M0801-G50	43015610				1					E	F					K	L														
11	自潤軸承(BUSHING)																															
	M0920-DU3530	42515611				1	A	B	C	D			G	H	I	J																
	M0920-DU4030	43015611				1					E	F					K	L														
12	油壓缸心軸(ROD, LIFT CYLINDER)																															
	33768	42542104A				1	A	B	C	D			G	H	I	J																3M
	33769	43042104A				1					E	F					K	L														
	33770	42542204A				1	A	B	C	D			G	H	I	J																3.3M
	33771	43042204A				1					E	F					K	L														
	33772	42542304A				1	A	B	C	D			G	H	I	J																3.5M
	33773	43042304A				1					E	F					K	L														
	33774	42542404A				1	A	B	C	D			G	H	I	J																4M
	33775	43042404A				1					E	F					K	L														
	33776	42542504A				1	A	B	C	D			G	H	I	J																4.5M
	33777	43042504A				1					E	F					K	L														
13	電木環(RING, WEAR)																															
		43015612			2000/10	1					E	F					K	L														停用(NOT USED)
	M0923003	42507610				1	A	B	C	D			G	H	I	J																
	M0923005	43007610			2003/02	1					E	F					K	L														
14	減壓閥(DECOMPRESSION VALVE)																															
		42507702			2000/10	1	A	B	C	D	E	F	G	H	I	J	K	L														停用(NOT USED)
	33681	42507725			2003/02	1	A	B	C	D	E	F	G	H	I	J	K	L														
15	O型環("O"RING)																															
	M0801-P20	42507703				1	A	B	C	D	E	F	G	H	I	J	K	L														

https://truckmanualshub.com/

升降系統
A308
MAST SYSTEM

二截式升降缸配管組
A308-5
LIFT CYLINDER FITTING (TWO-STAGE)

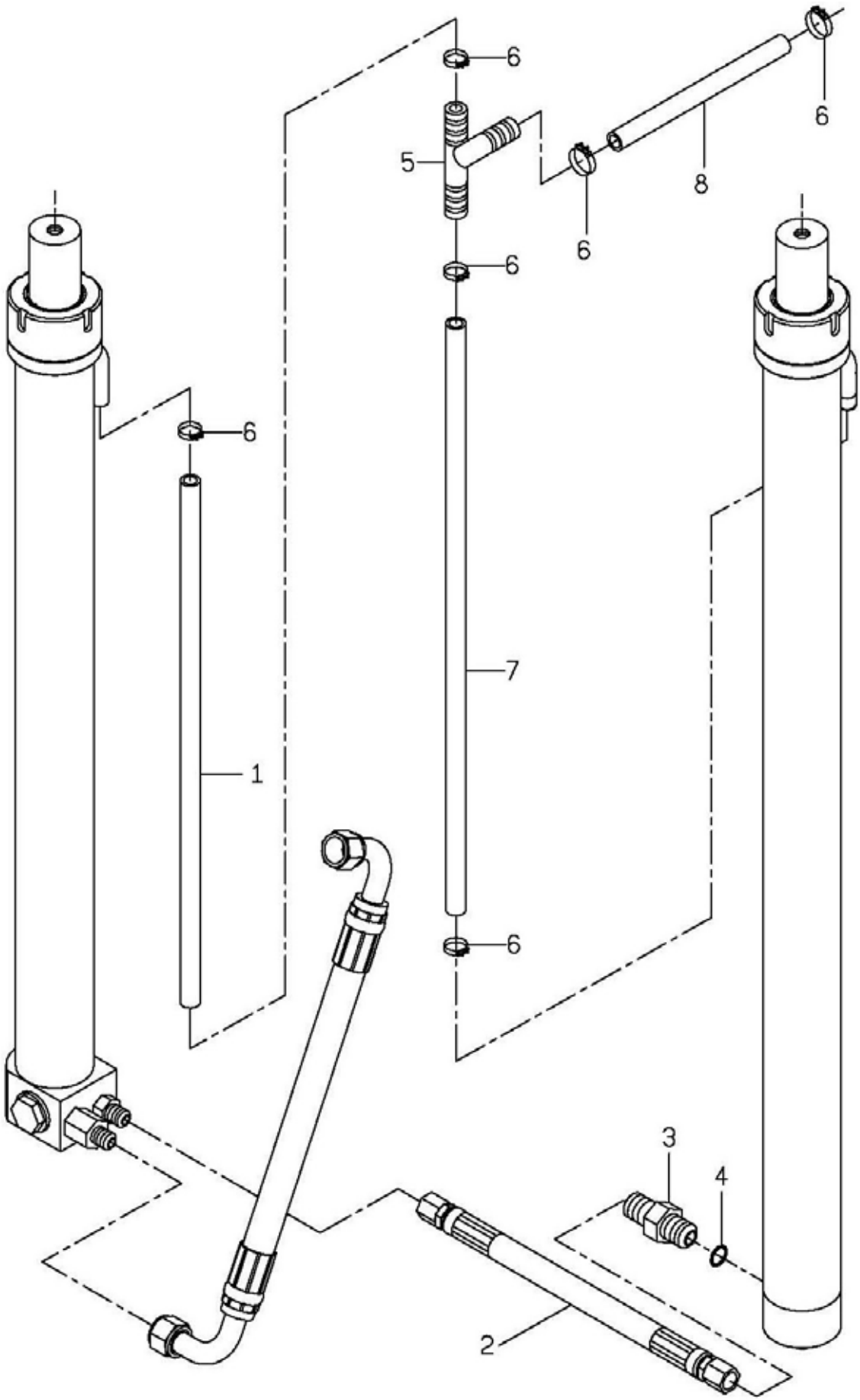

https://truckmanualshub.com/

二截式升降缸配管組
A308-5
LIFT CYLINDER FITTING (TWO-STAGE)

編號 NO.	零件名稱 PART NAME 新碼 NEW PART NO.	舊碼 OLD PART NO.	規格 SPECIFICATION	互換性 ITC	應用日期 APPLIED DATE	數量 QTY	FD 15	FD 18	FD 20	FD 25	FD 30	FD 35	FG 15	FG 18	FG 20	FG 25	FG 30	FG 35	FD〔C〕15	FD〔C〕18	FD〔C〕20	FD〔C〕25	FD〔C〕30	FD〔C〕35	FG〔C〕15	FG〔C〕18	FG〔C〕20	FG〔C〕25	FG〔C〕30	FG〔C〕35	機號 BODY NO.	備註 REMARK
							A	B	C	D	E	F	G	H	I	J	K	L	M	N	O	P	Q	R	S	T	U	V	W	X		
1	**回油管(HOSE RETURN)**																															
	M0501038	92507308				1	A	B	C	D	E	F	G	H	I	J	K	L														3M
	M0501042	92507314				1	A	B	C	D	E	F	G	H	I	J	K	L														3.3M
	M0501043	92507315				1	A	B	C	D	E	F	G	H	I	J	K	L														3.5M~3.7M
	M0501036	92507316				1	A	B	C	D	E	F	G	H	I	J	K	L														4M
	M0501035	92507320				1	A	B	C	D	E	F	G	H	I	J	K	L														4.5M
		92507321				1	A	B	C	D	E	F	G	H	I	J	K	L														5M
2	**高壓管(HOSE, LIFT)**																															
	M0501140	92507302				1	A	B	C	D	E	F	G	H	I	J	K	L														停用(NOT USED)
	M0501159					1	A	B					G	H																		
	M0501140	92507302				1			C	D					I	J																
	M0501140	92507302				1					E	F					K	L														
3	**接頭(CONNECTOR)**																															
		92507303			2000/10	1	A	B	C	D	E	F	G	H	I	J	K	L														
	32437	92508019A			2003/02	1	A	B	C	D	E	F	G	H	I	J	K	L														
4	**O型環("O"RING)**																															
	M0801-P12	92507304				1	A	B	C	D	E	F	G	H	I	J	K	L														
5	**三通接頭(CONNECTOR "T")**																															
	33778	92507305				1	A	B	C	D	E	F	G	H	I	J	K	L														
6	**管束(CLAMP HOSE)**																															
	M1315012	92507306				6	A	B	C	D	E	F	G	H	I	J	K	L														
7	**回油管(HOSE RETURN)**																															
	M0501044	92507307				1	A	B	C	D	E	F	G	H	I	J	K	L														3M
	M0501039	92507311				1	A	B	C	D	E	F	G	H	I	J	K	L														3.3M
	M0501040	92507312				1	A	B	C	D	E	F	G	H	I	J	K	L														3.5M
	M0501022	92507317				1	A	B	C	D	E	F	G	H	I	J	K	L														3.7M
	M0501041	92507313				1	A	B	C	D	E	F	G	H	I	J	K	L														4M
	M0501024	92507318				1	A	B	C	D	E	F	G	H	I	J	K	L														4.5M
	M0501011	92507319				1	A	B	C	D	E	F	G	H	I	J	K	L														5M
8	**回油管(HOSE RETURN)**																															
	M0501038	92507308				1	A	B	C	D	E	F	G	H	I	J	K	L														

https://truckmanualshub.com/

升降系統
A308
MAST SYSTEM

二截式貨櫃型升降缸配管組
A308-5A
LIFT CYLINDER FITTING (CONTAINER FORM)

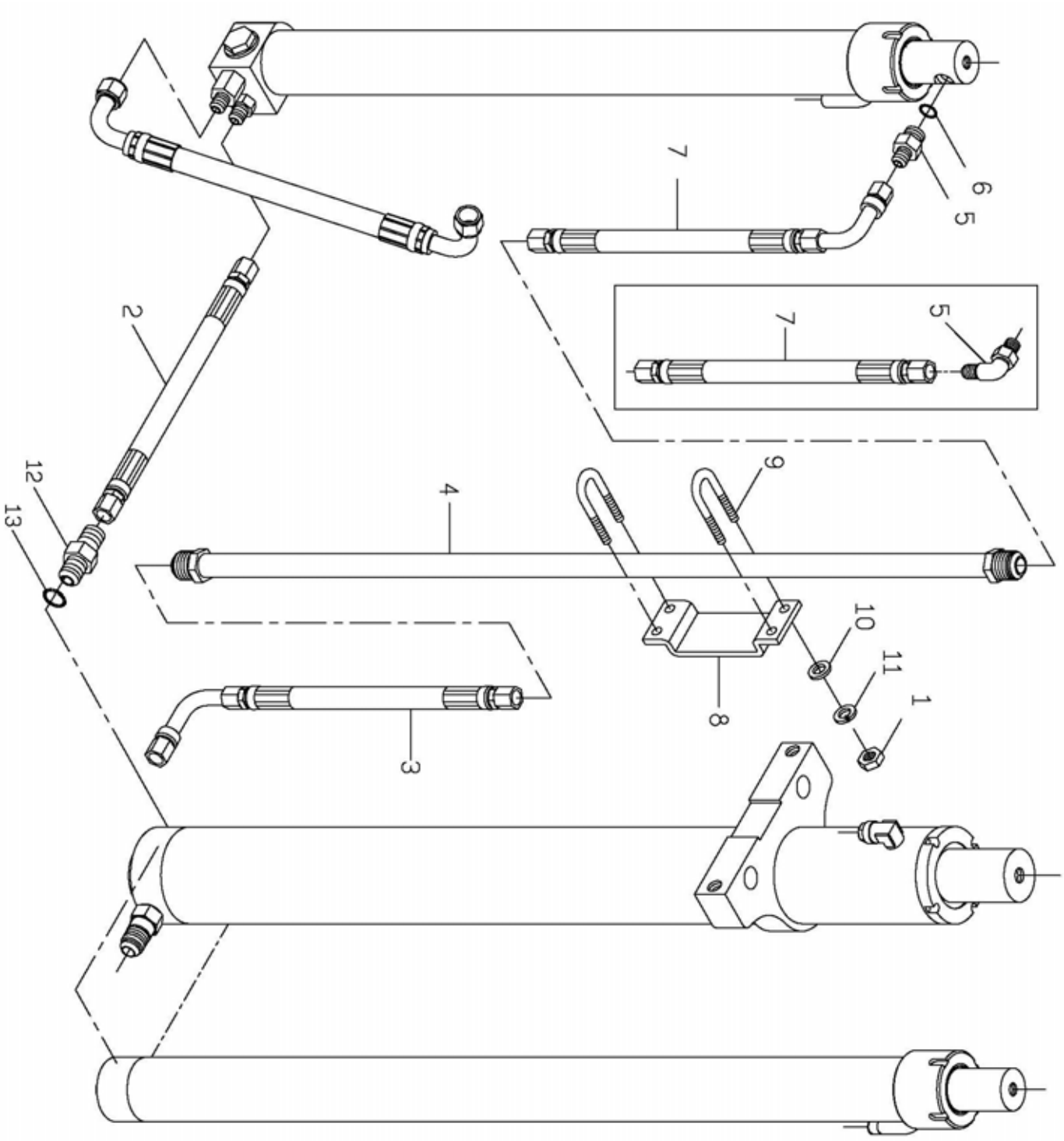

https://truckmanualshub.com/

升降系統
A308
MAST SYSTEM

二截式貨櫃型升降缸配管組
A308-5A
LIFT CYLINDER FITTING (CONTAINER FORM)

編號 NO.	零件名稱 PART NAME						FD		FG		FD〔C〕		FG〔C〕		機號 BODY NO.	備註 REMARK
	新碼 NEW PART NO.	舊碼 OLD PART NO.	規格 SPECIFICATION	互換性 ITC	應用日期 APPLIED DATE	數量 QTY	15 A	18 B	20 C	25 D	30 E	35 F	15 G	18 H	20 I	25 J	30 K	35 L	15 M	18 N	20 O	25 P	30 Q	35 R	15 S	18 T	20 U	25 V	30 W	35 X		
1	螺帽(NUT)																															
	M1513-M6	92515415				4	A	B	C	D	E	F	G	H	I	J	K	L														
2	高壓管(HOSE, HIGH PRESSURE)																															
	M0501140	92507302				1	A	B	C	D	E	F	G	H	I	J	K	L														
3	高壓管(HOSE, HIGH PRESSURE)																															
	M0502077	92515401				1	A	B	C	D	E	F	G	H	I	J	K	L														3M
	M0502079	92515406				1	A	B	C	D	E	F	G	H	I	J	K	L														3.3M~3.5M
	M0502083	92515408				1	A	B	C	D	E	F	G	H	I	J	K	L														4M
		92515417				1	A	B	C	D	E	F	G	H	I	J	K	L														4.5M
4	高壓鋼管(STEEL TUBE)																															
	33849	32515402				1	A	B	C	D	E	F	G	H	I	J	K	L														
5	接頭(CONNECTOR)																															
		92515403			2000/10	1	A	B	C	D	E	F	G	H	I	J	K	L														停用(NOT USED)
	33641	92507607A			2002/01	1	A	B	C	D	E	F	G	H	I	J	K	L														3M
5	90°接頭(CONNECTOR 90°)																															
	33780	92515419				1	A	B	C	D	E	F	G	H	I	J	K	L														3.3M~4.5M
6	O型環("O"RING)																															
		92515404			2000/10	1	A	B	C	D	E	F	G	H	I	J	K	L														停用(NOT USED)
	M0801003	92515307			2003/02	1	A	B	C	D	E	F	G	H	I	J	K	L														
7	高壓管(HOSE, HIGH PRESSURE)																															
		92515405				1	A	B	C	D	E	F	G	H	I	J	K	L														3M
	M0502059	92515409				1	A	B	C	D	E	F	G	H	I	J	K	L														3.3M
	M0502083	92515408				1	A	B	C	D	E	F	G	H	I	J	K	L														3.5M
	M0502081	92515416				1	A	B	C	D	E	F	G	H	I	J	K	L														4M
		92515418				1	A	B	C	D	E	F	G	H	I	J	K	L														4.5M
8	固定板(FIXED BOARD)																															
	33781	32515411				1	A	B	C	D	E	F	G	H	I	J	K	L														
9	U型螺栓(BOLT "U")																															
	33782	32515412				2	A	B	C	D	E	F	G	H	I	J	K	L														
10	平華司(WASHER)																															
	M1602004	92510428				4	A	B	C	D	E	F	G	H	I	J	K	L														
11	彈簧華司(SPRING WASHER)																															
	M1605-M6	92503218				4	A	B	C	D	E	F	G	H	I	J	K	L														
12	接頭(CONNECTOR)																															
		92507303			2000/10	1	A	B	C	D	E	F	G	H	I	J	K	L														停用(NOT USED)
	32437	92508019A			2003/02	1	A	B	C	D	E	F	G	H	I	J	K	L														
13	O型環("O"RING)																															
	M0801-P14	92516406				1	A	B	C	D	E	F	G	H	I	J	K	L														

https://truckmanualshub.com/

升降系統
A308
MAST SYSTEM

三截式升降缸配管組
A308-5B
LIFT CYLINDER FITTING (THREE-STAGE)

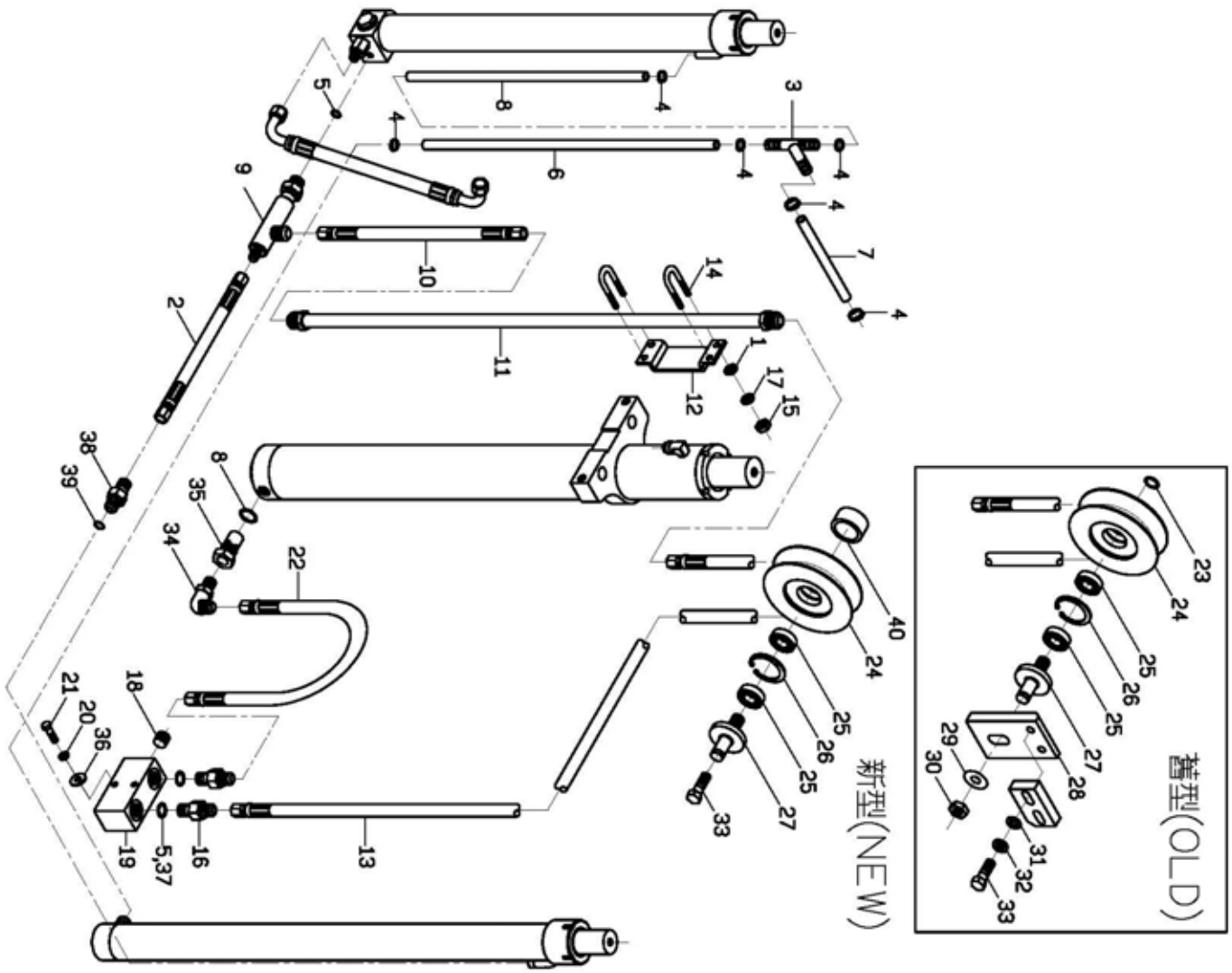

https://truckmanualshub.com/

三截式升降缸配管組
A308-5B
LIFT CYLINDER FITTING (THREE-STAGE)

編號 NO.	零件名稱 PART NAME 新碼 NEW PART NO.	舊碼 OLD PART NO.	規格 SPECIFICATION	互換性 ITC	應用日期 APPLIED DATE	數量 QTY	FD 15 18 20 25 30 35 A B C D E F	FG 15 18 20 25 30 35 G H I J K L	FD〔C〕 15 18 20 25 30 35 M N O P Q R	FG〔C〕 15 18 20 25 30 35 S T U V W X	機號 BODY NO.	備註 REMARK
1	平華司(WASHER)											
		92515413				4	A B C D E F	G H I J K L				
2	高壓管(HOSE, HIGH PRESSURE)											
	M0501210	91516426				1	A B	G H				
	M0501206	92516426				1	C D	I J				
	M0501235	93016426				1	E F	K L				
3	三通接管(CONNECTOR "T")											
	33778	92507305				1	A B C D E F	G H I J K L				
4	管束(HOSE CLAMP)											
	M1315012	92507306				6	A B C D E F	G H I J K L				
5	O型環("O"RING)											
		92507304			2000/10	1	A B C D E F	G H I J K L				停用(NOT USED)
		92516406			2000/10	1	A B C D E F	G H I J K L				停用(NOT USED)
		92515310			2000/10	1	A B C D E F	G H I J K L				停用(NOT USED)
	M0801003	92515307			2003/02	4	A B C D E F	G H I J K L				
6	回油管(HOSE, LOW PRESSURE)											
	M0501025	92516431				1	A B C D E F	G H I J K L				4M
	M0501044	92507307				1	A B C D E F	G H I J K L				4.5M
	33795					1	A B C D E F	G H I J K L				4.7M
	M0501026	92516432				1	A B C D E F	G H I J K L				4.8M
	M0501039	92507311				1	A B C D E F	G H I J K L				5M
	M0501027	92516433				1	A B C D E F	G H I J K L				5.5M
	M0501041	92507313				1	A B C D E F	G H I J K L				6M
	M0501011	92507319				1	E F	K L				6.5M
7	回油管(HOSE, LOW PRESSURE)											
	M0501034	92507309				1	A B C D E F	G H I J K L				
8	回油管(HOSE, LOW PRESSURE)											
	M0501028	92516434				1	A B C D E F	G H I J K L				4M
	M0501038	92507308				1	A B C D E F	G H I J K L				4.5M
	33842					1	A B C D E F	G H I J K L				4.7M
8	回油管(HOSE, LOW PRESSURE)											
	M0501034	92507309				1	A B C D E F	G H I J K L				4.8M
	M0501042	92507314				1	A B C D E F	G H I J K L				5M
		92516435				1	A B C D E F	G H I J K L				5.5M
	M0501036	92507316				1	A B C D E F	G H I J K L				6M
	M0501035	92507320				1	E F	K L				6.5M

https://truckmanualshub.com/

升降系統
A308
MAST SYSTEM

三截式升降缸配管組
A308-5B
LIFT CYLINDER FITTING (THREE-STAGE)

編號 NO.	新碼 NEW PART NO.	舊碼 OLD PART NO.	規格 SPECIFICATION	互換性 ITC	應用日期 APPLIED DATE	數量 QTY	FD 15	FD 18	FD 20	FD 25	FD 30	FD 35	FG 15	FG 18	FG 20	FG 25	FG 30	FG 35	FD〔C〕15	FD〔C〕18	FD〔C〕20	FD〔C〕25	FD〔C〕30	FD〔C〕35	FG〔C〕15	FG〔C〕18	FG〔C〕20	FG〔C〕25	FG〔C〕30	FG〔C〕35	機號 BODY NO.	備註 REMARK
	零件名稱 PART NAME						A	B	C	D	E	F	G	H	I	J	K	L	M	N	O	P	Q	R	S	T	U	V	W	X		
9	三通接管(CONNECTOR "T")																															
	33783	92516402				1	A	B	C	D	E	F	G	H	I	J	K	L														
10	高壓管(HOSE, HIGH PRESSURE)																															
	M0502059	92515409				1	A	B	C	D	E	F	G	H	I	J	K	L														
		92516429				1	A	B	C	D	E	F	G	H	I	J	K	L														4.8M
11	高壓鋼管(STEEL TUBE)																															
		92515402				1	A	B	C	D	E	F	G	H	I	J	K	L														
12	固定板(PIPE CLAMP)																															
	33786	32516428				1	A	B	C	D	E	F	G	H	I	J	K	L														
13	高壓管(HOSE, HIGH PRESSURE)																															
	M0502071	92516436				1	A	B	C	D	E	F	G	H	I	J	K	L														4M
	M0502064	92516401				1	A	B	C	D	E	F	G	H	I	J	K	L														4.5M
	33843					1	A	B	C	D	E	F	G	H	I	J	K	L														4.7M
	M0502061	92516404				1	A	B	C	D	E	F	G	H	I	J	K	L														4.8M,5M
	M0502067	92516438				1	A	B	C	D	E	F	G	H	I	J	K	L														5.5M
	M0502068	92516427				1	A	B	C	D	E	F	G	H	I	J	K	L														6M
		92516437				1					E	F					K	L														6.5M
14	U型螺栓(BOLT "U")																															
	33787	92515412				2	A	B	C	D	E	F	G	H	I	J	K	L														
15	螺帽(NUT)																															
	M1513-M6	92515415				4	A	B	C	D	E	F	G	H	I	J	K	L														
16	接頭(CONNECTOR)																															
	33641	92507607A				2	A	B	C	D	E	F	G	H	I	J	K	L														
17	彈簧華司(SPRING WASHER)																															
	M1605-M6	92503218				4	A	B	C	D	E	F	G	H	I	J	K	L														
18	油塞(PLUG)																															
		92516407				1	A	B	C	D	E	F	G	H	I	J	K	L														
19	油路塊(JOINT)																															
	33788	32516408				1	A	B	C	D	E	F	G	H	I	J	K	L														
20	彈簧華司(SPRING WASHER)																															
	M1605-M8	92501019				2	A	B	C	D	E	F	G	H	I	J	K	L														
21	螺栓(BOLT)																															
	M1424-M8*30	92503010				2	A	B	C	D	E	F	G	H	I	J	K	L														
22	高壓管(HOSE, HIGH PRESSURE)																															
	M0502059	92515409				1	A	B	C	D	E	F	G	H	I	J	K	L														
23	外扣環(SNAP RING)																															
	M1312-S16	92516412				1	A	B	C	D	E	F	G	H	I	J	K	L														停用(NOT USED)

https://truckmanualshub.com/

升降系統
A308
MAST SYSTEM

三截式升降缸配管組
A308-5B
LIFT CYLINDER FITTING (THREE-STAGE)

編號 NO.	新碼 NEW PART NO.	舊碼 OLD PART NO.	規格 SPECIFICATION	互換性 ITC	應用日期 APPLIED DATE	數量 QTY	FD 15	FD 18	FD 20	FD 25	FD 30	FD 35	FG 15	FG 18	FG 20	FG 25	FG 30	FG 35	FD〔C〕 15	FD〔C〕 18	FD〔C〕 20	FD〔C〕 25	FD〔C〕 30	FD〔C〕 35	FG〔C〕 15	FG〔C〕 18	FG〔C〕 20	FG〔C〕 25	FG〔C〕 30	FG〔C〕 35	機號 BODY NO.	備註 REMARK
							A	B	C	D	E	F	G	H	I	J	K	L	M	N	O	P	Q	R	S	T	U	V	W	X		
24	**滾輪(PULLEY)**																															
	33789	92516413				1	A	B	C	D	E	F	G	H	I	J	K	L														
25	**軸承(BEARING)**																															
		92512418			2000/10	2	A	B	C	D	E	F	G	H	I	J	K	L														停用(NOT USED)
	M0901-6003ZZ	92516414				2	A	B	C	D	E	F	G	H	I	J	K	L														
26	**內扣環(SNAP RING)**																															
	M1312-R37	92516415				1	A	B	C	D	E	F	G	H	I	J	K	L														
27	**固定螺栓(BOLT)**																															
	33790	92516416				1	A	B	C	D	E	F	G	H	I	J	K	L														停用(NOT USED)
28	**滾輪固定板(PLATE, PULLEY)**																															
	33791	32516417				1	A	B	C	D	E	F	G	H	I	J	K	L														
29	**平墊片(WASHER)**																															
	M1602-M16	92516418				1	A	B	C	D	E	F	G	H	I	J	K	L														停用(NOT USED)
30	**螺帽(NUT)**																															
		92516419				1	A	B	C	D	E	F	G	H	I	J	K	L														停用(NOT USED)
31	**平華司(WASHER)**																															
	M1602013	92520420			2006/02	2	A	B	C	D	E	F	G	H	I	J	K	L														停用(NOT USED)
32	**彈簧華司(SPRING WASHER)**																															
	M1605-M10	92501218			2006/02	2	A	B	C	D	E	F	G	H	I	J	K	L														停用(NOT USED)
33	**螺栓(BOLT)**																															
	M1424004	92501102				2	A	B	C	D	E	F	G	H	I	J	K	L														
34	**L型接頭(CONNECTOR "L")**																															
	33642	92515306				1	A	B	C	D	E	F	G	H	I	J	K	L														
35	**減壓閥(VALVA, DECOMPRESSION)**																															
		92516424			2000/10	1	A	B	C	D	E	F	G	H	I	J	K	L														停用(NOT USED)
	33731	42515322				1	A	B	C	D	E	F	G	H	I	J	K	L														
36	**平華司(WASHER)**																															
	M1602009	92511016				2	A	B	C	D	E	F	G	H	I	J	K	L														
37	**O型環("O"RING)**																															
	M0801-P14	92516406				1	A	B	C	D	E	F	G	H	I	J	K	L														
38	**接頭(CONNECTOR)**																															
		92507303			2000/10	1	A	B	C	D	E	F	G	H	I	J	K	L														停用(NOT USED)
	32437	92508019A			2003/02	1	A	B	C	D	E	F	G	H	I	J	K	L														
39	**O型環("O"RING)**																															
	M0801-P12	92507304				1	A	B	C	D	E	F	G	H	I	J	K	L														
40	**隔圈(SPACER)**																															
	33418	32550111				1	A	B	C	D	E	F	G	H	I	J	K	L														

https://truckmanualshub.com/

升降系統
A308
MAST SYSTEM

二截式貨叉架組
A308-6
LIFT BRACKET (TWO-STAGE)

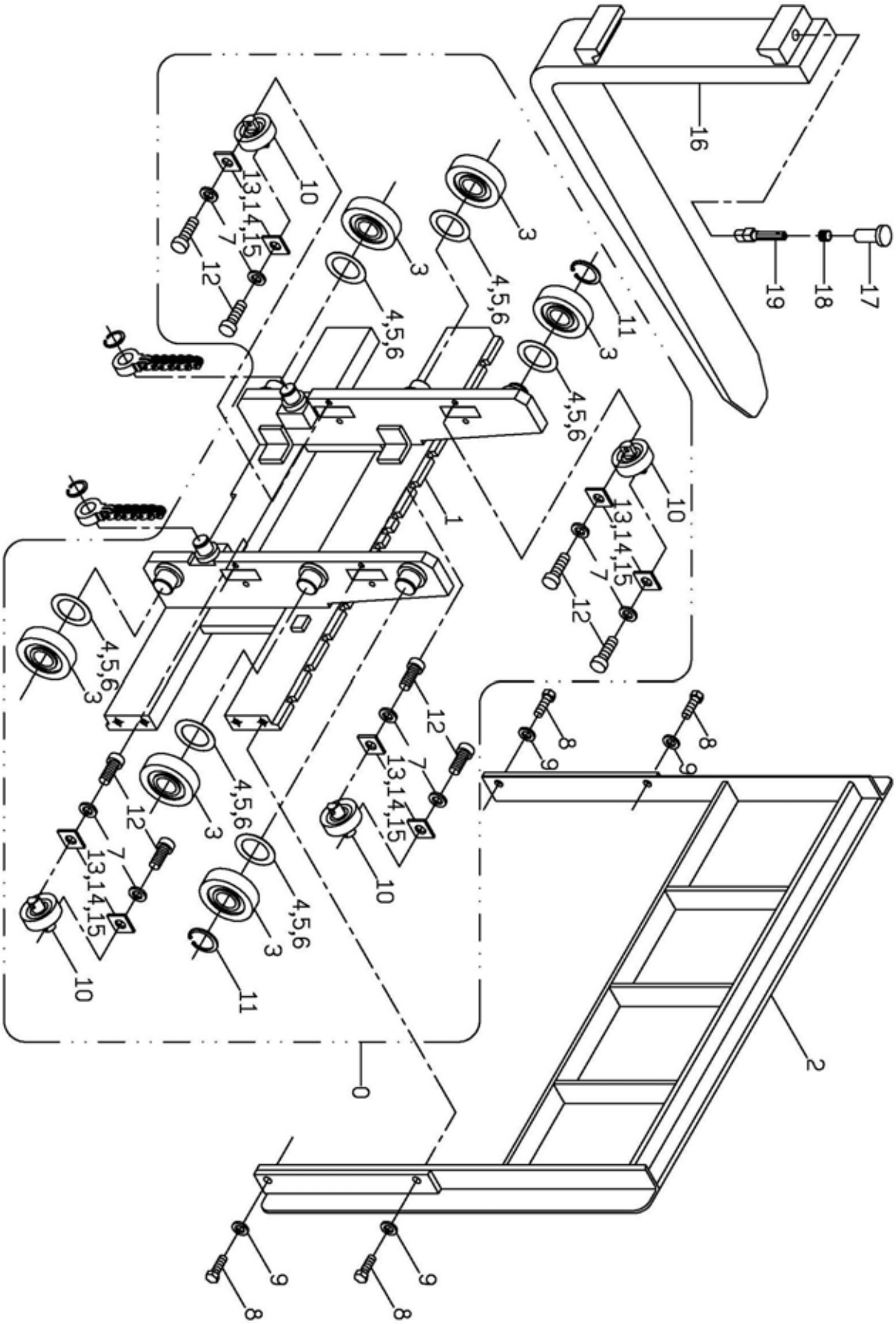

https://truckmanualshub.com/

二截式貨叉架組
A308-6
LIFT BRACKET (TWO-STAGE)

編號 NO.	零件名稱 PART NAME 新碼 NEW PART NO.	舊碼 OLD PART NO.	規格 SPECIFICATION	互換性 ITC	應用日期 APPLIED DATE	數量 QTY	FD 15 18 20 25 30 35	FG 15 18 20 25 30 35	FD〔C〕 15 18 20 25 30 35	FG〔C〕 15 18 20 25 30 35	機號 BODY NO.	備註 REMARK
							A B C D E F	G H I J K L	M N O P Q R	S T U V W X		
0	**貨叉架組(LIFT BRACKET ASSY)**											
	B350340					1	A B	G H				
	B350341					1	C D	I J				
	B350342					1	E	K				
	B350294					1	F	L				
	B350346					1	D	J				寬牙排(WIDER)
	B350347					1	E F	K L				寬牙排(WIDER)
1	**貨叉架(LIFT BRACKET)**											
	33356	21507500				1	A B	G H				
	33357	22507500				1	C D	I J				
	33358	23007500				1	E	K				
	31983					1	F	L				
1	**貨叉架(LIFT BRACKET) (DUAL)**											
	33799	22507900				1	D	J				寬牙排(WIDER)
	33800	23007900				1	E F	K L				寬牙排(WIDER)
2	**柵欄(BACKREST)(48")**											
		22507800			2000/10	1	C D	I J				
		23007800			2000/10	1	E F	K L				
2	**柵欄(BACKREST)**											
	33360	52507800				1	A B	G H				
	33801	42507800			2003/02	1	C D	I J				
	33802	43007800			2003/02	1	E F	K L				
3	**主滾輪(ROLLER, LIFT)**											
		92507007			2000/10	6	A B C D E F	G H I J K L				停用(NOT USED)
	32899	92507007			2003/02	6	A B C D	G H I J				
	32900	93007007			2003/02	6	E F	K L				
4	**墊片(SHIM)**											
	32895	32507006				N	A B C D E F	G H I J K L				0.5t
5	**墊片(SHIM)**											
	32896	32507044				N	A B C D E F	G H I J K L				1t
6	**墊片(SHIM)**											
	32897	32507045				N	A B C D E F	G H I J K L				2t
7	**彈簧華司(SPRING WASHER)**											
	M1605-M10	92501218				8	A B C D E F	G H I J K L				
8	**螺栓(BOLT)**											
	M1423005	92506021				4	A B C D E F	G H I J K L				
9	**彈簧華司(SPRING WASHER)**											
	M1605-M14	92506020				4	A B C D E F	G H I J K L				

https://truckmanualshub.com/

升降系統
A308
MAST SYSTEM

二截式貨叉架組
A308-6
LIFT BRACKET (TWO-STAGE)

編號 NO.	新碼 NEW PART NO.	舊碼 OLD PART NO.	規格 SPECIFICATION	互換性 ITC	應用日期 APPLIED DATE	數量 QTY	FD 15	FD 18	FD 20	FD 25	FD 30	FD 35	FG 15	FG 18	FG 20	FG 25	FG 30	FG 35	FD〔C〕 15	FD〔C〕 18	FD〔C〕 20	FD〔C〕 25	FD〔C〕 30	FD〔C〕 35	FG〔C〕 15	FG〔C〕 18	FG〔C〕 20	FG〔C〕 25	FG〔C〕 30	FG〔C〕 35	機號 BODY NO.	備註 REMARK
	零件名稱 PART NAME						A	B	C	D	E	F	G	H	I	J	K	L	M	N	O	P	Q	R	S	T	U	V	W	X		
10	**側滾輪(SIDE ROLLER)**																															
	33806	92507511				4	A	B	C	D	E	F	G	H	I	J	K	L														
11	**扣環(RING “C”)**																															
	M1312-S40	92501251				2	A	B	C	D	E	F	G	H	I	J	K	L														
12	**螺栓(BOLT)**																															
	M1410004	92507535				8	A	B	C	D	E	F	G	H	I	J	K	L														
13	**墊片(SHIM)**																															
	33807	32507516				N	A	B	C	D	E	F	G	H	I	J	K	L														0.5t
14	**墊片(SHIM)**																															
	33808	32507537				N	A	B	C	D	E	F	G	H	I	J	K	L														1t
15	**墊片(SHIM)**																															
	33809	32507536				N	A	B	C	D	E	F	G	H	I	J	K	L														2t
16	**牙叉(FORK)(3.5 Foot)**																															
		71507540			2000/10	2	A	B					G	H																		停用(NOT USED)
		72507540			2000/10	2			C	D					I	J																停用(NOT USED)
		73007540			2000/10	2					E	F					K	L														停用(NOT USED)
	33363	41507540			2003/02	2	A	B					G	H																		
	33364	42507540			2003/02	2			C	D					I	J																3.5ft
	33365	43007540			2003/02	2					E						K															
	35041	73507540				2						F						L														
16	**牙叉(FORK)(4 Foot)**																															
		71507550			2000/10	2	A	B					G	H																		停用(NOT USED)
		72507550			2000/10	2			C	D					I	J																停用(NOT USED)
		73007550			2000/10	2					E	F					K	L														停用(NOT USED)
	33366	41507550			2003/02	2	A	B					G	H																		
	33367	42507550			2003/02	2			C	D					I	J																4ft
	33368	43007550			2003/02	2					E						K															
	35042	73507550			2003/02	2						F						L														
16	**牙叉(FORK)(4.5 Foot)**																															
		71507560			2000/10	2	A	B					G	H																		停用(NOT USED)
		72507560			2000/10	2			C	D					I	J																停用(NOT USED)
		73007560			2000/10	2					E	F					K	L														停用(NOT USED)
	33369	41507560			2003/02	2	A	B					G	H																		
	33370	42507560			2003/02	2			C	D					I	J																4.5ft
	33371	43007560			2003/02	2					E						K															
	35043	73507560			2003/02	2						F						L														

https://truckmanualshub.com/

二截式貨叉架組
A308-6
LIFT BRACKET (TWO-STAGE)

編號 NO.	新碼 NEW PART NO.	舊碼 OLD PART NO.	規格 SPECIFICATION	互換性 ITC	應用日期 APPLIED DATE	數量 QTY	FD 15	FD 1805	FD 2005	FD 2305	FD 2505	FD 3005	FG 15	FG 1805	FG 2005	FG 2305	FG 2505	FG 3005	FD〔C〕 15	FD〔C〕 1805	FD〔C〕 2005	FD〔C〕 2305	FD〔C〕 2505	FD〔C〕 3005	FG〔C〕 15	FG〔C〕 1805	FG〔C〕 2005	FG〔C〕 2505	FG〔C〕 3005	機號 BODY NO.	備註 REMARK
	零件名稱 PART NAME						A	B	C	D	E	F	G	H	I	J	K	L	M	N	O	P	Q	R	S	T	U	V	W	X
16	**牙叉(FORK)(5 Foot)**																														
		71507570			2000/10	2	A	B					G	H																	停用(NOT USED)
		72507570			2000/10	2			C	D					I	J															停用(NOT USED)
		73007570			2000/10	2					E	F					K	L													停用(NOT USED)
	33372	41507570			2003/02	2	A	B					G	H																	
	33373	42507570			2003/02	2			C	D					I	J															5ft
	33374	43007570			2003/02	2					E						K														
	35016	73507570			2003/02	2						F						L													
16	**牙叉(FORK)(6 Foot)**																														
		71507580			2000/10	2	A	B					G	H																	停用(NOT USED)
		72507580			2000/10	2			C	D					I	J															停用(NOT USED)
		73007580			2000/10	2					E	F					K	L													停用(NOT USED)
	33375	41507580			2003/02	2	A	B					G	H																	
	33376	42507580			2003/02	2			C	D					I	J															6ft
	33377	43007580			2003/02	2					E						K														
	35044	73507580			2003/02	2						F						L													
17	**把手(KNOB, FORK STOPPER PIN)**																														
		72507531			2000/10	2	A	B	C	D	E	F	G	H	I	J	K	L													停用(NOT USED)
	33378	42507531			2003/02	2	A	B	C	D	E	F	G	H	I	J	K	L													
18	**彈簧(SPRING)**																														
		72507532			2000/10	2	A	B	C	D	E	F	G	H	I	J	K	L													停用(NOT USED)
	33810	42507532			2003/02	2	A	B	C	D	E	F	G	H	I	J	K	L													
19	**固定子(FIXED PIN)**																														
		72507533			2000/10	2	A	B	C	D	E	F	G	H	I	J	K	L													停用(NOT USED)
	33379	42507533			2003/02	2	A	B	C	D			G	H	I	J															
	33380	43007533			2003/02	2					E	F					K	L													

https://truckmanualshub.com/

升降系統
A308
MAST SYSTEM

二.三截式貨櫃型貨叉架組
A308-6A
LIFT BRACKET(TWO＆THREE CONTAINER FORM)

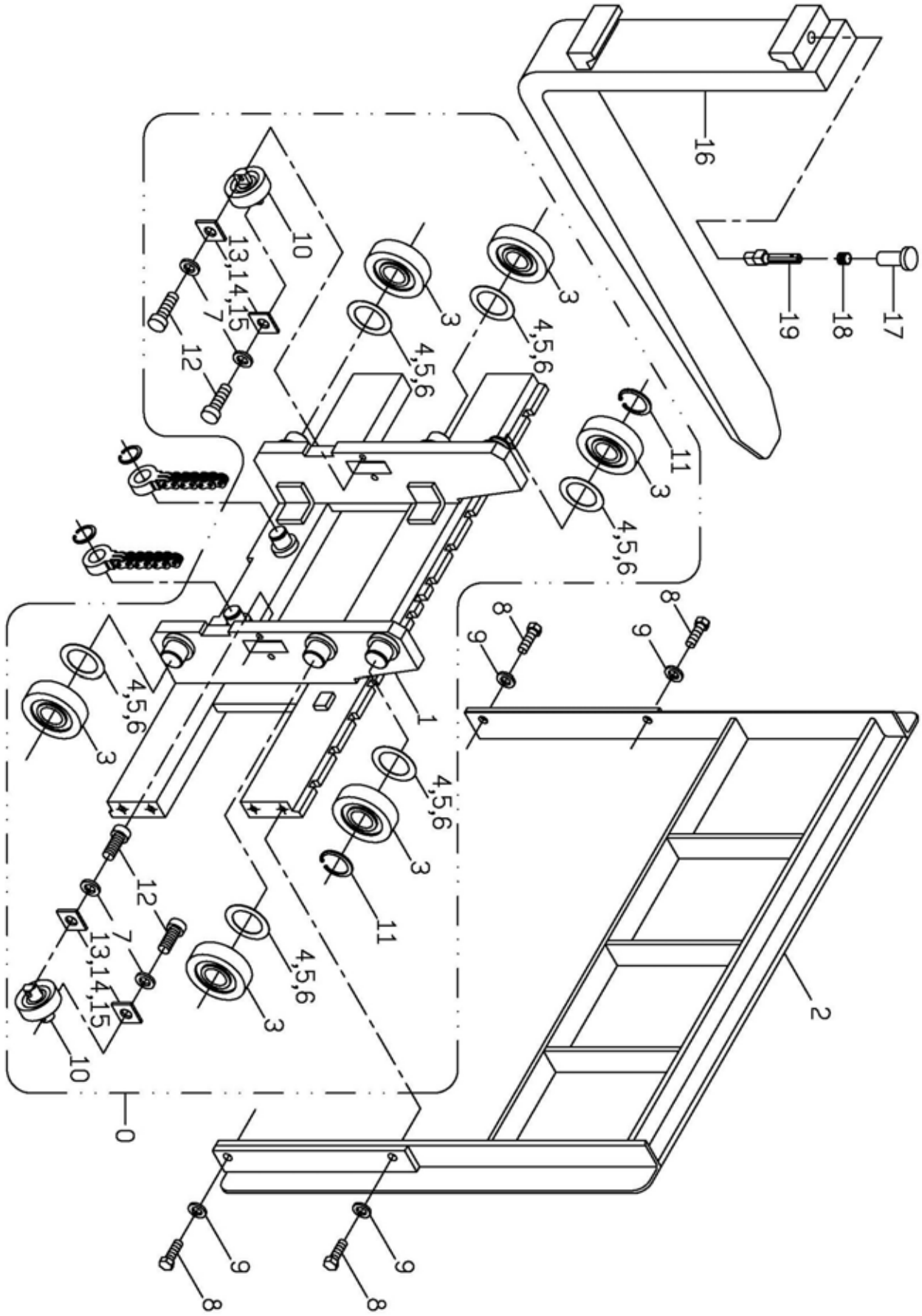

https://truckmanualshub.com/

二.三截式貨櫃型貨叉架組
A308-6A
LIFT BRACKET(TWO&THREE CONTAINER FORM)

編號 NO.	新碼 NEW PART NO.	舊碼 OLD PART NO.	規格 SPECIFICATION	互換性 ITC	應用日期 APPLIED DATE	數量 QTY	FD 15 A	FD 18 B	FD 20 C	FD 25 D	FD 30 E	FD 35 F	FG 15 G	FG 18 H	FG 20 I	FG 25 J	FG 30 K	FG 35 L	FD〔C〕15 M	FD〔C〕18 N	FD〔C〕20 O	FD〔C〕25 P	FD〔C〕30 Q	FD〔C〕35 R	FG〔C〕15 S	FG〔C〕18 T	FG〔C〕20 U	FG〔C〕25 V	FG〔C〕30 W	FG〔C〕35 X	機號 BODY NO.	備註 REMARK
0	**貨叉架組(LIFT BRACKET ASSY)**																														
	B350348					1	A	B					G	H																	
	B350349					1			C	D					I	J														三截式 (THREE-STAGE)
	B350350					1					E						K														
	B350354					1						F						L													
	B350296					1				D						J															三截式寬牙排 (THREE-STAGE,WIDER)
	B350290					1					E	F					K	L													
	B350355					1	A	B					G	H																	
	B350356					1			C	D					I	J														貨櫃型 (CONTAINER FORM)	
	B350357					1					E						K														
	B350289					1						F						L													
	B350361					1				D						J															貨櫃型寬牙排 (CONTAINER FORM,WIDER)
	B350362					1					E	F					K	L													
1	**貨叉架(LIFT BRACKET) (THREE-STAGE)**																														
	33352	21515500				1	A	B					G	H																	
	33353	22515500				1			C	D					I	J														三截式 (THREE-STAGE)	
	33811	23515500				1					E						K														
	34765					1						F						L													
1	**貨叉架(LIFT BRACKET) (DUAL WHEEL)**																														
	33844					1				D						J															三截式寬牙排 (THREE-STAGE,WIDER)
	33845					1					E	F					K	L													
1	**貨叉架(LIFT BRACKET) (CONTAINER FORM)**																														
	33815	21515800				1	A	B					G	H																	
	33816	22515800				1			C	D					I	J														貨櫃型 (CONTAINER FORM)	
	33817	23015800				1					E						K														
	34787				2006/09	1						F						L													
	33821	22515900				1				D						J															貨櫃型寬牙排 (CONTAINER FORM,WIDER)
	33822	23015900				1					E	F					K	L													
2	**柵欄(BACKREST)(48")**																														
		22507800			2000/10	1			C	D					I	J															
		23007800			2000/10	1					E	F					K	L													
2	**柵欄(BACKREST)**																														
	33360	52507800				1	A	B					G	H																	
	33801	42507800			2003/02	1			C	D					I	J															
	33802	43007800			2003/02	1					E	F					K	L													
3	**主滾輪(ROLLER, LIFT)**																														
		92507007			2000/10	6	A	B	C	D	E	F	G	H	I	J	K	L												停用(NOT USED)	
	32899	92507007			2003/02	6	A	B	C	D			G	H	I	J															
	32900	93007007			2003/02	6					E	F					K	L													

https://truckmanualshub.com/

二.三截式貨櫃型貨叉架組
A308-6A
LIFT BRACKET(TWO＆THREE CONTAINER FORM)

編號 NO.	零件名稱 PART NAME						FD	FG	FD〔C〕	FG〔C〕		
	新碼 NEW PART NO.	舊碼 OLD PART NO.	規格 SPECIFICATION	互換性 ITC	應用日期 APPLIED DATE	數量 QTY	15 A / 18 B / 20 C / 25 D / 30 E / 35 F	15 G / 18 H / 20 I / 25 J / 30 K / 35 L	15 M / 18 N / 20 O / 25 P / 30 Q / 35 R	15 S / 18 T / 20 U / 25 V / 30 W / 35 X	機號 BODY NO.	備註 REMARK
4	**墊片(SHIM)**											
	32895	32507006				N	A B C D E F	G H I J K L				0.5t
5	**墊片(SHIM)**											
	32896	32507044				N	A B C D E F	G H I J K L				1t
6	**墊片(SHIM)**											
	32897	32507045				N	A B C D E F	G H I J K L				2t
7	**彈簧華司(SPRING WASHER)**											
	M1605-M10	92501218				8	A B C D E F	G H I J K L				
8	**六角螺栓(HEX HEAD BOLT)**											
	M1423005	92506021				4	A B C D E F	G H I J K L				
9	**彈簧華司(SPRING WASHER)**											
	M1605-M14	92506020				4	A B C D E F	G H I J K L				
10	**側滾輪(SIDE ROLLER)**											
	33806	92507511				4	A B C D E F	G H I J K L				
11	**扣環(RING “C”)**											
		92507517				2	A B C D E F	G H I J K L				
12	**螺栓(BOLT)**											
	M1410004	92507535				8	A B C D E F	G H I J K L				
13	**墊片(SHIM)**											
	33807	32507516				N	A B C D E F	G H I J K L				0.5t
14	**墊片(SHIM)**											
	33808	32507537				N	A B C D E F	G H I J K L				1t
15	**墊片(SHIM)**											
	33809	32507536				N	A B C D E F	G H I J K L				2t
16	**牙叉(FORK SUB-ASSY)(3.5 Foot)**											
		71507540			2000/10	2	A B	G H				停用(NOT USED)
		72507540			2000/10	2	C D	I J				停用(NOT USED)
		73007540			2000/10	2	E F	K L				停用(NOT USED)
	33363	41507540			2003/02	2	A B	G H				
	33364	42507540			2003/02	2	C D	I J				3.5ft
	33365	43007540			2003/02	2	E	K				
	35041	73507540				2	F	L				
16	**牙叉(FORK SUB-ASSY)(4 Foot)**											
		71507550			2000/10	2	A B	G H				停用(NOT USED)
		72507550			2000/10	2	C D	I J				停用(NOT USED)
		73007550			2000/10	2	E F	K L				停用(NOT USED)
	33366	41507550			2003/02	2	A B	G H				4ft

https://truckmanualshub.com/

二.三截式貨櫃型貨叉架組
A308-6A
LIFT BRACKET(TWO＆THREE CONTAINER FORM)

編號 NO.	零件名稱 PART NAME						FD						FG						FD〔C〕						FG〔C〕						機號 BODY NO.	備註 REMARK
	新碼 NEW PART NO.	舊碼 OLD PART NO.	規格 SPECIFICATION	互換性 ITC	應用日期 APPLIED DATE	數量 QTY	15 A	18 B	20 C	25 D	30 E	35 F	15 G	18 H	20 I	25 J	30 K	35 L	15 M	18 N	20 O	25 P	30 Q	35 R	15 S	18 T	20 U	25 V	30 W	35 X		
16	**牙叉(FORK SUB-ASSY)(4 Foot)**																															
	33367	42507550			2003/02	2				C	D					I	J															
	33368	43007550			2003/02	2					E						K															4ft
	35042	73507550				2						F						L														
16	**牙叉(FORK)(4.5 Foot)**																															
		71507560			2000/10	2	A	B					G	H																		停用(NOT USED)
		72507560			2000/10	2			C	D					I	J																停用(NOT USED)
		73007560			2000/10	2					E	F					K	L														停用(NOT USED)
	33369	41507560			2003/02	2	A	B					G	H																		
	33370	42507560			2003/02	2			C	D					I	J																4.5ft
	33371	43007560			2003/02	2					E						K															
	35043	73507560			2003/02	2						F						L														
16	**牙叉(FORK)(5 Foot)**																															
		71507570			2000/10	2	A	B					G	H																		停用(NOT USED)
		72507570			2000/10	2			C	D					I	J																停用(NOT USED)
		73007570			2000/10	2					E	F					K	L														停用(NOT USED)
	33372	41507570			2003/02	2	A	B					G	H																		
	33373	42507570			2003/02	2			C	D					I	J																5ft
	33374	43007570			2003/02	2					E						K															
	35016	73507570			2003/02	2						F						L														
16	**牙叉(FORK)(6 Foot)**																															
		71507580			2000/10	2	A	B					G	H																		停用(NOT USED)
		72507580			2000/10	2			C	D					I	J																停用(NOT USED)
		73007580			2000/10	2					E	F					K	L														停用(NOT USED)
	33375	41507580			2003/02	2	A	B					G	H																		
	33376	42507580			2003/02	2			C	D					I	J																6ft
	33377	43007580			2003/02	2					E						K															
	35044	73507580			2003/02	2						F						L														
17	**把手(KNOB, FORK STOPPER PIN)**																															
		72507531			2000/10	2	A	B	C	D	E	F	G	H	I	J	K	L														停用(NOT USED)
	33378	42507531			2003/02	2	A	B	C	D	E	F	G	H	I	J	K	L														
18	**彈簧(SPRING)**																															
		72507532			2000/10	2	A	B	C	D	E	F	G	H	I	J	K	L														停用(NOT USED)
	33810	42507532			2003/02	2	A	B	C	D	E	F	G	H	I	J	K	L														
19	**固定子(FIXED PIN)**																															
		72507533			2000/10	2	A	B	C	D			G	H	I	J																停用(NOT USED)
	33379	42507533			2003/02	2	A	B	C	D			G	H	I	J																
	33380	43007533				2					E	F					K	L														

https://truckmanualshub.com/

升降系統
A308
MAST SYSTEM

油壓管路組
A308-7
HYDRAULIC LINE

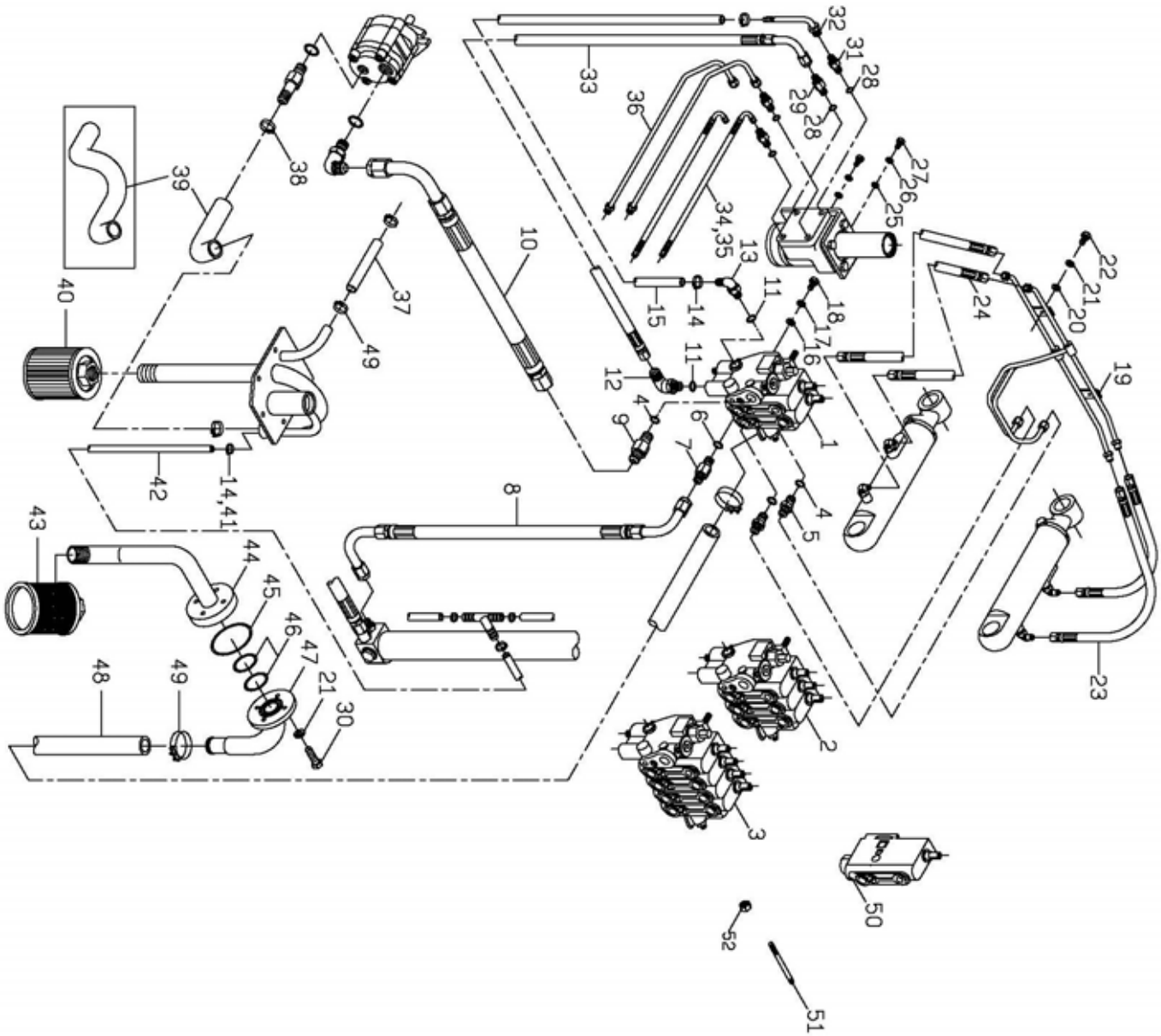

https://truckmanualshub.com/

升降系統
A308
MAST SYSTEM

油壓管路組
A308-7
HYDRAULIC LINE

編號 NO.	新碼 NEW PART NO.	舊碼 OLD PART NO.	規格 SPECIFICATION	互換性 ITC	應用日期 APPLIED DATE	數量 QTY	FD 15	FD 18	FD 20	FD 25	FD 30	FD 35	FG 15	FG 18	FG 20	FG 25	FG 30	FG 35	FD〔C〕15	FD〔C〕18	FD〔C〕20	FD〔C〕25	FD〔C〕30	FD〔C〕35	FG〔C〕15	FG〔C〕18	FG〔C〕20	FG〔C〕25	FG〔C〕30	FG〔C〕35	機號 BODY NO.	備註 REMARK
	零件名稱 PART NAME						A	B	C	D	E	F	G	H	I	J	K	L	M	N	O	P	Q	R	S	T	U	V	W	X		
1	兩排控制閥-標準(CONTROL VALVE, 2 VALVES)																															
	33823	92508201				1	A	B	C	D	E	F	G	H	I	J	K	L														STANDARD
2	三排控制閥-側移(CONTROL VALVE, 3 VALVES)																															
	33824	92508202				1	A	B	C	D	E	F	G	H	I	J	K	L														SIDE SHIFT
2	三排控制閥-傾卸(CONTROL VALVE, 3 VALVES)																															
	33825	92508206				1	A	B	C	D	E	F	G	H	I	J	K	L														HINGED FORK
3	四排控制閥-夾具(CONTROL VALVE, 4 VALVES)																															
	33826	92508203				1	A	B	C	D	E	F	G	H	I	J	K	L														SPECIAL LOAD
4	O型環("O"RING)																															
		92501107			2000/10	3	A	B	C	D	E	F	G	H	I	J	K	L														兩排(2VALVES)
		92501107			2000/10	5	A	B	C	D	E	F	G	H	I	J	K	L														三排(3VALVES)
		92501107			2000/10	7	A	B	C	D	E	F	G	H	I	J	K	L														四排(4VALVES)
	M0801-P18	92501107			2003/02	4	A	B	C	D	E	F	G	H	I	J	K	L														兩排(2VALVES)
	M0801-P18	92501107			2003/02	6	A	B	C	D	E	F	G	H	I	J	K	L														三排(3VALVES)
	M0801-P18	92501107			2003/02	8	A	B	C	D	E	F	G	H	I	J	K	L														四排(4VALVES)
5	接頭(CONNECTOR)																															
	33827	92508105				2	A	B	C	D	E	F	G	H	I	J	K	L														兩排(2VALVES)
	33827	92508105				4	A	B	C	D	E	F	G	H	I	J	K	L														三排(3VALVES)
	33827	92508105				6	A	B	C	D	E	F	G	H	I	J	K	L														四排(4VALVES)
6	O型環("O"RING)																															
	M0801004	92508012				2	A	B	C	D	E	F	G	H	I	J	K	L														
7	接頭(CONNECTOR)																															
	33828	92508011				1	A	B	C	D	E	F	G	H	I	J	K	L														
8	高壓管(HOSE, HIGH PRESSURE)																															
	M0502046	92508010				1	A	B	C	D			G	H	I	J																手排(MT)
	M0502045	93007301				1	A	B	C	D	E	F	G	H	I	J	K	L														自排(AT)
	M0502045	93007301				1					E	F					K	L														手排(MT)
9	接頭(CONNECTOR)																															
	33829	92508204				1	A	B	C	D	E	F	G	H	I	J	K	L														
10	高壓管(HOSE, HIGH PRESSURE)																															
	M0502047	92508205				1				C	D	E	F			I	J	K	L													手排(MT)
	M0502094				2006/02	1	A	B					G	H																	319754	手排(MT)
	M0502048	92508220				1	A	B	C	D	E	F	G	H	I	J	K	L														自排(AT)
11	O型環("O"RING)																															
	M0801002	94008223				2	A	B	C	D	E	F	G	H	I	J	K	L														
12	L型接頭(CONNECTOR "L")																															
	33426	92507431				1	A	B	C	D	E	F	G	H	I	J	K	L														自排(AT)

https://truckmanualshub.com/

油壓管路組
A308-7
HYDRAULIC LINE

編號 NO.	零件名稱 PART NAME						FD						FG						FD〔C〕						FG〔C〕						機號 BODY NO.	備註 REMARK
	新碼 NEW PART NO.	舊碼 OLD PART NO.	規格 SPECIFICATION	互換性 ITC	應用日期 APPLIED DATE	數量 QTY	15	18	20	25	30	35	15	18	20	25	30	35	15	18	20	25	30	35	15	18	20	25	30	35		
							A	B	C	D	E	F	G	H	I	J	K	L	M	N	O	P	Q	R	S	T	U	V	W	X		
12	**接頭(CONNECTOR)**																															
	32437	92508019A				1	A	B	C	D	E	F	G	H	I	J	K	L														手排(MT)
13	**90°插蕊接頭(90° CONNECTOR)**																															
	33833	92508207				1	A	B	C	D	E	F	G	H	I	J	K	L														
14	**管束(CLAMP, HOSE)**																															
	M1315011	92508007				2	A	B	C	D	E	F	G	H	I	J	K	L														
15	**回油管(HOSE, LOW PRESSURE)**																															
	M0501014	92508008				1	A	B	C	D	E	F	G	H	I	J	K	L														
16	**平華司(WASHER)**																															
	M1602013	92520420				4	A	B	C	D	E	F	G	H	I	J	K	L														
17	**彈簧華司(SPRING WASHER)**																															
	M1605-M10	92501218				4	A	B	C	D	E	F	G	H	I	J	K	L														停用(NOT USED)
	M1605-M10	92501218				3	A	B	C	D	E	F	G	H	I	J	K	L														
18	**螺栓(BOLT)**																															
		92508024				4	A	B	C	D	E	F	G	H	I	J	K	L														
19	**六通鋼管(CONNECTION SIX-WAY, TILT CYLINDER)**																															
	33834	92508208				1	A	B	C	D	E	F	G	H	I	J	K	L														
20	**平華司(WASHER)**																															
	M1602008	92508018				2	A	B	C	D	E	F	G	H	I	J	K	L														
21	**彈簧華司(SPRING WASHER)**																															
	M1605-M8	92501019				6	A	B	C	D	E	F	G	H	I	J	K	L														停用(NOT USED)
22	**螺栓(BOLT)**																															
	M1424-M8*25	92501104				2	A	B	C	D	E	F	G	H	I	J	K	L														
23	**高壓管(HOSE, HIGH PRESSURE)**																															
		92508017			2000/10	2	A	B	C	D	E	F	G	H	I	J	K	L														停用(NOT USED)
	M0501140	92507302			2003/02	2	A	B					G	H																		
	M0501143	92508017			2003/02	2			C	D	E	F			I	J	K	L														
24	**高壓管(HOSE, HIGH PRESSURE)**																															
		92507302			2000/10	2	A	B	C	D	E	F	G	H	I	J	K	L														停用(NOT USED)
	M0501141	92508225			2003/02	2	A	B					G	H																		
	M0501140	92507302			2003/02	2			C	D	E	F			I	J	K	L														
25	**平華司(WASHER)**																															
	M1602021	92512812				4	A	B	C	D	E	F	G	H	I	J	K	L														
26	**彈簧華司(SPRING WASHER)**																															
		92512811				4	A	B	C	D	E	F	G	H	I	J	K	L														
27	**螺栓(BOLT)**																															
	M1424010	92512810				4	A	B	C	D	E	F	G	H	I	J	K	L														

https://truckmanualshub.com/

油壓管路組
A308-7
HYDRAULIC LINE

編號 NO.	零件名稱 PART NAME 新碼 NEW PART NO.	舊碼 OLD PART NO.	規格 SPECIFICATION	互換性 ITC	應用日期 APPLIED DATE	數量 QTY	FD 15 A	FD 18 B	FD 20 C	FD 25 D	FD 30 E	FD 35 F	FG 15 G	FG 18 H	FG 20 I	FG 25 J	FG 30 K	FG 35 L	FD〔C〕 15 M	FD〔C〕 18 N	FD〔C〕 20 O	FD〔C〕 25 P	FD〔C〕 30 Q	FD〔C〕 35 R	FG〔C〕 15 S	FG〔C〕 18 T	FG〔C〕 20 U	FG〔C〕 25 V	FG〔C〕 30 W	FG〔C〕 35 X	機號 BODY NO.	備註 REMARK
28	**O型環("O"RING)**																														
		92508103			2000/10	4	A	B	C	D	E	F	G	H	I	J	K	L													停用(NOT USED)
	M0801003	92515307			2003/02	4	A	B	C	D	E	F	G	H	I	J	K	L													
29	**接頭(CONNECTOR)**																														
	33639	92508104				1	A	B	C	D	E	F	G	H	I	J	K	L													
30	**螺栓(BOLT)**																														
	M1424-M8*35	92501009				4	A	B	C	D	E	F	G	H	I	J	K	L													停用(NOT USED)
31	**接頭(CONNECTOR)**																														
	33836	92508101				3	A	B	C	D	E	F	G	H	I	J	K	L													
32	**插蕊接頭(CONNECTOR)**																														
	33837	92508102				1	A	B	C	D	E	F	G	H	I	J	K	L													
33	**高壓管(HOSE, HIGH PRESSURE)**																														
	M0501142	92508106				1	A	B	C	D	E	F	G	H	I	J	K	L													自排(AT)
	M0501144	92508109				1	A	B	C	D	E	F	G	H	I	J	K	L													手排(MT)
34	**高壓管(長)(HOSE, HIGH PRESSURE) (long)**																														
	M0501137	92508210				1	A	B	C	D			G	H	I	J															手排(MT)
	M0501145	93008210				1					E	F					K	L													
35	**高壓管(短)(HOSE, HIGH PRESSURE) (short)**																														
	M0501138	92508221				1	A	B	C	D			G	H	I	J															手排(MT)
	M0501146	93008221				1					E	F					K	L													
36	**油壓鋼管(STEEL TUBE)**																														
		32508108				2	A	B	C	D	E	F	G	H	I	J	K	L													自排(AT)
37	**透氣管(HOSE, SUCTION)**																														
		92508005	4JG2		2000/10	1				C	D	E	F																		停用(NOT USED)
		92508031	H20,H25		2000/10	1							G	H	I	J	K	L													停用(NOT USED)
		92508032	C240		2000/10	1	A	B	C	D																					停用(NOT USED)
	M0501015	92508031			2003/02	1	A	B					G	H																	
	M0501046	92508032			2003/02	1				C	D	E	F		I	J	K	L													
38	**管束(CLAMP, HOSE)**																														
	M1315013	92508003				2	A	B	C	D	E	F	G	H	I	J	K	L													
39	**吸油管(HOSE, LOW PRESSURE)**																														
	M0501139	91508002			2000/10	1	A	B	C				G	H	I																停用(NOT USED)
	M0501012	92508002			2000/10	1				D	E	F				J	K	L													停用(NOT USED)
	M0501013	92508005	C240		2003/02	1	A	B	C	D																					停用(NOT USED)
	M0501013	92508005	H20,H25		2003/02	1							G	H	I	J	K	L													停用(NOT USED)
		92508006	4JG2		2003/02	1				C	D	E	F																		停用(NOT USED)
	31696		C240		2006/07	1	A	B	C	D			G	H	I	J	K	L													自排(AT)

https://truckmanualshub.com/

油壓管路組
A308-7
HYDRAULIC LINE

編號 NO.	零件名稱 PART NAME						FD						FG						FD〔C〕						FG〔C〕						機號 BODY NO.	備註 REMARK
	新碼 NEW PART NO.	舊碼 OLD PART NO.	規格 SPECIFICATION	互換性 ITC	應用日期 APPLIED DATE	數量 QTY	15 A	18 B	20 C	25 D	30 E	35 F	15 G	18 H	20 I	25 J	30 K	35 L	15 M	18 N	20 O	25 P	30 Q	35 R	15 S	18 T	20 U	25 V	30 W	35 X		
39	**吸油管(HOSE, LOW PRESSURE)**																															
	34748		C240		2006/07	1	A	B	C	D																						手排(MT)
	31696		C240		2006/07	1	A	B	C	D																						自排(AT)
	34764		4JG2		2006/07	1					E	F																				
	34748		H20,H25		2006/07	1							G	H	I	J	K	L														
40	**濾油網(FILTER ASSY)**																															
	33838	92508014				1	A	B	C	D	E	F	G	H	I	J	K	L														
41	**管束(CLAMP, HOSE)**																															
	M1315012	92507306				2	A	B	C	D	E	F	G	H	I	J	K	L														
42	**回油管(HOSE, LOW PRESSURE)**																															
	M0501034	92507309				1	A	B	C	D	E	F	G	H	I	J	K	L														
43	**濾油網(FILTER ASSY, SUCTION)**																															
	33839	92508211				1	A	B	C	D	E	F	G	H	I	J	K	L														
44	**回油管固定座(BRACKET)**																															
	33840	32508212				1	A	B	C	D	E	F	G	H	I	J	K	L														停用(NOT USED)
45	**O型環("O"RING)**																															
	M0801-G80	92508213				1	A	B	C	D	E	F	G	H	I	J	K	L														停用(NOT USED)
46	**O型環("O"RING)**																															
	M0801-G45	92508214				2	A	B	C	D	E	F	G	H	I	J	K	L														停用(NOT USED)
47	**油管固定座(BRACKET)**																															
	33841	32508215				1	A	B	C	D	E	F	G	H	I	J	K	L														停用(NOT USED)
48	**油管(HOSE, SUCTION)**																															
	M0501139	91508002				1	A	B					G	H																		
	M0501012	92508002				1			C	D	E	F			I	J	K	L														
49	**管束(CLAMP, HOSE)**																															
	M1315008	92508004				4	A	B	C	D	E	F	G	H	I	J	K	L														
50	**控制閥油路塊-側移(CONTROL VALVE OIL CIRCUIT DIAGRAM)**																															
	33850					1	A	B	C	D	E	F	G	H	I	J	K	L														SIDE SHIFT
50	**控制閥油路塊-傾卸(CONTROL VALVE OIL CIRCUIT DIAGRAM)**																															
	33851					1	A	B	C	D	E	F	G	H	I	J	K	L														HINGED FORK
51	**操控閥螺栓(STEERING RALVE BOLT)**																															
	34895	32508030A				3	A	B	C	D	E	F	G	H	I	J	K	L														兩排(2VALVES)
	34896	32508031A				3	A	B	C	D	E	F	G	H	I	J	K	L														三排(3VALVES)
	34897	32508032A				3	A	B	C	D	E	F	G	H	I	J	K	L														四排(4VALVES)
	34563					3	A	B	C	D	E	F	G	H	I	J	K	L														五排(5VALVES)
52	**螺帽(NUT)**																															
	M1501011	92512812				3	A	B	C	D	E	F	G	H	I	J	K	L														

https://truckmanualshub.com/

附件系統
A309
ACCESSORY SYSTEM

https://truckmanualshub.com/

附件系統
A309
ACCESSORY SYSTEM

儀錶與開關
A309-1
METER & SWITCH

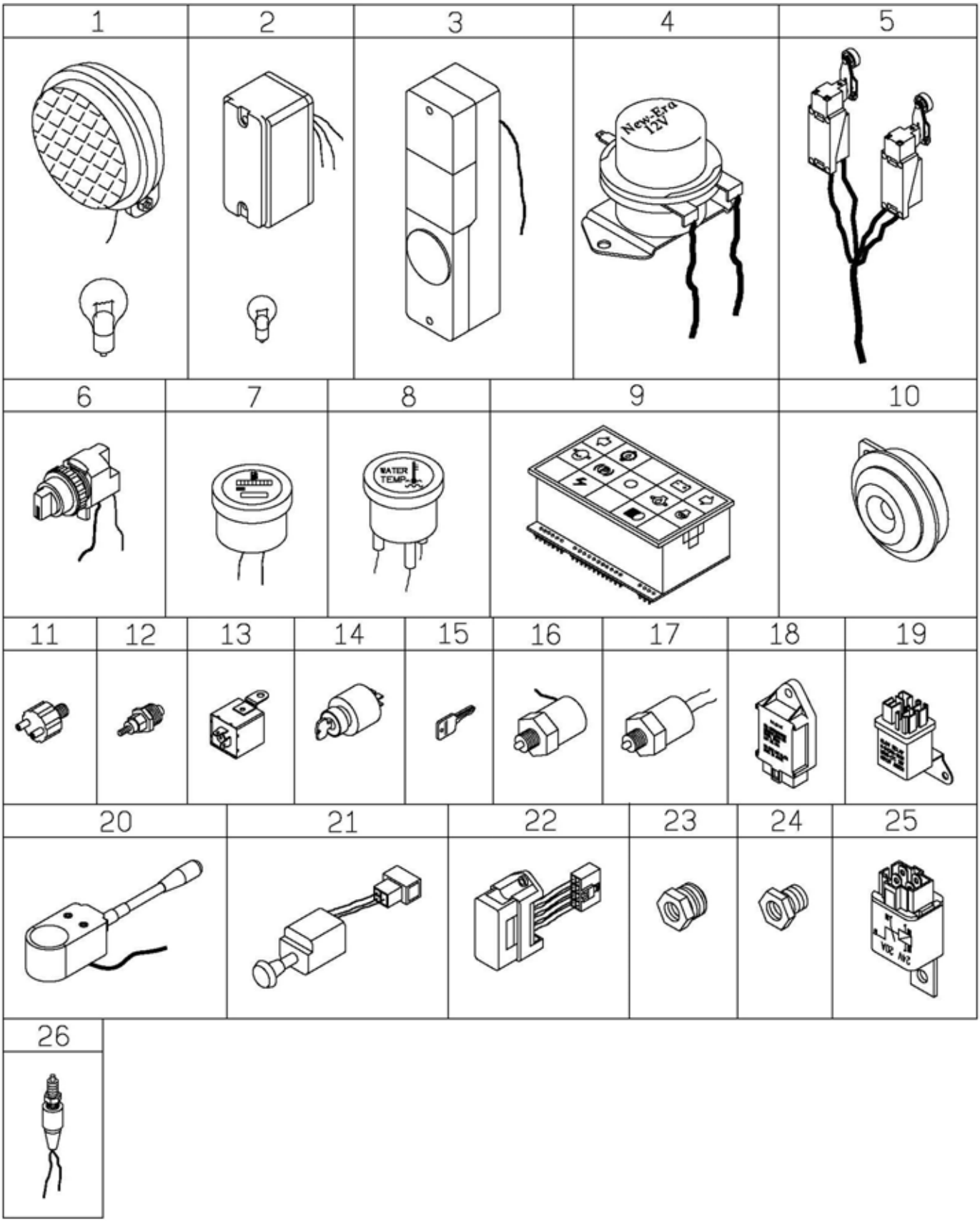

https://truckmanualshub.com/

附件系統
A309
ACCESSORY SYSTEM

儀錶與開關
A309-1
METER & SWITCH

編號 NO.	零件名稱 PART NAME						FD						FG						FD〔C〕						FG〔C〕						機號 BODY NO.	備註 REMARK
	新碼 NEW PART NO.	舊碼 OLD PART NO.	規格 SPECIFICATION	互換性 ITC	應用日期 APPLIED DATE	數量 QTY	15 A	18 B	20 C	25 D	30 E	35 F	15 G	18 H	20 I	25 J	30 K	35 L	15 M	18 N	20 O	25 P	30 Q	35 R	15 S	18 T	20 U	25 V	30 W	35 X		
1	大燈(HEAD LAMP)																															
	E2302001	92509010				2	A	B	C	D	E	F	G	H	I	J	K	L														
1	大燈燈泡(BULB,HEAD LAMP)																															
	E2302015	92513121				2	A	B	C	D	E	F	G	H	I	J	K	L														
2	方向燈(DIRECTION LIGHT)																															
	E2302002	92509031				2	A	B	C	D	E	F	G	H	I	J	K	L														
2	方向燈燈泡(DIRECTION LIGHT BULB)																															
	E2302016	92513103				2	A	B	C	D	E	F	G	H	I	J	K	L														
3	後車燈(TAIL LIGHT)																															
	E2302017	92509034				2	A	B	C	D	E	F	G	H	I	J	K	L														
3	後車燈燈泡 (TAIL LIGHT BULB, BRAKE)																															
	E2302003	92513103				2	A	B	C	D	E	F	G	H	I	J	K	L														剎車燈(BRAKE LAMP)
3	後車燈燈泡(TAIL LIGHT BULB)																															
	E2302019	92513104				4	A	B	C	D	E	F	G	H	I	J	K	L														
4	斷電裝置器(BREAKER)																															
		92513025			2000/10	1	A	B	C	D	E	F	G	H	I	J	K	L														停用(NOT USED)
	E0215001	92513025A			2003/02	1	A	B	C	D	E	F	G	H	I	J	K	L														CE
5	微動開關組(MICRO SWITCH)																															
	E0901025	92512776				1	A	B	C	D	E	F	G	H	I	J	K	L														停用(NOT USED)
6	斷電開關(BREAK SWITCH)																															
	E0215002	92513026				1	A	B	C	D	E	F	G	H	I	J	K	L														CE
7	電子式計時錶(ELECTRON HOUR METER)																															
	E3601006	92513032				1	A	B	C	D	E	F	G	H	I	J	K	L														選配件(CHOOSE)
8	水溫錶(WATER TEMPERATURE GAUGE)																															
	E3601004	92513004				1	A	B	C	D	E	F	G	H	I	J	K	L														停用(NOT USED)
	E3601013					1	A	B	C	D	E	F	G	H	I	J	K	L														停用(NOT USED)
	E3601024				2006/01	1	A	B	C	D	E	F	G	H	I	J	K	L														
9	電子式儀錶(ELECTRON METER)																															
	E3601010	92513031	GM3.0			1	A	B	C	D	E	F	G	H	I	J	K	L														
10	喇叭(HORN)																															
	E3804002	92513009				1	A	B	C	D	E	F	G	H	I	J	K	L														
11	剎車開關(BRAKE SWITCH)																															
	E1609001	92513008				1	A	B	C	D	E	F	G	H	I	J	K	L														
12	測溫器(TEMPERATURE SENSOR)																															
		92520314				2	A	B	C	D	E	F	G	H	I	J	K	L														
13	閃光器(FLASHER)																															
	E0212003	92513010				1	A	B	C	D	E	F	G	H	I	J	K	L														停用(NOT USED)
	E0216001	92513010				1	A	B	C	D	E	F	G	H	I	J	K	L														

https://truckmanualshub.com/

附件系統
A309
ACCESSORY SYSTEM

儀錶與開關
A309-1
METER & SWITCH

編號 NO.	零件名稱 PART NAME						FD						FG						FD〔C〕						FG〔C〕						機號 BODY NO.	備註 REMARK
	新碼 NEW PART NO.	舊碼 OLD PART NO.	規格 SPECIFICATION	互換性 ITC	應用日期 APPLIED DATE	數量 QTY	15	18	20	25	30	35	15	18	20	25	30	35	15	18	20	25	30	35	15	18	20	25	30	35		
							A	B	C	D	E	F	G	H	I	J	K	L	M	N	O	P	Q	R	S	T	U	V	W	X		
14	點火開關(ENGINE STARTER SWITCH)																															
	E1610001	92513012	C240			1	A	B	C	D																						停用(NOT USED)
	E1610002	92513027	4JG2			1					E	F																				停用(NOT USED)
	E1610001	92513012	C240,4JG2			1	A	B	C	D	E	F																				
	E1610003	92513024	H20,H25			1							G	H	I	J	K	L														
15	鑰匙(KEY)																															
	E1302019	92513028	C240			1	A	B	C	D																						停用(NOT USED)
	E1302020	92513029	4JG2			1					E	F																				停用(NOT USED)
	E1302019	92513028	C240,4JG2			1	A	B	C	D	E	F																				
	E1302021	92513030	H20,H25			1							G	H	I	J	K	L														
16	熄火開關(ENGINE STOP SWITCH)																															
	E1611001	92513013	C240,4JG2			1	A	B	C	D	E	F																				
	E1611002	92513019	H20,H25			1							G	H	I	J	K	L														
17	倒車開關(BACKWARD SWITCH)																															
	E1612001	92513011				1	A	B	C	D	E	F	G	H	I	J	K	L														停用(NOT USED)
18	計時器(TIMER)																															
	E3901001	92513018				1	A	B	C	D	E	F	G	H	I	J	K	L														停用(NOT USED)
	E3901001	92513018				1	A	B	C	D	E	F																				
19	預熱繼電器(PREHEAT RELAY)																															
	E0212006	92513001				1	A	B	C	D	E	F	G	H	I	J	K	L														停用(NOT USED)
	E0212006	92513001				1	A	B	C	D	E	F																				12V
20	方向燈開關(SWITCH DIRECTION LIGHT)																															
	E1607001	92513015				1	A	B	C	D	E	F	G	H	I	J	K	L														
21	大燈開關(HEAD LIGHT SWITCH)																															
	E1608002	92513022				1	A	B	C	D	E	F	G	H	I	J	K	L														
22	保險絲盒(FUSE BLOCK)																															
	E2802009	92513020				1	A	B	C	D	E	F	G	H	I	J	K	L														
23	油溫器座(OIL TEMPERATURE SENSOR SEAT)																															
		92520317			2000/10	1	A	B	C	D	E	F	G	H	I	J	K	L														停用(NOT USED)
	32149	92520317A			2003/02	1	A	B	C	D	E	F	G	H	I	J	K	L														停用(NOT USED)
	34970				2006/11	1	A	B	C	D	E	F	G	H	I	J	K	L														
24	水溫器座(WATER TEMPERATURE SENSOR SEAT)																															
	E3606002	34010214A	H20,H25			1							G	H	I	J	K	L														
25	繼電器(RELAY)																															
	E0212012				2005/05	3	A	B	C	D	E	F	G	H	I	J	K	L														12V
26	手剎車感應器(PARKING SWITCH)																															
	E3807001	34012912				1	A	B	C	D	E	F	G	H	I	J	K	L														

https://truckmanualshub.com/

附件系統
A309
ACCESSORY SYSTEM

工具箱組
A309-2
TOOLS BOX ASSY

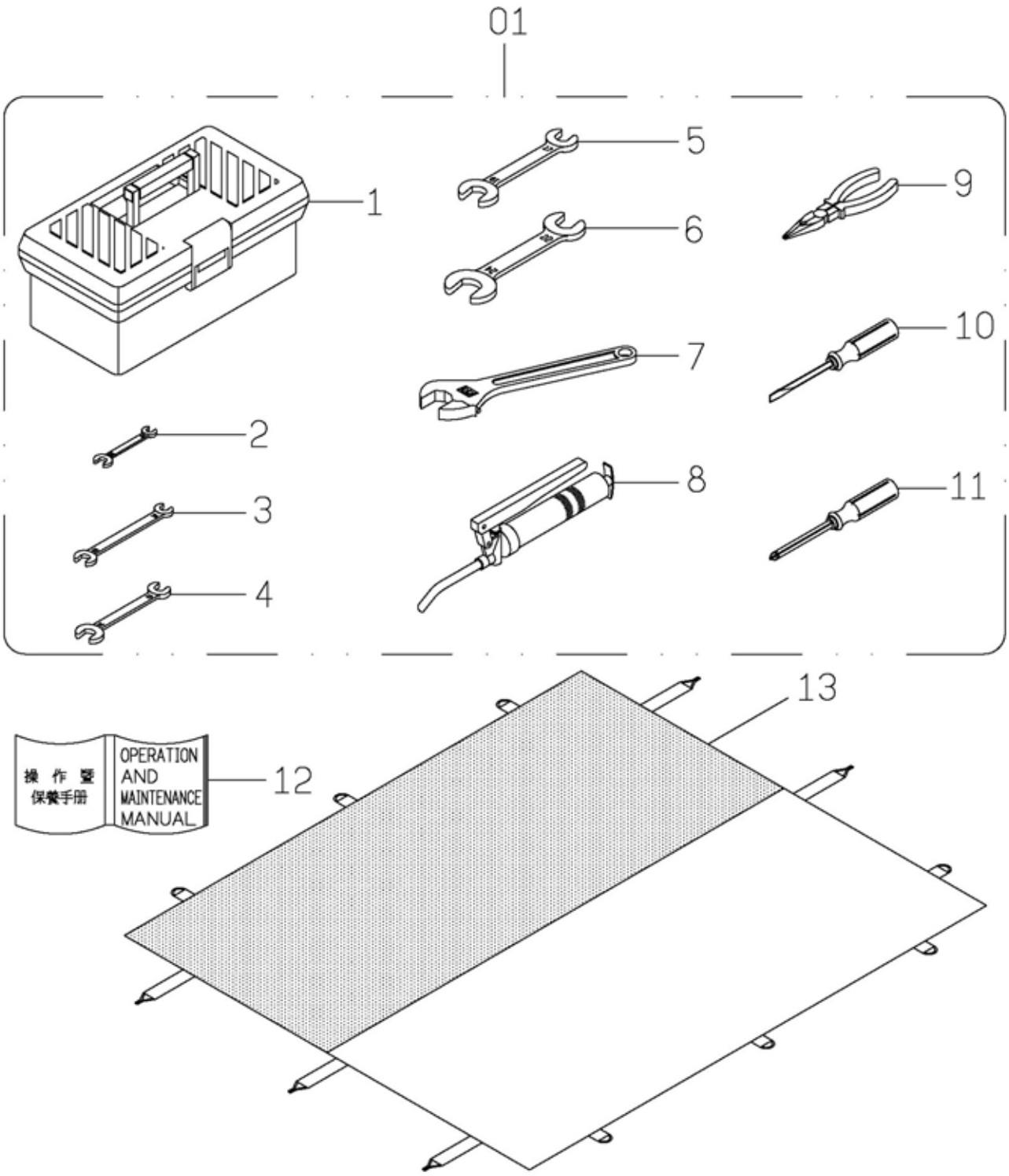

https://truckmanualshub.com/

附件系統
A309
ACCESSORY SYSTEM

工具箱組
A309-2
TOOLS BOX ASSY

編號 NO.	零件名稱 PART NAME						FD						FG						FD〔C〕						FG〔C〕						機號 BODY NO.	備註 REMARK
	新碼 NEW PART NO.	舊碼 OLD PART NO.	規格 SPECIFICATION	互換性 ITC	應用日期 APPLIED DATE	數量 QTY	15	18	20	25	30	35	15	18	20	25	30	35	15	18	20	25	30	35	15	18	20	25	30	35		
							A	B	C	D	E	F	G	H	I	J	K	L	M	N	O	P	Q	R	S	T	U	V	W	X		
01	工具箱(TOOLS BOX)																															
	B351128					1	A	B	C	D	E	F	G	H	I	J	K	L														
1	工具箱(TOOLS BOX)																															
	32481	92513211				1	A	B	C	D	E	F	G	H	I	J	K	L														
2	8-10開口板手(8-10, OPEN END WRENCH)																															
	33244	92513206				1	A	B	C	D	E	F	G	H	I	J	K	L														
3	10-12開口板手(10-12, OPEN END WRENCH)																															
	33245	92513205				1	A	B	C	D	E	F	G	H	I	J	K	L														
4	12-14開口板手(12-14, OPEN END WRENCH)																															
	33246	92513204				1	A	B	C	D	E	F	G	H	I	J	K	L														
5	17-19開口板手(17-19, OPEN END WRENCH)																															
	33247	92513203				1	A	B	C	D	E	F	G	H	I	J	K	L														
6	22-24開口板手(22-24, OPEN END WRENCH)																															
	33248	92513202				1	A	B	C	D	E	F	G	H	I	J	K	L														
7	10” 活動板手(10” ADJUSTABLE WRENCH)																															
	33249	92513201				1	A	B	C	D	E	F	G	H	I	J	K	L														
8	黃油打油器-100c.c.(PUMP GREASE-100c.c.)																															
	33250	92513212				1	A	B	C	D	E	F	G	H	I	J	K	L														
9	6” 尖嘴鉗(LONG NOSE PLIERS-6”)																															
	33251	92513209				1	A	B	C	D	E	F	G	H	I	J	K	L														
10	6” 平螺絲起子("-" SCREW DRIVER-6”)																															
	33252	92513208				1	A	B	C	D	E	F	G	H	I	J	K	L														
11	6” 十字螺絲起子("+" SCREW DRIVER-6”)																															
	33253	92513207				1	A	B	C	D	E	F	G	H	I	J	K	L														
12	操作暨保養手冊(OPERATING AND MAINTENANCE MANUAL)																															
		92513210			2000/10	1	A	B	C	D	E	F	G	H	I	J	K	L														停用(NOT USED)
	32828	DFM101				1	A	B	C	D	E	F	G	H	I	J	K	L														停用(NOT USED)
	33240	DFM103				1	A	B	C	D	E	F	G	H	I	J	K	L														停用(NOT USED)
	DFM101					1	A	B	C	D	E	F	G	H	I	J	K	L														
	DFM103					1	A	B	C	D	E	F	G	H	I	J	K	L														CE
13	頂蓬(CANVAS, ROOF)																															
	34040	A2509044				1	A	B	C	D	E	F	G	H	I	J	K	L														

https://truckmanualshub.com/

附件系統
A309
ACCESSORY SYSTEM

銘牌與貼紙
A309-3
PLATE & STICKER

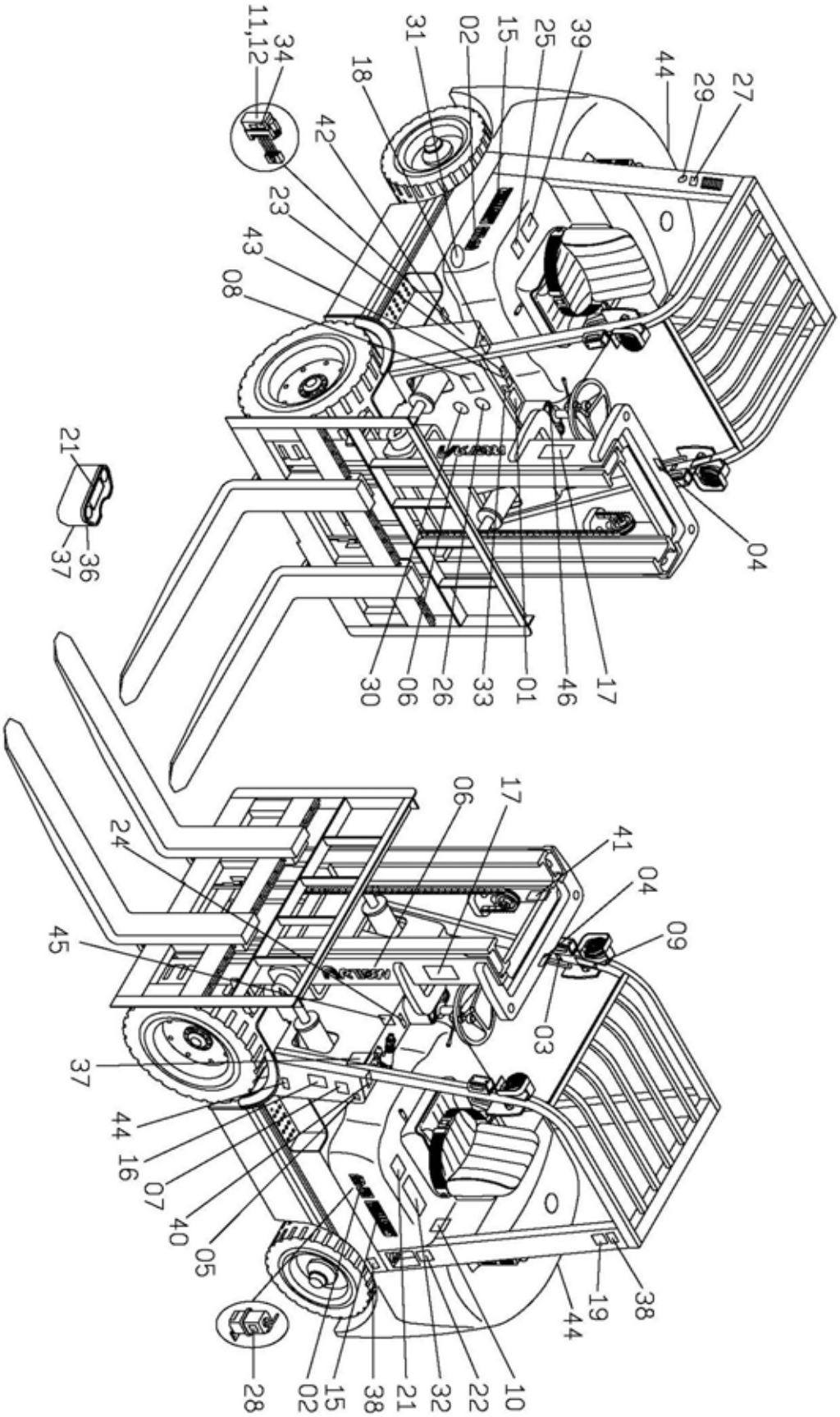

https://truckmanualshub.com/

附件系統
A309
ACCESSORY SYSTEM

銘牌與貼紙
A309-3
PLATE & STICKER

01

02

03

04

05

06

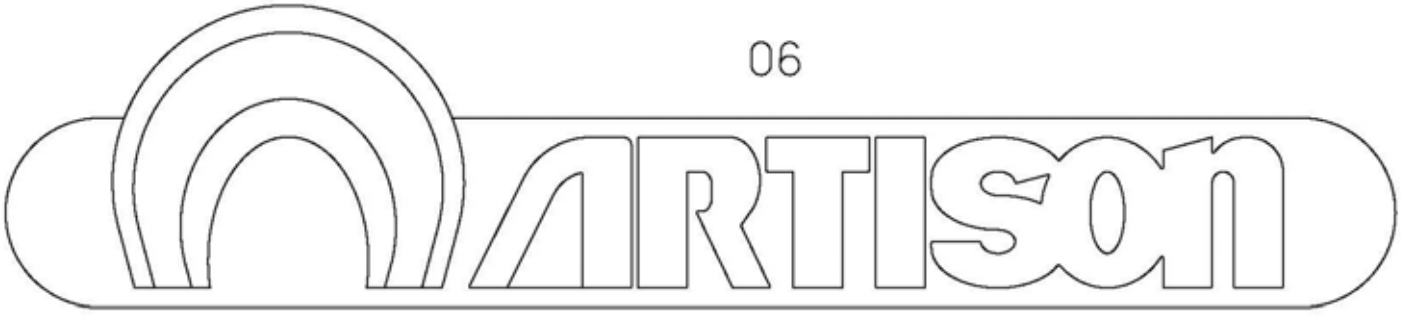

07

08

09

10

11

11

12

https://truckmanualshub.com/

附件系統
A309
ACCESSORY SYSTEM

銘牌與貼紙
A309-3
PLATE & STICKER

13

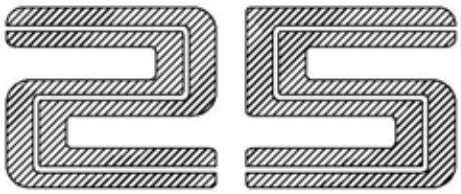

14

14

15

16

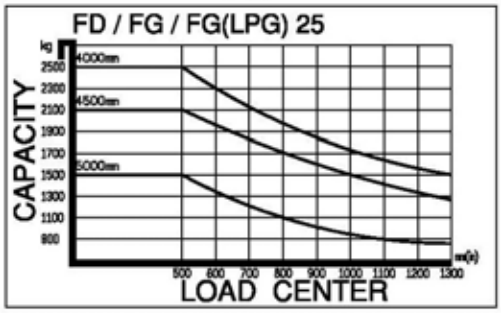

17

18

18

https://truckmanualshub.com/

銘牌與貼紙
A309-3
PLATE & STICKER

19

19

19

19

20

20

21

22

23

24

25

26

27

28

29

30

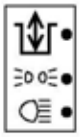

31

32

33

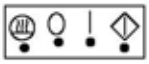

33

34

35

36

Safety instruction for LPG

1.There is a variation in equipment for filling LPG tanks. The local authorities that have jurisdiction have specific rules and regulations for filling LPG tanks. make sure these rules and regulations are available and underatood.

2.Close the fuel valve on the tank when parking the lift truck more than momentarily.
Do not store LPG tanks near heat or open flame. Do not park the lift truck near heat or ignition sources.
LPG is extremely flammable. When checking or filling an LPG tank: NO smoking. Stop engine.
Frost or Lpg odor indicates a leak. Inspect and repair a leak immediately. Do not start the engine.
Only trained and authorized personnel are permitted to operate filling equipment.
Fill LPG tanks outdoors. Stay at least 15 metres (50 feet) from buildings, motor vehicles, electrical equipment or other ignition sources. Stay at least 5 metres (15 feet) from LPG storage tanks.

3.Do not use an LPG tank that is damaged.A damaged LPG tank must be removed from service. A damaged hose or fitting can release LPG fuel and cause an explosion and fire hazard.

4.Before using the LPG system, the driver must confirm that the LPG tank is in the correct position of its bracket.

5.The size of LPG tank must not over the truck configuration.

6.Change-over of fuel
LPG to Gasoline
(1)Rev up engine and turn change-over switch to gasoline side.
(2)Close valve of gas cylinder after the engine turns smoothly.
Gasoline to LPG
(1)Open valve of gas cylinder.
(2)Turn off change-over switch, then turn it to LPG side before the engine stops.

37

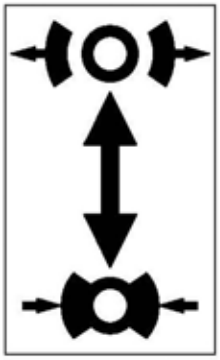

38

40

39

41

42

43

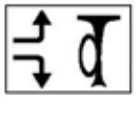

44

https://truckmanualshub.com/

銘牌與貼紙
A309-3
PLATE & STICKER

編號 NO.	零件名稱 PART NAME						FD						FG						FD〔C〕						FG〔C〕						機號 BODY NO.	備註 REMARK
	新碼 NEW PART NO.	舊碼 OLD PART NO.	規格 SPECIFICATION	互換性 ITC	應用日期 APPLIED DATE	數量 QTY	15	18	20	25	30	35	15	18	20	25	30	35	15	18	20	25	30	35	15	18	20	25	30	35		
							A	B	C	D	E	F	G	H	I	J	K	L	M	N	O	P	Q	R	S	T	U	V	W	X		
1	維護檢查貼紙(STICKER, DAILY INSPECTION)																															
	33255	32514001				1	A	B	C	D	E	F	G	H	I	J	K	L														內銷車(DOMESTIC)
2	商標貼紙(STICKER, MARK)																															
	32846	A2514006				2	A	B	C	D	E	F	G	H	I	J	K	L														內銷車(DOMESTIC)
3	照明警告貼紙(STICKER, ILLUMINATION)																															
	33257	32514061				1	A	B	C	D	E	F	G	H	I	J	K	L														內銷車(DOMESTIC)
4	桅桿警告貼紙(STICKER, CAUTION)																															
	33258	32514013				1	A	B	C	D	E	F	G	H	I	J	K	L														
5	引擎蓋指示貼紙(STICKER, ENGINE BONNET)																															
	33259	32514014				1	A	B	C	D	E	F	G	H	I	J	K	L														
6	商標貼紙(STICKER, MARK)																															
	31911					2	A	B	C	D	E	F	G	H	I	J	K	L														
7	乘座警告貼紙(STICKER, CAUTION)																															
	33261	32514019				1	A	B	C	D	E	F	G	H	I	J	K	L														
8	識別銘牌(PLATE, IDENTIFICATION)																															
	31913					1	A	B	C	D	E	F	G	H	I	J	K	L														
9	安全帶警告貼紙(STICKER, CAUTION)																															
	33264	32514017				1	A	B	C	D	E	F	G	H	I	J	K	L														外銷車(OVERSEAS)
10	風扇警告貼紙(STICKER, CAUTION)																															
	33265	32514005				1	A	B	C	D	E	F	G	H	I	J	K	L														
11	保險絲盒貼紙(STICKER, BLOCK FUSE)																															
	33266	32514034				1	A	B	C	D	E	F																				手排(MT)
11	保險絲盒貼紙(STICKER, BLOCK FUSE)																															
	33267	32514035				1	A	B	C	D	E	F																				自排(AT)
12	保險絲盒貼紙(STICKER, BLOCK FUSE)																															
	33268	32514062				1							G	H	I	J	K	L														汽油車(FG)
13	機型識別貼紙(STICKER, TYPE OF ENGINE)																															
	32847	A1514012A				2	A						G																			
	32861	A1814012A				2		B						H																		
	33432	A2014012A				2			C						I																	
	32836	A2514012A				2				D						J																
	32843	A3014012A				2					E						K															
	32845	A3514012A				2						F						L														
14	輪胎安全貼紙(STICKER, TIRE)																															
	33289	32514064				1	A	B	C	D	E	F	G	H	I	J	K	L														內銷車(DOMESTIC)
14	輪胎安全貼紙(STICKER, TIRE)																															
	33290	32514065				1	A	B	C	D	E	F	G	H	I	J	K	L														外銷車(OVERSEAS)

https://truckmanualshub.com/

銘牌與貼紙
A309-3
PLATE & STICKER

編號 NO.	新碼 NEW PART NO.	舊碼 OLD PART NO.	規格 SPECIFICATION	互換性 ITC	應用日期 APPLIED DATE	數量 QTY	FD 15	FD 18	FD 20	FD 25	FD 30	FD 35	FG 15	FG 18	FG 20	FG 25	FG 30	FG 35	FD〔C〕 15	FD〔C〕 18	FD〔C〕 20	FD〔C〕 25	FD〔C〕 30	FD〔C〕 35	FG〔C〕 15	FG〔C〕 18	FG〔C〕 20	FG〔C〕 25	FG〔C〕 30	FG〔C〕 35	機號 BODY NO.	備註 REMARK
	零件名稱 PART NAME						A	B	C	D	E	F	G	H	I	J	K	L	M	N	O	P	Q	R	S	T	U	V	W	X		
15	貨叉架警告貼紙(STICKER, CAUTION)																															
	33291	32514003A				2	A	B	C	D	E	F	G	H	I	J	K	L														
16	負重曲線牌(LOAD CENTER)																															
	33292	31514007				1	A						G																			
	33293	31814007				1		B						H																		
	33294	32014007				1			C						I																	
	33295	32514007				1				D						J																
	33296	33014007				1					E						K															
	33297	33514007				1						F						L														
16	負重曲線牌(LOAD CENTER)																															
	33298	31814037				1		B						H																	CE	
	33299	32514037				1				D						J															CE	
	33300	33014037				1					E						K														CE	
16	負重曲線牌(LOAD CENTER)																															
	33918					1	A						G																			
	33923					1		B						H																		
	33301	32014036				1			C						I																	側移(SIDE SHIFT)
	33302	32514036				1				D						J																
	33303	33014036				1					E						K															
	33924					1						F						L														
17	運吊指示貼紙(STICKER, CARGO)																															
	33304	32514018				2	A	B	C	D	E	F	G	H	I	J	K	L														
18	使用守則貼紙(STICKER, USE INSTRUCTION)																															
	33307	32514025				1	A	B	C	D	E	F	G	H	I	J	K	L														內銷車(DOMESTIC)
18	使用守則貼紙(STICKER, USE INSTRUCTION)																															
	33308	32514026				1	A	B	C	D	E	F	G	H	I	J	K	L														外銷車(OVERSEAS)
19	燃油指示貼紙(STICKER, FUEL)																															
	33309	32514020				1	A	B	C	D	E	F																				內銷車(DOMESTIC)
19	燃油指示貼紙(STICKER, FUEL)																															
	33310	32514021				1							G	H	I	J	K	L														內銷車(DOMESTIC)
19	燃油指示貼紙(STICKER, FUEL)																															
	33311	32514022				1	A	B	C	D	E	F																				外銷車(OVERSEAS)
19	燃油指示貼紙(STICKER, FUEL)																															
	33312	32514023				1							G	H	I	J	K	L														外銷車(OVERSEAS)
20	油水分離器警告貼紙(STICKER, CAUTION)																															
	33313	32514031				1	A	B	C	D	E	F	G	H	I	J	K	L														內銷車(DOMESTIC)
20	油水分離器警告貼紙(STICKER, CAUTION)																															
	33314	32514038				1	A	B	C	D	E	F	G	H	I	J	K	L														CE

https://truckmanualshub.com/

銘牌與貼紙
A309-3
PLATE & STICKER

編號 NO.	零件名稱 PART NAME						FD						FG						FD〔C〕						FG〔C〕						機號 BODY NO.	備註 REMARK
	新碼 NEW PART NO.	舊碼 OLD PART NO.	規格 SPECIFICATION	互換性 ITC	應用日期 APPLIED DATE	數量 QTY	15A	18B	20C	25D	30E	35F	15G	18H	20I	25J	30K	35L	15M	18N	20O	25P	30Q	35R	15S	18T	20U	25V	30W	35X		
21	進退檔指示貼紙(STICKER, GEAR SHIFTING)																															
	31776					1	A	B	C	D	E	F	G	H	I	J	K	L														自排(AT)
22	LPG安全貼紙(STICKER, LPG SAFETY)																															
	33316	32514066				1							G	H	I	J	K	L														內銷(LPG)
23	CE認證貼紙(STICKER, CE PAPERS)																															
	33317	32514040				1	A	B	C	D	E	F	G	H	I	J	K	L														CE
24	進氣口指示貼紙(STICKER, AIR INLET)																															
	33318	32514056				1	A	B	C	D	E	F	G	H	I	J	K	L														CE
25	副水箱指示貼紙(STICKER, TANK RESERVE)																															
	33319	32514057				1	A	B	C	D	E	F	G	H	I	J	K	L														CE
26	堆高機警示貼紙(STICKER, CAUTION)																															
	33320	32514041				1	A	B	C	D	E	F	G	H	I	J	K	L														CE
27	危險警告貼紙(STICKER, CAUTION)																															
	33321	32514042				1	A	B	C	D	E	F	G	H	I	J	K	L														CE
28	液壓油指示貼紙(STICKER, HYDRAULIC OIL)																															
	33322	32514044				1	A	B	C	D	E	F	G	H	I	J	K	L														CE
29	駕駛警示貼紙(STICKER, DRIVE)																															
	33323	32514039				1	A	B	C	D	E	F	G	H	I	J	K	L														CE
30	大燈開關貼紙(STICKER, LAMP)																															
	33324	32514050				1	A	B	C	D	E	F	G	H	I	J	K	L														CE
31	保險絲盒指示貼紙(STICKER, BLOCK FUSE)																															
	33325	32514047				1	A	B	C	D	E	F	G	H	I	J	K	L														CE
32	斷電開關指示貼紙(STICKER SWITCH BREAKER)																															
	33326	32514048				1	A	B	C	D	E	F	G	H	I	J	K	L														CE
33	啟動開關指示貼紙(STICKER, SWITCH STARTER)																															
	33327	32514051				1	A	B	C	D	E	F																				柴油車CE(FD)
33	啟動開關指示貼紙(STICKER, SWITCH STARTER)																															
	33328	32514052				1							G	H	I	J	K	L														汽油車CE(FG)
34	剎車油指示貼紙(STICKER, BRAKE OIL)																															
	33329	32514058				1	A	B	C	D	E	F	G	H	I	J	K	L														CE
35	運吊指示貼紙(STICKER, CARGO)																															
	33330	32514059				2	A	B	C	D	E	F	G	H	I	J	K	L														CE
36	安全須知貼紙(STICKER, SAFETY INSTRUCTION)																															
	33331	32514015				1	A	B	C	D	E	F	G	H	I	J	K	L														外銷(LPG)
37	手剎車指示貼紙(STICKER, PARKING BRAKE)																															
	33332	32514045				1	A	B	C	D	E	F	G	H	I	J	K	L														CE
38	鍊條警示貼紙(STICKER, CHAIN)																															
	33333	32514043				1	A	B	C	D	E	F	G	H	I	J	K	L														CE

https://truckmanualshub.com/

附件系統
A309
ACCESSORY SYSTEM

銘牌與貼紙
A309-3
PLATE & STICKER

編號 NO.	零件名稱 PART NAME						FD						FG						FD〔C〕						FG〔C〕						機號 BODY NO.	備註 REMARK
	新碼 NEW PART NO.	舊碼 OLD PART NO.	規格 SPECIFICATION	互換性 ITC	應用日期 APPLIED DATE	數量 QTY	1585 A	1805 B	2005 C	2505 D	3005 E	3505 F	1585 G	1805 H	2005 I	2505 J	3005 K	3505 L	1585 M	1805 N	2005 O	2505 P	3005 Q	3505 R	1585 S	1805 T	2005 U	2505 V	3005 W	3505 X		
39	**齒輪油指示貼紙(STICKER, GEAR OIL)**																															
	33334	32514054				1	A	B	C	D	E	F	G	H	I	J	K	L														CE
40	**升降貨叉指示貼紙(STICKER, BRACKET)**																															
	33335	32514046				1	A	B	C	D	E	F	G	H	I	J	K	L														CE
41	**胎壓指示貼紙(STICKER, TYRE DEFLECTION)**																															
	33336	32514060				2	A	B	C	D			G	H	I	J																CE
	33337	33014060				2					E	F					K	L														CE
42	**方向盤指示貼紙(STICKER, DIRECTOR)**																															
	33338	32514055				1	A	B	C	D	E	F	G	H	I	J	K	L														CE
43	**喇叭指示貼紙(STICKER, HORN)**																															
	33339	32514053				1	A	B	C	D	E	F	G	H	I	J	K	L														停用(NOT USED)
	31414					1	A	B	C	D	E	F	G	H	I	J	K	L														CE
44	**商標貼紙(STICKER, MARK)**																															
	31912					1	A	B	C	D	E	F	G	H	I	J	K	L														

https://truckmanualshub.com/

選配配件系統
A310
CHOOSE ACCESSORY SYSTEM

https://truckmanualshub.com/

選配配件系統
A310
CHOOSE ACCESSORY SYSTEM

側移組
A310-1
SIDE SHIFT

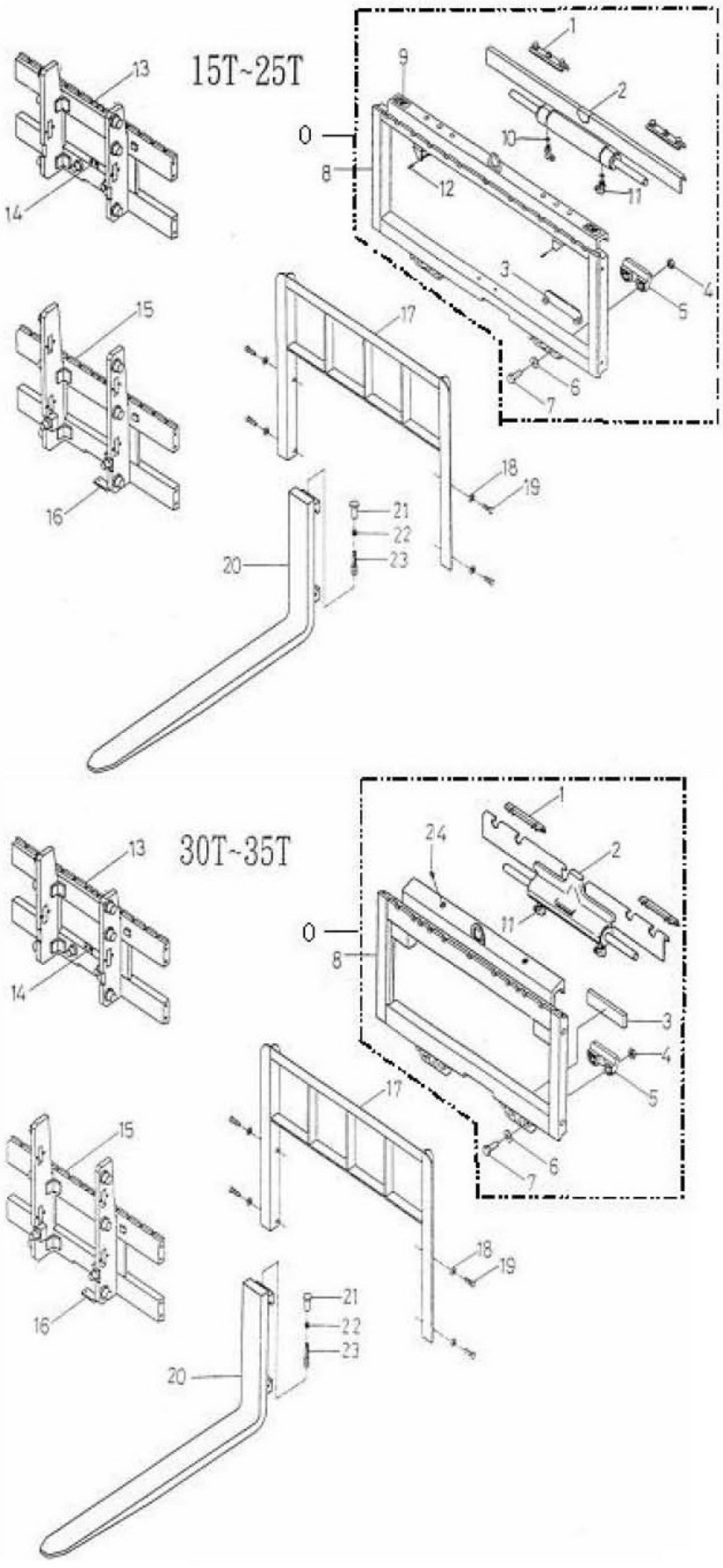

https://truckmanualshub.com/

選配配件系統
A310
CHOOSE ACCESSORY SYSTEM

側移組
A310-1
SIDE SHIFT

編號 NO.	新碼 NEW PART NO.	舊碼 OLD PART NO.	規格 SPECIFICATION	互換性 ITC	應用日期 APPLIED DATE	數量 QTY	FD 15	FD 18	FD 20	FD 25	FD 30	FD 35	FG 15	FG 18	FG 20	FG 25	FG 30	FG 35	FD〔C〕 15	FD〔C〕 18	FD〔C〕 20	FD〔C〕 25	FD〔C〕 30	FD〔C〕 35	FG〔C〕 15	FG〔C〕 18	FG〔C〕 20	FG〔C〕 25	FG〔C〕 30	FG〔C〕 35	機號 BODY NO.	備註 REMARK
							A	B	C	D	E	F	G	H	I	J	K	L	M	N	O	P	Q	R	S	T	U	V	W	X		
0	新側移總成(NEW SIDE SHIFT ASSY)																															
	B351113					1	A	B					G	H																		
	B350363	42551000				1			C	D					I	J																
	B350364	43051000				1					E	F					K	L														
1	耐磨滑條(上)(UPPER BEARING)																															
	33340	42551001				2	A	B	C	D			G	H	I	J																
	33341	43051001				2					E	F					K	L														
2	側移油壓缸組(ANCHOR CYLINDER)																															
	33342	42551002				1	A	B	C	D			G	H	I	J																
	33343	43051002				1					E	F					K	L														
3	耐磨滑條(下)(LOWER BEARING)																															
	33344	42551003				2	A	B	C	D			G	H	I	J																
	33345	43051003				2					E	F					K	L														
4	螺帽(NUT)																															
		42551004				4	A	B	C	D	E	F	G	H	I	J	K	L														
5	固定鉤(LOWER HOOK)																															
	33346	42551005				2	A	B	C	D	E	F	G	H	I	J	K	L														
6	平墊圈(WASHER)																															
		42551006				4	A	B	C	D	E	F	G	H	I	J	K	L														
7	螺栓(BOLT)																															
		42551007				4	A	B	C	D	E	F	G	H	I	J	K	L														
8	貨叉框架(FRAME)																															
	35055					1	A	B					G	H																		
	33347	42551008				1			C	D					I	J																
	33348	43051008				1					E	F					K	L														
9	貼紙(STICKER)																															
	33349	42551009				2	A	B	C	D			G	H	I	J																
10	平墊圈(WASHER)																															
		42551010				2	A	B	C	D			G	H	I	J																
11	接頭(CONNECTOR)																															
	33350	42551011				2	A	B	C	D			G	H	I	J																
	33351	43051011				2					E	F					K	L														
12	銷(ROLL PIN)																															
		42551012				2	A	B	C	D			G	H	I	J																
13	貨叉架(BRACKET) (CONTAINER &THREE-STAGE)																															
	33815	21515800				1	A	B					G	H																	貨櫃型 (CONTAINER FORM)	
	33816	22515800				1			C	D					I	J																
	33817	23015800				1					E						K															
	34787				2006/09	1						F						L														

https://truckmanualshub.com/

選配配件系統
A310
CHOOSE ACCESSORY SYSTEM

側移組
A310-1
SIDE SHIFT

編號 NO.	零件名稱 PART NAME						FD						FG						FD〔C〕						FG〔C〕						機號 BODY NO.	備註 REMARK
	新碼 NEW PART NO.	舊碼 OLD PART NO.	規格 SPECIFICATION	互換性 ITC	應用日期 APPLIED DATE	數量 QTY	15 A	18 B	20 C	25 D	30 E	35 F	15 G	18 H	20 I	25 J	30 K	35 L	15 M	18 N	20 O	25 P	30 Q	35 R	15 S	18 T	20 U	25 V	30 W	35 X		
13	**貨叉架(BRACKET) (CONTAINER &THREE-STAGE)**																															
	33352	21515500				1	A	B					G	H																		三截式 (THREE-STAGE)
	33353	22515500				1			C	D					I	J																
	33811	23515500				1					E						K															
	34765				2006/06	1						F						L														
14	**油管固定片(FIXED SLICE)(CONTAINER & THREE-STAGE)**																															
	33355	32515511				1	A	B	C	D	E	F	G	H	I	J	K	L														貨櫃型,三截型(CONTAINER FORM ,THREE-STAGE)
15	**貨叉架(BRACKET- STANDARD FORM)**																															
	33356	21507500				1	A	B					G	H																		二截型(TWO-STAGE)
	33357A	22507500				1			C	D					I	J																
	33358	23007500				1					E						K															
	31983					1						F						L														
16	**固定板(FLANGE SPLIT)**																															
	33359	32551013A				1	A	B	C	D	E	F	G	H	I	J	K	L														二截型(TWO-STAGE)
17	**柵欄(BACKREST)**																															
		22507800			2000/10	1			C	D					I	J																
		23007800			2000/10	1					E	F					K	L														
17	**柵欄(BACKREST)(48")**																															
	33360	52507800			2003/02	1	A	B					G	H																		
	33801	42507800			2003/02	1			C	D					I	J																
	33802	43007800			2003/02	1					E	F					K	L														
18	**彈簧華司(SPRING WASHER)**																															
	M1605-M14	92506020				4	A	B	C	D	E	F	G	H	I	J	K	L														
19	**螺栓(BOLT)**																															
	M1423005	92506021				4	A	B	C	D	E	F	G	H	I	J	K	L														
20	**牙叉(FORK)(3.5 Foot)**																															
		71507540			2000/10	2	A	B					G	H																		停用(NOT USED)
		72507540			2000/10	2			C	D					I	J																停用(NOT USED)
		73007540			2000/10	2					E	F					K	L														停用(NOT USED)
	33363	41507540			2003/02	2	A	B					G	H																		
	33364	42507540			2003/02	2			C	D					I	J																3.5ft
	33365	43007540			2003/02	2					E	F					K	L														
20	**牙叉(FORK)(4 Foot)**																															
		71507550			2000/10	2	A	B					G	H																		停用(NOT USED)
		72507550			2000/10	2			C	D					I	J																停用(NOT USED)
		73007550			2000/10	2					E	F					K	L														停用(NOT USED)

https://truckmanualshub.com/

選配配件系統
A310
CHOOSE ACCESSORY SYSTEM

側移組
A310-1
SIDE SHIFT

編號 NO.	零件名稱 PART NAME						FD						FG						FD〔C〕						FG〔C〕						機號 BODY NO.	備註 REMARK
	新碼 NEW PART NO.	舊碼 OLD PART NO.	規格 SPECIFICATION	互換性 ITC	應用日期 APPLIED DATE	數量 QTY	15 A	18 B	20 C	25 D	30 E	35 F	15 G	18 H	20 I	25 J	30 K	35 L	15 M	18 N	20 O	25 P	30 Q	35 R	15 S	18 T	20 U	25 V	30 W	35 X		
20	牙叉(FORK)(4 Foot)																															
	33366	41507550			2003/02	2	A	B					G	H																		
	33367	42507550			2003/02	2			C	D					I	J																4ft
	33368	43007550			2003/02	2					E	F					K	L														
20	牙叉(FORK)(4.5 Foot)																															
		71507560			2000/10	2	A	B					G	H																		停用(NOT USED)
		72507560			2000/10	2			C	D					I	J																停用(NOT USED)
		73007560			2000/10	2					E	F					K	L														停用(NOT USED)
	33369	41507560			2003/02	2	A	B					G	H																		
	33370	42507560			2003/02	2			C	D					I	J																4.5ft
	33371	43007560			2003/02	2					E	F					K	L														
20	牙叉(FORK)(5 Foot)																															
		71507570			2000/10	2	A	B					G	H																		停用(NOT USED)
		72507570			2000/10	2			C	D					I	J																停用(NOT USED)
		73007570			2000/10	2					E	F					K	L														停用(NOT USED)
	33372	41507570			2003/02	2	A	B					G	H																		
	33373	42507570			2003/02	2			C	D					I	J																5ft
	33374	43007570			2003/02	2					E	F					K	L														
20	牙叉(FORK)(6 Foot)																															
		71507580			2000/10	2	A	B					G	H																		停用(NOT USED)
		72507580			2000/10	2			C	D					I	J																停用(NOT USED)
		73007580			2000/10	2					E	F					K	L														停用(NOT USED)
	33375	41507580			2003/02	2	A	B					G	H																		
	33376	42507580			2003/02	2			C	D					I	J																6ft
	33377	43007580			2003/02	2					E	F					K	L														
21	把手(KNOB, FORK STOPPER PIN)																															
		72507531			2000/10	2	A	B	C	D	E	F	G	H	I	J	K	L														停用(NOT USED)
	33378	42507531			2003/02	2	A	B	C	D	E	F	G	H	I	J	K	L														
22	彈簧(SPRING)																															
		72507532			2000/10	2	A	B	C	D	E	F	G	H	I	J	K	L														停用(NOT USED)
	33810	42507532			2003/02	2	A	B	C	D	E	F	G	H	I	J	K	L														
23	固定子(PIN)																															
		72507533			2000/10	2	A	B	C	D			G	H	I	J																停用(NOT USED)
	33379	42507533			2003/02	2	A	B	C	D			G	H	I	J																
	33380	43007533			2003/02	2					E	F					K	L														
24	黃油嘴(GREASE CONNECTOR)																															
		43051009				2					E	F					K	L														

https://truckmanualshub.com/

選配配件系統
A310
CHOOSE ACCESSORY SYSTEM

傾卸組
A310-2
HINGED FORK

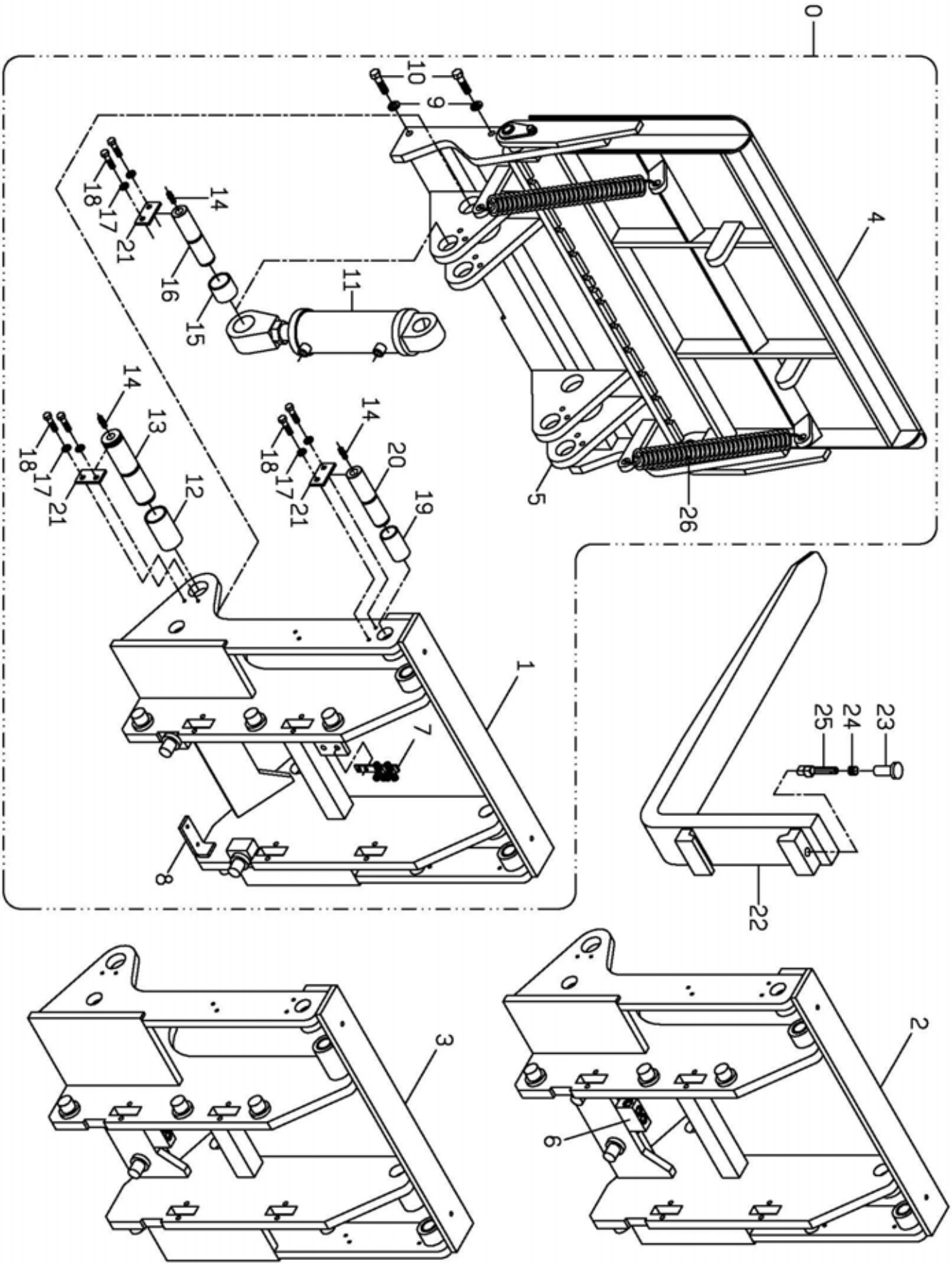

https://truckmanualshub.com/

選配配件系統
A310
CHOOSE ACCESSORY SYSTEM

傾卸組
A310-2
HINGED FORK

編號 NO.	零件名稱 PART NAME						FD						FG						FD〔C〕						FG〔C〕						機號 BODY NO.	備註 REMARK
	新碼 NEW PART NO.	舊碼 OLD PART NO.	規格 SPECIFICATION	互換性 ITC	應用日期 APPLIED DATE	數量 QTY	15	18	20	25	30	35	15	18	20	25	30	35	15	18	20	25	30	35	15	18	20	25	30	35		
							A	B	C	D	E	F	G	H	I	J	K	L	M	N	O	P	Q	R	S	T	U	V	W	X		
0	**傾卸總成(HINGED FORK)**																															
	B350365	22552020				1				D						J															二截型 (TWO-STAGE)
	B350366	23052020				1					E	F					K	L														
	B350285					1				D						J															貨櫃型 (CONTAINER FORM)
	B350291					1					E	F					K	L														
	B350297					1				D						J															三截型 (THREE-STAGE)
	B350522					1					E	F					K	L														
1	**傾卸托架(HINGED BRACKET, STANDARD)**																															
	33381	22552100A				1				D						J															二截型 (TWO-STAGE)
	33382	23052100				1					E	F					K	L														
2	**傾卸托架(HINGED BRACKET, CONTAINER)**																															
	33383	22552200				1				D						J															貨櫃型 (CONTAINER FORM)
	33384	23052200				1					E	F					K	L														
3	**傾卸托架(HINGED BRACKET, TRIPLEXING)**																															
	33385	22552300				1				D						J															三截型 (THREE-STAGE)
	33386	23052300				1					E	F					K	L														
4	**柵欄(BACKREST)**																															
	33387	42552400				1				D						J															
	33388	43052400				1					E	F					K	L														
5	**貨叉架(BRACKET)**																															
	33389	22552600				1				D						J															
	33390	23052600				1					E	F					K	L														
6	**四通接頭(CONNECTION, FOUR-WAY)(CONTAINER & THREE-STAGE)**																															
	33391	32551012A				1				D	E	F				J	K	L														貨櫃型,三截型(CONTAINER FORM ,THREE-STAGE)
7	**六通接頭(CONNECTION, SIX-WAY)**																															
	33392	32552001				1				D	E	F				J	K	L														二截型(TWO-STAGE)
8	**固定板(FLANGE SPLIT)(STANDARD FORM)**																															
	33359	32551013A				1				D	E	F				J	K	L														二截型(TWO-STAGE)
9	**彈簧華司(SPRING WASHER)**																															
	M1605-M14	92506020				4				D	E	F				J	K	L														
10	**螺栓(BOLT)**																															
	M1423005	92506021				4				D	E	F				J	K	L														
11	**傾卸油壓缸(HYDRAULIC CYLINDER)**																															
		22552700			2000/10	2				D	E	F				J	K	L														
	33393	42552700			2003/02	2				D	E	F				J	K	L														
12	**襯套(BUSHING)**																															
	33394	32552009				2				D	E	F				J	K	L														

https://truckmanualshub.com/

選配配件系統
A310
CHOOSE ACCESSORY SYSTEM

傾卸組
A310-2
HINGED FORK

編號 NO.	零件名稱 PART NAME						FD						FG						FD〔C〕						FG〔C〕						機號 BODY NO.	備註 REMARK
	新碼 NEW PART NO.	舊碼 OLD PART NO.	規格 SPECIFICATION	互換性 ITC	應用日期 APPLIED DATE	數量 QTY	15 A	18 B	20 C	25 D	30 E	35 F	15 G	18 H	20 I	25 J	30 K	35 L	15 M	18 N	20 O	25 P	30 Q	35 R	15 S	18 T	20 U	25 V	30 W	35 X		
13	固定心軸(FIXED MANDREL)(STANDARD & CONTAINER FORM)																															
	33395	32552012				2				D						J															二截型,貨櫃型(TWO-STAGE, CONTAINER	
	33396	33052012				2					E	F					K	L														
	33397	32552013				2				D						J															三截型(THREE-STAGE)	
	33398	33052013				2					E	F					K	L														
14	黃油嘴(GREASE CONNECTOR)																															
	M1321-M8	92507424				6					D	E F					J	K L														
15	襯套(BUSHING)																															
	33399	32552004				4					D	E F					J	K L														
16	固定心軸(FIXED MANDREL)																															
	33400	32552008				2					D	E F					J	K L														
17	彈簧華司(SPRING WASHER)																															
	M1605-M10	92501218				12					D	E F					J	K L														
18	螺栓(BOLT)																															
	M1424003	92520301				12					D	E F					J	K L														
19	襯套(BUSHING)																															
	33401	32552010				2					D	E F					J	K L														
20	固定心軸(FIXED MANDREL)(STANDARD & CONTAINER FORM)																															
	33402	32552015				2				D						J															二截型,貨櫃型(TWO-STAGE, CONTAINER	
	33403	33052015A				2					E	F					K	L														
20	固定心軸(FIXED MANDREL) (THREE-STAGE)																															
	33404	32552016				2				D						J															三截型(THREE-STAGE)	
	33405	33052016				2					E	F					K	L														
21	止動板(PLATE, REVERSE IDLE SHAFT LOCK)																															
		32552014			2000/10	2					D	E F					J	K L														停用(NOT USED)
		32552011			2000/10	4					D	E F					J	K L														
	33406	32552014			2003/02	6					D	E F					J	K L														
22	牙叉(FORK)(3.5 Foot)																															
		72552501			2000/10	2				D						J															停用(NOT USED)	
		73052501			2000/10	2					E	F					K	L													停用(NOT USED)	
	33407	42552501			2003/02	2				D						J															3.5ft	
	33408	43052501			2003/02	2					E	F					K	L														
22	牙叉(FORK)(4 Foot)																															
		72552502			2000/10	2				D						J															停用(NOT USED)	
		73052502			2000/10	2					E	F					K	L													停用(NOT USED)	
	33409	42552502			2003/02	2				D						J															4ft	
	33410	43052502			2003/02	2					E	F					K	L														

https://truckmanualshub.com/

選配配件系統
A310
CHOOSE ACCESSORY SYSTEM

傾卸組
A310-2
HINGED FORK

編號 NO.	零件名稱 PART NAME						FD						FG						FD〔C〕						FG〔C〕						機號 BODY NO.	備註 REMARK
	新碼 NEW PART NO.	舊碼 OLD PART NO.	規格 SPECIFICATION	互換性 ITC	應用日期 APPLIED DATE	數量 QTY	15 A	18 B	20 C	25 D	30 E	35 F	15 G	18 H	20 I	25 J	30 K	35 L	15 M	18 N	20 O	25 P	30 Q	35 R	15 S	18 T	20 U	25 V	30 W	35 X		
22	牙叉(FORK)(4.5 Foot)																															
		72552503			2000/10	2				D						J															停用(NOT USED)
		73052503			2000/10	2					E	F					K	L													停用(NOT USED)
	33411	42552503			2003/02	2				D						J															4.5ft
	33412	43052503			2003/02	2					E	F					K	L													
22	牙叉(FORK)(5 Foot)																															
		72552504			2000/10	2				D						J															停用(NOT USED)
		73052504			2000/10	2					E	F					K	L													停用(NOT USED)
	33413	42552504			2003/02	2				D						J															5ft
	33414	43052504			2003/02	2					E	F					K	L													
23	把手(KNOB, FORK STOPPER PIN)																															
		72507531			2000/10	2				D	E	F				J	K	L													停用(NOT USED)
	33378	42507531			2003/02	2				D	E	F				J	K	L													
24	彈簧(SPRING)																															
		72507532			2000/10	2				D	E	F				J	K	L													停用(NOT USED)
		42507532			2003/02	2				D	E	F				J	K	L													
25	固定子(PIN)																															
		72507533			2000/10	2				D	E	F				J	K	L													停用(NOT USED)
	33379	42507533			2003/02	2				D						J															
	33380	43007533			2003/02	2					E	F					K	L													
26	拉力彈簧(SPRING)																															
	32411	42552414				2				D	E	F				J	K	L													

https://truckmanualshub.com/

選配配件系統
A310
CHOOSE ACCESSORY SYSTEM

二截式側移配管組
A310-3
HOSE & ROLL FOR SIDE SHIFT (TWO-STAGE)

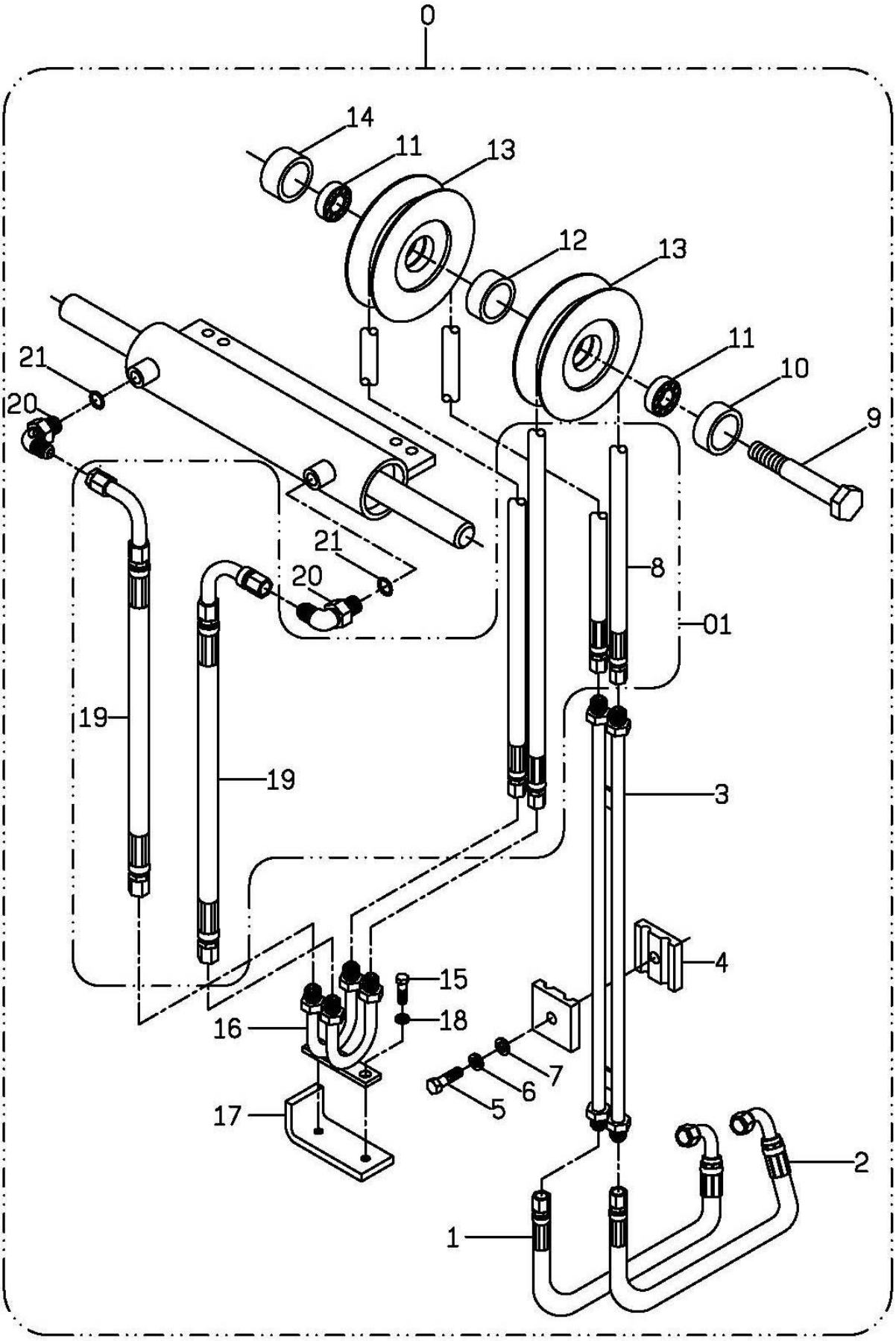

https://truckmanualshub.com/

選配配件系統
A310
CHOOSE ACCESSORY SYSTEM

二截式側移配管組
A310-3
HOSE & ROLL FOR SIDE SHIFT (TWO-STAGE)

編號 NO.	新碼 NEW PART NO.	舊碼 OLD PART NO.	規格 SPECIFICATION	互換性 ITC	應用日期 APPLIED DATE	數量 QTY	FD 15	FD 18	FD 20	FD 25	FD 30	FD 35	FG 15	FG 18	FG 20	FG 25	FG 30	FG 35	FD〔C〕 15	FD〔C〕 18	FD〔C〕 20	FD〔C〕 25	FD〔C〕 30	FD〔C〕 35	FG〔C〕 15	FG〔C〕 18	FG〔C〕 20	FG〔C〕 25	FG〔C〕 30	FG〔C〕 35	機號 BODY NO.	備註 REMARK
							A	B	C	D	E	F	G	H	I	J	K	L	M	N	O	P	Q	R	S	T	U	V	W	X		
0	**側移配管總成(SIDE SHIFT LINE ASSY)**																															
	B350367					1	A	B	C	D			G	H	I	J																3M
	B350374					1					E	F					K	L														
	B350368					1	A	B	C	D			G	H	I	J																3.3M
	B350375					1					E	F					K	L														
	B350369					1	A	B	C	D			G	H	I	J																3.5M
	B350376					1					E	F					K	L														
	B350370					1	A	B	C	D			G	H	I	J																3.7M
	B350377					1					E	F					K	L														
	B350371					1	A	B	C	D			G	H	I	J																4M
	B350378					1					E	F					K	L														
	B350372					1	A	B	C	D			G	H	I	J																4.5M
	B350379					1					E	F					K	L														
	B350373					1	A	B	C	D			G	H	I	J																5M
	B350380					1					E	F					K	L														
01	**油管組(HYDRAULIC LINE)**																															
	B350381					1	A	B	C	D			G	H	I	J																3M
	B350388					1					E	F					K	L														
	B350382					1	A	B	C	D			G	H	I	J																3.3M
	B350389					1					E	F					K	L														
	B350383					1	A	B	C	D			G	H	I	J																3.5M
	B350390					1					E	F					K	L														
	B350384					1	A	B	C	D			G	H	I	J																3.7M
	B350391					1					E	F					K	L														
	B350385					1	A	B	C	D			G	H	I	J																4M
	B350392					1					E	F					K	L														
	B350386					1	A	B	C	D			G	H	I	J																4.5M
	B350393					1					E	F					K	L														
	B350387					1	A	B	C	D			G	H	I	J																5M
	B350394					1					E	F					K	L														
1	**高壓油管(HOSE, HIGH PRESSURE)**																															
	M0501164	92550101				1	A	B	C	D	E	F	G	H	I	J	K	L														
2	**高壓油管(HOSE, HIGH PRESSURE)**																															
	M0501165	92550102				1	A	B	C	D	E	F	G	H	I	J	K	L														
3	**四通接頭(CONNECTION, FOUR-WAY)**																															
	33415	92550103				1	A	B	C	D	E	F	G	H	I	J	K	L														
4	**固定塊(FLANGE SPLIT)**																															
	33416	92550104				1	A	B	C	D	E	F	G	H	I	J	K	L														

https://truckmanualshub.com/

選配配件系統
A310
CHOOSE ACCESSORY SYSTEM

二截式側移配管組
A310-3
HOSE & ROLL FOR SIDE SHIFT (TWO-STAGE)

編號 NO.	新碼 NEW PART NO.	舊碼 OLD PART NO.	規格 SPECIFICATION	互換性 ITC	應用日期 APPLIED DATE	數量 QTY	FD 15 A	FD 18 B	FD 20 C	FD 25 D	FD 30 E	FD 35 F	FG 15 G	FG 18 H	FG 20 I	FG 25 J	FG 30 K	FG 35 L	FD〔C〕15 M	FD〔C〕18 N	FD〔C〕20 O	FD〔C〕25 P	FD〔C〕30 Q	FD〔C〕35 R	FG〔C〕15 S	FG〔C〕18 T	FG〔C〕20 U	FG〔C〕25 V	FG〔C〕30 W	FG〔C〕35 X	機號 BODY NO.	備註 REMARK
5	**螺栓(BOLT)**																															
	M1424007	92550105				1	A	B	C	D	E	F	G	H	I	J	K	L														
6	**彈簧華司(SPRING WASHER)**																															
	M1605-M10	92501218				1	A	B	C	D	E	F	G	H	I	J	K	L														
7	**平華司(WASHER)**																															
	M1602013	92520420				1	A	B	C	D	E	F	G	H	I	J	K	L														
8	**高壓油管(HOSE, HIGH PRESSURE)**																															
	M0501161	32550108				2	A	B	C	D	E	F	G	H	I	J	K	L														3M
	M0501178	32550119				2	A	B	C	D	E	F	G	H	I	J	K	L														3.3M
	M0501187	32550120				2	A	B	C	D	E	F	G	H	I	J	K	L														3.5M
		32550123				2	A	B	C	D	E	F	G	H	I	J	K	L														3.7M
	M0501188	32550121				2	A	B	C	D	E	F	G	H	I	J	K	L														4M
	M0501189	32550122				2	A	B	C	D	E	F	G	H	I	J	K	L														4.5M
	M0501190	32550124				2	A	B	C	D	E	F	G	H	I	J	K	L														5M
9	**螺栓(BOLT)**																															
	33450	32550316				1	A	B	C	D	E	F	G	H	I	J	K	L														
10	**隔圈(SPACER)**																															
	33417	32550110				1	A	B	C	D	E	F	G	H	I	J	K	L														停用(NOT USED)
	33420	32550113				1	A	B	C	D	E	F	G	H	I	J	K	L														
11	**軸承(BEARING)**																															
		92512418			2000/10	2	A	B	C	D	E	F	G	H	I	J	K	L														停用(NOT USED)
	M0901-6003ZZ	92516414			2003/02	2	A	B	C	D	E	F	G	H	I	J	K	L														停用(NOT USED)
12	**隔圈(SPACER)**																															
	33418	32550111				1	A	B	C	D	E	F	G	H	I	J	K	L														停用(NOT USED)
	34585				2006/03	1	A	B	C	D	E	F	G	H	I	J	K	L														
13	**滾輪(DOOR ROLLER)**																															
		32550112				2	A	B	C	D	E	F	G	H	I	J	K	L														停用(NOT USED)
	33419	32550112A			2005/03	2	A	B	C	D	E	F	G	H	I	J	K	L														
14	**隔圈(SPACER)**																															
	33420	32550113				1	A	B	C	D	E	F	G	H	I	J	K	L														停用(NOT USED)
	33417	32550110				1	A	B	C	D	E	F	G	H	I	J	K	L														
15	**螺栓(BOLT)**																															
	M1424-M8*20	92504208				2	A	B	C	D	E	F	G	H	I	J	K	L														
16	**連通接頭(CONNECTION, FOUR-WAY)**																															
	33421	32550115				1	A	B	C	D	E	F	G	H	I	J	K	L														四通(FOUR-WAY)
	33422	32550116				1	A	B	C	D	E	F	G	H	I	J	K	L														八通(EIGHT-WAY)

https://truckmanualshub.com/

選配配件系統
A310
CHOOSE ACCESSORY SYSTEM

二截式側移配管組
A310-3
HOSE & ROLL FOR SIDE SHIFT (TWO-STAGE)

編號 NO.	零件名稱 PART NAME			互換性 ITC	應用日期 APPLIED DATE	數量 QTY	FD						FG						FD〔C〕						FG〔C〕						機號 BODY NO.	備註 REMARK
	新碼 NEW PART NO.	舊碼 OLD PART NO.	規格 SPECIFICATION				155 A	180 B	205 C	230 D	305 E	355 F	155 G	180 H	205 I	230 J	305 K	355 L	155 M	180 N	205 O	230 P	305 Q	355 R	155 S	180 T	205 U	230 V	305 W	355 X		
17	**固定板(FLANGE SPLIT)**																															
	33359	32551013A				1	A	B	C	D	E	F	G	H	I	J	K	L														
18	**彈簧華司(SPRING WASHER)**																															
	M1605-M8	92501019				2	A	B	C	D	E	F	G	H	I	J	K	L														
19	**高壓油管(HOSE, HIGH PRESSURE)**																															
	33423	32550118				2	A	B	C	D			G	H	I	J																
	33424	33050118A				2					E	F					K	L														
20	**L型接頭(CONNECTOR "L")**																															
	33426	92507431				2	A	B	C	D	E	F	G	H	I	J	K	L														
21	**O型環("O"RING)**																															
		92507304			2000/10	2	A	B	C	D	E	F	G	H	I	J	K	L														停用(NOT USED)
	M0801002	94008223			2003/02	2	A	B	C	D	E	F	G	H	I	J	K	L														

https://truckmanualshub.com/

選配配件系統
A310
CHOOSE ACCESSORY SYSTEM

二截式貨櫃型側移配管組
A310-3A
HOSE&ROLL FOR SIDE SHIFT (CONTAINER FORM)

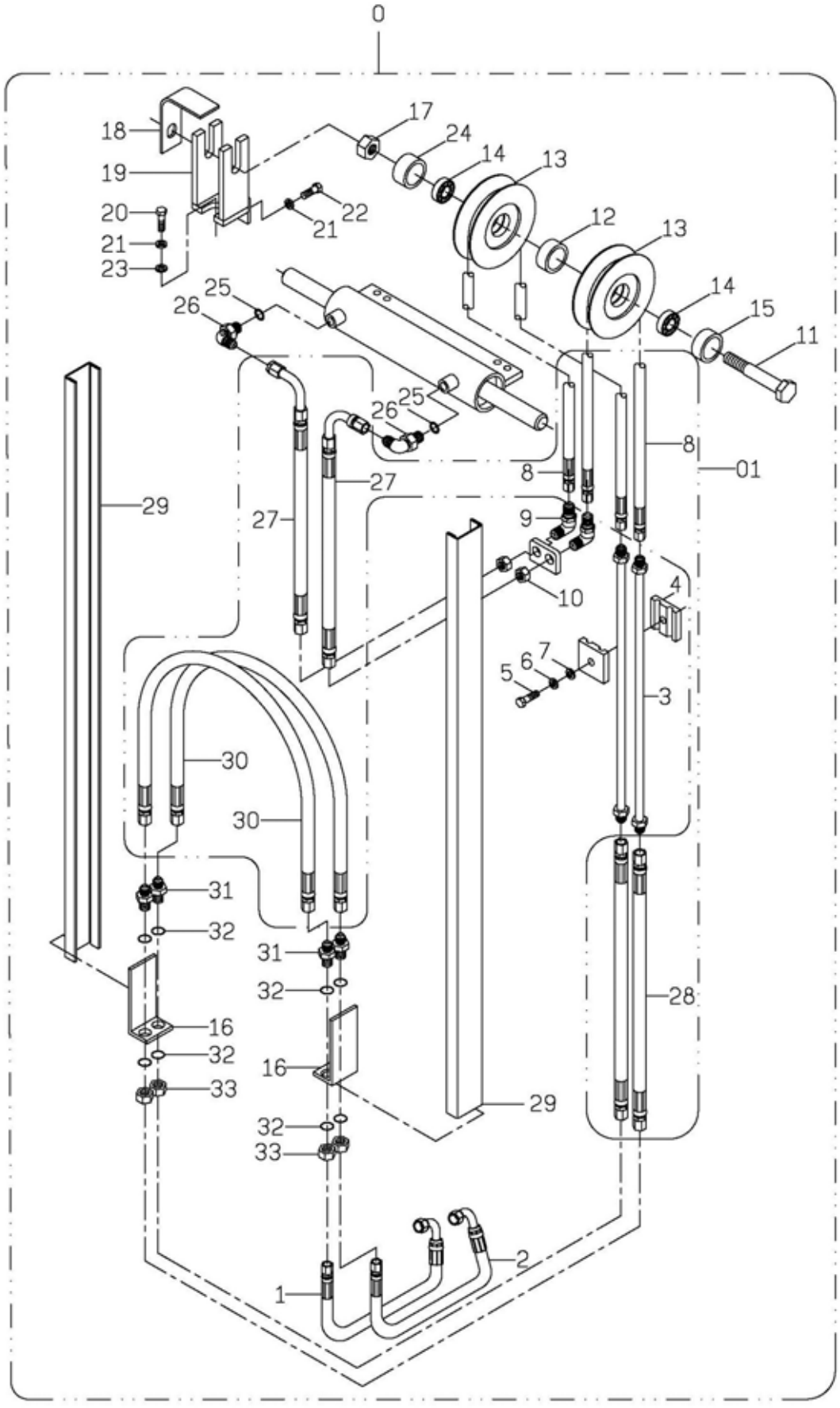

https://truckmanualshub.com/

選配配件系統
A310
CHOOSE ACCESSORY SYSTEM

二截式貨櫃型側移配管組
A310-3A
HOSE&ROLL FOR SIDE SHIFT (CONTAINER FORM)

編號 NO.	新碼 NEW PART NO.	舊碼 OLD PART NO.	規格 SPECIFICATION	互換性 ITC	應用日期 APPLIED DATE	數量 QTY	FD 15 A	FD 18 B	FD 20 C	FD 25 D	FD 30 E	FD 35 F	FG 15 G	FG 18 H	FG 20 I	FG 25 J	FG 30 K	FG 35 L	FD〔C〕15 M	FD〔C〕18 N	FD〔C〕20 O	FD〔C〕25 P	FD〔C〕30 Q	FD〔C〕35 R	FG〔C〕15 S	FG〔C〕18 T	FG〔C〕20 U	FG〔C〕25 V	FG〔C〕30 W	FG〔C〕35 X	機號 BODY NO.	備註 REMARK
0	**側移配管總成(SIDE SHIFT LINE ASSY)**																															
	B350395					1	A	B	C	D			G	H	I	J																3M
	B350400					1					E	F					K	L														
	B350396					1	A	B	C	D			G	H	I	J																3.3M
	B350401					1					E	F					K	L														
	B350397					1	A	B	C	D			G	H	I	J																3.5M
	B350402					1					E	F					K	L														
	B350398					1	A	B	C	D			G	H	I	J																4M
	B350403					1					E	F					K	L														
	B350399					1	A	B	C	D			G	H	I	J																4.5M
	B350404					1					E	F					K	L														
01	**油管組(HYDRAULIC LINE)**																															
	B350405					1	A	B	C	D			G	H	I	J																3M
	B350410					1					E	F					K	L														
	B350406					1	A	B	C	D			G	H	I	J																3.3M
	B350411					1					E	F					K	L														
	B350407					1	A	B	C	D			G	H	I	J																3.5M
	B350412					1					E	F					K	L														
	B350408					1	A	B	C	D			G	H	I	J																4M
	B350413					1					E	F					K	L														
	B350409					1	A	B	C	D			G	H	I	J																4.5M
	B350414					1					E	F					K	L														
1	**高壓油管(HOSE, HIGH PRESSURE)**																															
		92550221				1	A	B	C	D	E	F	G	H	I	J	K	L														
2	**高壓油管(HOSE, HIGH PRESSURE)**																															
	M0501213	92550222				1	A	B	C	D	E	F	G	H	I	J	K	L														
3	**高壓鋼管(STEEL TUBE)**																															
	32413	32550212				2	A	B	C	D	E	F	G	H	I	J	K	L														
4	**固定塊(FLANGE SPLIT)**																															
	33416	92550104				1	A	B	C	D	E	F	G	H	I	J	K	L														
5	**螺栓(BOLT)**																															
	M1424007	92550105				1	A	B	C	D	E	F	G	H	I	J	K	L														
6	**彈簧華司(SPRING WASHER)**																															
	M1605-M10	92501218				1	A	B	C	D	E	F	G	H	I	J	K	L														
7	**平華司(WASHER)**																															
	M1602013	92520420				1	A	B	C	D	E	F	G	H	I	J	K	L														

https://truckmanualshub.com/

選配配件系統
A310
CHOOSE ACCESSORY SYSTEM

二截式貨櫃型側移配管組
A310-3A
HOSE&ROLL FOR SIDE SHIFT (CONTAINER FORM)

編號 NO.	新碼 NEW PART NO.	舊碼 OLD PART NO.	規格 SPECIFICATION	互換性 ITC	應用日期 APPLIED DATE	數量 QTY	FD 15	FD 18	FD 20	FD 25	FD 30	FD 35	FG 15	FG 18	FG 20	FG 25	FG 30	FG 35	FD〔C〕 15	FD〔C〕 18	FD〔C〕 20	FD〔C〕 25	FD〔C〕 30	FD〔C〕 35	FG〔C〕 15	FG〔C〕 18	FG〔C〕 20	FG〔C〕 25	FG〔C〕 30	FG〔C〕 35	機號 BODY NO.	備註 REMARK
	零件名稱 PART NAME						A	B	C	D	E	F	G	H	I	J	K	L	M	N	O	P	Q	R	S	T	U	V	W	X		
8	高壓油管(HOSE, HIGH PRESSURE)																															
	M0501202	92550209				2	A	B	C	D	E	F	G	H	I	J	K	L														3M
	M0501203	92550215				2	A	B	C	D	E	F	G	H	I	J	K	L														3.3M
	M0501204	92550216				2	A	B	C	D	E	F	G	H	I	J	K	L														3.5M
	M0501205	92550217				2	A	B	C	D	E	F	G	H	I	J	K	L														4M
		92550224				2	A	B	C	D	E	F	G	H	I	J	K	L														4.5M
9	L型接頭(CONNECTOR "L")																															
		92550223			2000/10	2	A	B	C	D	E	F	G	H	I	J	K	L														
	33427	92505120			2003/02	2	A	B	C	D	E	F	G	H	I	J	K	L														
10	螺帽(NUT)																															
		92516419				2	A	B	C	D	E	F	G	H	I	J	K	L														
11	螺栓(BOLT)																															
		92550316				1	A	B	C	D	E	F	G	H	I	J	K	L														
12	隔圈(SPACER)																															
	33418	32550111				1	A	B	C	D	E	F	G	H	I	J	K	L														停用(NOT USED)
	34585				2006/03	1	A	B	C	D	E	F	G	H	I	J	K	L														
13	滾輪(DOOR ROLLER)																															
		32550112				2	A	B	C	D	E	F	G	H	I	J	K	L														停用(NOT USED)
	33419	32550112A			2005/03	2	A	B	C	D	E	F	G	H	I	J	K	L														
14	軸承(BEARING)																															
		92512418			2000/10	2	A	B	C	D	E	F	G	H	I	J	K	L														停用(NOT USED)
	M0901-6003ZZ	92516414			2003/02	2	A	B	C	D	E	F	G	H	I	J	K	L														
15	隔圈(SPACER)																															
	33417	32550110				1	A	B	C	D	E	F	G	H	I	J	K	L														停用(NOT USED)
	34674	32550225				1	A	B	C	D	E	F	G	H	I	J	K	L														
16	接頭固定塊(CONNECTOR; FLANGE SPLIT)(DUAL PIPE)																															
		32550237				2	A	B	C	D	E	F	G	H	I	J	K	L														停用(NOT USED)
	31194					2	A	B	C	D	E	F	G	H	I	J	K	L														
17	螺帽(NUT)																															
		92516419				1	A	B	C	D	E	F	G	H	I	J	K	L														
18	固定板(FLANGE SPLIT)																															
	33433	32550226				1	A	B	C	D	E	F	G	H	I	J	K	L														
19	固定座(FIXED BRACKET)																															
	33434	32550206D				1	A	B	C	D			G	H	I	J																
	33435	33050206E				1					E	F					K	L														

https://truckmanualshub.com/

選配配件系統
A310
CHOOSE ACCESSORY SYSTEM

二截式貨櫃型側移配管組
A310-3A
HOSE&ROLL FOR SIDE SHIFT (CONTAINER FORM)

編號 NO.	新碼 NEW PART NO.	舊碼 OLD PART NO.	規格 SPECIFICATION	互換性 ITC	應用日期 APPLIED DATE	數量 QTY	FD 15 A	FD 18 B	FD 20 C	FD 25 D	FD 30 E	FD 35 F	FG 15 G	FG 18 H	FG 20 I	FG 25 J	FG 30 K	FG 35 L	FD〔C〕 15 M	FD〔C〕 18 N	FD〔C〕 20 O	FD〔C〕 25 P	FD〔C〕 30 Q	FD〔C〕 35 R	FG〔C〕 15 S	FG〔C〕 18 T	FG〔C〕 20 U	FG〔C〕 25 V	FG〔C〕 30 W	FG〔C〕 35 X	機號 BODY NO.	備註 REMARK
20	**螺栓(BOLT)**																															
	M1424-M8*25	92501104				1	A	B	C	D	E	F	G	H	I	J	K	L														
21	**彈簧華司(SPRING WASHER)**																															
	M1605-M8	92501019				2	A	B	C	D	E	F	G	H	I	J	K	L														
22	**螺栓(BOLT)**																															
	M1401-M8*55	92550227				1	A	B	C	D	E	F	G	H	I	J	K	L														
23	**平華司(WASHER)**																															
	32638	92509009				1	A	B	C	D	E	F	G	H	I	J	K	L														
24	**隔圈(SPACER)**																															
	33420	32550113				1	A	B	C	D	E	F	G	H	I	J	K	L														停用(NOT USED)
	34674	32550225				1	A	B	C	D	E	F	G	H	I	J	K	L														
25	**O型環("O"RING)**																															
		92507304			2000/10	2	A	B	C	D	E	F	G	H	I	J	K	L														停用(NOT USED)
	M0801002	94008223			2003/02	2	A	B	C	D	E	F	G	H	I	J	K	L														
26	**L型接頭(CONNECTOR "L")**																															
	33426	92507431				2	A	B	C	D	E	F	G	H	I	J	K	L														
27	**高壓油管(HOSE, HIGH PRESSURE)**																															
		32507302A				2	A	B	C	D			G	H	I	J																停用(NOT USED)
	33424	33050118A				2					E	F					K	L														停用(NOT USED)
	34720	32507302A				2	A	B	C	D			G	H	I	J																
	34721					2					E	F					K	L														
28	**高壓油管(HOSE, HIGH PRESSURE)**																															
	M0501167	92550213				2	A	B	C	D	E	F	G	H	I	J	K	L														3M~3.3M
		92550219				2	A	B	C	D	E	F	G	H	I	J	K	L														3.5M~4M
		92550242				2	A	B	C	D	E	F	G	H	I	J	K	L														4.5M
29	**管路護套(PIPELINE CASE; DUAL PIPE)**																															
	33436	32550228				2	A	B	C	D	E	F	G	H	I	J	K	L														3M
	33438	32550229				2	A	B	C	D	E	F	G	H	I	J	K	L														3.3M
	33440	32550230				2	A	B	C	D	E	F	G	H	I	J	K	L														3.5M
	33442	32550231				2	A	B	C	D	E	F	G	H	I	J	K	L														4M
	33444	32550244				2	A	B	C	D	E	F	G	H	I	J	K	L														4.5M
30	**高壓油管(HOSE, HIGH PRESSURE)**																															
	M0501171	32550236				2	A	B	C	D	E	F	G	H	I	J	K	L														3M
		32550239				2	A	B	C	D	E	F	G	H	I	J	K	L														3.3M
		32550240				2	A	B	C	D	E	F	G	H	I	J	K	L														3.5M
	M0501174	32550241				2	A	B	C	D	E	F	G	H	I	J	K	L														4M
		32550243				2	A	B	C	D	E	F	G	H	I	J	K	L														4.5M

https://truckmanualshub.com/

選配配件系統
A310
CHOOSE ACCESSORY SYSTEM

二截式貨櫃型側移配管組
A310-3A
HOSE＆ROLL FOR SIDE SHIFT (CONTAINER FORM)

編號 NO.	零件名稱 PART NAME 新碼 NEW PART NO.	舊碼 OLD PART NO.	規格 SPECIFICATION	互換性 ITC	應用日期 APPLIED DATE	數量 QTY	FD 15 18 20 25 30 35 AB CD EF	FG 15 18 20 25 30 35 GH IJ KL	FD〔C〕 15 18 20 25 30 35 MN OP QR	FG〔C〕 15 18 20 25 30 35 ST UV WX	機號 BODY NO.	備註 REMARK
31	**接頭(CONNECTOR)(DUAL PIPE)**											
		32550210			2000/10	8	A B C D E F	G H I J K L				停用(NOT USED)
		32550210			2000/10	16	A B C D E F	G H I J K L				停用(NOT USED)
		92508019				8	A B C D E F	G H I J K L				停用(NOT USED)
		92508019				16	A B C D E F	G H I J K L				停用(NOT USED)
	M0601024				2005/03	4	A B C D E F	G H I J K L				
32	**O型環("O"RING)(DUAL PIPE)**											
	M0801-P12	92507304				8	A B C D E F	G H I J K L				停用(NOT USED)
	M0801-P12	92507304				16	A B C D E F	G H I J K L				停用(NOT USED)
33	**六角螺帽(NUT)**											
	M1501010	M1501-9/16"-18UNF			2005/03	4	A B C D E F	G H I J K L				

https://truckmanualshub.com/

選配配件系統
A310
CHOOSE ACCESSORY SYSTEM

三截式側移配管組
A310-3B
HOSE & ROLL FOR SIDE SHIFT (THREE-STAGE)

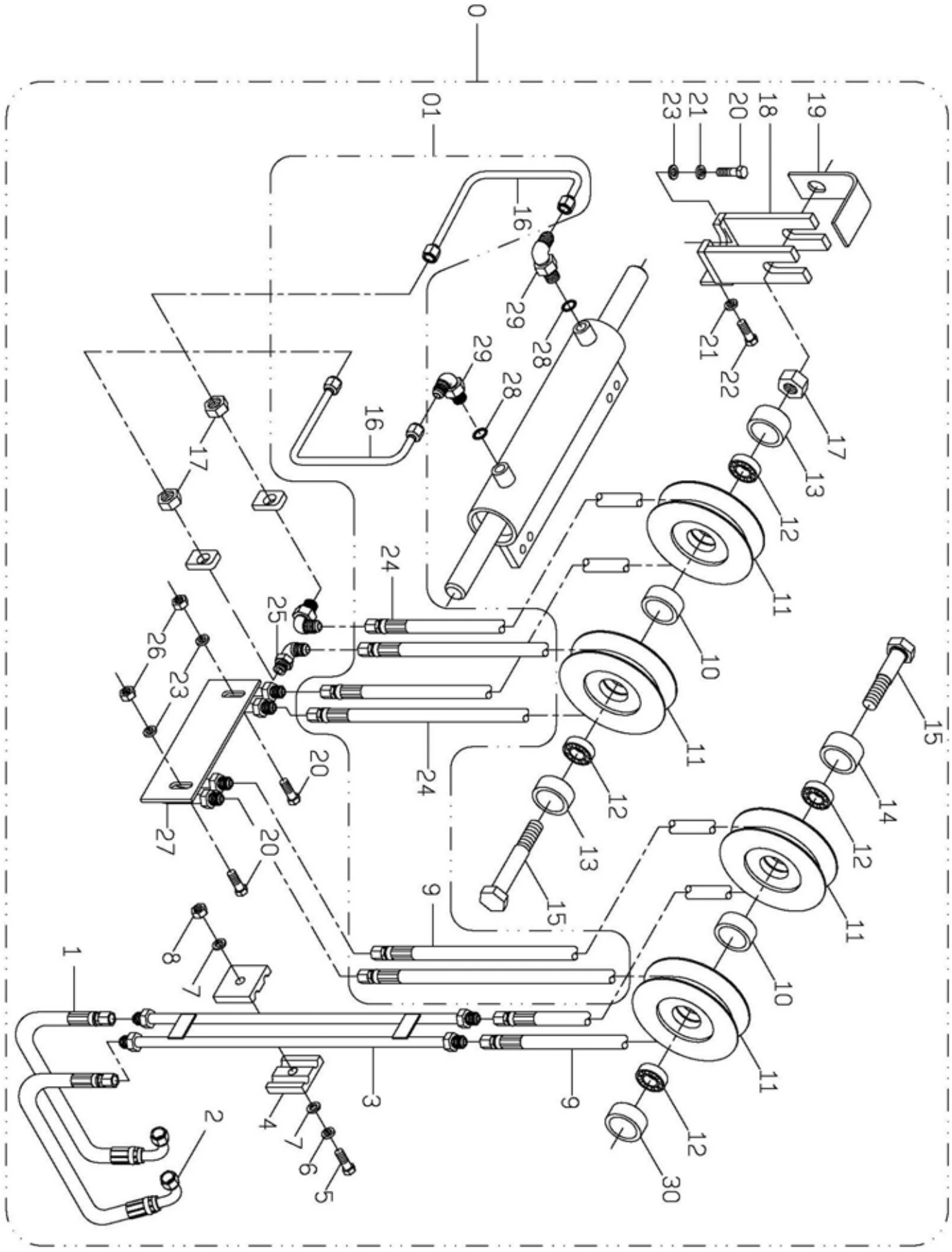

https://truckmanualshub.com/

選配配件系統
A310
CHOOSE ACCESSORY SYSTEM

三截式側移配管組
A310-3B
HOSE & ROLL FOR SIDE SHIFT (THREE-STAGE)

編號 NO.	零件名稱 PART NAME						FD						FG						FD〔C〕						FG〔C〕						機號 BODY NO.	備註 REMARK
	新碼 NEW PART NO.	舊碼 OLD PART NO.	規格 SPECIFICATION	互換性 ITC	應用日期 APPLIED DATE	數量 QTY	15	18	20	25	30	35	15	18	20	25	30	35	15	18	20	25	30	35	15	18	20	25	30	35		
							A	B	C	D	E	F	G	H	I	J	K	L	M	N	O	P	Q	R	S	T	U	V	W	X		
0	**側移配管總成(SIDE SHIFT LINE ASSY)**																															
	B350415 B350532					1 1					E	F					K	L														4M
	B350416 B350535					1 1					E	F					K	L														4.5M
	B350417 B350538					1 1					E	F					K	L														4.8M
	B350551 B350552					1 1					E	F					K	L														5M
	B350420 B350541					1 1					E	F					K	L														5.5M
	B350421 B350542					1 1					E	F					K	L														6M
	B350423 B350544					1 1					E	F					K	L														6.5M
01	**油管組(HYDRAULIC LINE)**																															
	B350424					1																										4M
	B350425					1																										4.5M
	B350426					1																										4.8M
	B350550					1																										5M
	B350429					1																										5.5M
	B350430					1																										6M
	B350432					1																										6.5M
1	**高壓油管(HOSE, HIGH PRESSURE)**																															
		92550221				1																										
2	**高壓油管(HOSE, HIGH PRESSURE)**																															
	M0501213	92550222				1																										
3	**四通接頭(CONNECTION, FOUR-WAY)**																															
	33415	92550103				1																										
4	**固定塊(FLANGE SPLIT)**																															
	33416	92550104				1																										
5	**螺栓(BOLT)**																															
	M1424007	92550105				1																										
6	**彈簧華司(SPRING WASHER)**																															
	M1605-M10	92501218				1																										
7	**平華司(WASHER)**																															
	M1602013	92520420				1																										

https://truckmanualshub.com/

選配配件系統
A310
CHOOSE ACCESSORY SYSTEM

三截式側移配管組
A310-3B
HOSE & ROLL FOR SIDE SHIFT (THREE-STAGE)

編號 NO.	新碼 NEW PART NO.	舊碼 OLD PART NO.	規格 SPECIFICATION	互換性 ITC	應用日期 APPLIED DATE	數量 QTY	FD 15	FD 18	FD 20	FD 25	FD 30	FD 35	FG 15	FG 18	FG 20	FG 25	FG 30	FG 35	FD〔C〕 15	FD〔C〕 18	FD〔C〕 20	FD〔C〕 25	FD〔C〕 30	FD〔C〕 35	FG〔C〕 15	FG〔C〕 18	FG〔C〕 20	FG〔C〕 25	FG〔C〕 30	FG〔C〕 35	機號 BODY NO.	備註 REMARK
	零件名稱 PART NAME						A	B	C	D	E	F	G	H	I	J	K	L	M	N	O	P	Q	R	S	T	U	V	W	X		
8	**螺帽(NUT)**																															
		92550315			2000/10	1	A	B	C	D	E	F	G	H	I	J	K	L														停用(NOT USED)
	M1502001	92504016			2003/02	1	A	B	C	D	E	F	G	H	I	J	K	L														
9	**高壓油管(HOSE, HIGH PRESSURE)**																															
		92550317			2000/10	2	A	B	C	D	E	F	G	H	I	J	K	L														4.8M
		92550316				2	A	B	C	D	E	F	G	H	I	J	K	L														4M
	M0501222	92550301				2	A	B	C	D	E	F	G	H	I	J	K	L														4.5M
		92550119			2003/02	2	A	B	C	D	E	F	G	H	I	J	K	L														4.8M
		92550308				2	A	B	C	D	E	F	G	H	I	J	K	L														5M
	M0501179	92550309				2	A	B	C	D	E	F	G	H	I	J	K	L														5.5M
	M0501181	92550310				2	A	B	C	D	E	F	G	H	I	J	K	L														6M
	M0501182	92550318				2	A	B	C	D	E	F	G	H	I	J	K	L														6.5M
10	**隔圈(SPACER)**																															
	33418	32550111				2	A	B	C	D	E	F	G	H	I	J	K	L														停用(NOT USED)
	34585				2006/03	2	A	B	C	D	E	F	G	H	I	J	K	L														
11	**滾輪(DOOR ROLLER)**																															
		32550112				4	A	B	C	D	E	F	G	H	I	J	K	L														停用(NOT USED)
	33419	32550112A			2005/03	4	A	B	C	D	E	F	G	H	I	J	K	L														
12	**軸承(BEARING)**																															
		92512418			2000/10	4	A	B	C	D	E	F	G	H	I	J	K	L														停用(NOT USED)
	M0901-6003ZZ	92516414			2003/02	4	A	B	C	D	E	F	G	H	I	J	K	L														停用(NOT USED)
13	**隔圈(SPACER)**																															
	33420	32550113				2	A	B	C	D	E	F	G	H	I	J	K	L														停用(NOT USED)
	34674	32550225				2	A	B	C	D	E	F	G	H	I	J	K	L														
14	**隔圈(SPACER)**																															
	33417	32550110				2	A	B	C	D	E	F	G	H	I	J	K	L														停用(NOT USED)
	33420	32550113				1	A	B	C	D	E	F	G	H	I	J	K	L														
15	**螺栓(BOLT)**																															
	33450	32550316				2	A	B	C	D	E	F	G	H	I	J	K	L														
16	**高壓油管(HOSE, HIGH PRESSURE)**																															
	M0503048	92550306				2	A	B	C	D	E	F	G	H	I	J	K	L														停用(NOT USED)
	34720	32507302A			2006/06	2	A	B	C	D			G	H	I	J																
	34721				2006/06	2					E	F					K	L														
17	**螺帽(NUT)**																															
		92516419				3	A	B	C	D	E	F	G	H	I	J	K	L														

https://truckmanualshub.com/

選配配件系統
A310
CHOOSE ACCESSORY SYSTEM

三截式側移配管組
A310-3B
HOSE & ROLL FOR SIDE SHIFT (THREE-STAGE)

編號 NO.	新碼 NEW PART NO.	舊碼 OLD PART NO.	規格 SPECIFICATION	互換性 ITC	應用日期 APPLIED DATE	數量 QTY	FD 15 A	FD 18 B	FD 20 C	FD 25 D	FD 30 E	FD 35 F	FG 15 G	FG 18 H	FG 20 I	FG 25 J	FG 30 K	FG 35 L	FD〔C〕 15 M	FD〔C〕 18 N	FD〔C〕 20 O	FD〔C〕 25 P	FD〔C〕 30 Q	FD〔C〕 35 R	FG〔C〕 15 S	FG〔C〕 18 T	FG〔C〕 20 U	FG〔C〕 25 V	FG〔C〕 30 W	FG〔C〕 35 X	機號 BODY NO.	備註 REMARK
18	**固定座(FIXED BRACKET)**																															
	33434	32550206D				1	A	B	C	D			G	H	I	J																
	33435	33050206E				1					E	F					K	L														
	32534	32550703				1	A	B	C	D	E	F	G	H	I	J	K	L														
19	**固定板(FLANGE SPLIT)**																															
	33433	32550226				1	A	B	C	D	E	F	G	H	I	J	K	L														
20	**螺栓(BOLT)**																															
	M1424-M8*25	92501104				3	A	B	C	D	E	F	G	H	I	J	K	L														
21	**彈簧華司(SPRING WASHER)**																															
	M1605-M8	92501019				4	A	B	C	D	E	F	G	H	I	J	K	L														
22	**螺栓(BOLT)**																															
	M1401-M8*55	92550227				1	A	B	C	D	E	F	G	H	I	J	K	L														
23	**平華司(WASHER)**																															
	32638	92509009				1	A	B	C	D	E	F	G	H	I	J	K	L														
24	**高壓油管(HOSE, HIGH PRESSURE)**																															
		92550320			2000/10	2	A	B	C	D	E	F	G	H	I	J	K	L													4.8M	
		92550311			2000/10	2	A	B	C	D	E	F	G	H	I	J	K	L													5M	
		92550319				2	A	B	C	D	E	F	G	H	I	J	K	L													4M	
	M0501234	92550302				2	A	B	C	D	E	F	G	H	I	J	K	L													4.5M	
	M0501150	92550311			2003/02	2	A	B	C	D	E	F	G	H	I	J	K	L													4.8M &5M	
	M0501186	92550312				2	A	B	C	D	E	F	G	H	I	J	K	L													5.5M	
		92550313				2	A	B	C	D	E	F	G	H	I	J	K	L													6M	
	M0501183	92550321				2	A	B	C	D	E	F	G	H	I	J	K	L													6.5M	
25	**L型接頭(CONNECTOR "L")**																															
	33428	92550223				2	A	B	C	D	E	F	G	H	I	J	K	L														
26	**螺帽(NUT)**																															
	M1501-M8	92501115				2	A	B	C	D	E	F	G	H	I	J	K	L														
27	**四通接頭(CONNECTION, FOUR-WAY)**																															
	33447	32550304				1	A	B	C	D	E	F	G	H	I	J	K	L														
27	**八通接頭(CONNECTION, EIGHT-WAY)**																															
	33422	32550116				1	A	B	C	D	E	F	G	H	I	J	K	L														
28	**O型環("O"RING)**																															
		92507304			2000/10	2	A	B	C	D	E	F	G	H	I	J	K	L													停用(NOT USED)	
	M0801002	94008223			2003/02	2	A	B	C	D	E	F	G	H	I	J	K	L														
29	**L型接頭(CONNECTOR "L")**																															
	33426	92507431				2	A	B	C	D	E	F	G	H	I	J	K	L														
30	**隔圈(SPACER)**																															
	33417	32550110				1	A	B	C	D	E	F	G	H	I	J	K	L														

https://truckmanualshub.com/

選配配件系統
A310
CHOOSE ACCESSORY SYSTEM

二截式傾卸配管組
A310-3C
HOSE & ROLL FOR HINGED FORK (TWO-STAGE)

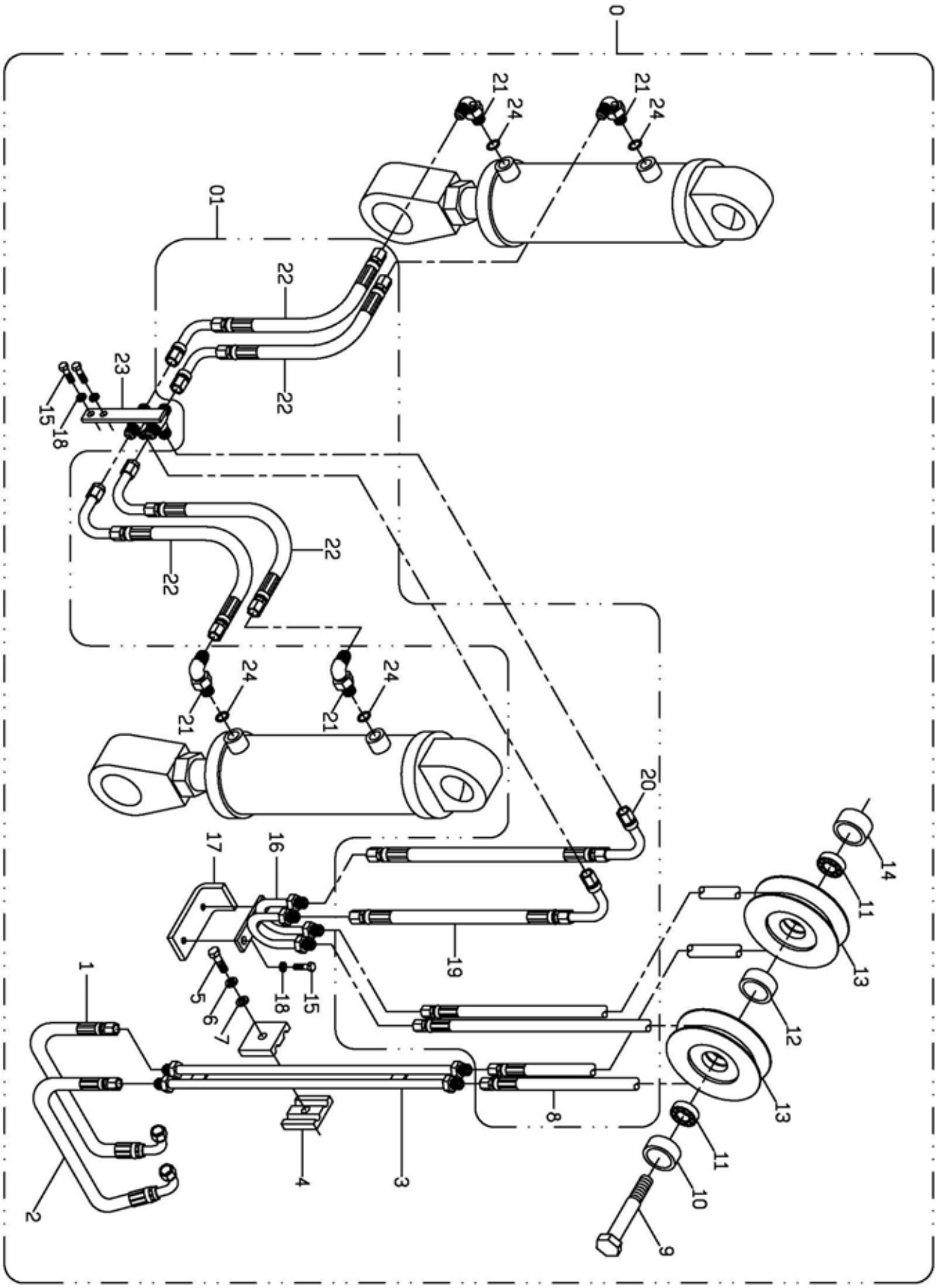

https://truckmanualshub.com/

選配配件系統
A310
CHOOSE ACCESSORY SYSTEM

二截式傾卸配管組
A310-3C
HOSE & ROLL FOR HINGED FORK (TWO-STAGE)

編號 NO.	新碼 NEW PART NO.	舊碼 OLD PART NO.	規格 SPECIFICATION	互換性 ITC	應用日期 APPLIED DATE	數量 QTY	FD 15 A	FD 18 B	FD 20 C	FD 25 D	FD 30 E	FD 35 F	FG 15 G	FG 18 H	FG 20 I	FG 25 J	FG 30 K	FG 35 L	FD〔C〕 15 M	FD〔C〕 18 N	FD〔C〕 20 O	FD〔C〕 25 P	FD〔C〕 30 Q	FD〔C〕 35 R	FG〔C〕 15 S	FG〔C〕 18 T	FG〔C〕 20 U	FG〔C〕 25 V	FG〔C〕 30 W	FG〔C〕 35 X	機號 BODY NO.	備註 REMARK
0	傾卸配管總成(HINGED FORK LINE ASSY)																														
	B350433					1				D	E	F				J	K	L													3M
	B350434					1				D	E	F				J	K	L													3.3M
	B350435					1				D	E	F				J	K	L													3.5M
	B350436					1				D	E	F				J	K	L													3.7M
	B350437					1				D	E	F				J	K	L													4M
	B350438					1				D	E	F				J	K	L													4.5M
	B350439					1				D	E	F				J	K	L													5M
01	油管組(HYDRAULIC LINE)																														
	B350440					1				D	E	F				J	K	L													3M
	B350441					1				D	E	F				J	K	L													3.3M
	B350442					1				D	E	F				J	K	L													3.5M
	B350443					1				D	E	F				J	K	L													3.7M
	B350444					1				D	E	F				J	K	L													4M
	B350445					1				D	E	F				J	K	L													4.5M
	B350446					1				D	E	F				J	K	L													5M
1	高壓油管(HOSE, HIGH PRESSURE)																														
	M0501164	92550101				1				D	E	F				J	K	L													
2	高壓油管(HOSE, HIGH PRESSURE)																														
	M0501165	92550102				1				D	E	F				J	K	L													
3	四通接頭(CONNECTION, FOUR-WAY)																														
	33415	92550103				1				D	E	F				J	K	L													
4	固定塊(FLANGE SPLIT)																														
	33416	92550104				1				D	E	F				J	K	L													
5	螺栓(BOLT)																														
	M1424007	92550105				1				D	E	F				J	K	L													
6	彈簧華司(SPRING WASHER)																														
	M1605-M10	92501218				1				D	E	F				J	K	L													
7	平華司(WASHER)																														
	M1602013	92520420				1				D	E	F				J	K	L													
8	高壓油管(HOSE, HIGH PRESSURE)																														
	M0501161	32550108				2				D	E	F				J	K	L													3M
	M0501178	32550119				2				D	E	F				J	K	L													3.3M
	M0501187	32550120				2				D	E	F				J	K	L													3.5M
		32550123				2				D	E	F				J	K	L													3.7M
	M0501188	32550121				2				D	E	F				J	K	L													4M

https://truckmanualshub.com/

選配配件系統
A310
CHOOSE ACCESSORY SYSTEM

二截式傾卸配管組
A310-3C
HOSE & ROLL FOR HINGED FORK (TWO-STAGE)

編號 NO.	新碼 NEW PART NO.	舊碼 OLD PART NO.	規格 SPECIFICATION	互換性 ITC	應用日期 APPLIED DATE	數量 QTY	FD 15 A	FD 180 B	FD 205 C	FD 230 D	FD 305 E	FD 335 F	FG 15 G	FG 180 H	FG 205 I	FG 230 J	FG 305 K	FG 335 L	FD〔C〕 15 M	FD〔C〕 180 N	FD〔C〕 205 O	FD〔C〕 230 P	FD〔C〕 305 Q	FD〔C〕 335 R	FG〔C〕 15 S	FG〔C〕 180 T	FG〔C〕 205 U	FG〔C〕 230 V	FG〔C〕 305 W	FG〔C〕 335 X	機號 BODY NO.	備註 REMARK
8	**高壓油管(HOSE, HIGH PRESSURE)**																														
	M0501189	32550122				2		D E F						J K L																	4.5M
	M0501190	32550124				2		D E F						J K L																	5M
9	**螺栓(BOLT)**																														
	33450	32550316				1		D E F						J K L																	
10	**隔圈(SPACER)**																														
	33417	32550110				1		D E F						J K L																	停用(NOT USED)
	33420	32550113				1		D E F						J K L																	
11	**軸承(BEARING)**																														
		92512418			2000/10	2		D E F						J K L																	停用(NOT USED)
	M0901-6003ZZ	92516414			2003/02	2		D E F						J K L																	停用(NOT USED)
12	**隔圈(SPACER)**																														
	33418	32550111				1		D E F						J K L																	停用(NOT USED)
	34585				2006/03	1		D E F						J K L																	
13	**滾輪(DOOR ROLLER)**																														
		32550112				2		D E F						J K L																	停用(NOT USED)
	33419	32550112A			2005/03	2		D E F						J K L																	
14	**隔圈(SPACER)**																														
	33420	32550113				1		D E F						J K L																	停用(NOT USED)
	33417	32550110				1		D E F						J K L																	
15	**螺栓(BOLT)**																														
	M1424-M8*20	92504208				2		D E F						J K L																	
16	**四通接頭(CONNECTION, FOUR-WAY)**																														
	33421	32550115				1		D E F						J K L																	
17	**固定板(FLANGE SPLIT)**																														
	33359	32551013A				1		D E F						J K L																	
18	**彈簧華司(SPRING WASHER)**																														
	M1605-M8	92501019				2		D E F						J K L																	
19	**高壓油管(HOSE, HIGH PRESSURE)**																														
		92550402				1		D E F						J K L																	
20	**高壓油管(HOSE, HIGH PRESSURE)**																														
		92550403				1		D E F						J K L																	
21	**L型接頭(CONNECTOR "L")**																														
	33426	92507431				4		D E F						J K L																	
22	**高壓油管(HOSE HIGH PRESSURE)**																														
		92550401				4		D E F						J K L																	
23	**六通接頭(CONNECTION, SIX-WAY)**																														
	33392	32552001				1		D E F						J K L																	

https://truckmanualshub.com/

二截式傾卸配管組
A310-3C
HOSE & ROLL FOR HINGED FORK (TWO-STAGE)

編號 NO.	零件名稱 PART NAME						FD						FG						FD〔C〕						FG〔C〕						機號 BODY NO.	備註 REMARK
	新碼 NEW PART NO.	舊碼 OLD PART NO.	規格 SPECIFICATION	互換性 ITC	應用日期 APPLIED DATE	數量 QTY	15	18	20	25	30	35	15	18	20	25	30	35	15	18	20	25	30	35	15	18	20	25	30	35		
							A	B	C	D	E	F	G	H	I	J	K	L	M	N	O	P	Q	R	S	T	U	V	W	X		
24	O型環("O"RING)																															
		92507304			2000/10	2				D	E	F				J	K	L														停用(NOT USED)
	M0801002	94008223			2003/02	2				D	E	F				J	K	L														

https://truckmanualshub.com/

選配配件系統
A310
CHOOSE ACCESSORY SYSTEM

二截式貨櫃型傾卸配管組
A310-3D
HOSE&ROLL FOR HINGED FORK(CONTAINER FORM)

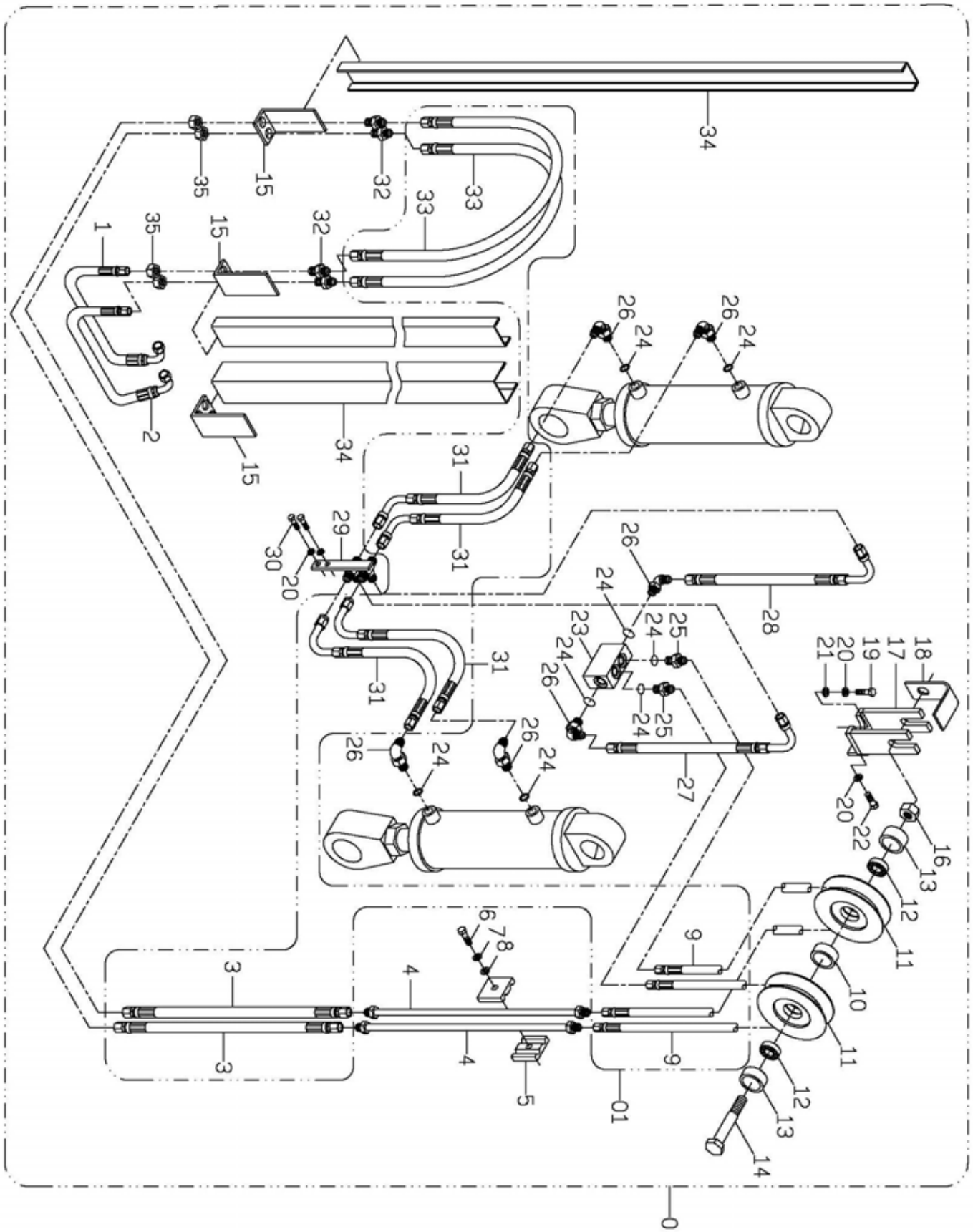

https://truckmanualshub.com/

選配配件系統
A310
CHOOSE ACCESSORY SYSTEM

二截式貨櫃型傾卸配管組
A310-3D
HOSE&ROLL FOR HINGED FORK(CONTAINER FORM)

編號 NO.	新碼 NEW PART NO.	舊碼 OLD PART NO.	規格 SPECIFICATION	互換性 ITC	應用日期 APPLIED DATE	數量 QTY	FD 15	FD 18	FD 20	FD 25	FD 30	FD 35	FG 15	FG 18	FG 20	FG 25	FG 30	FG 35	FD〔C〕 15	FD〔C〕 18	FD〔C〕 20	FD〔C〕 25	FD〔C〕 30	FD〔C〕 35	FG〔C〕 15	FG〔C〕 18	FG〔C〕 20	FG〔C〕 25	FG〔C〕 30	FG〔C〕 35	機號 BODY NO.	備註 REMARK
							A	B	C	D	E	F	G	H	I	J	K	L	M	N	O	P	Q	R	S	T	U	V	W	X		
0	傾卸配管總成(HINGED FORK LINE ASSY)																															
	B350447					1				D						J																3M
	B350545					1				E	F					K	L															
	B350448					1				D						J																3.3M
	B350546					1				E	F					K	L															
	B350449					1				D						J																3.5M
	B350547					1				E	F					K	L															
	B350450					1				D						J																4M
	B350548					1				E	F					K	L															
	B350451					1				D						J																4.5M
	B350549					1				E	F					K	L															
01	油管組(HYDRAULIC LINE)																															
	B350452					1				D	E	F				J	K	L														3M
	B350453					1				D	E	F				J	K	L														3.3M
	B350454					1				D	E	F				J	K	L														3.5M
	B350455					1				D	E	F				J	K	L														4M
	B350456					1				D	E	F				J	K	L														4.5M
1	高壓油管(HOSE, HIGH PRESSURE)																															
		92550221				1				D	E	F				J	K	L														
2	高壓油管(HOSE, HIGH PRESSURE)																															
	M0501213	92550222				1				D	E	F				J	K	L														
3	高壓油管(HOSE, HIGH PRESSURE)																															
	M0501167	92550213				2				D	E	F				J	K	L														3M~3.3M
		92550219				2				D	E	F				J	K	L														3.5M~4M
		92550242				2				D	E	F				J	K	L														4.5M
4	高壓鋼管(STEEL TUBE)																															
	32413	32550212				2				D	E	F				J	K	L														
5	固定塊(FLANGE SPLIT)																															
	33449	32550104				1				D	E	F				J	K	L														
6	螺栓(BOLT)																															
	M1424007	92550105				1				D	E	F				J	K	L														
7	彈簧華司(SPRING WASHER)																															
	M1605-M10	92501218				1				D	E	F				J	K	L														
8	平華司(WASHER)																															
	M1602013	92520420				1				D	E	F				J	K	L														

https://truckmanualshub.com/

選配配件系統
A310
CHOOSE ACCESSORY SYSTEM

二截式貨櫃型傾卸配管組
A310-3D
HOSE&ROLL FOR HINGED FORK(CONTAINER FORM)

編號 NO.	零件名稱 PART NAME 新碼 NEW PART NO.	舊碼 OLD PART NO.	規格 SPECIFICATION	互換性 ITC	應用日期 APPLIED DATE	數量 QTY	FD 15 A	FD 18 B	FD 20 C	FD 25 D	FD 30 E	FD 35 F	FG 15 G	FG 18 H	FG 20 I	FG 25 J	FG 30 K	FG 35 L	FD〔C〕 15 M	FD〔C〕 18 N	FD〔C〕 20 O	FD〔C〕 25 P	FD〔C〕 30 Q	FD〔C〕 35 R	FG〔C〕 15 S	FG〔C〕 18 T	FG〔C〕 20 U	FG〔C〕 25 V	FG〔C〕 30 W	FG〔C〕 35 X	機號 BODY NO.	備註 REMARK
9	高壓油管(HOSE, HIGH PRESSURE)																															
	M0501202	92550209				2		D	E	F				J	K	L																3M
	M0501203	92550215				2		D	E	F				J	K	L																3.3M
9	高壓油管(HOSE, HIGH PRESSURE)																															
	M0501204	92550216				2		D	E	F				J	K	L																3.5M
	M0501205	92550217				2		D	E	F				J	K	L																4M
		92550224				2		D	E	F				J	K	L																4.5M
10	隔圈(SPACER)																															
	33418	32550111				1		D	E	F				J	K	L																停用(NOT USED)
	34585				2006/03	1		D	E	F				J	K	L																
11	滾輪(DOOR ROLLER)																															
		32550112				2		D	E	F				J	K	L																停用(NOT USED)
	33419	32550112A			2005/03	2		D	E	F				J	K	L																
12	軸承(BEARING)																															
		92512418			2000/10	2		D	E	F				J	K	L																停用(NOT USED)
	M0901-6003ZZ	92516414			2003/02	2		D	E	F				J	K	L																停用(NOT USED)
13	隔圈(SPACER)																															
	33417	32550110				1		D	E	F				J	K	L																停用(NOT USED)
	34674	32550225				2		D	E	F				J	K	L																
14	螺栓(BOLT)																															
		92550316				1		D	E	F				J	K	L																
15	接頭固定塊(CONNECTOR; FLANGE SPLIT)(DUAL PIPE)																															
		32550237				2		D	E	F				J	K	L																停用(NOT USED)
		32550238				2		D	E	F				J	K	L																停用(NOT USED)
	31194					2		D	E	F				J	K	L																
16	螺帽(NUT)																															
		92516419				1		D	E	F				J	K	L																
17	固定座(FIXED BRACKET)																															
	33434	32550206D				1		D						J																		
	33435	33050206E				1			E	F					K	L																
18	固定板(FLANGE SPLIT)																															
	33433	32550226				1		D	E	F				J	K	L																
19	螺栓(BOLT)																															
	M1424-M8*25	92501104				1		D	E	F				J	K	L																

https://truckmanualshub.com/

選配配件系統
A310
CHOOSE ACCESSORY SYSTEM

二截式貨櫃型傾卸配管組
A310-3D
HOSE&ROLL FOR HINGED FORK(CONTAINER FORM)

編號 NO.	零件名稱 PART NAME						FD		FG		FD〔C〕		FG〔C〕		機號 BODY NO.	備註 REMARK
	新碼 NEW PART NO.	舊碼 OLD PART NO.	規格 SPECIFICATION	互換性 ITC	應用日期 APPLIED DATE	數量 QTY	15A 18B 20C 25D 30E 35F		15G 18H 20I 25J 30K 35L		15M 18N 20O 25P 30Q 35R		15S 18T 20U 25V 30W 35X			
20	**彈簧華司(SPRING WASHER)**															
	M1605-M8	92501019				4	DEF		JKL							
21	**平華司(WASHER)**															
	32638	92509009				1	DEF		JKL							
22	**螺栓(BOLT)**															
	M1401-M8*55	92550227				1	DEF		JKL							
23	**四通接頭(CONNECTION, FOUR-WAY)**															
	33391	32551012A				1	DEF		JKL							
24	**O型環("O"RING)(DUAL PIPE)**															
		92507304			2000/10	16	DEF		JKL							
	M0801-P12	92507304			2005/03	8	DEF		JKL							
25	**接頭(CONNECTOR)(DUAL PIPE)**															
		32505212			2000/10	10	DEF		JKL							停用(NOT USED)
		32505212			2000/10	14	DEF		JKL							停用(NOT USED)
		92508019			2003/02	10	DEF		JKL							
	32437	92508019A			2005/03	2	DEF		JKL							
26	**L型接頭(CONNECTOR "L")**															
	33426	92507431				6	DEF		JKL							
27	**高壓油管(HOSE, HIGH PRESSURE)**															
		32550403				1	D		J							
		33050403				1	EF		KL							
28	**高壓油管(HOSE, HIGH PRESSURE)**															
		32550402				1	D		J							
		33050402				1	EF		KL							
29	**六通接頭(CONNECTION, SIX-WAY)**															
	33392	32552001				1	DEF		JKL							
30	**螺栓(BOLT)**															
	M1424-M8*20	92504208				2	DEF		JKL							
31	**高壓油管(HOSE HIGH PRESSURE)**															
		92550401				4	DEF		JKL							
32	**接頭(CONNECTOR)(DUAL PIPE)**															
	M0601024				2005/03	4	DEF		JKL							
32	**隔圈(SPACER)**															
	33420	32550113				1	DEF		JKL							

https://truckmanualshub.com/

選配配件系統
A310
CHOOSE ACCESSORY SYSTEM

二截式貨櫃型傾卸配管組
A310-3D
HOSE&ROLL FOR HINGED FORK(CONTAINER FORM)

編號 NO.	零件名稱 PART NAME 新碼 NEW PART NO.	舊碼 OLD PART NO.	規格 SPECIFICATION	互換性 ITC	應用日期 APPLIED DATE	數量 QTY	FD 15 A	FD 180 B	FD 205 C	FD 230 D	FD 305 E	FD 355 F	FG 155 G	FG 180 H	FG 205 I	FG 230 J	FG 305 K	FG 355 L	FD〔C〕155 M	FD〔C〕180 N	FD〔C〕205 O	FD〔C〕230 P	FD〔C〕305 Q	FD〔C〕355 R	FG〔C〕155 S	FG〔C〕180 T	FG〔C〕205 U	FG〔C〕230 V	FG〔C〕305 W	FG〔C〕355 X	機號 BODY NO.	備註 REMARK
33	**高壓油管(HOSE, HIGH PRESSURE)**																														
	M0501171	32550236				2				D	E	F				J	K	L													3M
		32550239				2				D	E	F				J	K	L													3.3M
		32550240				2				D	E	F				J	K	L													3.5M
33	**高壓油管(HOSE, HIGH PRESSURE)**																														
	M0501174	32550241				2				D	E	F				J	K	L													4M
		32550243				2				D	E	F				J	K	L													4.5M
34	**管路護套(PIPELINE CASE; DUAL PIPE)**																														
	33436	32550228				2				D	E	F				J	K	L													
34	**管路護套(PIPELINE CASE; DUAL PIPE)**																														
	33438	32550229				2				D	E	F				J	K	L													二管用(2 PIPE)(3.3M)
	33440	32550230				2				D	E	F				J	K	L													二管用(2 PIPE)(3.5M)
	33442	32550231				2				D	E	F				J	K	L													二管用(2 PIPE)(4M)
	33444	32550244				2				D	E	F				J	K	L													二管用(2 PIPE)(4.5M)
35	**六角螺帽(NUT)**																														
	M1501010	M1501-9/16"-18UNF			2005/03	4				D	E	F				J	K	L													二管用(2 PIPE)

https://truckmanualshub.com/

選配配件系統
A310
CHOOSE ACCESSORY SYSTEM

三截式傾卸配管組
A310-3E
HOSE & ROLL FOR HINGED FORK (THREE-STAGE)

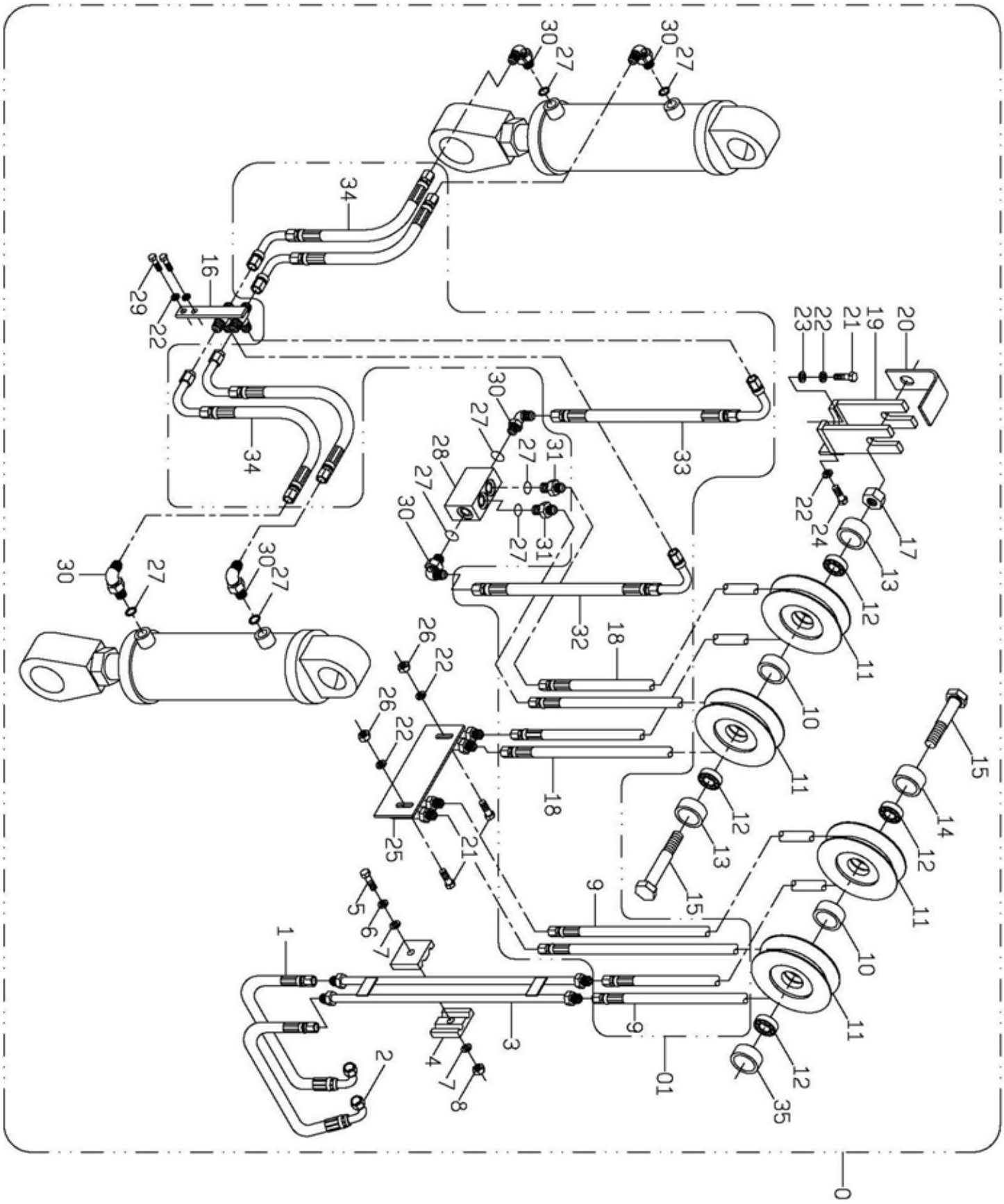

https://truckmanualshub.com/

選配配件系統
A310
CHOOSE ACCESSORY SYSTEM

三截式傾卸配管組
A310-3E
HOSE & ROLL FOR HINGED FORK (THREE-STAGE)

編號 NO.	零件名稱 PART NAME						FD						FG						FD〔C〕						FG〔C〕						機號 BODY NO.	備註 REMARK
	新碼 NEW PART NO.	舊碼 OLD PART NO.	規格 SPECIFICATION	互換性 ITC	應用日期 APPLIED DATE	數量 QTY	15 A	18 B	20 C	25 D	30 E	35 F	15 G	18 H	20 I	25 J	30 K	35 L	15 M	18 N	20 O	25 P	30 Q	35 R	15 S	18 T	20 U	25 V	30 W	35 X		
0	**傾卸配管總成(HINGED FORK LINE ASSY)**																															
	B350457					1				D						J																4M
	B350458					1				E	F					K	L															
	B350459					1				D						J																4.5M
	B350460					1				E	F					K	L															
	B350461					1				D						J																4.8M
	B350462					1				E	F					K	L															
	B350463					1				D						J																5M
	B350464					1				E	F					K	L															
	B350465					1				D						J																5.5M
	B350466					1				E	F					K	L															
	B350467					1				D						J																6M
	B350468					1				E	F					K	L															
	B350469					1				D						J																6.5M
	B350470					1				E	F					K	L															
01	**油管組(HYDRAULIC LINE)**																															
	B350471					1				D						J																4M
	B350472					1				E	F					K	L															
	B350473					1				D						J																4.5M
	B350474					1				E	F					K	L															
	B350475					1				D						J																4.8M
	B350476					1				E	F					K	L															
	B350477					1				D						J																5M
	B350478					1				E	F					K	L															
	B350479					1				D						J																5.5M
	B350480					1				E	F					K	L															
	B350481					1				D						J																6M
	B350482					1				E	F					K	L															
	B350483					1				D						J																6.5M
	B350484					1				E	F					K	L															
1	**高壓油管(HOSE, HIGH PRESSURE)**																															
		92550221				1				D	E	F				J	K	L														
2	**高壓油管(HOSE, HIGH PRESSURE)**																															
	M0501213	92550222				1				D	E	F				J	K	L														
3	**四通接頭(CONNECTION, FOUR-WAY)**																															
	33415	92550103				1				D	E	F				J	K	L														
4	**固定塊(FLANGE SPLIT)**																															
	33416	92550104				1				D	E	F				J	K	L														

https://truckmanualshub.com/

選配配件系統
A310
CHOOSE ACCESSORY SYSTEM

三截式傾卸配管組
A310-3E
HOSE & ROLL FOR HINGED FORK (THREE-STAGE)

編號 NO.	零件名稱 PART NAME						FD		FG		FD〔C〕		FG〔C〕			
	新碼 NEW PART NO.	舊碼 OLD PART NO.	規格 SPECIFICATION	互換性 ITC	應用日期 APPLIED DATE	數量 QTY	15 A	18 B	20 C	25 D	30 E	35 F	15 G	18 H	20 I	25 J	30 K	35 L	15 M	18 N	20 O	25 P	30 Q	35 R	15 S	18 T	20 U	25 V	30 W	35 X	機號 BODY NO.	備註 REMARK
5	**螺栓(BOLT)**																															
	M1424007	92550105				1	D	E	F				J	K	L																	
6	**彈簧華司(SPRING WASHER)**																															
	M1605-M10	92501218				1	D	E	F				J	K	L																	
7	**平華司(WASHER)**																															
	M1602013	92520420				1	D	E	F				J	K	L																	
8	**螺帽(NUT)**																															
		92550315				1	D	E	F				J	K	L																	
9	**高壓油管(HOSE, HIGH PRESSURE)**																															
		92550316				2	D	E	F				J	K	L																4M	
	M0501222	92550301				2	D	E	F				J	K	L																4.5M	
		92550317				2	D	E	F				J	K	L																4.8M	
		92550308				2	D	E	F				J	K	L																5M	
	M0501179	92550309				2	D	E	F				J	K	L																5.5M	
	M0501181	92550310				2	D	E	F				J	K	L																6M	
	M0501182	92550318				2	D	E	F				J	K	L																6.5M	
10	**隔圈(SPACER)**																															
	33418	32550111				2	D	E	F				J	K	L																停用(NOT USED)	
	34585				2006/03	2	D	E	F				J	K	L																	
11	**滾輪(DOOR ROLLER)**																															
		32550112				4	D	E	F				J	K	L																停用(NOT USED)	
	33419	32550112A			2005/03	4	D	E	F				J	K	L																	
12	**軸承(BEARING)**																															
		92512418			2000/10	4	D	E	F				J	K	L																停用(NOT USED)	
	M0901-6003ZZ	92516414			2003/02	4	D	E	F				J	K	L																停用(NOT USED)	
13	**隔圈(SPACER)**																															
	33420	32550113				2	D	E	F				J	K	L																停用(NOT USED)	
	34674	32550225				2	D	E	F				J	K	L																	
14	**隔圈(SPACER)**																															
	33417	32550110				2	D	E	F				J	K	L																停用(NOT USED)	
	33420	32550113				1	D	E	F				J	K	L																	
15	**螺栓(BOLT)**																															
	33450	32550316				2	D	E	F				J	K	L																	
16	**六通接頭(CONNECTION, SIX-WAY)**																															
	33392	32552001				1	D	E	F				J	K	L																	
17	**螺帽(NUT)**																															
		92516419				1	D	E	F				J	K	L																	
18	**高壓油管(HOSE, HIGH PRESSURE)**																															
		92550319				2	D	E	F				J	K	L																4M	
	M0501234	92550302				2	D	E	F				J	K	L																4.5M	

https://truckmanualshub.com/

選配配件系統
A310
CHOOSE ACCESSORY SYSTEM

三截式傾卸配管組
A310-3E
HOSE & ROLL FOR HINGED FORK (THREE-STAGE)

編號 NO.	零件名稱 PART NAME						FD						FG						FD〔C〕						FG〔C〕						機號 BODY NO.	備註 REMARK
	新碼 NEW PART NO.	舊碼 OLD PART NO.	規格 SPECIFICATION	互換性 ITC	應用日期 APPLIED DATE	數量 QTY	15	18	20	25	30	35	15	18	20	25	30	35	15	18	20	25	30	35	15	18	20	25	30	35		
							A	B	C	D	E	F	G	H	I	J	K	L	M	N	O	P	Q	R	S	T	U	V	W	X		
18	高壓油管(HOSE, HIGH PRESSURE)																															
		92550330				2				D	E	F				J	K	L														4.8M
	M0501150	92550311				2				D	E	F				J	K	L														5M
18	高壓油管(HOSE, HIGH PRESSURE)																															
	M0501186	92550312				2				D	E	F				J	K	L														5.5M
		92550313				2				D	E	F				J	K	L														6M
	M0501183	92550321				2				D	E	F				J	K	L														6.5M
19	固定座(FIXED BRACKET)																															
	33434	32550206D				1				D						J																
	33435	33050206E				1					E	F					K	L														
20	固定板(FLANGE SPLIT)																															
	33433	32550226				1				D	E	F				J	K	L														
21	螺栓(BOLT)																															
	M1424-M8*25	92501104				3				D	E	F				J	K	L														
22	彈簧華司(SPRING WASHER)																															
	M1605-M8	92501019				6				D	E	F				J	K	L														
23	平華司(WASHER)																															
	32638	92509009				1				D	E	F				J	K	L														
24	螺栓(BOLT)																															
	M1401-M8*55	92550227				1				D	E	F				J	K	L														
25	四通接頭(CONNECTION, FOUR-WAY)																															
	33447	32550304				1				D	E	F				J	K	L														
26	螺帽(NUT)																															
	M1501-M8	92501115				2				D	E	F				J	K	L														
27	O型環("O"RING)																															
	M0801-P12	92507304				8				D	E	F				J	K	L														
28	四通接頭(CONNECTION, FOUR-WAY)																															
	33391	32551012A				1				D	E	F				J	K	L														
29	螺栓(BOLT)																															
	M1424-M8*20	92504208				2				D	E	F				J	K	L														
30	L型接頭(CONNECTOR "L")																															
	33426	92507431				6				D	E	F				J	K	L														
31	接頭(CONNECTOR)																															
	33446	32550210				2				D	E	F				J	K	L														
32	高壓油管(HOSE, HIGH PRESSURE)																															
		32550402				1				D						J																
		33050402				1					E	F					K	L														
33	高壓油管(HOSE, HIGH PRESSURE)																															
		32550403				1				D						J																
		33050403				1					E	F					K	L														

https://truckmanualshub.com/

三截式傾卸配管組

A310-3E

HOSE & ROLL FOR HINGED FORK (THREE-STAGE)

編號 NO.	零件名稱 PART NAME						FD						FG						FD〔C〕						FG〔C〕							
	新碼 NEW PART NO.	舊碼 OLD PART NO.	規格 SPECIFICATION	互換性 ITC	應用日期 APPLIED DATE	數量 QTY	15 A	180 B	205 C	230 D	305 E	335 F	15 G	180 H	205 I	230 J	305 K	335 L	15 M	180 N	205 O	230 P	305 Q	335 R	15 S	180 T	205 U	230 V	305 W	335 X	機號 BODY NO.	備註 REMARK
34	**高壓油管(HOSE, HIGH PRESSURE)**																															
		92550401				4				D	E	F				J	K	L														
35	**隔圈(SPACER)**																															
	33417	32550110				1				D	E	F				J	K	L														

https://truckmanualshub.com/

選配配件系統
A310
CHOOSE ACCESSORY SYSTEM

三截式四排配管組
A310-3F
HOSE & ROLL OF FOUR-ROW (THREE-STAGE)

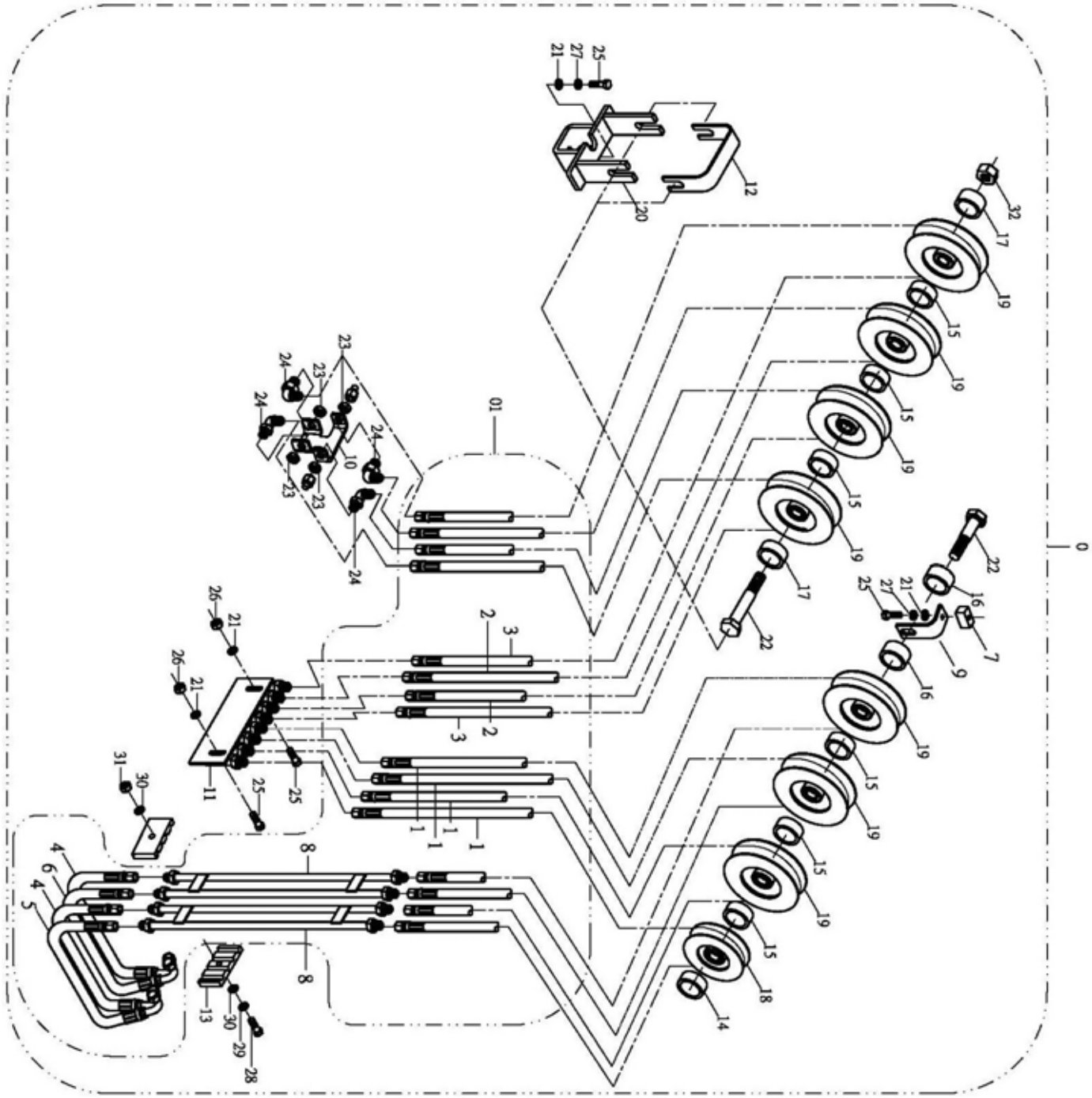

https://truckmanualshub.com/

選配配件系統
A310
CHOOSE ACCESSORY SYSTEM

三截式四排配管組
A310-3F
HOSE & ROLL OF FOUR-ROW (THREE-STAGE)

編號 NO.	零件名稱 PART NAME						FD						FG						FD〔C〕						FG〔C〕						機號 BODY NO.	備註 REMARK
	新碼 NEW PART NO.	舊碼 OLD PART NO.	規格 SPECIFICATION	互換性 ITC	應用日期 APPLIED DATE	數量 QTY	15	18	20	25	30	35	15	18	20	25	30	35	15	18	20	25	30	35	15	18	20	25	30	35		
							A	B	C	D	E	F	G	H	I	J	K	L	M	N	O	P	Q	R	S	T	U	V	W	X		
0	**配管總成(LINE ASSY)**																															
	B350860					1	A	B	C	D	E	F	G	H	I	J	K	L														4.5M
	B350861					1	A	B	C	D	E	F	G	H	I	J	K	L														4.8M
	B350862					1	A	B	C	D	E	F	G	H	I	J	K	L														5M
	B350863					1	A	B	C	D	E	F	G	H	I	J	K	L														5.5M
	B350864					1	A	B	C	D	E	F	G	H	I	J	K	L														6M
01	**油管組(HYDRAULIC LINE)**																															
	B350981					1	A	B	C	D	E	F	G	H	I	J	K	L														4.5M
	B350983					1	A	B	C	D	E	F	G	H	I	J	K	L														4.8M
	B350985					1	A	B	C	D	E	F	G	H	I	J	K	L														5M
	B350987					1	A	B	C	D	E	F	G	H	I	J	K	L														5.5M
	B350989					1	A	B	C	D	E	F	G	H	I	J	K	L														6M
1	**高壓油管(HOSE, HIGH PRESSURE)**																															
	M0501222	92550301				4	A	B	C	D	E	F	G	H	I	J	K	L														4.5M
	M0501178	32550119				4	A	B	C	D	E	F	G	H	I	J	K	L														4.8M
	M0501175					4	A	B	C	D	E	F	G	H	I	J	K	L														5M
	M0501179	92550309				4	A	B	C	D	E	F	G	H	I	J	K	L														5.5M
	M0501181	92550310				4	A	B	C	D	E	F	G	H	I	J	K	L														6M
2	**高壓油管(HOSE, HIGH PRESSURE)**																															
	M0501223					2	A	B	C	D	E	F	G	H	I	J	K	L														4.5M
	M0501223					2	A	B	C	D	E	F	G	H	I	J	K	L														4.8M
	M0501223					2	A	B	C	D	E	F	G	H	I	J	K	L														5M
	M0501310					2	A	B	C	D	E	F	G	H	I	J	K	L														5.5M
	M0501312					2	A	B	C	D	E	F	G	H	I	J	K	L														6M
3	**高壓油管(HOSE, HIGH PRESSURE)**																															
	M0501150	92550311				2	A	B	C	D	E	F	G	H	I	J	K	L														4.5M
	M0501150	92550311				2	A	B	C	D	E	F	G	H	I	J	K	L														4.8M
	M0501150	92550311				2	A	B	C	D	E	F	G	H	I	J	K	L														5M
	M0501222	92550301				2	A	B	C	D	E	F	G	H	I	J	K	L														5.5M
	M0501178	32550119				2	A	B	C	D	E	F	G	H	I	J	K	L														6M
4	**高壓油管(HOSE, HIGH PRESSURE)**																															
	M0501201					2	A	B	C	D	E	F	G	H	I	J	K	L														
5	**高壓油管(HOSE, HIGH PRESSURE)**																															
	M0501185					1	A	B	C	D	E	F	G	H	I	J	K	L														
6	**高壓油管(HOSE, HIGH PRESSURE)**																															
	M0501213	92550222				1	A	B	C	D	E	F	G	H	I	J	K	L														

https://truckmanualshub.com/

選配配件系統
A310
CHOOSE ACCESSORY SYSTEM

三截式四排配管組
A310-3F
HOSE & ROLL OF FOUR-ROW (THREE-STAGE)

編號 NO.	零件名稱 PART NAME						FD		FG		FD〔C〕		FG〔C〕			
	新碼 NEW PART NO.	舊碼 OLD PART NO.	規格 SPECIFICATION	互換性 ITC	應用日期 APPLIED DATE	數量 QTY	1 1 2 2 3 3 5 5 0 5 0 5 A B C D E F		1 1 2 2 3 3 5 5 0 5 0 5 G H I J K L		1 1 2 2 3 3 5 5 0 5 0 5 M N O P Q R		1 1 2 2 3 3 5 5 0 5 0 5 S T U V W X		機號 BODY NO.	備註 REMARK
7	定位塊(FIXED LUMP)															
	34766	32516331				1	A B C D E F		G H I J K L							
8	四通接頭(CONNECTION, FOUR-WAY)															
	33415	32550103				2	A B C D E F		G H I J K L							
9	滾輪固定板(DOOR ROLLER FLANGE SPLIT)															
	31991	32550701				1	A B C D E F		G H I J K L							
10	四排固定座(FOUR-ROW FLANGE SET)															
	31002					1	A B C D E F		G H I J K L							
11	八通接頭(CONNECTION, EIGHT-WAY)															
	31994	32550705				1	A B C D E F		G H I J K L							
12	固定檔板(FLANGE SPLIT)															
	31993	32550704				1	A B C D E F		G H I J K L							
13	鋼管固定塊(STEEL TUBE OF FLANGE SPLIT)															
	31995	32550706				1	A B C D E F		G H I J K L							
14	隔圈(SPACER)															
	33417	32550110	17*18			1	A B C D E F		G H I J K L							
15	隔圈(SPACER)															
	34585		17*14			6	A B C D E F		G H I J K L							
16	隔圈(SPACER)															
	34776		17*10			2	A B C D E F		G H I J K L							
17	隔圈(SPACER)															
	34674		17*12			2	A B C D E F		G H I J K L							
18	滾輪(DOOR ROLLER)															
	33429	52550112A				1	A B C D E F		G H I J K L							
19	滾輪(DOOR ROLLER)															
	33419	32550112				7	A B C D E F		G H I J K L							
20	固定座(FIXED BRACKET)															
	32534	32550703				1	A B C D		G H I J							
	34747					1		E F		K L						
21	平華司(WASHER)															
	32638	92509009				4	A B C D E F		G H I J K L							
22	螺栓(BOLT)															
	33450	32550316				2	A B C D E F		G H I J K L							
23	螺帽(NUT)															
	34785					4	A B C D E F		G H I J K L							
24	L型接頭(CONNECTOR "L")															
	33428	92550223				4	A B C D E F		G H I J K L							

https://truckmanualshub.com/

選配配件系統
A310
CHOOSE ACCESSORY SYSTEM

三截式四排配管組
A310-3F
HOSE & ROLL OF FOUR-ROW (THREE-STAGE)

編號 NO.	零件名稱 PART NAME						FD						FG						FD〔C〕						FG〔C〕						機號 BODY NO.	備註 REMARK
	新碼 NEW PART NO.	舊碼 OLD PART NO.	規格 SPECIFICATION	互換性 ITC	應用日期 APPLIED DATE	數量 QTY	15 A	18 B	20 C	25 D	30 E	35 F	15 G	18 H	20 I	25 J	30 K	35 L	15 M	18 N	20 O	25 P	30 Q	35 R	15 S	18 T	20 U	25 V	30 W	35 X		
25	**螺栓(BOLT)**																															
	M1424-M8*25	92501104				4	A	B	C	D	E	F	G	H	I	J	K	L														
26	**螺帽(NUT)**																															
	M1501-M8	92501115				2	A	B	C	D	E	F	G	H	I	J	K	L														
27	**彈簧華司(SPRING WASHER)**																															
	M1605-M8	92501019				2	A	B	C	D	E	F	G	H	I	J	K	L														
28	**螺栓(BOLT)**																															
	M1424007	92550105				1	A	B	C	D	E	F	G	H	I	J	K	L														
29	**彈簧華司(SPRING WASHER)**																															
	M1605-M10	92501218				1	A	B	C	D	E	F	G	H	I	J	K	L														
30	**平華司(WASHER)**																															
	M1602013	92520420				2	A	B	C	D	E	F	G	H	I	J	K	L														
31	**螺帽(NUT)**																															
	M1502001	92504016				1	A	B	C	D	E	F	G	H	I	J	K	L														
32	**螺帽(NUT)**																															
	M1513005	92506022				1	A	B	C	D	E	F	G	H	I	J	K	L														

https://truckmanualshub.com/

選配配件系統
A310
CHOOSE ACCESSORY SYSTEM

二截式四排配管組
A310-3G
HOSE & ROLL OF FOUR-ROW(TWO-STAGE)

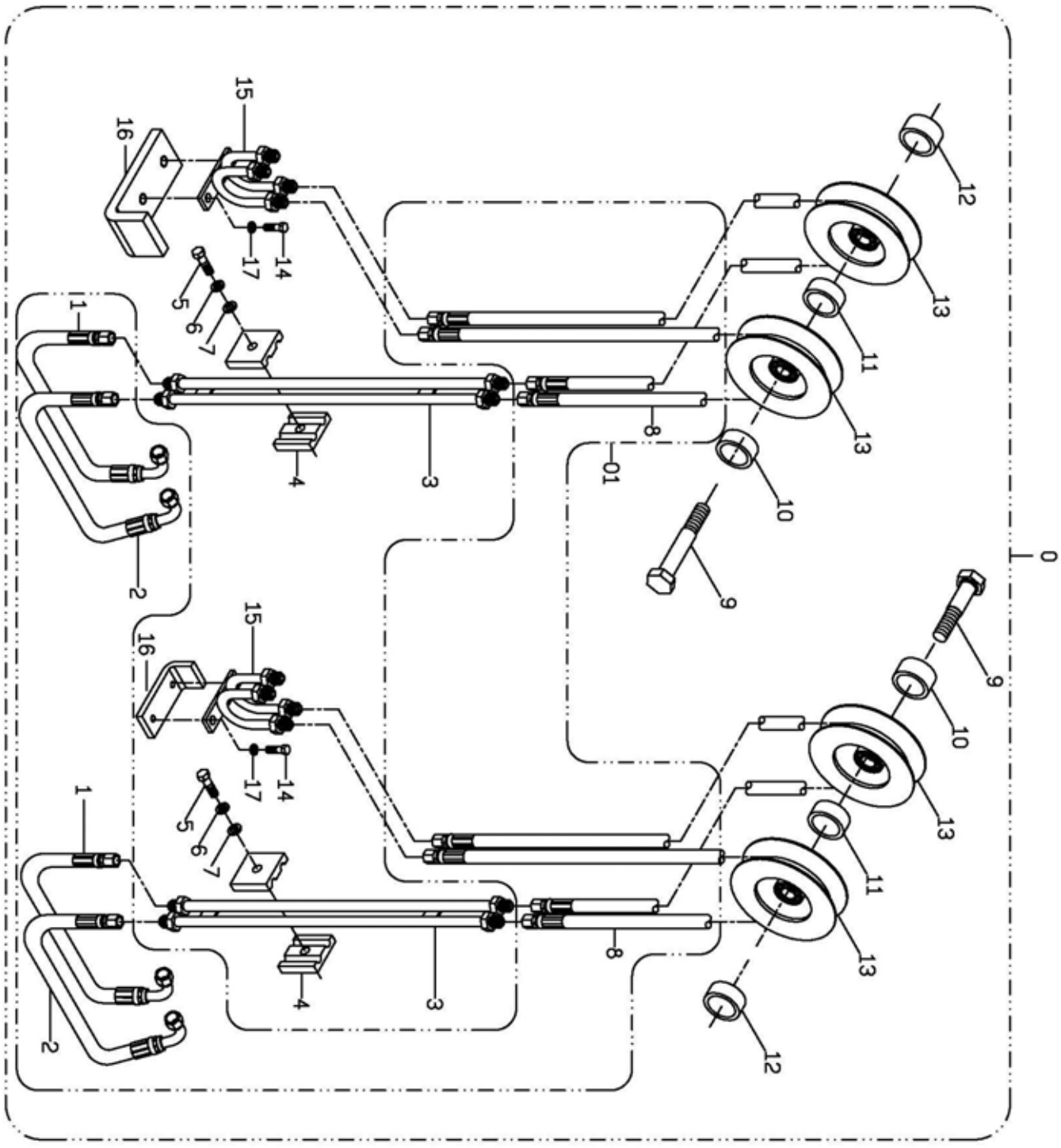

https://truckmanualshub.com/

選配配件系統
A310
CHOOSE ACCESSORY SYSTEM

二截式四排配管組
A310-3G
HOSE & ROLL OF FOUR-ROW(TWO-STAGE)

編號 NO.	零件名稱 PART NAME						FD						FG						FD〔C〕						FG〔C〕						機號 BODY NO.	備註 REMARK
	新碼 NEW PART NO.	舊碼 OLD PART NO.	規格 SPECIFICATION	互換性 ITC	應用日期 APPLIED DATE	數量 QTY	15 A	18 B	20 C	25 D	30 E	35 F	15 G	18 H	20 I	25 J	30 K	35 L	15 M	18 N	20 O	25 P	30 Q	35 R	15 S	18 T	20 U	25 V	30 W	35 X		
0	**配管總成(LINE ASSY)**																															
	B350916					1	A	B	C	D	E	F	G	H	I	J	K	L														3M
	B350920					1	A	B	C	D	E	F	G	H	I	J	K	L														3.3M
	B350924					1	A	B	C	D	E	F	G	H	I	J	K	L														3.5M
	B350928					1	A	B	C	D	E	F	G	H	I	J	K	L														4M
	B350932					1	A	B	C	D	E	F	G	H	I	J	K	L														4.5M
	B350936					1	A	B	C	D	E	F	G	H	I	J	K	L														5M
01	**油管組(HYDRAULIC LINE)**																															
	B350990					1	A	B	C	D	E	F	G	H	I	J	K	L														3M
	B350991					1	A	B	C	D	E	F	G	H	I	J	K	L														3.3M
	B350992					1	A	B	C	D	E	F	G	H	I	J	K	L														3.5M
	B350993					1	A	B	C	D	E	F	G	H	I	J	K	L														4M
	B350994					1	A	B	C	D	E	F	G	H	I	J	K	L														4.5M
	B350995					1	A	B	C	D	E	F	G	H	I	J	K	L														5M
1	**高壓油管(HOSE, HIGH PRESSURE)**																															
	M0501164	92550101				2	A	B	C	D	E	F	G	H	I	J	K	L														
2	**高壓油管(HOSE, HIGH PRESSURE)**																															
	M0501165	92550102				2	A	B	C	D	E	F	G	H	I	J	K	L														
3	**四通接頭(CONNECTION, FOUR-WAY)**																															
	33415	32550103				2	A	B	C	D	E	F	G	H	I	J	K	L														
4	**鋼管固定塊(STEEL TUBE OF FLANGE SPLIT)**																															
	33416	92550104				2	A	B	C	D	E	F	G	H	I	J	K	L														
5	**螺栓(BOLT)**																															
	M1424007	92550105				2	A	B	C	D	E	F	G	H	I	J	K	L														
6	**彈簧華司(SPRING WASHER)**																															
	M1605-M10	92501218				2	A	B	C	D	E	F	G	H	I	J	K	L														
7	**平華司(WASHER)**																															
	M1602013					2	A	B	C	D	E	F	G	H	I	J	K	L														
8	**高壓油管(HOSE, HIGH PRESSURE)**																															
	M0501161	32550108				4	A	B	C	D	E	F	G	H	I	J	K	L														3M
	M0501178	32550119				4	A	B	C	D	E	F	G	H	I	J	K	L														3.3M
	M0501187	32550120				4	A	B	C	D	E	F	G	H	I	J	K	L														3.5M
	M0501188	32550121				4	A	B	C	D	E	F	G	H	I	J	K	L														4M
	M0501189	32550122				4	A	B	C	D	E	F	G	H	I	J	K	L														4.5M
	M0501190	32550124				4	A	B	C	D	E	F	G	H	I	J	K	L														5M

https://truckmanualshub.com/

選配配件系統
A310
CHOOSE ACCESSORY SYSTEM

二截式四排配管組
A310-3G
HOSE & ROLL OF FOUR-ROW(TWO-STAGE)

編號 NO.	零件名稱 PART NAME						FD						FG						FD〔C〕						FG〔C〕						機號 BODY NO.	備註 REMARK
	新碼 NEW PART NO.	舊碼 OLD PART NO.	規格 SPECIFICATION	互換性 ITC	應用日期 APPLIED DATE	數量 QTY	15	18	20	25	30	35	15	18	20	25	30	35	15	18	20	25	30	35	15	18	20	25	30	35		
							A	B	C	D	E	F	G	H	I	J	K	L	M	N	O	P	Q	R	S	T	U	V	W	X		
9	螺栓(BOLT)																															
	33450	32550316				2	A	B	C	D	E	F	G	H	I	J	K	L														
10	隔圈(SPACER)																															
	33420	32550113	17*22			2	A	B	C	D	E	F	G	H	I	J	K	L														
11	隔圈(SPACER)																															
	34585		17*14			2	A	B	C	D	E	F	G	H	I	J	K	L														
12	隔圈(SPACER)																															
	33417	32550110	17*18			2	A	B	C	D	E	F	G	H	I	J	K	L														
13	滾輪(DOOR ROLLER)																															
	33419	32550112				4	A	B	C	D	E	F	G	H	I	J	K	L														
14	螺栓(BOLT)																															
	M1424-M8*20	92504208				2	A	B	C	D	E	F	G	H	I	J	K	L														停用(NOT USED)
	M1424-M8*20	92504208				4	A	B	C	D	E	F	G	H	I	J	K	L														
15	連通接頭(CONNECTION, FOUR-WAY)																															
	33421	32550115				2	A	B	C	D	E	F	G	H	I	J	K	L														
16	固定板(FLANGE SPLIT)																															
	33359	32551013A				2	A	B	C	D	E	F	G	H	I	J	K	L														
17	彈簧華司(SPRING WASHER)																															
	M1605-M8	92501019				2	A	B	C	D	E	F	G	H	I	J	K	L														停用(NOT USED)
	M1605-M8	92501019				4	A	B	C	D	E	F	G	H	I	J	K	L														

https://truckmanualshub.com/

選配配件系統
A310
CHOOSE ACCESSORY SYSTEM

二截式貨櫃型四排配管組
A310-3H
HOSE & ROLL OF FOUR-ROW(TWO-STAGE

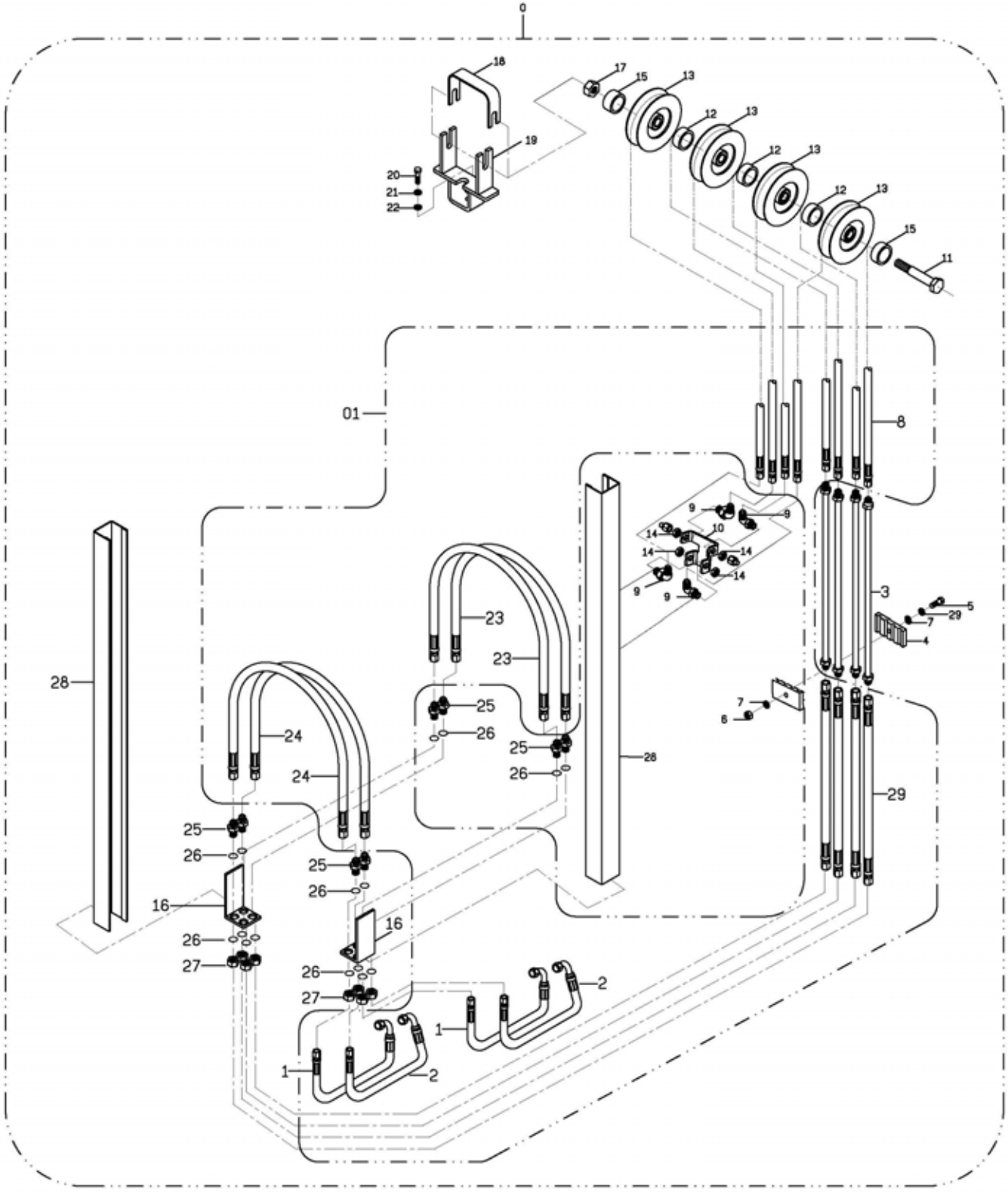

https://truckmanualshub.com/

選配配件系統
A310
CHOOSE ACCESSORY SYSTEM

二截式貨櫃型四排配管組
A310-3H
HOSE & ROLL OF FOUR-ROW(TWO-STAGE

編號 NO.	零件名稱 PART NAME						FD						FG						FD〔C〕						FG〔C〕						機號 BODY NO.	備註 REMARK
	新碼 NEW PART NO.	舊碼 OLD PART NO.	規格 SPECIFICATION	互換性 ITC	應用日期 APPLIED DATE	數量 QTY	15 A	18 B	20 C	25 D	30 E	35 F	15 G	18 H	20 I	25 J	30 K	35 L	15 M	18 N	20 O	25 P	30 Q	35 R	15 S	18 T	20 U	25 V	30 W	35 X		
0	配管總成(LINE ASSY)																															
	B350940					1	A	B	C	D	E	F	G	H	I	J	K	L														3M
	B350943					1	A	B	C	D	E	F	G	H	I	J	K	L														3.3M
	B350948					1	A	B	C	D	E	F	G	H	I	J	K	L														3.5M
01	油管組(HYDRAULIC LINE)																															
	B350996					1	A	B	C	D	E	F	G	H	I	J	K	L														3M
	B350997					1	A	B	C	D	E	F	G	H	I	J	K	L														3.3M
	B350998					1	A	B	C	D	E	F	G	H	I	J	K	L														3.5M
1	高壓油管(HOSE, HIGH PRESSURE)																															
	M0501201					2	A	B	C	D	E	F	G	H	I	J	K	L														
2	高壓油管(HOSE, HIGH PRESSURE)																															
	M0501213	92550222				2	A	B	C	D	E	F	G	H	I	J	K	L														
3	高壓鋼管(STEEL TUBE)																															
	32413	32550212				4	A	B	C	D	E	F	G	H	I	J	K	L														
4	鋼管固定塊(STEEL TUBE OF FLANGE SPLIT)																															
	31995	32550706				1	A	B	C	D	E	F	G	H	I	J	K	L														
5	螺栓(BOLT)																															
	M1424007	92550105				1	A	B	C	D	E	F	G	H	I	J	K	L														
6	螺帽(NUT)																															
	M1502001	92504016				1	A	B	C	D	E	F	G	H	I	J	K	L														
7	平華司(WASHER)																															
	M1602013	92520420				2	A	B	C	D	E	F	G	H	I	J	K	L														
8	高壓油管(HOSE, HIGH PRESSURE)																															
	M0501202	92550209				4	A	B	C	D	E	F	G	H	I	J	K	L														3M
	M0501203	M0501203				4	A	B	C	D	E	F	G	H	I	J	K	L														3.3M
	M0501204	92550216				4	A	B	C	D	E	F	G	H	I	J	K	L														3.5M
9	L型接頭(CONNECTOR "L")																															
	33428	92550223				4	A	B	C	D	E	F	G	H	I	J	K	L														
10	四排固定座(FOUR-ROW FLANGE SET)																															
	31002					1	A	B	C	D	E	F	G	H	I	J	K	L														
11	螺栓(BOLT)																															
	33450	32550316				1	A	B	C	D	E	F	G	H	I	J	K	L														
12	隔圈(SPACER)																															
	34585	T30066	17*14			3	A	B	C	D	E	F	G	H	I	J	K	L														
13	滾輪(DOOR ROLLER)																															
	33419	32550112				4	A	B	C	D	E	F	G	H	I	J	K	L														
14	螺帽(NUT)																															
	34785					1	A	B	C	D	E	F	G	H	I	J	K	L														

https://truckmanualshub.com/

選配配件系統
A310
CHOOSE ACCESSORY SYSTEM

二截式貨櫃型四排配管組
A310-3H
HOSE & ROLL OF FOUR-ROW(TWO-STAGE

編號 NO.	零件名稱 PART NAME						FD						FG						FD〔C〕						FG〔C〕						機號 BODY NO.	備註 REMARK
	新碼 NEW PART NO.	舊碼 OLD PART NO.	規格 SPECIFICATION	互換性 ITC	應用日期 APPLIED DATE	數量 QTY	15 A	18 B	20 C	25 D	30 E	35 F	15 G	18 H	20 I	25 J	30 K	35 L	15 M	18 N	20 O	25 P	30 Q	35 R	15 S	18 T	20 U	25 V	30 W	35 X		
15	隔圈(SPACER)																															
	34674	32550225	17*12			2	A	B	C	D	E	F	G	H	I	J	K	L														
16	固定板(FLANGE SPLIT)																															
	31769					2	A	B	C	D	E	F	G	H	I	J	K	L														
17	螺帽(NUT)																															
	M1513005	92506022				1	A	B	C	D	E	F	G	H	I	J	K	L														
18	固定檔板(FLANGE SPLIT)																															
	31993	32550704				1	A	B	C	D	E	F	G	H	I	J	K	L														
19	固定座(FIXED BRACKET)																															
	32534	32550703				1	A	B	C	D			G	H	I	J																
	34747					1					E	F					K	L														
20	螺栓(BOLT)																															
	M1424-M8*25	92501104				1	A	B	C	D	E	F	G	H	I	J	K	L														
21	彈簧華司(SPRING WASHER)																															
	M1605-M8	92501019				2	A	B	C	D	E	F	G	H	I	J	K	L														
22	平華司(WASHER)																															
	32638	92509009				4	A	B	C	D	E	F	G	H	I	J	K	L														
23	高壓油管(HOSE, HIGH PRESSURE)																															
	M0501202	92550209				1	A	B	C	D	E	F	G	H	I	J	K	L														3M
	M0501168					1	A	B	C	D	E	F	G	H	I	J	K	L														3.3M
	M0501282					1	A	B	C	D	E	F	G	H	I	J	K	L														3.5M
24	高壓油管(HOSE, HIGH PRESSURE)																															
	M0501168					1	A	B	C	D	E	F	G	H	I	J	K	L														3M
	M0501282					1	A	B	C	D	E	F	G	H	I	J	K	L														3.3M
	M0501294					1	A	B	C	D	E	F	G	H	I	J	K	L														3.5M
25	接頭(CONNECTOR)(DUAL PIPE)																															
	M0601024					8	A	B	C	D	E	F	G	H	I	J	K	L														
26	O型環(O-RING)(DUAL PIPE)																															
	M0801-P12	92507304				16	A	B	C	D	E	F	G	H	I	J	K	L														
27	六角螺帽(NUT)																															
	M1501010	M1501-9/16"-18UNF				8	A	B	C	D	E	F	G	H	I	J	K	L														
28	管路護套(PIPELINE CASE; DUAL PIPE)																															
	33437	32550232				2	A	B	C	D	E	F	G	H	I	J	K	L														3M
	33439					2	A	B	C	D	E	F	G	H	I	J	K	L														3.3M
	33441					2	A	B	C	D	E	F	G	H	I	J	K	L														3.5M
29	高壓油管(HOSE, HIGH PRESSURE)																															
	M0501167	92550213				4	A	B	C	D	E	F	G	H	I	J	K	L														3M~3.3M
	M0501294					4	A	B	C	D	E	F	G	H	I	J	K	L														3.5M~4M

https://truckmanualshub.com/

選配配件系統
A310
CHOOSE ACCESSORY SYSTEM

選附配件組

A310-4

CHOOSE ACCESSORY OVERALL

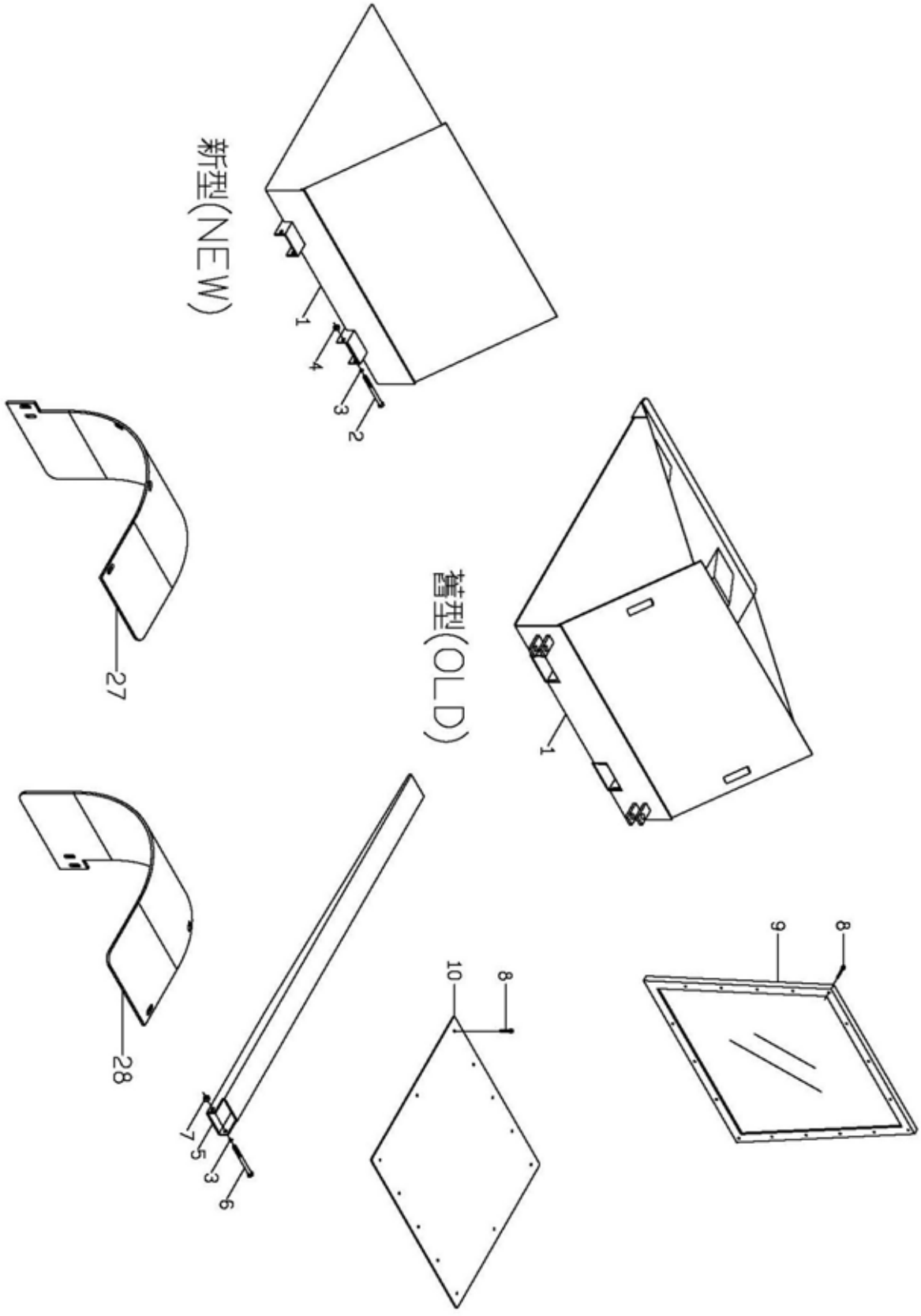

https://truckmanualshub.com/

選配配件系統
A310
CHOOSE ACCESSORY SYSTEM

選附配件組
A310-4
CHOOSE ACCESSORY OVERALL

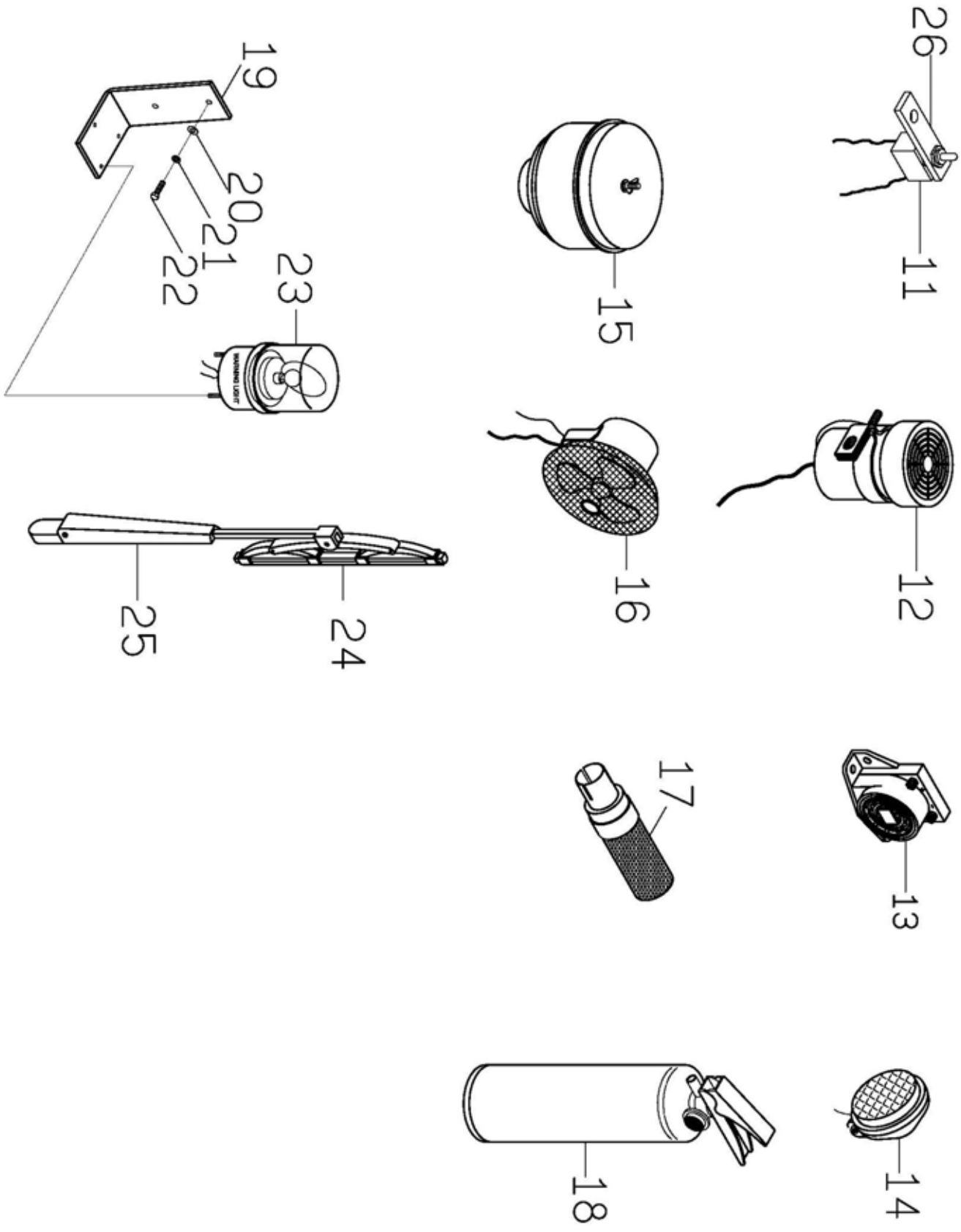

https://truckmanualshub.com/

選配配件系統
A310
CHOOSE ACCESSORY SYSTEM

選附配件組
A310-4
CHOOSE ACCESSORY OVERALL

編號 NO.	新碼 NEW PART NO.	舊碼 OLD PART NO.	規格 SPECIFICATION	互換性 ITC	應用日期 APPLIED DATE	數量 QTY	FD 15	FD 18	FD 20	FD 25	FD 30	FD 35	FG 15	FG 18	FG 20	FG 25	FG 30	FG 35	FD〔C〕15	FD〔C〕18	FD〔C〕20	FD〔C〕25	FD〔C〕30	FD〔C〕35	FG〔C〕15	FG〔C〕18	FG〔C〕20	FG〔C〕25	FG〔C〕30	FG〔C〕35	機號 BODY NO.	備註 REMARK
	零件名稱 PART NAME						A	B	C	D	E	F	G	H	I	J	K	L	M	N	O	P	Q	R	S	T	U	V	W	X		
1	**鏟斗(SHOVEL)**																															
	32827	22570800				1	A	B	C	D	E	F	G	H	I	J	K	L														停用(NOT USED)
	34866				2006/09	1				D						J															1.18m^3
	34871				2006/09	1				D						J															1.48m^3
	34873				2006/09	1					E	F					K	L													1.18m^3
	34872				2006/09	1					E	F					K	L													1.48m^3
2	**螺栓(BOLT)**																															
		32550217				2	A	B	C	D	E	F	G	H	I	J	K	L														停用(NOT USED)
3	**彈簧華司(SPRING WASHER)**																															
	M1605-M16	92504212				2	A	B	C	D	E	F	G	H	I	J	K	L														停用(NOT USED)
4	**螺帽(NUT)**																															
		92550218				2	A	B	C	D	E	F	G	H	I	J	K	L														停用(NOT USED)
5	**牙套(FORK CASE)(5 foot)**																															
	33452	32507520				2	A	B	C	D			G	H	I	J																停用(NOT USED)
	34854				2006/09	2	A	B					G	H																		
	33452	32507520			2006/09	2			C	D					I	J															5ft	
	33453	33007520			2006/09	2					E	F					K	L														
5	**牙套(FORK CASE)(5.5 foot)**																															
	33454	32507521				2	A	B	C	D			G	H	I	J																停用(NOT USED)
	34853	31507520			2006/09	2	A	B					G	H																		
	33454	32507521			2006/09	2			C	D					I	J															5.5ft	
	33455	33007521				2					E	F					K	L														
5	**牙套(FORK CASE)(6 foot)**																															
	33456	32507522				2	A	B	C	D			G	H	I	J																停用(NOT USED)
	34852	31507522				2	A	B					G	H																		
	33456	32507522				2			C	D					I	J															6ft	
	33457	33007522				2					E	F					K	L														
5	**牙套(FORK CASE)(6.5 foot)**																															
	33458	32507523				2	A	B	C	D			G	H	I	J															6.5ft	
	33459	33007523				2					E	F					K	L														
5	**牙套(FORK CASE)(7 foot)**																															
	33460	32507524				2	A	B	C	D			G	H	I	J															7ft	
	33461	33007524				2					E	F					K	L														
5	**牙套(FORK CASE)(7.5 foot)**																															
	33462	32507525				2	A	B	C	D			G	H	I	J															7.5ft	
	33463	33007525				2					E	F					K	L														

https://truckmanualshub.com/

選配配件系統
A310
CHOOSE ACCESSORY SYSTEM

選附配件組
A310-4
CHOOSE ACCESSORY OVERALL

編號 NO.	新碼 NEW PART NO.	舊碼 OLD PART NO.	規格 SPECIFICATION	互換性 ITC	應用日期 APPLIED DATE	數量 QTY	FD 15	FD 18	FD 20	FD 25	FD 30	FD 35	FG 15	FG 18	FG 20	FG 25	FG 30	FG 35	FD〔C〕 15	FD〔C〕 18	FD〔C〕 20	FD〔C〕 25	FD〔C〕 30	FD〔C〕 35	FG〔C〕 15	FG〔C〕 18	FG〔C〕 20	FG〔C〕 25	FG〔C〕 30	FG〔C〕 35	機號 BODY NO.	備註 REMARK
	零件名稱 PART NAME						A	B	C	D	E	F	G	H	I	J	K	L	M	N	O	P	Q	R	S	T	U	V	W	X		
6	螺栓(BOLT)																															
		32507528				2	A	B	C	D	E	F	G	H	I	J	K	L														停用(NOT USED)
	M1402015					2	A	B	C	D	E	F	G	H	I	J	K	L														
7	螺帽(NUT)																															
	33451	92507529				2	A	B	C	D	E	F	G	H	I	J	K	L														
8	自攻螺絲(BOLT)																															
		92575013				N	A	B	C	D	E	F	G	H	I	J	K	L														
9	擋風玻璃(WINDSCREEN)																															
	33464	32575011				1	A	B	C	D	E	F	G	H	I	J	K	L														
10	頂蓬護板(HARD CEILING)																															
	33465	31575012				1	A	B					G	H																		
	33466	32575012				1			C	D	E	F			I	J	K	L														
11	搖頭開關(SWITCH)																															
	E1602003	92575009				1	A	B	C	D	E	F	G	H	I	J	K	L														停用(NOT USED)
	E1604002					1	A	B	C	D	E	F	G	H	I	J	K	L														
12	倒車喇叭(HORN,REVERSE)																															
	E3804005	92575007				1	A	B	C	D	E	F	G	H	I	J	K	L														
13	倒車喇叭(HORN,REVERSE)																															
	E3804007					1	A	B	C	D	E	F	G	H	I	J	K	L														電子式(ELECTRONIC)
14	後大燈(REAR LAMP)																															
	E2302001	92509010				1	A	B	C	D	E	F	G	H	I	J	K	L														
15	濕式濾清器(PRE-CLEANER)																															
	33467	92575001				1	A	B	C	D	E	F	G	H	I	J	K	L														
16	電風扇(ELECTRIC FAN)																															
	E3805004	92575008				1	A	B	C	D	E	F	G	H	I	J	K	L														
17	滅燄器(FIRE EXTINGUISHER)																															
	32584	92510526				1	A	B	C	D	E	F	G	H	I	J	K	L														
18	滅火器(5磅)(FIRE EXTINGUISHER)(5 POUND)																															
	33468	92575002				1	A	B	C	D	E	F	G	H	I	J	K	L														
19	警示燈燈架(ALARM LIGHT FRAME)																															
	33469	32575006E				1	A	B	C	D	E	F	G	H	I	J	K	L														
20	平華司(WASHER)																															
	M1602004	92510428				2	A	B	C	D	E	F	G	H	I	J	K	L														
21	彈簧華司(WASHER SPRING)																															
	M1605-M6	92503218				2	A	B	C	D	E	F	G	H	I	J	K	L														
22	螺栓(BOLT)																															
	M1423-M6*16	92512513				2	A	B	C	D	E	F	G	H	I	J	K	L														

https://truckmanualshub.com/

選配配件系統
A310
CHOOSE ACCESSORY SYSTEM

選附配件組
A310-4
CHOOSE ACCESSORY OVERALL

編號 NO.	新碼 NEW PART NO.	舊碼 OLD PART NO.	規格 SPECIFICATION	互換性 ITC	應用日期 APPLIED DATE	數量 QTY	FD 15A 18B 20C 25D 30E 35F	FG 15G 18H 20I 25J 30K 35L	FD〔C〕 15M 18N 20O 25P 30Q 35R	FG〔C〕 15S 18T 20U 25V 30W 35X	機號 BODY NO.	備註 REMARK
	零件名稱 PART NAME											
23	閃黃警示燈(ALARM LIGHT “YELLOW”)											
	E1615003	92575004				1	A B C D E F	G H I J K L				
23	閃紅警示燈(ALARM LIGHT “RED”)											
	E1615004	92575005				1	A B C D E F	G H I J K L				
24	雨刷(WINDSCREEN WIPER)											
	33471	92575010				1	A B C D E F	G H I J K L				
25	雨刷組(WINDSCREEN WIPER-ASSY)											
	33470	92575003				1	A B C D E F	G H I J K L				
26	保險鎖固定片(FIXING)											
	34894					1	A B C D E F	G H I J K L				
27	擋泥副板(左)(PUST PROOF BOARD)(L.H)											
	34983	41509341				1	A B	G H				前雙輪 (DRIVE DUAL WHEELS)
	34985	42509341A				1	C D E F	I J K L				
28	擋泥副板(右)(PUST PROOF BOARD)(R.H)											
	34984	41509441				1	A B	G H				前雙輪 (DRIVE DUAL WHEELS)
	34986	42509441A				1	C D E F	I J K L				

https://truckmanualshub.com/

選配配件系統
A310
CHOOSE ACCESSORY SYSTEM

立式向上排氣管組
A310-5
EXHAUST PIPE

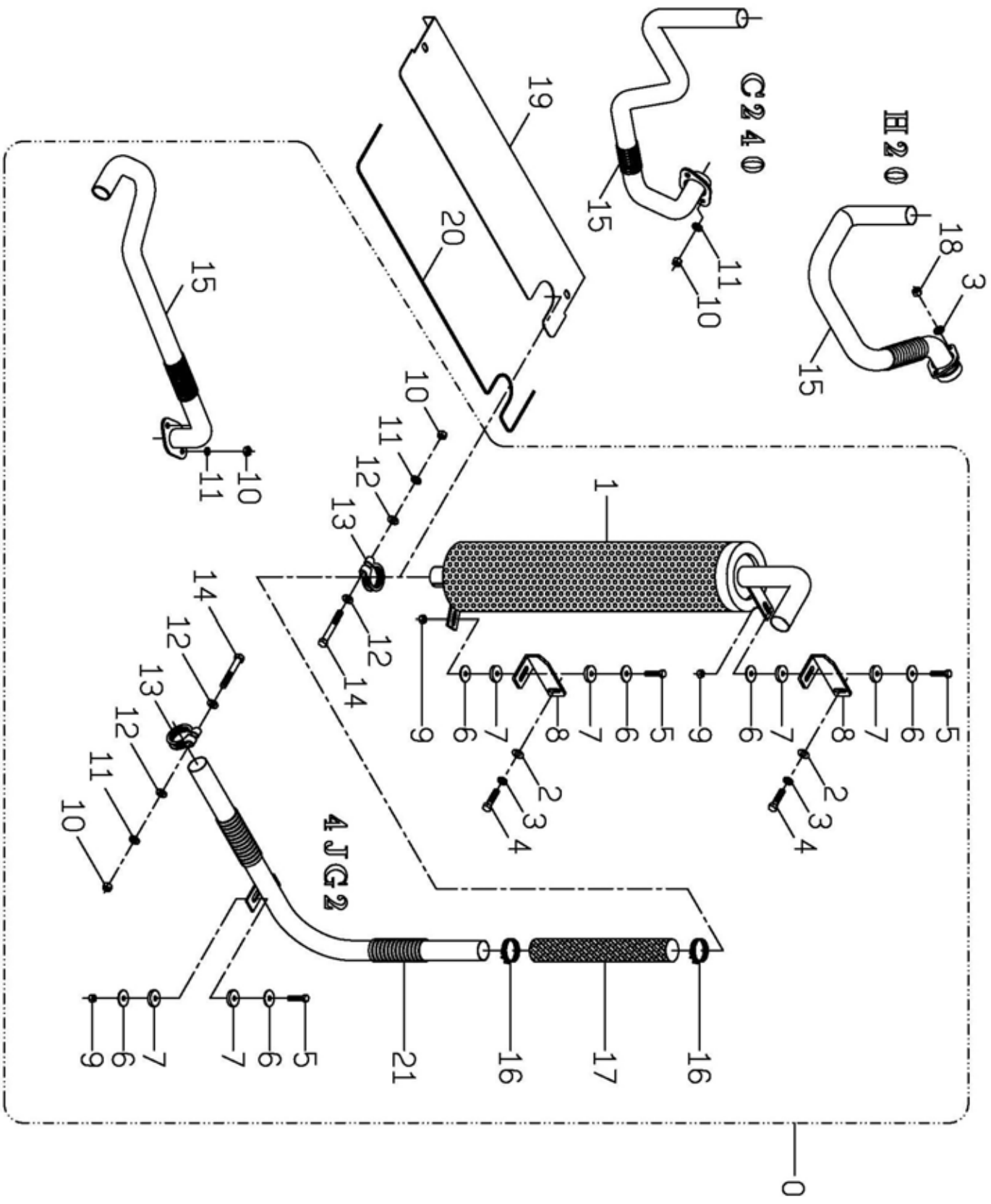

https://truckmanualshub.com/

選配配件系統
A310
CHOOSE ACCESSORY SYSTEM

立式向上排氣管組
A310-5
EXHAUST PIPE

編號 NO.	零件名稱 PART NAME						FD												FG												FD〔C〕												FG〔C〕												機號 BODY NO.	備註 REMARK
	新碼 NEW PART NO.	舊碼 OLD PART NO.	規格 SPECIFICATION	互換性 ITC	應用日期 APPLIED DATE	數量 QTY	15	18	20	25	30	35	15	18	20	25	30	35	15	18	20	25	30	35	15	18	20	25	30	35	15	18	20	25	30	35	15	18	20	25	30	35														
							A	B	C	D	E	F	G	H	I	J	K	L	M	N	O	P	Q	R	S	T	U	V	W	X																												
0	立式向上排氣管組(EXHAUST PIPE)																																																								
	B350553		4JG2			1		C	D	E	F																																													手排(MT)
	B350485		4JG2			1		C	D	E	F																																											自排(AT)
	B350486		C240			1	A	B	C	D																																											
	B350487		H20,H25			1							G	H	I	J	K	L																																				
1	立式排氣管(ERECT EXHAUST PIPE)																																																				
	33472	32572901				1	A	B	C	D	E	F	G	H	I	J	K	L																																				
2	平華司(WASHER)																																																				
	M1602007	92511056				2	A	B	C	D	E	F	G	H	I	J	K	L																																				
3	彈簧華司(SPRING WASHER)																																																				
	M1605-M8	92501019	C240,4JG2			2	A	B	C	D	E	F																																										
	M1605-M8	92501019	H20,H25			4							G	H	I	J	K	L																																				
4	螺栓(BOLT)																																																				
	M1424-M8*20	92504208				2	A	B	C	D	E	F	G	H	I	J	K	L																																				
5	螺栓(BOLT)																																																				
	M1424-M8*35	92501009	C240			2	A	B	C	D																																										
	M1424-M8*35	92501009	H20,H25			2							G	H	I	J	K	L																																				
	M1424-M8*35	92501009	4JG2			3		C	D	E	F																																										
6	平華司(WASHER)																																																				
	M1602010	92507027	C240			4	A	B	C	D																																										
	M1602010	92507027	H20,H25			4							G	H	I	J	K	L																																		
	M1602010	92507027	4JG2			6		C	D	E	F																																									
7	橡膠墊圈(GASKET, RUBBER)																																																			
	32587	32572902	C240			4	A	B	C	D																																										
	32587	32572902	H20,H25			4							G	H	I	J	K	L																																		
	32587	32572902	4JG2			6		C	D	E	F																																									
8	固定座(BRACKET)																																																				
	32873	32572903				2	A	B	C	D	E	F	G	H	I	J	K	L																																				
9	螺帽(NUT)																																																				
	M1502-M8	92509013	C240			2	A	B	C	D																																										
	M1502-M8	92509013	H20,H25			2							G	H	I	J	K	L																																		
	M1502-M8	92509013	4JG2			3		C	D	E	F																																									
10	螺帽(NUT)																																																				
	32875	92506028	C240,4JG2			2	A	B	C	D	E	F																																									
	32875	92506028	H20,H25			1							G	H	I	J	K	L																																		
11	彈簧華司(SPRING WASHER)																																																			
	M1605-M10	92501218	C240,4JG2			2	A	B	C	D	E	F																																									
	M1605-M10	92501218	H20,H25			1							G	H	I	J	K	L																																		

https://truckmanualshub.com/

選配配件系統
A310
CHOOSE ACCESSORY SYSTEM

立式向上排氣管組
A310-5
EXHAUST PIPE

編號 NO.	零件名稱 PART NAME						FD						FG						FD〔C〕						FG〔C〕						機號 BODY NO.	備註 REMARK
	新碼 NEW PART NO.	舊碼 OLD PART NO.	規格 SPECIFICATION	互換性 ITC	應用日期 APPLIED DATE	數量 QTY	15A	18B	20C	25D	30E	35F	15G	18H	20I	25J	30K	35L	15M	18N	20O	25P	30Q	35R	15S	18T	20U	25V	30W	35X		
12	平華司(WASHER)																															
	M1602013	92520420	C240			2	A	B	C	D																						
	M1602013	92520420	H20,H25			2							G	H	I	J	K	L														
	M1602013	92520420	4JG2			4					E	F																				
13	固定環(STAY-RING)																															
	32578	92510513	C240			1	A	B	C	D																						
	32578	92510513	H20,H25			1							G	H	I	J	K	L														
	32578	92510513	4JG2			2					E	F																				
14	螺栓(BOLT)																															
	32874	92510511	C240			1	A	B	C	D																						
	32874	92510511	H20,H25			1							G	H	I	J	K	L														
	32874	92510511	4JG2			2					E	F																				
15	排氣管(EXHAUST)																															
	32573	32510518	4JG2			1					E	F																				手排(MT)
	32574	32510522	4JG2			1					E	F																				自排(AT)
	31574		C240			1	A	B																								
	33473	32572905	C240			1			C	D																						
	33474	32572906	H20,H25			1							G	H	I	J	K	L														
16	管束(CLAMP, HOSE)																															
	M1315008	92508004				2	A	B	C	D	E	F	G	H	I	J	K	L														
17	隔熱管(LAGGING MATERIAL)																															
	33475	92572907				1	A	B	C	D	E	F	G	H	I	J	K	L														
18	螺帽(NUT)																															
	M1501-M8	92501115	H20,H25			4							G	H	I	J	K	L														
19	水箱蓋(RADIATOR COVER)																															
	34861				2006/09	1	A	B					G	H																		
	34862				2006/09	1			C	D					I	J																
	34863				2006/09	1					E	F					K	L														
20	水箱蓋護條(RADIATOR COVER,INSULATOR)																															
	33482	31511067				1	A						G																			
	33483	31811067				1		B						H																		
	33484	32011067				1			C						I																	
	33485	32511067				1				D						J																
	33486	33011067				1					E						K															
	33487	33511067				1						F						L														
21	排氣管(中段)(EXHAUST)																															
	33488	32572904	4JG2			1					E	F																				

https://truckmanualshub.com/

選配配件系統
A310
CHOOSE ACCESSORY SYSTEM

向上排氣管組
A310-5A
UPWARD EXHAUST PIPE

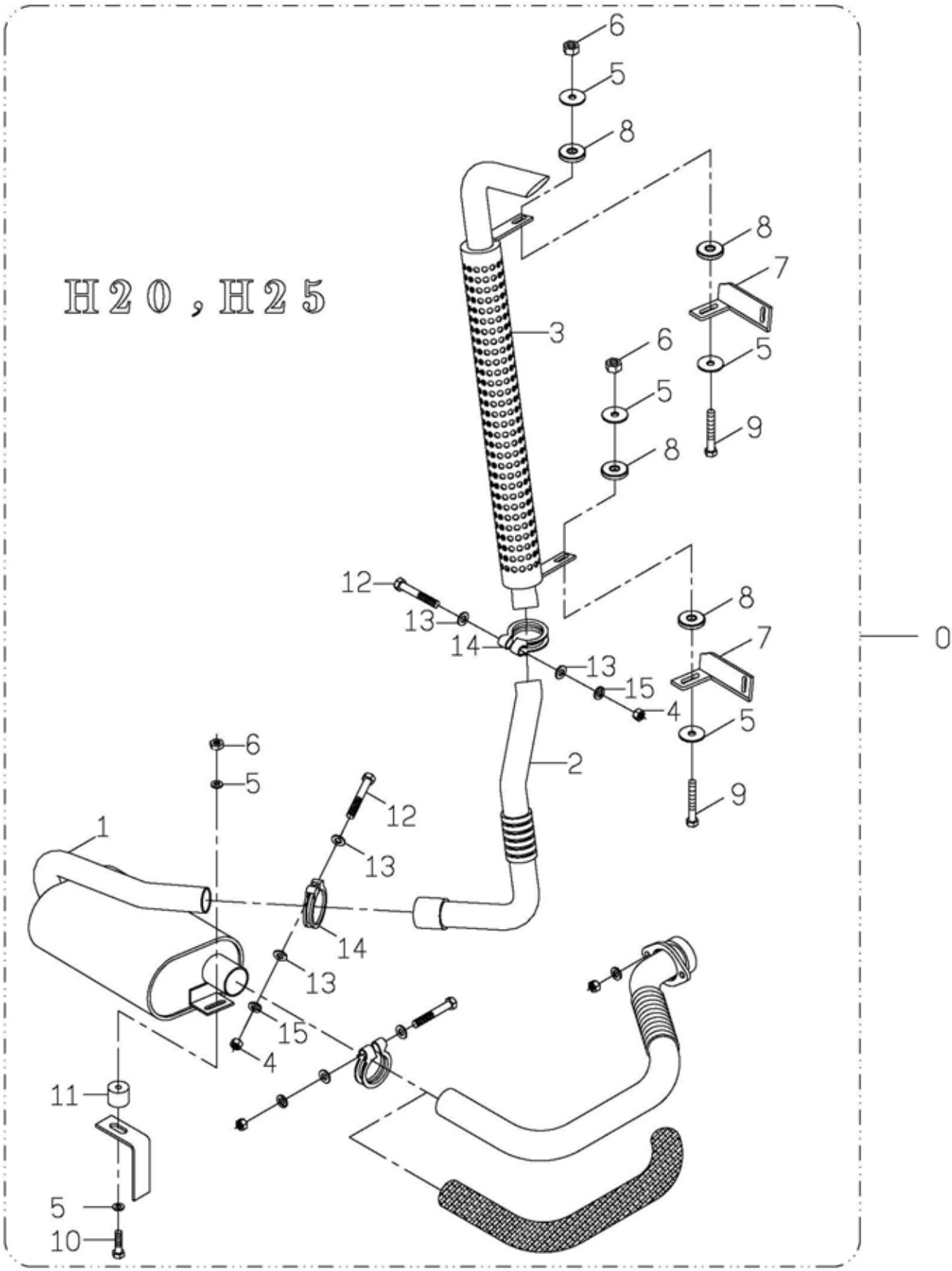

https://truckmanualshub.com/

向上排氣管組
A310-5A
UPWARD EXHAUST PIPE

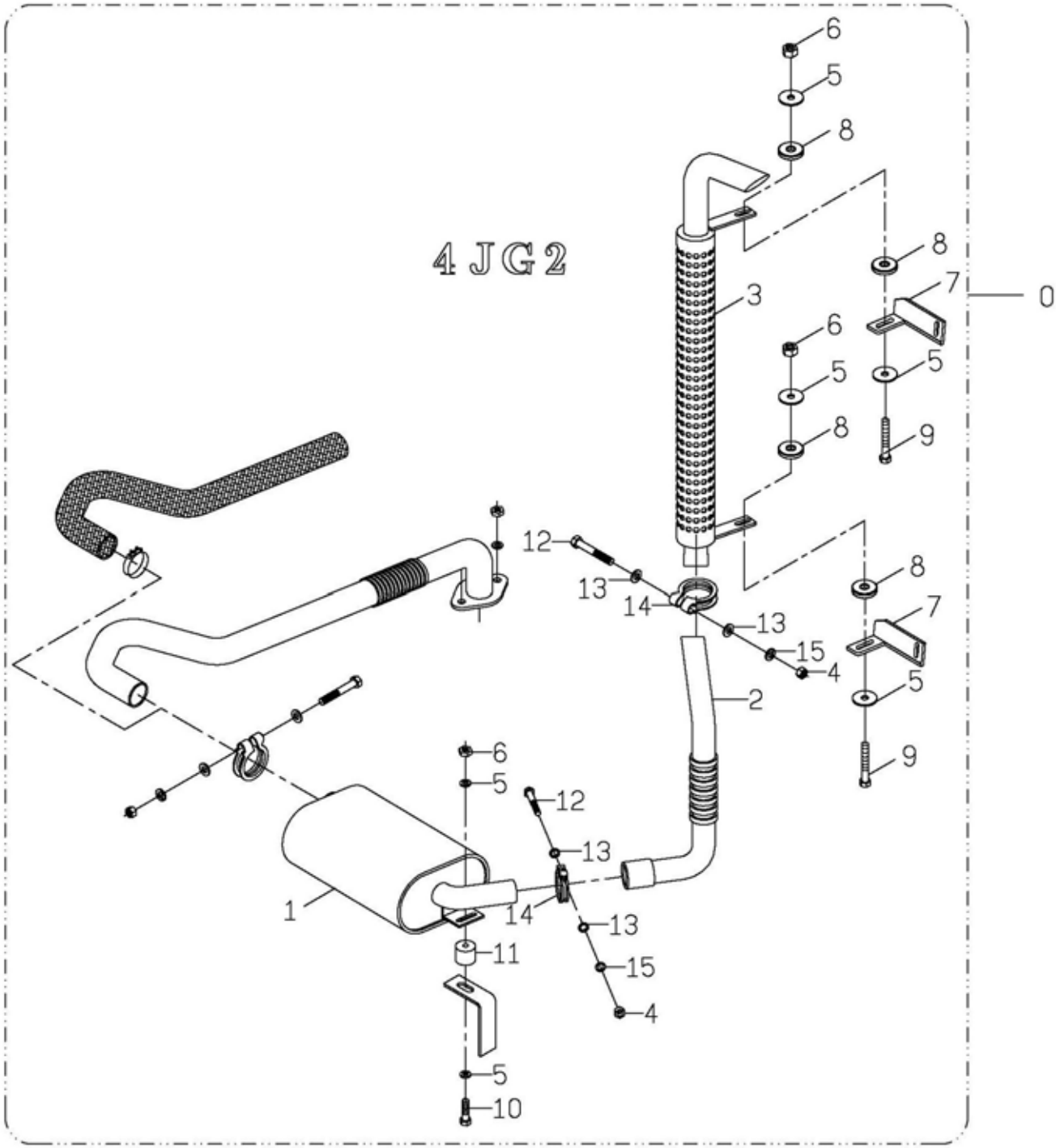

https://truckmanualshub.com/

選配配件系統
A310
CHOOSE ACCESSORY SYSTEM

向上排氣管組
A310-5A
UPWARD EXHAUST PIPE

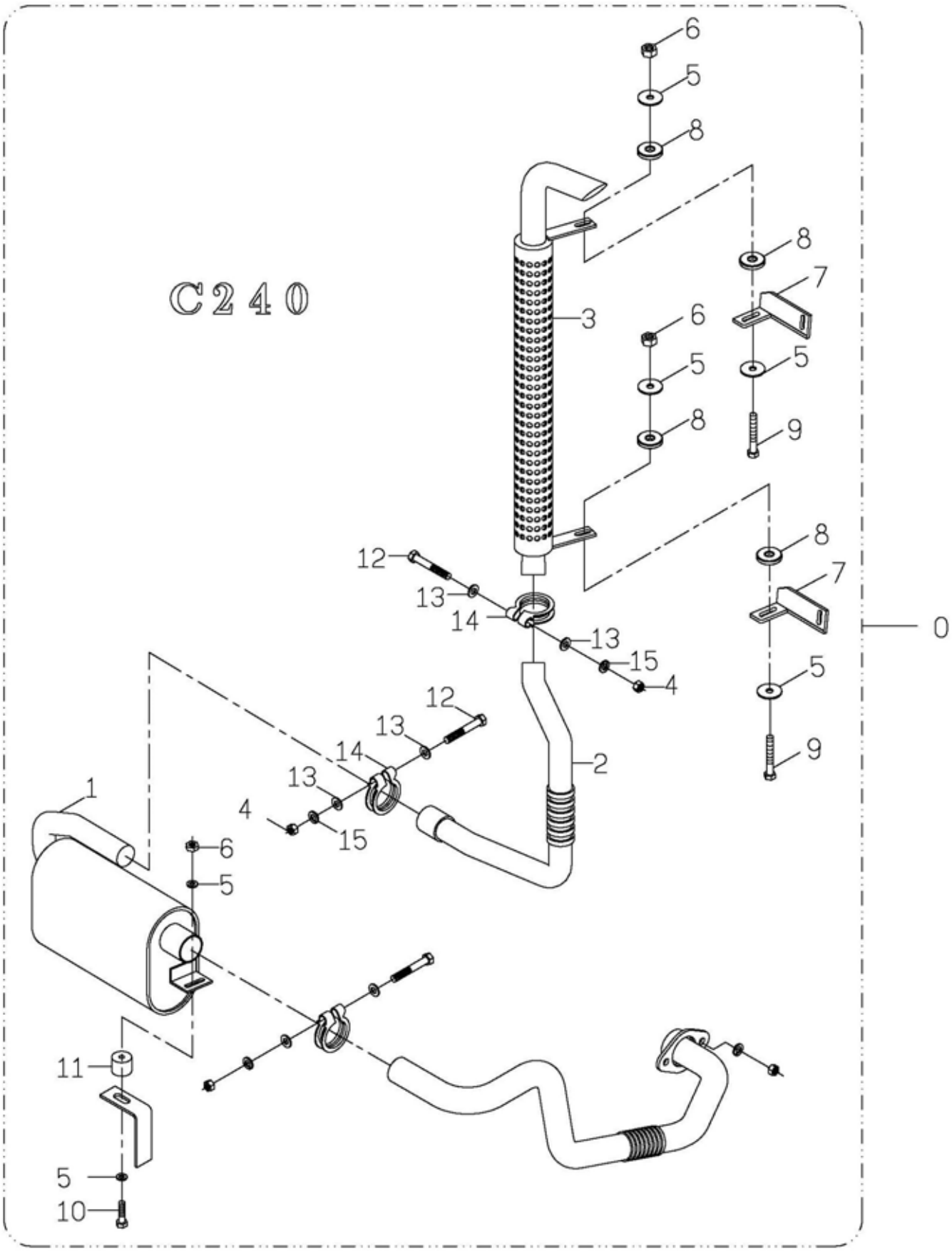

https://truckmanualshub.com/

選配配件系統
A310
CHOOSE ACCESSORY SYSTEM

向上排氣管組
A310-5A
UPWARD EXHAUST PIPE

編號 NO.	新碼 NEW PART NO.	舊碼 OLD PART NO.	規格 SPECIFICATION	互換性 ITC	應用日期 APPLIED DATE	數量 QTY	FD 15 A	FD 18 B	FD 20 C	FD 25 D	FD 30 E	FD 35 F	FG 15 G	FG 18 H	FG 20 I	FG 25 J	FG 30 K	FG 35 L	FD〔C〕15 M	FD〔C〕18 N	FD〔C〕20 O	FD〔C〕25 P	FD〔C〕30 Q	FD〔C〕35 R	FG〔C〕15 S	FG〔C〕18 T	FG〔C〕20 U	FG〔C〕25 V	FG〔C〕30 W	FG〔C〕35 X	機號 BODY NO.	備註 REMARK
0	**向上排氣管組(UPWARD EXHAUST PIPE)**																															
	B350489		C240,H20			1	A	B					G	H																		
	B350488		C240			1			C	D																						
	B350490		4JG2			1			C	D	E	F																				
	B350097		H20,H25			1									I	J	K	L														
1	**消音器(MUFFLER)**																															
	32862	MD-072	C240,H20			1	A	B					G	H																		
	32863	MD-074	C240			1			C	D																						
	32864	MD-070	4JG2			1			C	D	E	F																				
	32863	MD-074	H20,H25			1									I	J	K	L														
2	**排氣管(EXHAUST)**																															
	31566		C240,H20			1	A	B					G	H																		
	31564		C240			1			C	D																						
	31565		4JG2			1			C	D	E	F																				
	31564		H20,H25			1									I	J	K	L														
3	**立式排氣管(ERECT EXHAUST PIPE)**																															
	34705		C240,H20			1	A	B					G	H																		
	34706		C240			1			C	D																						
	34707		4JG2			1			C	D	E	F																				
	34706		H20,H25			1									I	J	K	L														
4	**螺帽(NUT)**																															
	32875	92506028	C240,4JG2			2	A	B	C	D	E	F																				
	32875	92506028	H20,H25			2							G	H	I	J	K	L														
5	**平華司(WASHER)**																															
	M1602010	92507027				8	A	B	C	D	E	F	G	H	I	J	K	L														
6	**螺帽(NUT)**																															
	M1501-M8	92501115	C240,4JG2			4	A	B	C	D	E	F																				
	M1501-M8	92501115	H20,H25			4							G	H	I	J	K	L														
7	**固定座(FIXED BRACKET)**																															
	31702					2	A	B	C	D	E	F	G	H	I	J	K	L														
8	**橡皮墊(DAMPER)**																															
	32551	92510403				4	A	B	C	D	E	F	G	H	I	J	K	L														
9	**螺栓(BOLT)**																															
	M1424-M8*35	92501009				2	A	B	C	D	E	F	G	H	I	J	K	L														
10	**螺栓(BOLT)**																															
	M1424-M8*55	92510515				2	A	B	C	D	E	F	G	H	I	J	K	L														
11	**橡膠墊圈(GASKET, RUBBER)**																															
	32579	92510514				2	A	B	C	D	E	F	G	H	I	J	K	L														

https://truckmanualshub.com/

選配配件系統
A310
CHOOSE ACCESSORY SYSTEM

向上排氣管組
A310-5A
UPWARD EXHAUST PIPE

編號 NO.	零件名稱 PART NAME						FD						FG						FD〔C〕						FG〔C〕						機號 BODY NO.	備註 REMARK
	新碼 NEW PART NO.	舊碼 OLD PART NO.	規格 SPECIFICATION	互換性 ITC	應用日期 APPLIED DATE	數量 QTY	15A	18B	20C	25D	30E	35F	15G	18H	20I	25J	30K	35L	15M	18N	20O	25P	30Q	35R	15S	18T	20U	25V	30W	35X		
12	**螺栓(BOLT)**																															
	32874	92510511				2	A	B	C	D	E	F	G	H	I	J	K	L														
13	**平華司(WASHER)**																															
	M1602013	92520420				4	A	B	C	D	E	F	G	H	I	J	K	L														
14	**固定環(STAY-RING)**																															
	32578	92510513				2	A	B	C	D	E	F	G	H	I	J	K	L														
15	**彈簧華司(SPRING WASHER)**																															
	M1605-M10	92501218	C240,4JG2			2	A	B	C	D	E	F																				
	M1605-M10	92501218	H20,H25			2							G	H	I	J	K	L														

https://truckmanualshub.com/

選配配件系統
A310
CHOOSE ACCESSORY SYSTEM

背式瓦斯桶架
A310-6
CARRYING LPG TANK BRACKET ASSEMBLY

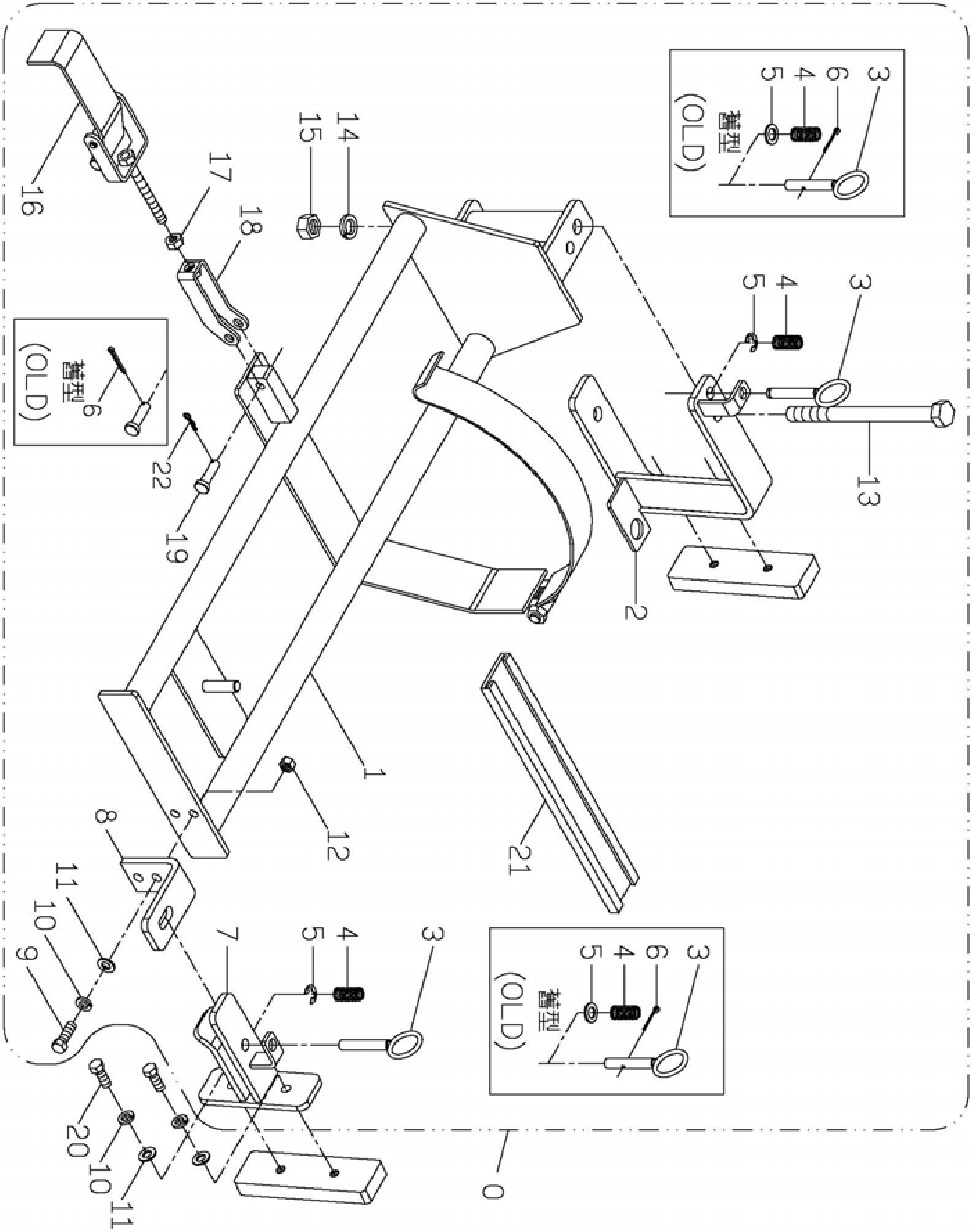

https://truckmanualshub.com/

選配配件系統
A310
CHOOSE ACCESSORY SYSTEM

背式瓦斯桶架
A310-6
CARRYING LPG TANK BRACKET ASSEMBLY

編號 NO.	新碼 NEW PART NO.	舊碼 OLD PART NO.	規格 SPECIFICATION	互換性 ITC	應用日期 APPLIED DATE	數量 QTY	FD 15 A	FD 18 B	FD 20 C	FD 25 D	FD 30 E	FD 35 F	FG 15 G	FG 18 H	FG 20 I	FG 25 J	FG 30 K	FG 35 L	FD〔C〕 15 M	FD〔C〕 18 N	FD〔C〕 20 O	FD〔C〕 25 P	FD〔C〕 30 Q	FD〔C〕 35 R	FG〔C〕 15 S	FG〔C〕 18 T	FG〔C〕 20 U	FG〔C〕 25 V	FG〔C〕 30 W	FG〔C〕 35 X	機號 BODY NO.	備註 REMARK
0	背式瓦斯桶架(CARRYING LPG TANK BRACKET ASSEMBLY)																															
	B350491	22576100				1									I	J	K	L														LPG
	B350493	52576100				1							G	H																		
1	瓦斯桶支架(LPG TANK SUPPORT BRACKET)																															
	33489	32576101				1							G	H	I	J	K	L														停用(NOT USED)
	33489A					1							G	H	I	J	K	L														LPG
2	固定座（左）(FIXED BRACKET L.H.)																															
	33492	32576102				1							G	H	I	J	K	L														LPG
3	插銷(PIN)																															
	33493	32576103				2							G	H	I	J	K	L														停用(NOT USED)
	33493A					2							G	H	I	J	K	L														LPG
4	彈簧(SPRING)																															
		92576104			2000/10	2							G	H	I	J	K	L														停用(NOT USED)
		32576104			2003/02	2							G	H	I	J	K	L														LPG
5	平墊圈(WASHER)																															
	M1602021	92512812				2							G	H	I	J	K	L														停用(NOT USED)
5	E型扣環(E-RING)																															
	M1312-E9	92576209				2							G	H	I	J	K	L														LPG
6	開口銷(PIN,COTTER)																															
	M1307002	92501220				3							G	H	I	J	K	L														停用(NOT USED)
7	固定座（右）(FIXED BRACKET R.H.)																															
	33494	32576105				1							G	H	I	J	K	L														LPG
8	固定座（右）(FIXED BRACKET R.H.)																															
	33495	32576106				1							G	H	I	J	K	L														停用(NOT USED)
	33495	32576106				1							G	H																		LPG
	34941				2006/10	1									I	J	K	L														
9	螺栓(BOLT)																															
	M1424004	92501102				2							G	H	I	J	K	L														LPG
10	彈簧華司(WASHER SPRING)																															
	M1605-M10	92501218				6							G	H	I	J	K	L														LPG
11	平墊圈(WASHER)																															
	M1602013	92520420				6							G	H	I	J	K	L														LPG
12	螺帽(NUT)																															
	M1502001	92504016				2							G	H	I	J	K	L														LPG
13	螺栓(BOLT)																															
	M1423025	32552017				1							G	H	I	J	K	L														LPG
14	彈簧華司(WASHER SPRING)																															
	M1605-M16	92504212				1							G	H	I	J	K	L														LPG

https://truckmanualshub.com/

選配配件系統
A310
CHOOSE ACCESSORY SYSTEM

背式瓦斯桶架
A310-6
CARRYING LPG TANK BRACKET ASSEMBLY

編號 NO.	零件名稱 PART NAME						FD		FG		FD〔C〕		FG〔C〕		機號 BODY NO.	備註 REMARK
	新碼 NEW PART NO.	舊碼 OLD PART NO.	規格 SPECIFICATION	互換性 ITC	應用日期 APPLIED DATE	數量 QTY	15 A	18 B	15 G	18 H	15 M	18 N	15 S	18 T		
							20 C	20 I	20 O	20 U						
							25 D	25 J	25 P	25 V						
							30 E	30 K	30 Q	30 W						
							35 F	35 L	35 R	35 X						
15	**螺帽(NUT)**															
	M1501008	92552018				1			G H I J K L							LPG
16	**扣鉤(HOOK)**															
	33497	32576107				1			G H I J K L							LPG
17	**螺帽(NUT)**															
	32875	92506028				1			G H I J K L							LPG
18	**拉桿(SHAFT)**															
	33498	32576108				1			G H I J K L							LPG
19	**銷(PIN)**															
	31981	32576109				1			G H I J K L							LPG
20	**螺栓(BOLT)**															
	M1424003	92520301				4			G H I J K L							LPG
21	**護條(PROTECT COVER)**															
	33499	32576110				1			G H I J K L							LPG
22	**R型開口銷("R" Cotter PIN)**															
	M1307006	92512428				1			G H I J K L							LPG

https://truckmanualshub.com/

選配配件系統
A310
CHOOSE ACCESSORY SYSTEM

立式瓦斯桶架
A310-6A
UPRINGHT LPG TANK BRACKET ASSEMBLY

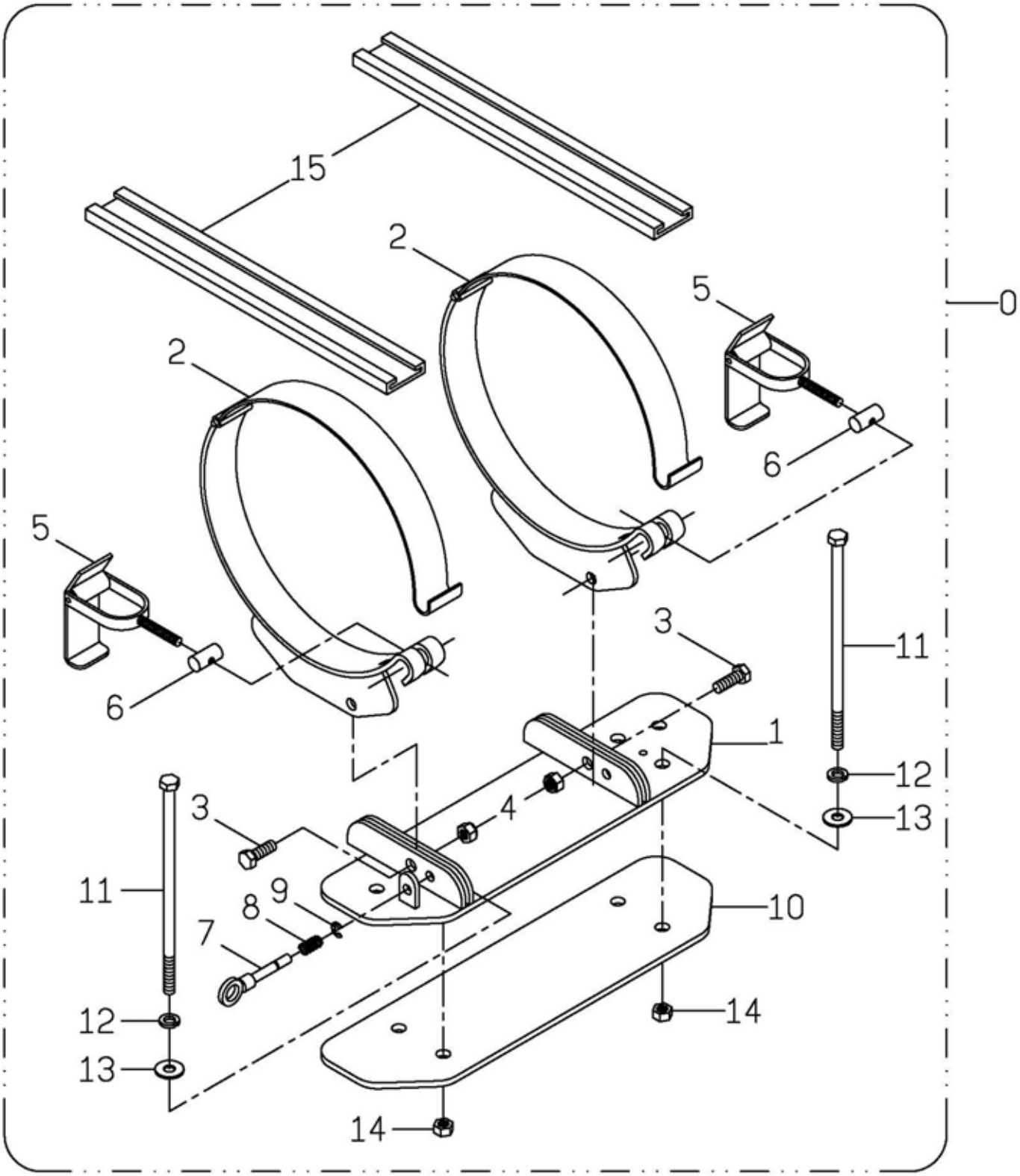

https://truckmanualshub.com/

選配配件系統
A310
CHOOSE ACCESSORY SYSTEM

立式瓦斯桶架
A310-6A
UPRINGHT LPG TANK BRACKET ASSEMBLY

編號 NO.	零件名稱 PART NAME						FD		FG		FD〔C〕		FG〔C〕		機號 BODY NO.	備註 REMARK
	新碼 NEW PART NO.	舊碼 OLD PART NO.	規格 SPECIFICATION	互換性 ITC	應用日期 APPLIED DATE	數量 QTY	15 A	18 B	15 G	18 H	15 M	18 N	15 S	18 T		
							20 C	20 I	20 O	20 U						
							25 D	25 J	25 P	25 V						
							30 E	30 K	30 Q	30 W						
							35 F	35 L	35 R	35 X						
0	立式瓦斯桶架(UPRIGHT LPG TANK BRACKET ASSEMBLY)															
	B350494	22576200				1		G H I J K L								LPG
1	支撐座(BRACKET)															
	33500	32576201				1		G H I J K L								LPG
2	固定架(FIXED BRACKET)															
	33501	32576202				2		G H I J K L								LPG
3	螺栓(BOLT)															
		92576203				2		G H I J K L								LPG
4	螺帽(NUT)															
		92576204				2		G H I J K L								LPG
5	扣鉤(HOOK)															
	33502	32576205				2		G H I J K L								LPG
6	定位軸(SHAFT)															
	33503	32576206				2		G H I J K L								LPG
7	插銷(PIN)															
	33504	32576207				1		G H I J K L								LPG
8	彈簧(SPRING)															
	33505	92576208				1		G H I J K L								LPG
9	E形扣環(“E” RING)															
	M1312-E9	92576209				1		G H I J K L								LPG
10	防震墊(SHOCKPROOF,CUSHION)															
	33506	32576210				1		G H I J K L								LPG
11	螺栓(BOLT)															
		92576211				2		G H I J K L								LPG
12	彈簧華司(SPRING WASHER)															
	M1605-M12	92501024				2		G H I J K L								LPG
13	平墊圈(WASHER)															
		92576213				2		G H I J K L								LPG
14	螺帽(NUT)															
		92576214				2		G H I J K L								LPG
15	護條(PROTECTIVE COVER)															
	33507	32576215				2		G H I J K L								LPG

https://truckmanualshub.com/

選配配件系統
A310
CHOOSE ACCESSORY SYSTEM

雙燃料瓦斯轉換器組
A310-7
LPG & GASOLING-FUEL SUPPLY SYSTEM

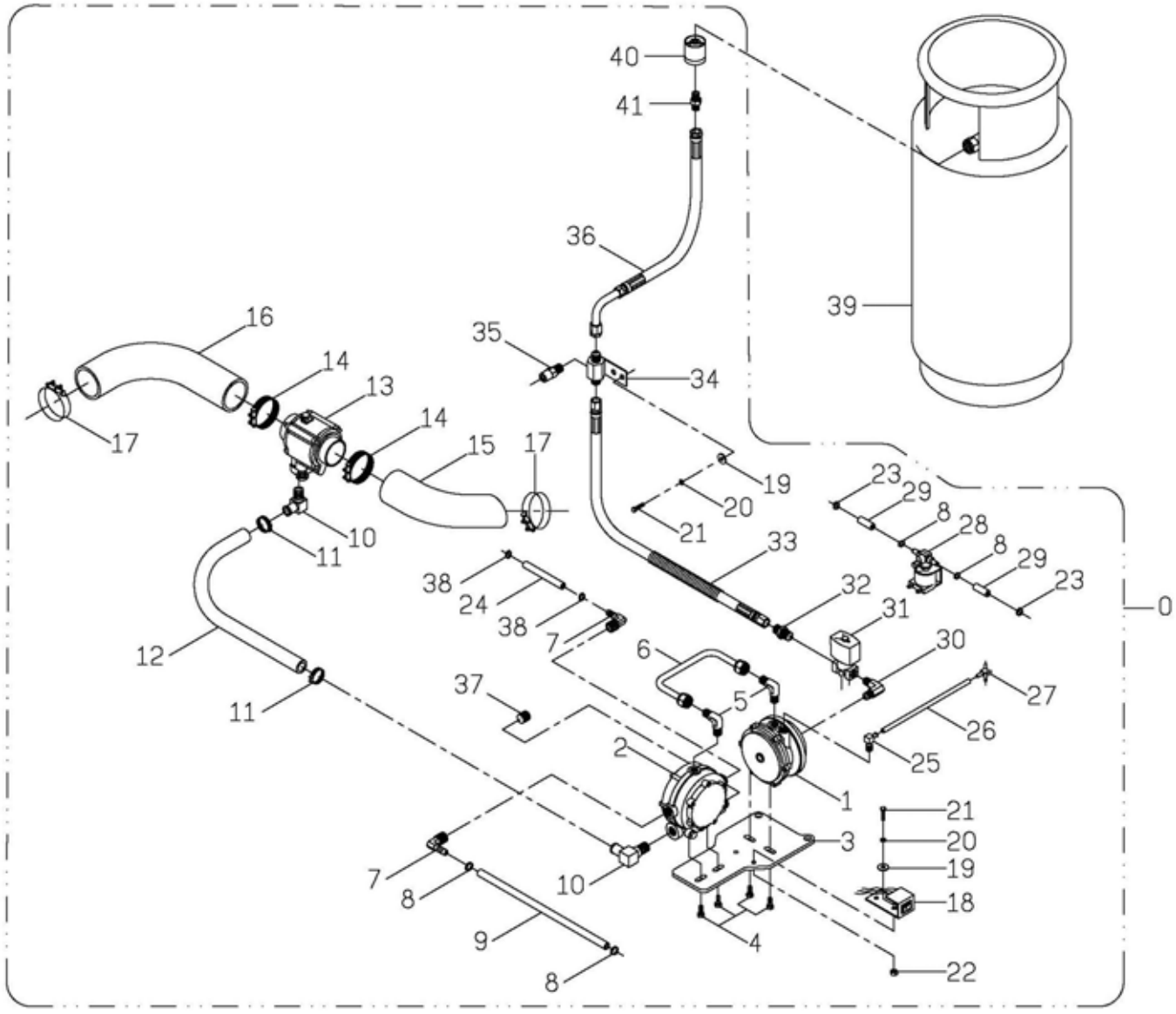

https://truckmanualshub.com/

選配配件系統
A310
CHOOSE ACCESSORY SYSTEM

雙燃料瓦斯轉換器組
A310-7
LPG & GASOLING-FUEL SUPPLY SYSTEM

編號 NO.	零件名稱 PART NAME						FD						FG						FD〔C〕						FG〔C〕						機號 BODY NO.	備註 REMARK
	新碼 NEW PART NO.	舊碼 OLD PART NO.	規格 SPECIFICATION	互換性 ITC	應用日期 APPLIED DATE	數量 QTY	15A	18B	20C	25D	30E	35F	15G	18H	20I	25J	30K	35L	15M	18N	20O	25P	30Q	35R	15S	18T	20U	25V	30W	35X		
0	雙燃料系統(LPG & GASOLINE-FUEL SUPPLY SYSTEM)																															
	B350495	22576300	H20,H25			1							G	H	I	J	K	L														
1	過濾器(FILTER & LOCK-OFF VALVE)																															
	33508	22576500	H20,H25			1							G	H	I	J	K	L														
2	轉換器(LPG CONVERTER)																															
	33509	22576600	H20,H25			1							G	H	I	J	K	L														
3	固定板(FIXED BRACKET)																															
	33510	32576301	H20,H25			1							G	H	I	J	K	L														
4	螺栓(BOLT)																															
	M1423-M6*16	92512513	H20,H25			4							G	H	I	J	K	L														
5	90°接頭(90° CONNECTOR)																															
	33511	32576302	H20,H25			2							G	H	I	J	K	L														
6	連接接頭(LINK CONNECTOR)																															
	33512	32576303	H20,H25			1							G	H	I	J	K	L														
7	90°插蕊接頭(90° CONNECTOR)																															
	33513	32576304	H20,H25			2							G	H	I	J	K	L														
8	管束(CLAMP, HOSE)																															
	M1315025	92576305	H20,H25			4							G	H	I	J	K	L														
9	水管(HOSE)																															
	33514	92576306	H20,H25			1							G	H	I	J	K	L														
10	90°接頭(90° CONNECTOR)																															
	33515	32576307	H20,H25			2							G	H	I	J	K	L														
11	管束(CLAMP, HOSE)																															
	M1315026	92576308	H20,H25			2							G	H	I	J	K	L														
12	瓦斯管(GAS PIPE)																															
	33516	92576309	H20,H25			1							G	H	I	J	K	L														
13	汽化器(CARBURETOR)																															
	33517	22576310	H20,H25			1							G	H	I	J	K	L														
14	管束(CLAMP, HOSE)																															
		92576311	H20,H25			2							G	H	I	J	K	L														
15	引管(HOSE AIR CLEANER)																															
	33518	32576312	H20,H25			1							G	H	I	J	K	L														
16	引管(HOSE AIR CLEANER)																															
	33519	32576313	H20,H25			1							G	H	I	J	K	L														
17	管束(CLAMP, HOSE)																															
	M1315014	92510612	H20,H25			2							G	H	I	J	K	L														
18	切換開關(CHANGE SWITCH)																															
	33520	92576314	H20,H25			1							G	H	I	J	K	L														

https://truckmanualshub.com/

選配配件系統
A310
CHOOSE ACCESSORY SYSTEM

雙燃料瓦斯轉換器組
A310-7
LPG & GASOLING-FUEL SUPPLY SYSTEM

編號 NO.	零件名稱 PART NAME						FD						FG						FD〔C〕						FG〔C〕						機號 BODY NO.	備註 REMARK
	新碼 NEW PART NO.	舊碼 OLD PART NO.	規格 SPECIFICATION	互換性 ITC	應用日期 APPLIED DATE	數量 QTY	15 A	18 B	20 C	25 D	30 E	35 F	15 G	18 H	20 I	25 J	30 K	35 L	15 M	18 N	20 O	25 P	30 Q	35 R	15 S	18 T	20 U	25 V	30 W	35 X		
19	平墊圈(WASHER)																															
	M1602004	92510428	H20,H25			4							GHIJKL																			
20	彈簧華司(SPRING WASHER)																															
	M1605-M6	92503218	H20,H25			4							GHIJKL																			
21	螺栓(BOLT)																															
		92507043	H20,H25			4							GHIJKL																			
22	螺帽(NUT)																															
	M1513-M6	92515415	H20,H25			2							GHIJKL																			
23	管束(CLAMP, HOSE)																															
	M1315011	92508007	H20,H25			2							GHIJKL																			
24	瓦斯管(GAS PIPE)																															
		92576315	H20,H25		2000/10	1							GHIJKL																			
24	水管(HOSE)																															
	33521	92576315	H20,H25		2003/02	1							GHIJKL																			
25	90°接頭(90° CONNECTOR)																															
	33522	32576316	H20,H25			1							GHIJKL																			
26	引管(HOSE AIR CLEANER)																															
	33523	92576317	H20,H25			1							GHIJKL																			
27	三通接頭(CONNECTION, THREE-WAY)																															
	33524	92576318	H20,H25			1							GHIJKL																			
28	汽油電磁閥(GASOLINE ELECTROMAGNETIC VALVE)																															
	33525	92576319	H20,H25			1							GHIJKL																			
29	引管(HOSE AIR CLEANER)																															
	33526	92576320	H20,H25			2							GHIJKL																			
30	90°接頭(90° CONNECTOR)																															
	33527	92576321	H20,H25			1							GHIJKL																			
31	瓦斯電磁閥(GAS ELECTROMAGNETIC VALVE)																															
	33528	92576322	H20,H25			1							GHIJKL																			
32	接頭(CONNECTOR)																															
	32538	92576323	H20,H25			1							GHIJKL																			
33	瓦斯管(GAS PIPE)																															
	33529	92576324	H20,H25			1							GHIJKL																			
34	固定接頭(FIXED CONNECTOR)																															
	32535	32576325A	H20,H25			1							GHIJKL																			
35	安全閥(SAFETY VALVE)																															
	32536	32576326	H20,H25			1							GHIJKL																			
36	瓦斯管(GAS PIPE)																															
	32537	92576327	H20,H25			1							GHIJKL																			

https://truckmanualshub.com/

雙燃料瓦斯轉換器組
A310-7
LPG & GASOLING-FUEL SUPPLY SYSTEM

編號 NO.	零件名稱 PART NAME						FD						FG						FD〔C〕						FG〔C〕						機號 BODY NO.	備註 REMARK
	新碼 NEW PART NO.	舊碼 OLD PART NO.	規格 SPECIFICATION	互換性 ITC	應用日期 APPLIED DATE	數量 QTY	15 A	18 B	20 C	25 D	30 E	35 F	15 G	18 H	20 I	25 J	30 K	35 L	15 M	18 N	20 O	25 P	30 Q	35 R	15 S	18 T	20 U	25 V	30 W	35 X		
37	**止塞(PLUG)**																															
	33531	32576328	H20,H25			1							G	H	I	J	K	L														
38	**管束(CLAMP, HOSE)**																															
	M1315018	92509908	H20,H25			2							G	H	I	J	K	L														
39	**瓦斯桶(LPG TANK) (35L)**																															
	33532	92576329				1							G	H	I	J	K	L														選配件(CHOOSE)
39	**瓦斯桶(LPG TANK) (55L)**																															
	33533	92576330				1							G	H	I	J	K	L														選配件(CHOOSE)
40	**接頭(CONNECTOR)**																															
	M0612003					1							G	H	I	J	K	L														
41	**接頭(CONNECTOR)**																															
	32538	92576323				1							G	H	I	J	K	L														

https://truckmanualshub.com/

選配配件系統
A310
CHOOSE ACCESSORY SYSTEM

單燃料瓦斯轉換器組
A310-7A
LPG-FUEL SUPPLY SYSTEM

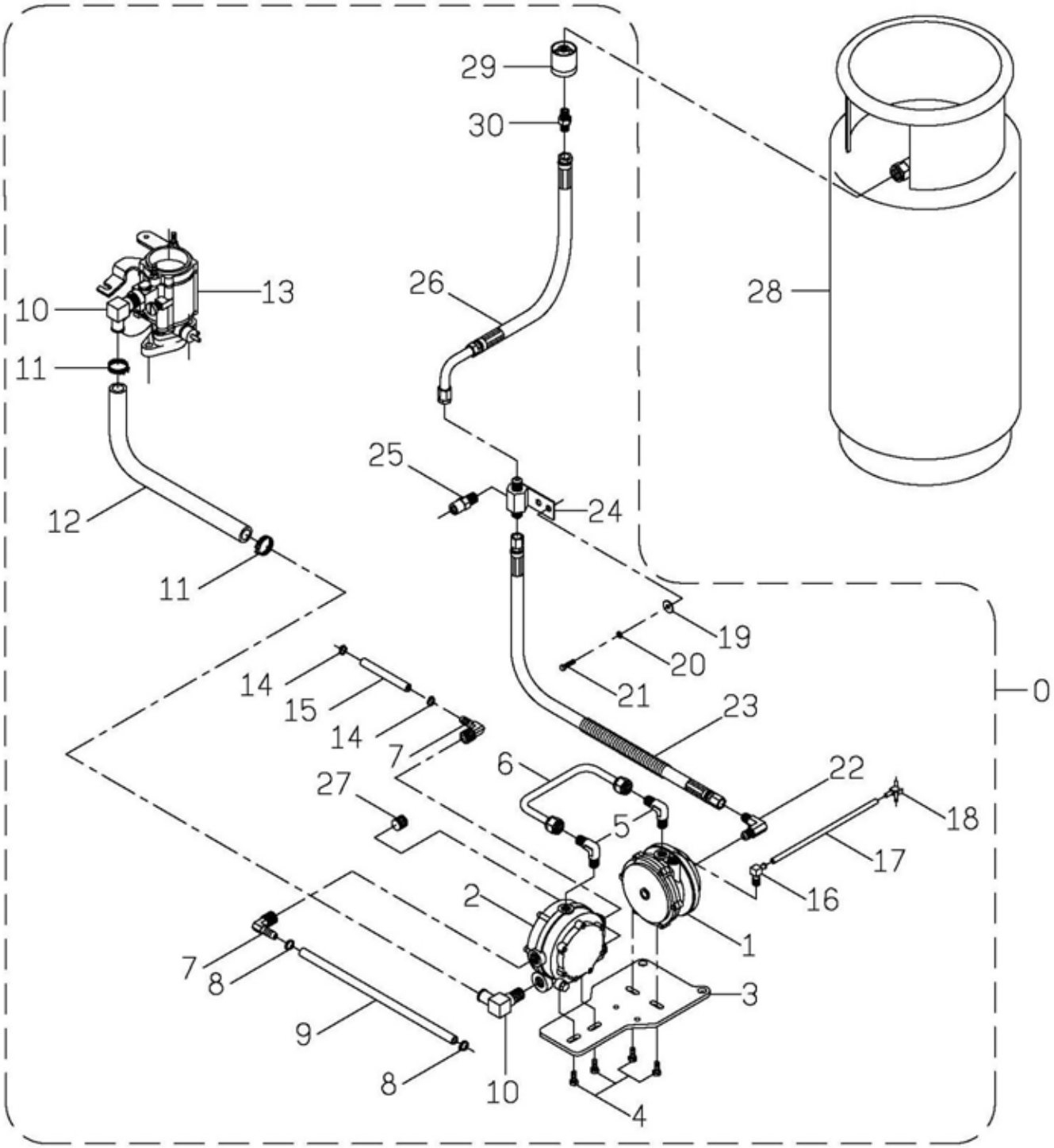

https://truckmanualshub.com/

選配配件系統
A310
CHOOSE ACCESSORY SYSTEM

單燃料瓦斯轉換器組
A310-7A
LPG-FUEL SUPPLY SYSTEM

編號 NO.	零件名稱 PART NAME						FD						FG						FD〔C〕						FG〔C〕						機號 BODY NO.	備註 REMARK
	新碼 NEW PART NO.	舊碼 OLD PART NO.	規格 SPECIFICATION	互換性 ITC	應用日期 APPLIED DATE	數量 QTY	1580 5A	1580 5B	2050 5C	2050 5D	3050 5E	3050 5F	1580 5G	1580 5H	2050 5I	2050 5J	3050 5K	3050 5L	1580 5M	1580 5N	2050 5O	2050 5P	3050 5Q	3050 5R	1580 5S	1580 5T	2050 5U	2050 5V	3050 5W	3050 5X		
0	**單燃料系統(LPG-FUEL SUPPLY SYSTEM)**																															
	B350496	22576400	H20,H25			1							G	H	I	J	K	L														
1	**過濾器(FILTER & LOCK-OFF VALVE)**																															
	33508	22576500	H20,H25			1							G	H	I	J	K	L														
2	**轉換器(LPG CONVERTER)**																															
	33509	22576600	H20,H25			1							G	H	I	J	K	L														
3	**固定板(FIXED BRACKET)**																															
	33510	32576301	H20,H25			1							G	H	I	J	K	L														
4	**螺栓(BOLT)**																															
	M1423-M6*16	92512513	H20,H25			4							G	H	I	J	K	L														
5	**90°接頭(90°CONNECTOR)**																															
	33511	32576302	H20,H25			2							G	H	I	J	K	L														
6	**連接接頭(LINK CONNECTOR)**																															
	33512	32576303	H20,H25			1							G	H	I	J	K	L														
7	**90°插蕊接頭(90° CONNECTOR)**																															
	33513	32576304	H20,H25			2							G	H	I	J	K	L														
8	**管束(CLAMP, HOSE)**																															
	M1315025	92576305	H20,H25			2							G	H	I	J	K	L														
9	**水管(HOSE)**																															
	33514	92576306	H20,H25			1							G	H	I	J	K	L														
10	**90°接頭(90° CONNECTOR)**																															
	33515	32576307	H20,H25			2							G	H	I	J	K	L														
11	**管束(CLAMP, HOSE)**																															
	M1315026	92576308	H20,H25			2							G	H	I	J	K	L														
12	**瓦斯管(GAS PIPE)**																															
	33516	92576309	H20,H25			1							G	H	I	J	K	L														
13	**汽化器(CARBURETOR)**																															
	33534	22576410	H20,H25			1							G	H	I	J	K	L														
14	**管束(CLAMP, HOSE)**																															
	M1315011	92508007	H20,H25			2							G	H	I	J	K	L														
15	**水管(HOSE)**																															
	33521	92576315	H20,H25			1							G	H	I	J	K	L														
16	**90°接頭(90°CONNECTOR)**																															
	33522	32576316	H20,H25			1							G	H	I	J	K	L														
17	**引管(HOSE AIR CLEANER)**																															
	33523	92576317	H20,H25			1							G	H	I	J	K	L														
18	**三通接頭(CONNECTION, THREE-WAY)**																															
	33524	92576318	H20,H25			1							G	H	I	J	K	L														

https://truckmanualshub.com/

選配配件系統
A310
CHOOSE ACCESSORY SYSTEM

單燃料瓦斯轉換器組
A310-7A
LPG-FUEL SUPPLY SYSTEM

編號 NO.	零件名稱 PART NAME						FD						FG						FD〔C〕						FG〔C〕						機號 BODY NO.	備註 REMARK
	新碼 NEW PART NO.	舊碼 OLD PART NO.	規格 SPECIFICATION	互換性 ITC	應用日期 APPLIED DATE	數量 QTY	15	18	20	25	30	35	15	18	20	25	30	35	15	18	20	25	30	35	15	18	20	25	30	35		
							A	B	C	D	E	F	G	H	I	J	K	L	M	N	O	P	Q	R	S	T	U	V	W	X		
19	**平墊圈(WASHER)**																															
	M1602004	92510428	H20,H25			4							G	H	I	J	K	L														
20	**彈簧華司(SPRING WASHER)**																															
	M1605-M6	92503218	H20,H25			4							G	H	I	J	K	L														
21	**螺栓(BOLT)**																															
		92507043	H20,H25			4							G	H	I	J	K	L														
22	**90°接頭(90° CONNECTOR)**																															
	33527	92576321	H20,H25			1							G	H	I	J	K	L														
23	**瓦斯管(GAS PIPE)**																															
	33529	92576324	H20,H25			1							G	H	I	J	K	L														
24	**固定接頭(FIXED CONNECTOR)**																															
	32535	32576325A	H20,H25			1							G	H	I	J	K	L														
25	**安全閥(SAFETY VALVE)**																															
	32536	32576326	H20,H25			1							G	H	I	J	K	L														
26	**瓦斯管(GAS PIPE)**																															
	32537	92576327	H20,H25			1							G	H	I	J	K	L														
27	**止塞(PLUG)**																															
	33531	32576328	H20,H25			1							G	H	I	J	K	L														
28	**瓦斯桶(LPG TANK) (35L)**																															
	33532	92576329				1							G	H	I	J	K	L														LPG,選配件(CHOOSE)
28	**瓦斯桶(LPG TANK) (55L)**																															
	33533	92576330				1							G	H	I	J	K	L														LPG,選配件(CHOOSE)
29	**接頭(CONNECTOR)**																															
	M0612003					1							G	H	I	J	K	L														
30	**接頭(CONNECTOR)**																															
	32538	92576323				1							G	H	I	J	K	L														

https://truckmanualshub.com/

修理包系統
A311
REPAIR KIT SYSTEM

https://truckmanualshub.com/

修理包系統
A311
REPAIR KIT SYSTEM

過濾器

A311-1

FILTER & LOCK-OFF VALVE

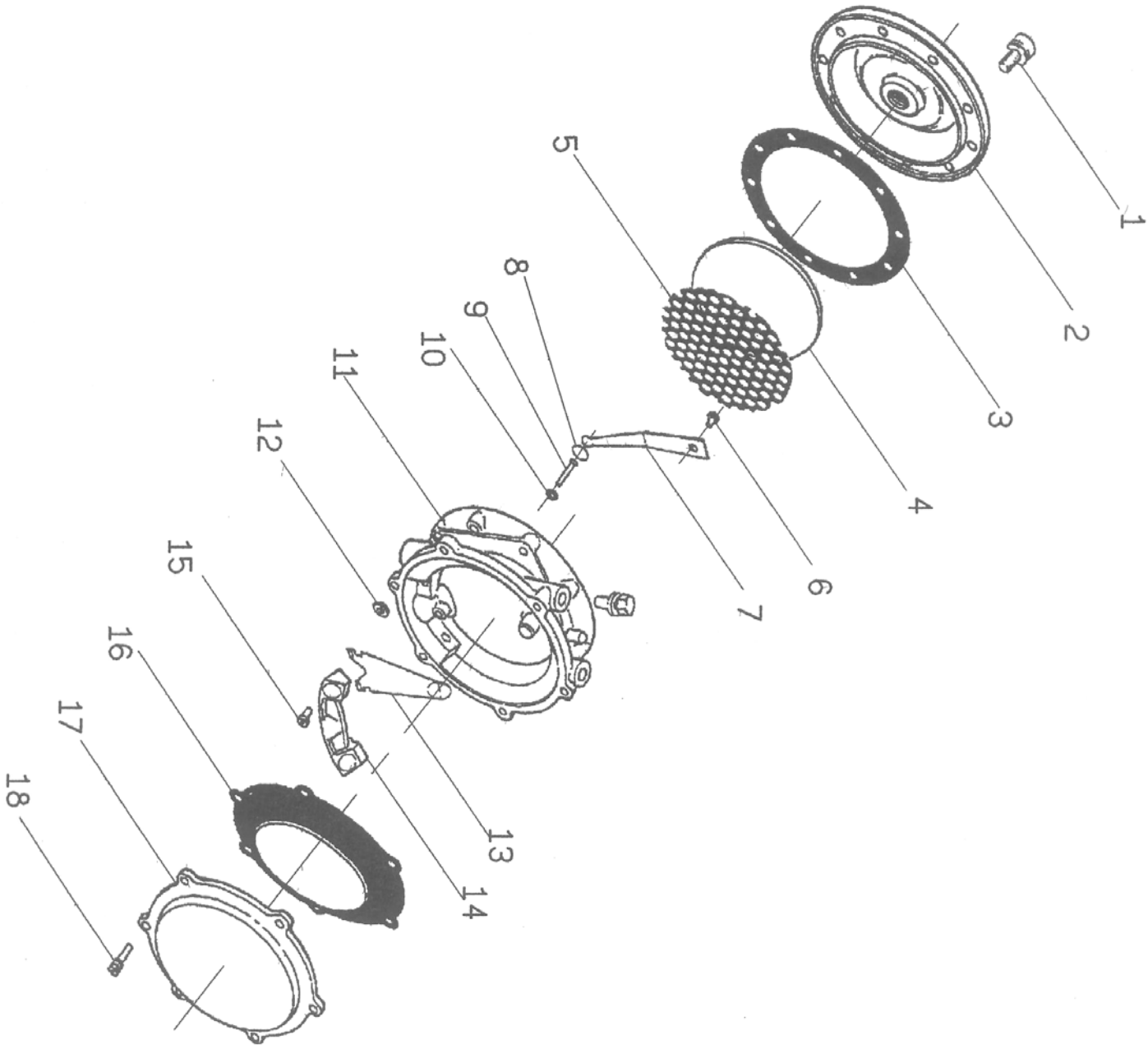

https://truckmanualshub.com/

修理包系統
A311
REPAIR KIT SYSTEM

過濾器
A311-1
FILTER & LOCK-OFF VALVE

編號 NO.	零件名稱 PART NAME						FD						FG						FD〔C〕						FG〔C〕						機號 BODY NO.	備註 REMARK
	新碼 NEW PART NO.	舊碼 OLD PART NO.	規格 SPECIFICATION	互換性 ITC	應用日期 APPLIED DATE	數量 QTY	15 A	18 B	20 C	25 D	30 E	35 F	15 G	18 H	20 I	25 J	30 K	35 L	15 M	18 N	20 O	25 P	30 Q	35 R	15 S	18 T	20 U	25 V	30 W	35 X		
1	螺栓(BOLT)																															
		92576501				10	A	B	C	D	E	F	G	H	I	J	K	L														
2	蓋(COVER)																															
	33535	32576502				1	A	B	C	D	E	F	G	H	I	J	K	L														
3	墊片(PACKING)																															
	33536	32576503				1	A	B	C	D	E	F	G	H	I	J	K	L														
4	過濾片(FILTER)																															
	33537	32576504				1	A	B	C	D	E	F	G	H	I	J	K	L														
5	篩片(SCREEN)																															
	33538	32576505				1	A	B	C	D	E	F	G	H	I	J	K	L														
6	螺栓(BOLT)																															
		92576506				1	A	B	C	D	E	F	G	H	I	J	K	L														
7	彈簧閥(VALVE SPRING)																															
	33539	32576507				1	A	B	C	D	E	F	G	H	I	J	K	L														
8	閥座(VALVE SEAT)																															
	33540	32576508				1	A	B	C	D	E	F	G	H	I	J	K	L														
9	銷(PIN)																															
		92576509				1	A	B	C	D	E	F	G	H	I	J	K	L														
10	密封圈(SEAL)																															
		32576510				1	A	B	C	D	E	F	G	H	I	J	K	L														
11	本體(BODY)																															
	33541	32576511				1	A	B	C	D	E	F	G	H	I	J	K	L														
12	彈簧華司(SPRING WASHER)																															
		92576512				2	A	B	C	D	E	F	G	H	I	J	K	L														
13	手桿(LEVER)																															
	33542	32576513				1	A	B	C	D	E	F	G	H	I	J	K	L														
14	支撐座(FULCRUM)																															
	33543	32576514				1	A	B	C	D	E	F	G	H	I	J	K	L														
15	螺栓(BOLT)																															
		92576515				2	A	B	C	D	E	F	G	H	I	J	K	L														
16	隔膜片(DIAPHRAGM)																															
	33544	32576516				1	A	B	C	D	E	F	G	H	I	J	K	L														
17	膜片蓋(DIAPHRAGM COVER)																															
	33545	32576517				1	A	B	C	D	E	F	G	H	I	J	K	L														
18	螺栓(BOLT)																															
		92576518				6	A	B	C	D	E	F	G	H	I	J	K	L														

https://truckmanualshub.com/

修理包系統
A311
REPAIR KIT SYSTEM

轉換器
A311-2
LPG CONVERTER

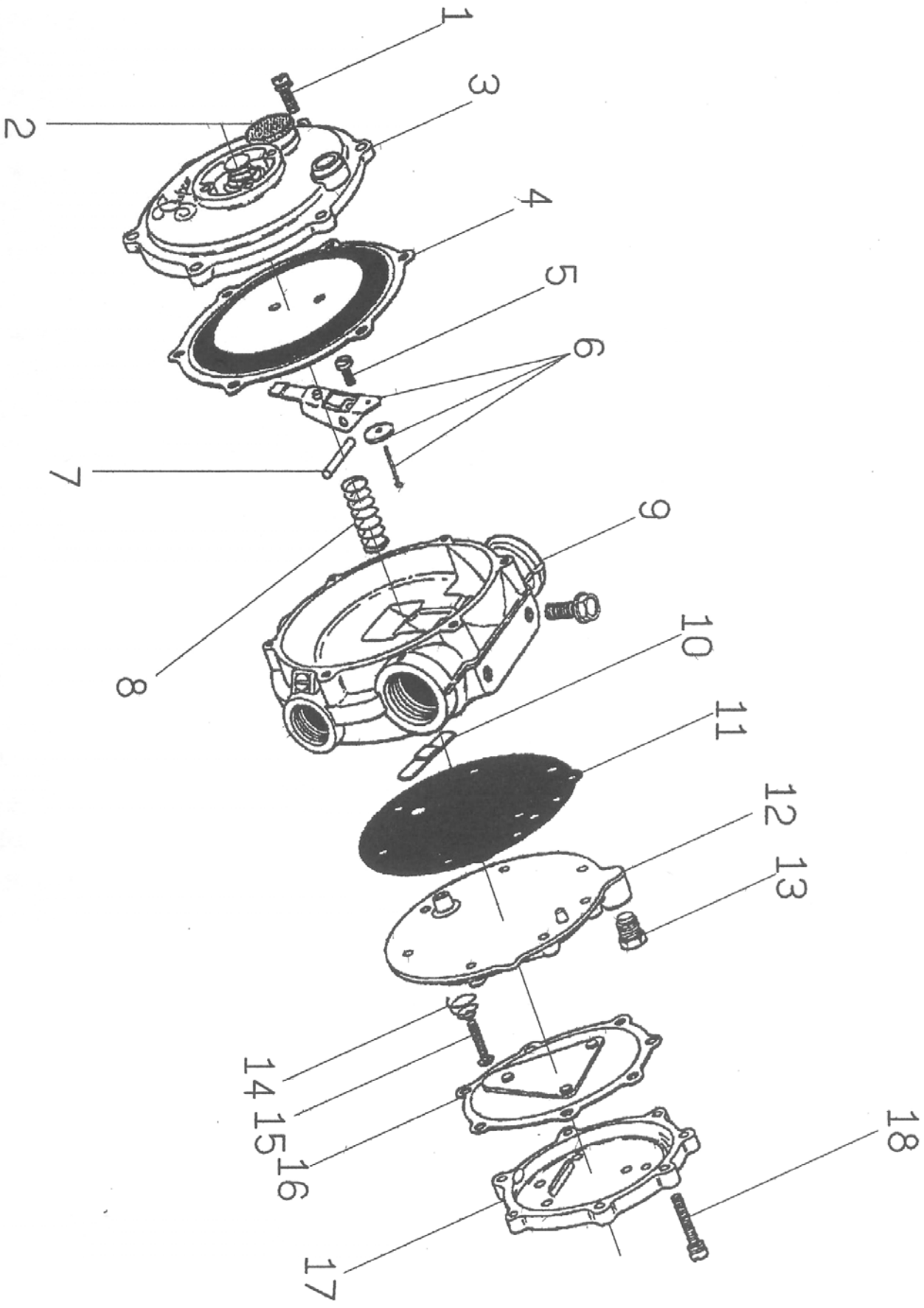

https://truckmanualshub.com/

修理包系統
A311
REPAIR KIT SYSTEM

轉換器
A311-2
LPG CONVERTER

編號 NO.	零件名稱 PART NAME						FD						FG						FD〔C〕						FG〔C〕						機號 BODY NO.	備註 REMARK
	新碼 NEW PART NO.	舊碼 OLD PART NO.	規格 SPECIFICATION	互換性 ITC	應用日期 APPLIED DATE	數量 QTY	15 A	180 B	205 C	230 D	305 E	330 F	155 G	180 H	205 I	230 J	305 K	330 L	155 M	180 N	205 O	230 P	305 Q	330 R	155 S	180 T	205 U	230 V	305 W	330 X		
1	螺栓(BOLT)																															
		92576518				6	A	B	C	D	E	F	G	H	I	J	K	L														
2	篩片(SCREEN)																															
	33546	32576601				1	A	B	C	D	E	F	G	H	I	J	K	L														
3	蓋(COVER)																															
	33547	32576602				1	A	B	C	D	E	F	G	H	I	J	K	L														
4	隔膜片(DIAPHRAGM)																															
	33548	32576603				1	A	B	C	D	E	F	G	H	I	J	K	L														
5	螺栓(BOLT)																															
		92576604				1	A	B	C	D	E	F	G	H	I	J	K	L														
6	手桿(LEVER)																															
	33549	32576605				1	A	B	C	D	E	F	G	H	I	J	K	L														
7	銷(PIN)																															
		92576606				1	A	B	C	D	E	F	G	H	I	J	K	L														
8	彈簧(SPRING)																															
		92576607				1	A	B	C	D	E	F	G	H	I	J	K	L														
9	本體(BODY)																															
	33550	32576608				1	A	B	C	D	E	F	G	H	I	J	K	L														
10	板座(SEAT)																															
	33551	32576609				1	A	B	C	D	E	F	G	H	I	J	K	L														
11	墊片(PACKING)																															
	33552	32576610				1	A	B	C	D	E	F	G	H	I	J	K	L														
12	蓋(COVER)																															
	33553	32576611				1	A	B	C	D	E	F	G	H	I	J	K	L														
13	栓塞(PLUG)																															
	33554	92576612				1	A	B	C	D	E	F	G	H	I	J	K	L														
14	彈簧(SPRING)																															
		92576613				1	A	B	C	D	E	F	G	H	I	J	K	L														
15	銷(PIN)																															
		92576614				1	A	B	C	D	E	F	G	H	I	J	K	L														
16	膜片蓋(DIAPHRAGM COVER)																															
	33555	32576615				1	A	B	C	D	E	F	G	H	I	J	K	L														
17	蓋(COVER)																															
	33556	32576616				1	A	B	C	D	E	F	G	H	I	J	K	L														
18	螺栓(BOLT)																															
		92576617				7	A	B	C	D	E	F	G	H	I	J	K	L														

https://truckmanualshub.com/

修理包系統
A311
REPAIR KIT SYSTEM

修理包總覽

A311-3

REPAIR KIT OVERALL

編號 NO.	零件名稱 PART NAME						FD						FG						FD〔C〕						FG〔C〕						機號 BODY NO.	備註 REMARK
	新碼 NEW PART NO.	舊碼 OLD PART NO.	規格 SPECIFICATION	互換性 ITC	應用日期 APPLIED DATE	數量 QTY	15 A	18 B	20 C	25 D	30 E	35 F	15 G	18 H	20 I	25 J	30 K	35 L	15 M	18 N	20 O	25 P	30 Q	35 R	15 S	18 T	20 U	25 V	30 W	35 X		
1	F.A.T.自動變速箱修理包(REPAIR KIT FOR AUTOMATIC TRANSMISSION GEAR BOX)																															
	B350098	91517017				1	A	B					G	H																		
	B350099	92517017				1			C	D	E	F			I	J	K	L														
2	轉向油壓缸修理包(全油壓)(REPAIR KIT FOR POWER CYLINDER)(FULL LOAD)																															
		42517002			2000/10	1	A	B	C	D	E	F	G	H	I	J	K	L													停用(NOT USED)	
	B350100	41517002				1	A	B					G	H																		
	B350101	42517002			2003/02	1			C	D	E	F			I	J	K	L														
3	剎車襯板修理包(左)(REPAIR KIT FOR BRAKE BACKING PLATE)(L.H)																															
	B350102	41517003				1	A	B					G	H																		
	B350103	42517003				1			C	D	E	F			I	J	K	L														
3	剎車襯板修理包(右)(REPAIR KIT FOR BRAKE BACKING PLATE)(R.H)																															
	B350747					1	A	B					G	H																		
	B350748					1			C	D	E	F			I	J	K	L														
4	剎車分泵修理包(REPAIR KIT FOR BRAKE CYLINDER)																															
	B350111	91517004				1	A	B					G	H																		
	B350112	92517004				1			C	D	E	F			I	J	K	L														
5	剎車總泵修理包(REPAIR KIT FOR BRAKE ASSY CYLINDER)																															
	B350113	92517005				1	A	B	C	D	E	F	G	H	I	J	K	L														手排(MT)
	B350114	92517018				1	A	B	C	D	E	F	G	H	I	J	K	L														自排(AT)
6	升降油壓缸修理包-二,三截型(左)(REPAIR KIT FOR LIFT CYLINDER)(TWO STAGE & THREE STAGE)(L.H)																															
	B350115	42517006				1	A	B	C	D			G	H	I	J																
	B350116	43017006				1					E	F					K	L														
6	升降油壓缸修理包-二,三截型(右)(REPAIR KIT FOR LIFT CYLINDER)(TWO STAGE & THREE STAGE)(R.H)																															
	B350139	42517007				1	A	B	C	D			G	H	I	J																
	B350140	43017007				1					E	F					K	L														
7	升降油壓缸修理包-貨櫃型(左)(REPAIR KIT FOR LIFT CYLINDER)(CONTAINER FORM)(L.H)																															
	B350142	42517009				1	A	B	C	D			G	H	I	J																
	B350143	43017009				1					E	F					K	L														
7	升降油壓缸修理包-貨櫃型(右)(REPAIR KIT FOR LIFT CYLINDER)(CONTAINER FORM)(R.H)																															
	B350149	42517010				1	A	B	C	D			G	H	I	J																
	B350150	43017010				1					E	F					K	L														
8	貨櫃油壓缸修理包-貨櫃,三截型(REPAIR KIT FOR LIFT CYLINDER)(CONTAINER & TRIPLEXING FORM)																															
	B350151	42517011				1	A	B	C	D			G	H	I	J																停用(NOT USED)
	B350152	43017011				1					E	F					K	L														停用(NOT USED)
	B350151A				2006/06	1	A	B	C	D			G	H	I	J																
	B350152A				2006/06	1					E	F					K	L														

https://truckmanualshub.com/

修理包系統
A311
REPAIR KIT SYSTEM

修理包總覽
A311-3
REPAIR KIT OVERALL

編號 NO.	零件名稱 PART NAME						FD						FG						FD〔C〕						FG〔C〕						機號 BODY NO.	備註 REMARK
	新碼 NEW PART NO.	舊碼 OLD PART NO.	規格 SPECIFICATION	互換性 ITC	應用日期 APPLIED DATE	數量 QTY	15 A	18 B	20 C	25 D	30 E	35 F	15 G	18 H	20 I	25 J	30 K	35 L	15 M	18 N	20 O	25 P	30 Q	35 R	15 S	18 T	20 U	25 V	30 W	35 X		
9	**傾斜油壓缸修理包(REPAIR KIT FOR TILT CYLINDER)**																															
	B350153	42517008				1	A	B	C	D	E		G	H	I	J	K															
	B350177	44017008				1						F						L														
10	**方向機懸吊系統修理包(REPAIR KIT FOR POWER STEERING-SUSPEND)**																															
		92517016			2000/10	1	A	B	C	D	E	F	G	H	I	J	K	L														停用(NOT USED)
	B350178	92517016			2003/02	1	A	B	C	D	E	F	G	H	I	J	K	L														手排(MT)
	B350179	92517023				1	A	B	C	D	E	F	G	H	I	J	K	L														自排(AT)
11	**全油壓方向機修理包(REPAIR KIT FOR POWER STEERING)(FULL LOAD)**																															
	B350180	92517015				1	A	B	C	D	E	F	G	H	I	J	K	L														
12	**側移油壓缸修理包(REPAIR KIT FOR SIDE SHIFT CYLINDER)**																															
	B350181	91517012				1	A	B	C	D			G	H	I	J																
	B350182	92517012				1					E	F					K	L														
13	**兩排控制閥修理包-標準型(REPAIR KIT FOR CONTROL VALVE, 2 VALVES)**																															
	B350183	92517019				1	A	B	C	D	E	F	G	H	I	J	K	L														STANDARD
13	**三排控制閥修理包-側移型(REPAIR KIT FOR CONTROL VALVE, 3 VALVES)**																															
	B350192	92517020				1	A	B	C	D	E	F	G	H	I	J	K	L														SIDE SHIFT
13	**三排控制閥修理包-傾卸型(REPAIR KIT FOR CONTROL VALVE, 3 VALVES)**																															
	B350193	92517021				1	A	B	C	D	E	F	G	H	I	J	K	L														HINGED FORK
13	**四排控制閥修理包-夾具型(REPAIR KIT FOR CONTROL VALVE, 4 VALVES)**																															
	B350194	92517022				1	A	B	C	D	E	F	G	H	I	J	K	L														SPECIAL LOAD

https://truckmanualshub.com/

零件號碼索引
PARTS INDEX

(照新碼排序)
(ACCORDING TO NEW PART NO. SORT)

零件名稱 (PARE NAME)		
新碼 NEW PART NO.	舊碼 OLD PART NO.	頁次 PAGE
30891		A304-3-2
31002		A310-3F-3
31194		A310-3A-3
31414		A309-3-8
31463C		A306-3-2
31464B		A306-3-2
31465A		A306-3-2
31470		A301-9-3
31471		A306-3-2
31472B		A306-3-4
31473		A306-3-3
31474		A305-4-2
31475		A306-3-5
31476B		A306-3-5
31477A		A306-3-2
31478A		A306-3-3
31479		A306-3-3
31480A		A306-3-3
31481		A306-3-3
31482A		A306-3-4
31482B		A306-3-4
31485A		A306-3-2
31486B		A306-3-4
31504		A301-11A-3
31505		A301-11A-2
31516		A301-8-3
31521		A306-3-4
31522		A306-3-4
31523		A306-3-5
31524		A304-1-3
31525		A304-1-3
31574		A310-5-2
31576		A306-3-5
31577		A306-3-5
31578		A306-3-5
31579		A306-3-5
31581		A306-3-4
31615A		A307-1-5
31634A		A301-11A-2
31635		A301-11A-2

零件名稱 (PARE NAME)		
新碼 NEW PART NO.	舊碼 OLD PART NO.	頁次 PAGE
31636		A301-11A-2
31637		A301-11A-2
31638		A301-11A-3
31639		A301-11A-3
31640		A301-11A-2
31641		A301-11A-3
31645		A301-11A-2
31665		A306-3-5
31702		A310-5A-4
31737		A303-3-5
31752		A307-1A-2
31769		A310-3H-3
31770		A307-1A-2
31771		A307-1A-2
31772		A307-1A-2
31773		A307-1A-2
31774		A307-1A-2
31775		A307-1A-2
31776		A307-1A-2
31777		A307-1A-2
31864		A305-1-6
31892		A307-1-5
31911		A309-3-5
31912		A309-3-8
31913		A309-3-5
31938		A305-1-6
31962	71501202	A301-3-5
31963	72501202	A301-3-5
31964	73001202	A301-3-5
31966	31510139B	A304-1-2
31974	32512619	A306-2-2
31975	31501249B	A301-3-5
31976	31502018	A301-4-3
31977	32502018	A301-4-3
31978	33002018B	A301-4-3
31981	32576109	A310-6-3
31983		A308-6-2
31990	32560102B	A301-6-2
31991	32550701	A310-3F-3
31993	32550704	A310-3F-3

https://truckmanualshub.com/

零件號碼索引
PARTS INDEX

(照新碼排序)
(ACCORDING TO NEW PART NO. SORT)

零件名稱 (PARE NAME)		
新碼 NEW PART NO.	舊碼 OLD PART NO.	頁次 PAGE
31994	32550705	A310-3F-3
31995	32550706	A310-3F-3
32001	31501001	A301-1-2
32002	32501001	A301-1-2
32003	33001001	A301-1-2
32004	32501012	A301-1-2
32005	33001012A	A301-1-2
32006	32501011	A301-1-2
32007	33001011	A301-1-2
32008	92501010A	A301-1-2
32009	32501013	A301-1-2
32010	33001013	A301-1-2
32011	92560414	A301-1-2
32012	92501006	A301-1-2
32013	32501017	A301-1-2
32014	32501015	A301-1-2
32015	92501016	A301-1-2
32016	32501005	A301-1-2
32017	32501007	A301-1-3
32018	31501008	A301-1-3
32019	32501008	A301-1-3
32020	32501136	A301-2-2
32021	32501137	A301-2-2
32022	32501126	A301-2-2
32023	32501103	A301-2-2
32024	32501129	A301-2-2
32025	32501108	A301-2-2
32026	32501105A	A301-2-2
32027	92501109	A301-2-2
32028	32501113A	A301-2-2
32029	32501114	A301-2-3
32030	32501111B	A301-2-3
32031	32501130A	A301-2-3
32032	32501117A	A301-2-3
32033	32501118	A301-2-3
32034	32501133	A301-2-3
32035	32501121A	A301-2-3
32036	32501120	A301-2-3
32037	32501127	A301-2-3
32038	92501123B	A301-2-3

零件名稱 (PARE NAME)		
新碼 NEW PART NO.	舊碼 OLD PART NO.	頁次 PAGE
32039	92501124A	A301-2-3
32040	32501140A	A301-2-3
32041	31501204	A301-3-2
32042	32501204A	A301-3-2
32043	32501205	A301-3-2
32044	32501255	A301-3-2
32045	31501206	A301-3-2
32046	32501206	A301-3-2
32047	32501207	A301-3-2
32048	32501208	A301-3-2
32049	32501209A	A301-3-2
32050	32501211	A301-3-2
32051	32501213A	A301-3-2
32052	32501214	A301-3-2
32053	92501254	A301-3-3
32054	32501215C	A301-3-3
32055	32501217	A301-3-3
32056	32501221	A301-3-3
32057	92501256	A301-3-3
32058	32501222	A301-3-3
32059	32501225	A301-3-3
32060	32501226B	A301-3-3
32061	32501227A	A301-3-3
32062	32501228	A301-3-3
32063	32501229	A301-3-3
32064	32501231	A301-3-3
32065	32501230	A301-3-3
32066	32501233	A301-3-4
32067	32501232A	A301-3-4
32068	32501234	A301-3-4
32069	31501235A	A301-3-4
32070	32501235B	A301-3-4
32071	32501236A	A301-3-4
32072	32501237	A301-3-4
32073	32501238	A301-3-4
32074	32501252	A301-3-4
32075	32501239	A301-3-4
32076	31501240A	A301-3-4
32077	32501240A	A301-3-4
32078	32501224	A301-3-4

https://truckmanualshub.com/

零件號碼索引

PARTS INDEX

(照新碼排序)

(ACCORDING TO NEW PART NO. SORT)

零件名稱 (PARE NAME)		
新碼 NEW PART NO.	舊碼 OLD PART NO.	頁次 PAGE
32079	32501241	A301-3-4
32080	32501243	A301-3-4
32081	32501248	A301-3-5
32082	33001248	A301-3-5
32083	32501249B	A301-3-5
32084	32501258	A301-3-5
32085	32501260	A301-3-5
32086	31502001	A301-4-2
32087	32502001	A301-4-2
32088	33002001B	A301-4-2
32089	32502003	A301-4-2
32090	31502005	A301-4-2
32091	32502005	A301-4-2
32092	92502010A	A301-4-2
32093	31502012	A301-4-3
32094	32502012	A301-4-3
32095	33002012B	A301-4-3
32096	32502009	A301-4-3
32097	33002009	A301-4-3
32098	32502017	A301-4-3
32099	33002017A	A301-4-3
32100	32502016	A301-4-3
32101	33002016A	A301-4-3
32102	32502014	A301-4-3
32103	33002014	A301-4-3
32104	32502015	A301-4-3
32105	33002015A	A301-4-3
32106	91502008	A301-4-3
32107	92502008	A301-4-3
32108	93002008	A301-4-3
32109	32503022	A301-5-2
32110	32503023	A301-5-2
32111	72503200	A301-5-2
32112	72503100	A301-5-2
32113	72503300	A301-5-2
32114	32503002	A301-5-2
32115	32503025	A301-5-2
32116	22503006	A301-5-2
32117	92503009A	A301-5-2
32118	32503012A	A301-5-2

零件名稱 (PARE NAME)		
新碼 NEW PART NO.	舊碼 OLD PART NO.	頁次 PAGE
32119	32503014	A301-5-3
32120	32503016	A301-5-3
32121	32503026	A301-5-3
32122	32503017	A301-5-3
32123	32503027	A301-5-3
32124	31560101B	A301-6-2
32125	32560101C	A301-6-2
32127	32560103B	A301-6-4
32129	32560202D	A301-7-2
32130	32560204	A301-7-2
32131	32560209B	A301-7-2
32132	32560216A	A301-7-3
32133	32560218	A301-7-3
32134	31560222	A301-7-3
32135	31560301	A301-8-2
32136	32560301C	A301-8-2
32137	32560305A	A301-8-2
32138	32560306A	A301-8-2
32139	32560311A	A301-8-2
32140	32560314	A301-8-2
32142	32560317	A301-8-3
32143	32560318	A301-8-3
32144	32560322	A301-8-3
32145	32560323	A301-8-3
32146	32560324	A301-8-3
32147	32560325	A301-8-3
32148	92560328	A301-8-3
32149	92520317A	A301-8-3
32150	32560601	A301-8-4
32151	92560603	A301-8-4
32152	32560605	A301-8-4
32153	32560607	A301-8-4
32154	92560611A	A301-8-4
32155	32560401C	A301-9-2
32156	32560402	A301-9-2
32157	32560403B	A301-9-2
32158	32560404A	A301-9-2
32159	32560405	A301-9-2
32160	32560406A	A301-9-2
32161	32560413	A301-9-2

https://truckmanualshub.com/

零件號碼索引
PARTS INDEX

(照新碼排序)
(ACCORDING TO NEW PART NO. SORT)

零件名稱 (PARE NAME)		
新碼 NEW PART NO.	舊碼 OLD PART NO.	頁次 PAGE
32162	22560417	A301-9-2
32163	22560420	A301-9-3
32164	22560421	A301-9-3
32165	32560503A	A301-10-2
32166	32560505	A301-10-2
32167	32560507	A301-10-2
32168	32560508	A301-10-2
32169	32560509	A301-10-2
32170	32560510	A301-10-2
32171	92560511	A301-10-2
32172	32560512C	A301-10-2
32173	32560513B	A301-10-2
32174	32560514D	A301-10-2
32175	32560515	A301-10-2
32176	32560516	A301-10-3
32177	32560517	A301-10-3
32178	32560518J	A301-10-3
32179	32560519	A301-10-3
32180		A301-10-3
32181		A301-10-3
32182	32560523	A301-10-3
32183	32560521	A301-10-3
32184	32560526	A301-10-3
32187	32560704	A301-11-2
32188	92560706	A301-11-2
32189	32560707	A301-11-2
32190	32560708	A301-11-2
32191	92560709	A301-11-2
32192	32560710	A301-11-2
32193	32560714	A301-11-2
32194	32560716	A301-11-2
32195	32560717	A301-11-2
32196	92560718	A301-11-2
32197	92560719	A301-11-3
32198	92560720	A301-11-3
32199	32560721	A301-11-3
32200	32560723	A301-11-3
32201	92560725	A301-11-3
32202	92560726	A301-11-3
32203	32560727	A301-11-3

零件名稱 (PARE NAME)		
新碼 NEW PART NO.	舊碼 OLD PART NO.	頁次 PAGE
32204	32560728	A301-11-3
32205	32560729	A301-11-3
32206	92560730	A301-11-3
32207	32560731	A301-11-3
32208	32560732	A301-11-3
32209	92560735	A301-11-3
32210	32560736	A301-11-3
32211	32560742	A301-11-4
32212	32560743D	A301-11-4
32213	32560745	A301-11-4
32214	31506043	A302-1-2
32215	32506001	A302-1-2
32216	33006041	A302-1-2
32220	32506002	A302-1-2
32221	31506003	A302-1-2
32222	32506051	A302-1-2
32223	33006051	A302-1-2
32226	32506008	A302-1-2
32227	31506010C	A302-1-2
32228	32506010A	A302-1-2
32229	33006010	A302-1-2
32232	31506044	A302-1-3
32233	32506044	A302-1-3
32234	33006044	A302-1-3
32236	31506046	A302-1-3
32237	32506015	A302-1-3
32238	33006015B	A302-1-3
32240	31506047	A302-1-3
32241	32506016	A302-1-3
32242	33006016	A302-1-3
32243	72506019	A302-1-3
32244	73006019A	A302-1-3
32246	31506023	A302-1-4
32247	32506023	A302-1-4
32248	31506048	A302-1-4
32249	32506024A	A302-1-4
32250	33006048	A302-1-4
32254	32506049	A302-1-4
32255	33006049	A302-1-4
32257	31506037	A302-1-4

https://truckmanualshub.com/

零件號碼索引
PARTS INDEX

(照新碼排序)
(ACCORDING TO NEW PART NO. SORT)

零件名稱 (PARE NAME)		
新碼 NEW PART NO.	舊碼 OLD PART NO.	頁次 PAGE
32258	32506052	A302-1-4
32259	33006052	A302-1-4
32262	32506025	A302-1-4
32263	32506026	A302-1-4
32279	71506201	A302-2-2
32280	72506201	A302-2-2
32281	71506232	A302-2-2
32282	72506232	A302-2-2
32283	91506102	A302-2-2
32284	92506202	A302-2-2
32285	32506207	A302-2-2
32286	91506128	A302-2-2
32287	92506210	A302-2-2
32288	92506211	A302-2-2
32289	92506233	A302-2-2
32290	91506113	A302-2-2
32291	92506213	A302-2-2
32292	91506241	A302-2-2
32293	92506241	A302-2-2
32294	91506212	A302-2-2
32295	92506212	A302-2-2
32296	91506114	A302-2-2
32297	92506214	A302-2-2
32298	91506134	A302-2-3
32299	92506234	A302-2-3
32300	91506115	A302-2-3
32301	92506215	A302-2-3
32302	91506135	A302-2-3
32303	92506235	A302-2-3
32304	91506117	A302-2-3
32305	92506217	A302-2-3
32306	91506237	A302-2-3
32307	92506237	A302-2-3
32308	91506118	A302-2-3
32309	92506218	A302-2-3
32310	91506119	A302-2-3
32311	92506219	A302-2-3
32312	91506138	A302-2-3
32313	92506238	A302-2-3
32314	91506120	A302-2-3

零件名稱 (PARE NAME)		
新碼 NEW PART NO.	舊碼 OLD PART NO.	頁次 PAGE
32315	92506220	A302-2-3
32316	91506139	A302-2-3
32317	92506239	A302-2-3
32318	92506250	A302-2-3
32319	92506221	A302-2-3
32320	92561010	A302-2-3
32321	92506125	A302-2-4
32322	92506224	A302-2-4
32323	92506122	A302-2-4
32324	92506225	A302-2-4
32325	92506113	A302-2-4
32326	92506226	A302-2-4
32327	92506227	A302-2-4
32328	92506228	A302-2-4
32329	92506230	A302-2-4
32330	92512120	A302-2-4
32331	92512128	A302-2-4
32332	92512121	A302-2-4
32333	92512129	A302-2-4
32334	92506242	A302-2-4
32335	92506243	A302-2-4
32336	92506244	A302-2-4
32337	92506245	A302-2-4
32338	92506216	A302-2-4
32339	92506236	A302-2-4
32340	31504025	A302-3-2
32341	32504025	A302-3-2
32342	31506030	A302-3-2
32343	31504021	A302-3-2
32344	32504021	A302-3-2
32345	91504030	A302-3-2
32346	92504030	A302-3-2
32347	91506036	A302-3-2
32348	91504052	A302-3-3
32349	92504052	A302-3-3
32350	93004052	A302-3-3
32351	32506030	A302-3-3
32352	33006030	A302-3-3
32353	91506032	A302-3-2
32354	92506032A	A302-3-3

https://truckmanualshub.com/

零件號碼索引
PARTS INDEX

(照新碼排序)
(ACCORDING TO NEW PART NO. SORT)

零件名稱 (PARE NAME)		
新碼 NEW PART NO.	舊碼 OLD PART NO.	頁次 PAGE
32355	92506036	A302-3-4
32356	93006036	A302-3-4
32357	93506036	A302-3-4
32358	91506054	A302-3-4
32359	92506054	A302-3-4
32360	93006054	A302-3-4
32361	93006055	A302-3-4
32362	92506065	A302-3-4
32363	93006065	A302-3-4
32364	32506057	A302-3-4
32365	33006057	A302-3-4
32366	93006061	A302-3-4
32367	93006063	A302-3-4
32368	21504300	A303-1-2
32369	22504300	A303-1-2
32373	42504003	A303-1-2
32376	42504023	A303-1-2
32379	42504024	A303-1-2
32383	41504217	A303-1-2
32384	42504217	A303-1-2
32388	31504019	A303-1-2
32389	32504019	A303-1-2
32394	31504018	A303-1-3
32395	32504018	A303-1-3
32396	32504022	A303-1-3
32397	32504023	A303-1-3
32398	32504027	A303-1-3
32401	41504218	A303-1-3
32402	42504218	A303-1-3
32406	92504219	A303-1-3
32407	32504001	A303-1-3
32408	42504204	A303-1-3
32409	A1509000	A305-1-2
32410	42504205B	A303-1-3
32411	42552414	A310-2-4
32412	42504206	A303-1-4
32413	32550212	A310-3A-2
32414	32504211A	A303-1-4
32415	32504015	A303-1-4
32416	32504055	A303-1-4

零件名稱 (PARE NAME)		
新碼 NEW PART NO.	舊碼 OLD PART NO.	頁次 PAGE
32426	42505201	A303-2-2
32427	43005201	A303-2-2
32429	42505206	A303-2-2
32430	43005206	A303-2-2
32432	42505202	A303-2-2
32433	41505208	A303-2-2
32434	42505208	A303-2-2
32435	43005208	A303-2-2
32437	92508019A	A303-2-2
32440	32512487	A303-3-2
32441	92512482	A303-3-2
32442	92512480	A303-3-2
32444	92512405	A303-3-2
32445	32512406	A303-3-2
32447	32512409	A303-3-2
32448	92512439	A303-3-2
32449	92512468	A303-3-3
32450	32512411	A303-3-3
32451	32512412	A303-3-3
32452	32512413	A303-3-3
32453	32512414	A303-3-3
32454	32512415	A303-3-3
32455	92512434	A303-3-3
32456	32512437	A303-3-3
32457	92512438	A303-3-3
32458	32512451	A303-3-3
32459	22512424	A303-3-3
32460	32512423	A303-3-3
32461	32512440	A303-3-3
32462	32512444	A303-3-3
32463	92512429	A303-3-3
32464	92512443	A303-3-4
32465	22512474	A303-3-4
32466	32512441	A303-3-4
32467	32512478	A303-3-4
32468	92512422	A303-3-4
32469	92512469A	A303-3-4
32470	92512445	A303-3-4
32471	32512433	A303-3-4
32472	32512430A	A303-3-5

https://truckmanualshub.com/

零件號碼索引
PARTS INDEX

(照新碼排序)
(ACCORDING TO NEW PART NO. SORT)

零件名稱 (PARE NAME)		
新碼 NEW PART NO.	舊碼 OLD PART NO.	頁次 PAGE
32473	32512432	A303-3-5
32474	92512465	A303-3-5
32475	92512447	A303-3-5
32476	92512466	A303-3-5
32477	92512450	A303-3-5
32478	92512459	A303-3-5
32479	92512472	A303-3-5
32480	22512460	A303-3-5
32481	92513211	A309-2-2
32482	MD-160	A303-3-6
32483	MD-161	A303-3-6
32484	92512444	A303-3-6
32485	32512808C	A303-4-2
32486	32512807	A303-4-2
32487	72512804	A303-4-2
32490	32512814	A303-4-2
32491	72510101	A304-1-2
32492	72510102	A304-1-2
32493	72510103	A304-1-2
32494	92510127	A304-1-2
32495	72510105	A304-1-2
32496	32510107	A304-1-2
32497	92510129	A304-1-2
32498	92510130	A304-1-2
32499	92510131	A304-1-2
32500	92510128	A304-1-2
32501	92510140	A304-1-2
32501A		A304-1-2
32502	92510117	A304-1-2
32502A		A304-1-2
32503	31510123A	A304-1-3
32504	32510123	A304-1-3
32504A		A304-1B-3
32505	72510212	A304-1A-2
32506	72510213	A304-1A-2
32507	72510202	A304-1A-2
32508	72510216	A304-1A-2
32509	92510207	A304-1A-2
32510	72510211	A304-1A-2
32511	92510209	A304-1A-2

零件名稱 (PARE NAME)		
新碼 NEW PART NO.	舊碼 OLD PART NO.	頁次 PAGE
32512	92510208	A304-1A-2
32513	72510301	A304-1B-2
32514	72510322	A304-1B-2
32515	72510302	A304-1B-2
32516	72510317	A304-1B-2
32517	72510303	A304-1B-2
32518	92510310	A304-1B-2
32519	72510318	A304-1B-2
32520	72510319	A304-1B-2
32521	92510108	A304-1B-2
32522	92510314	A304-1B-2
32523	92510315	A304-1B-2
32524	92510316	A304-1B-2
32525	92510311	A304-1B-2
32526		A304-1B-2
32528	92510305	A304-1B-2
32529	92510307	A304-1B-3
32530	32510309	A304-1B-3
32531	32510308	A304-1B-3
32532	92510122	A304-1B-3
32533	92510326	A304-1B-3
32534	32550703	A310-3B-4
32538	92576323	A310-7-4
32539	92510404	A304-2-2
32540	92510414	A304-2-2
32541	92510434	A304-2-2
32542	92510430	A304-2-2
32545	92509062	A305-1-6
32546	92510407	A304-2-2
32547	92510420	A304-2-2
32548	92510408	A304-2-2
32549	92510418	A304-2-2
32550	92510419	A304-2-2
32551	92510403	A304-2-2
32552	92510435	A304-2-2
32553	92510425	A304-2-2
32554	92510432	A304-2-3
32555	92510431	A304-2-3
32556	92510433	A304-2-3
32558	92510436	A304-2-3

https://truckmanualshub.com/

零件號碼索引
PARTS INDEX

(照新碼排序)
(ACCORDING TO NEW PART NO. SORT)

零件名稱 (PARE NAME)		
新碼 NEW PART NO.	舊碼 OLD PART NO.	頁次 PAGE
32559	92510412	A304-2-2
32566	32510517	A304-3-2
32567	32510520	A304-3-2
32570	32510503	A304-3-2
32571	32510519	A304-3-2
32572	32510521	A304-3-2
32573	32510518	A304-3-2
32574	32510522	A304-3-2
32575	32510504	A304-3-2
32578	92510513	A304-3-2
32579	92510514	A304-3-2
32580	92510524	A304-3-3
32581	92510525	A304-3-3
32583		A304-3-3
32584	92510526	A304-3-3
32587	32572902	A310-5-2
32588	51510401	A304-4-3
32589	32510644	A304-4-3
32590	92510627	A304-4-3
32591	51510404	A304-4-3
32592	32510632	A304-4-3
32593	92510632	A304-4-3
32594	51510406	A304-4-3
32595	51510407	A304-4-3
32596	92510623	A304-4-3
32597	92510625	A304-4-3
32598	32510645	A304-4-3
32599	92510628	A304-4-3
32600	92510624	A304-4-3
32602	51510405	A304-4-3
32603	51510403	A304-4-4
32604	51510402	A304-4-4
32615	32509091	A305-1-2
32616		A305-1-2
32617	91509075	A305-1-2
32618	92509075	A305-1-2
32619	91509079	A305-1-2
32620	92509079	A305-1-2
32621	91509077	A305-1-2
32622	92509077	A305-1-2

零件名稱 (PARE NAME)		
新碼 NEW PART NO.	舊碼 OLD PART NO.	頁次 PAGE
32623	91509081	A305-1-2
32624	92509081	A305-1-2
32625	91509078	A305-1-2
32626	92509078	A305-1-2
32627	91509082	A305-1-2
32628	92509082	A305-1-2
32629	92509001	A305-1-2
32630	32509003	A305-1-2
32631	32509093	A305-1-2
32632	32509005	A305-1-3
32633	32509006	A305-1-3
32634	51509007	A305-1-3
32635	32509073	A305-1-3
32636	32509016	A305-1-3
32637	32509055	A305-1-3
32638	92509009	A305-1-3
32639	32509011	A305-1-3
32641	32509099	A305-1-3
32643	32509038	A305-1-4
32644	92509015	A305-1-4
32645	92509094	A305-1-4
32648	42509023	A305-1-4
32649	92509909	A305-1-4
32650	32509033	A305-1-4
32651	32509070	A305-1-4
32652	92509039	A305-1-4
32653	92509071	A305-1-4
32655	92509057	A305-1-4
32656	92509090	A305-1-5
32657	32509053	A305-1-5
32658	92509059	A305-1-5
32659	42509048	A305-1-5
32661	92509061	A305-1-5
32663	22509065	A305-1-6
32666	42509025	A305-1-6
32667	32509097	A305-1-6
32668	32509098	A305-1-6
32669	32509096A	A305-1-6
32670	92509910	A305-1-6
32671	22509030	A305-1-6

https://truckmanualshub.com/

零件號碼索引

PARTS INDEX

(照新碼排序)

(ACCORDING TO NEW PART NO. SORT)

零件名稱 (PARE NAME)		
新碼 NEW PART NO.	舊碼 OLD PART NO.	頁次 PAGE
32672	22509032	A305-1-6
32672A		A305-1-6
32673	22509035	A305-1-6
32677	32509067	A305-1-6
32678	92509068	A305-1-6
32679	32509020	A305-1-6
32680	92509017	A305-1-6
32681	32509022	A305-1-6
32682	92509069	A305-1-6
32683	32520924	A305-1-7
32684	32509054	A305-1-7
32685	A2509086	A305-1-7
32686	A2509089	A305-1-7
32687	A2509088	A305-1-7
32688	A2509090	A305-1-7
32689	A2509091	A305-1-7
32690	92511036	A305-2-2
32692	92511039	A305-2-2
32693	41511012A	A305-2-2
32704	41511004	A305-2-2
32715	92511035	A305-2-2
32716	41511014	A305-2-2
32717	42511014	A305-2-2
32720	31511049	A305-2-2
32721	32511049	A305-2-2
32723	32511006	A305-2-3
32724	32511007	A305-2-3
32725	92511042	A305-2-3
32727	32511017	A305-2-3
32728	41511013	A305-2-3
32729	42511013	A305-2-3
32732	32511044	A305-2-3
32733	92503007	A301-5-2
32734	32511048	A305-2-4
32735	31511066	A305-2-4
32741	32511051	A305-2-4
32742	32511052	A305-2-4
32743	32511053	A305-2-4
32744	32511064	A305-2-4
32745	32511059	A305-2-4

零件名稱 (PARE NAME)		
新碼 NEW PART NO.	舊碼 OLD PART NO.	頁次 PAGE
32746	32511061	A305-2-4
32749	92511102	A305-3-2
32750	92511105	A305-3-2
32751	92511108	A305-3-2
32752	32512501	A305-4-2
32753	32512502	A305-4-2
32754	32512505	A305-4-2
32755	41512507	A305-4-2
32756	42512507	A305-4-2
32757	41512520	A305-4-2
32758	42512520	A305-4-2
32762	42512530	A305-4-2
32764		A305-4-2
32765	92512525	A305-4-2
32766	21512515	A305-4-2
32767	22512515	A305-4-2
32769	32512526	A305-4-3
32770	32512517A	A305-4-3
32771	32512527	A305-4-3
32772	21512510	A305-4-3
32773	22512510	A305-4-3
32774	32512509	A305-4-3
32775	32512307	A305-4-3
32776	92512511	A305-4-3
32777	32512528	A305-4-3
32778	92512529A	A305-4-3
32779	32518125	A306-1-2
32780	32518126	A306-1-2
32781	32518101	A306-1-2
32782	32518102	A306-1-2
32783	32518103A	A306-1-2
32784	32518105	A306-1-2
32785	32518106	A306-1-2
32786	32518107	A306-1-2
32787	32518109	A306-1-2
32788	32518110	A306-1-2
32789	32518111	A306-1-2
32790	92511053	A306-1-2
32792	32518120	A306-1-3
32793	32518121	A306-1-3

https://truckmanualshub.com/

零件號碼索引
PARTS INDEX

(照新碼排序)
(ACCORDING TO NEW PART NO. SORT)

零件名稱 (PARE NAME)		
新碼 NEW PART NO.	舊碼 OLD PART NO.	頁次 PAGE
32794	32518122	A306-1-3
32795	32518123A	A306-1-3
32796	32512601	A306-2-2
32797	32512604	A306-2-2
32798	32512610	A306-2-2
32799	32512605	A306-2-2
32800	32512611	A306-2-2
32801	32512612	A306-2-2
32802	32512630	A306-2-2
32803	32512622	A306-2-2
32804	32512615	A306-2-3
32805	92512617A	A306-2-3
32806	92512636	A306-2-3
32807	32512621	A306-2-3
32808	92512651	A306-2-3
32809	92512606	A306-2-3
32810	32512607A	A306-2-3
32811	92512624	A306-2-3
32811A		A306-2-3
32812	93012624	A306-2-3
32813	92512608	A306-2-3
32814	93012608	A306-2-3
32815	32512431	A306-2-4
32816	32518706	A306-3-2
32817	34012965	A306-3-3
32818	34012972	A306-3-3
32819	34012961	A306-3-3
32820	34012960	A306-3-4
32821	34012959	A306-3-4
32822	34012957	A306-3-4
32823	92508450	A306-3-4
32824	32518716	A306-3-4
32825	A2509911	A305-1-4
32826	A2511004A	A305-2-2
32827	22570800	A310-4-3
32828	DFM101	A309-2-2
32829	A2511012	A305-2-2
32830	A2511066	A305-2-4
32832	A2512481	A303-3-2
32835	32512769	A307-1-3

零件名稱 (PARE NAME)		
新碼 NEW PART NO.	舊碼 OLD PART NO.	頁次 PAGE
32836	A2514012A	A309-3-5
32837	A2560701	A301-11-2
32838	A2560702	A301-11-2
32839	A3009000	A305-1-2
32840	A3011004A	A305-2-2
32841	A3011012	A305-2-2
32842	A3011066	A305-2-4
32843	A3014012A	A309-3-5
32844	A3509000	A305-1-2
32845	A3514012A	A309-3-5
32846	A2514006	A309-3-5
32847	A1514012A	A309-3-5
32848	A1809000	A305-1-2
32849	A1811004A	A305-2-2
32850	32518711	A307-1-4
32851	32518712	A307-1-5
32852	32518713	A307-1-5
32853	32518704	A307-1-5
32855	32512752	A307-1-5
32856	32518718D	A307-1-5
32857	A1811012	A305-2-2
32858	32518717D	A307-1-5
32859	A1811066	A305-2-4
32860	32518721	A307-1-5
32861	A1814012A	A309-3-5
32862	MD-072	A310-5A-4
32863	MD-074	A310-5A-4
32864	MD-070	A310-5A-4
32868		A310-5A-4
32869		A310-5A-4
32870		A310-5A-4
32871		A310-5A-4
32872		A310-5A-4
32873	32572903	A310-5-2
32874	92510511	A310-5A-4
32875	92506028	A310-5A-4
32876	32512301	A307-2-4
32877	32512302	A307-2-4
32878	32512320	A307-2-4
32879	32512303	A307-2-4

https://truckmanualshub.com/

零件號碼索引
PARTS INDEX

(照新碼排序)
(ACCORDING TO NEW PART NO. SORT)

零件名稱 (PARE NAME)		
新碼 NEW PART NO.	舊碼 OLD PART NO.	頁次 PAGE
32880	32512323	A307-2-4
32881	32512324	A307-2-4
32882	32512325	A307-2-4
32883	32512308	A307-2-4
32884	32512311	A307-2-5
32885	32512313	A307-2-5
32886	92512315	A307-2-5
32887	92512318	A307-2-5
32888	92512305	A307-2-6
32889	92512321	A307-2-6
32890	92512322	A307-2-6
32891	32512306	A307-2-6
32892	32507004	A308-1-2
32893	32507042	A308-1-2
32894	32507043	A308-1-2
32895	32507006	A308-1-2
32896	32507044	A308-1-2
32897	32507045	A308-1-2
32899	92507007	A308-1-2
32900	93007007	A308-1-2
32902	32507002	A308-1-2
32903	32507046	A308-1-2
32904	32507033	A308-1-3
32905	33007033	A308-1-3
32906	92507030	A308-1-3
32907	93007030	A308-1-3
32908	92507036	A308-1-3
32909	93007036	A308-1-3
32910	92507037	A308-1-3
32911	93007037	A308-1-3
32912	92507040	A308-1-3
32913	93007040	A308-1-3
32914	92507038	A308-1-3
32915	93007038	A308-1-3
32916	92507039	A308-1-3
32917	93007039	A308-1-3
32918	92507041	A308-1-3
32919	93007041	A308-1-3
32920	32507031	A308-1-3
32921	33007031	A308-1-3

零件名稱 (PARE NAME)		
新碼 NEW PART NO.	舊碼 OLD PART NO.	頁次 PAGE
32923	32507017	A308-1-3
32924	33007017	A308-1-3
32925	22507003	A308-1-3
32926	93007035	A308-1-4
32927	32507012	A308-1-4
32928	32507013	A308-1-4
32929	33007013	A308-1-4
32930	32507018	A308-1-4
32931	32507021	A308-1-4
32932	33007021	A308-1-4
32933	32507022	A308-1-4
32934	33007022	A308-1-4
32937	32507001	A308-1-5
32938	32515016	A308-1A-2
32939	92515011A	A308-1A-2
32940	42515001	A308-1A-2
32941	43015001	A308-1A-2
32943	92515012	A308-1A-3
32944	93015012	A308-1A-3
32945	92515013	A308-1A-3
32946	93015013	A308-1A-3
32947	92515014	A308-1A-3
32948	93015014	A308-1A-3
32949	92515015	A308-1A-3
32950	93015015	A308-1A-3
32951	92515019	A308-1A-3
32952	93015019	A308-1A-3
32953	33015022	A308-1A-3
32954	32515004	A308-1A-3
32955	33015004	A308-1A-3
32956	92516005	A308-1B-3
32957	93010605	A308-1B-3
32958		A308-1B-3
32959		A308-1B-3
32960	92516006	A308-1B-3
32961	93016006	A308-1B-3
32963	92515009	A308-1B-4
32964	92516007	A308-1B-4
32965	93016007	A308-1B-4
32966	92516001	A308-1B-4

https://truckmanualshub.com/

零件號碼索引
PARTS INDEX

(照新碼排序)
(ACCORDING TO NEW PART NO. SORT)

零件名稱 (PARE NAME)		
新碼 NEW PART NO.	舊碼 OLD PART NO.	頁次 PAGE
32967	93016001	A308-1B-4
32968		A308-1B-4
32969		A308-1B-4
32970	92516002	A308-1B-4
32971	93016002	A308-1B-4
32972	92516003	A308-1B-4
32973	93016003	A308-1B-4
32974	92516004	A308-1B-4
32975	93016004	A308-1B-4
32976	93016008	A308-1B-4
32977	92515016	A308-1B-5
32978	92507002	A308-1B-5
32979	92507046	A308-1B-5
32980	21532100	A308-2-2
32981	22532100	A308-2-2
32982	23032100	A308-2-2
32983	23532100	A308-2-2
32988	21532200	A308-2-2
32989	22532200	A308-2-2
32990	23032200	A308-2-2
32991	23532200	A308-2-2
32996	21532300	A308-2-2
32997	22532300	A308-2-2
32998	23032300	A308-2-2
32999	23532300	A308-2-2
33004	21532700	A308-2-2
33005	22532700	A308-2-2
33006	23032700	A308-2-2
33007	23532700	A308-2-2
33008	21532400	A308-2-2
33009	22532400	A308-2-2
33010	23032400	A308-2-2
33011	23532400	A308-2-2
33016	21532500	A308-2-2
33017	22532500	A308-2-2
33018	23032500	A308-2-2
33019	23532500	A308-2-2
33020	21532600	A308-2-2
33021	22532600	A308-2-2
33022	23032600	A308-2-2

零件名稱 (PARE NAME)		
新碼 NEW PART NO.	舊碼 OLD PART NO.	頁次 PAGE
33023	23532600	A308-2-2
33024	21531100	A308-2-2
33025	22531100	A308-2-2
33026	23031100	A308-2-2
33031	21531200	A308-2-2
33032	22531200	A308-2-2
33033	23031200	A308-2-2
33038	21531300	A308-2-3
33039	22531300	A308-2-3
33040	23031300	A308-2-3
33045	21531700	A308-2-3
33046	22531700	A308-2-3
33047	23031700	A308-2-3
33048	21531400	A308-2-3
33049	22531400	A308-2-3
33050	23031400	A308-2-3
33055	21531500	A308-2-3
33056	22531500	A308-2-3
33057	23031500	A308-2-3
33058	21531600	A308-2-3
33059	22531600	A308-2-3
33060	23031600	A308-2-3
33061	21534100	A308-2-4
33062	22534100	A308-2-4
33063	23034100	A308-2-4
33064	23534100	A308-2-4
33069	21534200	A308-2-4
33070	22534200	A308-2-4
33071	23034200	A308-2-4
33072	23534200	A308-2-4
33077	21534300	A308-2-4
33078	22534300	A308-2-4
33079	23034300	A308-2-4
33080	23534300	A308-2-4
33085	21534400	A308-2-4
33086	22534400	A308-2-4
33087	23034400	A308-2-4
33088	23534400	A308-2-4
33093	21534500	A308-2-4
33094	22534500	A308-2-4

https://truckmanualshub.com/

零件號碼索引
PARTS INDEX

(照新碼排序)
(ACCORDING TO NEW PART NO. SORT)

零件名稱 (PARE NAME)		
新碼 NEW PART NO.	舊碼 OLD PART NO.	頁次 PAGE
33095	23034500	A308-2-4
33096	23534500	A308-2-4
33097	21533100	A308-2-4
33098	22533100	A308-2-4
33099	23033100	A308-2-4
33104	21533200	A308-2-4
33105	22533200	A308-2-4
33106	23033200	A308-2-4
33111	21533300	A308-2-4
33112	22533300	A308-2-4
33113	23033300	A308-2-4
33118	21533400	A308-2-4
33119	22533400	A308-2-4
33120	23033400	A308-2-4
33125	21533500	A308-2-4
33126	22533500	A308-2-4
33127	23033500	A308-2-4
33128	21537100	A308-2-5
33129	22537100	A308-2-5
33130	23037100	A308-2-5
33131	23537100	A308-2-5
33136	21537400	A308-2-5
33137	22537400	A308-2-5
33138	23037400	A308-2-5
33139	23537400	A308-2-5
33140	21537200	A308-2-5
33141	22537200	A308-2-5
33142	23037200	A308-2-5
33143	23537200	A308-2-5
33147	21537300	A308-2-5
33148	22537300	A308-2-5
33149	23037300	A308-2-5
33150	23537300	A308-2-5
33154	23037500	A308-2-5
33155	23537500	A308-2-5
33156	21536900	A308-2-5
33157	22536900	A308-2-5
33158	23036900	A308-2-5
33163	21536100	A308-2-6
33164	22536100	A308-2-6

零件名稱 (PARE NAME)		
新碼 NEW PART NO.	舊碼 OLD PART NO.	頁次 PAGE
33165	23036100	A308-2-6
33170	21536600	A308-2-6
33171	22536600	A308-2-6
33172	23036600	A308-2-6
33173	21536500	A308-2-6
33174	22536500	A308-2-6
33175	23036500	A308-2-6
33180	21536200	A308-2-6
33181	22536200	A308-2-6
33182	23036200	A308-2-6
33187	21536300	A308-2-6
33188	22536300	A308-2-6
33189	23036300	A308-2-6
33190	21536400	A308-2-6
33191	22536400	A308-2-6
33192	23036400	A308-2-6
33197	23036800	A308-2-6
33198	21535900	A308-2-6
33199	22535900	A308-2-6
33200	23035900	A308-2-6
33205	21535100	A308-2-6
33206	22535100	A308-2-6
33207	23035100	A308-2-6
33212	21535600	A308-2-6
33213	22535600	A308-2-6
33214	23035600	A308-2-6
33215	21535500	A308-2-6
33216	22535500	A308-2-6
33217	23035500	A308-2-6
33222	21535200	A308-2-6
33223	22535200	A308-2-6
33224	23035200	A308-2-6
33229	21535300	A308-2-7
33230	22535300	A308-2-7
33231	23035300	A308-2-7
33232	21535400	A308-2-7
33233	22535400	A308-2-7
33234	23035400	A308-2-7
33239	23035700	A308-2-7
33240	DFM103	A309-2-2

https://truckmanualshub.com/

零件號碼索引
PARTS INDEX

(照新碼排序)
(ACCORDING TO NEW PART NO. SORT)

零件名稱 (PARE NAME)		
新碼 NEW PART NO.	舊碼 OLD PART NO.	頁次 PAGE
33242	IDE-1907	A309-2-2
33243	IDE-6070	A309-2-2
33244	92513206	A309-2-2
33245	92513205	A309-2-2
33246	92513204	A309-2-2
33247	92513203	A309-2-2
33248	92513202	A309-2-2
33249	92513201	A309-2-2
33250	92513212	A309-2-2
33251	92513209	A309-2-2
33252	92513208	A309-2-2
33253	92513207	A309-2-2
33255	32514001	A309-3-5
33257	32514061	A309-3-5
33258	32514013	A309-3-5
33259	32514014	A309-3-5
33261	32514019	A309-3-5
33264	32514017	A309-3-5
33265	32514005	A309-3-5
33266	32514034	A309-3-5
33267	32514035	A309-3-5
33268	32514062	A309-3-5
33289	32514064	A309-3-5
33290	32514065	A309-3-5
33291	32514003A	A309-3-6
33292	31514007	A309-3-6
33293	31814007	A309-3-6
33294	32014007	A309-3-6
33295	32514007	A309-3-6
33296	33014007	A309-3-6
33297	33514007	A309-3-6
33298	31814037	A309-3-6
33299	32514037	A309-3-6
33300	33014037	A309-3-6
33301	32014036	A309-3-6
33302	32514036	A309-3-6
33303	33014036	A309-3-6
33304	32514018	A309-3-6
33307	32514025	A309-3-6
33308	32514026	A309-3-6

零件名稱 (PARE NAME)		
新碼 NEW PART NO.	舊碼 OLD PART NO.	頁次 PAGE
33309	32514020	A309-3-6
33310	32514021	A309-3-6
33311	32514022	A309-3-6
33312	32514023	A309-3-6
33313	32514031	A309-3-6
33314	32514038	A309-3-6
33316	32514066	A309-3-7
33317	32514040	A309-3-7
33318	32514056	A309-3-7
33319	32514057	A309-3-7
33320	32514041	A309-3-7
33321	32514042	A309-3-7
33322	32514044	A309-3-7
33323	32514039	A309-3-7
33324	32514050	A309-3-7
33325	32514047	A309-3-7
33326	32514048	A309-3-7
33327	32514051	A309-3-7
33328	32514052	A309-3-7
33329	32514058	A309-3-7
33330	32514059	A309-3-7
33331	32514015	A309-3-7
33332	32514045	A309-3-7
33333	32514043	A309-3-7
33335	32514046	A309-3-8
33336	32514060	A309-3-8
33337	33014060	A309-3-8
33338	32514055	A309-3-8
33339	32514053	A309-3-8
33340	42551001	A310-1-2
33341	43051001	A310-1-2
33342	42551002	A310-1-2
33343	43051002	A310-1-2
33344	42551003	A310-1-2
33345	43051003	A310-1-2
33346	42551005	A310-1-2
33347	42551008	A310-1-2
33348	43051008	A310-1-2
33349	42551009	A310-1-2
33350	42551011	A310-1-2

https://truckmanualshub.com/

零件號碼索引
PARTS INDEX

(照新碼排序)
(ACCORDING TO NEW PART NO. SORT)

零件名稱 (PARE NAME)		
新碼 NEW PART NO.	舊碼 OLD PART NO.	頁次 PAGE
33351	43051011	A310-1-2
33352	21515500	A310-1-3
33353	22515500	A310-1-3
33355	32515511	A310-1-3
33356	21507500	A310-1-3
33357A	22507500	A310-1-3
33358	23007500	A310-1-3
33359	32551013A	A310-1-3
33360	52507800	A310-1-3
33363	41507540	A310-1-3
33364	42507540	A310-1-3
33365	43007540	A310-1-3
33366	41507550	A310-1-3
33367	42507550	A310-1-3
33368	43007550	A310-1-3
33369	41507560	A310-1-4
33370	42507560	A310-1-4
33371	43007560	A310-1-4
33372	41507570	A310-1-4
33373	42507570	A310-1-4
33374	43007570	A310-1-4
33375	41507580	A310-1-4
33376	42507580	A310-1-4
33377	43007580	A310-1-4
33378	42507531	A310-1-4
33379	42507533	A310-1-4
33380	43007533	A310-1-4
33381	22552100A	A310-2-2
33382	23052100	A310-2-2
33383	22552200	A310-2-2
33384	23052200	A310-2-2
33385	22552300	A310-2-2
33386	23052300	A310-2-2
33387	42552400	A310-2-2
33388	43052400	A310-2-2
33389	22552600	A310-2-2
33390	23052600	A310-2-2
33391	32551012A	A310-2-2
33392	32552001	A310-2-2
33393	42552700	A310-2-2

零件名稱 (PARE NAME)		
新碼 NEW PART NO.	舊碼 OLD PART NO.	頁次 PAGE
33394	32552009	A310-2-2
33395	32552012	A310-2-3
33396	33052012	A310-2-3
33397	32552013	A310-2-3
33398	33052013	A310-2-3
33399	32552004	A310-2-3
33400	32552008	A310-2-3
33401	32552010	A310-2-3
33402	32552015	A310-2-3
33403	33052015A	A310-2-3
33404	32552016	A310-2-3
33405	33052016	A310-2-3
33406	32552014	A310-2-3
33407	42552501	A310-2-3
33408	43052501	A310-2-3
33409	42552502	A310-2-3
33410	43052502	A310-2-3
33411	42552503	A310-2-4
33412	43052503	A310-2-4
33413	42552504	A310-2-4
33414	43052504	A310-2-4
33415	92550103	A310-3-2
33416	92550104	A310-3-2
33417	32550110	A310-3-3
33418	32550111	A310-3-3
33419	32550112A	A310-3-3
33420	32550113	A310-3-3
33421	32550115	A310-3-3
33422	32550116	A310-3-3
33423	32550118	A310-3-4
33424	33050118A	A310-3-4
33425	A2011004	A305-2-2
33426	92507431	A310-3-4
33427	92505120	A310-3A-3
33428	92550223	A310-3B-4
33429	52550112A	A310-3F-3
33430	A2011012	A305-2-2
33431	A2011066	A305-2-4
33432	A2014012A	A309-3-5
33433	32550226	A310-3A-3

https://truckmanualshub.com/

零件號碼索引
PARTS INDEX

(照新碼排序)
(ACCORDING TO NEW PART NO. SORT)

零件名稱 (PARE NAME)		
新碼 NEW PART NO.	舊碼 OLD PART NO.	頁次 PAGE
33434	32550206D	A310-3A-3
33435	33050206E	A310-3A-3
33436	32550228	A310-3A-4
33437	32550232	A310-3H-3
33438	32550229	A310-3A-4
33439	32550233	A310-3H-3
33440	32550230	A310-3A-4
33441	32550234	A310-3H-3
33442	32550231	A310-3A-4
33444	32550244	A310-3A-4
33446	32550210	A310-3E-4
33447	32550304	A310-3B-4
33449	32550104	A310-3D-2
33450	32550316	A310-3-3
33451	92507529	A310-4-3
33452	32507520	A310-4-3
33453	33007520	A310-4-3
33454	32507521	A310-4-3
33455	33007521	A310-4-3
33456	32507522	A310-4-3
33457	33007522	A310-4-3
33458	32507523	A310-4-3
33459	33007523	A310-4-3
33460	32507524	A310-4-3
33461	33007524	A310-4-3
33462	32507525	A310-4-3
33463	33007525	A310-4-3
33464	32575011	A310-4-3
33465	31575012	A310-4-3
33466	32575012	A310-4-3
33467	92575001	A310-4-4
33468	92575002	A310-4-4
33469	32575006	A310-4-4
33470	92575003	A310-4-4
33471	92575010	A310-4-4
33472	32572901	A310-5-2
33473	32572905	A310-5-3
33474	32572906	A310-5-3
33475	92572907	A310-5-3
33482	31511067	A310-5-3
33483	31811067	A310-5-3

零件名稱 (PARE NAME)		
新碼 NEW PART NO.	舊碼 OLD PART NO.	頁次 PAGE
33484	32011067	A310-5-3
33485	32511067	A310-5-3
33486	33011067	A310-5-3
33487	33511067	A310-5-3
33488	32572904	A310-5-4
33489A		A310-6-2
33492	32576102	A310-6-2
33493A		A310-6-2
33494	32576105	A310-6-2
33495	32576106	A310-6-2
33497	32576107	A310-6-2
33498	32576108	A310-6-3
33499	32576110	A310-6-3
33500	32576201	A310-6A-2
33501	32576202	A310-6A-2
33502	32576205	A310-6A-2
33503	32576206	A310-6A-2
33504	32576207	A310-6A-2
33505	92576208	A310-6A-2
33506	32576210	A310-6A-2
33507	32576215	A310-6A-2
33508	22576500	A310-7-2
33509	22576600	A310-7-2
33510	32576301	A310-7-2
33511	32576302	A310-7-2
33512	32576303	A310-7-2
33513	32576304	A310-7-2
33514	92576306	A310-7-2
33515	32576307	A310-7-2
33516	92576309	A310-7-2
33517	22576310	A310-7-2
33518	32576312	A310-7-2
33519	32576313	A310-7-2
33520	92576314	A310-7-2
33521	92576315	A310-7-3
33522	32576316	A310-7-3
33523	92576317	A310-7-3
33524	92576318	A310-7-3
33525	92576319	A310-7-3
33526	92576320	A310-7-3
33527	92576321	A310-7-3

https://truckmanualshub.com/

零件號碼索引
PARTS INDEX

(照新碼排序)
(ACCORDING TO NEW PART NO. SORT)

零件名稱 (PARE NAME)		
新碼 NEW PART NO.	舊碼 OLD PART NO.	頁次 PAGE
33528	92576322	A310-7-3
33529	92576324	A310-7-3
33531	32576328	A310-7-4
33532	92576329	A310-7-4
33533	92576330	A310-7-4
33534	22576410	A310-7A-2
33535	32576502	A311-1-2
33536	32576503	A311-1-2
33537	32576504	A311-1-2
33538	32576505	A311-1-2
33539	32576507	A311-1-2
33540	32576508	A311-1-2
33541	32576511	A311-1-2
33542	32576513	A311-1-2
33543	32576514	A311-1-2
33544	32576516	A311-1-2
33545	32576517	A311-1-2
33546	32576601	A311-2-2
33547	32576602	A311-2-2
33548	32576603	A311-2-2
33549	32576605	A311-2-2
33550	32576608	A311-2-2
33551	32576609	A311-2-2
33552	32576610	A311-2-2
33553	32576611	A311-2-2
33554	92576612	A311-2-2
33555	32576615	A311-2-2
33556	32576616	A311-2-2
33557	42507401	A308-3-2
33558	44007401	A308-3-2
33562	42507404	A308-3-2
33563	44007404	A308-3-2
33564	42507409	A308-3-3
33565	44007409	A308-3-3
33566	42507406	A308-3-3
33567	44007406	A308-3-3
33568	42507432	A308-3-3
33569	44007432	A308-3-3
33573	42507418	A308-3-3
33574	44007418	A308-3-3

零件名稱 (PARE NAME)		
新碼 NEW PART NO.	舊碼 OLD PART NO.	頁次 PAGE
33575	32507421	A308-3-3
33576	92507423	A308-3-3
33577	42541101A	A308-4-2
33578	43041101A	A308-4-2
33580	42541201A	A308-4-2
33581	43041201A	A308-4-2
33583	42541301A	A308-4-2
33584	43041301A	A308-4-2
33586	42541601A	A308-4-2
33587	43041601A	A308-4-2
33588	42541401A	A308-4-2
33589	43041401A	A308-4-2
33591		A308-4-2
33592		A308-4-2
33593		A308-4-2
33594		A308-4-2
33595	42541701A	A308-4-3
33596	43041701A	A308-4-3
33598		A308-4-3
33599		A308-4-3
33600	42541501A	A308-4-3
33601	43041501A	A308-4-3
33603	43041801A	A308-4-3
33604	42507603	A308-4-3
33605	43007603	A308-4-3
33607	42507605	A308-4-3
33608	43007605	A308-4-3
33610	42541102A	A308-4-3
33611	43041102A	A308-4-3
33613	42541202A	A308-4-3
33614	43041202A	A308-4-3
33616	42541302A	A308-4-3
33617	43041302A	A308-4-3
33619	42541602A	A308-4-3
33620	43041602A	A308-4-3
33621	42541402A	A308-4-3
33622	43041402A	A308-4-3
33624		A308-4-3
33625		A308-4-3
33626		A308-4-3

https://truckmanualshub.com/

零件號碼索引
PARTS INDEX

(照新碼排序)
(ACCORDING TO NEW PART NO. SORT)

零件名稱 (PARE NAME)		
新碼 NEW PART NO.	舊碼 OLD PART NO.	頁次 PAGE
33627		A308-4-3
33628	42541702A	A308-4-4
33629	43041702A	A308-4-4
33631		A308-4-4
33632		A308-4-4
33633	42541502A	A308-4-4
33634	43041502A	A308-4-4
33636	43041802A	A308-4-4
33637	42507625	A308-4-4
33639	92508104	A308-4-4
33641	92507607A	A308-4-4
33643	42541103A	A308-4A-2
33644	92501132	A301-2-2
33645	43041103A	A308-4A-2
33647	42541203A	A308-4A-2
33648	43041203A	A308-4A-2
33650	42541303A	A308-4A-2
33651	43041303A	A308-4A-2
33653	42541603A	A308-4A-2
33654	43041603A	A308-4A-2
33655	42541403A	A308-4A-2
33656	43041403A	A308-4A-2
33658		A308-4A-2
33659		A308-4A-2
33660		A308-4A-2
33661		A308-4A-2
33662	42541703A	A308-4A-3
33663	43041703A	A308-4A-3
33665		A308-4A-3
33666		A308-4A-3
33667	42541503A	A308-4A-3
33668	43041503A	A308-4A-3
33670	43041803A	A308-4A-3
33675		A308-4A-3
33676		A308-4A-3
33677		A308-4A-3
33678		A308-4A-3
33679		A308-4A-4
33680		A308-4A-4
33681	42507725	A308-4A-4

零件名稱 (PARE NAME)		
新碼 NEW PART NO.	舊碼 OLD PART NO.	頁次 PAGE
33683	42543101	A308-4B-2
33683A		A308-4B-2
33684	43043101	A308-4B-2
33684A		A308-4B-2
33686	42543201	A308-4B-3
33686A		A308-4B-3
33687	43043201	A308-4B-3
33687A		A308-4B-3
33689	42543301	A308-4B-3
33689A		A308-4B-3
33690	43043301	A308-4B-3
33690A		A308-4B-3
33692	42543601	A308-4B-3
33692A		A308-4B-3
33693	43043601	A308-4B-3
33693A		A308-4B-3
33694	42543401	A308-4B-3
33694A		A308-4B-3
33695	43043401	A308-4B-3
33695A		A308-4B-3
33698	42543701	A308-4B-3
33698A		A308-4B-3
33699	43043701	A308-4B-3
33699A		A308-4B-3
33700	42543501	A308-4B-3
33700A		A308-4B-3
33701	43043501	A308-4B-3
33701A		A308-4B-3
33703	43043801	A308-4B-3
33703A		A308-4B-3
33704	42543102	A308-4B-4
33704A		A308-4B-4
33705	43043102	A308-4B-4
33705A		A308-4B-4
33707	42543202	A308-4B-4
33707A		A308-4B-4
33708	43043202	A308-4B-4
33708A		A308-4B-4
33710	42543302	A308-4B-4
33710A		A308-4B-4

https://truckmanualshub.com/

零件號碼索引
PARTS INDEX

(照新碼排序)
(ACCORDING TO NEW PART NO. SORT)

零件名稱 (PARE NAME)		
新碼 NEW PART NO.	舊碼 OLD PART NO.	頁次 PAGE
33711	43043302	A308-4B-4
33711A		A308-4B-4
33713	42543602	A308-4B-4
33713A		A308-4B-4
33714	43043602	A308-4B-4
33714A		A308-4B-4
33715	42543402	A308-4B-4
33715A		A308-4B-4
33716	43043402	A308-4B-4
33716A		A308-4B-4
33719	42543702	A308-4B-4
33719A		A308-4B-4
33720	43043702	A308-4B-4
33720A		A308-4B-4
33721	42543502	A308-4B-4
33721A		A308-4B-4
33722	43043502	A308-4B-4
33722A		A308-4B-4
33724	43043802	A308-4B-4
33724A		A308-4B-4
33725	42515321	A308-4B-4
33726	43015321	A308-4B-4
33727	42515315	A308-4B-5
33727A		A308-4B-5
33728	43015315	A308-4B-5
33728A		A308-4B-5
33730	42515316	A308-4B-5
33731	42515322	A308-4B-5
33733	42542101A	A308-4C-2
33734	43042101A	A308-4C-2
33735	42542201A	A308-4C-2
33736	43042201A	A308-4C-2
33737	42542301A	A308-4C-2
33738	43042301A	A308-4C-2
33739	42542401A	A308-4C-2
33740	43042401A	A308-4C-2
33741	42542501A	A308-4C-2
33742	43042501A	A308-4C-2
33743	42515603	A308-4C-2
33744	43015603	A308-4C-2

零件名稱 (PARE NAME)		
新碼 NEW PART NO.	舊碼 OLD PART NO.	頁次 PAGE
33745	42515608	A308-4C-3
33746	43015608	A308-4C-3
33747	42542102A	A308-4C-3
33748	43042102A	A308-4C-3
33749	42542202A	A308-4C-3
33750	43042202A	A308-4C-3
33751	42542302A	A308-4C-3
33752	43042302A	A308-4C-3
33753	42542402A	A308-4C-3
33754	43042402A	A308-4C-3
33755	42542502A	A308-4C-3
33756	43042502A	A308-4C-3
33757	A2509000	A305-1-2
33758	42542103A	A308-4D-2
33759	43042103A	A308-4D-2
33760	42542203A	A308-4D-2
33761	43042203A	A308-4D-2
33762	42542303A	A308-4D-2
33763	43042303A	A308-4D-2
33764	42542403A	A308-4D-2
33765	43042403A	A308-4D-2
33766	42542503A	A308-4D-2
33767	43042503A	A308-4D-2
33768	42542104A	A308-4D-3
33769	43042104A	A308-4D-3
33770	42542204A	A308-4D-3
33771	43042204A	A308-4D-3
33772	42542304A	A308-4D-3
33773	43042304A	A308-4D-3
33774	42542404A	A308-4D-3
33775	43042404A	A308-4D-3
33776	42542504A	A308-4D-3
33777	43042504A	A308-4D-3
33778	92507305	A308-5-2
33780	92515419	A308-5A-2
33781	32515411	A308-5A-2
33782	32515412	A308-5A-2
33783	92516402	A308-5B-3
33786	32516428	A308-5B-3
33787	92515412	A308-5B-3

https://truckmanualshub.com/

零件號碼索引
PARTS INDEX

(照新碼排序)
(ACCORDING TO NEW PART NO. SORT)

零件名稱 (PARE NAME)		
新碼 NEW PART NO.	舊碼 OLD PART NO.	頁次 PAGE
33788	32516408	A308-5B-3
33789	92516413	A308-5B-4
33790	92516416	A308-5B-4
33791	32516417	A308-5B-4
33795		A308-5B-2
33799	22507900	A308-6-2
33800	23007900	A308-6-2
33801	42507800	A308-6-2
33802	43007800	A308-6-2
33806	92507511	A308-6-3
33807	32507516	A308-6-3
33808	32507537	A308-6-3
33809	32507536	A308-6-3
33810	42507532	A308-6-4
33811	23515500	A308-6A-2
33815	21515800	A308-6A-2
33816	22515800	A308-6A-2
33817	23015800	A308-6A-2
33821	22515900	A308-6A-2
33822	23015900	A308-6A-2
33823	92508201	A308-7-2
33824	92508202	A308-7-2
33825	92508206	A308-7-2
33826	92508203	A308-7-2
33827	92508105	A308-7-2
33828	92508011	A308-7-2
33829	92508204	A308-7-2
33833	92508207	A308-7-3
33834	92508208	A308-7-3
33836	92508101	A308-7-4
33837	92508102	A308-7-4
33838	92508014	A308-7-5
33839	92508211	A308-7-5
33840	32508212	A308-7-5
33841	32508215	A308-7-5
33842		A308-5B-2
33843		A308-5B-3
33844		A308-6A-2
33845		A308-6A-2
33848	92511201	A305-3-2

零件名稱 (PARE NAME)		
新碼 NEW PART NO.	舊碼 OLD PART NO.	頁次 PAGE
33849	32515402	A308-5A-2
33850		A308-7-5
33851		A308-7-5
33853		A305-4-2
33853A		A305-4-2
33860		A305-1-2
33861		A305-1-2
33862		A305-1-2
33863		A305-1-2
33864		A305-1-2
33865		A305-1-2
33883	92512809	A303-4-2
33918		A309-3-6
33923		A309-3-6
33924		A309-3-6
33930		A305-2-2
33941	94012445	A310-6-2
34040	A2509044	A309-2-2
34157	92512479	A303-3-6
34563		A308-7-5
34585		A310-3-3
34588		A302-3-2
34602	92512309A	A303-3-3
34603		A305-1-8
34608		A303-1-4
34674	32550225	A310-3H-3
34697		A302-3-2
34701	32512607	A303-3-6
34720	32507302A	A310-3B-3
34721		A310-3B-3
34747		A310-3F-3
34748		A308-7-4
34764		A308-7-4
34765		A308-6A-2
34766	32516331	A310-3F-3
34771	32560610	A301-8-4
34776		A310-3F-3
34783	32506013A	A302-1-3
34784		A303-3-6
34785		A310-3F-3

https://truckmanualshub.com/

零件號碼索引
PARTS INDEX

(照新碼排序)
(ACCORDING TO NEW PART NO. SORT)

零件名稱 (PARE NAME)		
新碼 NEW PART NO.	舊碼 OLD PART NO.	頁次 PAGE
34787		A310-4-3
34814	92511062	A305-2-4
34817	A3511004E	A305-2-2
34819	32510150	A304-1A-3
34820		A304-1A-3
34821		A306-2-4
34825		A306-2-3
34826		A306-2-4
34827		A303-3-7
34828		A303-3-7
34837	32510216	A304-1A-3
34843	92512130A	A301-8-4
34845	92512512	A305-4-3
34846		A303-3-2
34847		A303-3-2
34848	92512503	A305-4-2
34850	92518724	A307-1-4
34851	92518725A	A307-1-5
34852	31507522	A310-4-3
34853	31507520	A310-4-3
34854		A310-4-3
34860	32512524	A305-4-2
34861		A310-5-3
34862		A310-5-3
34863		A310-5-3
34865	32507215	A308-1-5
34866		A310-4-3
34871		A310-4-3
34872		A310-4-3
34873		A310-4-3
34894		A310-4-4
34895	32508030A	A308-7-5
34896	32508031A	A308-7-5
34897	32508032A	A308-7-5
34900	31512758	A307-1-4
34902		A307-1A-3
34903	32512727A	A307-1-3
34904	32512737A	A307-1-3
34905	92512738B	A307-1-3
34906	32512739B	A307-1-3

零件名稱 (PARE NAME)		
新碼 NEW PART NO.	舊碼 OLD PART NO.	頁次 PAGE
34909	31560225A	A301-7-3
34930	32512773	A307-1-2
34931	42512774	A307-1-3
34941		A310-6-2
34965		A306-3A-4
34966		A306-3A-4
34967		A306-3A-4
34968		A305-1-6
34969	32512701A	A307-1-2
34970		A301-8-4
34982		A303-3-5
34983	41509341	A310-4-4
34984	41509441	A310-4-4
34985	42509341A	A310-4-4
34986	42509441A	A310-4-4
35016	73507570	A308-6-4
35041	73507540	A308-6-3
35042	73507550	A308-6-3
35043	73507560	A308-6-3
35044	73507580	A308-6-4
35048		A306-1-3
35055		A310-1-2

https://truckmanualshub.com/

零件號碼索引
PARTS INDEX

(照新碼排序)
(ACCORDING TO NEW PART NO. SORT)

零件名稱 (PARE NAME)		
新碼 NEW PART NO.	舊碼 OLD PART NO.	頁次 PAGE
B350001	31814	A307-1A-2
B350002		A301-2-2
B350003		A301-3-2
B350004	21502020	A301-4-2
B350005	22502020	A301-4-2
B350006	23002020	A301-4-2
B350007	71502013	A301-4-3
B350008	72502013	A301-4-3
B350009	73002013	A301-4-3
B350010	32503031	A301-5-2
B350011	32503032	A301-5-2
B350012	21560110	A301-6-2
B350013	22560110	A301-6-2
B350014	71560205	A301-6-3
B350015	72560205	A301-6-3
B350016	73560205	A301-6-3
B350017	21560200	A301-7-2
B350018	22560200	A301-7-2
B350019	22560422	A301-9-2
B350020		A301-9-2
B350021	21560530	A301-10-2
B350022	22560530	A301-10-2
B350023	22560700	A301-11-2
B350024	31646	A301-11A-2
B350025		A302-1-3
B350026		A302-1-3
B350027		A302-1-3
B350031	41506006	A302-2-2
B350032	42506006	A302-2-2
B350033	41506039	A302-2-2
B350034	42506039	A302-2-2
B350035		A302-3-2
B350036		A302-3-2
B350037		A302-3-2
B350038		A302-3-2
B350039		A302-3-2
B350040		A302-3-2
B350045	21504220	A303-1-3
B350046	22504220	A303-1-3
B350047	23004220	A303-1-3

零件名稱 (PARE NAME)		
新碼 NEW PART NO.	舊碼 OLD PART NO.	頁次 PAGE
B350051	41505200	A303-2-2
B350052	42505200	A303-2-2
B350053	43005200	A303-2-2
B350055		A303-4-2
B350056	22510141	A304-1-2
B350058	42510650	A304-4-3
B350059	42510636	A304-4-3
B350060	22510635	A304-4-3
B350062		A305-2-2
B350063		A305-2-2
B350066	22511050	A305-2-2
B350069	22511116	A305-3-2
B350069A		A305-3-2
B350070		A305-4-2
B350071		A305-4-2
B350072	22518100	A306-1-2
B350073		A306-2-2
B350074		A306-3-2
B350075	22512370	A307-2-4
B350076	22512380	A307-2-4
B350077	22512390	A307-2-4
B350078	31703	A306-3-5
B350080		A307-1-2
B350090		A308-1-2
B350091		A308-1-2
B350092		A308-1-2
B350093		A308-1-2
B350094		A308-1-2
B350095		A308-1-2
B350096		A308-1-2
B350097		A310-5A-4
B350098	91517017	A311-3-1
B350099	92517017	A311-3-1
B350100	41517002	A311-3-1
B350101	42517002	A311-3-1
B350102	41517003	A311-3-1
B350103	42517003	A311-3-1
B350104		A308-1-2
B350105		A308-1-2
B350106		A308-1-2

https://truckmanualshub.com/

零件號碼索引
PARTS INDEX

(照新碼排序)
(ACCORDING TO NEW PART NO. SORT)

零件名稱 (PARE NAME)		
新碼 NEW PART NO.	舊碼 OLD PART NO.	頁次 PAGE
B350107		A308-1-2
B350108		A308-1-2
B350109		A308-1-2
B350110		A308-1-2
B350111	91517004	A311-3-1
B350112	92517004	A311-3-1
B350113	92517005	A311-3-1
B350114	92517018	A311-3-1
B350115	42517006	A311-3-1
B350116	43017006	A311-3-1
B350134		A308-1A-2
B350135		A308-1A-2
B350136		A308-1A-2
B350137		A308-1A-2
B350138		A308-1A-2
B350139	42517007	A311-3-1
B350140	43017007	A311-3-1
B350142	42517009	A311-3-1
B350143	43017009	A311-3-1
B350144		A308-1A-2
B350145		A308-1A-2
B350146		A308-1A-2
B350147		A308-1A-2
B350148		A308-1A-2
B350149	42517010	A311-3-1
B350150	43017010	A311-3-1
B350151	42517011	A311-3-1
B350151A		A311-3-1
B350152	43017011	A311-3-1
B350152A		A311-3-1
B350153	42517008	A311-3-2
B350170		A308-1B-2
B350171		A308-1B-2
B350172		A308-1B-2
B350173		A308-1B-2
B350175		A308-1B-2
B350176		A308-1B-2
B350177	44017008	A311-3-2
B350178	92517016	A311-3-2
B350179	92517023	A311-3-2

零件名稱 (PARE NAME)		
新碼 NEW PART NO.	舊碼 OLD PART NO.	頁次 PAGE
B350180	92517015	A311-3-2
B350181	91517012	A311-3-2
B350182	92517012	A311-3-2
B350183	92517019	A311-3-2
B350184		A308-1B-2
B350185		A308-1B-2
B350186		A308-1B-2
B350187		A308-1B-2
B350189		A308-1B-2
B350190		A308-1B-2
B350191		A308-1B-2
B350192	92517020	A311-3-2
B350193	92517021	A311-3-2
B350194	92517022	A311-3-2
B350219	42507400	A308-3-2
B350222	44007435	A308-3-2
B350226	42541100	A308-4-2
B350227	42541200	A308-4-2
B350228	42541300	A308-4-2
B350229	42541500	A308-4-2
B350230	42541400	A308-4-2
B350231	42541600	A308-4-2
B350232	42541700	A308-4-2
B350233	43041100	A308-4-2
B350234	43041200	A308-4-2
B350235	43041300	A308-4-2
B350236	43041500	A308-4-2
B350237	43041400	A308-4-2
B350238	43041600	A308-4-2
B350239	43041700	A308-4-2
B350244	42541800	A308-4-2
B350245		A308-4-2
B350246	42541900	A308-4-2
B350250	43041800	A308-4-2
B350251		A308-4-2
B350252	43041900	A308-4-2
B350256	43041000	A308-4-2
B350262	42544100	A308-4A-2
B350263	42544200	A308-4A-2
B350264	42544300	A308-4A-2

https://truckmanualshub.com/

零件號碼索引
PARTS INDEX

(照新碼排序)
(ACCORDING TO NEW PART NO. SORT)

零件名稱 (PARE NAME)		
新碼 NEW PART NO.	舊碼 OLD PART NO.	頁次 PAGE
B350265	42544500	A308-4A-2
B350266	42544400	A308-4A-2
B350267	42544600	A308-4A-2
B350268	42544700	A308-4A-2
B350269	43044100	A308-4A-2
B350270	43044200	A308-4A-2
B350271	43044300	A308-4A-2
B350272	43044500	A308-4A-2
B350273	43044400	A308-4A-2
B350274	43044600	A308-4A-2
B350275	43044700	A308-4A-2
B350280	42544800	A308-4A-2
B350281		A308-4A-2
B350282	42544900	A308-4A-2
B350285		A310-2-2
B350286	43044800	A308-4A-2
B350287		A308-4A-2
B350288	43044900	A308-4A-2
B350289		A308-6A-2
B350290		A308-6A-2
B350291		A310-2-2
B350292	43044000	A308-4A-2
B350294		A308-6-2
B350296		A308-6A-2
B350297		A310-2-2
B350298	42543100	A308-4B-2
B350298A		A308-4B-2
B350299	42543200	A308-4B-2
B350299A		A308-4B-2
B350300	42543300	A308-4B-2
B350300A		A308-4B-2
B350301	42543400	A308-4B-2
B350301A		
B350302	42543700	A308-4B-2
B350302A		A308-4B-2
B350303	42543500	A308-4B-2
B350303A		A308-4B-2
B350304	42543600	A308-4B-2
B350304A		A308-4B-2
B350305	43043100	A308-4B-2

零件名稱 (PARE NAME)		
新碼 NEW PART NO.	舊碼 OLD PART NO.	頁次 PAGE
B350305A		A308-4B-2
B350306	43043200	A308-4B-2
B350306A		A308-4B-2
B350307	43043300	A308-4B-2
B350307A		A308-4B-2
B350308	43043400	A308-4B-2
B350308A		A308-4B-2
B350309	43043700	A308-4B-2
B350309A		A308-4B-2
B350310	43043500	A308-4B-2
B350310A		A308-4B-2
B350311	43043600	A308-4B-2
B350311A		A308-4B-2
B350312	43043800	A308-4B-2
B350312A		A308-4B-2
B350319	42542100	A308-4C-2
B350320	42542200	A308-4C-2
B350321	42542300	A308-4C-2
B350322	42542400	A308-4C-2
B350323	42542500	A308-4C-2
B350324	43042100	A308-4C-2
B350325	43042200	A308-4C-2
B350326	43042300	A308-4C-2
B350327	43042400	A308-4C-2
B350328	43042500	A308-4C-2
B350329		A301-3-2
B350330	42545100	A308-4D-2
B350331	42545200	A308-4D-2
B350332	42545300	A308-4D-2
B350333	42545400	A308-4D-2
B350334	42545500	A308-4D-2
B350335	43045100	A308-4D-2
B350336	43045200	A308-4D-2
B350337	43045300	A308-4D-2
B350338	43045400	A308-4D-2
B350339	43045500	A308-4D-2
B350340		A308-6-2
B350341		A308-6-2
B350342		A308-6-2
B350346		A308-6-2

https://truckmanualshub.com/

零件號碼索引
PARTS INDEX

(照新碼排序)
(ACCORDING TO NEW PART NO. SORT)

零件名稱 (PARE NAME)		
新碼 NEW PART NO.	舊碼 OLD PART NO.	頁次 PAGE
B350347		A308-6-2
B350348		A308-6A-2
B350349		A308-6A-2
B350350		A308-6A-2
B350354		A308-6A-2
B350355		A308-6A-2
B350356		A308-6A-2
B350357		A308-6A-2
B350361		A308-6A-2
B350362		A308-6A-2
B350363	42551000	A310-1-2
B350364	43051000	A310-1-2
B350365	22552020	A310-2-2
B350366	23052020	A310-2-2
B350367		A310-3-2
B350368		A310-3-2
B350369		A310-3-2
B350370		A310-3-2
B350371		A310-3-2
B350372		A310-3-2
B350373		A310-3-2
B350374		A310-3-2
B350375		A310-3-2
B350376		A310-3-2
B350377		A310-3-2
B350378		A310-3-2
B350379		A310-3-2
B350380		A310-3-2
B350381		A310-3-2
B350382		A310-3-2
B350383		A310-3-2
B350384		A310-3-2
B350385		A310-3-2
B350386		A310-3-2
B350387		A310-3-2
B350388		A310-3-2
B350389		A310-3-2
B350390		A310-3-2
B350391		A310-3-2
B350392		A310-3-2

零件名稱 (PARE NAME)		
新碼 NEW PART NO.	舊碼 OLD PART NO.	頁次 PAGE
B350393		A310-3-2
B350394		A310-3-2
B350395		A310-3A-2
B350396		A310-3A-2
B350397		A310-3A-2
B350398		A310-3A-2
B350399		A310-3A-2
B350400		A310-3A-2
B350401		A310-3A-2
B350402		A310-3A-2
B350403		A310-3A-2
B350404		A310-3A-2
B350405		A310-3A-2
B350406		A310-3A-2
B350407		A310-3A-2
B350408		A310-3A-2
B350409		A310-3A-2
B350410		A310-3A-2
B350411		A310-3A-2
B350412		A310-3A-2
B350413		A310-3A-2
B350414		A310-3A-2
B350415		A310-3B-2
B350416		A310-3B-2
B350417		A310-3B-2
B350420		A310-3B-2
B350421		A310-3B-2
B350423		A310-3B-2
B350424		A310-3B-2
B350425		A310-3B-2
B350426		A310-3B-2
B350429		A310-3B-2
B350430		A310-3B-2
B350432		A310-3B-2
B350433		A310-3C-2
B350434		A310-3C-2
B350435		A310-3C-2
B350436		A310-3C-2
B350437		A310-3C-2
B350438		A310-3C-2

https://truckmanualshub.com/

零件號碼索引

PARTS INDEX

(照新碼排序)

(ACCORDING TO NEW PART NO. SORT)

零件名稱 (PARE NAME)		
新碼 NEW PART NO.	舊碼 OLD PART NO.	頁次 PAGE
B350439		A310-3C-2
B350440		A310-3C-2
B350441		A310-3C-2
B350442		A310-3C-2
B350443		A310-3C-2
B350444		A310-3C-2
B350445		A310-3C-2
B350446		A310-3C-2
B350447		A310-3D-2
B350448		A310-3D-2
B350449		A310-3D-2
B350450		A310-3D-2
B350451		A310-3D-2
B350452		A310-3D-2
B350453		A310-3D-2
B350454		A310-3D-2
B350455		A310-3D-2
B350456		A310-3D-2
B350457		A310-3E-2
B350458		A310-3E-2
B350459		A310-3E-2
B350460		A310-3E-2
B350461		A310-3E-2
B350462		A310-3E-2
B350463		A310-3E-2
B350464		A310-3E-2
B350465		A310-3E-2
B350466		A310-3E-2
B350467		A310-3E-2
B350468		A310-3E-2
B350469		A310-3E-2
B350470		A310-3E-2
B350471		A310-3E-2
B350472		A310-3E-2
B350473		A310-3E-2
B350474		A310-3E-2
B350475		A310-3E-2
B350476		A310-3E-2
B350477		A310-3E-2
B350478		A310-3E-2

零件名稱 (PARE NAME)		
新碼 NEW PART NO.	舊碼 OLD PART NO.	頁次 PAGE
B350479		A310-3E-2
B350480		A310-3E-2
B350481		A310-3E-2
B350482		A310-3E-2
B350483		A310-3E-2
B350484		A310-3E-2
B350485		A310-5-2
B350486		A310-5-2
B350487		A310-5-2
B350488		A310-5A-4
B350489		A310-5A-4
B350490		A310-5A-4
B350491	22576100	A310-6-2
B350494	22576200	A310-6A-2
B350495	22576300	A310-7-2
B350496	22576400	A310-7A-2
B350498		A301-6-2
B350499		A305-1-4
B350500		A302-3-2
B350501		A302-3-2
B350502		A302-3-2
B350503		A302-3-2
B350504		A302-3-2
B350505		A302-3-2
B350510		A302-3-6
B350514		A302-3-6
B350511		A302-3-6
B350513		A302-3-2
B350519	22511200	A305-3-2
B350520	22511215	A305-3-2
B350522		A310-2-2
B350532		A310-3B-2
B350535		A310-3B-2
B350538		A310-3B-2
B350541		A310-3B-2
B350542		A310-3B-2
B350544		A310-3B-2
B350545		A310-3D-2
B350546		A310-3D-2
B350547		A310-3D-2

https://truckmanualshub.com/

零件號碼索引

PARTS INDEX

(照新碼排序)

(ACCORDING TO NEW PART NO. SORT)

零件名稱 (PARE NAME)		
新碼 NEW PART NO.	舊碼 OLD PART NO.	頁次 PAGE
B350548		A310-3D-2
B350549		A310-3D-2
B350550		A310-3B-2
B350551		A310-3B-2
B350552		A310-3B-2
B350553		A310-5-2
B350557		A301-5-2
B350558		A301-5-2
B350634		A301-4-2
B350635		A301-4-2
B350636		A301-4-2
B350640		A301-6-2
B350663	43507400	A308-3-2
B350664	43507435	A308-3-2
B350747		A311-3-1
B350748		A311-3-1
B350753		A306-3A-2
B350765	22512494	A303-3-2
B350766		A303-3-2
B350767		A301-1-2
B350768		A301-1-2
B350769		A301-1-2
B350770		A301-6-2
B350771		A301-6-2
B350772		A301-6-2
B350773		A301-6-2
B350792		A302-3-4
B350793		A302-3-4
B350794		A302-3-2
B350795		A302-3-2
B350821		A302-3-6
B350860		A310-3F-2
B350861		A310-3F-2
B350862		A310-3F-2
B350863		A310-3F-2
B350864		A310-3F-2
B350916		A310-3G-2
B350920		A310-3G-2
B350924		A310-3G-2
B350928		A310-3G-2

零件名稱 (PARE NAME)		
新碼 NEW PART NO.	舊碼 OLD PART NO.	頁次 PAGE
B350932		A310-3G-2
B350936		A310-3G-2
B350940		A310-3H-2
B350943		A310-3H-2
B350948		A310-3H-2
B350957		A305-1-4
B350981		A310-3F-2
B350983		A310-3F-2
B350985		A310-3F-2
B350987		A310-3F-2
B350989		A310-3F-2
B350990		A310-3G-2
B350991		A310-3G-2
B350992		A310-3G-2
B350993		A310-3G-2
B350994		A310-3G-2
B350995		A310-3G-2
B350996		A310-3H-2
B350997		A310-3H-2
B350998		A310-3H-2
B351057		A307-1A-2
B351128		A309-2-2
B351113		A310-1-2

https://truckmanualshub.com/

零件號碼索引
PARTS INDEX

(照新碼排序)
(ACCORDING TO NEW PART NO. SORT)

零件名稱 (PARE NAME)		
新碼 NEW PART NO.	舊碼 OLD PART NO.	頁次 PAGE
E0211009		A307-1-2
E0211010		A307-1A-2
E0212003	92513010	A309-1-2
E0212006	92513001	A309-1-3
E0212012		A309-1-3
E0215001	92513025A	A309-1-2
E0215002	92513026	A309-1-2
E0216001	92513010	A309-1-2
E0901019		A301-2-3
E0901025	92512776	A307-1-2
E0901027		A306-3-2
E1302019	92513028	A309-1-3
E1302020	92513029	A309-1-3
E1302021	92513030	A309-1-3
E1602003	92575009	A310-4-4
E1604002		A310-4-4
E1607001	92513015	A309-1-3
E1608002	92513022	A309-1-3
E1609001	92513008	A303-3-7
E1610001	92513012	A309-1-3
E1610002	92513027	A309-1-3
E1610003	92513024	A309-1-3
E1611001	92513013	A309-1-3
E1611002	92513019	A309-1-3
E1612001	92513011	A309-1-3
E1615003	92575004	A310-4-4
E1615004	92575005	A310-4-4
E1616002		A305-1-7
E1616003		A305-1-7
E2302001	92509010	A305-1-3
E2302002	92509031	A305-1-4
E2302003	92513103	A309-1-2
E2302015	92513121	A309-1-2
E2302016	92513103	A309-1-2
E2302017	92509034	A305-1-6
E2302019	92513104	A309-1-2
E2802009	92513020	A309-1-3
E3401005		A305-1-7
E3401006		A305-1-7
E3402003		A301-8-3

零件名稱 (PARE NAME)		
新碼 NEW PART NO.	舊碼 OLD PART NO.	頁次 PAGE
E3402004		A304-1-3
E3601004	92513004	A309-1-2
E3601006	92513032	A309-1-2
E3601010	92513031	A309-1-2
E3601013		A309-1-2
E3601024		A309-1-2
E3606002	34010214A	A304-1B-3
E3801001	92509004	A305-1-3
E3801002	92509074	A305-1-3
E3804007		A310-4-4
E3804002	92513009	A309-1-2
E3804005	92575007	A310-4-4
E3805004	92575008	A310-4-4
E3806001	92520318A	A301-8-3
E3807001	34012912	A309-1-3
E3901001	92513018	A309-1-3

https://truckmanualshub.com/

零件號碼索引
PARTS INDEX

(照新碼排序)
(ACCORDING TO NEW PART NO. SORT)

零件名稱 (PARE NAME)		
新碼 NEW PART NO.	舊碼 OLD PART NO.	頁次 PAGE
M0501010	92509903	A305-1-5
M0501011	92507319	A308-5-2
M0501012	92508002	A308-7-4
M0501013	92508005	A305-1-7
M0501014	92508008	A306-3A-3
M0501015	92508031	A308-7-4
M0501016	92509040	A305-1-5
M0501017	92509041	A305-1-7
M0501018	92509051	A305-1-5
M0501019	92509058	A305-1-5
M0501020	92509901	A305-1-5
M0501021	92509902	A305-1-5
M0501022	92507317	A308-5-2
M0501023	92509906	A305-1-7
M0501024	92507318	A308-5-2
M0501025	92516431	A308-5B-2
M0501026	92516432	A308-5B-2
M0501027	92516433	A308-5B-2
M0501028	92516434	A308-5B-2
M0501033	92509904	A305-1-5
M0501034	92507309	A308-5B-2
M0501035	92507320	A308-5-2
M0501036	92507316	A308-5-2
M0501038	92507308	A308-5B-2
M0501039	92507311	A308-5B-2
M0501040	92507312	A308-5-2
M0501041	92507313	A308-5B-2
M0501042	92507314	A308-5-2
M0501043	92507315	A308-5-2
M0501044	92507307	A308-5B-2
M0501045	92509060	A305-1-6
M0501046	92508032	A308-7-4
M0501137	92508210	A308-7-4
M0501138	92508221	A308-7-4
M0501139	91508002	A308-7-4
M0501140	92507302	A308-5-2
M0501141	92508225	A308-7-3
M0501142	92508106	A308-7-4
M0501143	92508017	A308-7-3
M0501144	92508109	A308-7-4

零件名稱 (PARE NAME)		
新碼 NEW PART NO.	舊碼 OLD PART NO.	頁次 PAGE
M0501145	93008210	A308-7-4
M0501146	93008221	A308-7-4
M0501150	92550311	A310-3E-4
M0501159		A308-5-2
M0501161	32550108	A310-3C-2
M0501164	92550101	A310-3C-2
M0501165	92550102	A310-3-2
M0501167	92550213	A310-3D-2
M0501168		A310-3H-3
M0501171	32550236	A310-3A-5
M0501174	32550241	A310-3D-5
M0501175		A310-3F-2
M0501178	32550119	A310-3-3
M0501179	92550309	A310-3B-3
M0501181	92550310	A310-3B-3
M0501182	92550318	A310-3B-3
M0501183	92550321	A310-3B-4
M0501185		A310-3F-2
M0501186	92550312	A310-3B-4
M0501187	32550120	A310-3-3
M0501188	32550121	A310-3-3
M0501189	32550122	A310-3-3
M0501190	32550124	A310-3-3
M0501201		A310-3F-2
M0501202	92550209	A310-3A-3
M0501203	92550215	A310-3D-2
M0501204	92550216	A310-3D-3
M0501205	92550217	A310-3D-3
M0501206	92516426	A308-5B-2
M0501210	91516426	A308-5B-2
M0501213	92550222	A310-3D-2
M0501222	92550301	A310-3E-3
M0501223		A310-3F-3
M0501234	92550302	A310-3E-4
M0501235	93016426	A308-5B-2
M0501282		A310-3H-3
M0501294		A310-3H-3
M0501310		A310-3F-2
M0502045	93007301	A308-7-2
M0502046	92508010	A308-7-2

https://truckmanualshub.com/

零件號碼索引
PARTS INDEX

(照新碼排序)
(ACCORDING TO NEW PART NO. SORT)

零件名稱 (PARE NAME)		
新碼 NEW PART NO.	舊碼 OLD PART NO.	頁次 PAGE
M0502047	92508205	A308-7-2
M0502048	92508220	A308-7-2
M0502059	92515409	A308-5A-2
M0502061	92516404	A308-5B-3
M0502064	92516401	A308-5B-3
M0502067	92516438	A308-5B-3
M0502068	92516427	A308-5B-3
M0502071	92516436	A308-5B-3
M0502077	92515401	A308-5A-2
M0502079	92515406	A308-5A-2
M0502081	92515416	A308-5A-2
M0502083	92515408	A308-5A-2
M0503048	92550306	A310-3B-3
M0601024		A310-3A-5
M0604005	92560315	A301-8-3
M0604006	92560316	A301-8-3
M0604007	92560409	A308-4B-5
M0604008	M0604-PT3/8"	A301-8-4
M0612003		A310-7-4
M0701008	92560217	A301-7-3
M0702018	91506050	A302-1-4
M0702019	92506044	A302-1-4
M0702026	92512813	A303-4-2
M0702027	42504005	A303-1-2
M0702028	92501018	A301-1-3
M0702045	93006035	A302-1-4
M0702056	92560713	A301-11A-2
M0702057	92560712	A301-11A-2
M0703001	92504011	A303-1-2
M0706001	91506011	A302-1-2
M0706002	92506011	A302-1-2
M0706003	93006011	A302-1-2
M0713001	92560412	A301-9-2
M0801002	94008223	A308-7-2
M0801003	92515307	A308-7-3
M0801004	92508012	A308-7-2
M0801011	92560407	A301-9-2
M0801-AS275	91502004	A301-4-2
M0801-AS277	92502004	A301-4-2
M0801-AS279	93002004	A301-4-2

零件名稱 (PARE NAME)		
新碼 NEW PART NO.	舊碼 OLD PART NO.	頁次 PAGE
M0801-G30		A308-7A-4
M0801-G45	92508214	A308-4C-3
M0801-G50	43015610	A308-4C-3
M0801-G55	92560215	A301-7-3
M0801-G60	43015605	A308-4C-2
M0801-G65	92506038	A302-1-4
M0801-G65B	42505204	A303-2-2
M0801-G70	93006038	A301-10-2
M0801-G70B	44005220	A303-2-2
M0801-G75	42515305	A302-1-2
M0801-G80	92508213	A308-4B-5
M0801-G80B	44007434	A308-3-2
M0801-G85	43015305	A308-4B-5
M0801-G90	92506040	A302-1-2
M0801-G95	93006040	A302-1-2
M0801-G110	92560206	A301-7-2
M0801-P9	92507005	A306-3-3
M0801-P10	92520909	A301-11-4
M0801-P11	94012995	A301-8-2
M0801-P12	92507304	A308-5-2
M0801-P14	92516406	A301-8-4
M0801-P16	92505211	A301-8-3
M0801-P18	92501107	A308-7-2
M0801-P20	42507703	A308-4C-4
M0801-P21	92560715	A301-11-2
M0801-P24	92509052	A301-11-2
M0801-P28	92501216	A301-3-3
M0801-P30	94008226	A304-1-2
M0801-P34	92560522	A301-10-3
M0801-P44	92560602	A301-8-4
M0801-P45	92560214	A301-7-3
M0802001	42515606	A308-4C-2
M0802002	42507422	A308-3-2
M0802003	43015606	A308-4C-2
M0802004	42515609	A308-4C-3
M0802005	42505219	A308-3-2
M0802006	43015609	A308-4C-3
M0802007	43007613	A308-4-4
M0802008	42515320	A308-4B-3
M0802009	43015320	A308-4B-3

https://truckmanualshub.com/

零件號碼索引
PARTS INDEX

(照新碼排序)
(ACCORDING TO NEW PART NO. SORT)

零件名稱 (PARE NAME)		
新碼 NEW PART NO.	舊碼 OLD PART NO.	頁次 PAGE
M0802010	42505205	A303-2-2
M0802011	44005205	A303-2-2
M0802012	45505205	A303-2-2
M0802014	44007433	A308-3-2
M0802022		A308-4B-5
M0802033		A308-4B-5
M0803002	42507411	A308-3-2
M0803003	42515607	A308-4C-3
M0803004	42505203	A308-4C-3
M0803005	42507612	A308-4-4
M0803006	43007612	A308-4-4
M0803007	42505209	A303-2-2
M0803008	42507403	A303-2-2
M0803009	42515319	A308-4B-3
M0803010	43015319	A308-4B-3
M0803011	42507624	A308-4-3
M0803012	43007624	A308-4-3
M0803019		A306-3-3
M0803025		A306-3-3
M0803031		A308-4B-5
M0803032		A308-4B-5
M0807003	42507420	A308-3-3
M0807004	42515602	A308-4C-2
M0807005	42505207	A308-4C-2
M0807007	42507602	A308-4-3
M0807008	43007602	A308-4-3
M0807009	42515317	A308-4B-5
M0807010	43015317	A308-4B-5
M0901-6003ZZ	92516414	A308-5B-4
M0901-6004VV	92512802	A303-4-2
M0901-6206	92560504	A301-10-2
M0901-6208		A301-3-5
M0901-6208NR	92501247	A301-3-5
M0901-6304	42560219	A301-7-2
M0901-6306	92501223	A301-3-3
M0901-6306	92520309	A301-7-2
M0901-6306NR	92501242	A301-3-4
M0904-MUB5205UM	92501201	A301-1-2
M0904-NJ304	91501201	A301-2-3
M0905-KT354220	92501210	A301-10-2

零件名稱 (PARE NAME)		
新碼 NEW PART NO.	舊碼 OLD PART NO.	頁次 PAGE
M0905-TA2230Z	92503005	A301-5-2
M0905-TA2830Z	42504004	A303-1-2
M0907002	42504002	A303-1-2
M0909001	93002006	A301-6-2
M0909-30209	91504012	A303-1-2
M0909-30306	92504020	A303-1-3
M0909-30309D	92560207	A301-2-3
M0909-32012	91506045	A302-1-3
M0909-32015	92506012	A302-1-3
M0909-32016	93006012	A302-1-3
M0909-32207	42504020	A303-1-3
M0909-33013	92502006	A301-6-2
M0909-33013A	91506012	A302-1-3
M0920-DU3530	42515611	A308-4D-3
M0920-DU4025	42507604	A308-4A-3
M0920-DU4030	43015611	A308-4C-3
M0920-DU4525	43007604	A308-4A-3
M0920-MB3020	42507416	A308-3-2
M0920-MB4020	44007416	A308-3-2
M0920-MB5040	42515304	A308-4B-4
M0920-MB6040	43015304	A308-4B-4
M0921001	92503018	A301-5-3
M0923001	42515604	A308-4D-2
M0923002	43015604	A308-4D-2
M0923003	42507610	A308-4-4
M0923004	43015313	A308-3-4
M0923005	43007610	A308-4D-3
M0923006	42515313	A308-4B-3
M1203004		A304-1A-2
M1211013		A302-3-3
M1211015		A302-3-4
M1211017		A302-3-3
M1211019		A302-3-4
M1212001	33506030	A302-3-3
M1213001		A304-1A-2
M1301-3*13	92560737	A301-11-3
M1301-6*19.8	92560408	A301-9-2
M1301-10*28		A301-5-3
M1301-10*30	92503019	A301-5-3
M1301-10*45	92501025	A301-6-3

https://truckmanualshub.com/

零件號碼索引
PARTS INDEX

(照新碼排序)
(ACCORDING TO NEW PART NO. SORT)

零件名稱 (PARE NAME)		
新碼 NEW PART NO.	舊碼 OLD PART NO.	頁次 PAGE
M1301-12*28		A301-5-2
M1301-12*30	92503008	A301-5-2
M1301-12*32		A301-8-2
M1305-5*30	92560612	A301-8-4
M1305-6*30	92501119	A301-2-3
M1305-8*35	92511008	A305-2-3
M1306002	92511062	A305-2-4
M1306003	92512524	A305-4-2
M1306004	92512503	A305-4-2
M1306-8*15	92518115	A306-1-3
M1306-8*26	92518725A	A307-1-5
M1306-8*42	32518118	A306-1-3
M1306-10*25	92512309	A303-3-4
M1307001	92501125	A301-2-3
M1307002	92501220	A301-3-3
M1307003	92504024	A303-1-3
M1307004	92512310	A305-4-3
M1307005	92511063	A305-2-3
M1307006	92512304	A303-3-4
M1307006	92512428	A306-3A-3
M1312-E9	92576209	A310-6A-2
M1312-R18		A301-11A-3
M1312-R22	92560722	A301-11-3
M1312-R25	92560741	A301-11-4
M1312-R28	92560703	A301-11-2
M1312-R30	92560711	A301-11A-2
M1312-R37	92516415	A308-5B-4
M1312-R42	92512801	A303-4-2
M1312-R100	92560213	A301-7-3
M1312-S12	92512506	A305-4-3
M1312-S15	92518715	A306-3A-2
M1312-S16	92516412	A308-5B-3
M1312-S20	94012803	A303-4-2
M1312-S28	92507020	A308-1-3
M1312-S30	92501246	A301-3-4
M1312-S35	92512419	A301-7-2
M1312-S38	92507032	A308-1-3
M1312-S40	92501251	A308-6-3
M1315006	92512458	A303-3-5
M1315007	92509907	A305-1-7

零件名稱 (PARE NAME)		
新碼 NEW PART NO.	舊碼 OLD PART NO.	頁次 PAGE
M1315008	92508004	A308-7-5
M1315011	92508007	A304-2-2
M1315012	92507306	A308-7-5
M1315013	92508003	A304-2-2
M1315014	92510612	A304-4-3
M1315015	92510411	A304-2-2
M1315016	92510610	A304-4-3
M1315018	92509908	A310-7-4
M1315019	92509042	A305-1-5
M1315024	92512485	A303-3-5
M1315025	92576305	A310-7A-2
M1315026	92576308	A310-7-2
M1317011	92511003	A305-2-2
M1321-M6	92512609	A306-2-2
M1321-M6*45	92504214	A303-1-3
M1321-M8	92507424	A308-3-3
M1321-M10	92503015	A308-3-3
M1323028	92560734	A301-11-3
M1323031	92512730	A307-1-3
M1323034	32518104	A306-1-2
M1325-8*25	92507014	A308-1-3
M1325-10*35	93007014	A308-1-3
M1401004	92507512	A301-8-3
M1401006	92503020	A301-5-3
M1401-M10*25	92560502	A301-10-2
M1401-M5*35	94012998	A306-3-4
M1401-M5*45L		A310-11A-2
M1401-M6*10	92512736	A307-1-3
M1401-M6*55		A301-2-2
M1401-M6*60	92512463	A303-3-5
M1401-M8*8	92509008	A305-1-3
M1401-M8*45	92560739	A301-11-4
M1401-M8*50	92560740	A301-11-4
M1401-M8*55	92550227	A310-3B-4
M1402015		A310-4-3
M1402-M8*20L		A301-11A-2
M1402-M8*25		A306-3A-2
M1402-M8*30		A306-3-2
M1402-M8*35		A306-3A-2
M1402-M10*50		A306-3-5

https://truckmanualshub.com/

零件號碼索引
PARTS INDEX

(照新碼排序)
(ACCORDING TO NEW PART NO. SORT)

零件名稱 (PARE NAME)		
新碼 NEW PART NO.	舊碼 OLD PART NO.	頁次 PAGE
M1402-M12*50	94004013	A303-103
M1403-M10*20	92512726	A307-1-3
M1408-M4*20		A305-1-6
M1408-M5*25		A305-1-7
M1408-M6*6	92509036	A305-1-2
M1409-M5*8		A307-1A-2
M1409-M8*30	92511104	A305-3-2
M1410001	92511005	A305-2-3
M1410003	92511009	A306-2-2
M1410004	92507535	A308-6-3
M1410-M5*8		A307-1A-2
M1410-M6*12		A307-1A-2
M1412-M5*12		A305-1-5
M1414-M2*20		A307-1A-2
M1414-M3*15		A301-1-2
M1414-M3*20		A306-3-2
M1414-M3*25		A301-1-2
M1414-M3*30L		A307-1-3
M1414-M4*6	92509049	A305-1-5
M1414-M4*10	92512742	A307-1-2
M1414-M4*45	92513107	A305-1-5
M1414-M5*10	92512740	A307-1-3
M1414-M5*55	92513113	A305-1-4
M1423001	92501253	A301-3-2
M1423002	93002007	A301-6-3
M1423003	92501212	A301-3-2
M1423004	92506042	A302-1-3
M1423005	92506021	A310-1-3
M1423006	92507024	A308-1-4
M1423022	92504213	A303-1-4
M1423027	92512425	A303-3-5
M1423028	92512464	A303-3-5
M1423034	92515021	A308-1A-3
M1423-5/8"*8	32552017	A310-6-2
M1423-M6*10	92507015	A304-2-3
M1423-M6*16	92512513	A305-4-3
M1423-M6*20	92509043	A305-1-4
M1423-M6*30	92512650	A303-3-6
M1423-M12*25	42504029	A302-3-2
M1423-M12*50	92507029	A308-1-2

零件名稱 (PARE NAME)		
新碼 NEW PART NO.	舊碼 OLD PART NO.	頁次 PAGE
M1423-M30*120	42511001	A305-2-2
M1424001	92502007	A301-8-2
M1424002	92501219	A305-3-2
M1424003	92520301	A302-3-2
M1424004	92501102	A303-1-4
M1424005	92502108	A301-8-3
M1424006	92508024	A301-8-3
M1424007	92550105	A301-8-2
M1424009	92512470	A303-3-5
M1424010	92512810	A303-4-2
M1424013	92501020	A301-5-3
M1424015	M1424-M10*55*P1.25	A301-8-2
M1424-M8*12		A301-2-3
M1424-M8*16	92501014	A302-1-3
M1424-M8*20	92504208	A301-3-4
M1424-M8*25	92501104	A301-1-2
M1424-M8*30	92503010	A301-5-2
M1424-M8*35	92501009	A301-9-2
M1424-M8*40	92512467	A303-3-4
M1424-M8*45	92560416	A304-2-2
M1424-M8*55	92510515	A304-3-2
M1424-M8*70	92512521	A305-4-2
M14501011	92501032	A307-2-5
M1501008	92552018	A310-6-2
M1501-9/16"-18UNF	M1501010	A310-3D-5
M1501-M2		A307-1A-3
M1501-M3		A307-1-5
M1501-M12	94004014	A303-1-3
M1502001	92504016	A310-3B-3
M1502002	92512623	A306-2-3
M1501-M8	92501115	A301-2-2
M1502003	92507428	A308-3-3
M1502-M8	92509013	A310-5-2
M1513004	92504026	A302-1-4
M1513005	92506022	A302-1-4
M1513006	92506005	A302-1-2
M1513007	92507019	A308-1A-4
M1513008	92518723	A307-1-5
M1513-M6	92515415	A303-3-5

https://truckmanualshub.com/

零件號碼索引
PARTS INDEX

(照新碼排序)
(ACCORDING TO NEW PART NO. SORT)

零件名稱 (PARE NAME)		
新碼 NEW PART NO.	舊碼 OLD PART NO.	頁次 PAGE
M1602001	92512753	A307-1-2
M1602002	94020611	A305-1-3
M1602003	92512516	A305-4-3
M1602004	92510428	A307-1-3
M1602006	92507009	A304-4-4
M1602007	92511056	A305-2-4
M1602008	92508018	A308-7-3
M1602009	92511016	A305-2-3
M1602010	92507027	A305-3-2
M1602012	92511111	A305-3-2
M1602013	92520420	A303-3-4
M1602014	92512455	A303-3-4
M1602016	34012970	A306-3-3
M1602021	92512812	A303-4-2
M1602024	92515007	A308-1A-3
M1602027	32511002	A305-2-2
M1602028	92510121	A302-1-3
M1602-M16	92516418	A308-5B-4
M1605-M2		A307-1A-2
M1605-M4	92509019	A305-1-6
M1605-M5	92512725	A305-1-7
M1605-M6	92503218	A301-8-2
M1605-M8	92501019	A301-5-2
M1605-M10	92501218	A307-1-3
M1605-M12	92501024	A301-3-2
M1605-M14	92506020	A302-1-3
M1605-M16	92504212	A302-3-3
M1605-M18	92506004	A302-1-2
M1606-M3		A301-3-2
M1606-M5		A305-1-6
M1609-M6	92520102	A307-1-4

零件名稱 (PARE NAME)		
新碼 NEW PART NO.	舊碼 OLD PART NO.	頁次 PAGE

https://truckmanualshub.com/

零件號碼索引
PARTS INDEX

(照舊碼排序)

(ACCORDING TO OLD PARTYNO,SORT)

零件名稱 (PARE NAME)		
舊碼 OLD PART NO.	新碼 NEW PART NO.	頁次 PAGE
21502020	B350004	A301-4-2
21504220	B350045	A303-1-3
21504300	32368	A303-1-2
21507500	33356	A310-1-3
21512510	32772	A305-4-3
21512515	32766	A305-4-2
21515500	33352	A310-1-3
21515800	33815	A308-6A-2
21531100	33024	A308-2-2
21531200	33031	A308-2-2
21531300	33038	A308-2-3
21531400	33048	A308-2-3
21531500	33055	A308-2-3
21531600	33058	A308-2-3
21531700	33045	A308-2-3
21532100	32980	A308-2-2
21532200	32988	A308-2-2
21532300	32996	A308-2-2
21532400	33008	A308-2-2
21532500	33016	A308-2-2
21532600	33020	A308-2-2
21532700	33004	A308-2-2
21533100	33097	A308-2-4
21533200	33104	A308-2-4
21533300	33111	A308-2-4
21533400	33118	A308-2-4
21533500	33125	A308-2-4
21534100	33061	A308-2-4
21534200	33069	A308-2-4
21534300	33077	A308-2-4
21534400	33085	A308-2-4
21534500	33093	A308-2-4
21535100	33205	A308-2-6
21535200	33222	A308-2-6
21535300	33229	A308-2-7
21535400	33232	A308-2-7
21535500	33215	A308-2-6
21535600	33212	A308-2-6
21535900	33198	A308-2-6
21536100	33163	A308-2-6

零件名稱 (PARE NAME)		
舊碼 OLD PART NO.	新碼 NEW PART NO.	頁次 PAGE
21536200	33180	A308-2-6
21536300	33187	A308-2-6
21536400	33190	A308-2-6
21536500	33173	A308-2-6
21536600	33170	A308-2-6
21536900	33156	A308-2-5
21537100	33128	A308-2-5
21537200	33140	A308-2-5
21537300	33147	A308-2-5
21537400	33136	A308-2-5
21560110	B350012	A301-6-2
21560200	B350017	A301-7-2
21560530	B350021	A301-10-2
22502020	B350005	A301-4-2
22503006	32116	A301-5-2
22504220	B350046	A303-1-3
22504300	32369	A303-1-2
22507003	32925	A308-1-3
22507500	33357A	A310-1-3
22507900	33799	A308-6-2
22509030	32671	A305-1-6
22509032	32672	A305-1-6
22509035	32673	A305-1-6
22509065	32663	A305-1-6
22510141	B350056	A304-1-2
22510635	B350060	A304-4-3
22511116	B350069	A305-3-2
22511050	B350066	A305-2-2
22511200	B350519	A305-3-2
22511215	B350520	A305-3-2
22512370	B350075	A307-2-4
22512380	B350076	A307-2-4
22512390	B350077	A307-2-4
22512424	32459	A303-3-3
22512460	32480	A303-3-5
22512474	32465	A303-3-4
22512494	B350765	A303-3-2
22512510	32773	A305-4-3
22512515	32767	A305-4-2
22515500	33353	A310-1-3

https://truckmanualshub.com/

零件號碼索引
PARTS INDEX

(照舊碼排序)

(ACCORDING TO OLD PARTYNO,SORT)

零件名稱 (PARE NAME)		
舊碼 OLD PART NO.	新碼 NEW PART NO.	頁次 PAGE
22515800	33816	A308-6A-2
22515900	33821	A308-6A-2
22518100	B350072	A306-1-2
22531100	33025	A308-2-2
22531200	33032	A308-2-2
22531300	33039	A308-2-3
22531400	33049	A308-2-3
22531500	33056	A308-2-3
22531600	33059	A308-2-3
22531700	33046	A308-2-3
22532100	32981	A308-2-2
22532200	32989	A308-2-2
22532300	32997	A308-2-2
22532400	33009	A308-2-2
22532500	33017	A308-2-2
22532600	33021	A308-2-2
22532700	33005	A308-2-2
22533100	33098	A308-2-4
22533200	33105	A308-2-4
22533300	33112	A308-2-4
22533400	33119	A308-2-4
22533500	33126	A308-2-4
22534100	33062	A308-2-4
22534200	33070	A308-2-4
22534300	33078	A308-2-4
22534400	33086	A308-2-4
22534500	33094	A308-2-4
22535100	33206	A308-2-6
22535200	33223	A308-2-6
22535300	33230	A308-2-7
22535400	33233	A308-2-7
22535500	33216	A308-2-6
22535600	33213	A308-2-6
22535900	33199	A308-2-6
22536100	33164	A308-2-6
22536200	33181	A308-2-6
22536300	33188	A308-2-6
22536400	33191	A308-2-6
22536500	33174	A308-2-6
22536600	33171	A308-2-6

零件名稱 (PARE NAME)		
舊碼 OLD PART NO.	新碼 NEW PART NO.	頁次 PAGE
22536900	33157	A308-2-5
22537100	33129	A308-2-5
22537200	33141	A308-2-5
22537300	33148	A308-2-5
22537400	33137	A308-2-5
22552020	B350365	A310-2-2
22552100A	33381	A310-2-2
22552200	33383	A310-2-2
22552300	33385	A310-2-2
22552600	33389	A310-2-2
22560110	B350013	A301-6-2
22560200	B350018	A301-7-2
22560417	32162	A301-9-2
22560420	32163	A301-9-3
22560421	32164	A301-9-3
22560422	B350019	A301-9-2
22560530	B350022	A301-10-2
22560700	B350023	A301-11-2
22570800	32827	A310-4-3
22576100	B350491	A310-6-2
22576200	B350494	A310-6A-2
22576300	B350495	A310-7-2
22576310	33517	A310-7-2
22576400	B350496	A310-7A-2
22576410	33534	A310-7A-2
22576500	33508	A310-7-2
22576600	33509	A310-7-2
23002020	B350006	A301-4-2
23004220	B350047	A303-1-3
23007500	33358	A310-1-3
23007900	33800	A308-6-2
23015800	33817	A308-6A-2
23015900	33822	A308-6A-2
23031100	33026	A308-2-2
23031200	33033	A308-2-2
23031300	33040	A308-2-3
23031400	33050	A308-2-3
23031500	33057	A308-2-3
23031600	33060	A308-2-3
23031700	33047	A308-2-3

https://truckmanualshub.com/

零件號碼索引
PARTS INDEX

(照舊碼排序)

(ACCORDING TO OLD PARTYNO,SORT)

零件名稱 (PARE NAME)		
舊碼 OLD PART NO.	新碼 NEW PART NO.	頁次 PAGE
23032100	32982	A308-2-2
23032200	32990	A308-2-2
23032300	32998	A308-2-2
23032400	33010	A308-2-2
23032500	33018	A308-2-2
23032600	33022	A308-2-2
23032700	33006	A308-2-2
23033100	33099	A308-2-4
23033200	33106	A308-2-4
23033300	33113	A308-2-4
23033400	33120	A308-2-4
23033500	33127	A308-2-4
23034100	33063	A308-2-4
23034200	33071	A308-2-4
23034300	33079	A308-2-4
23034400	33087	A308-2-4
23034500	33095	A308-2-4
23035100	33207	A308-2-6
23035200	33224	A308-2-6
23035300	33231	A308-2-7
23035400	33234	A308-2-7
23035500	33217	A308-2-6
23035600	33214	A308-2-6
23035700	33239	A308-2-7
23035900	33200	A308-2-6
23036100	33165	A308-2-6
23036200	33182	A308-2-6
23036300	33189	A308-2-6
23036400	33192	A308-2-6
23036500	33175	A308-2-6
23036600	33172	A308-2-6
23036800	33197	A308-2-6
23036900	33158	A308-2-5
23037100	33130	A308-2-5
23037200	33142	A308-2-5
23037300	33149	A308-2-5
23037400	33138	A308-2-5
23037500	33154	A308-2-5
23052020	B350366	A310-2-2
23052100	33382	A310-2-2

零件名稱 (PARE NAME)		
舊碼 OLD PART NO.	新碼 NEW PART NO.	頁次 PAGE
23052200	33384	A310-2-2
23052300	33386	A310-2-2
23052600	33390	A310-2-2
23515500	33811	A308-6A-2
23532100	32983	A308-2-2
23532200	32991	A308-2-2
23532300	32999	A308-2-2
23532400	33011	A308-2-2
23532500	33019	A308-2-2
23532600	33023	A308-2-2
23532700	33007	A308-2-2
23534100	33064	A308-2-4
23534200	33072	A308-2-4
23534300	33080	A308-2-4
23534500	33096	A308-2-4
23537100	33131	A308-2-5
23537200	33143	A308-2-5
23537300	33150	A308-2-5
23537400	33139	A308-2-5
23537500	33155	A308-2-5
31501001	32001	A301-1-2
31501008	32018	A301-1-3
31501204	32041	A301-3-2
31501206	32045	A301-3-2
31501235A	32069	A301-3-4
31501240A	32076	A301-3-4
31501249B	31975	A301-3-5
31502001	32086	A301-4-2
31502005	32090	A301-4-2
31502012	32093	A301-4-3
31502018	31976	A301-4-3
31504018	32394	A303-1-3
31504019	32388	A303-1-2
31504021	32343	A302-3-2
31504025	32340	A302-3-2
31506003	32221	A302-1-2
31506010C	32227	A302-1-2
31506023	32246	A302-1-4
31506030	32342	A302-3-2
31506037	32257	A302-1-4

https://truckmanualshub.com/

零件號碼索引
PARTS INDEX

(照舊碼排序)

(ACCORDING TO OLD PARTYNO,SORT)

零件名稱 (PARE NAME)		
舊碼 OLD PART NO.	新碼 NEW PART NO.	頁次 PAGE
31506043	32214	A302-1-2
31506044	32232	A302-1-3
31506046	32236	A302-1-3
31506047	32240	A302-1-3
31506048	32248	A302-1-4
31507520	34853	A310-4-3
31507522	34852	A310-4-3
31510123A	32503	A304-1-3
31510139B	31966	A304-1-2
31511049	32720	A305-2-2
31511066	32735	A305-2-4
31511067	33482	A310-5-3
31514007	33292	A309-3-6
31560101B	32124	A301-6-2
31560222	32134	A301-7-3
31560225A	34909	A301-7-3
31560301	32135	A301-8-2
31575012	33465	A310-4-3
31646	B350024	A301-11A-2
31703	B350078	A306-3-5
31811067	33483	A310-5-3
31814	B350001	A307-1A-2
31814007	33293	A309-3-6
31814037	33298	A309-3-6
32011067	33484	A310-5-3
32014007	33294	A309-3-6
32014036	33301	A309-3-6
32501001	32002	A301-1-2
32501005	32016	A301-1-2
32501007	32017	A301-1-3
32501008	32019	A301-1-3
32501011	32006	A301-1-2
32501012	32004	A301-1-2
32501013	32009	A301-1-2
32501015	32014	A301-1-2
32501017	32013	A301-1-2
32501103	32023	A301-2-2
32501105A	32026	A301-2-2
32501108	32025	A301-2-2
32501111B	32030	A301-2-3

零件名稱 (PARE NAME)		
舊碼 OLD PART NO.	新碼 NEW PART NO.	頁次 PAGE
32501113A	32028	A301-2-2
32501114	32029	A301-2-3
32501117A	32032	A301-2-3
32501118	32033	A301-2-3
32501120	32036	A301-2-3
32501121A	32035	A301-2-3
32501126	32022	A301-2-2
32501127	32037	A301-2-3
32501129	32024	A301-2-2
32501130A	32031	A301-2-3
32501133	32034	A301-2-3
32501136	32020	A301-2-2
32501137	32021	A301-2-2
32501140A	32040	A301-2-3
32501204A	32042	A301-3-2
32501205	32043	A301-3-2
32501206	32046	A301-3-2
32501207	32047	A301-3-2
32501208	32048	A301-3-2
32501209A	32049	A301-3-2
32501211	32050	A301-3-2
32501213A	32051	A301-3-2
32501214	32052	A301-3-2
32501215C	32054	A301-3-3
32501217	32055	A301-3-3
32501221	32056	A301-3-3
32501222	32058	A301-3-3
32501224	32078	A301-3-4
32501225	32059	A301-3-3
32501226B	32060	A301-3-3
32501227A	32061	A301-3-3
32501228	32062	A301-3-3
32501229	32063	A301-3-3
32501230	32065	A301-3-3
32501231	32064	A301-3-3
32501232A	32067	A301-3-4
32501233	32066	A301-3-4
32501234	32068	A301-3-4
32501235B	32070	A301-3-4
32501236A	32071	A301-3-4

https://truckmanualshub.com/

零件號碼索引

PARTS INDEX

(照舊碼排序)

(ACCORDING TO OLD PARTYNO,SORT)

零件名稱 (PARE NAME)		
舊碼 OLD PART NO.	新碼 NEW PART NO.	頁次 PAGE
32501237	32072	A301-3-4
32501238	32073	A301-3-4
32501239	32075	A301-3-4
32501240A	32077	A301-3-4
32501241	32079	A301-3-4
32501243	32080	A301-3-4
32501248	32081	A301-3-5
32501249B	32083	A301-3-5
32501252	32074	A301-3-4
32501255	32044	A301-3-2
32501258	32084	A301-3-5
32501260	32085	A301-3-5
32502001	32087	A301-4-2
32502003	32089	A301-4-2
32502005	32091	A301-4-2
32502009	32096	A301-4-3
32502012	32094	A301-4-3
32502014	32102	A301-4-3
32502015	32104	A301-4-3
32502016	32100	A301-4-3
32502017	32098	A301-4-3
32502018	31977	A301-4-3
32503002	32114	A301-5-2
32503012A	32118	A301-5-2
32503014	32119	A301-5-3
32503016	32120	A301-5-3
32503017	32122	A301-5-3
32503022	32109	A301-5-2
32503023	32110	A301-5-2
32503025	32115	A301-5-2
32503026	32121	A301-5-3
32503027	32123	A301-5-3
32503031	B350010	A301-5-2
32503032	B350011	A301-5-2
32504001	32407	A303-1-3
32504015	32415	A303-1-4
32504018	32395	A303-1-3
32504019	32389	A303-1-2
32504021	32344	A302-3-2
32504022	32396	A303-1-3

零件名稱 (PARE NAME)		
舊碼 OLD PART NO.	新碼 NEW PART NO.	頁次 PAGE
32504023	32397	A303-1-3
32504025	32341	A302-3-2
32504027	32398	A303-1-3
32504055	32416	A303-1-4
32504211A	32414	A303-1-4
32506001	32215	A302-1-2
32506002	32220	A302-1-2
32506008	32226	A302-1-2
32506010A	32228	A302-1-2
32506013A	34783	A302-1-3
32506015	32237	A302-1-3
32506016	32241	A302-1-3
32506023	32247	A302-1-4
32506024A	32249	A302-1-4
32506025	32262	A302-1-4
32506026	32263	A302-1-4
32506030	32351	A302-3-3
32506044	32233	A302-1-3
32506049	32254	A302-1-4
32506051	32222	A302-1-2
32506052	32258	A302-1-4
32506057	32364	A302-3-4
32506207	32285	A302-2-2
32507001	32937	A308-1-5
32507002	32902	A308-1-2
32507004	32892	A308-1-2
32507006	32895	A308-1-2
32507012	32927	A308-1-4
32507013	32928	A308-1-4
32507017	32923	A308-1-3
32507018	32930	A308-1-4
32507021	32931	A308-1-4
32507022	32933	A308-1-4
32507031	32920	A308-1-3
32507033	32904	A308-1-3
32507042	32893	A308-1-2
32507043	32894	A308-1-2
32507044	32896	A308-1-2
32507045	32897	A308-1-2
32507046	32903	A308-1-2

https://truckmanualshub.com/

零件號碼索引

PARTS INDEX

(照舊碼排序)

(ACCORDING TO OLD PARTYNO,SORT)

零件名稱 (PARE NAME)		
舊碼 OLD PART NO.	新碼 NEW PART NO.	頁次 PAGE
32507215	34865	A308-1-5
32507302A	34720	A310-3B-3
32507421	33575	A308-3-3
32507516	33807	A308-6-3
32507520	33452	A310-4-3
32507521	33454	A310-4-3
32507522	33456	A310-4-3
32507523	33458	A310-4-3
32507524	33460	A310-4-3
32507525	33462	A310-4-3
32507536	33809	A308-6-3
32507537	33808	A308-6-3
32508030A	34895	A308-7-5
32508031A	34896	A308-7-5
32508032A	34897	A308-7-5
32508212	33840	A308-7-5
32508215	33841	A308-7-5
32509003	32630	A305-1-2
32509005	32632	A305-1-3
32509006	32633	A305-1-3
32509011	32639	A305-1-3
32509016	32636	A305-1-3
32509020	32679	A305-1-6
32509022	32681	A305-1-6
32509033	32650	A305-1-4
32509038	32643	A305-1-4
32509053	32657	A305-1-5
32509054	32684	A305-1-7
32509055	32637	A305-1-3
32509067	32677	A305-1-6
32509070	32651	A305-1-4
32509073	32635	A305-1-3
32509091	32615	A305-1-2
32509093	32631	A305-1-2
32509096A	32669	A305-1-6
32509097	32667	A305-1-6
32509098	32668	A305-1-6
32509099	32641	A305-1-3
32510107	32496	A304-1-2
32510123	32504	A304-1-3

零件名稱 (PARE NAME)		
舊碼 OLD PART NO.	新碼 NEW PART NO.	頁次 PAGE
32510150	34819	A304-1A-3
32510216	34837	A304-1A-3
32510308	32531	A304-1B-3
32510309	32530	A304-1B-3
32510503	32570	A304-3-2
32510504	32575	A304-3-2
32510517	32566	A304-3-2
32510518	32573	A304-3-2
32510519	32571	A304-3-2
32510520	32567	A304-3-2
32510521	32572	A304-3-2
32510522	32574	A304-3-2
32510632	32592	A304-4-3
32510644	32589	A304-4-3
32510645	32598	A304-4-3
32511002	M1602027	A305-2-2
32511006	32723	A305-2-3
32511007	32724	A305-2-3
32511017	32727	A305-2-3
32511044	32732	A305-2-3
32511048	32734	A305-2-4
32511049	32721	A305-2-2
32511051	32741	A305-2-4
32511052	32742	A305-2-4
32511053	32743	A305-2-4
32511059	32745	A305-2-4
32511061	32746	A305-2-4
32511064	32744	A305-2-4
32511067	33485	A310-5-3
32512301	32876	A307-2-4
32512302	32877	A307-2-4
32512303	32879	A307-2-4
32512306	32891	A307-2-6
32512307	32775	A305-4-3
32512308	32883	A307-2-4
32512311	32884	A307-2-5
32512313	32885	A307-2-5
32512320	32878	A307-2-4
32512323	32880	A307-2-4
32512324	32881	A307-2-4

https://truckmanualshub.com/

零件號碼索引

PARTS INDEX

(照舊碼排序)

(ACCORDING TO OLD PARTYNO,SORT)

零件名稱 (PARE NAME)		
舊碼 OLD PART NO.	新碼 NEW PART NO.	頁次 PAGE
32512325	32882	A307-2-4
32512406	32445	A303-3-2
32512409	32447	A303-3-2
32512411	32450	A303-3-3
32512412	32451	A303-3-3
32512413	32452	A303-3-3
32512414	32453	A303-3-3
32512415	32454	A303-3-3
32512423	32460	A303-3-3
32512430A	32472	A303-3-5
32512431	32815	A306-2-4
32512432	32473	A303-3-5
32512433	32471	A303-3-4
32512437	32456	A303-3-3
32512440	32461	A303-3-3
32512441	32466	A303-3-4
32512444	32462	A303-3-3
32512451	32458	A303-3-3
32512478	32467	A303-3-4
32512487	32440	A303-3-2
32512501	32752	A305-4-2
32512502	32753	A305-4-2
32512505	32754	A305-4-2
32512509	32774	A305-4-3
32512517A	32770	A305-4-3
32512524	34860	A305-4-2
32512526	32769	A305-4-3
32512527	32771	A305-4-3
32512528	32777	A305-4-3
32512601	32796	A306-2-2
32512604	32797	A306-2-2
32512605	32799	A306-2-2
32512607	34701	A303-3-6
32512607A	32810	A306-2-3
32512610	32798	A306-2-2
32512611	32800	A306-2-2
32512612	32801	A306-2-2
32512615	32804	A306-2-3
32512619	31974	A306-2-2
32512621	32807	A306-2-3

零件名稱 (PARE NAME)		
舊碼 OLD PART NO.	新碼 NEW PART NO.	頁次 PAGE
32512622	32803	A306-2-2
32512630	32802	A306-2-2
32512701A	34969	A307-1-2
32512727A	34903	A307-1-3
32512737A	34904	A307-1-3
92512738B	34905	A307-1-3
32512739B	34906	A307-1-3
32512752	32855	A307-1-5
31512758	34900	A307-1-4
32512769	32835	A307-1-3
32512773	34930	A307-1-2
32512807	32486	A303-4-2
32512808C	32485	A303-4-2
32512814	32490	A303-4-2
32514001	33255	A309-3-5
32514003A	33291	A309-3-6
32514005	33265	A309-3-5
32514007	33295	A309-3-6
32514013	33258	A309-3-5
32514014	33259	A309-3-5
32514015	33331	A309-3-7
32514017	33264	A309-3-5
32514018	33304	A309-3-6
32514019	33261	A309-3-5
32514020	33309	A309-3-6
32514021	33310	A309-3-6
32514022	33311	A309-3-6
32514023	33312	A309-3-6
32514025	33307	A309-3-6
32514026	33308	A309-3-6
32514031	33313	A309-3-6
32514034	33266	A309-3-5
32514035	33267	A309-3-5
32514036	33302	A309-3-6
32514037	33299	A309-3-6
32514038	33314	A309-3-6
32514039	33323	A309-3-7
32514040	33317	A309-3-7
32514041	33320	A309-3-7
32514042	33321	A309-3-7

https://truckmanualshub.com/

零件號碼索引

PARTS INDEX

(照舊碼排序)

(ACCORDING TO OLD PARTYNO,SORT)

零件名稱 (PARE NAME)		
舊碼 OLD PART NO.	新碼 NEW PART NO.	頁次 PAGE
32514043	33333	A309-3-7
32514044	33322	A309-3-7
32514045	33332	A309-3-7
32514046	33335	A309-3-8
32514047	33325	A309-3-7
32514048	33326	A309-3-7
32514050	33324	A309-3-7
32514051	33327	A309-3-7
32514052	33328	A309-3-7
32514053	33339	A309-3-8
32514055	33338	A309-3-8
32514056	33318	A309-3-7
32514057	33319	A309-3-7
32514058	33329	A309-3-7
32514059	33330	A309-3-7
32514060	33336	A309-3-8
32514061	33257	A309-3-5
32514062	33268	A309-3-5
32514064	33289	A309-3-5
32514065	33290	A309-3-5
32514066	33316	A309-3-7
32515004	32954	A308-1A-3
32515016	32938	A308-1A-2
32515402	33849	A308-5A-2
32515411	33781	A308-5A-2
32515412	33782	A308-5A-2
32515511	33355	A310-1-3
32516331	34766	A310-3F-3
32516408	33788	A308-5B-3
32516417	33791	A308-5B-4
32516428	33786	A308-5B-3
32518101	32781	A306-1-2
32518102	32782	A306-1-2
32518103A	32783	A306-1-2
32518104	M1323034	A306-1-2
32518105	32784	A306-1-2
32518106	32785	A306-1-2
32518107	32786	A306-1-2
32518109	32787	A306-1-2
32518110	32788	A306-1-2

零件名稱 (PARE NAME)		
舊碼 OLD PART NO.	新碼 NEW PART NO.	頁次 PAGE
32518111	32789	A306-1-2
32518118	M1306-8*42	A306-1-3
32518120	32792	A306-1-3
32518121	32793	A306-1-3
32518122	32794	A306-1-3
32518123A	32795	A306-1-3
32518125	32779	A306-1-2
32518126	32780	A306-1-2
32518704	32853	A307-1-5
32518706	32816	A306-3-2
32518711	32850	A307-1-4
32518712	32851	A307-1-5
32518713	32852	A307-1-5
32518716	32824	A306-3-4
32518717D	32858	A307-1-5
32518718D	32856	A307-1-5
32518721	32860	A307-1-5
32520924	32683	A305-1-7
32550104	33449	A310-3D-2
32550108	M0501161	A310-3C-2
32550110	33417	A310-3-3
32550111	33418	A310-3-3
32550112A	33419	A310-3-3
32550113	33420	A310-3-3
32550115	33421	A310-3-3
32550116	33422	A310-3-3
32550118	33423	A310-3-4
32550119	M0501178	A310-3-3
32550120	M0501187	A310-3-3
32550121	M0501188	A310-3-3
32550122	M0501189	A310-3-3
32550124	M0501190	A310-3-3
32550206D	33434	A310-3A-3
32550210	33446	A310-3E-4
32550212	32413	A310-3A-2
32550225	34674	A310-3H-3
32550226	33433	A310-3A-3
32550228	33436	A310-3A-4
32550229	33438	A310-3A-4
32550230	33440	A310-3A-4

https://truckmanualshub.com/

零件號碼索引

PARTS INDEX

(照舊碼排序)

(ACCORDING TO OLD PARTYNO,SORT)

零件名稱 (PARE NAME)		
舊碼 OLD PART NO.	新碼 NEW PART NO.	頁次 PAGE
32550231	33442	A310-3A-4
32550232	33437	A310-3A-4
32550233	33439	A310-3A-4
32550234	33441	A310-3A-4
32550235	33443	A310-3A-4
32550236	M0501171	A310-3A-5
32550241	M0501174	A310-3D-5
32550244	33444	A310-3A-4
32550245	33445	A310-3A-4
32550304	33447	A310-3B-4
32550316	33450	A310-3-3
32550701	31991	A310-3F-3
32550703	32534	A310-3A-3
32550704	31993	A310-3F-3
32550705	31994	A310-3F-3
32550706	31995	A310-3F-3
32551012A	33391	A310-2-2
32551013A	33359	A310-1-3
32552001	33392	A310-2-2
32552004	33399	A310-2-3
32552008	33400	A310-2-3
32552009	33394	A310-2-2
32552010	33401	A310-2-3
32552012	33395	A310-2-3
32552013	33397	A310-2-3
32552014	33406	A310-2-3
32552015	33402	A310-2-3
32552016	33404	A310-2-3
32552017	M1423-5/8"*8	A310-6-2
32560101C	32125	A301-6-2
32560102B	31990	A301-6-2
32560103B	32127	A301-6-4
32560202D	32129	A301-7-2
32560204	32130	A301-7-2
32560209B	32131	A301-7-2
32560216A	32132	A301-7-3
32560218	32133	A301-7-3
32560301C	32136	A301-8-2
32560305A	32137	A301-8-2
32560306A	32138	A301-8-2

零件名稱 (PARE NAME)		
舊碼 OLD PART NO.	新碼 NEW PART NO.	頁次 PAGE
32560311A	32139	A301-8-2
32560314	32140	A301-8-2
32560317	32142	A301-8-3
32560318	32143	A301-8-3
32560322	32144	A301-8-3
32560323	32145	A301-8-3
32560324	32146	A301-8-3
32560325	32147	A301-8-3
32560401C	32155	A301-9-2
32560402	32156	A301-9-2
32560403B	32157	A301-9-2
32560404A	32158	A301-9-2
32560405	32159	A301-9-2
32560406A	32160	A301-9-2
32560413	32161	A301-9-2
32560503A	32165	A301-10-2
32560505	32166	A301-10-2
32560507	32167	A301-10-2
32560508	32168	A301-10-2
32560509	32169	A301-10-2
32560510	32170	A301-10-2
32560512C	32172	A301-10-2
32560513B	32173	A301-10-2
32560514D	32174	A301-10-2
32560515	32175	A301-10-2
32560516	32176	A301-10-3
32560517	32177	A301-10-3
32560518J	32178	A301-10-3
32560519	32179	A301-10-3
32560521	32183	A301-10-3
32560523	32182	A301-10-3
32560526	32184	A301-10-3
32560601	32150	A301-8-4
32560605	32152	A301-8-4
32560607	32153	A301-8-4
32560610	34771	A301-8-4
32560704	32187	A301-11-2
32560707	32189	A301-11-2
32560708	32190	A301-11-2
32560710	32192	A301-11-2

https://truckmanualshub.com/

零件號碼索引
PARTS INDEX

(照舊碼排序)

(ACCORDING TO OLD PARTYNO,SORT)

零件名稱 (PARE NAME)		
舊碼 OLD PART NO.	新碼 NEW PART NO.	頁次 PAGE
32560714	32193	A301-11-2
32560716	32194	A301-11-2
32560717	32195	A301-11-2
32560721	32199	A301-11-3
32560723	32200	A301-11-3
32560727	32203	A301-11-3
32560728	32204	A301-11-3
32560729	32205	A301-11-3
32560731	32207	A301-11-3
32560732	32208	A301-11-3
32560736	32210	A301-11-3
32560742	32211	A301-11-4
32560743D	32212	A301-11-4
32560745	32213	A301-11-4
32572901	33472	A310-5-2
32572902	32587	A310-5-2
32572903	32873	A310-5-2
32572904	33488	A310-5-4
32572905	33473	A310-5-3
32572906	33474	A310-5-3
32575006	33469	A310-4-4
32575011	33464	A310-4-3
32575012	33466	A310-4-3
32576102	33492	A310-6-2
32576105	33494	A310-6-2
32576106	33495	A310-6-2
32576107	33497	A310-6-2
32576108	33498	A310-6-3
32576109	31981	A310-6-3
32576110	33499	A310-6-3
32576201	33500	A310-6A-2
32576202	33501	A310-6A-2
32576205	33502	A310-6A-2
32576206	33503	A310-6A-2
32576207	33504	A310-6A-2
32576210	33506	A310-6A-2
32576215	33507	A310-6A-2
32576301	33510	A310-7-2
32576302	33511	A310-7-2
32576303	33512	A310-7-2

零件名稱 (PARE NAME)		
舊碼 OLD PART NO.	新碼 NEW PART NO.	頁次 PAGE
32576304	33513	A310-7-2
32576307	33515	A310-7-2
32576312	33518	A310-7-2
32576313	33519	A310-7-2
32576316	33522	A310-7-3
32576328	33531	A310-7-4
32576502	33535	A311-1-2
32576503	33536	A311-1-2
32576504	33537	A311-1-2
32576505	33538	A311-1-2
32576507	33539	A311-1-2
32576508	33540	A311-1-2
32576511	33541	A311-1-2
32576513	33542	A311-1-2
32576514	33543	A311-1-2
32576516	33544	A311-1-2
32576517	33545	A311-1-2
32576601	33546	A311-2-2
32576602	33547	A311-2-2
32576603	33548	A311-2-2
32576605	33549	A311-2-2
32576608	33550	A311-2-2
32576609	33551	A311-2-2
32576610	33552	A311-2-2
32576611	33553	A311-2-2
32576615	33555	A311-2-2
32576616	33556	A311-2-2
33001001	32003	A301-1-2
33001011	32007	A301-1-2
33001012A	32005	A301-1-2
33001013	32010	A301-1-2
33001248	32082	A301-3-5
33002001B	32088	A301-4-2
33002009	32097	A301-4-3
33002012B	32095	A301-4-3
33002014	32103	A301-4-3
33002015A	32105	A301-4-3
33002016A	32101	A301-4-3
33002017A	32099	A301-4-3
33002018B	31978	A301-4-3

https://truckmanualshub.com/

零件號碼索引
PARTS INDEX

(照舊碼排序)

(ACCORDING TO OLD PARTYNO,SORT)

零件名稱 (PARE NAME)		
舊碼 OLD PART NO.	新碼 NEW PART NO.	頁次 PAGE
33006010	32229	A302-1-2
33006015B	32238	A302-1-3
33006016	32242	A302-1-3
33006030	32352	A302-3-3
33006041	32216	A302-1-2
33006044	32234	A302-1-3
33006048	32250	A302-1-4
33006049	32255	A302-1-4
33006051	32223	A302-1-2
33006052	32259	A302-1-4
33006057	32365	A302-3-4
33007013	32929	A308-1-4
33007017	32924	A308-1-3
33007021	32932	A308-1-4
33007022	32934	A308-1-4
33007031	32921	A308-1-3
33007033	32905	A308-1-3
33007520	33453	A310-4-3
33007521	33455	A310-4-3
33007522	33457	A310-4-3
33007523	33459	A310-4-3
33007524	33461	A310-4-3
33007525	33463	A310-4-3
33011067	33486	A310-5-3
33014007	33296	A309-3-6
33014036	33303	A309-3-6
33014037	33300	A309-3-6
33014060	33337	A309-3-8
33015004	32955	A308-1A-3
33015022	32953	A308-1A-3
33050118A	33424	A310-3-4
33050206E	33435	A310-3A-3
33052012	33396	A310-2-3
33052013	33398	A310-2-3
33052015A	33403	A310-2-3
33052016	33405	A310-2-3
33506030	M1212001	A302-3-3
33511067	33487	A310-5-3
33514007	33297	A309-3-6
34010214A	E3606002	A304-1B-3

零件名稱 (PARE NAME)		
舊碼 OLD PART NO.	新碼 NEW PART NO.	頁次 PAGE
34012912	E3807001	A309-1-3
34012957	32822	A306-3-4
34012959	32821	A306-3-4
34012960	32820	A306-3-4
34012961	32819	A306-3-3
34012965	32817	A306-3-3
34012970	M1602016	A306-3-3
34012972	32818	A306-3-3
41504217	32383	A303-1-2
41504218	32401	A303-1-3
41505200	B350051	A303-2-2
41505208	32433	A303-2-2
41506006	B350031	A302-2-2
41506039	B350033	A302-2-2
41507540	33363	A310-1-3
41507550	33366	A310-1-3
41507560	33369	A310-1-4
41507570	33372	A310-1-4
41507580	33375	A310-1-4
41509341	34983	A310-4-4
42509341A	34985	A310-4-4
41509441	34984	A310-4-4
42509441A	34986	A310-4-4
41511004	32704	A305-2-2
41511012A	32693	A305-2-2
41511013	32728	A305-2-3
41511014	32716	A305-2-2
41512507	32755	A305-4-2
41512520	32757	A305-4-2
41517002	B350100	A311-3-1
41517003	B350102	A311-3-1
42504002	M0907002	A303-1-2
42504003	32373	A303-1-2
42504004	M0905-TA2830Z	A303-1-2
42504005	M0702027	A303-1-2
42504020	M0909-32207	A303-1-3
42504023	32376	A303-1-2
42504024	32379	A303-1-2
42504029	M1423-M12*25	A302-3-2
42504204	32408	A303-1-3

https://truckmanualshub.com/

零件號碼索引
PARTS INDEX

(照舊碼排序)

(ACCORDING TO OLD PARTYNO,SORT)

零件名稱 (PARE NAME)		
舊碼 OLD PART NO.	新碼 NEW PART NO.	頁次 PAGE
42504205B	32410	A303-1-3
42504206	32412	A303-1-4
42504217	32384	A303-1-2
42504218	32402	A303-1-3
42505200	B350052	A303-2-2
42505201	32426	A303-2-2
42505202	32432	A303-2-2
42505203	M0803004	A308-4C-3
42505204	M0801-G65B	A303-2-2
42505205	M0802010	A303-2-2
42505206	32429	A303-2-2
42505207	M0807005	A308-4C-2
42505208	32434	A303-2-2
42505209	M0803007	A303-2-2
42505219	M0802005	A308-3-2
42506006	B350032	A302-2-2
42506039	B350034	A302-2-2
42507400	B350219	A308-3-2
42507401	33557	A308-3-2
42507403	M0803008	A303-2-2
42507404	33562	A308-3-2
42507406	33566	A308-3-3
42507409	33564	A308-3-3
42507411	M0803002	A308-3-2
42507416	M0920-MB3020	A308-3-2
42507418	33573	A308-3-3
42507420	M0807003	A308-3-3
42507422	M0802002	A308-3-2
42507432	33568	A308-3-3
42507531	33378	A310-1-4
42507532	33810	A308-6-4
42507533	33379	A310-1-4
42507540	33364	A310-1-3
42507550	33367	A310-1-3
42507560	33370	A310-1-4
42507570	33373	A310-1-4
42507580	33376	A310-1-4
42507602	M0807007	A308-4-3
42507603	33604	A308-4-3
42507604	M0920-DU4025	A308-4A-3

零件名稱 (PARE NAME)		
舊碼 OLD PART NO.	新碼 NEW PART NO.	頁次 PAGE
42507605	33607	A308-4-3
42507610	M0923003	A308-4-4
42507612	M0803005	A308-4-4
42507624	M0803011	A308-4-3
42507625	33637	A308-4-4
42507703	M0801-P20	A308-4C-4
42507725	33681	A308-4A-4
42507800	33801	A308-6-2
42509023	32648	A305-1-4
42509025	32666	A305-1-6
42509048	32659	A305-1-5
42510636	B350059	A304-4-3
42510650	B350058	A304-4-3
42511001	M1423-M30*120	A305-2-2
42511013	32729	A305-2-3
42511014	32717	A305-2-2
42512507	32756	A305-4-2
42512520	32758	A305-4-2
42512530	32762	A305-4-2
42515001	32940	A308-1A-2
42515304	M0920-MB5040	A308-4B-4
42515305	M0801-G75	A302-1-2
42515313	M0923006	A308-4B-3
42515315	33727	A308-4B-5
42515316	33730	A308-4B-5
42515317	M0807009	A308-4B-5
42515319	M0803009	A308-4B-3
42515320	M0802008	A308-4B-3
42515321	33725	A308-4B-4
42515322	33731	A308-4B-5
42515602	M0807004	A308-4C-2
42515603	33743	A308-4C-2
42515604	M0923001	A308-4D-2
42515606	M0802001	A308-4C-2
42515607	M0803003	A308-4C-3
42515608	33745	A308-4C-3
42515609	M0802004	A308-4C-3
42515611	M0920-DU3530	A308-4D-3
42517002	B350101	A311-3-1
42517003	B350103	A311-3-1

https://truckmanualshub.com/

零件號碼索引
PARTS INDEX

(照舊碼排序)

(ACCORDING TO OLD PARTYNO,SORT)

零件名稱 (PARE NAME)		
舊碼 OLD PART NO.	新碼 NEW PART NO.	頁次 PAGE
42517006	B350115	A311-3-1
42517007	B350139	A311-3-1
42517008	B350153	A311-3-2
42517009	B350142	A311-3-1
42517010	B350149	A311-3-1
42517011	B350151	A311-3-1
42541100	B350226	A308-4-2
42541101A	33577	A308-4-2
42541102A	33610	A308-4-3
42541103A	33643	A308-4A-2
42541200	B350227	A308-4-2
42541201A	33580	A308-4-2
42541202A	33613	A308-4-3
42541203A	33647	A308-4A-2
42541300	B350228	A308-4-2
42541301A	33583	A308-4-2
42541302A	33616	A308-4-3
42541303A	33650	A308-4A-2
42541400	B350230	A308-4-2
42541401A	33588	A308-4-2
42541402A	33621	A308-4-3
42541403A	33655	A308-4A-2
42541500	B350229	A308-4-2
42541501A	33600	A308-4-3
42541502A	33633	A308-4-4
42541503A	33667	A308-4A-3
42541600	B350231	A308-4-2
42541601A	33586	A308-4-2
42541602A	33619	A308-4-3
42541603A	33653	A308-4A-2
42541700	B350232	A308-4-2
42541701A	33595	A308-4-3
42541702A	33628	A308-4-4
42541703A	33662	A308-4A-3
42541800	B350244	A308-4-2
42541900	B350246	A308-4-2
42542100	B350319	A308-4C-2
42542101A	33733	A308-4C-2
42542102A	33747	A308-4C-3
42542103A	33758	A308-4D-2

零件名稱 (PARE NAME)		
舊碼 OLD PART NO.	新碼 NEW PART NO.	頁次 PAGE
42542104A	33768	A308-4D-3
42542200	B350320	A308-4C-2
42542201A	33735	A308-4C-2
42542202A	33749	A308-4C-3
42542203A	33760	A308-4D-2
42542204A	33770	A308-4D-3
42542300	B350321	A308-4C-2
42542301A	33737	A308-4C-2
42542302A	33751	A308-4C-3
42542303A	33762	A308-4D-2
42542304A	33772	A308-4D-3
42542400	B350322	A308-4C-2
42542401A	33739	A308-4C-2
42542402A	33753	A308-4C-3
42542403A	33764	A308-4D-2
42542404A	33774	A308-4D-3
42542500	B350323	A308-4C-2
42542501A	33741	A308-4C-2
42542502A	33755	A308-4C-3
42542503A	33766	A308-4D-2
42542504A	33776	A308-4D-3
42543100	B350298	A308-4B-2
42543101	33683	A308-4B-2
42543102	33704	A308-4B-4
42543200	B350299	A308-4B-2
42543201	33686	A308-4B-3
42543202	33707	A308-4B-4
42543300	B350300	A308-4B-2
42543301	33689	A308-4B-3
42543302	33710	A308-4B-4
42543400	B350301	A308-4B-2
42543401	33694	A308-4B-3
42543402	33715	A308-4B-4
42543500	B350303	A308-4B-2
42543501	33700	A308-4B-3
42543502	33721	A308-4B-4
42543600	B350304	A308-4B-2
42543601	33692	A308-4B-3
42543602	33713	A308-4B-4
42543700	B350302	A308-4B-2

https://truckmanualshub.com/

零件號碼索引

PARTS INDEX

(照舊碼排序)

(ACCORDING TO OLD PARTYNO,SORT)

零件名稱 (PARE NAME)		
舊碼 OLD PART NO.	新碼 NEW PART NO.	頁次 PAGE
42543701	33698	A308-4B-3
42543702	33719	A308-4B-4
42544100	B350262	A308-4A-2
42544200	B350263	A308-4A-2
42544300	B350264	A308-4A-2
42544400	B350266	A308-4A-2
42544500	B350265	A308-4A-2
42544600	B350267	A308-4A-2
42544700	B350268	A308-4A-2
42544800	B350280	A308-4A-2
42544900	B350282	A308-4A-2
42545100	B350330	A308-4D-2
42545200	B350331	A308-4D-2
42545300	B350332	A308-4D-2
42545400	B350333	A308-4D-2
42545500	B350334	A308-4D-2
42551000	B350363	A310-1-2
42551001	33340	A310-1-2
42551002	33342	A310-1-2
42551003	33344	A310-1-2
42551005	33346	A310-1-2
42551008	33347	A310-1-2
42551009	33349	A310-1-2
42551011	33350	A310-1-2
42512774	34931	A307-1-3
42552400	33387	A310-2-2
42552414	32411	A310-2-4
42552501	33407	A310-2-3
42552502	33409	A310-2-3
42552503	33411	A310-2-4
42552504	33413	A310-2-4
42552700	33393	A310-2-2
42560219	M0901-6304	A301-7-2
43005200	B350053	A303-2-2
43005201	32427	A303-2-2
43005206	32430	A303-2-2
43005208	32435	A303-2-2
43007533	33380	A310-1-4
43007540	33365	A310-1-3
43007550	33368	A310-1-3

零件名稱 (PARE NAME)		
舊碼 OLD PART NO.	新碼 NEW PART NO.	頁次 PAGE
43007560	33371	A310-1-4
43007570	33374	A310-1-4
43007580	33377	A310-1-4
43007602	M0807008	A308-4-3
43007603	33605	A308-4-3
43007610	M0923005	A308-4D-3
43007604	M0920-DU4525	A308-4A-3
43007605	33608	A308-4-3
43007612	M0803006	A308-4-4
43007613	M0802007	A308-4-4
43007624	M0803012	A308-4-3
43007800	33802	A308-6-2
43015001	32941	A308-1A-2
43015304	M0920-MB6040	A308-4B-4
43015305	M0801-G85	A308-4B-5
43015313	M0923004	A308-3-4
43015315	33728	A308-4B-5
43015317	M0807010	A308-4B-5
43015319	M0803010	A308-4B-3
43015320	M0802009	A308-4B-3
43015321	33726	A308-4B-4
43015603	33744	A308-4C-2
43015604	M0923002	A308-4D-2
43015605	M0801-G60	A308-4C-2
43015606	M0802003	A308-4C-2
43015608	33746	A308-4C-3
43015609	M0802006	A308-4C-3
43015610	M0801-G50	A308-4C-3
43015611	M0920-DU4030	A308-4C-3
43017006	B350116	A311-3-1
43017007	B350140	A311-3-1
43017009	B350143	A311-3-1
43017010	B350150	A311-3-1
43017011	B350152	A311-3-1
43041000	B350256	A308-4-2
43041100	B350233	A308-4-2
43041101A	33578	A308-4-2
43041102A	33611	A308-4-3
43041103A	33645	A308-4A-2
43041200	B350234	A308-4-2

https://truckmanualshub.com/

零件號碼索引

PARTS INDEX

(照舊碼排序)

(ACCORDING TO OLD PARTYNO,SORT)

零件名稱 (PARE NAME)		
舊碼 OLD PART NO.	新碼 NEW PART NO.	頁次 PAGE
43041201A	33581	A308-4-2
43041202A	33614	A308-4-3
43041203A	33648	A308-4A-2
43041300	B350235	A308-4-2
43041301A	33584	A308-4-2
43041302A	33617	A308-4-3
43041303A	33651	A308-4A-2
43041400	B350237	A308-4-2
43041401A	33589	A308-4-2
43041402A	33622	A308-4-3
43041403A	33656	A308-4A-2
43041500	B350236	A308-4-2
43041501A	33601	A308-4-3
43041502A	33634	A308-4-4
43041503A	33668	A308-4A-3
43041600	B350238	A308-4-2
43041601A	33587	A308-4-2
43041602A	33620	A308-4-3
43041603A	33654	A308-4A-2
43041700	B350239	A308-4-2
43041701A	33596	A308-4-3
43041702A	33629	A308-4-4
43041703A	33663	A308-4A-3
43041800	B350250	A308-4-2
43041801A	33603	A308-4-3
43041802A	33636	A308-4-4
43041803A	33670	A308-4A-3
43041900	B350252	A308-4-2
43042100	B350324	A308-4C-2
43042101A	33734	A308-4C-2
43042102A	33748	A308-4C-3
43042103A	33759	A308-4D-2
43042104A	33769	A308-4D-3
43042200	B350325	A308-4C-2
43042201A	33736	A308-4C-2
43042202A	33750	A308-4C-3
43042203A	33761	A308-4D-2
43042204A	33771	A308-4D-3
43042300	B350326	A308-4C-2
43042301A	33738	A308-4C-2

零件名稱 (PARE NAME)		
舊碼 OLD PART NO.	新碼 NEW PART NO.	頁次 PAGE
43042302A	33752	A308-4C-3
43042303A	33763	A308-4D-2
43042304A	33773	A308-4D-3
43042400	B350327	A308-4C-2
43042401A	33740	A308-4C-2
43042402A	33754	A308-4C-3
43042403A	33765	A308-4D-2
43042404A	33775	A308-4D-3
43042500	B350328	A308-4C-2
43042501A	33742	A308-4C-2
43042502A	33756	A308-4C-3
43042503A	33767	A308-4D-2
43042504A	33777	A308-4D-3
43043100	B350305	A308-4B-2
43043101	33684	A308-4B-2
43043102	33705	A308-4B-4
43043200	B350306	A308-4B-2
43043201	33687	A308-4B-3
43043202	33708	A308-4B-4
43043300	B350307	A308-4B-2
43043301	33690	A308-4B-3
43043302	33711	A308-4B-4
43043400	B350308	A308-4B-2
43043401	33695	A308-4B-3
43043402	33716	A308-4B-4
43043500	B350310	A308-4B-2
43043501	33701	A308-4B-3
43043502	33722	A308-4B-4
43043600	B350311	A308-4B-2
43043601	33693	A308-4B-3
43043602	33714	A308-4B-4
43043700	B350309	A308-4B-2
43043701	33699	A308-4B-3
43043702	33720	A308-4B-4
43043800	B350312	A308-4B-2
43043801	33703	A308-4B-3
43043802	33724	A308-4B-4
43044000	B350292	A308-4A-2
43044100	B350269	A308-4A-2
43044200	B350270	A308-4A-2

https://truckmanualshub.com/

零件號碼索引
PARTS INDEX

(照舊碼排序)

(ACCORDING TO OLD PARTYNO,SORT)

零件名稱 (PARE NAME)		
舊碼 OLD PART NO.	新碼 NEW PART NO.	頁次 PAGE
43044300	B350271	A308-4A-2
43044400	B350273	A308-4A-2
43044500	B350272	A308-4A-2
43044600	B350274	A308-4A-2
43044700	B350275	A308-4A-2
43044800	B350286	A308-4A-2
43044900	B350288	A308-4A-2
43045100	B350335	A308-4D-2
43045200	B350336	A308-4D-2
43045300	B350337	A308-4D-2
43045400	B350338	A308-4D-2
43045500	B350339	A308-4D-2
43051000	B350364	A310-1-2
43051001	33341	A310-1-2
43051002	33343	A310-1-2
43051003	33345	A310-1-2
43051008	33348	A310-1-2
43051011	33351	A310-1-2
43052400	33388	A310-2-2
43052501	33408	A310-2-3
43052502	33410	A310-2-3
43052503	33412	A310-2-4
43052504	33414	A310-2-4
43507400	B350663	A308-3-2
43507435	B350664	A308-3-2
44005205	M0802011	A303-2-2
44005220	M0801-G70B	A303-2-2
44007401	33558	A308-3-2
44007404	33563	A308-3-2
44007406	33567	A308-3-3
44007409	33565	A308-3-3
44007416	M0920-MB4020	A308-3-2
44007418	33574	A308-3-3
44007432	33569	A308-3-3
44007433	M0802014	A308-3-2
44007434	M0801-G80B	A308-3-2
44007435	B350222	A308-3-2
44017008	B350177	A311-3-2
51509007	32634	A305-1-3
51510401	32588	A304-4-3

零件名稱 (PARE NAME)		
舊碼 OLD PART NO.	新碼 NEW PART NO.	頁次 PAGE
51510402	32604	A304-4-4
51510403	32603	A304-4-4
51510404	32591	A304-4-3
51510405	32602	A304-4-3
51510406	32594	A304-4-3
51510407	32595	A304-4-3
52507800	33360	A310-1-3
52550112A	33429	A310-3F-3
71501202	31962	A301-3-5
71502013	B350007	A301-4-3
71506201	32279	A302-2-2
71506232	32281	A302-2-2
71560205	B350014	A301-6-3
72501202	31963	A301-3-5
72502013	B350008	A301-4-3
72503100	32112	A301-5-2
72503200	32111	A301-5-2
72503300	32113	A301-5-2
72506019	32243	A302-1-3
72506201	32280	A302-2-2
72506232	32282	A302-2-2
72510101	32491	A304-1-2
72510102	32492	A304-1-2
72510103	32493	A304-1-2
72510105	32495	A304-1-2
72510202	32507	A304-1A-2
72510211	32510	A304-1A-2
72510212	32505	A304-1A-2
72510213	32506	A304-1A-2
72510216	32508	A304-1A-2
72510301	32513	A304-1B-2
72510302	32515	A304-1B-2
72510303	32517	A304-1B-2
72510317	32516	A304-1B-2
72510318	32519	A304-1B-2
72510319	32520	A304-1B-2
72510322	32514	A304-1B-2
72512804	32487	A303-4-2
72560205	B350015	A301-6-3
73001202	31964	A301-3-5

https://truckmanualshub.com/

零件號碼索引
PARTS INDEX

(照舊碼排序)

(ACCORDING TO OLD PARTYNO,SORT)

零件名稱 (PARE NAME)		
舊碼 OLD PART NO.	新碼 NEW PART NO.	頁次 PAGE
73002013	B350009	A301-4-3
73006019A	32244	A302-1-3
73507540	35041	A308-6-3
73507550	35042	A308-6-3
73507560	35043	A308-6-3
73507570	35016	A308-6-4
73507580	35044	A308-6-4
73560205	B350016	A301-6-3
91501201	M0904-NJ304	A301-2-3
91502004	M0801-AS275	A301-4-2
91502008	32106	A301-4-3
91504012	M0909-30209	A303-1-2
91504030	32345	A302-3-2
91504052	32348	A302-3-3
91506011	M0706001	A302-1-2
91506012	M0909-33013A	A302-1-3
91506032	32353	A302-3-2
91506036	32347	A302-3-2
91506045	M0909-32012	A302-1-3
91506050	M0702018	A302-1-4
91506054	32358	A302-3-4
91506102	32283	A302-2-2
91506113	32290	A302-2-2
91506114	32296	A302-2-2
91506115	32300	A302-2-3
91506117	32304	A302-2-3
91506118	32308	A302-2-3
91506119	32310	A302-2-3
91506120	32314	A302-2-3
91506128	32286	A302-2-2
91506134	32298	A302-2-3
91506135	32302	A302-2-3
91506138	32312	A302-2-3
91506139	32316	A302-2-3
91506212	32294	A302-2-2
91506237	32306	A302-2-3
91506241	32292	A302-2-2
91508002	M0501139	A308-7-4
91509075	32617	A305-1-2
91509077	32621	A305-1-2

零件名稱 (PARE NAME)		
舊碼 OLD PART NO.	新碼 NEW PART NO.	頁次 PAGE
91509078	32625	A305-1-2
91509079	32619	A305-1-2
91509081	32623	A305-1-2
91509082	32627	A305-1-2
91516426	M0501210	A308-5B-2
91517004	B350111	A311-3-1
91517012	B350181	A311-3-2
91517017	B350098	A311-3-1
92501006	32012	A301-1-2
92501009	M1424-M8*35	A301-9-2
92501010A	32008	A301-1-2
92501014	M1424-M8*16	A302-1-3
92501016	32015	A301-1-2
92501018	M0702028	A301-1-3
92501019	M1605-M8	A301-5-2
92501020	M1424013	A301-5-3
92501024	M1605-M12	A301-3-2
92501025	M1301-10*45	A301-6-3
92501032	M14501011	A307-2-5
92501102	M1424004	A303-1-4
92501104	M1424-M8*25	A301-1-2
92501107	M0801-P18	A308-7-2
92501109	32027	A301-2-2
92501115	M1501-M8	A301-2-2
92501119	M1305-6*30	A301-2-3
92501123B	32038	A301-2-3
92501124A	32039	A301-2-3
92501125	M1307001	A301-2-3
92501132	33644	A301-2-2
92501201	M0904-MUB5205UM	A301-1-2
92501210	M0905-KT354220	A301-10-2
92501212	M1423003	A301-3-2
92501216	M0801-P28	A301-3-3
92501218	M1605-M10	A307-1-3
92501219	M1424002	A305-3-2
92501220	M1307002	A301-3-3
92501242	M0901-6306NR	A301-3-4
92501246	M1312-S30	A301-3-4
92501247	M0901-6208NR	A301-3-5
92501251	M1312-S40	A308-6-3

https://truckmanualshub.com/

零件號碼索引
PARTS INDEX

(照舊碼排序)

(ACCORDING TO OLD PARTYNO,SORT)

零件名稱 (PARE NAME)		
舊碼 OLD PART NO.	新碼 NEW PART NO.	頁次 PAGE
92501253	M1423001	A301-3-2
92501253	M1423034	A301-3-2
92501254	32053	A301-3-3
92501256	32057	A301-3-3
92502004	M0801-AS277	A301-4-2
92502006	M0909-33013	A301-6-2
92502007	M1424001	A301-8-2
92502008	32107	A301-4-3
92502010A	32092	A301-4-2
92502108	M1424005	A301-8-3
92503005	M0905-TA2230Z	A301-5-2
92503007	32733	A301-5-2
92503008	M1301-12*30	A301-5-2
92503009A	32117	A301-5-2
92503010	M1424-M8*30	A301-5-2
92503015	M1321-M10	A308-3-3
92503018	M0921001	A301-5-3
92503019	M1301-10*30	A301-5-3
92503020	M1401006	A301-5-3
92503218	M1605-M6	A301-8-2
92504011	M0703001	A303-1-2
92504016	M1502001	A310-3B-3
92504020	M0909-30306	A303-1-3
92504024	M1307003	A303-1-3
92504026	M1513004	A302-1-4
92504030	32346	A302-3-2
92504052	32349	A302-3-3
92504208	M1424-M8*20	A301-3-4
92504212	M1605-M16	A302-3-3
92504213	M1423022	A303-1-4
92504214	M1321-M6*45	A303-1-3
92504219	32406	A303-1-3
92505120	33427	A310-3A-3
92505211	M0801-P16	A301-8-3
92506004	M1605-M18	A302-1-2
92506005	M1513006	A302-1-2
92506011	M0706002	A302-1-2
92506012	M0909-32015	A302-1-3
92506020	M1605-M14	A302-1-3
92506021	M1423005	A310-1-3

零件名稱 (PARE NAME)		
舊碼 OLD PART NO.	新碼 NEW PART NO.	頁次 PAGE
92506022	M1513005	A302-1-4
92506028	32875	A310-5A-4
92506032A	32354	A302-3-3
92506036	32355	A302-3-4
92506038	M0801-G65	A302-1-4
92506040	M0801-G90	A302-1-2
92506042	M1423004	A302-1-3
92506044	M0702019	A302-1-4
92506054	32359	A302-3-4
92506065	32362	A302-3-4
92506113	32325	A302-2-4
92506122	32323	A302-2-4
92506125	32321	A302-2-4
92506202	32284	A302-2-2
92506210	32287	A302-2-2
92506211	32288	A302-2-2
92506212	32295	A302-2-2
92506213	32291	A302-2-2
92506214	32297	A302-2-2
92506215	32301	A302-2-3
92506216	32338	A302-2-4
92506217	32305	A302-2-3
92506218	32309	A302-2-3
92506219	32311	A302-2-3
92506220	32315	A302-2-3
92506221	32319	A302-2-3
92506224	32322	A302-2-4
92506225	32324	A302-2-4
92506226	32326	A302-2-4
92506227	32327	A302-2-4
92506228	32328	A302-2-4
92506230	32329	A302-2-4
92506233	32289	A302-2-2
92506234	32299	A302-2-3
92506235	32303	A302-2-3
92506236	32339	A302-2-4
92506237	32307	A302-2-3
92506238	32313	A302-2-3
92506239	32317	A302-2-3
92506241	32293	A302-2-2

https://truckmanualshub.com/

零件號碼索引
PARTS INDEX

(照舊碼排序)

(ACCORDING TO OLD PARTYNO,SORT)

零件名稱 (PARE NAME)		
舊碼 OLD PART NO.	新碼 NEW PART NO.	頁次 PAGE
92506242	32334	A302-2-4
92506243	32335	A302-2-4
92506244	32336	A302-2-4
92506245	32337	A302-2-4
92506250	32318	A302-2-3
92507002	32978	A308-1B-5
92507005	M0801-P9	A306-3-3
92507007	32899	A308-1-2
92507009	M1602006	A304-4-4
92507014	M1325-8*25	A308-1-3
92507015	M1423-M6*10	A304-2-3
92507019	M1513007	A308-1A-4
92507020	M1312-S28	A308-1-3
92507024	M1423006	A308-1-4
92507027	M1602010	A305-3-2
92507029	M1423-M12*50	A308-1-2
92507030	32906	A308-1-3
92507032	M1312-S38	A308-1-3
92507036	32908	A308-1-3
92507037	32910	A308-1-3
92507038	32914	A308-1-3
92507039	32916	A308-1-3
92507040	32912	A308-1-3
92507041	32918	A308-1-3
92507046	32979	A308-1B-5
92507302	M0501140	A308-5-2
92507304	M0801-P12	A308-5-2
92507305	33778	A308-5-2
92507306	M1315012	A308-7-5
92507307	M0501044	A308-5B-2
92507308	M0501038	A308-5B-2
92507309	M0501034	A308-5B-2
92507311	M0501039	A308-5B-2
92507312	M0501040	A308-5-2
92507313	M0501041	A308-5B-2
92507314	M0501042	A308-5-2
92507315	M0501043	A308-5-2
92507316	M0501036	A308-5-2
92507317	M0501022	A308-5-2
92507318	M0501024	A308-5-2

零件名稱 (PARE NAME)		
舊碼 OLD PART NO.	新碼 NEW PART NO.	頁次 PAGE
92507319	M0501011	A308-5-2
92507320	M0501035	A308-5-2
92507423	33576	A308-3-3
92507424	M1321-M8	A308-3-3
92507428	M1502003	A308-3-3
92507431	33426	A310-3-4
92507511	33806	A308-6-3
92507512	M1401004	A301-8-3
92507529	33451	A310-4-3
92507535	M1410004	A308-6-3
92507607A	33641	A308-4-4
92508002	M0501012	A308-7-4
92508003	M1315013	A304-2-2
92508004	M1315008	A308-7-5
92508005	M0501013	A305-1-7
92508007	M1315011	A304-2-2
92508008	M0501014	A306-3A-3
92508010	M0502046	A308-7-2
92508011	33828	A308-7-2
92508012	M0801004	A308-7-2
92508014	33838	A308-7-5
92508017	M0501143	A308-7-3
92508018	M1602008	A308-7-3
92508019A	32437	A303-2-2
92508024	M1424006	A301-8-3
92508031	M0501015	A308-7-4
92508032	M0501046	A308-7-4
92508101	33836	A308-7-4
92508102	33837	A308-7-4
92508104	33639	A308-4-4
92508105	33827	A308-7-2
92508106	M0501142	A308-7-4
92508109	M0501144	A308-7-4
92508201	33823	A308-7-2
92508202	33824	A308-7-2
92508203	33826	A308-7-2
92508204	33829	A308-7-2
92508205	M0502047	A308-7-2
92508206	33825	A308-7-2
92508207	33833	A308-7-3

https://truckmanualshub.com/

零件號碼索引
PARTS INDEX

(照舊碼排序)

(ACCORDING TO OLD PARTYNO,SORT)

零件名稱 (PARE NAME)		
舊碼 OLD PART NO.	新碼 NEW PART NO.	頁次 PAGE
92508208	33834	A308-7-3
92508210	M0501137	A308-7-4
92508211	33839	A308-7-5
92508213	M0801-G80	A308-4B-5
92508214	M0801-G45	A308-4C-3
92508220	M0502048	A308-7-2
92508221	M0501138	A308-7-4
92508225	M0501141	A308-7-3
92508450	32823	A306-3-4
92509001	32629	A305-1-2
92509004	E3801001	A305-1-3
92509008	M1401-M8*8	A305-1-3
92509009	32638	A305-1-3
92509010	E2302001	A305-1-3
92509013	M1502-M8	A310-5-2
92509015	32644	A305-1-4
92509017	32680	A305-1-6
92509019	M1605-M4	A305-1-6
92509031	E2302002	A305-1-4
92509034	E2302017	A305-1-6
92509036	M1408-M6*6	A305-1-2
92509039	32652	A305-1-4
92509040	M0501016	A305-1-5
92509041	M0501017	A305-1-7
92509042	M1315019	A305-1-5
92509043	M1423-M6*20	A305-1-4
92509049	M1414-M4*6	A305-1-5
92509051	M0501018	A305-1-5
92509052	M0801-P24	A301-11-2
92509057	32655	A305-1-4
92509058	M0501019	A305-1-5
92509059	32658	A305-1-5
92509060	M0501045	A305-1-6
92509061	32661	A305-1-5
92509062	32545	A305-1-6
92509068	32678	A305-1-6
92509069	32682	A305-1-6
92509071	32653	A305-1-4
92509074	E3801002	A305-1-3
92509075	32618	A305-1-2

零件名稱 (PARE NAME)		
舊碼 OLD PART NO.	新碼 NEW PART NO.	頁次 PAGE
92509077	32622	A305-1-2
92509078	32626	A305-1-2
92509079	32620	A305-1-2
92509081	32624	A305-1-2
92509082	32628	A305-1-2
92509090	32656	A305-1-5
92509094	32645	A305-1-4
92509901	M0501020	A305-1-5
92509902	M0501021	A305-1-5
92509903	M0501010	A305-1-5
92509904	M0501033	A305-1-5
92509906	M0501023	A305-1-7
92509907	M1315007	A305-1-7
92509908	M1315018	A310-7-4
92509909	32649	A305-1-4
92509910	32670	A305-1-6
92510108	32521	A304-1B-2
92510117	32502	A304-1-2
92510121	M1602028	A302-1-3
92510122	32532	A304-1B-3
92510127	32494	A304-1-2
92510128	32500	A304-1-2
92510129	32497	A304-1-2
92510130	32498	A304-1-2
92510131	32499	A304-1-2
92510140	32501	A304-1-2
92510207	32509	A304-1A-2
92510208	32512	A304-1A-2
92510209	32511	A304-1A-2
92510305	32528	A304-1B-2
92510307	32529	A304-1B-3
92510310	32518	A304-1B-2
92510311	32525	A304-1B-2
92510314	32522	A304-1B-2
92510315	32523	A304-1B-2
92510316	32524	A304-1B-2
92510326	32533	A304-1B-3
92510403	32551	A304-2-2
92510404	32539	A304-2-2
92510407	32546	A304-2-2

https://truckmanualshub.com/

零件號碼索引

PARTS INDEX

(照舊碼排序)

(ACCORDING TO OLD PARTYNO,SORT)

零件名稱 (PARE NAME)		
舊碼 OLD PART NO.	新碼 NEW PART NO.	頁次 PAGE
92510408	32548	A304-2-2
92510411	M1315015	A304-2-2
92510412	32559	A304-2-2
92510414	32540	A304-2-2
92510418	32549	A304-2-2
92510419	32550	A304-2-2
92510420	32547	A304-2-2
92510425	32553	A304-2-2
92510428	M1602004	A307-1-3
92510430	32542	A304-2-2
92510431	32555	A304-2-3
92510432	32554	A304-2-3
92510433	32556	A304-2-3
92510434	32541	A304-2-2
92510435	32552	A304-2-2
92510436	32558	A304-2-3
92510511	32874	A310-5A-4
92510513	32578	A304-3-2
92510514	32579	A304-3-2
92510515	M1424-M8*55	A304-3-2
92510524	32580	A304-3-3
92510525	32581	A304-3-3
92510526	32584	A304-3-3
92510610	M1315016	A304-4-3
92510612	M1315014	A304-4-3
92510623	32596	A304-4-3
92510624	32600	A304-4-3
92510625	32597	A304-4-3
92510627	32590	A304-4-3
92510628	32599	A304-4-3
92510632	32593	A304-4-3
92511003	M1317011	A305-2-2
92511005	M1410001	A305-2-3
92511008	M1305-8*35	A305-2-3
92511009	M1410003	A306-2-2
92511016	M1602009	A305-2-3
92511035	32715	A305-2-2
92511036	32690	A305-2-2
92511039	32692	A305-2-2
92511042	32725	A305-2-3

零件名稱 (PARE NAME)		
舊碼 OLD PART NO.	新碼 NEW PART NO.	頁次 PAGE
92511053	32790	A306-1-2
92511056	M1602007	A305-2-4
92511062	34814	A305-2-4
92511062	M1306002	A305-2-4
92511063	M1307005	A305-2-3
92511102	32749	A305-3-2
92511104	M1409-M8*30	A305-3-2
92511105	32750	A305-3-2
92511108	32751	A305-3-2
92511111	M1602012	A305-3-2
92511201	33848	A305-3-2
92512120	32330	A302-2-4
92512121	32332	A302-2-4
92512128	32331	A302-2-4
92512129	32333	A302-2-4
92512130A	34843	A301-8-4
92512304	M1307006	A303-3-4
92512305	32888	A307-2-6
92512309	M1306-10*25	A303-3-4
92512309A	34602	A303-3-3
92512310	M1307004	A305-4-3
92512315	32886	A307-2-5
92512318	32887	A307-2-5
92512321	32889	A307-2-6
92512322	32890	A307-2-6
92512405	32444	A303-3-2
92512419	M1312-S35	A301-7-2
92512422	32468	A303-3-4
92512425	M1423027	A303-3-5
92512428	M1307006	A306-3A-3
92512429	32463	A303-3-3
92512434	32455	A303-3-3
92512438	32457	A303-3-3
92512439	32448	A303-3-2
92512443	32464	A303-3-4
92512444	32484	A303-3-6
92512445	32470	A303-3-4
92512447	32475	A303-3-5
92512450	32477	A303-3-5
92512455	M1602014	A303-3-4

https://truckmanualshub.com/

零件號碼索引
PARTS INDEX

(照舊碼排序)

(ACCORDING TO OLD PARTYNO,SORT)

零件名稱 (PARE NAME)		
舊碼 OLD PART NO.	新碼 NEW PART NO.	頁次 PAGE
92512458	M1315006	A303-3-5
92512459	32478	A303-3-5
92512463	M1401-M6*60	A303-3-5
92512464	M1423028	A303-3-5
92512465	32474	A303-3-5
92512466	32476	A303-3-5
92512467	M1424-M8*40	A303-3-4
92512468	32449	A303-3-3
92512469A	32469	A303-3-4
92512470	M1424009	A303-3-5
92512472	32479	A303-3-5
92512479	34157	A303-3-6
92512480	32442	A303-3-2
92512482	32441	A303-3-2
92512485	M1315024	A303-3-5
92512503	34848	A305-4-2
92512503	M1306004	A305-4-2
92512506	M1312-S12	A305-4-3
92512511	32776	A305-4-3
92512512	34845	A305-4-3
92512513	M1423-M6*16	A305-4-3
92512516	M1602003	A305-4-3
92512521	M1424-M8*70	A305-4-2
92512524	M1306003	A305-4-2
92512525	32765	A305-4-2
92512529A	32778	A305-4-3
92512606	32809	A306-2-3
92512608	32813	A306-2-3
92512609	M1321-M6	A306-2-2
92512617A	32805	A306-2-3
92512623	M1502002	A306-2-3
92512624	32811	A306-2-3
92512636	32806	A306-2-3
92512650	M1423-M6*30	A303-3-6
92512651	32808	A306-2-3
92512725	M1605-M5	A305-1-7
92512726	M1403-M10*20	A307-1-3
92512730	M1323031	A307-1-3
92512736	M1401-M6*10	A307-1-3
92512740	M1414-M5*10	A307-1-3

零件名稱 (PARE NAME)		
舊碼 OLD PART NO.	新碼 NEW PART NO.	頁次 PAGE
92512742	M1414-M4*10	A307-1-2
92512753	M1602001	A307-1-2
92512776	E0901025	A307-1-2
92512801	M1312-R42	A303-4-2
92512802	M0901-6004VV	A303-4-2
92512809	33883	A303-4-2
92512810	M1424010	A303-4-2
92512812	M1602021	A303-4-2
92512813	M0702026	A303-4-2
92513001	E0212006	A309-1-3
92513004	E3601004	A309-1-2
92513008	E1609001	A303-3-7
92513009	E3804002	A309-1-2
92513010	E0212003	A309-1-2
92513010	E0216001	A309-1-2
92513011	E1612001	A309-1-3
92513012	E1610001	A309-1-3
92513013	E1611001	A309-1-3
92513015	E1607001	A309-1-3
92513018	E3901001	A309-1-3
92513019	E1611002	A309-1-3
92513020	E2802009	A309-1-3
92513022	E1608002	A309-1-3
92513024	E1610003	A309-1-3
92513025A	E0215001	A309-1-2
92513026	E0215002	A309-1-2
92513027	E1610002	A309-1-3
92513028	E1302019	A309-1-3
92513029	E1302020	A309-1-3
92513030	E1302021	A309-1-3
92513031	E3601010	A309-1-2
92513032	E3601006	A309-1-2
92513103	E2302003	A309-1-2
92513103	E2302016	A309-1-2
92513104	E2302019	A309-1-2
92513107	M1414-M4*45	A305-1-5
92513113	M1414-M5*55	A305-1-4
92513121	E2302015	A309-1-2
92513201	33249	A309-2-2
92513202	33248	A309-2-2

https://truckmanualshub.com/

零件號碼索引
PARTS INDEX

(照舊碼排序)

(ACCORDING TO OLD PARTYNO,SORT)

零件名稱 (PARE NAME)		
舊碼 OLD PART NO.	新碼 NEW PART NO.	頁次 PAGE
92513203	33247	A309-2-2
92513204	33246	A309-2-2
92513205	33245	A309-2-2
92513206	33244	A309-2-2
92513207	33253	A309-2-2
92513208	33252	A309-2-2
92513209	33251	A309-2-2
92513211	32481	A309-2-2
92513212	33250	A309-2-2
92515007	M1602024	A308-1A-3
92515009	32963	A308-1B-4
92515011A	32939	A308-1A-2
92515012	32943	A308-1A-3
92515013	32945	A308-1A-3
92515014	32947	A308-1A-3
92515015	32949	A308-1A-3
92515016	32977	A308-1B-5
92515019	32951	A308-1A-3
92515021	M1423034	A308-1A-3
92515307	M0801003	A308-7-3
92515401	M0502077	A308-5A-2
92515406	M0502079	A308-5A-2
92515408	M0502083	A308-5A-2
92515409	M0502059	A308-5A-2
92515412	33787	A308-5B-3
92515415	M1513-M6	A303-3-5
92515416	M0502081	A308-5A-2
92515419	33780	A308-5A-2
92516001	32966	A308-1B-4
92516002	32970	A308-1B-4
92516003	32972	A308-1B-4
92516004	32974	A308-1B-4
92516005	32956	A308-1B-3
92516006	32960	A308-1B-3
92516007	32964	A308-1B-4
92516401	M0502064	A308-5B-3
92516402	33783	A308-5B-3
92516404	M0502061	A308-5B-3
92516406	M0801-P14	A301-8-4
92516412	M1312-S16	A308-5B-3

零件名稱 (PARE NAME)		
舊碼 OLD PART NO.	新碼 NEW PART NO.	頁次 PAGE
92516413	33789	A308-5B-4
92516414	M0901-6003ZZ	A308-5B-4
92516415	M1312-R37	A308-5B-4
92516416	33790	A308-5B-4
92516418	M1602-M16	A308-5B-4
92516426	M0501206	A308-5B-2
92516427	M0502068	A308-5B-3
92516431	M0501025	A308-5B-2
92516432	M0501026	A308-5B-2
92516433	M0501027	A308-5B-2
92516434	M0501028	A308-5B-2
92516436	M0502071	A308-5B-3
92516438	M0502067	A308-5B-3
92517004	B350112	A311-3-1
92517005	B350113	A311-3-1
92517012	B350182	A311-3-2
92517015	B350180	A311-3-2
92517016	B350178	A311-3-2
92517017	B350099	A311-3-1
92517018	B350114	A311-3-1
92517019	B350183	A311-3-2
92517020	B350192	A311-3-2
92517021	B350193	A311-3-2
92517022	B350194	A311-3-2
92517023	B350179	A311-3-2
92518115	M1306-8*15	A306-1-3
92518715	M1312-S15	A306-3A-2
92518723	M1513008	A307-1-5
92518724	34850	A307-1-4
92518725A	34851	A307-1-5
92518725A	M1306-8*26	A307-1-5
92520102	M1609-M6	A307-1-4
92520105	M1602005	A305-1-5
92520301	M1424003	A302-3-2
92520309	M0901-6306	A301-7-2
92520317A	32149	A301-8-3
92520318A	E3806001	A301-8-3
92520420	M1602013	A303-3-4
92520909	M0801-P10	A301-11-4
92512309A	34602	A303-3-3

https://truckmanualshub.com/

零件號碼索引
PARTS INDEX

(照舊碼排序)

(ACCORDING TO OLD PARTYNO,SORT)

零件名稱 (PARE NAME)		
舊碼 OLD PART NO.	新碼 NEW PART NO.	頁次 PAGE
92550101	M0501164	A310-3C-2
92550102	M0501165	A310-3-2
92550103	33415	A310-3-2
92550104	33416	A310-3-2
92550105	M1424007	A301-8-2
92550209	M0501202	A310-3A-3
92550213	M0501167	A310-3D-2
92550215	M0501203	A310-3D-2
92550216	M0501204	A310-3D-3
92550217	M0501205	A310-3D-3
92550222	M0501213	A310-3D-2
92550223	33428	A310-3B-4
92550227	M1401-M8*55	A310-3B-4
92550301	M0501222	A310-3E-3
92550302	M0501234	A310-3E-4
92550306	M0503048	A310-3B-3
92550309	M0501179	A310-3B-3
92550310	M0501181	A310-3B-3
92550311	M0501150	A310-3E-4
92550312	M0501186	A310-3B-4
92550318	M0501182	A310-3B-3
92550321	M0501183	A310-3B-4
92552018	M1501008	A310-6-2
92560206	M0801-G110	A301-7-2
92560207	M0909-30309D	A301-2-3
92560213	M1312-R100	A301-7-3
92560214	M0801-P45	A301-7-3
92560215	M0801-G55	A301-7-3
92560217	M0701008	A301-7-3
92560315	M0604005	A301-8-3
92560316	M0604006	A301-8-3
92560328	32148	A301-8-3
92560407	M0801011	A301-9-2
92560408	M1301-6*19.8	A301-9-2
92560409	M0604007	A308-4B-5
92560412	M0713001	A301-9-2
92560414	32011	A301-1-2
92560416	M1424-M8*45	A304-2-2
92560502	M1401-M10*25	A301-10-2
92560504	M0901-6206	A301-10-2

零件名稱 (PARE NAME)		
舊碼 OLD PART NO.	新碼 NEW PART NO.	頁次 PAGE
92560511	32171	A301-10-2
92560522	M0801-P34	A301-10-3
92560602	M0801-P44	A301-8-4
92560603	32151	A301-8-4
92560611A	32154	A301-8-4
92560612	M1305-5*30	A301-8-4
92560703	M1312-R28	A301-11-2
92560706	32188	A301-11-2
92560709	32191	A301-11-2
92560711	M1312-R30	A301-11A-2
92560712	M0702057	A301-11A-2
92560713	M0702056	A301-11A-2
92560715	M0801-P21	A301-11-2
92560718	32196	A301-11-2
92560719	32197	A301-11-3
92560720	32198	A301-11-3
92560722	M1312-R22	A301-11-3
92560725	32201	A301-11-3
92560726	32202	A301-11-3
92560730	32206	A301-11-3
92560734	M1323028	A301-11-3
92560735	32209	A301-11-3
92560737	M1301-3*13	A301-11-3
92560739	M1401-M8*45	A301-11-4
92560740	M1401-M8*50	A301-11-4
92560741	M1312-R25	A301-11-4
92561010	32320	A302-2-3
92572907	33475	A310-5-3
92575001	33467	A310-4-4
92575002	33468	A310-4-4
92575003	33470	A310-4-4
92575004	E1615003	A310-4-4
92575005	E1615004	A310-4-4
92575007	E3804005	A310-4-4
92575008	E3805004	A310-4-4
92575009	E1602003	A310-4-4
92575010	33471	A310-4-4
92576208	33505	A310-6A-2
92576209	M1312-E9	A310-6A-2
92576305	M1315025	A310-7A-2

https://truckmanualshub.com/

零件號碼索引
PARTS INDEX

(照舊碼排序)

(ACCORDING TO OLD PARTYNO,SORT)

零件名稱 (PARE NAME)		
舊碼 OLD PART NO.	新碼 NEW PART NO.	頁次 PAGE
92576306	33514	A310-7-2
92576308	M1315026	A310-7-2
92576309	33516	A310-7-2
92576314	33520	A310-7-2
92576315	33521	A310-7-3
92576317	33523	A310-7-3
92576318	33524	A310-7-3
92576319	33525	A310-7-3
92576320	33526	A310-7-3
92576321	33527	A310-7-3
92576322	33528	A310-7-3
92576323	32538	A310-7-4
92576324	33529	A310-7-3
92576329	33532	A310-7-4
92576330	33533	A310-7-4
92576612	33554	A311-2-2
93002004	M0801-AS279	A301-4-2
93002006	M0909001	A301-6-2
93002007	M1423002	A301-6-3
93002008	32108	A301-4-3
93004052	32350	A302-3-3
93006011	M0706003	A302-1-2
93006012	M0909-32016	A302-1-3
93006035	M0702045	A302-1-4
93006036	32356	A302-3-4
93006038	M0801-G70	A301-10-2
93006040	M0801-G95	A302-1-2
93006054	32360	A302-3-4
93006055	32361	A302-3-4
93006061	32366	A302-3-4
93006063	32367	A302-3-4
93006065	32363	A302-3-4
93007007	32900	A308-1-2
93007014	M1325-10*35	A308-1-3
93007030	32907	A308-1-3
93007035	32926	A308-1-4
93007036	32909	A308-1-3
93007037	32911	A308-1-3
93007038	32915	A308-1-3
93007039	32917	A308-1-3

零件名稱 (PARE NAME)		
舊碼 OLD PART NO.	新碼 NEW PART NO.	頁次 PAGE
93007040	32913	A308-1-3
93007041	32919	A308-1-3
93007301	M0502045	A308-7-2
93008210	M0501145	A308-7-4
93008221	M0501146	A308-7-4
93010605	32957	A308-1B-3
93012608	32814	A306-2-3
93012624	32812	A306-2-3
93015012	32944	A308-1A-3
93015013	32946	A308-1A-3
93015014	32948	A308-1A-3
93015015	32950	A308-1A-3
93015019	32952	A308-1A-3
93016001	32967	A308-1B-4
93016002	32971	A308-1B-4
93016003	32973	A308-1B-4
93016004	32975	A308-1B-4
93016006	32961	A308-1B-3
93016007	32965	A308-1B-4
93016008	32976	A308-1B-4
93016426	M0501235	A308-5B-2
93506036	32357	A302-3-4
94004013	M1402-M12*50	A303-103
94004014	M1501-M12	A303-1-3
94008223	M0801002	A308-7-2
94008226	M0801-P30	A304-1-2
94012445	33941	A310-6-2
94012803	M1312-S20	A303-4-2
94012995	M0801-P11	A301-8-2
94012998	M1401-M5*35	A306-3-4
94020611	M1602002	A305-1-3
A1509000	32409	A305-1-2
A1514012A	32847	A309-3-5
A1809000	32848	A305-1-2
A1811004A	32849	A305-2-2
A1811012	32857	A305-2-2
A1811066	32859	A305-2-4
A1814012A	32861	A309-3-5
A2011004	33425	A305-2-2
A2011012	33430	A305-2-2

https://truckmanualshub.com/

零件號碼索引
PARTS INDEX

(照舊碼排序)

(ACCORDING TO OLD PARTYNO,SORT)

零件名稱 (PARE NAME)		
舊碼 OLD PART NO.	新碼 NEW PART NO.	頁次 PAGE
A2011066	33431	A305-2-4
A2014012A	33432	A309-3-5
A2509000	33757	A305-1-2
A2509044	34040	A309-2-2
A2509086	32685	A305-1-7
A2509088	32687	A305-1-7
A2509089	32686	A305-1-7
A2509090	32688	A305-1-7
A2509091	32689	A305-1-7
A2509911	32825	A305-1-4
A2511004A	32826	A305-2-2
A2511012	32829	A305-2-2
A2511066	32830	A305-2-4
A2512481	32832	A303-3-2
A2514006	32846	A309-3-5
A2514012A	32836	A309-3-5
A2560701	32837	A301-11-2
A2560702	32838	A301-11-2
A3009000	32839	A305-1-2
A3011004A	32840	A305-2-2
A3011012	32841	A305-2-2
A3011066	32842	A305-2-4
A3014012A	32843	A309-3-5
A3509000	32844	A305-1-2
A3511004E	34817	A305-2-2
A3514012A	32845	A309-3-5
DFM101	32828	A309-2-2
DFM103	33240	A309-2-2
IDE-1907	33242	A309-2-2
IDE-6070	33243	A309-2-2
M0604-PT3/8"	M0604008	A301-8-4
M1424-M10*55*P1.25	M1424015	A301-8-2
M1501-9/16"-18UNF	M1501010	A310-3D-5
MD-070	32864	A310-5A-4
MD-072	32862	A310-5A-4
MD-074	32863	A310-5A-4

零件名稱 (PARE NAME)		
舊碼 OLD PART NO.	新碼 NEW PART NO.	頁次 PAGE
MD-160	32482	A303-3-6
MD-161	32483	A303-3-6

https://truckmanualshub.com/

MEMO

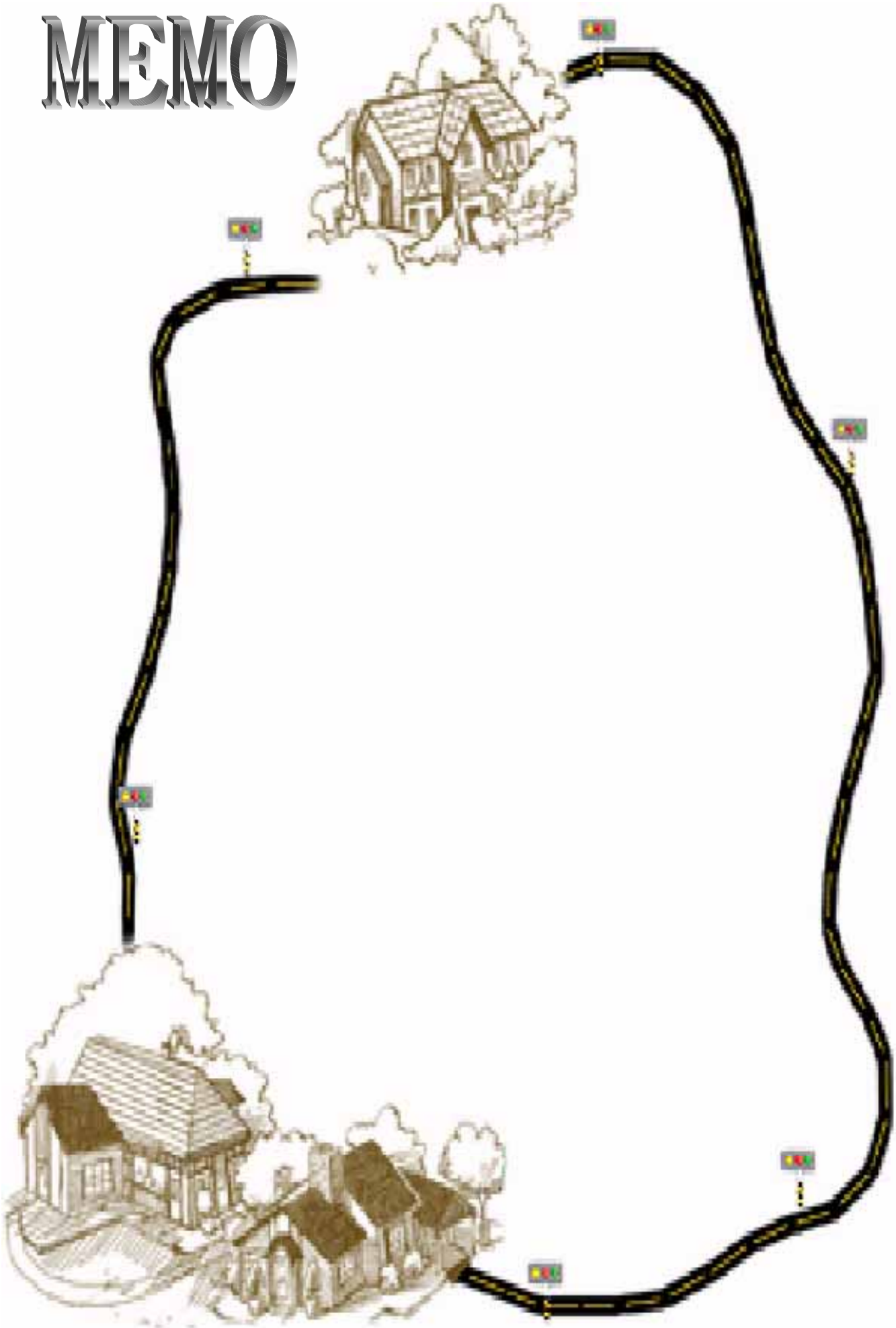

https://truckmanualshub.com/

台品堆高機15T~35T零件手冊

Taipiin forklift truck 15T~35T parts manual

版　　次 **Edition** : 04

出版日期 **Publish date** : 2007-01

手冊編號 **Pub. No.** : DEC 013

發　　行 **Publisher** : Taipiin CO.,LTD.

台品工業股份有限公司

https://truckmanualshub.com/

台品工業股份有限公司
地址:台中縣大雅鄉神林路一段269號
電話:04-25688022(代表線)　傳真: 04-25601566

TAIPIIN CO., LTD.
FACTORY：269, SEC 1, SHEIN LIN RD, TAYA, TAICHUNG, TAIWAN, R.O.C.
TEL：886-4-25688022　FAX：886-4-25601566