https://truckmanualshub.com/

Contents

Main Body Section

Changes from Model 3B 1

Overall Specifications 1

1. Specifications Comparison Table 1
2. Performance Improvements 2

Hydraulic-related Changes 3

1. Use of High-performance Return Filter (nephron filter and breaker filter eliminated) 3
2. Use of Add-on Valve 5
3. Multi-purpose Circuit Switched to One-touch Operation (breaker ⇔ crusher) 6
4. Hydraulic Pump 7
5. Swing Motor 8
6. Reduced Flow Force 9
7. Straight Travel Valve 10
8. Heat Circuit 11

Lower-section Related Changes 13

1. Grease Bath Seal 13

Cab-related Changes 14

1. Cab Shape 14
2. Irregularly Shaped Steel Line Structure 14
3. Beefed-up Equipment 15
4. Interior Equipment 16
5. Front Window Lock Mechanism 19

Attachment Changes 20

1. Boom 20
2. Line Clamp 20

Specifications 21

Overall 21

1. Main Data 21
2. Performance 21
3. Main Unit Dimensions 21
4. Engine 22
5. Cooling System 22
6. Upper Side Work System 23
7. Operating Device 23
8. Swing Units 24
9. Travel Lower Body 25

https://truckmanualshub.com/

Contents

Hydraulic Equipment....25
1. Hydraulic Device....25
2. Control Valve, Cylinder....26
Capacities, Filters....26
1. Coolant and Oil Capacities....26
2. Hydraulic Oil Filters....26
3. Fuel Filter....26
Lifting Capacity....27
Precautions for lifting loads with the hydraulic excavator....27
Lifting Capacities (SH330-5)....28
1. Standard Arm (3.25 m), 600 Grouser Shoe....28
2. Short Arm (2.63 m), 600 Grorser Shoe....29
3. Long Arm (4.04 m), 600 Grouser Shoe....30
4. Standard Arm (3.25 m), 800 Grouser Shoe....31
5. Short Arm (2.63 m), 800 Grouser Shoe....32
6. Long Arm (4.04 m), 800 Grouser Shoe....33
Lifting Capacities (SH330LC-5)....34
1. Standard Arm (3.25 m), 600 Grouser Shoe....34
2. Short Arm (2.63 m), 600 Grouser Shoe....35
3. Long Arm (4.04 m), 600 Grouser Shoe....36
4. Standard Arm (3.25 m) 800 Grouser Shoe....37
5. Short Arm (2.63 m) 800 Grouser Shoe....38
6. Long Arm (4.04 m) 800 Grouser Shoe....39
Lifting Capacities (SH350HD-5)....40
1. Standard Arm (3.25 m), 600 Grouser Shoe....40
2. Short Arm (2.63 m), 600 Grouser Shoe....41
3. Standard Arm (3.25 m), 800 Grouser Shoe....42
4. Short Arm (2.63 m), 800 Grouser Shoe....43
Lifting Capacities (SH350LHD-5)....44
1. Standard Arm (3.25 m), 600 Grouser Shoe....44
2. Short Arm (2.63 m), 600 Grouser Shoe....45
3. Standard Arm (3.25 m), 800 Grouser Shoe....46
4. Short Arm (2.63 m), 800 Grouser Shoe....47
Overall View....48
Overall View (SH330-5)....48
1. Standard Arm (3.25 m)....48
2. Short Arm (2.63 m)....48
3. Long Arm (4.04 m)....49

https://truckmanualshub.com/

Contents

Overall View (SH330LC-5) 50
1. Standard Arm (3.25 m) 50
2. Short Arm (2.63 m) 50
3. Long Arm (4.04 m) 51
Overall View (SH350HD-5) 52
1. Standard Arm (3.25 m) 52
2. Short Arm (2.63 m) 52
Overall View (SH350LHD-5) 53
1. Standard Arm (3.25 m) 53
2. Short Arm (2.63 m) 53
Work Range Diagram 54
Work Range Diagram (SH330-5) 54
1. Standard Arm (3.25 m) 54
2. Short Arm (2.63 m) 55
3. Long Arm (4.04 m) 56
Work Range Diagram (SH330LC-5) 57
1. Standard Arm (3.25 m) 57
2. Short Arm (2.63 m) 58
3. Long Arm (4.04 m) 59
Work Range Diagram (SH350HD-5) 60
1. Standard Arm (3.25 m) 60
2. Short Arm (2.63 m) 61
Work Range Diagram (SH350LHD-5) 62
Standard Arm (3.25 m) 62
Short Arm (2.63 m) 63

https://truckmanualshub.com/

Contents

Summary Section

Main Equipment Table 1
- Lower Component 1
  1. Travel Unit 1
  2. Take-up Roller 1
  3. Upper Roller 1
  4. Lower Roller 1
  5. Recoil Spring 2
  6. Shoe 2
- Upper Component 3
  1. Swing Unit 3
- Engine-related 4
  1. Engine 4
  2. Muffler 5
  3. Air Cleaner (double element) 5
  4. Radiator 5
- Hydraulic Device 6
  1. Hydraulic Pump 6
  2. Pump P-Q Diagram 7
- Control-related 8
  1. Control Valve 8
  2. Solenoid Valve (5 stack) 8
  3. Remote Control Valve (left/right, travel operations) 9
  4. Remote Control Valve Characteristic Diagram 10
  5. Cushion Valve (heat circuit, with shuttle valve) 11
  6. Center Joint 11
- Backhoe Attachment 12
  1. Cylinder 12
  2. Attachments 13

Equipment Layout Diagram 14
- Main Equipment Layout 14
- Consumable Part Layout 15

Standard Machine Option List 16
- List of Optional Components 16

https://truckmanualshub.com/

Contents

Hydraulics Section

Hydraulic Equipment Layout 1
- Overall View 1
- Pump Chamber Hydraulic Equipment Layout 2
- Swing Body Center Section Hydraulic Equipment Layout 3
- Housing Left Side Hydraulic Equipment Layout 4
- Layout of Hydraulic Equipment in Cab 5

Port Diagram 6
- Pump 6
  1. Hydraulic Pump (standard model) 6
- Valves 7
  1. Control Valve 7
  2. 5 Stack Solenoid Valve 10
  3. 2 Stack Solenoid Valve 11
  4. Remote Control Valves (upper, travel) 12
  5. Cushion Valve 13
  6. 4-way Multi-valve 14
  7. 2-way Multi-valve 15
  8. Direction Valve/Shut-off Valve 16
  9. HBCV (Option) 17
- Manifolds 18
  1. Manifold Under Cab 18
  2. Manifold (accumulator section) 18
  3. Manifold (hydraulic oil tank section) 19
- Motors 20
  1. Swing Motor 20
  2. Travel Motor 21
  3. Center Joint 22

Pilot Hose Connection Diagram 23
- Pilot P and T Lines 23
- Pilot Control Line 25
- Pilot Control Line (2-way selector valve) 27
- Pilot Control Line (4-way selector valve) 29

https://truckmanualshub.com/

Contents

Function List 31
Function Table 31
Explanation of New Functions 33
1. Swing Relief Cut-off Control 33
2. Swing Speed Limit Control 35
3. Negative Control Power Save Control 36
4. Option Line Flow Adjustment Control 37
5. Multi Purpose Circuit (breaker ⇔ crusher) One-touch Switching Control 38
6. Bucket-close Regenerative Circuit 39
Explanation of Hydraulic Circuit and Operations (standard model) 40
Travel Circuit 40
Travel low-speed circuit 40
Travel high-speed circuit 42
Straight travel circuit 44
Swing Circuit 46
Swing speed limit control circuit 46
Swing relief cut-off control circuit 48
Swing priority circuit 50
Swing brake circuit 52
Swing parking circuit (lever in neutral) 54
Swing parking circuit (brake release) 56
Swing parking circuit (machine stop) 58
Boom Circuit 60
Boom-up circuit (independent operation) 60
Boom-up circuit (compound boom-up + arm-in) 62
Boom-down regenerative circuit 64
Boom-down tilting prevention circuit 66
Boom-down load holding valve circuit 68
Arm Circuit 70
Arm-out circuit 70
Arm-in forced regenerative circuit 72
Arm-in load holding valve circuit 74
Bucket Circuit 76
Bucket-open circuit 76
Bucket-close regenerative circuit 78
Negative Control Circuit 80
Negative control circuit (power save solenoid OFF) 80
Negative control power save circuit (power save solenoid ON) 82
Negative control circuit (bucket close, power save solenoid OFF) 84

https://truckmanualshub.com/

Contents

Other Circuits 86
Cushion circuit (arm-out operation) 86
Cushion circuit (arm-out operation stopped) 88
Cushion circuit (arm-out → arm-in operation) 90
Heat circuit (lever in neutral) 92
Auto pressure boost circuit (bucket close) 94

Explanation of Hydraulic Circuit and Operations (option) 96
Option Circuits 96
Breaker circuit (independent operation) 96
Double-acting circuit (hydraulic fork) 98
Multi-purpose circuit (breaker Q control) 100
Multi-purpose circuit (2 pumps flow crusher) 102
2nd option circuit (hydraulic rotation fork) 104

Main Equipment Structure and Operation Explanation 106
Pump 106
1. Hydraulic Pump 106
2. Regulator 109
3. Gear Pump 117
Motor 119
1. Travel Motor 119
2. Swing Motor 131
Valve 137
1. Control Valve 137
2. 5 Stack Solenoid Valve Operation Explanation 173
3. Upper Pilot Valve (remote control valve) 174
4. Travel Pilot Valve (remote control valve) 179
5. Cushion Valve 184
6. Selector Valve (4-way) 188
7. Direction Valve (3-direction) 192

https://truckmanualshub.com/

Contents

Electrics Section

Explanation of New Functions 1
- Work Mode Select Switch 1
  - The Throttle Volume and Work Mode Select Switch are Linked!! 1
  - Computer connection method 4
  - Monitor changes 5
  - Pilot pressure switch changed to pressure sensor 8
- Pump Electromagnetic Proportional Valve 10
  1. Horsepower Control Proportional Valve 10
  2. P1 Flow Control Proportional Valve 10
- System Control for Energy Saving 11
  1. Reduced Fuel Consumption Through Transient Load Reduction Control 11
  2. Reduced Fuel Consumption Through Swing Relief Cut Control 12
  3. Reduced Fuel Consumption Through Power Save Control 14
- Swing Speed Limit Control 16

Electrical Equipment Layout Diagram 18
- Overall View 18
  1. Main Unit Left Side Layout Diagram (radiator chamber) 19
  2. Engine Section Layout Diagram 20
  3. Main Unit Right Side Layout Diagram (pump chamber) 21
  4. Main Unit Center Section Layout Diagram 22
  5. Cab Layout Diagram 1 23
  6. Layout Around Operator’s Seat 25
- Stand Alone Parts Diagram 26

Main Equipment Structural Diagrams 18
- Connection Connector Pin Layout 18
  1. Computer A 18
  2. Monitor 19

Electrical Circuit Diagram 20
- Overall View 20
  1. Sequence Circuit Diagram 20
- Block Diagram 22
  1. Computer A 22
  2. Computer S 23
  3. ECM 24
  4. Monitor Display 25
  5. Air Conditioner 26
  6. Lever Lock 27

https://truckmanualshub.com/

Contents

7. Horn 27
8. Working Light 28
9. Option 28
10. Other 29
11. Electrical Symbol List 30

Electrical Connector Wiring Diagram 31

Wire Harness 31

1. Main Frame Harness 31

Cab 34

1. Cab Main Harness 34
2. Cab Sub Harness 37
3. In Cab 39
4. Engine Harness 41

Console 42

1. Console Right Harness 42
2. Console Left Harness 42

Electrical Parts and Wiring Assembly Diagram 43

Main Frame 43

Cab 46

Explanation of Functions and Operations 74

Explanation of Electrical Functions 74

Engine Speed Control 76

1. Throttle Control 76
2. Idling Control (auto/one-touch) 80
3. Idling Start 81
4. Auto Warm-up 82

Engine Start/Stop Control 84

1. Engine Start/Stop Judgment 84
2. Power-cut Delay 85
3. Engine Emergency Stop 86
4. Neutral Start 88

Pump Control 89

1. Work Mode Control 89
2. Pump Horsepower Boost Control 90
3. Pump Horsepower Cut Control 91
4. Power Save Control 92

https://truckmanualshub.com/

Swing 94
1. Swing Brake 94
2. Swing Free Swing (option for North America) 95
3. Swing Lock (for maintenance) 96
4. Swing Relief Cut 98
5. Swing Speed Limit 99
Travel 101
1. Travel Speed Switchover 101
2. Travel Alarm 102
Valve Control 104
1. Lever Lock 104
2. Solenoid Sticking Prevention 105
3. Pressure Boost Control 106
Monitor Control 108
1. Bar Graph (coolant temperature gauge, oil temperature gauge, fuel gauge) 108
Accessories 114
1. Horn 114
2. Working Light 115
3. Wiper and Washer 116
4. Room Lamp 118
5. Radio Mute 120
Other 121
1. Anti-theft 121
2. Battery Save Function 122
3. Alternator Power Generation Detection 123
4. Overload Warning 124
Options 126
1. Option line control 126
2. Option Line Control 129
3. Feed Pump Automatic Stop 131
4. Return Filter Clogging Detected 134
5. Beacon 135
Service Support 136
Screen Operations 136
1. Screen Shift 136

https://truckmanualshub.com/

Contents

Screen Display List 138
1. CHK (status display) Screen List 138
2. DIAG (trouble diagnosis) Screen 150
3. HR (usage log) Screen List 152
4. CFG (setting change) Screen 157
5. CAL (troubleshooting support) Screen 160
6. Check the Monitor Switch (self-diagnosis function) 162
7. Option Flow Setting 164
8. Anti-theft Setting 166
9. Model Setting 168
10. Engine Information Screen 170

Screen Display Details 172
1. Message Display List 172

Abnormality Display 174
1. Diagnostic Trouble Code Display 174
2. Main Unit Diagnostic Trouble Code List 175
3. Diagnostic Trouble Code (monitor display) 178
4. Sensor Trouble Operation Table 185
5. EPF (Engine Protection Feature) 188

https://truckmanualshub.com/

Contents

Engine Section

Engine Summary 1
- Main Data Table 1
- Overall Appearance Diagram 2
- Sensor and Auxiliary Equipment Layout (left) 3
- Sensor and Auxiliary Equipment Layout (rear) 4
- Engine System Diagram 4
- Fuel System Diagram 5
- Detailed Parts Diagrams 6
  1. ECM (engine control module) 6
  2. Supply Pump/SCV (suction control valve) 7
  3. Common Rail/Flow Damper 7
  4. Common Rail Pressure Sensor/Pressure Limiter 8
  5. Injector 8
  6. Engine Coolant Temperature Sensor 9
  7. Engine Oil Pressure Sensor 9
  8. Cam Position Sensor (CMP sensor) 10
  9. Crank Position Sensor (CKP sensor) 10
  10. Atmospheric Pressure Sensor 11
  11. Suction Air Temperature Sensor 11
  12. Boost Pressure Sensor 12
  13. Boost Temperature Sensor 12
  14. Charge Fuel Pump 13
  15. EGR Cooler 13
  16. Lead Valve (check valve) 14
  17. EGR Valve 14
- Engine Control Summary 15

Explanation of Engine Terms 16
- Function Explanation Table 16

Explanation of Engine Structure 18
- Technology for Exhaust Gases 18
  1. Common Rail System 18
  2. Multi Stage Fuel Injection (multiple injection) 19
  3. Inter Cooler 21
  4. EGR (exhaust gas recirculation) 22

https://truckmanualshub.com/

Contents

Explanation of Engine Operation 24
Fuel Unit 24
1. Common Rail System Summary 24
2. Change Points for Injection Method (governor, common rail) 25
3. Explanation of Injector Operation 26
4. Explanation of Supply Pump Operation 29
5. Supply Pump Disassembly Diagram 30
6. Explanation of Flow Damper Operation 32
7. Pressure Limiter 33
8. Cautions for Maintenance 34
Explanation of Engine Control 37
1. Fuel Injection Quantity Correction 37
2. Starting Q Correction 37
3. Preheat Control (QOS: quick on start) 37
4. Atmospheric Pressure Correction (high altitude correction) 37
5. Control for Overheating 38
6. Control for Boost Temperature Rise 39
7. Control for Engine Oil Pressure Drop 39
8. Start Control (coolant temperature monitoring) 39
9. Long Cranking Control 40
10. Starting Control for Reduced Number of Cylinders 40
11. Normal Stop (key switch OFF operation) 40
12. Engine Start/Stop Judgment 41
Engine Maintenance Standards 42
Engine Information Screen 42
1. Purpose 42
2. How to Go to This Screen 42
3. Engine Start Restriction 42
4. Screen 42
Monitor Operating Method 44
1. View Mode 44
2. Edit Mode 44
Engine Information (Q resistance, QR code, engine serial number) Copying Method 45
Rewriting Injector QR Codes 46
When Replacing Computer A at the Same Time 48
Engine Information Acquisition Timing 48
Redoing Engine Information Acquisition 48
Abnormality Display 48

https://truckmanualshub.com/

Contents

Engine Equipment Table 49
Exhaust Gas 3rd Engine Accessory Electrical Parts Interchangeability (Isuzu part number) 49
Exhaust Gas Regulations 50
Features of Materials Subject to Exhaust Gas Regulation 50
Exhaust Gas Regulation Values 50
Cautions for Fuel Used 52
Engine Fuel and Maintenance of Fuel Filters 52
1. Fuel to be applied 52
2. Maintenance of fuel filters 54

https://truckmanualshub.com/

Contents

Air Conditioner Section

Changes from Model 3B 1
- Change List 1

Layout Diagram 2
- Air Conditioner Overall Diagram 2
  1. Frame 2
  2. Cab 4
- Equipment Layout Diagram 6

Circuit Diagram 7
- Air Conditioner Circuit Diagram 7

Explanation of Functions 9
- Explanation of Control 9
  1. Air Mix Motor Actuator Control 9
  2. Blow Mode Motor Actuator Control 10
  3. Refresh / Recirculate Switch Motor Actuator Control 11
  4. Blower Amp Control 12
  5. Compressor Clutch Control 15
  6. COOLMAX Control and HOTMAX Control 16
  7. Trouble Detection and Control after Trouble Detected 17
  8. Monitor Mode 18
  9. Door Switch Control 21
  10. Inside Air Filter Clogging Detection Control 21

Actuator Inspection 23
- Air Mix Motor Actuator Inspection 23
- Refresh / Recirculate Motor Actuator Inspection 25
- Mode Motor Actuator Inspection 27

Self-diagnosis Function with Panel Display 9
- Abnormality Display and Self-check Procedures 9
  1. Abnormality Display Position 9
  2. Explanation of Abnormality Display 9
  3. Explanation of Monitor Mode 11

https://truckmanualshub.com/

Contents

Part Function and OK/NG Judgment..... 40
Control Panel and Control Unit 40
Blower Amp 40
Relay..... 41
Air Mix Actuator 41
Refresh / Recirculate Actuator..... 41
Blow Mode Actuator..... 42
Evaporator Sensor..... 42
Dual Pressure Switch 42
Solar Radiation Sensor..... 43

https://truckmanualshub.com/

Contents

New Machine Performance Section

New Machine Performance Judgment Table 1
Performance Judgment Check Sheet 1
Performance Measurement Entry Table 2
Measurement Method and Main Unit Posture 3
Engine Speed 3
Pressure in Each Section 3
Cylinder Falling Amount 3
Attachment Speed 4
Swing Speed 5
Swing (180°) Brake Angle 5
Travel Speed 5
Off Travel Amount 6
Travel Sprocket Speed 6
Shoe Tension Amount 6
Swing Ball Race Bearing Movement Amount and Bucket Tip Movement Amount 7

https://truckmanualshub.com/

Contents

Maintenance Section

Pressure Measurement and Adjustment Procedures 1
Procedures for Pressure Measurement from the Monitor Display 1
1. Pressure Measurement Method 1
2. Operating Method 1
Procedures for Measuring Hydraulic Oil Temperature from the Monitor Display 2
1. Hydraulic Oil Temperature Measurement Method 2
2. Operating Method 2
Procedures for Pressure Measurement by Installing Pressure Gauge 3
1. Preparations 3
2. Items to Prepare 3
Pressure Measuring Ports 4
Control Valve 5
1. Location of Relief Valves 5
Pressure Measurement Preparations 6
Pressure Measurement and Adjustment Procedures 9
1. Main Pressure Measurement 9
2. Pilot Pressure Measurement 13
3. Negative Control Pressure Measurement 14
Pressure Adjustment 16
1. Main Pressure Adjustment 16
2. Pilot Pressure Adjustment 20
Hydraulic Pump Flow Measurement Procedures 21
Preparations 21
1. Items to Prepare 21
Work Preparations 22
Flow Measurement 25
Drain Volume Measurement Procedures 26
Preparations 26
Travel Motor Drain Volume Measurement 26
Swing Motor Drain Volume Measurement 29
Air Bleed Procedure 30
Hydraulic Pump 30
Travel Motor 31
Swing Motor 32
HBCV (Option) 33
1. Boom Cylinder HBCV 33
2. Arm Cylinder HBCV 33

https://truckmanualshub.com/

Contents

Electricity Measurement Procedures 34
Measurement Equipment 34
Measurement Tools 35
Measurement Method 46
1. Hydraulic Pump Electromagnetic Proportional Valve 46
2. Solenoid Valve (5 stack) 47
3. Oil Temperature Sensor 48
4. Pressure Sensor 49
Procedures for Replacing Consumable Parts 51
Air Conditioner Belt and Fan Belt Replacement 51
1. Air Conditioner Belt Replacement 51
2. Fan Belt Replacement 53
Fuel Filter Replacement 56
1. Filter Replacement 56
2. Air Bleeding 59
Engine Oil Filter and Engine Oil Replacement 60
1. Engine Oil Replacement 60
2. Engine Oil Filter Replacement 61
Radiator Coolant Replacement 63
Air Cleaner Cleaning and Replacement 64
Hydraulic Oil Filter Replacement 66
1. Return Filter Replacement 66
2. Suction Filter Replacement 67
3. Air Breather Element Replacement 68
4. Pilot Oil Filter Replacement 68
5. Hydraulic Oil Replacement 69
Others 72
1. Coolant Filling 72
2. Washer Fluid Filling 72
Periodic Maintenance Procedures 73
Maintenance Every 250 Hours 73
1. Battery Inspection and Replacement 73
Maintenance after First 250 Hours for New Machine / Every 1000 Hours from Then on 74
1. Swing Reduction Gear Oil Replacement 74
2. Gear Oil Filling 75
Replace the Flange Packing at the Bottom of the Fuel Tank 76

https://truckmanualshub.com/

Contents

Bolt Size and Torque Table 77
Bolt and Nut Tightening 77
Retightening Torque Table 78

https://truckmanualshub.com/

Contents

Data Section

Main Unit Weight 1
Divided Weight (standard specifications) 1
Stand Alone Part Weight 2
Shoe Weight (per side) 2
Arm Weight 2
Bucket Weight 3
Interchangeability 4
Interchangeability 4
1. Main Part Interchangeability Table (SH330-5) 4
2. Main Part Interchangeability Table (SH330LC-5) 5
3. Main Part Interchangeability Table (SH350HD-5) 6
Attachment Installation Dimensions 7
Attachment Dimensions 7
Paint Colors 9
Paint Colors 9
Unit Conversion Ratio 10
Unit Conversion Ratio 10

https://truckmanualshub.com/

Overall Specifications

1. Specifications Comparison Table

		SH330-5	vs	SH330-3B	Improvements
Operating weight	kg	33300	+100 kg	33200	Increased stability
Engine model	-	ISUZU AH-6HK1		ISUZU AH-6HK1	No change
Engine output (SAE J1995 NET)	kW/min^{-1}	202/2000		202/2000	
Maximum flow (no load)	Model L/min	2 pistons + 1 gear 292.5 × 2 + 26	103 %	2 pistons + 1 gear 284 × 2 + 26	
Swing speed	min^{-1}	10.0	104 %	9.6	
Noise inside cab	dB (A)	67	-2 db	77.0	Reduced noise

https://truckmanualshub.com/

2. Performance Improvements
   (1) Improved strength
   - Increased pump horsepower

   (2) Improved speed
   - Increased pump horsepower
   - Bucket-close regenerative circuit used

   (3) Improved operability
   - Spool open characteristic reviewed
   - Reduced shock for travel + upper operation (change in straight travel circuit)
   - Improved compound operability for crusher + upper operation (change in option flow circuit)
   - Increased heat performance (change in cushion valve)
   - Improved response (improved remote control valve)

   (4) Easier operation
   - SP, H, Auto mode select switch eliminated (difficulty of button switch eliminated)
   - Automatic selection (SP, H, Auto mode) according to degree of opening of throttle volume
   - Multi-purpose circuit switched to one-touch operation (breaker ⇔ crusher) (can only be switched within cab)

   (5) Improved universality
   - Use of add-on valve
   - Increased capacity for 2nd option pump (41.4 → 63.3 L/min)
   - Function added for switching flow when option line used (to support special attachment specifications)

   (6) Energy saving (improved fuel economy)
   - Foot relief (negative control) made variable (standby pressure reduced)
   - Swing relief cut (when swing starts) (pump excess flow reduced)
   - Pump torque variable control
   - Auto mode control method reviewed
   - Increased pump efficiency

   (7) Improved work environment
   - Reduced pump noise

   (8) Improved maintainability
   - Filter layouts reviewed
   - High-performance return filter used (nephron filter eliminated, breaker filter eliminated)
   - Electric filter indicator used (for breaker specifications) Monitor display in cab

https://truckmanualshub.com/

Hydraulic-related Changes

1. Use of High-performance Return Filter (nephron filter and breaker filter eliminated)

   Performance of the return filter is increased to make the nephron filter unnecessary.

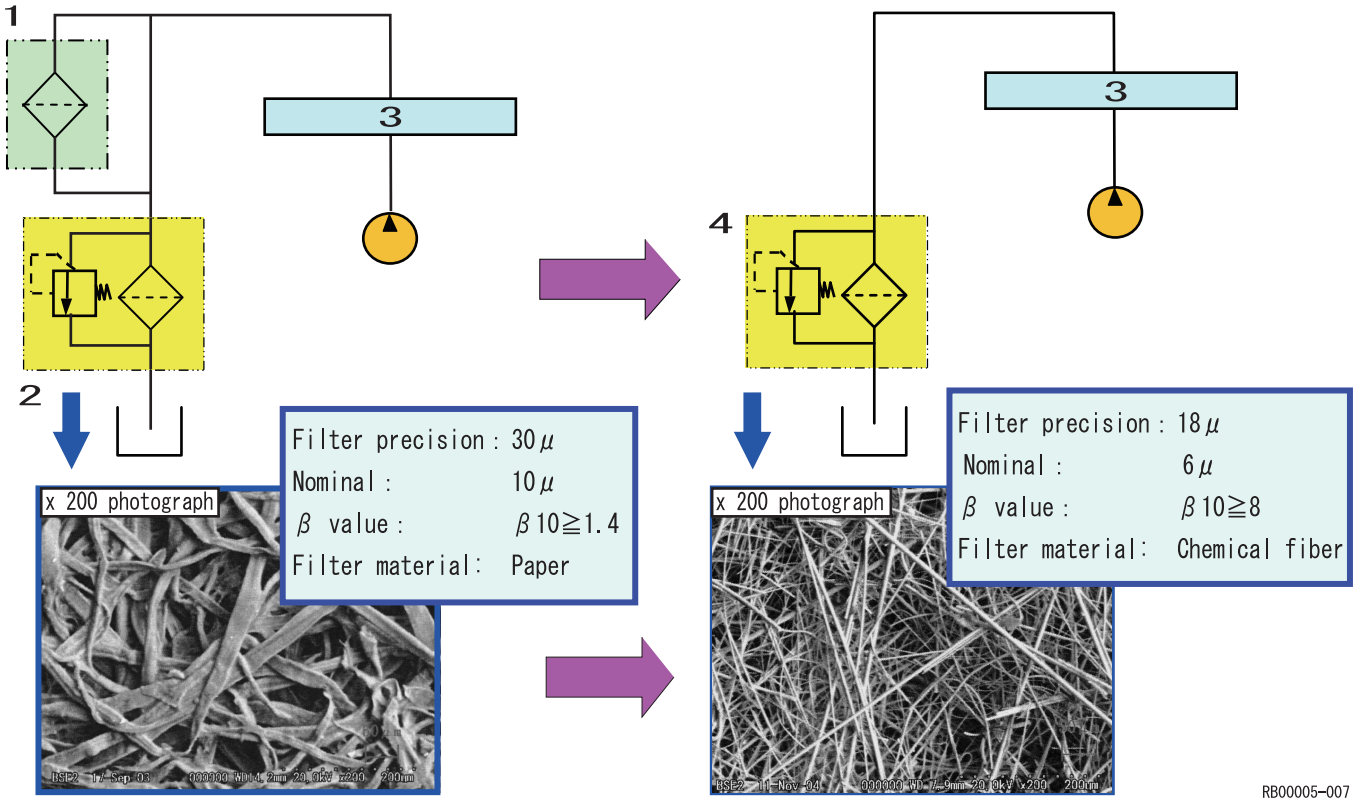

1	Nephron filter	3	Control valve
2	Return filter	4	High-precision return filter

https://truckmanualshub.com/

Changes from Model 3B

Performance of the return filter is increased to make the separate breaker filter unnecessary.

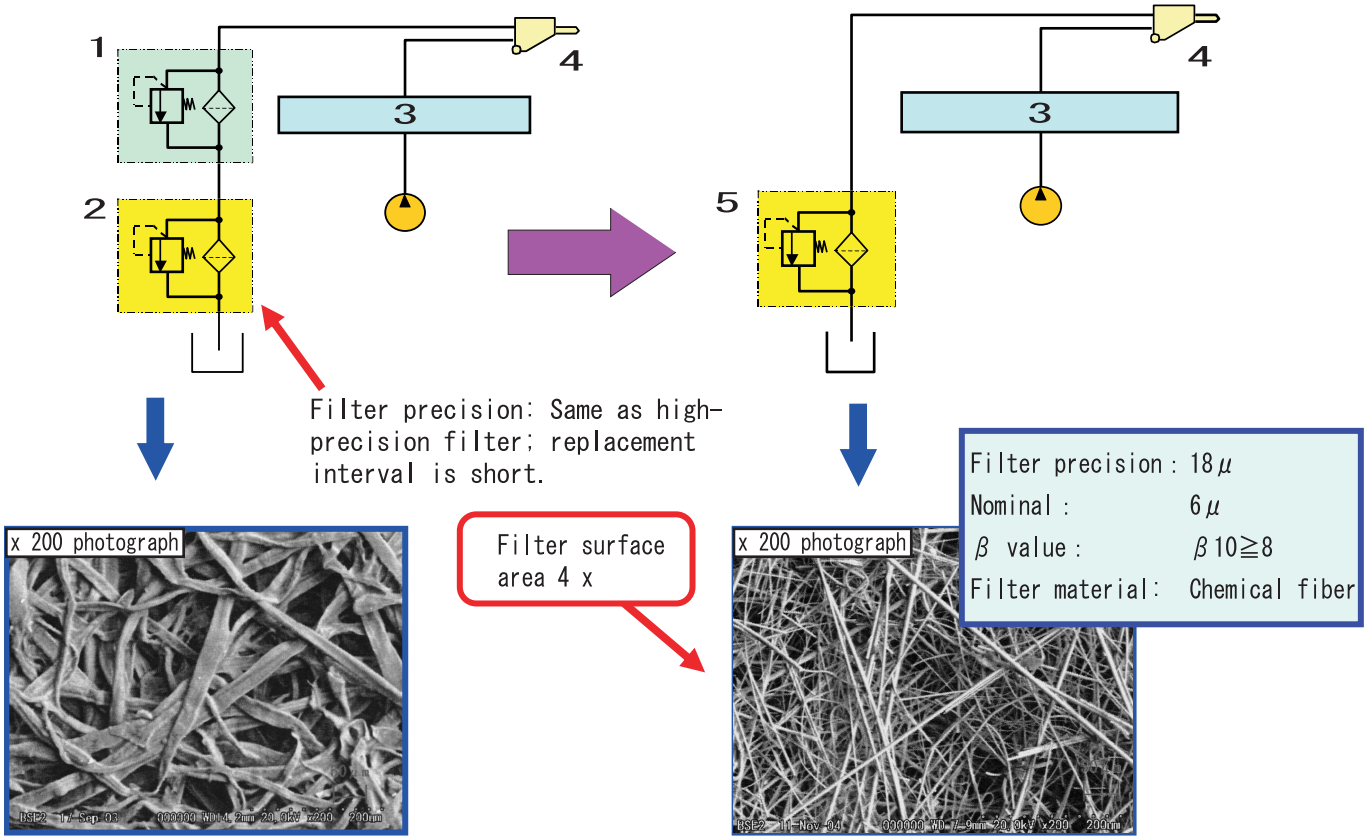

RB00005-009

1	Breaker filter	4	Breaker
2	Return filter	5	High-precision return filter
3	Control valve		

https://truckmanualshub.com/

2. Use of Add-on Valve

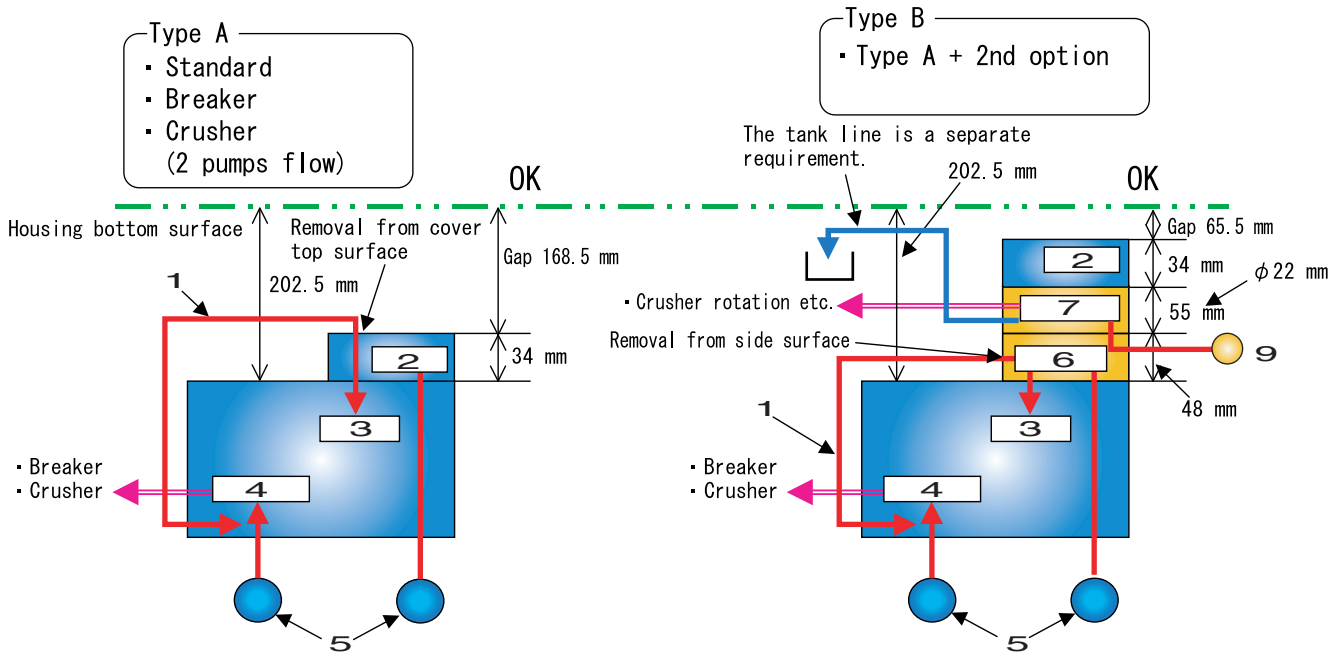

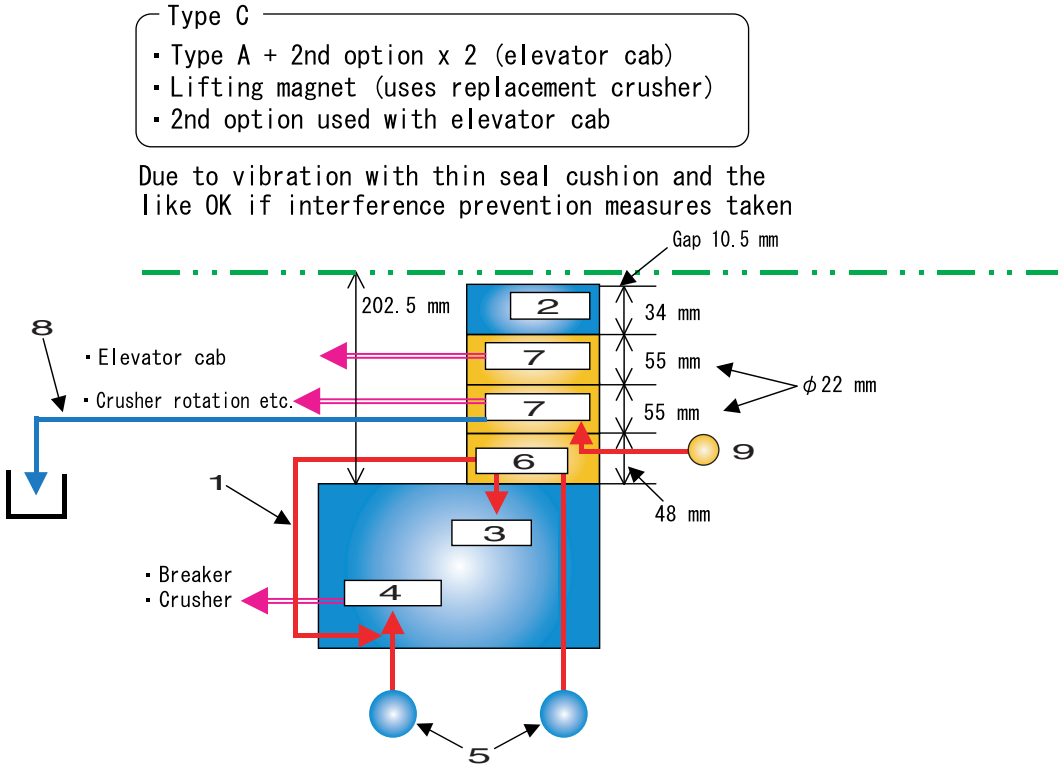

RB00005-001

1	Flow line	6	Inlet
2	Cover	7	2nd option
3	Bypass cut valve	8	Tank line
4	Option	9	2nd option pump
5	Main pump		

https://truckmanualshub.com/

Changes from Model 3B

3. Multi-purpose Circuit Switched to One-touch Operation (breaker ⇔ crusher)

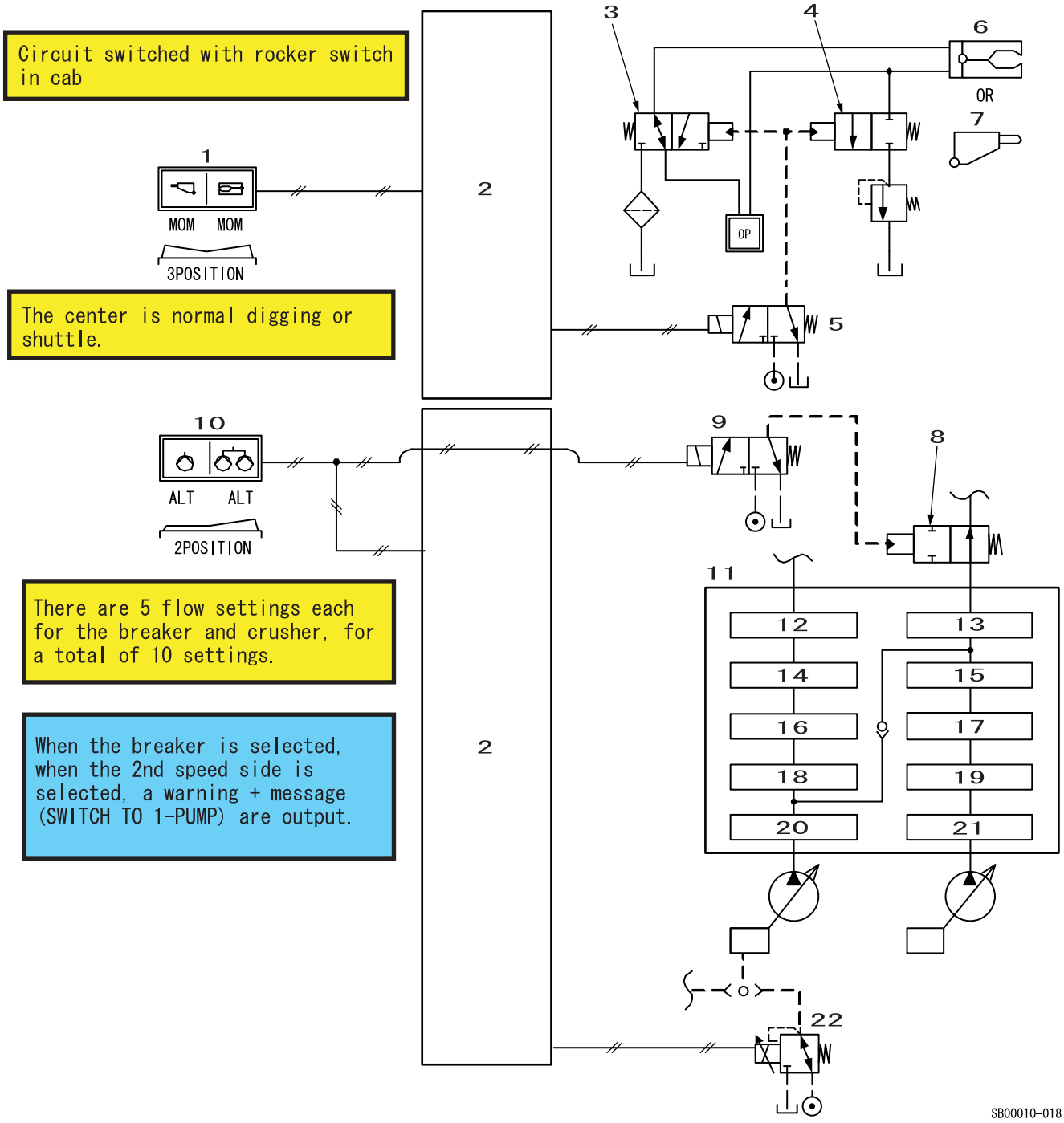

1	Option line select switch	9	Solenoid valve for 2 pumps flow	17	Bucket
2	Computer A	10	2 pumps flow switch	18	Option
3	3-direction valve	11	Control valve	19	Travel (right)
4	Pilot switchover valve	12	Arm (1)	20	Travel (left)
5	Option line switchover solenoid	13	Arm (2)	21	Straight travel
6	Crusher	14	Boom (2)	22	Flow shift proportional valve
7	Breaker	15	Boom (1)		
8	Bypass cut valve	16	Swing		

https://truckmanualshub.com/

4. Hydraulic Pump

(1) Hydraulic pump changes

The basic structure is unchanged from that used in Model 3B.
The specifications changes and improvements are as follows.

- Increased discharge volume (higher slope) 140 cc/rev → 150 cc/rev
- Horsepower setting reviewed (each mode) and horsepower increased
- Proportional valve and shuttle valve added to front side pump negative control section
  Swing speed limit, swing relief cut, option flow setting, reduced flow for non-operation (energy saving)
- Shuttle valve added to rear-side pump negative control section Reduced flow during non-operation (energy saving)
- Valve plate notch shape changed and through-bolt section covered to reduce noise
- Addition of O-ring to regulator piston section not implemented (clearance space filled in) Leak amount reduction (increased efficiency)

(2) Appearance changes

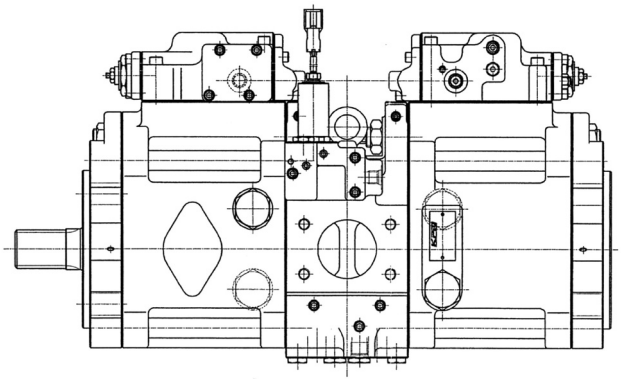

Model 3B

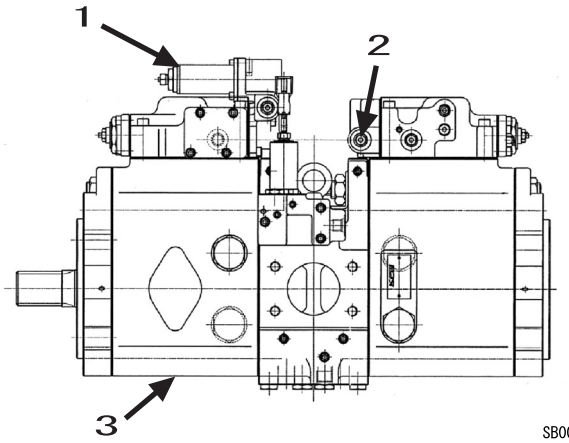

Model 5

1	Proportional valve added
2	Shuttle valve port added
3	Through bolt section film cover

(3) Circuit changes

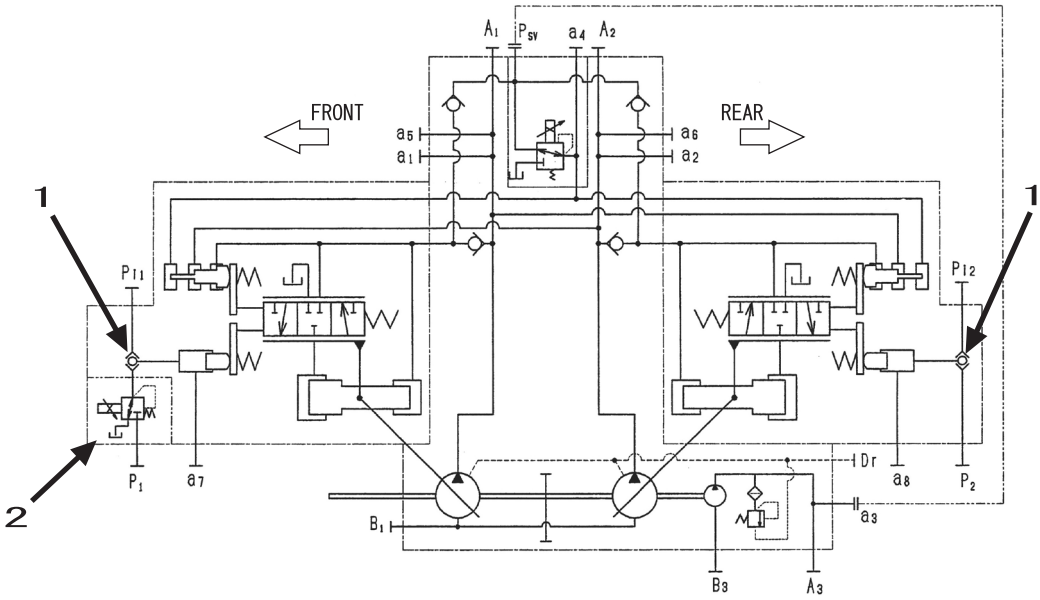

1	Shuttle valve added
2	Proportional valve added

https://truckmanualshub.com/

5. Swing Motor

Manufacturer changed from Toshiba Machine Co., Ltd. to Kawasaki Precision Machinery Ltd.
Along with this change, the installation method for the reduction gear to the motor also changed.

	Model 3B	Model 5
Manufacturer	Toshiba Machine Co., Ltd.	Kawasaki Precision Machinery Ltd.
Type	MFC200	M5X180
Intake amount	187.7 cm^3/rev	180.0 cm^3/rev

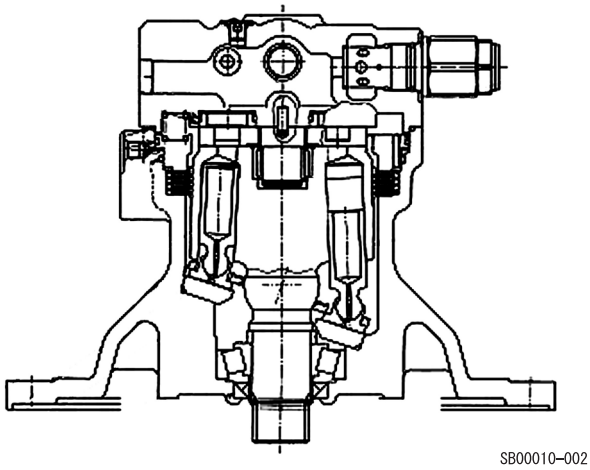

Model 3B

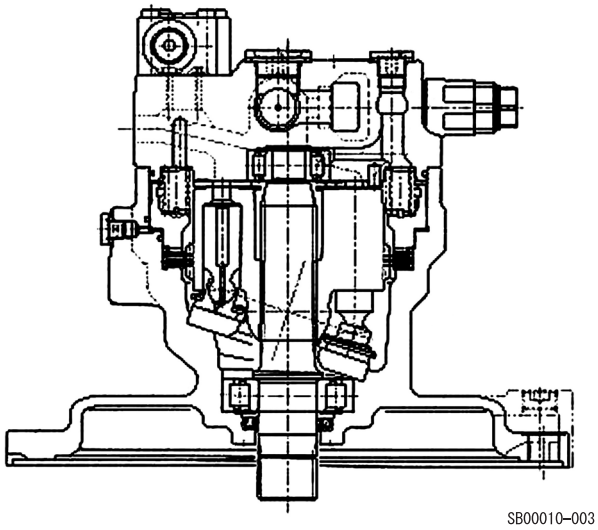

Model 5

https://truckmanualshub.com/

6. Reduced Flow Force

By changing the structure in the control valve, the hydraulic oil flow has been reviewed and the resistance (flow force) was reduced to greatly improve fine operability and provide a linear response that better approximates human sensation.

Lever stroke and ATT correlation diagram (image diagram)

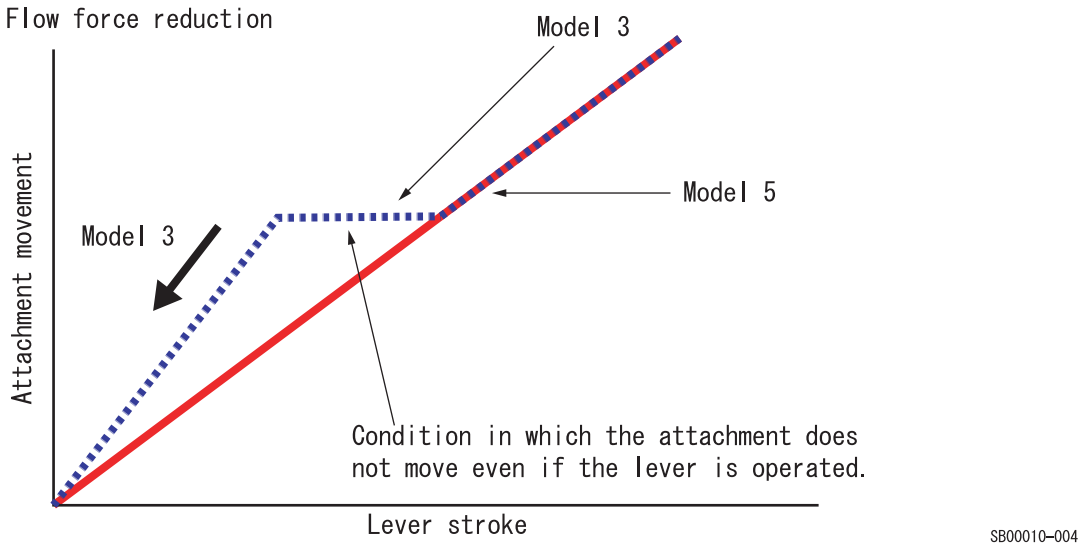

This is when it is effective!

- For hanging work, precision work (positioning), etc., the cylinder movement is linked linearly to the operation lever movement.
- For fine operation, such as pin hole position alignment when replacing the bucket
- For fine work such as leveling and grading
- Even for work that requires speed, such as continuous piling, even for compound operations, the operation feel is smooth and stress-free.
  This is one example of a swing line.
  The hydraulic oil flow has been changed to have the same direction as the spool.
  The resistance (flow force) has been reduced and smooth movement attained.
  The same type of improvements has been made at many locations to improve the operability.

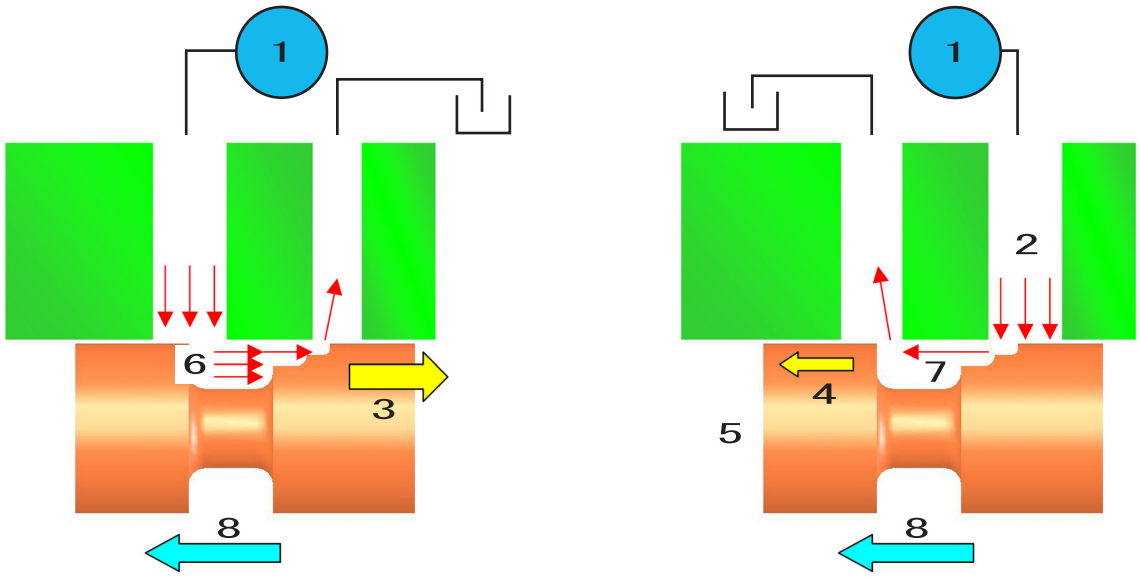

1	Motor	5	Same direction as spool movement
2	Path within valve is changed.	6	High flow enters the spool.
3	Fluid force; High	7	Low flow within spool
4	Fluid force; Low	8	Direction in which the spool is moved

https://truckmanualshub.com/

7. Straight Travel Valve

Improved operability during simultaneous upper side and travel operation
Even when the lever is operated during traveling, the travel speed is smoothly reduced according to the degree of lever operation.

This is when it is effective!

In traveling on steep slopes for construction in mountainous areas (afforestation-related civil works, construction of new forest roads, etc.), the operator would have to simultaneously perform traveling and arm operation.
When the arm is moved, the ratio of hydraulic oil flowing to the travel motor is reduced. The straight travel valve is adjusted according to upper lever operation to enable shock-free speed reduction and ensure straight travel stability.

Model 3B/5 independent travel | Model 3B compound operation | Model 5 compound operation

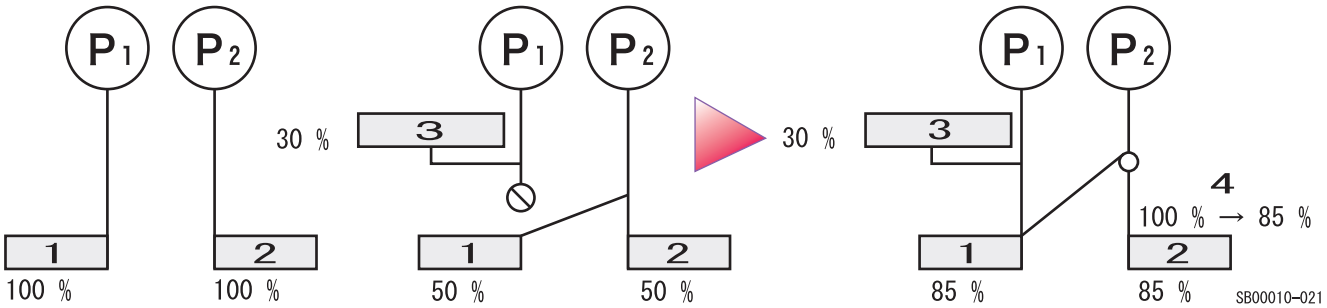

1	Right travel	3	Boom operation
2	Left travel	4	Flow setting with straight travel valve

Model 5 circuit

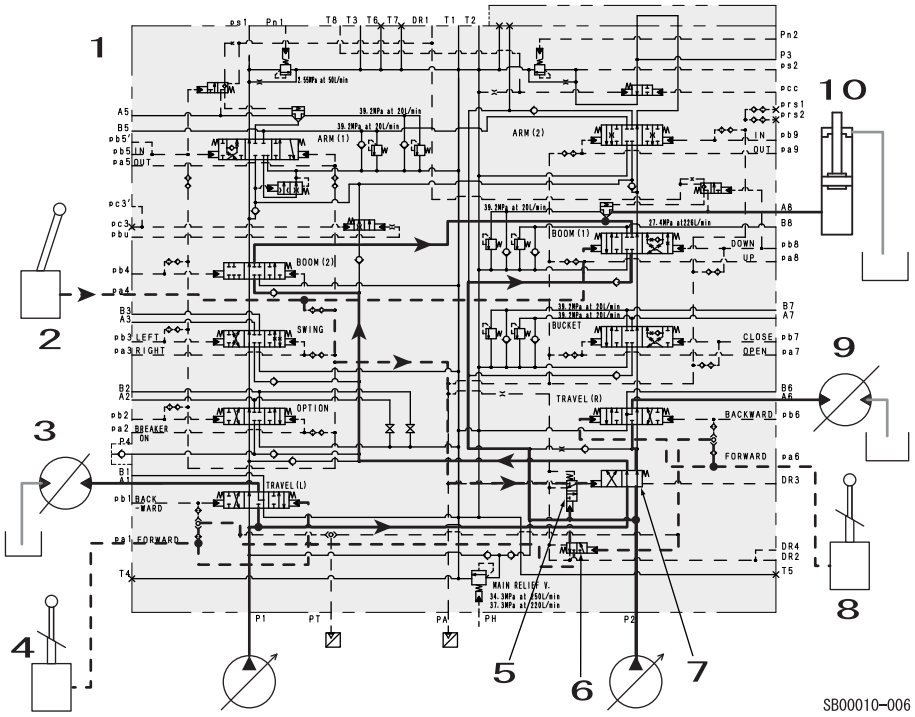

1	Control valve
2	(Upper) Remote control valve
3	Left travel motor
4	Left travel remote control valve
5	Straight travel signal (left)
6	Straight travel signal (right)
7	Straight travel valve
8	Right travel remote control valve
9	Right travel motor
10	Boom cylinder

This is an example of simultaneous boom-up operation and travel.
Through upper (boom-up) lever operation, the pilot pressure oil from the remote control valve flows in the control valve Pa4 port and the boom spool is switched. At the same time, the pilot pressure oil split internally is fed to the straight travel valve via the straight travel signal (left) and the straight travel spool is switched.
The amount of switching of the straight travel spool varies with the upper (boom-up) pilot pressure. This prevents any sharp drop in travel speed.

https://truckmanualshub.com/

8. Heat Circuit

Faster warm up

The pilot line warms up more quickly due to a change in oil flow so that the heated oil returns through the remote control valve.

When heat circuit is operated (for arm and boom single-side operation), warm-up speed increase (cushion valve).

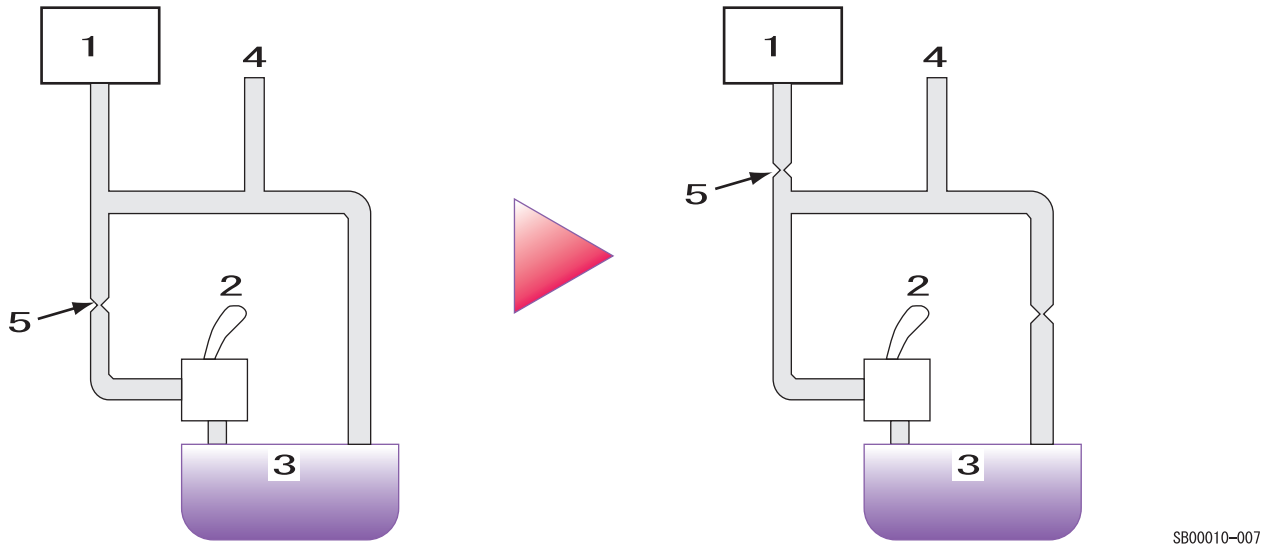

Model 3B

Model 5

*** There is no soft/hard switch.**

With the circuit change, the metering position is optimized,
which increases the warm-up oil flow and shortens warm-up time.

1	Control valve
2	Remote control valve
3	Tank
4	Warmed up oil in main line
5	Cushion orifice

https://truckmanualshub.com/

Changes from Model 3B

Model 3B circuit

Almost all the heated oil was dropped into the tank and it was difficult to heat the pilot line.

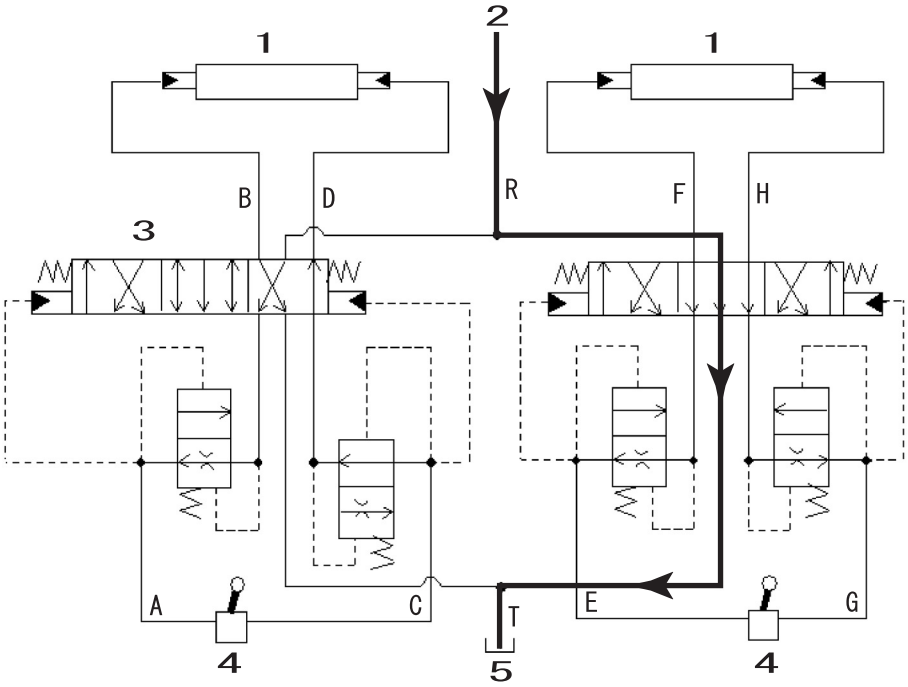

RST-02-00-001ik

1	Control valve spool	4	Remote control valve
2	Return line	5	Tank line
3	Cushion valve		

Model 5 circuit

In neutral, since an orifice has been put at the reverse notch spool, almost all the heated oil is sent to the pilot line.

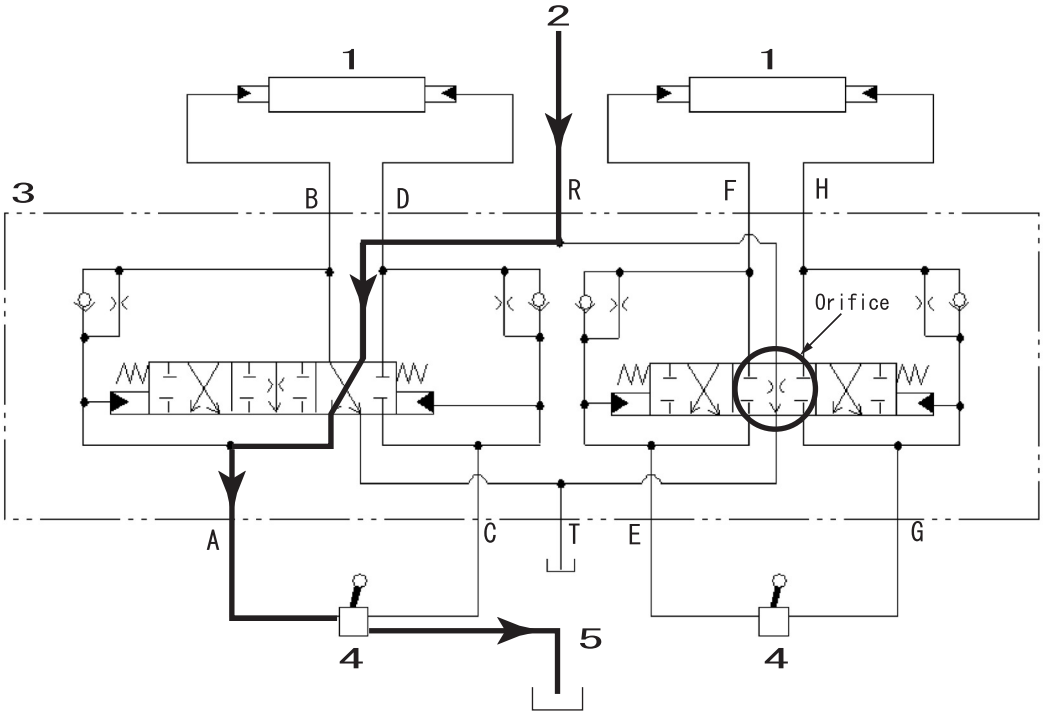

RB00004-005

1	Control valve spool	4	Remote control valve
2	Return line	5	Tank line
3	Cushion valve		

https://truckmanualshub.com/

Lower-section Related Changes

1. Grease Bath Seal

Model 3B

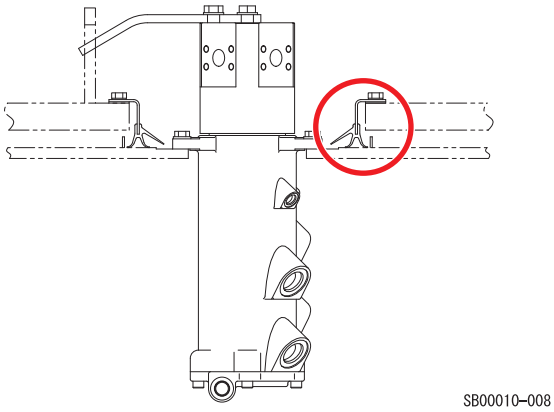

There is a high possibility of water penetration due to entry of foreign matter.

Model 5

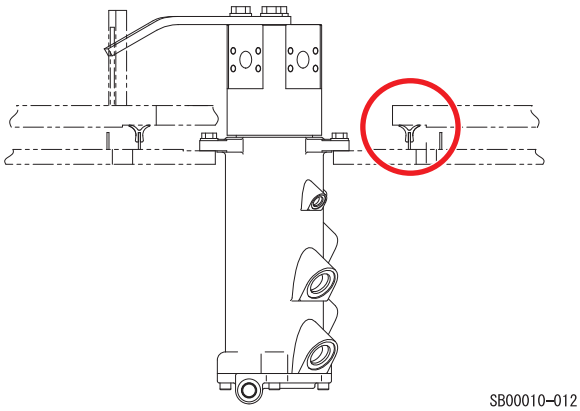

The upper seal structure minimizes entry of foreign matter.

https://truckmanualshub.com/

Changes from Model 3B

Cab-related Changes

1. Cab Shape
   - Increased strength (irregularly shaped steel line structure used)
   - Improved field of vision (single sheet of glass used for right window)
   - Sense of luxury added (size of operation section, optimization of operation force)

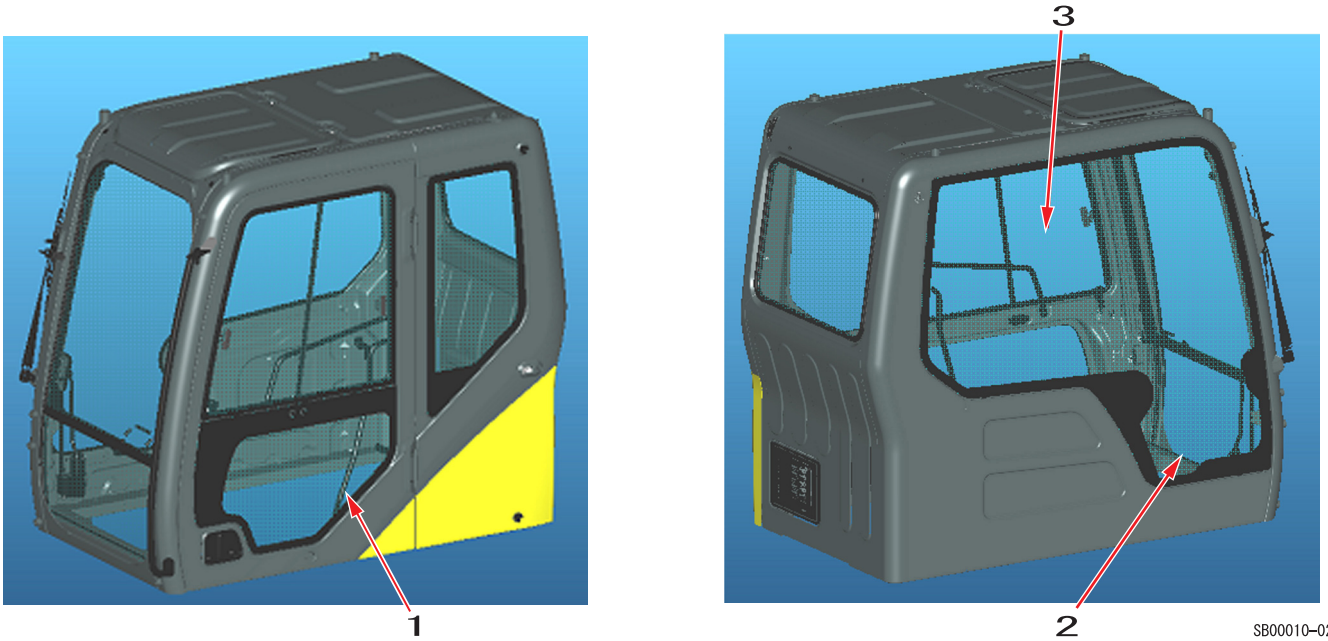

1	Enlargement of bottom left field of vision
2	Enlargement of front right field of vision
3	Right window glass surface area : × 1.6

2. Irregularly Shaped Steel Line Structure

Cab cross-section

Plate thickness: t = 2 mm Plate thickness: t = 3.2 mm

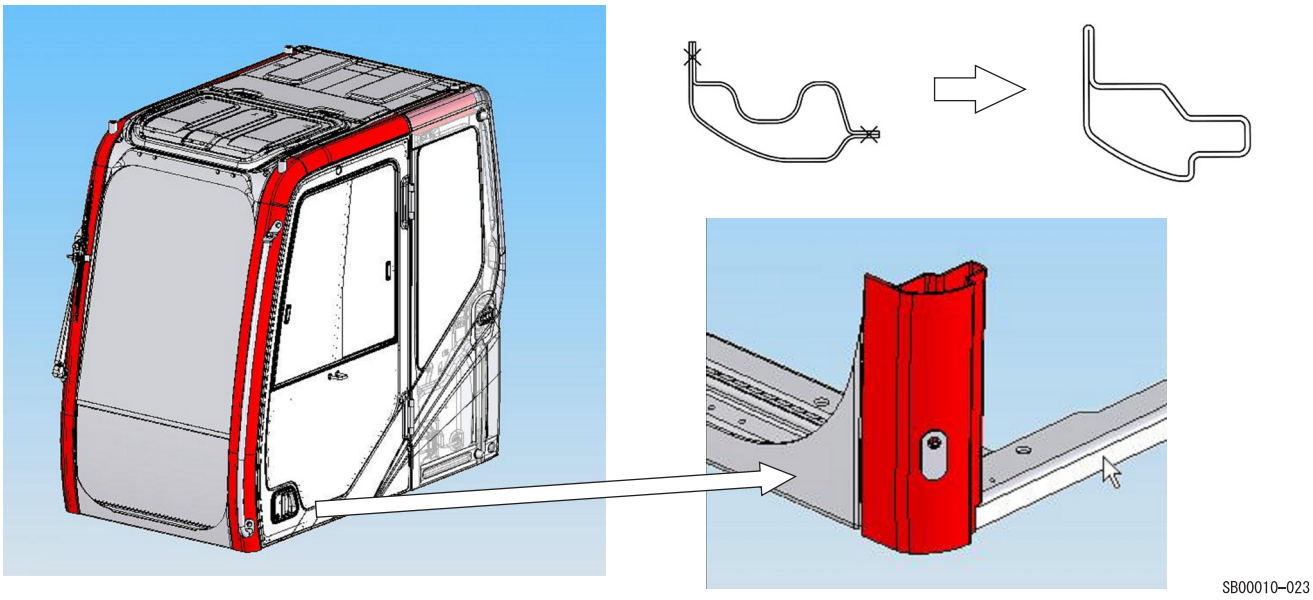

https://truckmanualshub.com/

3. Beefed-up Equipment

Head guard fastening possible as standard feature

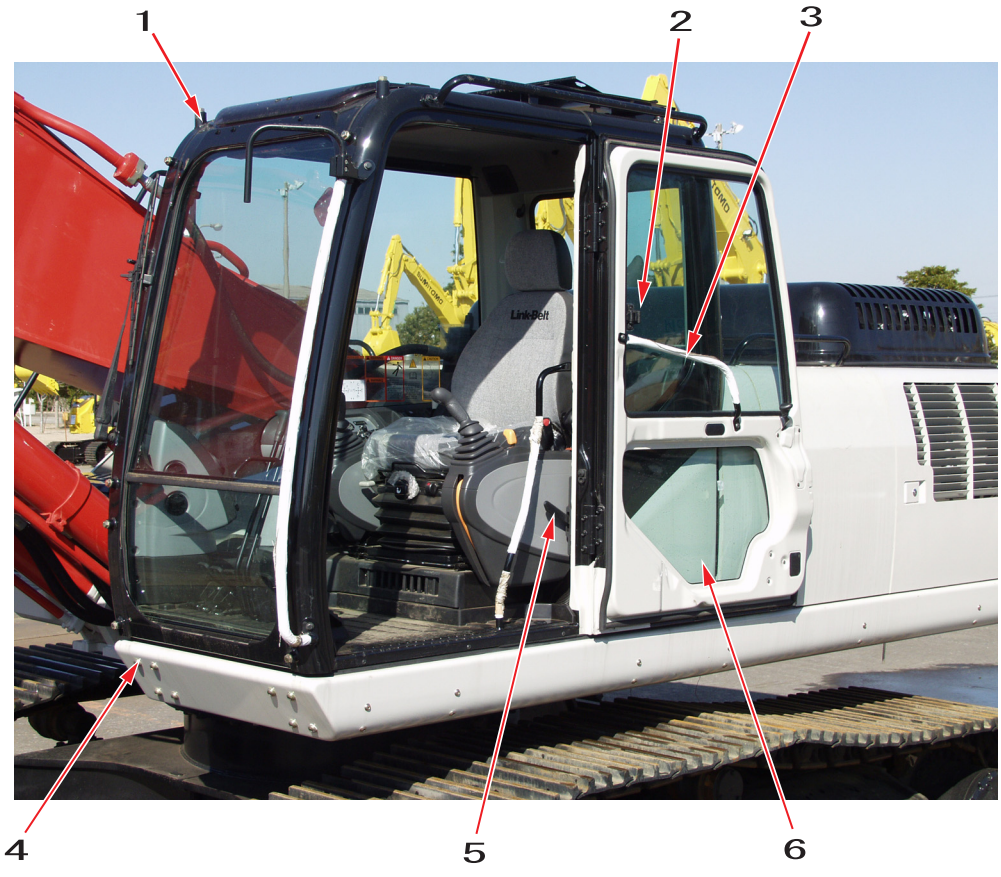

Option support

1	Ceiling seat shifted to boss
2	Sash and slide lock made larger
3	Door inside handrail made larger
4	Front seating converted to boss Seating strengthened
5	Door open lock release lever made larger
6	Glass under door made larger
7	Standard standby of cab front light harness
8	Clear sunroof
9	Cab front light, sunvisor installation bolt

https://truckmanualshub.com/

4. Interior Equipment

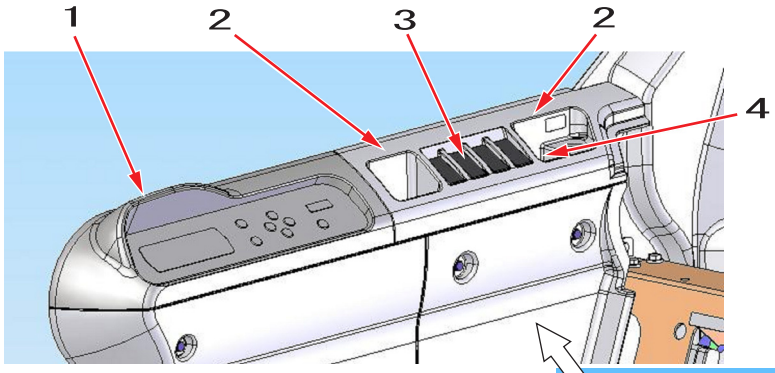

Right side

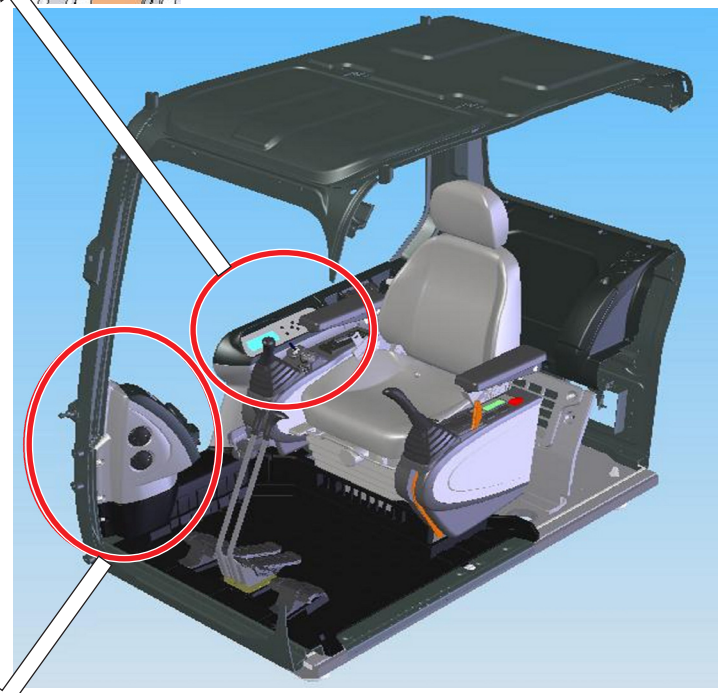

RST-02-00-001fd

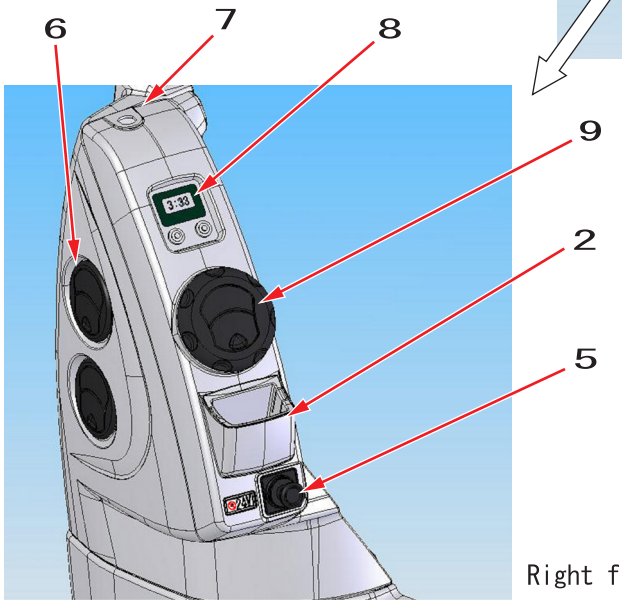

Right front side

1	Monitor panel
2	Glove box
3	Rocker switch space
4	DC accessory socket
5	Cigar lighter
6	AC defroster grille
7	Solar radiation sensor
8	Clock
9	AC face grille

https://truckmanualshub.com/

Right console

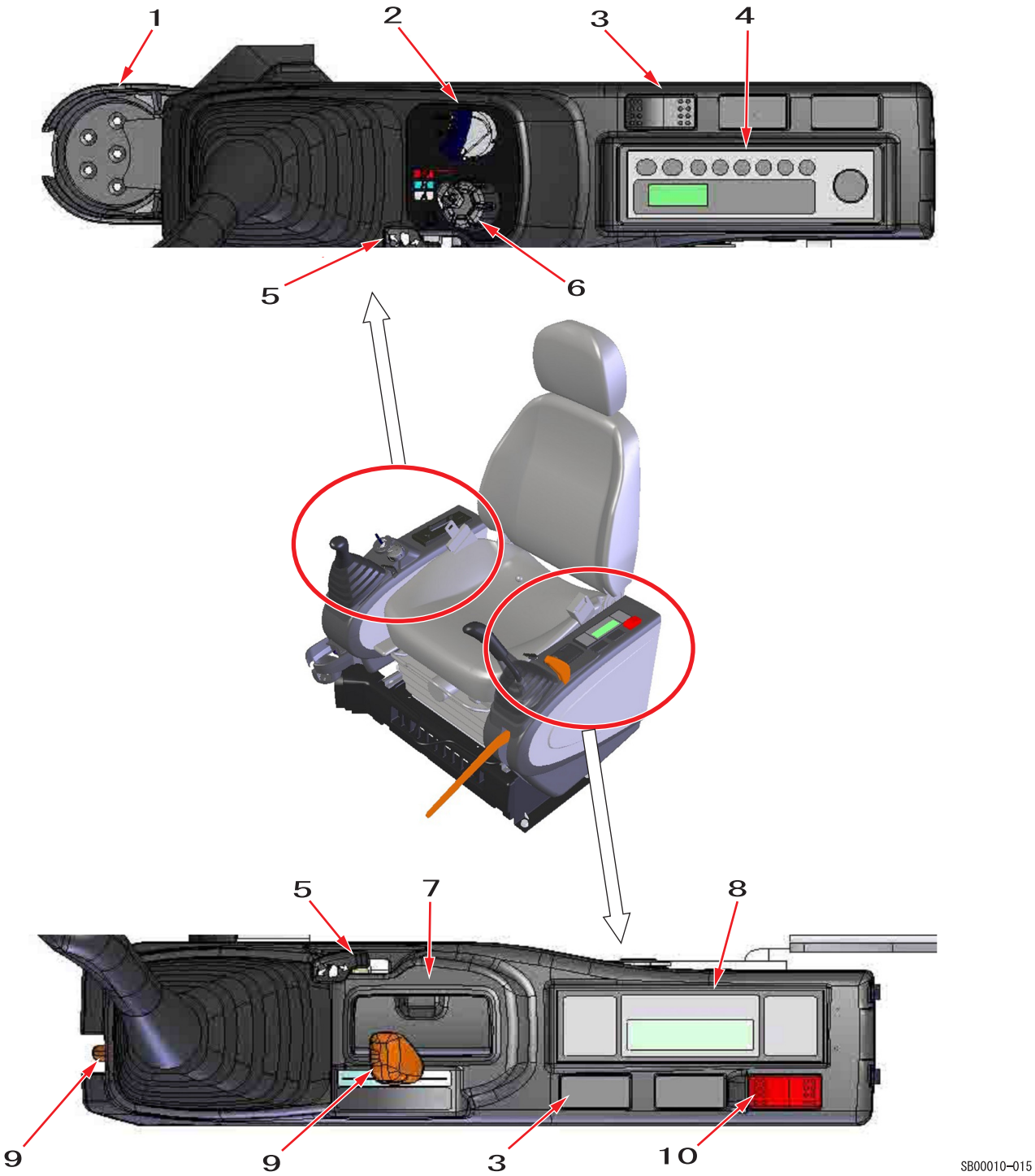

Left console

1	Cup holder
2	Key switch
3	Rocker switch space
4	AM/FM radio
5	Tilt lever
6	Throttle volume
7	Ashtray
8	AC control panel
9	Gate lever
10	Engine emergency stop switch

https://truckmanualshub.com/

Changes from Model 3B

Rear section

Can hold large lunch box

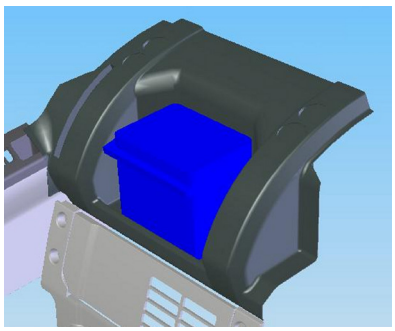

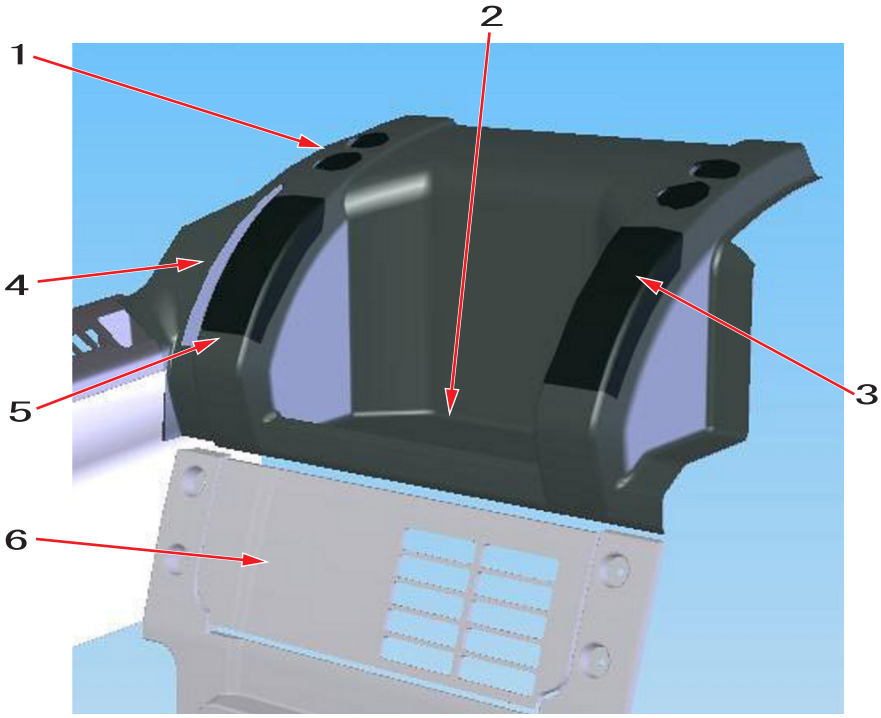

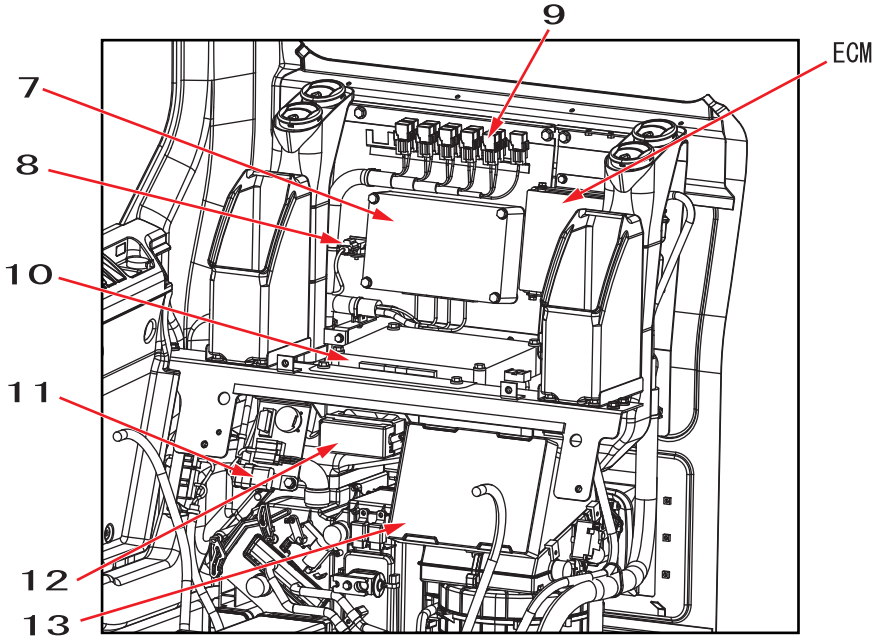

SB00010-016

1	AC rear vent grille
2	Large tray
3	Utility box
4	Magazine rack
5	Hot and cool box
6	Maintenance space
7	Computer A
8	Atmospheric pressure sensor
9	Relay
10	Computer B
11	Computer A rewriting connector
12	Fuse box
13	Air conditioner inside air filter

https://truckmanualshub.com/

5. Front Window Lock Mechanism

Model 3

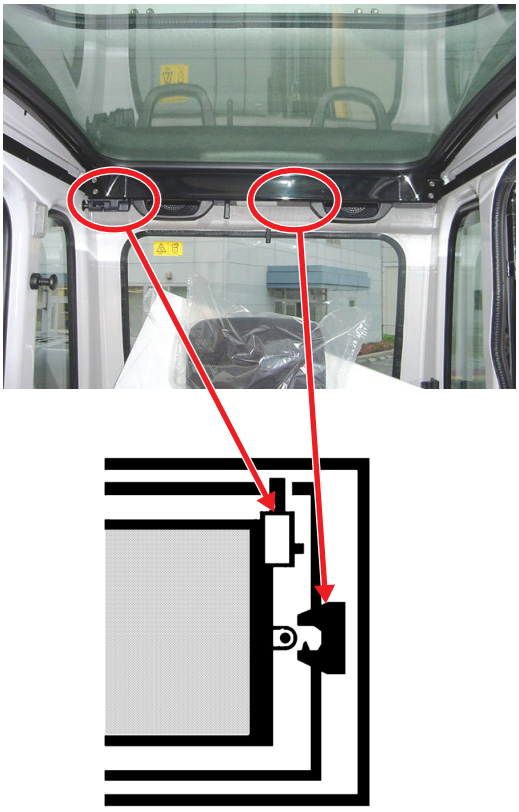

Model 5

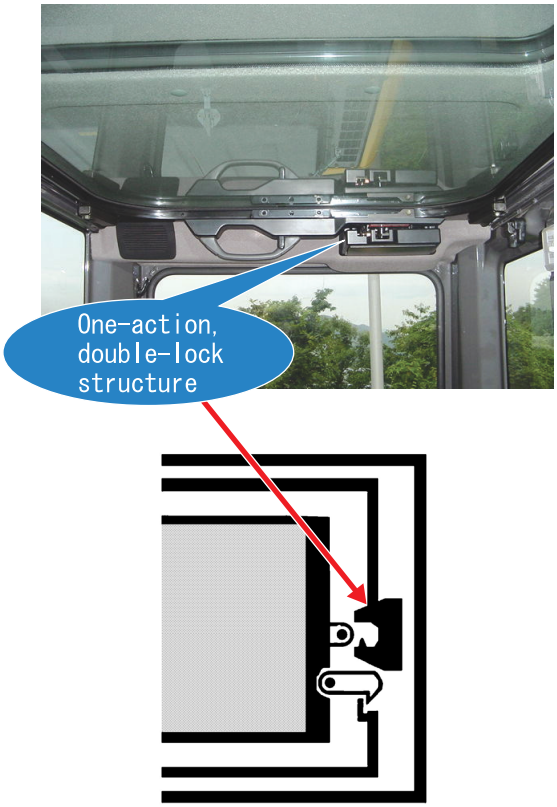

SB00010-017

The front window open lock mechanism uses 2 lock mechanisms to secure the minimum required safety (fail safe).
(1) Auto lock section
(2) Safety lock (secondary lock) section

https://truckmanualshub.com/

Changes from Model 3B

Attachment Changes

1. Boom

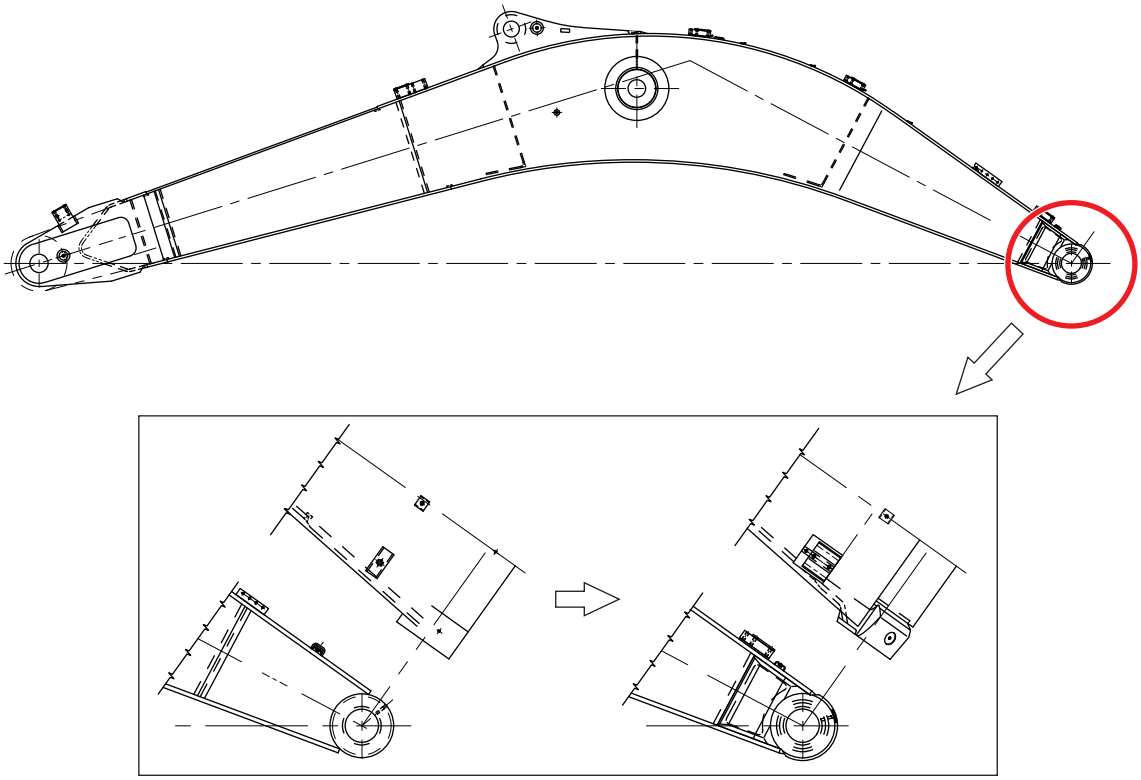

Boom foot boss changed to forging

2. Line Clamp

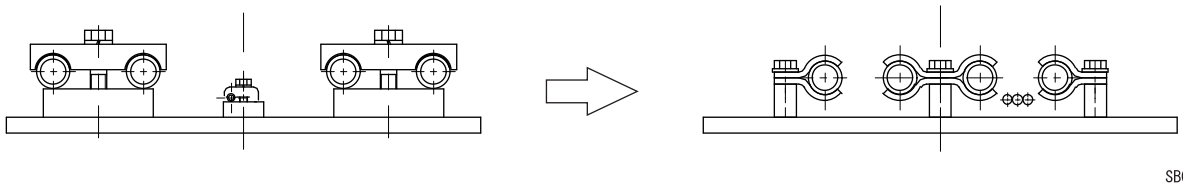

Option line added through added seating processing on boom side surface

Boom seating converted to shared 2-layer structure and clamp shape changed

https://truckmanualshub.com/

Overall

1. Main Data

Model name	SH330-5	SH330LC-5	SH350HD-5	SH350LHD-5
Operating weight	33400 kg	34000 kg	35600 kg	36100 kg
Engine output	202 kW/2000 min^{-1}			
Bucket capacity	Heaped 1.40 m^3			
	Leveled 1.04 m^3			

2. Performance

	SH330-5	SH330LC-5	SH350HD-5	SH350LHD-5
Standard weight	18.0 kN			
Swing speed	9.8 min^{-1}			
Travel speed	Low speed 3.5 km/h			
	High speed 5.5 km/h			
Maximum pulling force	265 kN			264 kN
Grade ability	70 % (35°)			
Ground pressure	67 kPa (600 mm grouser shoe)	64 kPa (600 mm grouser shoe)	72 kPa (600 mm grouser shoe)	67 kPa (600 mm grouser shoe)
	52 kPa (800 mm grouser shoe)	49 kPa (800 mm grouser shoe)	55 kPa (800 mm grouser shoe)	51 kPa (800 mm grouser shoe)

3. Main Unit Dimensions

	SH330-5/SH350HD-5	SH330LC-5	SH350LHD-5
Main unit length	5750 mm	5910 mm	
Main unit width	3200 mm		
Upper swing body width	3020 mm		3120 mm
Cab width	1000 mm		
Main unit height	3130 mm		
Swing radius (rear end)	3450 mm		
Swing body rear end distance	3420 mm		
Swing body rear section bottom height	1210 mm		
Distance between tumblers	3720 mm	4040 mm	
Overall track length	4650 mm	4980 mm	
Overall track width	3200 mm		
Distance between tracks	2600 mm		
Track shoe width	600 mm (option 800 mm)		
Minimum ground clearance	480 mm (to bottom of lower frame)		

https://truckmanualshub.com/

4. Engine

	SH330-5/SH330LC-5/SH350HD-5/SH350LHD-5		
Name	Isuzu 6HK1X diesel engine		
Model	4-cycle, water cooled, overhead camshaft, vertical in-line, direct injection type (electronic control), with turbocharger		
Number of cylinders - bore x stroke	6 - ϕ 115 mm x 125 mm		
Total stroke volume	7790 cc		
Maximum torque	1080 N•m/1500 min^{-1} min.		
Fuel consumption ratio	234.6 g/kW•h max.		
Starter	24 V	5.0 kW	Reduction type
Charging generator	24 V	50 A	AC type
Battery	12 V	128 Ah/5 HR	x 2

5. Cooling System

	SH330-5/SH330LC-5/SH350HD-5/SH350LHD-5
Fan type	ϕ850 mm x 6 Intake
Radiator	
Fin type	Wavy
Fin pitch	2.0 mm
Oil cooler	
Fin type	Wavy
Fin pitch	1.75 mm
Inter cooler	
Fin type	Triangular straight
Fin pitch	2.0 mm
Fuel cooler	
Fin type	Wavy
Fin pitch	2.0 mm

https://truckmanualshub.com/

6. Upper Side Work System

	SH330-5/SH330LC-5			SH350HD-5/SH350LHD-5	
Model	Backhoe attachment				
Components, dimensions, working dimensions					
Standard bucket capacity	Heaped 1.40 m^3 (leveled 1.04 m^3)				
Bucket width	1300 mm			1310 mm	
Bucket width with side cutter	1440 mm			1420 mm	
Bucket weight with side cutter	1150 kg			1480 kg	
Boom length	6450 mm				
Arm type	Standard (STD/HD) (3.25 m)	Long (4.04 m)	Short (2.63 m)	Standard (HD) (3.25 m)	Short (HD) (2.63 m)
Arm length	3250 mm	4040 mm	2630 mm	3250 mm	2630 mm
Bucket radius	1680 mm				
Bucket wrist angle	173°				
Maximum digging radius	11170 mm	11900 mm	10670 mm	11170 mm	10670 mm
Maximum digging radius at ground line	10980 mm	11720 mm	10470 mm	10980 mm	10470 mm
Maximum digging depth	7340 mm	8140 mm	6730 mm	7340 mm	6730 mm
Maximum vertical straight wall digging depth	6350 mm	7150 mm	5970 mm	6350 mm	5970 mm
Maximum digging height	10370 mm	10670 mm	10320 mm	10370 mm	10320 mm
Maximum dump height	7230 mm	7540 mm	7140 mm	7230 mm	7140 mm
Minimum swing radius at front	4500 mm	4560 mm	4630 mm	4500 mm	4630 mm
Height for minimum swing radius at front	8480 mm	8490 mm	8540 mm	8480 mm	8540 mm

7. Operating Device

	SH330-5/SH330LC-5/SH350HD-5/SH350LHD-5
Operator's seat	
Position	Left side
Structure	Adjustable forward and back and up and down, reclining mechanism, with seat suspension
Cab	Sealed steel type, all reinforced glass
Levers and pedals	
For travel use	Lever and pedal type (hydraulic pilot type) x 2
For operating machine use	Lever type (hydraulic pilot type) x 2
Instruments and switches	
Work mode select switch	3 modes (SP/H/A)
Travel mode select switch	Low-speed / high-speed switch type
One-touch idle	Knob switch type
Engine emergency stop	Switch type

https://truckmanualshub.com/

	SH330-5/SH330LC-5/SH350HD-5/SH350LHD-5
Monitor device	
Machine status display (full dot liquid crystal)	
Work mode select status	SP/H/A
Instrument (full dot liquid crystal except for hour meter)	
Fuel gauge	Bar graph indicator
Engine coolant temperature gauge	Bar graph indicator
Hydraulic oil temperature gauge	Bar graph indicator
Hour meter	Digital type
Machine status and warnings (full dot liquid crystal and warning alarm)	* has warning alarm
Overheat * / Battery charge * / Electrical system abnormality * / Refill fuel * / Engine oil pressure * / Refill coolant * / Engine pre-heat Auto Warm-up Air cleaner * / Anti-theft device triggered Engine system abnormality * / Engine emergency stop *	
Illumination equipment	
Working light Cab top:	24 V 70 W x 1
Boom up:	24 V 70 W x 1
Interior light	4 V 10 W x 1
Horn	Electric horn x 2
Other	Wiper with intermittent function, window washer, air conditioner, clock, rear view mirrors (left and right) 1 each

8. Swing Units

	SH330-5/SH330LC-5/SH350HD-5/SH350LHD-5
Swing circle	Swing bearing type (with inner gear)
Swing hydraulic motor	Fixed displacement piston motor x 1
Reduction gear	Planetary gear 2-stage reduction gear
Swing parking brake	Mechanical lock (operational lever linkage type)

https://truckmanualshub.com/

9. Travel Lower Body

	SH330-5/SH350HD-5	SH330LC-5/SH350LHD-5
Travel hydraulic motor	Variable displacement piston motor x 2	
Reduction gear	Planetary gear 3-stage reduction gear	
Travel brake	Hydraulic lock	
Parking brake	Mechanical lock (travel lever linkage type)	
Track shoe		
Model	Assembly-type triple grouser shoe	
Number of shoes (per side)	45	48
Shoe width	600 mm (option 800 mm)	
Grouser height	36 mm	
Link pitch	216 mm	
Roller		
Number of upper rollers (per side)	x 2	
Number of lower rollers (per side)	x 7	x 8
Track belt tension adjuster	Grease cylinder type (with cushion spring)	

Hydraulic Equipment

1. Hydraulic Device

	SH330-5/SH330LC-5/SH350HD-5/SH350LHD-5
Hydraulic pump drive type	Direct engine link (no transmission)
Hydraulic pump	
Model	Double variable displacement piston pump x 1
	Gear pump x 1
Discharge volume	Piston pump 2 x 290 L/min
	Gear pump 30 L/min
Pump control method	Simultaneous output full-horsepower control
Set pressure of main relief valve	34.3 MPa (37.3 MPa for boost)
Set pressure of overload relief valve	27.4 MPa (boom down)
	39.2 MPa (other)

https://truckmanualshub.com/

2. Control Valve, Cylinder

	SH330-5/SH330LC-5/SH350HD-5/SH350LHD-5
Control valve	
Model	Quadruple spool Quintuple spool One-piece type x 1
Operating method	Hydraulic pilot type: travel, swing, and operating machine
Cylinder	Number of cylinders x tube bore - rod diameter - stroke
Boom cylinder	2 x ϕ145 mm - ϕ100 mm - 1495 mm
Arm cylinder	1 x ϕ170 mm - ϕ120 mm - 1748 mm
Bucket cylinder	1 x ϕ150 mm - ϕ105 mm - 1210 mm

Capacities, Filters

1. Coolant and Oil Capacities

	SH330-5/SH330LC-5/SH350HD-5/SH350LHD-5
Coolant	30 L
Fuel	578 L
Engine lubricating oil	38 L
Travel reduction gear lubricating oil (one side)	11 L
Swing reduction gear lubricating oil	6 L
Hydraulic oil	350 L
Hydraulic oil tank regulation amount	175 L

2. Hydraulic Oil Filters

	SH330-5/SH330LC-5/SH350HD-5/SH350LHD-5
Suction filter (inside tank)	105 μm
Return filter (inside tank)	6 μm
Pilot line filter (inside housing)	8 μm

3. Fuel Filter

	SH330-5/SH330LC-5/SH350HD-5/SH350LHD-5
Main filter	4 μm
Pre-filter	10 μm

https://truckmanualshub.com/

Precautions for lifting loads with the hydraulic excavator

Discuss the procedures in advance

RB02001-001

1. Operators and those who handle rigging must be trained for those specific purposes.
2. Use a sling that is sturdy enough. Also, use a device designed to prevent loads from falling.

Take measures to ensure safe operation

1. Specify signals to be used for lifting loads and designate a signal person for the entire course of operation.

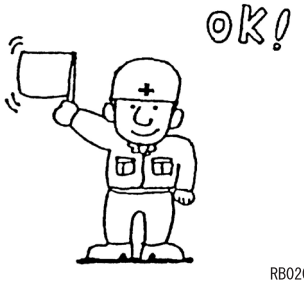

RB02001-002

2. Work on a level surface. (Working on a slope can cause the machine to overturn and fall.)

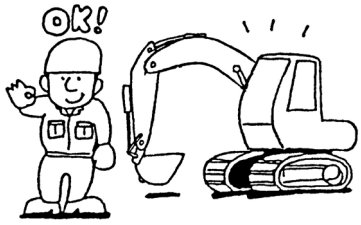

RB02001-003

3. If you are on a slope, level out the footing before starting to work.

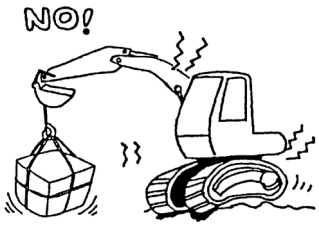

RB02001-004

4. Do not allow anyone to be under the suspended load or at other dangerous areas.

RB02001-005

5. Do not lift a load exceeding the rated capacity. (The machine can overturn and jeopardize the safety of workers.)

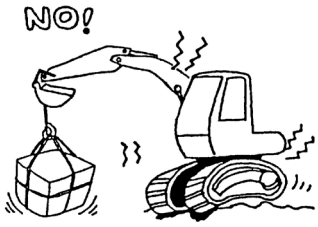

RB02001-006

6. The wire ropes and the chains for rigging must be sturdy enough and be free of disfigurement and corrosion.

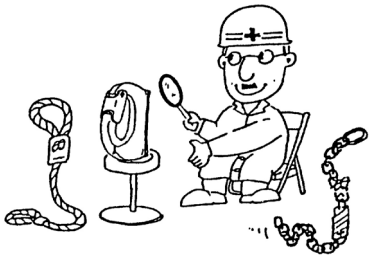

RB02001-007

Use wire ropes with safety factor 6 or greater.

Use lifting chains with safety factor 5 or greater.

Caution

[1] The operators must be trained specifically.

[2] The weight of the loads and the rigging equipment combined must not exceed the maximum load value.

[3] During the crane operations, lower the engine speed (mode A) and keep working at low engine speed.

[4] Be extra careful while carrying out the swing operations. Move the machine slowly.

[5] Do not leave the cab while you are suspending a load.

[6] Do not travel any distance while you are suspending a load.

[7] Sling the load in such a manner that the wire rope and the ring do not get detached from the hook.

[8] If the bucket hook, or the rigging equipment gets damaged during operation, stop the procedure and make necessary repairs.

[9] Please contact our authorized service shops when you wish to have hooks attached to your bucket.

https://truckmanualshub.com/

Lifting Capacity

Lifting Capacities (SH330-5)

1. Standard Arm (3.25 m), 600 Grouser Shoe

Bucket: 1.4 m^3

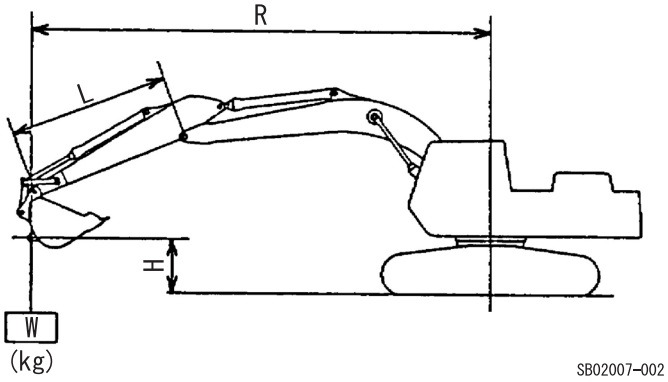

L: 3.25 m Arm length

R: Reach from swing center

H: Bucket hook height

W: Lifting capacity

We: Frontal rating load

Ws: Lateral rating load

MAX: Rating load at height point H and at maximum working reach

(Maximum working reach: 9.67 m) (Units; kg)

H \ R		Max.		9 m	8 m	7 m	6 m	5 m	4 m	3 m	2 m	Min.	
		W	R (m)									W	R (m)
7 m	We	4900 *	8.24		5880 *							7280 *	7.31
	Ws	4900 *	8.24		5630							6700	7.31
6 m	We	4580 *	8.83		7380 *							7600 *	7.03
	Ws	4570	8.83		5560							7060	7.03
5 m	We	4630 *	9.21	5790 *	7670 *	8110 *						8470 *	6.38
	Ws	4130	9.21	4330	5420	6890						8070	6.38
4 m	We	4750 *	9.48	6170	7580	8760 *	9740 *	11230 *				19580 *	2.22
	Ws	3820	9.48	4230	5250	6620	8550	11230 *				19580 *	2.22
3 m	We	4950 *	9.63	6040	7370	9200	10830 *	12960 *	16680 *	13770 *		9280 *	2.82
	Ws	3610	9.63	4100	5060	6330	8100	10790	15350	13770 *		9280 *	2.82
2 m	We	5220	9.67	5900	7170	8900	11400	14540 *	19190 *	7200 *		6850 *	2.98
	Ws	3490	9.67	3980	4870	6040	7680	10130	14220	7200 *		6850 *	2.98
1 m	We	5190	9.62	5780	6990	8630	11010	14810	20360 *	8060 *		6050 *	2.77
	Ws	3450	9.62	3870	4700	5800	7330	9620	13500	8060 *		6050 *	2.77
0 m	We	5270	9.45	5690	6840	8420	10720	14420	19960 *	10640 *		8150 *	2.26
	Ws	3490	9.45	3780	4560	5604	7070	9280	13140	10640 *		8150 *	2.26
-1 m	We	5480	9.17	5630	6740	8280	10540	14210	21160 *	13780 *	10040 *	9780 *	1.86
	Ws	3620	9.17	3720	4470	5470	6900	9100	12990	13780 *	10040 *	10590 *	1.67
-2 m	We	5850	8.77		6700	8210	10450	14130	20520 *	17360 *	13500 *	13180 *	1.86
	Ws	3870	8.77		4430	5410	6820	9030	12980	17360 *	13500 *	12460 *	1.41
-3 m	We	6470	8.22		6730	8210	10460	14160	19390 *	21510 *	17120 *	16730 *	1.86
	Ws	4290	8.22		4450	5410	6830	9060	13080	21510 *	17120 *	15740 *	1.41
-4 m	We	7500	7.50			8310	10550	14300	17670 *	22090 *	21150 *	20660 *	1.86
	Ws	5000	7.50			5500	6910	9180	13270	22090 *	21150 *	19390 *	1.41
-5 m	We	9040 *	6.55				10250 *	12510 *	15170 *	18630 *		23640 *	2.03
	Ws	6260	6.55				7110	9410	13590	18630 *		23640 *	2.03
-6 m	We	8690 *	5.24					9240 *	11420 *			12250 *	3.63
	Ws	8690 *	5.24					9240 *	11420 *			12250 *	3.63

*Hydraulic pressure factor: 87.0%. Without asterisk: Stability factor: 75.0%

https://truckmanualshub.com/

2. Short Arm (2.63 m), 600 Grorser Shoe

Bucket: 1.6 m^3

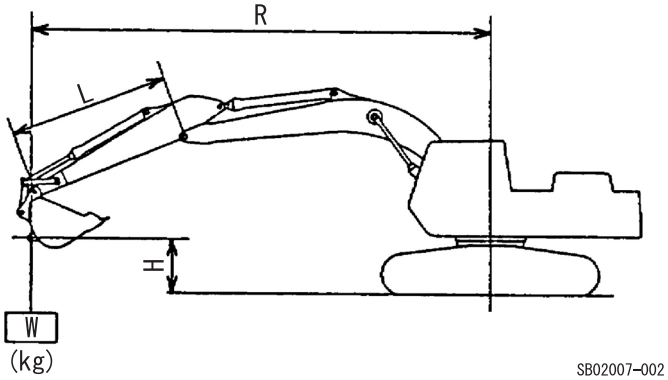

L: 2.63 m Arm length

R: Reach from swing center

H: Bucket hook height

W: Lifting capacity

We: Frontal rating load

Ws: Lateral rating load

MAX: Rating load at height point H and at maximum working reach

(Maximum working reach: 9.18 m) (Units; kg)

H \ R		Max. W	Max. R (m)	9 m	8 m	7 m	6 m	5 m	4 m	3 m	2 m	Min. W	Min. R (m)
7 m	We	7900 *	7.51			8080 *						8140 *	6.69
	Ws	6160	7.51			7050						7670	6.69
6 m	We	6630 *	8.28		7740	8310 *						8610 *	6.34
	Ws	5030	8.28		5390	6920						8240	6.34
5 m	We	6540	8.69		7620	8760 *	9570 *					10140 *	5.48
	Ws	4500	8.69		5280	6710	8720					10135	5.48
4 m	We	6080	8.97		7450	9340	10520 *	12350 *	15550 *			20700 *	3.20
	Ws	4140	8.97		5120	6440	8290	11100	15550 *			20700 *	3.20
3 m	We	5790	9.13	5950	7260	9030	11520 *	13970 *	18410 *			15220 *	3.63
	Ws	3910	9.13	4020	4950	6160	7560	10370	14500			15220 *	3.63
2 m	We	5640	9.18	5840	7070	8750	11160	14980	16540 *			11390 *	3.76
	Ws	3780	9.18	3920	4770	5900	7460	9760	13530			11390 *	3.76
1 m	We	5620	9.12	5740	6910	8510	10820	14490	15380 *			9650 *	3.60
	Ws	3740	9.12	3830	4630	5680	7150	9340	13070			9650 *	3.60
0 m	We	5730	8.95		6790	8340	10580	14210	17760 *			9010 *	3.11
	Ws	3800	8.95		4520	5520	6940	9100	12910			9010 *	3.11
-1 m	We	6000	8.65		6730	8230	10460	14100	20540 *	13410 *		12090 *	2.32
	Ws	3980	8.65		4460	5430	6830	8990	12890	13410 *		12090 *	2.32
-2 m	We	6480	8.22		6740	8210	10430	14100	19550 *	18590 *	14610 *	14320 *	1.86
	Ws	4300	8.22		4460	5410	6800	9000	12970	18590 *	14610 *	13990 *	1.65
-3 m	We	7300	7.64			8280	10500	14210	18080 *	22100 *	19570 *	19160 *	1.86
	Ws	4850	7.64			5470	6860	9090	13150	22100 *	19570 *	18700 *	1.68
-4 m	We	8730	6.85				10680	13310 *	15970 *	19250 *		23320 *	2.05
	Ws	5810	6.85				7020	9290	13420	19250 *		23320 *	2.05
-5 m	We	8910 *	5.80					10710 *	12900 *	15240 *		15310 *	2.97
	Ws	7720	5.80					9620	12900 *	15240 *		15310 *	2.97

*Hydraulic pressure factor: 87.0%. Without asterisk: Stability factor: 75.0%

https://truckmanualshub.com/

Lifting Capacity

3. Long Arm (4.04 m), 600 Grouser Shoe

Bucket: 1.15 m^3

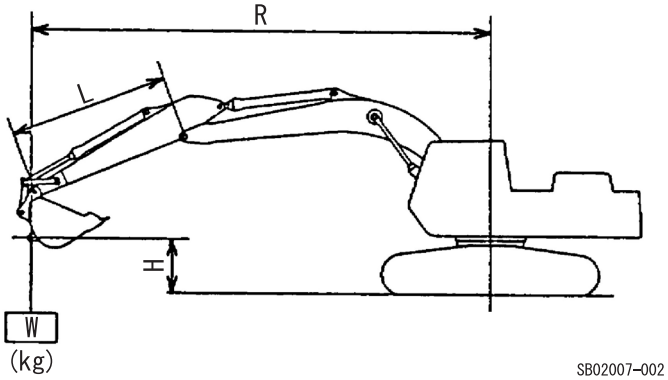

L: 4.04 m Arm length

R: Reach from swing center

H: Bucket hook height

W: Lifting capacity

We: Frontal rating load

Ws: Lateral rating load

MAX: Rating load at height point H and at maximum working reach

(Maximum working reach: 10.43 m) (Units; kg)

H \ R		Max.		10 m	9 m	8 m	7 m	6 m	5 m	4 m	3 m	2 m	Min.	
		W	R (m)										W	R (m)
7 m	We	3620 *	9.15		4140 *								6030 *	8.11
	Ws	3620 *	9.15		4140 *								5670	8.11
6 m	We	3510 *	9.65		5490 *	6480 *							6490 *	7.88
	Ws	3510 *	9.65		4520	5710							5880	7.88
5 m	We	3530 *	10.00	3540 *	6380	6830 *							7000 *	7.38
	Ws	3530	10.00	3530	4420	5550							6430	7.38
4 m	We	3600 *	10.25	4680 *	6240	7290 *	7800 *						8140 *	6.48
	Ws	3280	10.25	3460	4290	5350	6780						7740	6.48
3 m	We	3730 *	10.39	5030	6080	7460	8580 *	9670 *	11320 *				19980 *	2.94
	Ws	3110	10.39	3360	4140	5130	6450	8330	11220				19980 *	2.94
2 m	We	3920 *	10.43	4920	5910	7220	9000	10830 *	13090 *	16970 *	15270 *		6600 *	2.38
	Ws	3000	10.43	3260	3980	4900	6130	7850	10440	14850	15270 *		6600 *	2.38
1 m	We	4170 *	10.37	4820	5760	6990	8680	11130	14580 *	19160 *	11170 *		4920 *	2.12
	Ws	2950	10.37	3170	3830	4690	5830	7410	9790	13820	11170 *		4920 *	2.12
0 m	We	4520 *	10.22	4730	5630	6800	8410	10740	14480	20450 *	11520 *	6700 *	6300 *	1.86
	Ws	2970	10.22	3090	3710	4510	5580	7070	9310	13170	11520 *	6700 *	6250 *	1.44
-1 m	We	4710	9.96		5530	6650	8200	10470	14130	20970 *	13240 *	9130 *	8780 *	1.86
	Ws	3050	9.96		3620	4370	5390	6820	9000	12820	13240 *	9130 *	7960 *	1.41
-2 m	We	4970	9.59		5470	6560	8070	10300	13940	20860 *	15670 *	11700 *	11340 *	1.86
	Ws	3220	9.59		3560	4290	5270	6670	8840	12670	15670 *	11700 *	10450 *	1.41
-3 m	We	5390	9.10		5470	6530	8020	10230	13880	20210 *	18690 *	14490 *	14100 *	1.86
	Ws	3510	9.10		3570	4260	5220	6610	8780	12670	18690 *	14490 *	13080 *	1.41
-4 m	We	6060	8.46			6570	8040	10260	13930	19010 *	22370 *	17620 *	17160 *	1.86
	Ws	3970	8.46			4300	5240	6630	8830	12780	21850	17620 *	15930 *	1.41
-5 m	We	7190	7.63				8160	10390	13930 *	17150 *	21820 *	21230 *	20670 *	1.86
	Ws	4740	7.63				5350	6750	8980	13020	21820 *	21230 *	19140 *	1.41
-6 m	We	8360 *	6.54					9530 *	11740 *	14400 *	18000 *	23860 *	24180 *	1.96
	Ws	6160	6.54					6990	9250	13390	18000 *	23860 *	24180 *	1.96

*Hydraulic pressure factor: 87.0%. Without asterisk: Stability factor: 75.0%

https://truckmanualshub.com/

4. Standard Arm (3.25 m), 800 Grouser Shoe

Bucket: 1.4 m^3

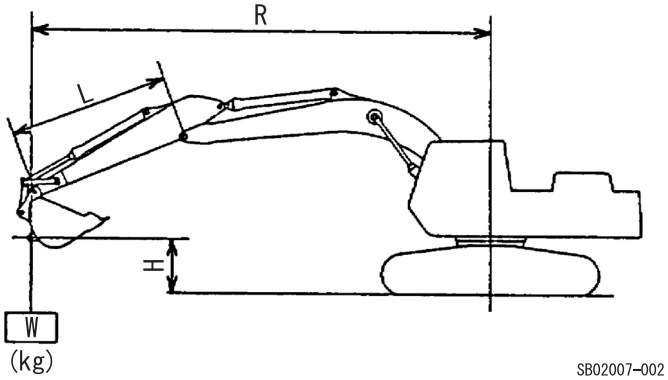

L: 3.25 m Arm length

R: Reach from swing center

H: Bucket hook height

W: Lifting capacity

We: Frontal rating load

Ws: Lateral rating load

MAX: Rating load at height point H and at maximum working reach

(Maximum working reach: 9.67 m) (Units; kg)

H \ R		Max. W	Max. R (m)	9 m	8 m	7 m	6 m	5 m	4 m	3 m	2 m	Min. W	Min. R (m)
7 m	We	4900 *	8.24		5880 *							7280 *	7.31
	Ws	4900 *	8.24		5750							6830	7.31
6 m	We	4580 *	8.83		7380 *							7600 *	7.03
	Ws	4580 *	8.83		5680							7190	7.03
5 m	We	4630 *	9.21	5790 *	7670 *	8110 *						8470 *	6.38
	Ws	4220	9.21	4430	5540	7020						8220	6.38
4 m	We	4750 *	9.48	6310	7750	8760 *	9740 *	11230 *				19580 *	2.22
	Ws	3910	9.48	4330	5370	6750	8720	11230 *				19580 *	2.22
3 m	We	4950 *	9.63	6180	7540	9400	10830 *	12960 *	16680 *	13770 *		9280 *	2.82
	Ws	3710	9.63	4210	5174	6460	8270	11010	15640	13770 *		9280 *	2.82
2 m	We	5240 *	9.67	6050	7340	9100	11650	14540 *	19190 *	7200 *		6850 *	2.98
	Ws	3580	9.67	4080	4990	6180	7850	10340	14510	7200 *		6850 *	2.98
1 m	We	5320	9.62	5930	7150	8830	11260	15130	20360 *	8060 *		6050 *	2.77
	Ws	3540	9.62	3970	4810	5930	7500	9830	13800	8060 *		6050 *	2.77
0 m	We	5400	9.45	5830	7010	8620	10970	14750	19960 *	10640 *		8150 *	2.26
	Ws	3580	9.45	3880	4680	5740	7230	9500	13430	10640 *		8150 *	2.26
-1 m	We	5610	9.17	5770	6910	8480	10780	14530	21160 *	13780 *	10040 *	9780 *	1.86
	Ws	3720	9.17	3830	4580	5610	7070	9310	13290	13780 *	10040 *	10590 *	1.67
-2 m	We	6000	8.77		6860	8400	10700	14460	20520 *	17360 *	13500 *	13180 *	1.86
	Ws	3970	8.77		4540	5550	6990	9240	13280	17360 *	13500 *	12460 *	1.41
-3 m	We	6630	8.22		6890	8410	10700	14490	19390 *	21510 *	17120 *	16730 *	1.86
	Ws	4400	8.22		4570	5550	6990	9270	13370	21510 *	17120 *	15740 *	1.41
-4 m	We	7680	7.50			8510	10800	14480 *	17670 *	22090 *	21150 *	20660 *	1.86
	Ws	5110	7.50			5640	7080	9390	13570	22090 *	21150 *	19330 *	1.41
-5 m	We	9040 *	6.55				10250 *	12510 *	15170 *	18630 *		23640 *	2.03
	Ws	6410	6.55				7280	9620	13890	18630 *		23640 *	2.03
-6 m	We	8690 *	5.24					9240 *	11420 *			12250 *	3.63
	Ws	8690 *	5.24					9240 *	11420 *			12250 *	3.63

*Hydraulic pressure factor: 87.0%. Without asterisk: Stability factor: 75.0%

https://truckmanualshub.com/

Lifting Capacity

5. Short Arm (2.63 m), 800 Grouser Shoe

Bucket: 1.6 m^3

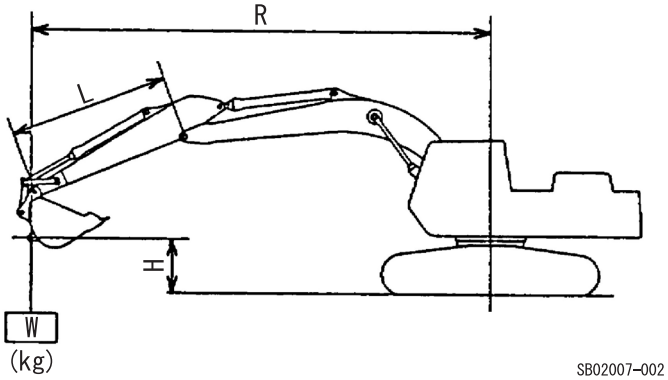

L: 2.63 m Arm length

R: Reach from swing center

H: Bucket hook height

W: Lifting capacity

We: Frontal rating load

Ws: Lateral rating load

MAX: Rating load at height point H and at maximum working reach

(Maximum working reach: 9.18 m) (Units; kg)

H \ R		Max. W	Max. R (m)	9 m	8 m	7 m	6 m	5 m	4 m	3 m	2 m	Min. W	Min. R (m)
7 m	We	7900 *	7.51			8080 *						8140 *	6.69
	Ws	6290	7.51			7190						7820	6.69
6 m	We	6630 *	8.28		7900	8310 *						8610 *	6.34
	Ws	5140	8.28		5510	7060						8390	6.34
5 m	We	6690	8.69		7780	8760 *	9570 *					10140 *	5.48
	Ws	4600	8.69		5400	6840	8880					10140 *	5.48
4 m	We	6230	8.97		7610	9350 *	10520 *	12350 *	15550 *			20700 *	3.20
	Ws	4240	8.97		5240	6580	8460	11310	15550 *			20700 *	3.20
3 m	We	5930	9.13	6090	7420	9230	11522 *	13970 *	18410 *			15220 *	3.63
	Ws	4010	9.13	4120	5060	6300	8022	10590	14800			15220 *	3.63
2 m	We	5780	9.18	5980	7240	8940	11407	15300	16540 *			11390 *	3.76
	Ws	3880	9.18	4020	4890	6040	7627	9980	13830			11390 *	3.76
1 m	We	5760	9.12	5880	7080	8710	11062	14810	15380 *			9650 *	3.60
	Ws	3840	9.12	3930	4740	5820	7316	9550	13370			9650 *	3.60
0 m	We	5880	8.95		6960	8530	10829	14540	17760 *			9010 *	3.11
	Ws	3910	8.95		4630	5660	7106	9310	13210			9010 *	3.11
-1 m	We	6150	8.65		6900	8430	10704	14420	20540 *	13410 *		12090 *	2.32
	Ws	4080	8.65		4570	5570	6993	9210	13190	13410 *		12090 *	2.32
-2 m	We	6640	8.22		6900	8410	10676	14420	19550 *	18590 *	14610 *	14320 *	1.86
	Ws	4410	8.22		4580	5550	6968	9210	13270	18590 *	14610 *	13990 *	1.65
-3 m	We	7480	7.64			8480	10744	14530	18080 *	22100 *	19570 *	19160 *	1.86
	Ws	4970	7.64			5610	7029	9300	13440	22100 *	19570 *	18700 *	1.68
-4 m	We	8940	6.85				10924	13310 *	15970 *	19250 *		23320 *	2.05
	Ws	5960	6.85				7192	9500	13720	19250 *		23320 *	2.05
-5 m	We	8910 *	5.80					10710 *	12900 *	15240 *		15310 *	2.97
	Ws	7900	5.80					9840	12900 *	15240 *		15310 *	2.97

*Hydraulic pressure factor: 87.0%. Without asterisk: Stability factor: 75.0%

https://truckmanualshub.com/

6. Long Arm (4.04 m), 800 Grouser Shoe

Bucket: 1.15 m^3

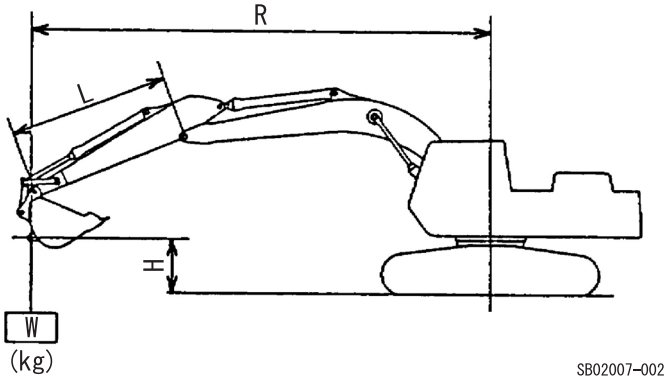

L: 4.04 m Arm length

R: Reach from swing center

H: Bucket hook height

W: Lifting capacity

We: Frontal rating load

Ws: Lateral rating load

MAX: Rating load at height point H and at maximum working reach

(Maximum working reach: 10.43 m) (Units; kg)

H \ R		Max. W	Max. R (m)	10 m	9 m	8 m	7 m	6 m	5 m	4 m	3 m	2 m	Min. W	Min. R (m)
7 m	We	3620 *	9.15		4140 *								6030 *	8.11
	Ws	3620 *	9.15		4140 *								5780	8.11
6 m	We	3510 *	9.65		5490 *	6480 *							6490 *	7.88
	Ws	3510 *	9.65		4620	5830							6000	7.88
5 m	We	3530 *	10.00	3540 *	6480 *	6830 *							6000 *	7.38
	Ws	3530 *	10.00	3540 *	4520	5660							6560	7.38
4 m	We	3600 *	10.25	4680 *	6380	7290 *	7800 *						8140 *	6.48
	Ws	3370	10.25	3550	4390	5460	6920						7890	6.48
3 m	We	3730 *	10.39	5150	6220	7620	8580 *	9670 *	11320 *				19980 *	2.94
	Ws	3190	10.39	3450	4240	5240	6590	8500	11320 *				19980 *	2.94
2 m	We	3920 *	10.43	5040	6060	7380	9200	10830 *	13090 *	16970 *	15270 *		6600 *	2.38
	Ws	3080	10.43	3350	4080	5020	6260	8010	10660	15150	15270 *		6600 *	2.38
1 m	We	4170 *	10.37	4940	5900	7160	8880	11370	14580 *	19160 *	11170 *		4920 *	2.12
	Ws	3040	10.37	3260	3940	4810	5970	7580	10010	14120	11170 *		4920 *	2.12
0 m	We	4520 *	10.22	4860	5770	6970	8600	10990	14810	20450 *	11520 *	6700 *	6300 *	1.86
	Ws	3060	10.22	3180	3810	4630	5720	7240	9530	13470	11520 *	6700 *	6250 *	1.44
-1 m	We	4830	9.96		5670	6820	8400	10710	14450	20970 *	13240 *	9130 *	8780 *	1.86
	Ws	3140	9.96		3720	4490	5530	6990	9220	13120	13240 *	9130 *	7960 *	1.41
-2 m	We	5100	9.59		5610	6720	8270	10550	14260	20860 *	15670 *	11700 *	11340 *	1.86
	Ws	3320	9.59		3660	4400	5410	6840	9050	12670	15670 *	11700 *	10450 *	1.41
-3 m	We	5530	9.10		5620	6690	8210	10480	14200	20210 *	18690 *	14490 *	14100 *	1.86
	Ws	3610	9.10		3670	4370	5360	6780	9000	12970	18690 *	14490 *	13080 *	1.41
-4 m	We	6220	8.46			6730	8240	10510	14250	19010 *	22370 *	17620 *	17160 *	1.86
	Ws	4080	8.46			4410	5380	6800	9050	13080	22330	17620 *	15930 *	1.41
-5 m	We	7370	7.63				8360	10630	13930 *	17150 *	21820 *	21230 *	20670 *	1.86
	Ws	4860	7.63				5490	6920	9200	13310	21820 *	21230 *	19140 *	1.41
-6 m	We	8360 *	6.54					9530 *	11740 *	14400 *	18000 *	23860 *	24180 *	1.96
	Ws	6310	6.54					7150	9470	13680	18000 *	23860 *	24180 *	1.96

*Hydraulic pressure factor: 87.0%. Without asterisk: Stability factor: 75.0%

https://truckmanualshub.com/

Lifting Capacity

Lifting Capacities (SH330LC-5)

1. Standard Arm (3.25 m), 600 Grouser Shoe

Bucket: 1.4 m^3

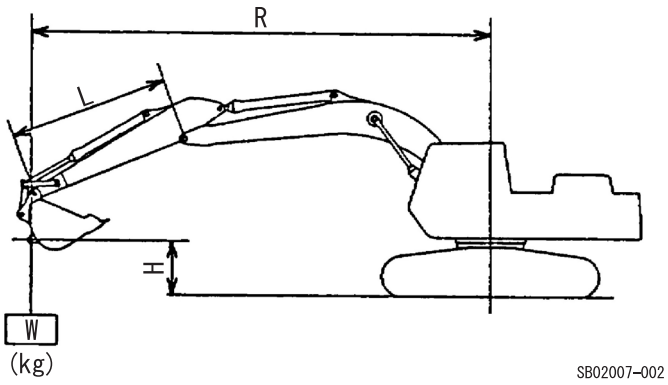

L: 3.25 m Arm length

R: Reach from swing center

H: Bucket hook height

W: Lifting capacity

We: Frontal rating load

Ws: Lateral rating load

MAX: Rating load at height point H and at maximum working reach

(Maximum working reach: 9.67 m) (Units; kg)

H \ R		Max. W	Max. R (m)	9 m	8 m	7 m	6 m	5 m	4 m	3 m	Min. W	Min. R (m)
7 m	We	4900 *	8.24		5880 *						7280 *	7.31
	Ws	4900 *	8.24		5730						6810	7.31
6 m	We	4580 *	8.83		7380 *						7600 *	7.03
	Ws	4580 *	8.83		5660						7170	7.03
5 m	We	4630 *	9.21	5790 *	7670 *	8110 *					8470 *	6.38
	Ws	4210	9.21	4410	5520	7000					8200	6.38
4 m	We	4750 *	9.48	7010	8080 *	8760 *	9740 *	11230 *			19580 *	2.22
	Ws	3900	9.48	4310	5350	6730	8690	11230 *			19580 *	2.22
3 m	We	4950 *	9.63	6880	8390	9480 *	10830 *	12960 *	16680 *	13770 *	9280 *	2.82
	Ws	3690	9.63	4190	5160	6440	8250	10980	15600	13770 *	9280 *	2.82
2 m	We	5240 *	9.67	6740	8180	10170	11870 *	14540 *	19190 *	7200 *	6850 *	2.98
	Ws	3570	9.67	4070	4970	6160	7820	10310	14470	7200 *	6850 *	2.98
1 m	We	5640 *	9.62	6620	8000	9890	12690	15730 *	20360 *	8060 *	6050 *	2.77
	Ws	3530	9.62	3950	4800	5910	7470	9800	13750	8060 *	6050 *	2.77
0 m	We	6040	9.45	6520	7840	9680	12390	16430 *	19960 *	10640 *	8150 *	2.26
	Ws	3570	9.45	6860	4660	5720	7210	9460	13390	10640 *	8150 *	2.26
-1 m	We	6290	9.17	6470	7740	9530	12200	16620	21160 *	13780 *	10090 *	2.02
	Ws	3700	9.17	3810	4570	5590	7040	9280	13240	13780 *	10590 *	1.67
-2 m	We	6720	8.77		7700	9460	12110	16400 *	20520 *	17360 *	13550 *	2.02
	Ws	3960	8.77		4530	5530	6960	9210	13230	17360 *	12460 *	1.41
-3 m	We	7430	8.22		7730	9460	12110	15710 *	19390 *	21510 *	17180 *	2.02
	Ws	4380	8.22		4550	5530	6970	9240	13330	21510 *	15740 *	1.41
-4 m	We	8620	7.50			9560	12010 *	14480 *	17670 *	22090 *	21230 *	2.02
	Ws	5100	7.50			5620	7060	9360	13530	22090 *	19330 *	1.41
-5 m	We	9040 *	6.55				10250 *	12510 *	15170 *	18630 *	23640 *	2.03
	Ws	6390	6.55				7260	9590	13840	18630 *	23640 *	2.03
-6 m	We	8690 *	5.24					9240 *	11420 *		12250 *	3.63
	Ws	8690 *	5.24					9240 *	11420 *		12250 *	3.63

*Hydraulic pressure factor: 87.0%. Without asterisk: Stability factor: 75.0%

https://truckmanualshub.com/

2. Short Arm (2.63 m), 600 Grouser Shoe

Bucket: 1.6 m^3

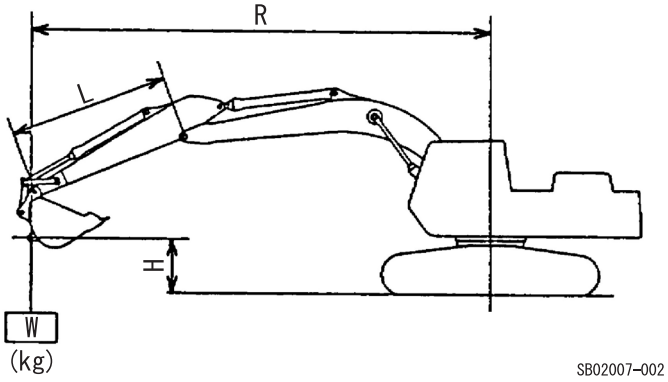

L: 2.63 m Arm length

R: Reach from swing center

H: Bucket hook height

W: Lifting capacity

We: Frontal rating load

Ws: Lateral rating load

MAX: Rating load at height point H and at maximum working reach

(Maximum working reach: 9.18 m) (Units; kg)

H \ R		Max. W	Max. R (m)	9 m	8 m	7 m	6 m	5 m	4 m	3 m	Min. W	Min. R (m)
7 m	We	7900 *	7.51			8080 *					8140 *	6.69
	Ws	6270	7.51			7170					7800	6.69
6 m	We	6630 *	8.28		8020 *	8310 *					8610 *	6.34
	Ws	5130	8.28		5490	7040					8370	6.34
5 m	We	6700 *	8.69		8230 *	8760 *	9570 *				10140 *	5.48
	Ws	4590	8.69		8380	6820	8860				10140 *	5.48
4 m	We	6870 *	8.97		8470	9350 *	10520 *	12350 *	15550 *		20700 *	3.20
	Ws	4230	8.97		8220	6560	8440	11280	15550 *		20700 *	3.20
3 m	We	6620	9.13	6790	8070	9990 *	11520 *	13970 *	18410 *		15220 *	3.63
	Ws	3990	9.13	4100	5050	6280	8000	10560	14760		15220 *	3.63
2 m	We	6460	9.18	6670	8080	10010	12430 *	15330 *	16540 *		11390 *	3.76
	Ws	3860	9.18	4000	4870	6020	7600	9940	13790		11390 *	3.76
1 m	We	6440	9.12	6580	7920	9770	12490	16210 *	15380 *		9650 *	3.60
	Ws	3830	9.12	3910	4720	5800	7290	9520	13330		9650 *	3.60
0 m	We	6580	8.95		7800	9590	12250	16580 *	17760 *		9010 *	3.11
	Ws	3890	8.95		4620	5640	7080	9280	13160		9010 *	3.11
-1 m	We	6890	8.65		7730	9490	12110	16480 *	20540 *	13410 *	12090 *	2.32
	Ws	4070	8.65		4560	5550	6970	9170	13150	13410 *	12090 *	2.32
-2 m	We	7440	8.22		7740	9460	12090	15940 *	19550 *	18590 *	14660 *	2.02
	Ws	4400	8.22		4560	5530	6940	9180	13230	18590 *	13990 *	1.65
-3 m	We	8380	7.64			9530	12160	14930 *	18080 *	22100 *	19640 *	2.02
	Ws	4960	7.64			5590	7010	9270	14000	22100 *	18700 *	1.68
-4 m	We	9200 *	6.85				11050 *	13310 *	15980 *	19250 *	23320 *	2.05
	Ws	5940	6.85				7170	9470	13680	19250 *	23320 *	2.05
-5 m	We	8910 *	5.80					10710 *	12900 *	15240 *	15310 *	2.97
	Ws	7870	5.80					9810	12900 *	15240 *	15310 *	2.97

*Hydraulic pressure factor: 87.0%. Without asterisk: Stability factor: 75.0%

https://truckmanualshub.com/

Lifting Capacity

3. Long Arm (4.04 m), 600 Grouser Shoe

Bucket: 1.15 m^3

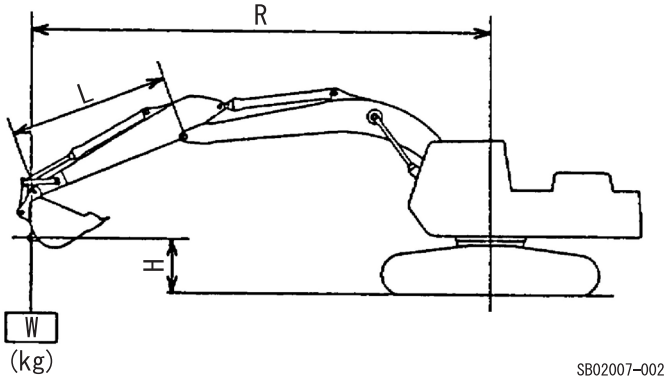

L: 4.04 m Arm length

R: Reach from swing center

H: Bucket hook height

W: Lifting capacity

We: Frontal rating load

Ws: Lateral rating load

MAX: Rating load at height point H and at maximum working reach

(Maximum working reach: 10.43 m) (Units; kg)

H \ R		Max.		10 m	9 m	8 m	7 m	6 m	5 m	4 m	3 m	Min.	
		W	R (m)									W	R (m)
7 m	We	3620 *	9.15		4140 *							6030 *	8.11
	Ws	3620 *	9.15		4140 *							5770	8.11
6 m	We	3510 *	9.65		5500 *	6480 *						6490 *	7.88
	Ws	3510 *	9.65		4600	5810						5980	7.88
5 m	We	3530 *	10.00	3540 *	6480 *	6830 *						7000 *	7.38
	Ws	3530 *	10.00	3540 *	4500	5650						6540	7.38
4 m	We	3600 *	10.25	4680 *	6920 *	7290 *	7800 *					8140 *	6.48
	Ws	3350	10.25	3530	4370	5450	6900					7870	6.48
3 m	We	3730 *	10.39	5780 *	6930	7820 *	8580 *	9670 *	11320 *			19980 *	2.94
	Ws	3180	10.39	3440	4220	5220	6570	8480	11320 *			19980 *	2.94
2 m	We	3920 *	10.43	5640	6760	8240	9360 *	10830 *	13090 *	16970 *	15270 *	6600 *	2.38
	Ws	3070	10.43	3340	4070	5000	6240	7990	10630	15100	15270 *	6600 *	2.38
1 m	We	4170 *	10.37	5530	6600	8010	9950	11860 *	14580 *	19160 *	11170 *	4920 *	2.12
	Ws	3030	10.37	3240	3920	4790	5940	7560	9970	14070	11170 *	4920 *	2.12
0 m	We	4520 *	10.22	5450	6460	7810	9670	12410	15650 *	20450 *	11520 *	6760 *	2.02
	Ws	3040	10.22	3160	3800	4610	5700	7210	9500	13430	11520 *	6250 *	1.44
-1 m	We	5000 *	9.96		6360	7660	9460	12130	16240 *	20970 *	13240 *	9180 *	2.02
	Ws	3130	9.96		3700	4470	5510	6960	9190	13080	13240 *	7960 *	1.41
-2 m	We	5670 *	9.59		6300	7560	9320	11960	16340	20860 *	15670 *	11730 *	2.02
	Ws	3300	9.59		3650	4390	5390	6810	9020	12930	15670 *	10450 *	1.41
-3 m	We	6210	9.10		6310	7530	9270	11890	16070 *	20210 *	18690 *	14550 *	2.02
	Ws	3590	9.10		3650	4360	5340	6750	8970	12920	18690 *	13080 *	1.41
-4 m	We	6980	8.46			7570	9290	11910	15290 *	19010 *	22370 *	17690 *	2.02
	Ws	4060	8.46			4400	5360	6780	9010	13040	22260	15930 *	1.41
-5 m	We	8270	7.63				9420	11500 *	13930 *	17150 *	21820 *	21320 *	2.02
	Ws	4840	7.63				5470	6890	9160	13270	21820 *	19140 *	1.41
-6 m	We	8360 *	6.54					9530 *	11740 *	14400 *	18000 *	23690 *	2.02
	Ws	6290	6.54					7130	9440	13640	18000 *	24180 *	1.96

*Hydraulic pressure factor: 87.0%. Without asterisk: Stability factor: 75.0%

https://truckmanualshub.com/

4. Standard Arm (3.25 m) 800 Grouser Shoe

Bucket: 1.4 m^3

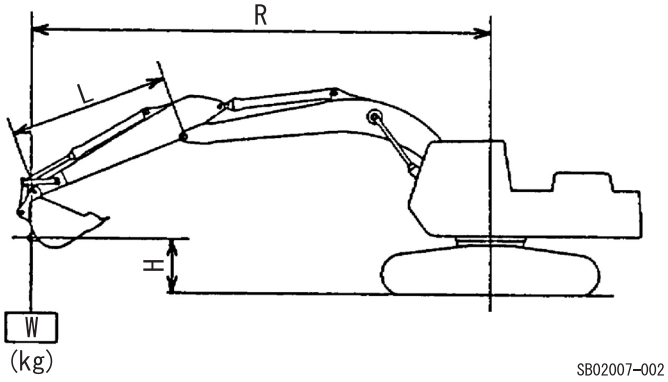

L: 3.25 m Arm length

R: Reach from swing center

H: Bucket hook height

W: Lifting capacity

We: Frontal rating load

Ws: Lateral rating load

MAX: Rating load at height point H and at maximum working reach

(Maximum working reach: 9.67 m) (Units; kg)

H \ R		Max.		9 m	8 m	7 m	6 m	5 m	4 m	3 m	Min.	
		W	R (m)								W	R (m)
7 m	We	4900 *	8.24		5880 *						7280 *	7.31
	Ws	4900 *	8.24		5880						6960	7.31
6 m	We	4580 *	8.83		7380 *						7600 *	7.03
	Ws	4580 *	8.83		5790						7330	7.03
5 m	We	4630 *	9.21	5790 *	7670 *	8110 *					8470 *	6.38
	Ws	4320	9.21	4530	5650	7160					8370	6.38
4 m	We	4750 *	9.48	7190	8080 *	8760 *	9740 *	11230 *			19580 *	2.22
	Ws	4010	9.48	4430	5480	6890	8880	11230 *			19580 *	2.22
3 m	We	4950 *	9.63	7060	8550 *	9480 *	10830 *	12960 *	16680 *	13770 *	9280 *	2.82
	Ws	3800	9.63	4300	5290	6600	8430	11220	15930	13770 *	9280 *	2.82
2 m	We	5240 *	9.67	6920	8390	10170 *	11870 *	14540 *	19190 *	7200 *	6850 *	2.98
	Ws	3680	9.67	4180	5097	6310	8010	10550	14800	7200 *	6850 *	2.98
1 m	We	5640 *	9.62	6800	8200	10140	12730 *	15730 *	20360 *	8060 *	6050 *	2.77
	Ws	3640	9.62	4070	4930	6070	7660	10040	14090	8060 *	6050 *	2.77
0 m	We	6190 *	9.45	6700	8050	9930	12700	16430 *	19960 *	10640 *	8150 *	2.26
	Ws	3680	9.45	3980	4790	5880	7400	9700	13720	10640 *	8150 *	2.26
-1 m	We	6460	9.17	6640	7950	9780	12510	16640 *	21160 *	13780 *	10090 *	2.02
	Ws	3810	9.17	3920	4700	5740	7230	9520	13580	13780 *	10590 *	1.67
-2 m	We	6900	8.77		7900	9710	12410	16400 *	20520 *	17360 *	13550 *	2.02
	Ws	4070	8.77		4660	5680	7150	9450	13570	17360 *	12460 *	1.41
-3 m	We	7620	8.22		7930	9710	12420	15710 *	19390 *	21510 *	17180 *	2.02
	Ws	4510	8.22		4680	5680	7160	9480	13660	21510 *	15740 *	1.41
-4 m	We	8840	7.50			9810	12010 *	14480 *	17670 *	22090 *	21230 *	2.02
	Ws	5240	7.50			5770	7240	9600	13860	22090 *	19330 *	1.41
-5 m	We	9040 *	6.55				10250 *	12510 *	15170 *	18630 *	23640 *	2.03
	Ws	6560	6.55				7440	9830	14180	18630 *	23640 *	2.03
-6 m	We	8690 *	5.24					9240 *	11420 *		12250 *	3.63
	Ws	8690 *	5.24					9240 *	11420 *		12250 *	3.63

*Hydraulic pressure factor: 87.0%. Without asterisk: Stability factor: 75.0%

https://truckmanualshub.com/

5. Short Arm (2.63 m) 800 Grouser Shoe

Bucket: 1.6 m^3

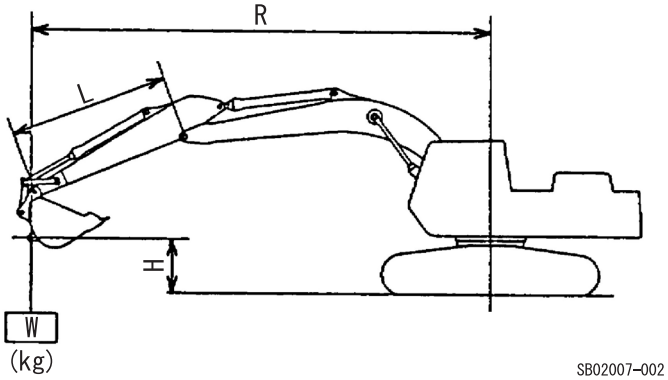

L: 2.63 m Arm length

R: Reach from swing center

H: Bucket hook height

W: Lifting capacity

We: Frontal rating load

Ws: Lateral rating load

MAX: Rating load at height point H and at maximum working reach

(Maximum working reach: 9.18 m) (Units; kg)

H \ R		Max. W	Max. R (m)	9 m	8 m	7 m	6 m	5 m	4 m	3 m	Min. W	Min. R (m)
7 m	We	7900 *	7.51			8080 *					8140 *	6.69
	Ws	9410	7.51			7320					7960	6.69
6 m	We	6630 *	8.28		8020 *	8310 *					8610 *	6.34
	Ws	5250	8.28		5620	7190					8540	6.34
5 m	We	6700 *	8.69		8230 *	8760 *	9570 *				10140 *	5.48
	Ws	4710	8.69		5510	6980	9050				10140 *	5.48
4 m	We	6870 *	8.97		8570 *	9350 *	10520 *	12350 *	15550 *		20700 *	3.20
	Ws	4340	8.97		5350	6710	8620	11520	15550 *		20700 *	3.20
3 m	We	6790	9.13	6960	8480	9990 *	11520 *	13970 *	18410 *		15220 *	3.63
	Ws	4110	9.13	4220	5180	6440	8190	10790	15090		15220 *	3.63
2 m	We	6630	9.18	6850	8290	10260	12430 *	15330 *	16540 *		11390 *	3.76
	Ws	3970	9.18	4120	5000	6170	7790	10180	14120		11390 *	3.76
1 m	We	6620	9.12	6760	8130	10020	12800	16210 *	15380 *		9650 *	3.60
	Ws	3940	9.12	4030	4860	5950	7480	9760	13660		9650 *	3.60
0 m	We	6750	8.95		8010	9840	12560	16580 *	17760 *		9010 *	3.11
	Ws	4010	8.95		4750	5800	7270	9520	13490		9010 *	3.11
-1 m	We	7070	8.65		7940	9740	12430	16480 *	20540 *	13410 *	12090 *	2.32
	Ws	4190	8.65		4690	5700	7160	9410	13480	13410 *	12090 *	2.32
-2 m	We	7640	8.22		7950	9710	12400	15940 *	19550 *	18590 *	14660 *	2.02
	Ws	4520	8.22		4690	5680	7130	9420	13560	18590 *	13990 *	1.65
-3 m	We	8600	7.64			9780	12450 *	14930 *	18080 *	22100 *	19640 *	2.02
	Ws	5090	7.64			5740	7190	9510	13730	22100 *	18700 *	1.68
-4 m	We	9200 *	6.85				11050 *	13310 *	15970 *	19250 *	23320 *	2.05
	Ws	6090	6.85				7360	9710	14010	19250 *	23320 *	2.05
-5 m	We	8910 *	5.80					10710 *	12900 *	15240 *	15310 *	2.97
	Ws	8070	5.80					10050	12900 *	15240 *	15310 *	2.97

*Hydraulic pressure factor: 87.0%. Without asterisk: Stability factor: 75.0%

https://truckmanualshub.com/

6. Long Arm (4.04 m) 800 Grouser Shoe

Bucket: 1.15 m^3

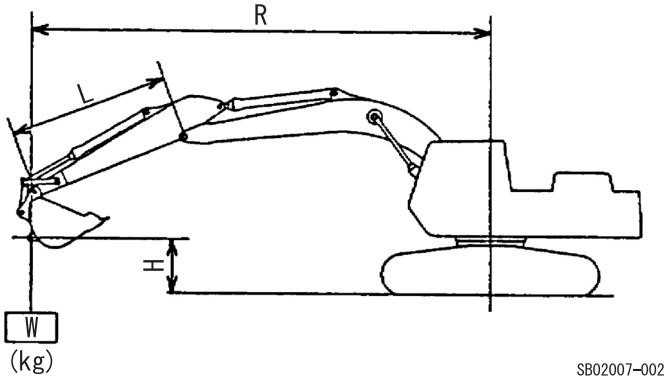

L: 4.04 m Arm length

R: Reach from swing center

H: Bucket hook height

W: Lifting capacity

We: Frontal rating load

Ws: Lateral rating load

MAX: Rating load at height point H and at maximum working reach

(Maximum working reach: 10.43 m) (Units; kg)

H \ R		Max. W	Max. R (m)	10 m	9 m	8 m	7 m	6 m	5 m	4 m	3 m	Min. W	Min. R (m)
7 m	We	3620 *	9.15		4140 *							6030 *	8.11
	Ws	3620 *	9.15		4140 *							5890	8.11
6 m	We	3510 *	9.65		5490 *	6480 *						6490 *	7.88
	Ws	3510 *	9.65		4720	5940						6110	7.88
5 m	We	3530 *	10.00	3540 *	6480 *	6830 *						7000 *	7.38
	Ws	3530 *	10.00	3540 *	4620	5780						6690	7.38
4 m	We	3600 *	10.25	4680 *	6920 *	7290 *	7800 *					8140 *	6.48
	Ws	3450	10.25	3630	4490	5580	7050					8040	6.48
3 m	We	3730 *	10.39	5480 *	7100	7820 *	8580 *	9670 *	11320 *			19980 *	2.94
	Ws	3270	10.39	3540	4330	5360	6720	8660	11320 *			19980 *	2.94
2 m	We	3920 *	10.43	5790	6930	8360 *	9360 *	10830 *	13090 *	16970 *	15270 *	6600 *	2.38
	Ws	3170	10.43	3440	4180	5130	6400	8180	10870	15440	15270 *	6600 *	2.38
1 m	We	4170 *	10.37	5690	6780	8210	10090 *	11860 *	14580 *	19160 *	11170 *	4920 *	2.12
	Ws	3120	10.37	3340	4030	4920	6100	7740	10210	14400	11170 *	4920 *	2.12
0 m	We	4520 *	10.22	5600	6640	8010	9920	12660 *	15650 *	20450 *	11520 *	6760 *	2.02
	Ws	3140	10.22	3260	3910	4740	5850	7400	9740	13760	11520 *	6250 *	1.44
-1 m	We	5000 *	9.96		6540	7860	9710	12440	16240 *	20970 *	13240 *	9180 *	2.02
	Ws	3230	9.96		3820	4610	5660	7150	9430	13410	13240 *	7960 *	1.41
-2 m	We	5670 *	9.59		6480	7770	9570	12270	16380 *	20860 *	15670 *	11760 *	2.02
	Ws	3410	9.59		3760	4520	5540	7000	9260	13260	15670 *	10450 *	1.41
-3 m	We	6380	9.10		6480	7730	9510	12200	16070 *	20210 *	18690 *	14550 *	2.02
	Ws	3710	9.10		3770	4490	5460	6940	9210	13260	18690 *	13080 *	1.41
-4 m	We	7170	8.46			7780	9540	12220	15290 *	19010 *	22370 *	17690 *	2.02
	Ws	4180	8.46			4530	5510	6960	9250	13370	22370 *	15930 *	1.41
-5 m	We	8300 *	7.63				9500 *	11500 *	13930 *	17150 *	21820 *	21320 *	2.02
	Ws	4980	7.63				5620	7080	9400	13600	21820 *	19140 *	1.41
-6 m	We	8360 *	6.54					9530 *	11740 *	14400 *	18000 *	23690 *	2.02
	Ws	6460	6.54					7320	9680	13970	18000 *	24180 *	1.96

*Hydraulic pressure factor: 87.0%. Without asterisk: Stability factor: 75.0%

https://truckmanualshub.com/

Lifting Capacity

Lifting Capacities (SH350HD-5)

1. Standard Arm (3.25 m), 600 Grouser Shoe

Bucket: 1.4 m^3

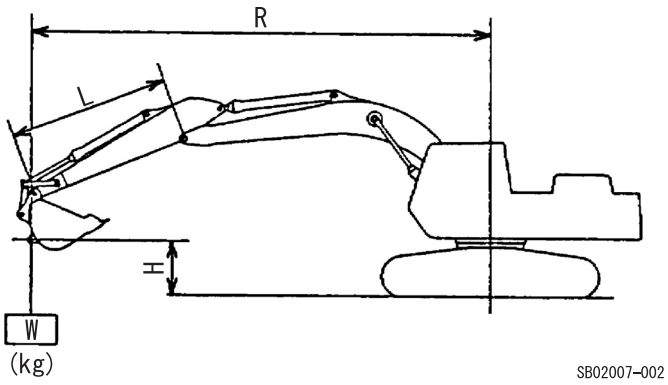

L: 3.25 m Arm length

R: Reach from swing center

H: Bucket hook height

W: Lifting capacity

We: Frontal rating load

Ws: Lateral rating load

MAX: Rating load at height point H and at maximum working reach

(Maximum working reach: 9.67 m) (Units; kg)

H \ R		Max.		9 m	8 m	7 m	6 m	5 m	4 m	3 m	2 m	Min.	
		W	R (m)									W	R (m)
7 m	We	4570 *	8.24		5560 *							6840 *	7.31
	Ws	4570 *	8.24		5560 *							6840 *	7.31
6 m	We	4250 *	8.83		6920 *							7150 *	7.03
	Ws	4250 *	8.83		5750							7150 *	7.03
5 m	We	4300 *	9.21	5460 *	7200 *	7640 *						8010 *	6.38
	Ws	4200	9.21	4420	5600	7180						8010 *	6.38
4 m	We	4430 *	9.48	6350	7590 *	8270 *	9250 *	10730 *				19240 *	2.22
	Ws	3870	9.48	4310	5410	6880	8970	10730 *				19240 *	2.22
3 m	We	4630 *	9.63	6210	7640	8960 *	10300 *	12390 *	16050 *	13440 *		8950 *	2.82
	Ws	3640	9.63	4170	5200	6560	8480	11360	16050 *	13440 *		8950 *	2.82
2 m	We	4920 *	9.67	6060	7420	9260	11300 *	13920 *	18470 *	6880 *		6520 *	2.98
	Ws	3510	9.67	4040	4990	6250	8010	10630	14990	6880 *		6520 *	2.98
1 m	We	5230	9.62	5930	7220	8970	11510	15060 *	19920 *	7730 *		5720 *	2.77
	Ws	3470	9.62	3910	4810	5980	7620	10060	14200	7730 *		5720 *	2.77
0 m	We	5380	9.45	5830	7060	8740	11190	15120	19630 *	10310 *		7820 *	2.26
	Ws	3510	9.45	3820	4650	5770	7330	9690	13790	10310 *		7820 *	2.26
-1 m	We	5600	9.17	5770	6950	8580	10980	14880	20330 *	13450 *	9720 *	9450 *	1.86
	Ws	3650	9.17	3760	4550	5630	7150	9490	13630	13450 *	9720 *	10260 *	1.67
-2 m	We	6000	8.77		6900	8500	10890	14800	19700 *	17030 *	13170 *	12850 *	1.86
	Ws	3900	8.77		4510	5560	7060	9410	13630	17030 *	13170 *	12130 *	1.41
-3 m	We	6660	8.22		6930	8510	10890	14830	18580 *	21180 *	16790 *	16400 *	1.86
	Ws	4360	8.22		4540	5560	7070	9450	13730	21180 *	16790 *	15410 *	1.41
-4 m	We	7760	7.50			8620	11000	13770 *	16880 *	21160 *	20830 *	20330 *	1.86
	Ws	5110	7.50			5660	7170	9580	13960	21160 *	20830 *	19000 *	1.41
-5 m	We	8440 *	6.55				9630 *	11820 *	14410 *	17740 *		22520 *	2.03
	Ws	6480	6.55				7390	9840	14310	17740 *		22520 *	2.03
-6 m	We	8060 *	5.24					8590 *	10700 *			11500 *	3.63
	Ws	8060 *	5.24					8590 *	10700 *			11500 *	3.63

*Hydraulic pressure factor: 87.0%. Without asterisk: Stability factor: 75.0%

https://truckmanualshub.com/

2. Short Arm (2.63 m), 600 Grouser Shoe

Bucket: 1.6 m^3

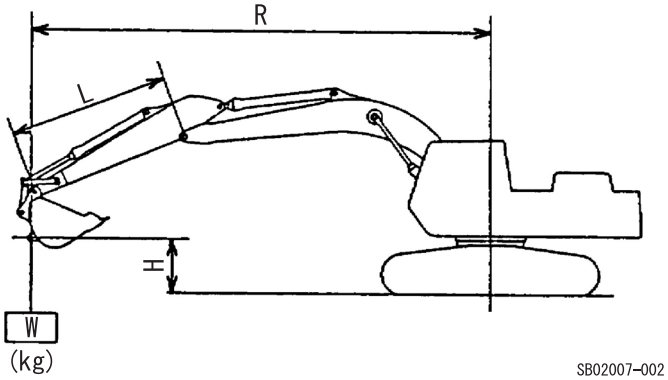

L: 2.63 m Arm length

R: Reach from swing center

H: Bucket hook height

W: Lifting capacity

We: Frontal rating load

Ws: Lateral rating load

MAX: Rating load at height point H and at maximum working reach

(Maximum working reach: 9.18 m) (Units; kg)

H \ R		Max. W	Max. R (m)	9 m	8 m	7 m	6 m	5 m	4 m	3 m	2 m	Min. W	Min. R (m)
7 m	We	7590 *	7.51			7650 *						7710 *	6.69
	Ws	6420	7.51			7370						7710 *	6.69
6 m	We	6320 *	8.28		7570 *	7870 *						8180 *	6.34
	Ws	5200	8.28		5590	7230						8180 *	6.34
5 m	We	6380 *	8.69		7770 *	8310 *	9120 *					9690 *	5.48
	Ws	4620	8.69		5470	7000	9120 *					9390 *	5.48
4 m	We	6280	8.97		7740	8870 *	10030 *	11840 *	15000 *			20060 *	3.20
	Ws	4240	8.97		5300	6720	8710	11720	15000 *			20060 *	3.20
3 m	We	5970	9.13	6130	7540	9430	11000 *	13400 *	17770 *			14920 *	3.63
	Ws	3990	9.13	4110	5100	6410	8230	10930	15360			14920 *	3.63
2 m	We	5810	9.18	6010	7340	9120	11700	14720 *	16240 *			11080 *	3.76
	Ws	3850	9.18	3990	4920	6130	7800	10270	14300			11080 *	3.76
1 m	We	5780	9.12	5910	7160	8870	11330	15240	15080 *			9350 *	3.60
	Ws	3810	9.12	3900	4750	5890	7460	9800	13800			9350 *	3.60
0 m	We	5900	8.95		7030	8680	11070	14940	17450 *			8700 *	3.11
	Ws	3870	8.95		4640	5720	7230	9540	13620			8700 *	3.11
-1 m	We	6190	8.65		6970	8570	10940	14810	19780 *	13100 *		11770 *	2.32
	Ws	4060	8.65		4570	5620	7110	9430	13600	13100 *		11770 *	2.32
-2 m	We	6700	8.22		6970	8540	10910	14810	18800 *	18280 *	14300 *	14010 *	1.86
	Ws	4400	8.22		4580	5590	1080	9430	13690	18280 *	14300 *	13670 *	1.65
-3 m	We	7570	7.64			8610	10980	14270 *	17340 *	21240 *	19270 *	18850 *	1.86
	Ws	4990	7.64			5660	7150	9530	13880	21240 *	19270 *	18390 *	1.68
-4 m	We	8650 *	6.85				10460 *	12670 *	15260 *	18420 *		22290 *	2.05
	Ws	6030	6.85				7330	9750	14180	18420 *		22290 *	2.05
-5 m	We	8330 *	5.80					10090 *	12210 *	14450 *		14510 *	2.97
	Ws	8080	5.80					10090 *	12210 *	14450 *		14510 *	2.97

*Hydraulic pressure factor: 87.0%. Without asterisk: Stability factor: 75.0%

https://truckmanualshub.com/

Lifting Capacity

3. Standard Arm (3.25 m), 800 Grouser Shoe

Bucket: 1.4 m^3

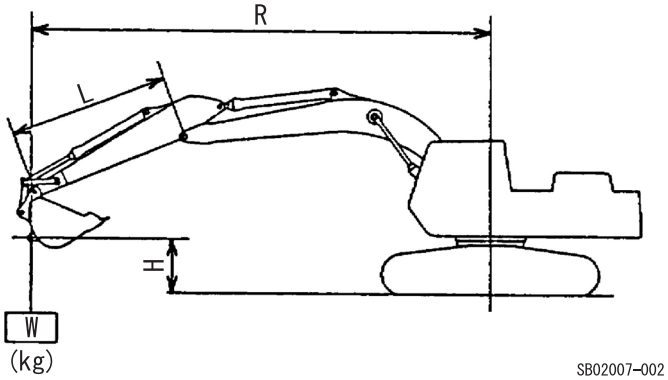

L: 3.25 m Arm length

R: Reach from swing center

H: Bucket hook height

W: Lifting capacity

We: Frontal rating load

Ws: Lateral rating load

MAX: Rating load at height point H and at maximum working reach

(Maximum working reach: 9.67 m) (Units; kg)

H \ R		Max. W	Max. R (m)	9 m	8 m	7 m	6 m	5 m	4 m	3 m	2 m	Min. W	Min. R (m)
7 m	We	4570 *	8.24		5560 *							6840 *	7.31
	Ws	4570 *	8.24		5560 *							6840 *	7.31
6 m	We	4250 *	8.83		6920 *							7150 *	7.03
	Ws	4250 *	8.83		5870							7150 *	7.03
5 m	We	4300 *	9.21	5460 *	7200 *	7640 *						8010 *	6.38
	Ws	4300	9.21	4520	5720	7320						8010 *	6.38
4 m	We	4430 *	9.48	6490	7590 *	8270 *	9250 *	10730 *				19240 *	2.22
	Ws	3960	9.48	4410	5530	7020	9130	10730 *				19240 *	2.22
3 m	We	4630 *	9.63	6350	7810	8960 *	10300 *	12390 *	16050 *	13440 *		8950 *	2.82
	Ws	3740	9.63	4280	5320	6700	8640	11570	16050 *	13440 *		8950 *	2.82
2 m	We	4920 *	9.67	6210	7580	9460	11300 *	13920 *	18470 *	6880 *		6520 *	2.98
	Ws	3610	9.67	4140	5110	6390	8180	10840	15280	6880 *		6520 *	2.98
1 m	We	5320 *	9.62	6070	7380	9170	11750	15060 *	19920 *	7730 *		5720 *	2.77
	Ws	3560	9.62	4020	4920	6120	7790	10280	14490	7730 *		5720 *	2.77
0 m	We	5520	9.45	5970	7220	8940	11430	15440	19630 *	10310 *		7820 *	2.26
	Ws	3600	9.45	3920	4770	5910	7500	9910	14090	10310 *		7820 *	2.26
-1 m	We	5740	9.17	5910	7110	8780	11230	15200	20330 *	13450 *	9720 *	9450 *	1.86
	Ws	3750	9.17	3860	4670	5760	7320	9700	13930	13450 *	9720 *	10260 *	1.67
-2 m	We	6140	8.77		7070	8700	11130	15120	19700 *	17030 *	13170 *	12850 *	1.86
	Ws	4020	8.77		4630	5690	7230	9630	13920	17030 *	13170 *	12130 *	1.41
-3 m	We	6820	8.22		7100	8710	11140	14990 *	18580 *	21180 *	16790 *	16400 *	1.86
	Ws	4470	8.22		4660	5700	7240	9660	14030	21180 *	16790 *	15410 *	1.41
-4 m	We	7940	7.50			8820	11250	13770 *	16880 *	21160 *	20830 *	20330 *	1.86
	Ws	5240	7.50			5800	7340	9800	14250	21160 *	20830 *	19000 *	1.41
-5 m	We	8440 *	6.55				9630 *	11820 *	14410 *	17740 *		22520 *	2.03
	Ws	6630	6.55				7560	10050	14410 *	17740 *		22520 *	2.03
-6 m	We	8060 *	5.24					8590 *	10700 *			11500 *	3.63
	Ws	8060 *	5.24					8590 *	10700 *			11500 *	3.63

*Hydraulic pressure factor: 87.0%. Without asterisk: Stability factor: 75.0%

https://truckmanualshub.com/

4. Short Arm (2.63 m), 800 Grouser Shoe

Bucket: 1.6 m^3

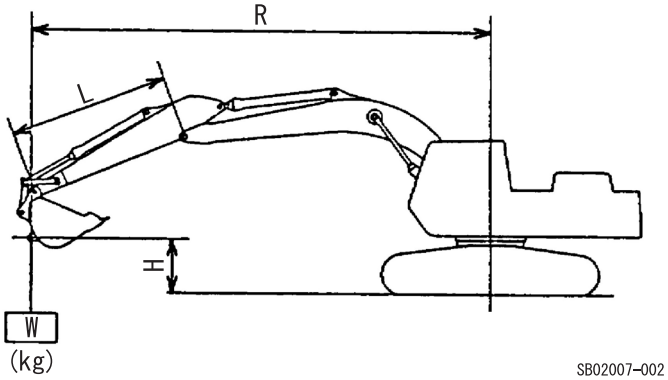

L: 2.63 m Arm length

R: Reach from swing center

H: Bucket hook height

W: Lifting capacity

We: Frontal rating load

Ws: Lateral rating load

MAX: Rating load at height point H and at maximum working reach

(Maximum working reach: 9.18 m) (Units; kg)

H \ R		Max. W	Max. R (m)	9 m	8 m	7 m	6 m	5 m	4 m	3 m	2 m	Min. W	Min. R (m)
7 m	We	7590 *	7.51			7650 *						7710 *	6.69
	Ws	6540	7.51			7510						7710 *	6.69
6 m	We	6320 *	8.28		7570 *	7870 *						8180 *	6.34
	Ws	5310	8.28		5700	7370						8180 *	6.34
5 m	We	6380 *	8.69		7770 *	8310 *	9120 *					9690 *	5.48
	Ws	4730	8.69		5580	7140	9120 *					9690 *	5.48
4 m	We	6420	8.97		7910	8870 *	10030 *	11840 *	15000 *			20060 *	3.20
	Ws	4340	8.97		5410	6850	8870	11840 *	15000 *			20060 *	3.20
3 m	We	6110	9.13	6280	7700	9490 *	11000 *	13400 *	17770 *			14920 *	3.63
	Ws	4090	9.13	4210	5220	6550	8400	11150	15650			14920 *	3.63
2 m	We	5950	9.18	6160	7500	9320	11880 *	14720 *	16240 *			11080 *	3.76
	Ws	3950	9.18	4090	5030	6270	7970	10480	14600			11080 *	3.76
1 m	We	5920	9.12	6050	7330	9060	11570	15560	15080 *			9350 *	3.60
	Ws	3910	9.12	4000	4870	6030	7630	10020	14090			9350 *	3.60
0 m	We	6040	8.95		7200	8870	11320	15260	17450 *			8700 *	3.11
	Ws	3970	8.95		4750	5850	7400	9750	13910			8700 *	3.11
-1 m	We	6340	8.65		7130	8770	11180	15130	19780 *	13100 *		11770 *	2.32
	Ws	4160	8.65		4690	5750	7280	9640	13900	13100 *		11770 *	2.32
-2 m	We	6860	8.22		7140	8740	11150	15140	18800 *	18280 *	14300 *	14010 *	1.86
	Ws	4520	8.22		4700	5730	7250	9640	13990	18280 *	14300 *	13670 *	1.65
-3 m	We	7750	7.64			8810	11230	14270 *	17340 *	21240 *	19270 *	18850 *	1.86
	Ws	5120	7.64			5800	7320	9750	14170	21240 *	19270 *	18390 *	1.68
-4 m	We	8650 *	6.85				10460 *	12670 *	15260 *	18420 *		22290 *	2.05
	Ws	6170	6.85				7490	9960	14480	18420 *		22290 *	2.05
-5 m	We	8330 *	5.80					10090 *	12210 *	14450 *		14510 *	2.97
	Ws	8250	5.80					10090 *	12210 *	14450 *		14510 *	2.97

*Hydraulic pressure factor: 87.0%. Without asterisk: Stability factor: 75.0%

https://truckmanualshub.com/

Lifting Capacity

Lifting Capacities (SH350LHD-5)

1. Standard Arm (3.25 m), 600 Grouser Shoe

Bucket: 1.4 m^3

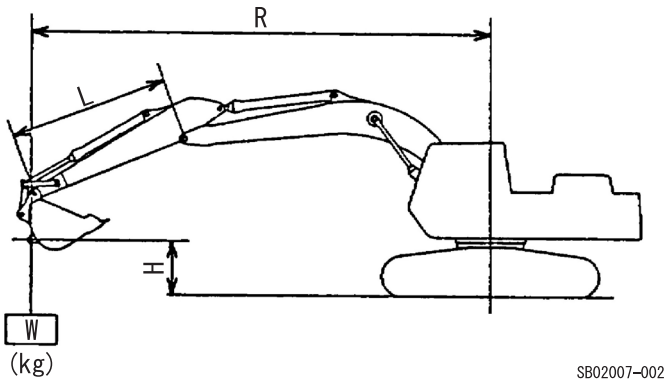

L: 3.25 m Arm length

R: Reach from swing center

H: Bucket hook height

W: Lifting capacity

We: Frontal rating load

Ws: Lateral rating load

MAX: Rating load at height point H and at maximum working reach

(Maximum working reach: 9.67 m) (Units; kg)

H \ R		Max. W	Max. R (m)	9 m	8 m	7 m	6 m	5 m	4 m	3 m	Min. W	Min. R (m)
7 m	We	4570 *	8.24		5560 *						6840 *	7.31
	Ws	4570 *	8.24		5560 *						6840 *	7.31
6 m	We	4250 *	8.83		6920 *						7150 *	7.03
	Ws	4250 *	8.83		5830						7150 *	7.03
5 m	We	4300 *	9.21	5460 *	7200 *	7640 *					8010 *	6.38
	Ws	4270	9.21	4490	5690	7280					8010 *	6.38
4 m	We	4430 *	9.48	7010 *	7590 *	8270 *	9250 *	10730 *			19240 *	2.22
	Ws	3940	9.48	4380	5500	6980	9090	10730 *			19240 *	2.22
3 m	We	4630 *	9.63	7070	8040 *	8960 *	10300 *	12390 *	16050 *	13440 *	8950 *	2.82
	Ws	3710	9.63	4250	5290	6670	8600	11520	16050 *	13440 *	8950 *	2.82
2 m	We	4920 *	9.67	6920	8460	9630 *	11300 *	13920 *	18470 *	6880 *	6520 *	2.98
	Ws	3580	9.67	4110	5080	6360	8130	10780	15200	6880 *	6520 *	2.98
1 m	We	5320 *	9.62	6790	8250	10200 *	12120 *	15060 *	19920 *	7730 *	5720 *	2.77
	Ws	3540	9.62	3990	4890	6080	7740	10220	14410	7730 *	5720 *	2.77
0 m	We	5870 *	9.45	6680	8090	10030	12680 *	15730 *	19630 *	10310 *	7820 *	2.26
	Ws	3580	9.45	3890	4740	5870	7450	9850	14010	10310 *	7820 *	2.26
-1 m	We	6430	9.17	6620	7970	9870	12690	15920 *	20330 *	13450 *	9760 *	2.02
	Ws	3720	9.17	3830	4640	5730	7270	9640	13850	13450 *	10260 *	1.67
-2 m	We	6890	8.77		7930	9790	12590	15680 *	19700 *	17030 *	13220 *	2.02
	Ws	3990	8.77		4600	5660	7190	9570	13840	17030 *	12130 *	1.41
-3 m	We	7640	8.22		7960	9790	12350 *	14990 *	18580 *	21180 *	16850 *	2.02
	Ws	4440	8.22		4620	5660	7190	9600	13950	21180 *	15410 *	1.41
-4 m	We	8400 *	7.50			9370 *	11370 *	13770 *	16880 *	21160 *	20910 *	2.02
	Ws	5210	7.50			5760	7290	9740	14170	21160 *	19000 *	1.41
-5 m	We	8440 *	6.55				9630 *	11820 *	14410 *	17740 *	22520 *	2.03
	Ws	6590	6.55				7510	10000	14410 *	17740 *	22520 *	2.03
-6 m	We	8060 *	5.24					8590 *	10700 *		11500 *	3.63
	Ws	8060 *	5.24					8590 *	10700 *		11500 *	3.63

*Hydraulic pressure factor: 87.0%. Without asterisk: Stability factor: 75.0%

https://truckmanualshub.com/

2. Short Arm (2.63 m), 600 Grouser Shoe

Bucket: 1.6 m^3

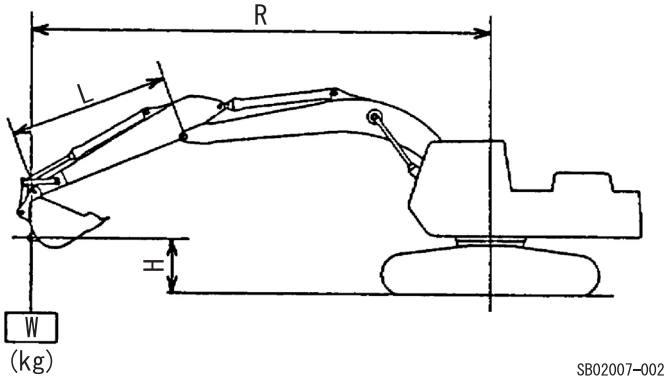

L: 2.63 m Arm length

R: Reach from swing center

H: Bucket hook height

W: Lifting capacity

We: Frontal rating load

Ws: Lateral rating load

MAX: Rating load at height point H and at maximum working reach

(Maximum working reach: 9.18 m) (Units; kg)

H \ R		Max. W	Max. R (m)	9 m	8 m	7 m	6 m	5 m	4 m	3 m	Min. W	Min. R (m)
7 m	We	7590 *	7.51			7650 *					7710 *	6.69
	Ws	6510	7.51			7470					7710 *	6.69
6 m	We	6320 *	8.28		7570 *	7870 *					8180 *	6.34
	Ws	5280	8.28		5670	7330					8180 *	6.34
5 m	We	6380 *	8.69		7770 *	8310 *	9120 *				9690 *	5.48
	Ws	4700	8.69		5550	7100	9120 *				9690 *	5.48
4 m	We	6560 *	8.97		8100 *	8870 *	10030 *	11840 *	15000 *		20060 *	3.20
	Ws	4310	8.97		5380	6820	8830	11840 *	15000 *		20060 *	3.20
3 m	We	6810	9.13	7000	8480 *	9490 *	11000 *	13400 *	17770 *		14920 *	3.63
	Ws	4060	9.13	4180	5190	6510	8350	11090	15570		14920 *	3.63
2 m	We	6640	9.18	6870	8370	10070 *	11880 *	14720 *	16240 *		11080 *	3.76
	Ws	3920	9.18	4070	5000	6230	7920	10420	14520		11080 *	3.76
1 m	We	6620	9.12	6770	8190	10160	12530 *	15570 *	15080 *		9350 *	3.60
	Ws	3880	9.12	3970	4840	5990	7580	9960	14010		9350 *	3.60
0 m	We	6760	8.95		8060	9970	12780	15920 *	17450 *		8700 *	3.11
	Ws	3950	8.95		4720	5820	7350	9700	13840		8700 *	3.11
-1 m	We	7100	8.65		7990	9850	12640	15810 *	19780 *	13100 *	11770 *	2.32
	Ws	4130	8.65		4660	5720	7230	9580	13820	13100 *	11770 *	2.32
-2 m	We	7690	8.22		8000	9830	12610 *	15270 *	18800 *	18280 *	14350 *	2.02
	Ws	4490	8.22		4660	5690	7200	9590	13910	18280 *	13670 *	1.65
-3 m	We	8640 *	7.64			9840 *	11840 *	14270 *	17340 *	21240 *	19330 *	2.02
	Ws	5090	7.64			5760	7270	9690	14090	21240 *	18390 *	1.68
-4 m	We	8650 *	6.85				10460 *	12670 *	15260 *	18420 *	22290 *	2.05
	Ws	6130	6.85				7450	9910	14400	18420 *	22290 *	2.05
-5 m	We	8330 *	5.80					10090 *	12210 *	14450 *	14510 *	2.97
	Ws	8210	5.80					10090 *	12210 *	14450 *	14510 *	2.97

*Hydraulic pressure factor: 87.0%. Without asterisk: Stability factor: 75.0%

https://truckmanualshub.com/

Lifting Capacity

3. Standard Arm (3.25 m), 800 Grouser Shoe

Bucket: 1.4 m^3

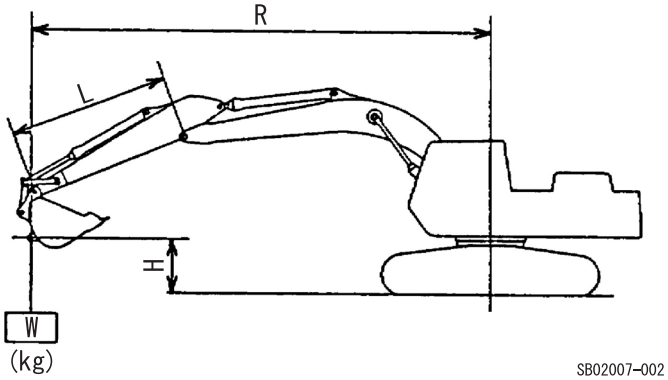

L: 3.25 m Arm length

R: Reach from swing center

H: Bucket hook height

W: Lifting capacity

We: Frontal rating load

Ws: Lateral rating load

MAX: Rating load at height point H and at maximum working reach

(Maximum working reach: 9.67 m) (Units; kg)

H \ R		Max.		9 m	8 m	7 m	6 m	5 m	4 m	3 m	Min.	
		W	R (m)								W	R (m)
7 m	We	4570 *	8.24		5560 *						6840 *	7.31
	Ws	4570 *	8.24		5560 *						6840 *	7.31
6 m	We	4250 *	8.83		6920 *						7150 *	7.03
	Ws	4250 *	8.83		5970						7150 *	7.03
5 m	We	4300 *	9.21	5460 *	7200 *	7640 *					8010 *	6.38
	Ws	4300 *	9.21	4610	5820	7430					8010 *	6.38
4 m	We	4430 *	9.48	7010 *	7590 *	8270 *	9250 *	10730 *			19240 *	2.22
	Ws	4040	9.48	4500	5630	7140	9250 *	10730 *			19240 *	2.22
3 m	We	4630 *	9.63	7250	8040 *	8960 *	10300 *	12390 *	16050 *	13440 *	8950 *	2.82
	Ws	3820	9.63	4360	5420	6820	8790	11760	16050 *	13440 *	8950 *	2.82
2 m	We	4920 *	9.67	7100	8490 *	9630 *	11300 *	13920 *	18470 *	6880 *	6520 *	2.98
	Ws	3690	9.67	4230	5210	6510	8320	11020	15540	6880 *	6520 *	2.98
1 m	We	5320 *	9.62	6970	8460	10200 *	12120 *	15060 *	19920 *	7730 *	5720 *	2.77
	Ws	3640	9.62	4100	5020	6240	7930	10460	14750	7730 *	5720 *	2.77
0 m	We	5870 *	9.45	6860	8290	10280	12680 *	15730 *	19630 *	10310 *	7820 *	2.26
	Ws	3690	9.45	4000	4870	6030	7640	10090	14340	10310 *	7820 *	2.26
-1 m	We	6600	9.17	6800	8180	10120	12920 *	15920 *	20330 *	13450 *	9760 *	2.02
	Ws	3830	9.17	3950	4770	5880	7460	9880	14180	13450 *	10260 *	1.67
-2 m	We	7070	8.77		8130	10040	12830 *	15680 *	19700 *	17030 *	13220 *	2.02
	Ws	4110	8.77		4730	5810	7370	9810	14170	17030 *	12130 *	1.41
-3 m	We	7840	8.22		8170	10040	12350 *	14990 *	18580 *	21180 *	16850 *	2.02
	Ws	4570	8.22		4760	5820	7380	9840	14280	21180 *	15410 *	1.41
-4 m	We	8400 *	7.50			9370 *	11370 *	13770 *	16880 *	21160 *	20910 *	2.02
	Ws	5350	7.50			5920	7480	9980	14510	21160 *	19000 *	1.41
-5 m	We	8440 *	6.55				9630 *	11820 *	14410 *	17740 *	22520 *	2.03
	Ws	6760	6.55				7700	10240	14410 *	17740 *	22520 *	2.03
-6 m	We	8060 *	5.24					8590 *	10700 *		11500 *	3.63
	Ws	8060 *	5.24					8590 *	10700 *		11500 *	3.63

*Hydraulic pressure factor: 87.0%. Without asterisk: Stability factor: 75.0%

https://truckmanualshub.com/

4. Short Arm (2.63 m), 800 Grouser Shoe

Bucket: 1.6 m^3

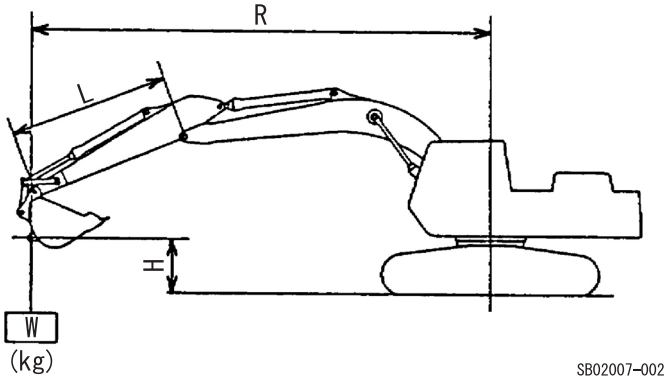

L: 2.63 m Arm length

R: Reach from swing center

H: Bucket hook height

W: Lifting capacity

We: Frontal rating load

Ws: Lateral rating load

MAX: Rating load at height point H and at maximum working reach

(Maximum working reach: 9.18 m) (Units; kg)

H \ R		Max. W	Max. R (m)	9 m	8 m	7 m	6 m	5 m	4 m	3 m	Min. W	Min. R (m)
7 m	We	7590 *	7.51			7650 *					7710 *	6.69
	Ws	6650	7.51			7630					7710 *	6.69
6 m	We	6320 *	8.28		7870 *	7870 *					8180 *	6.34
	Ws	5400	8.28		5800	7490					8180 *	6.34
5 m	We	6380 *	8.69		7770 *	8310 *	9120 *				9690 *	5.48
	Ws	4820	8.69		5680	7260	9120 *				9690 *	5.48
4 m	We	6560 *	8.97		8100 *	8870 *	10030 *	11840 *	15000 *		20060 *	3.20
	Ws	4430	8.97		5510	6970	9020	11840 *	15000 *		20060 *	3.20
3 m	We	6850 *	9.13	7170	8480 *	9490 *	11000 *	13400 *	17770 *		14920 *	3.63
	Ws	4170	9.13	4290	5320	6670	8540	11330	15910		14920 *	3.63
2 m	We	6810	9.18	7050	8580	10070 *	11880 *	14720 *	16240 *		11080 *	3.76
	Ws	4030	9.18	4180	5130	6380	8110	10660	14850		11080 *	3.76
1 m	We	6800	9.12	6950	5400	10410	12530 *	15570 *	15080 *		9350 *	3.60
	Ws	3990	9.12	4080	4970	6140	7770	10200	14350		9350 *	3.60
0 m	We	6940	8.95		8270	10210	12900 *	15920 *	17450 *		8700 *	3.11
	Ws	4060	8.95		4850	5970	7540	9940	14170		8700 *	3.11
-1 m	We	7280	8.65		8200	10100	12930 *	15810 *	19780 *	13100 *	11770 *	2.32
	Ws	4250	8.65		4790	5870	7420	9820	14150	13100 *	11770 *	2.32
-2 m	We	7880	8.22		8210	10080	12610 *	15270 *	18800 *	18280 *	14350 *	2.02
	Ws	4610	8.22		4800	5850	7390	9830	14240	18280 *	13670 *	1.65
-3 m	We	8340 *	7.64			9840 *	11840 *	14270 *	17340 *	21240 *	19330 *	2.02
	Ws	5220	7.64			5910	7460	9930	14430	21240 *	18390 *	1.68
-4 m	We	8650 *	6.85				10460 *	12670 *	15260 *	18420 *	22290 *	2.05
	Ws	6290	6.85				7640	10140	14730	18420 *	22290 *	2.05
-5 m	We	8330 *	5.80					10090 *	12210 *	14450 *	14510 *	2.97
	Ws	8330 *	5.80					10090 *	12210 *	14450 *	14510 *	2.97

*Hydraulic pressure factor: 87.0%. Without asterisk: Stability factor: 75.0%

https://truckmanualshub.com/

Overall View (SH330-5)

1. Standard Arm (3.25 m)

   Note: 1. Numbers are subject to change without notice due to design change or other reason.
   Note: 2. The diagrams give values that include the shoe lug height (36 mm).

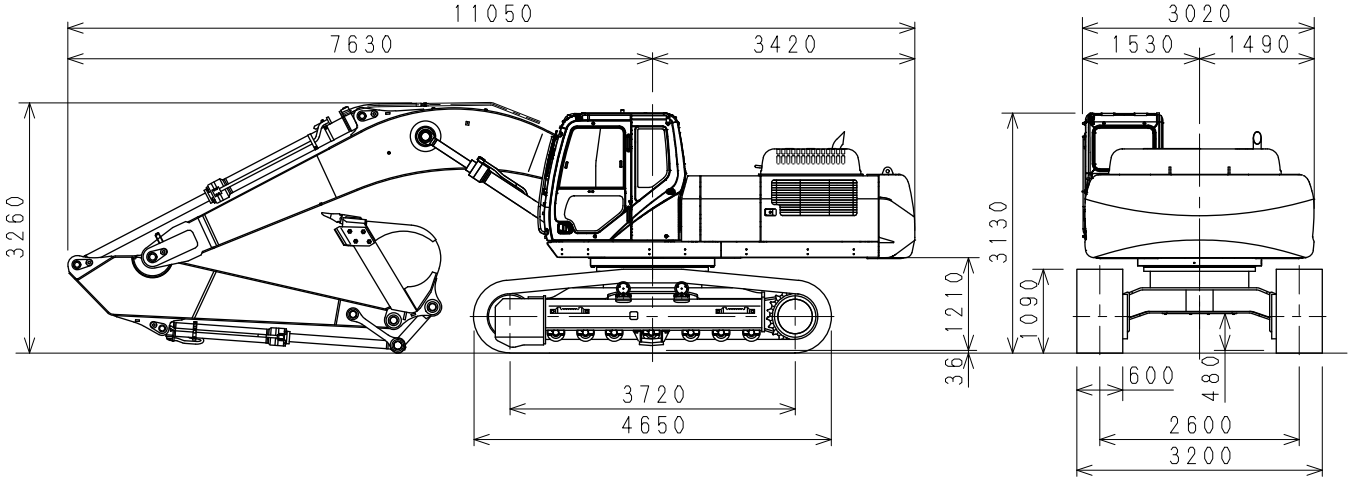

SB03012-001_EN

2. Short Arm (2.63 m)

   Note: 1. Numbers are subject to change without notice due to design change or other reason.
   Note: 2. The diagrams give values that include the shoe lug height (36 mm).

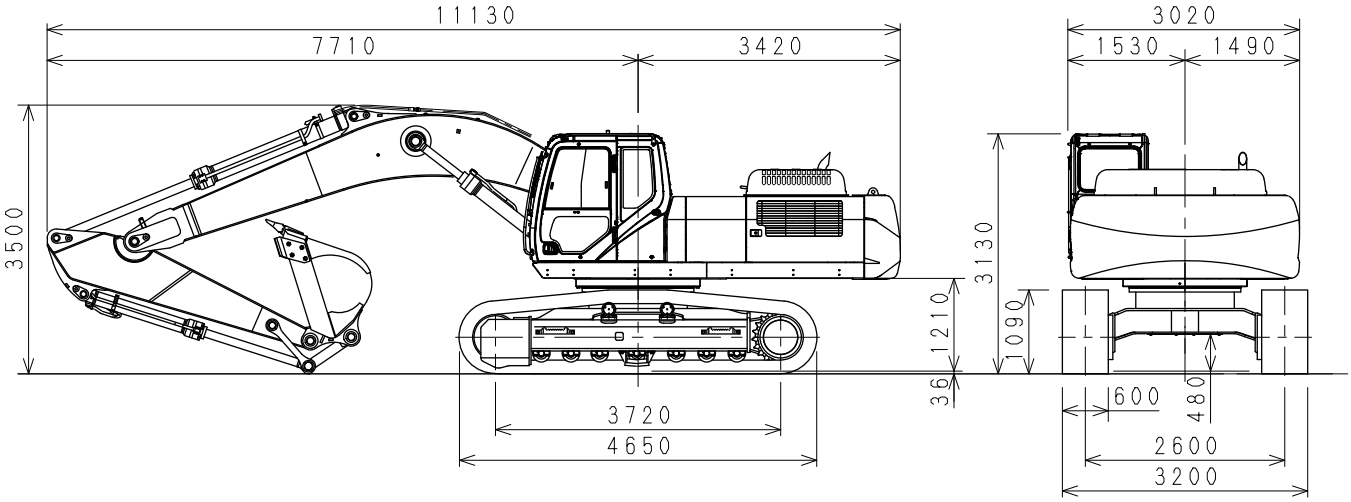

SB03012-002_EN

https://truckmanualshub.com/

Overall View

3. Long Arm (4.04 m)

   Note: 1. Numbers are subject to change without notice due to design change or other reason.
   Note: 2. The diagrams give values that include the shoe lug height (36 mm).

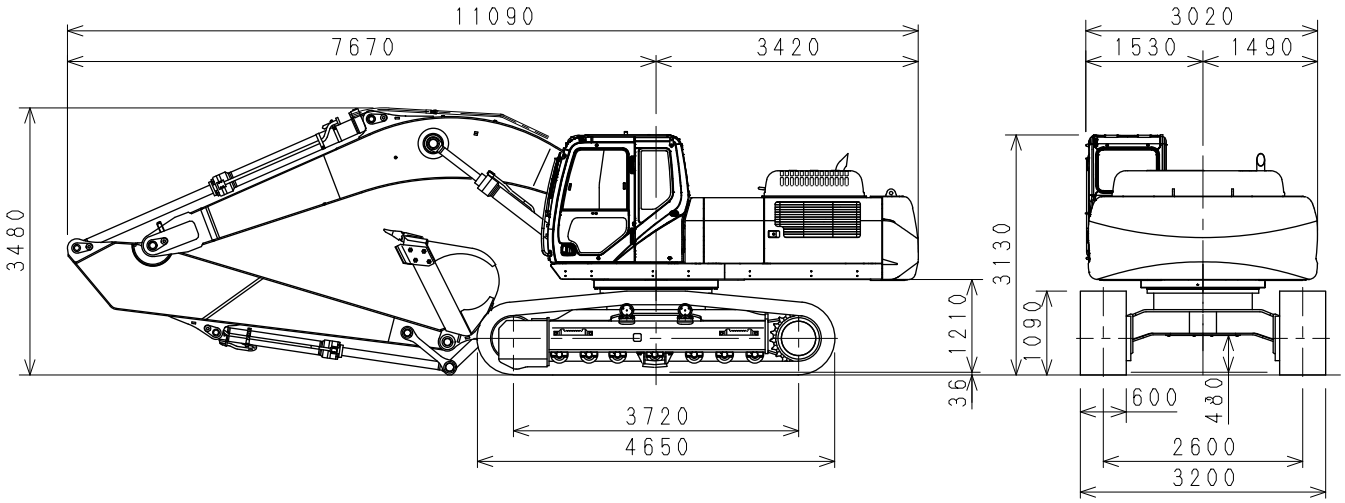

SB03012-003_EN

https://truckmanualshub.com/

Overall View (SH330LC-5)

1. Standard Arm (3.25 m)

   Note: 1. Numbers are subject to change without notice due to design change or other reason.
   Note: 2. The diagrams give values that include the shoe lug height (36 mm).

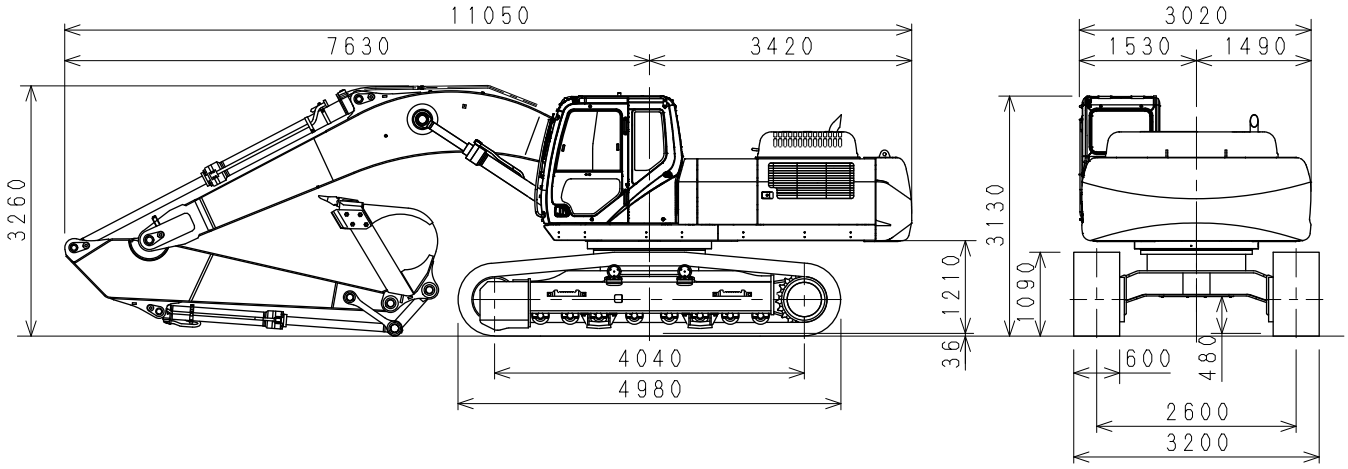

SB03012-011_EN

2. Short Arm (2.63 m)

   Note: 1. Numbers are subject to change without notice due to design change or other reason.
   Note: 2. The diagrams give values that include the shoe lug height (36 mm).

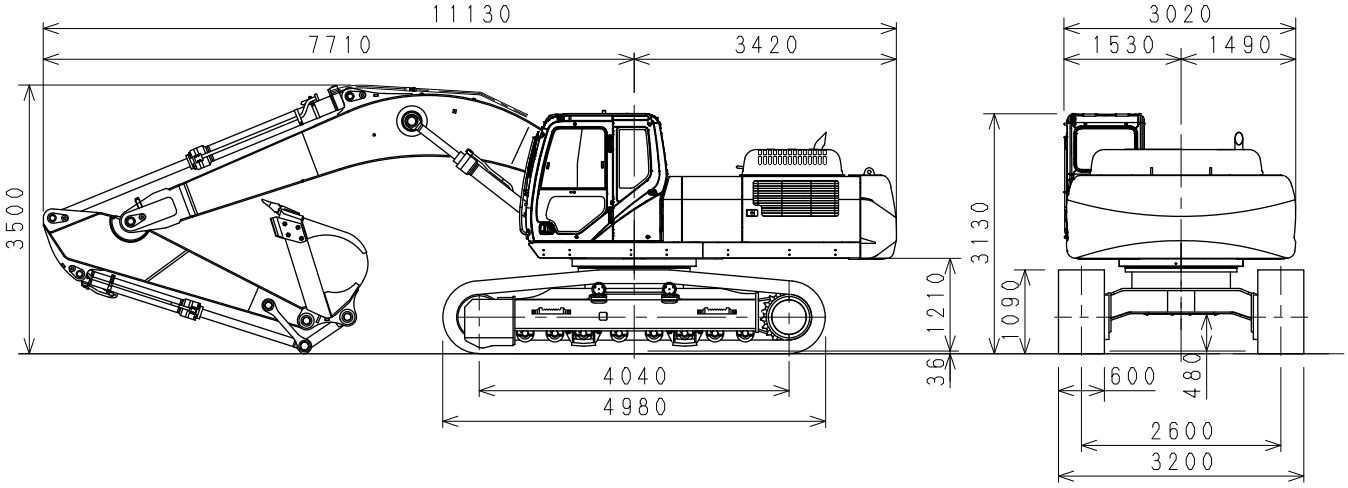

SB03012-012_EN

https://truckmanualshub.com/

Overall View

3. Long Arm (4.04 m)

Note: 1. Numbers are subject to change without notice due to design change or other reason.
Note: 2. The diagrams give values that include the shoe lug height (36 mm).

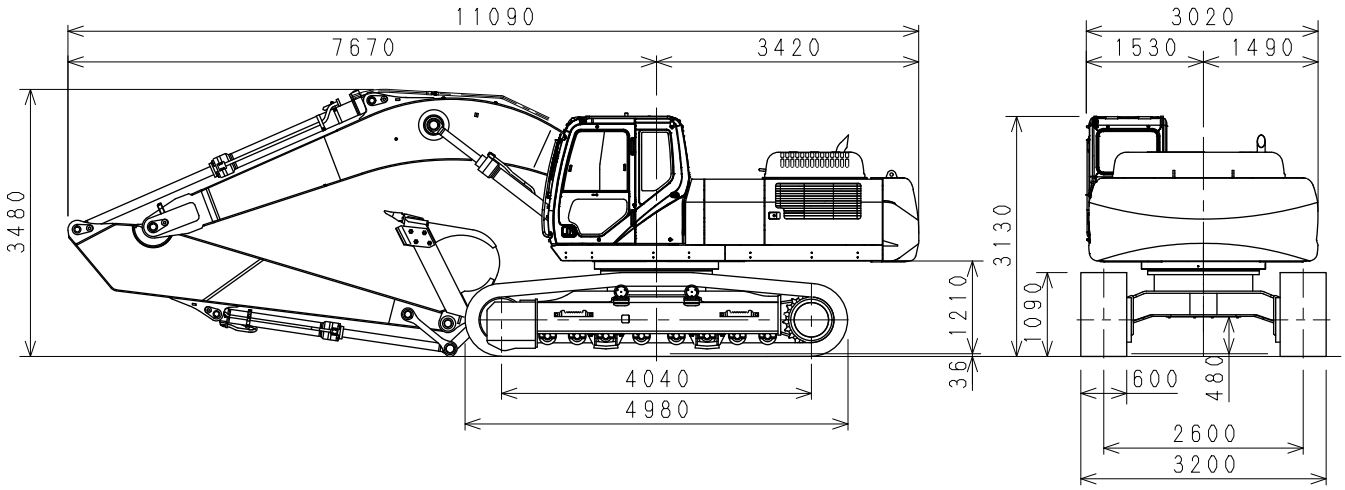

SB03012-013_EN

https://truckmanualshub.com/

Overall View (SH350HD-5)

1. Standard Arm (3.25 m)

   Note: 1. Numbers are subject to change without notice due to design change or other reason.
   Note: 2. The diagrams give values that include the shoe lug height (36 mm).

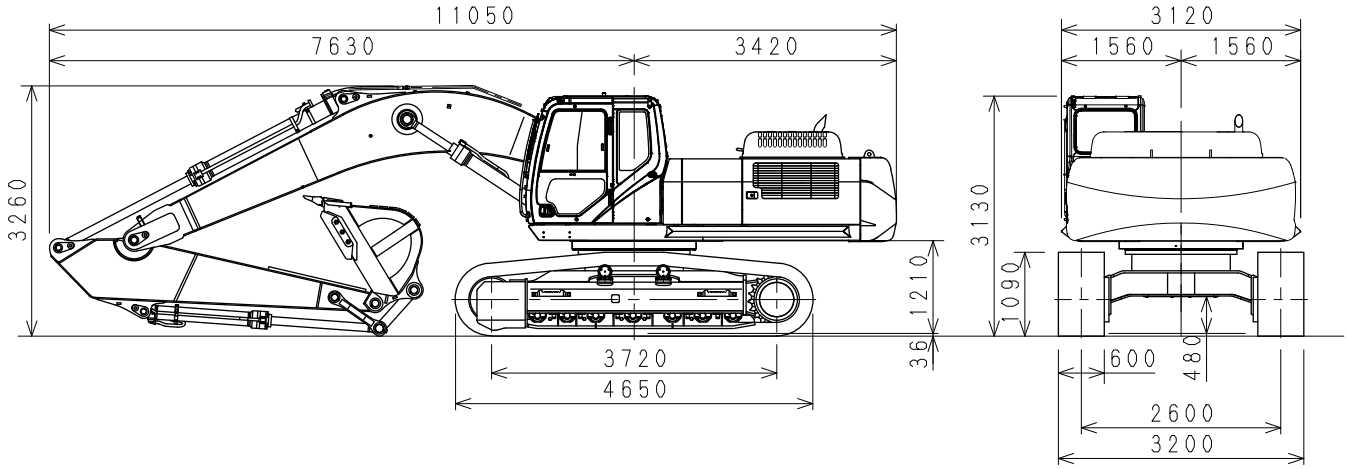

SB03012-014_EN

2. Short Arm (2.63 m)

   Note: 1. Numbers are subject to change without notice due to design change or other reason.
   Note: 2. The diagrams give values that include the shoe lug height (36 mm).

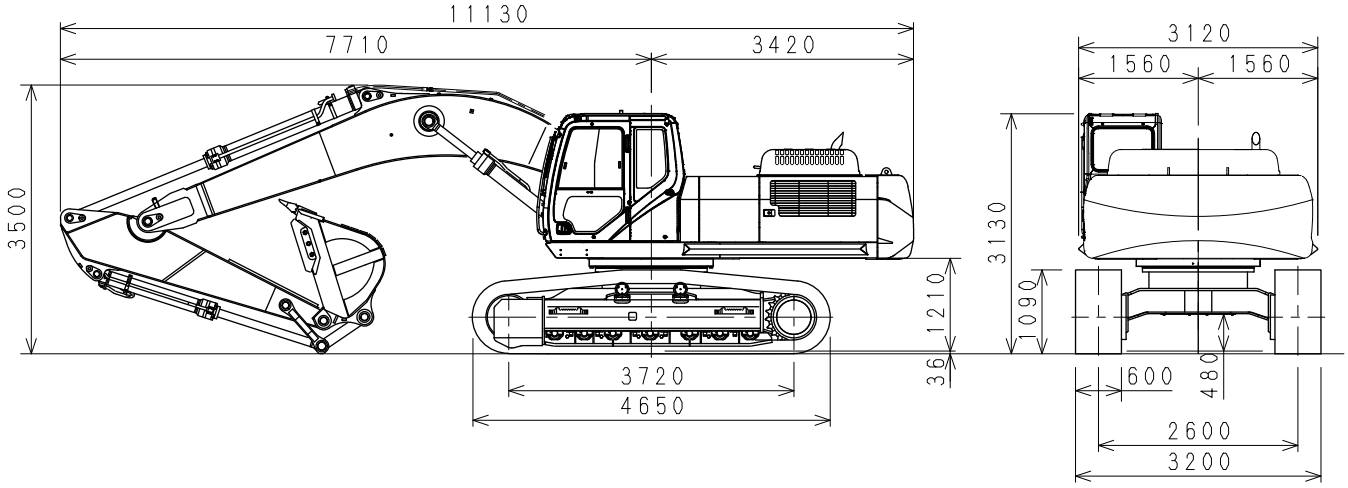

SB03012-015_EN

https://truckmanualshub.com/

Overall View (SH350LHD-5)

1. Standard Arm (3.25 m)

   Note: 1. Numbers are subject to change without notice due to design change or other reason.
   Note: 2. The diagrams give values that include the shoe lug height (36 mm).

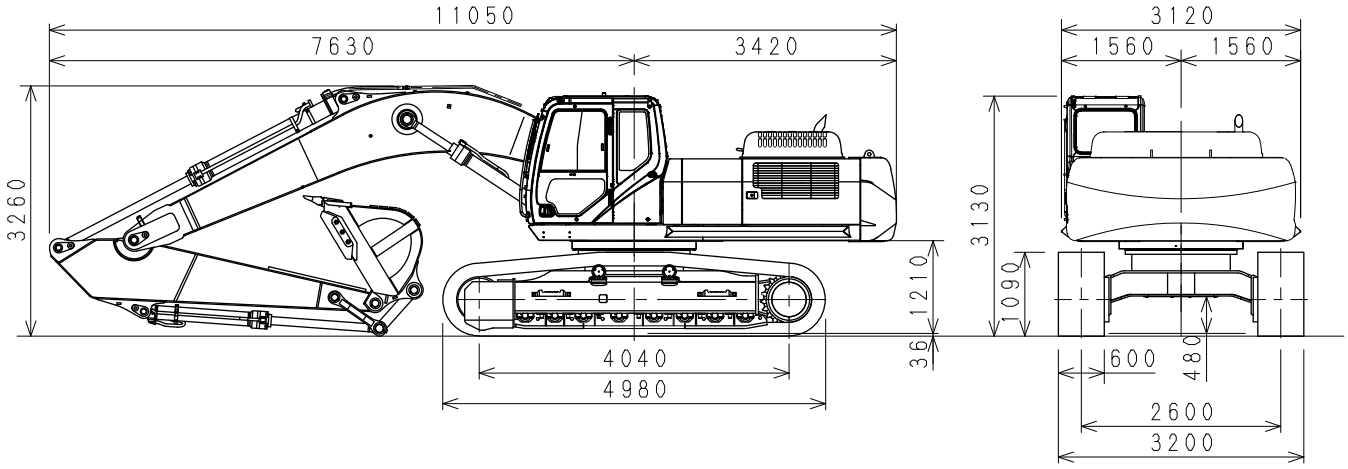

SB03012-009_EN

2. Short Arm (2.63 m)

   Note: 1. Numbers are subject to change without notice due to design change or other reason.
   Note: 2. The diagrams give values that include the shoe lug height (36 mm).

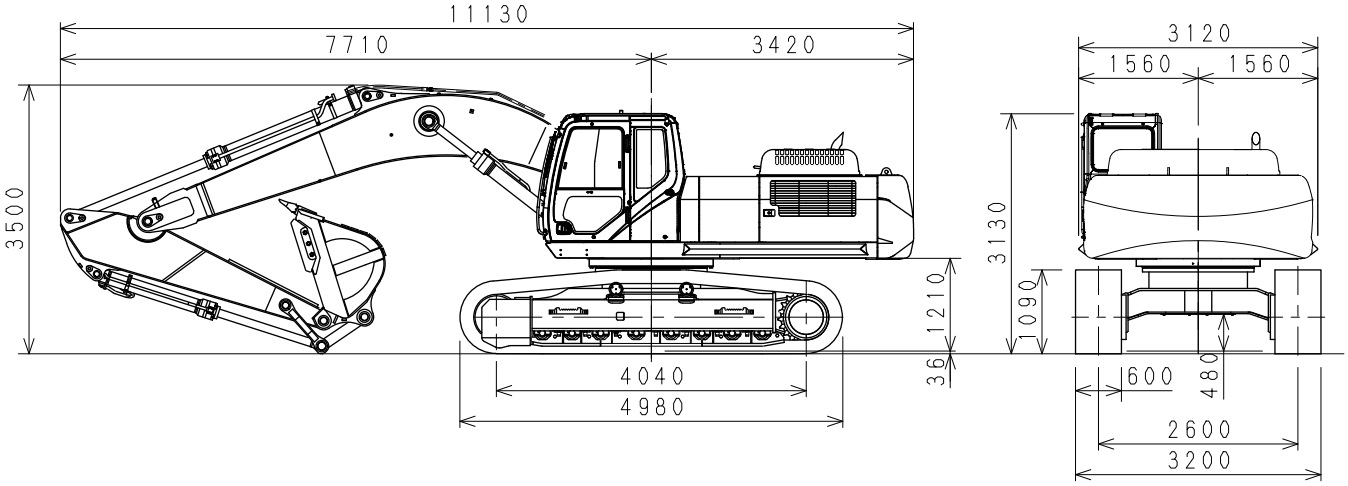

SB03012-010_EN

https://truckmanualshub.com/

Work Range Diagram (SH330-5)

1. Standard Arm (3.25 m)

   Note: 1. Numbers are subject to change without notice due to design change or other reason.
   Note: 2. The diagrams give values that exclude the shoe lug height (36 mm).

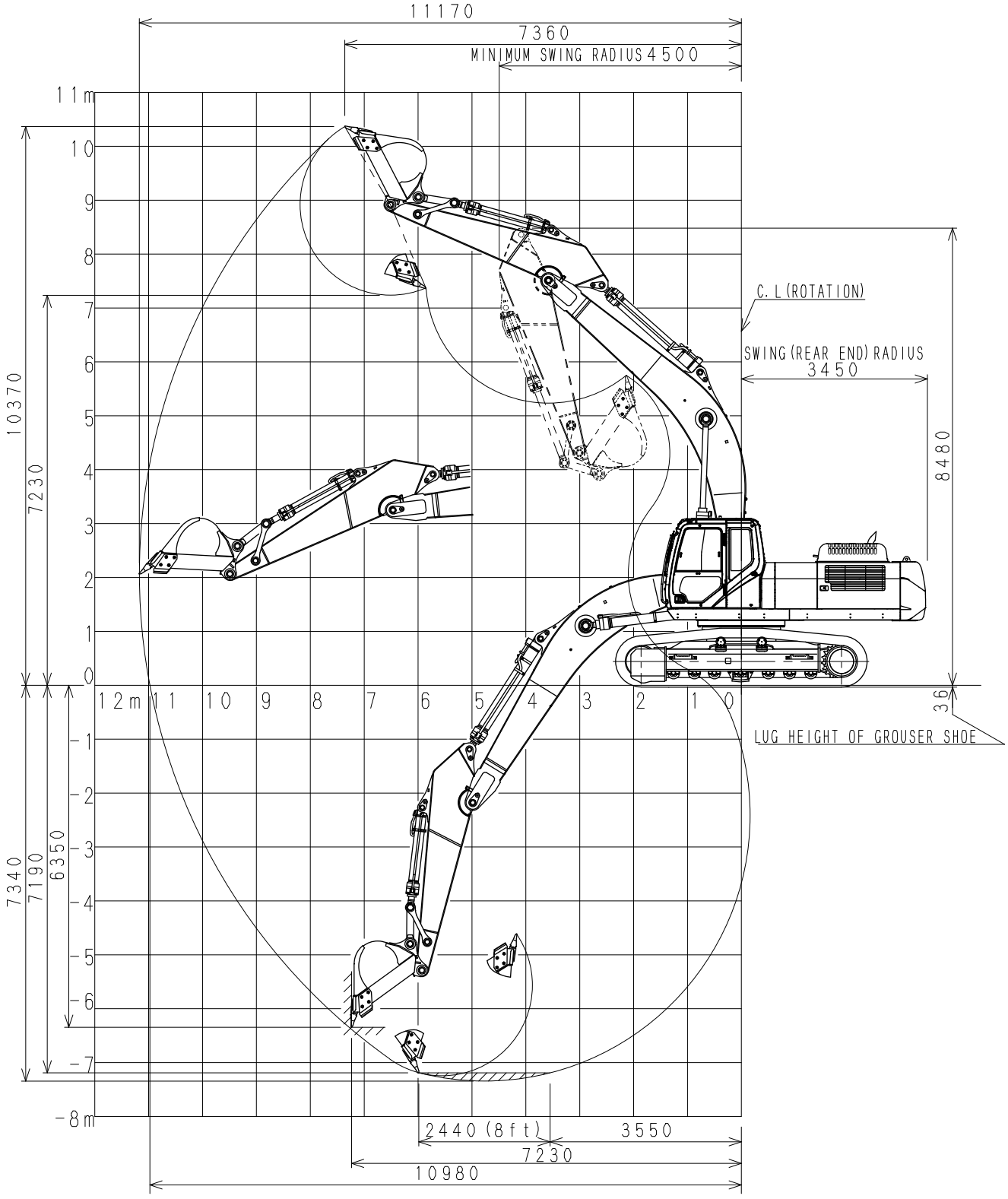

SB04012-001_EN

https://truckmanualshub.com/

Work Range Diagram

2. Short Arm (2.63 m)

   Note: 1. Numbers are subject to change without notice due to design change or other reason.
   Note: 2. The diagrams give values that exclude the shoe lug height (36 mm).

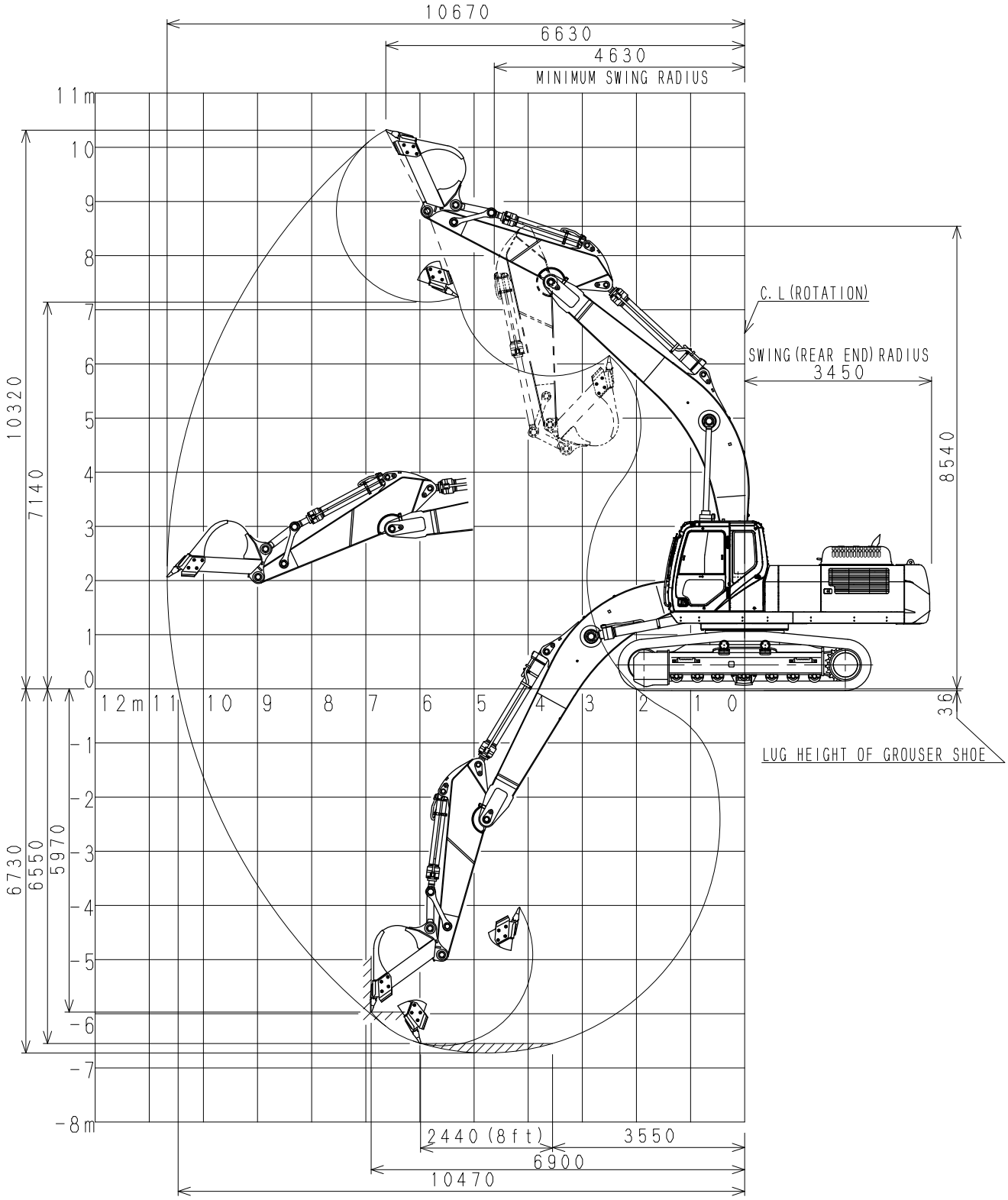

SB04012-002_EN

https://truckmanualshub.com/

3. Long Arm (4.04 m)

Note: 1. Numbers are subject to change without notice due to design change or other reason.
Note: 2. The diagrams give values that exclude the shoe lug height (36 mm).

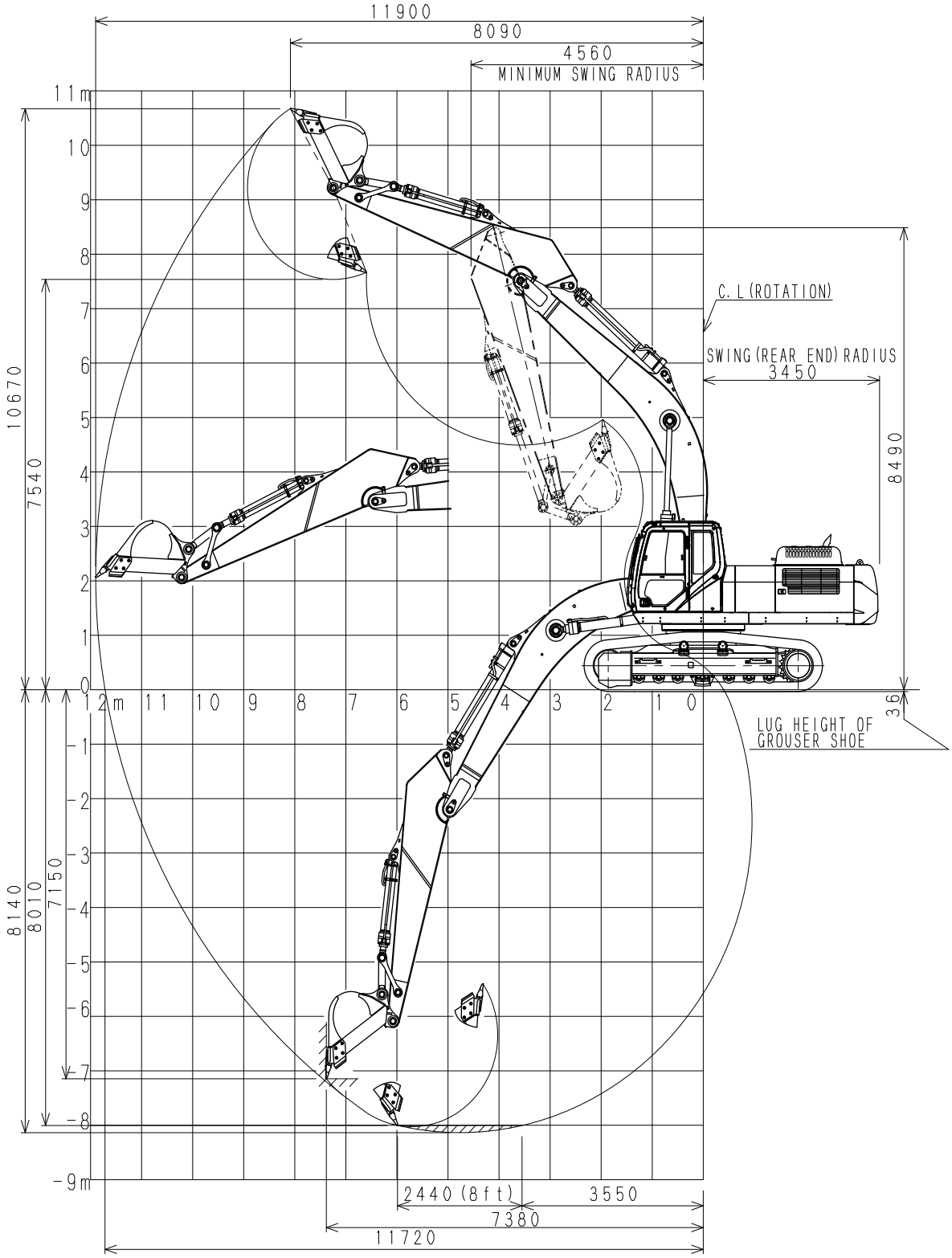

SB04012-003_EN

https://truckmanualshub.com/

Work Range Diagram

Work Range Diagram (SH330LC-5)

1. Standard Arm (3.25 m)

   Note: 1. Numbers are subject to change without notice due to design change or other reason.
   Note: 2. The diagrams give values that exclude the shoe lug height (36 mm).

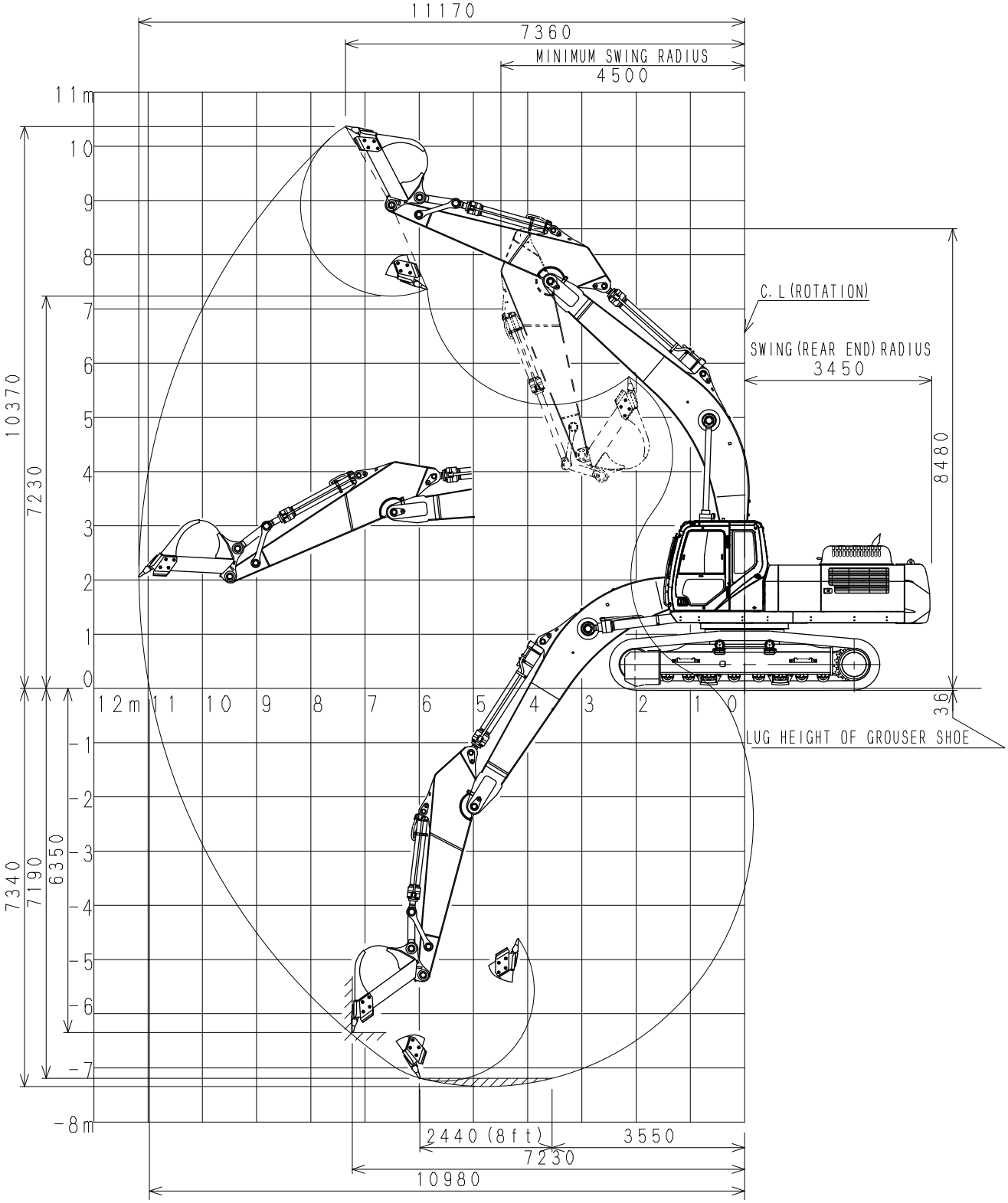

SB04012-011_EN

https://truckmanualshub.com/

2. Short Arm (2.63 m)

Note: 1. Numbers are subject to change without notice due to design change or other reason.
Note: 2. The diagrams give values that exclude the shoe lug height (36 mm).

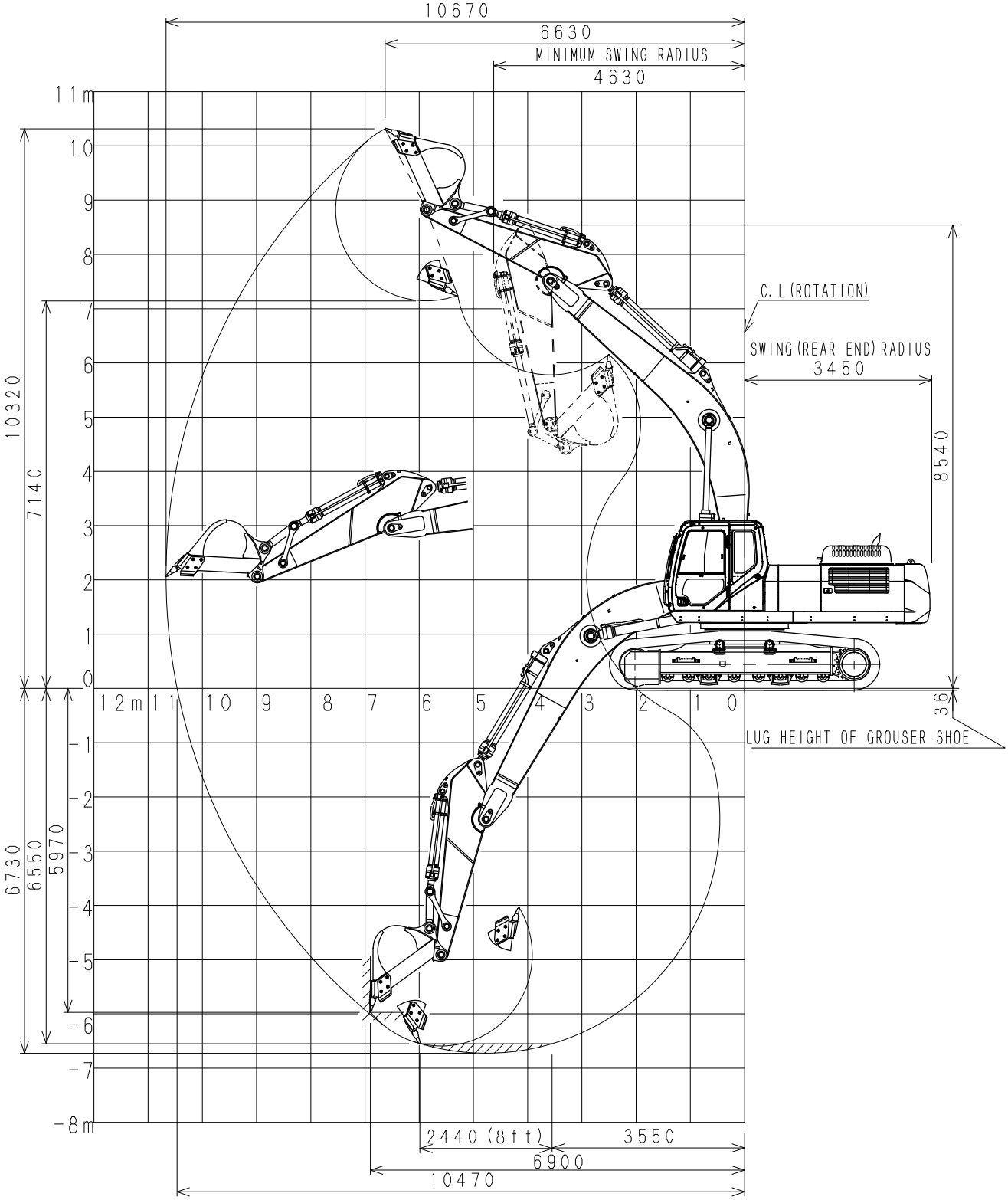

SB04012-012_EN

https://truckmanualshub.com/

Work Range Diagram

3. Long Arm (4.04 m)

Note: 1. Numbers are subject to change without notice due to design change or other reason.
Note: 2. The diagrams give values that exclude the shoe lug height (36 mm).

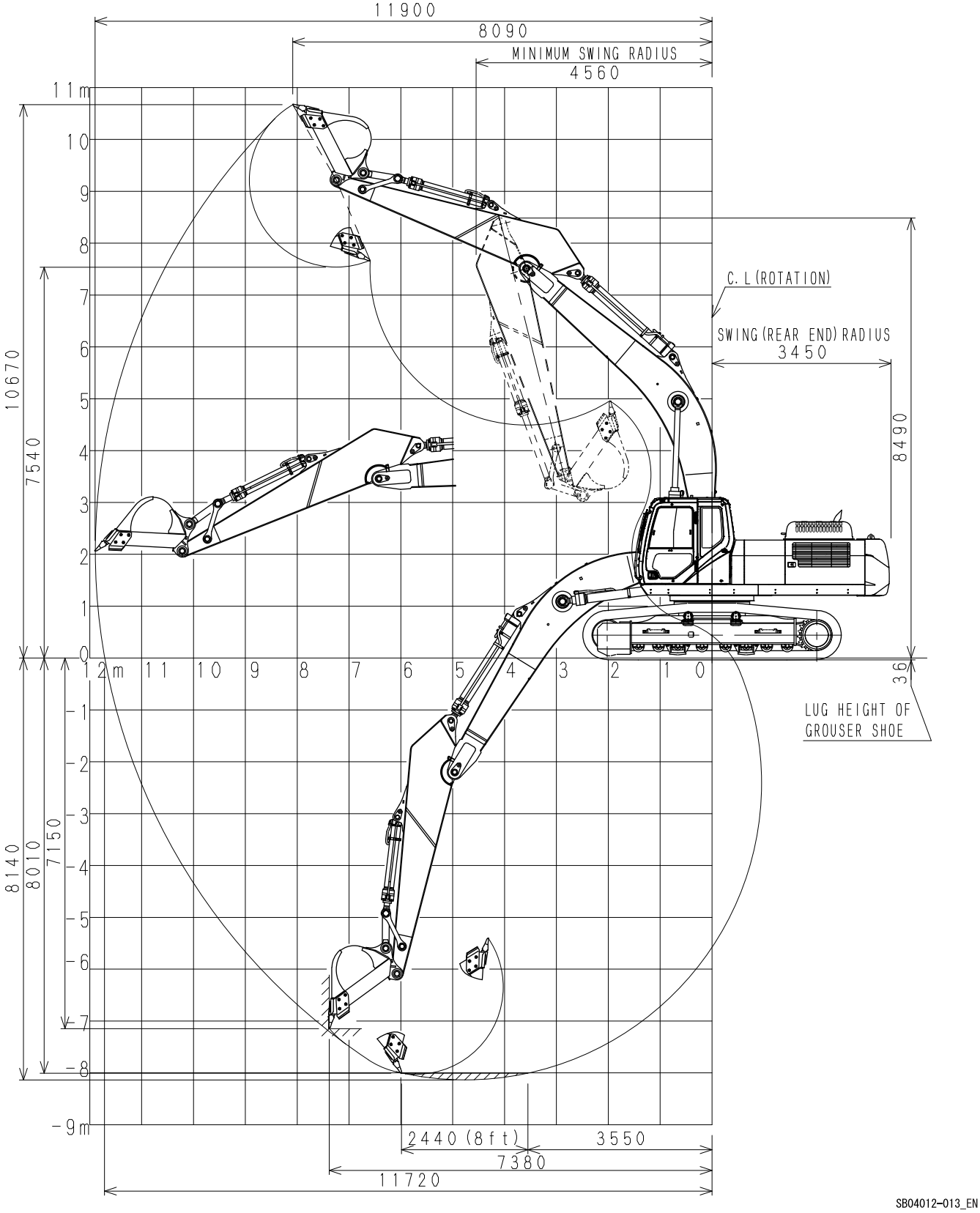

https://truckmanualshub.com/

Work Range Diagram (SH350HD-5)

1. Standard Arm (3.25 m)

   Note: 1. Numbers are subject to change without notice due to design change or other reason.
   Note: 2. The diagrams give values that exclude the shoe lug height (36 mm).

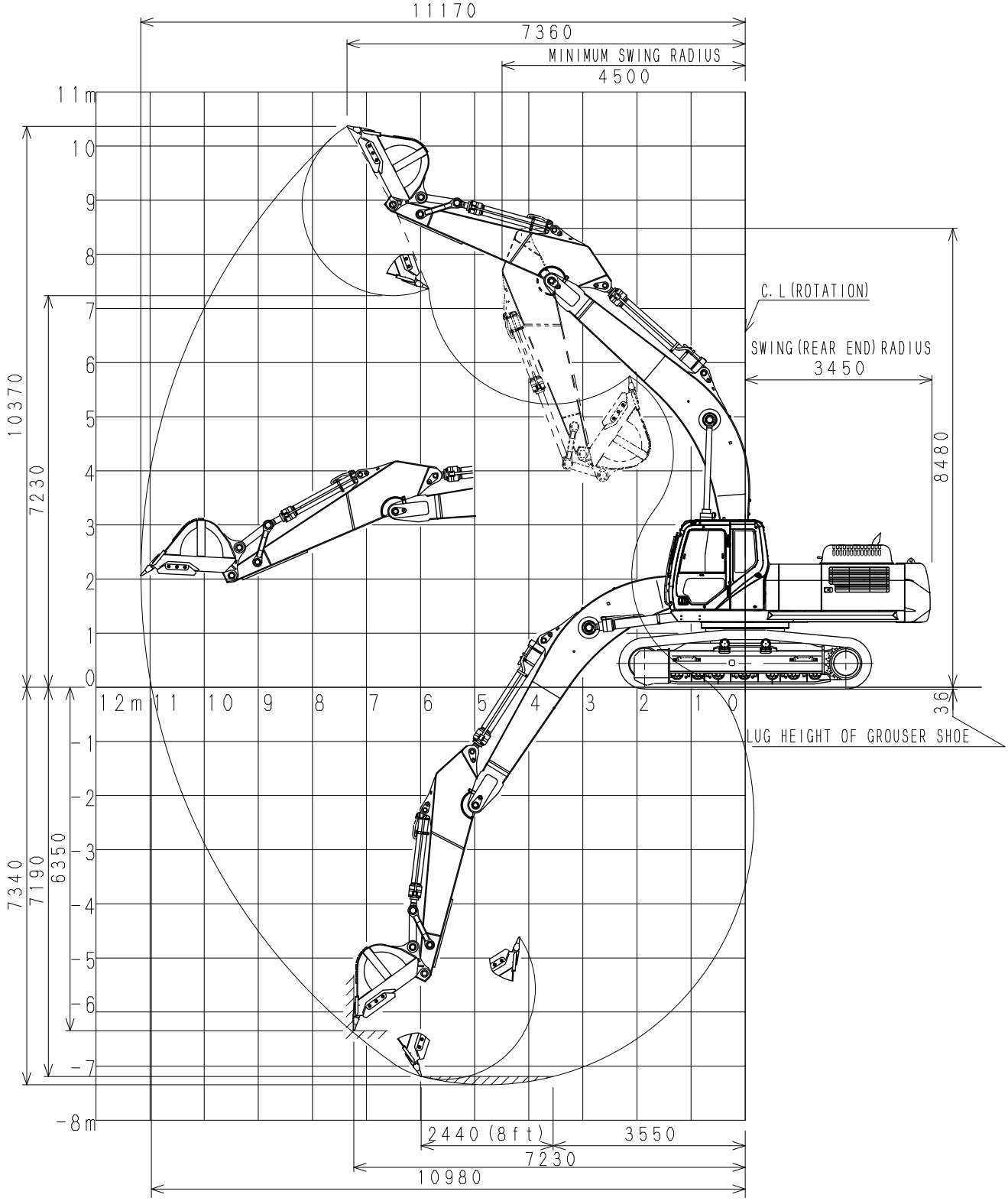

SB04012-014_EN

https://truckmanualshub.com/

Work Range Diagram

2. Short Arm (2.63 m)

   Note: 1. Numbers are subject to change without notice due to design change or other reason.
   Note: 2. The diagrams give values that exclude the shoe lug height (36 mm).

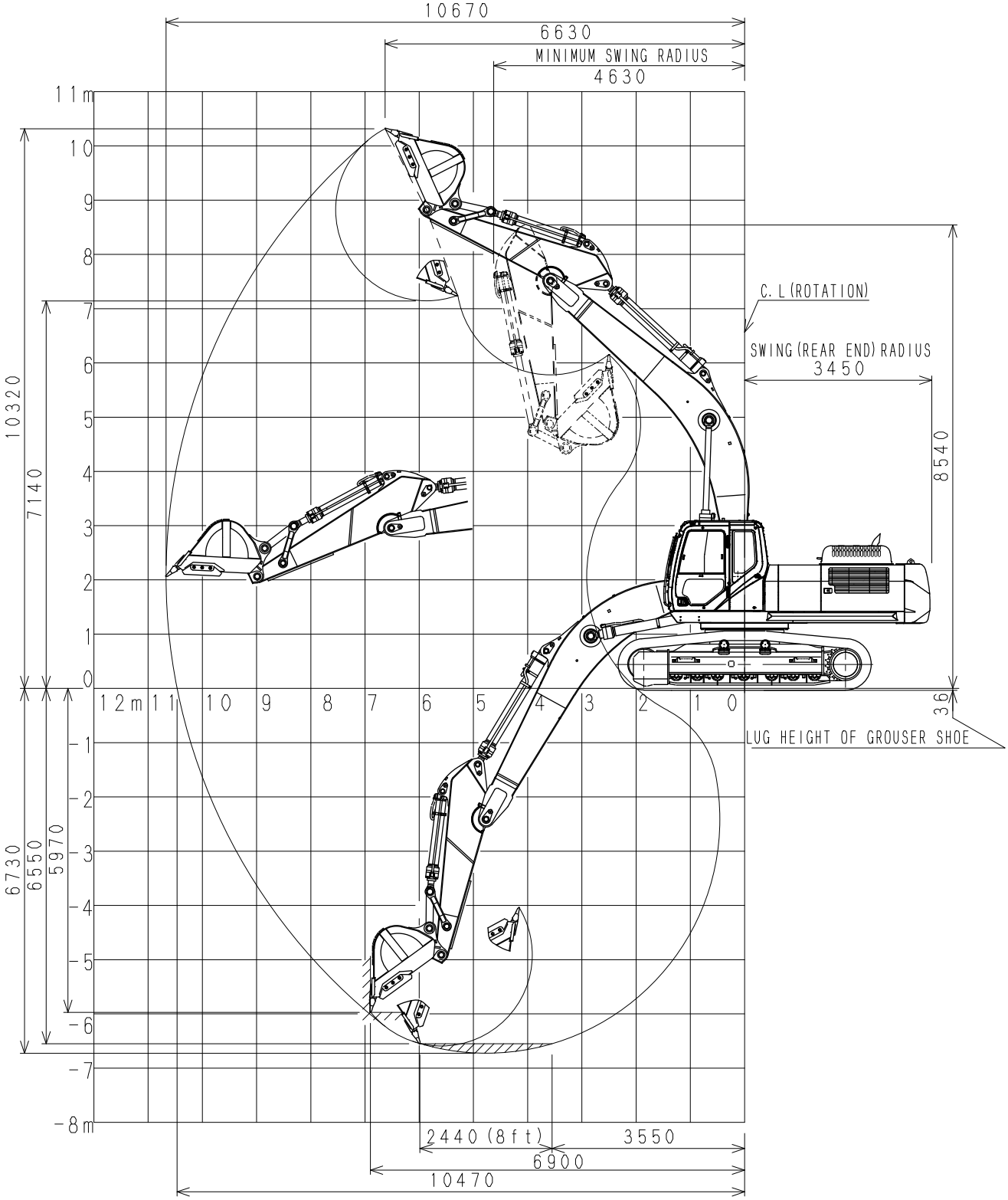

SB04012-015_EN

https://truckmanualshub.com/

Work Range Diagram (SH350LHD-5)

1. Standard Arm (3.25 m)

   Note: 1. Numbers are subject to change without notice due to design change or other reason.
   Note: 2. The diagrams give values that exclude the shoe lug height (36 mm).

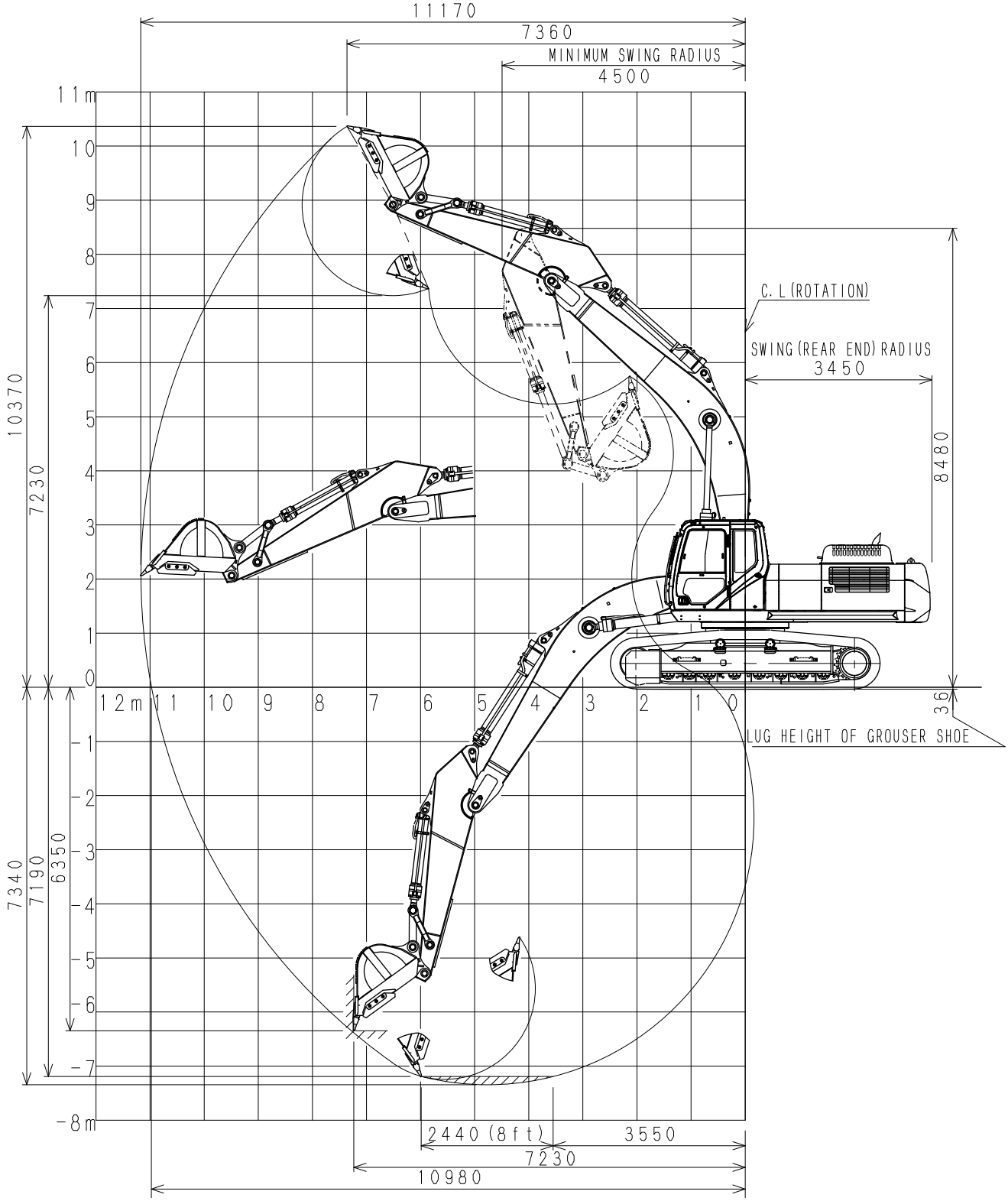

SB04012-009_EN

https://truckmanualshub.com/

Work Range Diagram

2. Short Arm (2.63 m)

   Note: 1. Numbers are subject to change without notice due to design change or other reason.
   Note: 2. The diagrams give values that exclude the shoe lug height (36 mm).

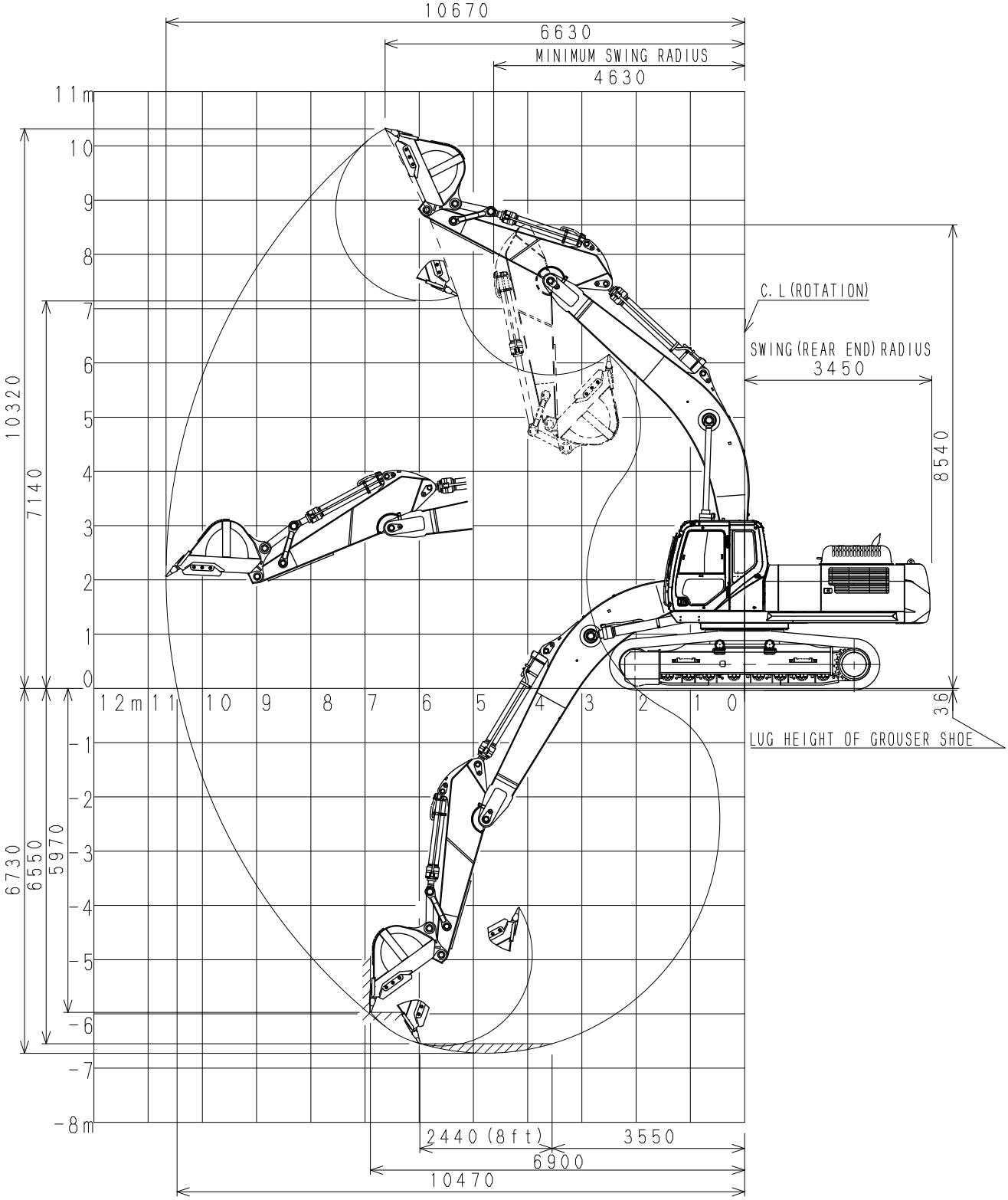

SB04012-010_EN

https://truckmanualshub.com/

Lower Component

1. Travel Unit

	SH330-5/SH330LC-5/SH350HD-5/SH350LHD-5
Sumitomo part No.	KSA10220
Manufacturer	Nabtesco Corporation
Motor type	Variable displacement piston motor
	Automatic 2-speed switchover with parking brake
Intake amount	290.7/170.1 cm^3/rev
Operating pressure	34.3 MPa
Operating flow	292.5 L/min
Brake torque	47.38 kN• min. (including reduction gear)
Relief valve set pressure	35.8 - 37.8 MPa
Automatic 2-speed switchover pressure	26.5 MPa
Reduction gear	
Reduction gear type	Planetary gear 2-stage reduction gear
Reduction ratio	40.467
Dry weight	390 kg

2. Take-up Roller

	SH330-5/SH330LC-5/SH350HD-5/SH350LHD-5
Sumitomo part No.	KSA1307
Weight	165.0 kg

3. Upper Roller

	SH330-5/SH330LC-5/SH350HD-5/SH350LHD-5
Sumitomo part No.	KBA1141
Weight	43.0 kg

4. Lower Roller

	SH330-5/SH330LC-5/SH350HD-5/SH350LHD-5
Sumitomo part No.	KSA1068
Weight	60.0 kg

https://truckmanualshub.com/

Main Equipment Table

5. Recoil Spring

	SH330-5/SH330LC-5/SH350HD-5/SH350LHD-5	
Item	Sumitomo part No.	Weight (kg)
Yoke	KSA1065	39.8
Sems B M16 × 50	105R016Y050R	0.5
Threaded rod	KSA1066	50.3
Groove height N M64	165R064HSN	1.9
SP pin 10 × 100	338W100Z100B	0.1
Recoil spring	KSA1310	119.4
Grease cylinder assembly	KSA0832	41.3
Sems B M16 × 65	105R016Y065R	0.3
Assembly	Total	254
	Mounting length of spring	779 mm

6. Shoe

	SH330-5/SH350HD-5		SH330LC-5/SH350LHD-5	
	Sumitomo part No.	Weight or quantity	Sumitomo part No.	Weight or quantity
600 grouser	KSA10370	2098 kg	KSA10450	2217 kg
Link	KSA10380	1 set	KSA10460	1 set
Shoe	KSA1121	× 45	KSA1106	× 48
Bolt	KSA1122	× 180	KSA1107	× 192
Nut	KSA1123	× 180	KSA1108	× 192
800 grouser	KSA10410	2455 kg	KSA10480	2619 kg
Link	KSA10420	1 set	KSA10460	1 set
Shoe	KSA1167	× 45	KSA1167	× 48
Bolt	KSA1107	× 180	KSA1107	× 192
Nut	KSA1108	× 180	KSA1108	× 192

https://truckmanualshub.com/

Upper Component

1. Swing Unit

	SH330-5/SH330LC-5	SH350HD-5/SH350LHD-5
Swing motor assembly		
Sumitomo part No.	KSC10140	
Swing motor		
Sumitomo part No.	KSC10070	
Manufacturer	Kawasaki Precision Machinery Ltd.	
Motor type	Fixed displacement piston motor	
	With parking brake	
Intake amount	180.1 cm^3/rev	
Operating pressure	30.4 MPa	
Operating flow	290 L/min	
Mechanical brake torque	1010.8 N•m min.	
Brake off pressure	3.1 MPa max.	
Relief valve set pressure	30.4 MPa	
Swing reduction gear		
Sumitomo part No.	KSC10080	
Reduction gear type	Planetary gear 2-stage reduction gear	
Reduction ratio	27.143	
Dry weight	435 kg	
Turntable bearing		
Sumitomo part No.	KSB10070	
Number of teeth	92	
Weight	540 kg	
Counterweight		
Sumitomo part No.	KSB12950	KSB12490
Weight	6400 kg	7400 kg

https://truckmanualshub.com/

Main Equipment Table

Engine-related

1. Engine

	SH330-5/SH330LC-5/SH350HD-5/SH350LHD-5
Sumitomo part No.	KSH1027
Engine model name	Isuzu 6HK1X diesel engine
Engine type	4-cycle, water cooled, overhead camshaft, vertical in-line, direct injection type (electronic control)
Number of cylinders - bore - stroke	6 - ϕ 115 mm - 125 mm
Total displacement	7.79 L
Compression ratio	17.5
Rated output	202 kW/2000 min^{-1}
Maximum torque	1080 N•m/about 1500 min^{-1}
Fuel consumption ratio	234.6（221± 13.6) g/kW•h max.
Engine dry weight	About 640 kg
Engine dimension	L 1357-W 995-H 1162.5 mm
Oil pan	All direction 35°, inclinable
Cooling fan	ϕ850 mm - suction type - 6 vanes, plastic
	With bell mouth-type fan guide
Pulley ratio	0.80 (reduction)
Charging generator	24 V 50 A AC type
Starter motor	24 V 5 kW reduction type
Coolant capacity	14.5 L
Oil pan capacity	Max: 38 L Min: 28 L (not including oil filter)
Direction of rotation	Right (as seen from fan)
	Compliant with JISD 0006-2000.

https://truckmanualshub.com/

2. Muffler

	SH330-5/SH330LC-5/SH350HD-5/SH350LHD-5
Sumitomo part No.	KSH0948
Manufacturer	Sankei Giken Kogyo Co., Ltd.
Type	ϕ283 × 780 L
Weight	20.0 kg

3. Air Cleaner (double element)

	SH330-5/SH330LC-5/SH350HD-5/SH350LHD-5
Sumitomo part No.	KSH0895
Manufacturer	Nippon Donaldson, Ltd.
Element (outer)	KSH0933
Element (inner)	KSH0932
Weight	13.6 kg

4. Radiator

		SH330-5/SH330LC-5/SH350HD-5/SH350LHD-5
Sumitomo part No.		KSH1028
Manufacturer		T.Rad Co., Ltd.
Oil cooler	Weight	34.0 kg
	Oil capacity	16.0 L
Radiator	Weight	21.1 kg
	Coolant capacity	9.4 L
Air cooler	Weight	19.9 kg
	Capacity	-
Fuel cooler	Weight	1.2 kg
	Capacity	0.44 L
Total weight		140 kg

https://truckmanualshub.com/

Main Equipment Table

Hydraulic Device

1. Hydraulic Pump

		SH330-5/SH330LC-5/SH350HD-5/SH350LHD-5
Sumitomo part No.		KSJ12240
Manufacturer		Kawasaki Precision Machinery Ltd.
Main pump		
Pump type		Double variable displacement piston pump
Displacement capacity		150 × 2 cm^3/rev
Operating pressure	Rated	34.3 MPa
	Maximum	37.3 MPa
Input revolution speed		1930 min^{-1}
Maximum discharge flow		290 × 2 L/min (at 1930 min^{-1})
Pilot pump		
Pump type		Gear pump
Displacement capacity		15 cm^3/rev
Operating pressure		3.92 MPa
Maximum discharge flow		29 L/min (at 1930 min^{-1})
Control method		Hydraulic simultaneous constant output control
		Maximum flow adjustment control through external commands (negative control)
		Setting horsepower adjustment control through external command milli-amp
Dry weight		188 kg

https://truckmanualshub.com/

2. Pump P-Q Diagram

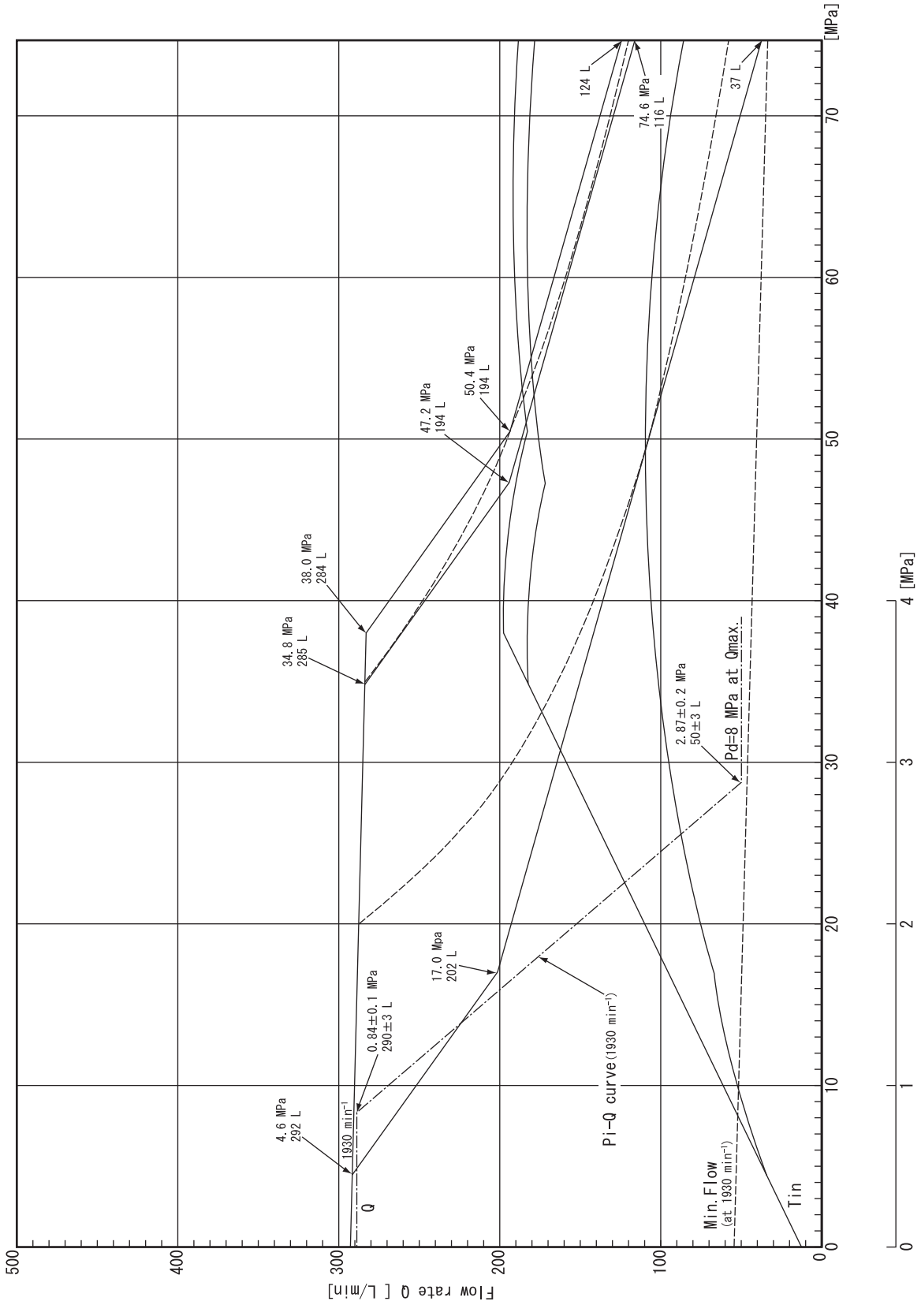

SC03008-001

https://truckmanualshub.com/

Main Equipment Table

Control-related

1. Control Valve

	SH330-5/SH330LC-5/SH350HD-5/SH350LHD-5
Sumitomo part No.	KSJ12250
Manufacturer	KYB Corporation
Maximum flow	292.5 L/min (at 1950 min^{-1})
Overload set pressure	27.4 MPa boom down
	39.2 MPa other
Main relief set pressure	34.3 MPa
(at boosting)	37.3 MPa
Foot relief set pressure	2.55 MPa
Function	Straight travel circuit
	Boom-up/arm 2 pumps internal flow
	Boom and arm load holding circuit
	Boom-down regenerative circuit
	Bucket-close Regenerative circuit
	Arm-in forced regenerative circuit
	Swing priority variable orifice (for arm operation)
	2 pumps flow
	Variable foot relief
Weight	193 kg

2. Solenoid Valve (5 stack)

Sumitomo part No.	KHJ14520	
Manufacturer	Yuken Kogyo Co., Ltd.	
Valve specifications		
Maximum flow	P → B 25 L/min other 5 L/min	
Rated pressure	4.5 MPa	
Port size	P, T, B, port	G3/8
	C1, C2, C3, C4, C5 ports	G1/4
Solenoid specifications		
Operating voltage	20 - 32 V DC	
Power consumption	17 W max.	
Weight	6.7 kg	

https://truckmanualshub.com/

3. Remote Control Valve (left/right, travel operations)

(1) Valve for left/right operations

Sumitomo part No.		KHJ13270
Manufacturer		Kawasaki Precision Machinery Ltd.
Operating pressure		3.92 MPa
Secondary pressure		0.64 - 2.45 MPa primary short type
Operating angle	1, 3 ports	19°
	2, 4 ports	25°
Weight		1.9 kg

(2) Valve for travel operation

Sumitomo part No.	KRJ5803
Manufacturer	Kawasaki Precision Machinery Ltd.
Operating pressure	3.92 MPa
Secondary pressure	0.64 - 2.45 MPa primary short type
Operating angle	12.4°
Weight	7.8 kg

https://truckmanualshub.com/

4. Remote Control Valve Characteristic Diagram

(1) Operation remote control valve control diagram

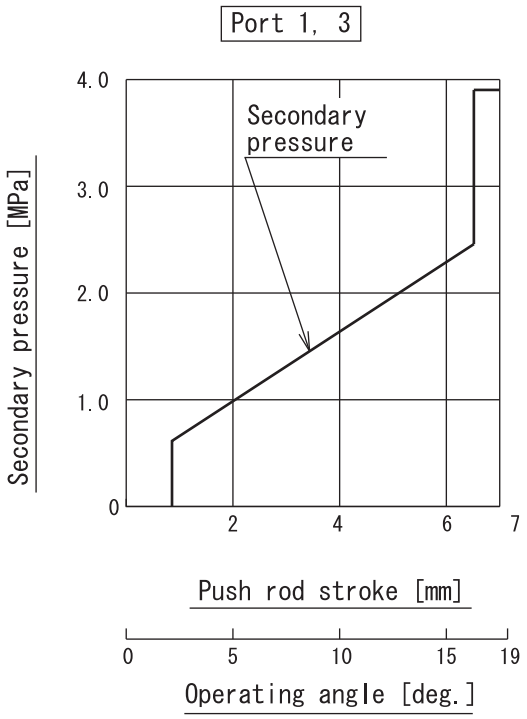

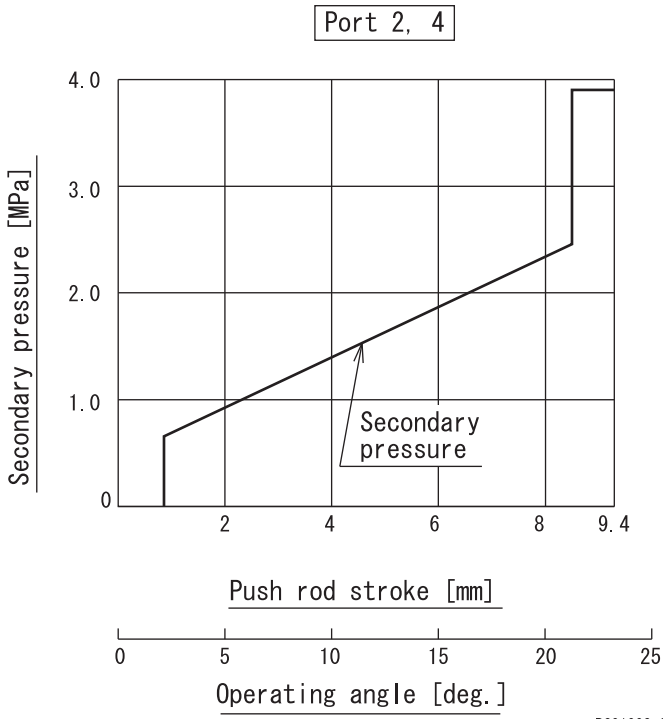

RC01008-003

(2) Travel remote control valve control diagram

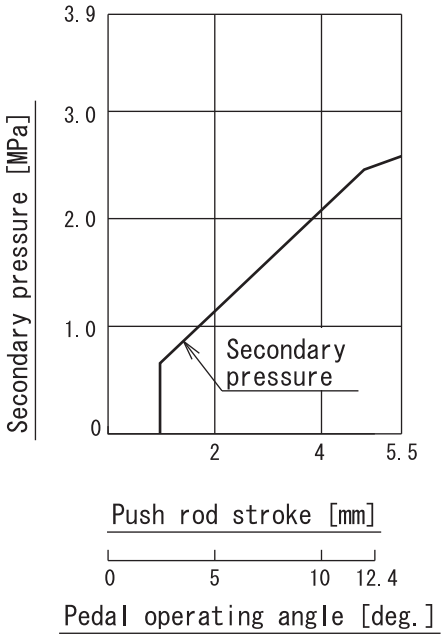

RC01008-004

https://truckmanualshub.com/

5. Cushion Valve (heat circuit, with shuttle valve)

	SH330-5/SH330LC-5/SH350HD-5/SH350LHD-5
Sumitomo part No.	KBJ12430
Manufacturer	Yanagisawa Seiki MFG. Co., Ltd.
Port size	G3/8 (A - P ports)
	G1/4 (R - V ports)
Weight	12.5 kg

6. Center Joint

	SH330-5/SH330LC-5/SH350HD-5/SH350LHD-5	
Sumitomo part No.	KSA1305	
Operating pressure	High-pressure passage (ABCD)	34.3 MPa
	Drain port (T)	1.0 MPa
	Pilot port (P)	3.9 MPa
Flow	High-pressure passage (ABCD)	360 L/min
	Drain port (T)	40 L/min
	Pilot port (P)	31 L/min
Port A	Forward right	G1
Port B	Forward left	G1
Port C	Backward right	G1
Port D	Backward left	G1
Port T	Drain port	G1/2
Port P	Pilot port	G1/4
Weight	106.7 kg	

https://truckmanualshub.com/

Main Equipment Table

Backhoe Attachment

1. Cylinder

Boom cylinder	SH330-5/SH330LC-5/SH350HD-5/SH350LHD-5
Sumitomo part No.	KSV1925 (right)
Sumitomo part No.	KSV1926 (left)
Manufacturer	ZENOAH
Cylinder bore	ϕ 145 mm
Rod diameter	ϕ 100 mm
Maximum retracted length	2090 mm
Stroke	1495 mm
Weight	279 kg

Arm cylinder	SH330-5/SH330LC-5/SH350HD-5/SH350LHD-5
Sumitomo part No.	KSV1927
Manufacturer	ZENOAH
Cylinder bore	ϕ 170 mm
Rod diameter	ϕ 120 mm
Maximum retracted length	2445 mm
Stroke	1748 mm
Weight	462 kg

Bucket cylinder	SH330-5/SH330LC-5/SH350HD-5/SH350LHD-5
Sumitomo part No.	KSV1928
Manufacturer	ZENOAH
Cylinder bore	ϕ 150 mm
Rod diameter	ϕ 105 mm
Maximum retracted length	1870 mm
Stroke	1210 mm
Weight	276 kg

https://truckmanualshub.com/

2. Attachments

(1) SH330-5/SH330LC-5 bucket type

● Standard bucket

◎ General digging (specific gravity 2.0 ton/m^3 max.)

○ Light digging (specific gravity 1.6 ton/m^3 max.)

△ For loading only (specific gravity 1.2 ton/m^3 max.)

× Do not use

Bucket capacity (m^3)	1.15 STD	1.4 STD	1.4 HD	1.6 STD	1.8 STD
Number of claws	4	5	5	5	5
Width (mm)	1233 (1100)	1435 (1302)	1424 (1310)	1575 (1442)	1733 (1600)
Long arm (4.04 m)	×	○	○	×	×
Standard arm (3.25 m)	◎	●	◎	○	×
Short arm (2.63 m)	◎	◎	◎	●	○
Ultra-short arm (2.21 m)	◎	◎	◎	◎	●

The figures in ( ) are dimensions excluding the side cutter.

(2) SH350HD-5 bucket type

● Standard bucket

◎ General digging (specific gravity 2.0 ton/m^3 max.)

○ Light digging (specific gravity 1.6 ton/m^3 max.)

△ For loading only (specific gravity 1.2 ton/m^3 max.)

× Do not use

Bucket capacity (m^3)	1.4 HD	1.6 HD
Number of claws	5	5
Width (mm)	1424 (1310)	1564 (1450)
Standard arm (3.25 m)	●	◎
Short arm (2.63 m)	◎	●

The figures in ( ) are dimensions excluding the side cutter.

https://truckmanualshub.com/

Main Equipment Layout

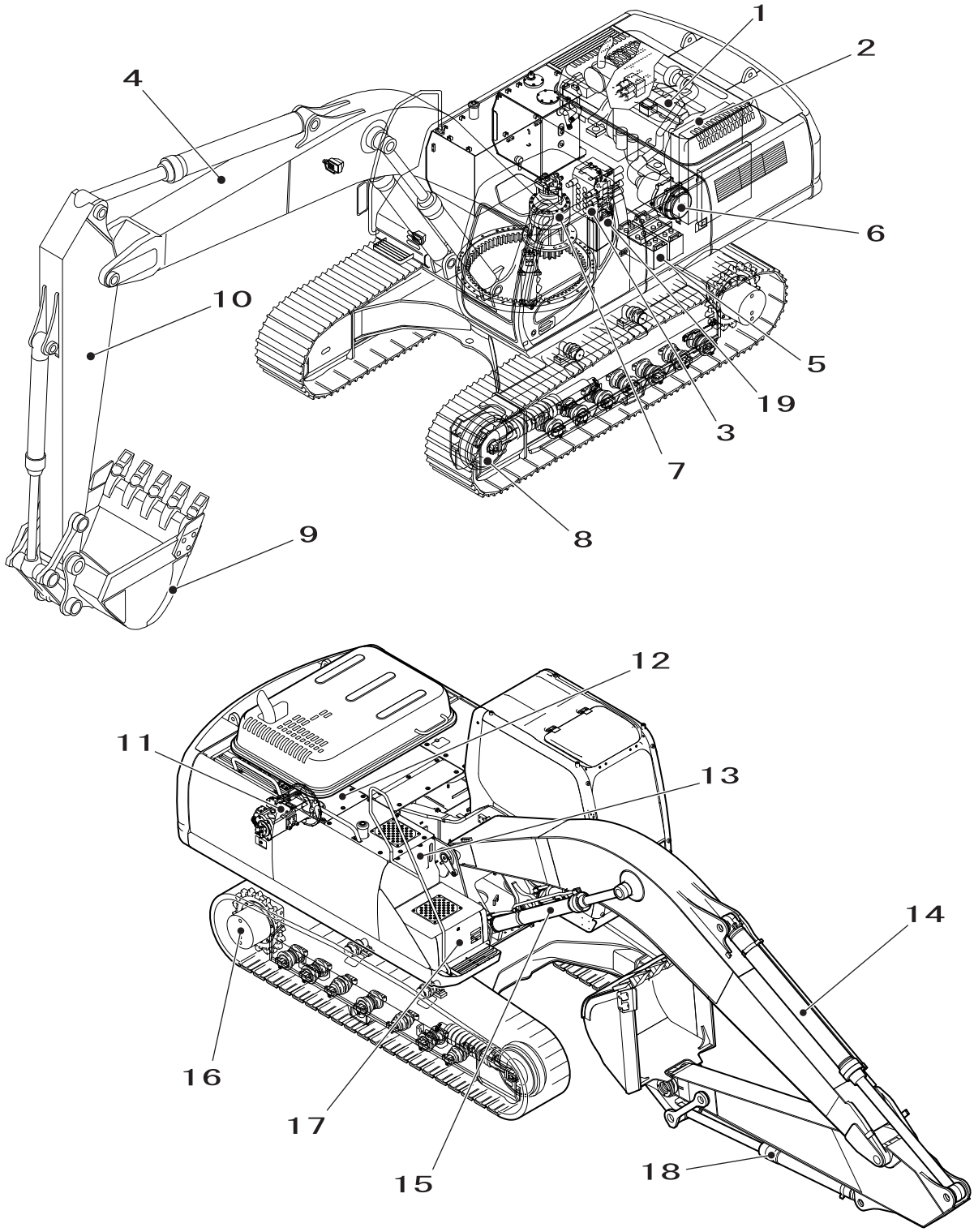

SC02008–001

1	Engine	8	Front idler	15	Boom cylinder
2	Radiator	9	Bucket	16	Travel motor
3	Control valve	10	Arm	17	Tool box
4	Boom	11	Hydraulic pump	18	Bucket cylinder
5	Battery	12	Hydraulic oil tank	19	Air Conditioner condenser
6	Air cleaner	13	Fuel tank		
7	Swing motor	14	Arm cylinder		

https://truckmanualshub.com/

Equipment Layout Diagram

Consumable Part Layout

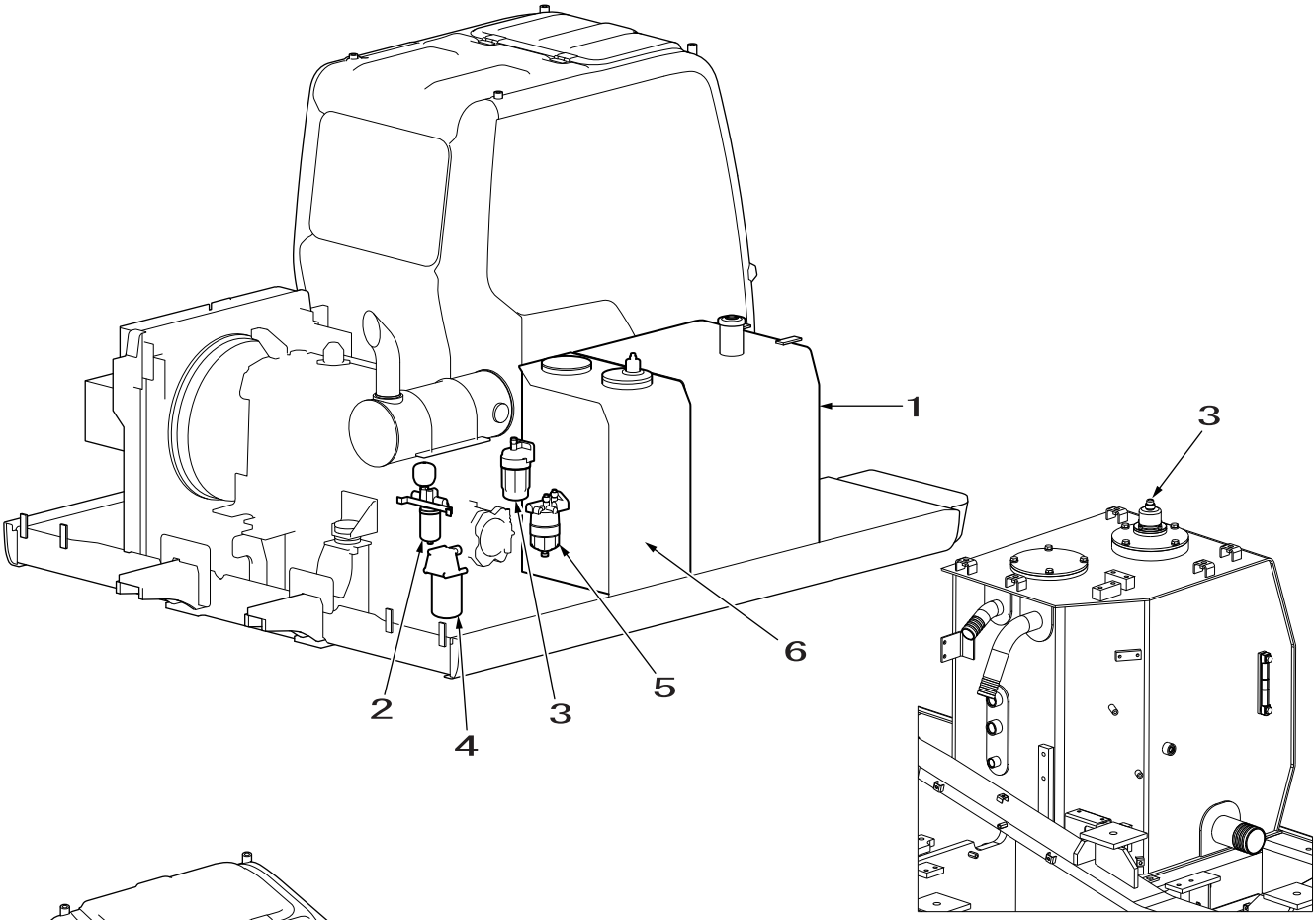

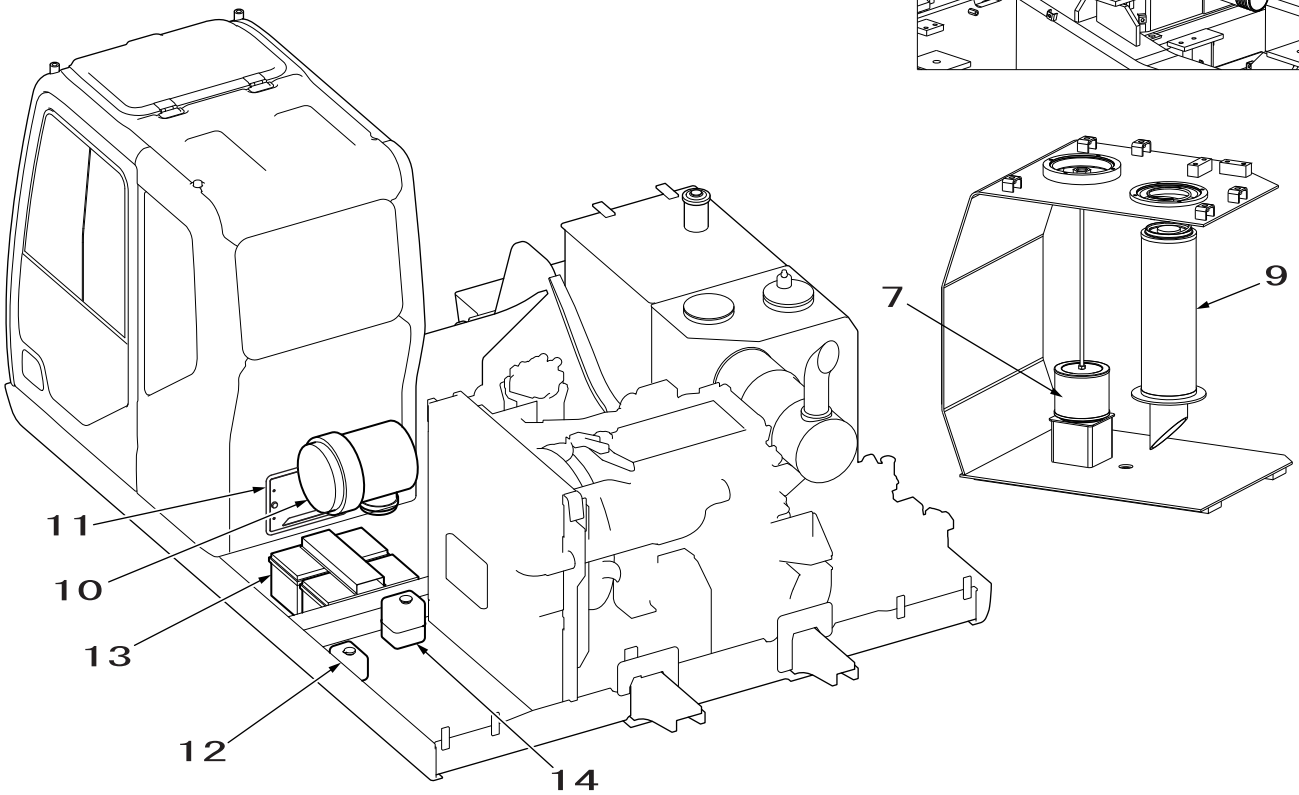

1	Fuel tank	6	Hydraulic oil tank	11	Air conditioner outside air filter
2	Pilot filter	7	Return filter	12	Washer tank
3	Fuel prefilter	8	Tank air breather	13	Battery
4	Engine oil filter	9	Suction filter	14	Reserve tank
5	Fuel filter	10	Air cleaner		

https://truckmanualshub.com/

List of Optional Components

◎ : Standard ● : Option

Spec. / Models	SH330-5	SH330LC-5	SH350HD-5	SH350LHD-5	Remarks
600G shoe	◎	◎	◎	◎	
800G shoe	●	●	●	●	
Lower under cover	◎	◎	◎	◎	
Center guard (single)	◎	-	-	-	
Center guard (double)	-	◎	-	-	
Full track guard	●	-	◎	◎	With seal
Travel alarm	◎	◎	◎	◎	
DC-DC converter	●	●	●	●	
Feed pump	●	●	●	●	
Rear view mirror (forward right)	◎	◎	◎	◎	
Rear view mirror (cab)	◎	◎	◎	◎	
Front guard, mesh (lower) (with cab seating)	●	●	●	●	
Front guard, mesh (full) (with cab seating)	●	●	●	●	
OPG Level 1 (with cab seating)	●	●	●	●	
OPG Level 2 (with cab seating)	●	●	●	●	
Head guard, FOPS Level 2	●	●	●	●	
Rain deflector	●	●	●	●	
Sunroof polycarbonate	●	●	●	●	
Cab top light	●	●	●	●	
Suspension seat	◎	◎	◎	◎	
KAB seat (air suspension)	●	●	●	●	
Breaker circuit (pedal)	●	●	●	●	+ Strengthened bucket linkage
Multi-purpose + 2nd option (pedal)	●	●	●	●	+ Strengthened bucket linkage
Semi-E.M.S.	◎	◎	◎	◎	
Arm reinforcement plate	●	●	●	●	KIT
LLC (30 %)	◎	◎	◎	◎	
Back monitor (monitor and camera)	●	●	●	●	KIT

https://truckmanualshub.com/

Overall View

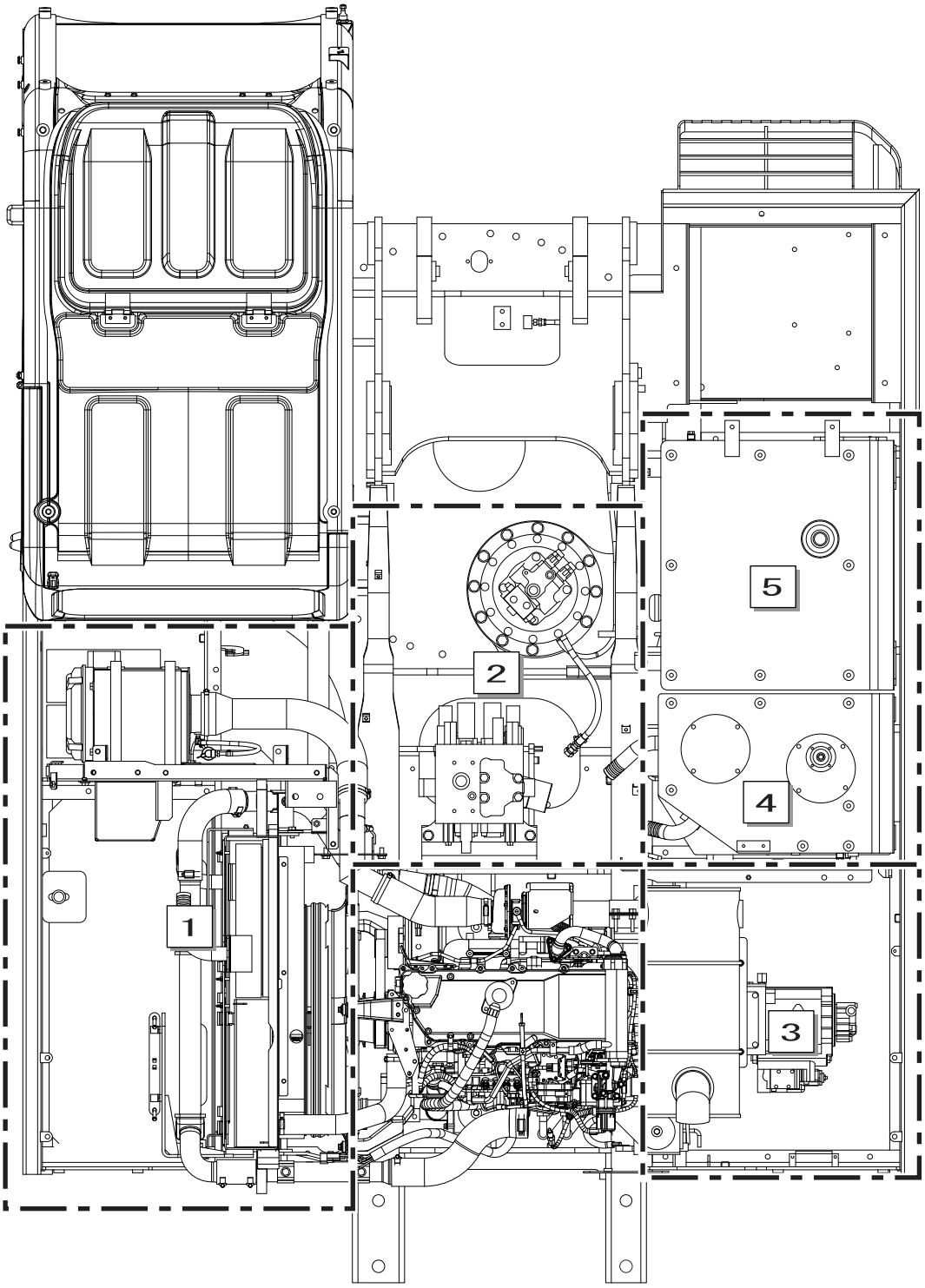

1	Left side housing
2	Swing body center section
3	Pump chamber
4	Hydraulic oil tank
5	Fuel tank

https://truckmanualshub.com/

Hydraulic Equipment Layout

Pump Chamber Hydraulic Equipment Layout

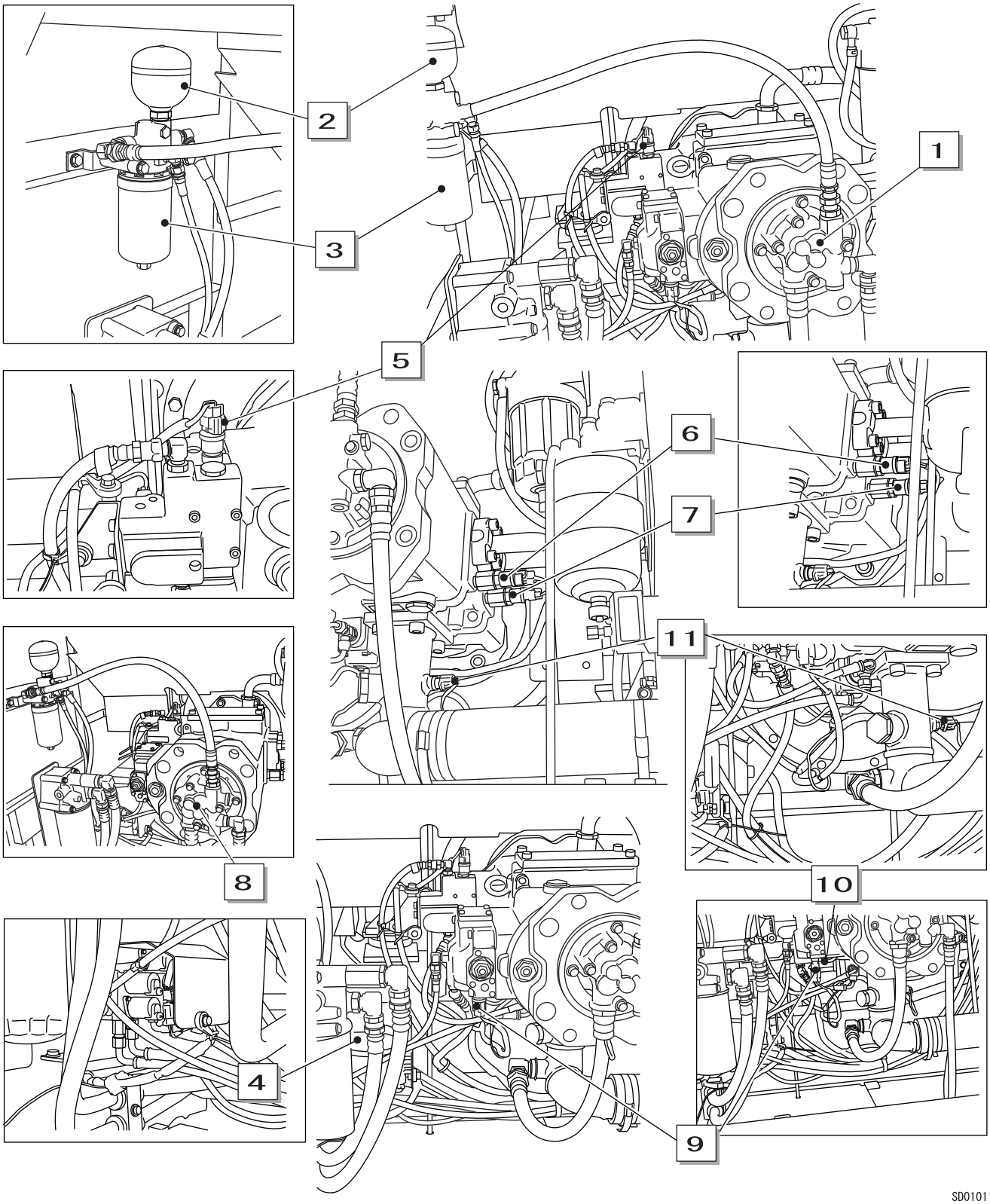

1	Hydraulic pump	7	P1 pressure sensor
2	Accumulator	8	Pilot pump
3	Pilot filter	9	N2 sensor
4	5 stack solenoid valve	10	Horsepower control electromagnetic proportional valve
5	N1 sensor		
6	P2 pressure sensor	11	Hydraulic oil temperature sensor

https://truckmanualshub.com/

Swing Body Center Section Hydraulic Equipment Layout

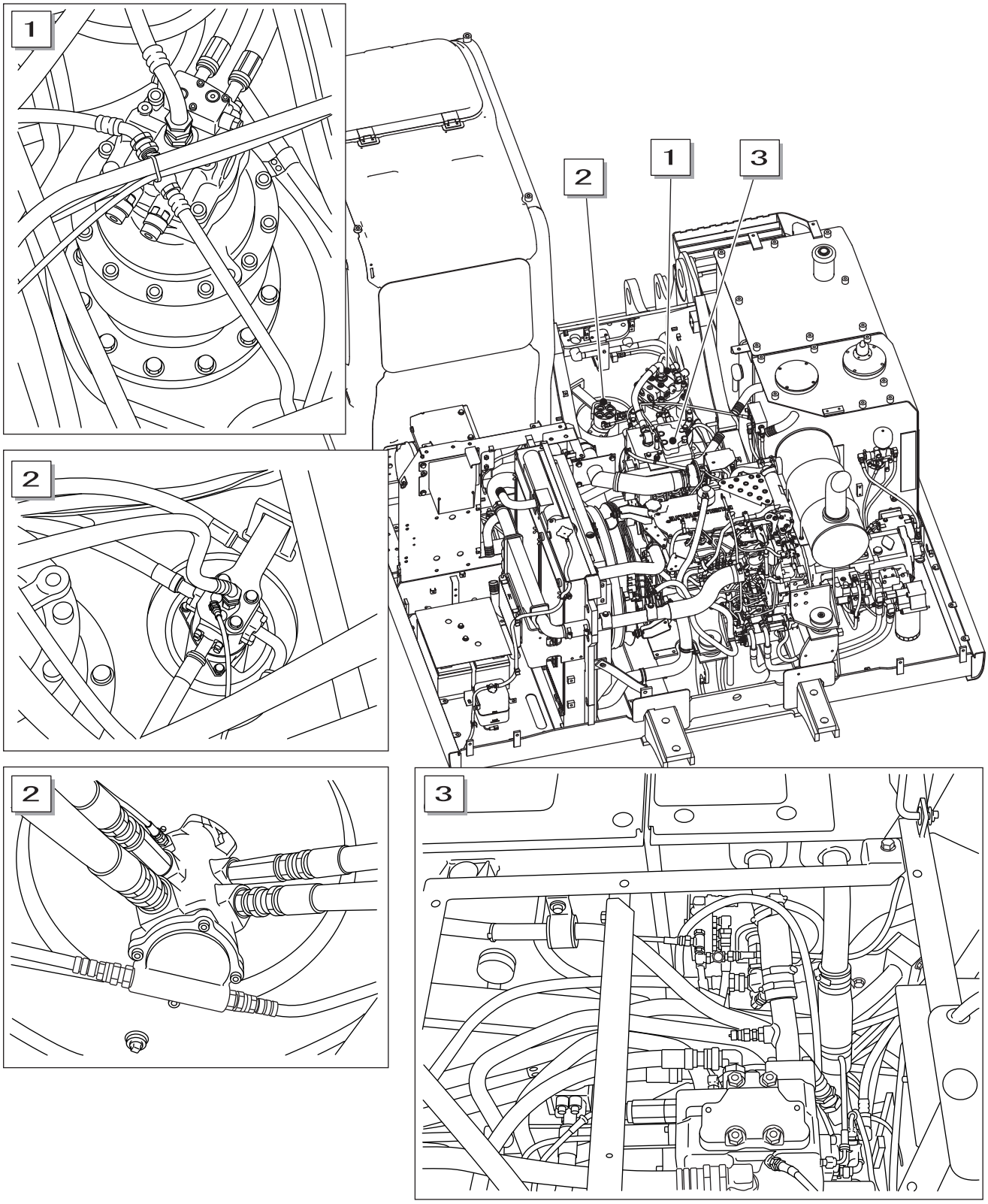

SD01011-502

1	Swing motor
2	Center joint
3	Control valve

https://truckmanualshub.com/

Hydraulic Equipment Layout

Housing Left Side Hydraulic Equipment Layout

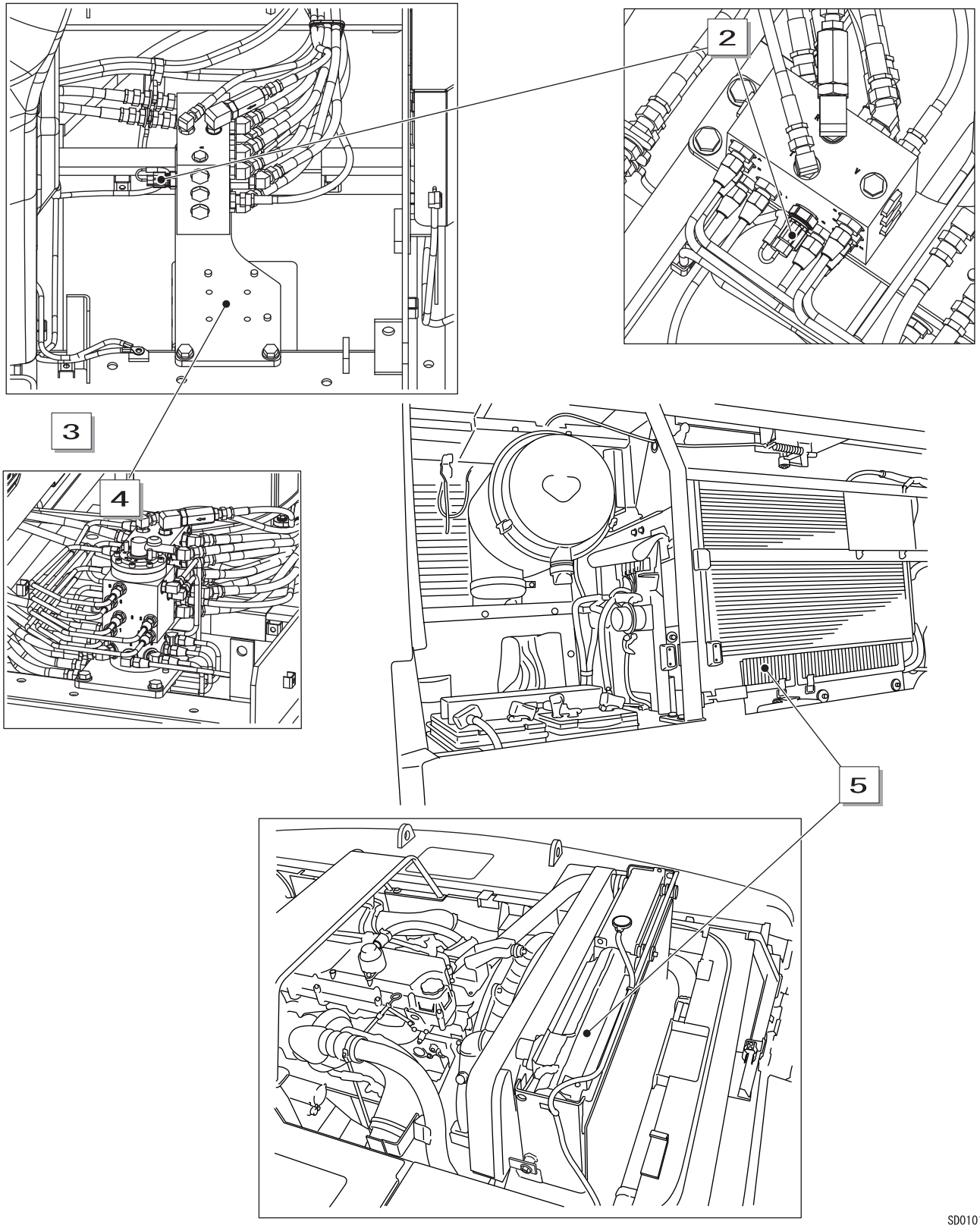

1	Cushion valve (with heat circuit)
2	Swing pilot pressure sensor
3	4-way selector valve installation seating
4	4-way selector valve
5	Oil cooler

https://truckmanualshub.com/

Layout of Hydraulic Equipment in Cab

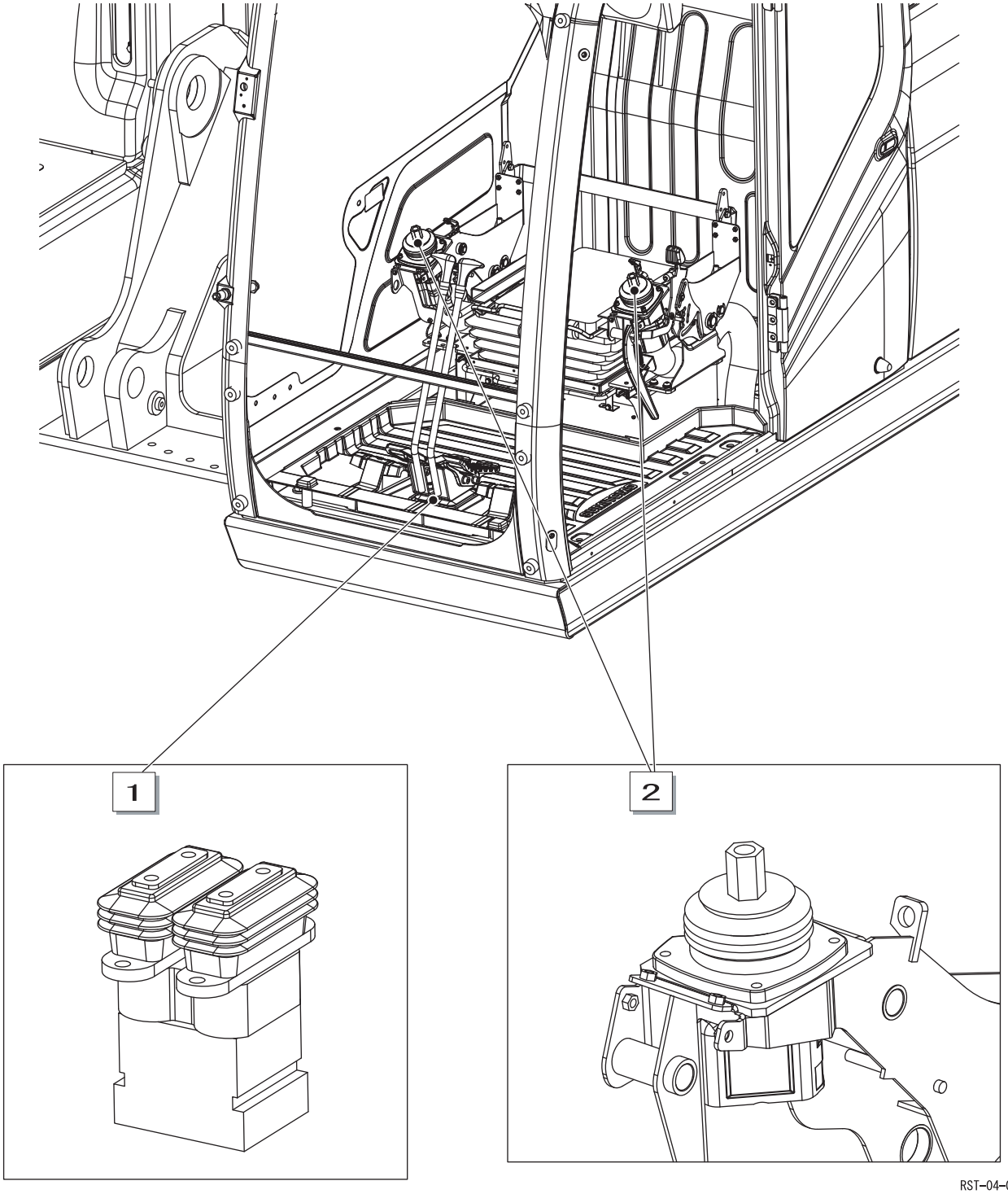

1	Travel remote control valve
2	Upper operation remote control valve

https://truckmanualshub.com/

Pump

1. Hydraulic Pump (standard model)

Port	Port name	Port size
A1, A2	Discharge port	SAE 6000psi 1
B1	Suction port	SAE 2500psi 3
Dr	Drain port	G3/4-23
P1	Proportional valve primary pressure port	G1/4-13
P2	P2 port	G1/4-13
Psv	Servo assist port	G1/4-15
Pi1, Pi2	Negative control port	G1/4-13
a1, a2, a4, a5, a6	Gauge port	G1/4-15
A3	Gear pump discharge port	G1/2-19
B3	Gear pump suction port	G3/4-20.5
a3	Gauge port	G1/4-14
Dr3	Drain port (gear pump)	G3/8-15

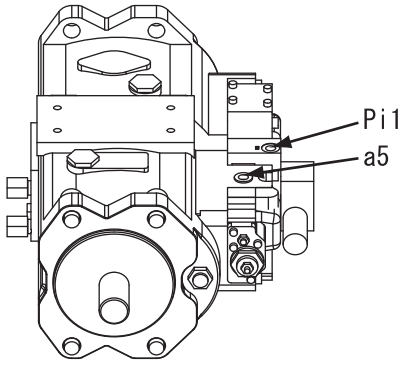

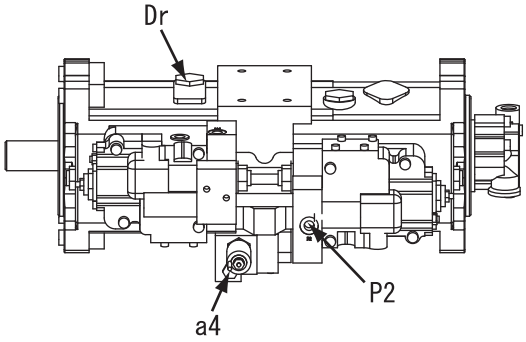

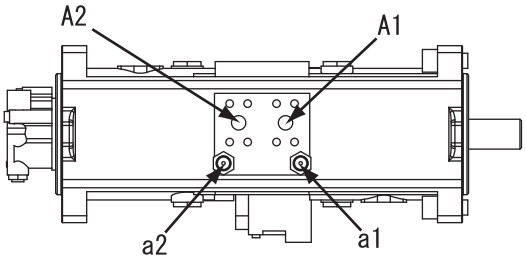

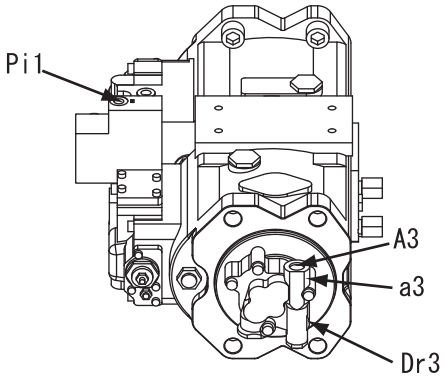

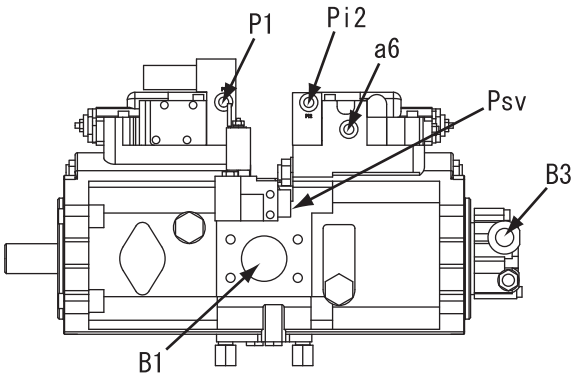

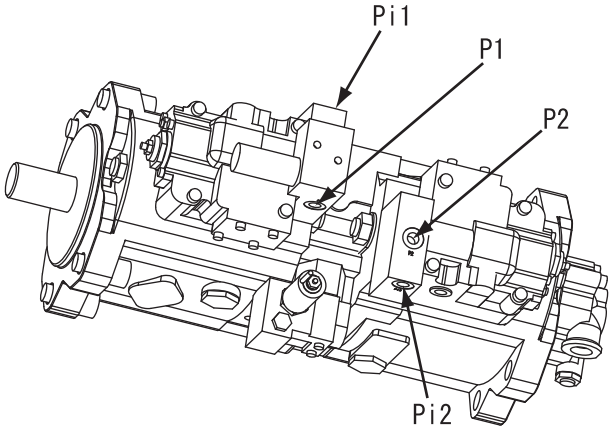

SD06012-001

https://truckmanualshub.com/

Port Diagram

Valves

1. Control Valve

(1) Relief valve

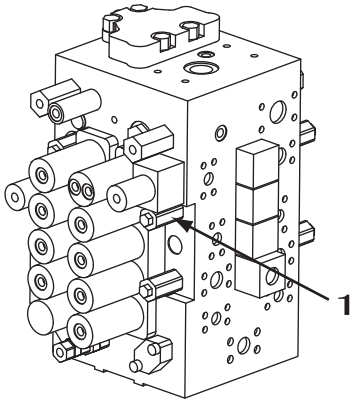

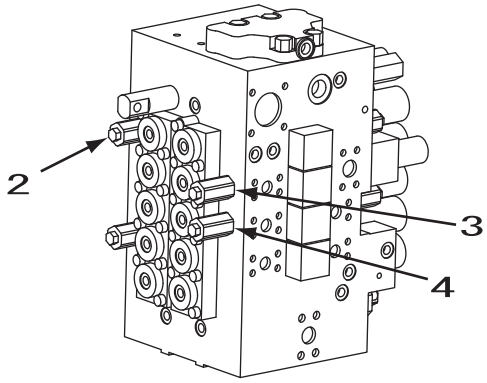

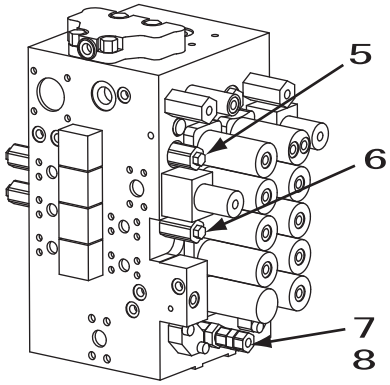

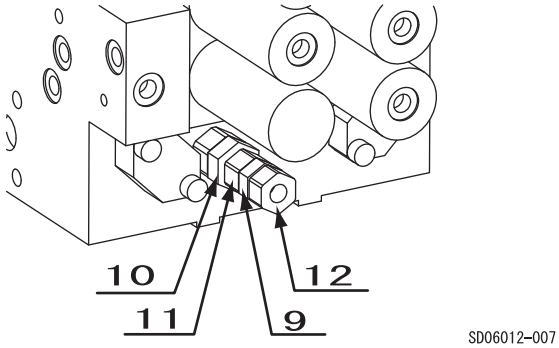

Detailed diagram of main relief valve adjustment

1	Boom up
2	Arm in
3	Boom down
4	Bucket close
5	Arm out
6	Bucket open
7	Main a (normal use)
8	Main b (pressure boost)
9	Standard lock nut
10	Pressure boost lock nut
11	Pressure boost adjusting screw
12	Standard pressure adjusting screw

https://truckmanualshub.com/

Port Diagram

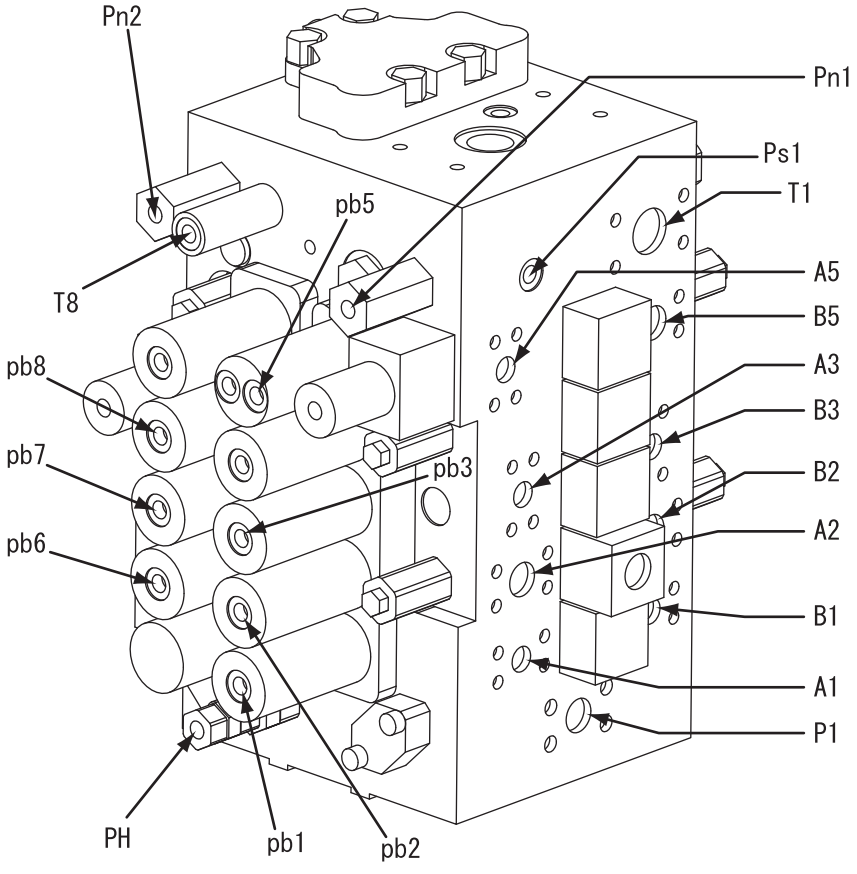

Port	Port size	Port name	Port	Port size	Port name
P1	SAE 6000psi 1	Pressure line	pb3	G1/4	Left swing pilot line
A1	SAE 5000psi 1	Left travel (forward) line	pb4	G1/4	Boom 2-down drain line
B1	SAE 5000psi 1	Left travel (backward) line	pb5	G1/4	Arm 1 in pilot line
A2	SAE 5000psi 1	Option line	pb7	G1/4	Bucket-close pilot line
B2	SAE 5000psi 1	Option line	pb8	G1/4	Boom 1-down pilot line
A3	SAE 5000psi 1	Swing right line	pb9	G1/4	Arm 2-in pilot line
B3	SAE 5000psi 1	Swing left line	Pn1	G1/4	Negative control power save signal
A5	SAE 5000psi 1	Arm-out line	Pn2	G1/4	Negative control power save signal
B5	SAE 5000psi 1	Arm-in line	PH	G1/4	Pressure boost signal port
T1		Return line	Ps1	G1/4	Negative control line
pb1	G1/4	Left travel backward pilot line	T8	G1/4	Heat circuit line
pb6	G1/4	Right travel backward pilot line	pb2	G1/4	Option line

https://truckmanualshub.com/

Port Diagram

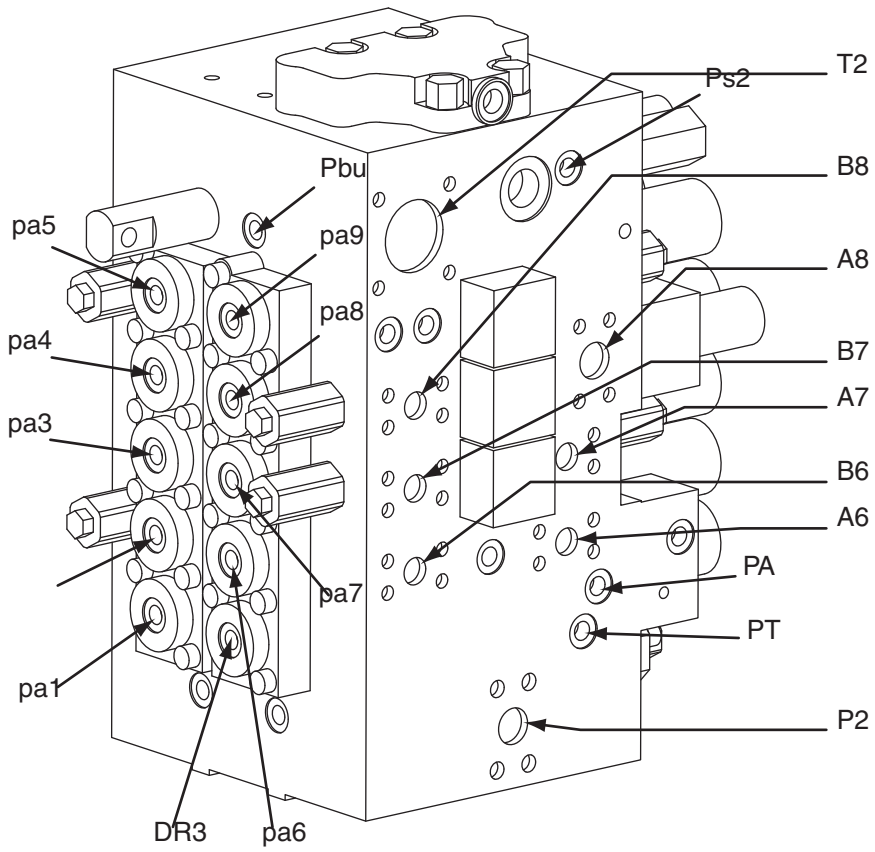

BD06003–003

Port	Port size	Port name	Port	Port size	Port name
P2	SAE 6000psi 1	Pressure line	pa7	G1/4	Bucket-open pilot line
A6	SAE 5000psi 1	Right travel (forward) line	pa3	G1/4	Right swing pilot line
B6	SAE 5000psi 1	Right travel (backward) line	pa8	G1/4	Boom 1-up pilot line
A7	SAE 5000psi 1	Bucket-open line	pa4	G1/4	Boom 2-up pilot line
B7	SAE 5000psi 1	Bucket-close line	pa9	G1/4	Arm 2-out pilot line
A8	SAE 5000psi 1	Boom-up line	pa5	G1/4	Arm 1-out pilot line
B8	SAE 5000psi 1	Boom-down line	PA	G1/4	Upper signal
T2		Return line	PT	G1/4	Travel signal
pa1	G1/4	Left travel forward pilot line	Ps2	G1/4	Negative control line
pa6	G1/4	Right travel forward pilot line	Pbu	G1/4	Swing priority variable orifice switch signal
DR3	G1/4	Straight travel drain line	Pa2	G1/4	Option line

https://truckmanualshub.com/

2. 5 Stack Solenoid Valve

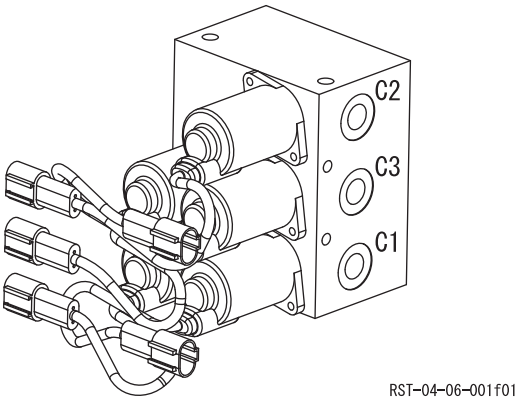

Port	Port size
C2	G1/4
C3	G1/4
C1	G1/4

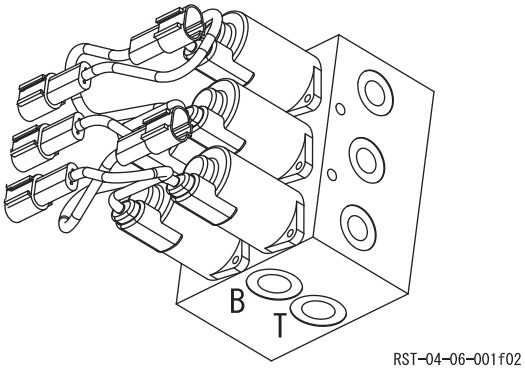

View from bottom

Port	Port size
B	G3/8
T	G3/8

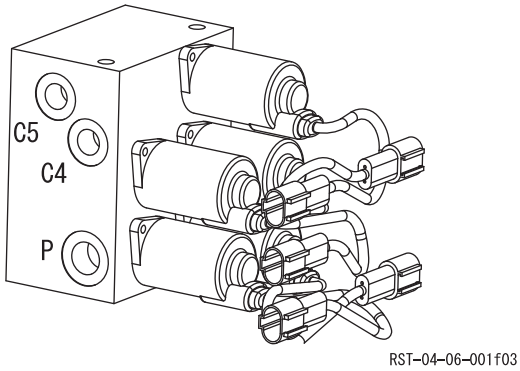

Port	Port size
C5	G1/4
C4	G1/4
P	G3/8

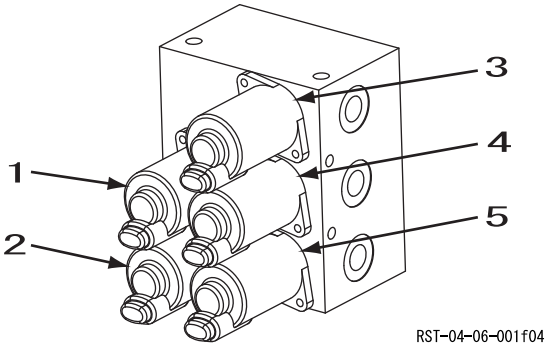

1	Power save
2	Lever lock
3	Swing lock
4	Pressure boost
5	Travel high speed

https://truckmanualshub.com/

Port Diagram

3. 2 Stack Solenoid Valve

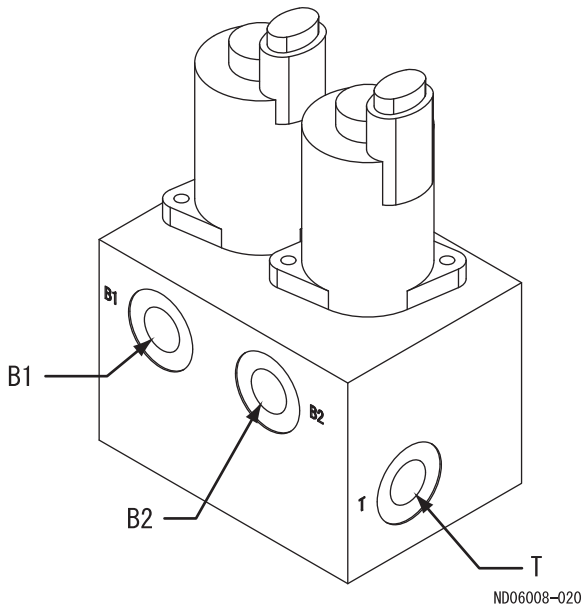

B port side

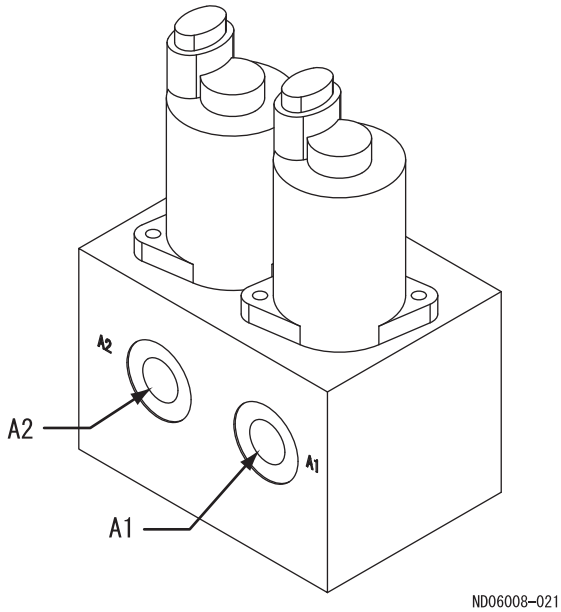

A port side

Port	Port size
A1	G1/4
B1	G1/4
A2	G1/4
B2	G1/4
T	G1/4

https://truckmanualshub.com/

4. Remote Control Valves (upper, travel)

(1) Remote control valves (left-right)

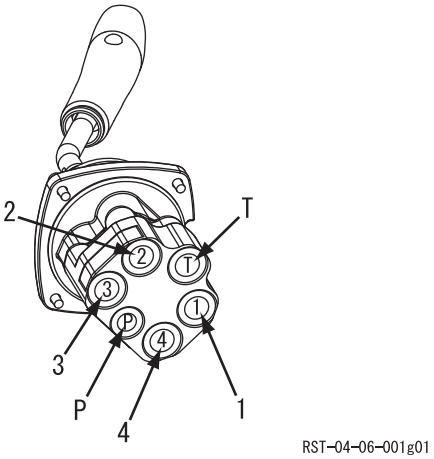

Right side

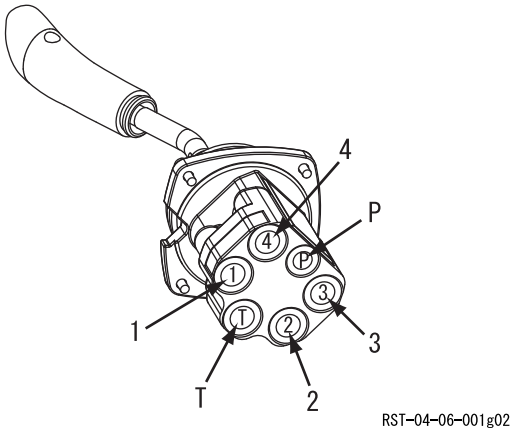

Left side

Right side	Port name	Left side	Port name	Port size
1	Bucket close	1	Swing right	G3/8
2	Boom down	2	Arm in	G3/8
3	Bucket open	3	Swing left	G3/8
4	Boom up	4	Arm out	G3/8
P	Pressure	P	Pressure	G1/4
T	Return	T	Return	G3/8

(2) Remote control valve (travel)

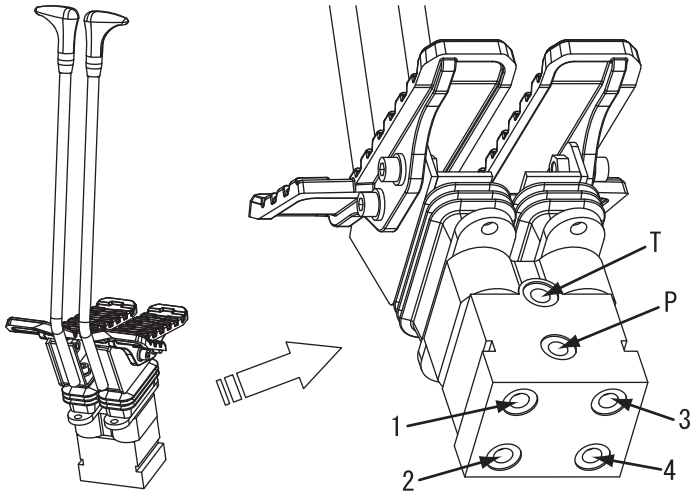

RST-04-06-001m

Port	Port name	Port size
1	Backward left	G1/4
2	Forward left	G1/4
3	Backward right	G1/4
4	Forward right	G1/4
P	Pressure	G1/4
T	Return	G1/4

https://truckmanualshub.com/

Port Diagram

5. Cushion Valve

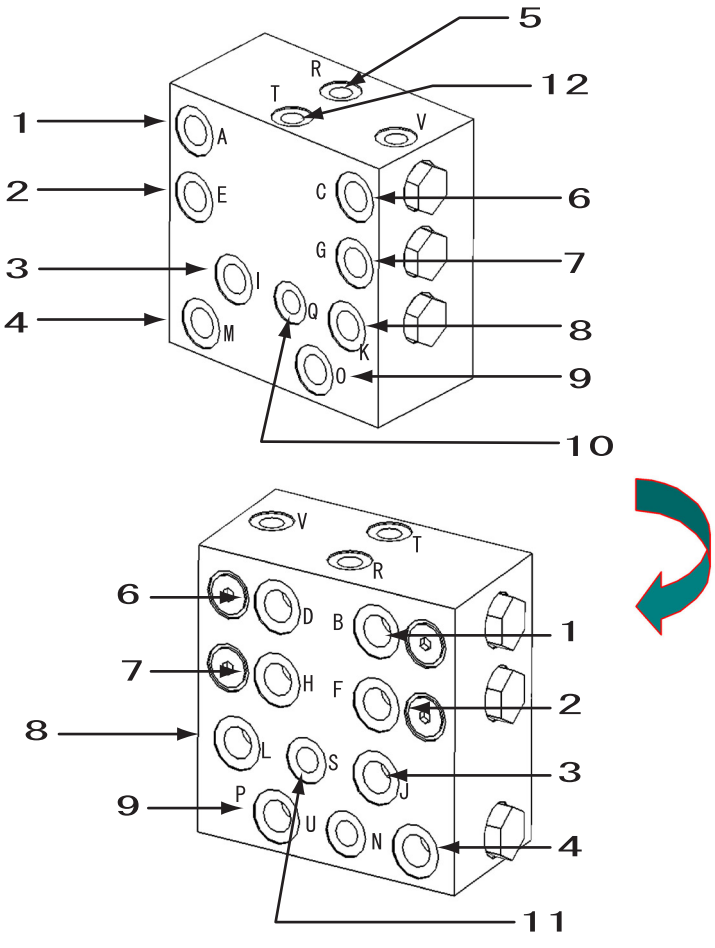

1	Arm in
2	Boom up
3	Swing right
4	Bucket close
5	Heat circuit line
6	Arm out
7	Boom down
8	Swing left
9	Bucket open
10	Pressure sensor (swing)
11	Swing priority switching pilot line
12	Drain line

Port	Port name	Port size
E, F	Boom up	G3/8
G, H	Boom down	G3/8
O, P	Bucket open	G3/8
M, N	Bucket close	G3/8
C, D	Arm out	G3/8
A, B	Arm in	G3/8
K, L	Swing left	G3/8
I, J	Swing right	G3/8
Q	Swing pressure sensor signal	G1/4
U	-	G1/4
S	Swing priority orifice switch	G1/4
V	-	G1/4
T	Return	G1/4
R	Heat circuit	G1/4

https://truckmanualshub.com/

6. 4-way Multi-valve

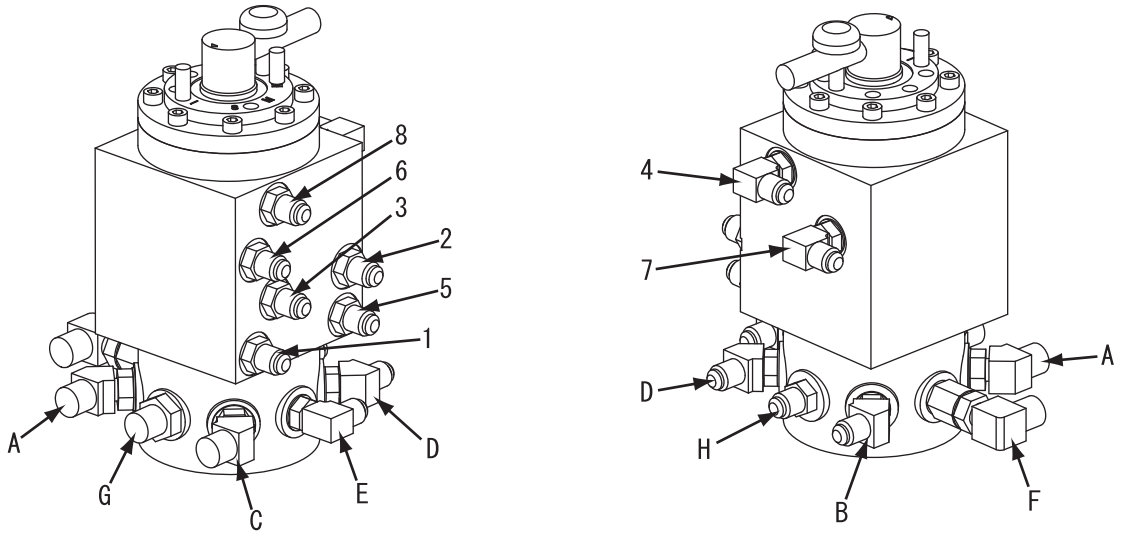

RST-04-06-001h

Port	Port name *ISO type	Port size
A	Right remote control valve side port/boom up	G1/4
C	Right remote control valve side port/boom down	G1/4
D	Right remote control valve side port/bucket open	G1/4
B	Right remote control valve side port/bucket close	G1/4
E	Left remote control valve side port/arm out	G1/4
G	Left remote control valve side port/arm in	G1/4
H	Left remote control valve side port/swing left	G1/4
F	Left remote control valve side port/swing right	G1/4
1	Cushion valve side port	G1/4
3	Cushion valve side port	G1/4
4	Cushion valve side port	G1/4
2	Cushion valve side port	G1/4
8	Cushion valve side port	G1/4
6	Cushion valve side port	G1/4
7	Cushion valve side port	G1/4
5	Cushion valve side port	G1/4

https://truckmanualshub.com/

Port Diagram

7. 2-way Multi-valve

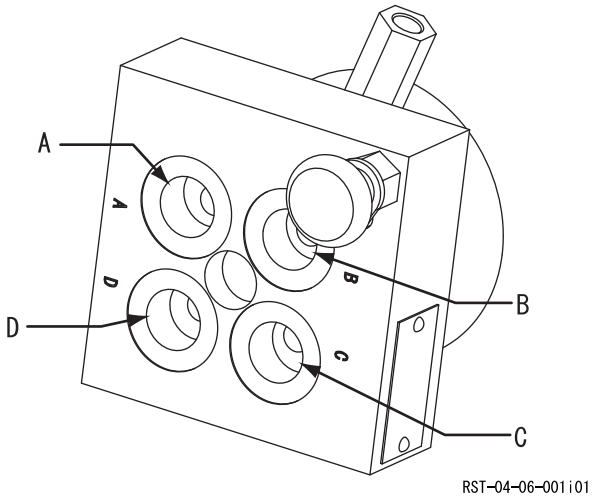

Remote control valve side

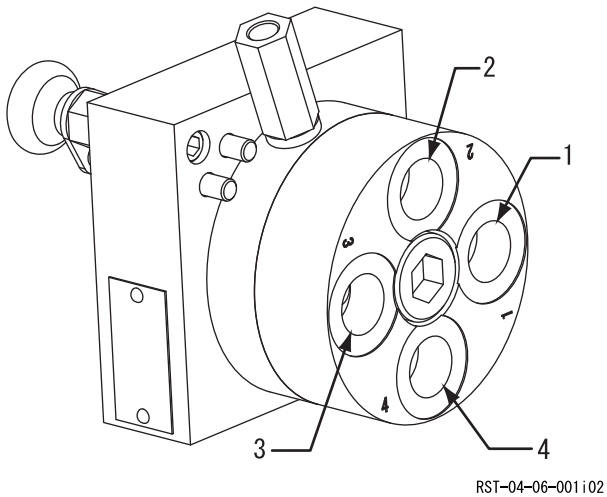

Cushion valve side

Port	Port name *ISO type	Port size
A	Remote control valve side/swing-left port	G3/8
B	Remote control valve side/arm-in port	G3/8
C	Remote control valve side/swing-right port	G3/8
D	Remote control valve side/arm-out port	G3/8
1	Cushion valve side port	G3/8
2	Cushion valve side port	G3/8
3	Cushion valve side port	G3/8
4	Cushion valve side port	G3/8

https://truckmanualshub.com/

8. Direction Valve/Shut-off Valve

(1) Direction valve

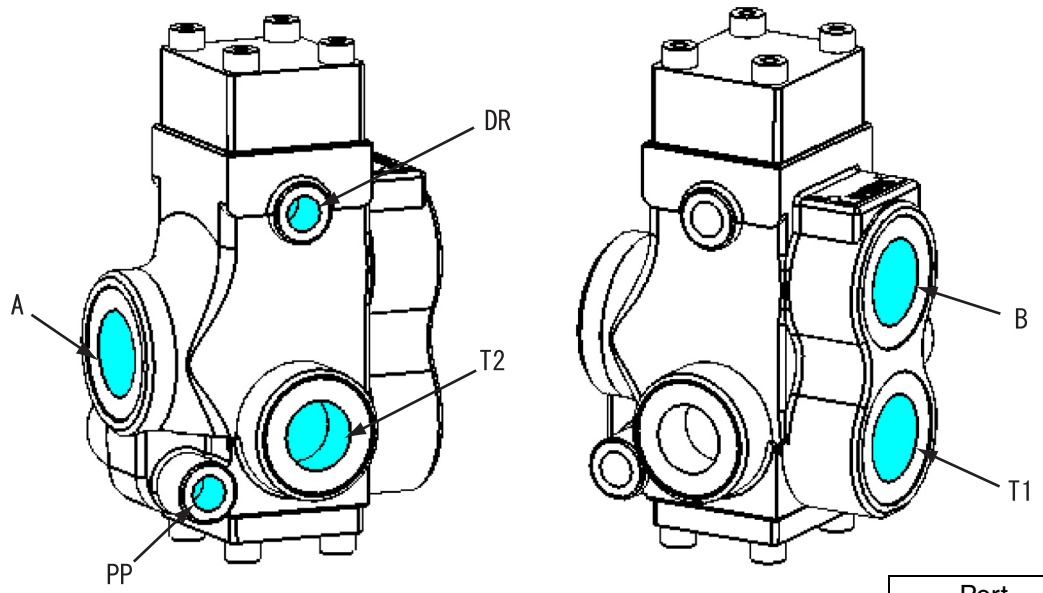

RST-04-06-001r

Port	Port size
A	G1
B	G1
T1	G1
T2	G3/4
PP	G1/4
DR	G1/4

(2) Shut-off valve

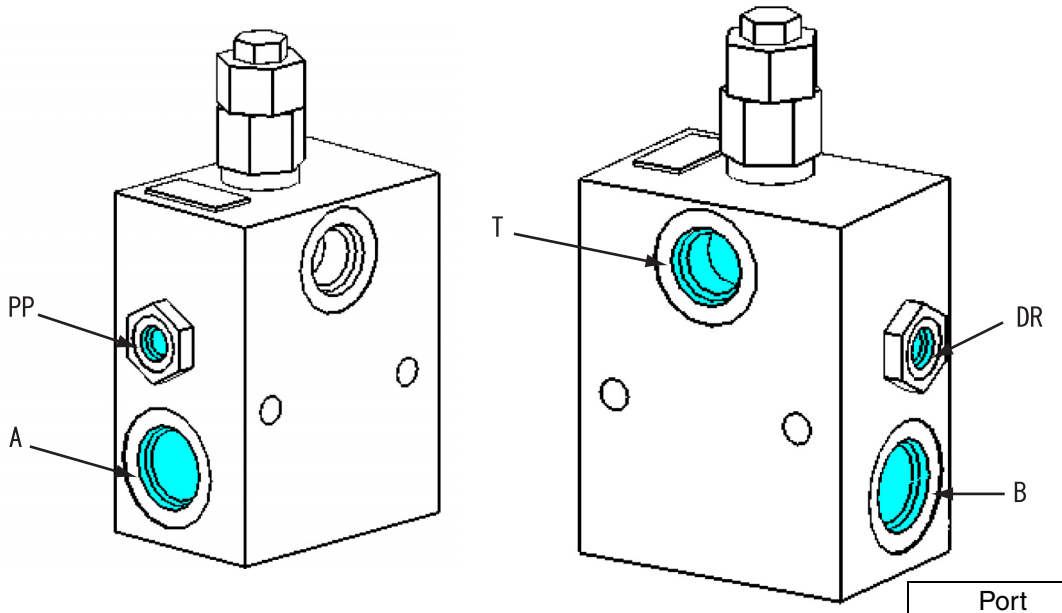

RST-04-06-001s

Port	Port size
A	G1
B	G1
T	G3/4
PP	G1/4
DR	G1/4

https://truckmanualshub.com/

Port Diagram

9. HBCV (Option)

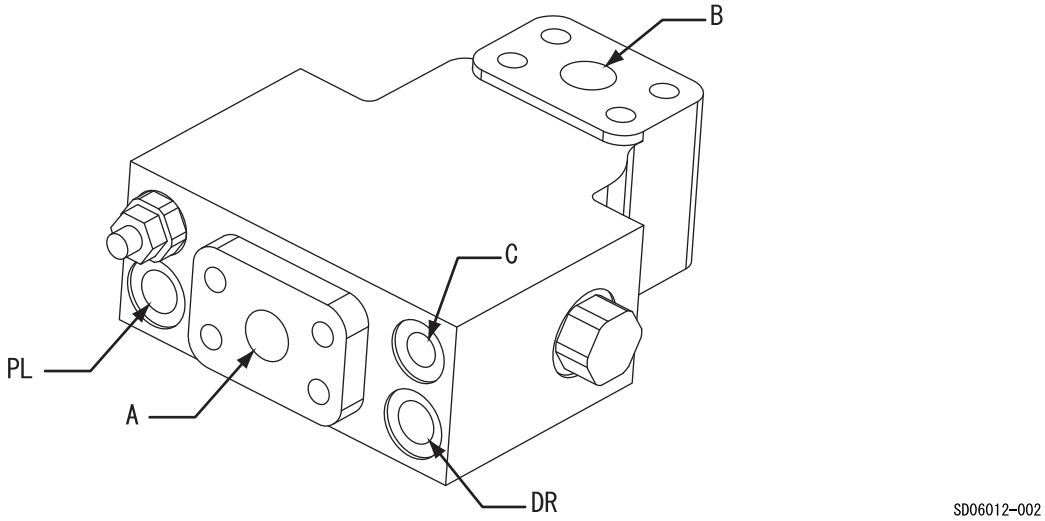

B port opening side

Port	Port size	Remarks
A	SAE 6000psi 1	Arm HBCV
	SAE J6000psi 1	Boom HBCV
B	SAE 6000psi 1	Arm HBCV
	SAE J6000psi 1	Boom HBCV
C	G1/4	
DR	G3/8	
PL	G1/4	

https://truckmanualshub.com/

Manifolds

1. Manifold Under Cab

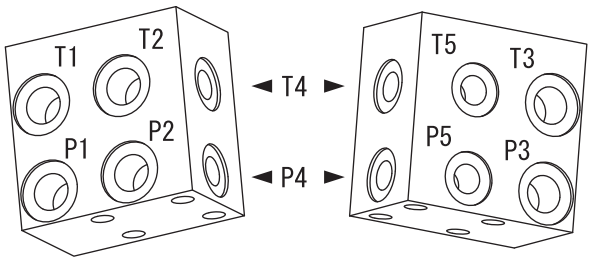

RST-04-06-001o

Port	Port size
P1	G3/8
P2	G3/8
P3	G3/8
P4	G1/4
P5	G1/4
T1	G3/8
T2	G3/8
T3	G3/8
T4	G1/4
T5	G1/4

2. Manifold (accumulator section)

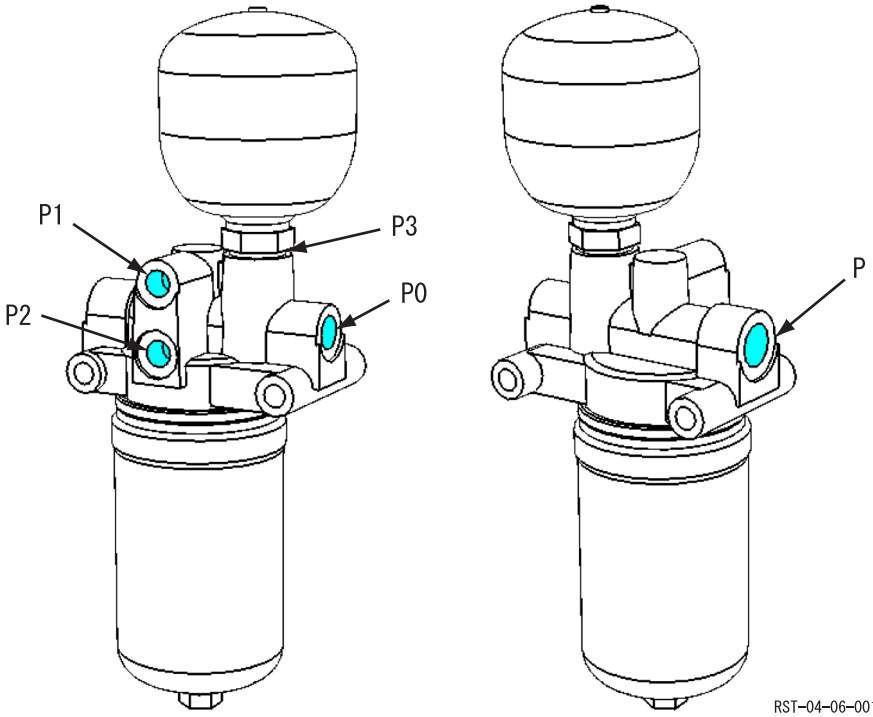

RST-04-06-001t

Port	Port size
P	G1/2
P1	G1/4
P2	G1/4
P3	G1/2
P0	G3/8

https://truckmanualshub.com/

Port Diagram

3. Manifold (hydraulic oil tank section)

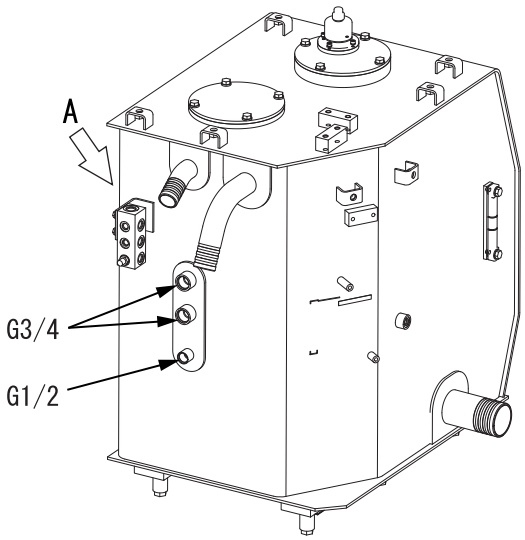

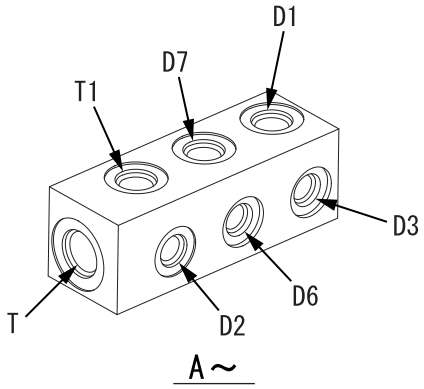

SD06012-003

Port	Port size
D1	G3/8
D2	G1/4
D3	G1/4
D6	G1/4
T	G1/2
T1	G3/8
D7	G3/8

https://truckmanualshub.com/

Motors

1. Swing Motor

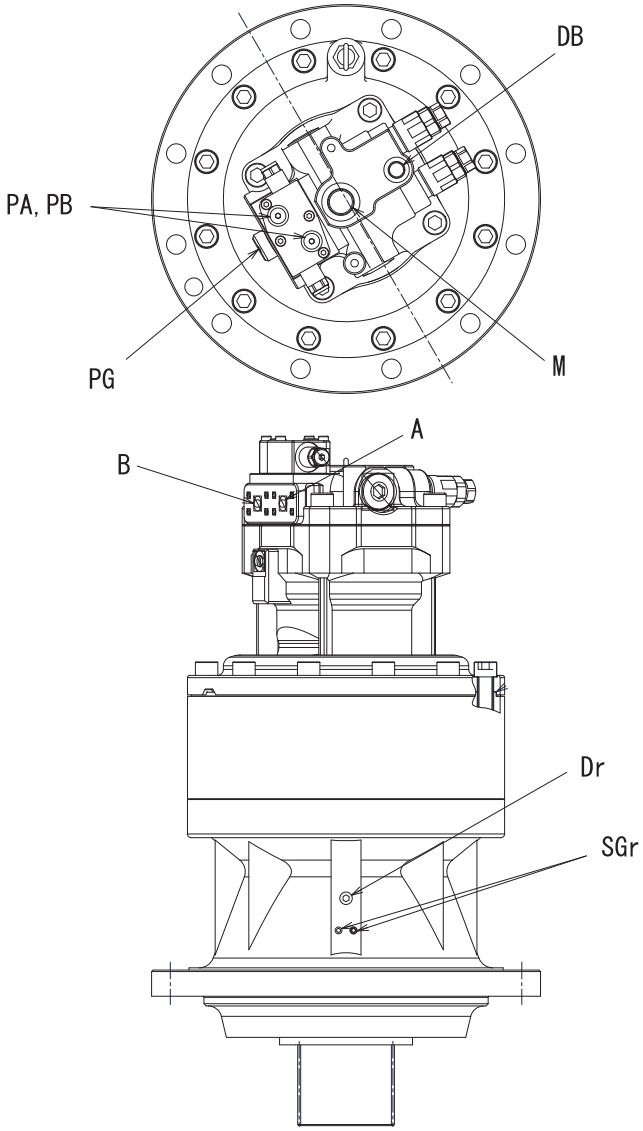

Port	Port name	Port size
M	Make up	G1
DB	Drain	G1/2
PG	Brake release	G1/4
A	Right swing	-
B	Left swing	-
PA, PB	Pressure measurement	G1/4
Dr	Gear oil drain port	PT3/8
SGr	Grease-up port	PT1/8

https://truckmanualshub.com/

Port Diagram

2. Travel Motor

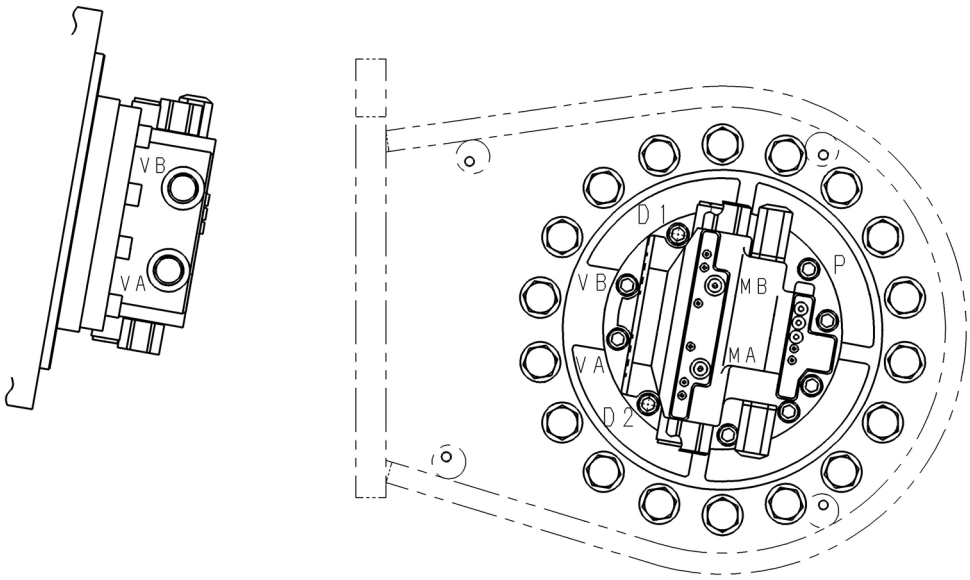

SD06012–005

Port	Port name	Port size
D1, D2	Drain port	G1/2
P	Pilot port	G1/4
MA, MB	Pressure detection port	G1/4
VA, VB	Main port	G1

https://truckmanualshub.com/

3. Center Joint

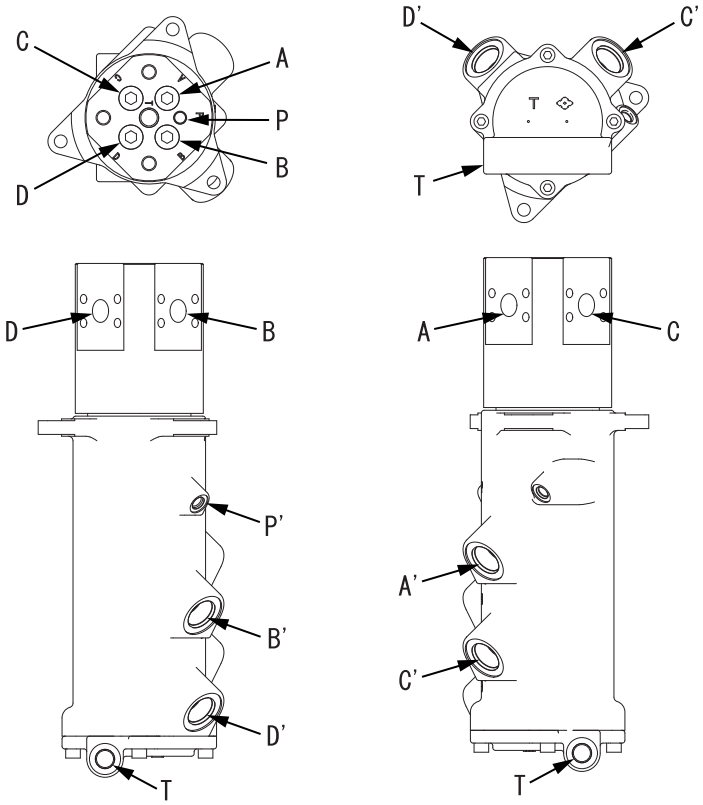

SD06012-006

Port	Port name	Port size
A'	Forward right (connected to travel motor)	G1
B'	Forward left (connected to travel motor)	G1
C'	Backward right (connected to travel motor)	G1
D'	Backward left (connected to travel motor)	G1
P'	Pilot port (connected to travel motor)	G1/4
T	Drain port	G1/2
A	Forward right (connected to control valve)	500psi 1
B	Forward left (connected to control valve)	500psi 1
C	Backward right (connected to control valve)	500psi 1
D	Backward left (connected to control valve)	500psi 1
P	Pilot port (connected to control valve)	G1/4

https://truckmanualshub.com/

Pilot Hose Connection Diagram

Pilot P and T Lines

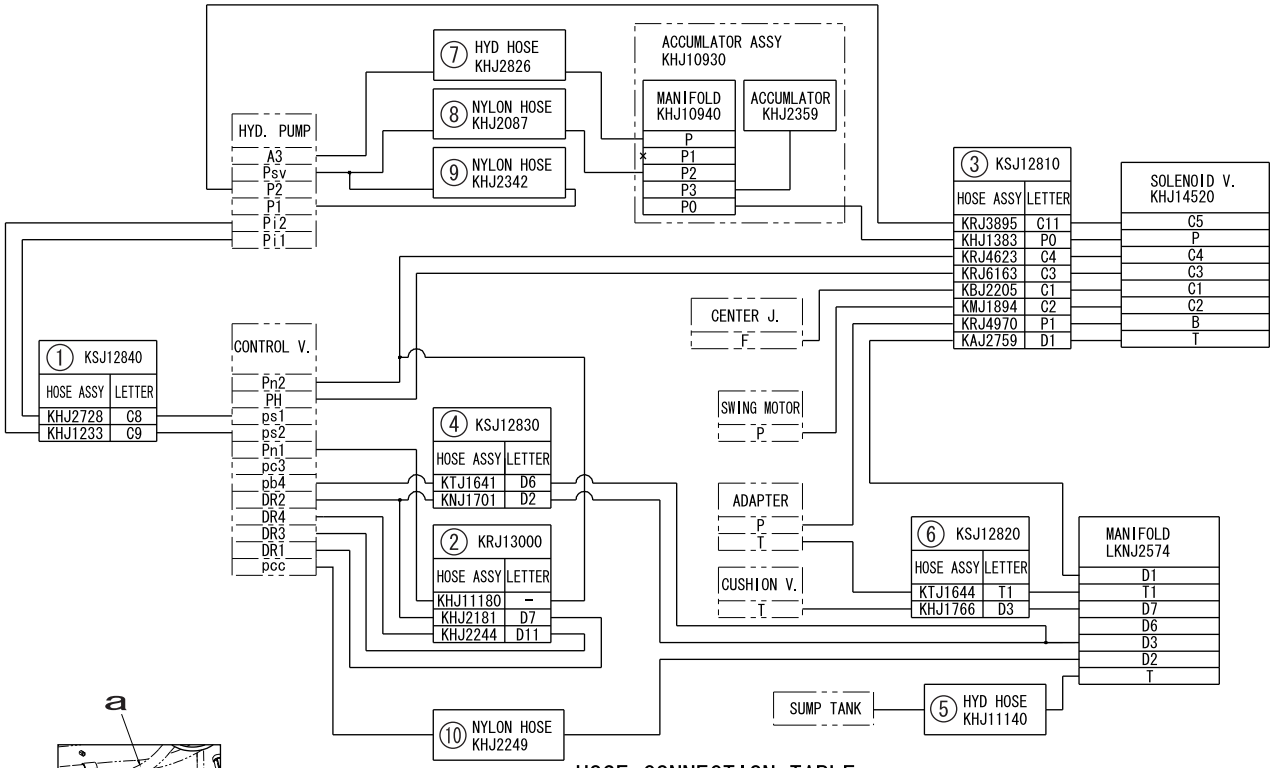

HOSE CONNECTION TABLE

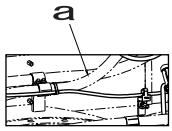

A ~

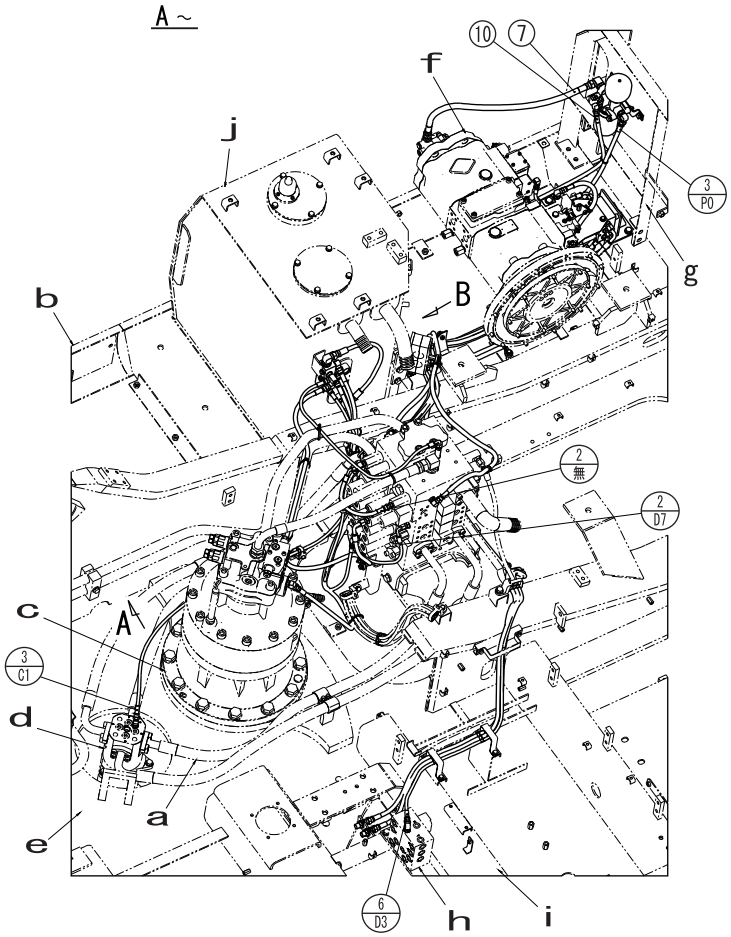

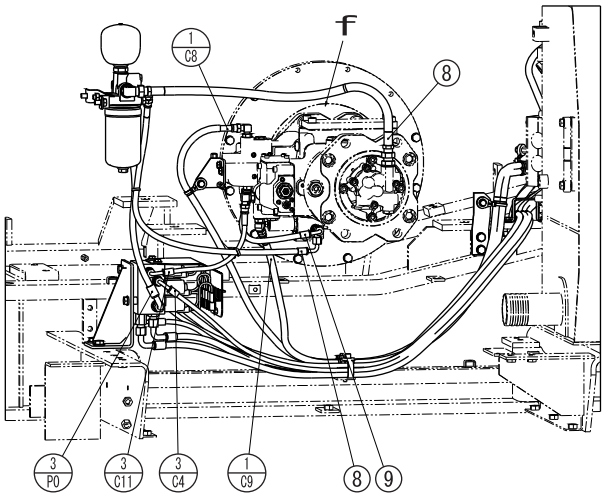

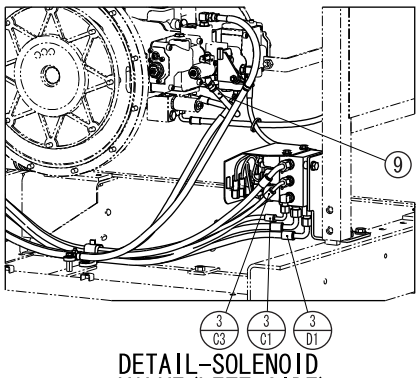

DETAIL-SOLENOID VALVE(LEFT SIDE)

KSJ12800-E02

https://truckmanualshub.com/

Pilot Hose Connection Diagram

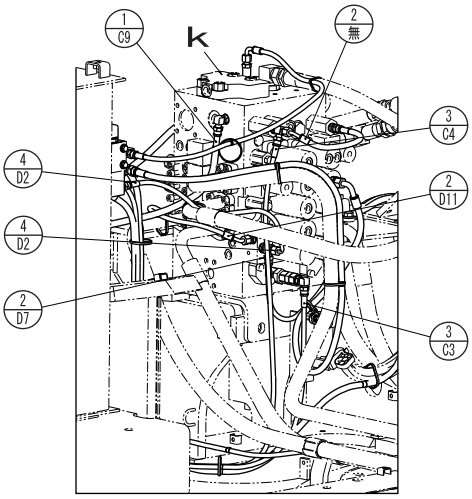

DETAIL-CONTROL VALVE(FRONT)

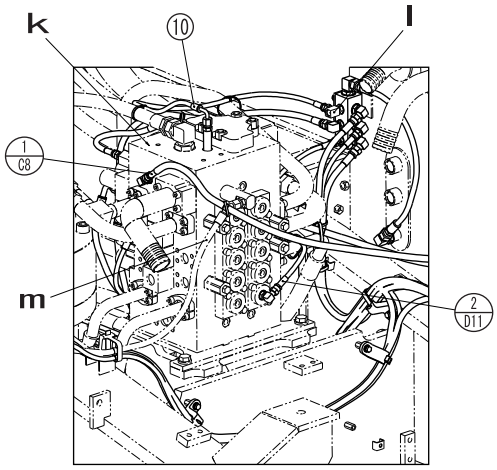

DETAIL-CONTROL VALVE(REAR)

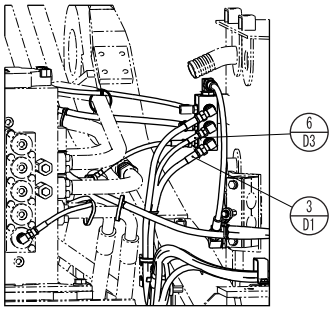

B ~

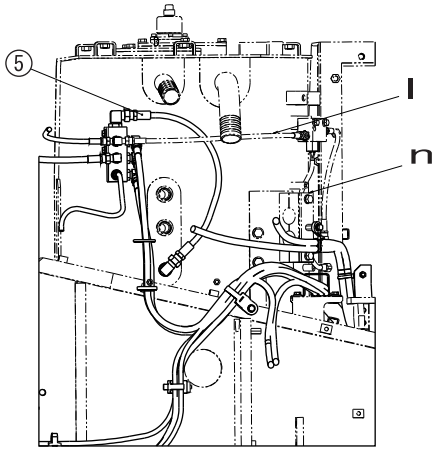

DETAIL-SUMP TANK

a	Travel line
b	Platform (left)
c	Swing frame
d	Center Joint
e	Swing frame
f	Hydraulic Pump
g	House frame
h	Cushion Valve
i	Platform (left)
j	Sump tank
k	Control Valve
l	Indicator line
m	Control line
n	Pressure line bracket

Code	Part name	Q'ty
1	ASSY hose (abrasion-proof rubber hose)	1
2	ASSY hose (flexible nylon hose)	1
3	ASSY hose (Nylon hose)	1
4	ASSY hose (Nylon hose)	1
5	Hydraulic hose	1
6	ASSY hose (Nylon hose)	1
7	Hydraulic hose	1
8	Nylon hose	1
9	Nylon hose	1
10	Nylon hose	1

KSJ12800-E02

https://truckmanualshub.com/

Pilot Hose Connection Diagram

Pilot Control Line

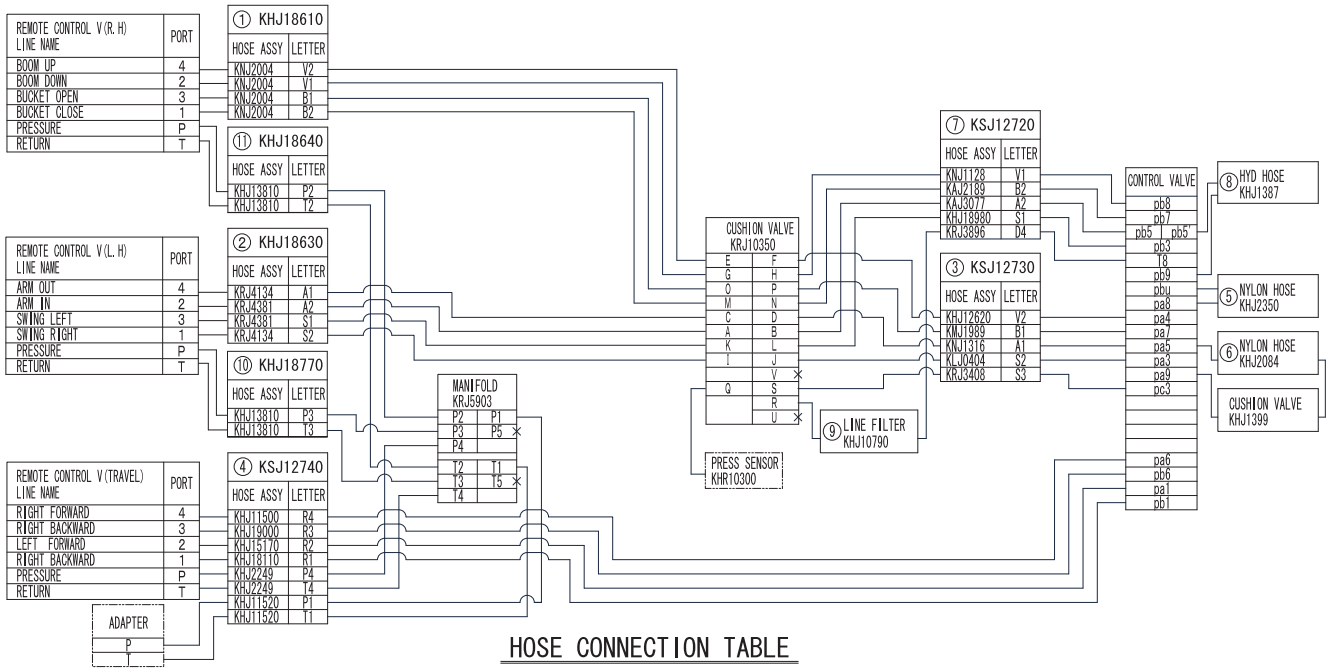

HOSE CONNECTION TABLE

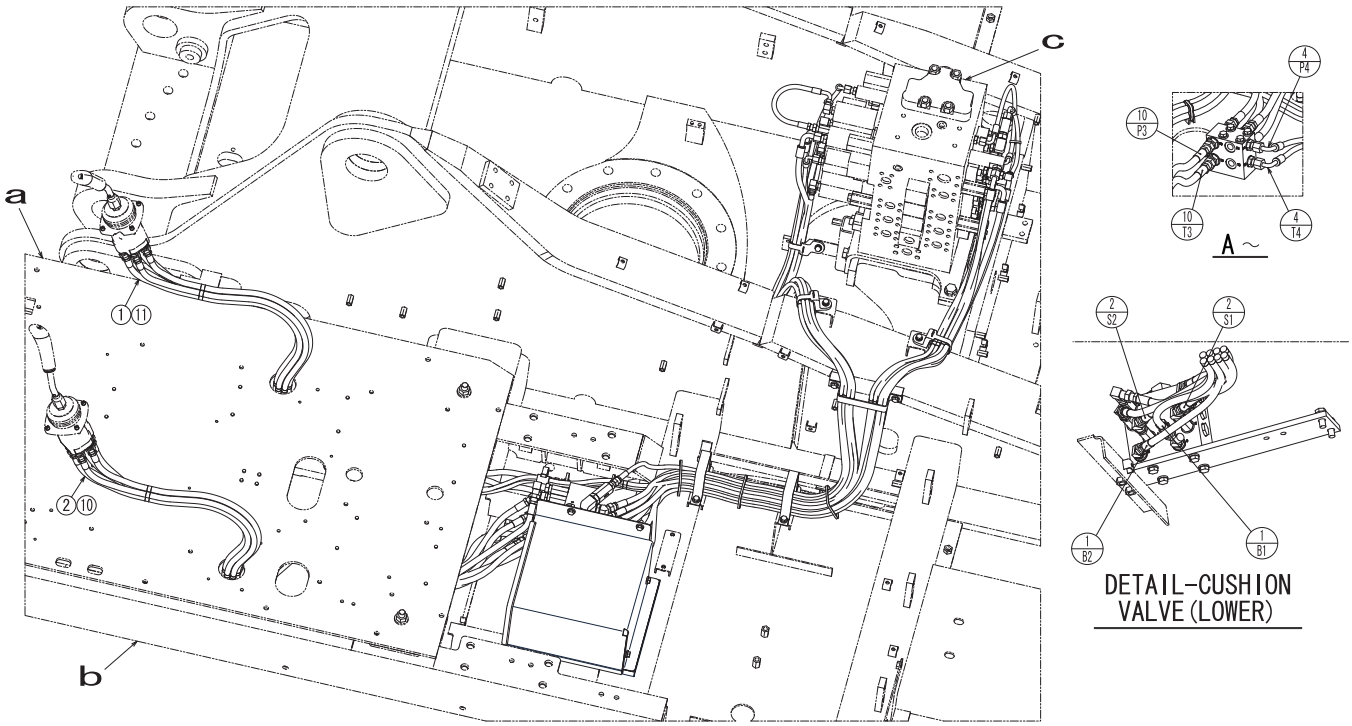

KSJ13220-E02

https://truckmanualshub.com/

Pilot Hose Connection Diagram

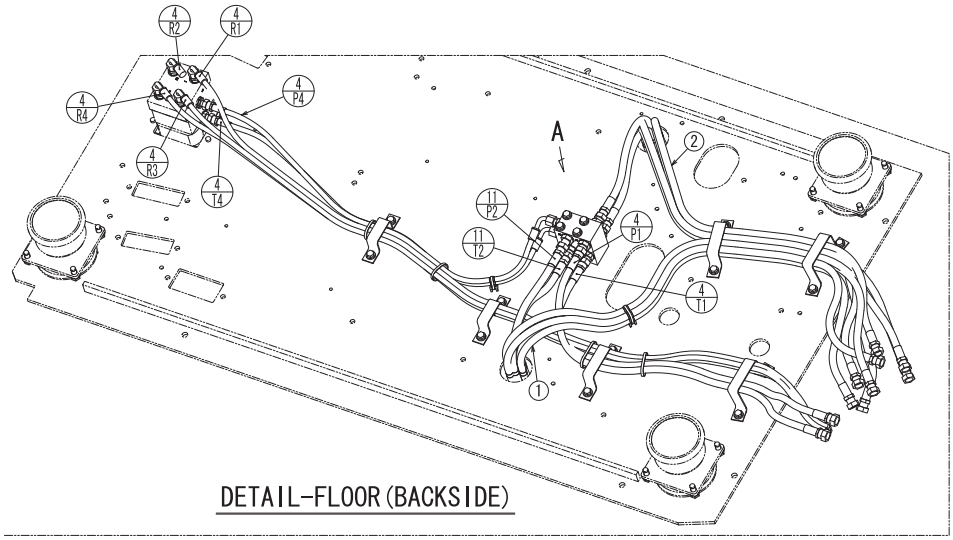

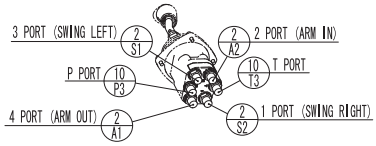

DETAIL-REMOTE CONTROL VALVE(L)

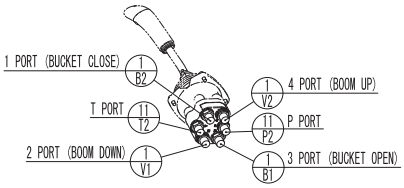

DETAIL-REMOTE CONTROL VALVE(R)

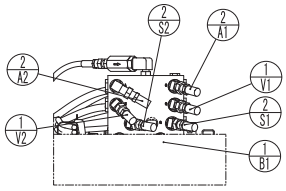

DETAIL 1-CUSHION VALVE(FRONT)

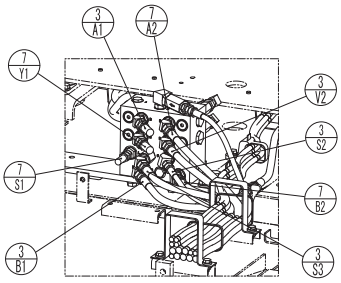

DETAIL-CUSHION VALVE(REAR)

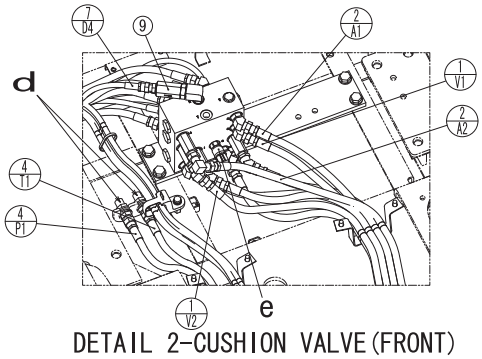

DETAIL 2-CUSHION VALVE(FRONT)

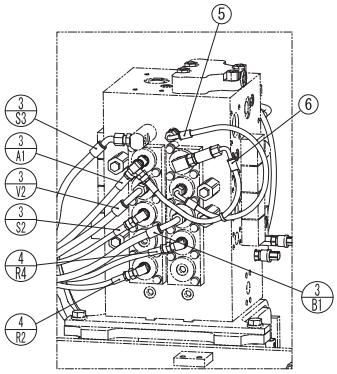

DETAIL-CONTROL VALVE(REAR)

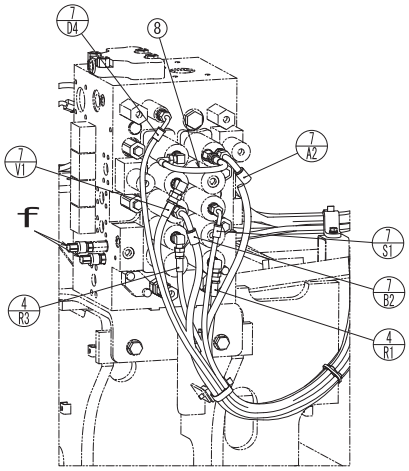

DETAIL-CONTROL VALVE(FRONT)

a	Floor
b	Platform (left)
c	Control Valve
d	Adapter hose (pilot P&T)
e	Pressure sensor Q
f	Pressure sensor PA,PT

Code	Part name	Q'ty
1	ASSY hose (rubber hose)	1
2	ASSY hose (rubber hose)	1
3	ASSY hose (Nylon hose)	1
4	ASSY hose (flexible nylon hose)	1
5	Nylon hose	1
6	Nylon hose	1
7	ASSY hose (Nylon hose)	1
8	Hydraulic hose	1
9	Line filter G1/4 (OR) x G1/4	1
10	ASSY hose (flexible nylon hose)	1
11	ASSY hose (flexible nylon hose)	1

KSJ13220-E02

https://truckmanualshub.com/

Pilot Hose Connection Diagram

Pilot Control Line (2-way selector valve)

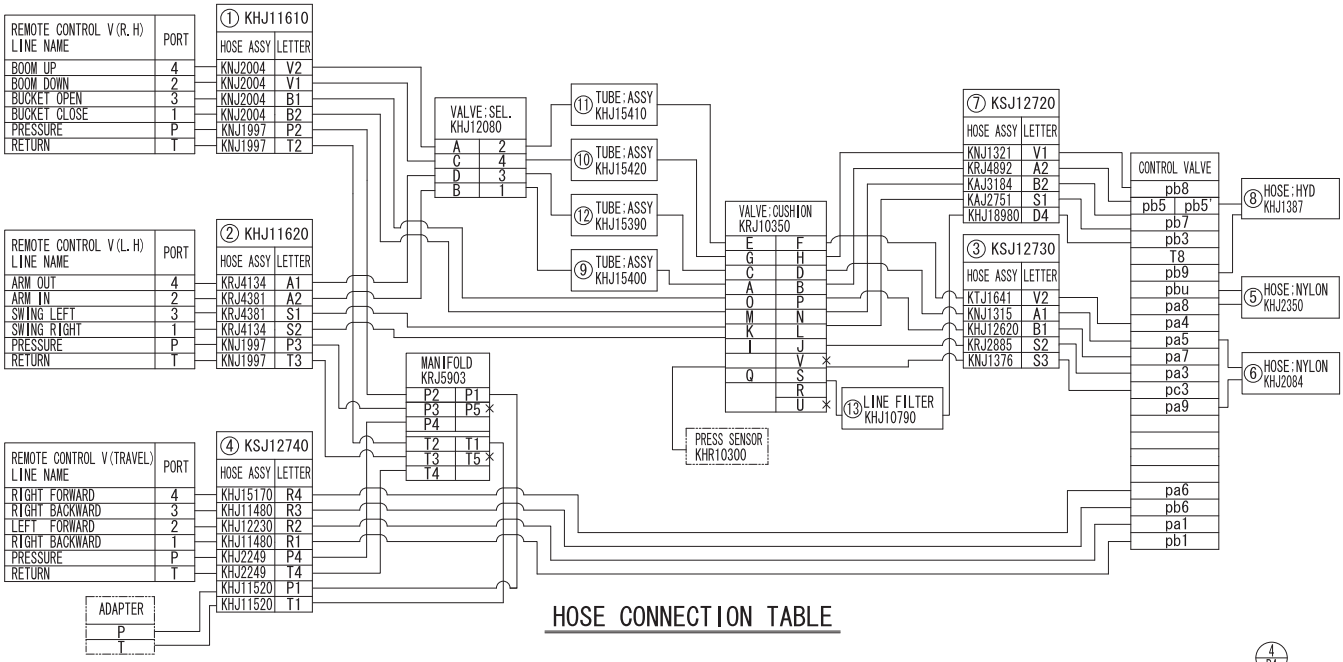

HOSE CONNECTION TABLE

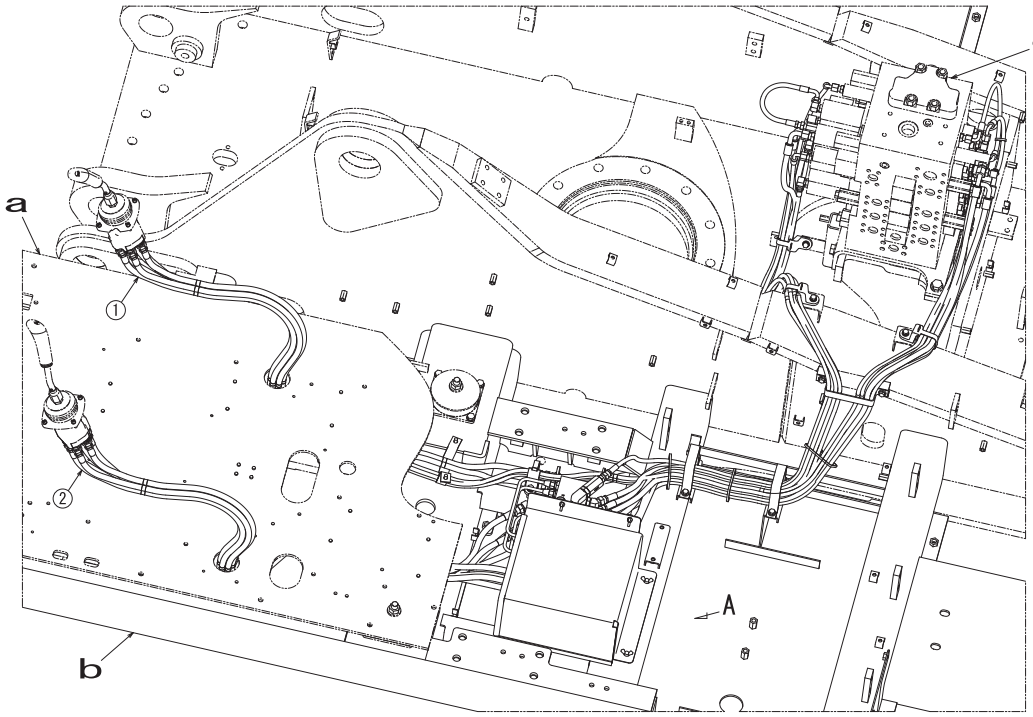

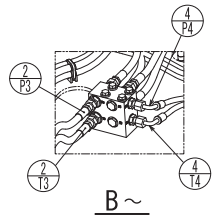

B ~

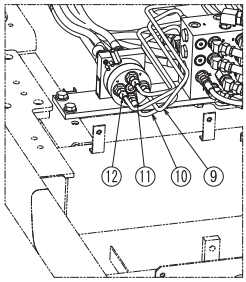

A ~

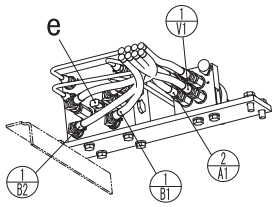

DETAIL-CUSHION VALVE (LOWER)

KSJ12750-EZ04

https://truckmanualshub.com/

Pilot Hose Connection Diagram

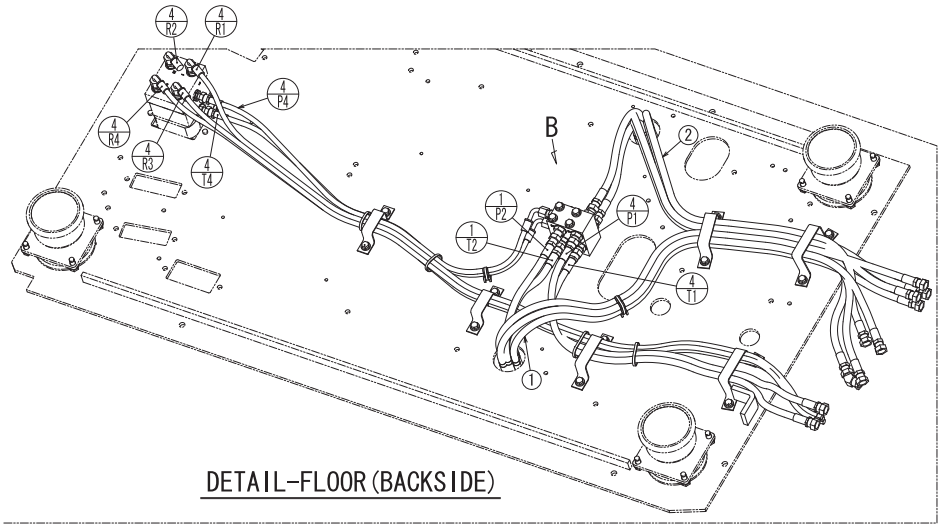

DETAIL-FLOOR(BACKSIDE)

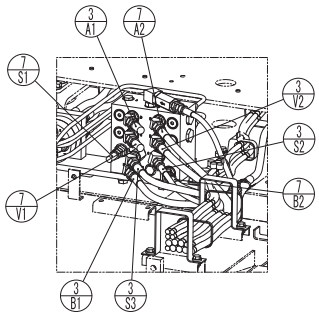

DETAIL-CUSHION VALVE(REAR)

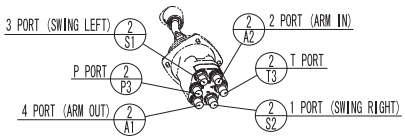

DETAIL-REMOTE CONTROL VALVE(L)

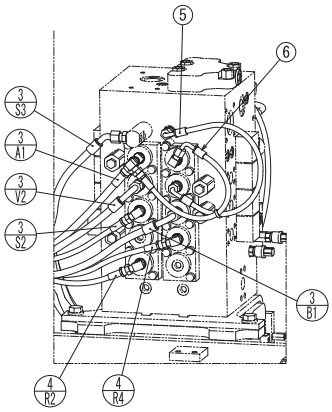

DETAIL-CONTROL VALVE(REAR)

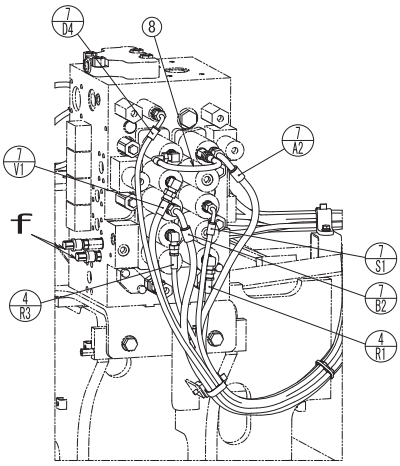

DETAIL-CONTROL VALVE(FRONT)

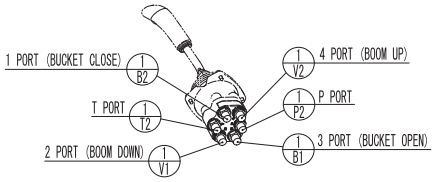

DETAIL-REMOTE CONTROL VALVE(R)

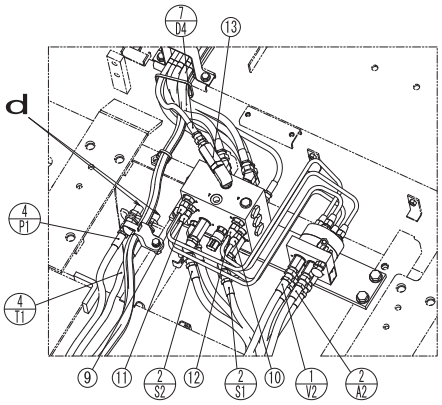

DETAIL-CUSHION VALVE(FRONT)

a	Floor
b	Platform (left)
c	Control Valve
d	Adapter hose (pilot P&T)
e	Pressure sensor Q
f	Pressure sensor PA,PT

Code	Part name	Q'ty
1	ASSY hose (rubber hose)	1
2	ASSY hose (rubber hose)	1
3	ASSY hose (Nylon hose)	1
4	ASSY hose (flexible nylon hose)	1
5	Nylon hose	1
6	Nylon hose	1
7	ASSY hose (nylon hose)	1
8	Hydraulic hose	1
9	ASSY tube (flare)	1
10	ASSY tube (flare)	1
11	ASSY tube (flare)	1
12	ASSY tube (flare)	1
13	Line filter G1/4 (OR) x G1/4	1

KSJ12750-EZ04

https://truckmanualshub.com/

Pilot Hose Connection Diagram

Pilot Control Line (4-way selector valve)

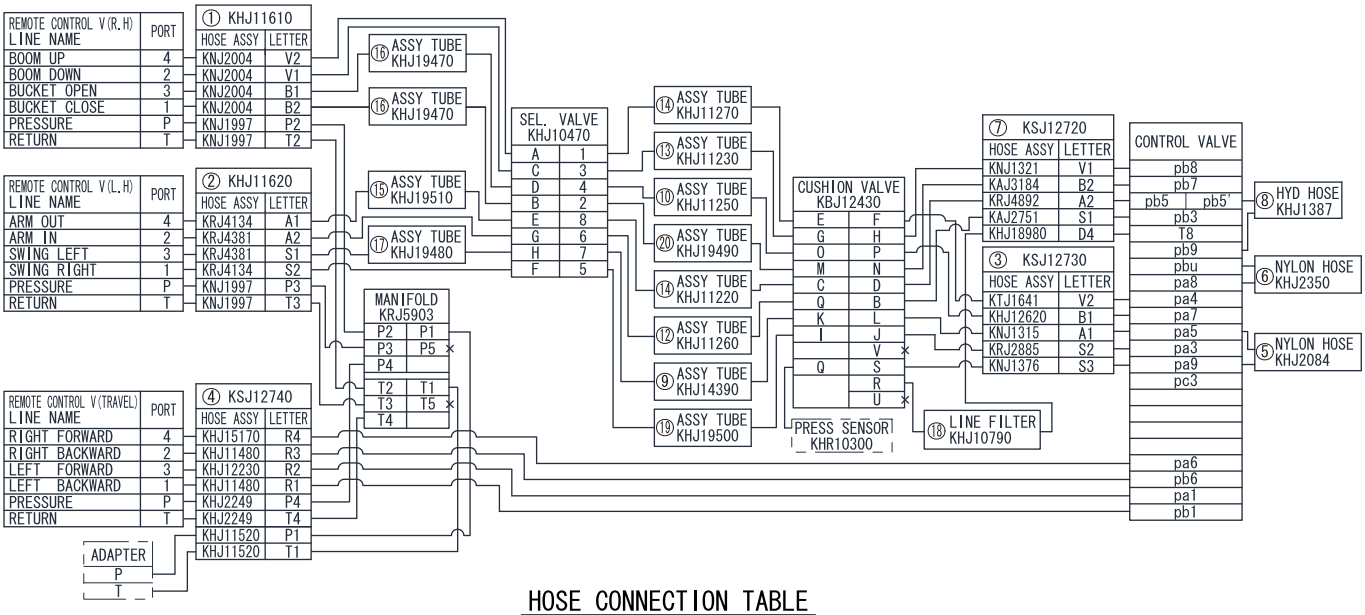

HOSE CONNECTION TABLE

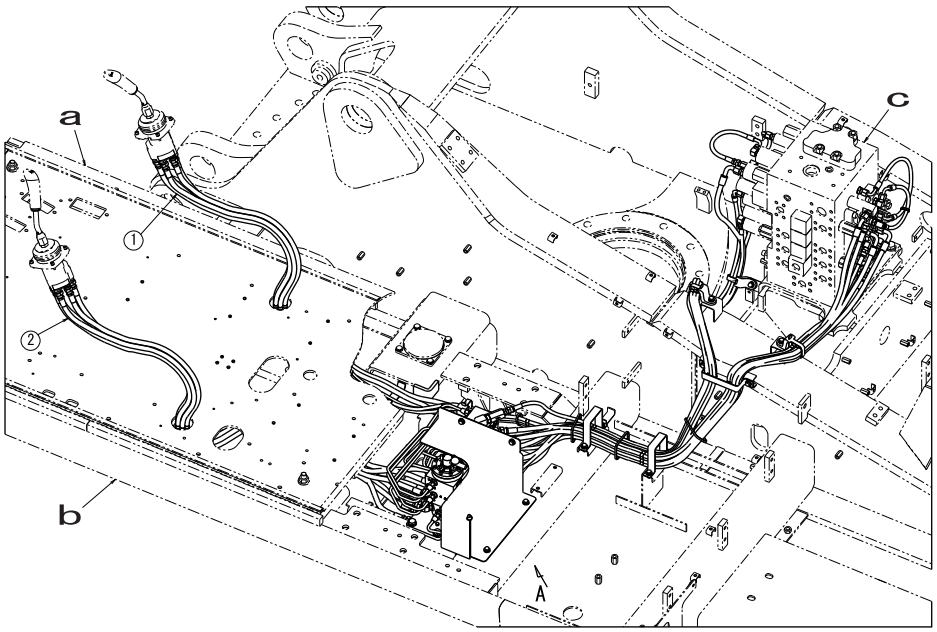

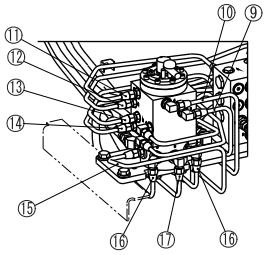

A ~

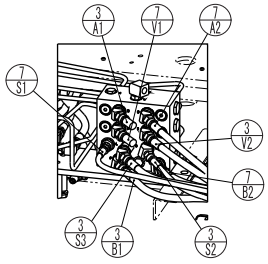

DETAIL-CUSHION VALVE(REAR)

KSJ13620-D01

https://truckmanualshub.com/

Pilot Hose Connection Diagram

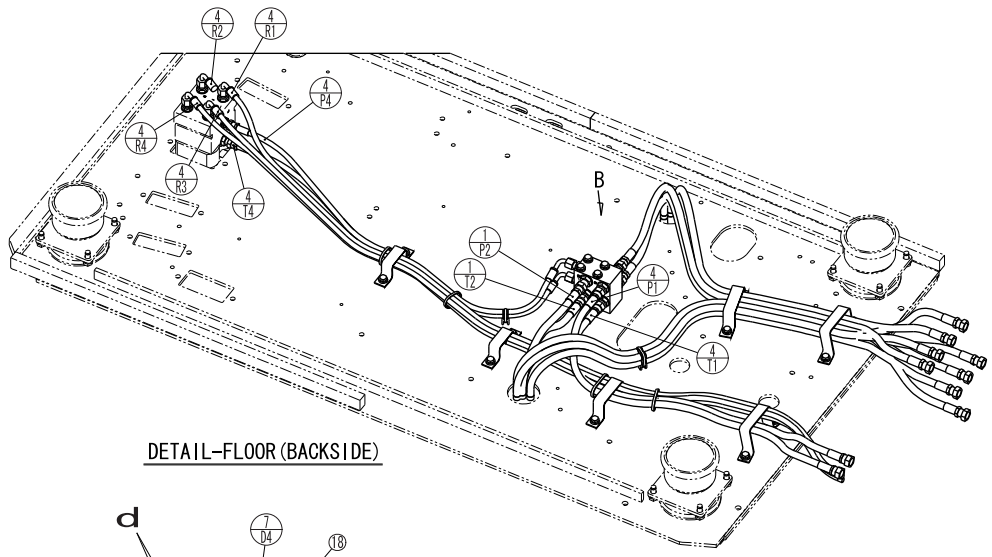

DETAIL-FLOOR(BACKSIDE)

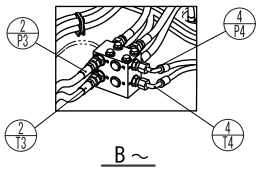

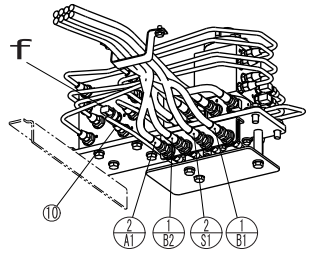

DETAIL-CUSHION VALVE(LOWER)

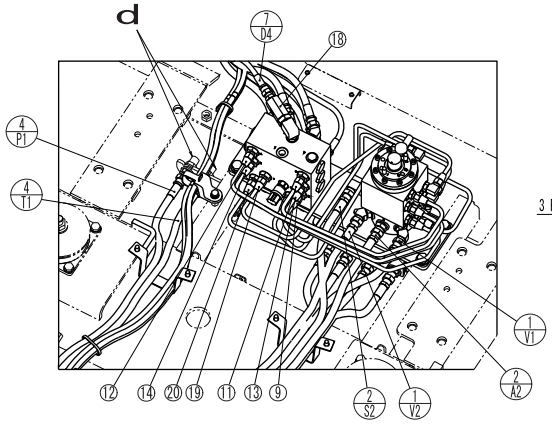

DETAIL-CUSHION VALVE(FRONT)

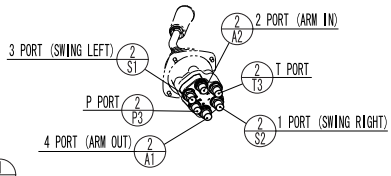

DETAIL-REMOTE CONTROL VALVE(L)

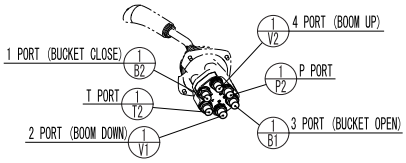

DETAIL-REMOTE CONTROL VALVE(R)

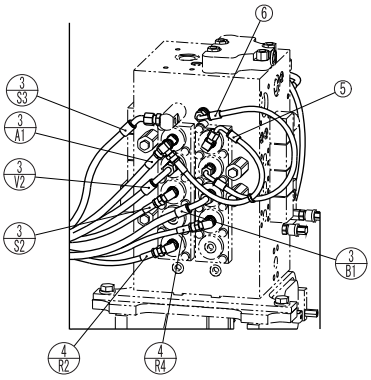

DETAIL-CONTROL VALVE(REAR)

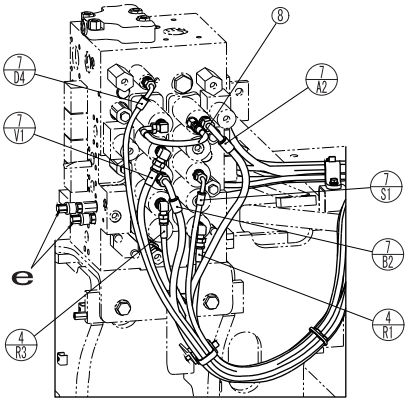

DETAIL-CONTROL VALVE(FRONT)

a	Floor
b	Platform (left)
c	Control Valve
d	Hose adapter (pilot P&T)
e	Pressure sensor PA,PT
f	Pressure sensor Q

Code	Part name	Q'ty
1	ASSY hose (rubber hose)	1
2	ASSY hose (rubber hose)	1
3	ASSY hose (Nylon hose)	1
4	ASSY hose (flexibleNylon hose)	1
5	Nylon hose	1
6	Nylon hose	1
7	ASSY hose (Nylon hose)	1
8	Hydraulic hose	1
9	ASSY tube (flare)	1
10	ASSY tube (flare)	1
11	ASSY tube (flare)	1
12	ASSY tube (flare)	1
13	ASSY tube (flare)	1
14	ASSY tube (flare)	1
15	ASSY tube (flare)	1
16	ASSY tube (flare)	2
17	ASSY tube (flare)	1
18	Line finter G1/4 (OR) x G1/4	1
19	ASSY tube (flare)	1
20	ASSY tube (flare)	1

KSJ13620-E01

https://truckmanualshub.com/

Function Table

◎ : New function △ : Changed function

Operation	Explanation of functions	Operation explanation
Travel circuit		
Low-speed circuit	Sets the travel motor 2-stage tilting angle to a large angle to set low speed.	page 40
High-speed circuit	Sets the travel motor 2-stage tilting angle to a small angle to set high speed. The speed is automatically switched to low speed according to the load pressure on the travel motor. In order to prevent hunting at high speed, if the travel pressure becomes 25.8 MPa or higher, the speed is set to low speed.	page 42
Straight travel circuit (△)	When there is an attachment or swing operation during traveling, travel is held straight without curving.	page 44
Swing circuit		
Swing speed limit control circuit (◎)	In order to increase the cylinder bore and attachment speed, the pump maximum flow was increased, but in order to not increase the swing speed, when swing is operated alone, the pump flow is restricted with the proportional valve installed on the swing pump (front side).	page 46
Swing relief cut-off control circuit (◎)	For swing single operation, if swing is started with a sharp lever operation, the pump flow is reduced with the proportional valve installed on the swing pump (front side). Normally, this control eliminates the excess oil discharged from the swing relief valve and reduces the horsepower consumption. When the swing speed rises, the pump discharge pressure falls, so the pump flow is increased gradually while it is detected with the sensor.	page 48
Swing priority circuit	1. Swing pushing is obtained by the swing priority variable orifice built into the control valve. 2. The swing priority variable orifice also works to secure the arm flow for bed metering.	page 50
Swing brake circuit	Suctions in the oil from the make-up line in order to prevent cavitation when swing stops.	page 52
Swing parking circuit (△)	1. When the swing lever is in neutral, swing parking works and is held at 100%. 2. When there is a swing lever or attachment operation, swing parking is released. 3. Swing parking works about 5 sec. after the swing lever is put into neutral. 4. When an attachment operation is stopped, if there is no swing operation, the swing parking circuit works about 1 sec. later. 5. When the engine is stopped, swing parking works.	page 54
Vibration backlash	The reversal prevention valve attached to the swing motor reduces backlashes that occur when the swing stops.	-
Boom circuit		
Boom-up circuit	1. Single The flow is merged internally by switching the boom (1) and (2) spool to raise the speed. 2. Compound The swing priority variable orifice spool is switched to make movement in arm-in compound operation smooth.	page 60
Boom-down regenerative circuit	Regeneration within the boom (1) spool is used to increase speed and prevent cavitation.	page 64

https://truckmanualshub.com/

Function List

◎ : New function △ : Changed function

Operation	Explanation of functions	Operation explanation
Boom-down tilting prevention circuit	High pressure is suppressed with the bleed-off circuit and tilting is mitigated.	page 66
Boom-down load hold valve circuit	1. By releasing the load hold valve built into the control valve, boom speed becomes faster. 2. Boom-down pilot pressure enables boom-down operation by releasing the load holding valve.	page 68
Arm circuit		
Arm-out circuit	The flow is merged internally by switching the arm (1) and (2) spool to raise the speed.	page 70
Arm-in forced regenerative circuit	The speed for compound operation is raised by the forced regeneration release valve in the control valve.	page 72
Arm-in load hold valve circuit	1. Load holding valve integrated in the control valve reduces natural drop on the arm-in side. 2. Arm-in pilot pressure enables arm-in operation by releasing the load holding valve.	page 74
Bucket circuit		
Bucket-close regenerative circuit (◎)	Regeneration within the bucket spool is used to increase speed and prevent cavitation.	page 78
Negative control circuit		
Negative control power save circuit (◎)	In the non-operation state, this circuit switches the negative control relief valve set pressure to reduce the pump discharge force and further reduce horsepower consumption.	page 80
Negative control circuit	For no-load operation, this circuit sets the hydraulic pump discharge volume to minimum to reduce horsepower consumption.	page 82
Others		
Cushion circuit	Softens the shock through the work of the cushion valve with heat circuit. This circuit is attached to the boom and arm pilot lines. There is no soft / hard switch. (Inline is disused by the tuning)	page 86
Auto pressure boost circuit	Boosts the main relief pressure from 34.3 - 36.8 MPa according to the engine load ratio and circuit pressure.	page 94
Option circuits		
Breaker circuit	The main control valve has an option section as standard so that it can support a breaker, crusher or other special attachment.	page 96
Option flow adjustment (◎)	It is possible to set the flow for the breaker, crusher, or other special attachment application by just operating a switch in the cab. Maximum of 5 applications.	-
Multi purpose circuit switch (◎)	It is possible to switch the circuit between the breaker and the crusher by just operating a switch in the cab.	-
2nd option circuit (◎)	Option valve can be added to the top section of the control valve and a 2nd option line can be installed easily.	-

https://truckmanualshub.com/

Explanation of New Functions

1. Swing Relief Cut-off Control

[1] Model 3B circuit

- When a swing starts, almost all the oil is discharged from the swing relief valve.

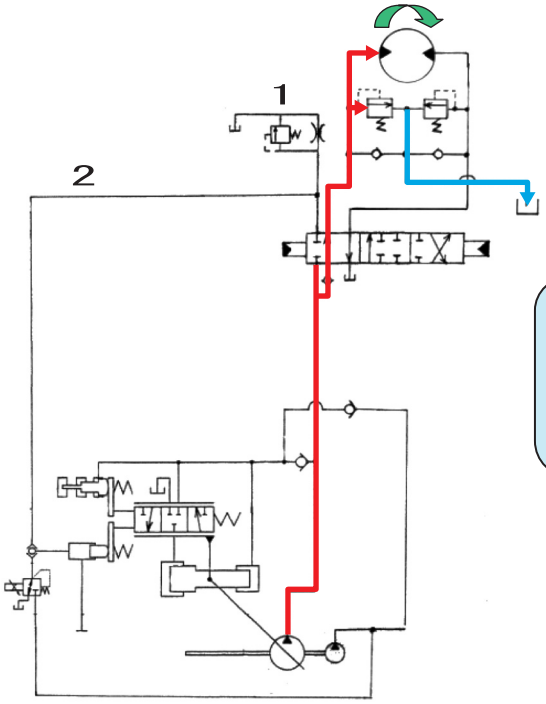

When the swing starts, high pressure is required, but not flow.
For Model 3B, swing relief pressure 29.4 MPa.
Pump discharge volume at this time 167 L/min.
When the pump is beginning to start up, almost all the oil flows from the relief valve to the tank.

SD03008-002

1	Foot relief valve
2	Negative control signal

https://truckmanualshub.com/

[2] Model 5 circuit

- When a swing starts, the flow is reduced with the front side proportional valve and the excess oil is eliminated.

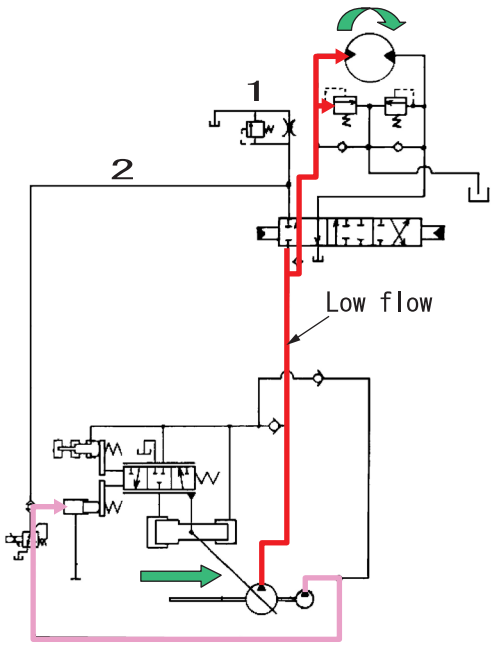

Current is input to the front side proportional valve, pilot pressure oil is led to the negative control port, and the flow decreases on the front side only.
While the pump discharge pressure is sensed, the flow is gradually increased.

1. Operation conditions for swing relief cut control when all the conditions below are satisfied.
   - Travel non-operation
   - No attachments other than boom down are operating
   - Sudden swing operation

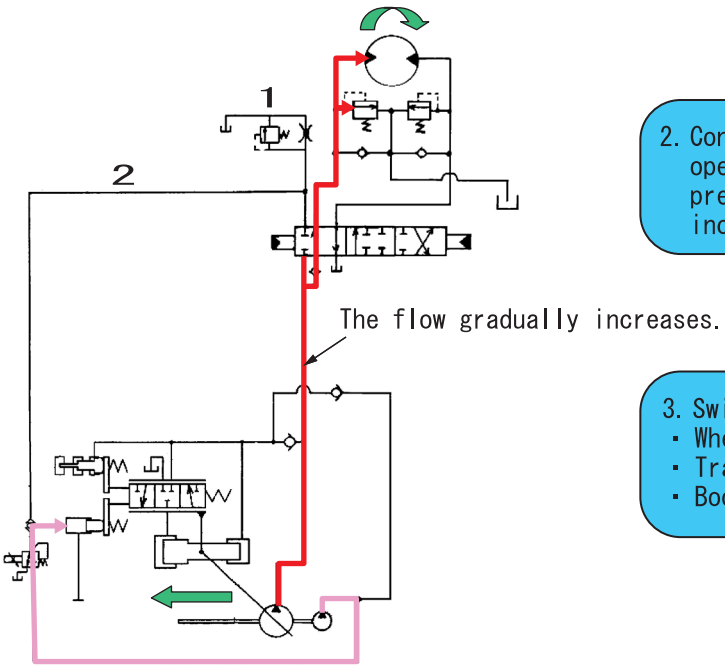

2. Control after swing relief cut control operation while the pump discharge pressure is sensed, the flow is gradually increased.

3. Swing relief cut control end conditions
   - When swing operation is stopped
   - Travel operation
   - Boom-up, arm-out/in, bucket open/close

RD03004-002

1	Foot relief valve
2	Negative control signal

https://truckmanualshub.com/

2. Swing Speed Limit Control

- The maximum pump flow has been increased, but because it is desired to maintain the current state of the swing speed, the front side proportional valve is used to hold down the flow for swing single operation.

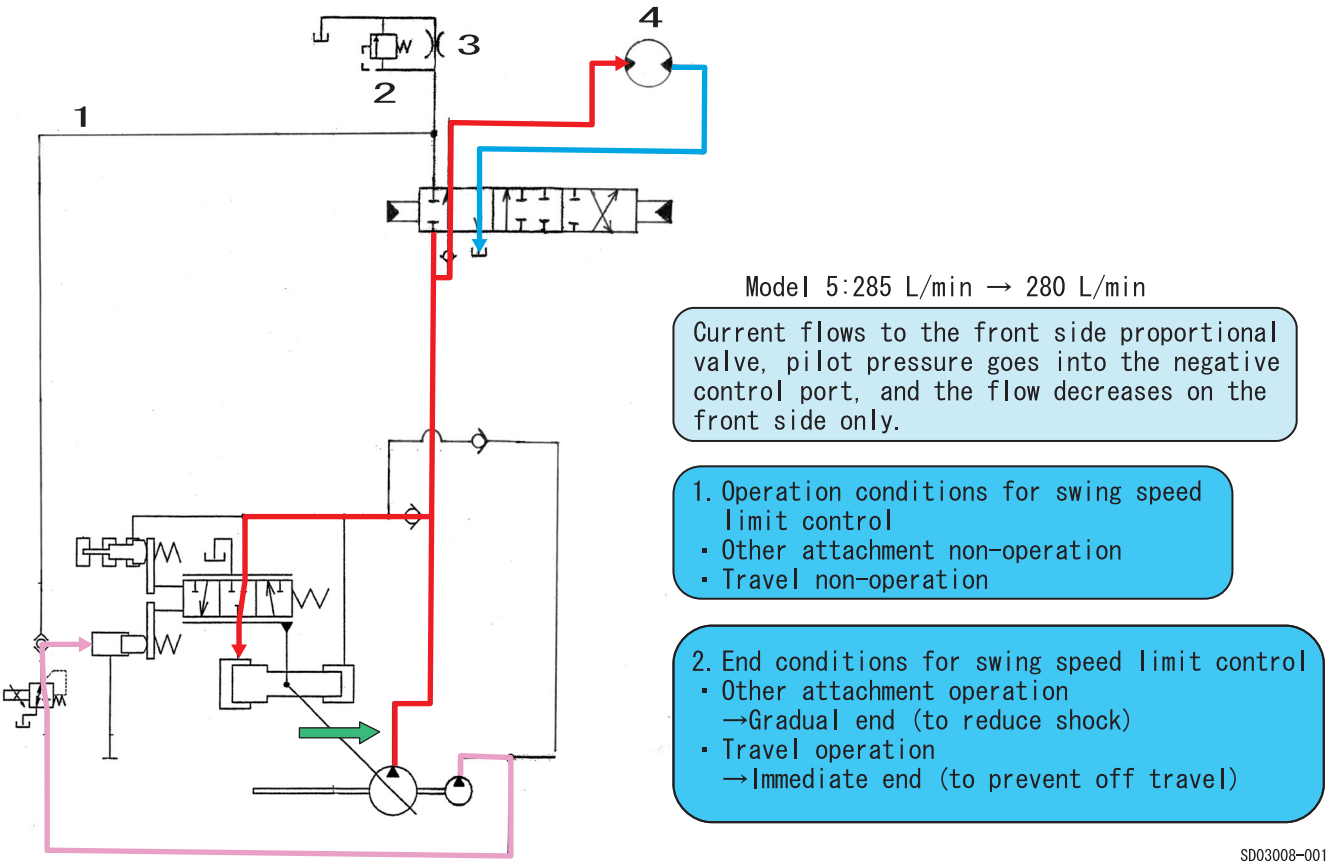

1	Negative control signal
2	Foot relief valve
3	Negative control orifice
4	Swing motor

https://truckmanualshub.com/

Function List

3. Negative Control Power Save Control

[1] Model 3B negative control circuit

- Control such that the discharge flow decreases as the negative control pressure increases.

This reduces the flow for non-operation, so there is an energy-saving effect.

For non-operation
1. The oil discharged from the pump is boosted to the foot relief set pressure at the orifice metering valve orifice downstream of the control valve and the negative control pressure rises.
2. The pump regulator section servo piston is moved in the direction that is left in the figure to decrease the flow.

However, the pump discharge pressure is the negative control pressure and pressure loss.

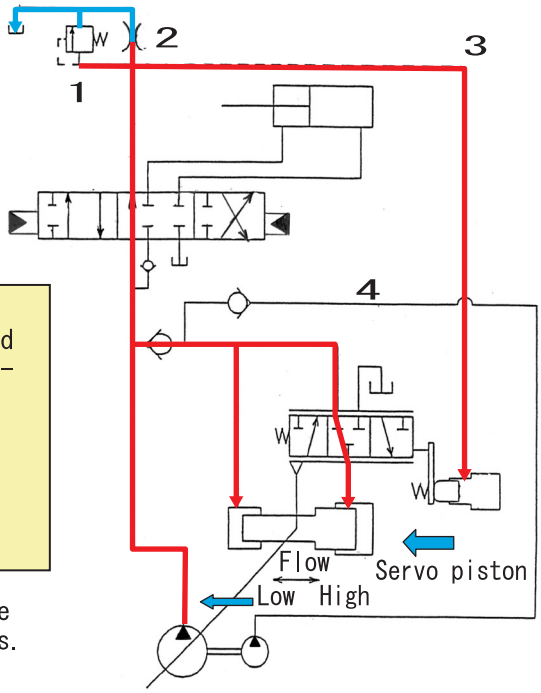

RD03004-004

1	Foot relief valve	3	Negative control pressure
2	Negative control orifice	4	Servo assist pressure

[2] Model 5 negative control circuit

This circuit uses the power save function.

- The negative control relief was made variable to lower the negative control pressure.

Power save solenoid valve

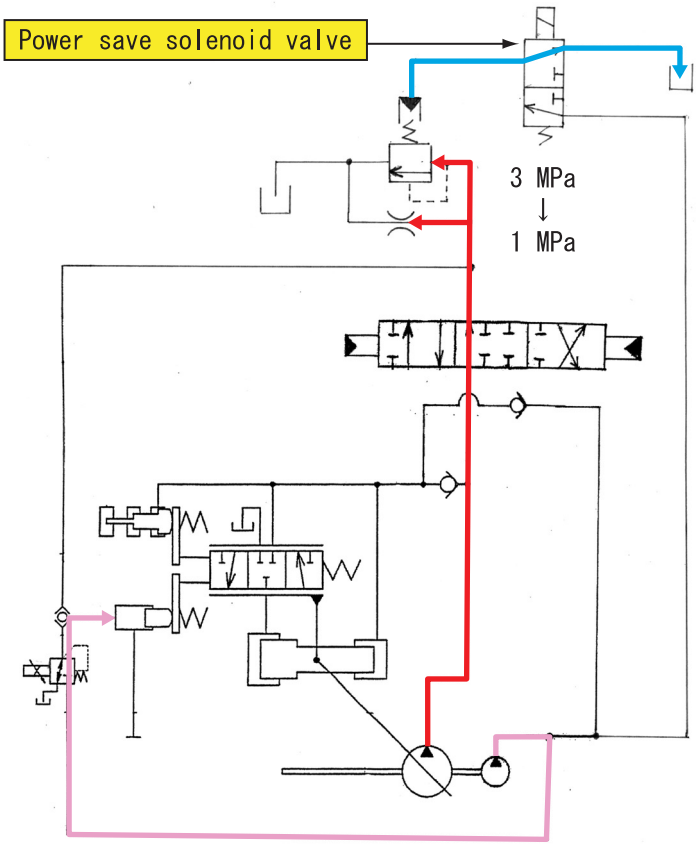

For non-operation, this gives low pressure + low flow, which provides a further energy-saving effect.

For non-operation
1. When 1 sec. passes from the end of operation, the solenoid valve comes ON and the negative control relief spring is released.
2. When the pump discharge pressure drops, the negative control pressure drops at the same time, so the proportional valve is operated to establish the negative control pressure.
3. The rear side pump leads the pilot pressure to the negative control port via the shuttle valve.
4. When any operation is carried out, this detects the pilot pressure and recovers in about 0.1 sec.

RD03004-005

https://truckmanualshub.com/

4. Option Line Flow Adjustment Control

- This control adjusts the set flow to match the breaker, crusher, or other application.

There are various types of front attachments installed on the shovel and the flows they require vary.
Even just for the 20-ton class breakers approved by our company, the required flow ranges from 120 - 200 L/min.

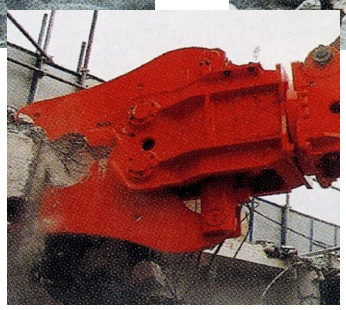

Model 3B breaker control
Breaker mode switch ON
Option pedal ON
When these occur, the engine speed drops to the preset speed.
Example: Model 3
If the required flow is 150 L/min, it drops to 1500 min^{-1}.

Problems
- The change in engine speed creates a sense of discomfort.
- The flow can only be set when the breaker is used. (With the crusher specifications, the flow cannot be adjusted.)
- Only 1 flow can be set.

SD03008-003

Model 5 uses a front pump proportional valve to adjust the flow.

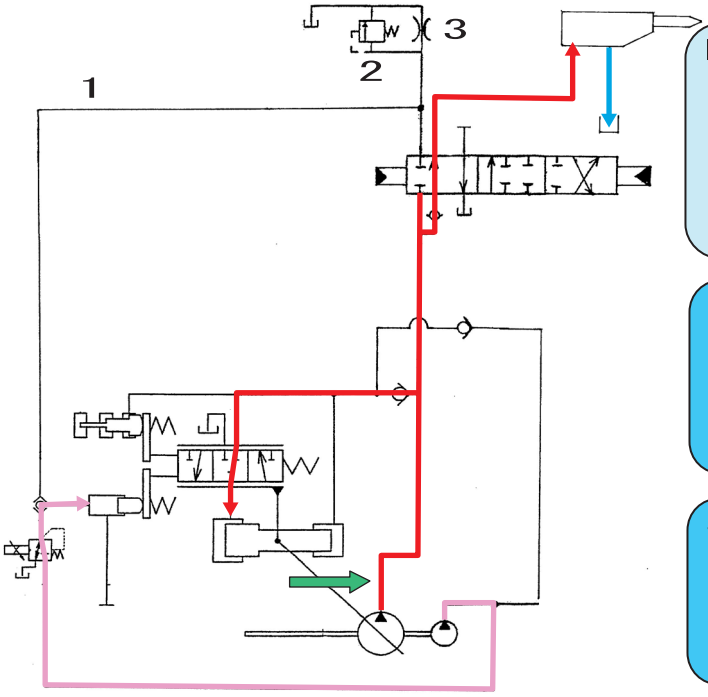

Improved points
- The breaker can be operated without engine speed change.
- The flow can be set even with the crusher specifications.
- 5 settings each can be stored for the breaker and the crusher.

1. Operation conditions for option flow adjustment control
- Option operation
- Attachment non-operation
- Travel non-operation
- Swing non-operation

2. End conditions for option flow adjustment control
- Attachment operation
- Travel operation
- Option non-operation
- Swing operation

Control contents
Accompanying the 10 flow settings (front side proportional valve settings), when one setting is selected, the set current is input to the front proportional valve, pilot pressure oil is led to the negative control port, and the flow decreases on the front side only.

RD03004-007

1	Negative control signal	2	Foot relief valve	3	Negative control orifice

https://truckmanualshub.com/

Function List

Option line flow setting screen

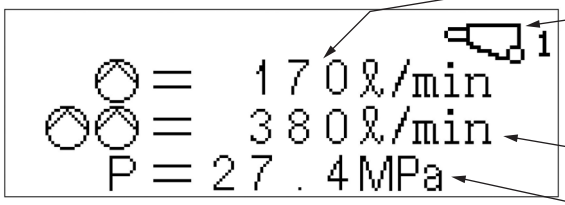

Displays the maximum flow for 1 pump.
Option line icon
Displays the option line for which the flow is set.
Breaker 1/2/3/4/5
Crusher 1/2/3/4/5
Select one
Displays the maximum flow for 2 pumps.
Pump discharge pressure (P1 pump main pressure)

For North America

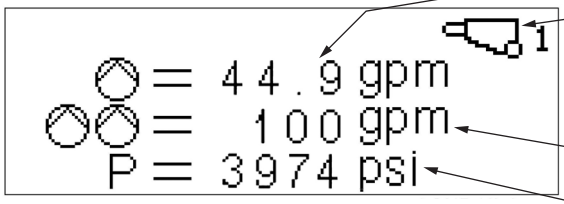

Displays the maximum flow for 1 pump.
Option line icon
Displays the option line for which the flow is set.
Breaker 1/2/3/4/5
Crusher 1/2/3/4/5
Select one
Displays the maximum flow for 2 pumps.
Pump discharge pressure (P1 pump main pressure)

RD03004-008

5. Multi Purpose Circuit (breaker ⇔ crusher) One-touch Switching Control
   - This control makes it easy to switch the circuit with a rocker switch in the cab.

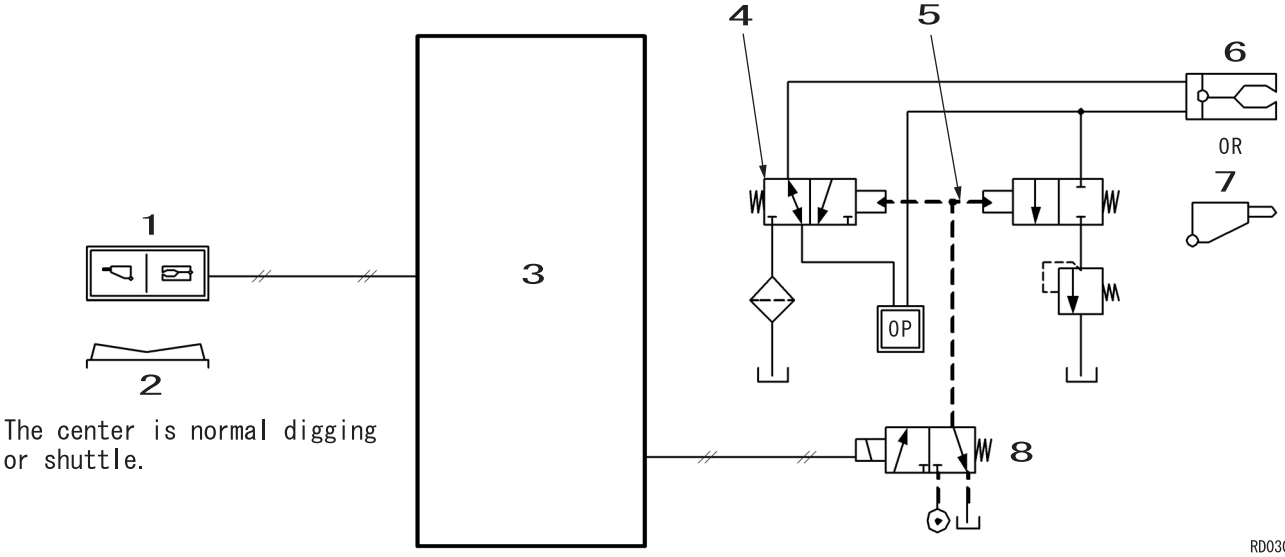

RD03004-009

1	Option line select switch	5	Pilot switchover
2	3 positions	6	Crusher
3	Computer A	7	Breaker
4	3-direction valve	8	Option line switchover solenoid

https://truckmanualshub.com/

6. Bucket-close Regenerative Circuit

This circuit speeds up bucket closing.
Bucket-close regenerative circuit used.

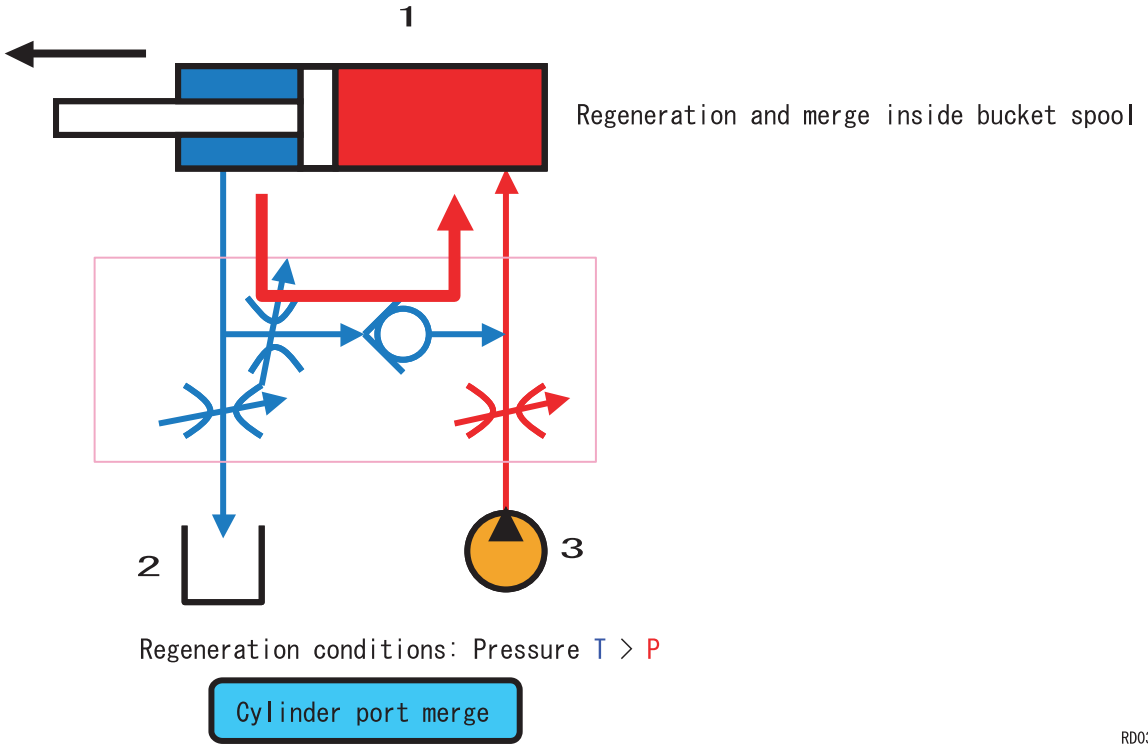

RD03004-010

1	Bucket cylinder
2	Hydraulic oil tank
3	Hydraulic pump

https://truckmanualshub.com/

Travel Circuit

Travel low-speed circuit

As an example, this section explains the forward travel operation.
The travel motor 2-stage tilting angle is a large angle side.Even if the travel switchover is set to the high-speed side, switching the key switch OFF and then ON again always returns the system to this state.
By operating the travel remote control valve to the forward side, the pilot pressure oil is fed to the control valve pa1 port and switches the left travel spool to the forward side.
At the same time, the oil is also fed to the pa6 port to switch the right travel spool to the forward side.
The discharge oil from hydraulic pump A1 enters the control valve P1 port and the discharge oil from hydraulic pump A2 enters the control valve P2 port. Each flows to the respective travel motor and causes forward travel through the left and right travel spools being switched.
The return oil from the travel motor goes through the left and right travel spools and returns to the hydraulic oil tank.
The travel high-speed solenoid valve goes OFF, the travel motor P port oil connects with the tank line, and the travel motor tilting angle moves to the large tilting side.

Pressure line
Tank line
Pilot pressure line
Pilot tank line
Electric line

1	Travel motor	10	Console lever lock switch
2	Travel high-speed select switch	11	Hydraulic pump
3	Computer A	12	Travel remote control valve
4	Control valve	13	Check valve
5	Travel (left)	14	Oil cooler
6	Travel (right)	15	Backward left
7	Travel high speed	16	Forward left
8	Lever lock	17	Backward right
9	5 stack solenoid valve	18	Forward right

https://truckmanualshub.com/

Overall View

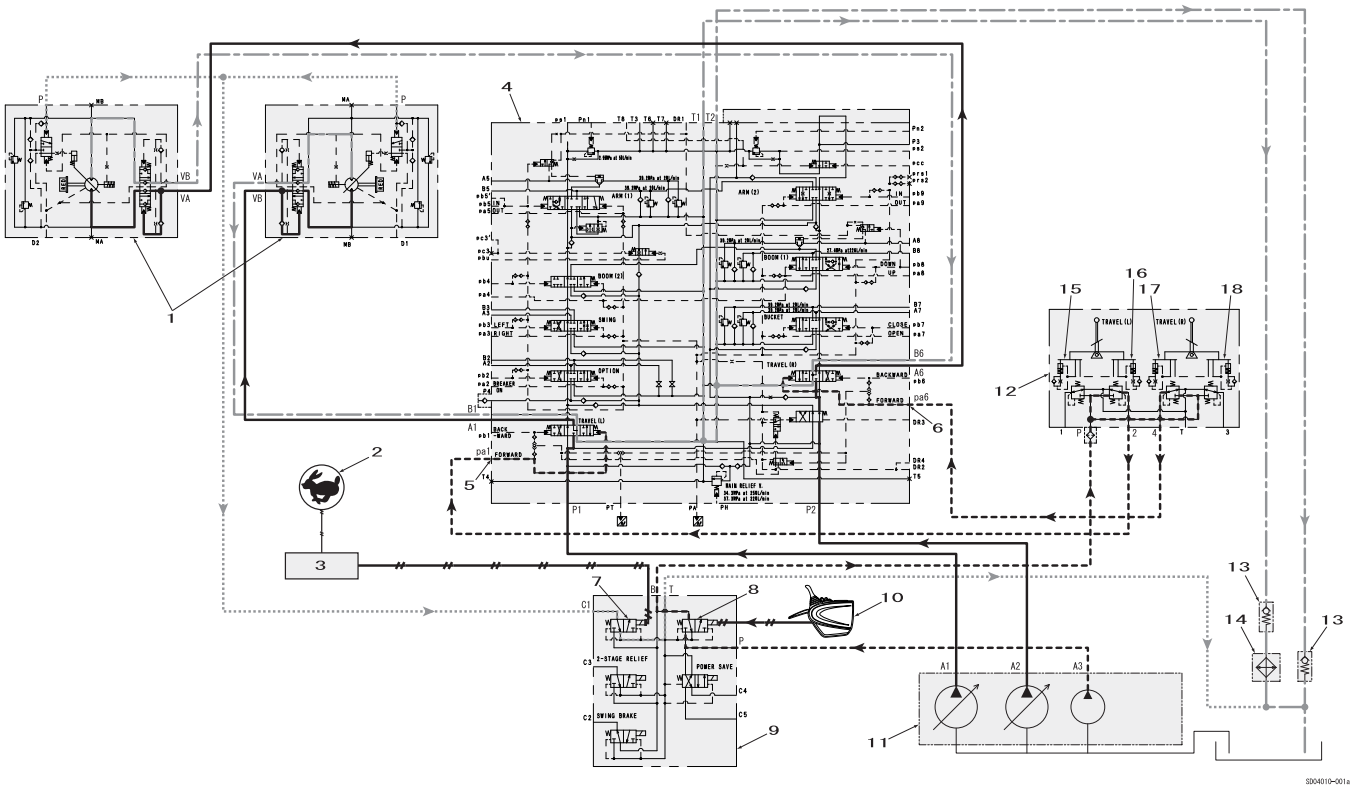

Enlarged View

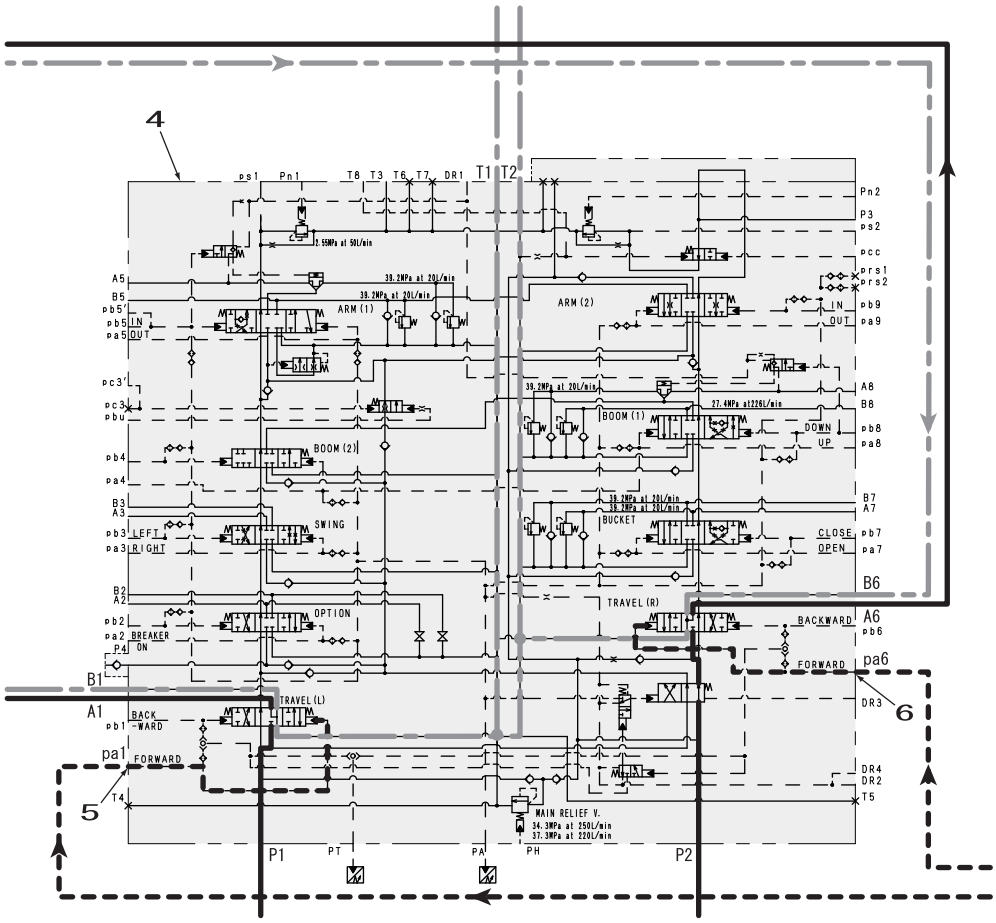

https://truckmanualshub.com/

Travel Circuit

Travel high-speed circuit

As an example, this section explains the forward travel operation.
Sets the travel motor 2-stage tilting angle to a small angle to set high speed. The travel motor has an automatic switchover function that switches the speed to low speed according to the load pressure on the travel motor only during high-speed travel conditions.
By operating the travel remote control valve to the forward side, the pilot pressure oil is fed to the control valve pa1 port and switches the left travel spool to the forward side.
At the same time, the oil is also fed to the pa6 port to switch the right travel spool to the forward side.
The discharge oil from hydraulic pump A1 enters the control valve P1 port and the discharge oil from hydraulic pump A2 enters the control valve P2 port. Each flows to the respective travel motor and causes forward travel through the left and right travel spools being switched.
The return oil from the travel motor goes through the left and right travel spools and returns to the hydraulic oil tank.
Electrical signals are sent to the computer A by operation of the travel high-speed select switch and the computer A sends electrical signals to the travel high-speed solenoid valve. Due to the switching of the travel high-speed solenoid valve, the pilot pressure (3.9 MPa) from the C1 port enters the left and right travel motor P ports through the center joint and sets the travel motor tilting angle to a small angle to raise the speed.

Pressure line
Tank line
Pilot pressure line
Pilot tank line
Electric line

1	Travel motor	10	Console lever lock switch
2	Travel high-speed select switch	11	Hydraulic pump
3	Computer A	12	Travel remote control valve
4	Control valve	13	Check valve
5	Travel (left)	14	Oil cooler
6	Travel (right)	15	Backward left
7	Travel high speed	16	Forward left
8	Lever lock	17	Backward right
9	5 stack solenoid valve	18	Forward right

https://truckmanualshub.com/

Overall View

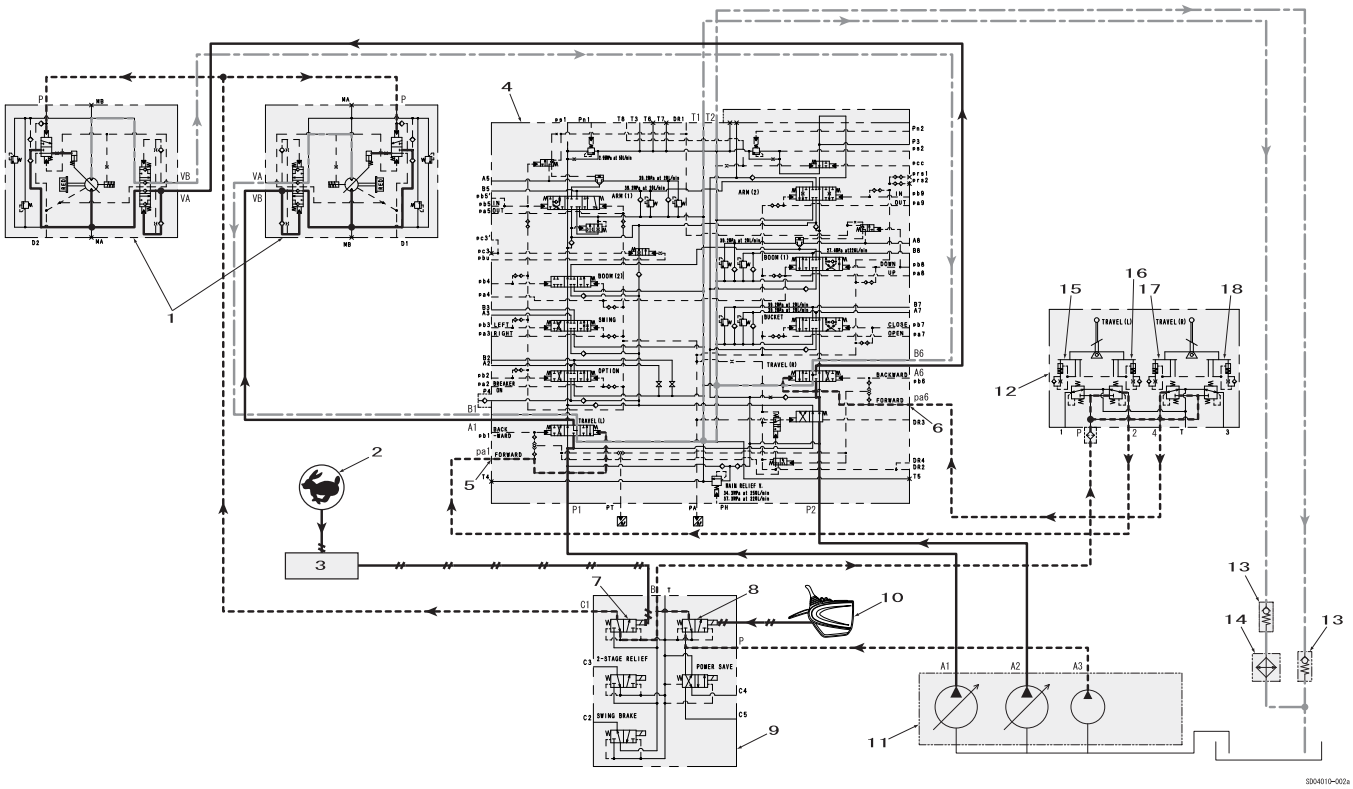

Enlarged View

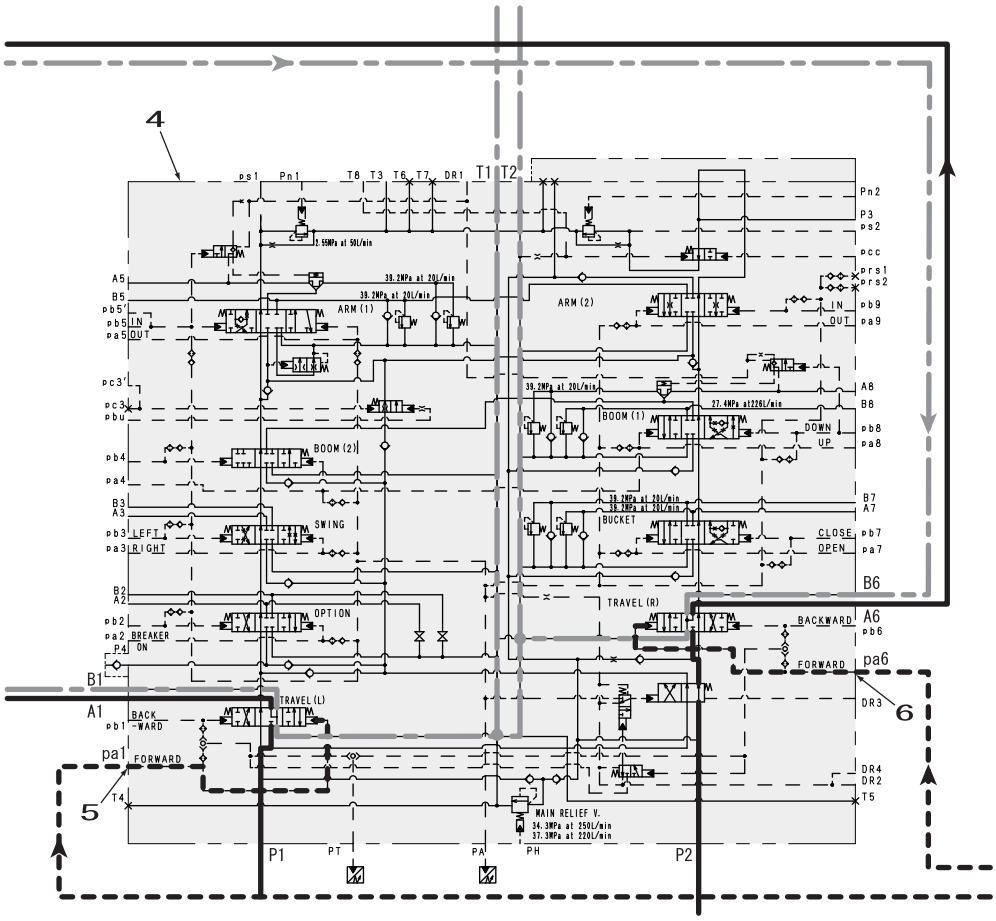

https://truckmanualshub.com/

Travel Circuit

Straight travel circuit

As an example, this section explains simultaneous forward travel and boom-up operations.
By operating the travel remote control valve to the forward side, the pilot pressure oil is fed to the control valve pa1 port and switches the left travel spool to the forward side.
In the same way, oil is also fed to the pa6 port to switch the right travel spool to the forward side.
Furthermore, the right forward travel pilot pressure oil separated internally from the control valve pa6 port switches the straight travel signal (right). On the other hand, the travel pilot pressure oil separated internally from the pa1 port switches the straight travel signal (left) via the straight travel signal (right).
The discharge oil from hydraulic pump A1 enters the control valve P1 port and the discharge oil from hydraulic pump A2 enters the control valve P2 port. Each flows to the respective travel motor and causes forward travel through the left and right travel spools being switched.
If a boom-up operation is carried out during travel, the pilot pressure oil is fed via the cushion valve to the control valve pa4 port and switches the boom (1) and (2) spools to the up side.
The upper (boom, arm, bucket, swing, option) pilot pressure oil separated internally from the control valve pa4 port is fed to the straight travel valve via the straight travel signal (left) and the straight travel spool is switched.
The amount of switching of the straight travel spool varies with the upper pilot pressure.
(Because the pilot pressure is low for slight upper operation, the amount of switching of the straight travel spool is slight to prevent sharp reduction in the travel speed.)
Through the straight travel valve being switched, it is possible for the control valve P1 pressurized oil to drive the left and right travel motors and for the control valve P2 pressurized oil to drive the boom.
Because the left and right motors are driven by 1 pump, the left and right motors have the same pressure and straight travel is possible. Furthermore, the P2 excess pressurized oil is fed to the travel side via the check valve with travel merge orifice to minimize the drop in speed.
The same operations are carried out when travel and an upper actuator other than for the boom are operated simultaneously.

Pressure line
Tank line
Pilot pressure line
Pilot tank line
Electric line

1	Travel motor	10	Straight travel signal (left)	19	Boom cylinder
2	Boom (up)	11	Straight travel signal (right)	20	Travel remote control valve
3	Boom (down)	12	Travel high-speed select switch	21	Check valve
4	Cushion valve	13	Computer A	22	Oil cooler
5	Remote control valve (boom, bucket)	14	Travel high speed	23	Backward left
6	Control valve	15	Lever lock	24	Forward left
7	Travel (left)	16	5 stack solenoid valve	25	Forward right
8	Travel (right)	17	Console lever lock switch	26	Backward right
9	Straight travel valve	18	Hydraulic pump		

https://truckmanualshub.com/

Overall View

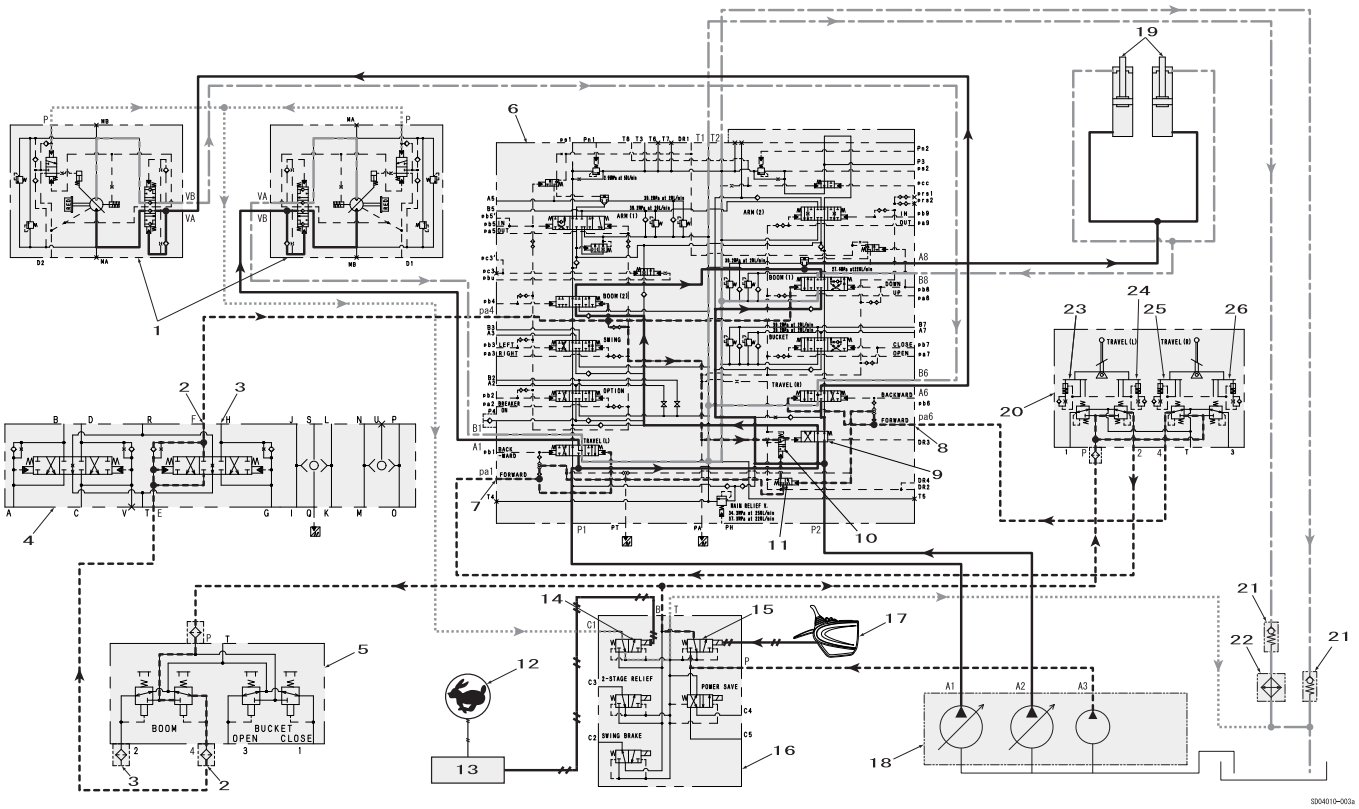

Enlarged View

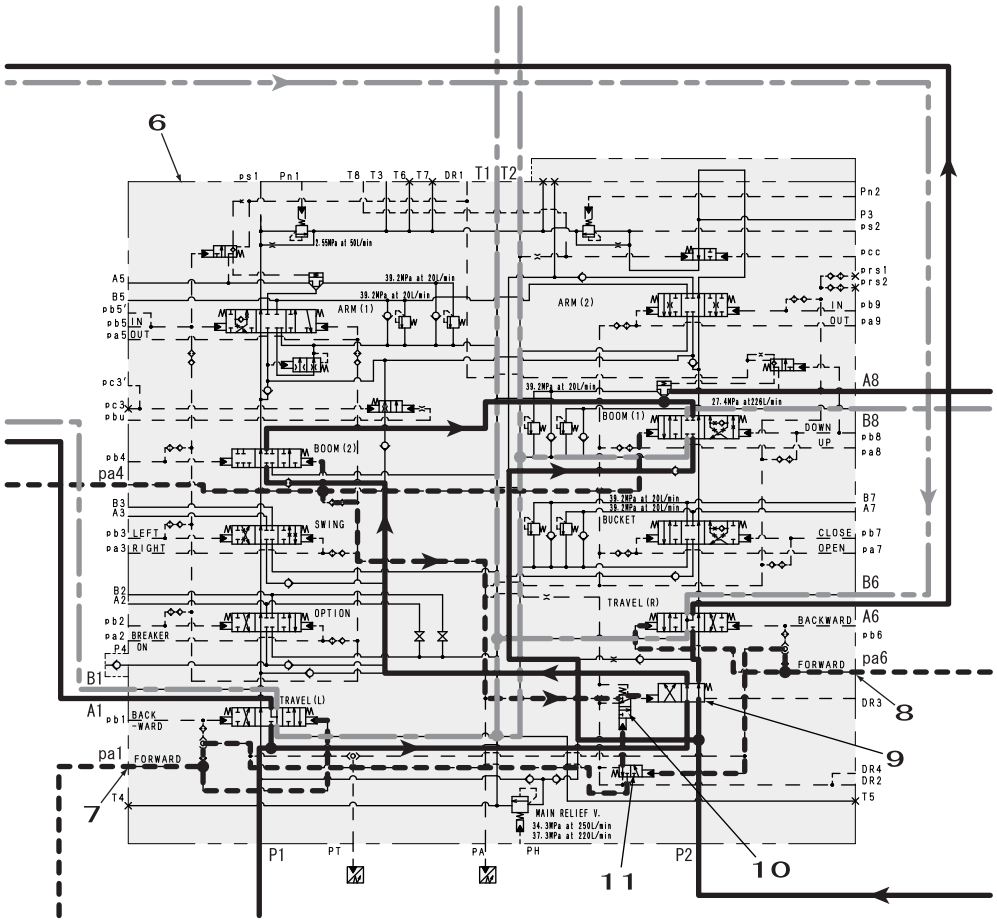

https://truckmanualshub.com/

Swing Circuit

Swing speed limit control circuit

This control is for suppressing increases in the swing speed accompanying increased pump flow. (Only in SP mode)
For independent swing operation, due to the swing pilot pressure sensor and P1 pressure sensor input electric signal, the computer A outputs a signal to the P1 flow control proportional valve.
The discharge oil from the hydraulic pump A3 is fed to the P1 flow control proportional valve.
The hydraulic pump A1 side discharge flow is reduced to 280 L/min by the signal output from the computer A to the P1 flow control proportional valve.

[1] Conditions under which the swing speed limit control is entered

- Independent full-lever swing operation
- Travel non-operation
- Work mode SP

[2] Conditions under which the swing speed limit control is ended

- Upper operation other than boom down
  → Gradual end (to reduce shock)
- Travel operation
  → Immediate end (to avoid off travel)
- Option operation

Pressure line
Tank line
Pilot pressure line
Pilot tank line
Electric line

1	Swing motor	13	Swing brake
2	Swing	14	5 stack solenoid valve
3	Cushion valve	15	Console lever lock switch
4	Right swing	16	N1 negative control pressure sensor
5	Left swing	17	P1 pressure sensor
6	Swing pilot pressure sensor	18	P1 flow control proportional valve
7	Remote control valve (arm, swing)	19	Hydraulic pump
8	Control valve	20	Horsepower control proportional valve
9	Travel pilot pressure sensor	21	P2 pressure sensor
10	Upper pilot pressure sensor	22	Check valve
11	Computer A	23	Oil cooler
12	Lever lock		

https://truckmanualshub.com/

Overall View

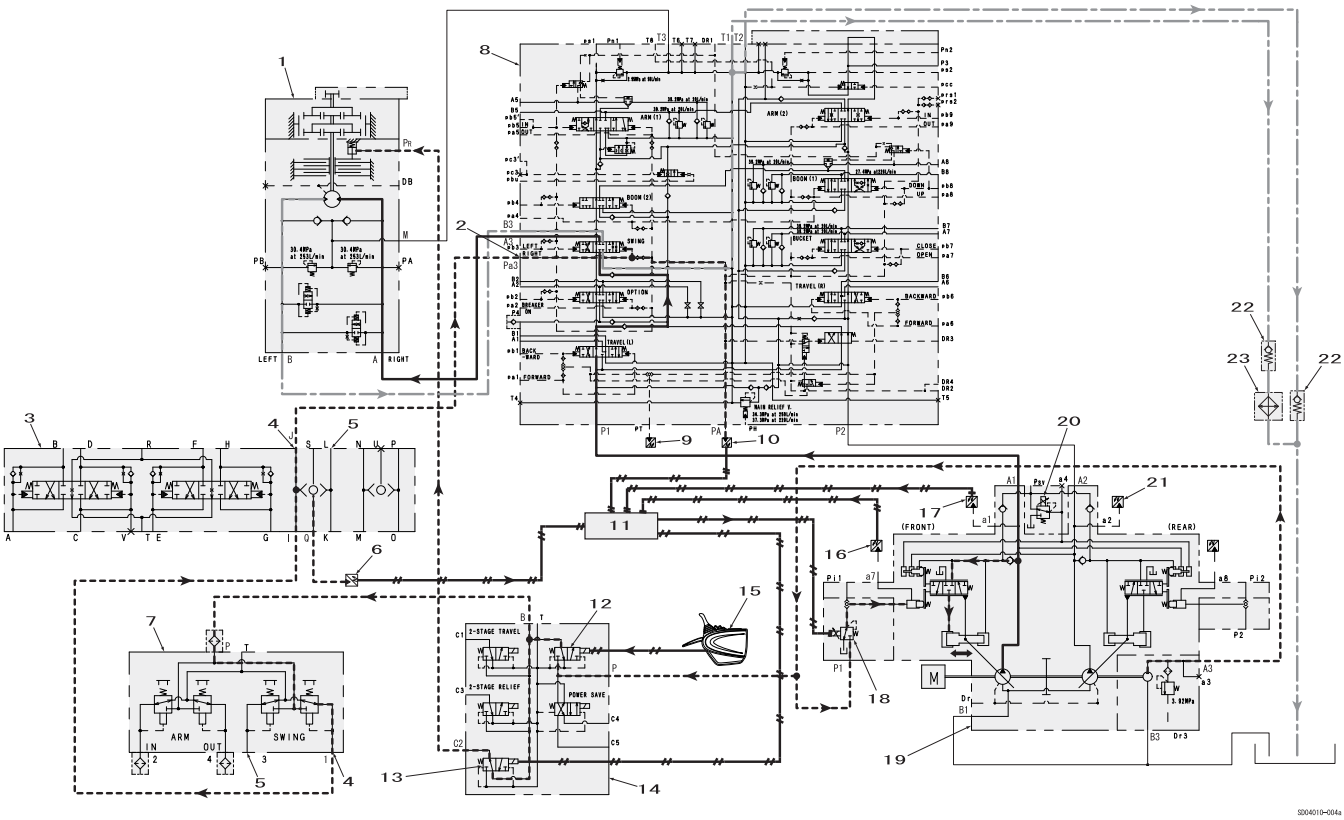

Enlarged View

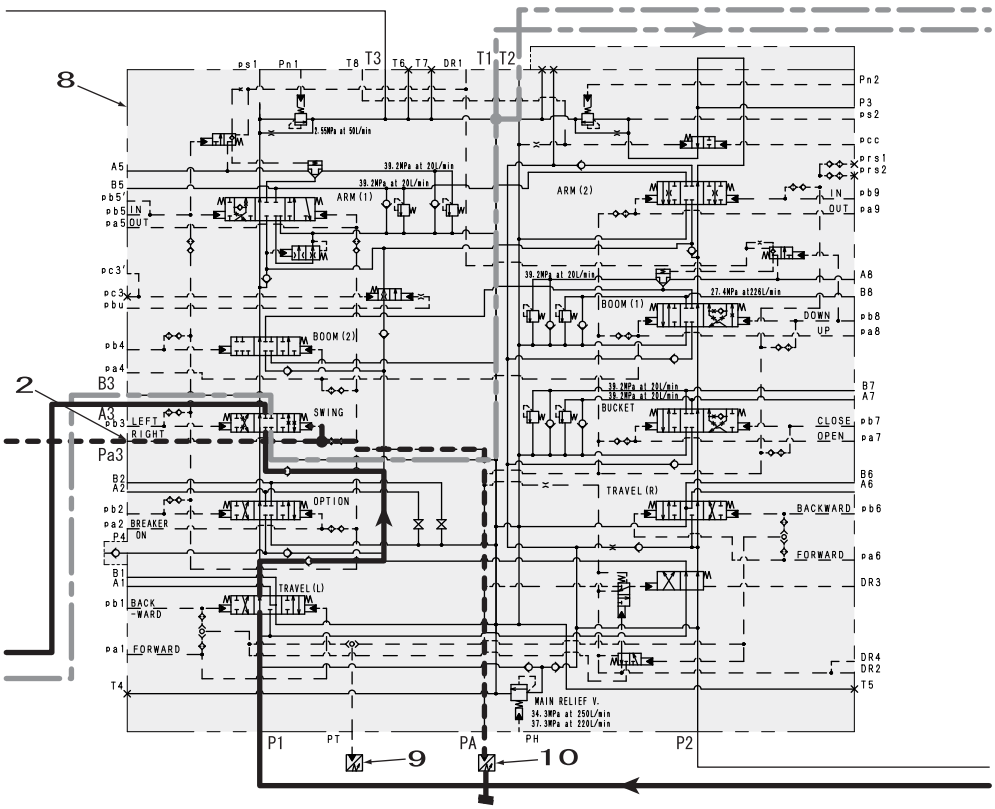

https://truckmanualshub.com/

Swing Circuit

Swing relief cut-off control circuit

This control aims for an energy-saving effect by controlling the pump in such a way as to minimize the excess oil drained from the swing motor relief valve for the starting pressure boost for a independent sharp swing operation.

When a swing operation starts, due to the swing pilot pressure sensor and P1 pressure sensor input electrical signals, computer A outputs a signal to the hydraulic pump P1 flow control proportional valve.

The discharge oil from the hydraulic pump A3 is fed to the P1 flow control proportional valve.

The output signal from computer A to the P1 flow control proportional valve controls the pilot pressure to reduce the hydraulic pump A1 side discharge flow. Also, the input signal from hydraulic pump P1 pressure sensor controls the pilot pressure to gradually increase the discharge flow.

[1] Swing relief cut-off control is executed when all the conditions below are satisfied.

- Travel non-operation
- Sharp independent swing operation or swing + boom-down operation

[2] Swing relief cut-off control ends when a condition below is satisfied.

- When swing operation is stopped
- Travel, boom-up, arm-out/in, or bucket-open/close operation

Pressure line
Tank line
Pilot pressure line
Pilot tank line
Electric line

1	Swing motor	13	Swing brake
2	Swing	14	5 stack solenoid valve
3	Cushion valve	15	Console lever lock switch
4	Right swing	16	N1 negative control pressure sensor
5	Left swing	17	P1 pressure sensor
6	Swing pilot pressure sensor	18	P1 flow control proportional valve
7	Remote control valve (arm, swing)	19	Hydraulic pump
8	Control valve	20	Horsepower control proportional valve
9	Travel pilot pressure sensor	21	P2 pressure sensor
10	Upper pilot pressure sensor	22	Check valve
11	Computer A	23	Oil cooler
12	Lever lock		

https://truckmanualshub.com/

Overall View

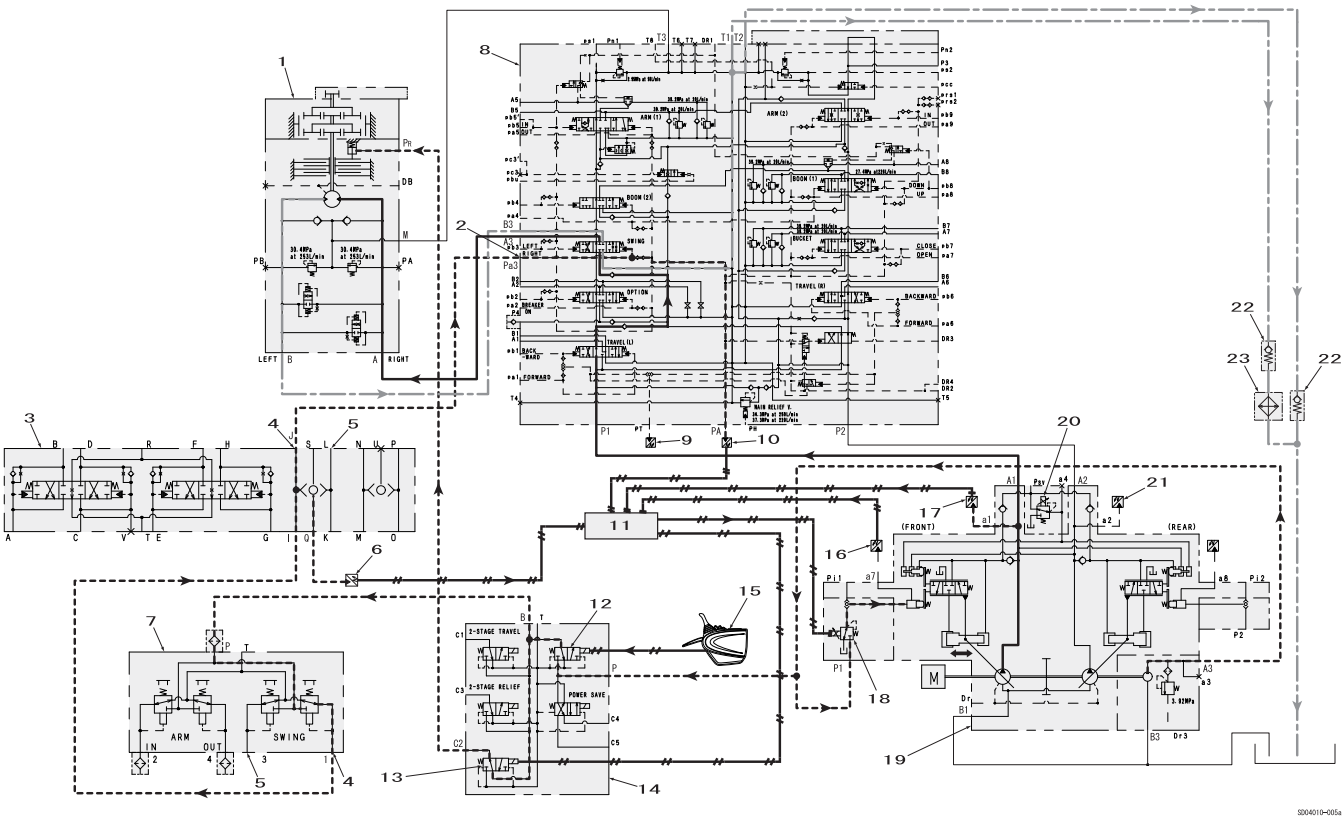

Enlarged View

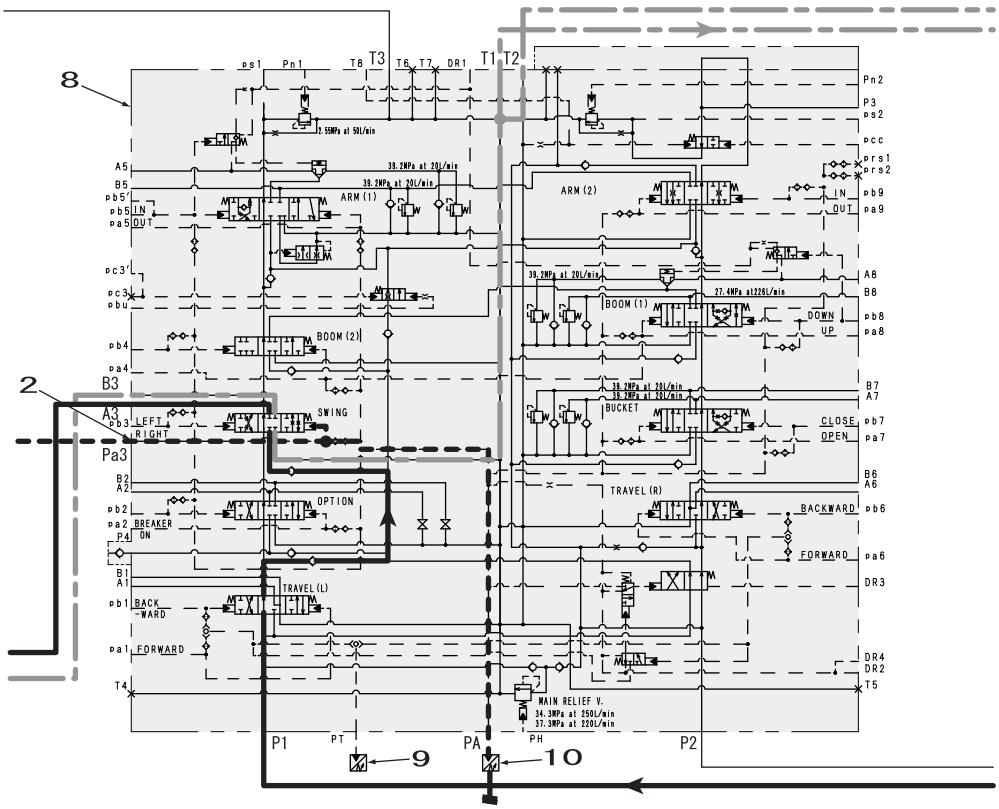

https://truckmanualshub.com/

Swing Circuit

Swing priority circuit

The swing pilot pressure is fed to the Pc3' port via the shuttle valve and holds the swing priority variable orifice to the right side. By metering the parallel circuit, for arm and swing simultaneous operation, the swing pressure is boosted to secure the swing force for pressing digging.

As an example, this section explains the right-swing and arm-in operation.

By moving the remote control valve to the right swing side, the pilot pressure oil is fed via the shuttle valve to the control valve pa3 port and switches the spool to the right swing side.

At this time, by moving the remote control valve to the arm-in side, the pilot pressure oil is fed via the cushion valve to the control valve pb5 port and switches the spool to the arm-in side.

At the same time, the pilot pressure oil from the shuttle valve S port is fed to the control valve Pc3' port to move the swing priority variable orifice to the right side and hold it.

The discharge oil from hydraulic pump A1 enters the control valve P1 port and is fed from the parallel oil path to the swing spool. Switching the spool lets the oil flow into the swing motor B port and the right swing operation is carried out.

The discharge oil from hydraulic pump A2 enters the control valve P2 port, is fed from the parallel oil path to the arm (2) spool and merges upstream of the arm (1) spool. Switching the spool lets the oil flow into the arm cylinder bottom and the arm-in operation is carried out.

When the right swing and arm-in operations are carried out at the same time, the swing priority variable orifice on the control valve P1 port parallel oil path moves and narrows, so the pressure is boosted to secure the swing force for pressing digging.

Pressure line
Tank line
Pilot pressure line
Pilot tank line
Electric line

1	Swing motor	15	Arm cylinder
2	Arm (in)	16	Arm (1)
3	Arm (out)	17	Swing
4	Right swing	18	Arm load holding valve spool
5	Left swing	19	Arm load holding valve check valve
6	Cushion valve	20	Regeneration release valve
7	Swing pilot pressure sensor	21	Control valve
8	Shuttle valve	22	Swing priority variable orifice
9	Computer A	23	Arm (2)
10	Remote control valve (arm, swing)	24	Upper pilot pressure sensor
11	Lever lock	25	Hydraulic pump
12	Swing brake	26	Check valve
13	5 stack solenoid valve	27	Oil cooler
14	Console lever lock switch		

https://truckmanualshub.com/

Overall View

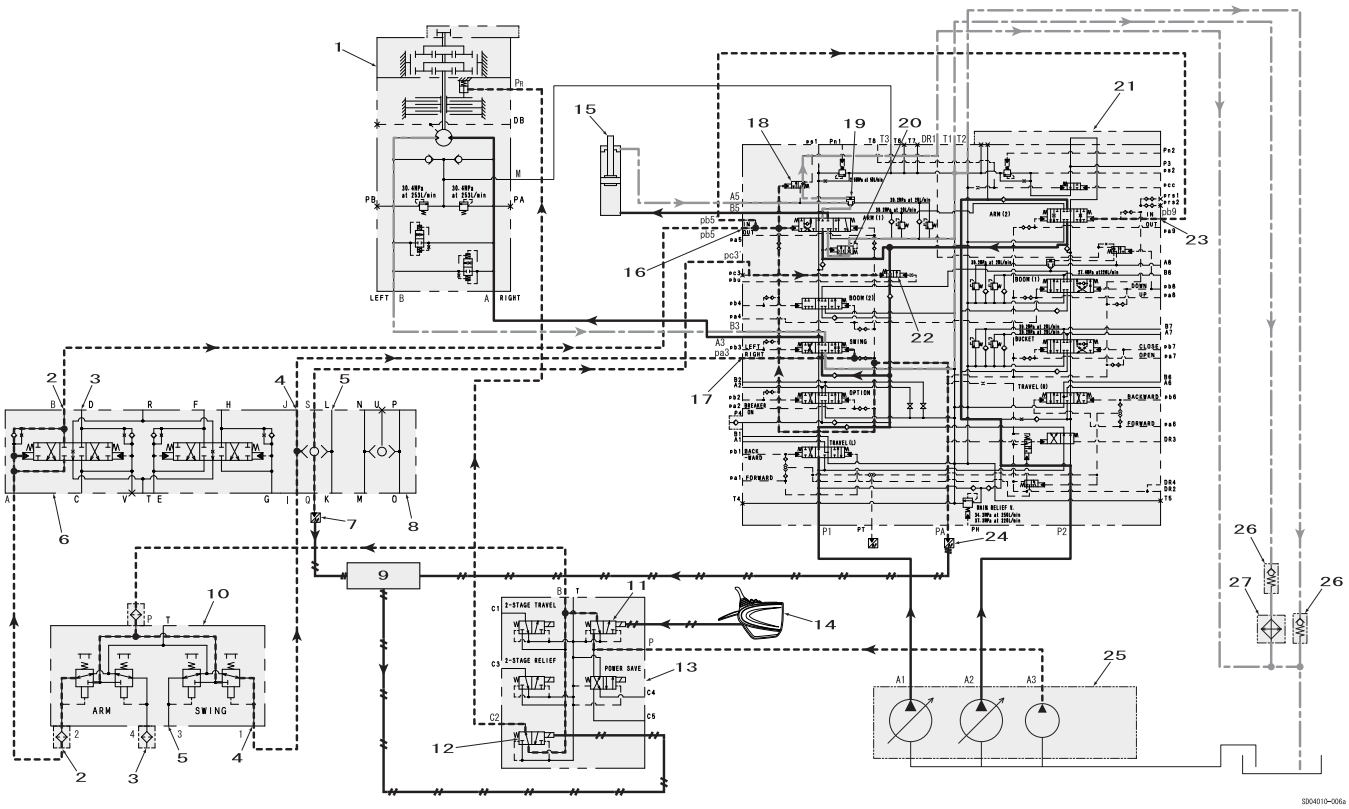

Enlarged View

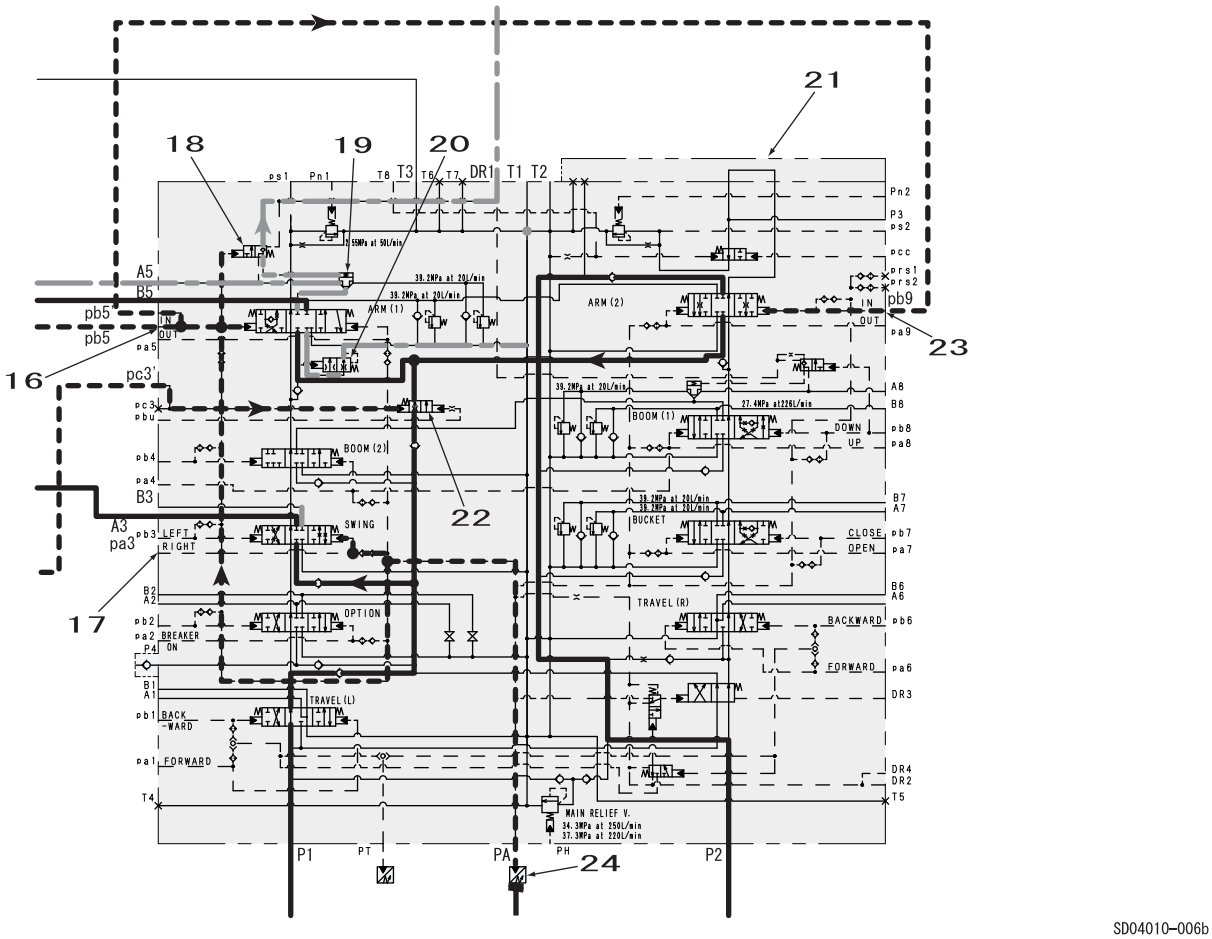

https://truckmanualshub.com/

Swing Circuit

Swing brake circuit

As an example, this section explains the brake circuit operation after the end of a right swing operation.

When the remote control valve is returned to neutral from a right swing operation, the pilot pressure oil is cut off and the control valve swing spool returns to neutral.

The pressurized oil fed to the swing motor A port from the control valve A3 port is cut. At the same time, the destination location is eliminated for the pressurized oil flowing from the swing motor B port to the control valve B3 port, so the pressure rises to the swing motor relief valve set pressure. The pressure generated here becomes a brake force and stops the motor.

When the swing is stopped, the swing motor continues to rotate for a while due to inertial force.In order to make up the shortfall in the oil volume, oil is supplied from the make-up line connected to the swing motor M port from the control valve T3 port to open the make-up check valve and oil is suctioned in to prevent cavitation.

Pressure line
Tank line
Pilot pressure line
Pilot tank line
Electric line

1	Swing motor	9	Lever lock
2	Cushion valve	10	Swing brake
3	Right swing	11	5 stack solenoid valve
4	Left swing	12	Console lever lock switch
5	Swing pilot pressure sensor	13	Computer A
6	Remote control valve (arm, swing)	14	Control valve
7	Hydraulic pump	15	Oil cooler
8	Check valve	16	Upper pilot pressure sensor

https://truckmanualshub.com/

Overall View

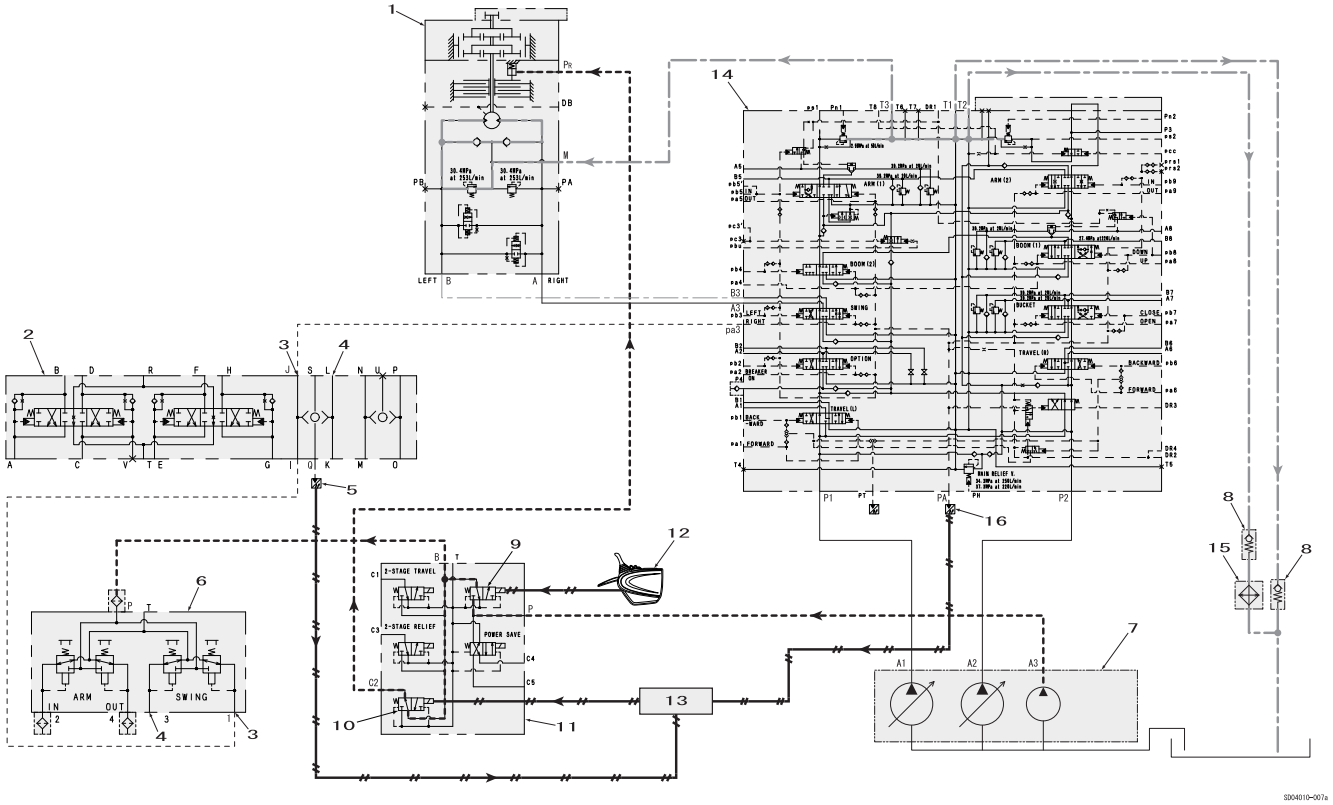

Enlarged View

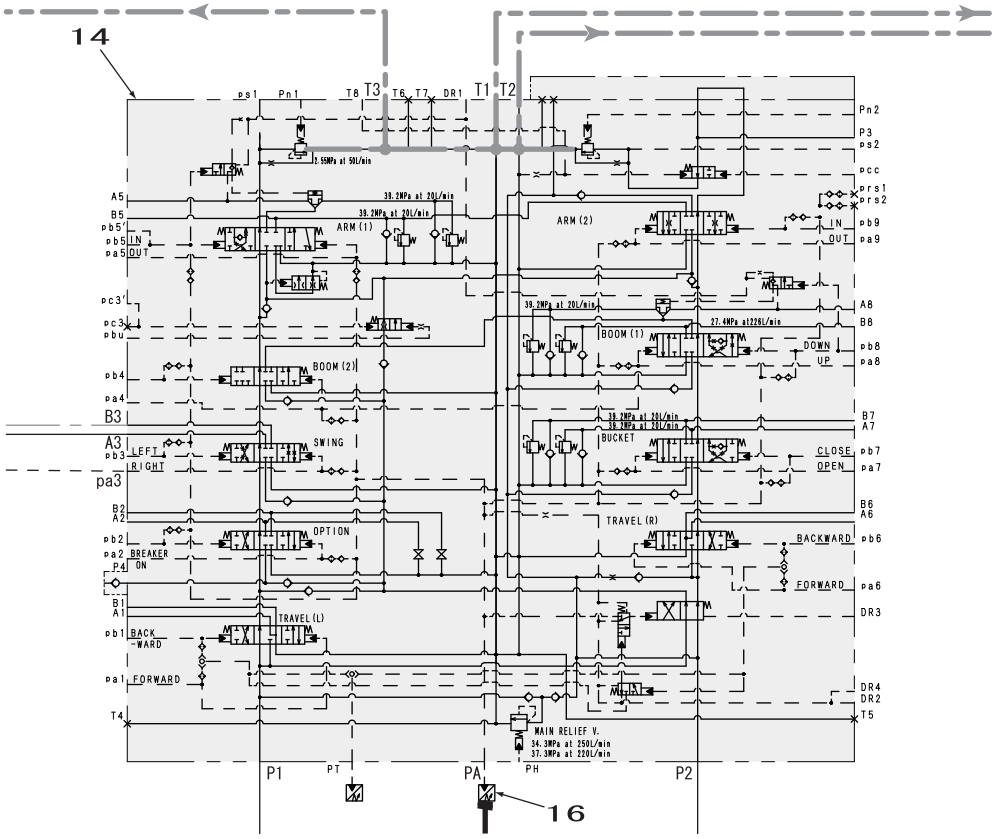

https://truckmanualshub.com/

Swing Circuit

Swing parking circuit (lever in neutral)

When the key is switched ON, the swing brake solenoid valve is switched by the electrical signal from computer A.

The swing motor PR port oil goes from the 5 stack solenoid valve C2 port through the swing brake solenoid, and returns to the hydraulic oil tank to hold the swing parking brake.

Pressure line
Tank line
Pilot pressure line
Pilot tank line
Electric line

1	Swing motor	9	Lever lock
2	Cushion valve	10	Swing brake
3	Right swing	11	5 stack solenoid valve
4	Left swing	12	Console lever lock switch
5	Swing pilot pressure sensor	13	Computer A
6	Remote control valve (arm, swing)	14	Control valve
7	Check valve	15	Upper pilot pressure sensor
8	Oil cooler	16	Hydraulic pump

https://truckmanualshub.com/

Overall View

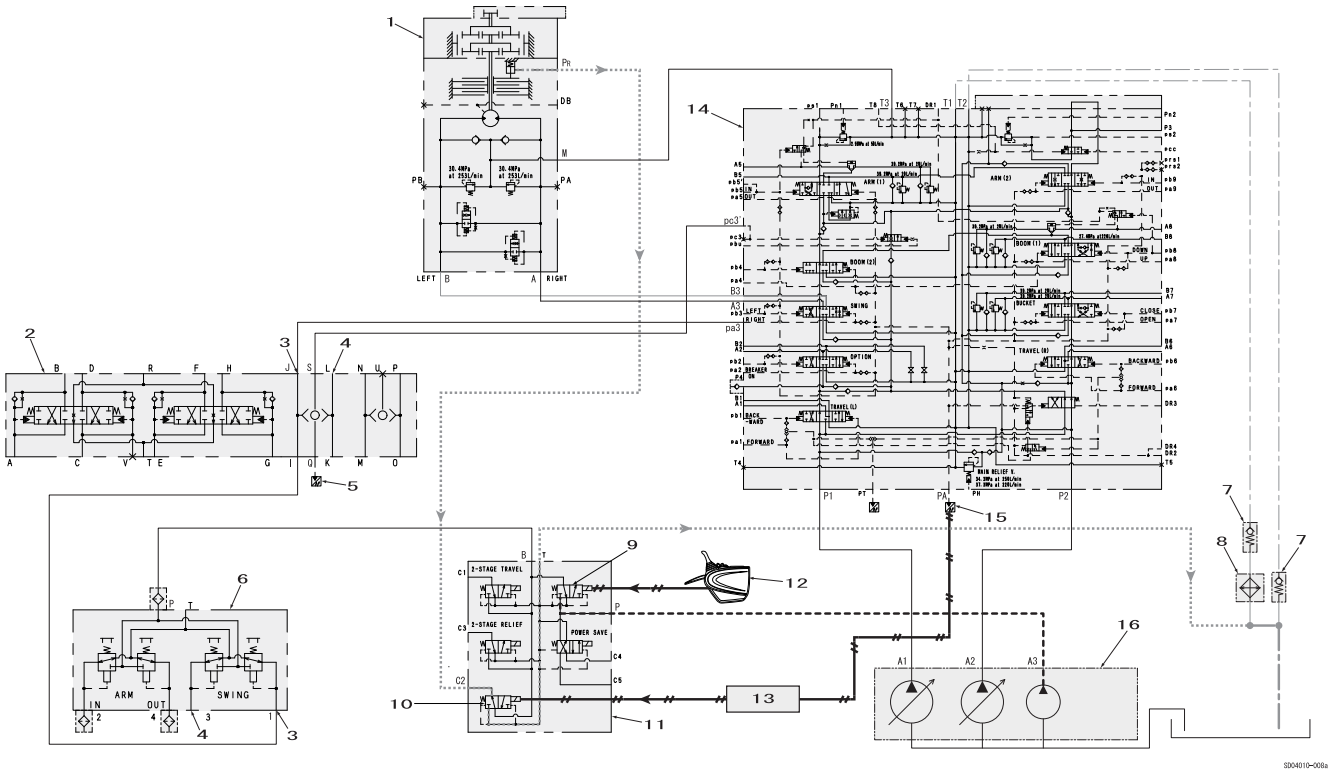

Enlarged View

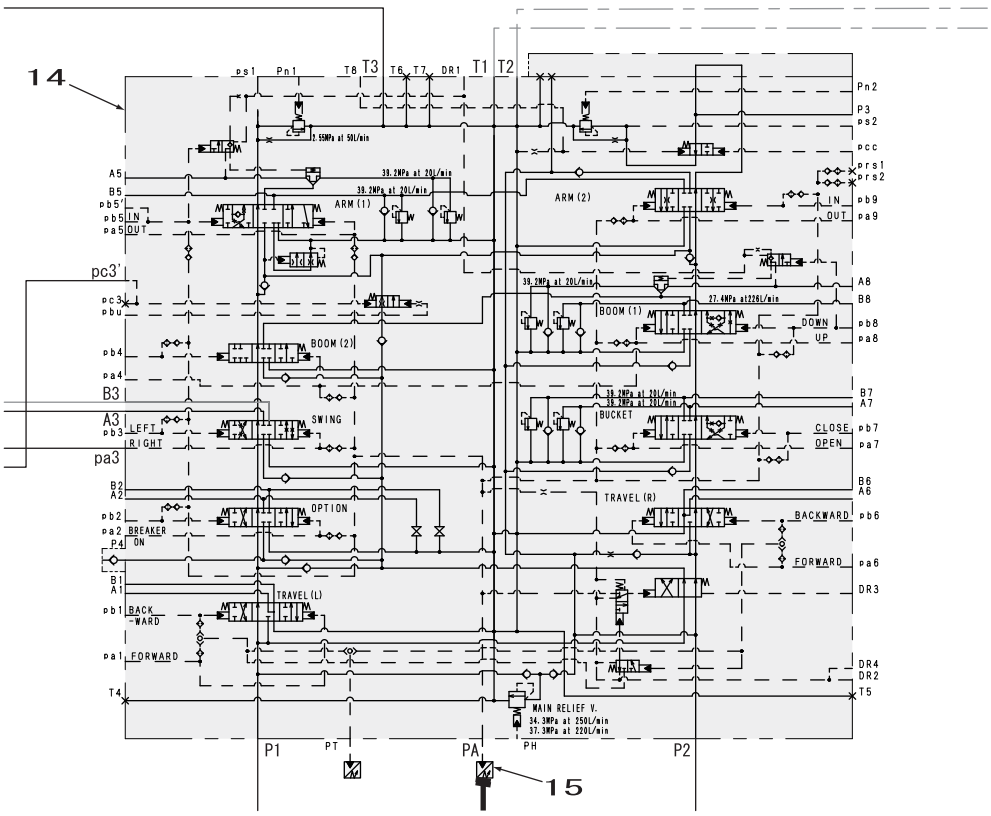

https://truckmanualshub.com/

Swing Circuit

Swing parking circuit (brake release)

When the engine is started and the swing lever is in neutral, the swing brake solenoid valve comes ON (24 V input), the pressure to the swing motor PR port is cut, and the swing parking brake works.
When the lever operation raises the reading to 0.5 MPa or higher at the pressure sensor in the swing pilot line, the output from computer A to the swing brake solenoid valve goes OFF, the swing motor PR port pressure rises, the swing parking brake is released, and swing becomes possible.
As an example, this section explains the right swing operation.
By carrying out the right swing operation on the remote control valve, the pilot pressure oil is fed to the control valve pa3 port via the shuttle valve and switches the swing spool to the right swing side.
At the same time, computer A detects the swing pilot pressure sensor signal, judges that there is a swing operation, the electrical signal output from computer A goes OFF, and the swing brake solenoid valve is switched.The pilot pressure oil is fed to the swing motor PR port from the swing brake solenoid valve C2 port to release the swing parking brake.
The discharge oil from hydraulic pump A1 enters the control valve P1 port and is fed from the parallel oil path to the swing spool. Switching the spool lets the oil flow into the swing motor A port and the right swing operation is carried out.
The pressurized oil from the swing motor B port goes through the swing spool and returns to the hydraulic oil tank.
When this is followed by an attachment operation, the pilot pressure is detected by the control valve PA port pressure sensor and the swing parking brake continues to be released.
After the swing operation ends, if about 5 sec. pass with no upper operation, the swing brake solenoid valve output from computer A comes ON and the swing parking brake works again.
After the swing ends, if this is followed by an upper operation or there is an upper operation within about 5 sec., when about 1 sec. passes after the end of the upper operation, the swing parking brake works again.
The swing parking brake is also released for independent upper operations and when about 1 sec. passes after the end of the upper operation, the swing parking brake works again.

Key switch	Swing pilot pressure sensor	Upper pilot pressure sensor	Swing brake solenoid valve	Swing motor mechanical brake
OFF	0 MPa	0 MPa	OFF	ON
ON	0 MPa	0 MPa	ON	ON
ON	0.5 MPa min.	0 MPa	OFF	OFF
ON	0 MPa	0.5 MPa min.	OFF	OFF
ON	0.5 MPa min.	0.5 MPa min.	OFF	OFF

Pilot pressure sensor judgment standard
Operation is judged when at 0.5 MPa or above.
Non-operation is judged when at 0.3 MPa or below.

Pressure line
Tank line
Pilot pressure line
Pilot tank line
Electric line

1	Swing motor	10	5 stack solenoid valve
2	Cushion valve	11	Console lever lock switch
3	Right swing	12	Computer A
4	Left swing	13	Control valve
5	Swing pilot pressure sensor	14	Upper pilot pressure sensor
6	Remote control valve (arm, swing)	15	Hydraulic pump
7	Swing	16	Check valve
8	Lever lock	17	Oil cooler
9	Swing brake		

https://truckmanualshub.com/

Overall View

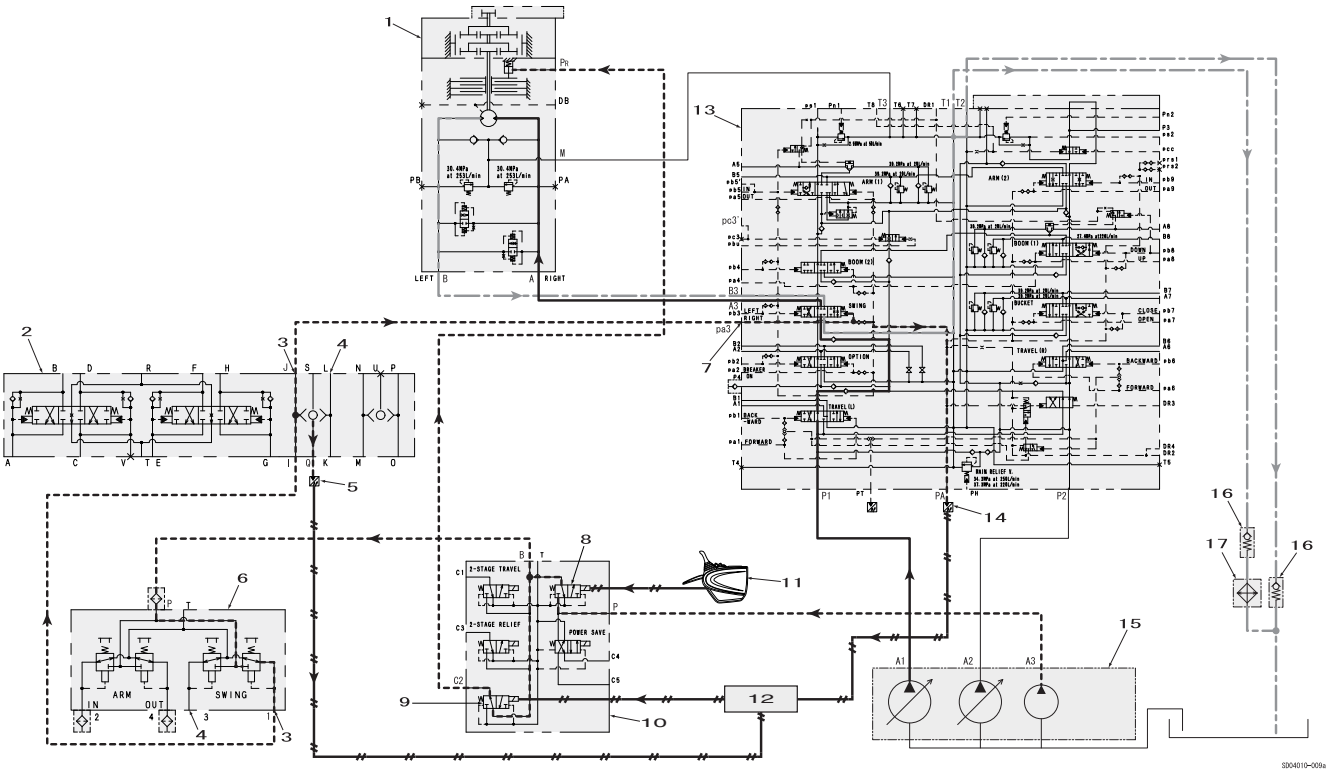

Enlarged View

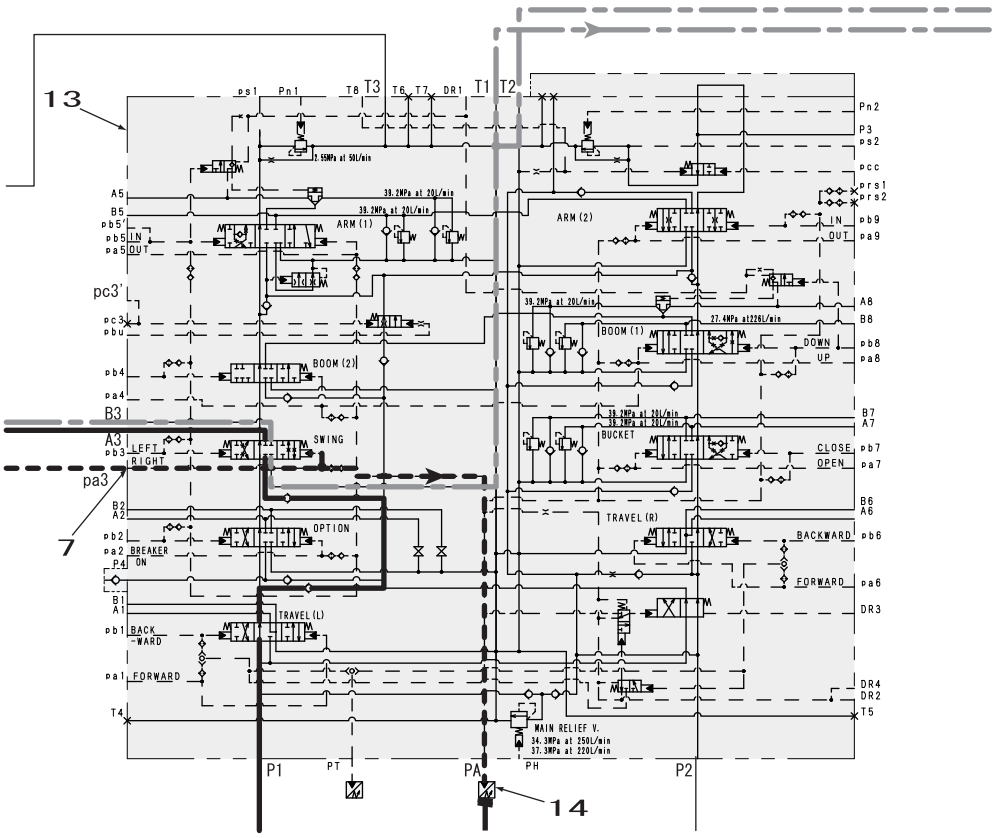

https://truckmanualshub.com/

Swing Circuit

Swing parking circuit (machine stop)

When the machine is stopped (the key is switched OFF), the swing motor P_R port oil goes from the swing brake solenoid C2 port through the lever lock solenoid and returns to the hydraulic oil tank, holding the swing parking brake hold status.

Pressure line
Tank line
Pilot pressure line
Pilot tank line
Electric line

1	Swing motor	9	Lever lock
2	Cushion valve	10	Swing brake
3	Right swing	11	5 stack solenoid valve
4	Left swing	12	Console lever lock switch
5	Swing pilot pressure sensor	13	Computer A
6	Remote control valve (arm, swing)	14	Control valve
7	Check valve	15	Upper pilot pressure sensor
8	Oil cooler	16	Hydraulic pump

https://truckmanualshub.com/

Overall View

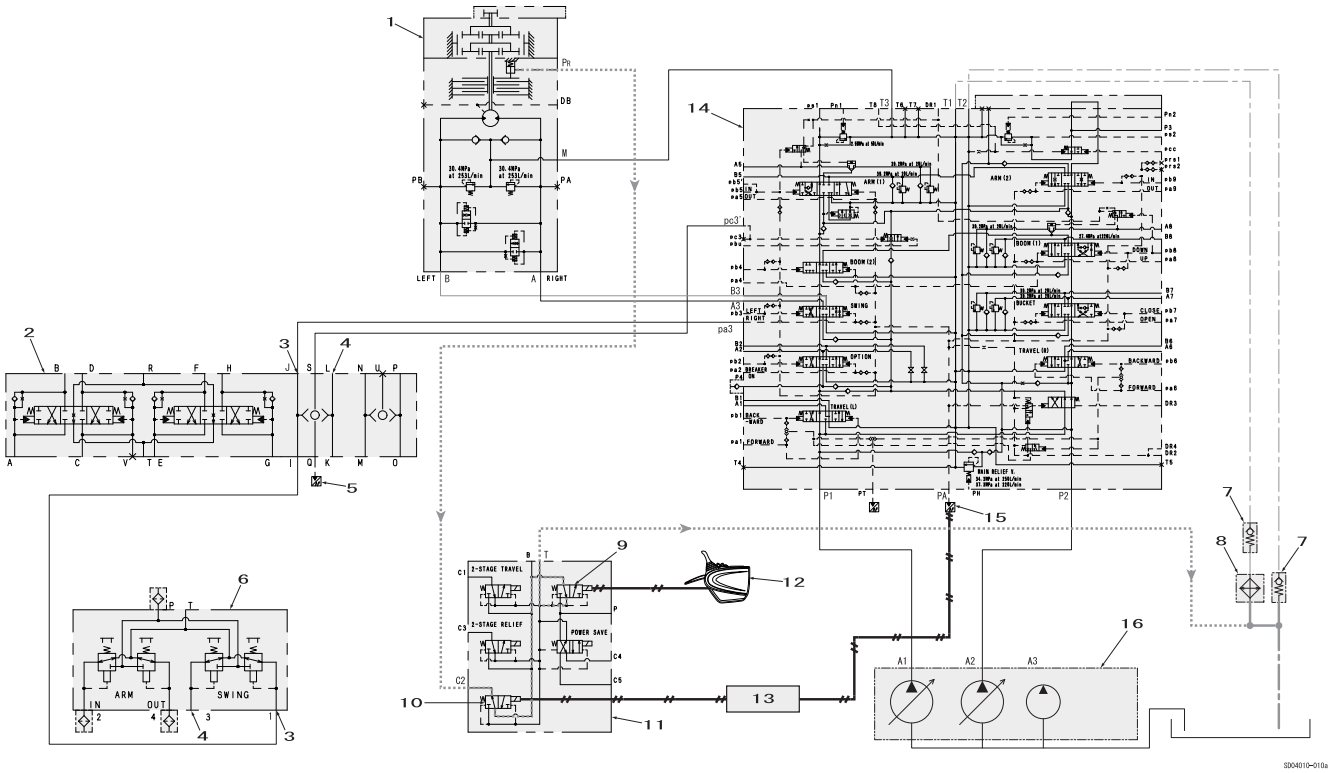

Enlarged View

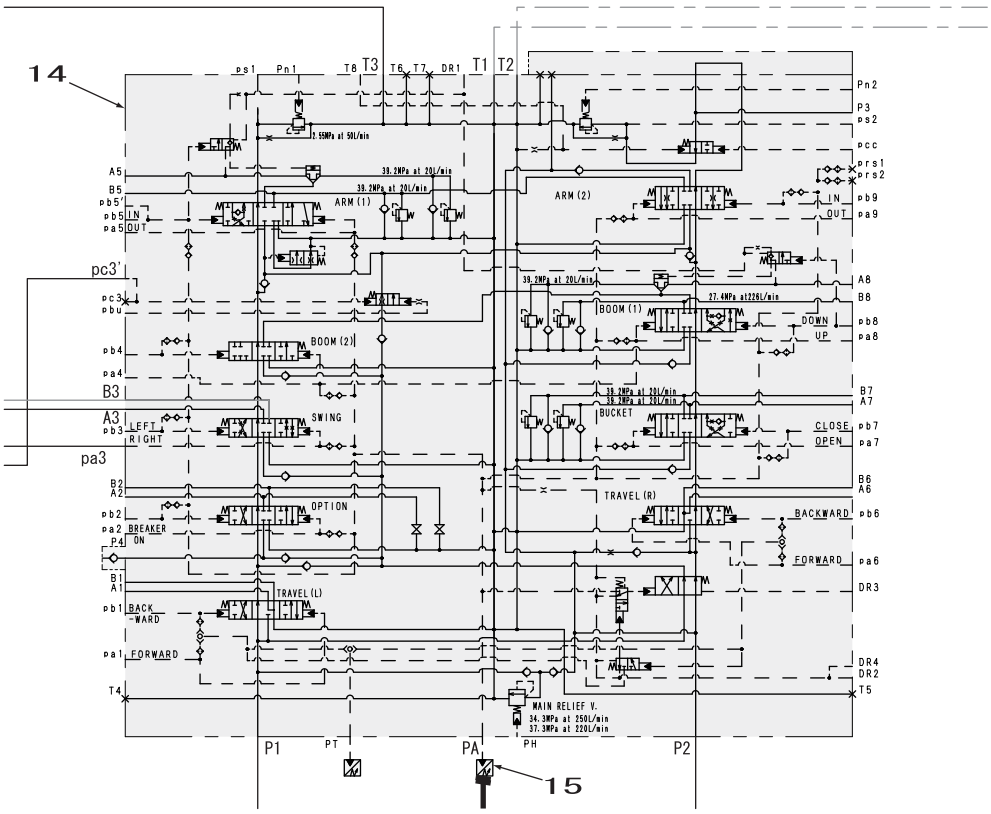

https://truckmanualshub.com/

Boom Circuit

Boom-up circuit (independent operation)

By operating the remote control valve to the boom-up side, the pilot pressure oil is fed via the cushion valve to the control valve pa4 port and the boom (2) spool is switched. At the same time, the pilot pressure oil from the pa4 port separated in the internal path is fed to the boom (1) pilot port and switches the boom (1) spool to the up side.

The discharge oil from hydraulic pump A1 enters the control valve P1 port, is fed from the parallel oil path to the boom (2) spool and merges downstream of the boom (1) spool. The discharge oil from hydraulic pump A2 is fed to the boom (1) spool via the parallel oil path, merges with the discharge oil from boom (2), flows through the boom load holding valve check valve and into the boom cylinder bottom side and the boom-up operation is carried out.

The boom cylinder rod side return oil goes through the boom (1) spool and returns into the hydraulic oil tank.

Pressure line
Tank line
Pilot pressure line
Pilot tank line
Electric line

1	Cushion valve	12	Boom cylinder
2	Boom (up)	13	Travel pilot pressure sensor
3	Boom (down)	14	Upper pilot pressure sensor
4	Boom (2)	15	Console lever lock switch
5	Remote control valve (boom, bucket)	16	Monitor display
6	Lever lock	17	Computer A
7	Boost pressure relief	18	P1 pressure sensor
8	5 stack solenoid valve	19	P2 pressure sensor
9	Control valve	20	Hydraulic pump
10	Boom load holding valve check valve	21	Check valve
11	Boom (1)	22	Oil cooler

https://truckmanualshub.com/

Overall View

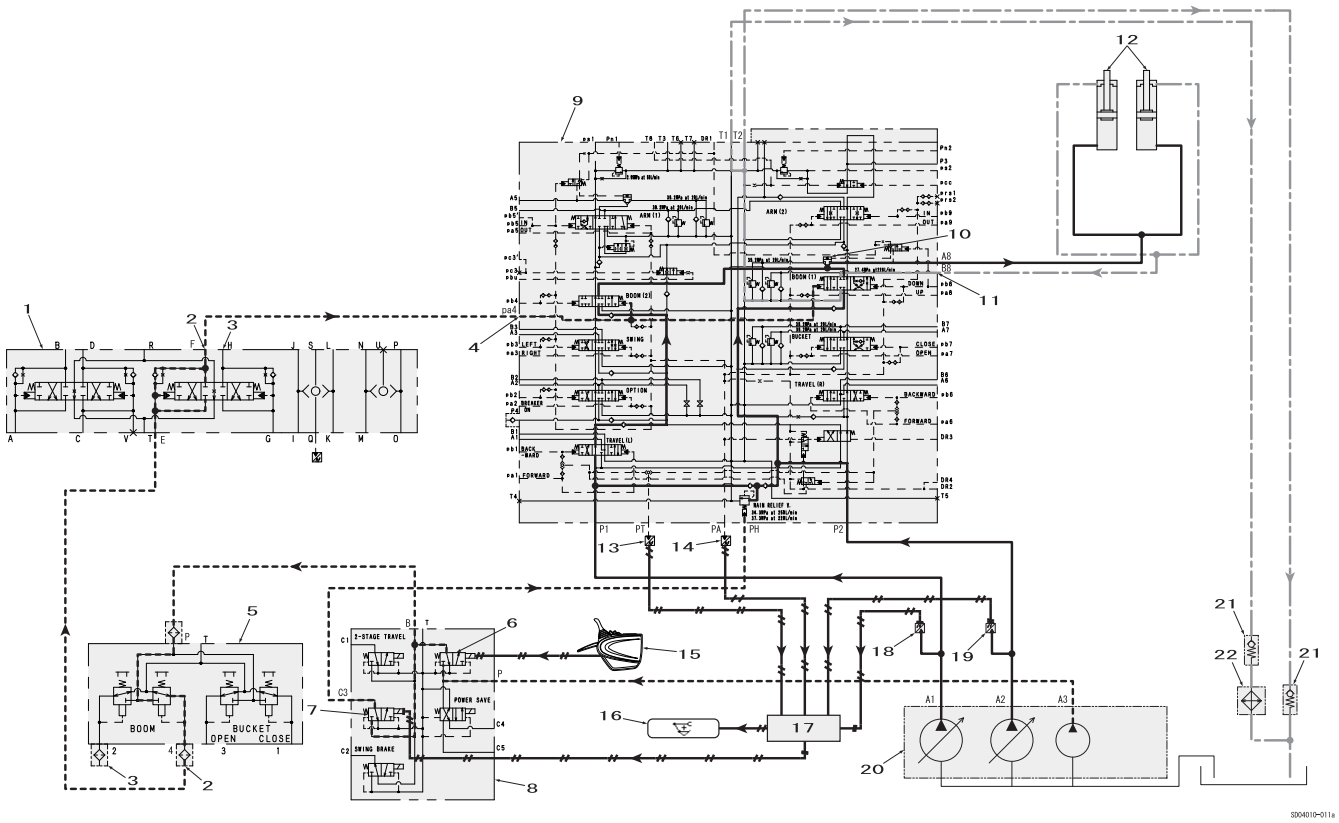

Enlarged View

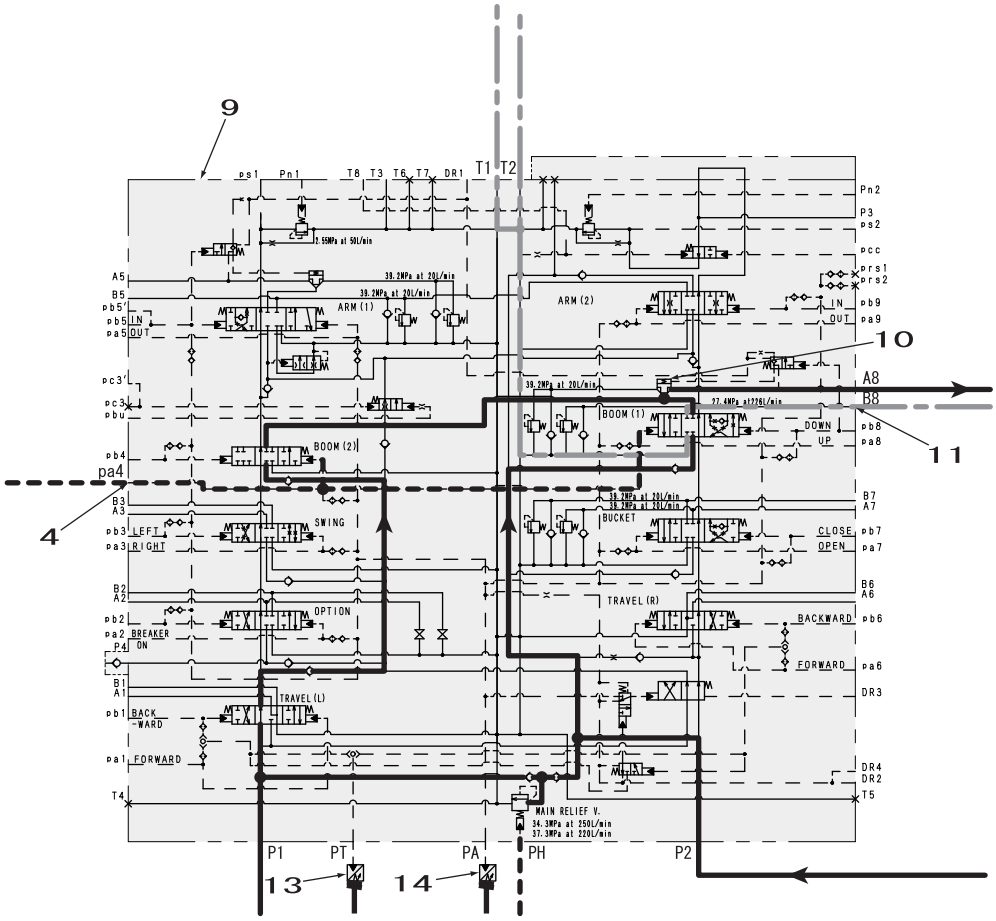

https://truckmanualshub.com/

Boom Circuit

Boom-up circuit (compound boom-up + arm-in)

As an example, this section explains the boom-up + arm-in compound operation (leveling work).
For leveling work, the boom-up pilot pressure oil is fed to the pbu port, the swing priority variable orifice is moved to the left side and the restriction on the flow to the arm is released to smooth the arm movement.
By operating the remote control valve to the boom-up side and arm-in side, the pilot pressure oil is fed via the cushion valve to the control valve pa4 port and pb5 port and switches the boom (1) and arm (1) spools. At the same time, pressurized oil separated from the boom (1) side pilot internal path is fed from the pa8 port to the pbu port and the swing priority variable orifice spool is switched to the left side.
The discharge oil from hydraulic pump A1 enters the control valve P1 port and is fed from the parallel oil path to the boom (2) and arm (1) spools. Because the swing priority variable orifice spool in the parallel oil path is moved, the restriction on flow to the arm is released and the oil flows through the arm (1) spool and into the arm cylinder bottom side. This makes arm-in operation movement smooth.
The arm cylinder rod side return oil goes through the load holding valve check valve and the arm (1) spool and returns to the hydraulic oil tank.
The discharge oil from hydraulic pump A2 enters the control valve P2 port and is fed from the parallel oil path to the boom (1) spool. Switching the spool lets the oil flow through the boom load holding valve check valve and into the boom cylinder bottom side and the boom-up operation is carried out.

When the circuit has an HBCV, the discharge oil from hydraulic pump A2 enters the control valve P2 port and is fed from the parallel oil path to the boom (1) spool.
Switching the spool lets the oil flow through the boom load holding valve check valve and HBCV check valve and into the boom cylinder bottom side and the boom-up operation is carried out.
The boom cylinder rod side return oil goes through the boom (1) spool and returns to the hydraulic oil tank.

Pressure line
Tank line
Pilot pressure line
Pilot tank line
Electric line

1	Arm cylinder	12	Arm (1)	23	Travel pilot pressure sensor
2	Arm (in)	13	Boom (2)	24	Upper pilot pressure sensor
3	Arm (out)	14	Arm load holding valve spool	25	Console lever lock switch
4	Boom (up)	15	Load holding valve check valve	26	Monitor display
5	Boom (down)	16	Regeneration release valve	27	Computer A
6	Cushion valve	17	Control valve	28	P1 pressure sensor
7	Remote control valve (boom, bucket)	18	Swing priority variable orifice	29	P2 pressure sensor
8	Remote control valve (arm, swing)	19	Arm (2)	30	Hydraulic pump
9	Lever lock	20	Boom load holding valve check valve	31	Check valve
10	Boost pressure relief	21	Boom (1)	32	Oil cooler
11	5 stack solenoid valve	22	Boom cylinder		

https://truckmanualshub.com/

Overall View

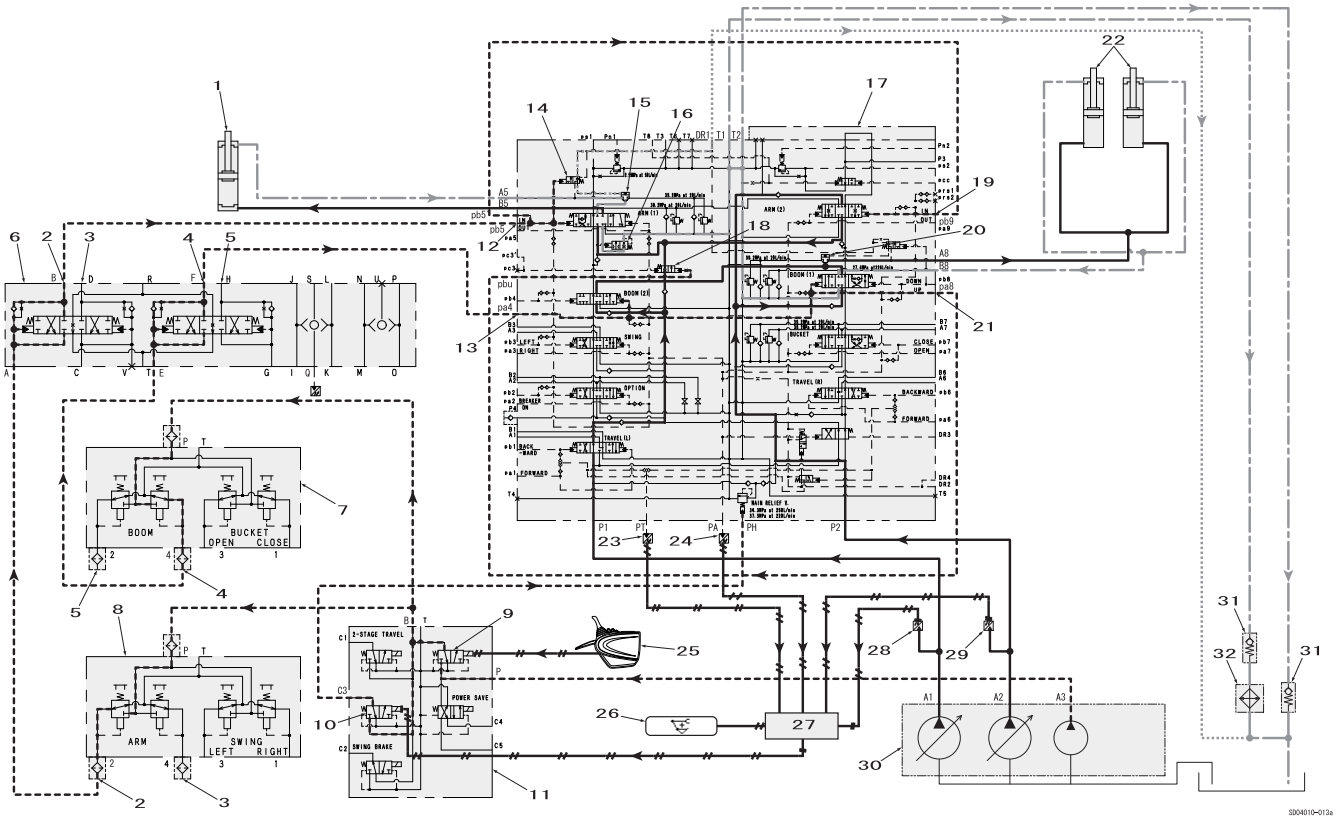

Enlarged View

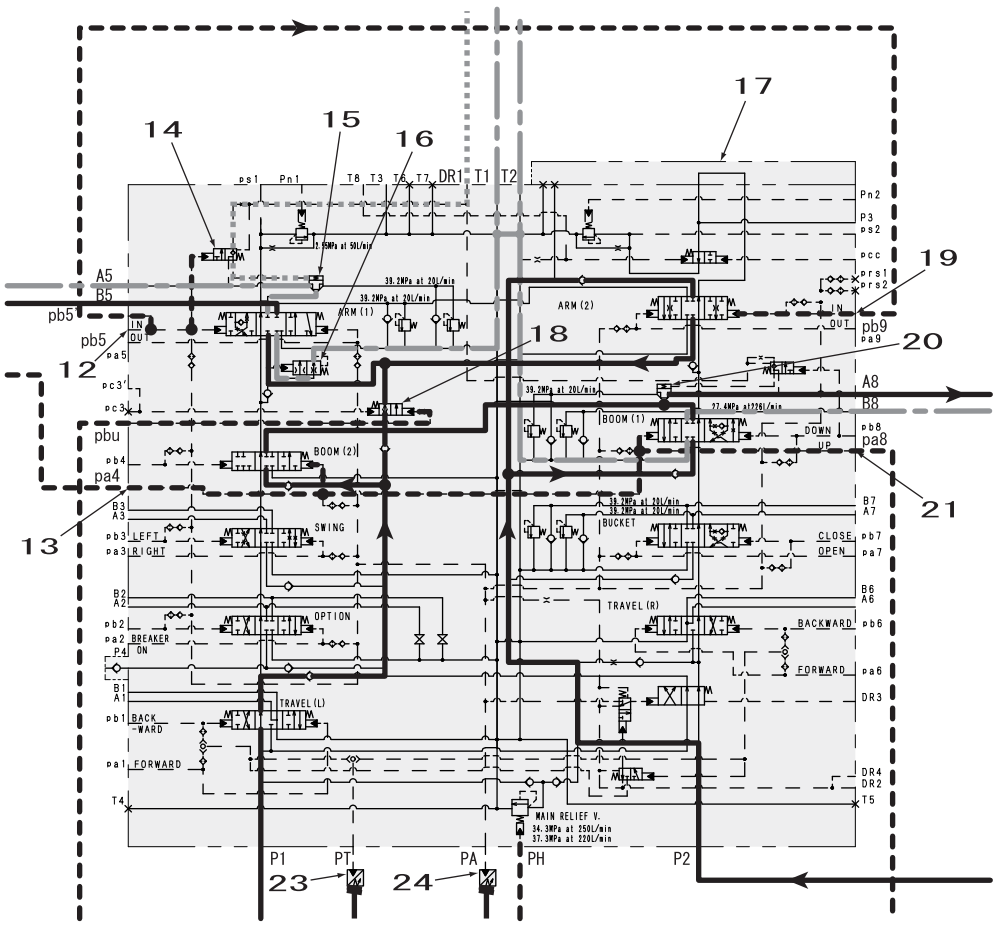

https://truckmanualshub.com/

Boom Circuit

Boom-down regenerative circuit

By moving the remote control valve to the boom-down side, the pilot pressure oil is fed via the cushion valve to the control valve pb8 port and switches the boom (1) spool to the down side.
The discharge oil from hydraulic pump A2 enters the control valve P2 port and is fed from the parallel oil path to the boom (1) spool. Switching the spool lets the oil flow into the boom cylinder rod side and the boom-down operation is carried out.
The pilot pressure oil from the pb8 port separated in the internal path is fed to the load holding valve spool and moves the spool to the left. In this way, the load holding valve check valve spring chamber oil is connected to the tank line through the load holding valve spool, the spring chamber pressure drops, and the load holding valve check valve is opened.
When the circuit has an HBCV, the pilot pressure oil separated in the internal path operates on the HBCV PL port and switches the spool. This opens the HBCV check valve. The boom cylinder bottom side pressurized oil goes through the load holding valve check valve (passes through the HBCV check valve and goes through the load holding valve check valve when the circuit has an HBCV) and is metered by the boom (1) spool regeneration orifice. Through this, the return oil pushes open the check valve in the spool and is regenerated on the cylinder rod side. The lower the cylinder rod side load pressure, the greater the volume of regeneration. When the cylinder rod side load pressure becomes high, the check valve is closed and the cylinder bottom return oil goes through the boom spool (1) without regeneration and returns to the hydraulic oil tank.
Because the circuit is configured in such a way that, even if the boom (1) spool is at full stroke, negative control pressure is generated by the center bypass bleed-off oil path and the pump does not discharge full flow, the shortfall is made up for with regeneration and engine output can be used effectively.

Pressure line
Tank line
Pilot pressure line
Pilot tank line
Electric line

1	Load holding valve check valve	9	Boom (down)	17	Boom cylinder
2	Check valve	10	Remote control valve (boom, bucket)	18	Boom (1)
3	Oil cooler	11	Lever lock	19	Travel pilot pressure sensor
4	P1 pressure sensor	12	Boost pressure relief	20	Upper pilot pressure sensor
5	Orifice	13	5 stack solenoid valve	21	Console lever lock switch
6	Bleed-off	14	Control valve	22	Monitor display
7	Cushion valve	15	P2 pressure sensor	23	Computer A
8	Boom (up)	16	Hydraulic pump		

https://truckmanualshub.com/

Overall View

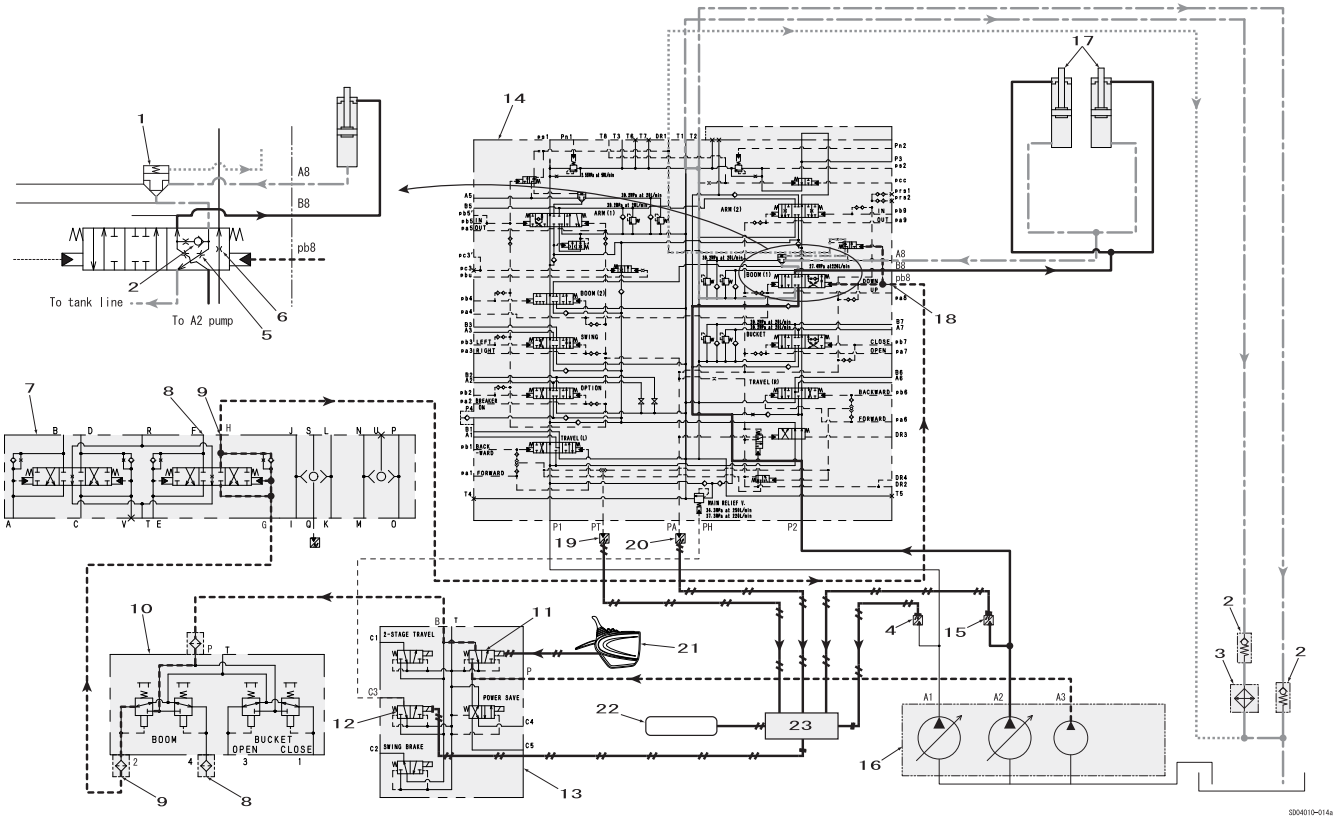

Enlarged View

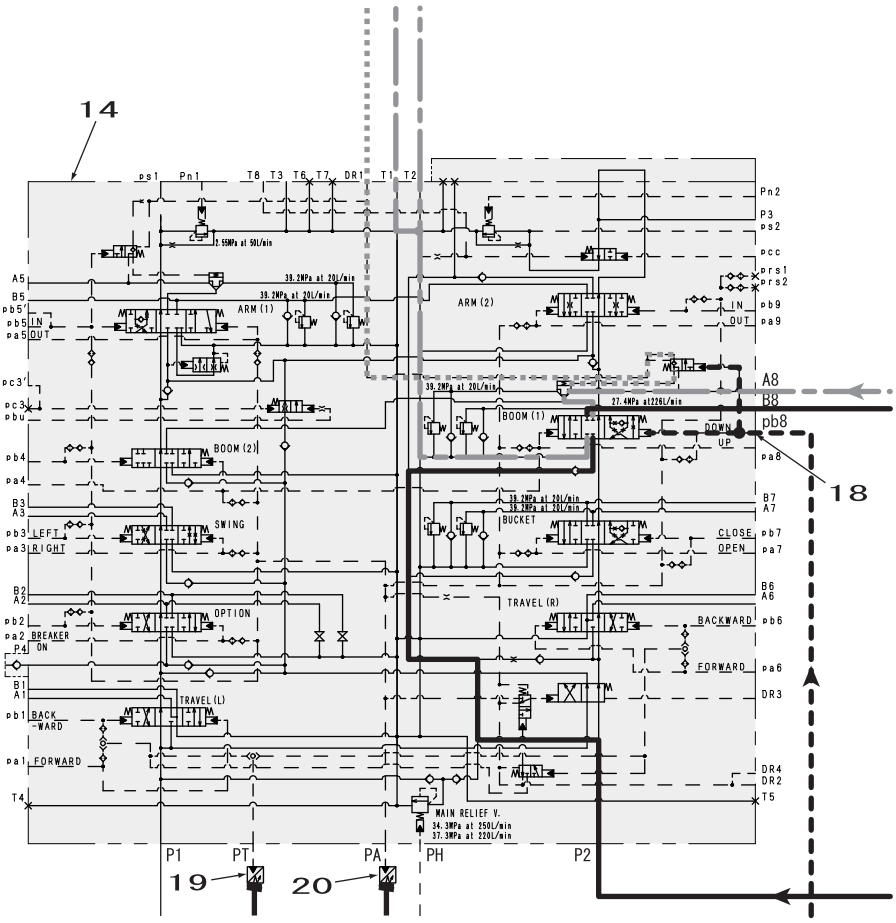

https://truckmanualshub.com/

Boom Circuit

Boom-down tilting prevention circuit

By operating the remote control valve all the way to the boom-down side at once, even if the boom spool goes its full stroke, negative control pressure is generated by the center bypass bleed-off oil path and the circuit is such that the hydraulic pump does not discharge full flow, so the generation of high pressure is restrained and main unit tilt is reduced. Since the shortfall in the oil volume is compensated by the regenerative circuit, the engine output can be used effectively.

Pressure line
Tank line
Pilot pressure line
Pilot tank line
Electric line

1	Load holding valve check valve	12	Control valve
2	Check valve	13	P2 pressure sensor
3	Oil cooler	14	Hydraulic pump
4	Bleed-off	15	Boom cylinder
5	Cushion valve	16	Boom (1)
6	Boom (up)	17	Travel pilot pressure sensor
7	Boom (down)	18	Upper pilot pressure sensor
8	Remote control valve (boom, bucket)	19	Console lever lock switch
9	Lever lock	20	Monitor display
10	Boost pressure relief	21	Computer A
11	5 stack solenoid valve	22	P1 pressure sensor

https://truckmanualshub.com/

Overall View

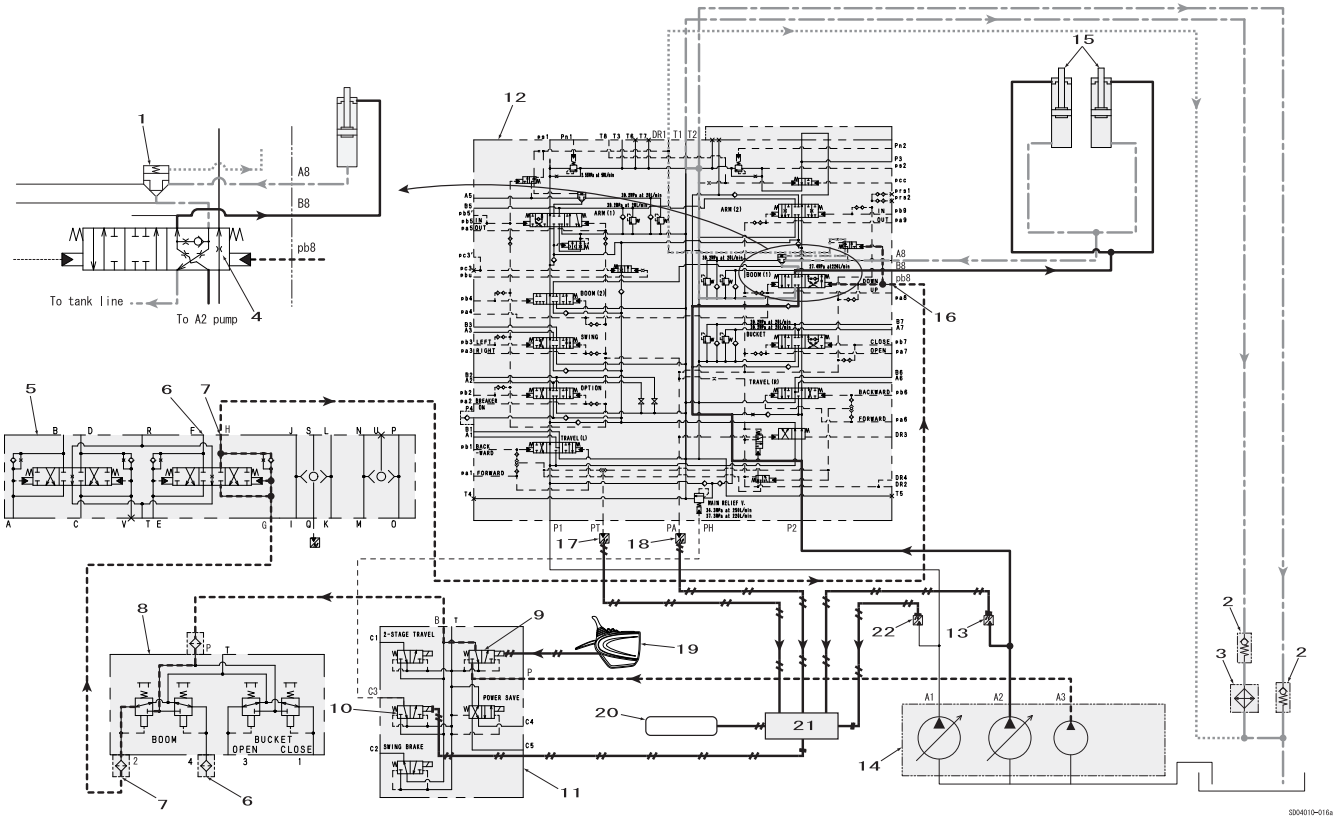

Enlarged View

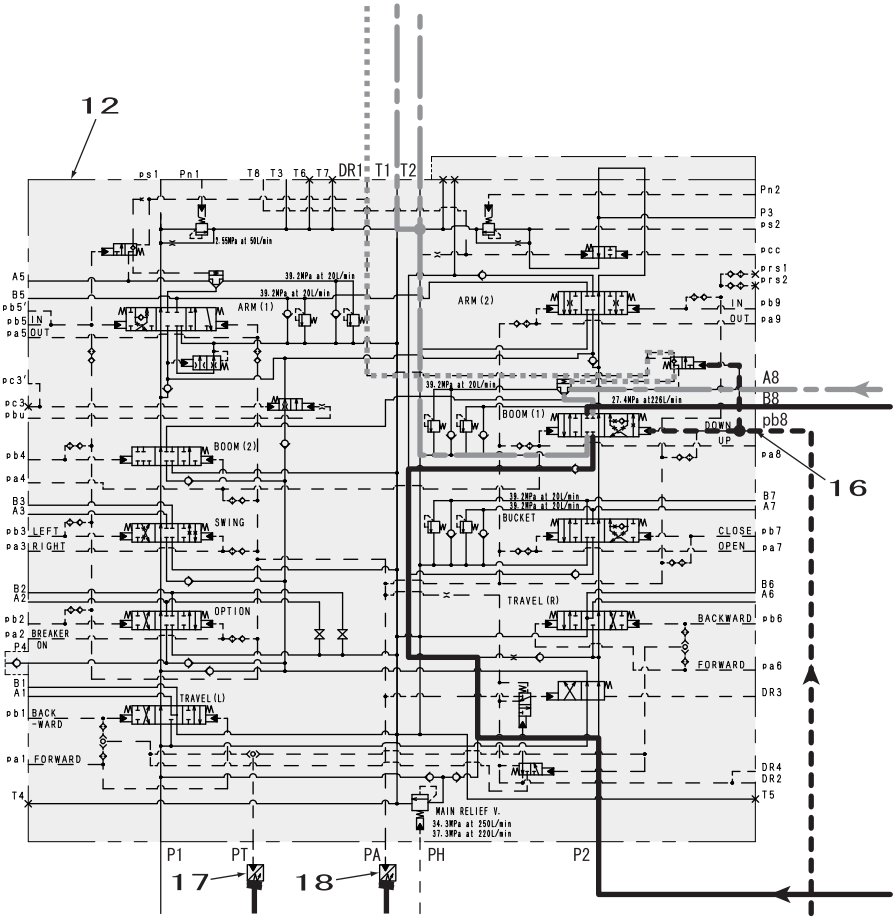

https://truckmanualshub.com/

Boom Circuit

Boom-down load holding valve circuit

When the remote control valve boom operation lever is in neutral, the oil at the boom cylinder bottom side is sealed by the load holding valve check valve, reducing internal leakage from the main spool and reducing the natural drop of the boom.

By moving the remote control valve to the boom-down side, the pilot pressure oil is fed via the cushion valve to the control valve pb8 port and switches the boom spool to the down side.

The discharge oil from hydraulic pump A2 enters the control valve P2 port and is fed from the parallel oil path to the boom (1). Switching the spool lets the oil flow into the boom cylinder bottom side and the boom-down operation is carried out.

The pilot pressure oil from the pb8 port separated in the internal path is fed to the load holding valve spool and moves the spool to the left. In this way, the load holding valve check valve spring chamber oil is connected to the tank line through the load holding valve spool, the spring chamber pressure drops, and the load holding valve check valve is opened.

The boom cylinder bottom side pressurized oil goes through the load holding valve check valve and the boom (1) spool and returns to the hydraulic oil tank.

Pressure line
Tank line
Pilot pressure line
Pilot tank line
Electric line

1	Boom load holding valve check valve	12	Oil cooler
2	Load holding valve spool	13	Boom cylinder
3	Cushion valve	14	Boom (1)
4	Boom (up)	15	Travel pilot pressure sensor
5	Boom (down)	16	Upper pilot pressure sensor
6	Remote control valve (boom, bucket)	17	Console lever lock switch
7	Lever lock	18	Monitor display
8	Boost pressure relief	19	Computer A
9	5 stack solenoid valve	20	P1 pressure sensor
10	Control valve	21	P2 pressure sensor
11	Check valve	22	Hydraulic pump

https://truckmanualshub.com/

Overall View

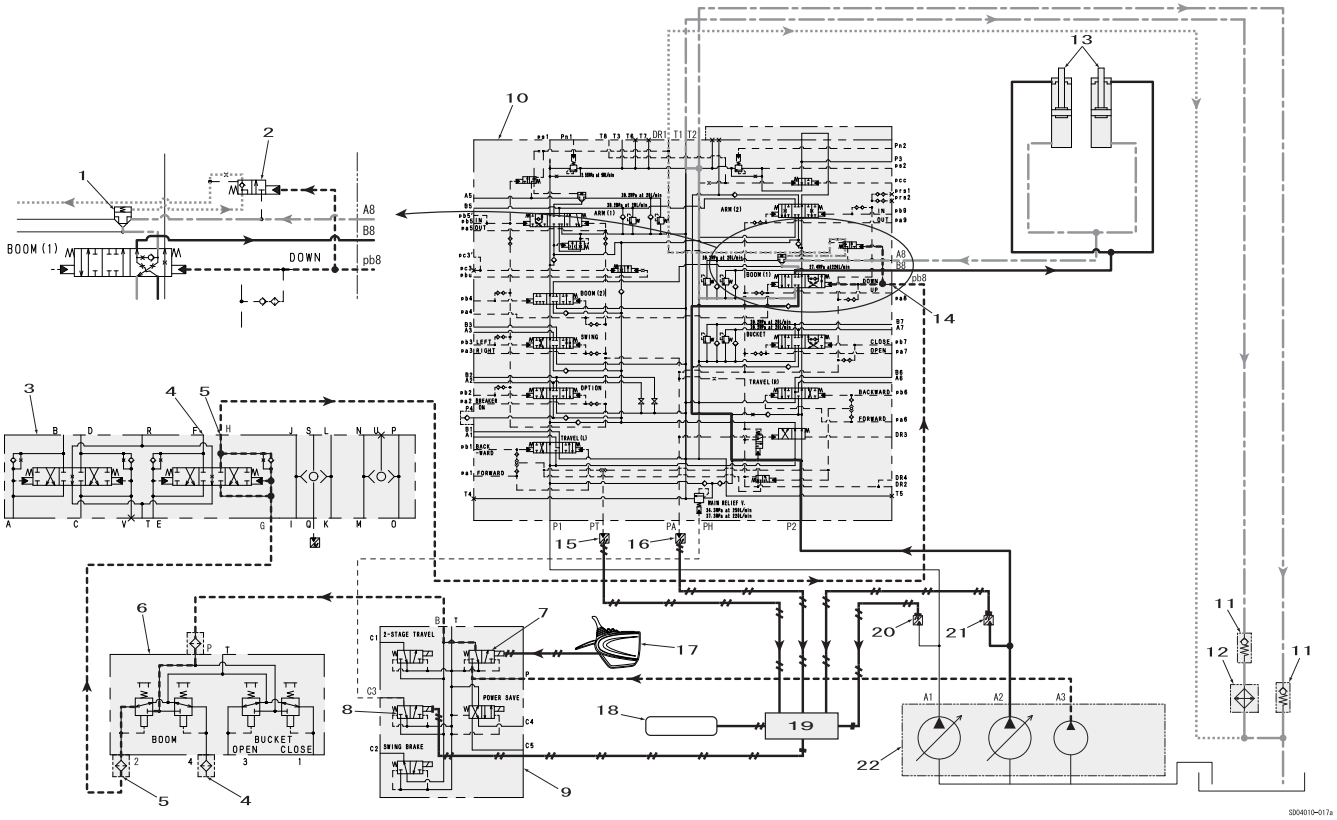

Enlarged View

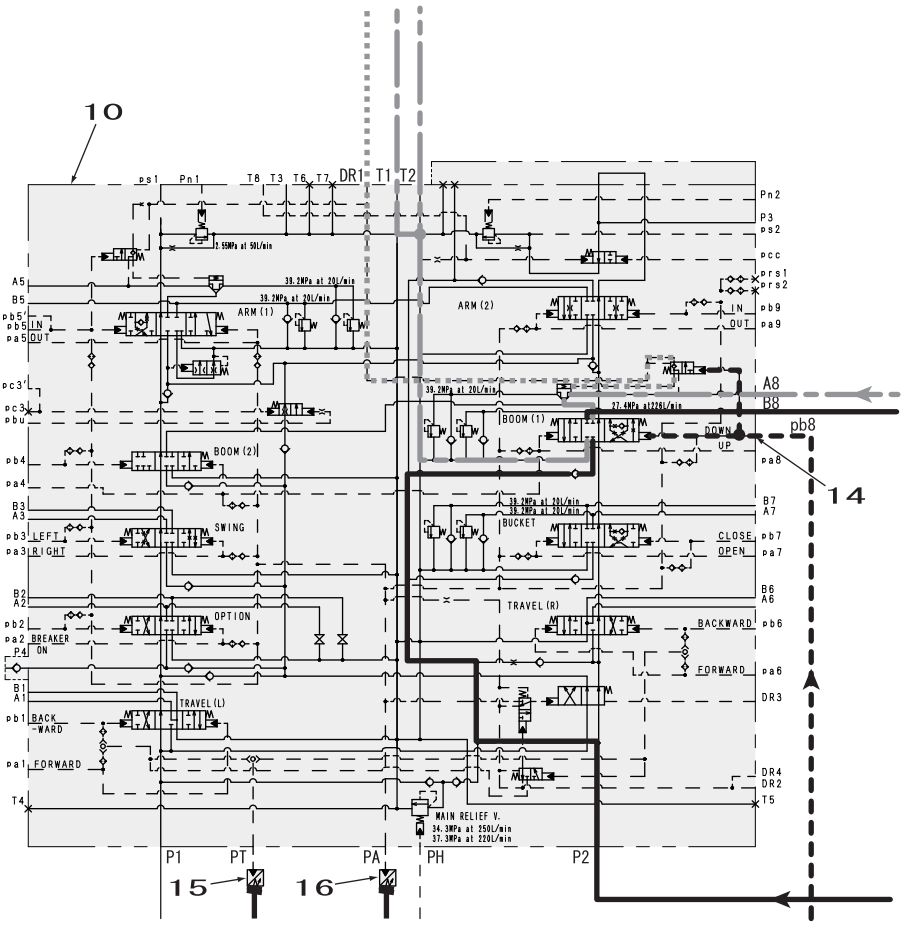

https://truckmanualshub.com/

Arm Circuit

Arm-out circuit

By moving the remote control valve to the arm-out side, the pilot pressure oil is fed via the cushion valve to the control valve pa5 port and pa9 port and switches the arm (1) and (2) spools to the out side.
The discharge oil from hydraulic pump A1 enters the control valve P1 port and is fed from the center bypass oil path to the arm (1) spool. The discharge oil from hydraulic pump A2 enters the control valve P2 port, flows from the center bypass oil path and through the arm (2) spool front arm merge oil path and merges upstream of the arm (1) spool.
Switching the arm spool lets the oil flow through the load holding valve check valve and into the arm cylinder rod side, carrying out the arm-out operation.

When the circuit has an HBCV, switching the arm spool lets the oil flow through the load holding valve check valve to push open the arm cylinder HBCV check valve and flow into the rod side, carrying out the arm-out operation.
The arm cylinder bottom side return oil goes through the arm (1) and (2) spools and returns to the hydraulic oil tank.

Pressure line
Tank line
Pilot pressure line
Pilot tank line
Electric line

1	Arm cylinder	13	Travel pilot pressure sensor
2	Arm (in)	14	Upper pilot pressure sensor
3	Arm (out)	15	Console lever lock switch
4	Cushion valve	16	Monitor display
5	Remote control valve (arm, swing)	17	Computer A
6	Lever lock	18	P1 pressure sensor
7	Boost pressure relief	19	P2 pressure sensor
8	5 stack solenoid valve	20	Hydraulic pump
9	Control valve	21	Check valve
10	Load holding valve check valve	22	Oil cooler
11	Arm (1)	23	Arm HBCV check valve
12	Arm (2)	24	Arm HBCV

https://truckmanualshub.com/

Overall View

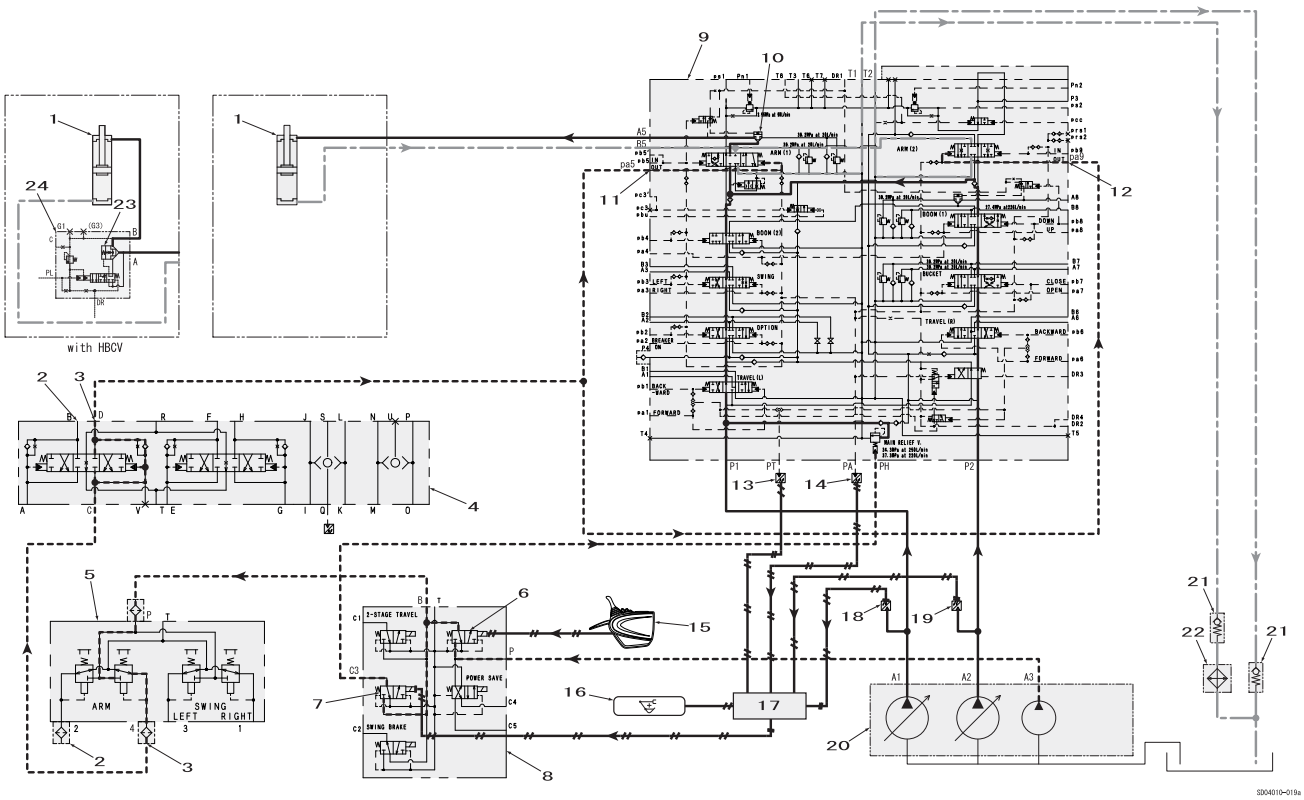

Enlarged View

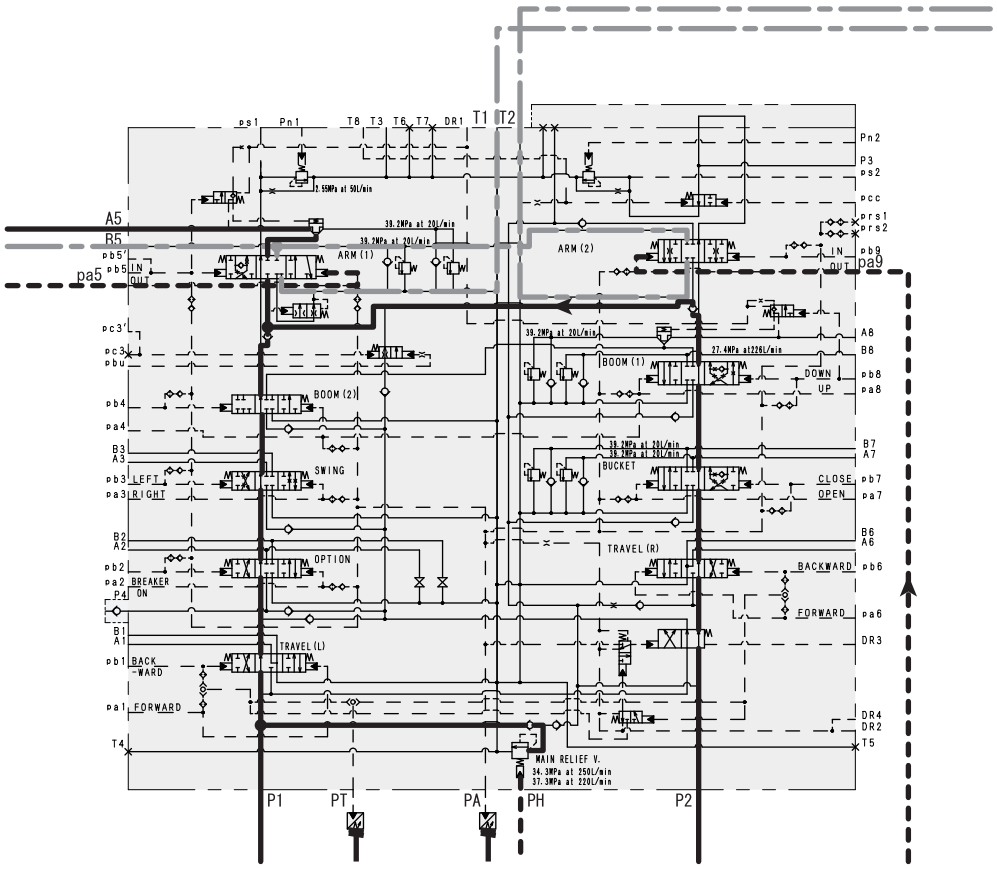

https://truckmanualshub.com/

Arm Circuit

Arm-in forced regenerative circuit

By moving the remote control valve to the arm-in side, the pilot pressure oil is fed via the cushion valve to the control valve pb5 port and pb9 port and switches the arm (1) and (2) spools to the in side.

The discharge oil from hydraulic pump A1 enters the control valve P1 port and is fed from the center bypass oil path to the arm (1) spool. The discharge oil from hydraulic pump A2 enters the control valve P2 port, flows from the center bypass oil path and through the arm (2) spool front arm merge oil path and merges upstream of the arm (1) spool.

Switching the arm spool lets the oil flow into the arm cylinder bottom side and the arm-in operation is carried out.

The pilot pressure oil from the pb5 port separated in the internal path is fed to the load holding valve spool and moves the spool to the right. In this way, the load holding valve check valve spring chamber oil is connected to the tank line through the load holding valve spool, the spring chamber pressure drops, and the load holding valve check valve is opened.

The arm cylinder rod side pressurized oil goes through the load holding valve check valve and the arm (1) spool and is metered by the forced regeneration release valve.Through this, the return oil pushes open the check valve in the arm (1) spool and is forcibly regenerated on the cylinder bottom side, securing the arm speed for leveling work etc. When the cylinder bottom load pressure becomes high, the forced regeneration release valve is switched to the large metering side and the opening becomes larger. Through this, the check valve in the spool is closed and the cylinder rod side return oil returns to the hydraulic oil tank via the arm spool (1) and forced regeneration release valve without being regenerated.

Pressure line
Tank line
Pilot pressure line
Pilot tank line
Electric line

1	Load holding valve spool	10	Cushion valve	19	Travel pilot pressure sensor
2	Load holding valve check valve	11	Remote control valve (arm, swing)	20	Upper pilot pressure sensor
3	Oil cooler	12	Lever lock	21	Console lever lock switch
4	Regeneration check valve	13	Boost pressure relief	22	Monitor display
5	Metering large	14	5 stack solenoid valve	23	Computer A
6	Metering small	15	Control valve	24	P1 pressure sensor
7	Forced regeneration release valve	16	Arm cylinder	25	P2 pressure sensor
8	Arm (in)	17	Arm (1)	26	Hydraulic pump
9	Arm (out)	18	Arm (2)	27	Check valve

https://truckmanualshub.com/

Overall View

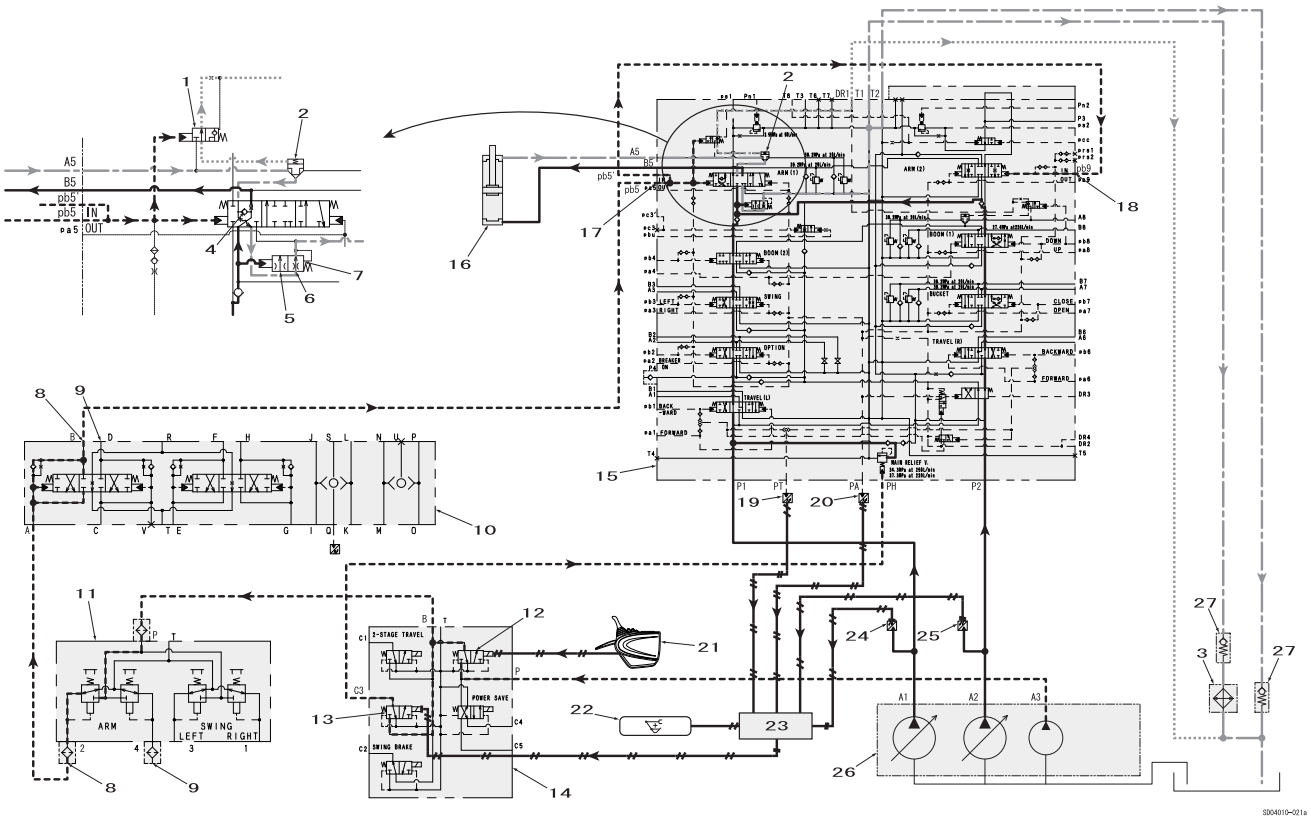

Enlarged View

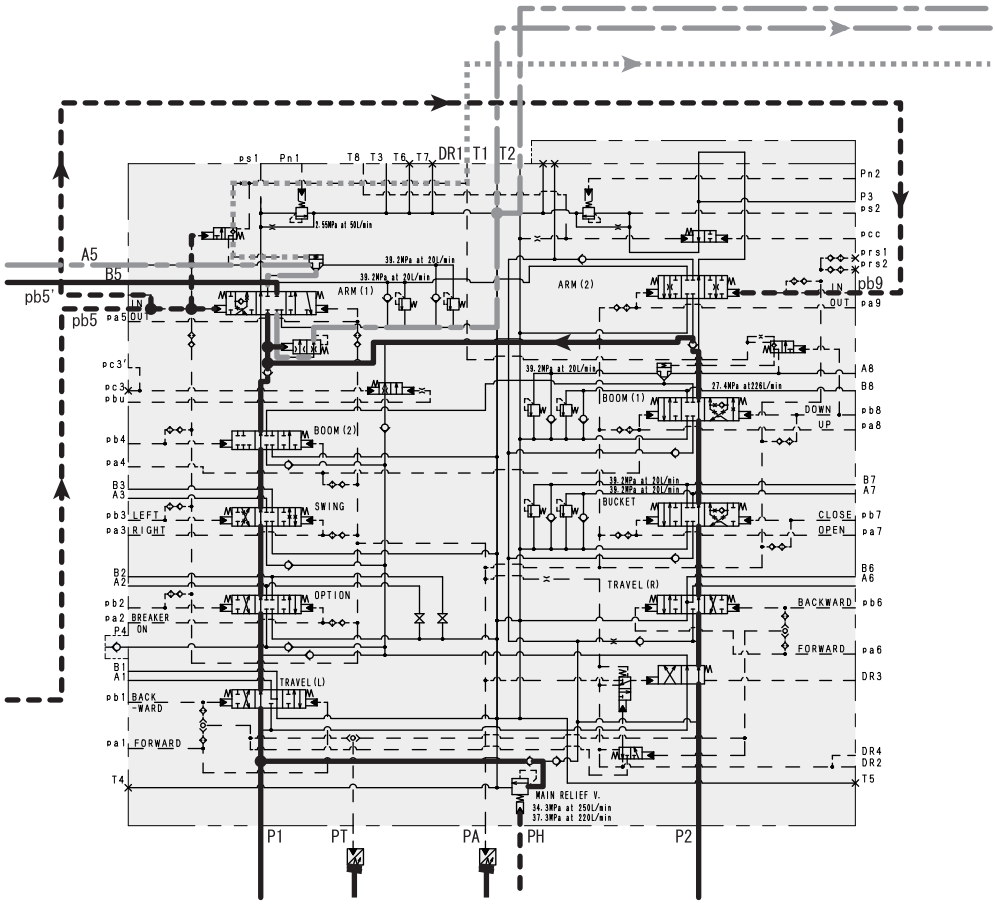

https://truckmanualshub.com/

Arm Circuit

Arm-in load holding valve circuit

When the remote control valve arm operation lever is in neutral, the oil at the arm cylinder rod side is sealed by the load holding valve check valve, reducing internal leakage from the main spool and reducing the natural drop of the arm.

By moving the remote control valve to the arm-in side, the pilot pressure oil is fed via the cushion valve to the control valve pb5 port and pb9 port and switches the arm (1) and (2) spools to the in side.

The discharge oil from hydraulic pump A1 enters the control valve P1 port and is fed from the center bypass oil path to the arm (1) spool. The discharge oil from hydraulic pump A2 enters the control valve P2 port, flows from the center bypass oil path and through the arm (2) spool front arm merge oil path and merges upstream of the arm (1) spool.

Switching the arm spool lets the oil flow into the arm cylinder bottom side and the arm-in operation is carried out.

The pilot pressure oil from the pb5 port separated in the internal path is fed to the load holding valve spool and moves the spool to the right. In this way, the load holding valve check valve spring chamber oil is connected to the tank line through the load holding valve spool, the spring chamber pressure drops, and the load holding valve check valve is opened.

The arm cylinder rod side pressurized oil goes through the load holding valve check valve and the arm (1) spool and returns to the hydraulic oil tank.

Pressure line
Tank line
Pilot pressure line
Pilot tank line
Electric line

1	Load holding valve spool	13	Arm (1)
2	Load holding valve check valve	14	Arm (2)
3	Oil cooler	15	Travel pilot pressure sensor
4	Arm (in)	16	Upper pilot pressure sensor
5	Arm (out)	17	Console lever lock switch
6	Cushion valve	18	Monitor display
7	Remote control valve (arm, swing)	19	Computer A
8	Lever lock	20	P1 pressure sensor
9	Boost pressure relief	21	P2 pressure sensor
10	5 stack solenoid valve	22	Hydraulic pump
11	Control valve	23	Check valve
12	Arm cylinder		

https://truckmanualshub.com/

Overall View

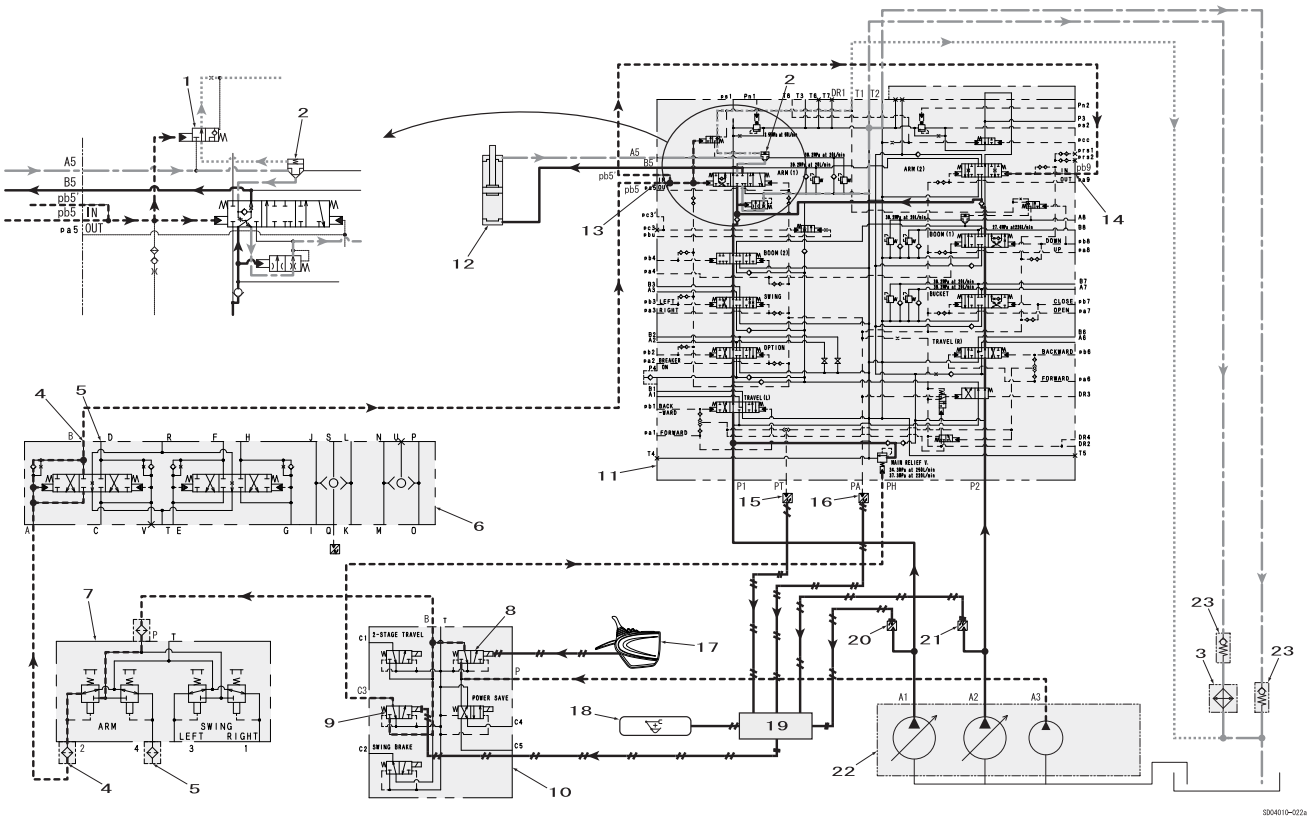

Enlarged View

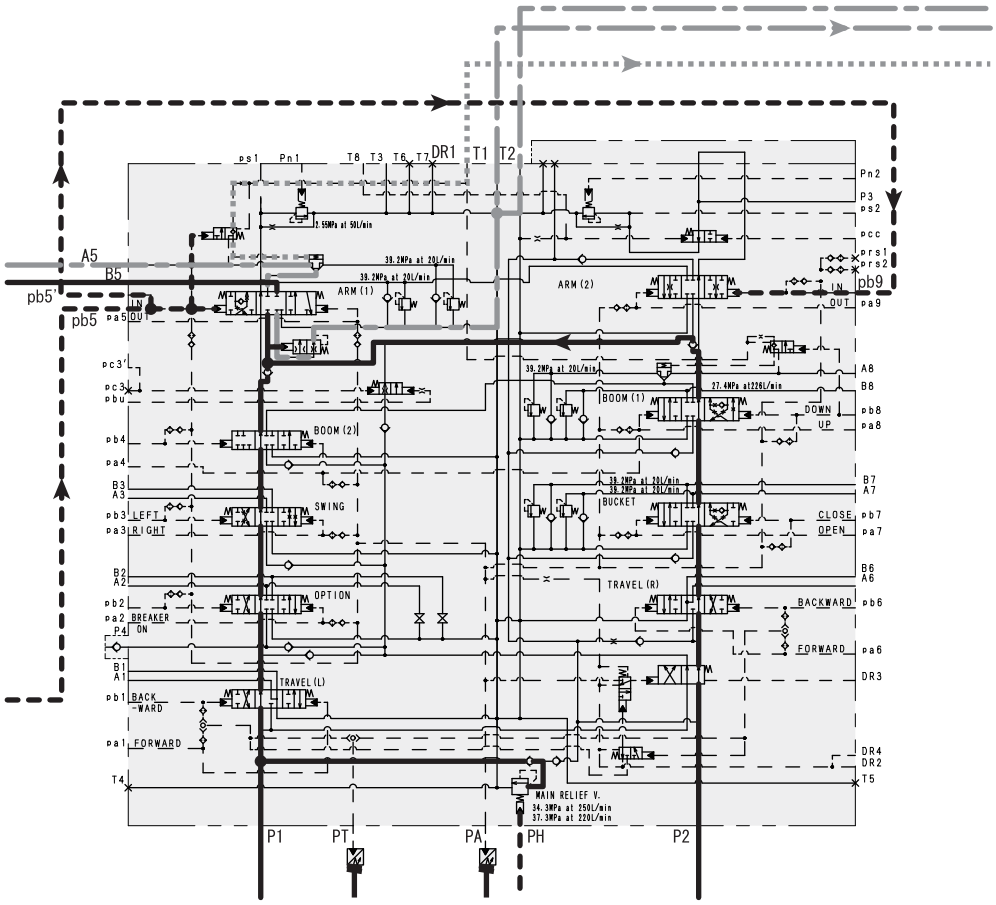

https://truckmanualshub.com/

Bucket Circuit

Bucket-open circuit

By moving the remote control valve to the bucket-open side, the pilot pressure oil is fed via the cushion valve to the control valve pa7 port and switches the bucket spool to the open side.
The discharge oil from hydraulic pump A2 enters the control valve P2 port and is fed from the parallel oil path to the bucket spool. Switching the spool lets the oil flow into the bucket cylinder rod side and the bucket-open operation is carried out.
The bucket cylinder bottom side pressurized oil goes through the bucket spool and returns to the hydraulic oil tank.

Pressure line
Tank line
Pilot pressure line
Pilot tank line
Electric line

1	Cushion valve	11	Travel pilot pressure sensor
2	Bucket (close)	12	Upper pilot pressure sensor
3	Bucket (open)	13	Console lever lock switch
4	Remote control valve (boom, bucket)	14	Monitor display
5	Lever lock	15	Computer A
6	Boost pressure relief	16	P1 pressure sensor
7	5 stack solenoid valve	17	P2 pressure sensor
8	Control valve	18	Hydraulic pump
9	Bucket	19	Check valve
10	Bucket cylinder	20	Oil cooler

https://truckmanualshub.com/

Overall View

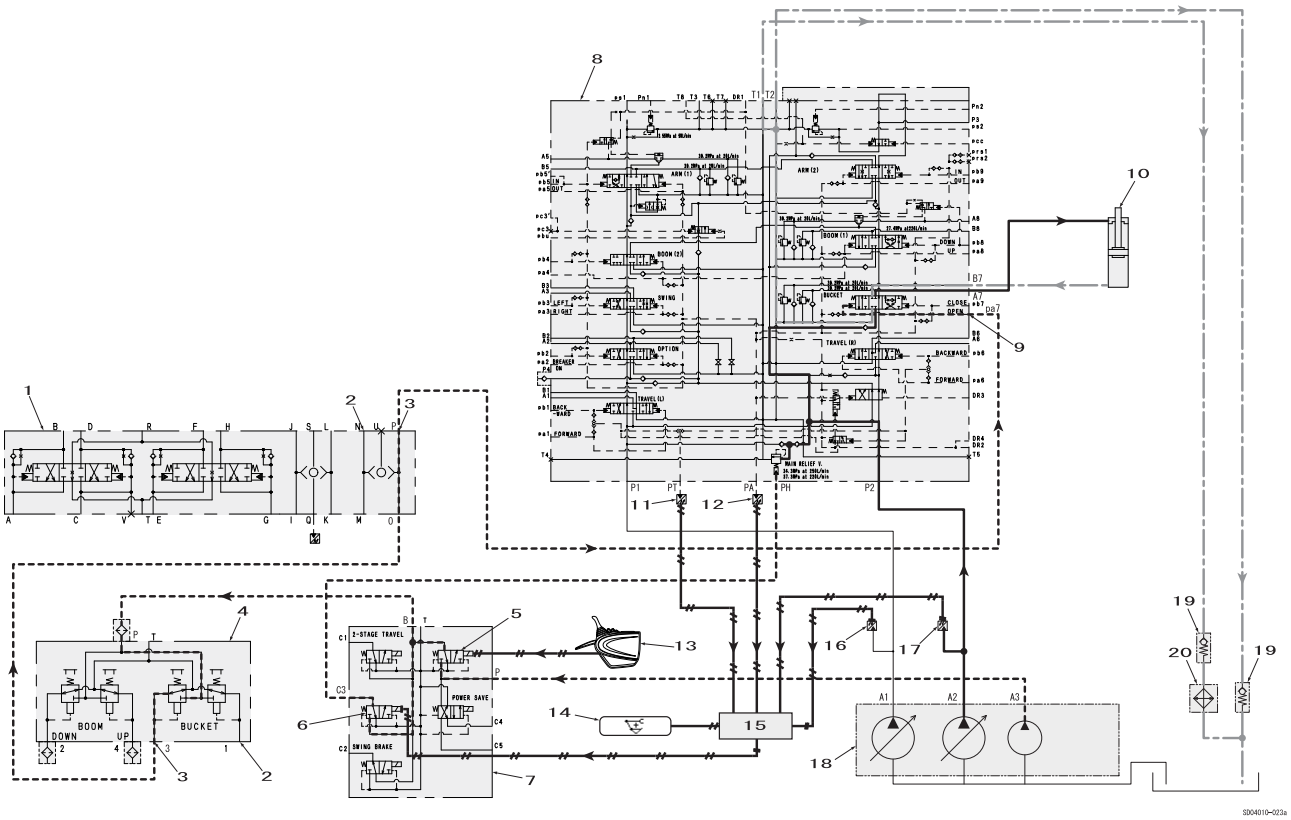

Enlarged View

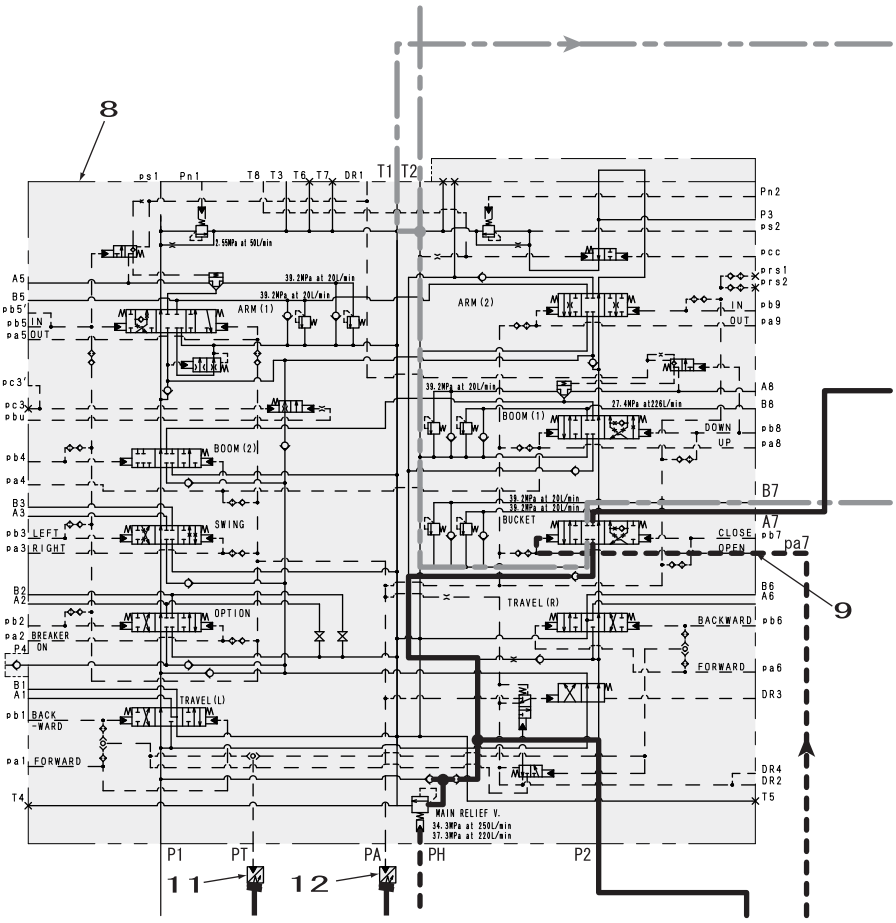

https://truckmanualshub.com/

Bucket Circuit

Bucket-close regenerative circuit

By moving the remote control valve to the bucket-close side, the pilot pressure oil is fed via the cushion valve to the control valve pb7 port and switches the bucket spool to the close side.
The discharge oil from hydraulic pump A2 enters the control valve P2 port and is fed from the parallel oil path to the bucket spool. Switching the spool lets the oil flow into the bucket cylinder bottom and the bucket-close operation is carried out.
The bucket cylinder rod side pressurized oil is metered by the bucket spool regeneration orifice.Through this, the return oil pushes open the check valve in the spool and is regenerated on the cylinder bottom side. The lower the cylinder rod side load pressure, the greater the volume of regeneration. When the cylinder rod side load pressure becomes high, the check valve is closed and the cylinder bottom side return oil goes through the bucket spool without regeneration and returns to the hydraulic oil tank.

Pressure line
Tank line
Pilot pressure line
Pilot tank line
Electric line

1	Regeneration check valve	12	Bucket
2	Oil cooler	13	Bucket cylinder
3	Orifice	14	Travel pilot pressure sensor
4	Cushion valve	15	Upper pilot pressure sensor
5	Bucket (close)	16	Console lever lock switch
6	Bucket (open)	17	Monitor display
7	Remote control valve (boom, bucket)	18	Computer A
8	Lever lock	19	P1 pressure sensor
9	Boost pressure relief	20	P2 pressure sensor
10	5 stack solenoid valve	21	Hydraulic pump
11	Control valve	22	Check valve

https://truckmanualshub.com/

Overall View

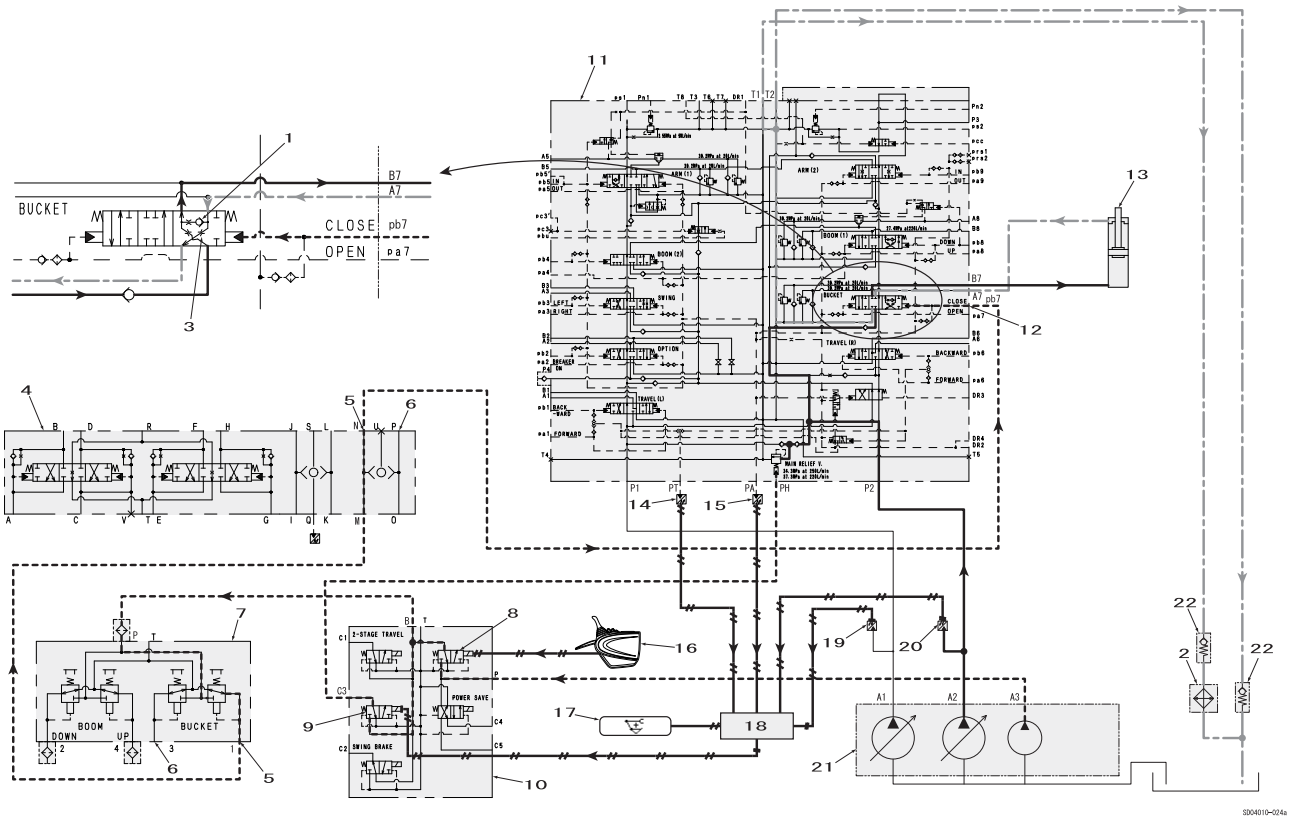

Enlarged View

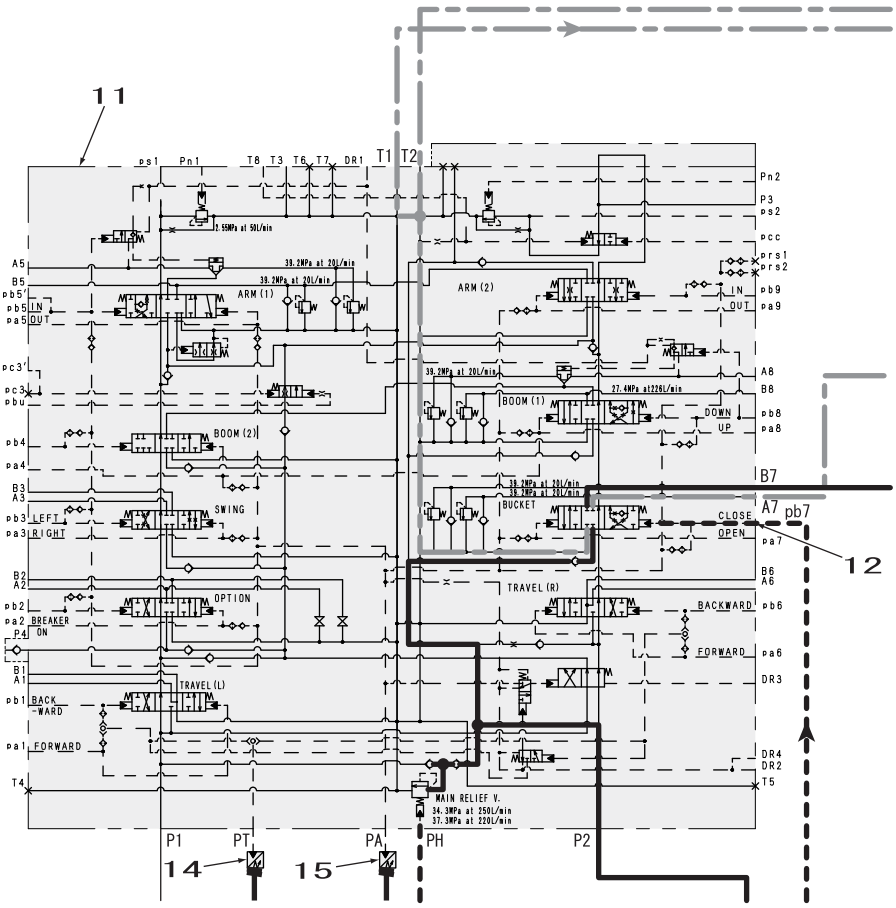

https://truckmanualshub.com/

Negative Control Circuit

Negative control circuit (power save solenoid OFF)

When the remote control valve operation lever is set to neutral, the discharge oil from hydraulic pumps A1 and A2 goes from the control valve P1 and P2 ports through the center bypass oil path, and through the downstream negative control variable relief, and returns to the hydraulic oil tank.
The discharged oil from pilot pump A3 enters the 5 stack solenoid valve P port, flows through the power save solenoid valve, is fed to the control valve Pn1 and Pn2 ports, and holds the P1 and P2 negative control relief at the set pressure of 2.55 MPa.
The negative control pressure oil separated from the center bypass oil path is fed from the Ps1 and Ps2 ports to the hydraulic pump Pi1 and Pi2 ports, moves the pump tilting to the minimum flow side, and the pump discharge flow is reduced.

Pressure line
Tank line
Pilot pressure line
Pilot tank line
Electric line

1	P1 negative control relief	11	N1 negative control pressure sensor
2	P2 negative control relief	12	P1 pressure sensor
3	Control valve	13	P2 pressure sensor
4	Travel pilot pressure sensor	14	N2 negative control pressure sensor
5	Upper pilot pressure sensor	15	Horsepower control proportional valve
6	Computer A	16	P1 flow control proportional valve
7	Console lever lock switch	17	Hydraulic pump
8	Lever lock	18	Check valve
9	Power save	19	Oil cooler
10	5 stack solenoid valve		

https://truckmanualshub.com/

Overall View

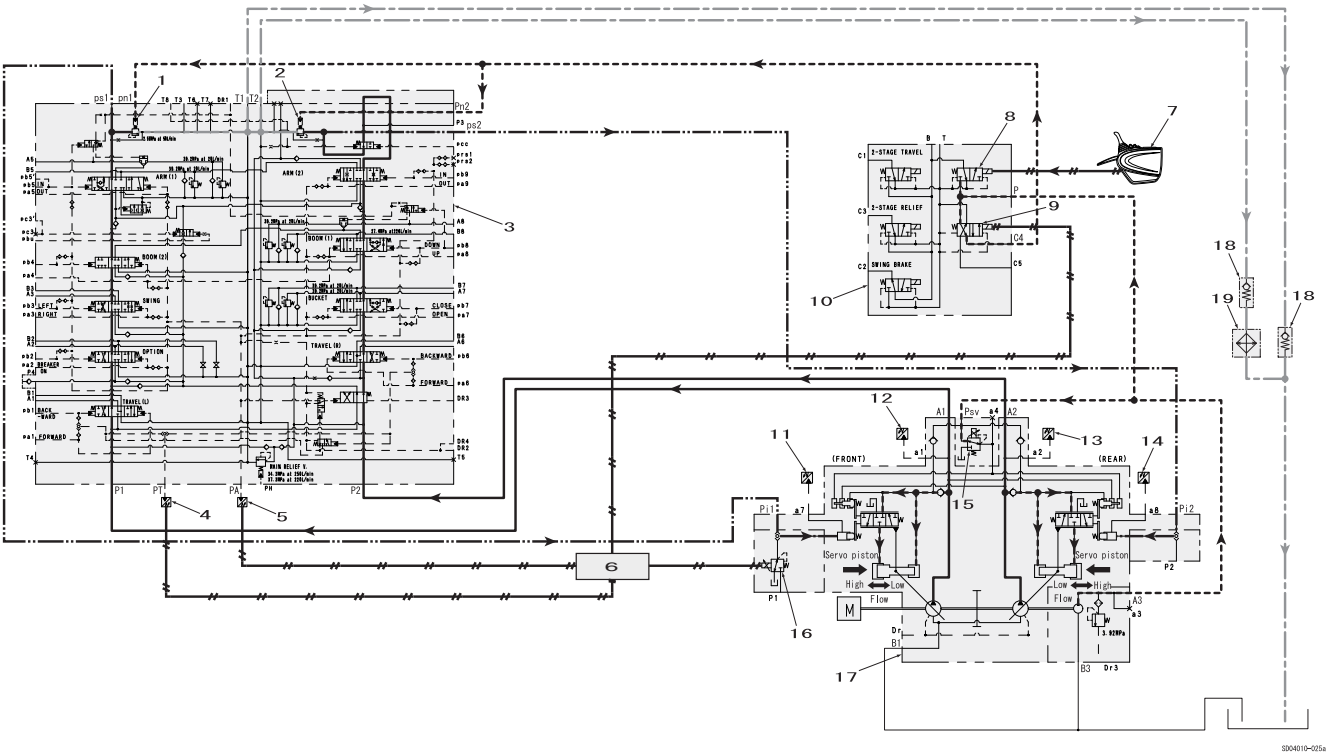

Enlarged View

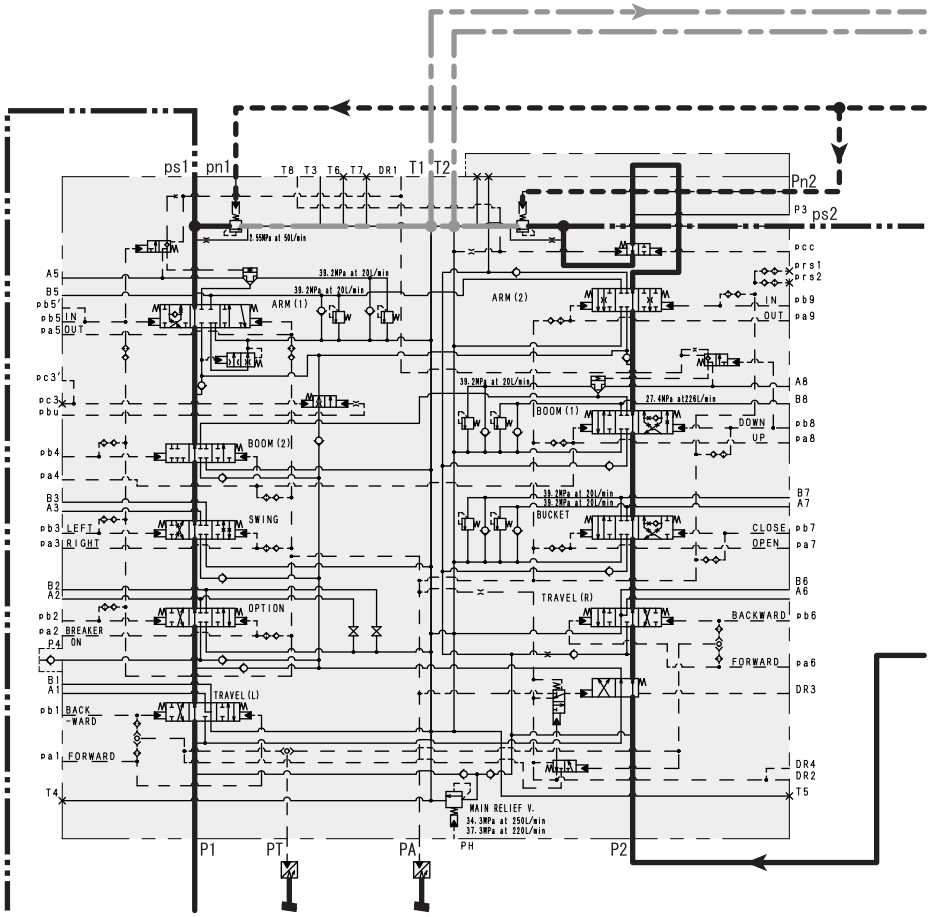

https://truckmanualshub.com/

Negative Control Circuit

Negative control power save circuit (power save solenoid ON)

The purpose of this control is to reduce fuel consumption during standby by reducing the back pressure for the negative control signal.

When the remote control valve operation lever is set to neutral, the non-operation state signal enters the computer A from the travel pilot pressure sensor and the upper pilot pressure sensor installed on the control valve PT port and PA port. After about 1 sec., the power save solenoid valve is excited and switched ON by the signal output from computer A, and the oil path is switched.

The pressurized oil from the control valve negative control relief Pn1 and Pn2 ports goes through the power save solenoid valve and returns to the hydraulic oil tank.

Therefore, the negative control relief set pressure is switched to low pressure to further reduce the A1 and A2 pump discharge pressure.

With the system running this way, the negative control signal is cut off and the P1 and P2 pump discharge volume increases.

The discharge oil from pilot pump A3 enters the 5 stack solenoid valve P port, flows through the power save solenoid valve, is fed to the hydraulic pump P2 port from the C5 port, moves the A2 side pump tilting to the minimum flow side, and this reduces the discharge flow.

At the same time, the discharge oil from the pilot pump A3 is fed to the hydraulic pump P1 port by the signal from computer A to the P1 flow restriction proportional valve, moves the A1 side pump tilting to the minimum flow side, and this reduces the discharge flow.

Pressure line
Tank line
Pilot pressure line
Pilot tank line
Electric line

1	Control valve	10	P1 pressure sensor
2	Travel pilot pressure sensor	11	P2 pressure sensor
3	Upper pilot pressure sensor	12	N2 negative control pressure sensor
4	Computer A	13	Horsepower control proportional valve
5	Console lever lock switch	14	P1 flow control proportional valve
6	Lever lock	15	Hydraulic pump
7	Power save	16	Check valve
8	5 stack solenoid valve	17	Oil cooler
9	N1 negative control pressure sensor		

https://truckmanualshub.com/

Overall View

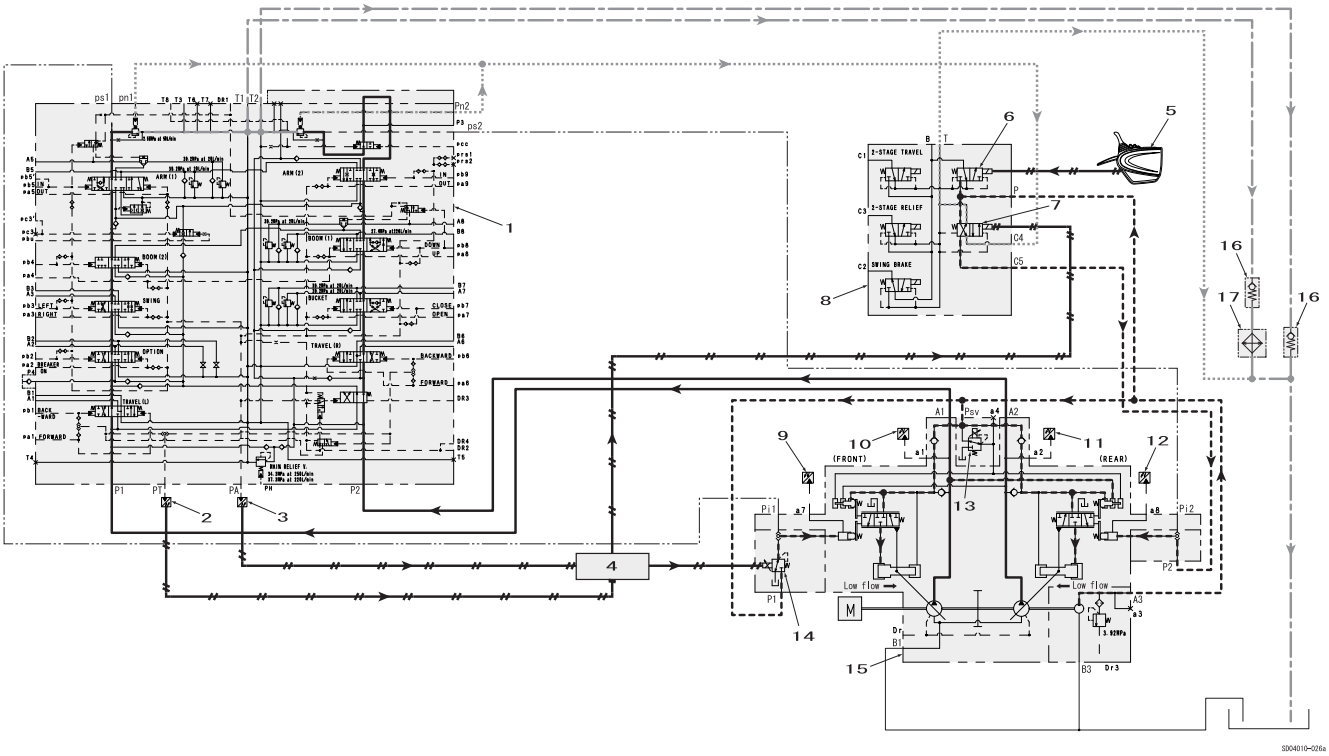

Enlarged View

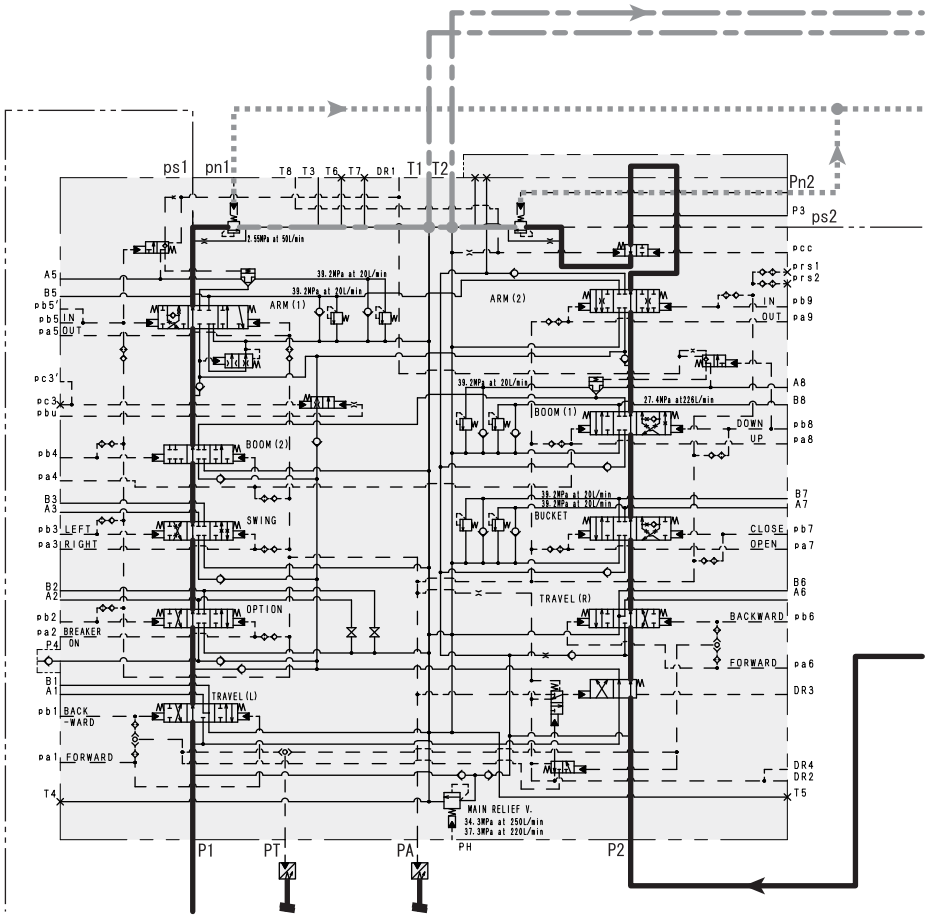

https://truckmanualshub.com/

Negative Control Circuit

Negative control circuit (bucket close, power save solenoid OFF)

As an example, this section explains the bucket-close operations.

By moving the remote control valve to the bucket-close side, the pilot pressure oil is fed via the cushion valve to the control valve pb7 port and switches the bucket spool to the close side.

The discharge oil from the hydraulic pump A2 enters the control valve P2 port, is fed to the bucket spool, flows into the bucket cylinder bottom side because of the spool switching and the bucket-close operation is carried out.

At the same time, the upper pilot pressure sensor signal is detected and through the signal output from computer A to switch OFF the power save solenoid valve, pilot pressure oil enters the negative control relief, and the pressure becomes the set pressure of 2.55 MPa.

Because the bucket spool switches and the pressurized oil on the center bypass downstream side is cut off, the Pi2 pump negative control pressure oil from the Ps2 port is eliminated, the pump tilting moves to the increase side, and the flow is increased.

Also, the command milli-amp to the P1 flow control proportional valve is lowered and the pressurized oil from the hydraulic pump A3 is cut off, but the negative control pressurized oil is fed from the control valve Ps1 port to the Pi1 port, moves the pump tilting to the minimum flow side, and the hydraulic pump A1 discharge volume is reduced.

Pressure line
Tank line
Pilot pressure line
Pilot tank line
Electric line

1	Control valve	12	Power save
2	Travel pilot pressure sensor	13	5 stack solenoid valve
3	Upper pilot pressure sensor	14	P1 pressure sensor
4	Cushion valve	15	P2 pressure sensor
5	Bucket (close)	16	N1 negative control pressure sensor
6	Bucket (open)	17	N2 negative control pressure sensor
7	Bucket cylinder	18	P1 flow control proportional valve
8	Computer A	19	Hydraulic pump
9	Remote control valve (boom, bucket)	20	Check valve
10	Console lever lock switch	21	Oil cooler
11	Lever lock		

https://truckmanualshub.com/

Overall View

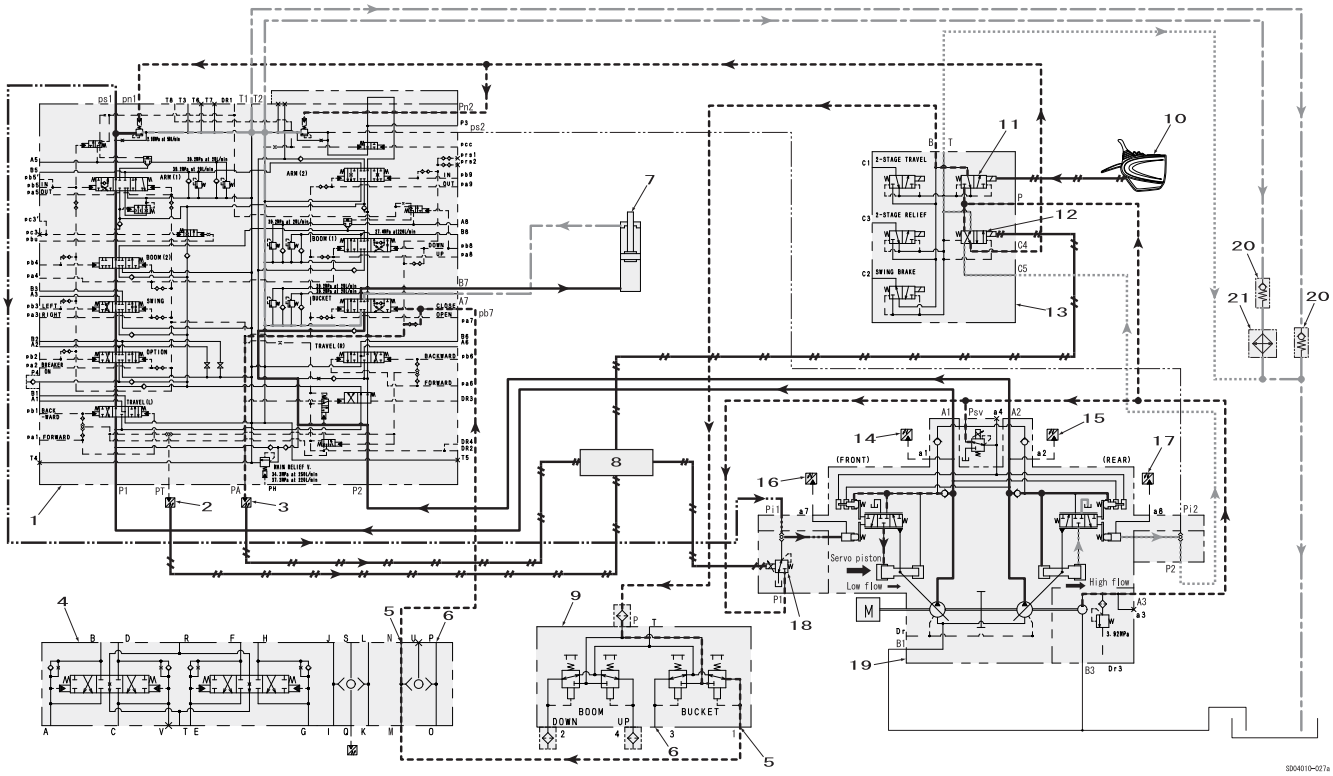

Enlarged View

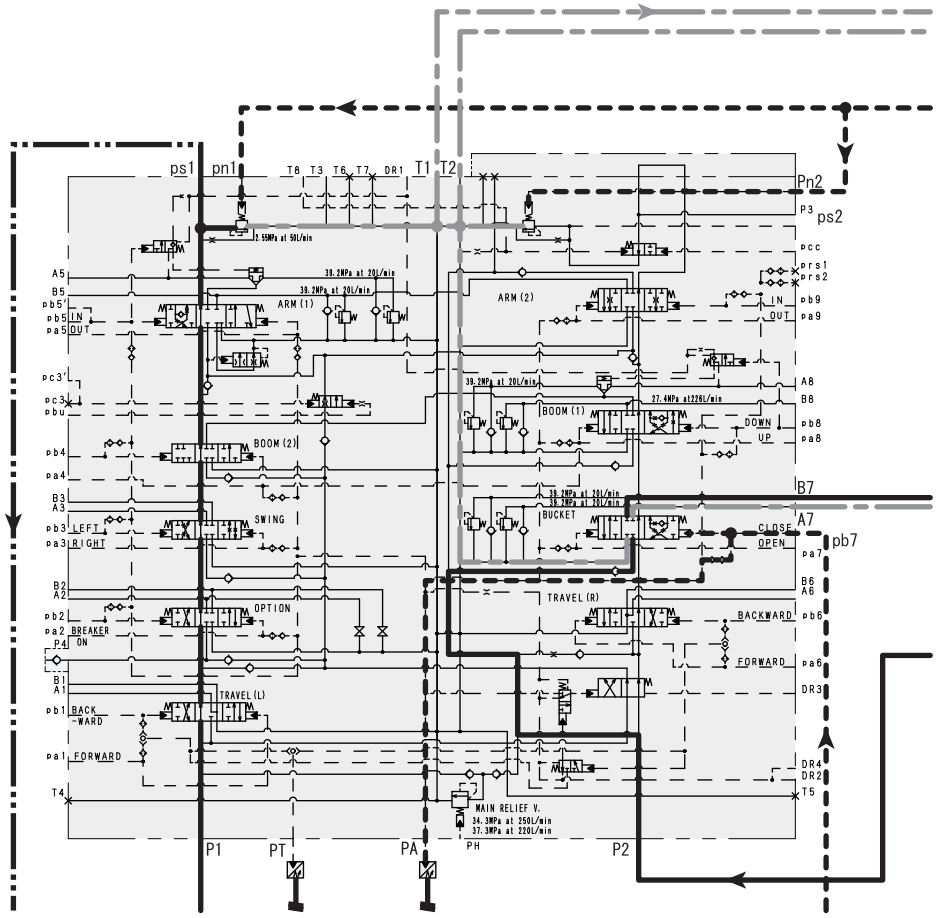

https://truckmanualshub.com/

Other Circuits

As examples, this section explains the cases when an arm-out operation is carried out, when an arm-out operation is stopped, and when an arm-out operation is followed by an arm-in operation.

Cushion circuit (arm-out operation)

When a remote control valve arm-out operation is carried out, the pilot pressure oil enters from the remote control valve 2 port into the cushion valve, pushes up the internal check valve, and is fed to the control valve pa5 and pa9 ports.
At the same time, the cushion valve cushion spool is switched to the left.
The arm-in side oil pushed out from the control valve pb9 and pb5 ports passes from the cushion valve B port through the cushion spool switched to the left and returns to the hydraulic oil tank.
At this time, the warmed oil from the return line enters the remote control valve through the cushion spool from the cushion valve R port and returns to the hydraulic oil tank, so heat performance is improved.

Pressure line
Tank line
Pilot pressure line
Pilot tank line
Electric line

1	Arm (in)	9	5 stack solenoid valve
2	Arm (out)	10	Control valve
3	Cushion spool	11	Arm (1)
4	Orifice	12	Arm (2)
5	Check valve	13	Console lever lock switch
6	Cushion valve	14	Hydraulic pump
7	Remote control valve (arm, swing)	15	Check valve
8	Lever lock	16	Oil cooler

https://truckmanualshub.com/

Overall View

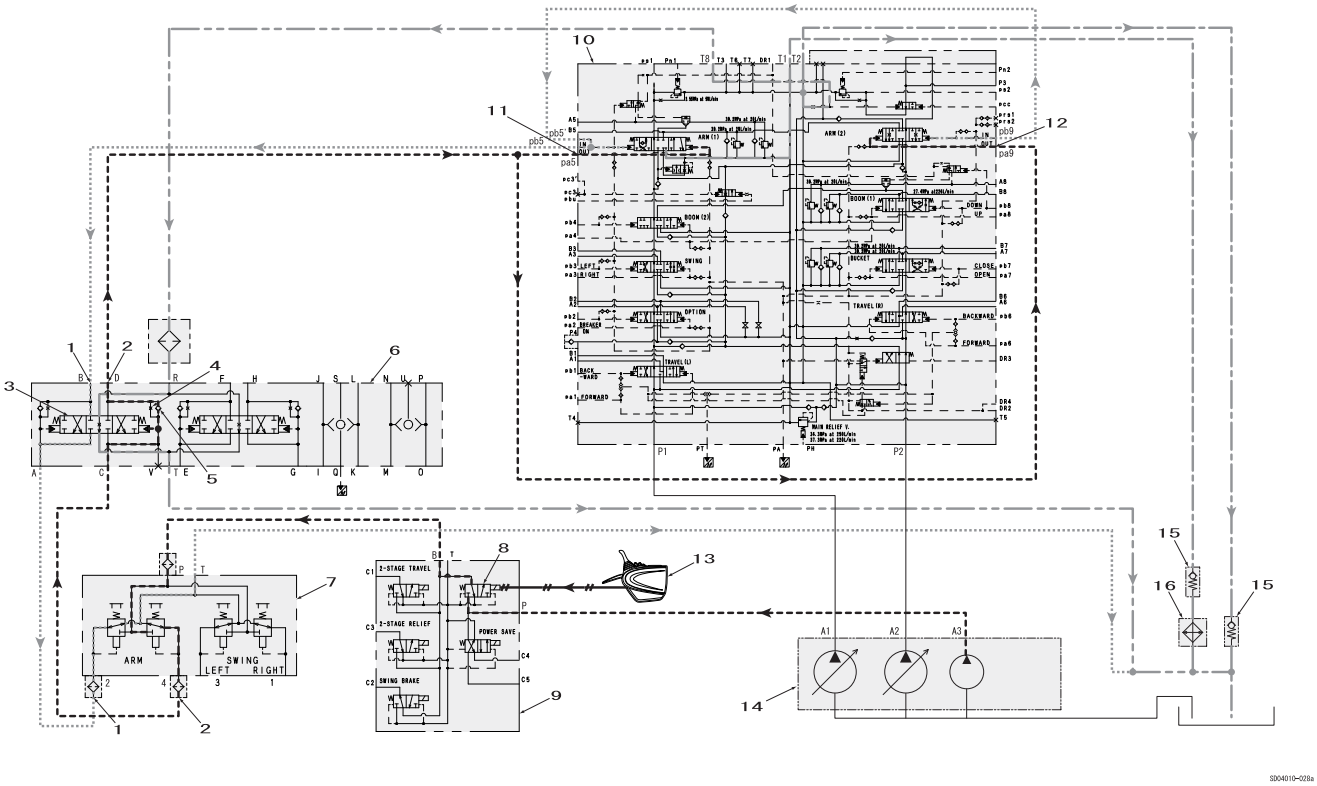

Enlarged View

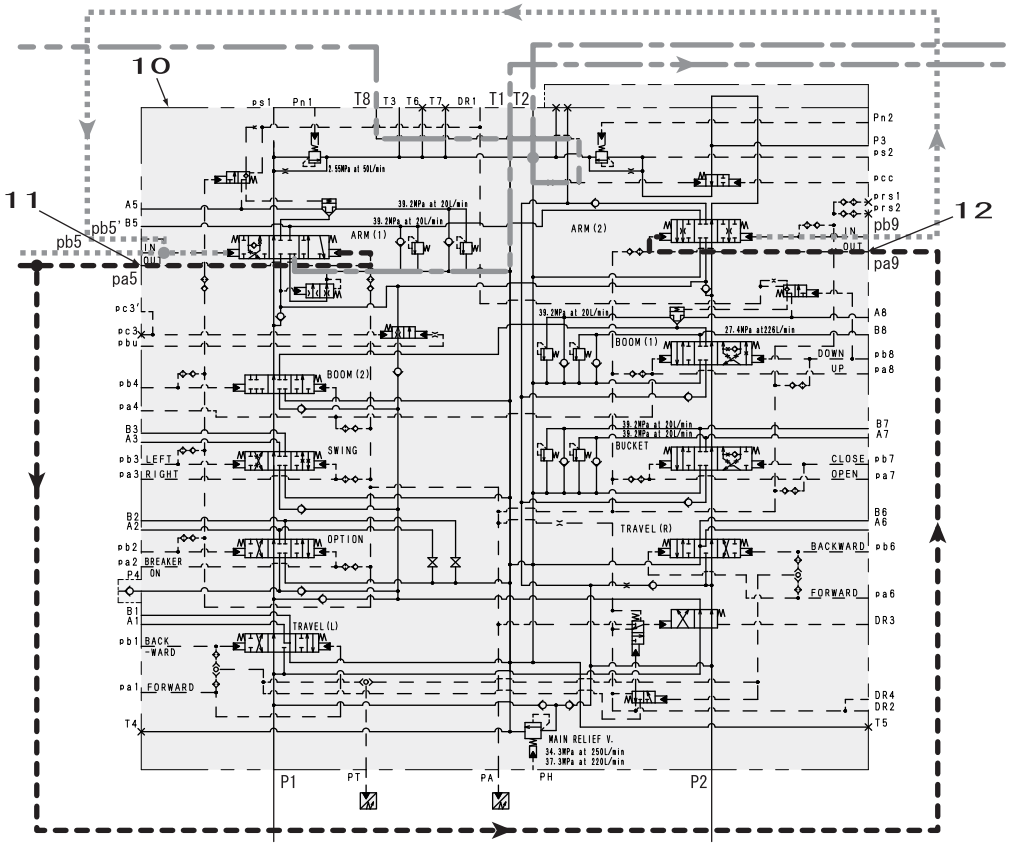

https://truckmanualshub.com/

Other Circuits

Cushion circuit (arm-out operation stopped)

When the remote control valve arm-out operation is returned to neutral, the oil pushed out from the control valve pa5 and pa9 ports flows to the cushion valve D port through the cushion orifice and returns from the remote control valve to the hydraulic oil tank.
Through this orifice, the arm spool moves to the neutral position without returning sharply, so the cushioning is improved.

Pressure line
Tank line
Pilot pressure line
Pilot tank line
Electric line

1	Arm (in)	9	Control valve
2	Arm (out)	10	Arm (1)
3	Cushion spool	11	Arm (2)
4	Orifice	12	Console lever lock switch
5	Cushion valve	13	Hydraulic pump
6	Remote control valve (arm, swing)	14	Check valve
7	Lever lock	15	Oil cooler
8	5 stack solenoid valve		

https://truckmanualshub.com/

Overall View

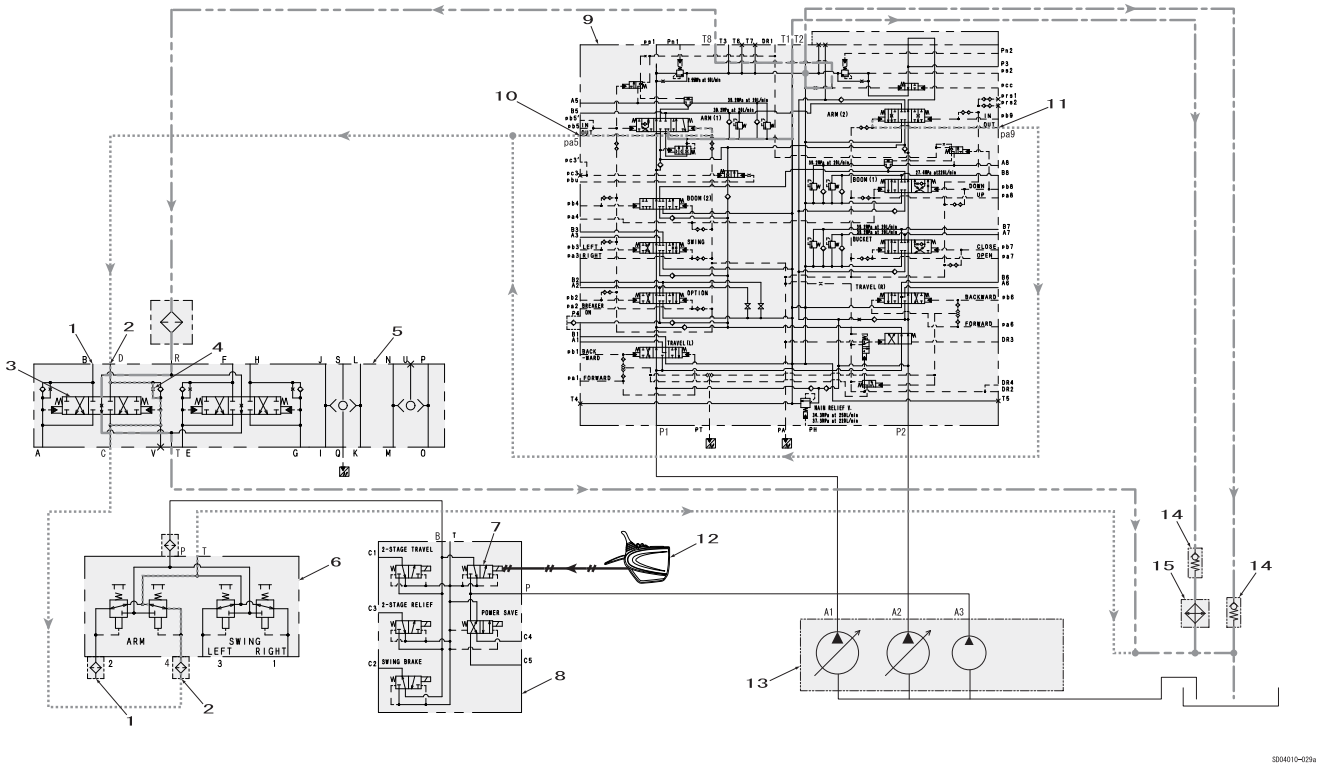

Enlarged View

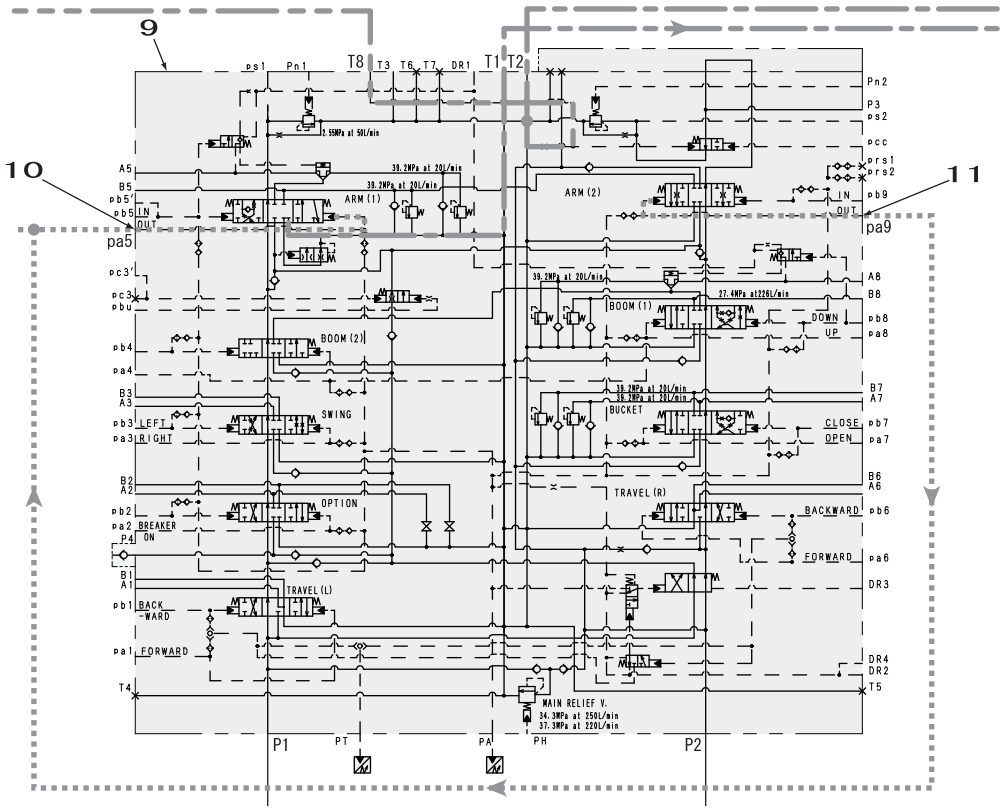

https://truckmanualshub.com/

Other Circuits

Cushion circuit (arm-out → arm-in operation)

When the lever is operating all at once from an arm-out operation to an arm-in operation (arm rattling operation), the pilot pressure oil is fed from the remote control valve 2 port into the cushion valve A port, pushes up the internal check valve, and reaches the control valve pb5 port and pb9 port.
At the same time, the cushion valve cushion spool is switched to the right.
At this time, the oil pushed out from the pa5 and pa9 ports does not pass through the cushion orifice, but passes through the cushion spool that has been switched to the right and returns to the hydraulic oil tank, so response is improved.

Pressure line
Tank line
Pilot pressure line
Pilot tank line
Electric line

1	Arm (in)	9	Control valve
2	Arm (out)	10	Arm (1)
3	Cushion spool	11	Arm (2)
4	Orifice	12	Console lever lock switch
5	Cushion valve	13	Hydraulic pump
6	Remote control valve (arm, swing)	14	Check valve
7	Lever lock	15	Oil cooler
8	5 stack solenoid valve		

https://truckmanualshub.com/

Overall View

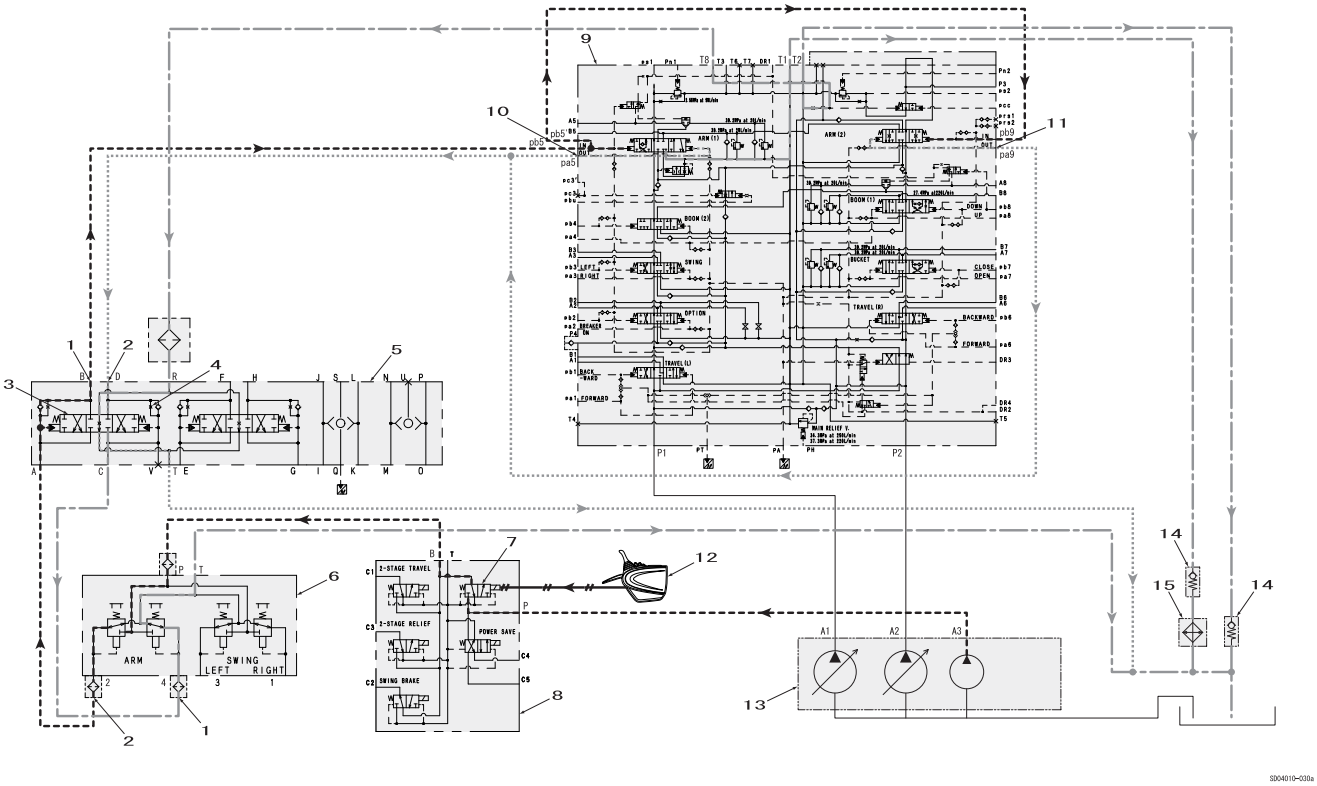

Enlarged View

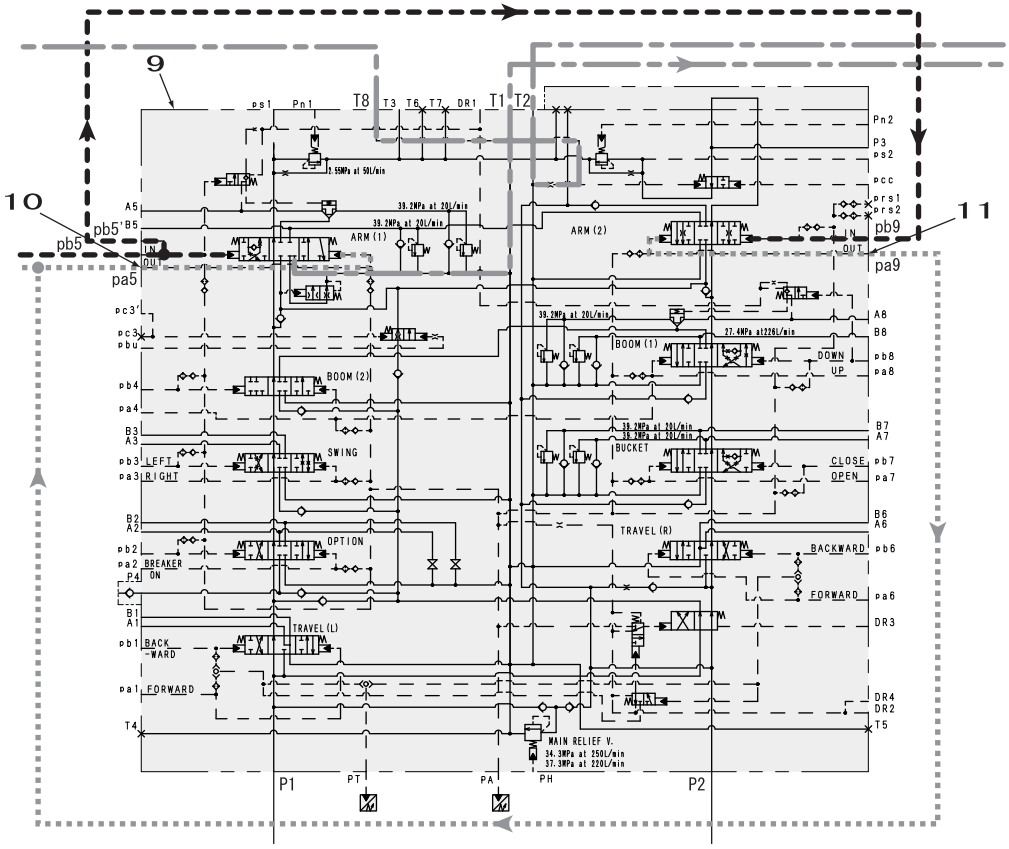

https://truckmanualshub.com/

Other Circuits

Heat circuit (lever in neutral)

The pilot line is equipped with a heat circuit to prevent response delay at low temperatures.
When the remote control valve operation lever is set to neutral, the discharge oil from hydraulic pumps A1 and A2 goes from the control valve P1 and P2 ports through the center bypass oil path, and returns to the hydraulic oil tank.
The pressurized oil from the control valve T8 port is fed to the cushion valve R port and returns through the cushion spool to the hydraulic oil tank.
By circulating the oil inside the cushion spool, the temperature of the oil in the cushion valve is raised to improve heat performance.

Pressure line
Tank line
Pilot pressure line
Pilot tank line
Electric line

1	Arm (in)	7	Control valve
2	Arm (out)	8	Console lever lock switch
3	Cushion valve	9	Hydraulic pump
4	Remote control valve (arm, swing)	10	Check valve
5	Lever lock	11	Oil cooler
6	5 stack solenoid valve		

https://truckmanualshub.com/

Overall View

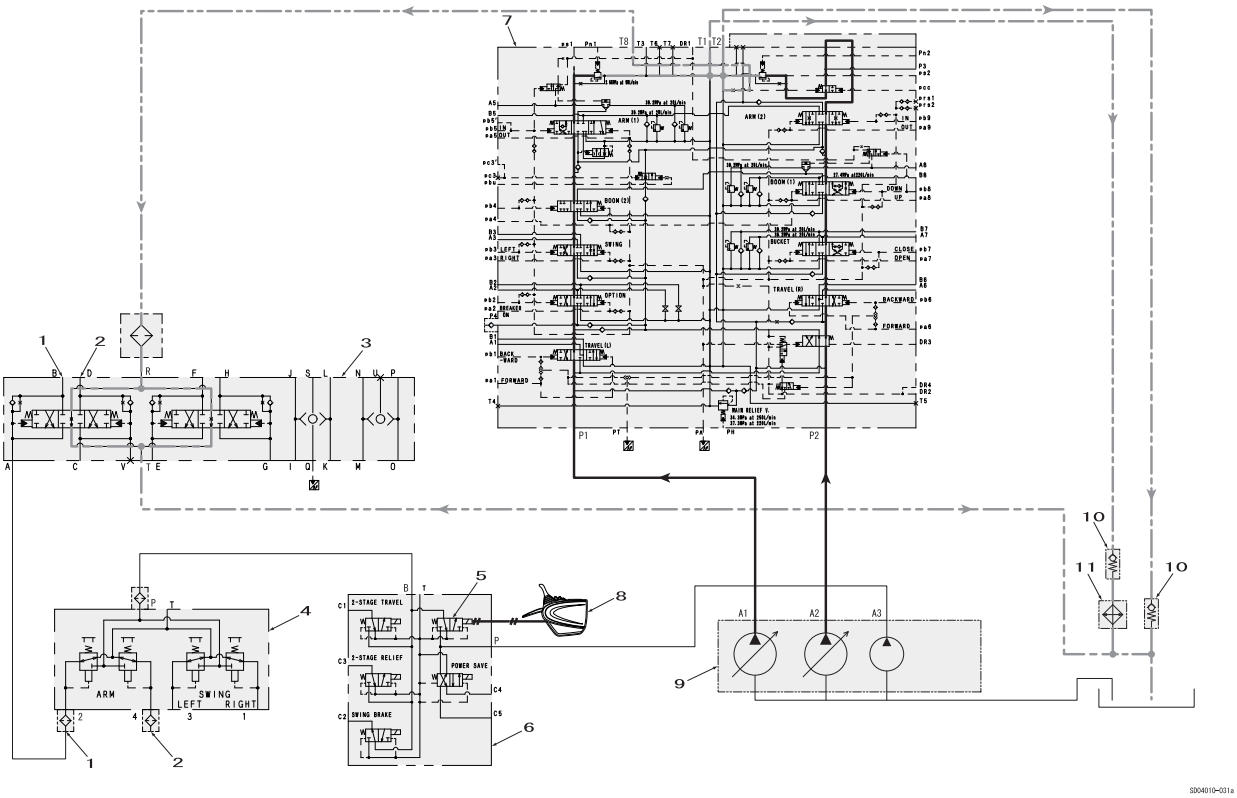

Enlarged View

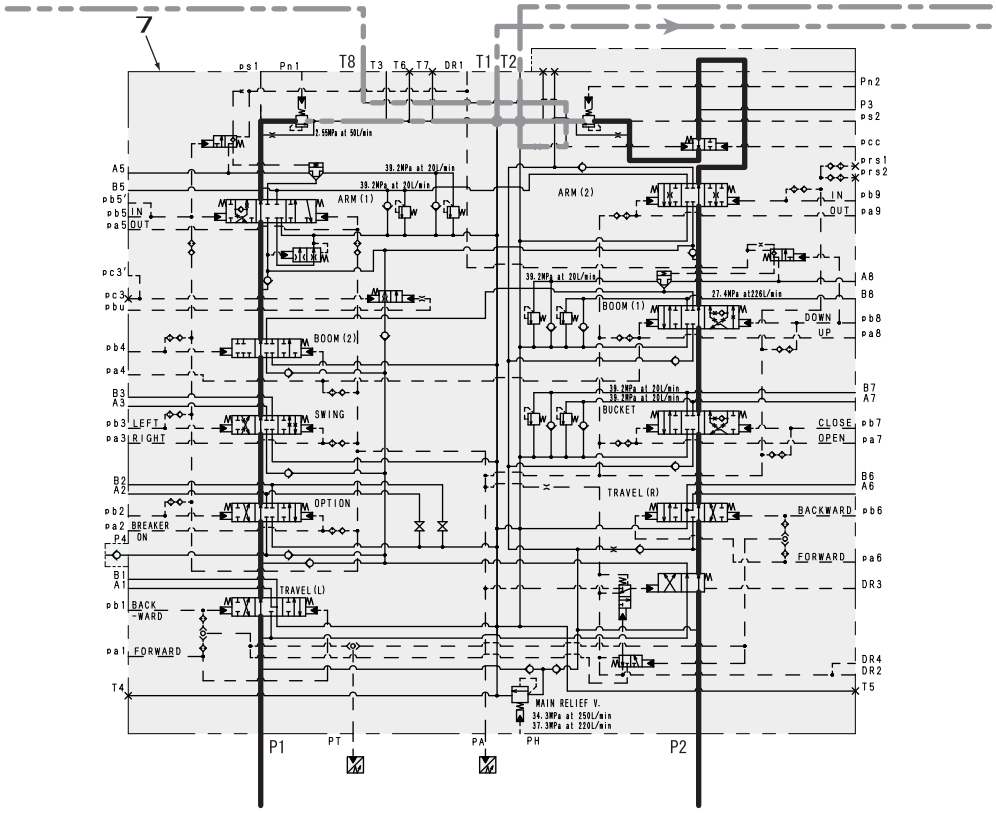

https://truckmanualshub.com/

Other Circuits

Auto pressure boost circuit (bucket close)

When an attachment is operated, this circuit boosts the control valve main relief set pressure from 34.3 MPa to 37.3 MPa according to the engine load ratio and hydraulic load pressure, then ends the pressure boost after 8 sec.

As an example, this section explains bucket-close operations.

By moving the remote control valve to the bucket-close side, the pilot pressure oil is fed via the cushion valve to the control valve pb7 port and switches the bucket spool to the close side.

At the same time, the output signal from the upper pilot pressure sensor that detected the pressurized oil separated from the pilot internal path is input to computer A, which judges that there is upper operation. Furthermore, computer A judges that there is a boost in the main pump P1 and P2 pressure, outputs the ON (24 V) signal to the pressure boost relief solenoid, switches the valve, and the pilot pressure oil is fed to the control valve main relief valve PH port to hold the pressure boost relief set pressure for 8 sec.

There is no boost for the option circuit and during travel operation.

Pressure line
Tank line
Pilot pressure line
Pilot tank line
Electric line

1	Cushion valve	11	Upper pilot pressure sensor
2	Bucket (close)	12	Console lever lock switch
3	Bucket (open)	13	Digging force incresed
4	Remote control valve (boom, bucket)	14	Monitor display
5	Lever lock	15	Computer A
6	Boost pressure relief	16	P1 pressure sensor
7	5 stack solenoid valve	17	P2 pressure sensor
8	Control valve	18	Hydraulic pump
9	Bucket	19	Check valve
10	Bucket cylinder	20	Oil cooler

https://truckmanualshub.com/

Overall View

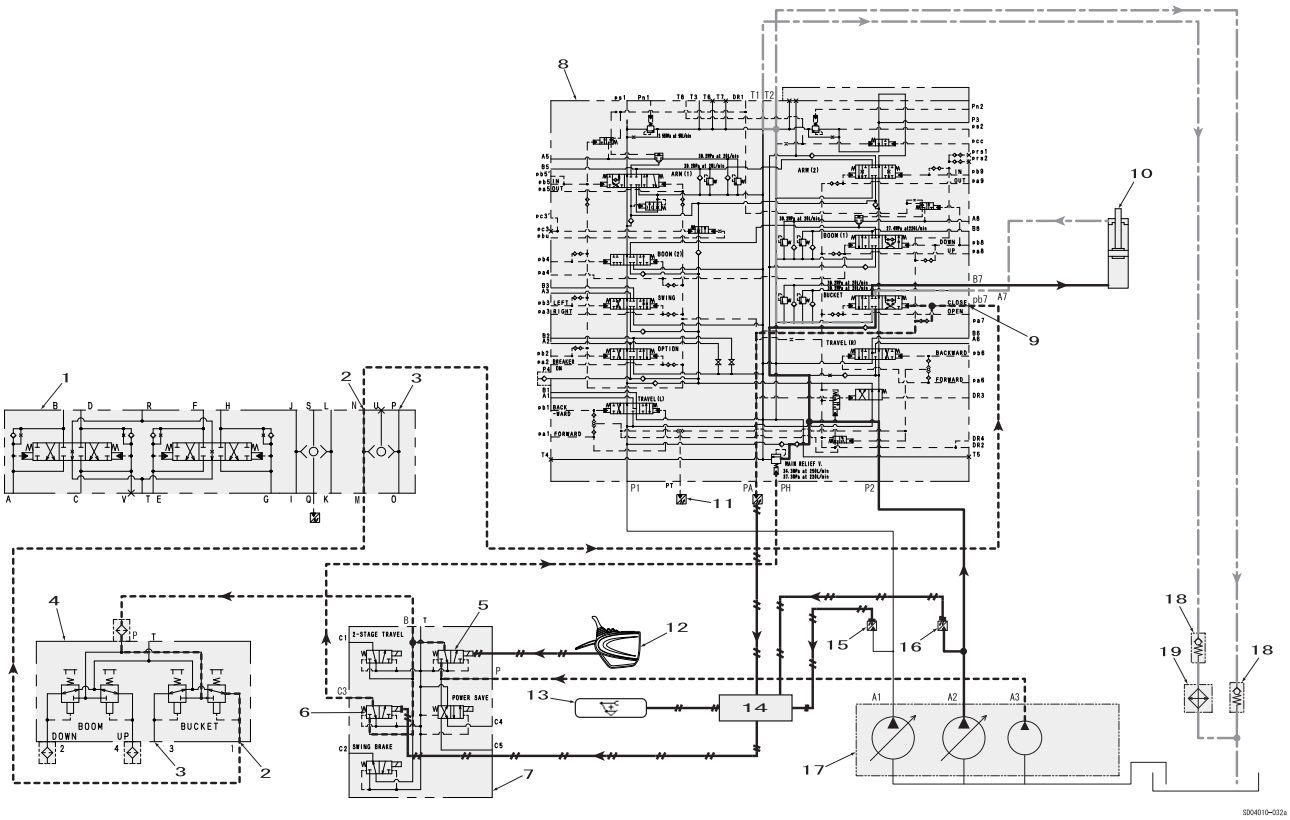

Enlarged View

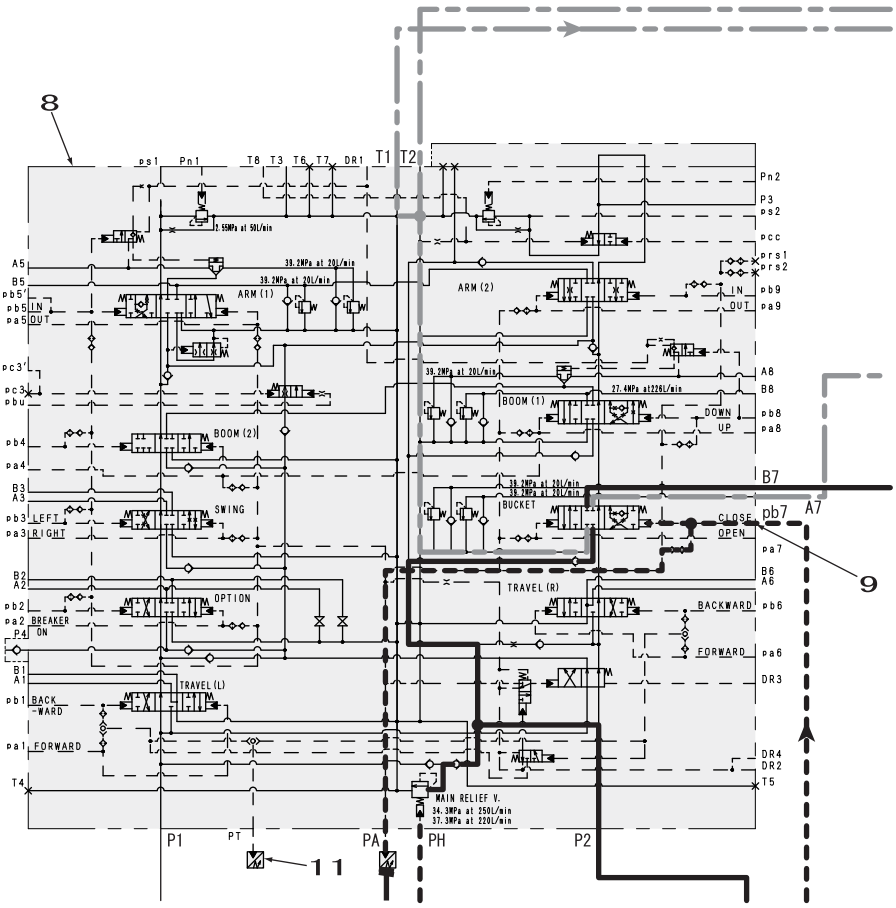

https://truckmanualshub.com/

Explanation of Hydraulic Circuit and Operations (option)

Option Circuits

Breaker circuit (independent operation)

By operating the option remote control valve to the breaker side, the pilot pressure oil is fed to the control valve pa2 port and switches the option spool.
The discharge oil from hydraulic pump A1 is fed from the control valve P1 port through the parallel oil path and fed to the option spool. Switching the spool lets the oil flow from the relief valve A port through the B port and into the breaker.
The breaker set pressure is set by this relief valve.
At this time, the option pilot pressure switch signal is detected, the P1 flow control proportional valve is controlled by the output signals from the computer A to adjust the discharge flow.
The return oil from the breaker goes through the manifold and returns to the hydraulic oil tank.
Because the breaker operating flow can be set to 5 levels on the service support screen of the monitor display with the ON signal from the breaker switch in the cab, the optimum operating flow can be selected.

Pressure line
Tank line
Pilot pressure line
Pilot tank line
Electric line

1	Control valve	12	Console lever lock switch
2	Manifold	13	Lever lock
3	Relief valve	14	5 stack solenoid valve
4	Breaker	15	P1 pressure sensor
5	Travel pilot pressure sensor	16	P2 pressure sensor
6	Upper pilot pressure sensor	17	N1 negative control pressure sensor
7	Computer A	18	N2 negative control pressure sensor
8	Monitor display	19	P1 flow control proportional valve
9	Breaker switch	20	Hydraulic pump
10	Option remote control valve	21	Check valve
11	Option pilot pressure switch	22	Oil cooler

https://truckmanualshub.com/

Overall View

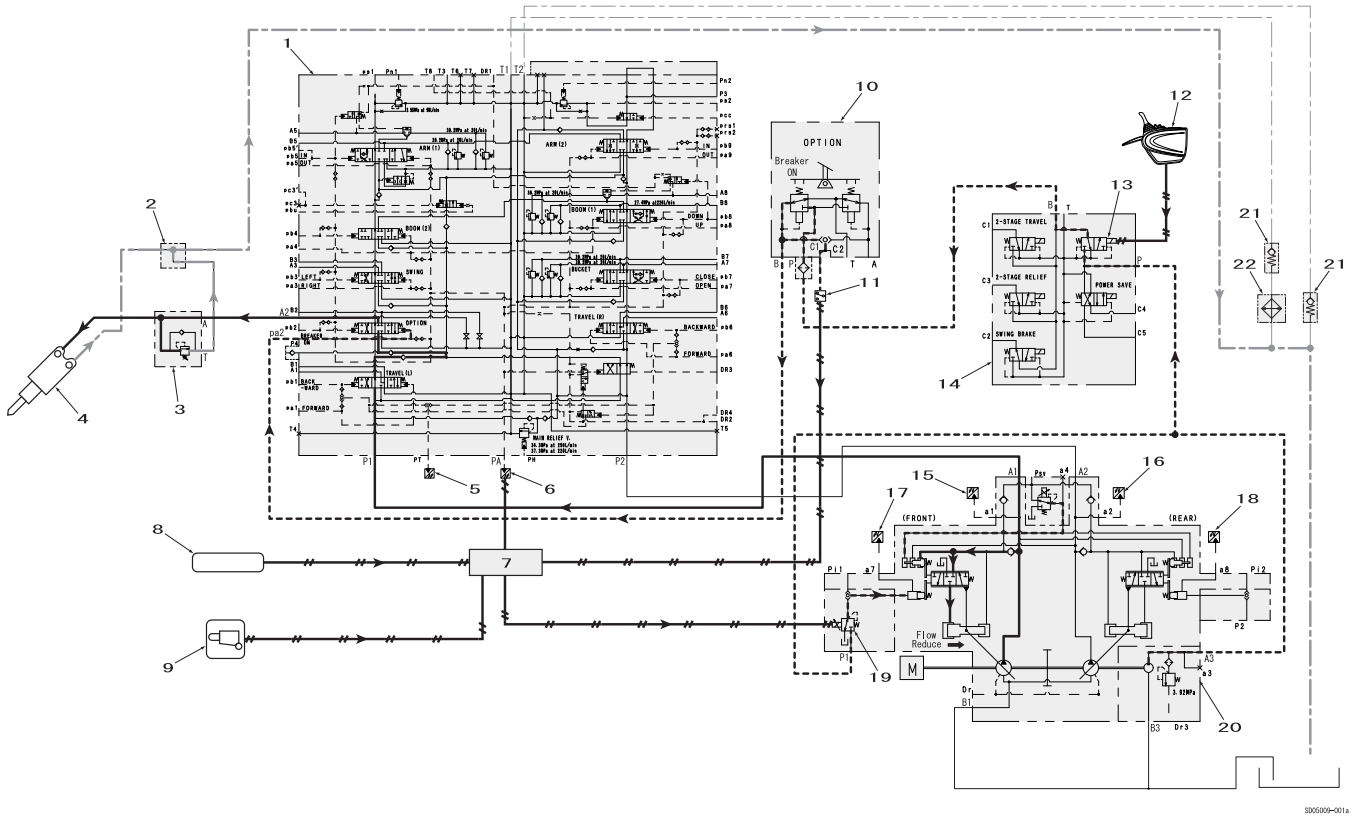

Enlarged View

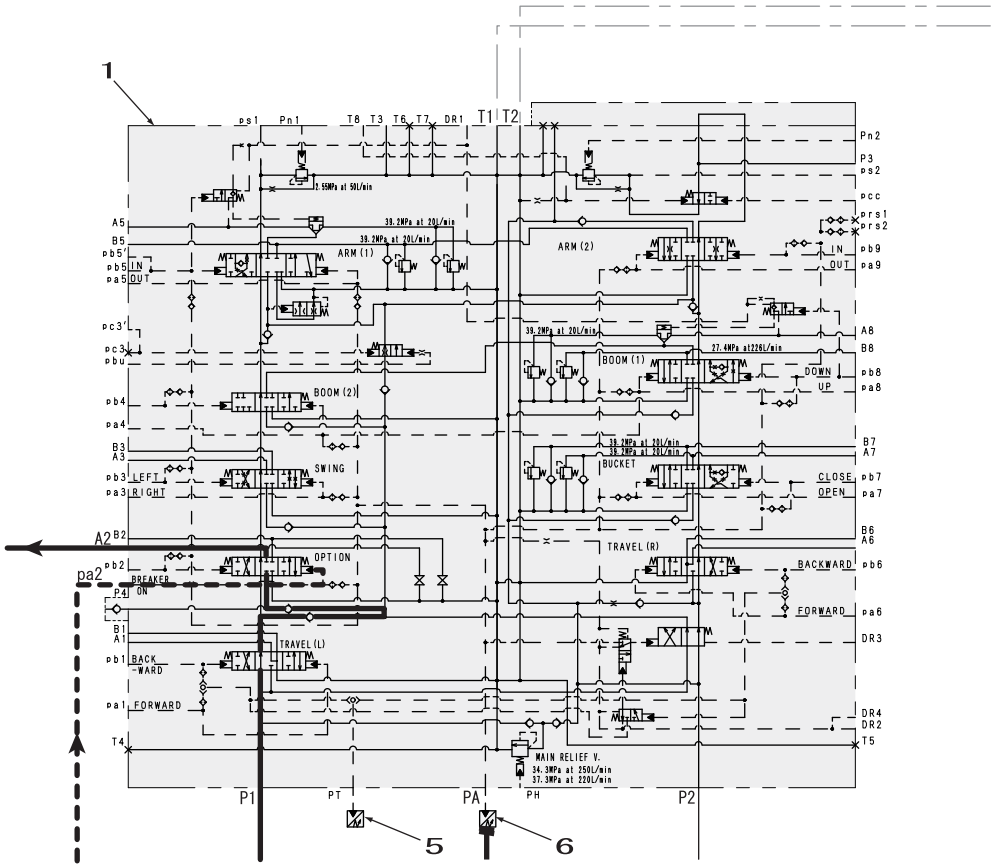

https://truckmanualshub.com/

Explanation of Hydraulic Circuit and Operations (option)

Double-acting circuit (hydraulic fork)

As an example, this section explains the case in which the hydraulic fork attachment is used.
By operating the option remote control valve to the fork close side, the pilot pressure oil is fed to the control valve pa2 port and switches the option spool to the close side.
The discharge oil from hydraulic pump A1 enters the control valve P1 port, is fed from the parallel oil path to the option spool, flows into the hydraulic fork because of the option spool switching and operates to the close side.
At this time, the option pilot pressure switch signal is detected and the auto idle function is released.
The return oil from the hydraulic fork goes through the option spool and returns to the hydraulic oil tank.

Pressure line
Tank line
Pilot pressure line
Pilot tank line
Electric line

1	Control valve	8	5 stack solenoid valve
2	Hydraulic fork	9	Console lever lock switch
3	Travel pilot pressure sensor	10	Hydraulic pump
4	Upper pilot pressure sensor	11	Option remote control valve
5	Monitor display	12	Option pilot pressure switch
6	Computer A	13	Check valve
7	Lever Lock	14	Oil cooler

https://truckmanualshub.com/

Overall View

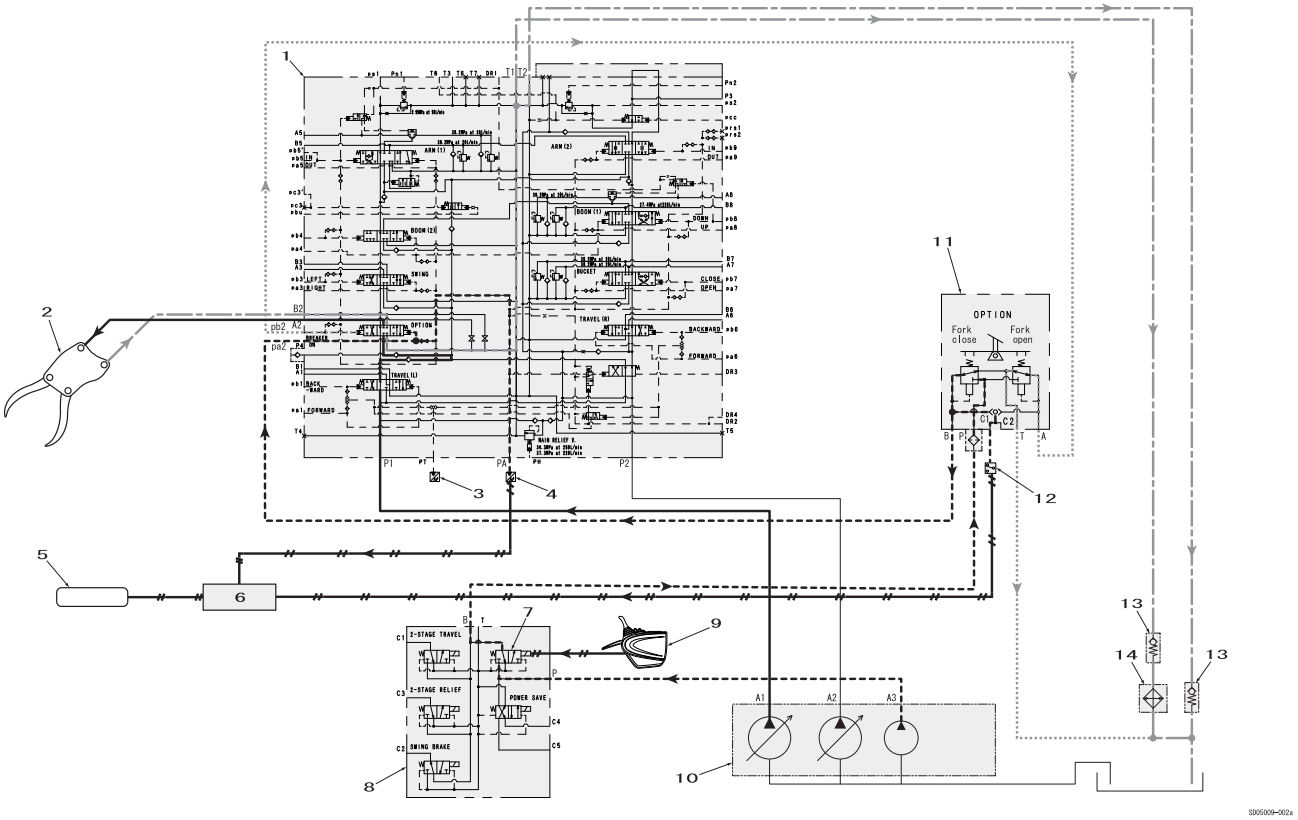

Enlarged View

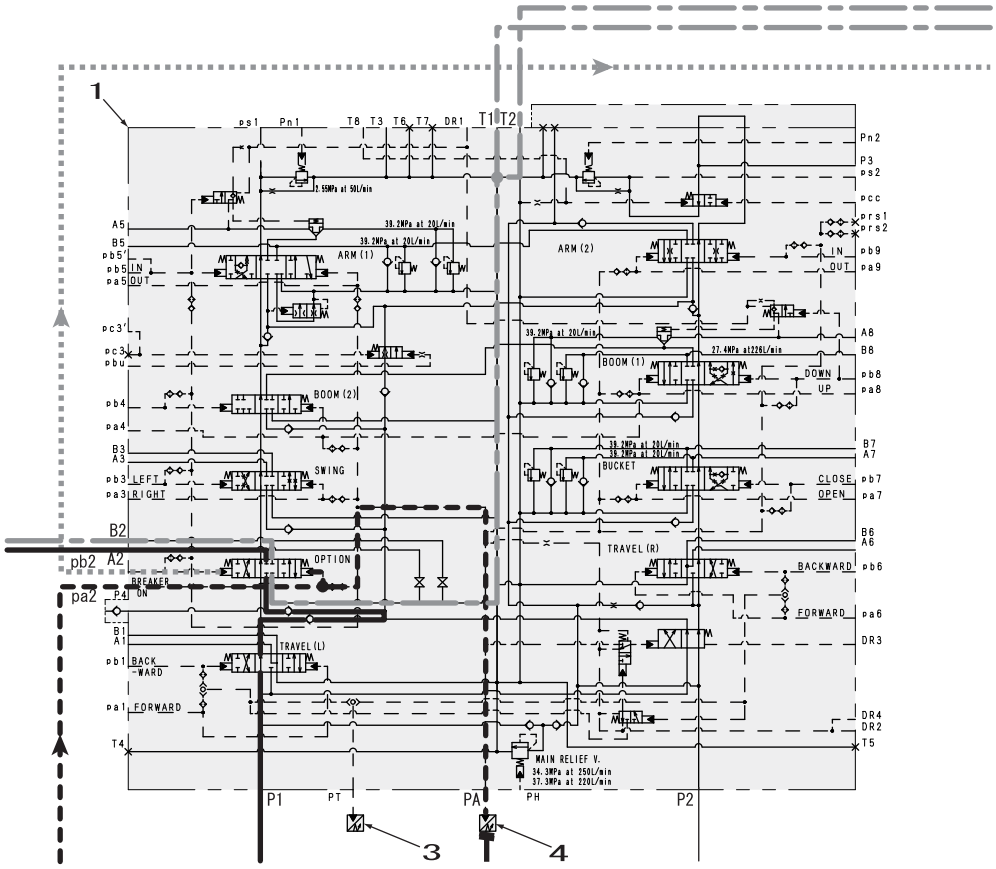

https://truckmanualshub.com/

Multi-purpose circuit (breaker Q control)

When the switch in the cab is flipped to the breaker side, the ON signal (24 V) is output from the computer A to the option switchover solenoid valve to switch the valve.
The pilot pressure oil flows from the option switchover solenoid valve B1 port to the A1 port and is fed to the 3-direction valve PP port and shut-off valve PP port and each valve is switched.
Always switch the 2 pumps flow select switch to the 1 pump side.
By operating the option remote control valve to the breaker side, the pilot pressure oil is fed to the control valve pa2 port and switches the option spool.
The discharge oil from hydraulic pump A1 is fed from the control valve P1 port through the parallel oil path and fed to the option spool. Switching the spool lets the oil flow from the shut-off valve A port through the B port and into the breaker.
The breaker set pressure is set by the relief valve built into the shut-off valve.
At this time, the option pilot pressure switch signal is detected, the P1 flow control proportional valve is controlled by the output signals from the computer A to adjust the discharge flow.
The return oil from the breaker returns from the 3-direction valve A1 port through the T1 port and to the hydraulic oil tank.
Because the breaker operating flow can be set to 5 levels on the service support screen of the monitor display, the optimum operating flow can be selected.

Pressure line
Tank line
Pilot pressure line
Pilot tank line
Electric line

1	Control valve	12	Lever lock
2	3-direction valve	13	5 stack solenoid valve
3	Shut-off valve	14	Horsepower control proportional valve
4	Breaker	15	P1 pressure sensor
5	Option remote control valve	16	P2 pressure sensor
6	Option pilot pressure switch	17	N1 negative control pressure sensor
7	Multi-purpose circuit switch	18	N2 negative control pressure sensor
8	Computer A	19	P1 flow control proportional valve
9	Monitor display	20	Hydraulic pump
10	Option switchover solenoid valve	21	Check valve
11	Console lever lock switch	22	Oil cooler

https://truckmanualshub.com/

Overall View

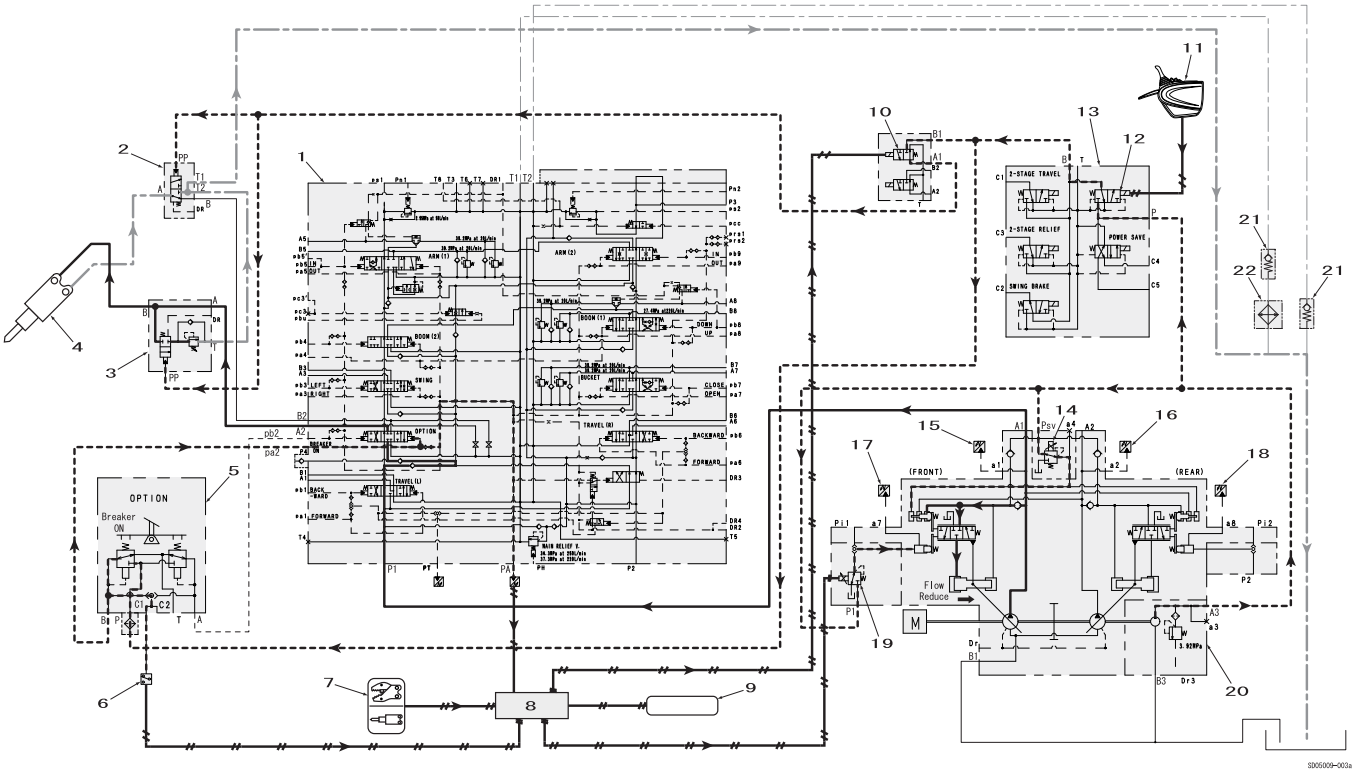

Enlarged View

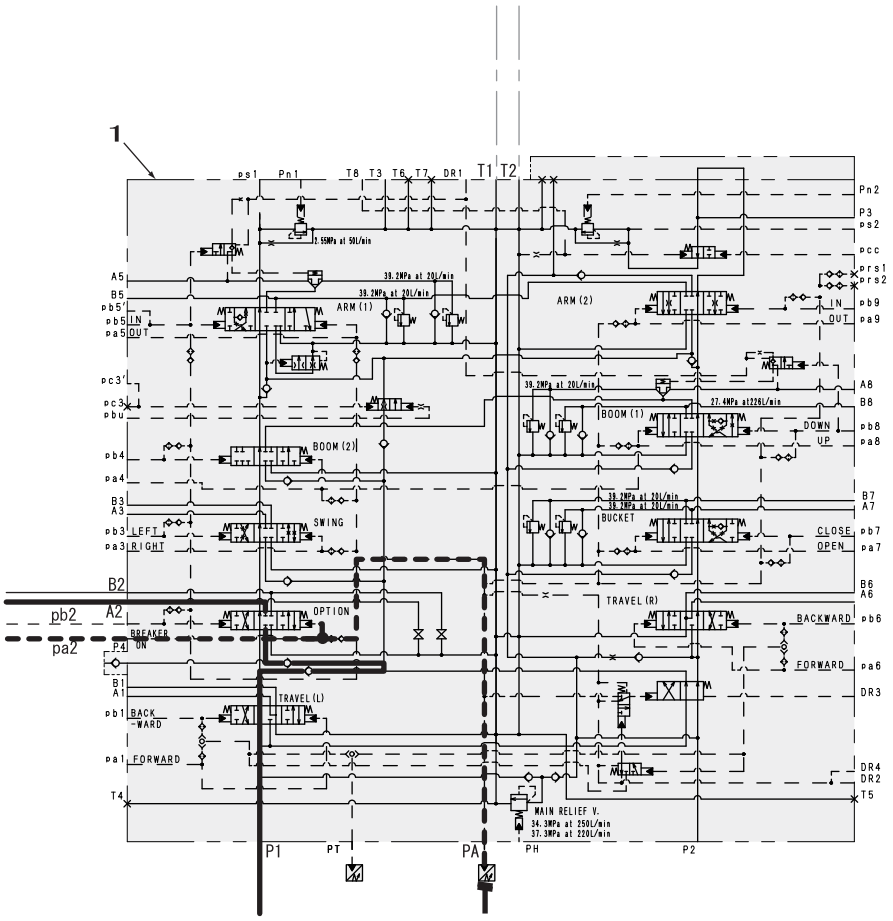

https://truckmanualshub.com/

Multi-purpose circuit (2 pumps flow crusher)

When the 2 pumps flow select switch in the cab is flipped to the 2 pumps flow side, the ON signal (24 V) is output from the computer A to the 2 pumps flow solenoid valve to switch the valve.
When the multi-purpose circuit switch is flipped to the crusher side, the crusher circuit is formed without outputting a signal from the computer A to the option switchover solenoid valve and without switching the valve.
At this time, the pilot signal does not go to the 3-direction valve or to the shut-off valve and the 3-direction valve forms the A ⇔ B circuit.
By operating the option remote control valve to the crusher close side, the pilot pressure oil is fed to the control valve pa2 port and switches the option spool.
At the same time, the pilot pressure oil flows from the solenoid valve for 2 pumps flow B2 port to the A2 port and is fed to the control valve pcc port and the control valve neutral cut valve is switched.
The discharge oil from hydraulic pump A2 enters the control valve P2 port and goes through the center bypass oil path and since the neutral cut valve has closed the port to the tank, the oil goes from the P3 port via the P4 port and merges on the upstream side of the option spool.
The discharge oil from hydraulic pump A1 is fed from the control valve P1 port through the parallel oil path and fed to the option spool. Switching the spool lets the oil flow from the shut-off valve A port through the B port and into the crusher.
At this time, the option pilot pressure switch signal is detected, the P1 flow control proportional valve is controlled by the output signals from the computer A to adjust the discharge flow.
The return oil from the crusher returns from the 3-direction valve A port through the B port and the option spool and returns to the hydraulic oil tank.
Because the crusher operating flow can be set to 5 levels on the service support screen of the monitor display, the optimum operating flow can be selected.

Pressure line
Tank line
Pilot pressure line
Pilot tank line
Electric line

1	3-direction valve	10	Monitor display	19	5 stack solenoid valve
2	Shut-off valve	11	Computer A	20	Console lever lock switch
3	Crusher	12	Multi-purpose circuit switch	21	Horsepower control proportional valve
4	Option switchover solenoid valve	13	2 pumps flow select switch	22	P1 pressure sensor
5	2 pumps flow solenoid valve	14	Control valve	23	P2 pressure sensor
6	Option remote control valve	15	Neutral cut valve	24	N1 negative control pressure sensor
7	Check valve	16	Travel pilot pressure sensor	25	N2 negative control pressure sensor
8	Oil cooler	17	Upper pilot pressure sensor	26	P1 flow control proportional valve
9	Option pilot pressure switch	18	Lever lock	27	Hydraulic pump

https://truckmanualshub.com/

Overall View

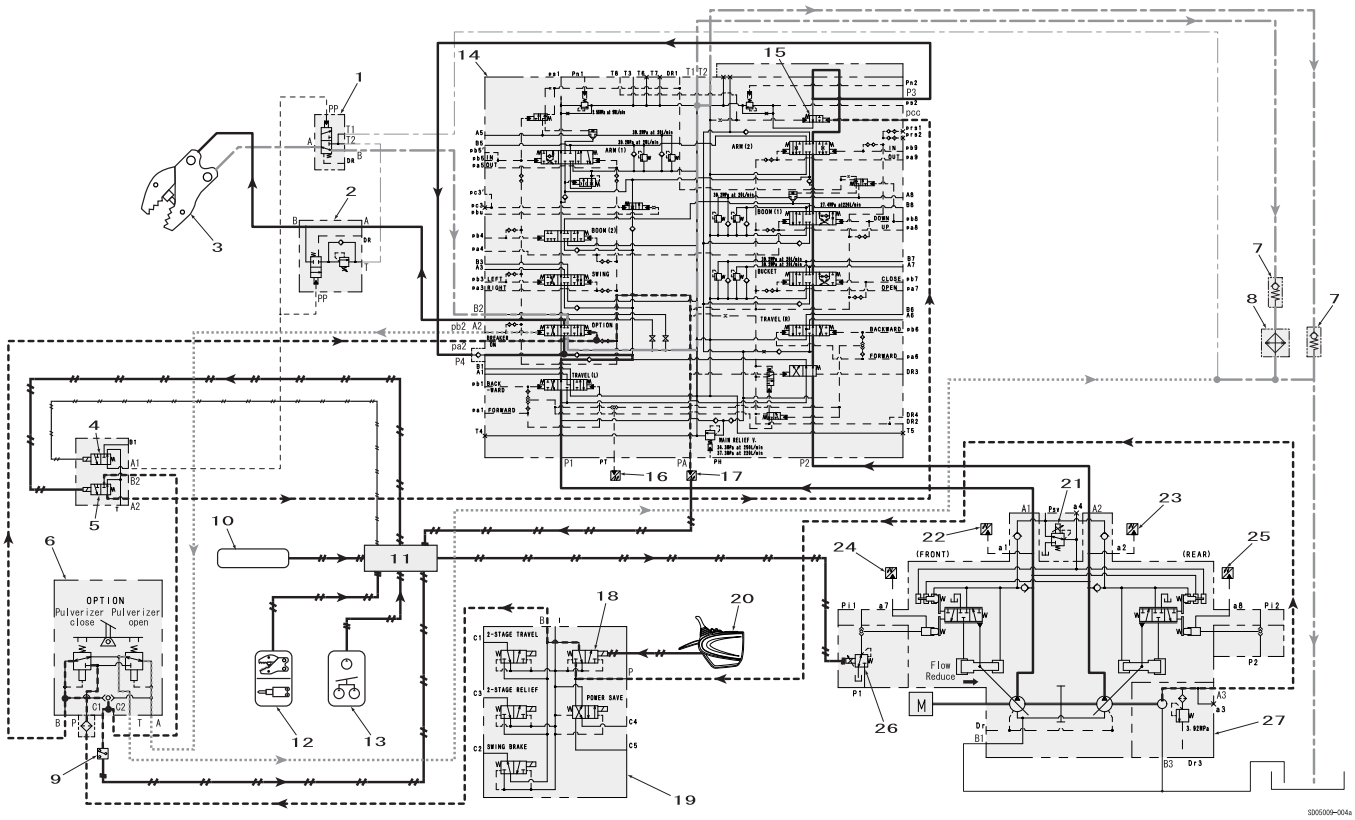

Enlarged View

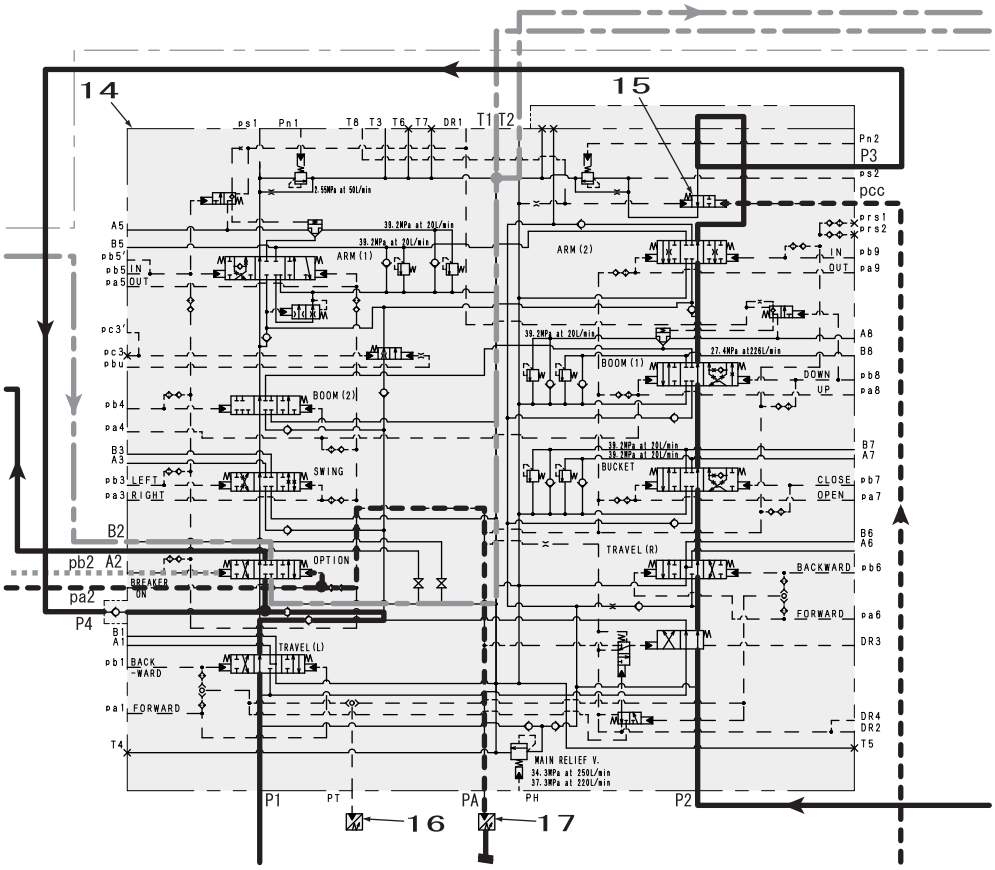

https://truckmanualshub.com/

2nd option circuit (hydraulic rotation fork)

As an example, this section explains the case in which the hydraulic rotation fork attachment is used.

By operating the 2nd option remote control valve to the right swing side, the pilot pressure oil is fed to the control valve par2 port.

The 4th hydraulic pump OUT discharge oil is fed to the control valve Pr port, goes through the 2nd option spool and flows to the hydraulic rotation fork to operate to the right swing side.

At this time, the 2nd option pilot pressure switch signal is detected and the auto idle function is released.

The return oil from the hydraulic rotation fork goes through the 2nd option spool and returns to the hydraulic oil tank.

The oil in the 2nd option drain line returns to the hydraulic oil tank without going through the control valve.

Pressure line
Tank line
Pilot pressure line
Pilot tank line
Electric line

1	Control valve	9	Oil cooler
2	Travel pilot pressure sensor	10	Hydraulic rotation fork
3	Upper pilot pressure sensor	11	2nd option pilot pressure switch
4	Lever lock	12	Monitor display
5	5 stack solenoid valve	13	Computer A
6	Console lever lock switch	14	4th pump
7	2nd option remote control valve	15	Hydraulic pump
8	Check valve		

https://truckmanualshub.com/

Overall View

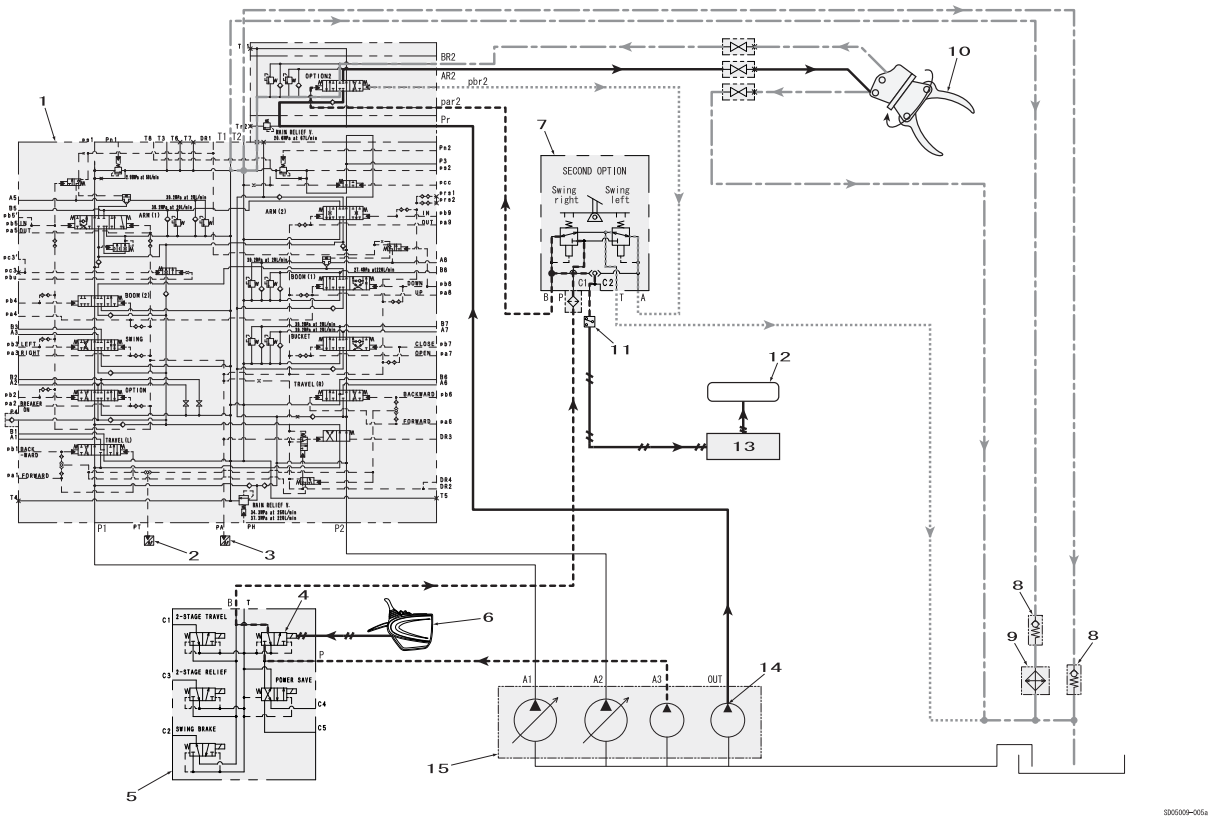

Enlarged View

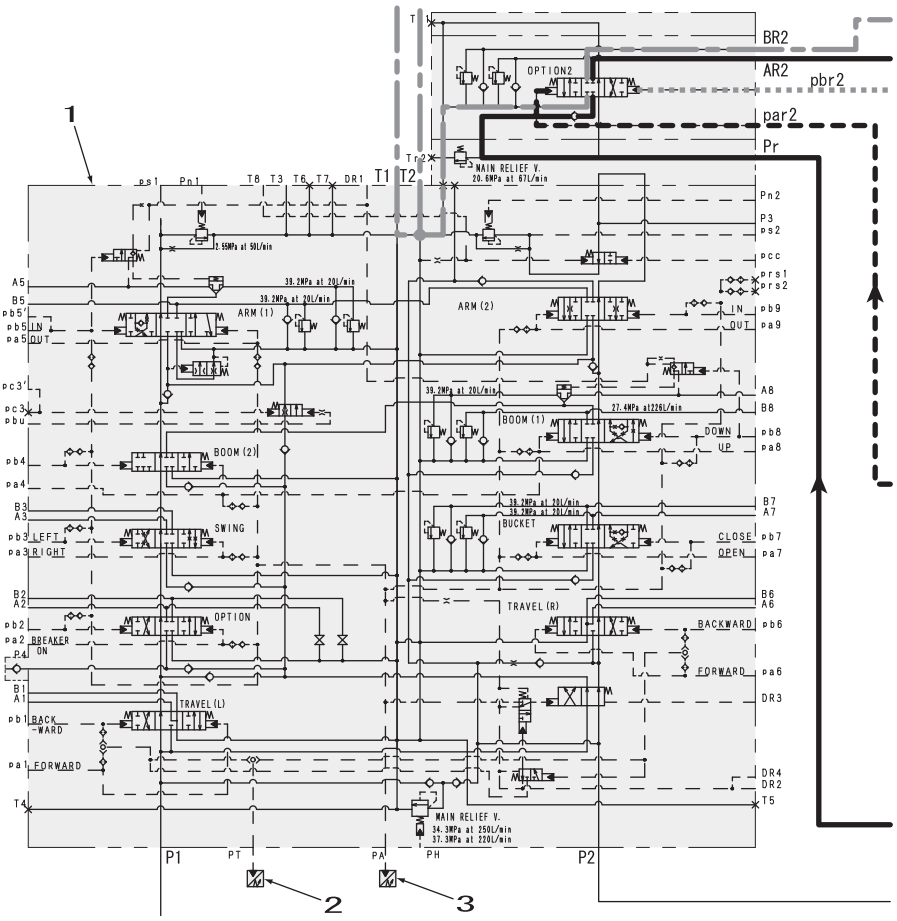

https://truckmanualshub.com/

Pump

1. Hydraulic Pump

(1) Structure and operation explanation

This pump has a structure in which 2 pumps are coupled by the 1st gear (116) and the 2 pumps can be driven at the same time through the rotation of the power source being transmitted to the drive shaft F (111) on the front side. The oil suction and discharge port are located in the connection section of the 2 pumps (specifically, the valve block (312)), and the suction port is used in common by the front pump and rear pump. Pump structure and operation principles are the same for the front and rear pumps. The front pump is explained below.

The pump can be roughly divided into the rotary group, which is the main part of the pump that performs rotation, the swash plate group, which changes the discharge flow, and the valve cover group, which switches between oil suction and discharge.

The rotary group is made up of the drive shaft F (111), cylinder block (141), piston shoes (151), (152), holder plate (153), spherical bushing (156), and cylinder spring (157). The drive shaft is supported at both ends with bearings (123), (124). Along with being caulked to the piston to form a spherical joint, the shoe has a pocket section for balancing the hydraulic pressure in order to reduce the thrust force generated by the load pressure and allow the shoe to slide lightly on the shoe plate (211). The piston shoe sub-group is pressed against the shoe plate by the cylinder spring via the holder plate and spherical bushing so that it can slide smoothly on the shoe plate. Also, the cylinder block is pressed against the valve plate (314) by the cylinder spring in the same way.

The swash plate group comprises the swash plate (212), shoe plate (211), swash plate support board (251), tilting bushing (214), tilting pin (531), and servo piston (532). The swash plate is supported by the swash plate support board at the cylindrically shaped section formed by the opposite side of the shoe sliding surface. By leading the hydraulic pressure force controlled by the regulator into the hydraulic pressure chambers on both sides of the servo piston, the servo piston moves left and right. This moves the swash plate on the swash plate support board via the tilting pin spherical section and changes the tilting angle (α).

The valve cover group comprises the valve block (312), valve plates (313), (314), and valve plate pin (885). The valve plate, which has 2 oval-shaped ports, is installed on the valve block. Its function is to feed oil to the cylinder block and recover it from the cylinder block. The oil switched by the valve plate is connected through the valve block to the outside lines.

Now when the drive shaft is driven by the power source (motor, engine, etc.), the cylinder block is also rotated at the same time via the spline coupling. When the swash plate tilts, the piston located at the center of the cylinder block moves reciprocally relative to the cylinder while turning with the cylinder block.

Therefore, if just one piston is looked at, during one cylinder block rotation the piston moves away from the valve plate (oil intake stroke) for 180° and then moves toward the valve plate (oil discharge stroke) for the remaining 180°. When the swash plate tilting angle is 0°, the piston does not move through a stroke and oil is not discharged.

https://truckmanualshub.com/

(2) Hydraulic pump internal structure diagram

Overall View

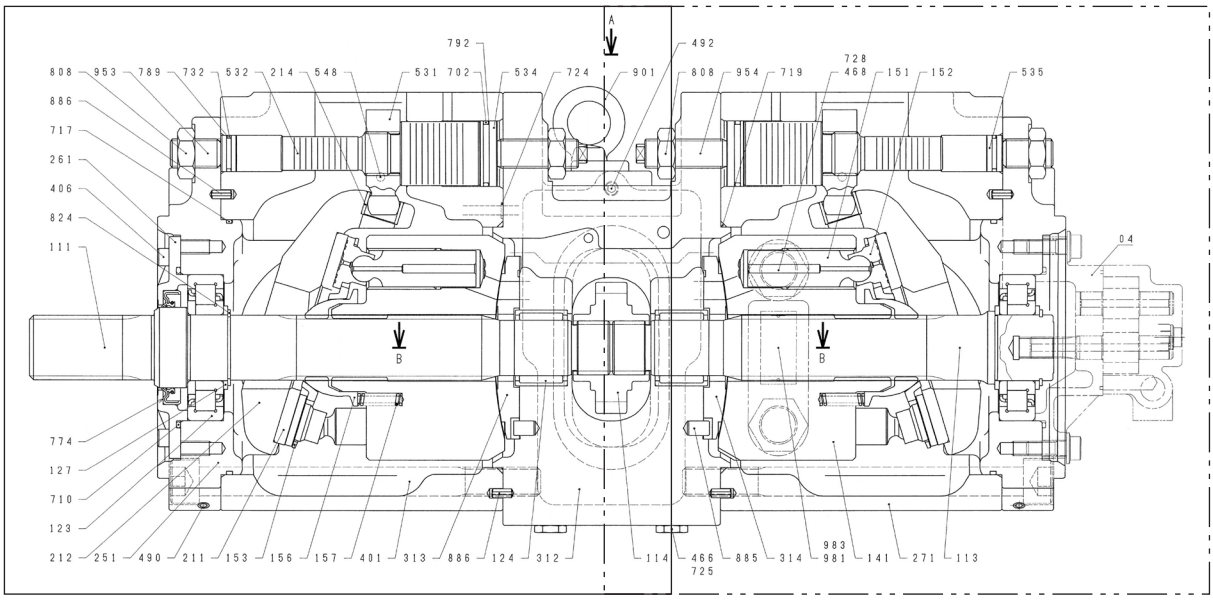

SD02009-032

Drive shaft front side

Drive shaft rear side

Drive shaft front side

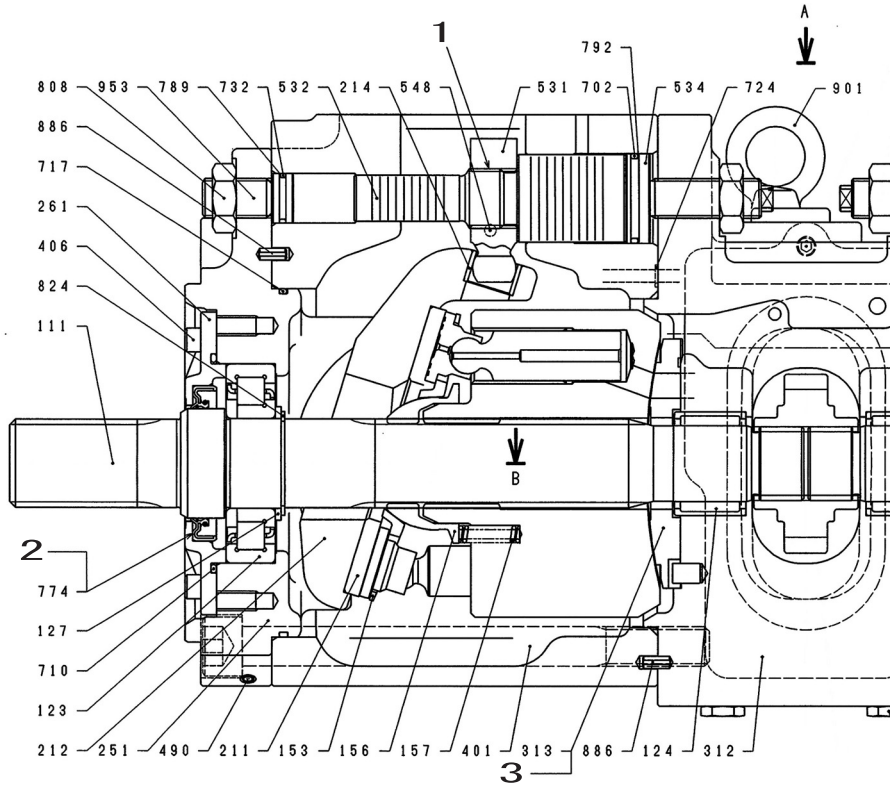

SD02009-033

https://truckmanualshub.com/

Parts table

Code	Part name	Q'ty	Component part No. (q'ty) or model
04	Gear pump	1 set	ZX15LHRZ2-07A-V
011	Piston subassembly	2 set	151 (9PC), 152 (9PC)
013	Cylinder subassembly (R)	1 set	141 (1PC), 313 (1PC)
014	Cylinder subassembly (L)	1 set	141 (1PC), 314 (1PC)
030	Swash plate subassembly	2 set	212 (1PC), 214 (1PC)
041	Check valve 1 subassembly	2 set	541 (1PC), 543 (1PC), 545 (1PC)
042	Check valve 2 subassembly	2 set	541 (1PC), 544 (1PC), 545 (1PC)
079	Electromagnetic proportional pressure reducing valve, casing subassembly	1 set	KDRDE5KR-V3-V
530	Tilting pin subassembly	2 set	531 (1PC), 548 (1PC)

1	Adhesion agent (ThreeBond Co., Ltd. No. 130SN) application
2	Oil seal outer circumference Lubricating agent (Sealub L101) application
3	Right rotation valve plate
4	Left rotation valve plate
5	Tightening torque Flange socket (4-M10 × 1.5): 33 N•m
6	Tightening torque Hexagon bolt (3-M6 × 1.0): 12 N•m

Code	Part name	Q'ty
111	Drive shaft (F)	1
113	Drive shaft (R)	1
114	1st gear	1
123	Roller bearing	2
124	Needle roller bearing	2
127	Bearing spacer	4
141	Cylinder block	2
151	Piston	18
152	Shoe	18
153	Holder plate	2
156	Spherical bushing	2
157	Cylinder spring	18
211	Shoe plate	2
212	Swash plate	2
214	Tilting bushing	2
251	Swash plate support board	2
261	Seal cover (F)	1
271	Pump casing	2
312	Valve block	1
313	Valve plate (R)	1
314	Valve plate (L)	1
326	Cover	1
401	Hexagon socket head bolt	8
406	Hexagon socket head bolt	4
414	Hexagon socket head bolt	4
466	VP plug	2
467	VP plug	2
468	VP plug	4
490	Insert plug	27
492	Insert plug	12

Code	Part name	Q'ty
531	Tilting pin	2
532	Servo piston	2
534	Stopper (L)	2
535	Stopper (S)	2
541	Seat	4
543	Stopper 1	2
544	Stopper 2	2
545	Steel ball	4
548	Feedback pin	2
702	O-ring	2
710	O-ring	1
714	O-ring	1
717	O-ring	2
724	O-ring	16
725	O-ring	6
728	O-ring	4
732	O-ring	2
774	Oil seal	1
789	Backup ring	2
792	Backup ring	2
808	Hexagon nut	2
824	Stop ring	2
885	Valve plate pin	2
886	Spring pin	4
901	Eyebolt	2
953	Hexagon socket head stop screw	2
954	Stop screw	2
981	Nameplate	1
983	Driving tack	2

Drive shaft rear side

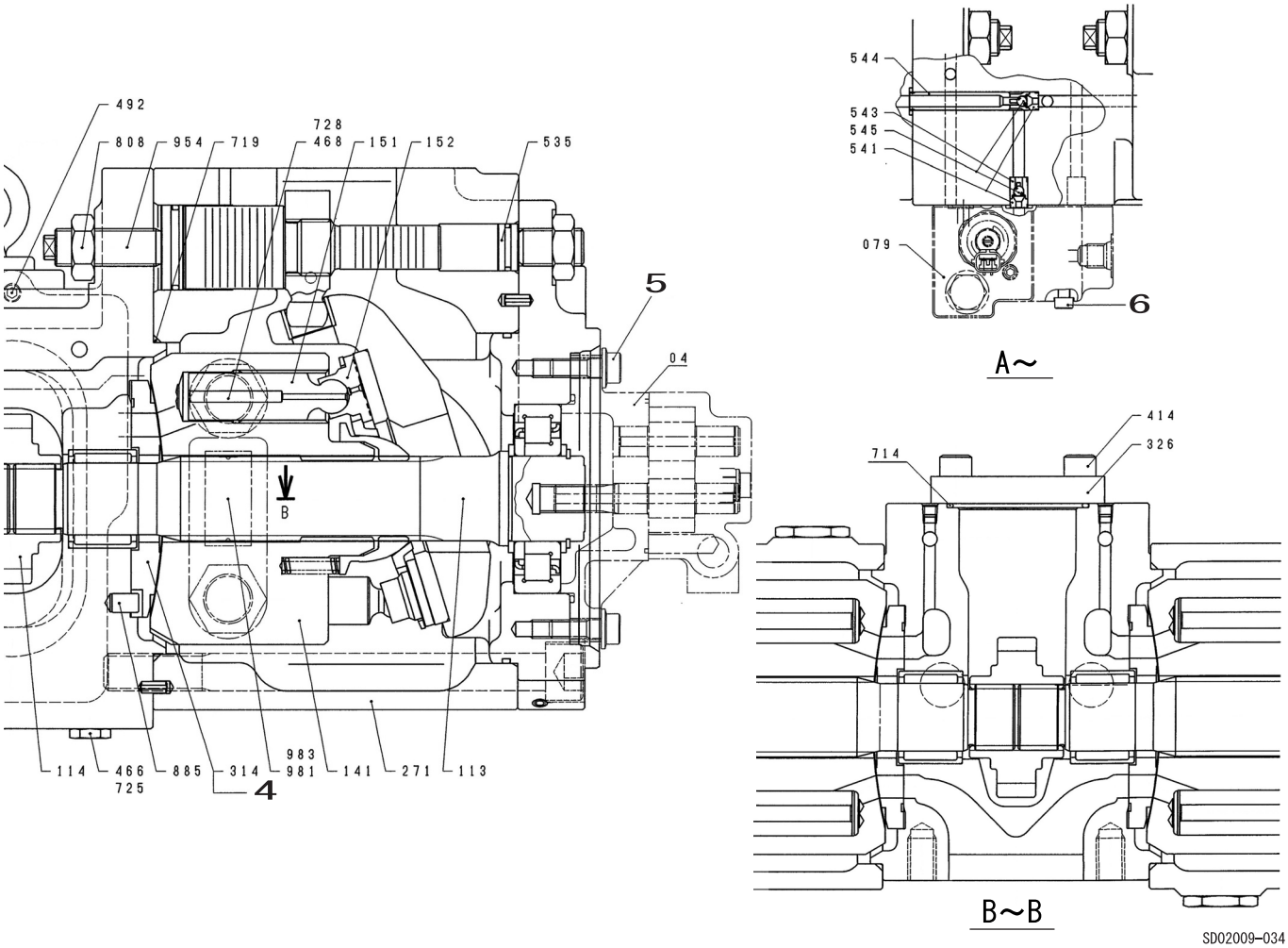

https://truckmanualshub.com/

2. Regulator

(1) Regulator operation explanation

[1] Flow control

• Operation explanation (See the regulator operation explanation diagram.)

1) Flow control

The pump discharge flow is controlled as desired with the pilot pressure Pi as in the diagram below.

1. Flow reduction operation

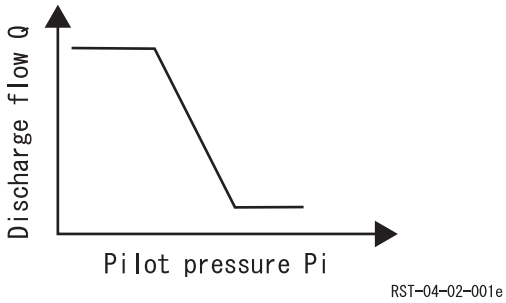

When the pilot pressure Pi increases, the pilot piston (643) moves to the right and stops at the location where the pilot spring (646) force and hydraulic pressure balance each other. The pin (875) fixed to lever 2 (613) fits into the grooved section of the pilot piston (643), so, through the movement of the pilot piston (643), lever 2 rotates with the B section (fastened by the fulcrum plug (614) and pin (876)) as the fulcrum. The pin (897) fixed to the feedback lever (611) projects into the large opening (C section) of lever 2 (613), so as lever 2 (613) rotates, the pin (897) moves to the right. The pin (548) fixed to the tilting pin (531) that shakes the swash plate (212) is bonded to the two-side width section (D section) of the feedback lever (611). Therefore, as the pin (897) moves, the feedback lever (611) rotates with D section as the fulcrum. Since the spool (652) is linked to the feedback lever (611) via the pin (874), the spool (652) moves to the right.

When the spool (652) moves, the discharge pressure Pd1 is led to the servo piston large-diameter chamber via the spool and CI port. The discharge pressure Pd1 is always led to the servo piston small-diameter chamber. As a result, the servo piston is moved to the right due to the surface area difference and reduces the flow.

When the servo piston (532) moves to the right, the D section also moves to the right. The return spring (654) is mounted on the spool (652). Since force pulling the spool to the left is always operating, the pin (897) is pressed into the large opening (C section) of lever 2 (613). Therefore, accompanying the D section movement, the feedback lever (611) rotates around the C section as the fulcrum and the spool (652) moves to the left. This movement causes the open section between the sleeve (651) and the spool (652) to begin to close, and the servo piston (532) stops at the point the open section fully closes.

2. Flow increase operation

When the pilot pressure Pi decreases, the pilot piston (643) is moved to the left by the pilot spring (646) force and lever 2 (613) rotates with the B section as the fulcrum. The pin (897) is pressed in the large opening (C section) of lever 2 (613) by the return spring (654) via the spool (652), pin (874), and feedback lever (611), so accompanying rotation of lever 2 (613), the feedback lever (611) rotates with the D section as the fulcrum and the spool (652) moves to the left.

When the spool (652) moves, the CI port opens to the tank port, so the pressure in the large-diameter chamber of the servo piston drains out, the servo piston (532) is moved to the left by the discharge pressure Pd1 of the small-diameter section and the flow increases.

Accompanying the movement of the servo piston (532), the D section moves to the left, the feedback lever (611) rotates with the C section as the fulcrum and the spool (652) moves to the right. This operation continues until the open section between the spool (652) and sleeve (651) closes, and then the servo piston stops at the point the open section fully closes.

https://truckmanualshub.com/

3. High-pressure selection function
   The pilot pressure Pi, which serves as the flow control signal, is the pressure for which high pressure is selected from among multiple command pressures via the shuttle valve subassembly (050).
   KR3K-9Y04-HV selects the higher pressure from Pi1 or the proportional valve 2nd pressure and KR3K-9X04-HV selects the higher pressure from Pi2 or the external command pressure P2.

[2] Horsepower control

1) Horsepower control
   As the load pressure increases, the pump tilting angle decreases and the overload of the engine is prevented as in the diagram below. Since this regulator uses the simultaneous full-horsepower control method, the tilting angles (displacement volumes) of the 2 pumps are controlled to be the same value as in the following equation.
   $Tin = Pd1 \times q/2\ \pi + Pd2 \times q/2\ \pi = (Pd1 + Pd2) \times q/2\ \pi$
   (q: Displacement volume)
   Horsepower control is the same as flow control and is briefly explained below.
   (For detailed operation of each part, see the Flow control section.)

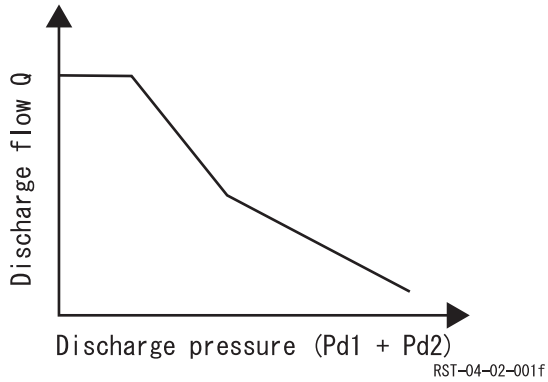

1. Overload prevention operation
   When the self pump discharge pressure Pd1 or the counterpart pump discharge pressure Pd2 rises, since Pd1 and Pd2 operate on the stepped section of the compensation piston (621), the compensation rod (623) is pressed to the right and moves to the location where the force of the outer spring (625) and inner spring (626) balance out the hydraulic pressure force. The movement of the compensation rod (623) is transmitted to lever 1 (612) through the pin (875) and lever 1 (612) rotates around the pin (876) (E section) fastened to the casing (601). The pin (897) fixed to the feedback lever (611) projects into the large opening (F section) of lever 1 (612), so as lever 1 (612) rotates, the feedback lever (611) rotates with the D section as the fulcrum and the spool (652) moves to the right.
   When the spool (652) moves, the discharge pressure Pd1 is led to the large-diameter section of the servo piston via the CI port, the servo piston (532) is moved to the right, and the pump discharge flow is decreased to prevent overload of the power source.
   The servo piston (532) movement is transmitted to the feedback lever (611) via the D section. The feedback lever (611) rotates with the F section as the fulcrum and the spool (652) moves to the left. The spool (652) moves until the open section between the spool (652) and sleeve (651) closes, and then the servo piston stops at the point the open section fully closes.
2. Flow return operation
   If the self pump discharge pressure Pd1 or the counterpart pressure pump discharge pressure Pd2 decreases, the compensation rod (623) is pressed back by the outer spring (625) and the inner spring (626) and lever 1 (612) rotates about the E section. Accompanying the lever 1 (612) rotation, the feedback lever (611) rotates around the D section as the fulcrum and the spool (652) moves to the left. Because of this, the CI port opens to the tank port, the servo piston large-diameter section pressure drains off, the servo piston (532) moves to the left and the pump discharge flow increases.
   The movement of the servo piston (532) is transmitted to the spool (652) by the feedback mechanism, and this operation continues until the open section between the spool (652) and the sleeve (651) closes.

https://truckmanualshub.com/

[3] Low tilting (low flow) command priority mechanism
As above, the flow control and the horsepower control tilting command is transmitted to the feedback lever (611) and spool (652) via the large opening (C and F sections) of lever 1 (612) and lever 2 (613) , but since the C and F sections have a structure in which a pin (ϕ5) projects into a large hole (ϕ9), the pin (897) only contacts the lever that makes the tilting smaller and the ϕ9 hole for the lever on the side that has the larger tilting command state does not contact the pin (897), but is free. This type of mechanical selection method gives priority to flow control and horsepower control commands with low tilting.

[4] Power shift control (decreased horsepower control)
Use the power shift pressure Pf to arbitrarily control the pump set horsepower as in the diagram below.
When the power shift pressure Pf increases, the compensation rod (623) is moved to the right via the pin (898) and the compensation piston (621), so the pump tilting angle is reduced and the horsepower setting is reduced in the same way as was explained for the operation to prevent overload. By contrast, as the power shift pressure Pf decreases, the horsepower setting increases.

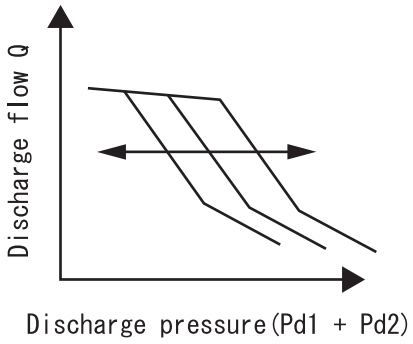

RST-04-02-001g

https://truckmanualshub.com/

(2) Regulator operation explanation diagram

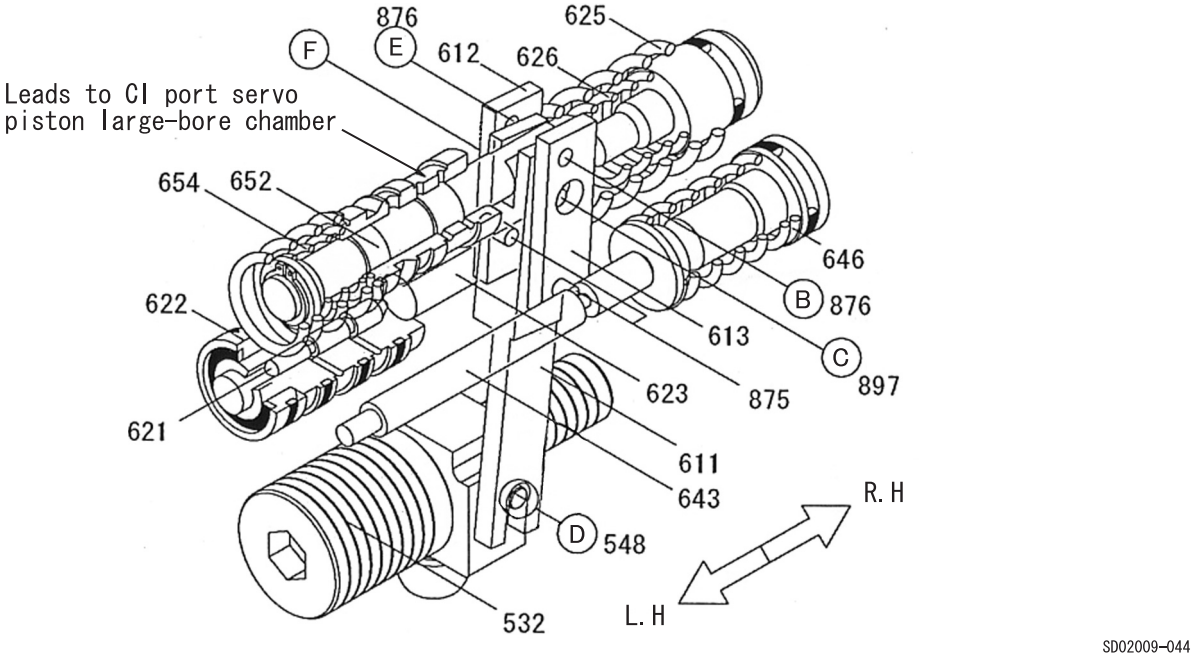

KR3K-9Y04-HV

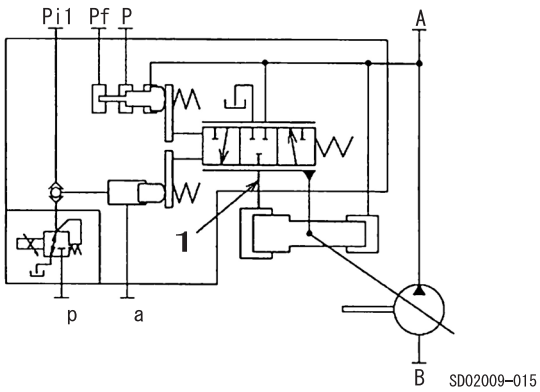

Hydraulic circuit diagram
Front side

KR3K-9X04-HV

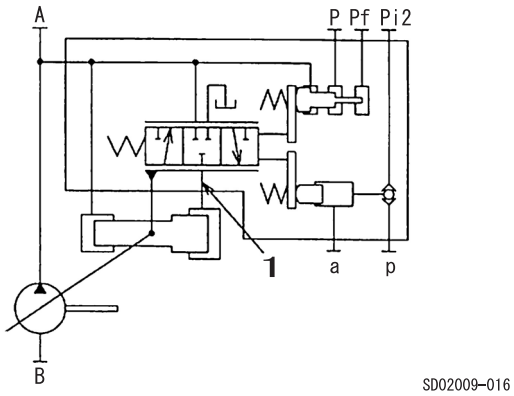

Hydraulic circuit diagram
Rear side

1	CI port

https://truckmanualshub.com/

(3) Front side regulator internal structure diagrams

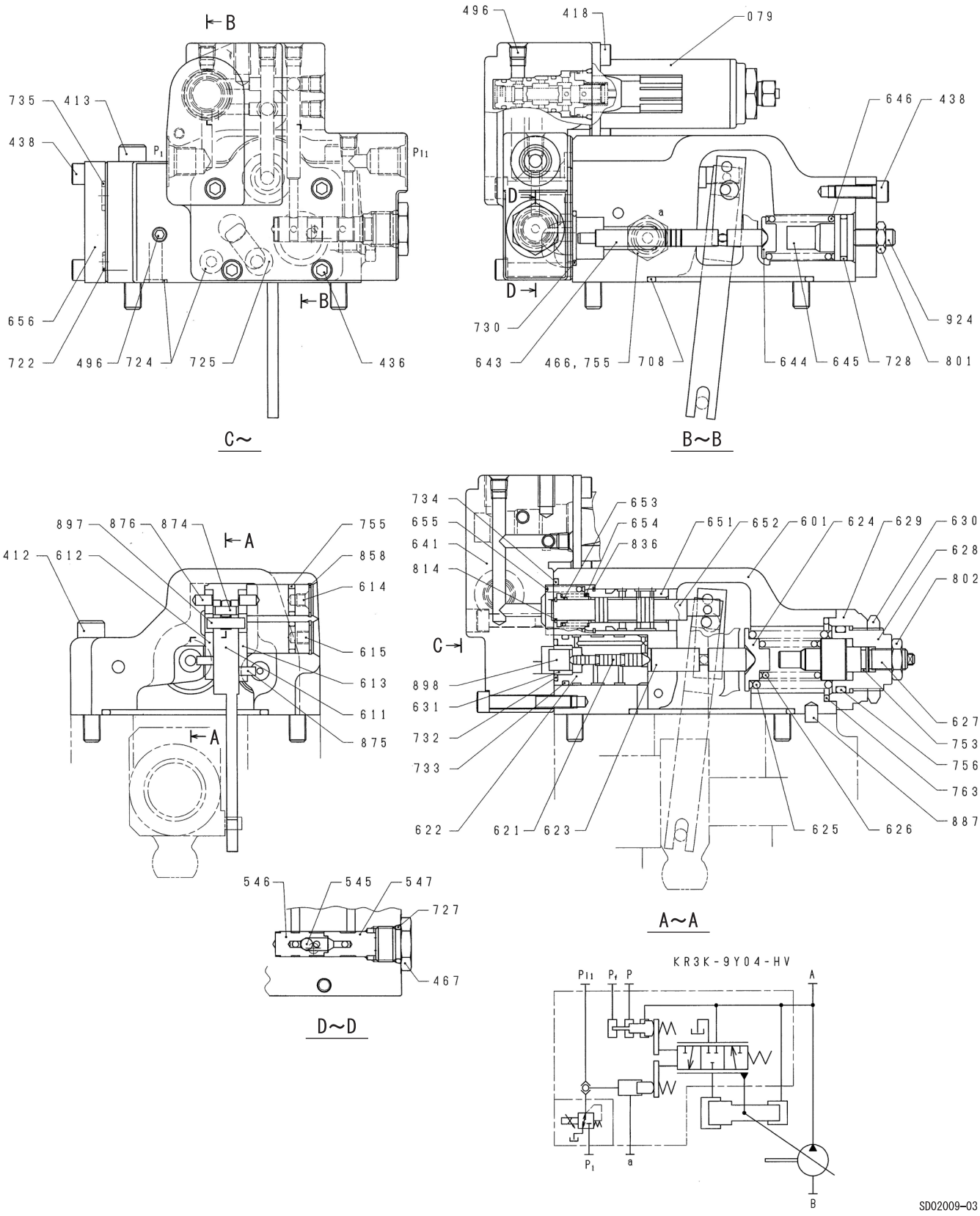

Hydraulic circuit

https://truckmanualshub.com/

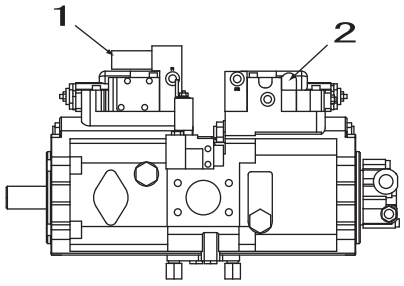

SD02009–006

1	Front side regulator
2	Rear side regulator

Code	Part name	Q'ty	Component part No. (q'ty) or model
050	Shuttle valve subassembly	1 set	545 (1PC), 546 (1PC), 547 (1PC)
079	Electromagnetic proportional pressure reducing valve	1 set	KDRDE5K-31/30C50-102

Code	Part name	Q'ty	Code	Part name	Q'ty
-	Regulator subassembly	1	651	Sleeve	1
412	Hexagon socket head bolt	2	652	Spool	1
413	Hexagon socket head bolt	2	653	Spring seating	1
418	Hexagon socket head bolt	2	654	Return spring	1
436	Hexagon socket head bolt	4	655	Set spring	1
438	Hexagon socket head bolt	8	656	Blind cover	1
466	VP plug	1	708	O-ring	1
467	VP plug	1	722	O-ring	3
496	Insert plug	12	724	O-ring	9
545	Steel ball	1	725	O-ring	1
546	Seat 1	1	727	O-ring	1
547	Seat 2	1	728	O-ring	1
601	Casing	1	730	O-ring	1
611	Feedback lever	1	732	O-ring	1
612	Lever 1	1	733	O-ring	1
613	Lever 2	1	734	O-ring	1
614	Fulcrum plug	1	735	O-ring	1
615	Adjusting plug	1	753	O-ring	1
621	Compensation piston	1	755	O-ring	3
622	Piston case	1	756	O-ring	1
623	Compensation rod	1	763	O-ring	1
624	Spring seating (C)	1	801	Hexagon nut	1
625	Outer spring	1	802	Hexagon nut	1
626	Inner spring	1	814	Stop ring	1
627	Adjusting ring (C)	1	836	Stop ring	1
628	Adjusting screw (C)	1	858	Locking ring	2
629	Cover (C)	1	874	Pin	1
630	Lock nut	1	875	Pin	2
631	Pf sleeve	1	876	Pin	2
641	Pilot cover	1	887	Pin	1
643	Pilot piston	1	897	Pin	1
644	Spring seating (Q)	1	898	Pin	1
645	Adjusting ring (Q)	1	924	Hexagon socket head stop screw	1
646	Pilot spring	1			

https://truckmanualshub.com/

(4) Rear side regulator internal structure diagram

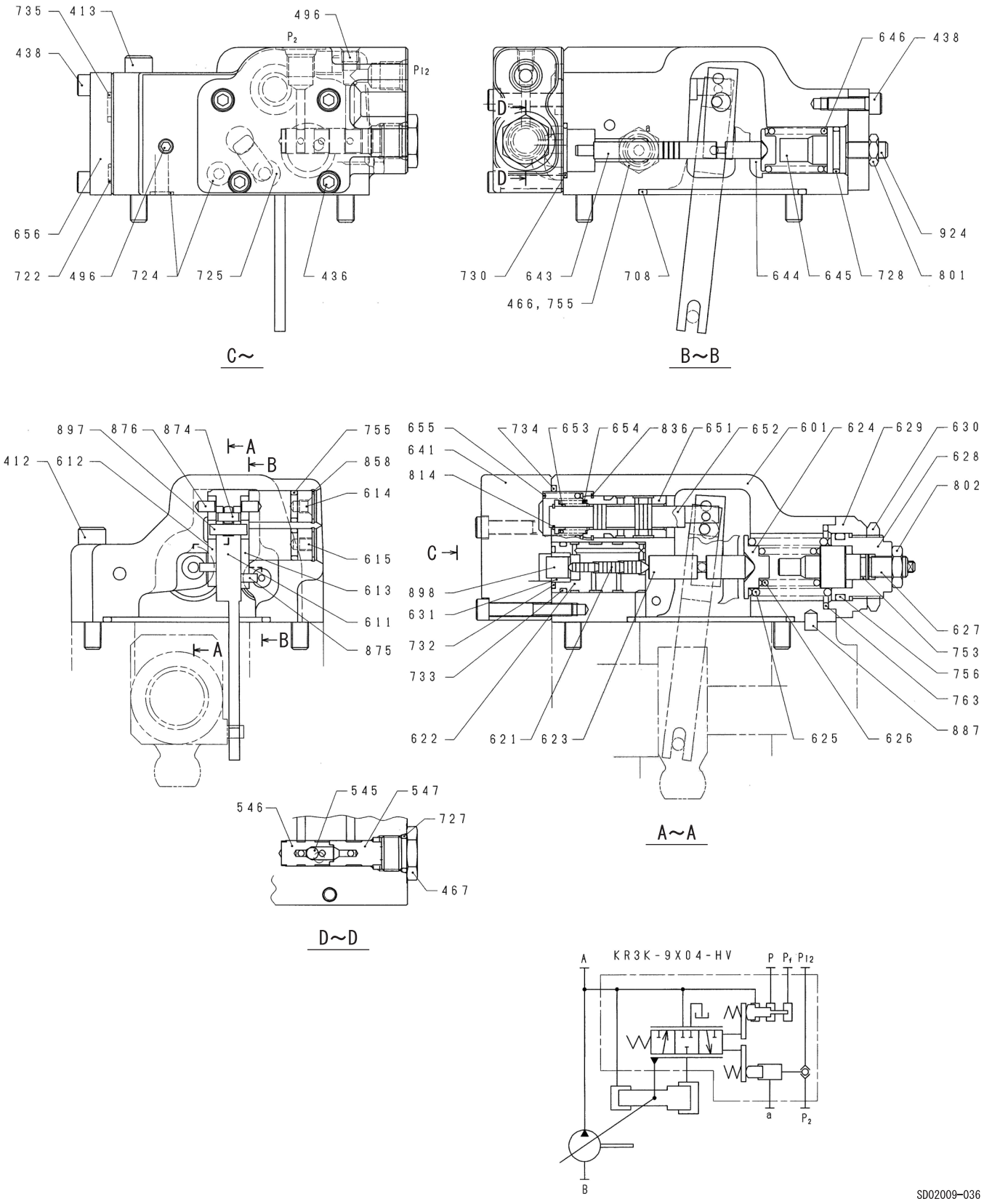

Hydraulic circuit

https://truckmanualshub.com/

Code	Part name	Q'ty	Component part No. (q'ty) or model
050	Shuttle valve subassembly	1 set	545 (1PC), 546 (1PC), 547 (1PC)

Code	Part name	Q'ty	Code	Part name	Q'ty
-	Regulator subassembly	1	651	Sleeve	1
412	Hexagon socket head bolt	2	652	Spool	1
413	Hexagon socket head bolt	2	653	Spring seating	1
436	Hexagon socket head bolt	4	654	Return spring	1
438	Hexagon socket head bolt	8	655	Set spring	1
466	VP plug	1	656	Blind cover	1
467	VP plug	1	708	O-ring	1
496	Insert plug	6	722	O-ring	3
545	Steel ball	1	724	O-ring	9
546	Seat 1	1	725	O-ring	1
547	Seat 2	1	727	O-ring	1
601	Casing	1	728	O-ring	1
611	Feedback lever	1	730	O-ring	1
612	Lever 1	1	732	O-ring	1
613	Lever 2	1	733	O-ring	1
614	Fulcrum plug	1	734	O-ring	1
615	Adjusting plug	1	735	O-ring	1
621	Compensation piston	1	753	O-ring	1
622	Piston case	1	755	O-ring	3
623	Compensation rod	1	756	O-ring	1
624	Spring seating (C)	1	763	O-ring	1
625	Outer spring	1	801	Hexagon nut	1
626	Inner spring	1	802	Hexagon nut	1
627	Adjusting ring (C)	1	814	Stop ring	1
628	Adjusting screw (C)	1	836	Stop ring	1
629	Cover (C)	1	858	Locking ring	2
630	Lock nut	1	874	Pin	1
631	Pf sleeve	1	875	Pin	2
641	Pilot cover	1	876	Pin	2
643	Pilot piston	1	887	Pin	1
644	Spring seating (Q)	1	897	Pin	1
645	Adjusting ring (Q)	1	898	Pin	1
646	Pilot spring	1	924	Hexagon socket head stop screw	1

https://truckmanualshub.com/

3. Gear Pump

(1) Gear pump internal structure diagram

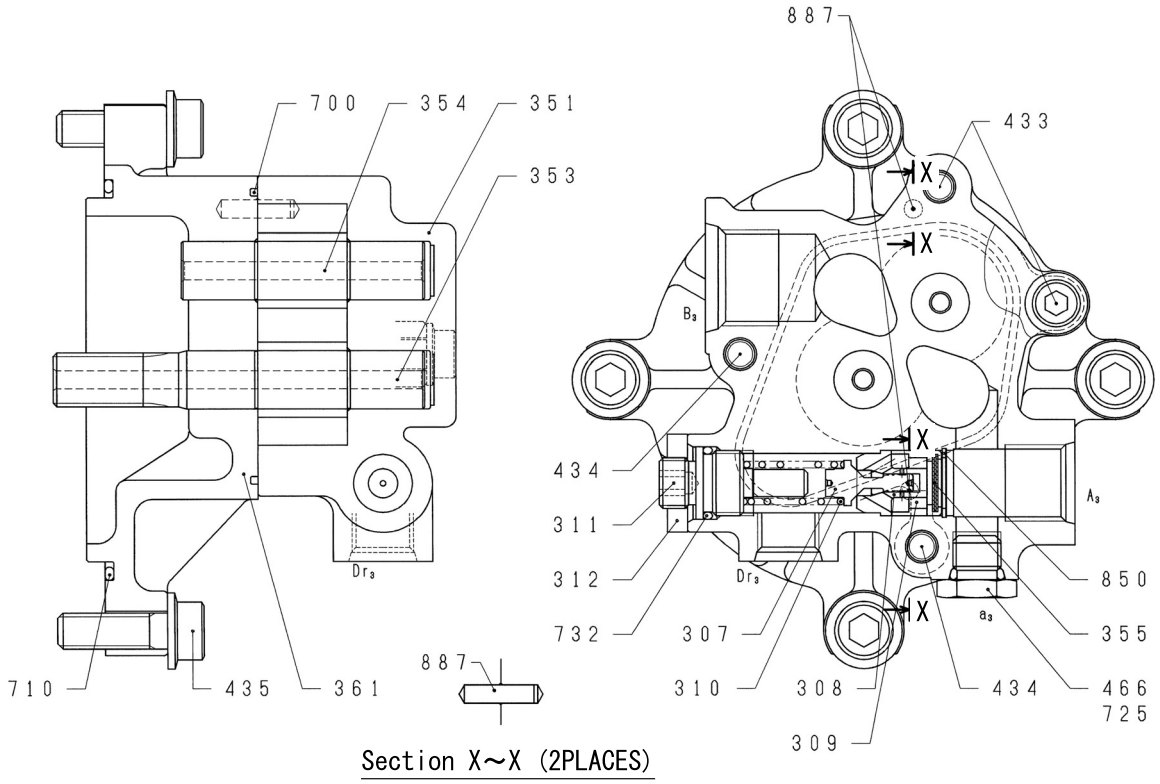

1	Front case side
2	Gear case side
3	To main pump

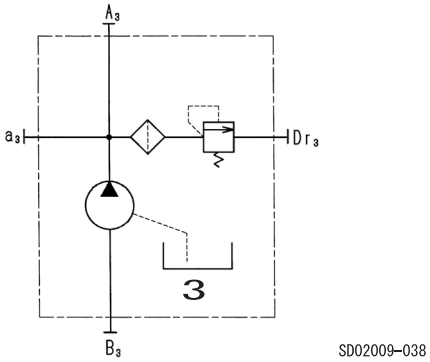

Hydraulic circuit

Code	Part name	Q'ty	Component part No. (q'ty) or model
350	Gear case subassembly	1 set	307 (1PC), 308 (1PC), 351 (1PC), 353 (1PC), 354 (1PC), 361 (1PC), 887 (2PC)

Code	Part name	Q'ty	Code	Part name	Q'ty
307	Poppet	1	433	Flange socket	2
308	Seat	1	434	Flange socket	2
309	Ring	1	435	Flange socket	4
310	Spring	1	466	VP plug	1
311	Adjusting screw	1	700	Angle ring	1
312	Lock nut	1	710	O-ring	1
351	Gear case	1	725	O-ring	1
353	Drive gear	1	732	O-ring	1
354	Driven gear	1	850	Locking ring	1
355	Filter	1	887	Pin	2
361	Front case	1			

https://truckmanualshub.com/

(2) Structure and operation explanation

Structure

The casing comprises the front case (361) and gear case (351). Inside the casing the drive gear (353), driven gear (354) pair and the relief valve for setting the discharge pressure are installed.
The relief valve comprises the filter (355), poppet (307), seat (308), spring (310), ring (309), adjusting screw (311), and lock nut (312).
In order to prevent oil leaking to the outside, an angle ring (700) and O-ring (710) are mounted on the front case (361).

Operation

Oil suctioned in from suction port B_3 is discharged from discharge port A_3 by the drive and driven gears.
The discharge oil is held at the set pressure of 3.9 MPa by the relief valve.
Unnecessary discharge oil is drained from the drain port via the relief valve.

https://truckmanualshub.com/

Motor

1. Travel Motor

(1) Travel motor operation explanation

Structure

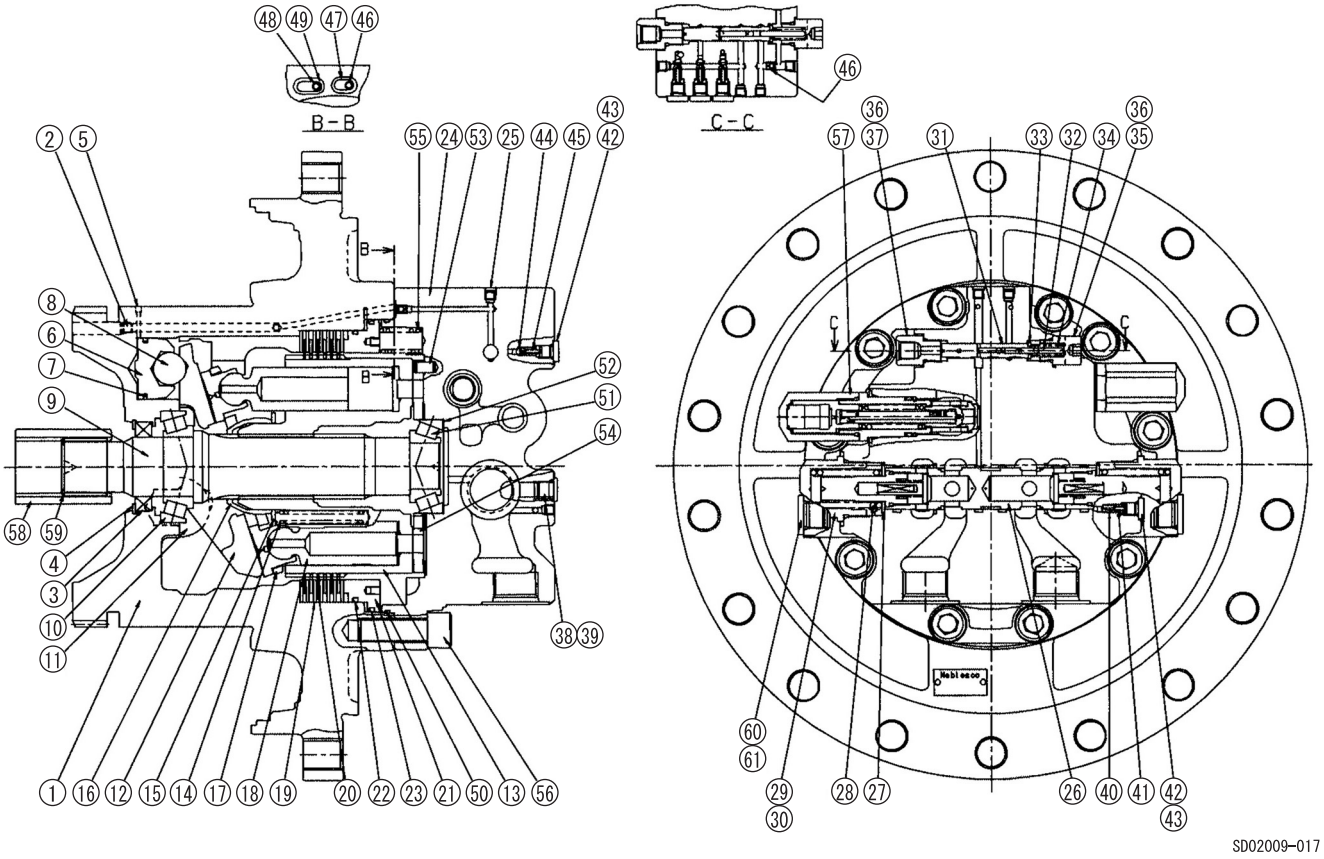

Diagram 1 Travel motor structural diagram

Code	Part name	Code	Part name	Code	Part name
1	Casing	23	D-ring (large bore)	45	Check valve spring
2	NPT1/16 plug	24	Rear cover	46	M6 orifice (ϕ0.6)
3	Oil seal	25	NPT1/16 plug (mec)	47	O-ring 1B P12.5
4	Circle R retaining ring IRTW68	26	Spool assembly	48	M6 orifice (ϕ0.8)
5	Expansion plug	27	Spring receiver	49	O-ring 1B P15
6	Tilting piston	28	Spring	50	O-ring 215.57 × 2.62
7	Tilting piston seal	29	M42 plug	51	Bearing HR32207C
8	Steel ball	30	O-ring 1B G40	52	Shim
9	Shaft	31	Pilot spool	53	Parallel pin
10	Bearing HR32209J	32	Pin	54	Valve plate
11	Pivot	33	Spring receiver	55	Brake spring
12	Shoe plate	34	Spring	56	Hexagon socket head bolt M18 × 50
13	Cylinder block	35	Pilot valve plug G3/8	57	Overload valve
14	Cylinder spring	36	O-ring 1B P14	58	Coupling
15	Spring receiver	37	Joint	59	C retaining ring 40 for hole
16	Spherical joint	38	G1/4 plug	60	G1/2 plug
17	Shoe retainer	39	O-ring 1B P11	61	O-ring 1B P18
18	Piston assembly	40	Orifice (break valve)		
19	Separator plate	41	Orifice spring (break valve)		
20	Friction plate	42	G1/8 plug		
21	Brake piston	43	O-ring 1B P8		
22	D-ring (small bore)	44	Check valve		

https://truckmanualshub.com/

Component parts summary explanation

The motor comprises the main parts listed below.

- Rotary group that produces rotation force
- Parking brake for preventing self-travel during parking
- Variable mechanism section for switching the motor capacity between high and low
- Overload relief valve installed in the rear cover
- Brake valve section (counterbalance valve) that plays a critical role in controlling the hydraulic circuits

1) Rotary group

The cylinder block (13) is fit into the teeth grooves on the spline of the shaft (9), which is supported at both ends by the bearings (10), (51). This cylinder block (13) is pressed against the rear cover (24) together with the valve plate (54) by the cylinder spring (14).
The 9 piston assemblies (18) slide along the surface of the shoe plate (12) while moving in and out of the cylinder block (13).There are hydrostatic bearings at both ends of the piston assembly (18), and to reduce the sliding resistance as well as make the piston move without separating from the surface of the shoe plate (12), the force of the cylinder spring (14) is transmitted through the spring receiver (15), spherical joint (16), and shoe retainer (17) to press both ends of the piston assembly (18) against the shoe plate (12).

2) Parking brake

7 separator plates (19) and 6 friction plates (20) are fit into the spline groove around the outer edge of the cylinder block (13) in an alternating pattern and are pressed against the casing (1) by the 14 brake springs (55) via the brake piston (21).

3) Variable capacity mechanism section

This section comprises the pivot (11), which is fit into the 2 semispherical indentations on the shoe plate (12) and supports the shoe plate (12), the tilting piston (6), which tilts the shoe plate (12) around the pivot (11), the tilting stopper (1-1), which supports tilting at the determined position, the pilot valve section, which brings pressurized oil to the tilting piston (6) according to external commands, and 3 check valves (44), which extract the highest pressure out of either the external command pilot pressure, the motor inlet pressure, and the motor outlet pressure, and send the pressurized oil to the pilot valve section.

https://truckmanualshub.com/

4) Overload Relief Valve

This comprises the socket (57-1), which holds the valve seat (57-3) which seats metal to the motor rear cover (24) internal hole section and screws the valve seat (57-3) into the rear cover (24) to fasten it, the valve (57-2), which is contacted to the valve seat (57-3) by the adjusting spring (57-9) and which is fit into the socket (57-1) internal hole, the linking piston (57-4), which is inserted into the valve internal hole and serves as the oil path to the pilot section body (57-6), the piston (57-7), which is inserted into the pilot section body (57-6) and is pressed against the lid (57-5), and the spring adjusting shim (57-8).

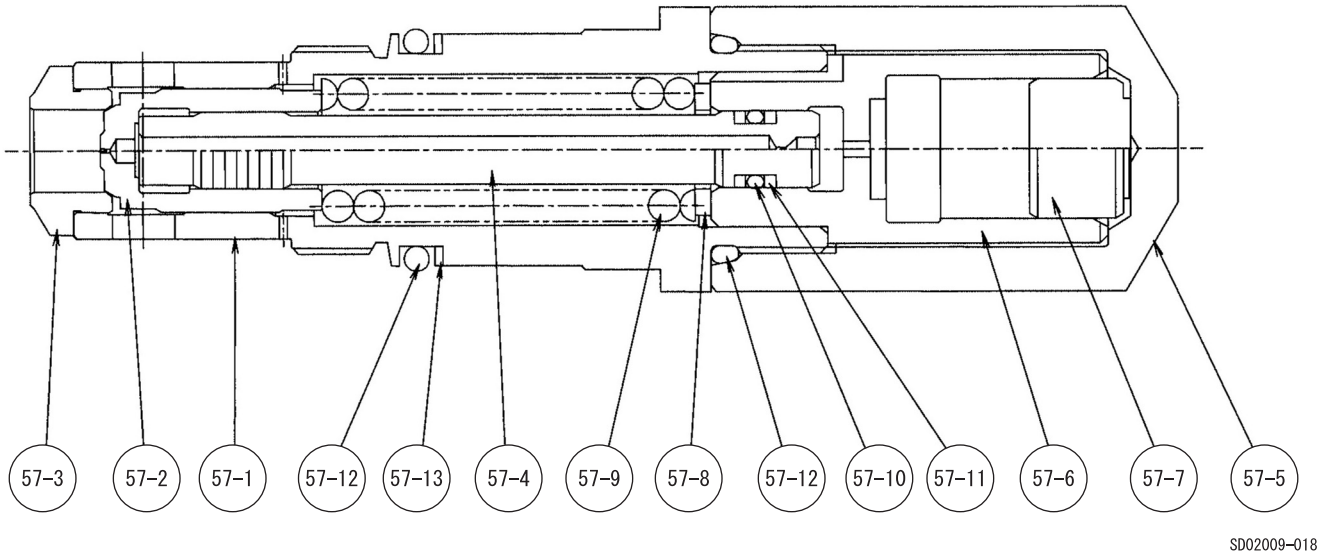

Diagram 2 Overload relief valve structural diagram

Code	Part name	Code	Part name
57-1	Socket	57-8	Shim
57-2	Valve	57-9	Adjusting spring
57-3	Valve seat	57-10	O-ring 1B P7
57-4	Linking piston	57-11	Backup ring T2 P7
57-5	Lid	57-12	O-ring 1B G25
57-6	Pilot section body	57-13	Backup ring T2 G25
57-7	Piston		

https://truckmanualshub.com/

5) Brake valve section

Spool switchover pressure: 0.59 - 0.95 MPa
Check valve cracking pressure: 0.015 MPa

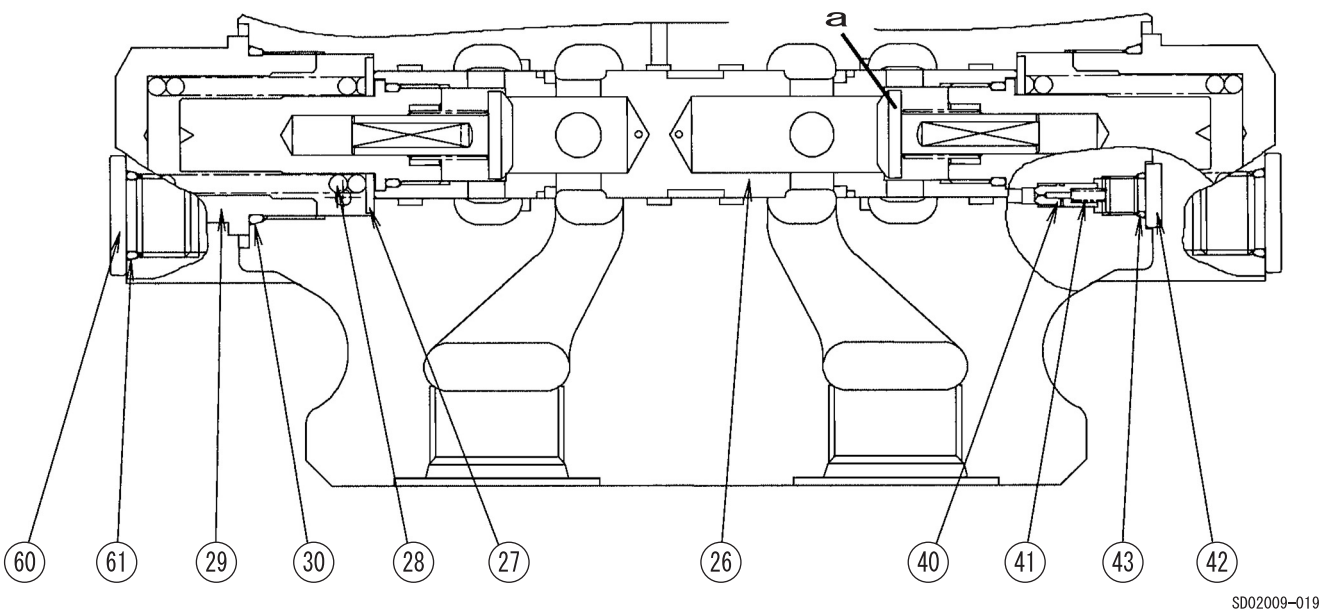

Diagram 3 Brake valve section

a	Check valve

[1] Spool
Through switchover of this spool (26), shut-off of discharge oil of the hydraulic motor and metering is automatically performed, and the effects of holding, acceleration, stopping and counterbalance operations can be applied to the hydraulic motor.

[2] Check valve (built into spool)
At the same time this serves as the feed oil path for the hydraulic motor, it also fulfills the discharge oil lock function.
Accordingly, at the same time it is the suction valve for the hydraulic motor, it serves as the holding valve.

https://truckmanualshub.com/

Function

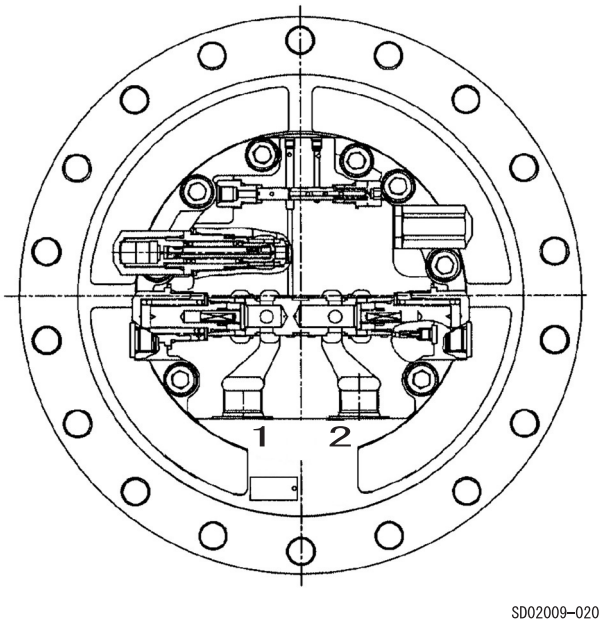

Diagram 4 Port positions

Inflow port	Discharge port	Direction of rotation (view from rear cover side)
VB	VA	Right (clockwise)
VA	VB	Left (counter-clockwise)

1	VA port
2	VB port

1) Motor operation

The high-pressure oil sent from the hydraulic pump enters from the inflow ports (VA, VB), flows through the break valve section, rear cover (24), and valve plate (54), and is led into the cylinder block (13).

The table shows the inflow port, the discharge port, and the direction of rotation of the output shaft.

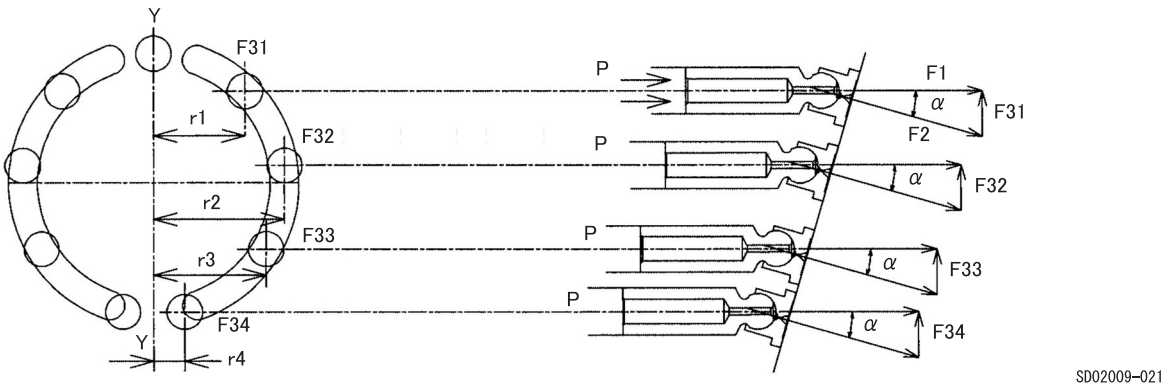

(a) (b)

Diagram 5

This high-pressure oil, as shown in diagram 5(a), operates on all the pistons in a 180° area with the Y-Y line connecting the piston top dead center and bottom dead center representing the boundary and

F1=P x A (P: Pressure, A: Piston area)

is produced.

This force F1 becomes a thrust force F2 and radial forces F31 - F34 (or F35) due to the shoe plate (12), which has a tilting angle of α.(See diagram 5 (b).) These radial forces operate as the rotation force on the Y-Y shaft and generate a torque of .

T=r1·F31+r2·F32+r3·F33+r4·F34

(When high pressure operates on 5 pistons, r5/F35 is added.)

This torque is transmitted to the shaft (9) spline via the cylinder block (13) and is transmitted to the shaft (9).

https://truckmanualshub.com/

2) Parking brake operation

The parking brake is released when high hydraulic pressure selected by the counterbalance section installed in the rear cover operates on the brake piston (21).Brake torque is constantly being produced if no pressure is operating.

This brake torque is generated by the force of friction between the separator plate (19) coupled by the casing (1) and spline and the friction plate (20) coupled with the cylinder block (13) by the spline.

When pressure is not operating on the brake piston section, the brake piston (21) is pressed by the brake spring (55) and the brake piston (21) sandwiches the friction plate (20) and separator plate (19) against the casing (1).

This sandwiching force generates friction force between the friction plate (20) and the separator plate (19), which serves as brake torque that constrains the shaft (9) in addition to the cylinder block (13).

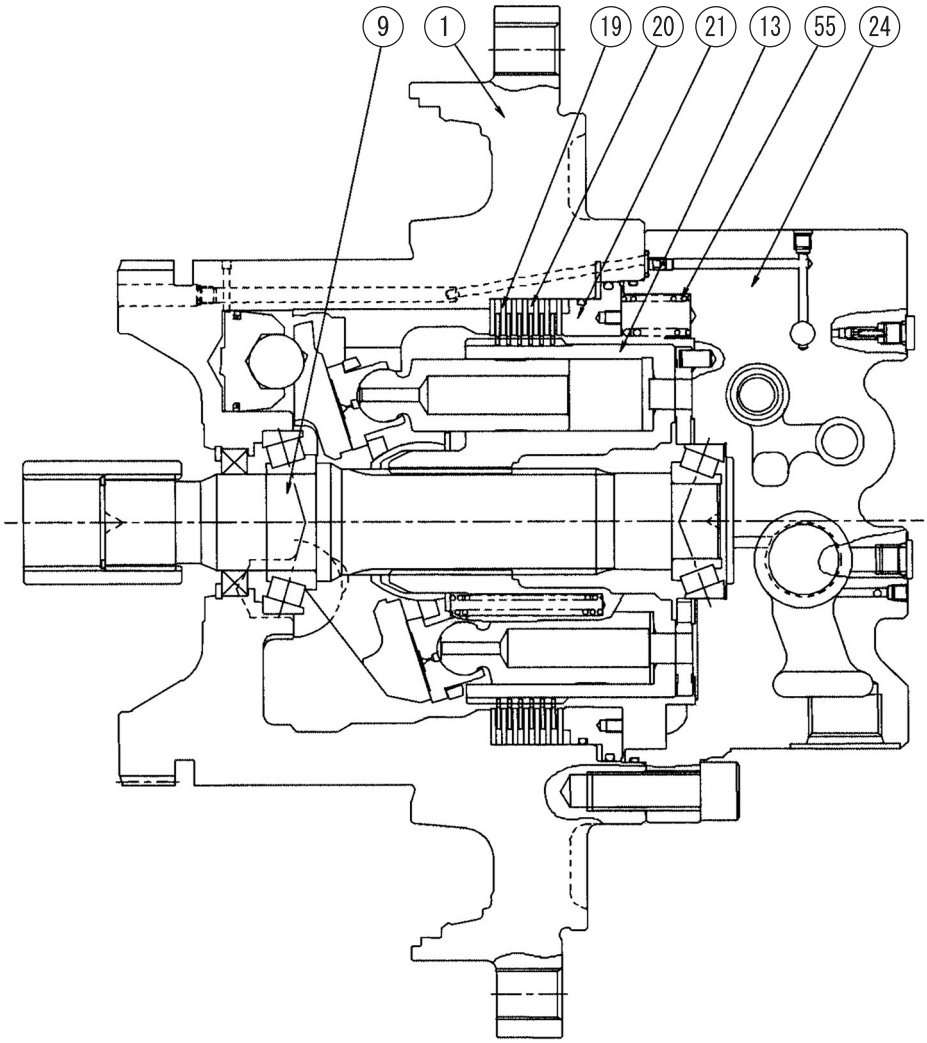

SD02009–022

Diagram 6 Parking brake section

https://truckmanualshub.com/

3) Operation of variable capacity mechanism section

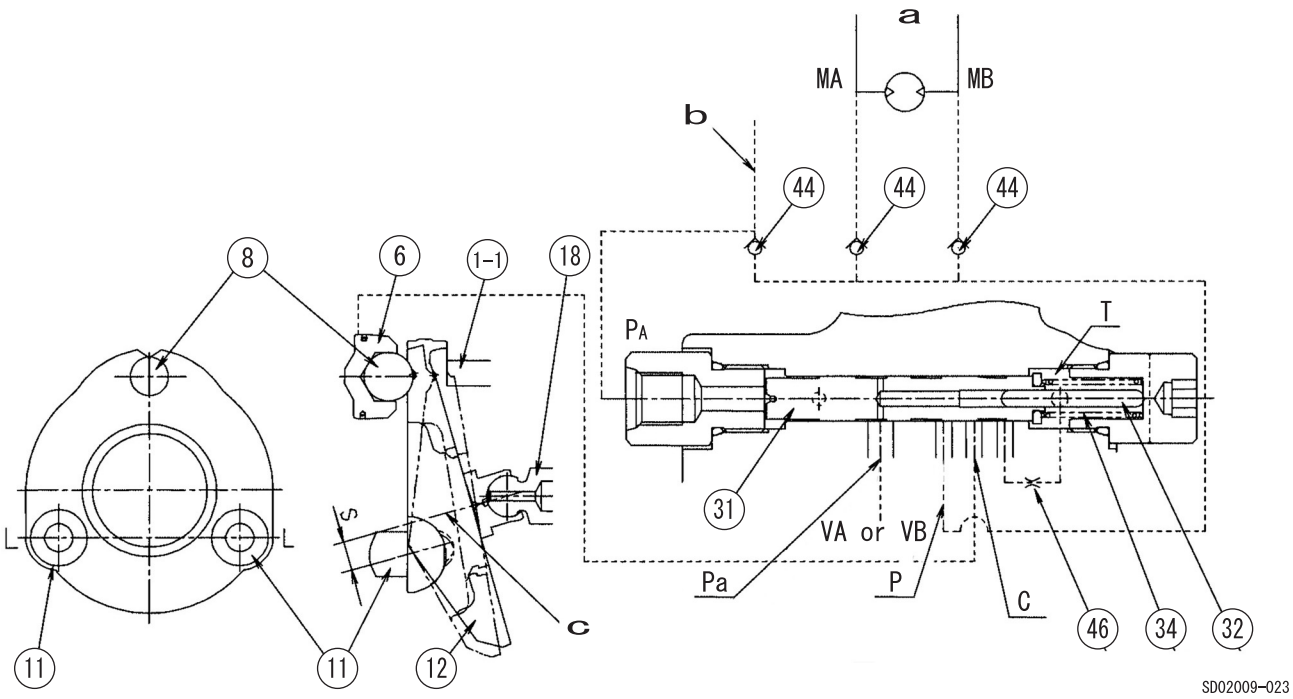

Diagram 7 Operation of variable capacity mechanism section

a	To counterbalance valve (brake valve)	b	High-speed travel command line (external pilot)
		c	Force application point

Diagram 7 shows a model of the variable capacity mechanism section.
When pressure overcoming the spring (34) enters the high-speed travel command line P_A, the spring (34) is compressed, the spool (31) moves to the right, the P and C ports are connected, the highest of the 3 pressures - motor pressure MA, motor pressure MB, and the high-speed travel command line pressure - is selected by the check valve (44), and the tilting piston (6) is pressed. Therefore, the shoe plate (12) tilts as shown by the broken line with the line (L) connecting the 2 pivots (11) as the axis center and when the tilting stops at the point where it contacts the tilting stopper (1-1), it holds that state.
As a result, the amount of the piston (18) coming in and out is reduced and the motor capacity becomes small, so the motor rotates at high speed without increasing the amount of oil sent from the hydraulic pump. For this machine, the capacity is about 1.71 time more.
On the other hand, when the high-speed travel command line P_A pressure disappears, the spool (31) is returned to the left by the spring (34), the oil that had been pressing against the tilting piston (6) passes through the orifice (46) and is released to the tank, and the force pressing against the piston disappears.
Here, there are 9 pistons (18) distributed uniformly on the shoe plate (12) and they press against the shoe plate (12). The force application point for the total force of these 9 pistons is positioned about at the center of the shoe plate (12) as in the diagram and the pivots (11) are at a position S away from the center, so a rotation force that is equal to S multiplied by the piston pressing force returns the motor to its original state and the motor switches to low-speed travel.
Also, when the engine power is exceeded, for example when steering or climbing a steep hill at high speed, in order to prevent the engine stalling, when the engine load exceeds the stipulated value, the motor is automatically switched to low-speed.
When the hydraulic pump pressure (VA or VB) is led to the P_B port of diagram 7, this pressure operates on the pin (32). When the stipulated pressure is exceeded, the spool (31) is returned to the left by the reaction force of the pin (32), the oil that had been pressing against the tilting piston (6) is released to the tank, and the shoe plate (12) tilts to configure the high-capacity motor so that operation becomes low-speed travel.
When this pressure falls to or below the stipulated pressure, the spool (31) moves to the right and operation becomes high-speed travel.

https://truckmanualshub.com/

4) Overload relief valve operation

There are 2 overload relief valves that are arranged in a cross-over fashion and operate in the following way.

[1] When the hydraulic motor is stopped, in order to prevent load inertia, the brake pressure generated on the motor discharge side is held to no greater than a certain value.

[2] In order to get sharp acceleration with driving at the stipulated set pressure when starting the hydraulic motor and to attenuate the brake shock when stopping, what is called boost attenuation operation is carried out. The pressure generated is held at low pressure for a short time and the reduction gear, travel crawler sprocket section, etc. mesh smoothly, then the circuit pressure is held at the stipulated set pressure.

When the A port pressure for the overload relief valve rises when the hydraulic motor starts, this pressure is applied to the effective diameter section seating to the valve seat (57-3) of the valve (57-2) and it is also applied to the linking piston (57-4) of the valve interior through the small hole in the valve (57-2). The A port pressure rises and the valve (57-2) resists the adjusting spring (57-9) with the surface area difference between the valve seat effective diameter section and the linking piston hole diameter section and sets the stipulated set pressure.

When the hydraulic motor brakes, the piston (57-7) in the rear section is on the left side due to the drive pressure and when the A port pressure rises, it is also applied to the piston (57-7) through the small hole in the valve and the small hole in the linking piston (57-4) and moves the piston to the right side until it contacts the lid (57-5).

During this time, the valve (57-2) resists the adjusting spring (57-9) and holds the A port pressure to a comparatively low and releases oil to the B port.

After the piston (57-7) contacts the lid (57-5), operation is the same as when the motor starts.

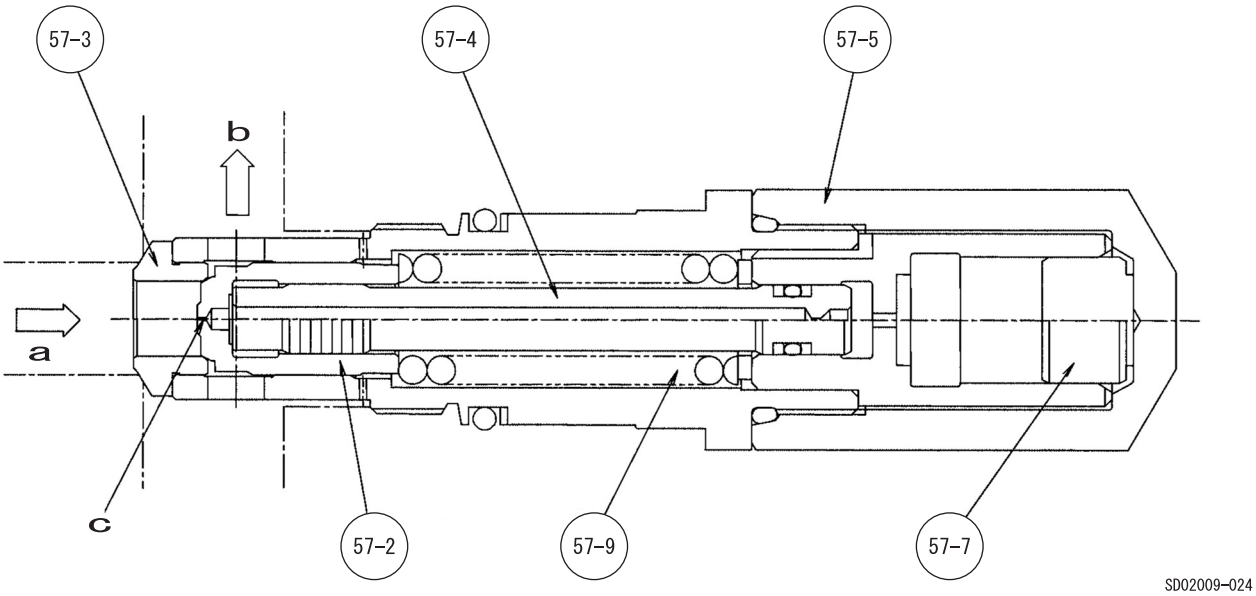

Diagram 8 Overload relief valve operation

a	From the A port
b	To the B port
c	Small hole

https://truckmanualshub.com/

5) Brake valve operation

a) Hold state (See diagram 9.)

In the switchover valve neutral state, the VA and VB ports are connected to the tank and the spool (26) is held in a central position by springs at both ends. Accordingly, because the VA → MA, VB → MB paths are closed, the MA and MB ports that connect to the hydraulic motor on either side are both in the closed state.

Also, because the parking brake release path is connected to the tank, the parking brake is in the operation state and rotation of the hydraulic motor is mechanically stopped by the brake spring force.

When an external force operates on the hydraulic motor, motor rotation is normally stopped by the parking brake.

The parking brake will slide when torque higher than the parking brake force occurs, but holding pressure occurs in the MA or MB port side and rotation is held to a very small amount by this holding pressure.

Also, when a small amount of rotation occurs with the hydraulic motor, high-pressure oil escapes from the closed circuit and cavitation tends to form in the low-pressure side of the closed circuit. The check valve built into the spool operates in order to prevent this cavitation, a VA → MA or VB → MB path is formed, and an oil volume equal to the leaked volume is filled into the closed circuit from the tank.

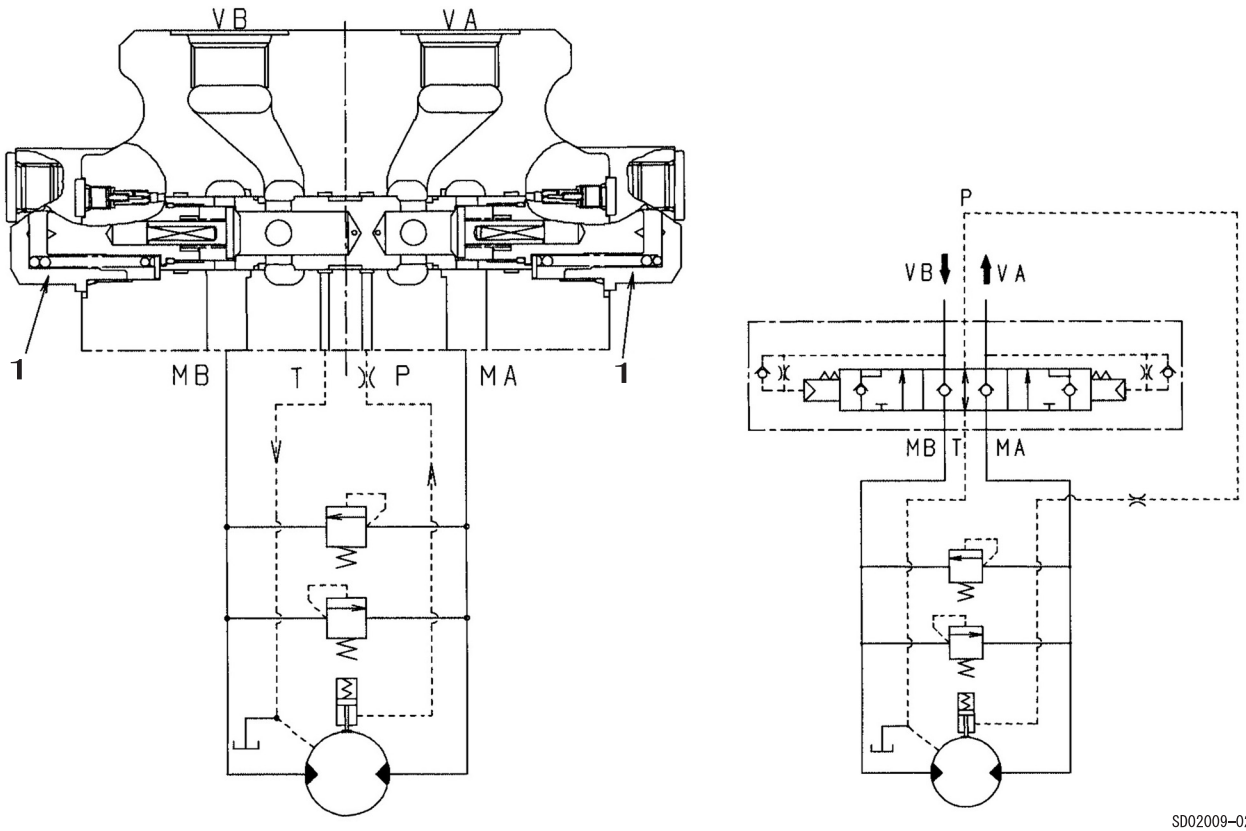

Diagram 9 Hold state

1	Spring

https://truckmanualshub.com/

b) Acceleration operation (See diagram 10.)

When the VA port connects to the hydraulic pump and the VB port connects to the tank through switching of the switchover valve, pressurized oil from the hydraulic pump pushes up the check valve within the spool from the VA port, this oil is fed to the hydraulic motor from the MA port, and this makes the hydraulic motor rotate.

Also, pressurized oil is fed to the pilot chamber on the VA port side, and the spool (26) which overcomes the spring force on the VB port side moves to the left. If this occurs, along with the MB → VB return path being formed, pressurized oil is fed to the parking brake release line and the parking brake is released. Accordingly, the hydraulic motor rotates.

If the inertial load of the hydraulic motor is large, pressure required for acceleration is achieved with the overload relief valve set pressure and the hydraulic motor increases the rotation speed while relieving pressurized oil.

As the rotation of the hydraulic motor increases, the relief volume decreases and a constant speed is eventually achieved.

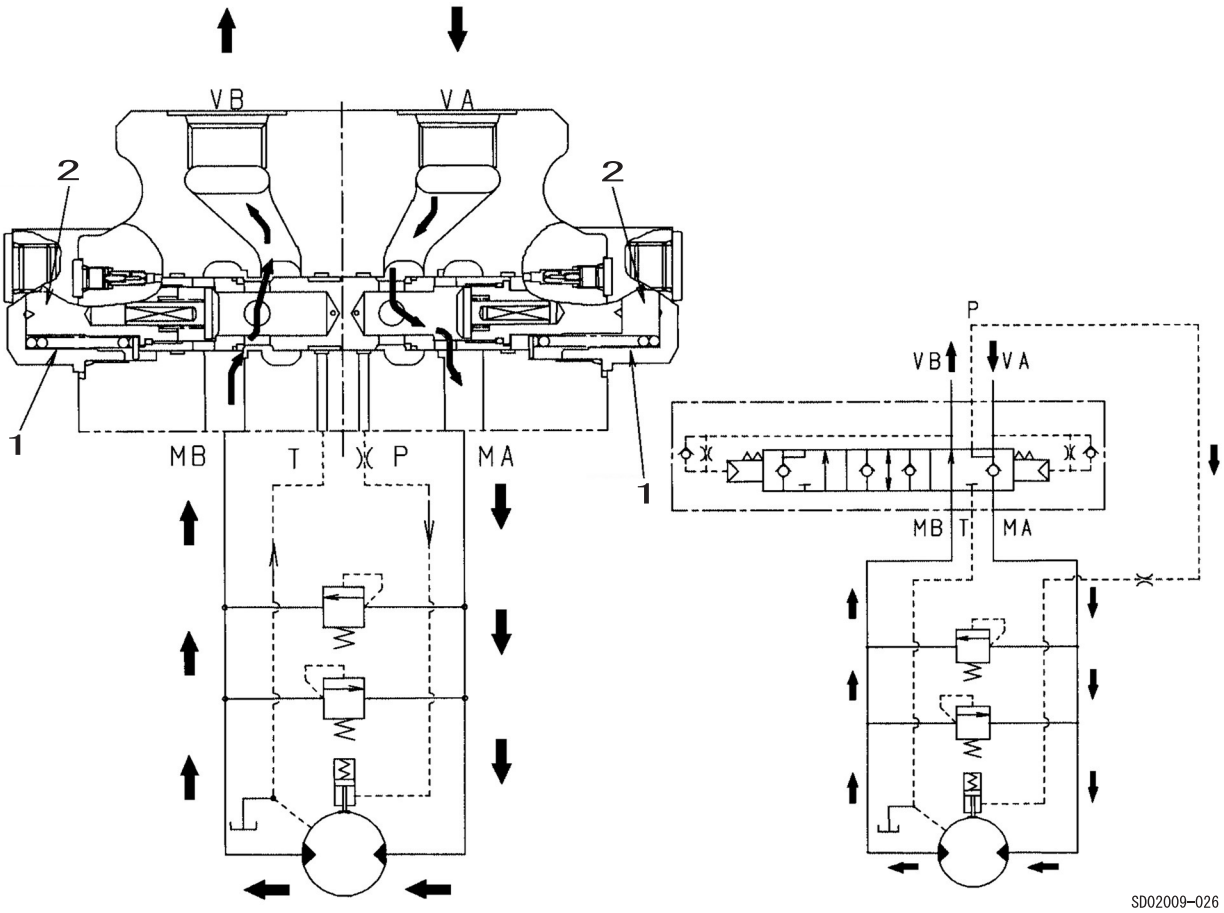

Diagram 10 Acceleration operation

1	Spring
2	Pilot chamber

https://truckmanualshub.com/

c) Stop operation (See diagram 11.)

When the switchover valve is returned to the neutral position, oil sending is cut off, and the VA and VB ports are connected to the tank during rotation of the hydraulic motor, pressure in the pilot chambers on both ends of the spool becomes equal and the spool (26) is returned to the neutral position through spring force.

This causes the MB → VB path to close. However, the inertial force of the load will force rotation of the hydraulic motor to continue. Pump operation occurs in the hydraulic motor and hydraulic oil continues to be discharged into the MB port, but pressure increases because this path is cut off. The overload relief valve operates and, as this happens, the speed of the hydraulic motor gradually decreases and the motor eventually stops.

Also, the parking brake release pressure is slowly reduced because it is metered. The brake eventually reaches the operation state and rotation of the hydraulic motor mechanically stops.

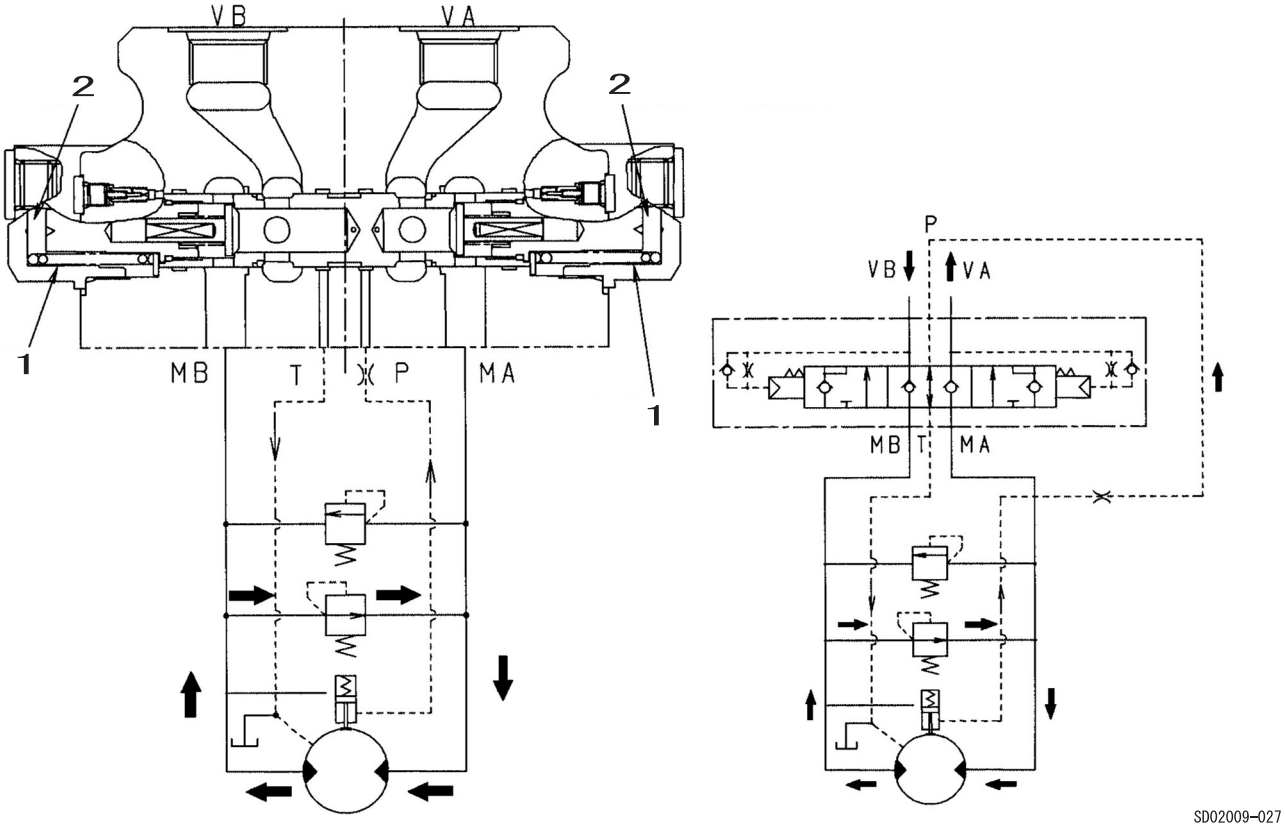

Diagram 11 Stop operation

1	Spring
2	Pilot chamber

https://truckmanualshub.com/

d) Counterbalance operation (diagram 12)

When the speed of the rotation hydraulic motor is reduced by load inertia, a counterbalance operation is necessary.

If the hydraulic oil being fed to the VB port from the hydraulic pump is gradually decreased, the hydraulic motor will rotate at a speed that is at or above the speed determined by the oil feed volume due to inertial force. As a result, the pressure in the pilot chamber of the VB port side is decreased and the spool (26) is pushed in the neutral direction to the left side by the spring (28).

Accordingly, because the surface area of the MA → VA path is reduced and path resistance increases, pressure on the MA side increases and the hydraulic motor is affected by brake operation.

If the motor rotation speed falls to or below the speed determined by the oil feed volume, pressure in the pilot chamber on the VB port side increases, the spool (26) moves to the right, brake operation is reduced in order to increase the surface area of the MA → VA path, and the rotation speed of the hydraulic motor is controlled to a speed that is equivalent to the oil feed volume.

In order to perform stable counterbalance operations, orifices (40) are installed on the pilot chambers on both ends in order to provide a damping effect on the spool (26).

The parking brake is released while the spool (26) is performing a pressure adjustment operation.

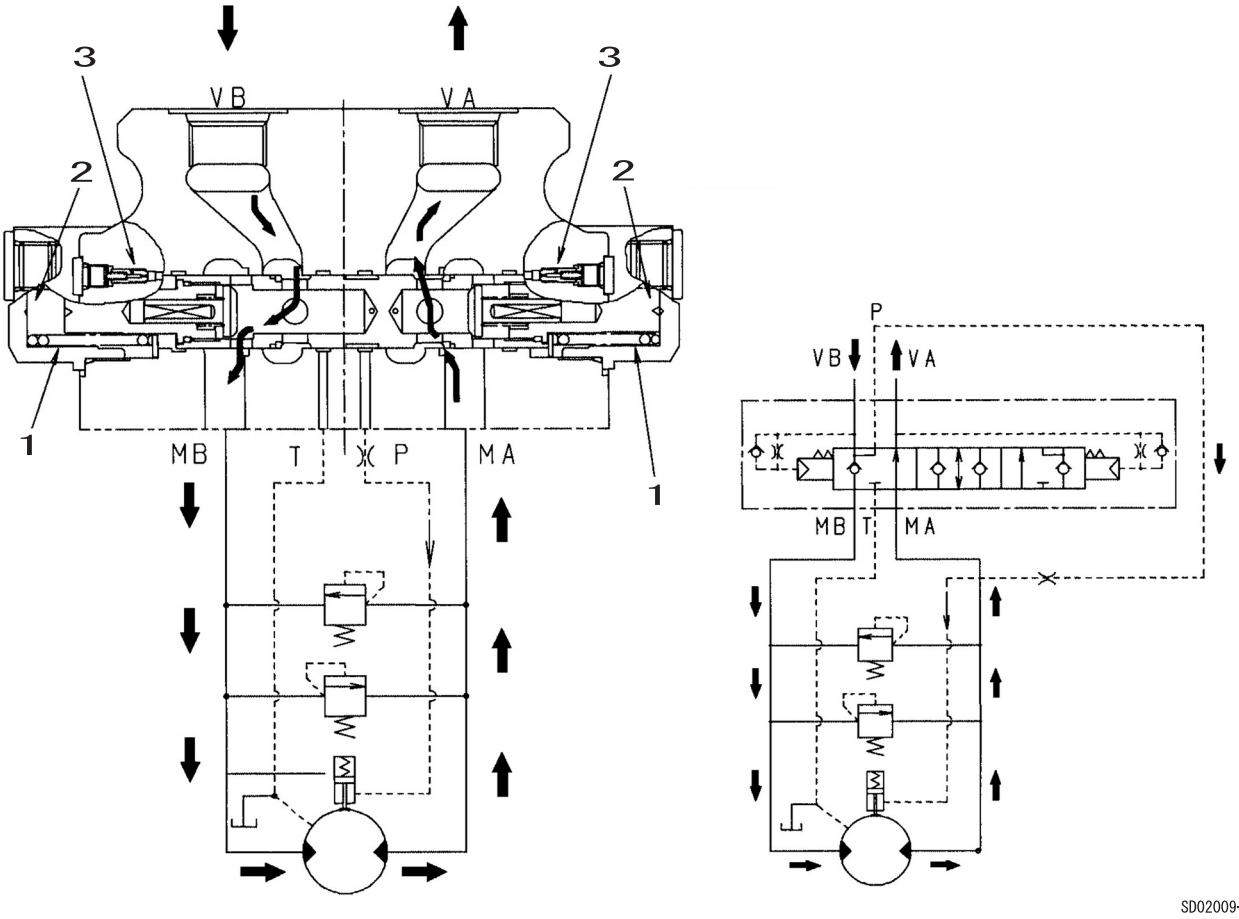

Diagram 12 Counterbalance operation

1	Spring
2	Pilot chamber
3	Check valve with orifice

https://truckmanualshub.com/

2. Swing Motor

(1) Swing motor operation explanation

1) Hydraulic motor section

As the diagram below shows, when the high-pressure oil passes through the valve plate (1) intake-side port (a) and flows into the cylinder, the hydraulic pressure operates on the piston and a force F is generated in the axial direction. This force F is divided into 2 vectors, a force F1 perpendicular to the swash plate (3) via the shoe (2) and a force F2 perpendicular to the shaft. This force F2 is transmitted to the cylinder block (4) via the piston, generating a rotational couple around the output shaft.
9 pistons are arrayed in the cylinder block. Rotation torque is transmitted sequentially to the output shaft by multiple pistons linked with the high-pressure oil intake-side port.
When the oil in and out directions are reversed, the rotation of the output shaft also reverses.
The theoretical output torque T [N•m] is given by the following equation.

$$T = \frac{p \times q}{2\pi}$$

p:Effective pressure difference [MPa]
q:Compartments per rotation [cm³]

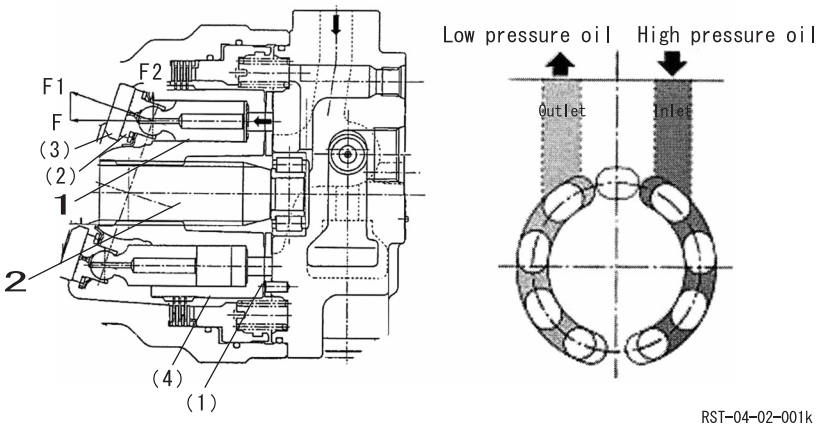

Figure 1 Motor section operation explanation diagram

1	Piston
2	Drive shaft

2) Valve casing section

[1] Anti-cavitation check valve section
Because the system using this type of motor does not have a valve with a counter-balance function, the motor sometimes rotates more than the quantity of oil fed.
In order to prevent cavitation due to insufficient oil, there is a check valve to take in the oil shortfall.

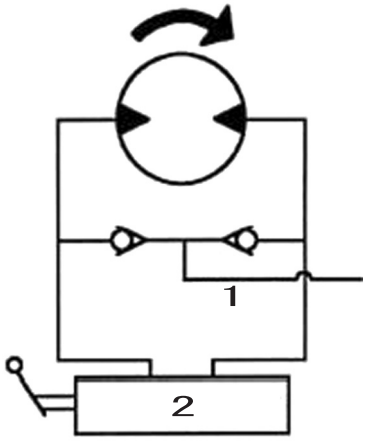

Figure 2 Hydraulic circuit diagram

1	M port
2	Control valve

https://truckmanualshub.com/

3) Brake section

The cylinder (111) is coupled with the drive shaft (101) by the gear. Also, the separator plate (743) is constrained for circumferential rotation by the arc groove cut into the casing (301).
When the friction plate (742) that is gear coupled to the cylinder outer circumference section is pressed to the casing (301) by the brake spring (712) via the separator (743) and the brake piston (702), friction force is generated between the friction plate and casing and between the separator plate and the brake piston. The drive shaft is constrained and braked by this friction force.
On the other hand, when brake release pressure is applied to the oil chamber formed between the brake piston and the casing and the hydraulic pressure wins out over the spring force, the brake piston moves, the force pressing the friction plate against the casing disappears, and the brake is released.

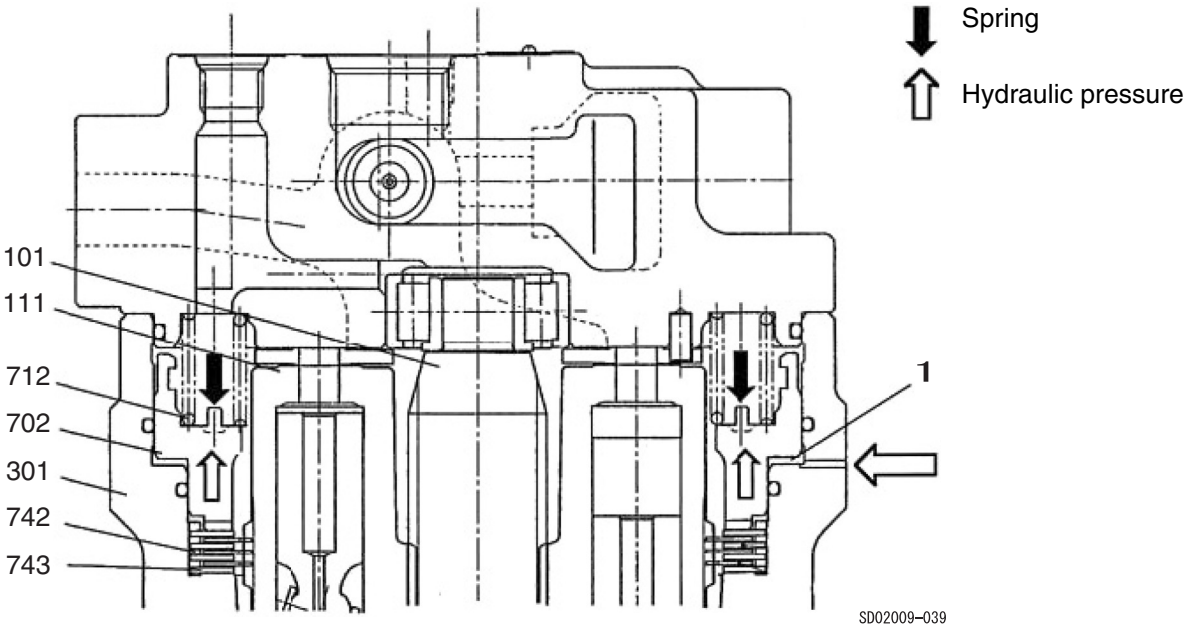

Figure 3 Brake operation diagram

1	Oil chamber

https://truckmanualshub.com/

4) Relief valve operation explanation (Relief valve model: KRD22EK10)

[1] Operation explanation for when the relief valve is pressurized

In the case where the P port is pressurized with the tank pressure,
the P and R ports are initially at the tank pressure and the valve status is as shown in diagram 4 (1).

At the pressure where there is balance between the hydraulic pressure determined by the product of the pressure P and the pressurized area A1 of the plunger (301) on the one hand and the hydraulic pressure determined by the product of the spring (321) load FSP and plunger (301) pressurized area A2 and the g chamber pressure Pg on the other, the relief valve starts to operate.

After that, the g chamber pressure rises and the piston (302) starts its stroke. Accompanying this movement, the load on the spring (321) increases.

Through the operation above, the relief pressure P is increased from P1 to Ps in the pressure boost time t1.

This process is explained below in terms of the relationship between the movement state of the parts in diagrams 4-(2) - (4) and the relief pressure.

1) State shown in diagram 4-(2)

When the relief valve P port is pressurized, pressure is generated in the g chamber via the orifice m in the plunger (301).

When the hydraulic pressure operating on the plunger (301) increases and reaches the pressure at which it balances the spring (321) load FSP, the relief valve carries out the relief operation at pressure P1.

The relationship at this time is expressed by the following equation.

$P1 \times A1 = FSP1 + Pg1 \times A2$FSP1: Initial set load for the spring (321)

2) State shown in diagram 4-(3)

The g chamber pressure operates on pressurized areas A3 and A4 of the piston (302). When this hydraulic pressure becomes larger than the load on the spring (321), the piston starts to move to the left.

At this time, the oil in the h chamber formed between the piston and the adjusting plug (401) is discharged into the g chamber via the orifice n set up on the piston (302) while the piston moves to the left, so the h chamber functions as a damping chamber.

Through this, the spring load gradually increases until the piston reaches the adjusting plug end section and the relief pressure P rises smoothly.

3) State shown in diagram 4-(4)

When the piston (302) reaches the adjusting plug (401) end section, it does not move farther to the left, so the constant relief state is reached and the relief pressure is held at P2.

Through the processes (1) - (4) above, the relief pressure varies as in diagram 5.

[2] Operation explanation for when the relief valve is depressurized

In the case where the P port pressure falls,
the P port pressure and the g chamber pressure fall together to the tank pressure when the pressurization of the P port ends. Through this, the plunger (301) which was open moves to the left and is placed in the seat (401). At the same time, the piston (302) also is moved to the right by the spring (321) and returns to the state in diagram 4-(1).

https://truckmanualshub.com/

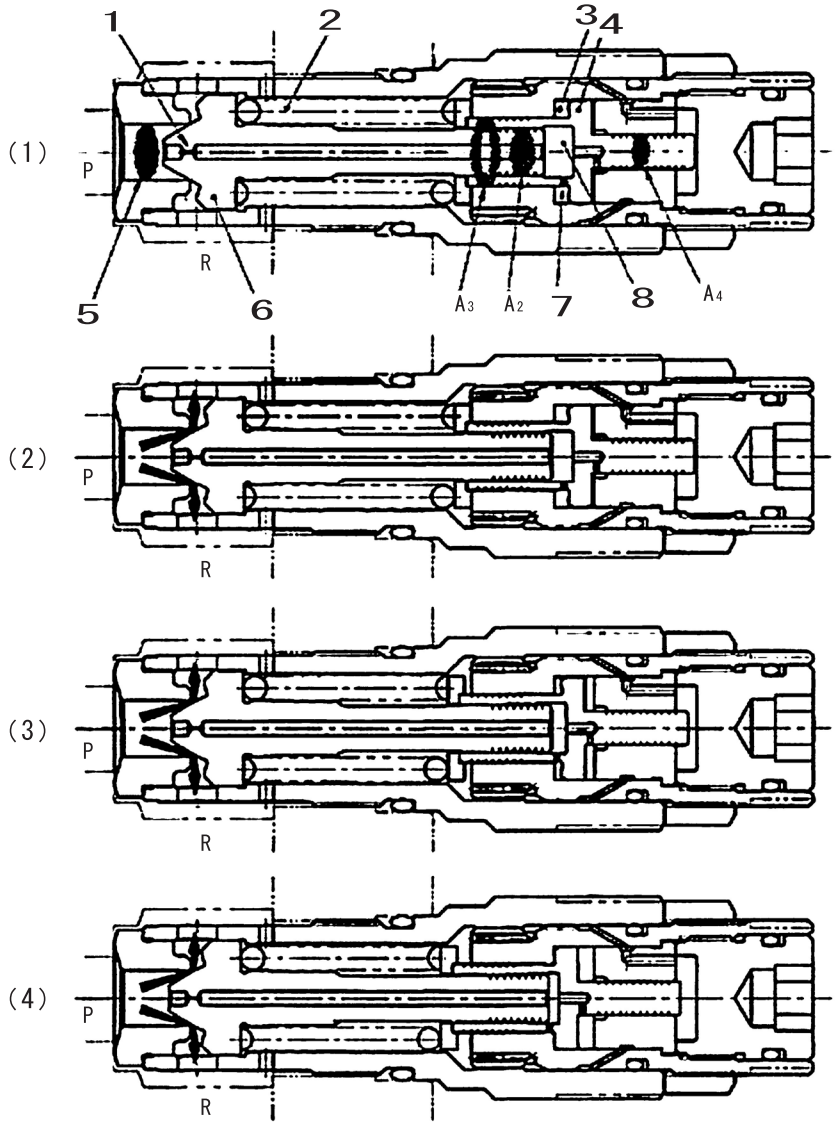

Figure 4 Relief valve operation explanation diagram

1	Orifice m	5	A1 pressurized area
2	Spring (321)	6	Plunger (301)
3	Chamber h	7	Orifice n
4	Piston (302)	8	g chamber

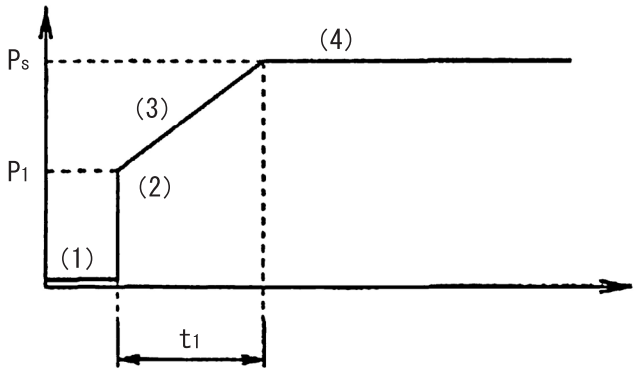

Diagram 5 Pressure boost characteristics

https://truckmanualshub.com/

(2) Swing motor internal diagram

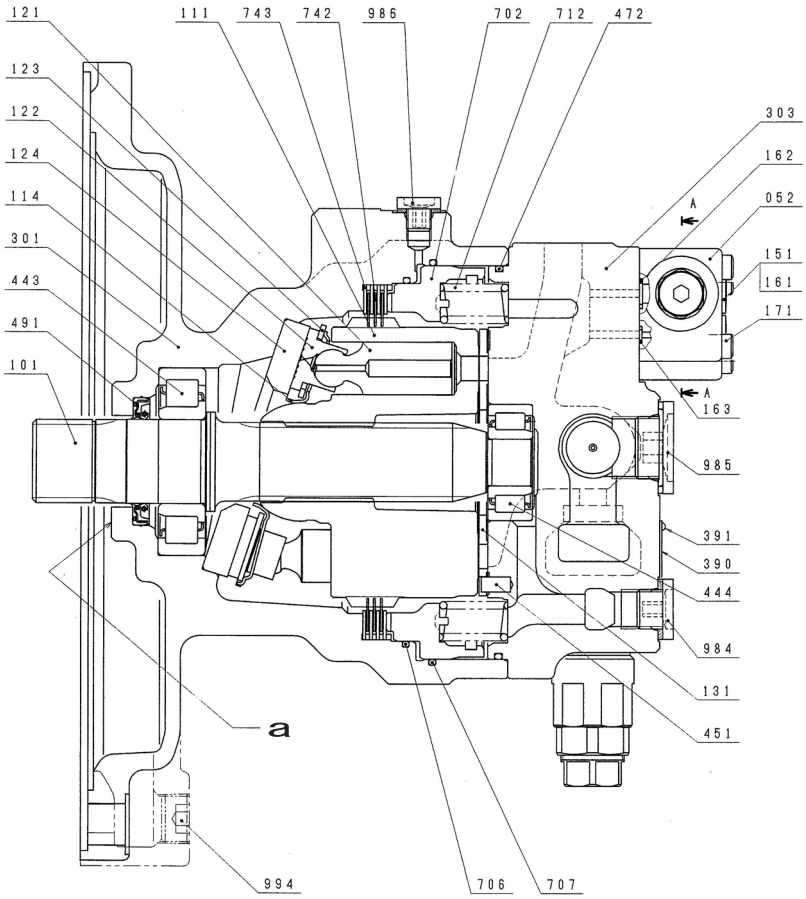

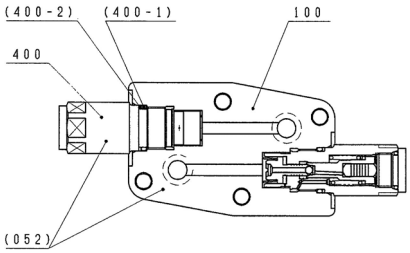

SECTION A~A

SD02009-011a

https://truckmanualshub.com/

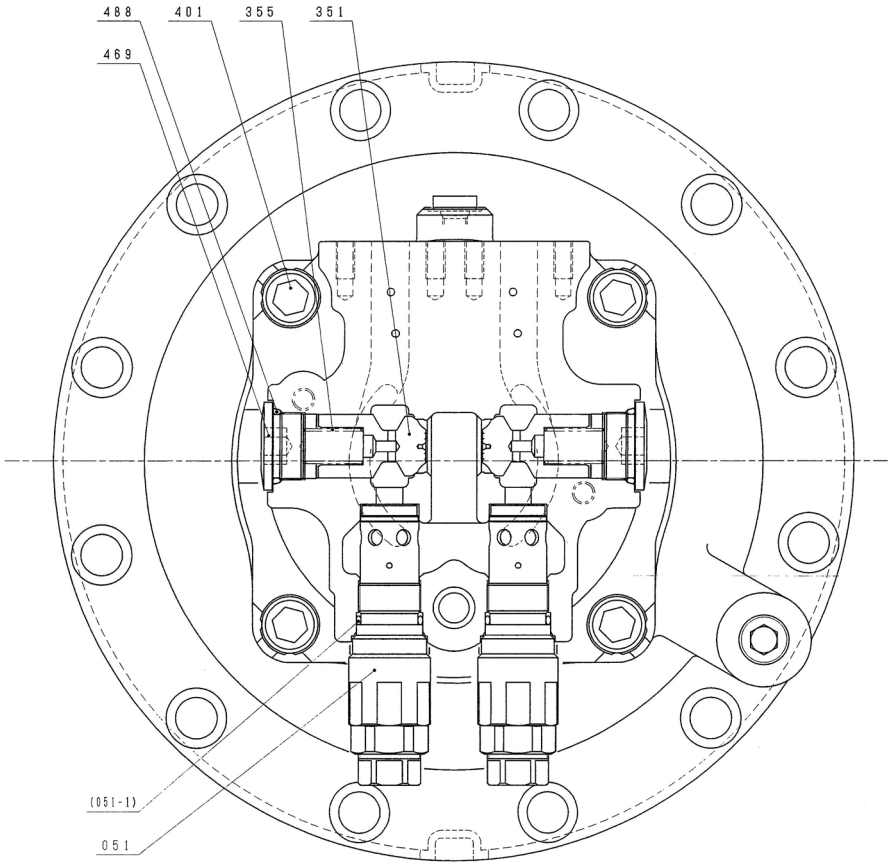

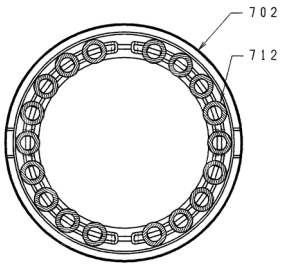

The disposition of brake sping

Code	Part name	Q'ty
052	Reverse prevention valve sub-assembly	1 set
100	Casing	1
151	ROH plug	2
161	O-ring	2
162	O-ring	2
163	O-ring	2
171	Hexagon socket head bolt	4
400	Reverse prevention valve	2 set
400-1	O-ring	2
400-2	Backup ring	2

Code	Part name	Q'ty
051	Relief valve	2 set
051-1	O-ring	2
10	Piston subassembly	1 set
101	Drive shaft	1
111	Cylinder	1
114	Plate spring	1
121	Piston	9
122	Shoe	9
123	Holder plate	1
124	Shoe plate	1
131	Valve plate B	1
20	Valve casing H2 subassembly	1 set
301	Casing JA1	1
303	Valve casing H2	1
351	Plunger H2	2
355	Spring H2	2
390	Nameplate	1
391	Driving tack	2
401	Hexagon socket head bolt	4
443	Roller bearing	1
444	Roller bearing	1
451	Pin	2
469	ROMH plug	2
472	O-ring	1
488	O-ring	2
491	Oil seal	1
702	Brake piston	1
706	O-ring	1
707	O-ring	1
712	Brake spring	18
742	Friction plate	2
743	Separator plate	4
984	Masking plug	1 set
985	Masking plug	1 set
986	Masking plug	1 set
994	Insert plug	1

a	Identification mark

SD02009-011b

https://truckmanualshub.com/

Valve

1. Control Valve

Basic configuration

This valve is based on the main unit housing which combines the P1 side housing and P2 side housing with the rear surfaces against each other and has a configuration that makes it possible to mount the inlet, add-on section, and outlet on the P2 side housing top.

(1) Operation

[1] When all spools in neutral

1) Neutral path [Fig. 1, Fig. 2]

1. When Pn1 and Pn2 ports are pressurized
   The oil fed from the P1 port enters the tank path (Ta) from the neutral path (L1) through the low-pressure relief orifice (Lc1) and returns to T1 - T8 ports.
   The oil fed from the P2 port enters the tank path (Ta) from the neutral path (R1) through the low-pressure relief orifice (Rc1) and returns to the T1 - T8 ports.
   The pressure in the pressure chambers (L2) and (R2) upstream from the low-pressure relief valve is led into the pump from the ps1 and ps2 ports and controls the P1 and P2 pump discharge volume.
   Also, if excess oil flows into the neutral path (L1), the poppet opens to provide low-pressure relief. This prevents the ps1 and ps2 port pressures from becoming abnormally high.
2. When Pn1 and Pn2 ports are not pressurized
   In this case, the low-pressure relief poppets open at lower pressure than in (a).
   Therefore, the oil fed from the P1 port enters the tank path (Ta) from the neutral path (L1) primarily through the low-pressure relief valve discharge port (L3) and returns to the T1 - T8 ports.
   Also, the oil fed from the P2 port enters the tank path (Ta) from the neutral path (R1) primarily through the low-pressure relief valve discharge port (R3) and returns to the T1 - T8 ports.

https://truckmanualshub.com/

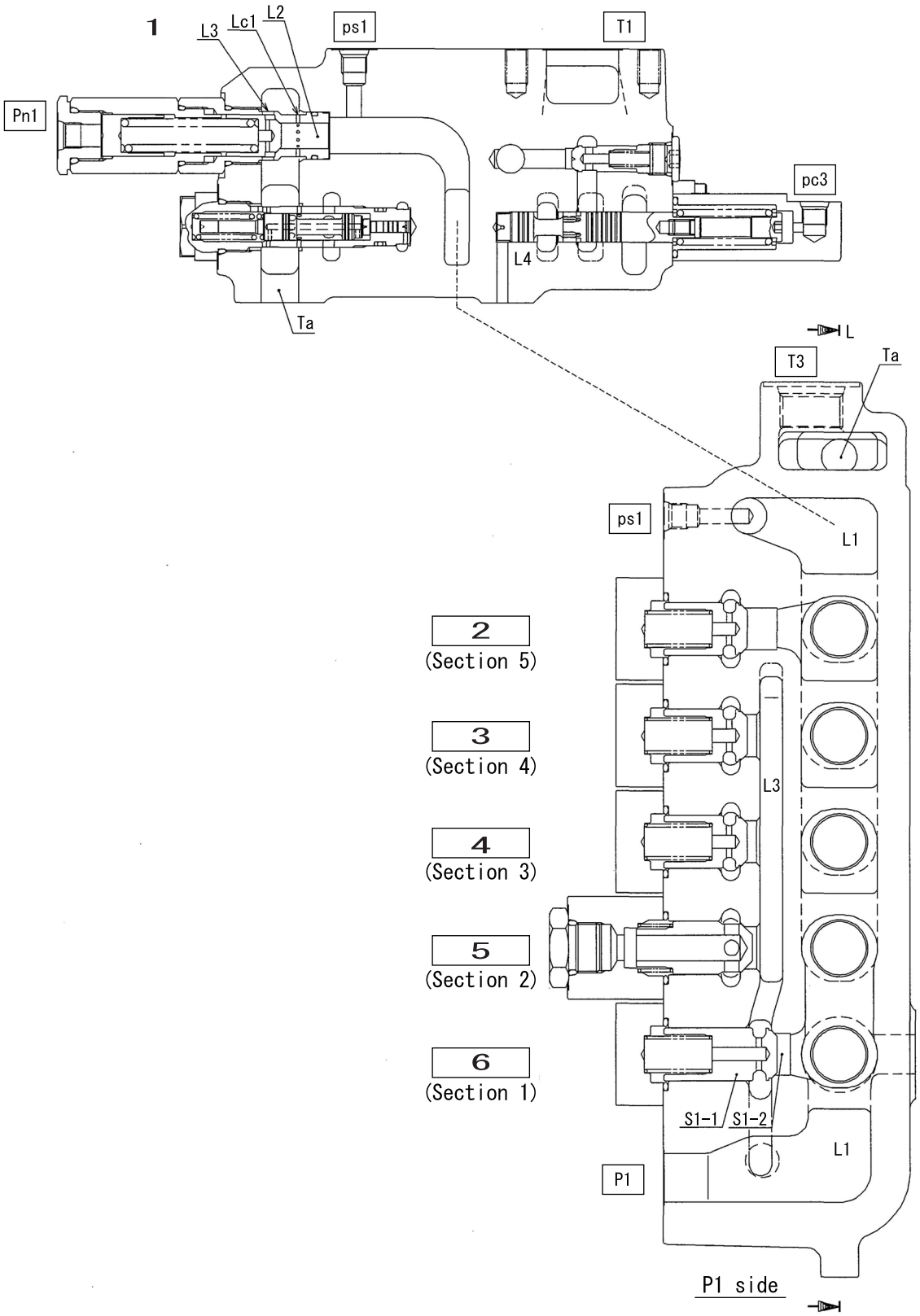

SD02009-012a

https://truckmanualshub.com/

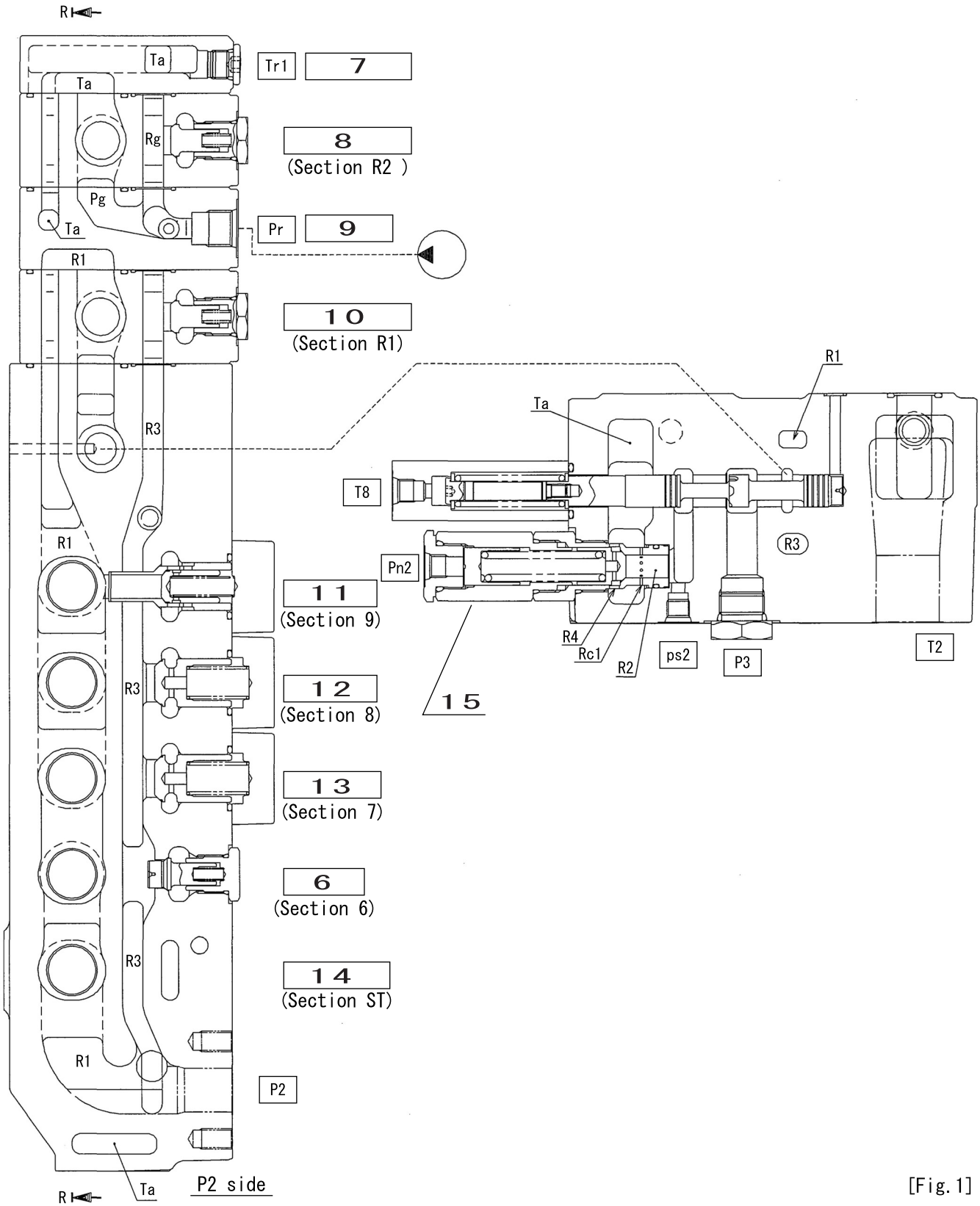

[Fig. 1]

SD02009-012b

1	Low-pressure relief valve (L)	6	Travel	11	Arm 2
2	Arm 1	7	Outlet	12	Boom 1
3	Boom 2	8	Attachment 2	13	Bucket
4	Swing	9	Inlet	14	Straight travel
5	Option	10	Attachment 1	15	Low-pressure relief valve (R)

https://truckmanualshub.com/

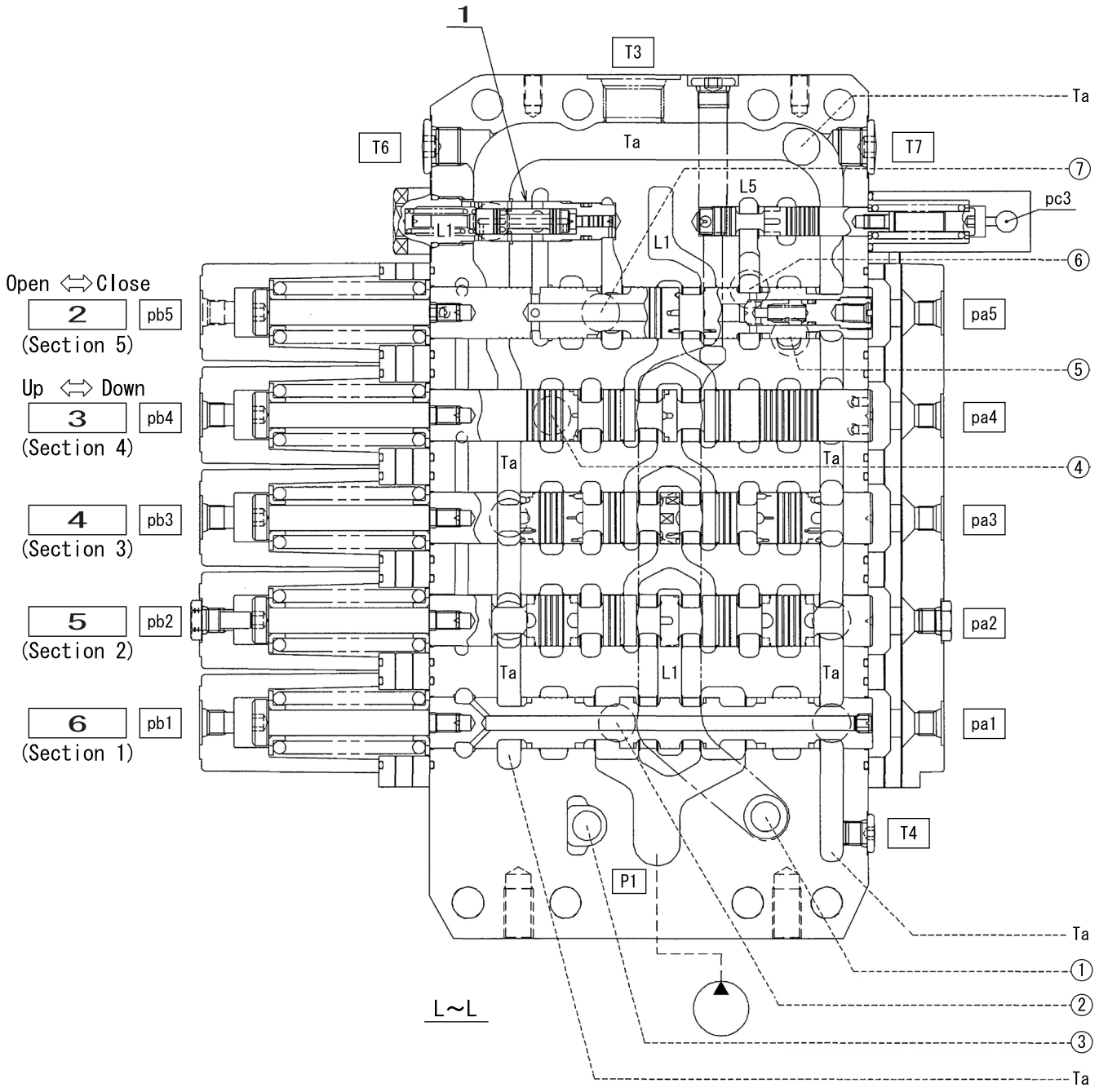

SD02009-013a

https://truckmanualshub.com/

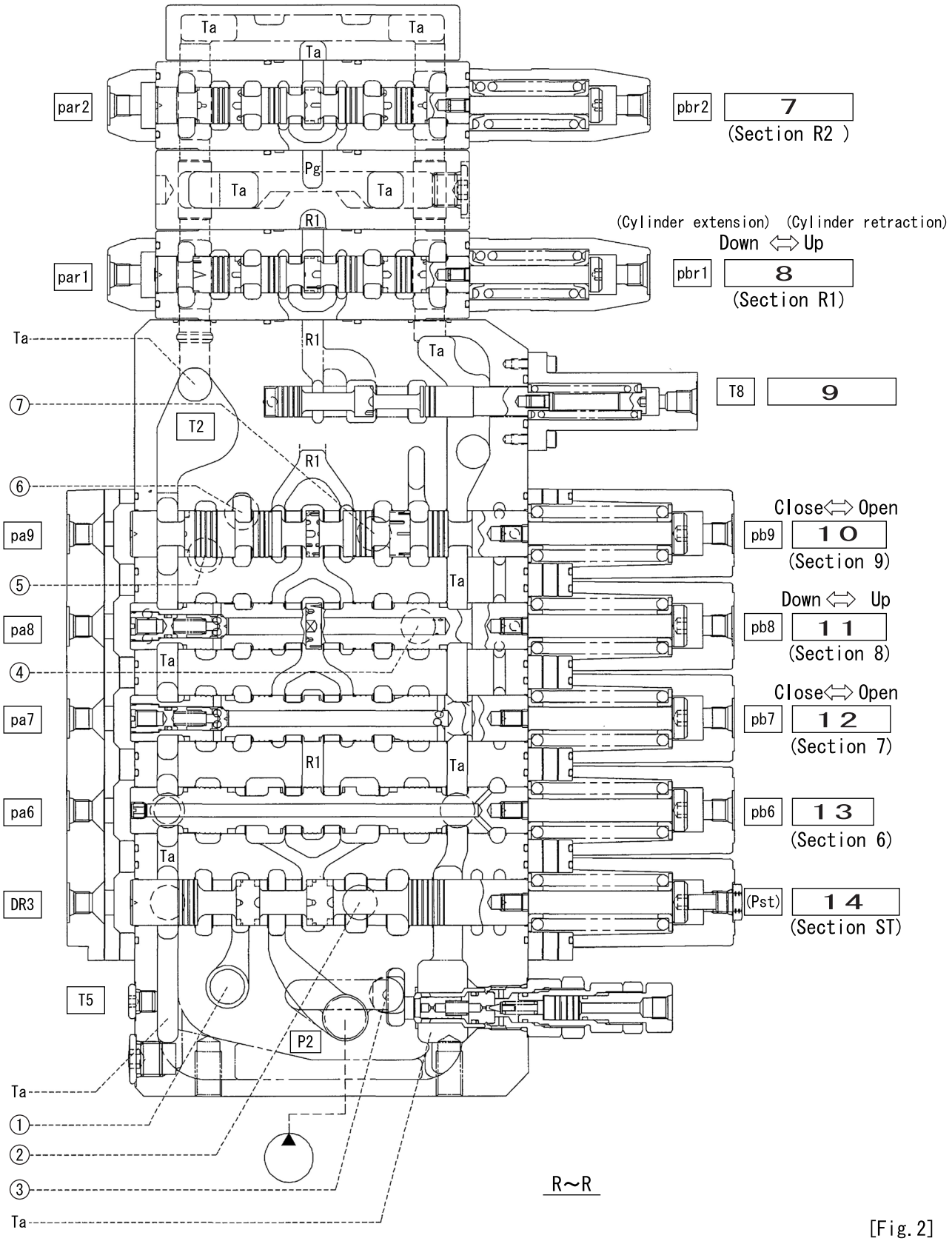

[Fig. 2]

SD02009-013b

1	Variable arm regeneration orifice	6	Travel	11	Boom 1
2	Arm 1	7	Attachment 2	12	Bucket
3	Boom 2	8	Attachment 1	13	Travel
4	Swing	9	Neutral cut	14	Straight travel
5	Option	10	Arm 2		

https://truckmanualshub.com/

2) Signal, straight travel signal control valve, plate assembly [Fig. 3]
There are 2 signals, (a) and (b) below. The pilot signal for each spool for which a lever is operated is used to generate the pressure that is output.
The straight travel signal control valve integrates each signal pressure and controls straight travel spool switchover. Also, the plate assembly has a function for picking up the pilot pressures with the built-in shuttle.

1. Travel signal (PT)
The highest of the pilot pressures applied to the travel section 1 (pa1, pb1) and travel section 6 (pa6, pb6) is selected and output to the PT port.
Therefore, when the travel spool is in the neutral position (no-load pilot pressure), no pressure is generated at the PT port.

https://truckmanualshub.com/

2. Front signal (PA)
   The highest of the pilot pressures (pa2 - 9 and pb2 - 9) applied to sections 2 - 9 that use the pressurized oil from the P1 and P2 pumps, except for the travel sections, is selected and output to the PA port. (Note 1)
   Therefore, when all the spools are in the neutral position (no-load pilot pressure), no pressure is generated at the PA port.

Note: 1
When an add-on (main pump add-on) is used through the feed from P2, the branches for the add-on pilot signals par1 and pbr1 are connected to the respective main unit valves, prs1 and prs2 ports, and thus incorporated in the front signal PA selection area.
Be careful. If the above line connection is not done, the PA pressure will not rise through add-on selection.
Also, when using 2 main pump add-ons, set the circuit so that maximum of the add-on pilot pressures (par1 and 2, pbr1 and 2) can be taken out as desired and connect to either prs1 or prs2.

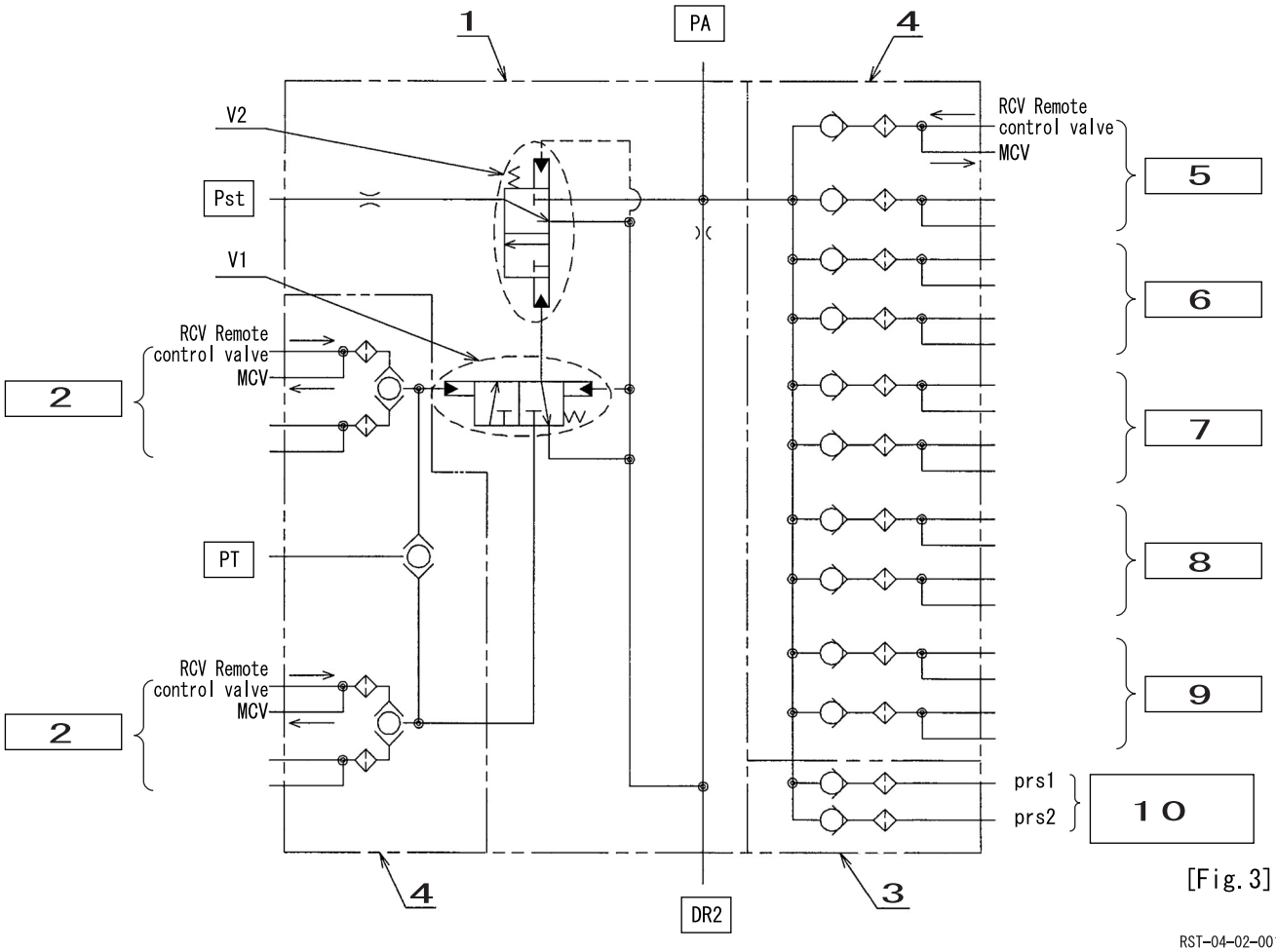

[Fig. 3]

RST-04-02-001an

1	Straight travel signal control valve	6	Arm
2	Travel	7	Bucket
3	Main unit housing section (option)	8	Swing
4	Plate assembly	9	Option
5	Boom	10	Add-on (main pump)

https://truckmanualshub.com/

[2] Independent operation

1) Travel spool switchover [Fig. 4 and Fig. 5]
When a travel spool is switched by pressurizing from the travel (section 1) pilot port Pb1 (Pa1), the oil fed from the P1 port flows from the neutral path (L1) through the spool neck section and into the B1 (A1) port. The return oil returns to the tank path (Ta) from the A1 (B1) port through the spool neck section.
When a travel spool is switched by pressurizing from the travel (section 6) pilot port Pb6 (Pa6), the oil fed from the P2 port flows from the neutral path (R1) through the spool neck section or path (S6-1) and into the B6 (A6) port.
When only travel is operated, the parallel path (R3) and the path (S6-1) have the same pressure, so the poppet (S6-2) does not open. The return oil returns to the tank path (Ta) from the A6 (B6) port through the spool neck section.

https://truckmanualshub.com/

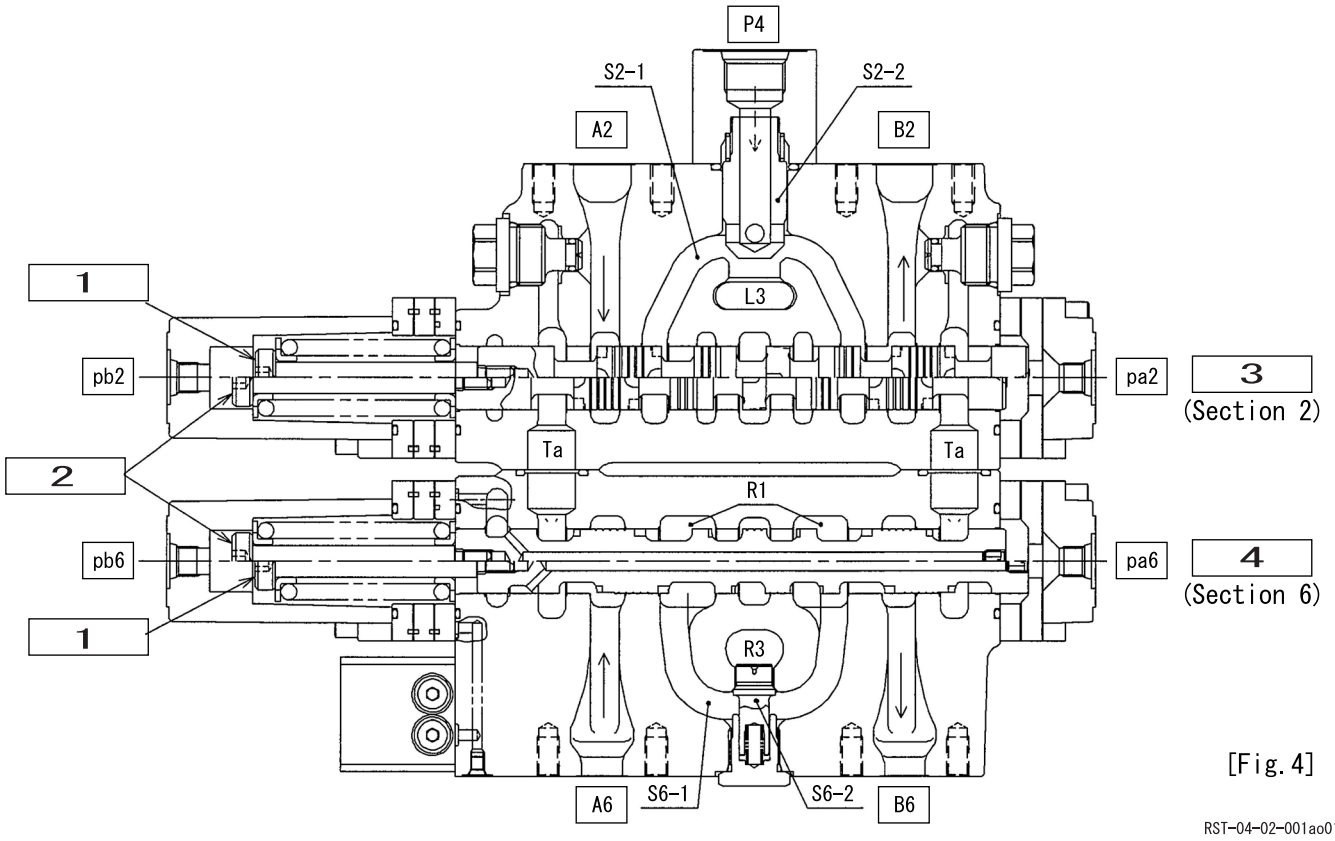

[Fig. 4]

1	Switching state
2	Neutral state
3	Option
4	Travel

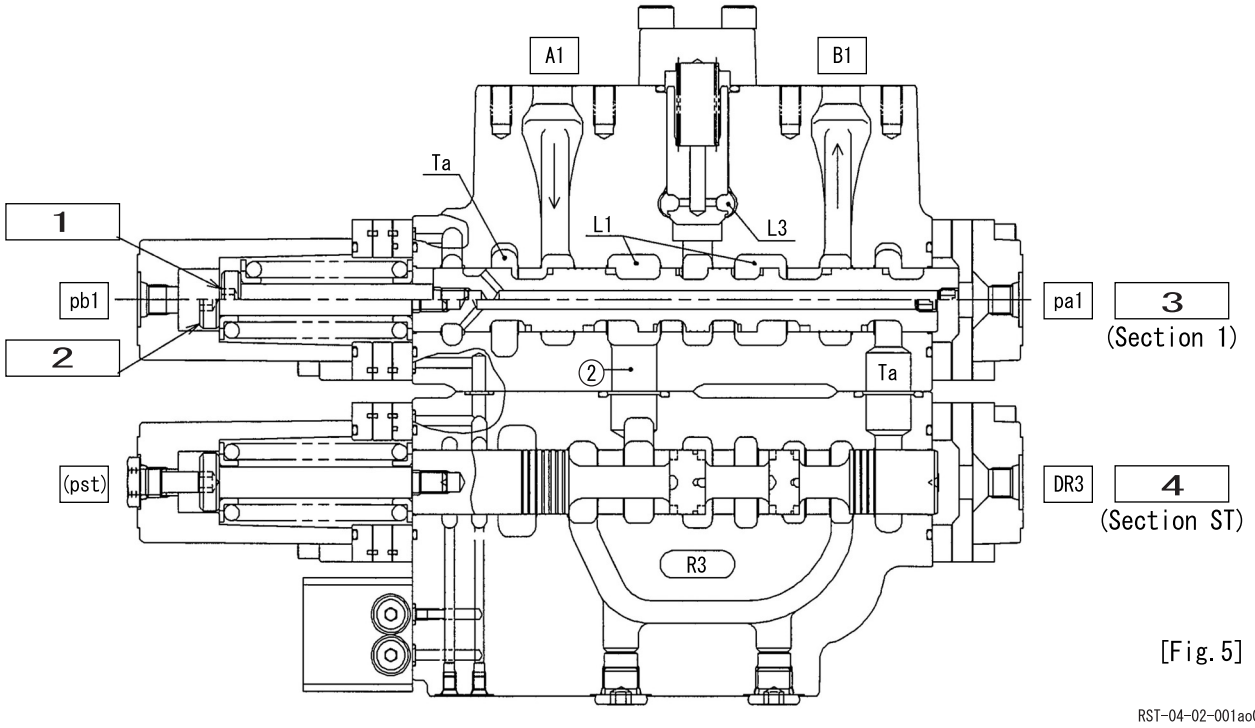

[Fig. 5]

1	Switching state
2	Neutral state
3	Travel
4	Straight travel

https://truckmanualshub.com/

2) Option spool switchover [Fig. 4]
When the option spool is switched by pressurizing from the option (section 2) pilot port Pb2 (Pa2), the neutral path (L1) is closed. The oil fed from the P1 port flows from the parallel path (L3) through the load check valve (S2-2), path (S2-1), and the spool neck section, and into the B2 (A2) port.
The return oil returns to the tank path (Ta) from the A2 (B2) through the spool neck section. Also, when oil is fed from the P4 port, it passes through the inside of the load check valve (S2-2) and merges with path (S2-1).

https://truckmanualshub.com/

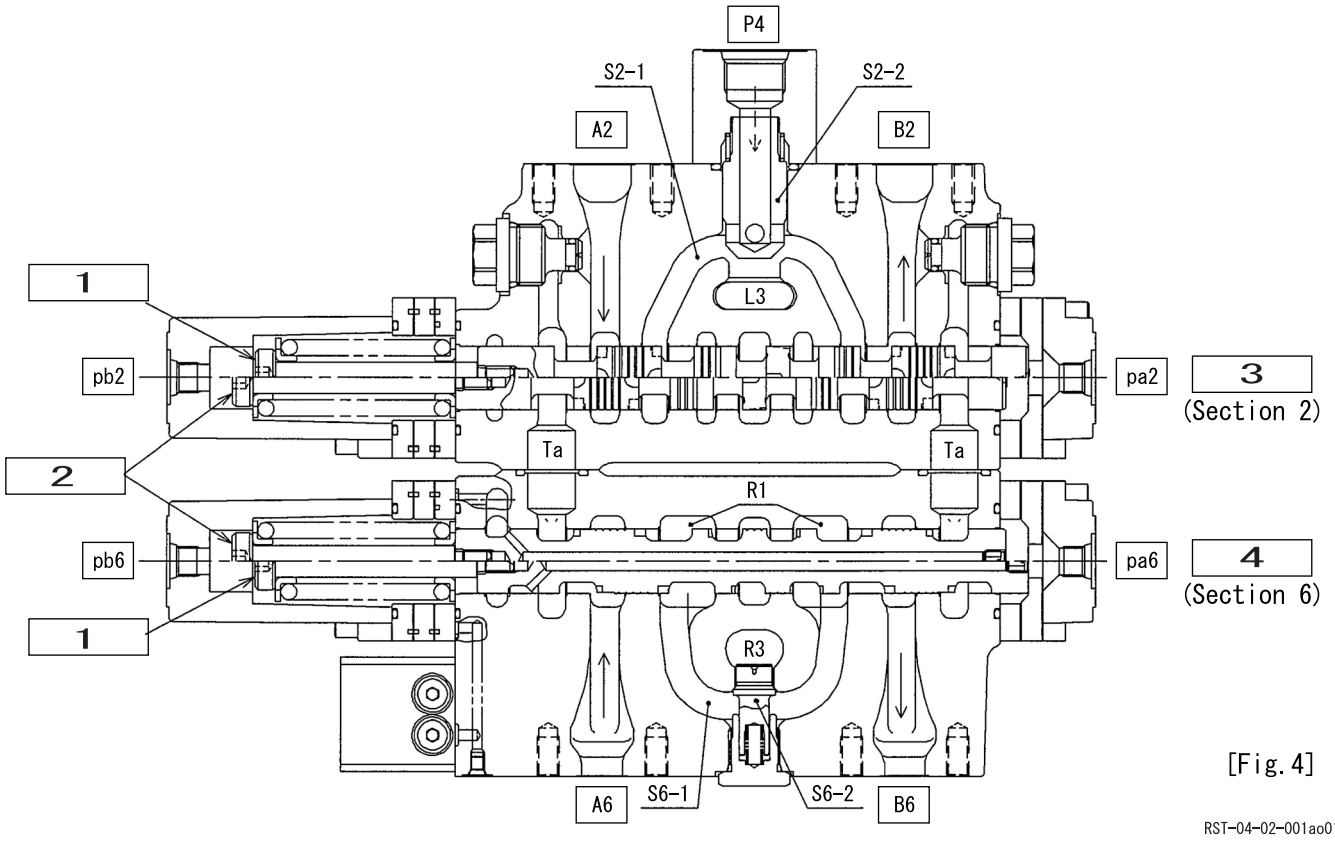

[Fig.4]

RST-04-02-001ao01

1	Switching state
2	Neutral state
3	Option
4	Travel

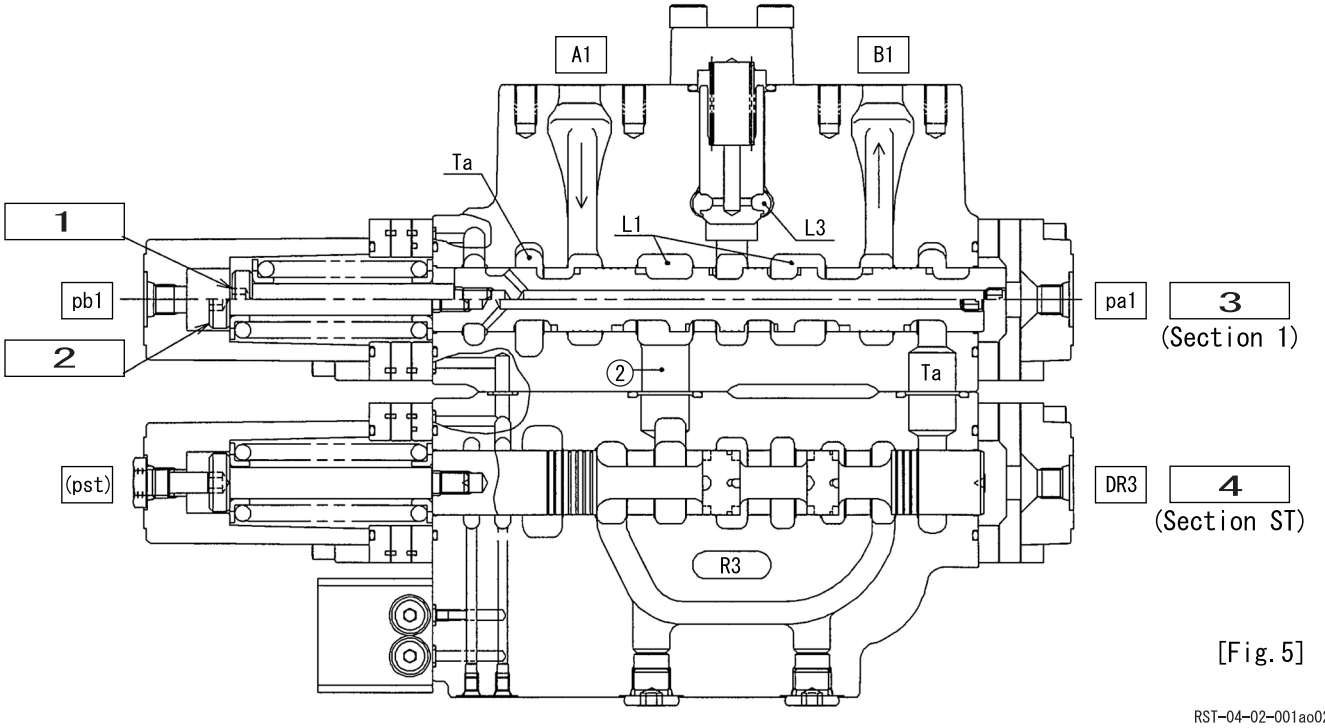

[Fig.5]

RST-04-02-001ao02

1	Switching state
2	Neutral state
3	Travel
4	Straight travel

https://truckmanualshub.com/

3) Swing spool switchover [Fig. 6]
When the swing spool is switched by pressurizing from the swing (section 3) pilot port Pb3 (Pa3), the neutral path (L1) is closed. The oil fed from the P1 port flows from the parallel path (L3) through the load check valve (S3-2), path (S3-1), and the spool neck section, and into the B3 (A3) port.
The return oil returns to the tank path (Ta) from the A3 (B3) through the spool neck section.

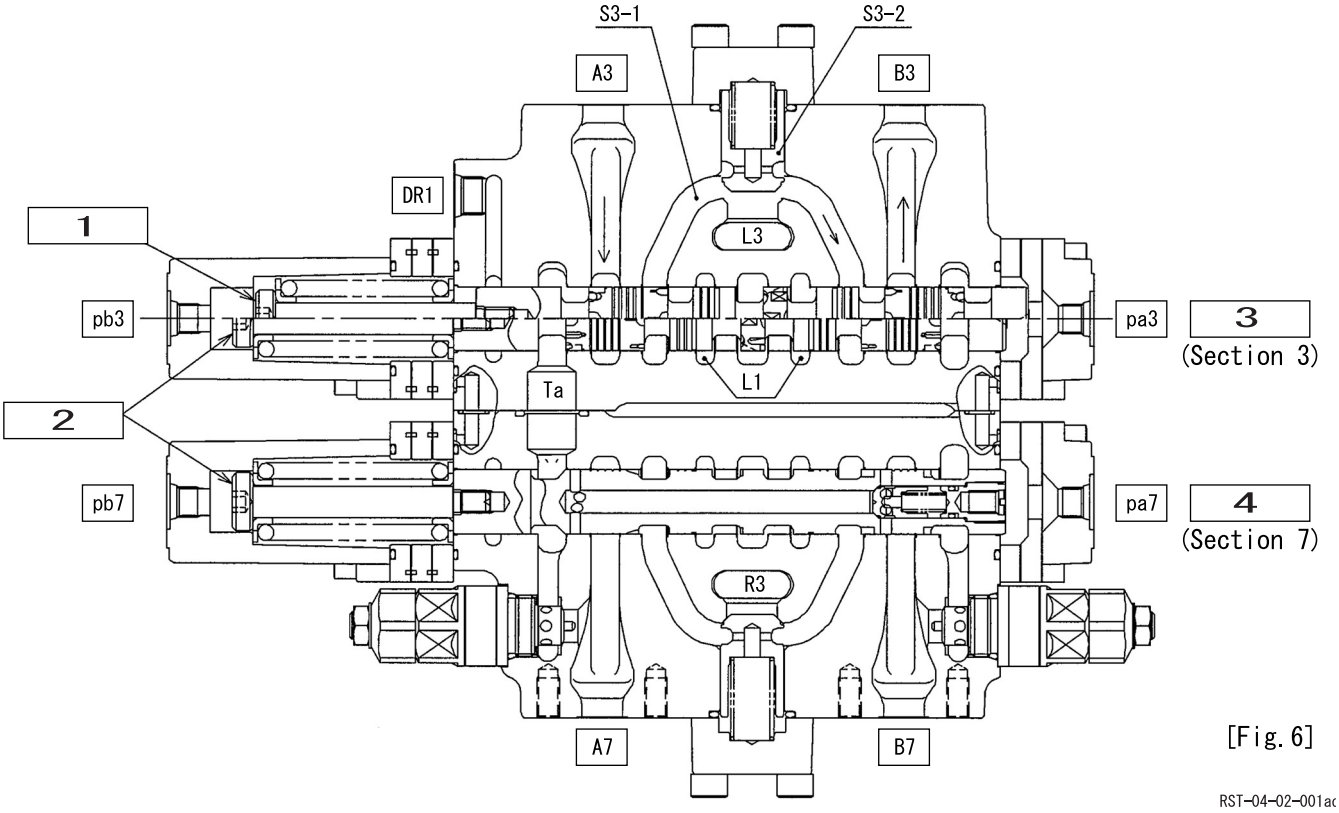

[Fig. 6]

1	Switching state	3	Swing
2	Neutral state	4	Bucket

https://truckmanualshub.com/

4) Bucket spool switchover [Fig. 7 and Fig. 8]

1. Close (regeneration) [Fig. 7]
   When the bucket spool is switched by pressurizing from the bucket (section 7) pilot port Pb7, the neutral path (R1) is closed. The oil fed from the P2 port flows through the parallel path (R3), the load check valve (S7-2), path (S7-1), and the spool neck section, and into the B7 port.
   At the same time, the return oil from the A7 port returns to the tank path (Ta).
   After part of the return oil pushes open the poppet (S7-3) inside the bucket spool, it merges into the B7 port to prevent cylinder head side cavitation.
   This is also accompanied by cylinder speed increases and P2 port pressure reductions depending on the port pressure conditions.

Bucket close (regeneration)

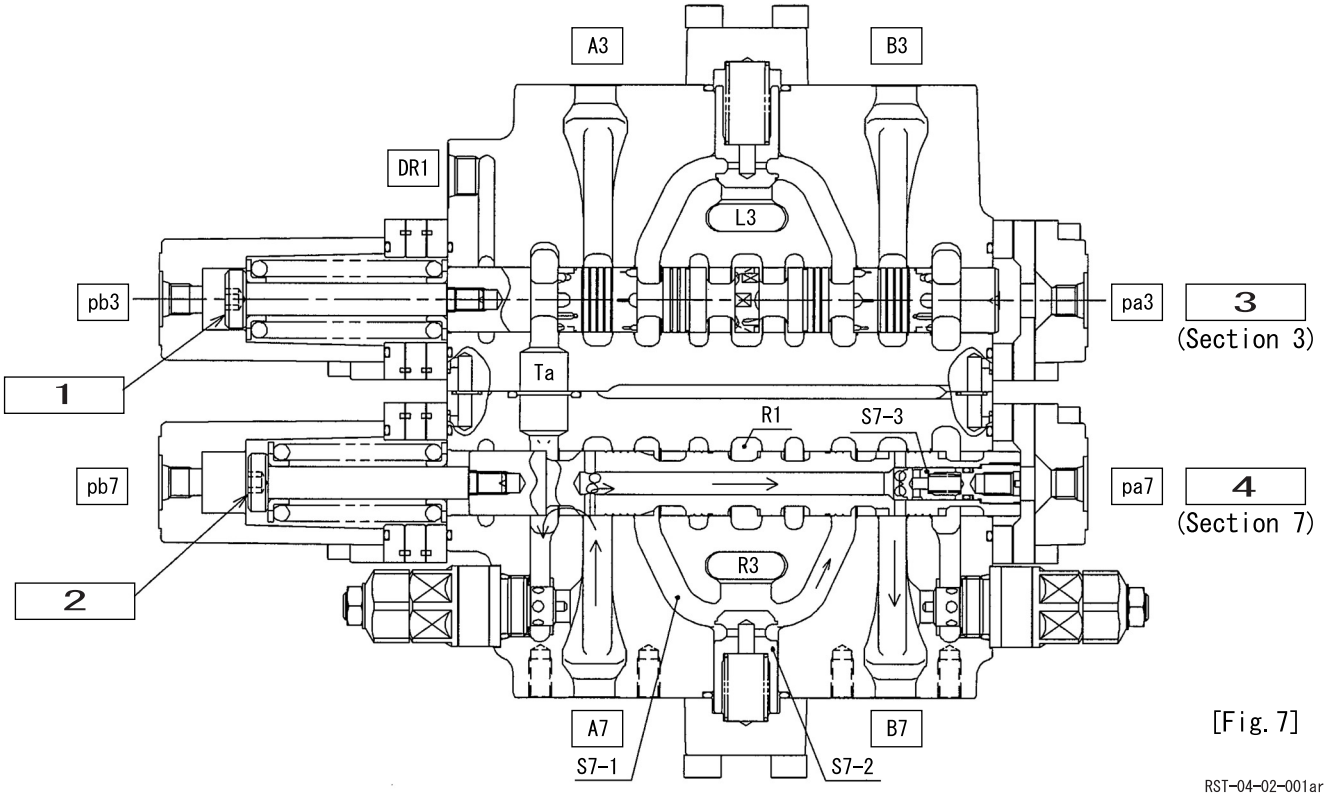

[Fig. 7]

1	Neutral state	3	Swing
2	Switching state	4	Bucket

https://truckmanualshub.com/

2. Open [Fig. 8]
   When the bucket spool is switched by pressurizing from the bucket (section 7) pilot port Pa7, the neutral path (R1) is closed. The oil fed from the P2 port flows through the parallel path (R3),
   the load check valve (S7-2), path (S7-1), and the spool neck section, and into the A7 port.
   The return oil returns to the tank path (Ta) from the B7 port through the spool neck section.

Bucket open

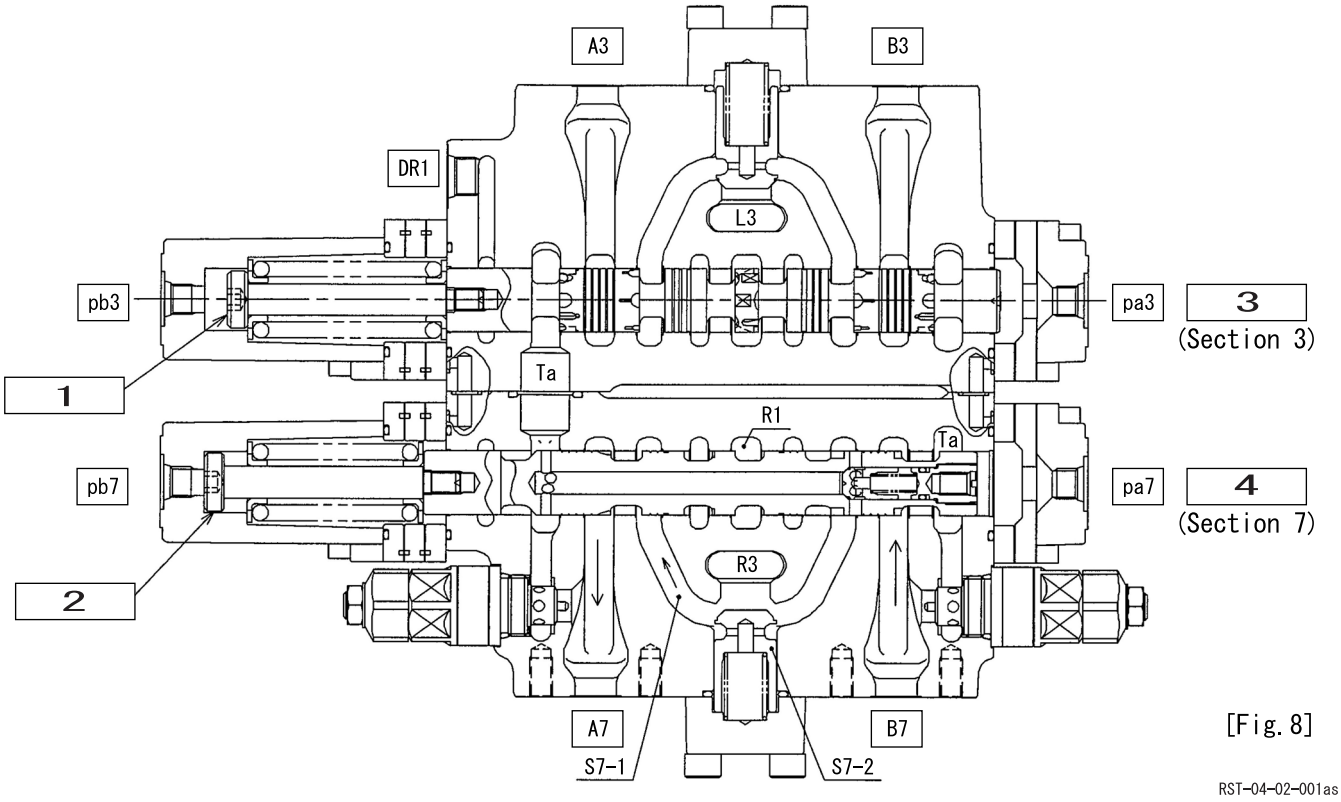

[Fig. 8]

1	Neutral state	3	Swing
2	Switching state	4	Bucket

https://truckmanualshub.com/

5) Boom spool switchover [Fig. 9, Fig. 10, and Fig. 11]

1. Neutral [Fig. 9]
   This valve mounts an anti-drift valve on the boom 1 cylinder head (A8) side.
   In neutral, the poppet (AD1) is reliably seated by the pressure of the A8 port itself led through path (AD2) and the spool (AD3) into the spring chamber (AD4) to cut off the return oil from the A8 port.

Neutral

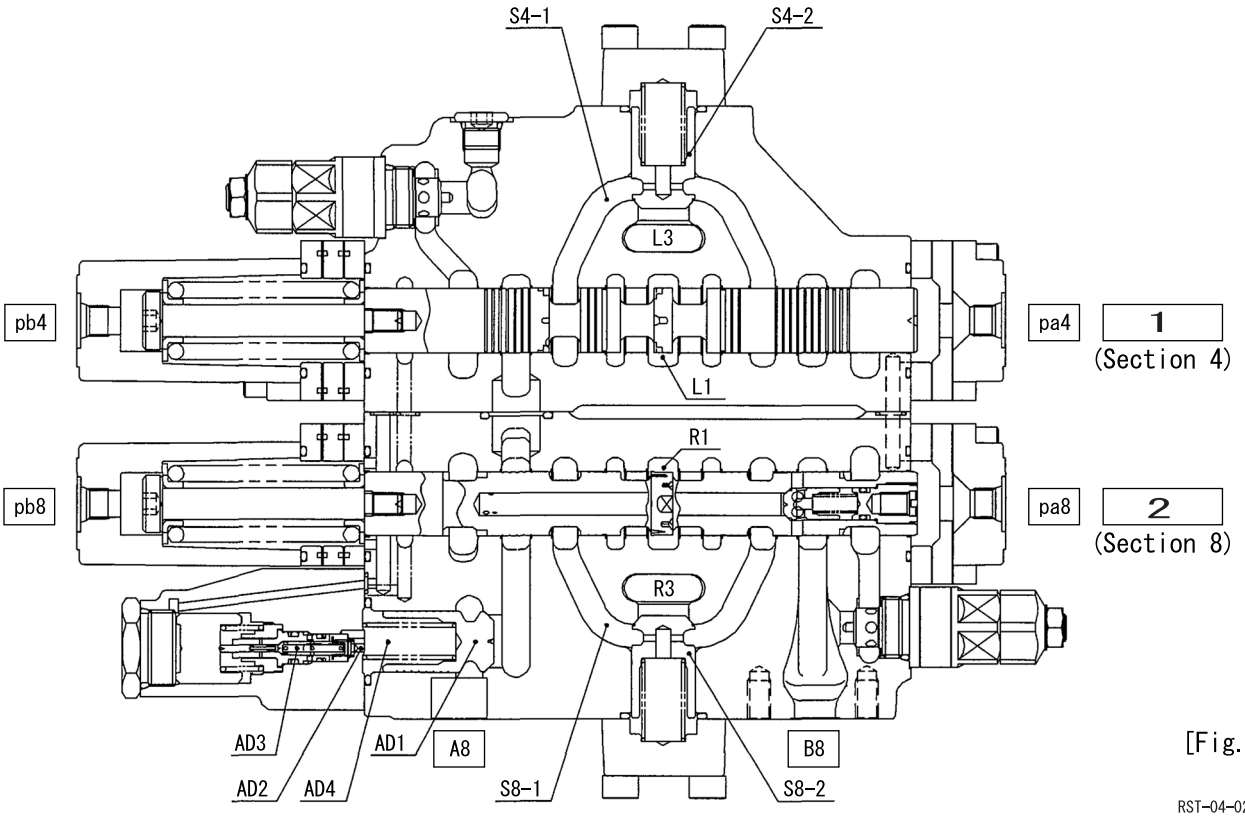

[Fig. 9]

RST-04-02-001at

1	Boom 2
2	Boom 1

https://truckmanualshub.com/

2. Boom up (2 pumps flow) [Fig. 10]
   When the boom 1 spool is switched by pressurizing from the boom 1 (section 8) pilot port Pa8, the neutral path (R1) is closed. The oil fed from the P2 port flows through the parallel path (R3), the load check valve (S8-2), and the spool neck section and into the A8 port.
   When the boom 2 spool is switched by pressurizing from the boom 2 (section 4) pilot port Pa4, the neutral path (L1) is closed. The oil fed from the P1 port flows through the parallel path (L3), the load check valve (S4-2), the spool neck section, and path (4) and merges into the A8 port. The return oil returns to the tank path (Ta) from the B8 port through the spool neck section.

Up (2 pumps flow)

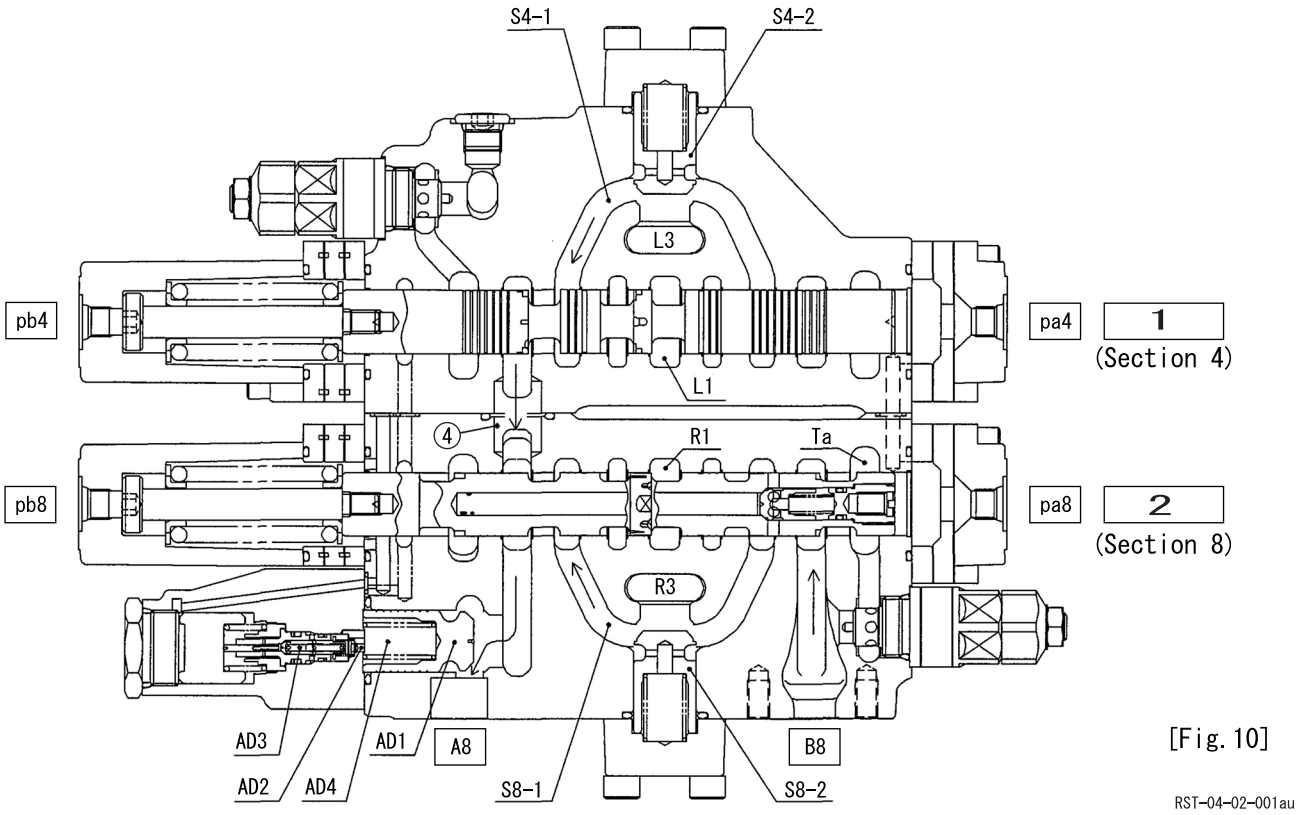

[Fig. 10]

1	Boom 2
2	Boom 1

https://truckmanualshub.com/

3. Boom down (regeneration) [Fig. 11]
   When the boom 1 spool is switched by pressurizing from the boom 1 (section 8) pilot port pb8, the neutral path (R1) is closed. The oil fed from the P2 port flows through the parallel path (R3), the load check valve (S8-2), and the spool neck section and into the B8 port.
   The pilot pressure applied to pb8 at this time moves the anti-drift valve spool (AD3) through the path built into the housing at the same time that the spool is switched and reduces the pressure of the spring chamber (AD4) to open the poppet (AD1).
   Through this movement, the cutoff of the A8 port is released before the spool is switched.
   After that, the return oil from the A8 port returns to the tank path (Ta).
   Part of the return oil pushes open the poppet (S8-3) inside the boom 1 spool, passes through path (S8-1), and merges into the B8 port to prevent cylinder rod side cavitation. This is also accompanied by cylinder speed increases and P2 port pressure reductions depending on the port pressure conditions.

Down (regeneration)

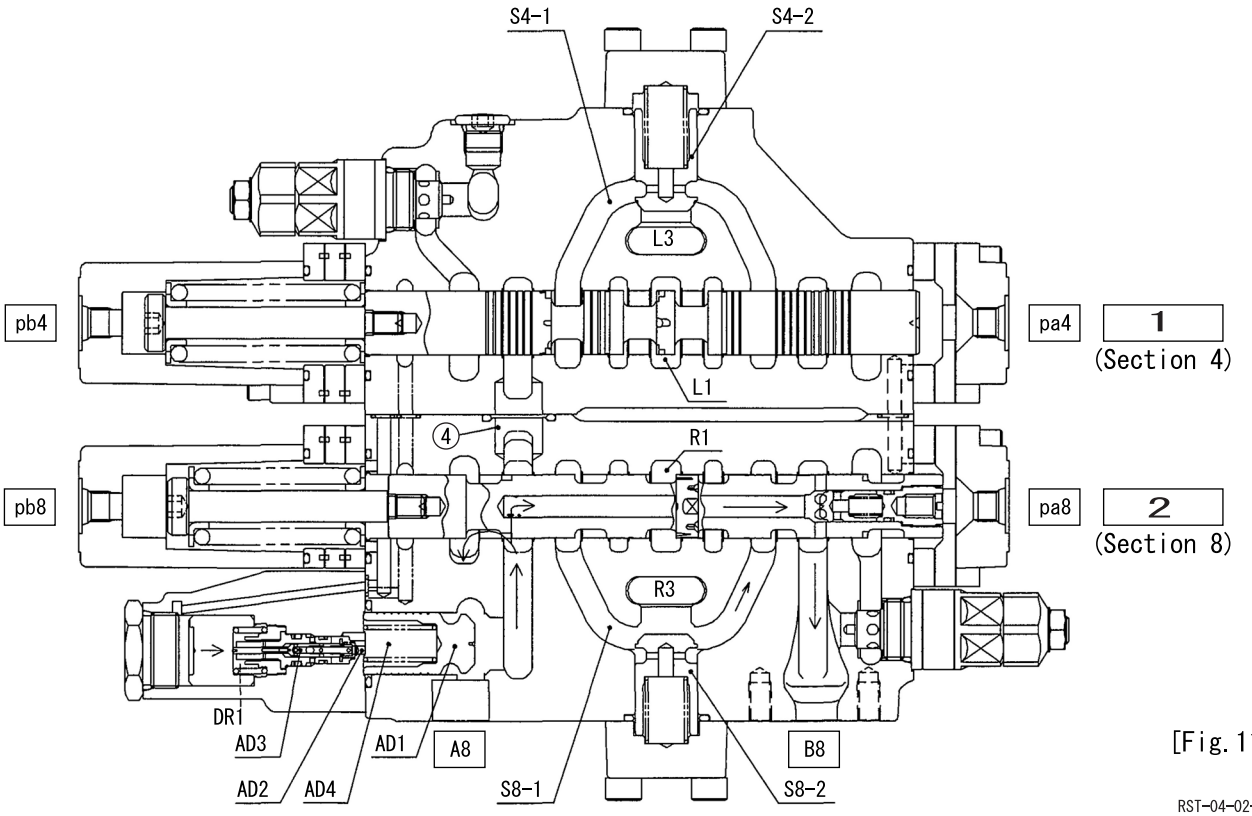

[Fig. 11]

1	Boom 2
2	Boom 1

https://truckmanualshub.com/

6) Arm spool switchover [Fig. 12 - 15]

1. Neutral [Fig.12]
   This valve mounts an anti-drift valve on the arm 1 cylinder rod side.
   In neutral, the poppet (AD1) is led through path (AD2) and the spool (AD3) into the spring chamber (AD4). It is reliably seated by the pressure of the A5 port itself to cut off the return oil from the A5 port.

Neutral

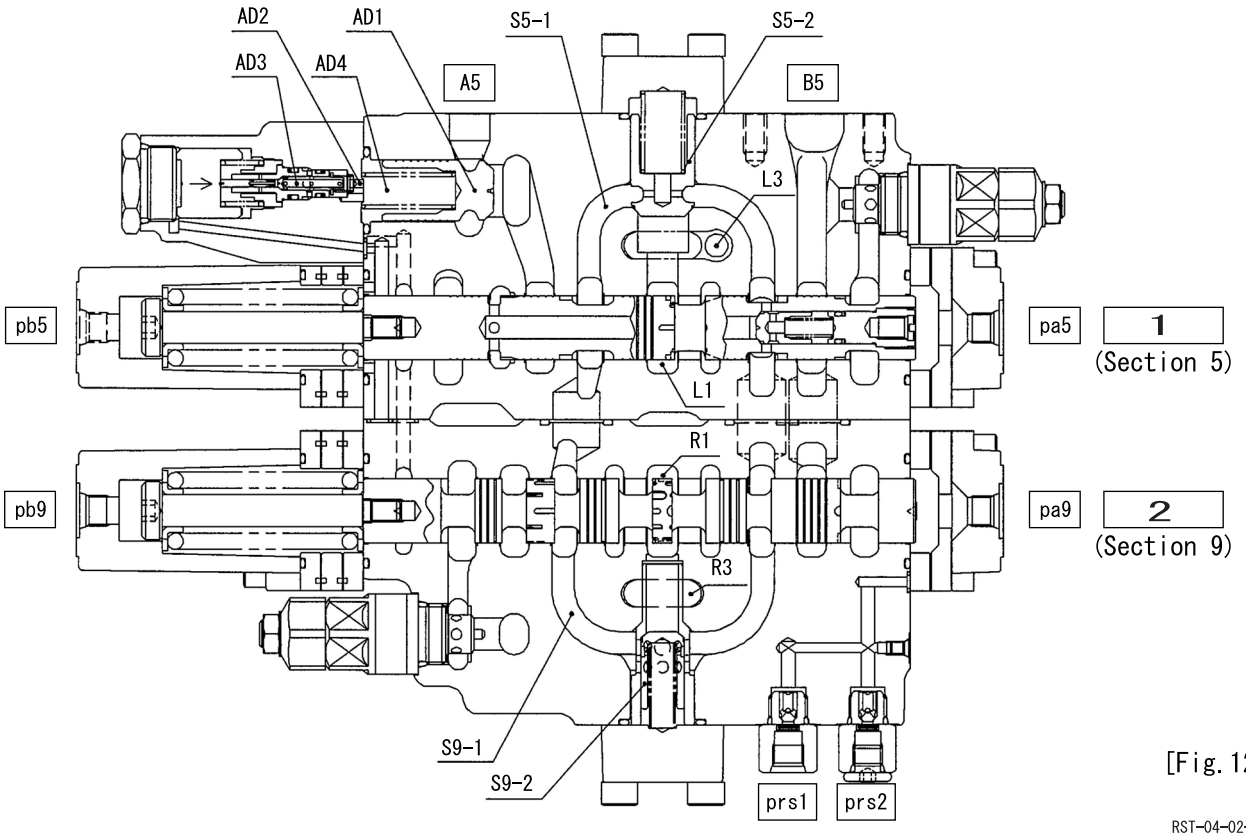

[Fig. 12]

RST-04-02-001aw

1	Arm 1
2	Arm 2

https://truckmanualshub.com/

2. Arm in (2 pumps flow) [Fig. 13]
   When the arm 1 spool is switched by pressurizing from the arm 1 (section 5) pilot port Pb5, the oil fed from the P1 port flows from the neutral path (L1) through the load check valve (S5-2), path (S5-1), and the spool neck section and into the B5 port. When the arm 2 spool is switched by pressurizing from the arm 2 (section 9) pilot port Pb9, the oil fed from the P2 port flows from the neutral path (R1) through the load check valve (S9-2), path (S9-1), the spool neck section, and path (6) and merges into the B5 port.
   The pilot pressure applied to pb5 at this time moves the anti-drift valve spool (AD3) through the path built into the housing at the same time that the spool is switched and reduces the pressure of the spring chamber (AD4) to open the poppet (AD1). Through this movement, the cutoff of the A5 port is released before the spool is switched.
   After that, the return oil from the A5 port splits into the flow through the regeneration check valve in the spool that is regenerated at the B5 port and the flow returning to the tank path (Ta) through the regeneration control valve.
   (For details on the regeneration function, see the regeneration valve operation explanation in next section 3).)

Arm in (2 pumps flow)

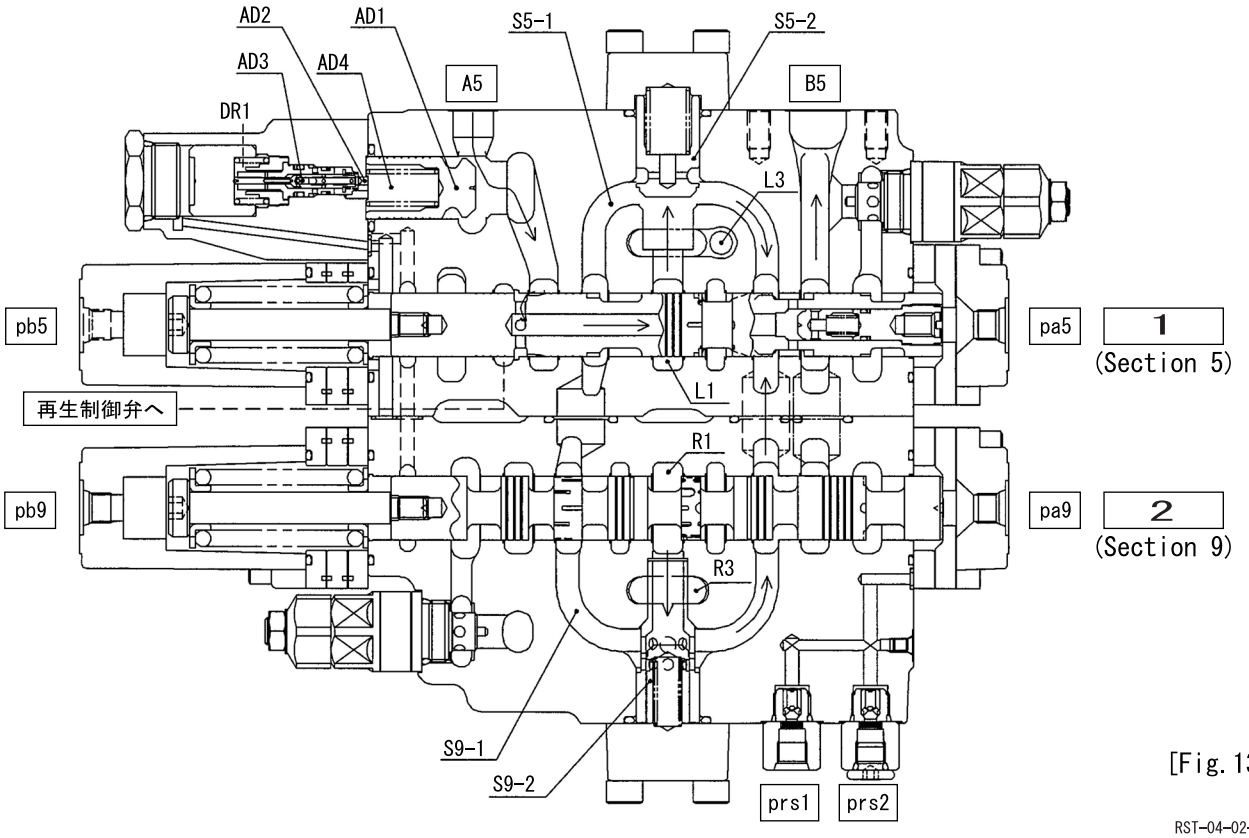

[Fig. 13]

RST-04-02-001ax

1	Arm 1
2	Arm 2

https://truckmanualshub.com/

3. Arm in (variable regeneration) [Fig. 14]
   For an arm-in operation, after the return oil from the A5 port passes through the notch (a), it divides into 2 paths:
   1. The return oil returns to the tank path (Ta) through the fixed orifice (d) in the regeneration control valve, path (e), and the variable orifice (f).
   2. The return oil passes through the fixed orifice (b) in the arm 1 spool, the regeneration check valve (c), and the fixed orifice (i), then merges into the bridge path (S5-1).

   Here, when the bridge path (S5-1) pressure goes higher due to the port B5 load pressure, the regeneration control valve spool (h) is pressed through the regeneration control valve piston (g), and the variable orifice (f) section opening surface area increases, so the quantity of oil returning to the tank path (Ta) increases.
   On the other hand, the quantity of oil regenerated in the B5 port decreases.
   Though this variable mechanism, both the regeneration ratio for low loads is secured and reduction in the return back pressure for high loads is established.

Arm in (variable regeneration)

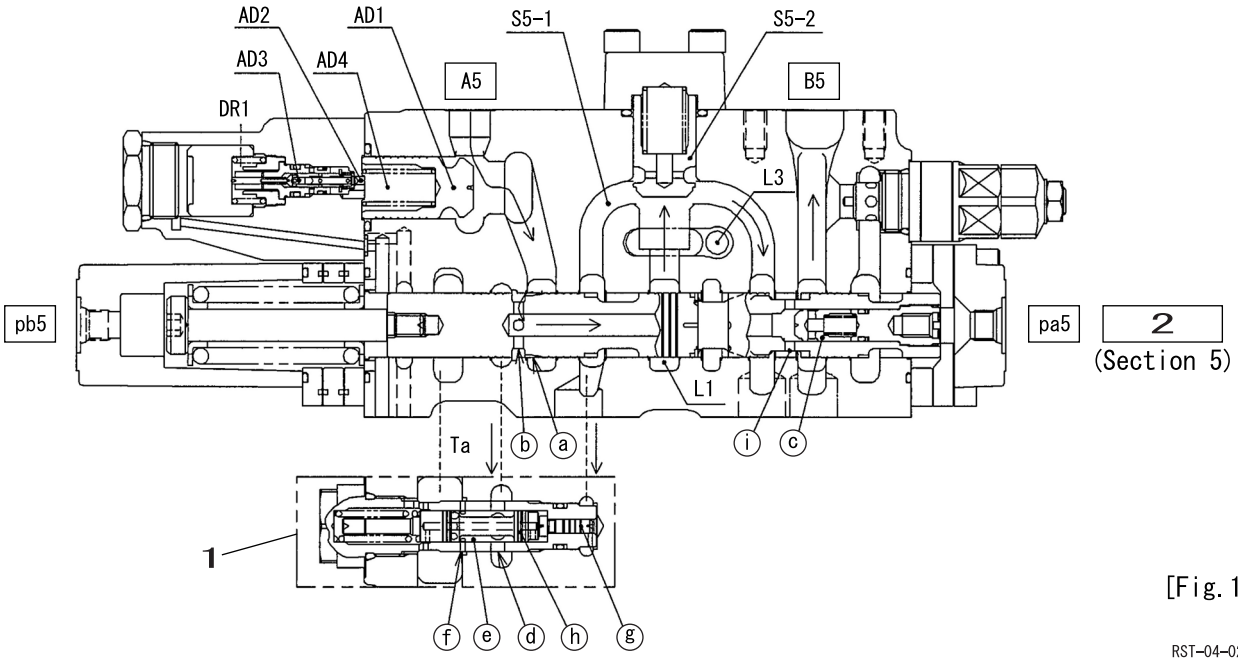

[Fig. 14]

RST-04-02-001ay

1	Regeneration control valve (variable)
2	Arm 1

https://truckmanualshub.com/

4. Arm out (2 pumps flow) [Fig. 15]
   When the arm 1 spool is switched by pressurizing from the arm 1 (section 5) pilot port Pa5, the oil fed from the P1 port flows from the neutral path (L1) through the load check valve (S5-2), path (S5-1), and the spool neck section and into the A5 port.
   When the arm 2 spool is switched by pressurizing from the arm 2 (section 9) pilot port Pa9, the oil fed from the P2 port flows from the neutral path (R1) through the load check valve (S9-2) and path (S9-1), merges into the arm 1 section path (S5-1) and heads toward the A5 port through the arm 1 spool neck section. The return oil from the B5 port returns to the tank path (Ta) through the spool neck section.

Arm out (2 pumps flow)

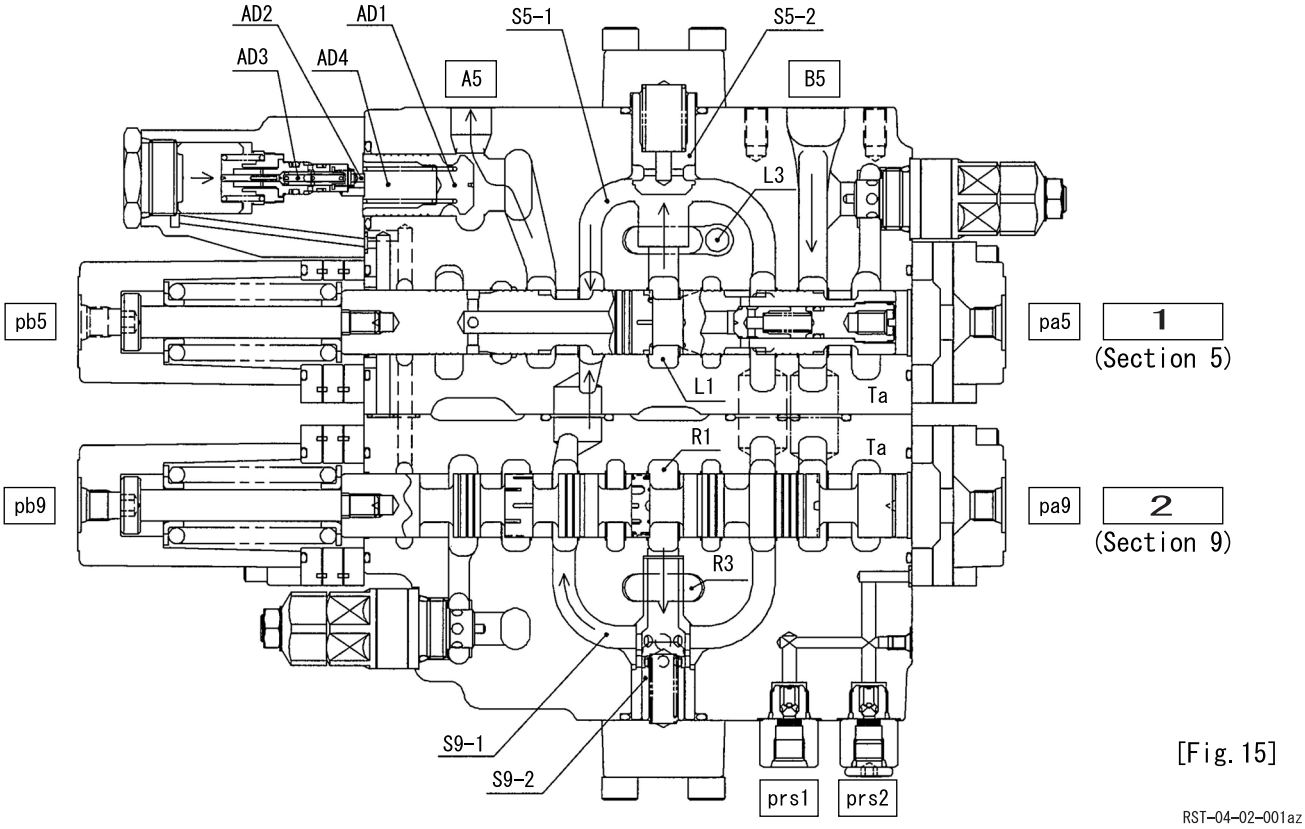

[Fig. 15]

1	Arm 1
2	Arm 2

https://truckmanualshub.com/

7) Arm parallel orifice [Fig. 16]
Metering by the spool is installed in the arm 1 parallel path of this valve to control the quantity of oil fed to arm 1 for compound operations.
The oil fed from the arm 1 (Section 5) parallel path (L3) pushes open the poppet (S5-3) and passes through the variable metering spool orifice (Lc8), then is connected to path (L5).
Here, the quantity metered by the orifice (Lc8) is adjusted by pressurizing the pilot port (Pbu).

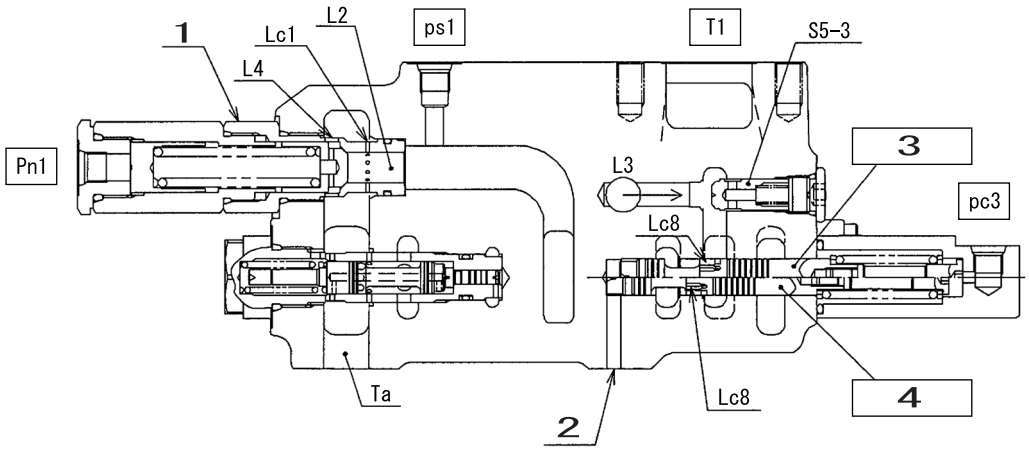

[Fig. 16]

RST-04-02-001ba

1	Low-pressure relief valve (L)	3	For boom up (for Pbu pressurization)
2	Pbu signal path	4	For neutral

https://truckmanualshub.com/

8) Relief valve

1. Main relief valve [Fig. 17]
   The oil fed from the P1 port passes through the poppet (LP) and the oil fed from the P2 port passes through the poppet (RP) and path (3) and is led to the main relief valve. The maximum pressure of the P1 and P2 side pumps is controlled by the operation of the main relief valve.

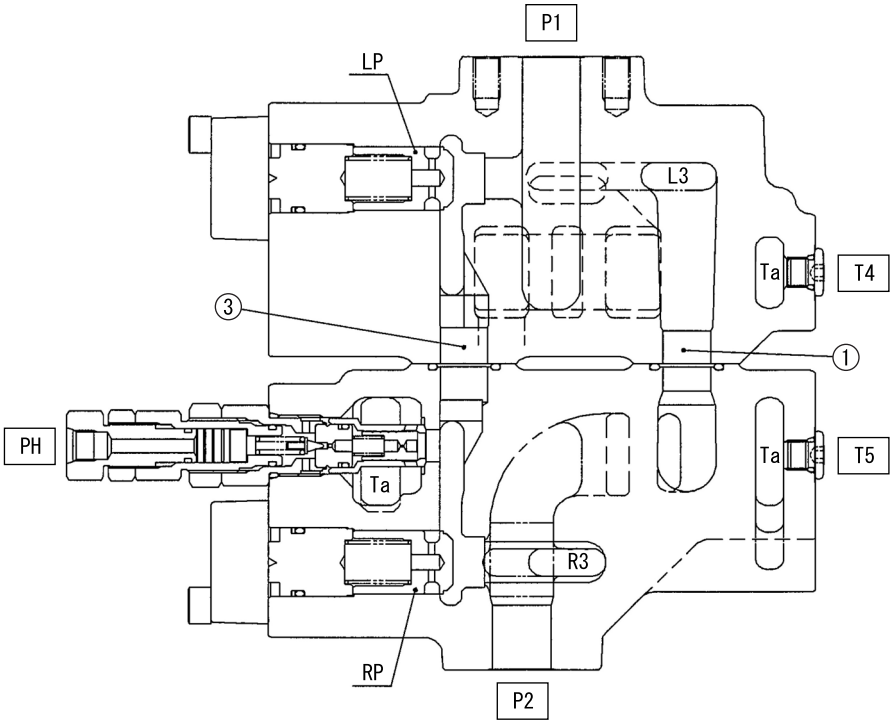

[Fig. 17]

RST-04-02-001bb

2. Overload relief valve [Fig. 18]
   There is an overload relief valve at the boom 1, arm 1, bucket, and add-on cylinder ports to prevent any abnormal rise in actuator pressure, for example due to an external force.
   This relief valve is also equipped with a function for preventing cavitation (suction function) by taking in oil from the tank when the cylinder port pressure becomes negative pressure.

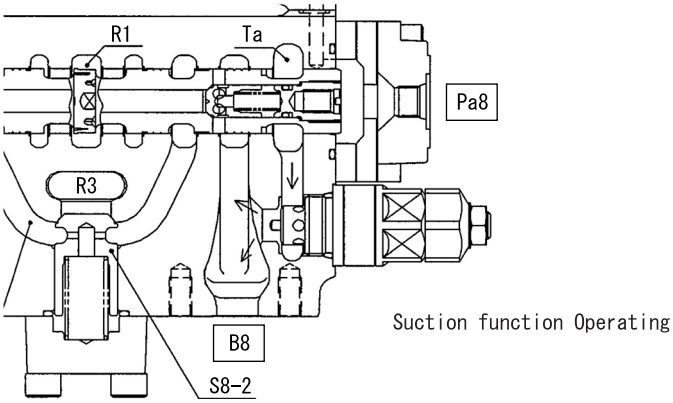

[Fig. 18]

RST-04-02-001cb

https://truckmanualshub.com/

[3] Compound operation

1) Travel compound operation [Fig. 19, Fig. 20]
Under the conditions below when the travel left/right and the front system are operated at the same time, the straight travel spool is switched, and the straight travel characteristic is maintained.
1 When the front is operated during travel left/right simultaneous operation (forward, backward, or pivot turn)
2 When the left/right are operated simultaneously during front system operation

Front system operation is not affected by the switchover section or quantity of switchovers.

1. Signal circuit [Fig. 19]
(A)When the [Travel 1] side lever is operated, the pressure branched off from the valve main unit pilot port passes through the filter and the shuttle, then switches the switchover valve [V1].
(B)When the [Travel 2] side lever is operated, the pressure branched off from the valve main unit pilot port passes through the filter and the shuttle, then if the switchover valve [V1] is switched, it switches the switchover valve [V2] through the path. On the other hand, if the switchover valve [V1] is in the neutral state, the path is cut off by the switchover valve [V1]. Therefore, if both (A) and (B) are established at the same time, the straight travel spool internal path (Pst) is conducted to PA. Also, if either (A) or (B) are established, the travel signal (PT) pressure rises.
(C)If at least one of the front systems is switched, the highest pressure of all the pilot pressures in the front system is selected and is conducted to the front signal port (PA). Therefore, if (A), (B), and (C) are established at the same time, the straight travel spool switchover quantity is determined proportional to the front signal (PA) pressure through the internal straight travel signal path (Pst). [Fig. 19] shows the example of a case of travel left/right forward + boom up.

https://truckmanualshub.com/

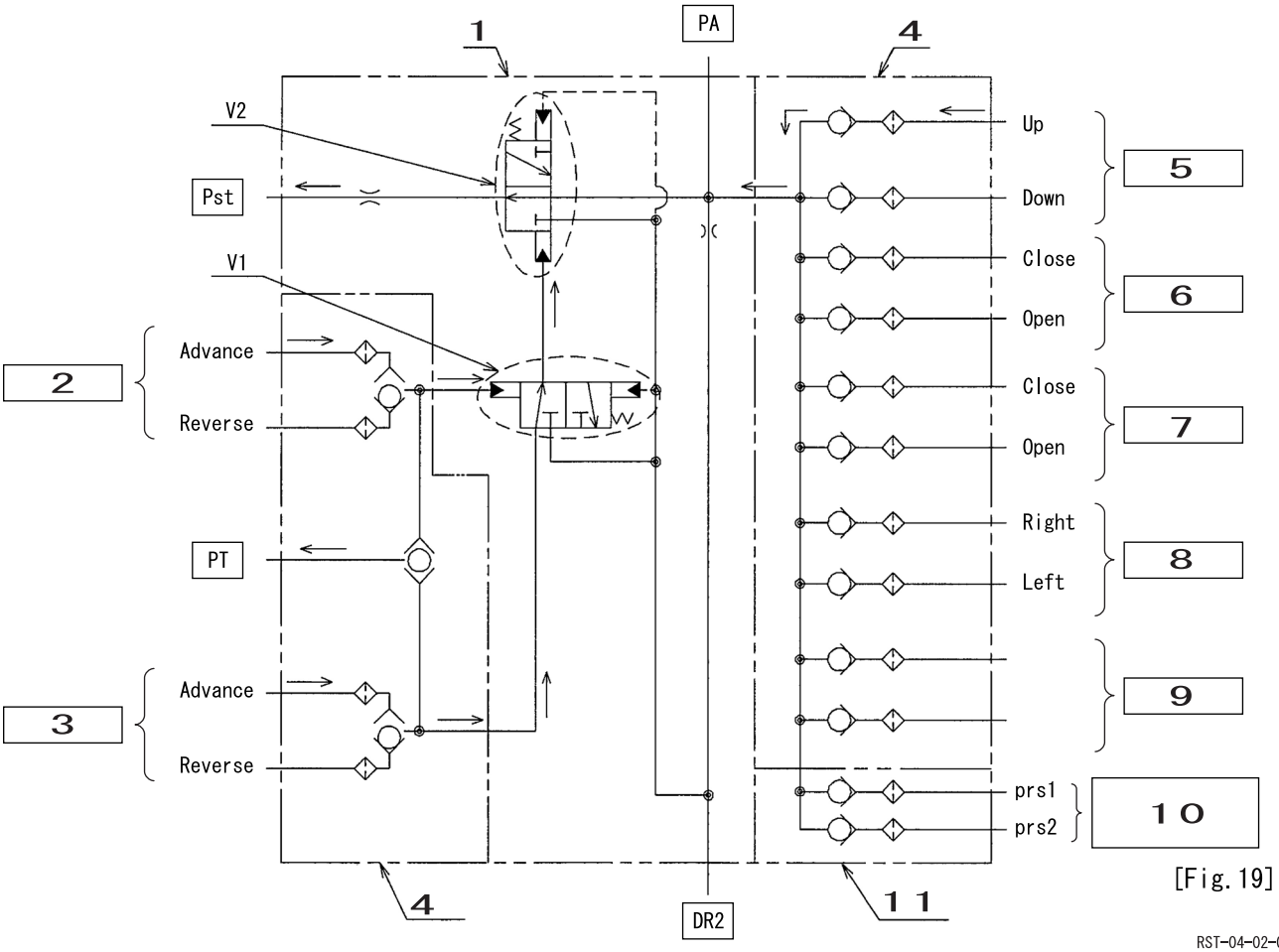

[Fig. 19]

RST-04-02-001bc

1	Straight travel signal control valve	5	Boom	9	Option
2	Travel 1	6	Arm	10	Add-on (main pump)
3	Travel 2	7	Bucket	11	Main unit housing section (option)
4	Plate assembly	8	Swing		

https://truckmanualshub.com/

2. Main unit circuit [Fig. 20]
   When the straight travel spool is switched, the oil fed from the P1 port flows from the neutral path (L1) to travel (section 1) and at the same time passes through path (2), the straight travel spool neck section, and the neutral path (R1) and into travel (section 6) and feeding to travel left and right becomes possible.
   On the other hand, when the oil fed from the P2 port flows to the parallel path (R3), at the same time it passes through the straight travel spool neck section and path (1) and into the parallel path (L3), so it becomes possible to feed oil to the entire front system.
   When the front system is switched during travel and that pressure becomes higher than the load pressure on travel (section 6), part of the oil fed from the P2 port pushes up the poppet (S6-2) from the parallel path (R3) and the oil flows through the orifice at the poppet tip and merges into path (S6-1).
   This softens the shock on the machine body of the sharp drop in speed caused by the switchover to 1 pump travel.
   As described above, because travel (sections 1 and 6) operates with the oil fed from the P1 port and operations other than travel are operated with oil fed from the P2 port, travel curving is prevented and straight travel characteristics are maintained during compound operations.

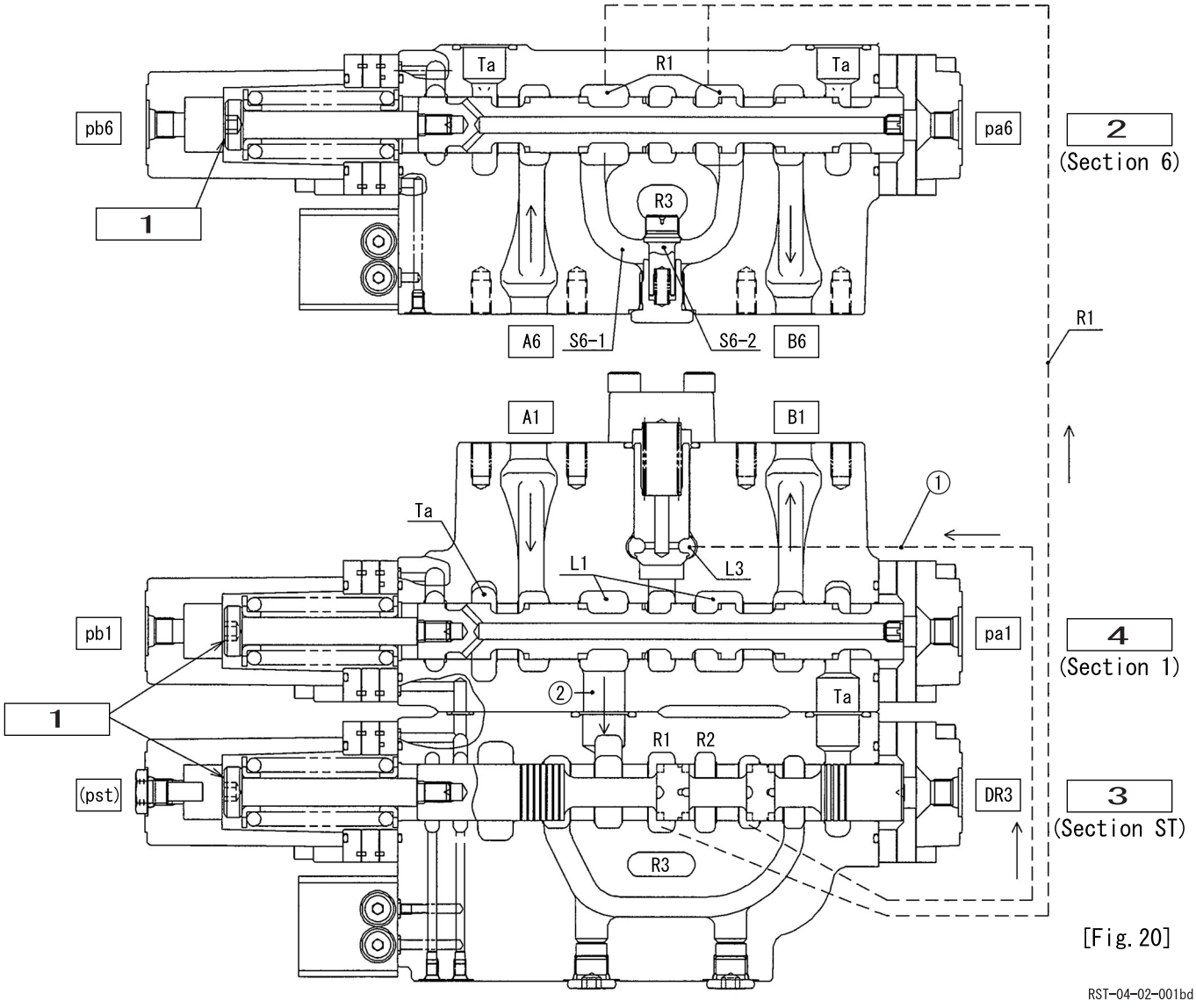

[Fig. 20]

1	Switching state	3	Straight travel
2	Travel	4	Travel

https://truckmanualshub.com/

[4] Anti-drift valve

The anti-drift valve is mounted on the arm rod (boom head) side cylinder port to prevent the arm (boom) cylinder from dropping naturally.
Also, the release signal operates led by the internal path from the pilot signal.
(The arm side (A5) is shown as a typical example.)

1) Neutral (A5 port hold)
   1. The A5 port hold pressure passes from path (a) through path (b), through path (c), and is conducted to the poppet (1) spring chamber (d).
   2. Therefore, the A5 port pressurized oil is cut off by the seat section (S1) and the seat section (S2).

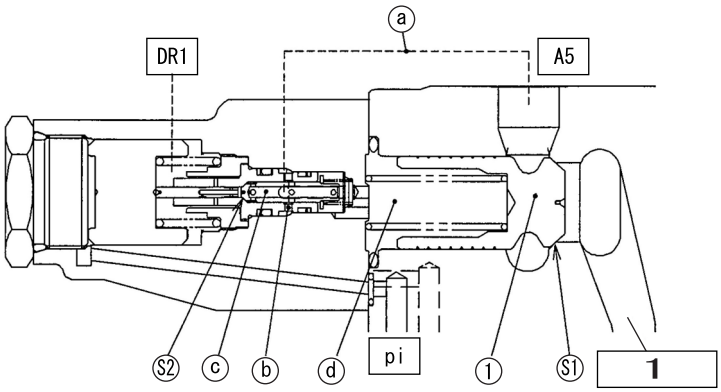

RST-04-02-001be

1	Main spool

2) Release signal application
   1. When the pi port is pressurized, the piston (2) moves and the spool (3) operates.
   2. Furthermore, the spool (3) operates the poppet (4).
   3. Then, the operation of the poppet (4) cuts off the conduction between the A5 port and the spring chamber (d).

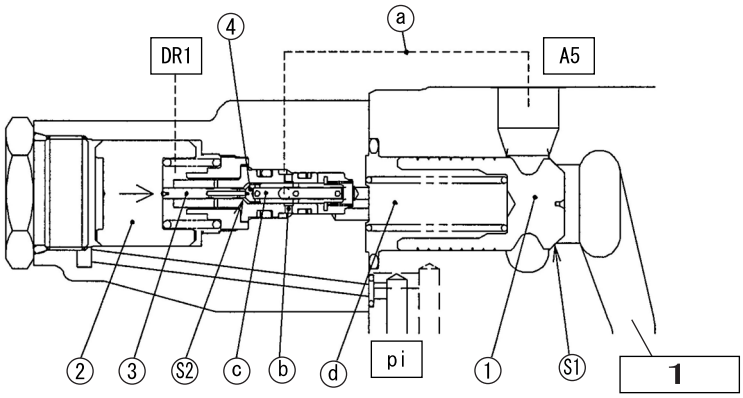

RST-04-02-001bf

1	Main spool

https://truckmanualshub.com/

3) Ending hold state
   1. When the piston (2) operates further, the spring chamber (d) passes from path (c) through path (e) and is conducted to the drain chamber [DR] through the (T2) section.
   2. The spring chamber (d) pressure becomes the drain pressure and the main poppet (1) operates.

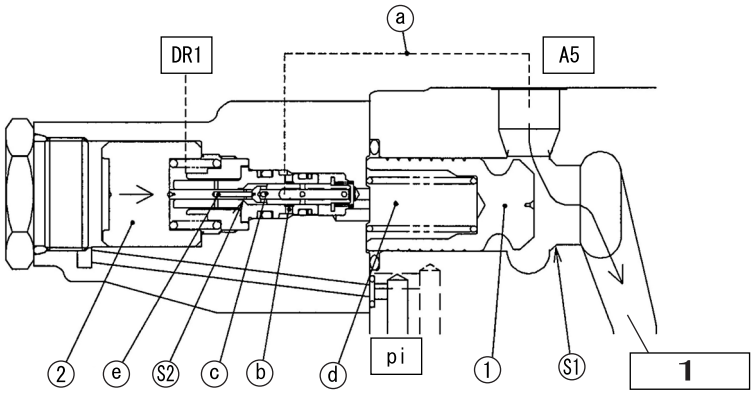

RST-04-02-001bg

1	Main spool

https://truckmanualshub.com/

[5] Relief valve

1) Main relief valve operation

1. This relief valve is incorporated between the neutral path "HP" and the low-pressure path "LP". The oil passes through the metering hole of the main poppet (C) and charges the interior space (D). The sleeve (E) and the main poppet (C) operating on the different surface areas [A] and [B] are seated securely.

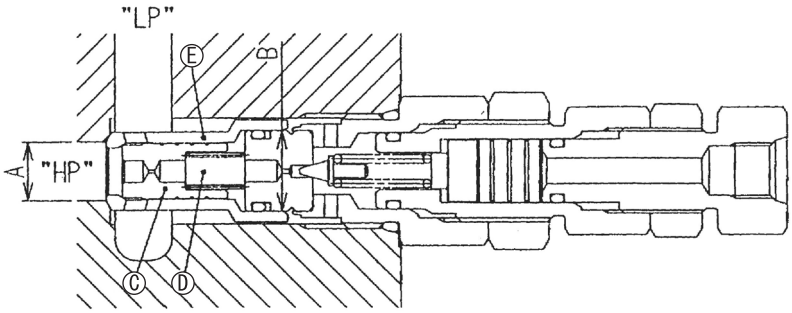

RST-04-02-001ch

2. When the neutral path "HP" pressure reaches the set pilot poppet spring force, the pilot poppet (F) opens. The oil flows around the poppet, passes through the notch hole (G), and is led to the low-pressure path "LP".

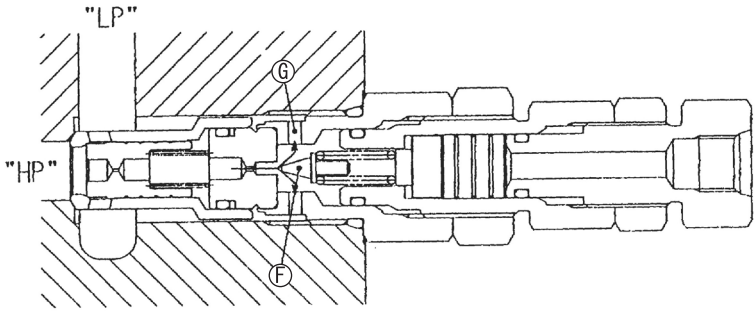

RST-04-02-001ci

3. Because the pilot poppet has opened, the (D) pressure drops and the main poppet (C) opens, so the oil flows directly into the path "LP".

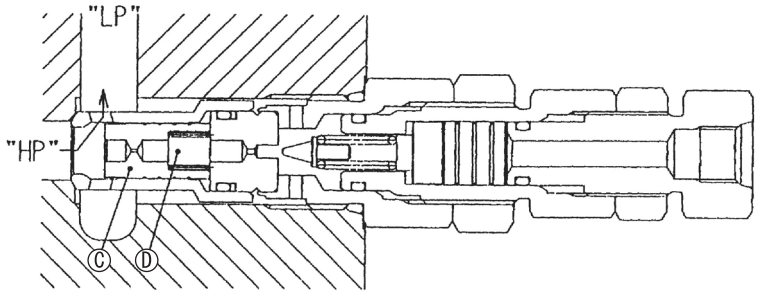

RST-04-02-001cj

"Boosted pressure operation"

When pressure is applied to the pilot port "PH", the piston (H) is moved to the set position by the plug (I). Because of this, the pilot spring force rises and the "HP" pressure rises.

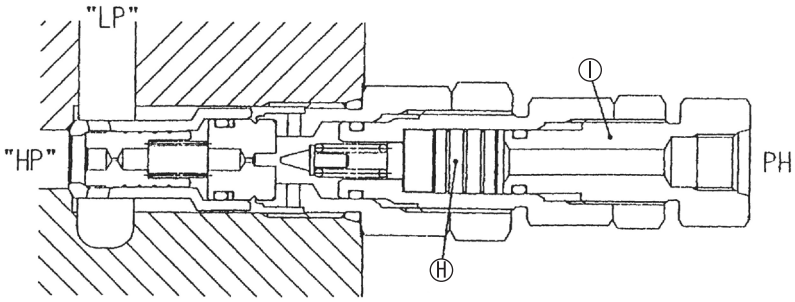

RST-04-02-001ck

https://truckmanualshub.com/

2) Overload relief valve operation

1. This relief valve is incorporated between the cylinder port "HP" and the low-pressure path "LP". The oil passes through the metering hole of the piston (C) and charges the interior space (G). The sleeve (K) and the main poppet (D) operating on the different surface areas [A] and [B] are seated securely.

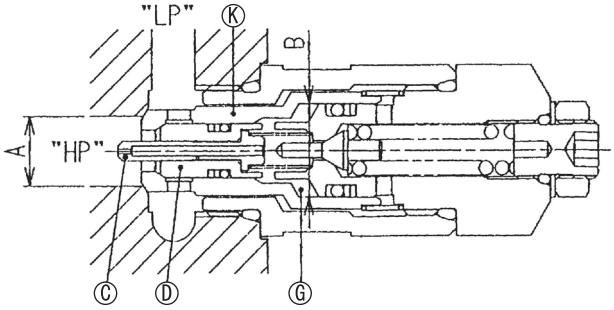

RST-04-02-001cl

2. When the cylinder port "HP" pressure reaches the set pilot poppet spring force, the pilot poppet (E) opens. The oil flows around the poppet, passes through the notch hole (H), and is led to the low-pressure path "LP".

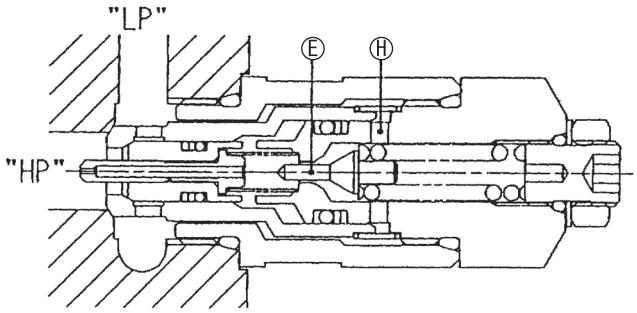

RST-04-02-001cm

3. Because the pilot poppet (E) has opened, oil flow is generated through the orifice (I) of the piston (C), a pressure difference is generated between the path "HP" and the rear side of the piston (C), and the piston (C) moves and is seated with the poppet (E).

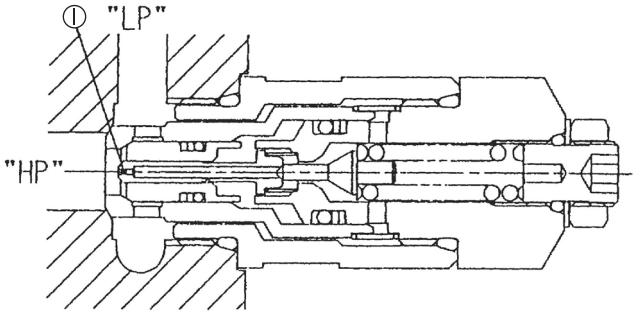

RST-04-02-001cn

4. The flow of oil from the path "HP" to the rear side of the poppet (D) is only through the ring-shaped gap between the poppet (D) and the piston (C) and through the orifice (F), so the pressure difference increases.
Because of this, the poppet (D) opens and the oil flows directly into the path "LP".

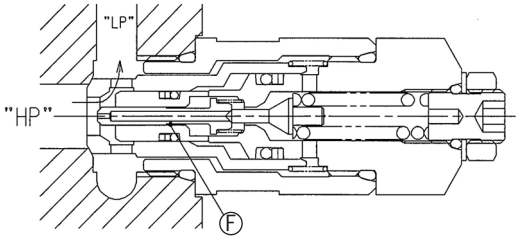

RST-04-02-001co

https://truckmanualshub.com/

3) Overload relief valve intake operation

1. This relief valve has a built-in anti-void unit that supplies oil if cavitation occurs at the cylinder port "HP".
   When the cylinder port "HP" pressure is lower than the low-pressure side "LP", the sleeve (K) is opened by the surface area difference between (A) and (B). Oil enters the cylinder port "HP" from the low-pressure side "LP" to prevent cavitation.

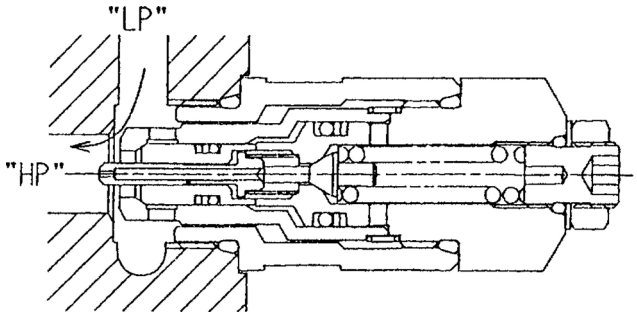

RST-04-02-001cp

[6] Neutral cut spool [Fig. 21]
This valve is equipped as standard with a neutral cut spool in the P2 side housing neutral path (R1) minimum flow (low-pressure relief valve upstream).
When the pcc port is pressurized and the neutral cut spool is switched, the path through the orifice [Lc7] to low-pressure relief is cut off and output to the outside from the P3 port becomes possible.

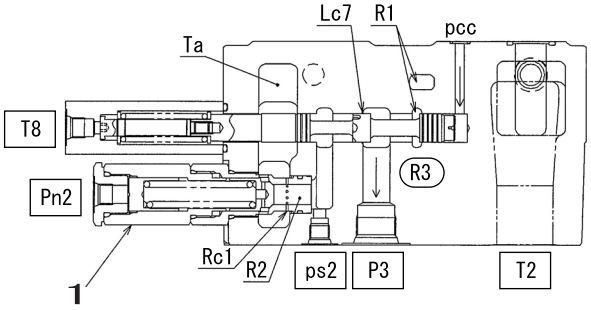

[Fig. 21]

RST-04-02-001cc

1	Low-pressure relief valve (R)

https://truckmanualshub.com/

[7] Plate assembly [Fig. 22]

This valve is equipped with a plate assembly hermetically sealed with a gasket piling a plate on the housing side surface.

The shuttle is built into the inside and this valve has a function for selecting and controlling the spool pilot pressure.

Also, in order to protect the shuttle section from contamination from the outside, a filter is mounted between the plates.

When removing, do not loosen the screws shown in the diagrams and be careful that internal parts are not dispersed.

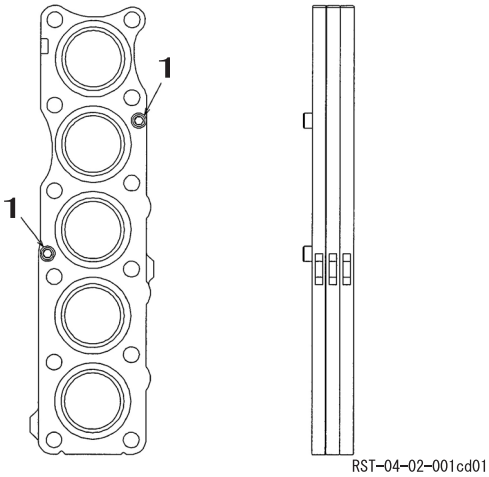

[Long cap side]

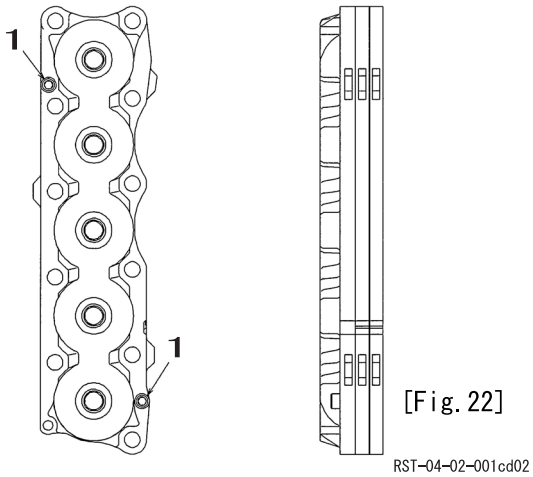

[Short cap side]

[Fig. 22]

1	Subassembly screw

https://truckmanualshub.com/

[8] Straight travel signal control valve [Fig. 19, Fig. 23]
This valve integrates the pilot pressure for the spool of the front system and travel selected with each plate assembly and is used to switch the straight travel spool.
When the Travel 1 pilot pressure is pressurized, the spool [V1] is switched.
When the Travel 2 pilot pressure is pressurized at the same time, the spool [V2] can be switched.
Here, when the front system pilot pressure [PA] is pressurized, the PA pressure flows into Pst and is led to the straight travel spool pilot chamber and the spool is switched.

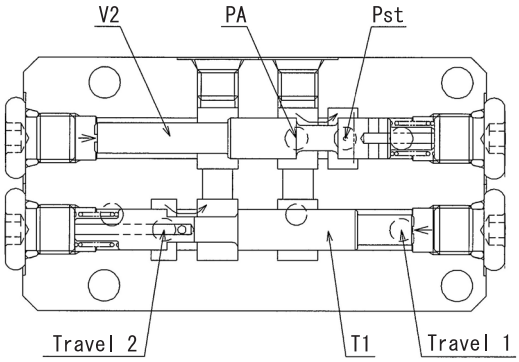

[Fig. 23]

RST-04-02-001ce

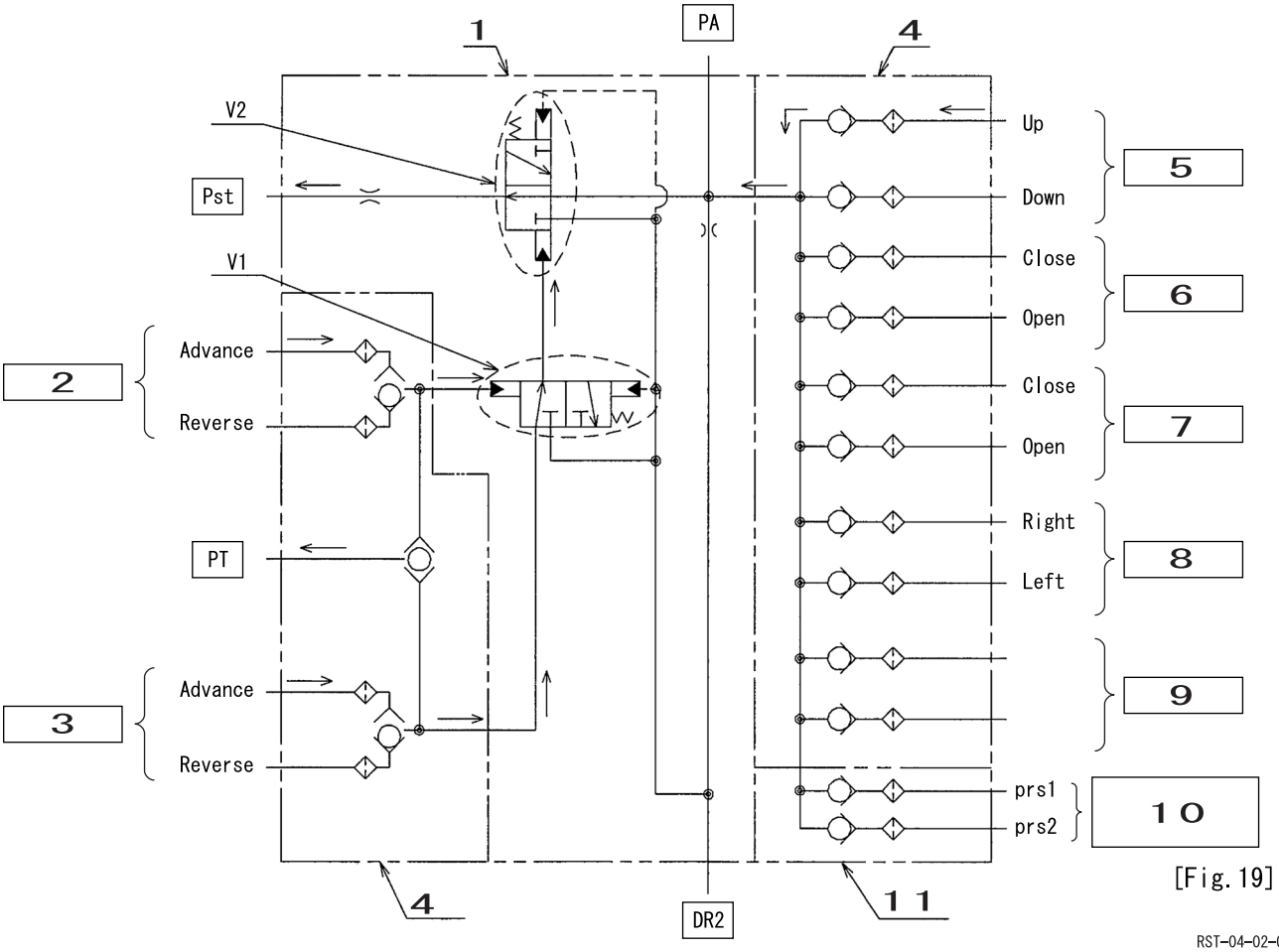

[Fig. 19]

RST-04-02-001bc

1	Straight travel signal control valve	5	Boom	9	Option
2	Travel 1	6	Arm	10	Add-on (main pump)
3	Travel 2	7	Bucket	11	Main unit housing section (option)
4	Plate assembly	8	Swing		

https://truckmanualshub.com/

[9] Add-on [Fig. 24, Fig. 25]

1) Add-on main relief valve
The oil fed from the Pr port is led to the main relief valve. The Pr pump maximum pressure is regulated by the operation of the main relief valve.

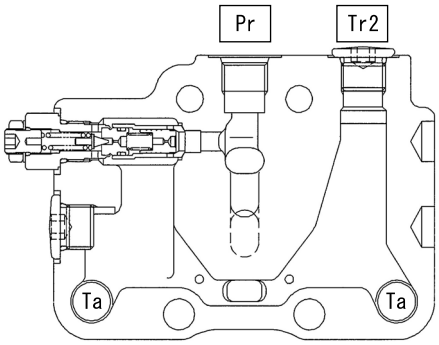

[Fig. 24]

RST-04-02-001cf

2) Spool section
When the spool is pressurized from the add-on (Section 10) pilot port par1 (pbr1) and switched, the neutral path [Pg] is closed. The oil fed from the Pg port flows from the parallel path [Rg] through the load check valve [S10-1], the path [S10-2], and the spool neck section, and into the AR1 (BR1) port.
The return oil returns to the tank path [Ta] from the BR1 (AR1) through the spool neck section.

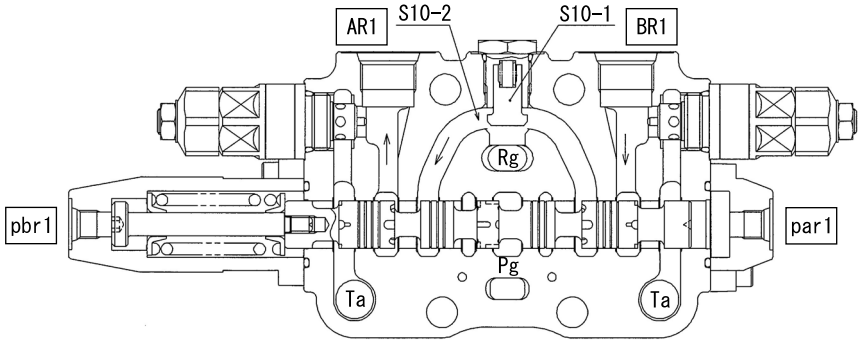

[Fig. 25]

RST-04-02-001cg

https://truckmanualshub.com/

3) Low-pressure relief valve operation [Fig. 26, Fig. 27]

1. Signal pressure generation (when pin1 (pin2) port pressurized)
   The oil fed from the pump port (P1 (P2)) flows through the neutral path (L1 (R1)), then flows from the low-pressure relief path (L2 (R2)) through the orifice (Lc1 (Rc1)) and out into the tank path (Ta).
   At this time, the pressure generated in path (L2 (R2)) by the orifice (Lc1 (Rc1)) is led to the low-pressure relief signal port (Ps1 (Ps2)).
   When the (L2 (R2)) upstream main spool operates, the oil flowing through (L2 (R2)) is reduced, so the (Ps1 (Ps2)) signal pressure becomes lower.

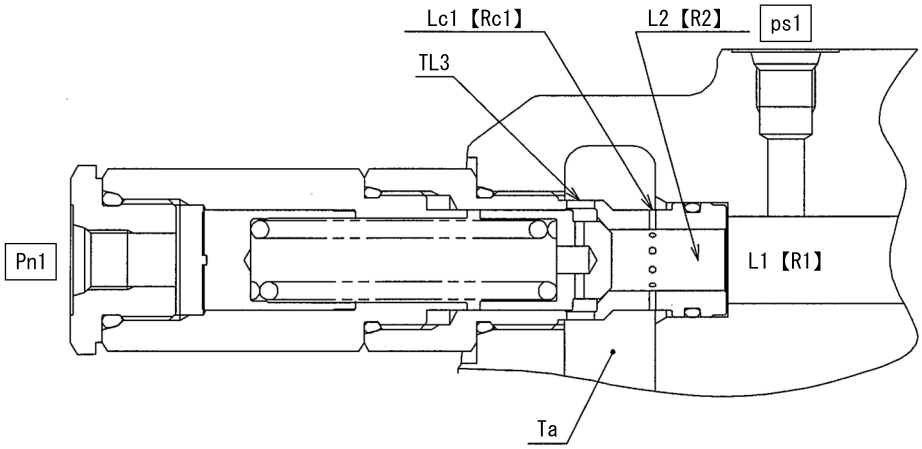

[Fig. 26]

RST-04-02-001cq

2. Relief operation
   When excess oil flows in path (L2 (R2)), the poppet is operated by the pressure generated in path (L2 (R2)) by the orifice (Lc1 (Rc1)).
   Through this poppet operation, the oil flows from the path, through the notch hole path, and out to the tank path [Ta]. This prevents the generation of excess pressure at the low-pressure relief signal port.

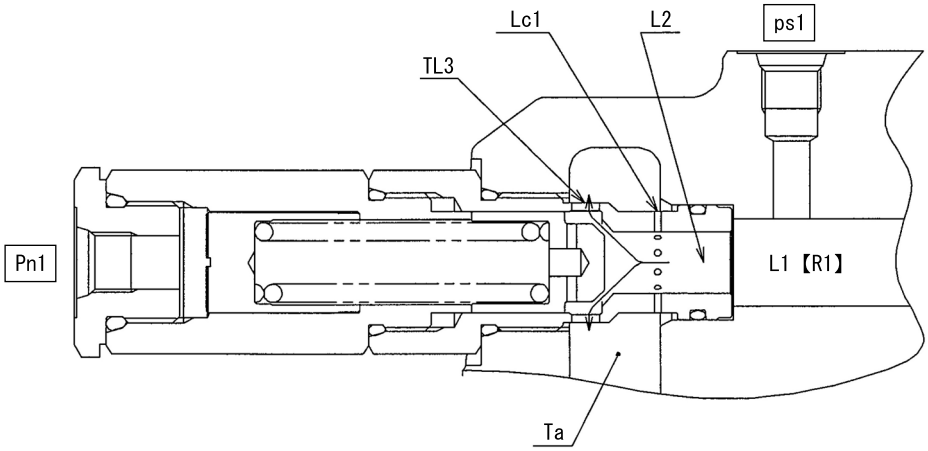

[Fig. 27]

RST-04-02-001cr

https://truckmanualshub.com/

4) Add-on main relief valve

1. Add-on main relief valve operation
   This relief valve is incorporated between the neutral path "HP" and the tank path "LP". The oil passes through the metering hole of the main poppet [1] and charges the interior space [C].
   Also, the sleeve [2] and the main poppet [1] operating on the different surface areas "A" and "B" are seated securely.

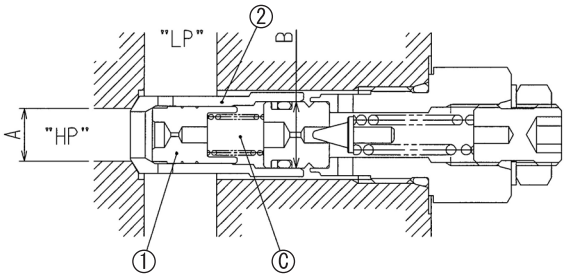

RST-04-02-001cs

2. When the neutral path "HP" pressure reaches the set pilot spring force, the pilot poppet [3] opens.
   The oil flows around the pilot poppet [3], passes from the notch hole [E] and through the ring-shaped gap [D] and is led to the tank path "LP".

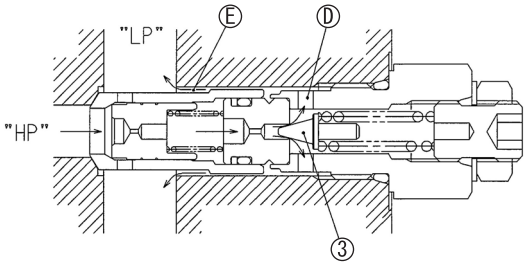

RST-04-02-001ct

3. Because the pilot poppet [3] has opened, the interior space [C] pressure drops and the main poppet [1] opens, so the "HP" oil flows directly into the path "LP".

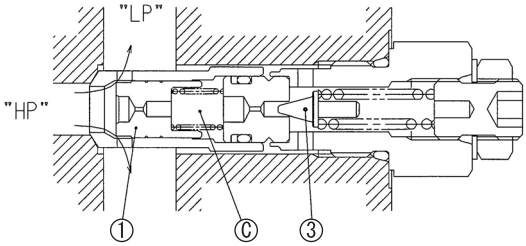

RST-04-02-001cu

https://truckmanualshub.com/

2. 5 Stack Solenoid Valve Operation Explanation

(1) External shape diagram and component parts

This valve is made up of the body and the electromagnetic switchover valve.

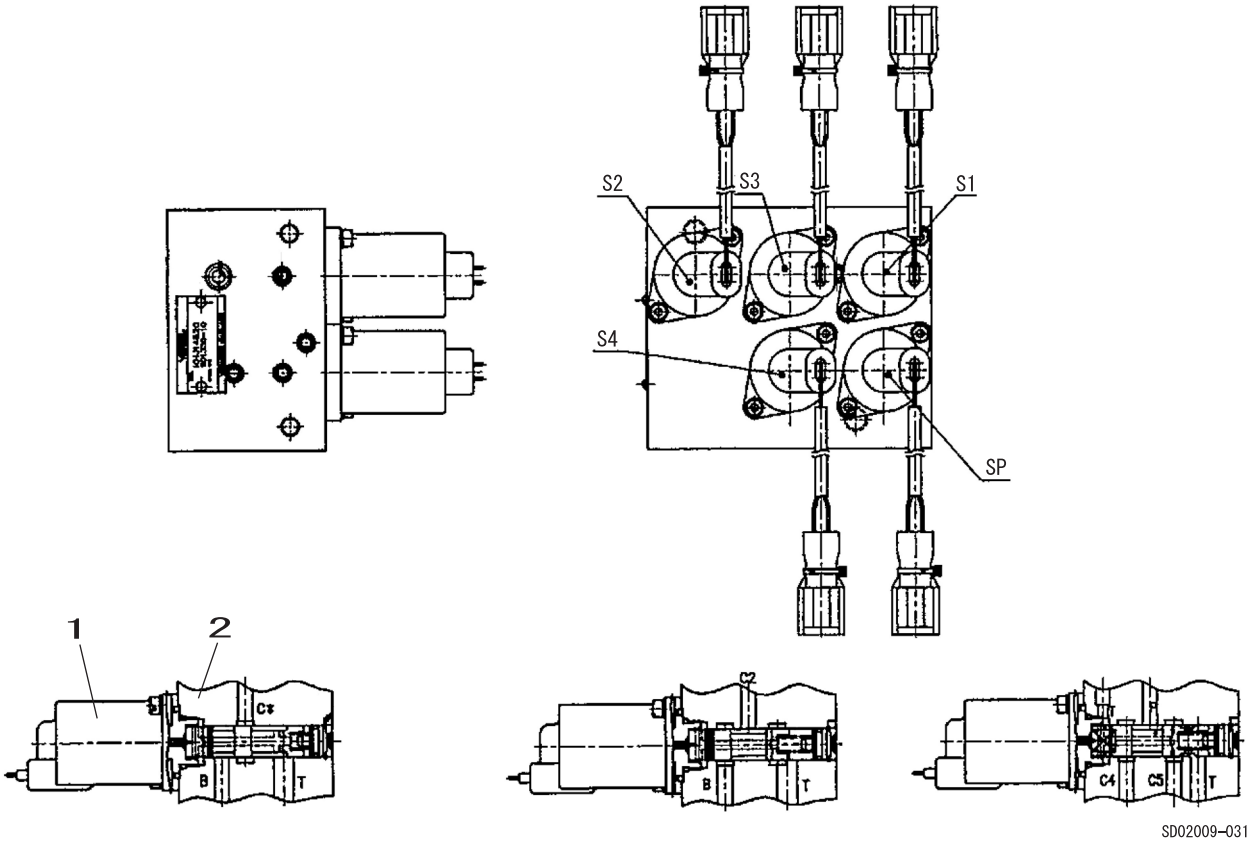

Normal closed-type solenoid: SP, S1, S3 Normal open type solenoid: S2 4 port-type solenoid: S4

1	Electromagnetic switchover valve
2	Body

(2) Operation explanation

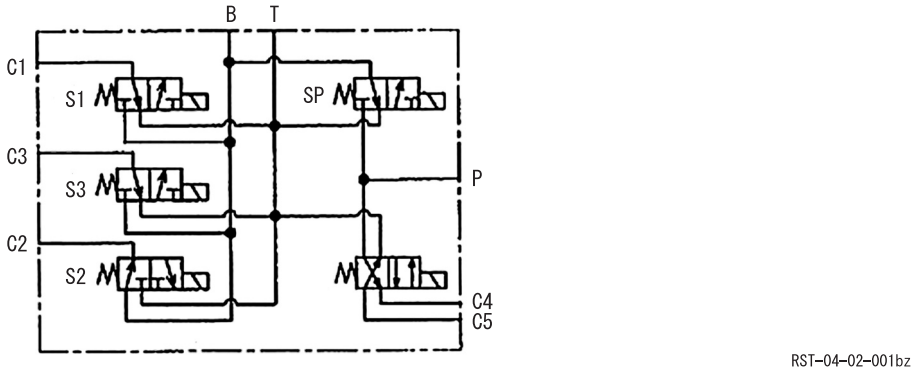

Hydraulic circuit diagram

The pressurized oil fed from the P port feeds pressurized oil to the C1 - C5 ports according to the excitation or non-excitation of electromagnetic switchover valves S1 - S4 resulting from exciting electromagnetic switchover valve SP.

Electromagnetic switchover valves S1 and S3	→	Oil passing through when valve excited
Electromagnetic switchover valve S2	→	Oil passing through when valve not excited
Electromagnetic switchover valve S4	→	Oil passing to C5 when valve excited Oil passing to C4 when valve not excited

https://truckmanualshub.com/

3. Upper Pilot Valve (remote control valve)

(1) Structure

The structure of the remote control valve is as shown in the assembly cross-section diagram (page 178). There is a longitudinal axial hole in the casing and the pressure reduction valve is installed in it.

The pressure reduction valve comprises the spool (201), secondary pressure setting spring (241), return spring (221), spring seating (216), and washer 2 (217). The secondary pressure setting spring (241) is set so that the secondary pressure calculation is 0.5-1 MPa (depending on the model). The spool (201) is pressed against the push rod (212) by the return spring (221).

When the push rod (212) is pushed down by tilting the handle or another operation, the spring seating goes down at the same time and the secondary pressure setting spring (241) setting is changed.

The casing (101) has the oil inlet (primary pressure) port P and the outlet (tank) port T and, furthermore, the secondary pressure is taken out from the ports 1, 2, 3, and 4.

(2) Function

[1] Basic functions

The remote control valve is for controlling the control valve spool stroke quantity, direction, etc. This is done by operating the pilot valve output pressure on the control valve spool end section.

In order to satisfy this function, the remote control valve is made up of the following elements.

1) Inlet port (P) to which the oil is fed from the hydraulic pump
2) Multiple output ports (1, 2, 3, 4) for operating the feed pressure from the inlet port on the control valve spool end
3) Tank port (T) required for controlling the above output pressure
4) Spool connecting the output port to the inlet port or tank port
5) Mechanical means including a spring operating on the above spool in order to control the output pressure

[2] Main part functions

The function of the spool (201) is to switch the oil path either to have the hydraulic pressure fed from the hydraulic pump received by the P port and lead the P port pressurized oil to the output ports (1, 2, 3, and 4) or to lead the output port pressurized oil to the T port. The output pressure operating on this spool (201) is determined by the secondary pressure setting spring (241).

In order to change the deflection quantity of the secondary pressure setting spring (241), the push rod (212) is inserted into the plug (211) in such a way that it can slide.

The return spring (221) operates on the casing (101) and spring seating (216) and operates to return the push rod (212) in the displacement zero direction regardless of the output pressure and makes the spool (201) neutral return reliable. It also has the effect of a counterforce spring for giving an operator an appropriate operation feel.

https://truckmanualshub.com/

(3) Operation

Operation of the remote control valve is explained based on the hydraulic circuit diagram (diagram 1) and operation explanation diagrams (diagram 2 - diagram 4). Diagram 1 is a typical usage example for the remote control valve.

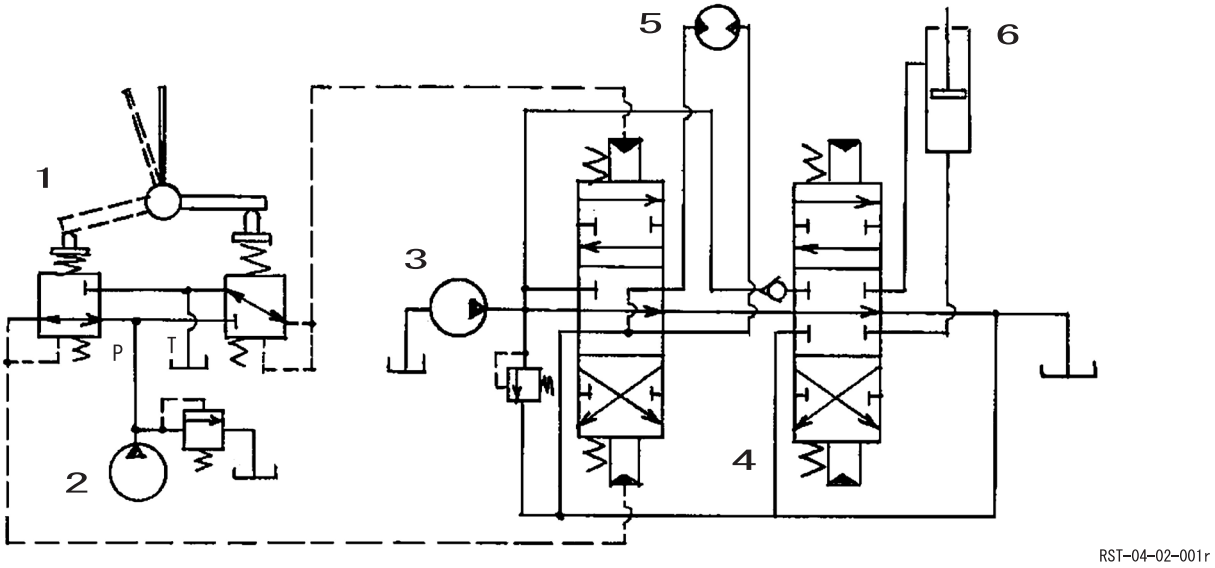

Diagram 1 Remote control valve usage example

1	Pilot valve	4	Control valve
2	Pilot pump	5	Hydraulic motor
3	Main pump	6	Hydraulic cylinder

[1] When the handle is in neutral (See diagram 2.)

The force of the secondary pressure setting spring (241) that determines the remote control valve output pressure does not operate on the spool (201). Therefore, the spool (201) is pushed up by the return spring (221) (spring seating (216)) and the output ports (2 and 4) are connected with the T port. Therefore, the output pressure is the same as the tank pressure.

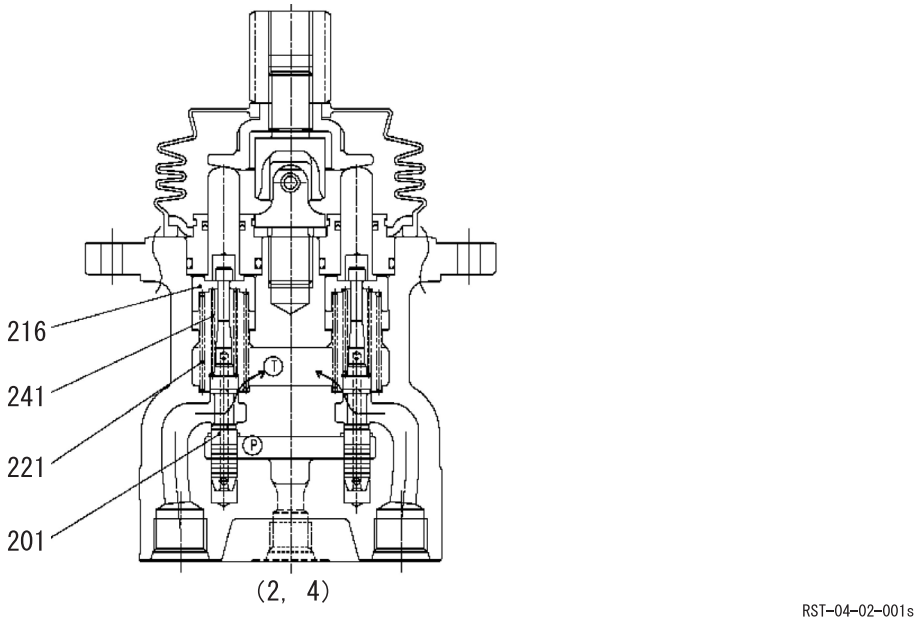

Diagram 2 When the handle is in neutral

https://truckmanualshub.com/

[2] When the handle is tilted (See diagram 3.)
When the handle is tiled and the push rod (212) is moved through a stroke, the (spring seating (216)) spool (201) moves down and the oil fed from the pilot pump flows out to the ports (2 and 4) through the P port and the ports (2 and 4) and pressure is generated.

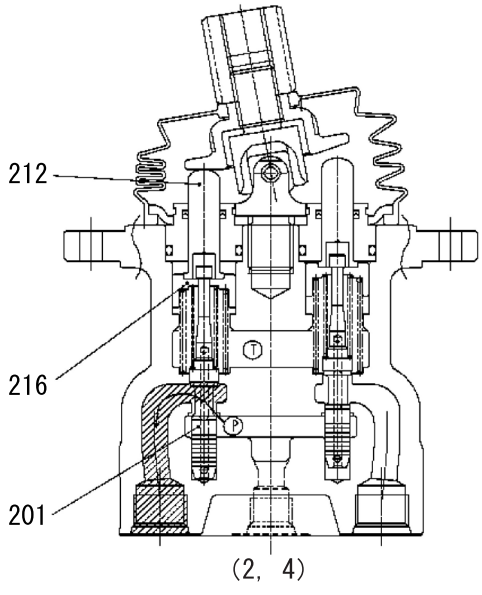

Diagram 3 When the handle is tilted

[3] When the handle is held (See diagram 4.)
When the handle is tilted and the pressure of the ports (2 and 4) rises to a pressure equivalent to the set spring force (241), the hydraulic pressure and the spring force are in balance. When the ports (2 and 4) pressure becomes higher than the set pressure, the ports (2 and 4) and the P port close and the ports (2 and 4) and the T port open. When the ports (2 and 4) pressure becomes lower than the set pressure, the ports (2 and 4) and the P port open and the ports (2 and 4) and the T port close, so the secondary pressure is held constant.

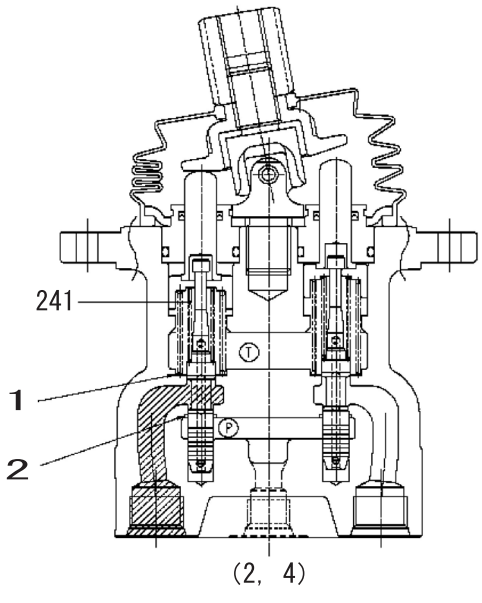

Diagram 4 When the handle is held
(secondary pressure at or above set pressure)

1	T port
2	P port

https://truckmanualshub.com/

[4] Operation in area in which the handle tilt is large (depends on the model)
For certain models, when the handle is flipped down beyond a certain angle, the spool top end section touches the push rod bore bottom section and the output pressure goes into the state of still being connected with the P port pressure.
Furthermore, with the structure in which the spring seating and spring are installed inside the push rod, when the handle is flipped down beyond a certain angle, the push rod bore bottom section and the spring touch. That spring force changes the 2nd pressure gradient and after that the push rod bore bottom section and the spring seating top end section touch, and the output pressure remains connected to the P port.

https://truckmanualshub.com/

(4) Structural diagram

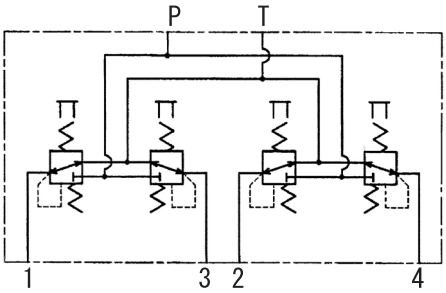

Hydraulic symbol

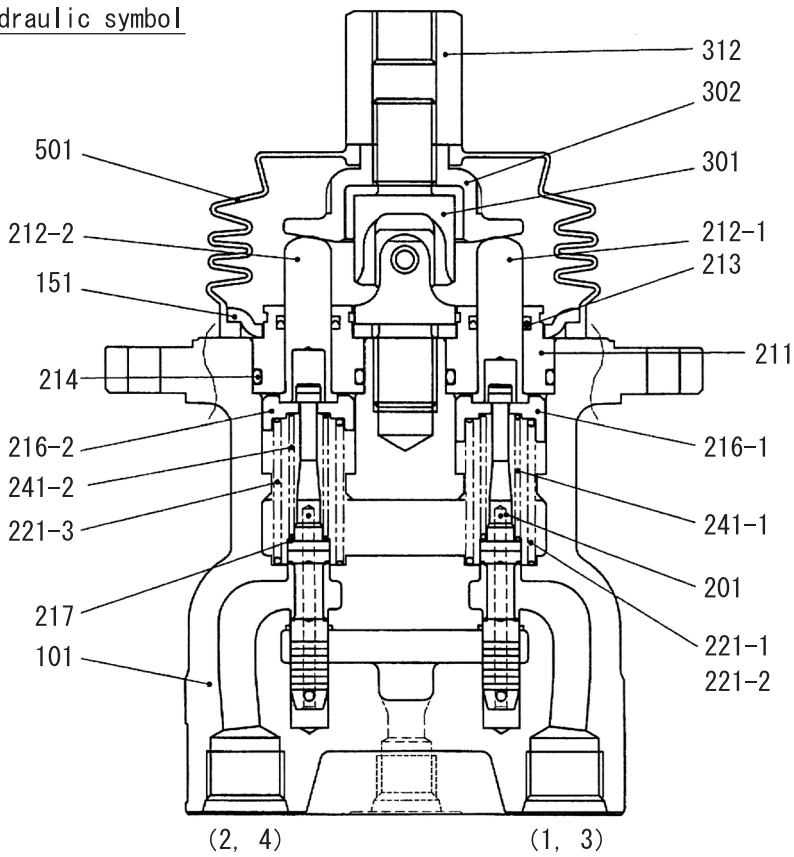

RST-04-02-001v

Code	Part name	Q'ty	Code	Part name	Q'ty
101	Casing	1	217	Washer 2	4
151	Plate	1	221-1	Spring (port 1)	1
201	Spool	4	221-2	Spring (port 3)	1
211	Plug	4	221-3	Spring	2
212-1	Push rod	2	241-1	Spring	2
212-2	Push rod	2	241-2	Spring	2
213	Seal	4	301	Joint	1
214	O-ring	4	302	Disk	1
216-1	Spring seating 1	2	312	Adjusting nut	1
216-2	Spring seating 1	2	501	Bellows	1

https://truckmanualshub.com/

4. Travel Pilot Valve (remote control valve)

(1) Operation

The remote control valve with built-in damper (referred to below as remove control valve with damper) is a remote control valve with a damping function for preventing the man-machine system hunting (lever hunting) phenomenon installed in the remote control valve main unit.
Operation of the remote control valve with damper is divided into the 4.-(1)-1) Pressure reduction valve section and the 4.-(1)-2) Operation section damping mechanism section. The explanations in these 2 sections are based on the hydraulic pressure circuit diagram, assembly section diagram, and damping operation explanation diagram below. The diagram below is a typical usage example for the remote control valve.

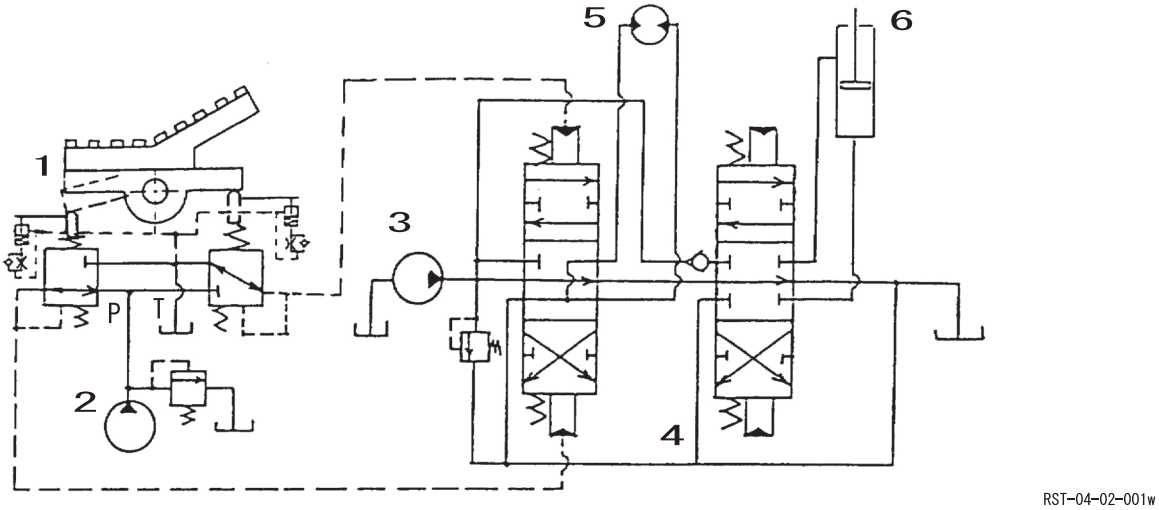

Hydraulic circuit diagram

1	Remote control valve	4	Control valve
2	Pilot pump	5	Hydraulic motor
3	Main pump	6	Hydraulic cylinder

1) Pressure reduction valve section

[1] For the neutral state
The spool (301) is pushed up by the return spring (335) via the spring seating (311) and washer 1 (215) and is in the neutral position shown in the assembly cross-section diagram.
Therefore, since the output port is connected only to port T by the spool switching function, the pressure at output ports 1 and 2 is the same as the pressure at port T.

[2] When the remote control valve operation section is tilted from the neutral state
In the assembly cross-section diagram, when the cam (420) is rotated clockwise, the port 1 side push rod (214) is pushed down, the spool moves down via washer 1, the spring seating, the secondary pressure setting spring (324), washer 2 (217), and washer 3 (313), the port P and port 1 are connected, and the oil fed from the pilot pump flows to port 1 and generates pressure.
When the port 1 pressure rises to the pressure equivalent to the secondary pressure setting spring force that has been set by tilting the operation section, the hydraulic pressure on the spool and the spring force come into balance and the port 1 output pressure is held constant. The port 2 spool stays in the neutral state and the oil from the control valve is discharged via port T.
Some specifications are of the type that near the maximum angle of the operation section, a push rod directly touches the spool top section and forcibly pushes in the spool to connect port P and the output port so that they have the same pressure.

https://truckmanualshub.com/

2) Operating section damping mechanism section

[1] For the neutral state
The push rod is pushed up by the damping springs (333 and 337) via the piston (224) and is in the position shown in the assembly cross-section diagram.

[2] When the operation section is tilted from the neutral state (See Damping operation explanation diagram (1).)
In the assembly cross-section diagram, when the cam is rotated clockwise, the port 1-side push rod is pushed down and the piston moves down.
At this time, the oil in the damping piston chamber is discharged from the piston metering hole and the pressure generated at this time generates damping force.
On the other hand, the port 2-side push rod is moved up by the damping spring via the piston.
At this time, the tank chamber oil is suctioned in through the 3 ball check sections made up of bushings (223) and steel balls (225) and into the damping piston chamber. The oil outside the piston chamber drains out from the path that leads from the casing top end section to port T.

[3] When the operation section is tilted back from a full tilt (See Damping operation explanation diagram (2).)
In the assembly cross-section diagram, after the cam is fully tilted clockwise then rotated counter-clockwise, the port 2 push rod is pushed down and the piston moves down.
At this time, as described above, the oil in the damping piston chamber is discharged from the piston metering hole and the pressure generated at this time generates damping force.
On the other hand, the port 1 push rod is moved up by the return spring (335) and the damping spring.
At this time, the tank chamber oil is suctioned in through the 3 ball check sections made up of bushings and steel balls and into the damping piston chamber. Also, the oil outside the piston chamber drains out from the path that leads from the casing top end section to the tank port.
In other words, the structure is such that damping force works for either tilt operation, from the neutral position to the full tilt position or from the full tilt position to the neutral position.

https://truckmanualshub.com/

Damping operation explanation diagram

[1] Operation when lever is moved through its stroke from the neutral position

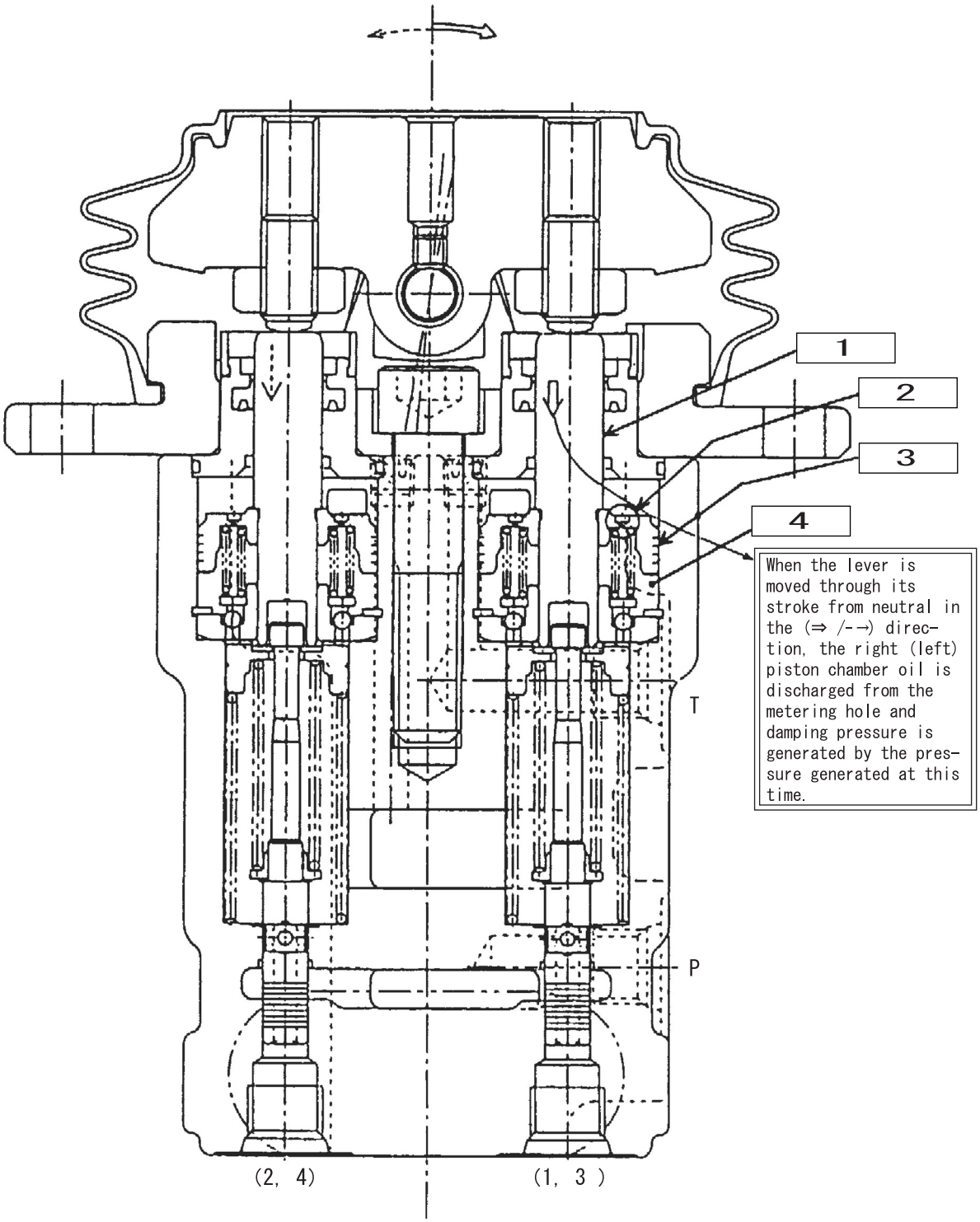

SD02009-014

1	Push rod
2	Orifice
3	Piston
4	Piston chamber

https://truckmanualshub.com/

[2] Lever stroke state and operation when lever is moved back

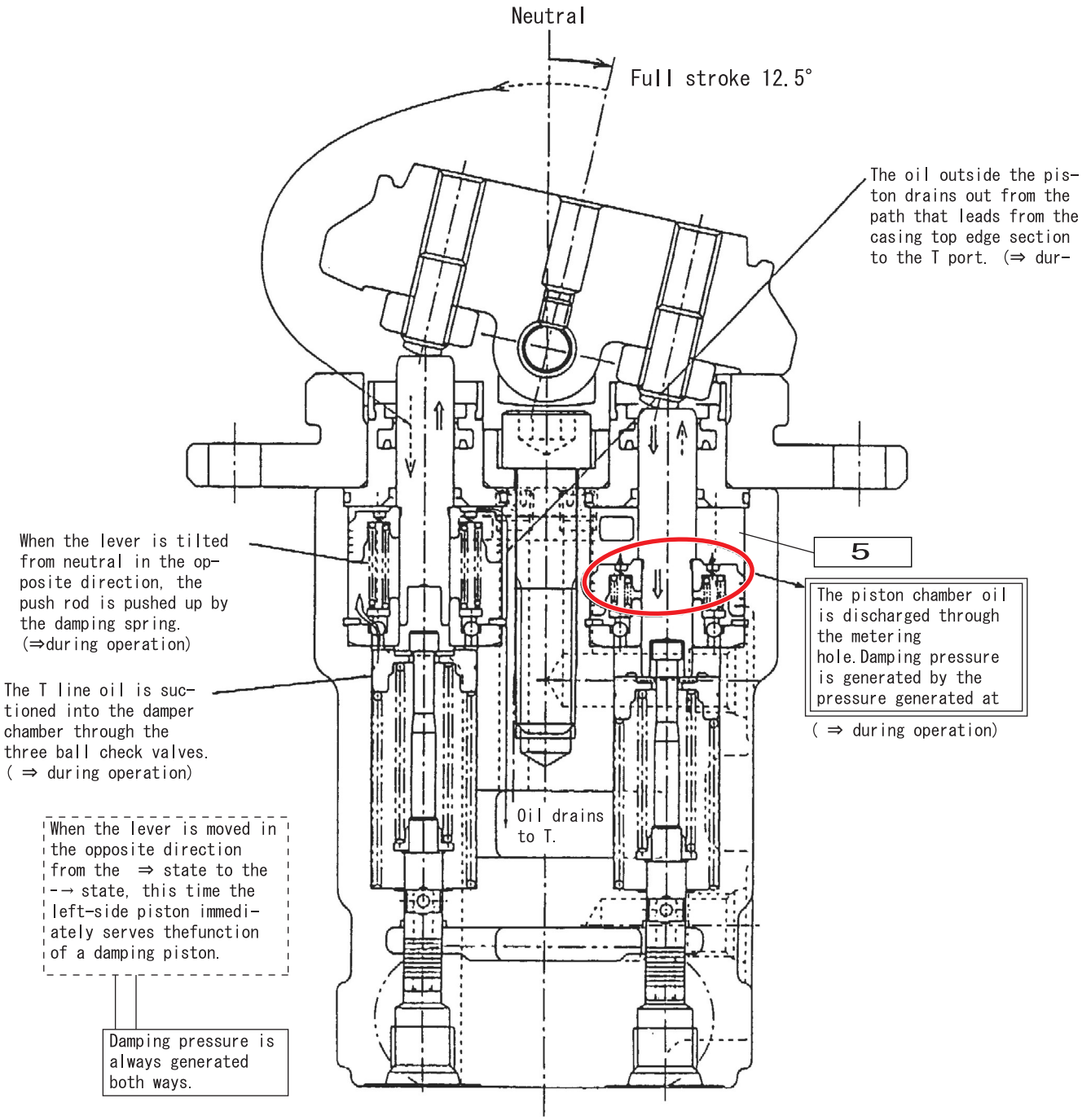

SD02009-014

5	Oil

https://truckmanualshub.com/

(2) Structural diagram

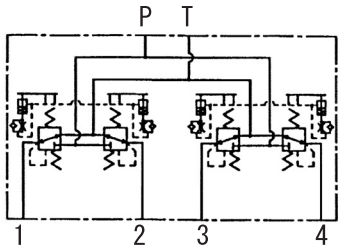

Hydraulic symbol

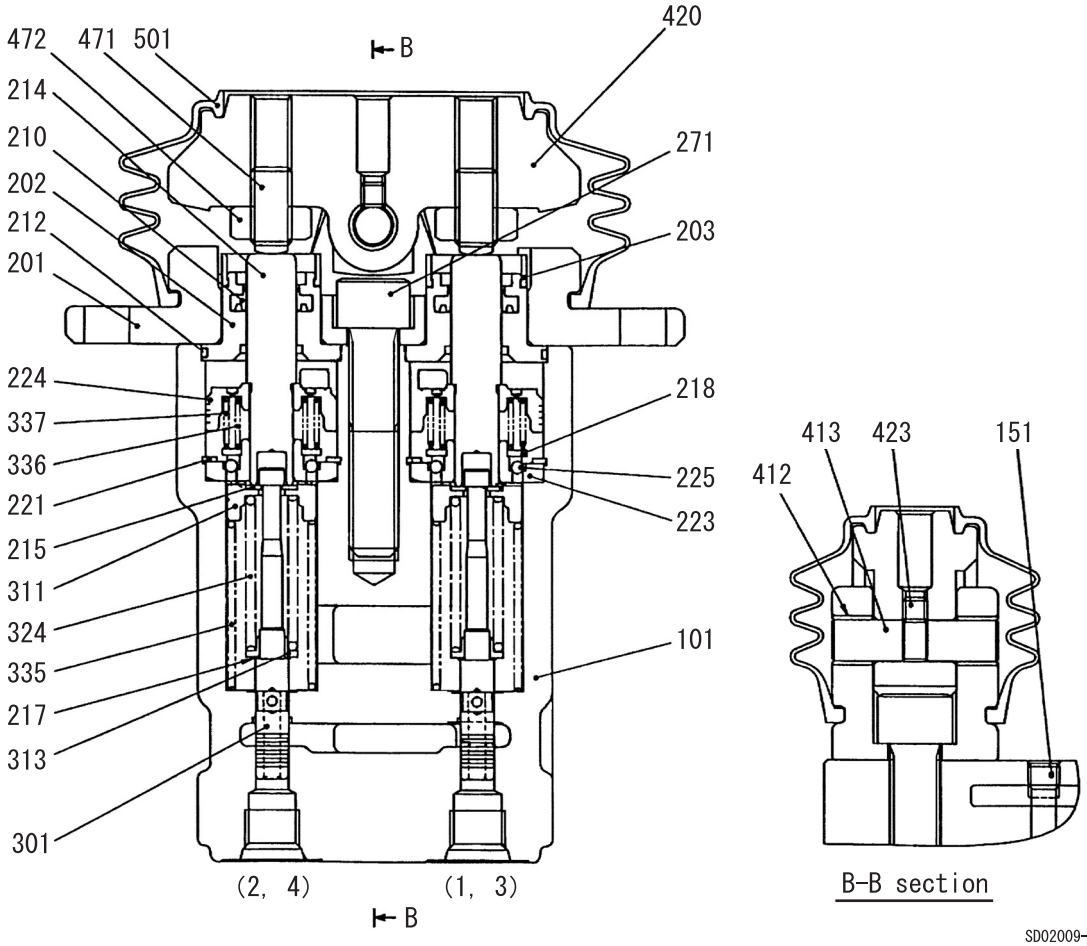

SD02009-040

Code	Part name	Q'ty	Code	Part name	Q'ty
101	Casing	1	271	Hexagon socket head bolt	2
151	Plug	2	301	Spool	4
201	Cover	2	311	Spring seating	4
202	Plug	4	313	Washer 3	4
203	Grease cup	4	324	Spring	4
210	NHU packing	4	335	Spring	4
212	O-ring	4	336	Spring	4
214	Push rod	4	337	Spring	4
215	Washer 1	8	412	Bushing	4
217	Washer 2	4	413	Camshaft	2
218	Spring seating	4	420	Cam	2
221	Locking ring	4	423	Hexagon socket head locking screw	2
223	Bushing	4	471	Locking screw	4
224	Piston 2D085	4	472	Lock nut	4
225	Steel ball	12	501	Bellows	2

https://truckmanualshub.com/

5. Cushion Valve

[1] Valve summary

This valve is made up of a shuttle valve section and cushion valve section with a heat circuit.
The cushion valve with a heat circuit is connected between the hydraulic shovel control valve and the pilot operation valve to reduce body shaking (cushion function) caused by emergency stop operations by the operator.
This valve is also equipped with a circuit with which the operator can deliberately disable the cushion function for reverse operations.
The shuttle valve selects the high-pressure signal pressure from 2 signal pressure systems. This valve has 2 circuits.

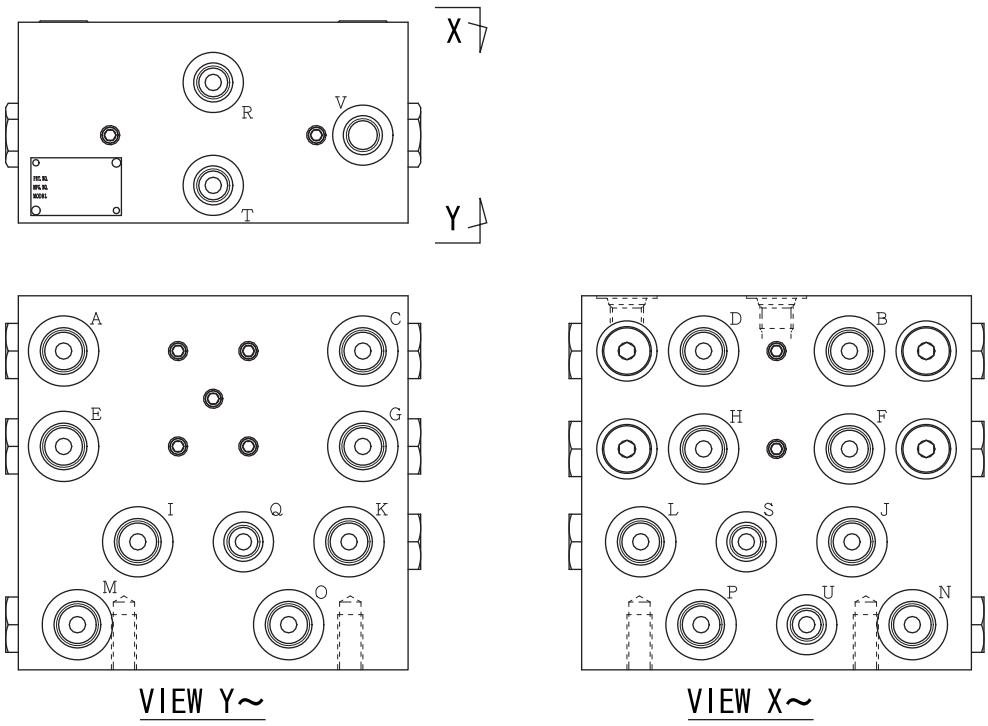

Diagram 1 External shape diagram

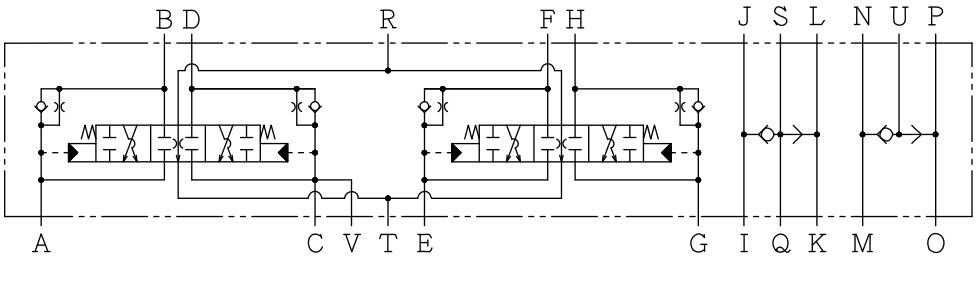

Diagram 2 Hydraulic system diagram

https://truckmanualshub.com/

[2] Operation explanation

1) Normal operation

The pressurized oil fed from the A port (or C, E, or G port) pushes up the check plunger and is sent to the B port (or D, F, or H port). The pressurized oil that has passed through the B port operates on the control valve spool and operates the actuator. The oil pushed out from the control valve spool passes through the D port (or B, F, or H port) and flows out to the T port.

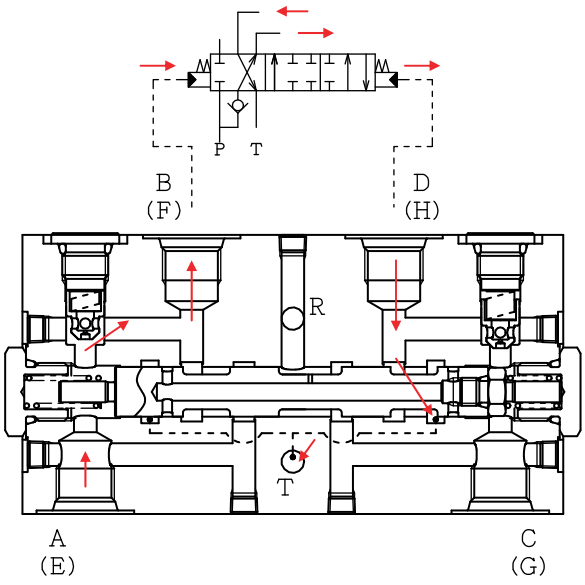

Diagram 3

2) Cushion operation

When the pressurized oil fed from the pilot operation valve to the A port (or C, E, or G port) is closed by the pilot operation valve, the pressurized oil that has operated on the control valve spool is pushed back to the B port (or the D, F, or H port) by the return spring on the spool. The returned oil passes through the check plunger metering orifice, is sent to the A port (or the C, E, or G port), and is drained from the pilot operation valve. At this time, by passing through the metering orifice, the pressurized oil holds down the control valve spool speed and reduces shaking of the body. (Cushion function)

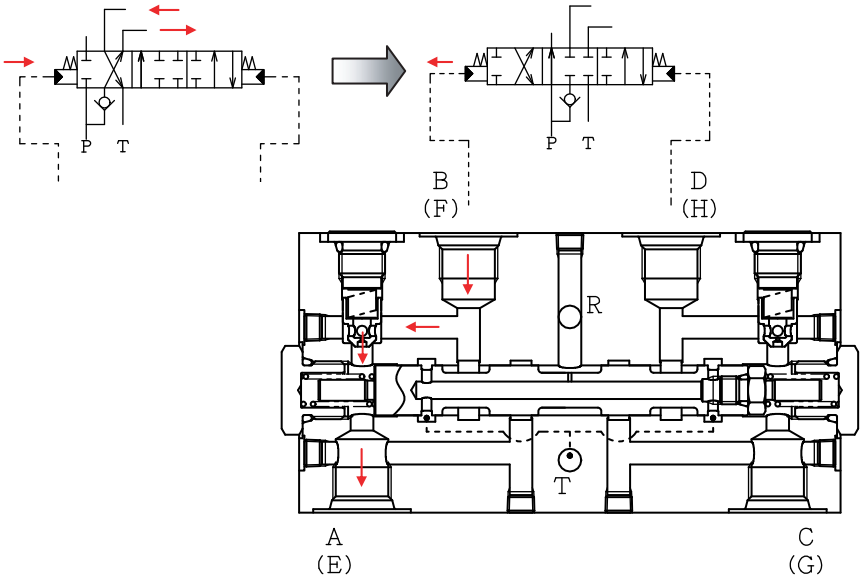

Diagram 4

https://truckmanualshub.com/

3) Reverse operation
When the pressurized oil fed from the pilot operation valve to the A port (or C, E, or G port) is switched to the C port (or A, E, or G port), the pressurized oil that has operated on the control valve spool is pushed back to the B port. Because the pushed back oil flows out to the T port without passing through the check plunger metering orifice, it does not hold down the control valve spool speed, so the cushion function does not work.

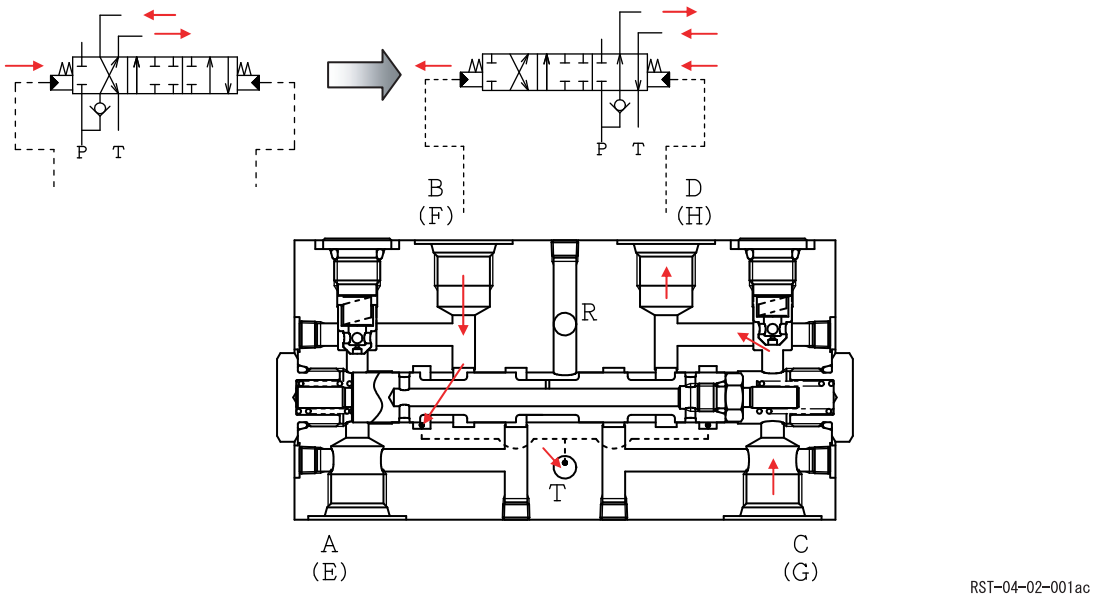

Diagram 5

4) Heat circuit
When the pilot operation valve is in the neutral position, the oil fed to the R port passes through the inside of the reverse operation spool, flows out to the T port, and heats up the inside of the valve.
When pressurized oil is being fed from the pilot operation valve to the A port (or C, E, or G port), the oil fed to the R port flows out to the C port (or A, E, or G port) and heats up the circuit to the pilot operation valve and inside the valve.

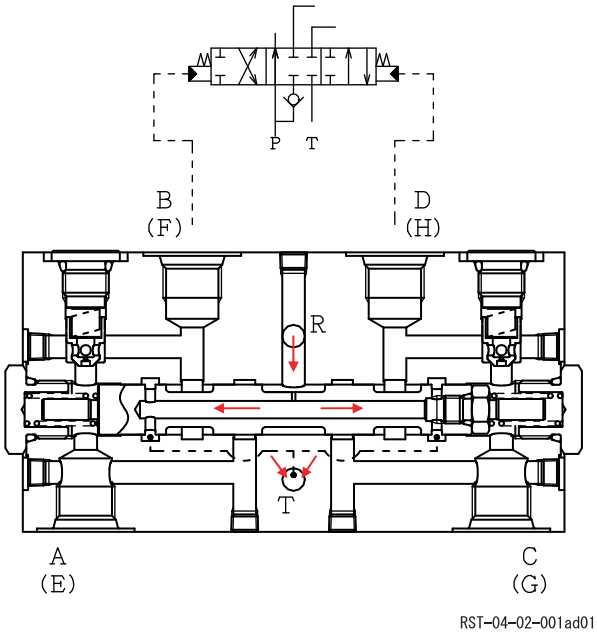

Diagram 6

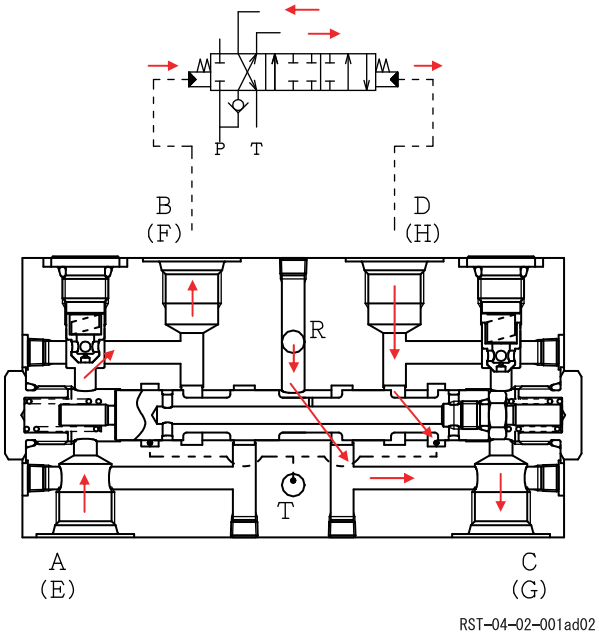

Diagram 7

https://truckmanualshub.com/

5) Shuttle valve
In the pressure between the I and J ports and the pressure between the K and L ports, the steel ball is pressed from the high pressure to the low pressure. Through this process, the high-pressure oil is fed to the S port or the Q port. In the same way, oil is fed to the U port at the higher of the pressures between the M and N ports and between the O and P ports.

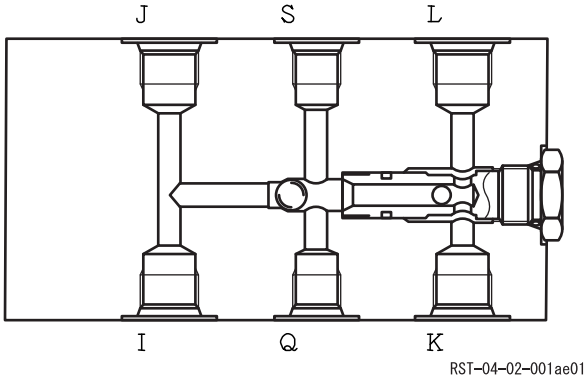

Diagram 8

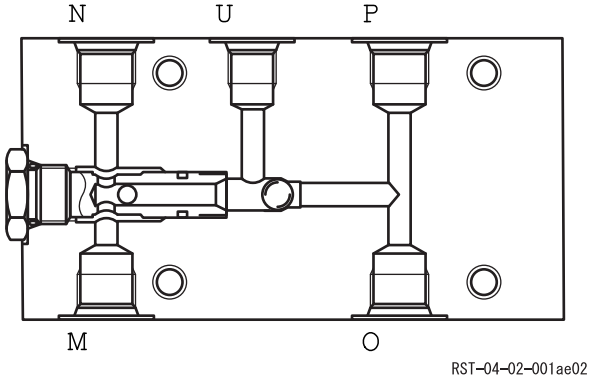

Diagram 9

https://truckmanualshub.com/

6. Selector Valve (4-way)

(1) Structure

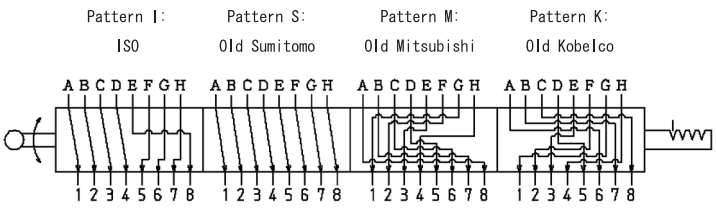

RST-04-02-001af01

Circuit diagram

Operation, work			
A	Right valve, retraction	1	Boom, up
B	Right valve, left side	2	Bucket, digging
C	Right valve, push out	3	Boom, down
D	Right valve, right side	4	Bucket, dirt removal
E	Left valve, push out	5	Swing, right
F	Left valve, right side	6	Arm, digging
G	Left valve, pull in	7	Swing, left
H	Left valve, left side	8	Arm, dirt removal

Circuit combination table			
Type I: ISO	Type S: Old Sumitomo	Type M: Old Mitsubishi	Type K: Old Kobelco
A-1	A-1	A-8	A-6
B-2	B-2	B-7	B-7
C-3	C-3	C-6	C-8
D-4	D-4	D-5	D-5
E-8	E-5	E-3	E-3
F-5	F-6	F-2	F-2
G-6	G-7	G-1	G-1
H-7	H-8	H-4	H-4

https://truckmanualshub.com/

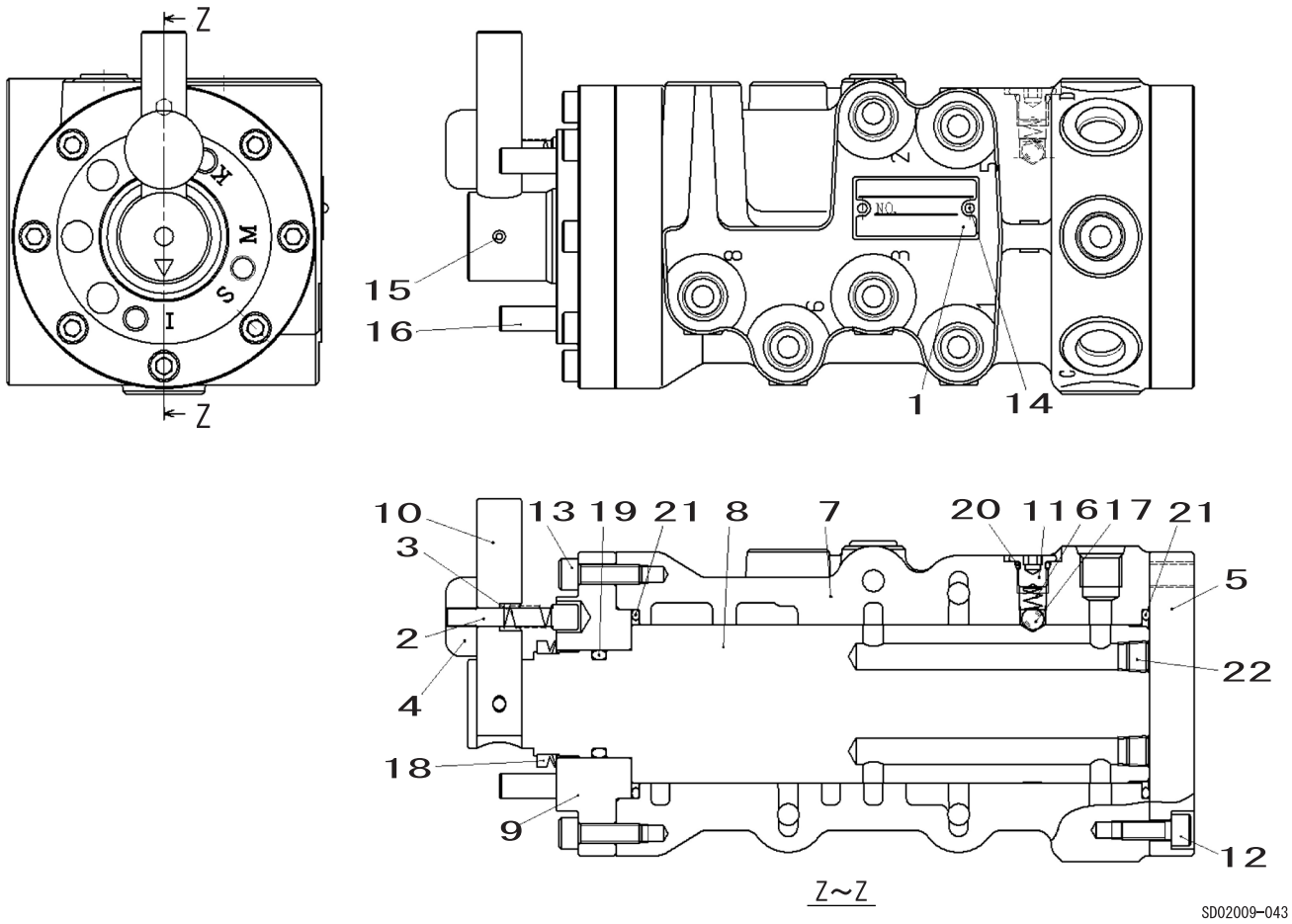

Diagram 1 Valve structure

1	Name plate	9	Cover	17	Steel ball
2	Pin	10	Lever	18	Oil seal
3	Spring	11	Plug with flange	19	O-ring
4	Knob	12	Hexagon socket head bolt	20	O-ring
5	Cover	13	Hexagon socket head bolt	21	O-ring
6	Spring	14	Rivet screw	22	Hexagon socket head plug
7	Casing	15	Spring pin		
8	Shaft	16	Spring pin		

https://truckmanualshub.com/

(2) Operation explanation

This valve is a rotation type switch valve.
By connecting a line between the hydraulic shovel work remote control valve and the main control valve and changing the lever (10) to the position for each type (rotating the shaft (8)), the valve circuit has been changed and the operation type changed to that in Diagram 2.
For details on the valve structure (circuit diagram), see Diagram 1.

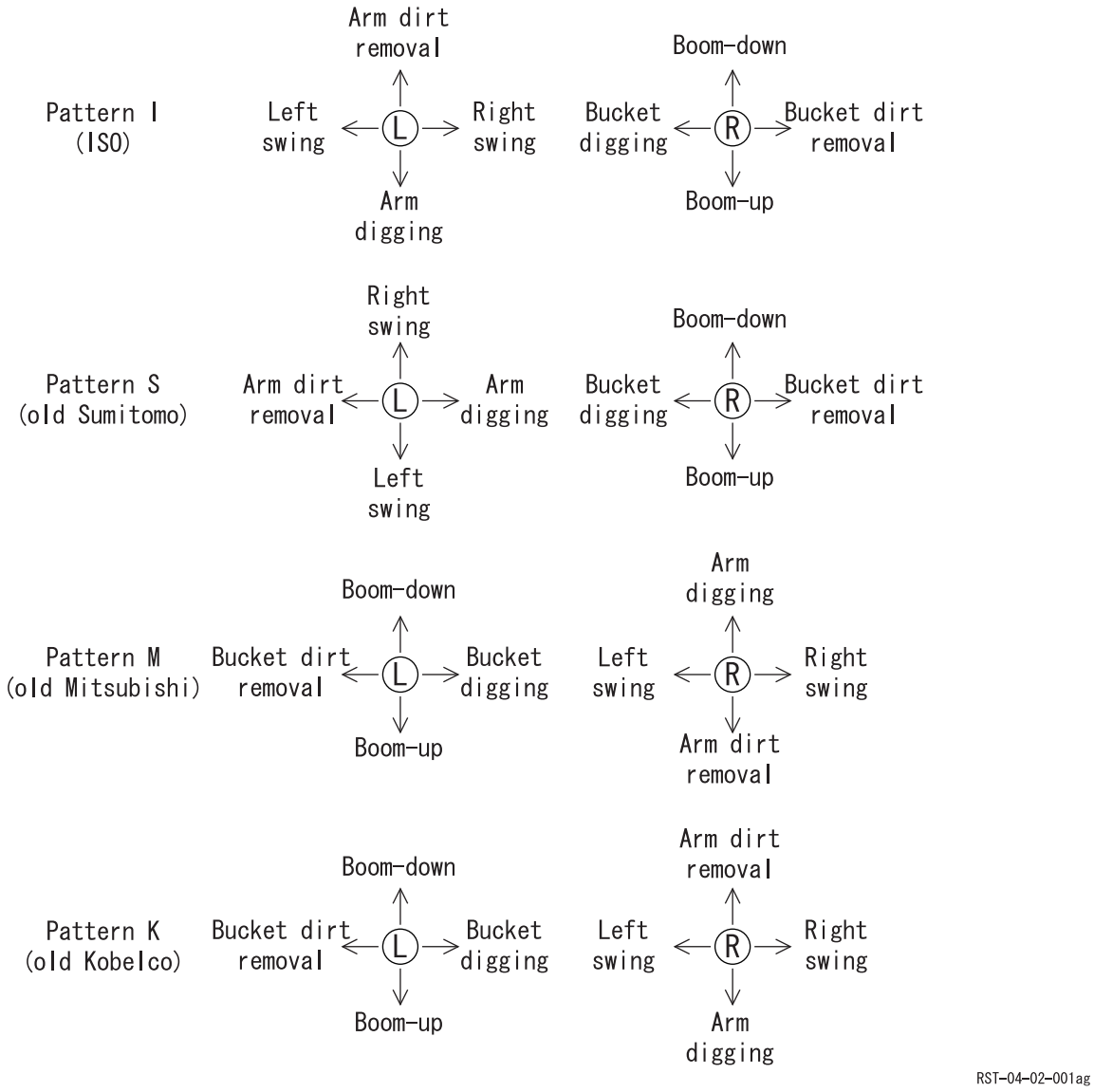

Diagram 2 Operation method by type

https://truckmanualshub.com/

(3) Development diagram

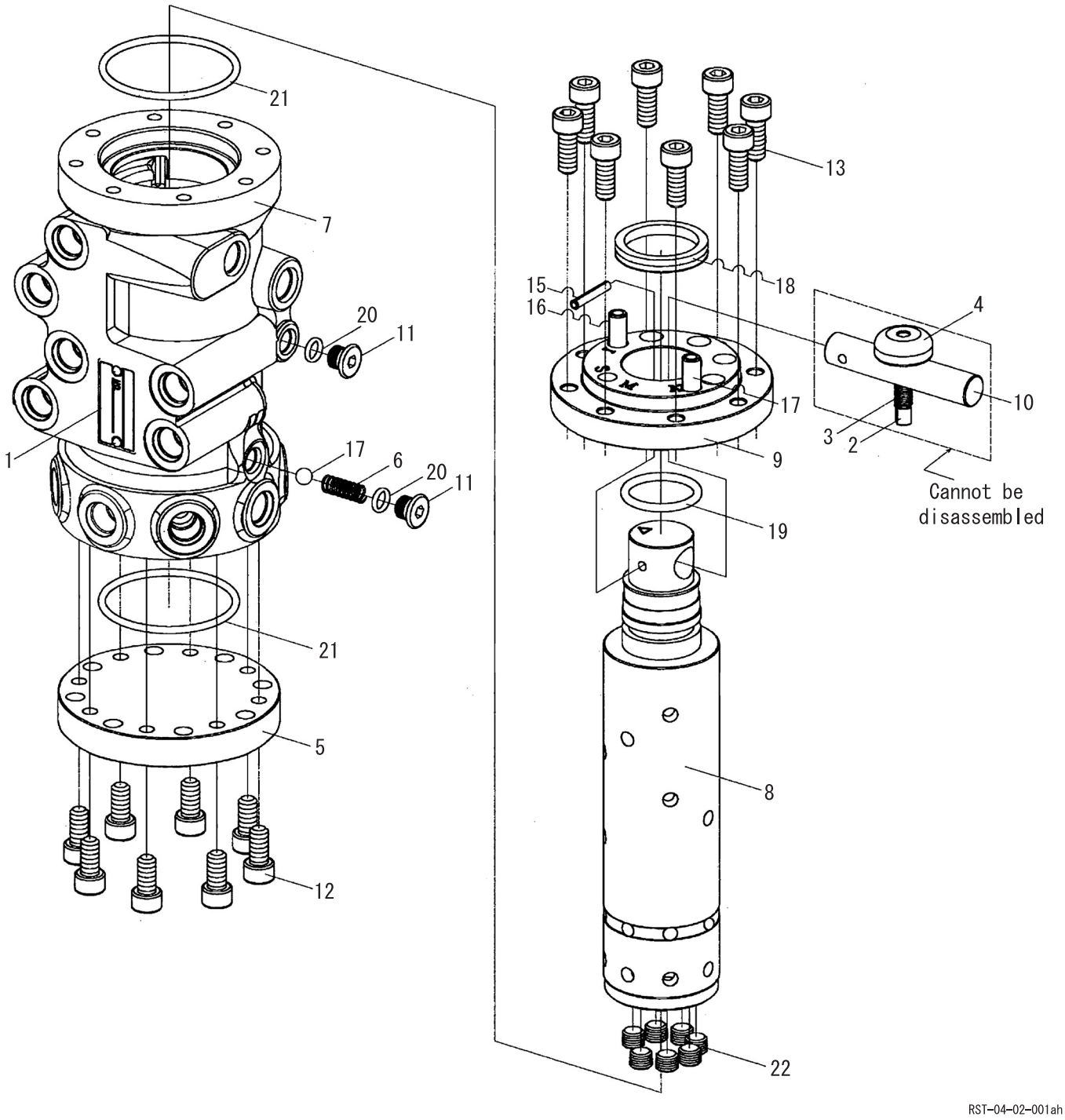

https://truckmanualshub.com/

7. Direction Valve (3-direction)

(1) Structure

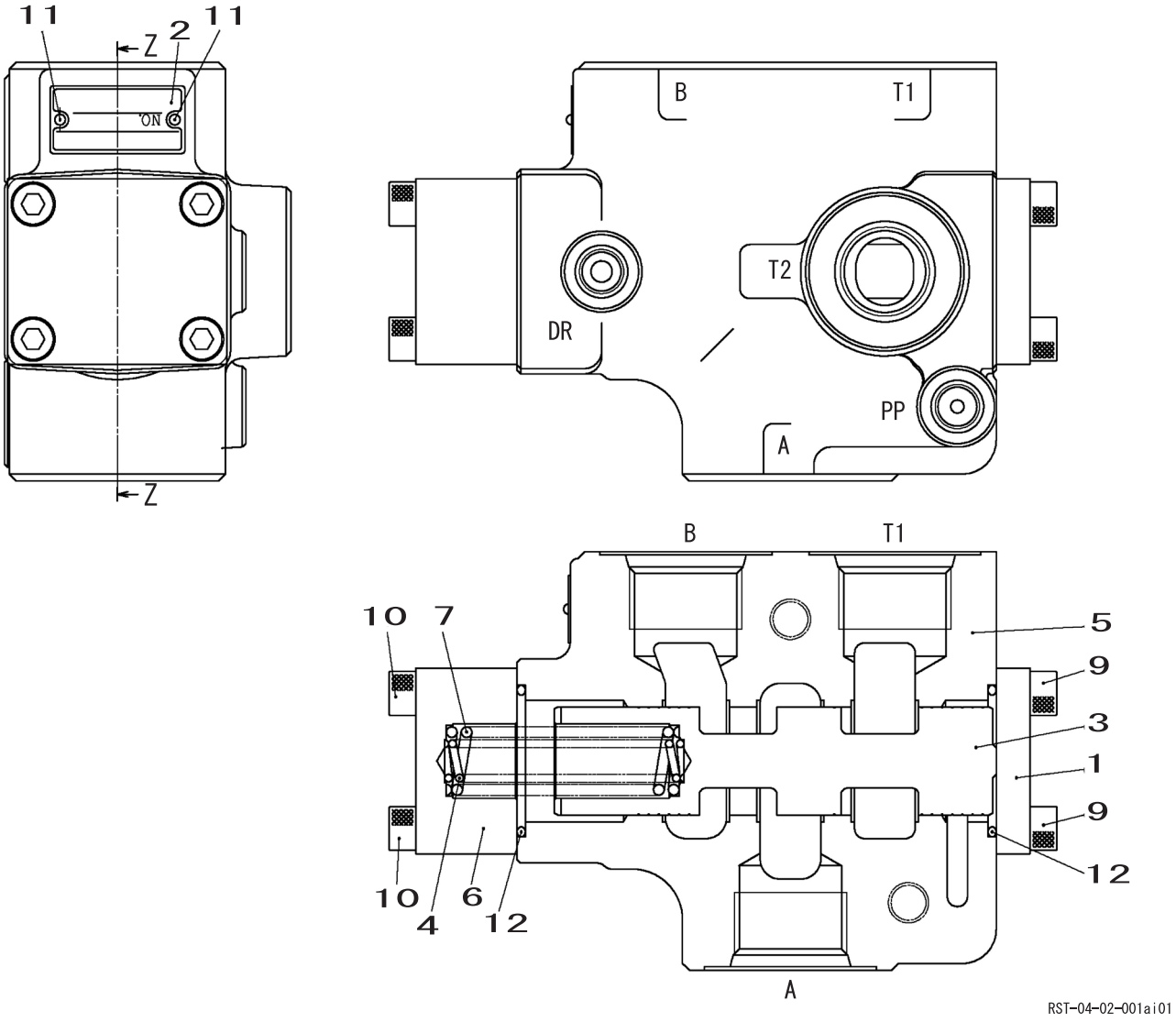

Z-Z section

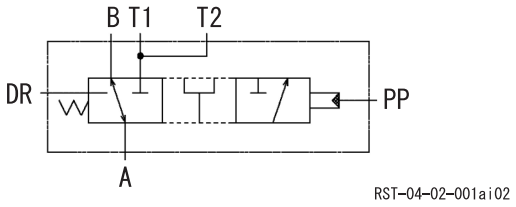

Circuit diagram

Diagram 1

1	Cover	5	Body	9	Hexagon socket head bolt
2	Name plate	6	Cover	10	Hexagon socket head bolt
3	Spool	7	Spring	11	Rivet screw
4	Spring	8	Hexagon socket head bolt	12	O-ring

https://truckmanualshub.com/

(2) Operation explanation

This valve switches the direction with the pilot pressure.

[1] When the spool is in neutral (PP port no load) Double-acting circuit, 2 pumps flow circuit selected

When the pilot pressure is not fed to the PP port, the spool (3) is held in the neutral position by the spring (4) and (7). The A port and the B port are conducting and pressurized oil from the T1 and T2 ports is cut off by the spool (3). (See diagram 2.)

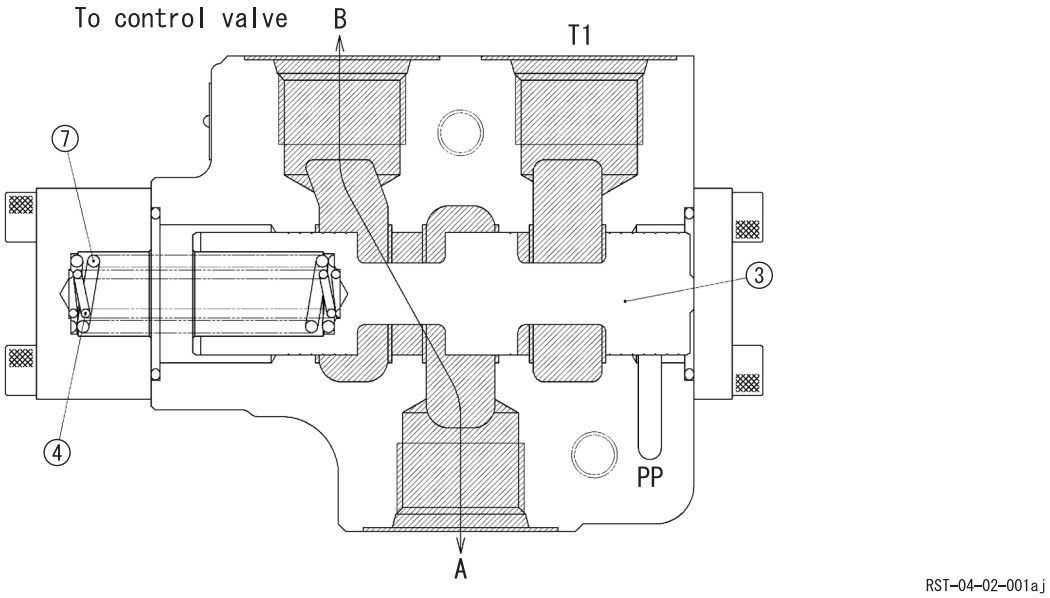

Diagram 2

[2] When the spool operates (PP port pressurized) Breaker circuit selected

When pressure is fed to the PP port, force [F] (PP port pressure × spool cross-sectional area) works on the spool (3) in the left direction. When F becomes larger than the set load of springs (4) and (7), the spool (3) moves to the left and the A port is conducted to the T1 and T2 ports.

Also, at this time, the pressurized oil at the B port is cut off by the spool (3). (See diagram 3.)

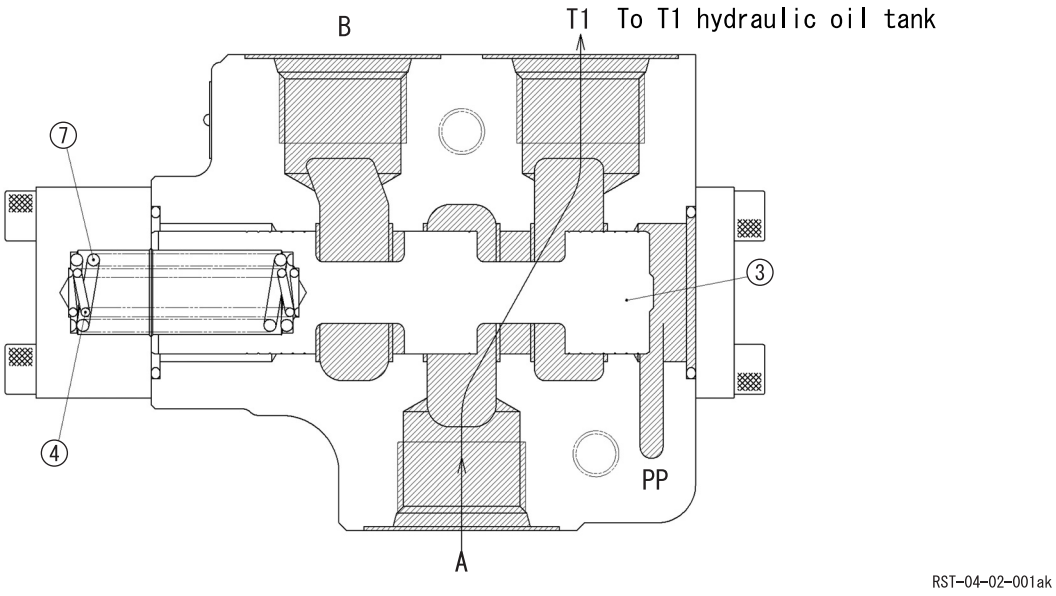

Diagram 3

https://truckmanualshub.com/

Work Mode Select Switch

The Throttle Volume and Work Mode Select Switch are Linked!!

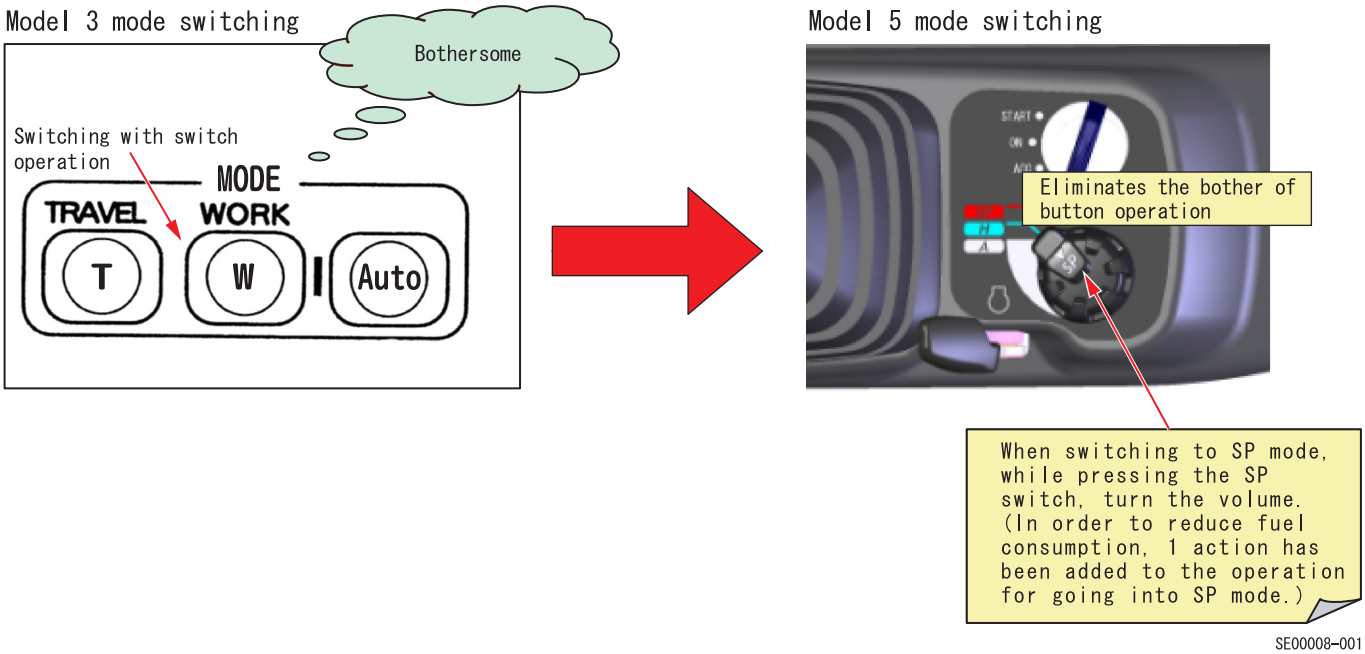

https://truckmanualshub.com/

Explanation of New Functions

[1] Flow of throttle control

With Model 3B, the throttle volume signal is connected directly to the ECU and only the work mode signal instruction is sent from the main unit computer. With Model 5, the throttle volume signal first goes to computer A, then the target engine speed instruction is sent from computer A to the ECM.

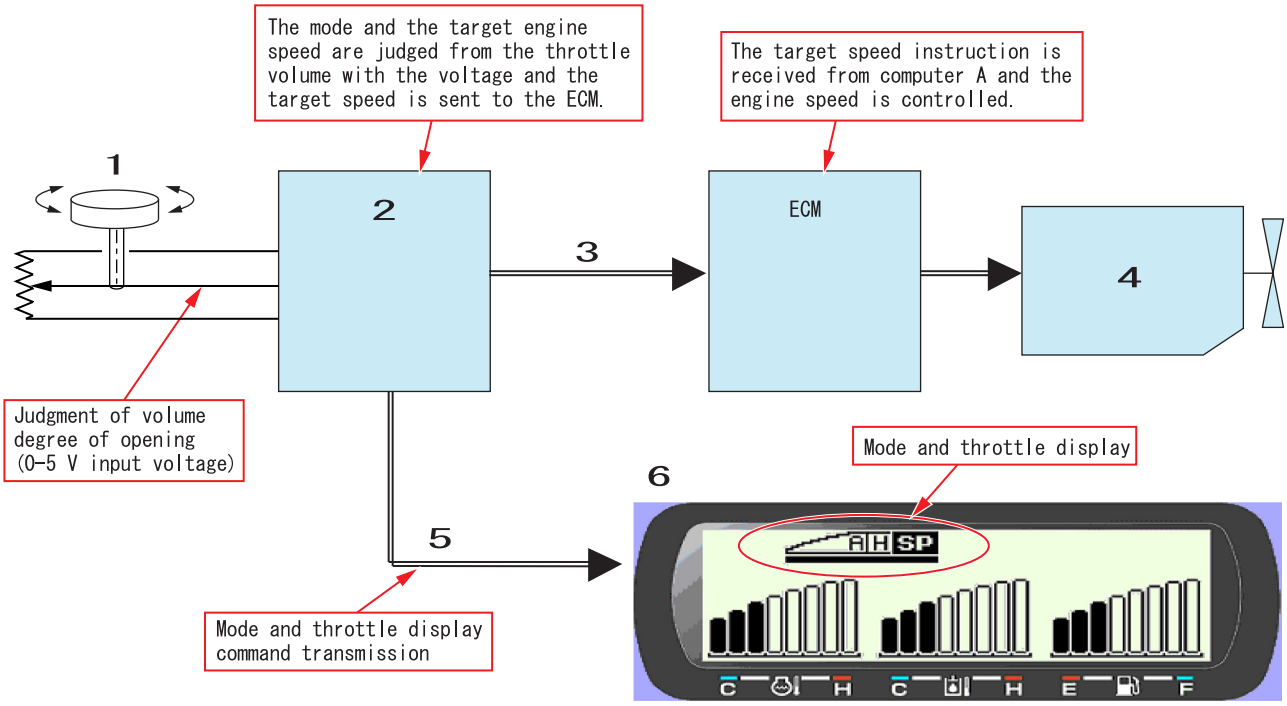

RE00004-004

1	Throttle volume
2	Computer A
3	CAN communication
4	Engine
5	UART communication
6	Monitor

[2] Pump horsepower control for each mode

If a throttle volume signal is input to computer A, computer A judges the work mode according to the degree of opening of the throttle volume and controls milli-amp for pump horsepower control proportional valve to match the work mode.

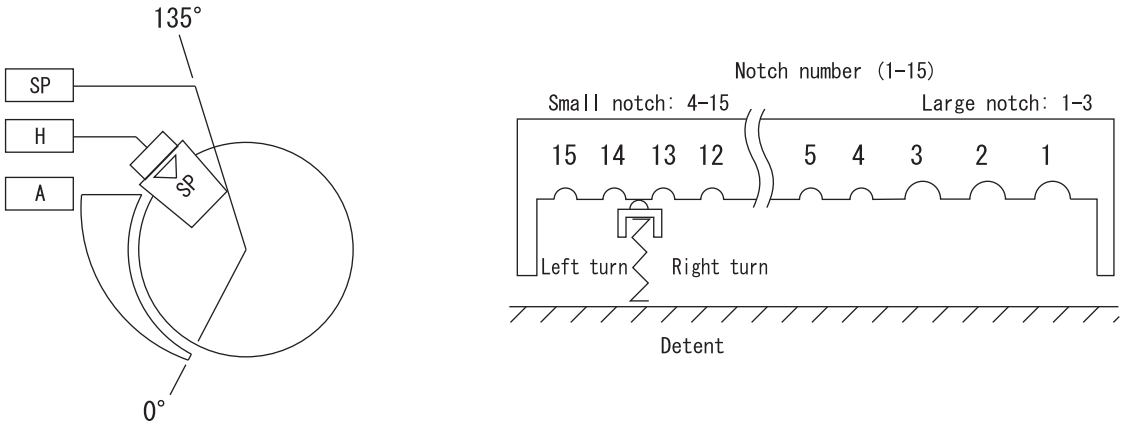

RE00004-005

https://truckmanualshub.com/

Control milli-amp

* = When the target engine speed is 1300 min^{-1} or less, milli-amp for pump horsepower control proportional valve is 50 mA.

	Volume position (detent position)	1	2	3	4 - 8	9 - 15
	Work mode (upper)	SP	H	A		
SH330-5	Engine speed (min^{-1})	1900	1800	1700	1699 - 1300	1299 - 900
	Milli-amp for pump horsepower control proportional valve (mA)	500	500	500	380	50
	Pressure boost	Auto	Auto	Normal		

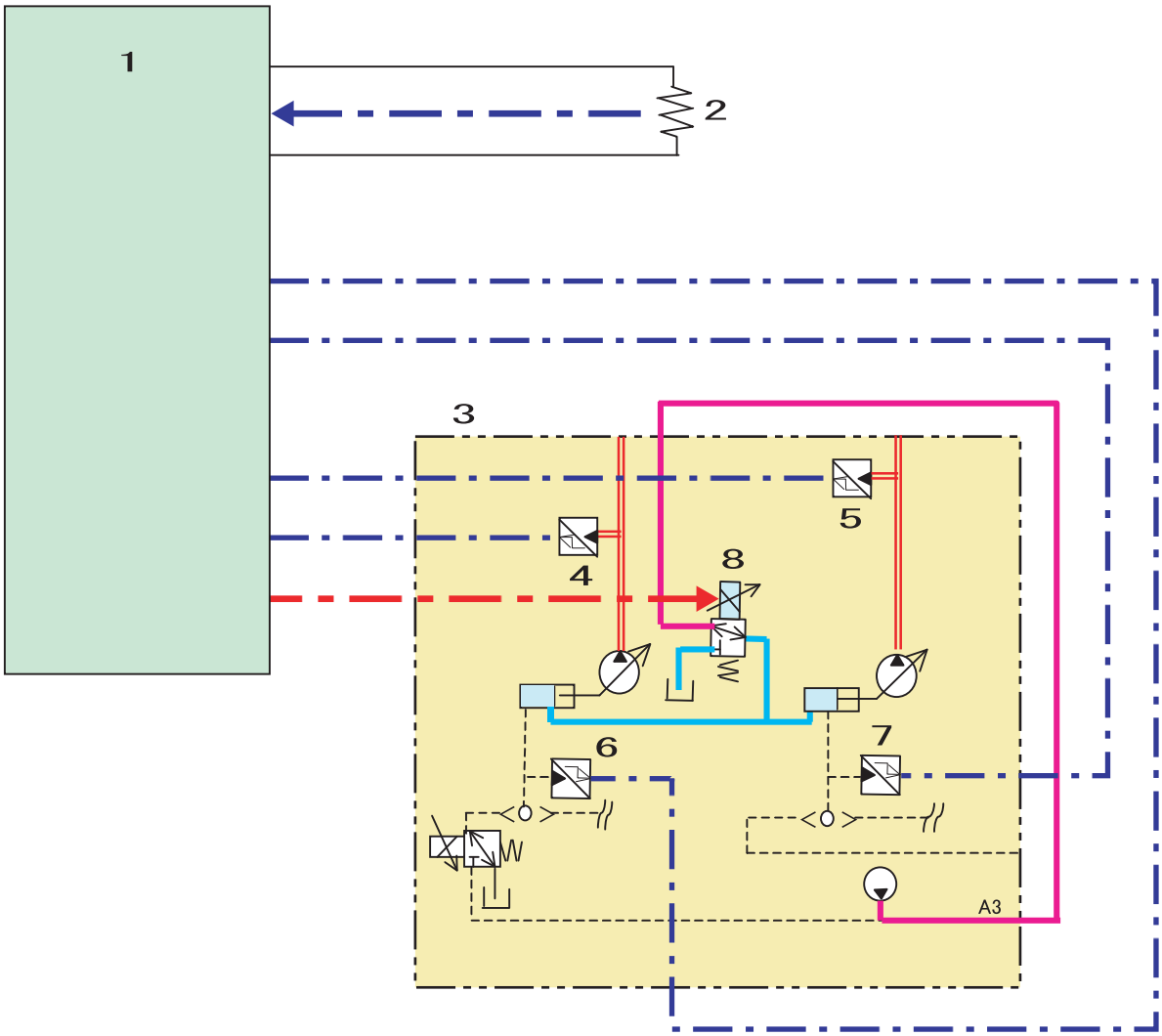

SE00008–002

1	Computer A	5	P2 pressure sensor
2	Throttle volume	6	N1 pressure sensor
3	Hydraulic pump	7	N2 pressure sensor
4	P1 pressure sensor	8	Pump horsepower control proportional valve

https://truckmanualshub.com/

Explanation of New Functions

Computer connection method

[1] Computers and the ECM are connected with CAN communication.

[2] The monitor and computers are connected with serial communication (UART).

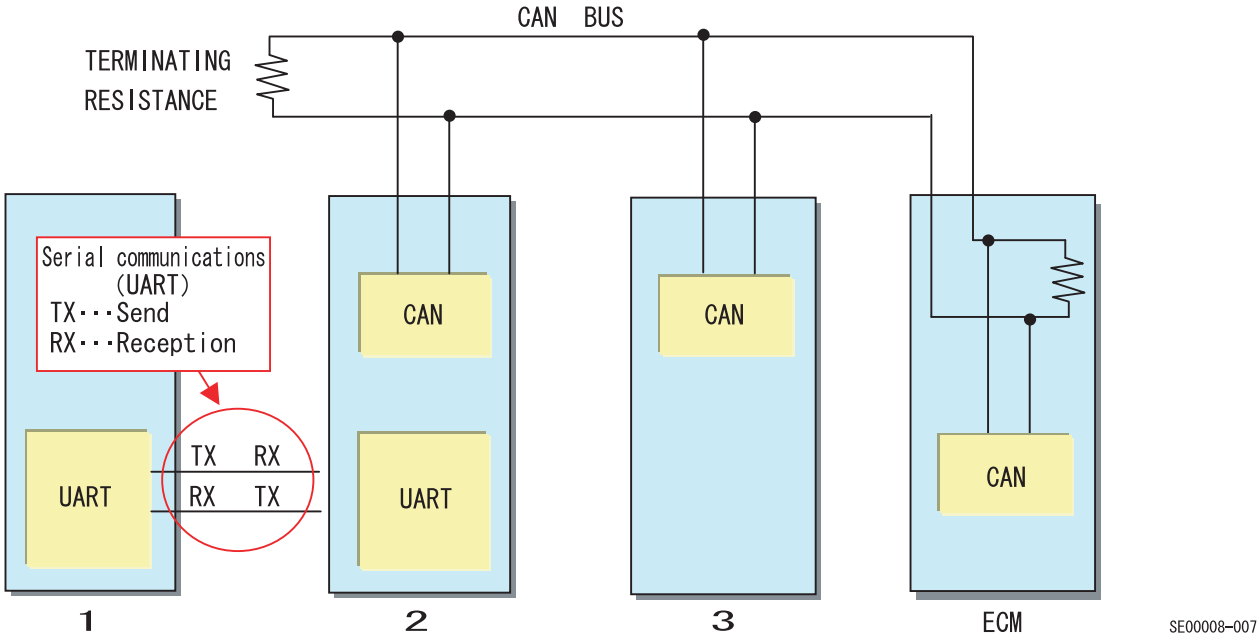

1	Monitor
2	Computer A
3	Computer S

1) Computer A ..... Main unit side computer (standard)
2) Computer S ..... Remote support computer (standard)
3) ECM ..... Engine computer

https://truckmanualshub.com/

Monitor changes

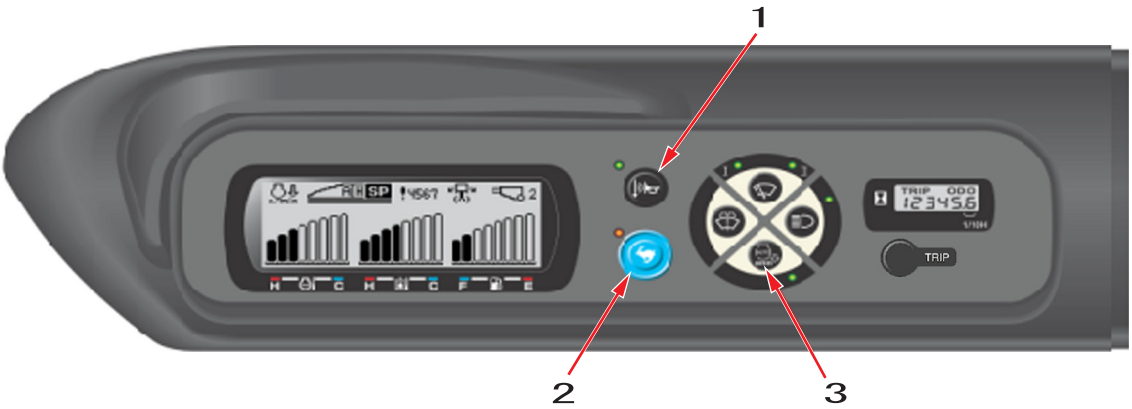

1	Horn volume select switch
2	Travel speed select switch
3	Auto idle switch

☆ Changes from Model 3B

[1] LCD backlight color change (green → white); no change in number or size of LCD dots

[2] Mounted switch changes

Switch name	Model 3B	Model 5	Details
Work mode	Yes	Eliminated	Throttle volume link mode switching
Auto mode	Yes	Eliminated	Throttle volume link mode switching
Travel mode	Yes	Yes	
Wiper	Yes	Yes	
Washer	Yes	Yes	
Working Light	Yes	Yes	
Swing lock	Yes	Eliminated	
Emergency stop	Yes	Eliminated	Changed to rocker switch
Buzzer stop	Yes	Eliminated	Buzzer changed to auto off
Auto idle	No	Yes	Dedicated switch added
Horn volume	No	Yes	Newly added

[3] Major increase in LCD brightness (Model 3B: 6 cd minimum → Model 5: 220 cd type)
(The increased brightness creates glare at night, so a light reduction function linked to working light output was added.)

https://truckmanualshub.com/

[4] External switch input ports added (5 ports)

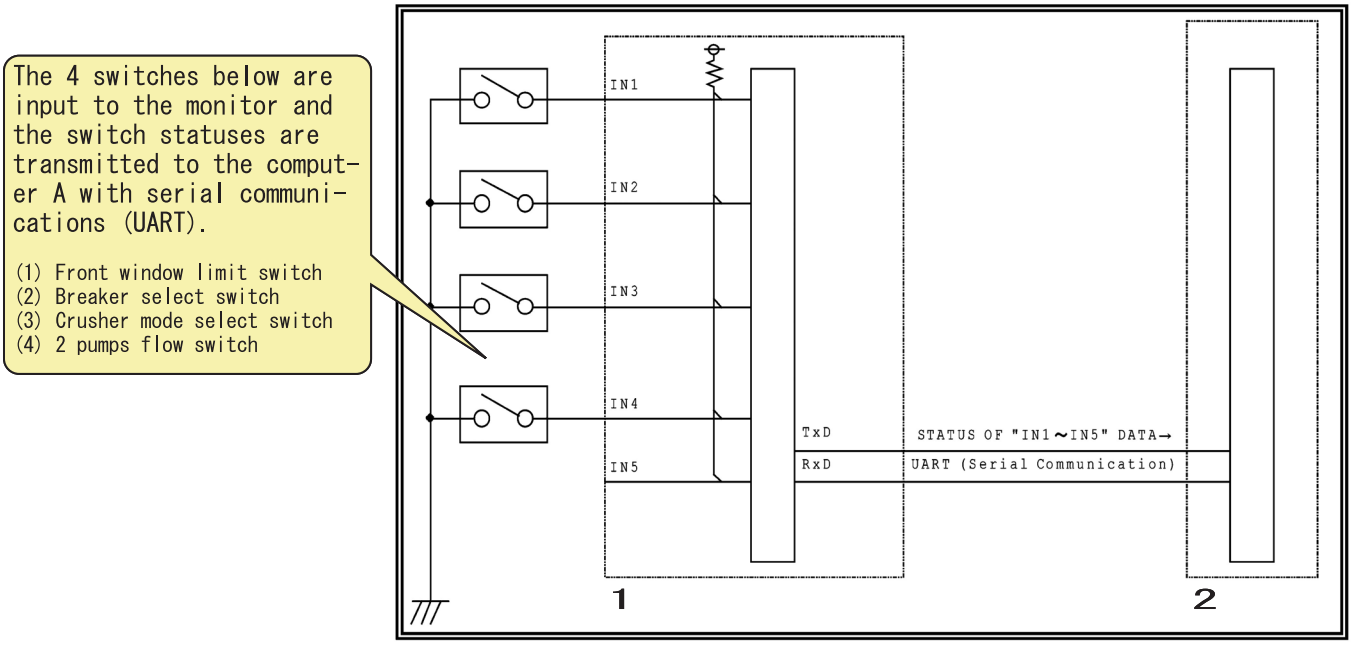

RE00004-002

1	Monitor
2	Computer A

Purpose

Sending the above switch states to the computer A makes it possible to check the operation of each switch on the service support check screen. Also, since the cumulative operation time for each switch is stored in the computer A, the time that the front window was open or closed and the usage log of each option line can be checked on the service support HR screen.

https://truckmanualshub.com/

[5] Output port (wiper, washer, working light, horn volume switchover) control method change

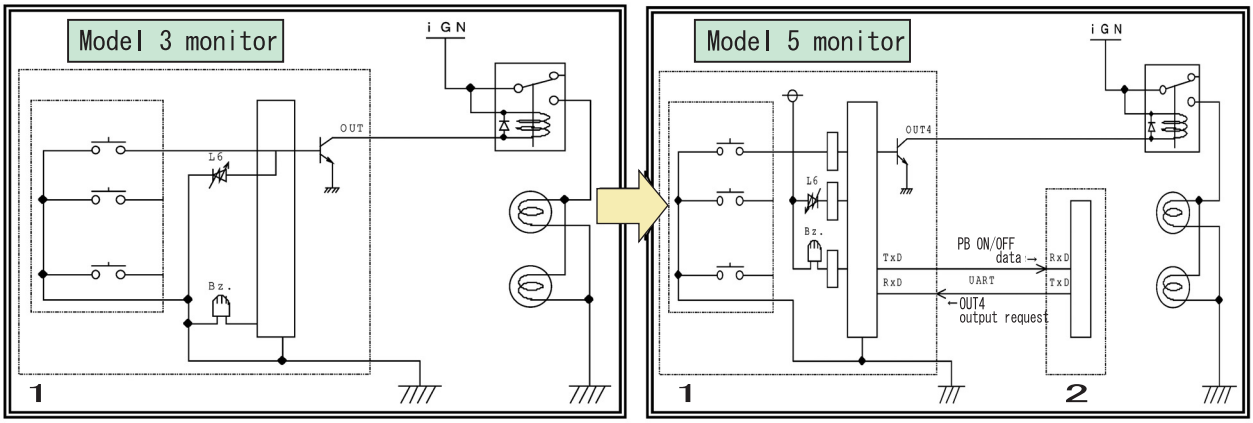

For Model 3, when a switch on the monitor is switched ON/OFF, output is controlled by the monitor alone.

For Model 5, switch signals on the monitor are sent to the computer A via the UART communication circuit, output ON/OFF is determined by the computer A side, and the output request is sent to the monitor via UART.
However, if normal UART communications are not possible (for example, due to a disconnection), the system switches automatically to monitor control.
(Same control as for Model 3)
However, travel mode switching and auto idle switching cannot be operated.

SE00008-008

1	Monitor display
2	Computer A

Purpose

Passing the switch states through the computer A makes the following possible.

1) Checking operation of each switch on the service support CHK screen
2) Checking the usage log for each operation on the service support HR screen

Judging communication abnormalities

If there is an abnormality in UART communication between the monitor and the computer A, the travel mode select switch and auto idle select switch LEDs flash to indicate the abnormality.

https://truckmanualshub.com/

Explanation of New Functions

Pilot pressure switch changed to pressure sensor

No.	Model 3B	Model 5	Change details
1	Upper pressure switch	Upper pressure sensor	Switch to sensor
2	Travel pressure switch	Travel pressure sensor	Switch to sensor
3	Swing pressure switch	Swing pressure sensor	Switch to sensor
4	P1 pressure sensor	P1 pressure sensor	Parts change (not interchangeable with Model 3B)
5	P2 pressure sensor	P2 pressure sensor	Parts change (not interchangeable with Model 3B)
6	N1 pressure sensor	N1 pressure sensor	Parts change (not interchangeable with Model 3B)
7	None	N2 pressure sensor	Newly added
8	Option pressure switch	Option pressure switch	No change

[1] Configuration
Pilot pressure sensor and switch sensing points

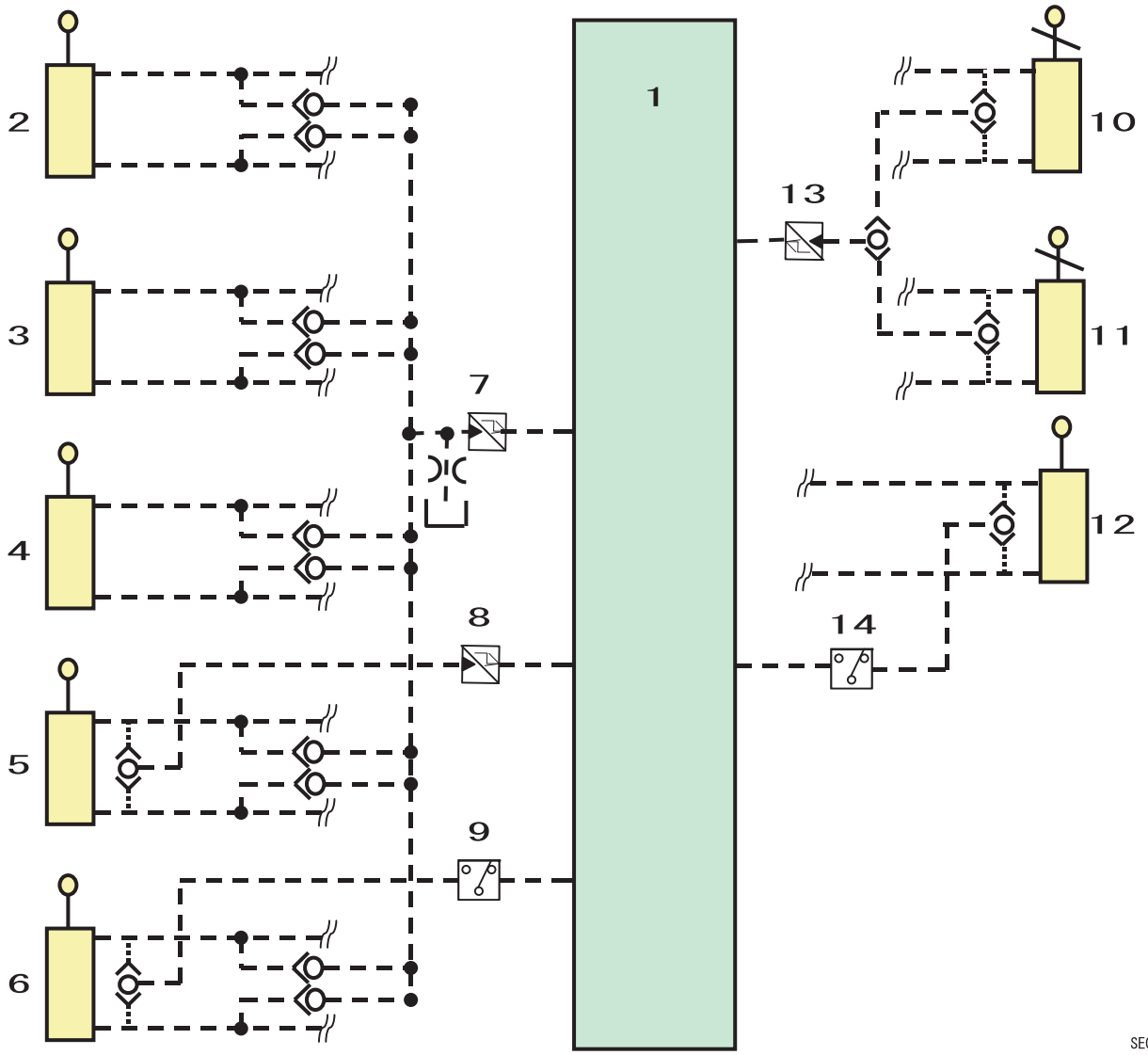

1	Computer A	6	1st option lever	11	Travel (right) lever
2	Bucket lever	7	Upper pressure sensor	12	2nd option lever
3	Arm lever	8	Swing pressure sensor	13	Travel pressure sensor
4	Boom lever	9	1st option pressure switch	14	2nd option pressure switch
5	Swing lever	10	Travel (left) lever		

https://truckmanualshub.com/

[2] Pilot pressure sensor characteristics
Relationship between pilot pressure and voltage (rated 5 MPa)

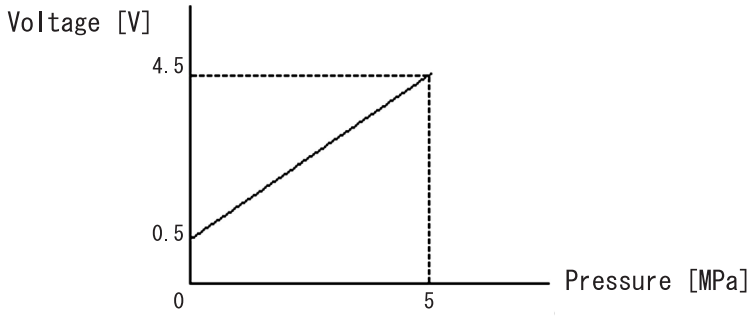

RE00004-010

[3] Sensor ON/OFF criterion

	Upper sensor	Swing sensor	Travel sensor	Option pressure switch
ON	0.5 MPa	0.5 MPa	0.5 MPa	0.5 MPa
OFF	0.3 MPa	0.3 MPa	0.3 MPa	0.3 MPa

[4] Sensor trouble criterion
When 0.25 V < Voltage < 4.75 V, normal; otherwise abnormal

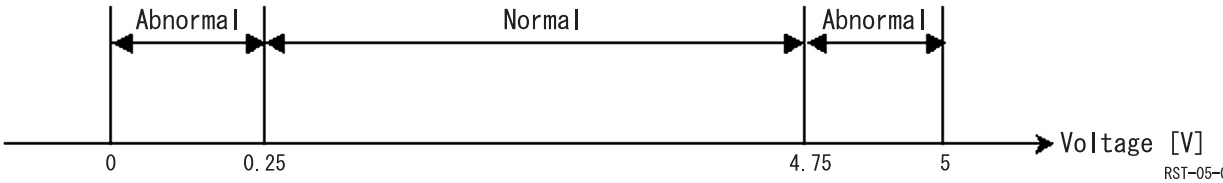

RST-05-00-0011

[5] New functions through switch to sensor
Changing the pilot pressure switch to a sensor makes it possible to judge sharp operation of the operation lever.

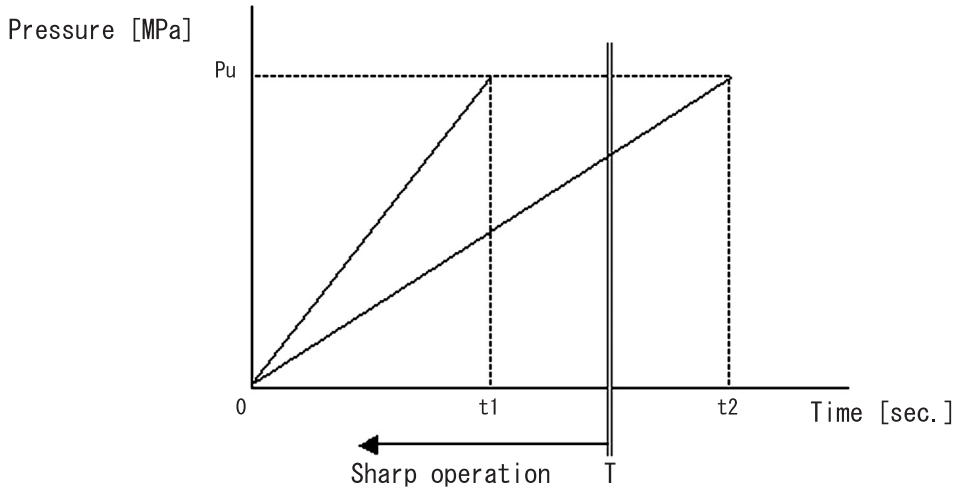

RE00004-011

Judgment method
When the time to reach the Pu [MPa] pressure is t1 [s] or t2 [s],
the shorter time until Pu [MPa] is reached, the more sharp the operation.
Therefore, operation is sharper with t1 [s] than with t2 [s].
With Model 5 machines, the sharp operation judgment standards ⊿ Pu [MPa] and ⊿ T [s] are set in the computer A, and if a ⊿Pu[MPa] pressure boost occurs during ⊿T[s], sharp operation judgment is made.
Also, sharp load is judged in the same way using the main pressure sensor.

https://truckmanualshub.com/

Explanation of New Functions

Pump Electromagnetic Proportional Valve

2 electromagnetic proportional valves are mounted on the main pump.

[1] Horsepower control proportional valve

[2] P1 flow control proportional valve (newly added)

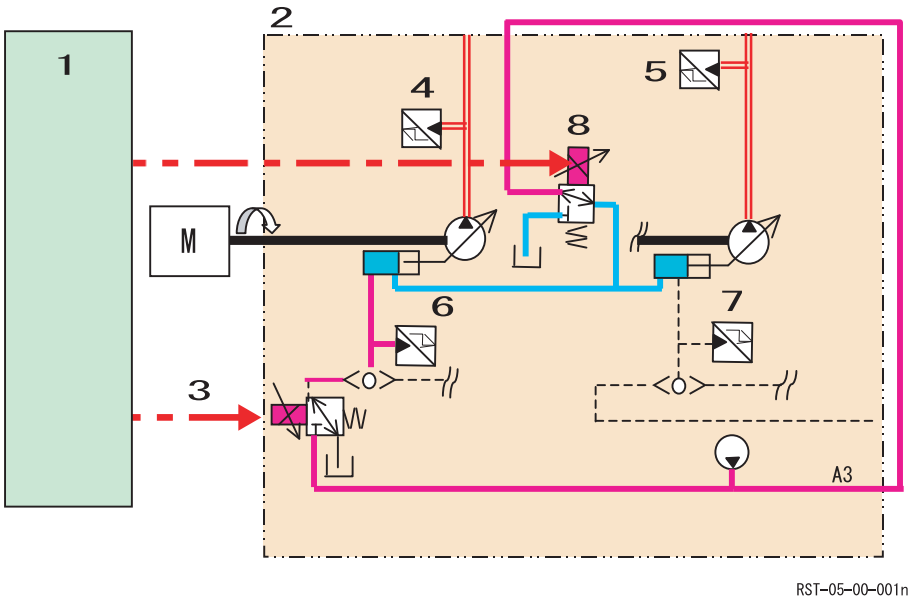

1	Computer A
2	Hydraulic pump
3	P1 flow control proportional valve
4	P1 pressure sensor
5	P2 pressure sensor
6	N1 pressure sensor
7	N2 pressure sensor
8	Horsepower control proportional valve

1. Horsepower Control Proportional Valve

   Controls overall flow for the P1 and P2 pumps

   Applications

   1) Pump horsepower boost control
   2) Pump horsepower cut control

   Control

   Control milli-amp: 50 mA min. .....500 mA max.

   Milli-amp increase → Pump flow increase

   Milli-amp decrease → Pump flow decrease

2. P1 Flow Control Proportional Valve

   Control of the flow for the P1 pump

   Applications

   1) Swing relief cut control
   2) Swing speed limit control
   3) Power save control
   4) Option flow control

   Control

   Control milli-amp: 50 mA min. .....740 mA max.

   Milli-amp increase → Pump flow decrease

   Milli-amp decrease → Pump flow increase

   * In order to detect disconnections, the minimum value for the control milli-amp is set to 50 mA. At 0 mA, computer A judges that the line is disconnected.

https://truckmanualshub.com/

System Control for Energy Saving

Fuel consumption is reduced 8 % through the use of three new hydraulic pressure control systems.

[1] Transient load reduction control (5 % reduction)

[2] Swing relief cut control (2 % reduction)

[3] Power save control (1 % reduction)

1. Reduced Fuel Consumption Through Transient Load Reduction Control

When the lever is operated sharply or there is a sharp high load, the pump control delay reduces the engine speed.
At this time, the engine side control increases the fuel injection quantity to restore the speed to the target engine speed, so fuel consumption increases. By using transient load reduction control, when these conditions occur, the pump torque is reduced to minimize the drop in engine speed and reduce fuel consumption.

(1) Transient load reduction control

When the conditions below occur, the milli-amp to the pump horsepower control proportional valve is first lowered to the minimum to reduce the pump torque, then the horsepower is controlled by gradually raising the milli-amps while watching the difference between the actual engine speed and the target speed and thus reducing the increase in fuel injection quantity.

Conditions

1) Sharp lever operation
   Judged from sharp rise in the pressure at the upper pressure sensor
2) Operation for high loads and sharp loads
   Judged from sharp rise in the pressure at the P1 or P2 pump pressure sensor

https://truckmanualshub.com/

2. Reduced Fuel Consumption Through Swing Relief Cut Control

Model 3B swing line

- When the swing starts, high pressure is required, but not flow.On Model 3B, almost all the oil flows from the swing relief to the tank when the swing begins to start, so energy is consumed needlessly.

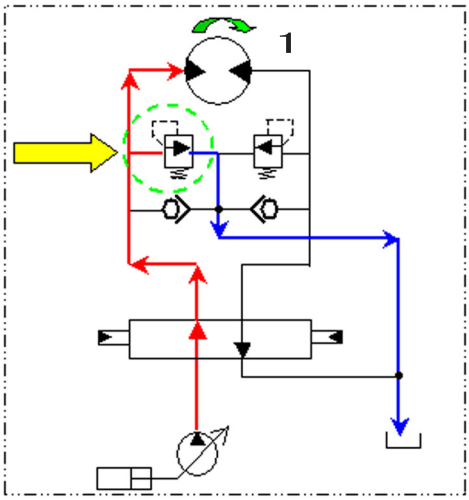

RST-05-00-001p

1	Swing motor

Model 5 swing line

[1] Swing relief cut used

Purpose

The swing relief cut control provides relief when the pressure is boosted for the start of the swing due to sharp swing operation and the drained off excess oil is held to the lowest amount possible. This provides an energy-saving effect.

Operation

For sharp swing operation, when the swing starts, the P1 pump discharge volume is reduced and only the necessary amount of oil is flowed. When the constant swing is reached, flow is necessary, so the P1 pump discharge volume is increased.

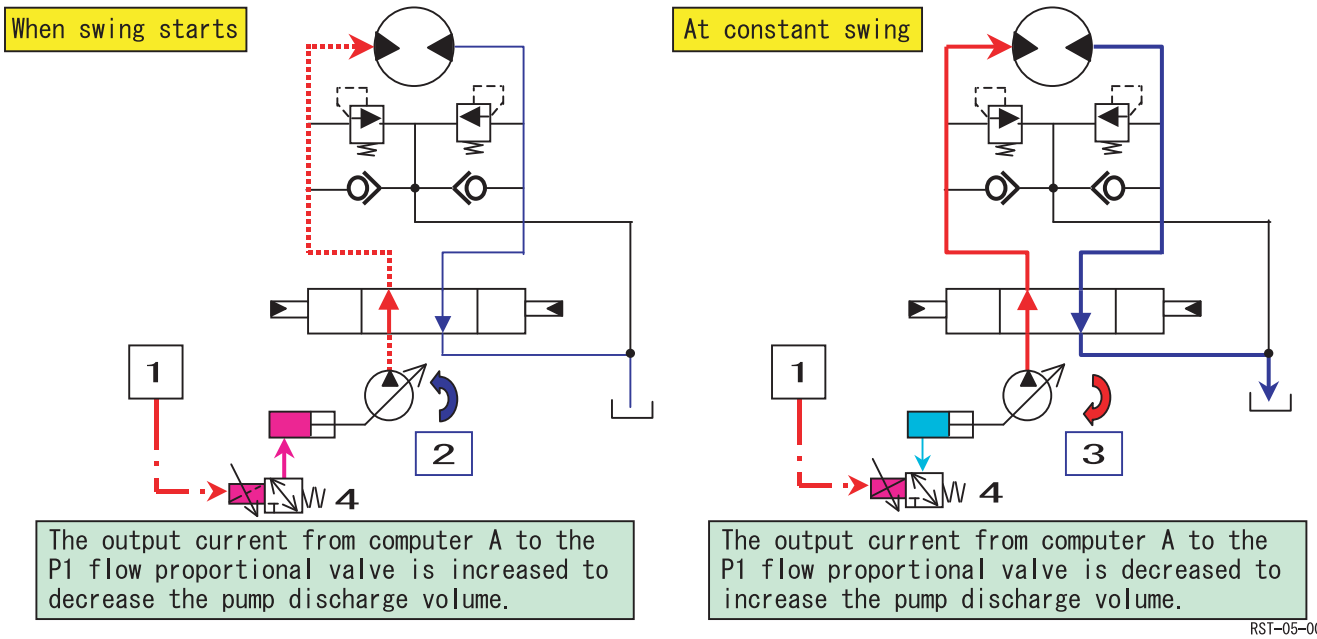

RST-05-00-001q

1	Computer A	3	Discharge increased
2	Discharge decreased	4	P1 flow control valve

Caution

The P1 flow control proportional valve Milli-amp (high) ⇒ P1 pump flow (low)
Milli-amp (low) ⇒ P1 pump flow (high)

https://truckmanualshub.com/

Control contents

When the conditions below are all met, computer A judges that this is swing relief cut control, increases the milli-amp to the P1 flow control proportional valve, and reduces the P1 flow.
After that, while checking the P1 pump discharge pressure, it gradually reduces the output milli-amp to the P1 flow control valve and raises the P1 pump flow to the constant swing speed.

Conditions

1) Sharp swing operation ..... Judged from the swing pilot pressure sensor pressure rise state
2) Within 1 sec. after start of swing
3) Attachment non-operation ..... Non-operation of attachments is judged from the N2 negative control pressure and P1 pressure sensor.
4) Travel non-operation ..... Travel pressure sensor OFF
5) Option line non-operation ..... Option pressure sensor OFF

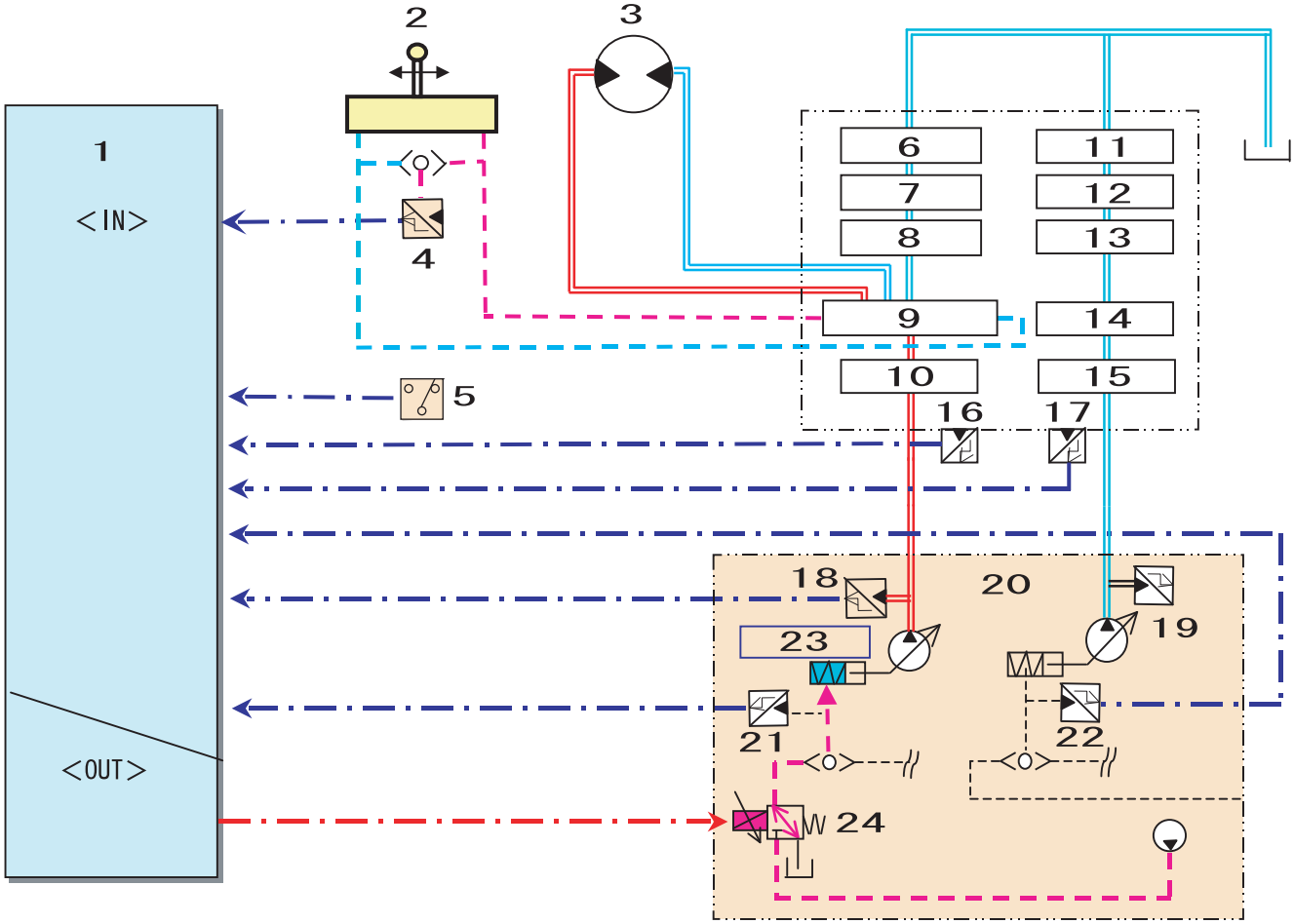

SE00008–005

1	Computer A	9	Option	17	Upper pressure sensor
2	Swing remote control valve	10	Travel (left)	18	P1 pressure sensor
3	Swing motor	11	Arm (2)	19	P2 pressure sensor
4	Swing pressure sensor	12	Boom (1)	20	Hydraulic pump
5	Option pressure switch	13	Bucket	21	N1 pressure sensor
6	Arm (1)	14	Travel (right)	22	N2 pressure sensor
7	Boom (2)	15	Straight travel	23	Discharge increased/decreased
8	Swing	16	Travel pressure sensor	24	P1 flow control proportional valve

https://truckmanualshub.com/

3. Reduced Fuel Consumption Through Power Save Control

Negative control circuit change

[1] Model 3B negative control circuit

Control such that the discharge flow decreases as the negative control pressure increases.

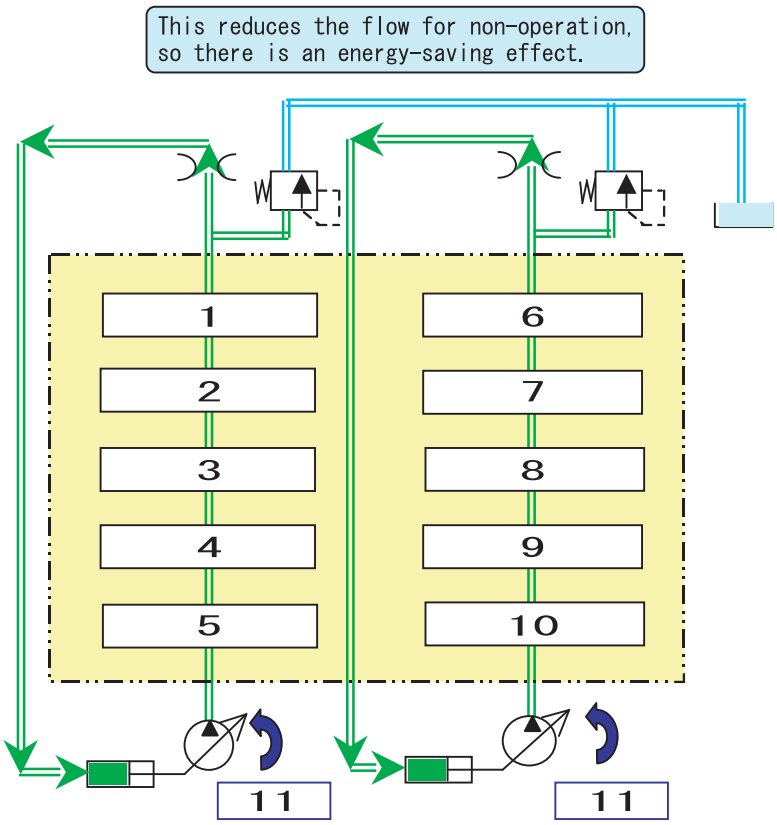

<Operation>

(1) The oil discharged from the pump is drained from the control valve center bypass and boosted to the foot relief set pressure at the negative control orifice downstream.

(2) The oil drained from the negative control orifice leads to the negative control ports for the P1 and P2 pumps, so accompanying the negative control pressure boost, the pump tilting angle is tilted to the minimum side to set the pump discharge to minimum.

RE00004-009

1	Arm (1)	7	Boom (1)
2	Boom (2)	8	Bucket
3	Swing	9	Travel (right)
4	Option	10	Straight travel
5	Travel (left)	11	Discharge decreased
6	Arm (2)		

https://truckmanualshub.com/

[2] Model 5 negative control circuit
Power save control used

Purpose

By making the negative control relief variable and lowering the negative control pressure, a further energy-saving effect is obtained.

For non-operation, this gives low pressure + low flow, which provides a further energy-saving effect.

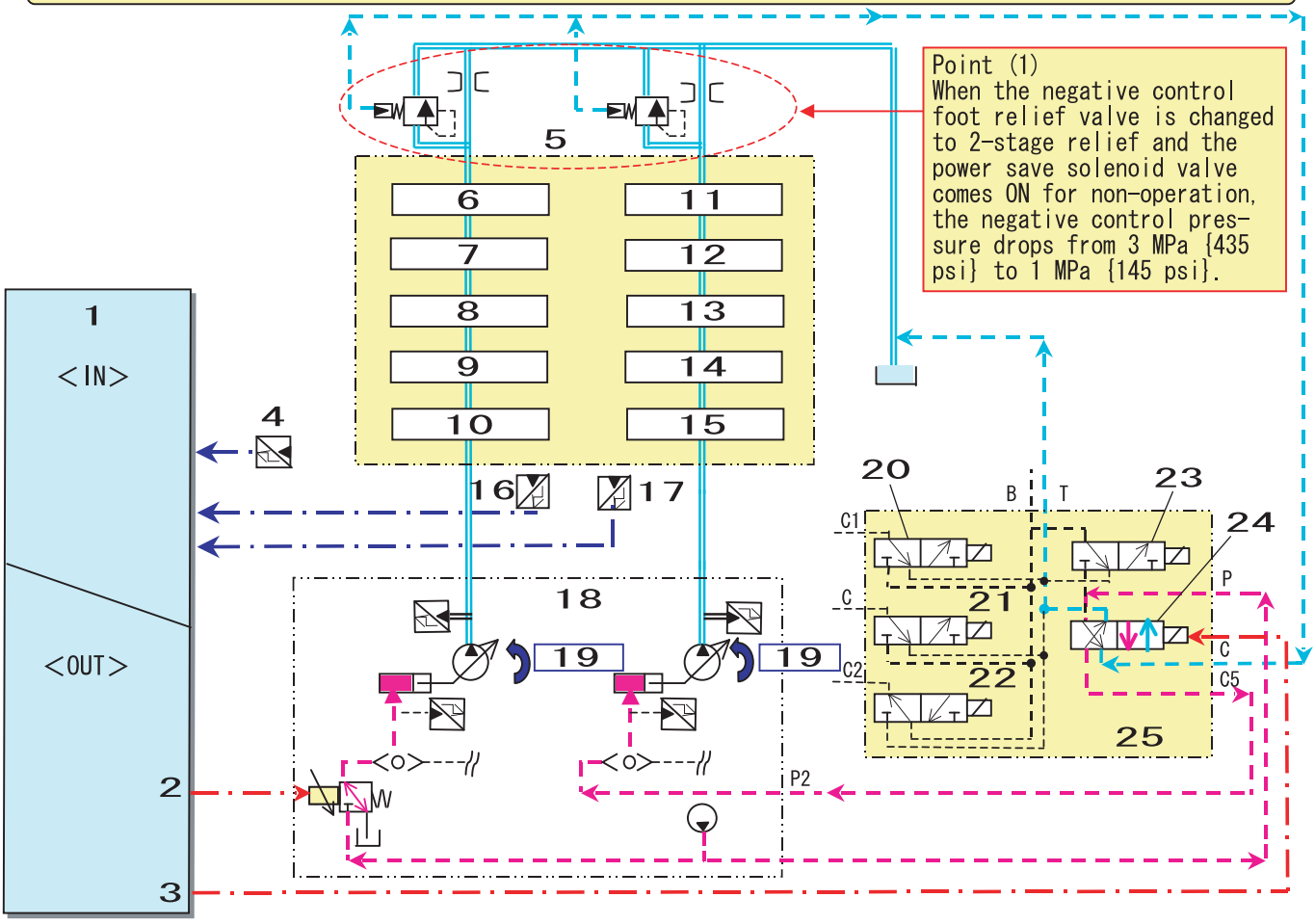

<Operation>

1) 1 sec. after the end of operation, the power save solenoid valve comes ON, the negative control relief spring pressure is led from the 5 stack solenoid block C5 port through the power save solenoid valve, and to the tank, the negative control relief valve is switched, and the pump discharge pressure drops.
2) When the pump discharge pressure drops, the negative control pressure drops at the same time, so the P1 and P2 pump negative control valves are controlled as below.
   P1 pump ··· The P1 flow proportional valve is operated, the negative control pressure is established, and the pump discharge is lowered by the negative control flow.
   P2 pump ··· The switching of the power save solenoid leads the pilot pressure from the solenoid block C5 port through the shuttle valve and to the negative control port to lower the negative control flow.
3) If any of the pilot pressure sensors-upper, travel, or swing-comes ON, the normal control is restored after about 0.1 sec.

LE00005-004

1	Computer A	10	Travel (left)	19	Discharge decreased
2	P1 flow control proportional valve	11	Arm (2)	20	Travel 2nd speed
3	Power save solenoid valve	12	Boom (1)	21	Pressure boost
4	Swing pressure sensor	13	Bucket	22	Swing Brake
5	Negative control relief	14	Travel (right)	23	Lever Lock
6	Arm (1)	15	Straight travel	24	Power save
7	Boom (2)	16	Travel pressure sensor	25	5 stack solenoid valve
8	Swing	17	Upper pressure sensor		
9	Option	18	Hydraulic pump		

https://truckmanualshub.com/

Swing Speed Limit Control

Purpose

Since the maximum pump flow has been increased compared to Model 3, the swing speed at maximum pump flow is too fast.

For the sake of improved swing operability and energy-saving effects, the maximum swing speed is held down to the same speed as for Model 3B.

(SH330-5 P1 maximum discharge volume held down from 285 L/min ⇒ 280 L/min; control only for SP mode)

Operation

When the conditions below are all met, the output milli-amp to the P1 flow control valve is set to the maximum of 370 mA and the P1 pump flow is held down.

Conditions

1) Swing single full lever operation ··· Judged from the N1 and N2 negative control pressure sensors and P1 and P2 pressure sensors
2) Travel non-operation ···Travel pressure sensor OFF
3) The work mode is SP mode.

https://truckmanualshub.com/

End conditions

1) Travel operation ⇒ immediate end (to prevent off travel)
2) Other attachment operation ⇒ gradual end (to reduce shock)
3) Option circuit operation

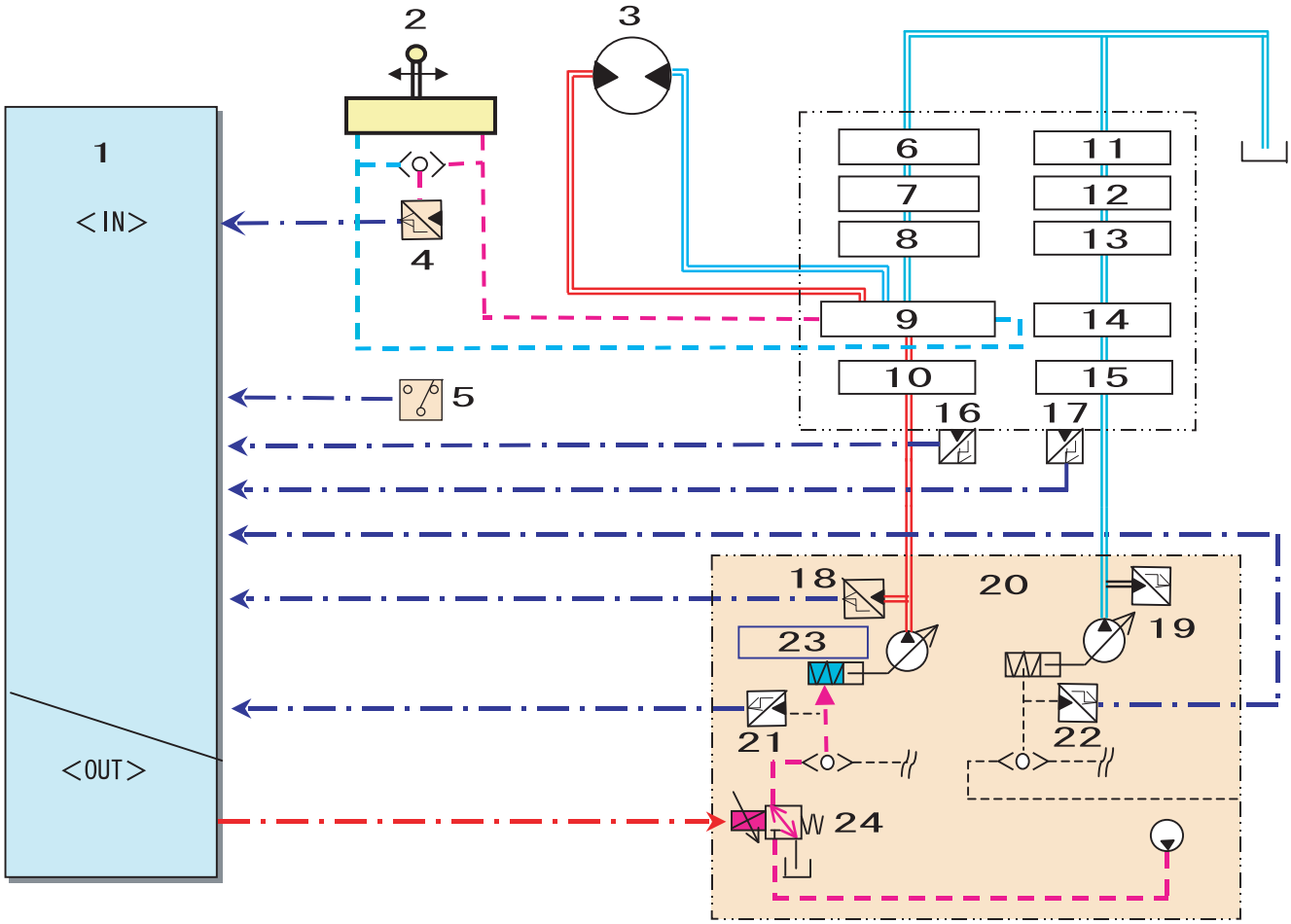

SE00008–005

1	Computer A	9	Option	17	Upper pressure sensor
2	Swing remote control valve	10	Travel (left)	18	P1 pressure sensor
3	Swing motor	11	Arm (2)	19	P2 pressure sensor
4	Swing pressure sensor	12	Boom (1)	20	Hydraulic pump
5	Option pressure switch	13	Bucket	21	N1 pressure sensor
6	Arm (1)	14	Travel (right)	22	N2 pressure sensor
7	Boom (2)	15	Straight travel	23	Discharge increased/decreased
8	Swing	16	Travel pressure sensor	24	P1 flow control proportional valve

Flow from swing start to constant-speed swing (SP mode)

Swing lever operation ⇒ Judged to be swing relief cut condition ⇒ Increased milli-amp to P1 flow control proportional valve ⇒ P1pump flow reduced ⇒ Milli-amp gradually decreased while watching swing pressure fall status ⇒ P1 pump flow increased ⇒ Judged to be speed limit condition ⇒ P1 pump milli-amp fixed to 370 mA

https://truckmanualshub.com/

Electrical Equipment Layout Diagram

Overall View

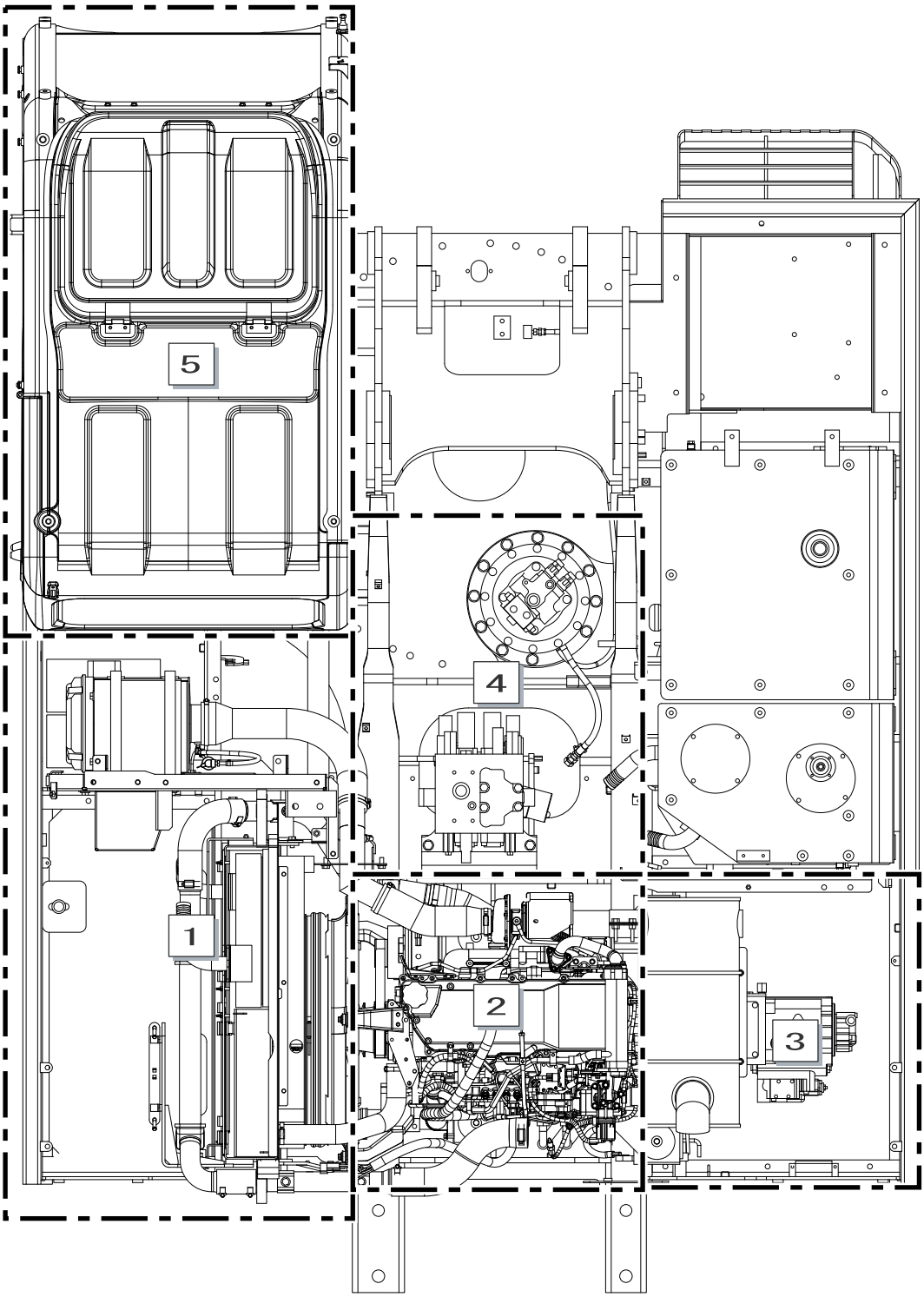

1	Main unit left side (radiator chamber)
2	Engine
3	Main unit right side (pump chamber)
4	Main unit center section
5	In Cab

https://truckmanualshub.com/

Electrical Equipment Layout Diagram

1. Main Unit Left Side Layout Diagram (radiator chamber)

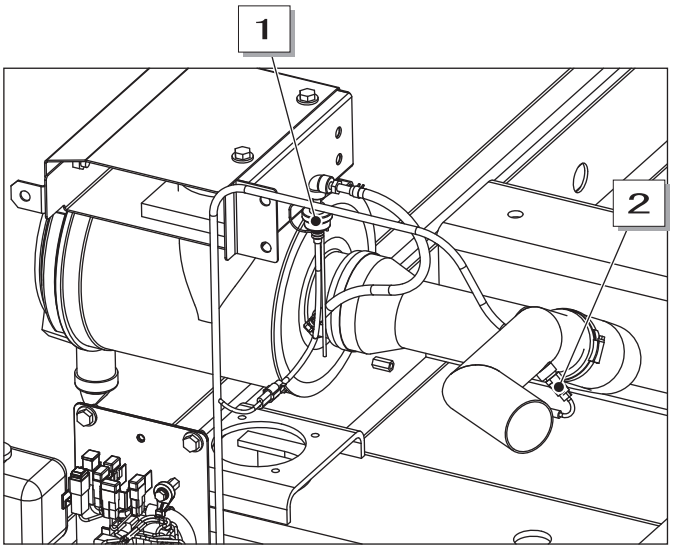

Shuttle valve back diagram

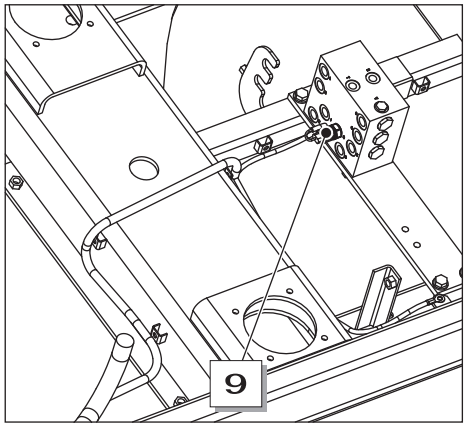

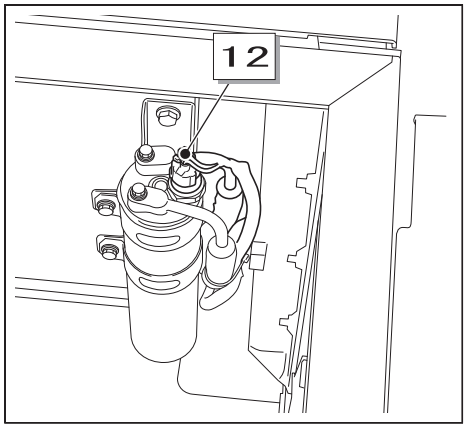

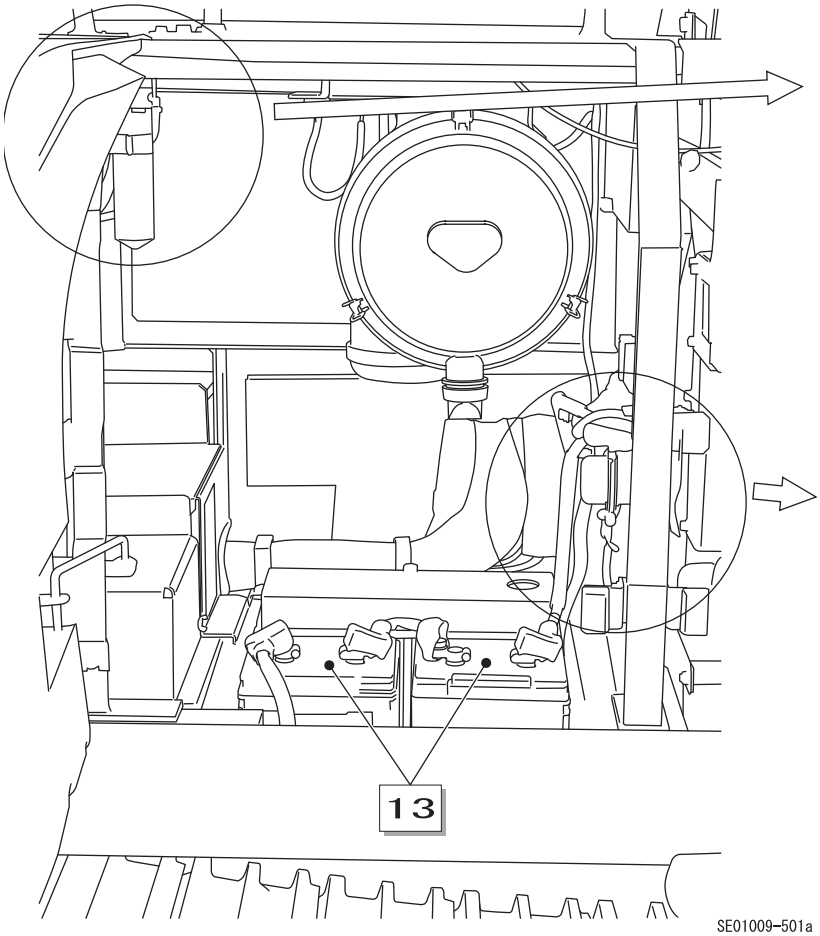

SE01009-501a

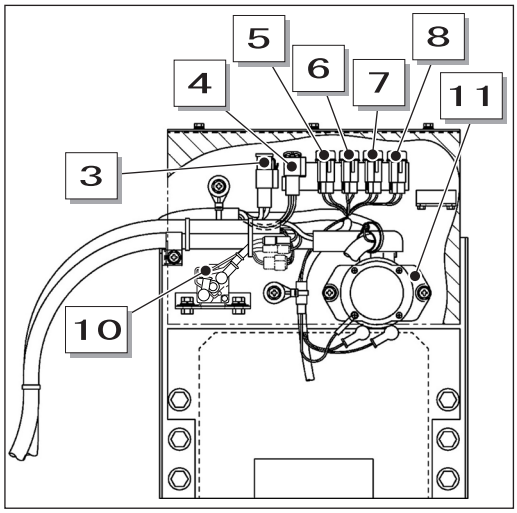

SE01009-501b

Location of fuses

1	Air cleaner sensor	6	Fuse: ECM20A (F4)	11	Battery relay
2	Suction air temperature sensor	7	Fuse: computer 20A (F5)	12	Receiver dryer sensor
3	Fusible link 65A (F1)	8	Fuse: GPS15A (F6)	13	Battery
4	Fusible link 60A (F2)	9	Swing pilot pressure sensor		
5	Fuse: key 15A (F3)	10	Safety relay		

https://truckmanualshub.com/

2. Engine Section Layout Diagram

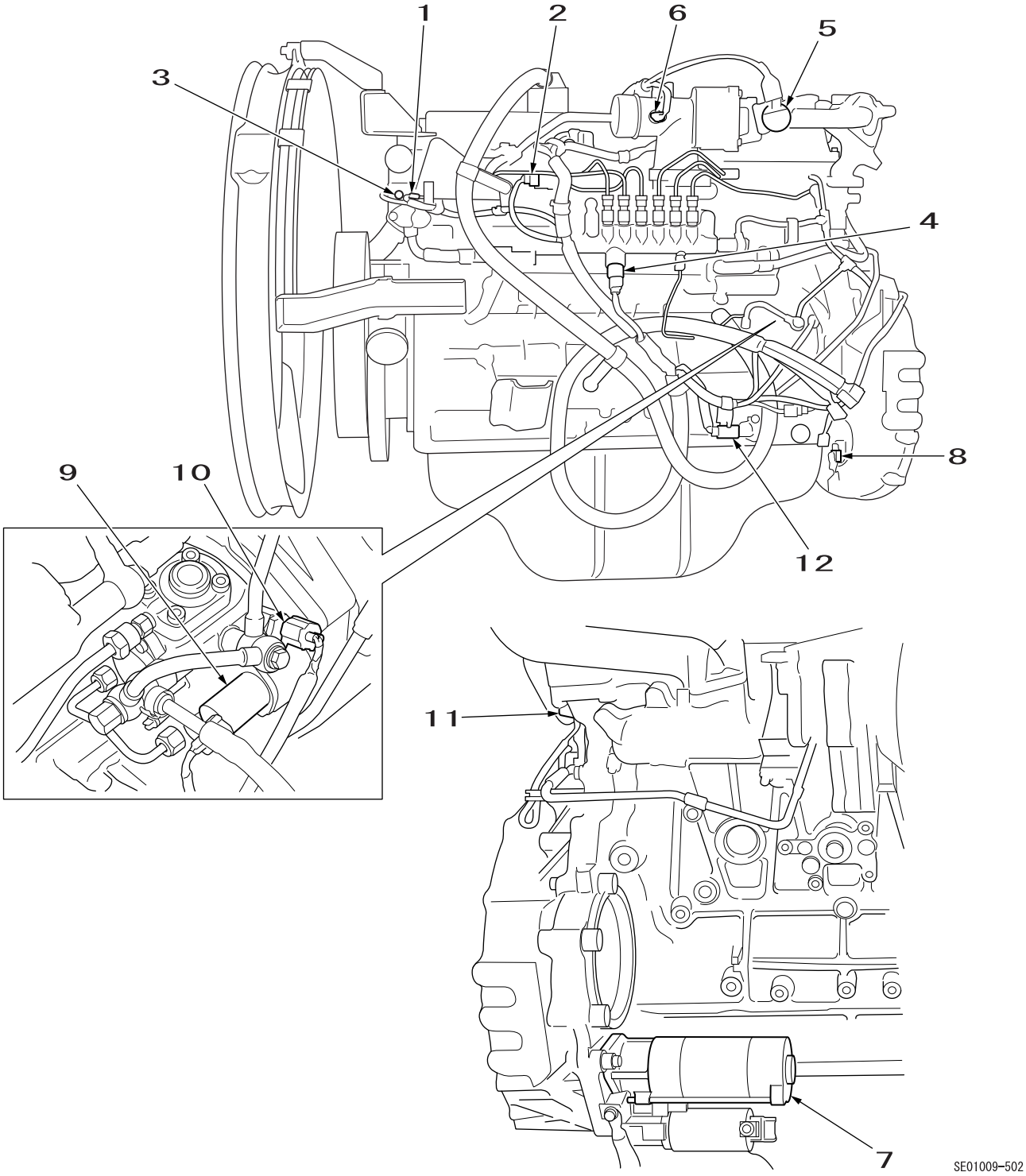

1	Engine coolant temperature sensor	7	Starter motor
2	Boost pressure sensor	8	Engine hydraulic pressure sensor
3	Overheat switch	9	Suction control valve
4	Common rail pressure sensor	10	Fuel temperature sensor
5	EGR valve	11	Cam position sensor
6	Boost temperature sensor	12	Crank position sensor

https://truckmanualshub.com/

Electrical Equipment Layout Diagram

3. Main Unit Right Side Layout Diagram (pump chamber)

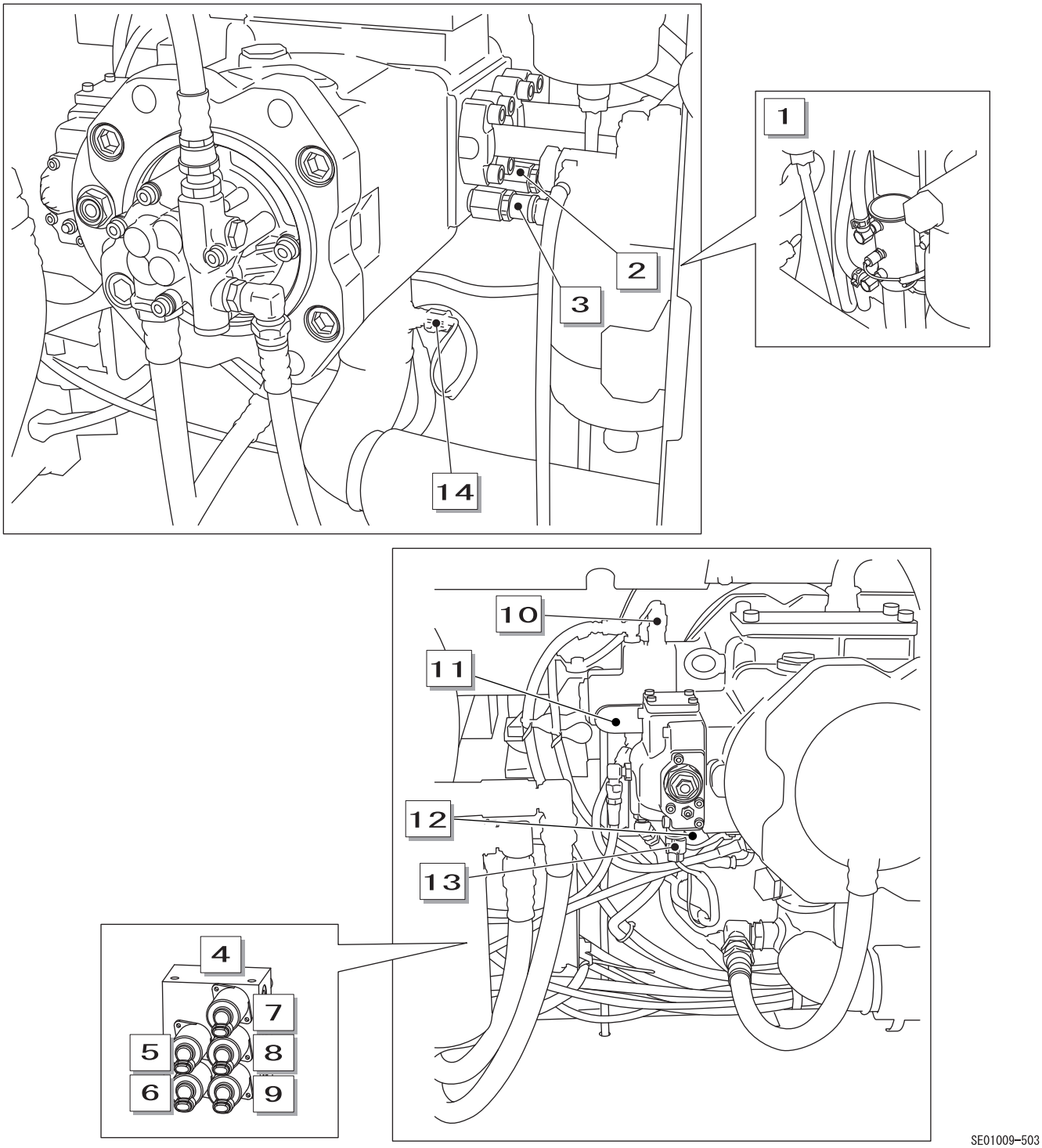

1	Charge fuel pump	8	Boosted pressure
2	P1 pressure sensor	9	Travel high speed
3	P2 pressure sensor	10	N1 pressure sensor
4	5 stack solenoid valve	11	P1 flow control proportional valve
5	Power save	12	Horsepower control proportional valve
6	Lever lock	13	N2 pressure sensor
7	Swing lock	14	Oil temperature sensor

https://truckmanualshub.com/

4. Main Unit Center Section Layout Diagram

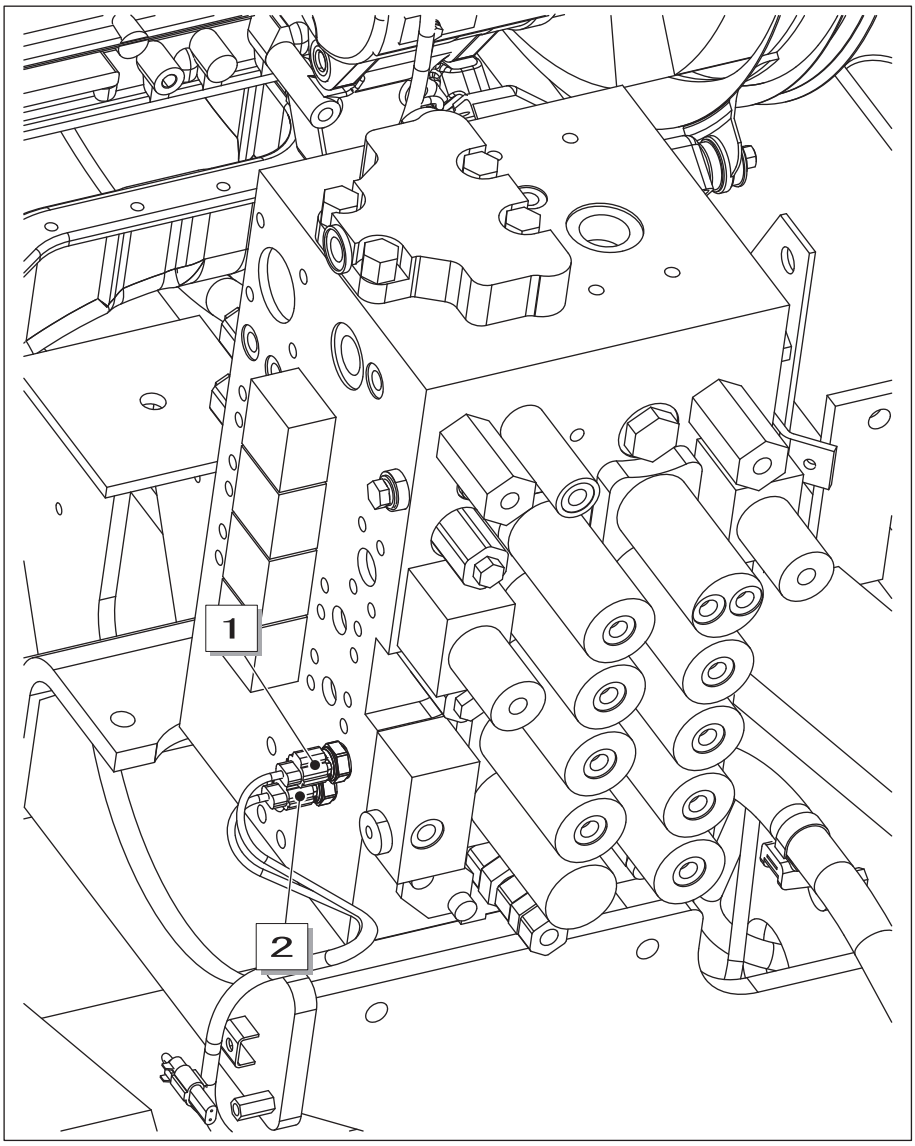

SE01009–504

1	Upper pressure sensor
2	Travel pressure sensor

https://truckmanualshub.com/

Electrical Equipment Layout Diagram

5. Cab Layout Diagram 1

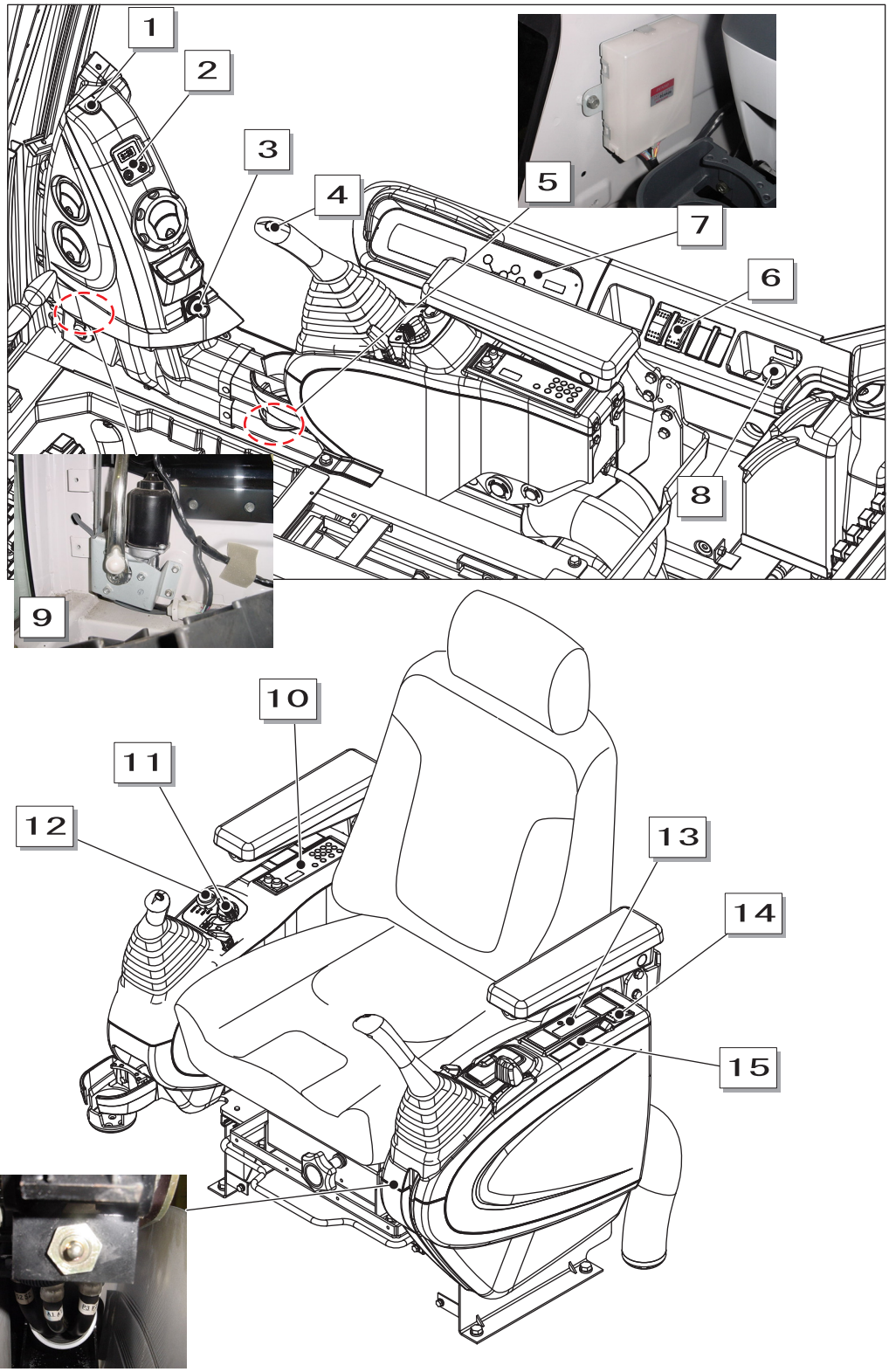

RST-05-01-001f

1	Air conditioner solar radiation sensor	7	Monitor display	13	Air conditioner control panel
2	Clock	8	12 V socket	14	Emergency stop switch
3	Cigar lighter	9	Wiper motor	15	Rocker switch
4	Knob	10	Radio	16	Gate lock limit switch
5	Wiper controller	11	Throttle volume		
6	Rocker switches (4)	12	Key cylinder		

https://truckmanualshub.com/

Electrical Equipment Layout Diagram

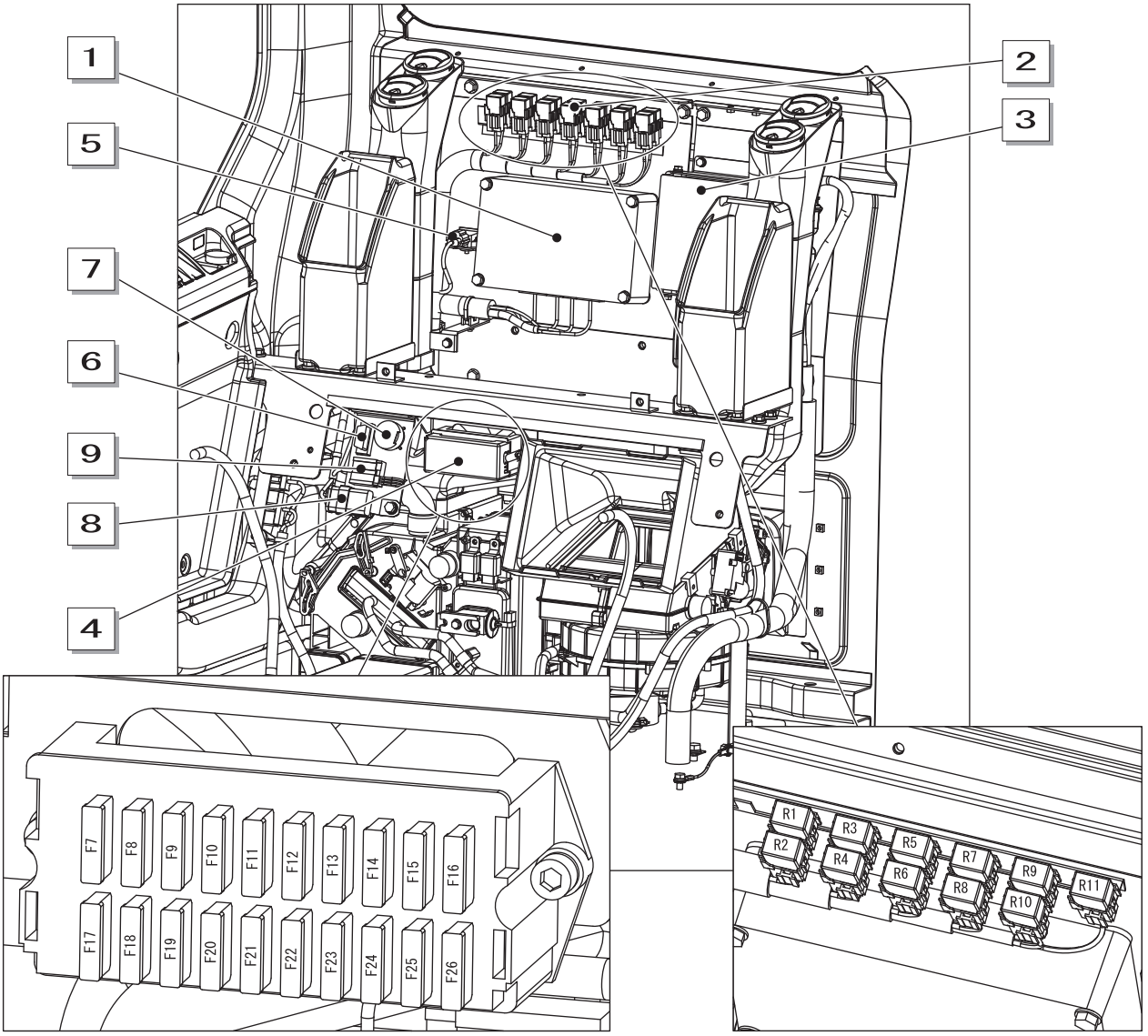

SE01009–002

Location of fuses

Location of relays

No.	Part name		No.	Part name	
F7	BACK UP RADIO, ROOM LAMP	10A	F17	FUEL FEED PUMP	20A
F8	ENGINE PRE-HEAT	30A	F18	CLOCK BACK MONITOR	10A
F9	OPTION LINE	10A	F19	CIGAR LIGHTER KAB SEAT	15A
F10	AIR-CONDITIONER UNIT	5A	F20	DC CONVERTER	10A
F11	AIR-CONDITIONER BLOWER	15A	F21	TRAVEL ALARM BEACON	10A
F12	AIR-CONDITIONER COMPRESSOR	5A	F22	SPARE (CRANE)	15A
F13	SOLENOID	10A	F23	ELEC. FUEL PUMP	10A
F14	WIPER WASHER	15A	F24	LAMP (SPARE)	15A
F15	HORN	10A	F25	LOCK LEVER (GATE)	10A
F16	LAMP (BOOM, HOUSE)	15A	F26	LAMP (CAB)	15A

No.	Name
R1	Main relay
R2	Glow relay
R3	Lamp relay
R4	Lamp relay (CAB)
R5	Horn relay L
R6	Horn relay R
R7	Speaker relay R
R8	Speaker relay L
R9	Room lamp relay
R10	Beacon relay
R11	Starter cut relay

1	Computer A	6	TECH II service connector
2	Relay	7	EST service connector
3	ECM (engine control module)	8	Computer A service connector
4	Fuse box	9	Computer S service connector
5	Atmospheric pressure sensor		

https://truckmanualshub.com/

Electrical Equipment Layout Diagram

6. Layout Around Operator's Seat

Right console

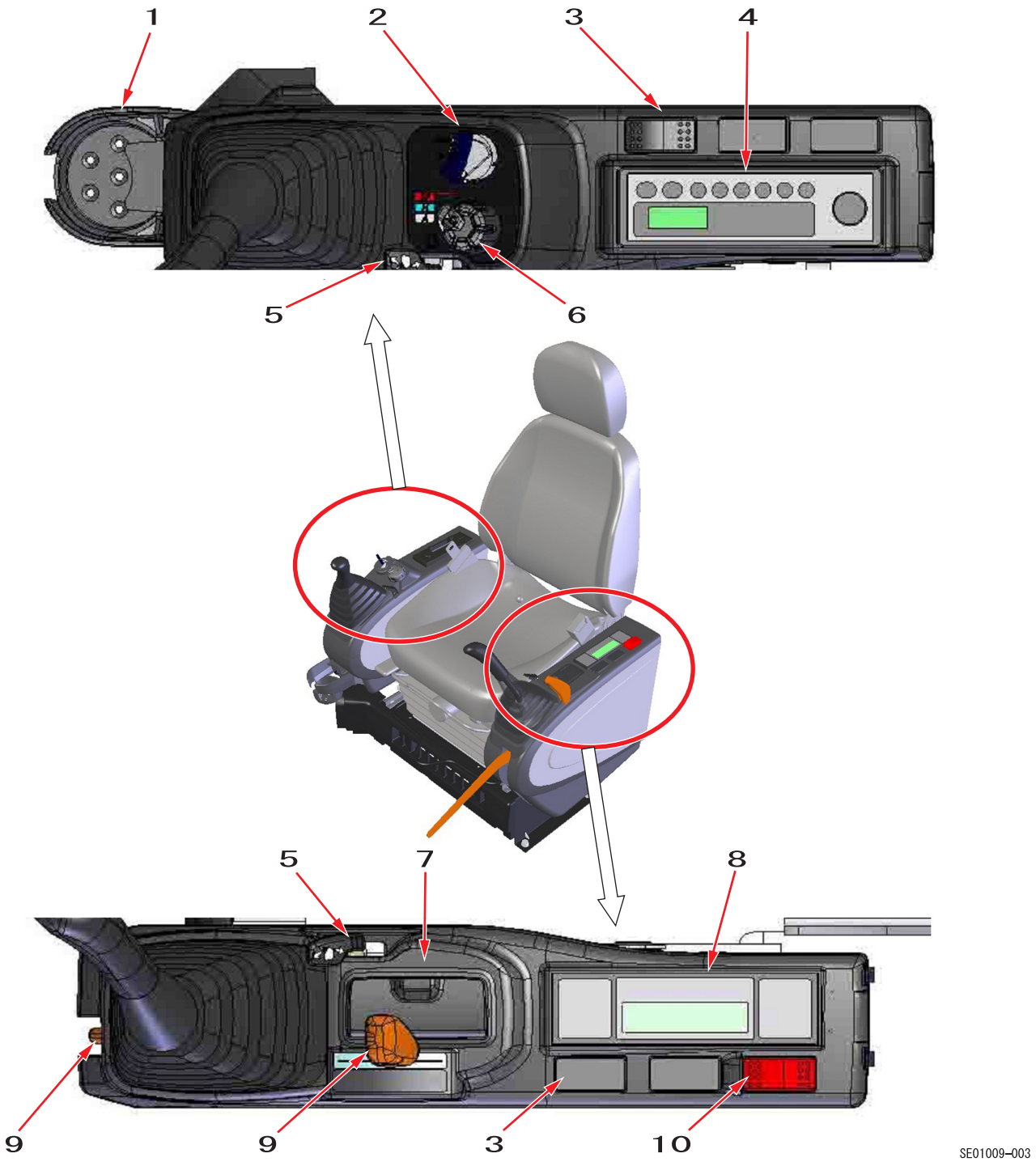

Left console

1	Cup holder
2	Key switch
3	Rocker switch space
4	AM/FM radio
5	Tilt lever
6	Throttle volume
7	Ashtray
8	Air conditioner control panel
9	Gate lever
10	Emergency stop switch

https://truckmanualshub.com/

Stand Alone Parts Diagram

Name	Shape	Circuit	Remarks
Safety relay	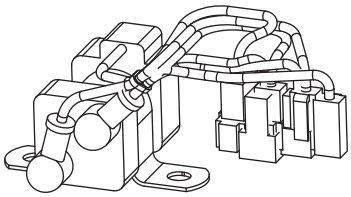	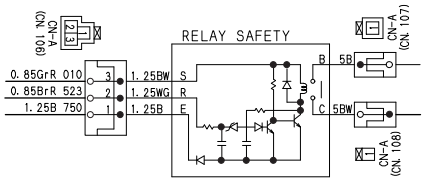	Model ; DC24 V specifications Isuzu Part No. ; 182553-0391 Part No. ; AEH0017
Battery relay	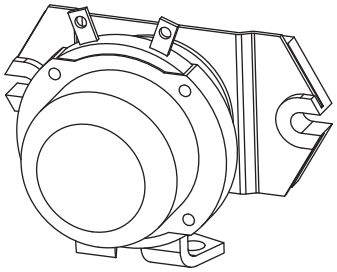	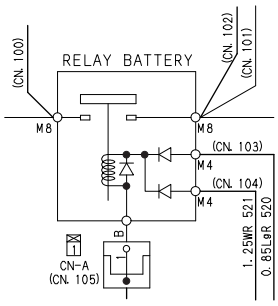	Model ; For +24 V DC Part No. ; KHR1241
Starter motor	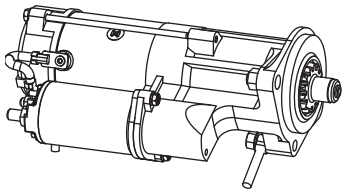	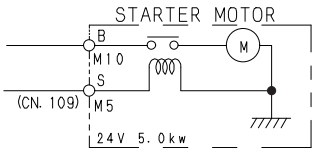	Model ; 5.0 kW-24 V Isuzu Part No. ; 898001-9150
Alternator	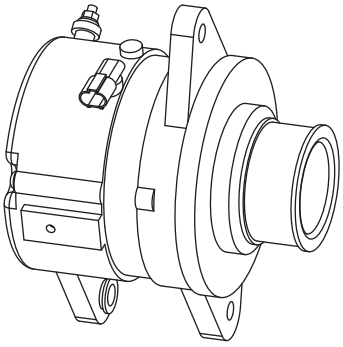	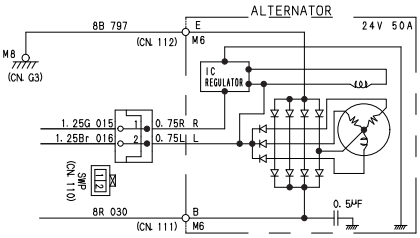	Model ; 50 A-24 V Isuzu Part No. ; 897375-0171
Battery	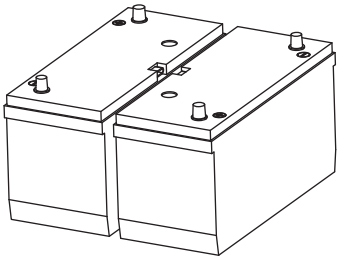	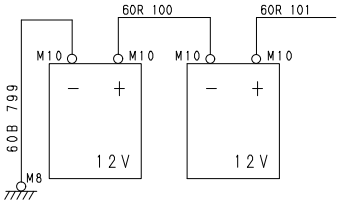	Model ; 130E41R Part No. ; KHR3944
Washer motor	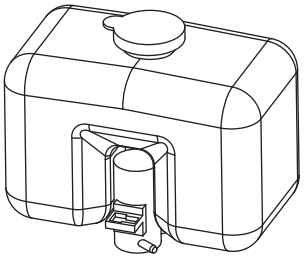	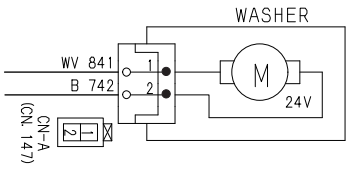	Part No. ; KHR2261 (tank + motor)

https://truckmanualshub.com/

Electrical Equipment Layout Diagram

Name	Shape	Circuit	Remarks
Fusible link (F1)	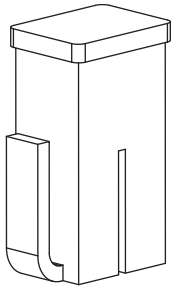	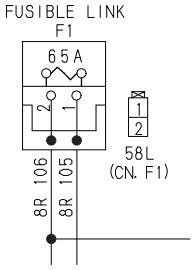	Model ; 65 A Part No. ; KHR1592
Fusible link (F2)	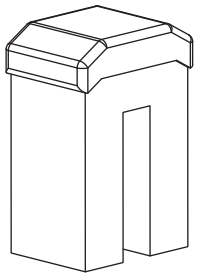	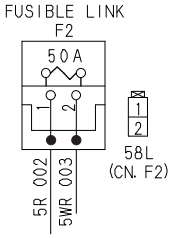	Model ; 50 A Part No. ; KHR3850
Fuse box (F3, F4, F5, F6)	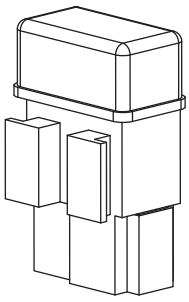	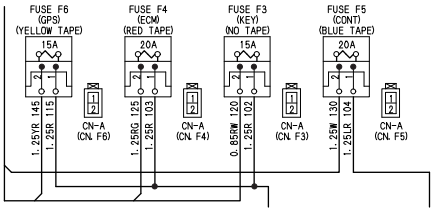	Model ; 7224-8511（20 A） 7224-8512（15 A）
Throttle volume	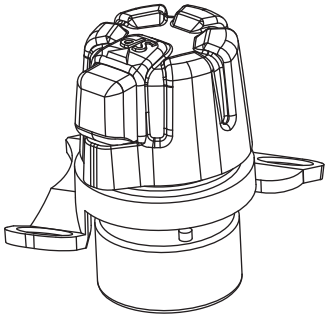	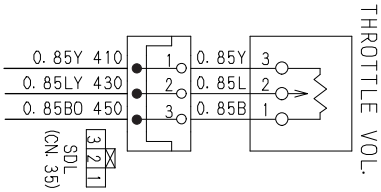	Model ; RA30Y2 30SKB1KΩK Part No. ; KHR2751
Starter switch	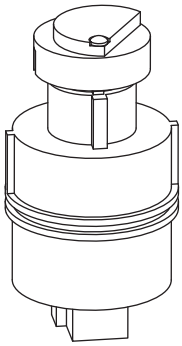	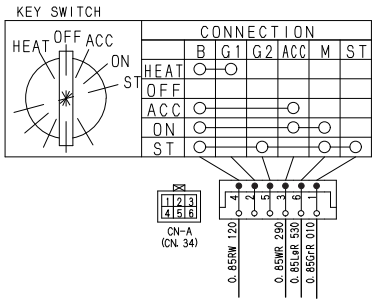	Model ; DC24 V Part No. ; KHR3077

https://truckmanualshub.com/

Electrical Equipment Layout Diagram

Name	Shape	Circuit	Remarks
Fuel level sensor	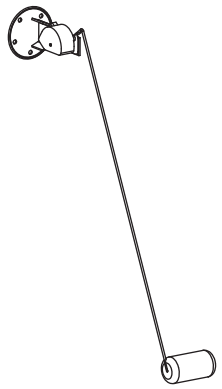	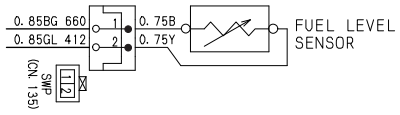	Part No. ; KHR10670
Charge fuel pump	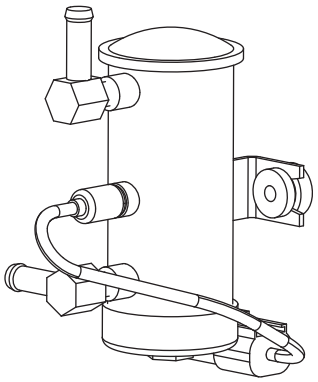	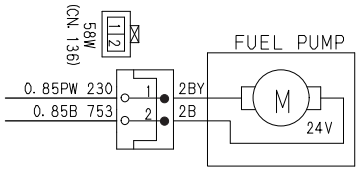	Model ; DC24 V Part No. ; KHH10460
Reserve tank limit switch	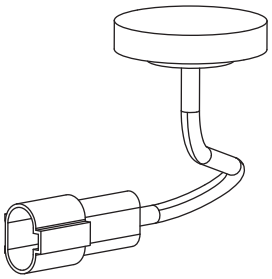	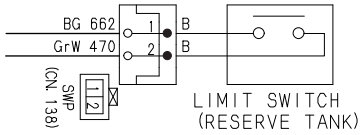	Part No. ; KHH0221
Vacuum sensor	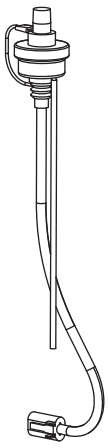	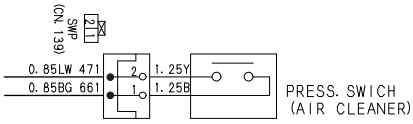	Part No. ; KHH10330

https://truckmanualshub.com/

Electrical Equipment Layout Diagram

Name	Shape	Circuit	Remarks
Glow plug	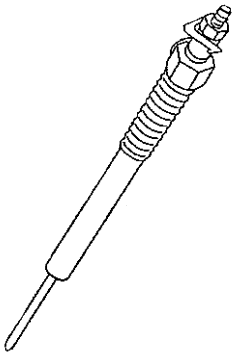	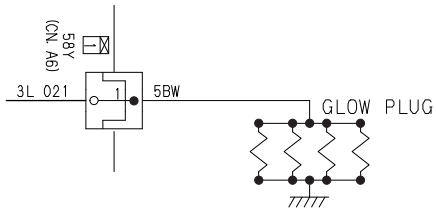	Isuzu Part No. ; 894390-7775
EGR motor EGR position sensor	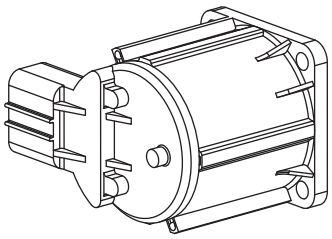	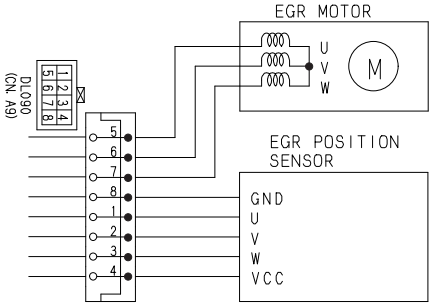	EGR valve accessory EGR valve Isuzu Part No. ; 898001-1910
Common rail pressure sen-sor	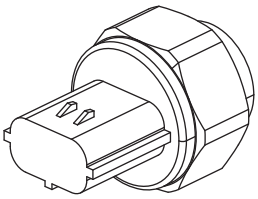	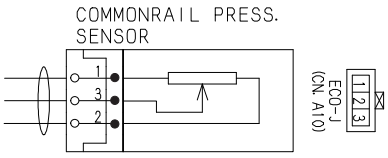	Common rail accessory Isuzu Part No. ; 897306-0632
Cam position sensor	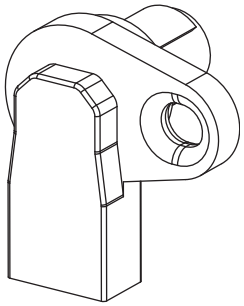	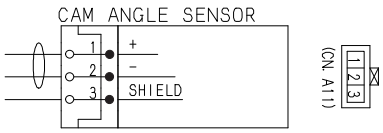	Isuzu Part No. ; 898014-8310
Crank position sensor	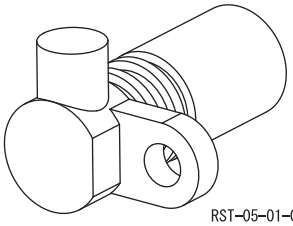		Isuzu Part No. ; 897306-1131
Oil pressure sensor	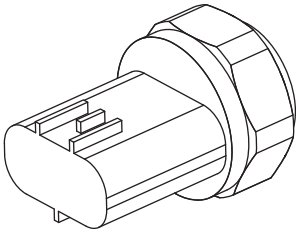	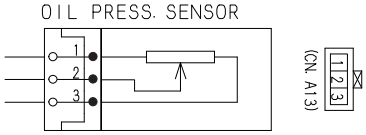	Isuzu Part No. ; 897600-4340

https://truckmanualshub.com/

Electrical Equipment Layout Diagram

Name	Shape	Circuit	Remarks
Boost pressure sensor	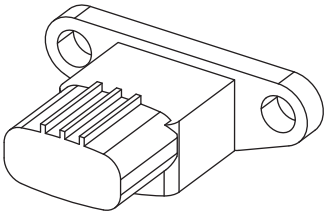	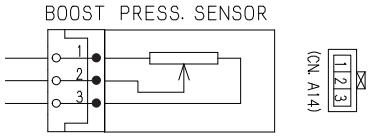	Isuzu Part No. ; 180220-0140
Boost temperature sensor	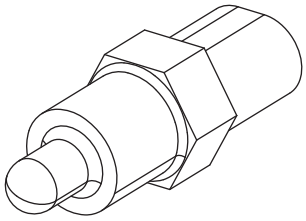	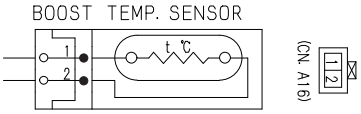	Isuzu Part No. ; 81246-8300
Fuel temperature sensor	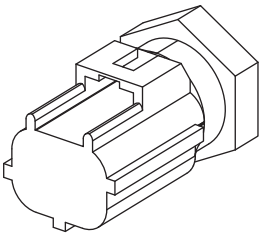	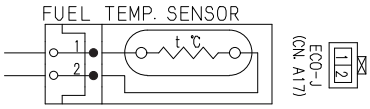	Supply pump accessory part Supply pump Isuzu Part No. ; 897306-0448
Suction control valve	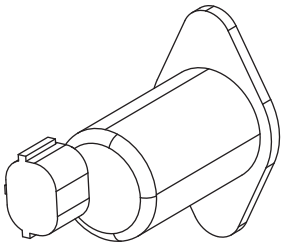	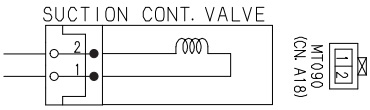	Supply pump accessory part Supply pump Isuzu Part No. ; 897306-0448
Injector	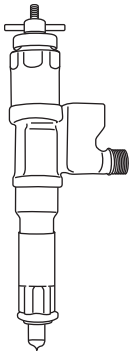	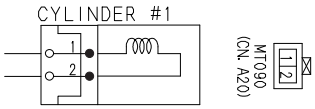	Isuzu Part No. ; 897329-7032
Suction air temperature sensor	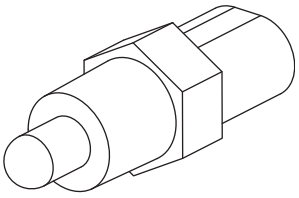	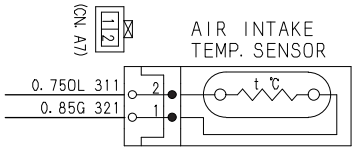	Isuzu Part No. ; 812146-8300 Part No. ; KHH0535

https://truckmanualshub.com/

Electrical Equipment Layout Diagram

Name	Shape	Circuit	Remarks
Engine coolant temperature sensor	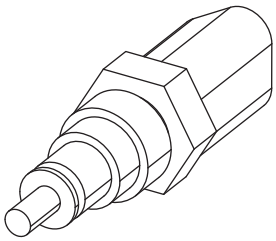	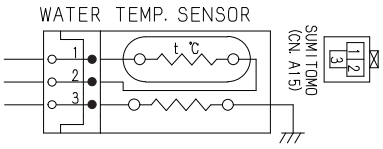	Isuzu Part No. ; 897170-3270
Atmospheric pressure sensor	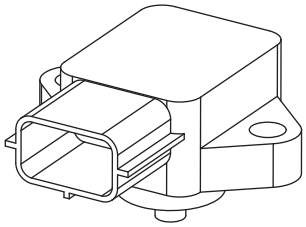	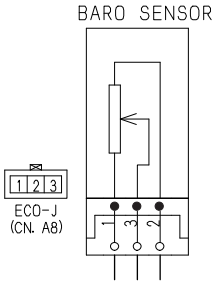	Isuzu Part No. ; 897217-7780 Part No. ; KHH0536
Computer A	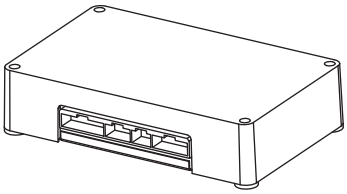	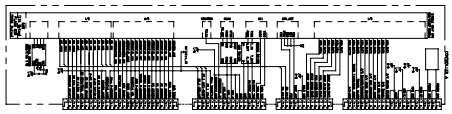	Part No. ; KHR10024
Relay	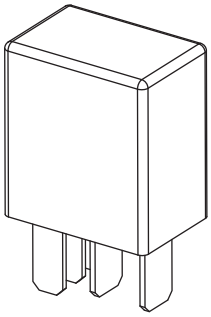	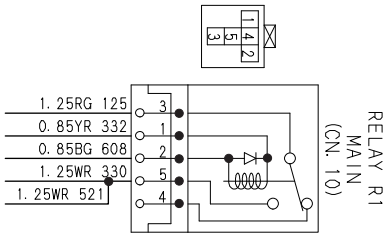	Model ; DC24 V Part No. ; KHR3802
DC-DC converter	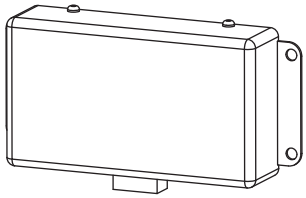	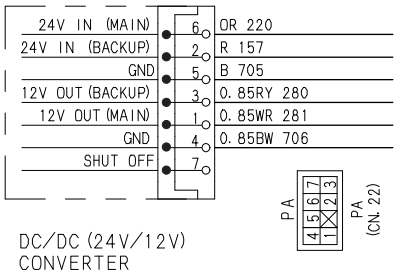	Part No. ; KHR2447
Alarm (feed pump)	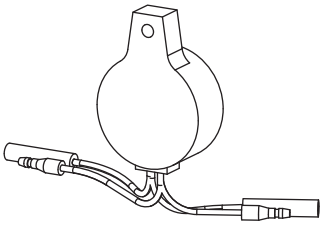	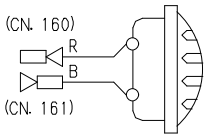	Part No. ; KHR4024

https://truckmanualshub.com/

Electrical Equipment Layout Diagram

Name	Shape	Circuit	Remarks
Feed pump	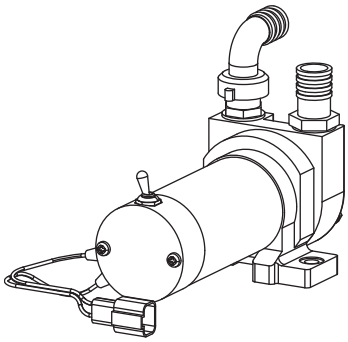	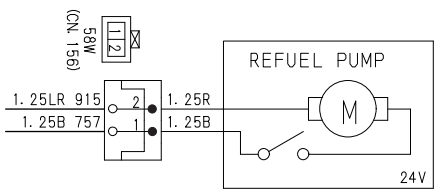	Part No. ; KHR12840
Feed pump switch	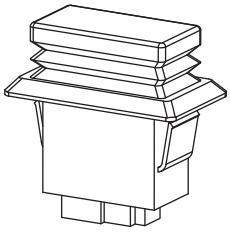	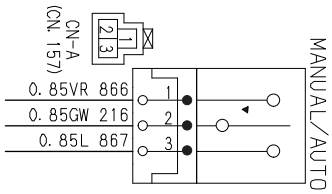	Part No. ; KHR11520
Lamp (front right house)	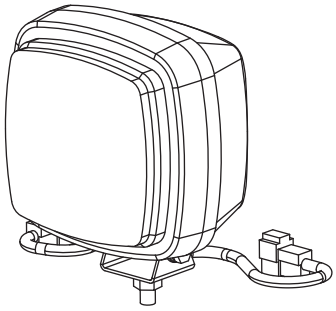	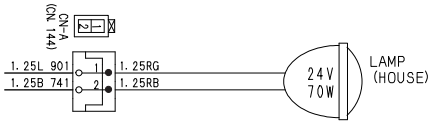	Model ; 24 V 70 W Part No. ; KHR2475
Lamp (boom)	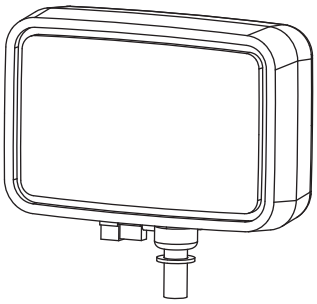	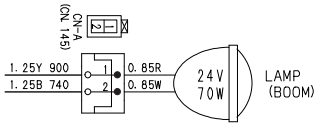	Model ; 24 V 70 W Part No. ; KHR0957
Lamp (cab top)	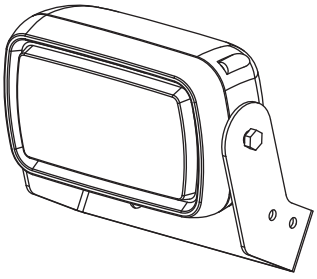	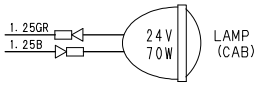	Model ; 24 V 70 W Part No. ; KHR16240

https://truckmanualshub.com/

Electrical Equipment Layout Diagram

Name	Shape	Circuit	Remarks
Speaker (R)	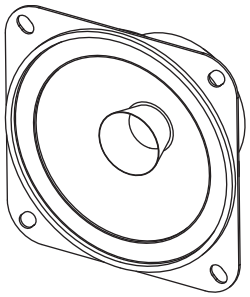	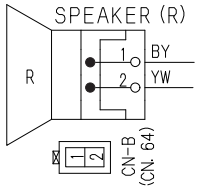	Part No. ; CAP2284
Monitor display	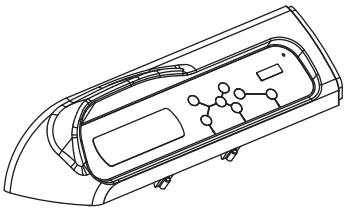	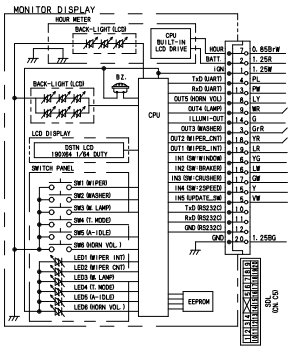	Model ; SK-0023-001-N0-KK Part No. ; KHR10051
Pressure sensor (P1) (P2)	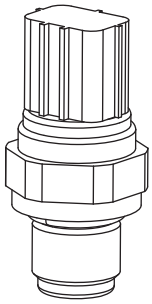	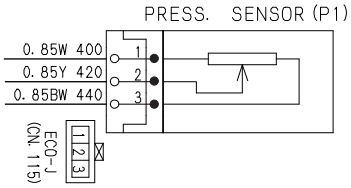	Model ; 50.0 MPa Part No. ; KHR10290
Pressure sensor (N1) (N2) (swing) (upper) (travel)	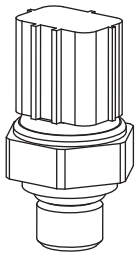	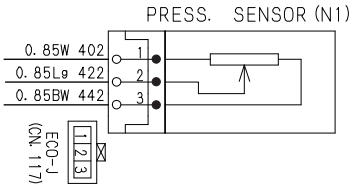	Model ; 5.0 MPa Part No. ; KHR10300
Pressure switch (option) (2nd option)	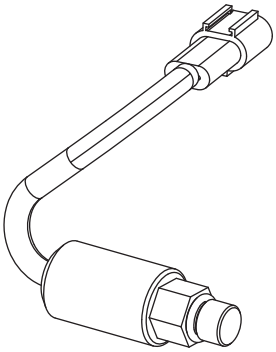	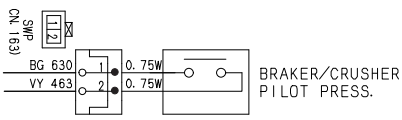	Model ; 0.49 MPa Part No. ; KHR10820

https://truckmanualshub.com/

Electrical Equipment Layout Diagram

Name	Shape	Circuit	Remarks
Pressure switch (filter)	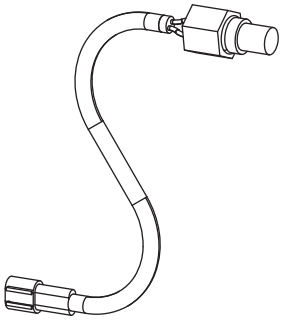	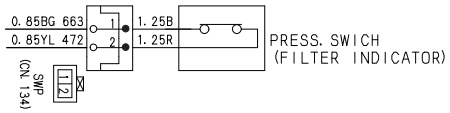	Part No. ; KHR14470
5 stack sole-noid valve	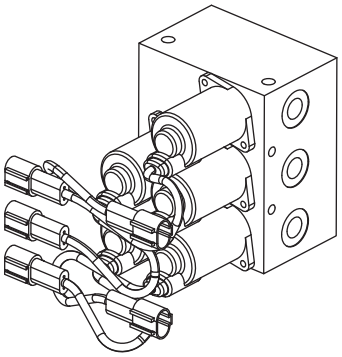	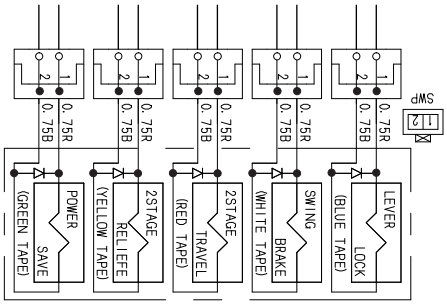	Part No. ; KHJ14520
2 stack sole-noid valve (knob switch type)	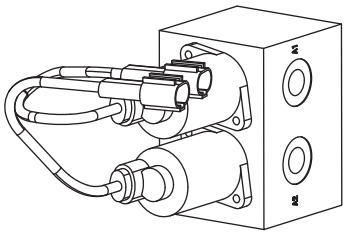	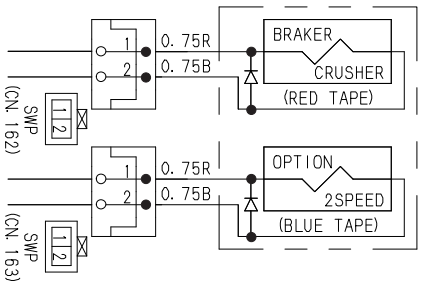	Part No. ; KHJ14780
2 stack sole-noid valve (pedal type)	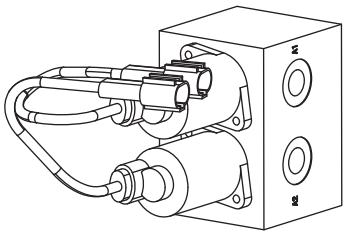	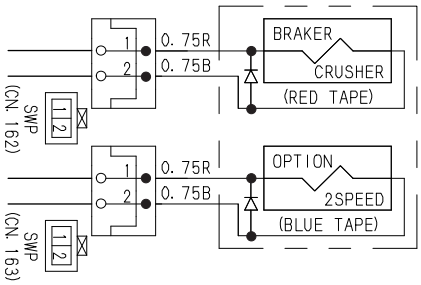	Part No. ; KHJ14000
P1 flow control proportional valve	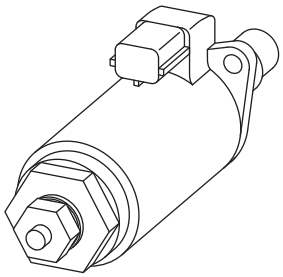	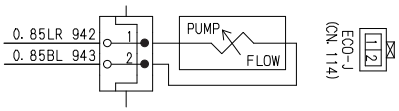	Part No. ; TIP0002128

https://truckmanualshub.com/

Electrical Equipment Layout Diagram

Name	Shape	Circuit	Remarks
Horsepower control proportional valve	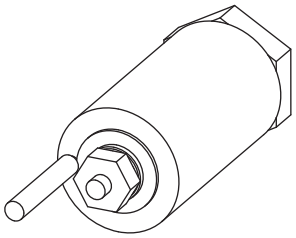	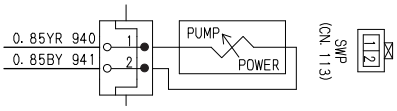	Part No. ; LJ00684
Free swing switch	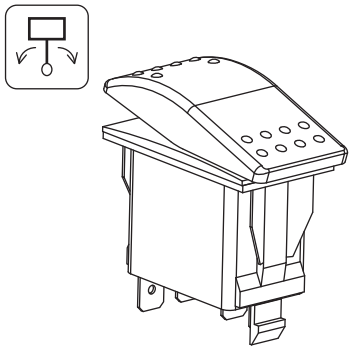	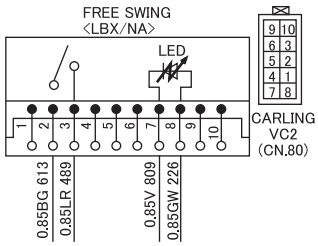	Part No. ; KHR16140
KAB seat	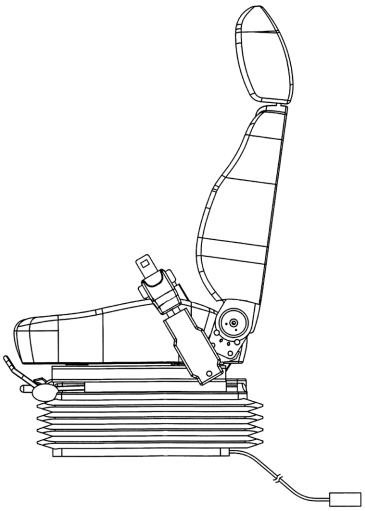	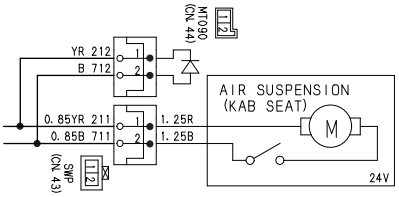	Model ; KAB 555 Part No. ; KHN12810
Free swing solenoid	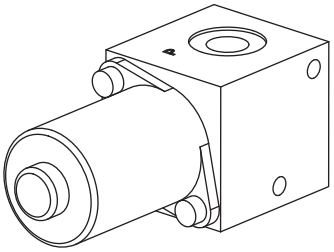	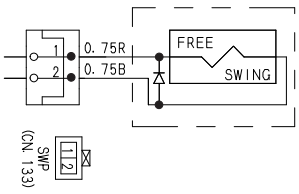	Part No. ; KHJ0659
Hydraulic oil temperature sensor	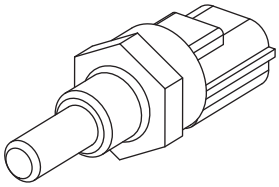	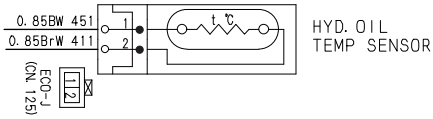	Part No. ; KHR2433

https://truckmanualshub.com/

Electrical Equipment Layout Diagram

Name	Shape	Circuit	Remarks
Clock	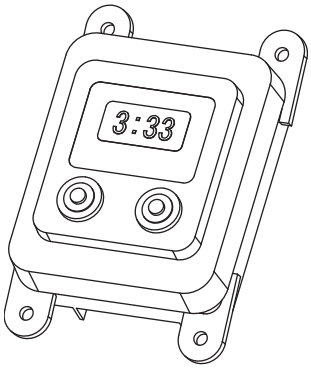	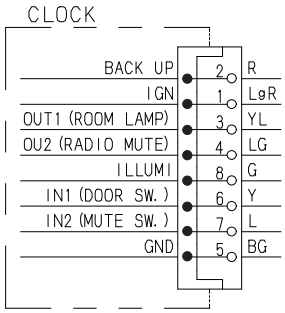	Part No. ; KHR10060
Knob right (with one-touch switch)	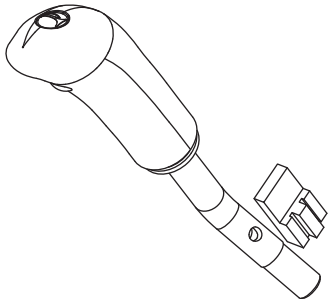	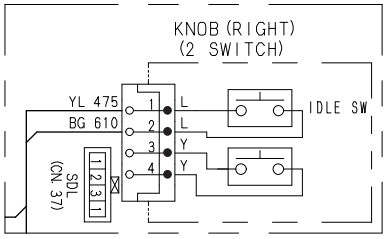	Model ; with 2 switches Part No. ; KHJ14460
Knob right (with one-touch switch) (short type)	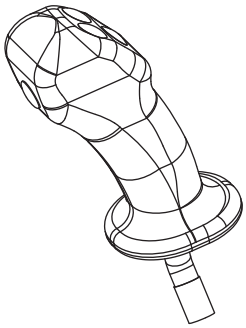	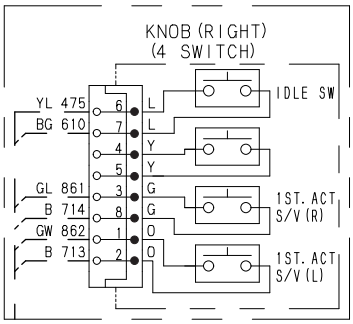	Model ; with 4 switches Part No. ; KHJ16140
Knob left (with horn switch and radio mute)	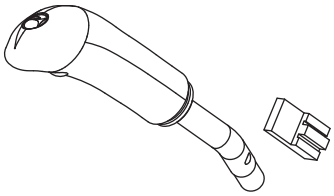	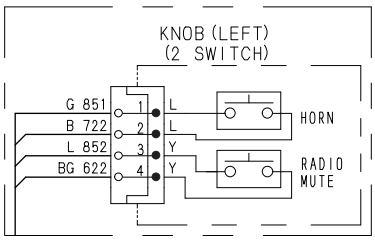	Model ; with 2 switches Part No. ; KHJ14450
Knob left (with horn switch and radio mute) (short type)	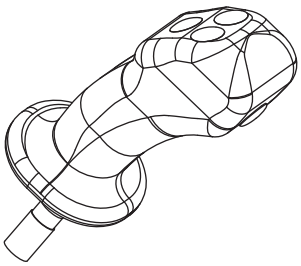	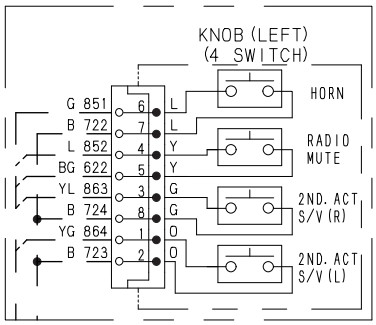	Model ; with 4 switches Part No. ; KHJ16150

https://truckmanualshub.com/

Electrical Equipment Layout Diagram

Name	Shape	Circuit	Remarks
Travel alarm	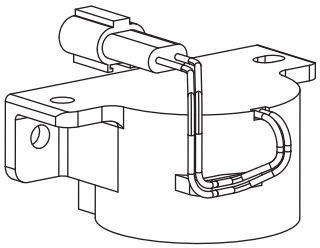	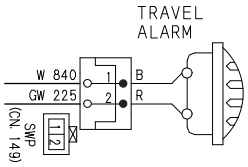	Part No. ; KHR3852 Basic frequency; 2560 Hz
Horn (low)	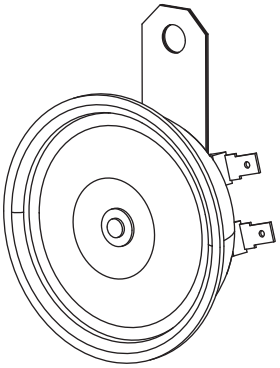	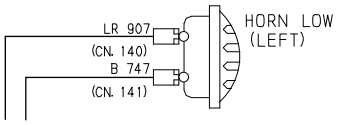	Part No. ; KHR2427 Basic frequency; 370 Hz
Horn (high)	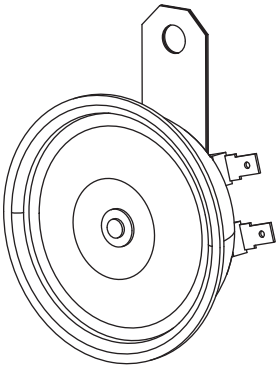	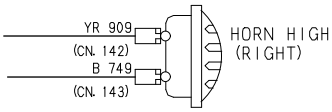	Part No. ; KHR2428 Basic frequency; 415 Hz
Diode	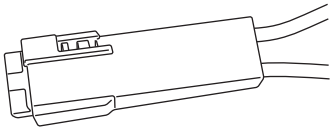	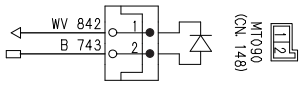	Wiring Systems Part No. ; 6098-0017 6098-0061 Part No. ; KHP1796
Lever lock limit switch	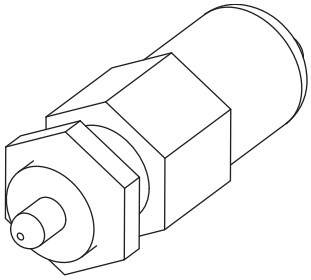	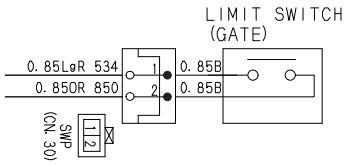	Part No. ; KHR14930

https://truckmanualshub.com/

Electrical Equipment Layout Diagram

Name	Shape	Circuit	Remarks
Radio	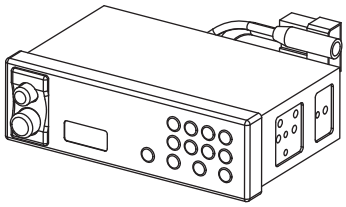	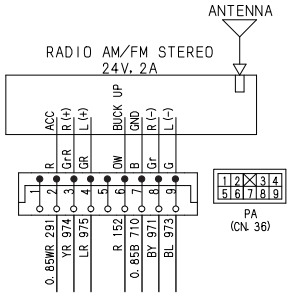	Model ; AM/FM ST (12/24 V) Part No. ; KHR15550
Lamp (room lamp)	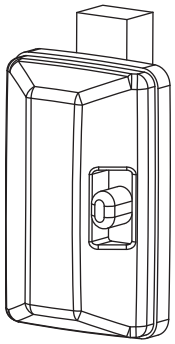	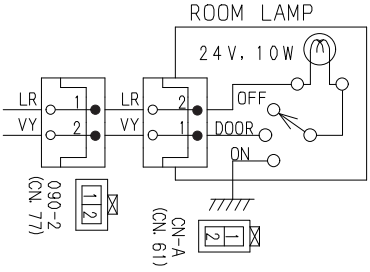	Model ; 24 V 10 W Part No. ; KHN2714
Accessory socket	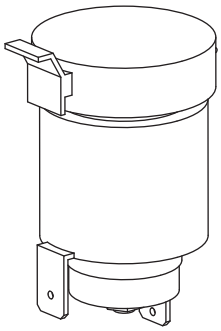	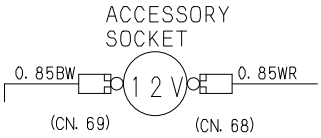	Model ; DC12 V Part No. ; KHR2501
Cigar lighter 24 V	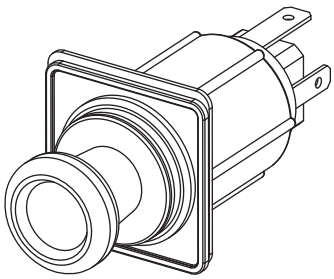	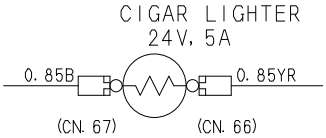	Model ; DC24 V Part No. ; KHR11210
Air conditioner unit	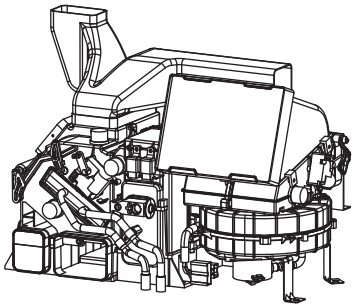	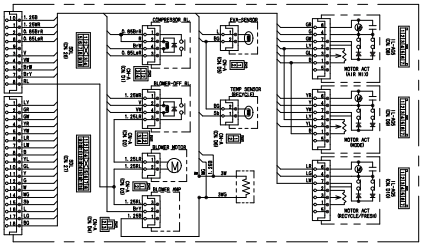	Part No. ; KHR13320

https://truckmanualshub.com/

Electrical Equipment Layout Diagram

Name	Shape	Circuit	Remarks
Limit switch (front window) (door)	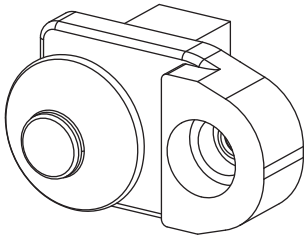	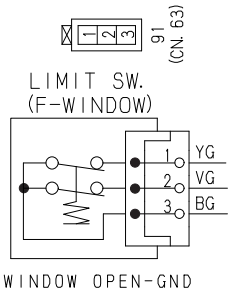	Part No. ; KHR2950
Wiper controller	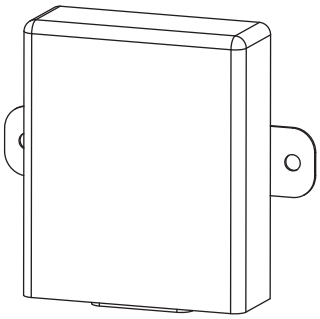	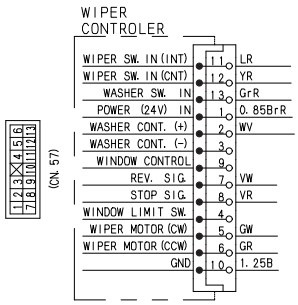	Part No. ; KHN3392
Wiper motor	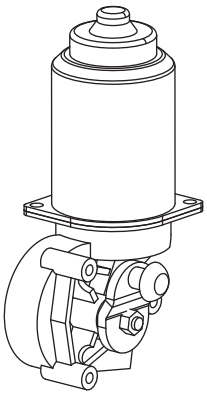	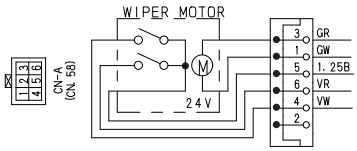	Part No. ; KHN16020
Solar radiation sensor	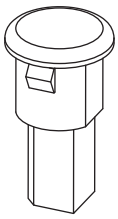	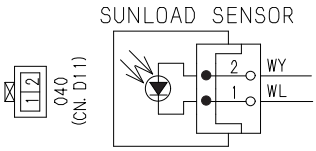	Part No. ; KHR10540
Receiver dryer (switch)	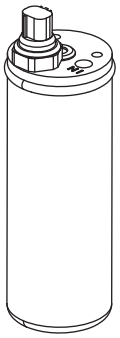	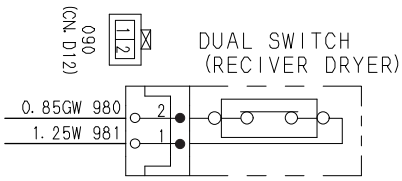	Part No. ; KHR13590

https://truckmanualshub.com/

Electrical Equipment Layout Diagram

Name	Shape	Circuit	Remarks
Air conditioner compressor (magnetic clutch)	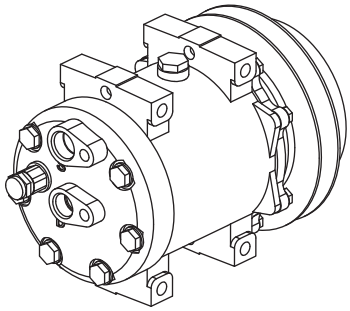	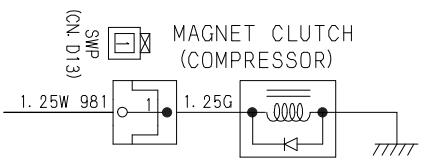	Part No. ; KHR3197
Motor actuator (air mix) (mode) (refresh / recirculate)	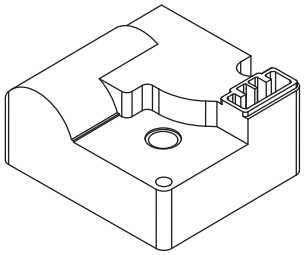	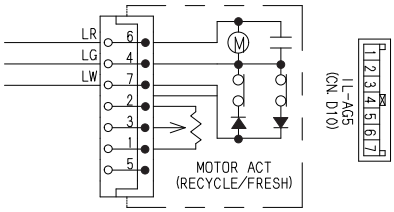	Part No. ; KHR13610
EVA sensor	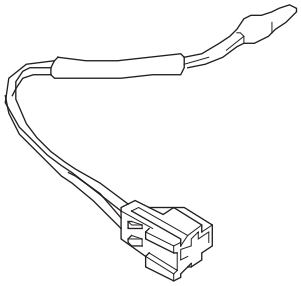	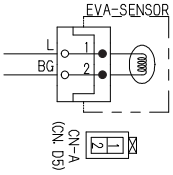	Part No. ; KHR13670
Interior temperature sensor	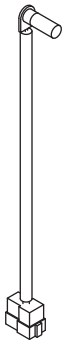	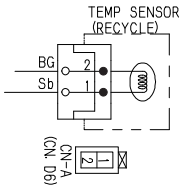	Part No. ; KHR13790
Relay (compressor) (blower OFF)	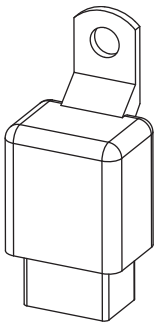	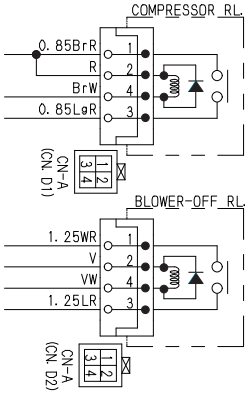	Part No. ; KHR2836

https://truckmanualshub.com/

Electrical Equipment Layout Diagram

Name	Shape	Circuit	Remarks
Blower motor	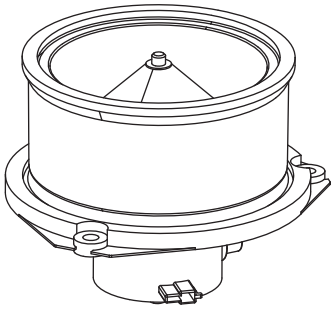	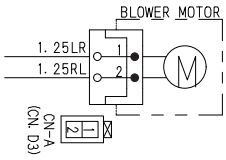	Part No. ; KHR2845
Blower amp	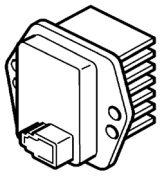	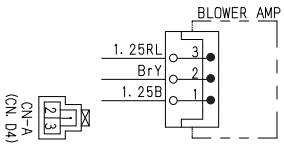	Part No. ; KHR13730
Air conditioner switch panel	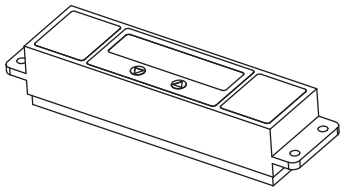	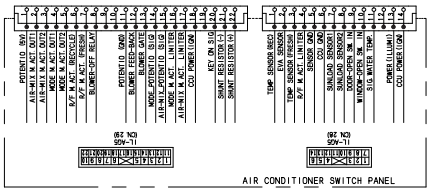	Part No. ; KHR12510
Option select switch (breaker / crusher)	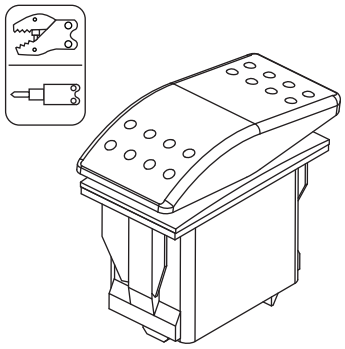	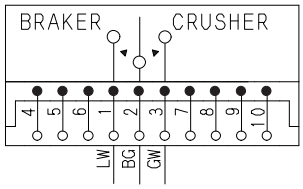	Part No. ; KHR14450
Option select switch (breaker)	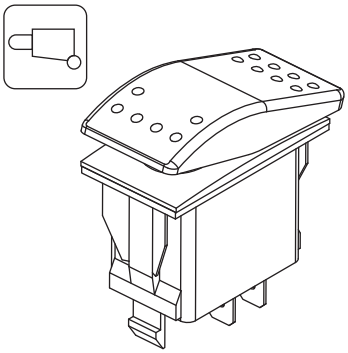	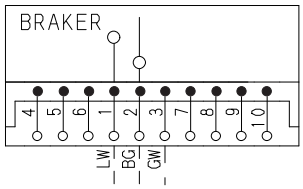	Part No. ; KHR14060

https://truckmanualshub.com/

Name	Shape	Circuit	Remarks
Option select switch (crusher)	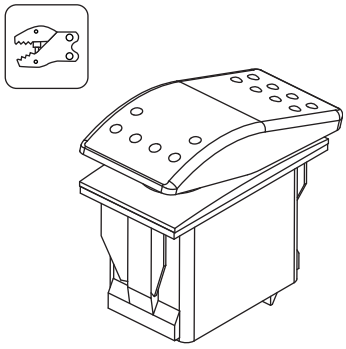	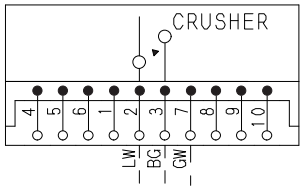	Part No. ; KHR15020
2 pumps flow select switch	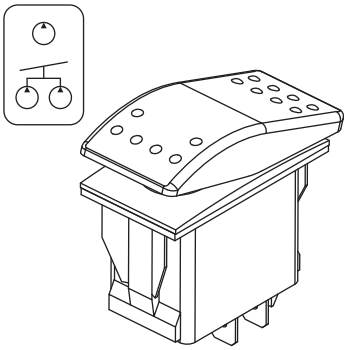	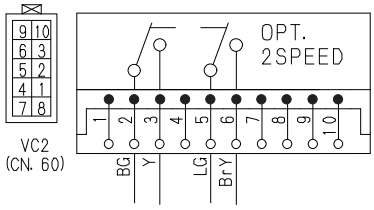	Part No. ; KHR14460
Emergency stop switch	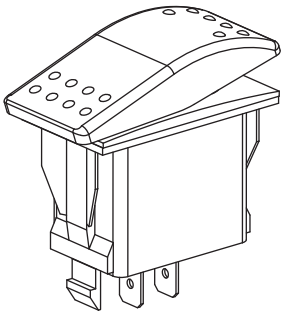	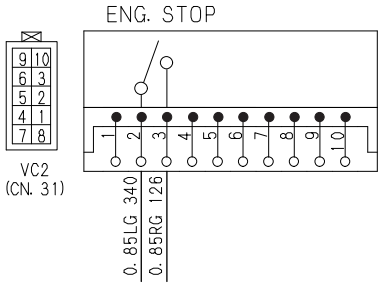	Part No. ; KHR14050

https://truckmanualshub.com/

Connection Connector Pin Layout

1. Computer A

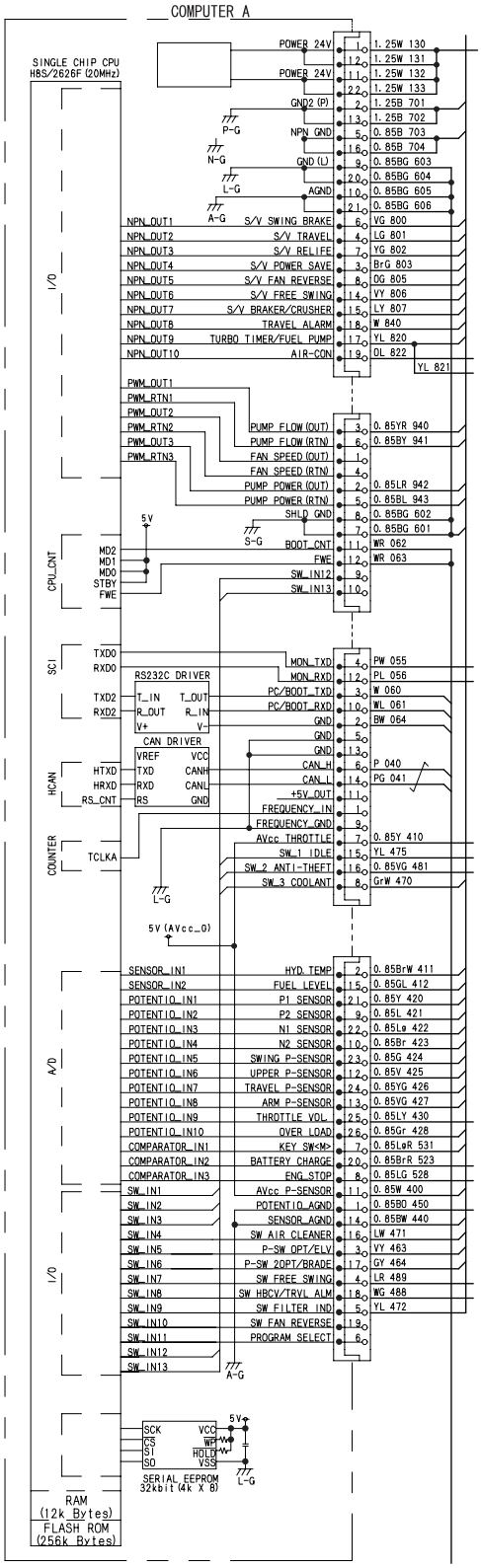

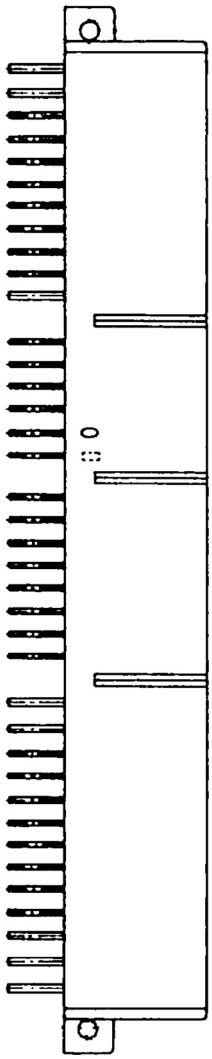

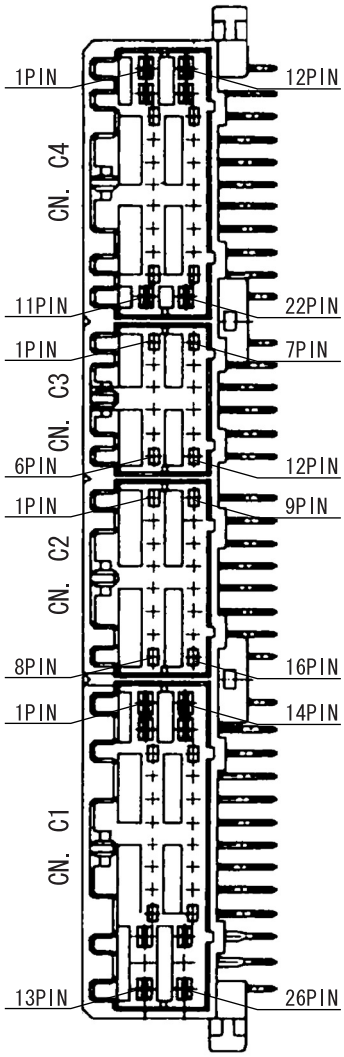

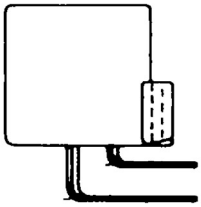

RST-05-02-001b

https://truckmanualshub.com/

Main Equipment Structural Diagrams

2. Monitor

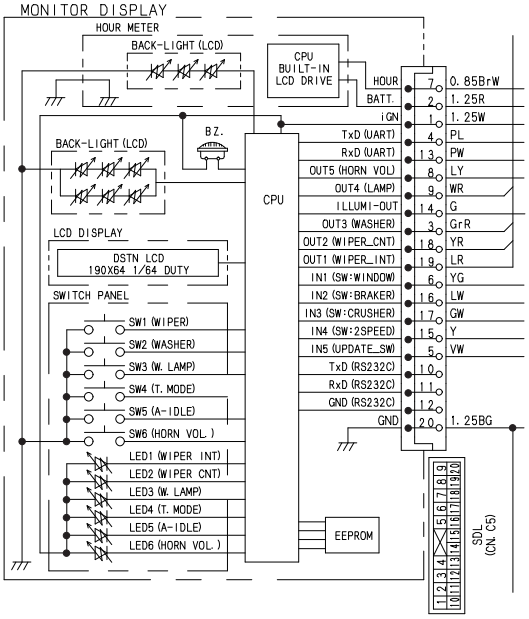

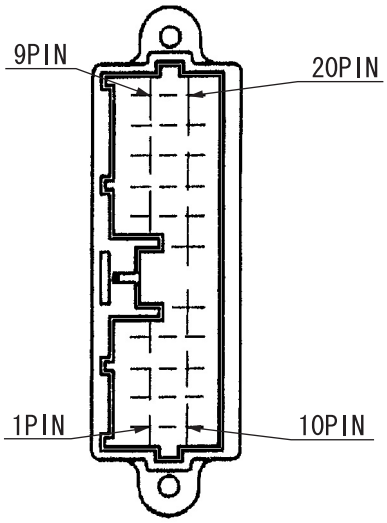

RST-05-02-001a

https://truckmanualshub.com/

Electrical Circuit Diagram

Overall View

1. Sequence Circuit Diagram

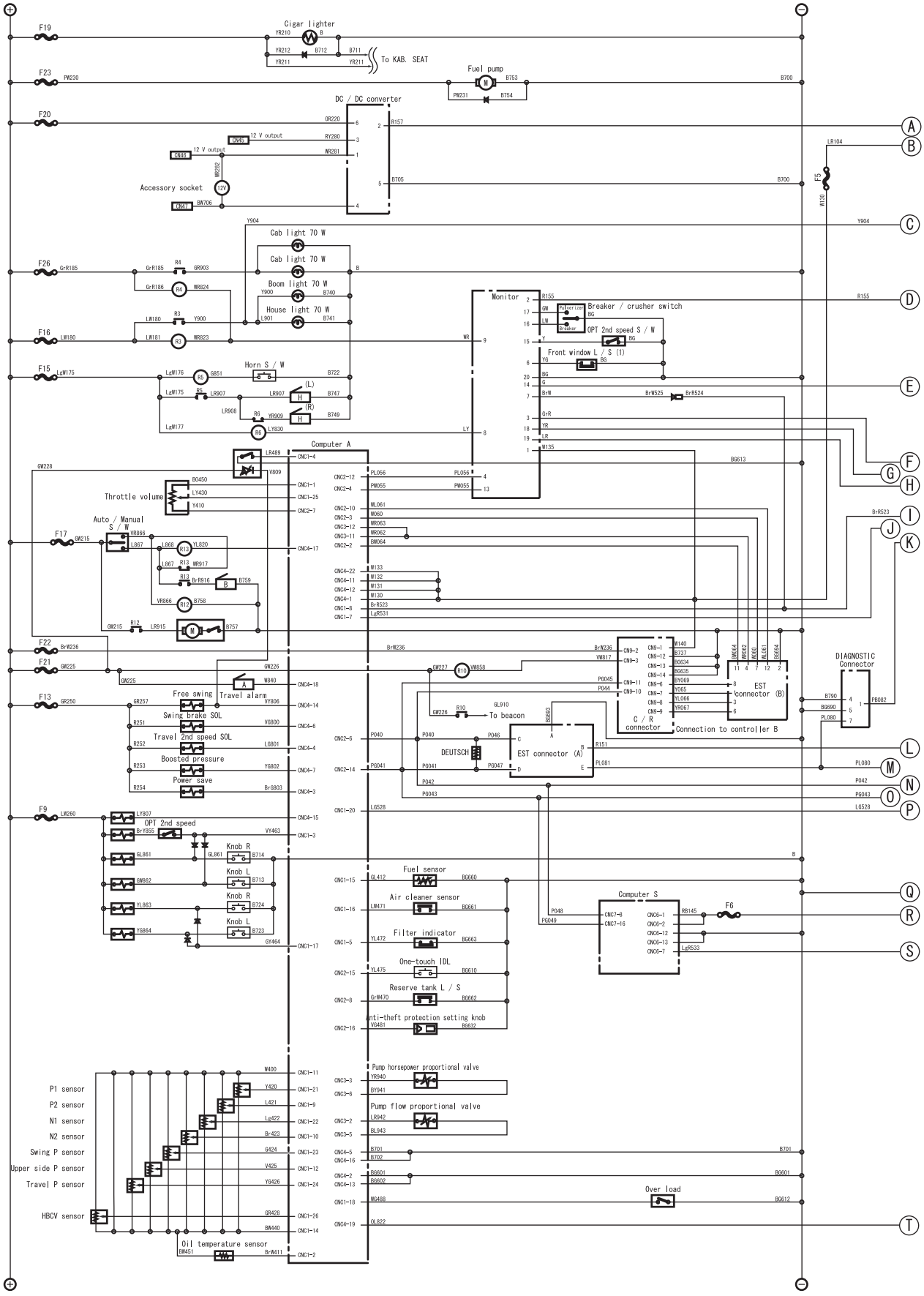

https://truckmanualshub.com/

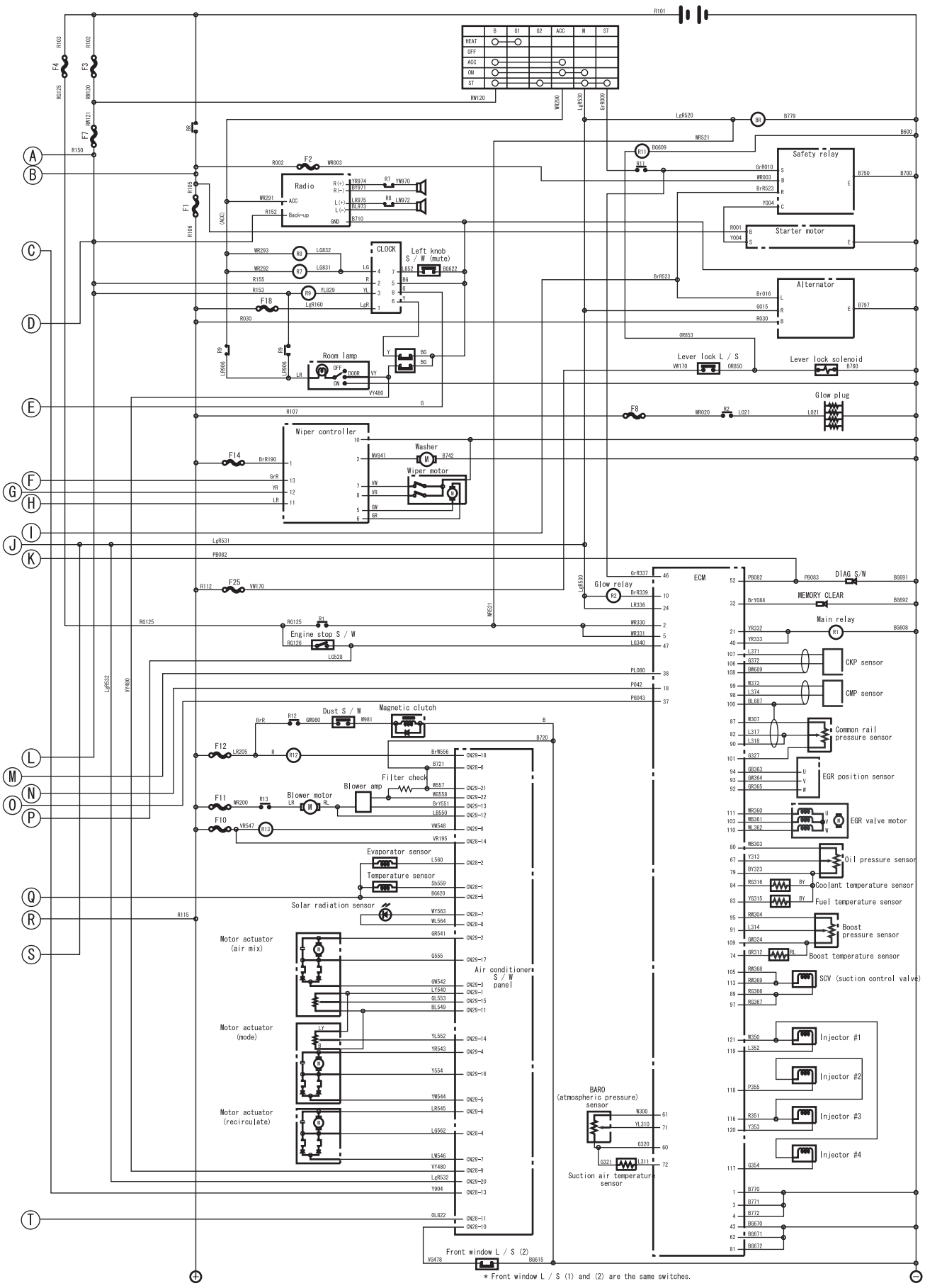

https://truckmanualshub.com/

Block Diagram

1. Computer A

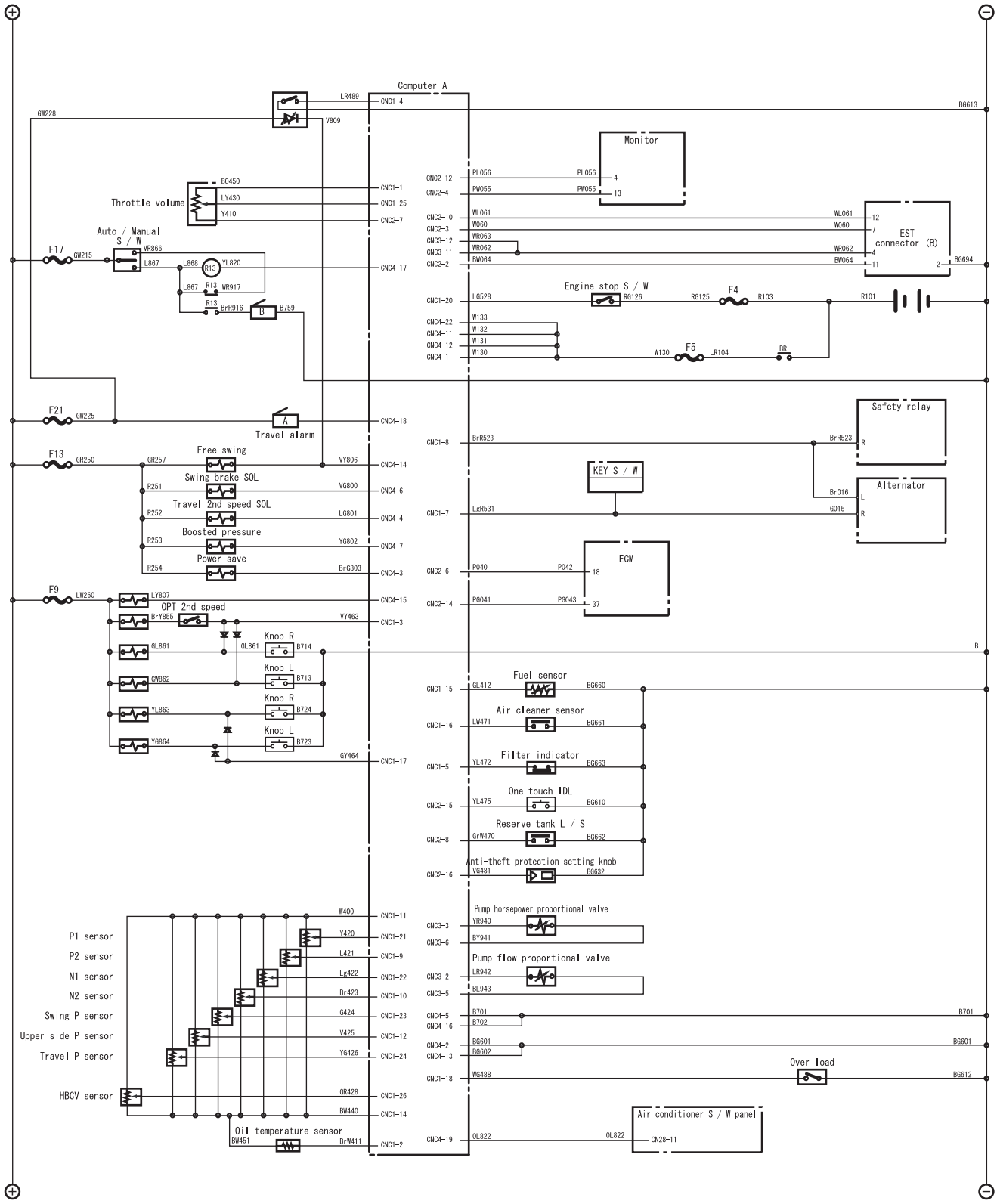

SE03010-002

https://truckmanualshub.com/

Electrical Circuit Diagram

2. Computer S

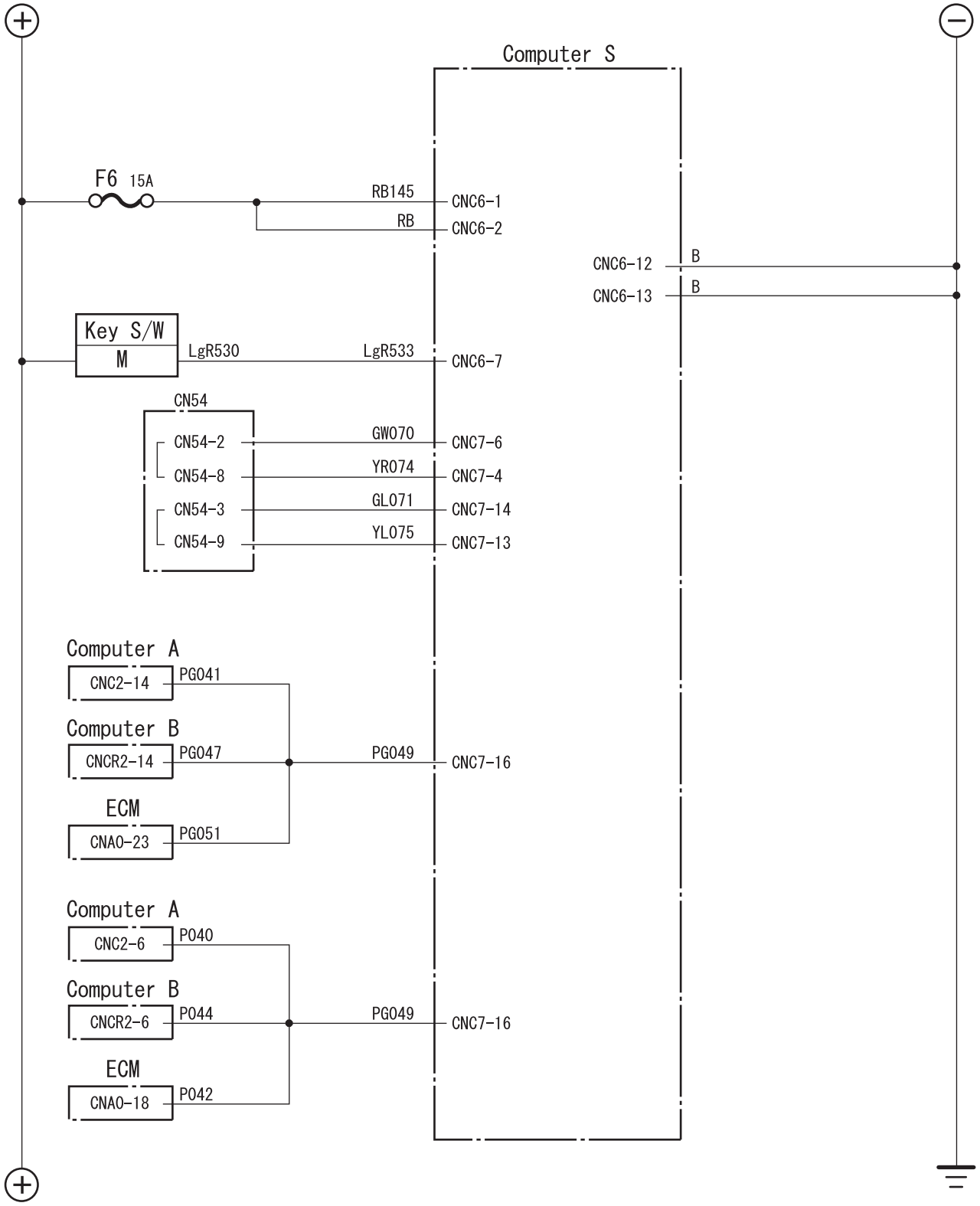

RE03003-003

https://truckmanualshub.com/

3. ECM

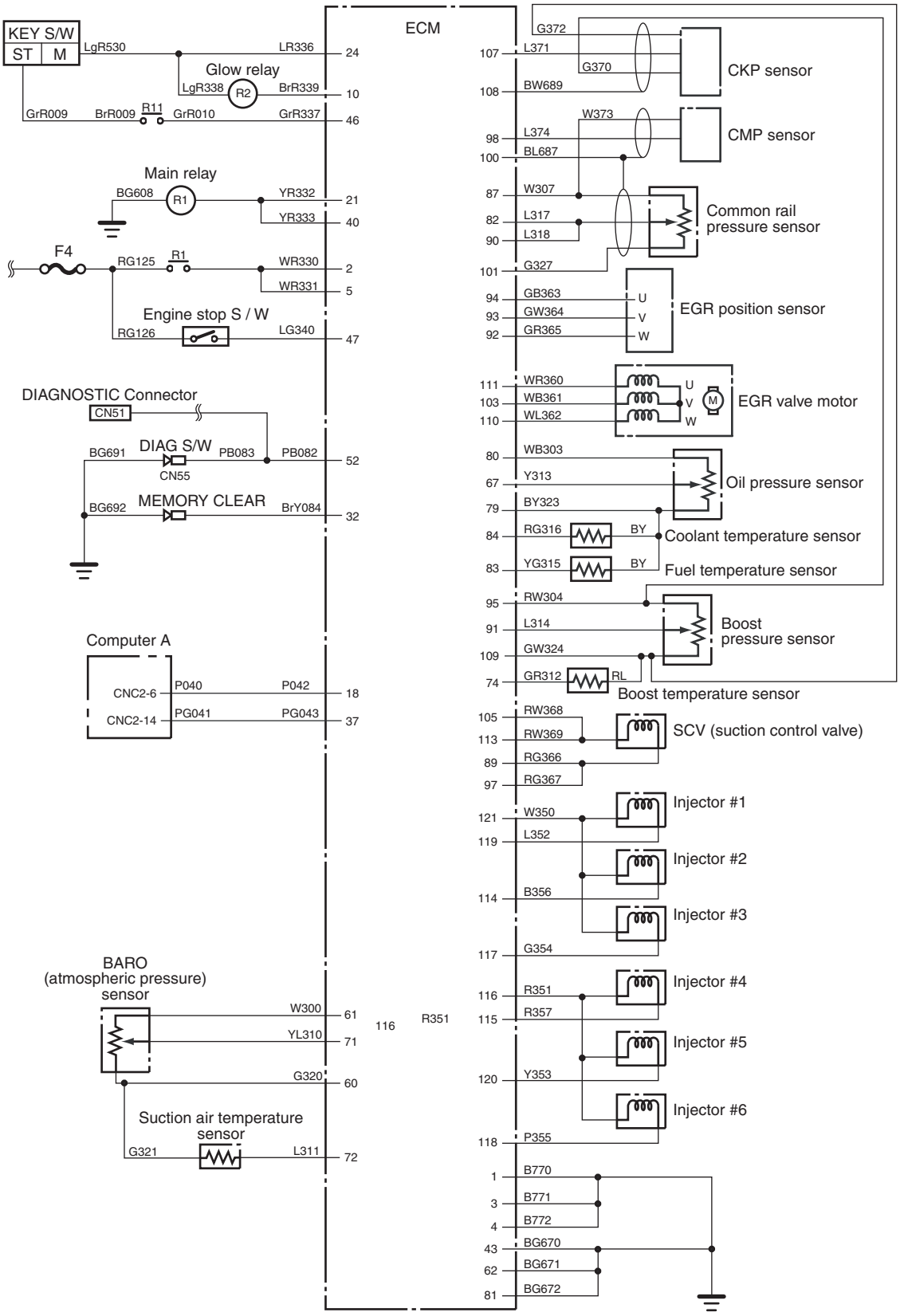

https://truckmanualshub.com/

Electrical Circuit Diagram

4. Monitor Display

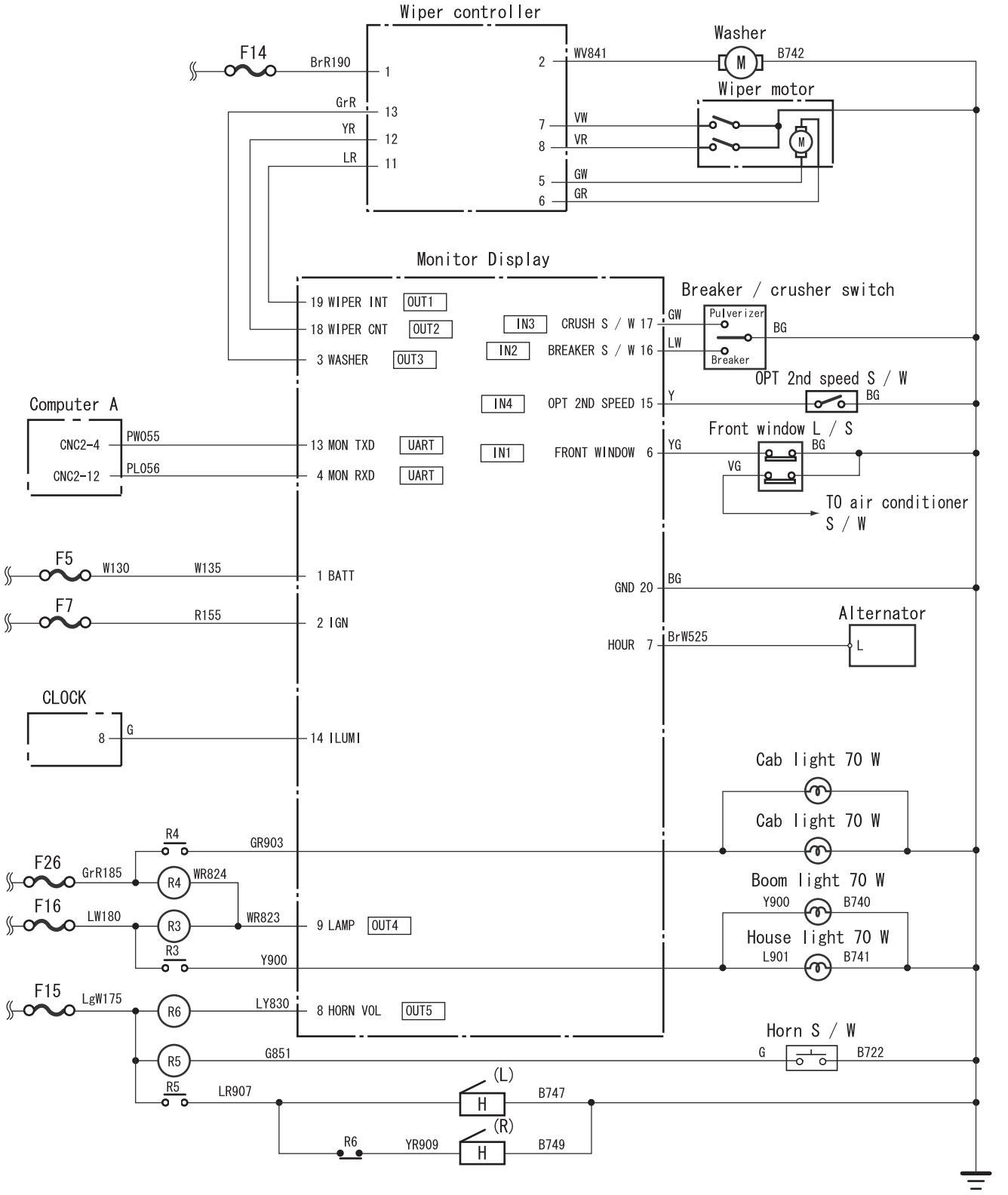

https://truckmanualshub.com/

5. Air Conditioner

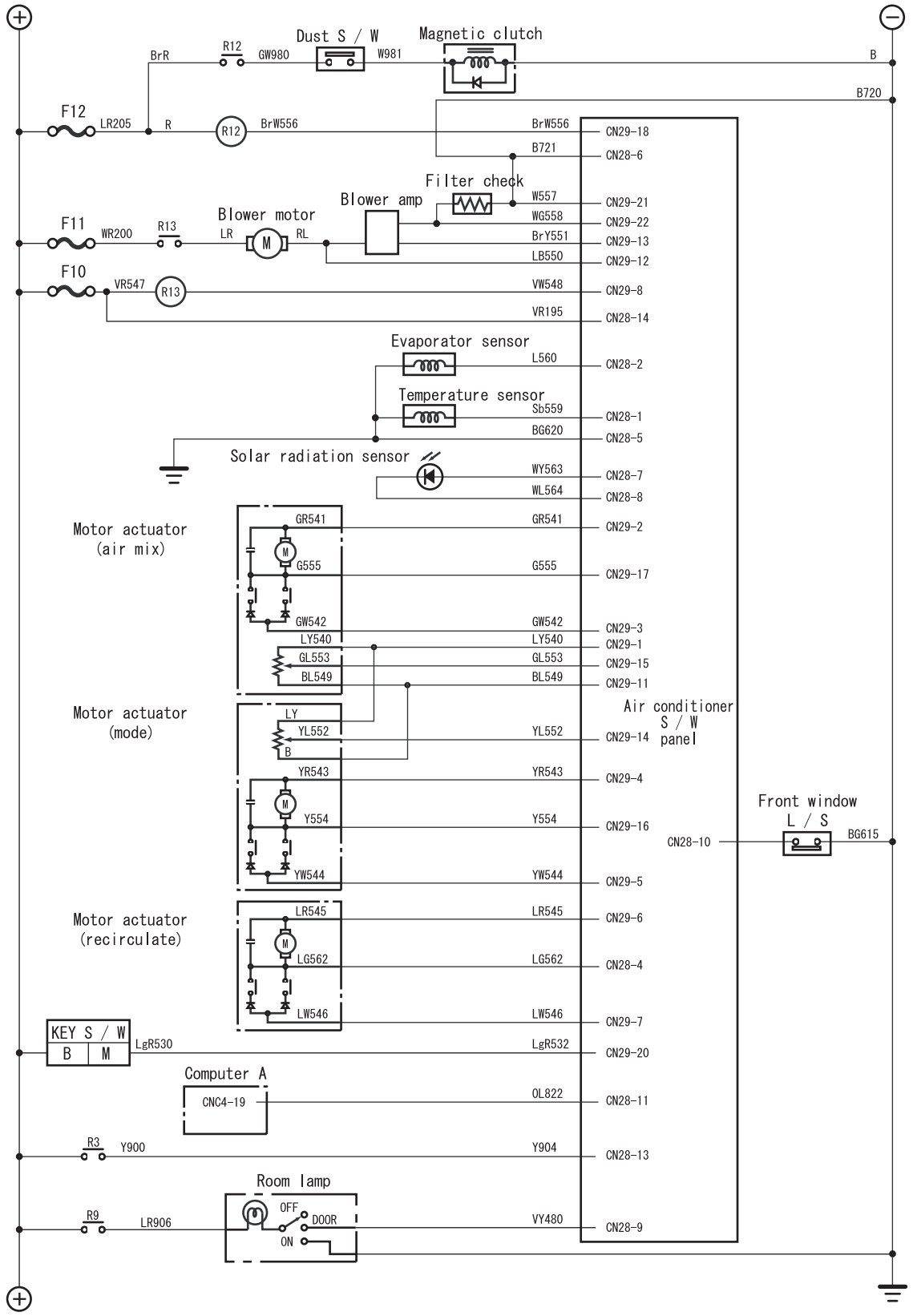

https://truckmanualshub.com/

Electrical Circuit Diagram

6. Lever Lock

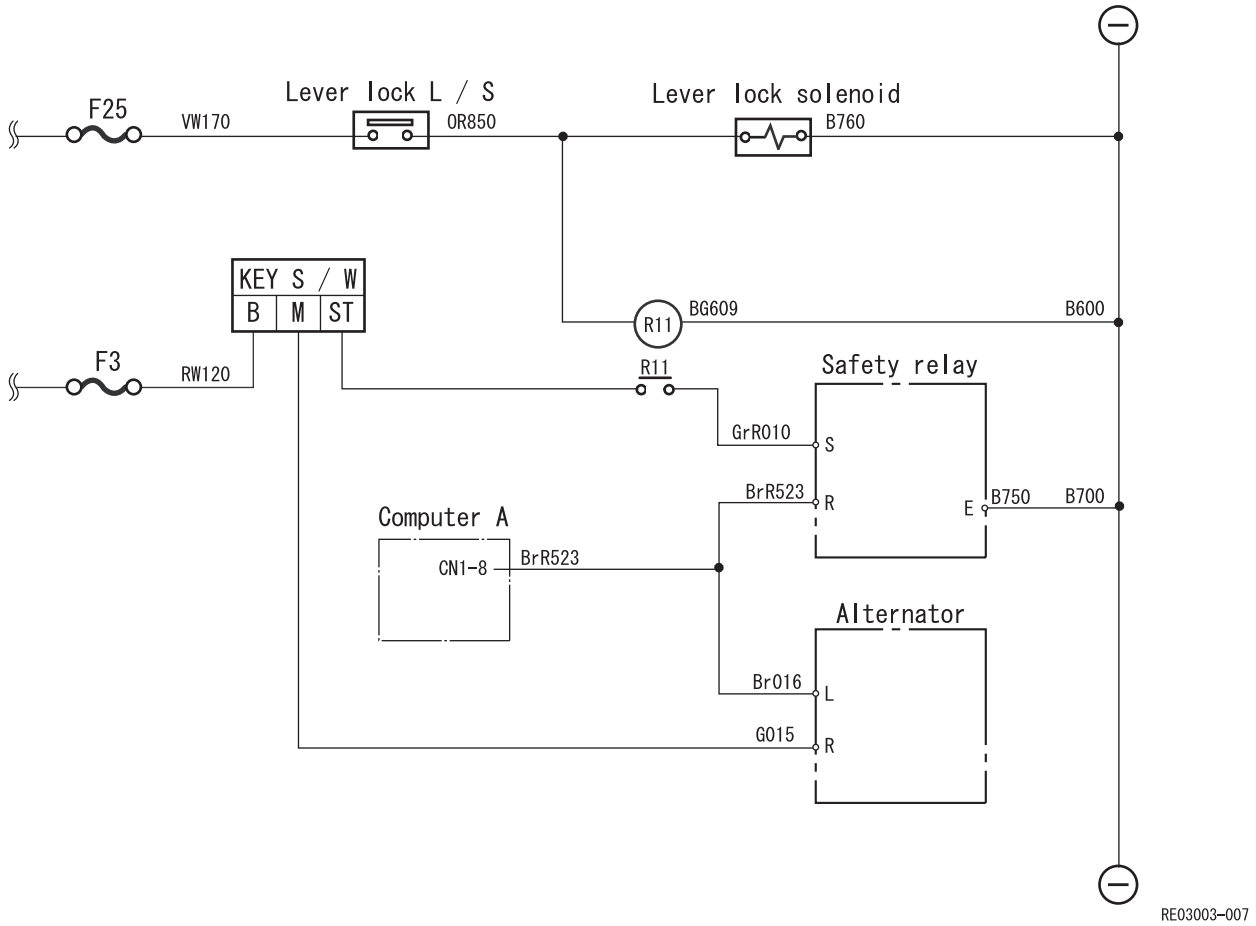

7. Horn

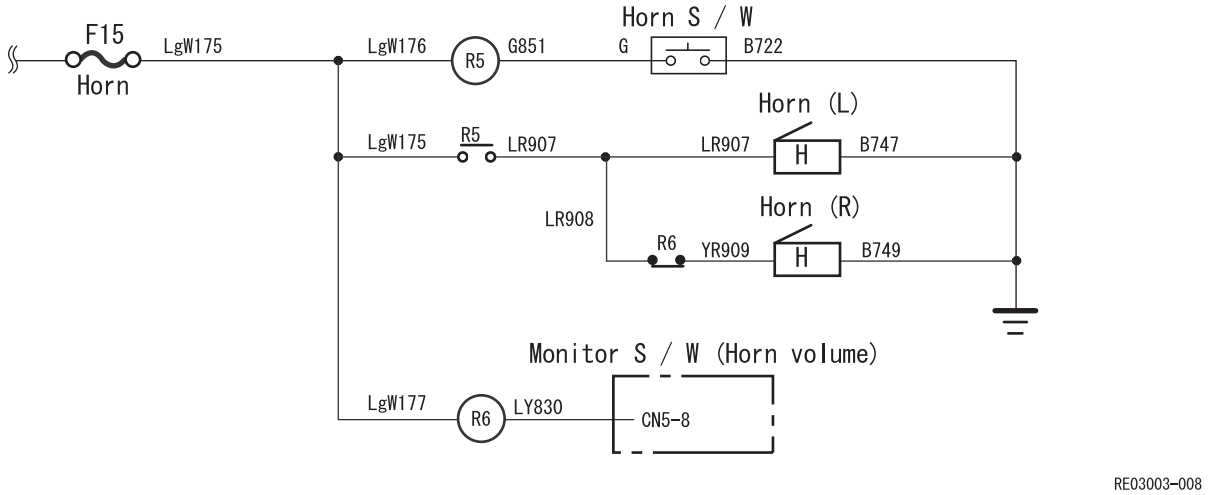

https://truckmanualshub.com/

8. Working Light

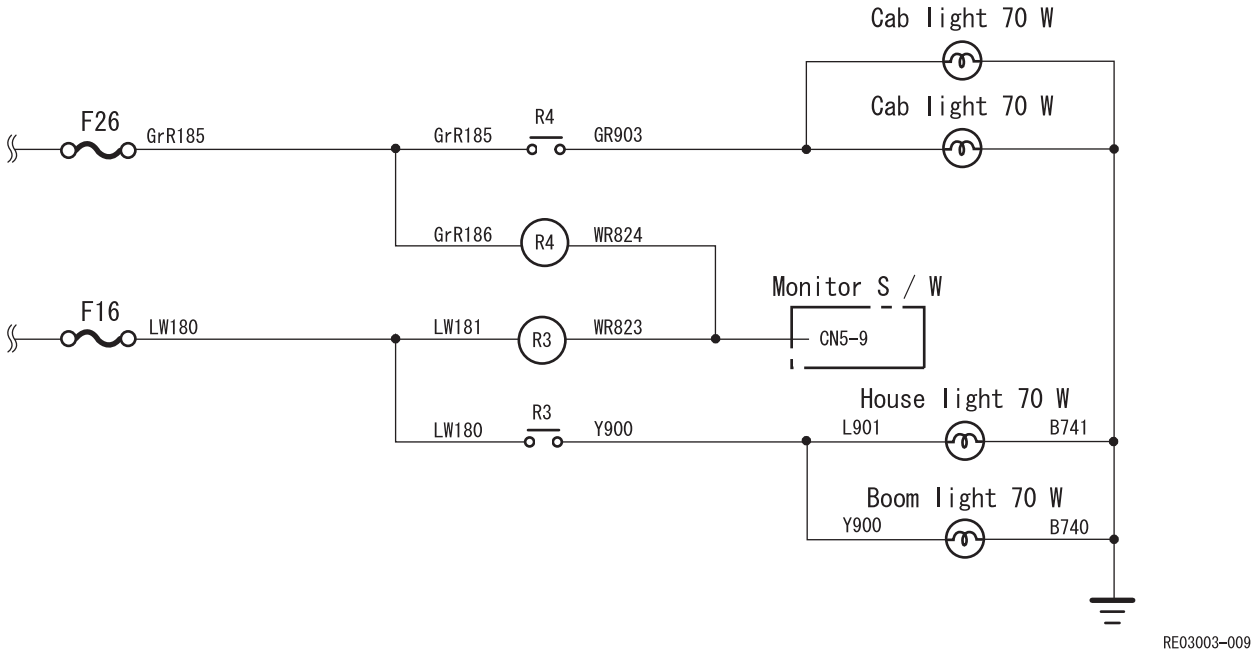

9. Option

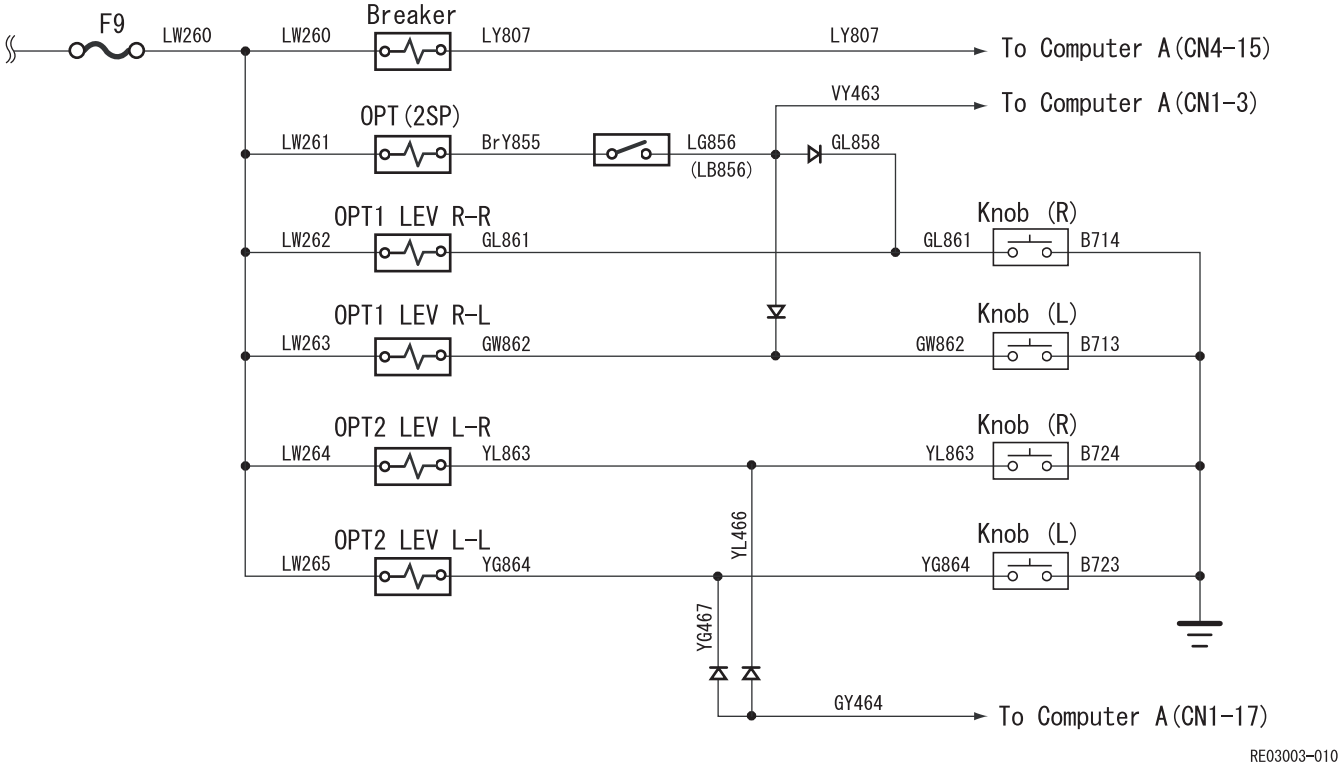

https://truckmanualshub.com/

Electrical Circuit Diagram

10.Other

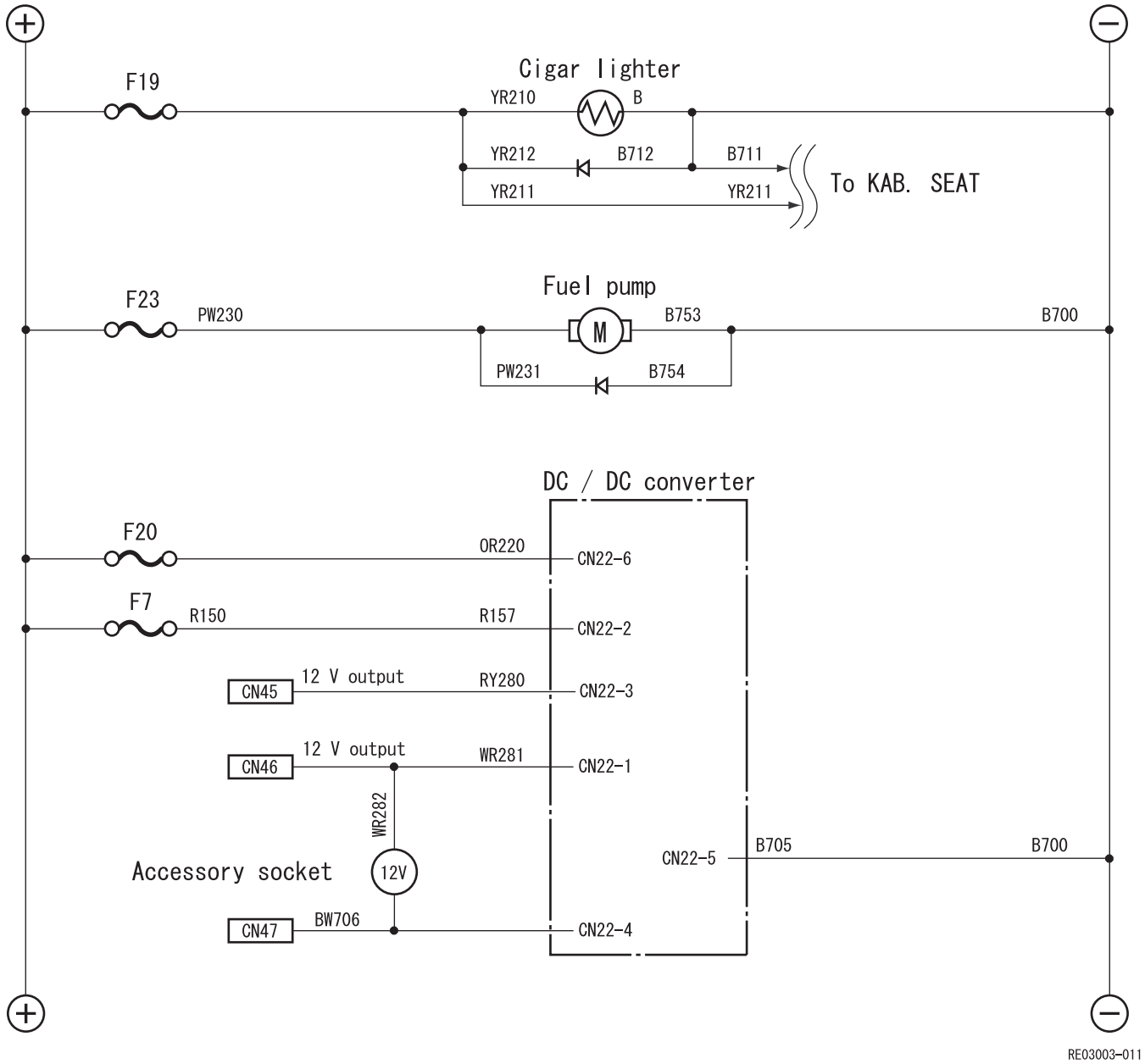

https://truckmanualshub.com/

11.Electrical Symbol List

Symbol	Name	Symbol	Name
	Fuse		Variable solenoid valve
	Diode		Resistor
	LED		Variable resistor
	Toggle switch "a" contact		Variable resistor
	Push switch "a" contact	A	Alarm
	Limit switch "a" contact	B	Buzzer
	Limit switch "b" contact	H	Horn
R	Relay coil	M	Motor
R	Relay contact "a" contact		Solar radiation sensor
R	Relay contact "b" contact		Speaker
	Solenoid valve		Lamp

https://truckmanualshub.com/

Electrical Connector Wiring Diagram

Wire Harness

1. Main Frame Harness

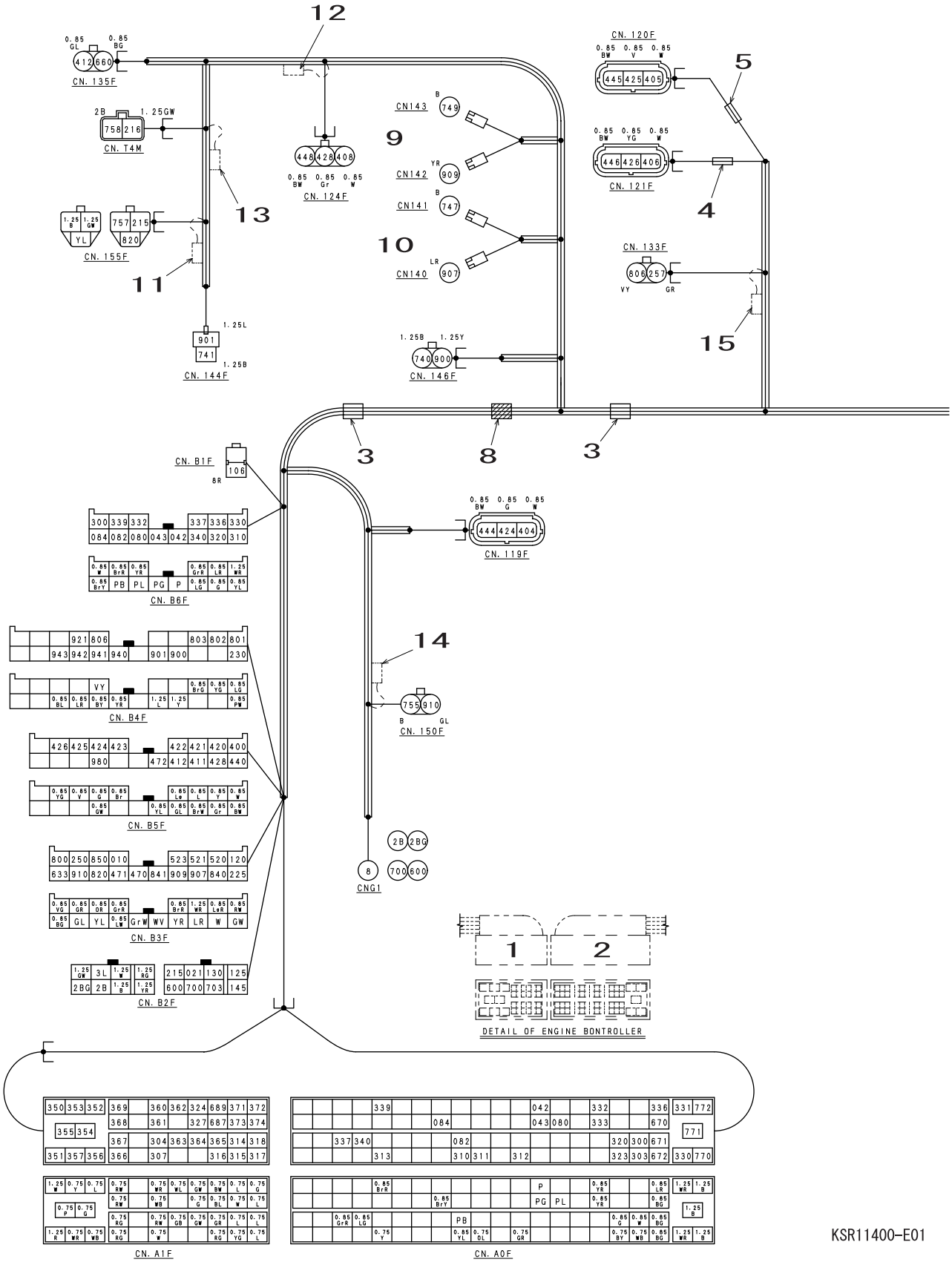

https://truckmanualshub.com/

Electrical Connector Wiring Diagram

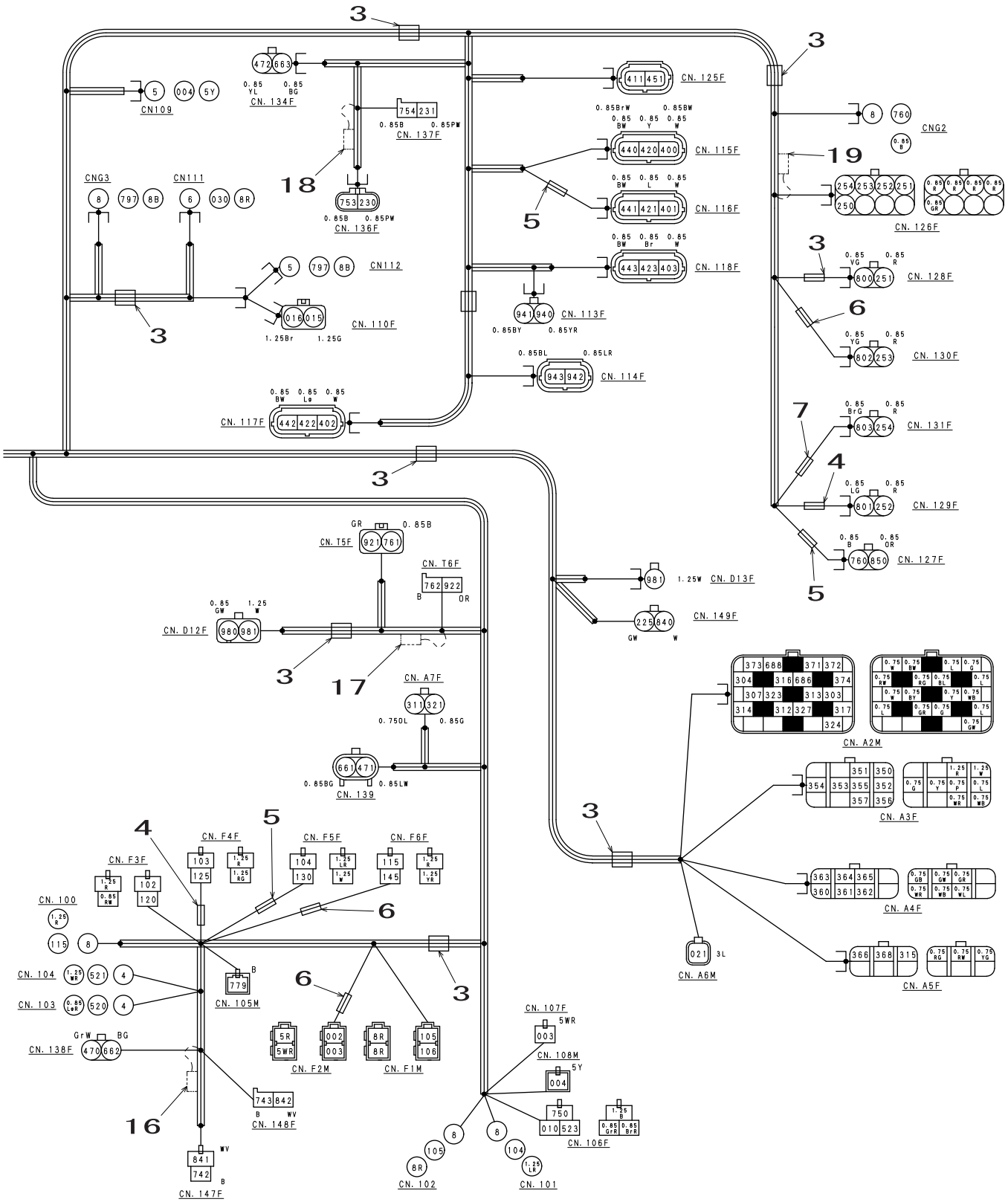

KSR11400-E01

https://truckmanualshub.com/

1	Eng. cont. c-2
2	Eng. cont. c-1
3	WhiteHITE tape
4	Red tape
5	Blue tape
6	Yellow tape
7	Green tape
8	Position of label
9	Horn (right)
10	Horn (left)

11	Fix connector (CN.155F) with red tape.
12	Fix connector (CN.124F) with red tape.
13	Fix connector (CN.T4M) with red tape.
14	Fix connector (CN.150F) with red tape.
15	Fix connector (CN.133F) with red tape.
16	Fix connector (CN.148F) with red tape.
17	Fix connector (CN.T6F) with red tape.
18	Fix connector (CN.137F) with red tape.
19	Fix connector (CN.126F) with red tape.

CN.100	Battery relay
CN.101	Battery relay(IGN)
CN.102	Battery relay(IGN)
CN.103	Battery relay (coil)
CN.104	Battery relay (coil)
CN.109	Starter motor: C
CN.111	Alternator: BWasher motor
CN.112	Alternator: E
CN.139	Air-cleaner sensor
CN.106F	Safety relay: S,R,E
CN.107F	Safety relay: B
CN.110F	Alternator: L,R
CN.113F	Proportionals/v: power
CN.114F	Proportional s/v: flow
CN.115F	Pressure sensor: P1
CN.116F	Pressure sensor: P2
CN.117F	Pressure sensor: N1
CN.118F	Pressure sensor: N2
CN.119F	Swing pressure sensor
CN.120F	Upper pressure sensor
CN.121F	Travel pressure sensor
CN.124F	Over load harness
CN.125F	Oil temp. sensor
CN.126F	Joint connector
CN.127F	Lock lever SOL. V
CN.128F	Swing brake SOL. V
CN.129F	2 stage travel SOL. V
CN.130F	2 stage relief SOL. V
CN.131F	Power save SOL. V
CN.133F	Free swing harness
CN.134F	Filter indcator
CN.135F	Fuel level sensor
CN.136F	Elec. fuel pump
CN.137F	Elec. fuel pump diode
CN.138F	Reserve tank
CN.144F	House lamp

CN.146F	Boom lamp harness
CN.147F	Washer motor
CN.148F	Washer diode
CN.149F	Travel alarm
CN.150F	Beacon harness
CN.155F	Fuel pump harness
CN.105M	Battery relay GND
CN.108M	Safety relay: C
CN.A0F	Eng. cont. C-1
CN.A1F	Eng. cont. C-2
CN.A3F	Engine harness: B
CN.A4F	Engine harness: C
CN.A5F	Engine harness: D
CN.A7F	Intake air temp.
CN.A2M	Engine harness: A
CN.A6M	Engine harness: E
CN.B1F	Cab main harness: A
CN.B2F	Cab main harness: B
CN.B3F	Cab main harness: C
CN.B4F	Cab main harness: D
CN.B5F	Cab main harness: E
CN.B6F	Cab main harness: F
CN.D12F	Reciever drier
CN.D13F	Aircon compressor
CN.F1M	Fusible link 65 A
CN.F2M	Fusible link 60 A
CN.F3F	Fuse: KEY
CN.F4F	Fuse: ECM
CN.F5F	Fuse: CONT.
CN.F6F	Fuse: GPS
CN.T4M	Lubricator
CN.T5F	Condenser fan
CN.T6F	Condenser fan diode
CN.G1	GND G1
CN.G2	GND G2
CN.G3	Alternator GND

https://truckmanualshub.com/

Electrical Connector Wiring Diagram

Cab

1. Cab Main Harness

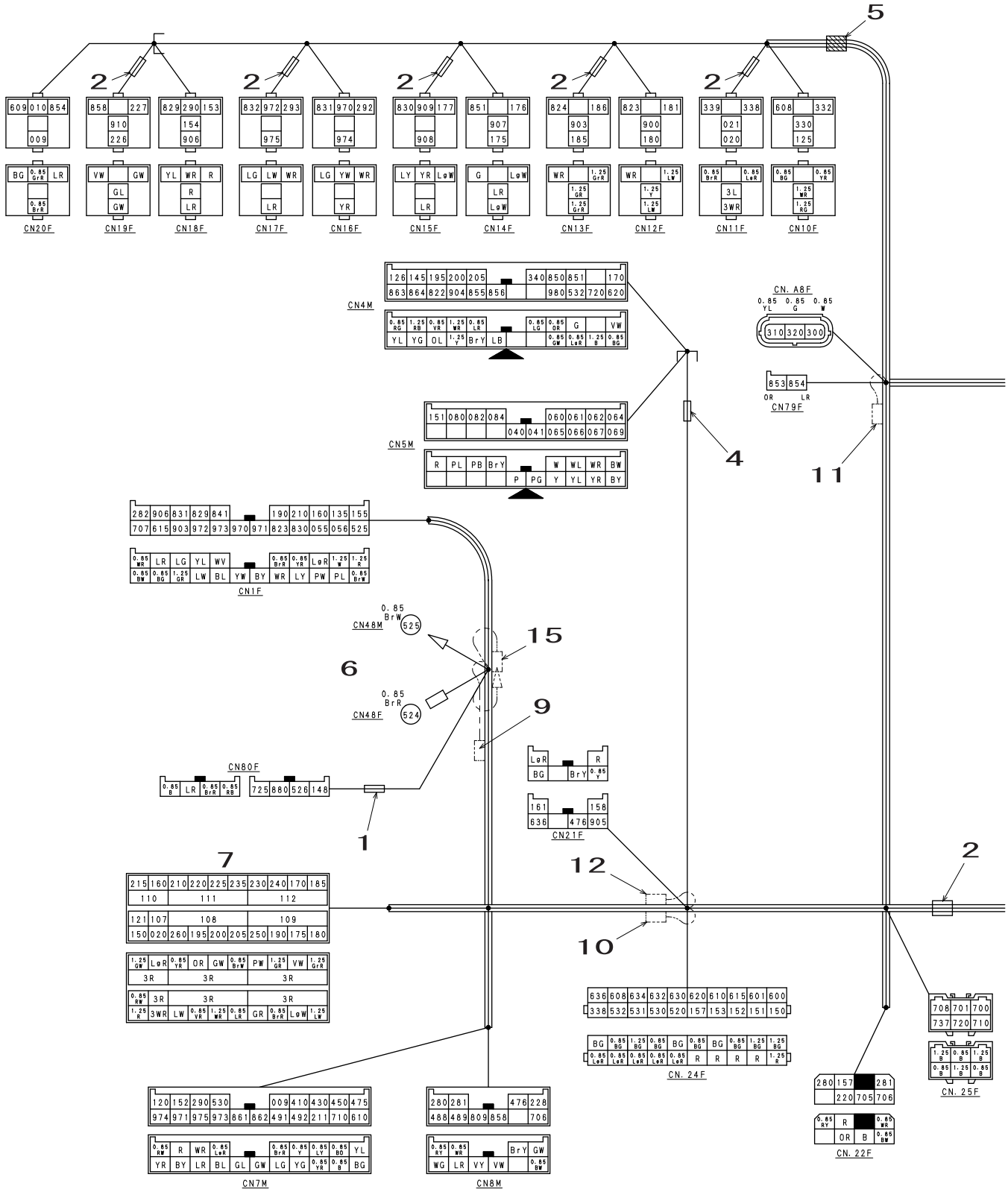

https://truckmanualshub.com/

Electrical Connector Wiring Diagram

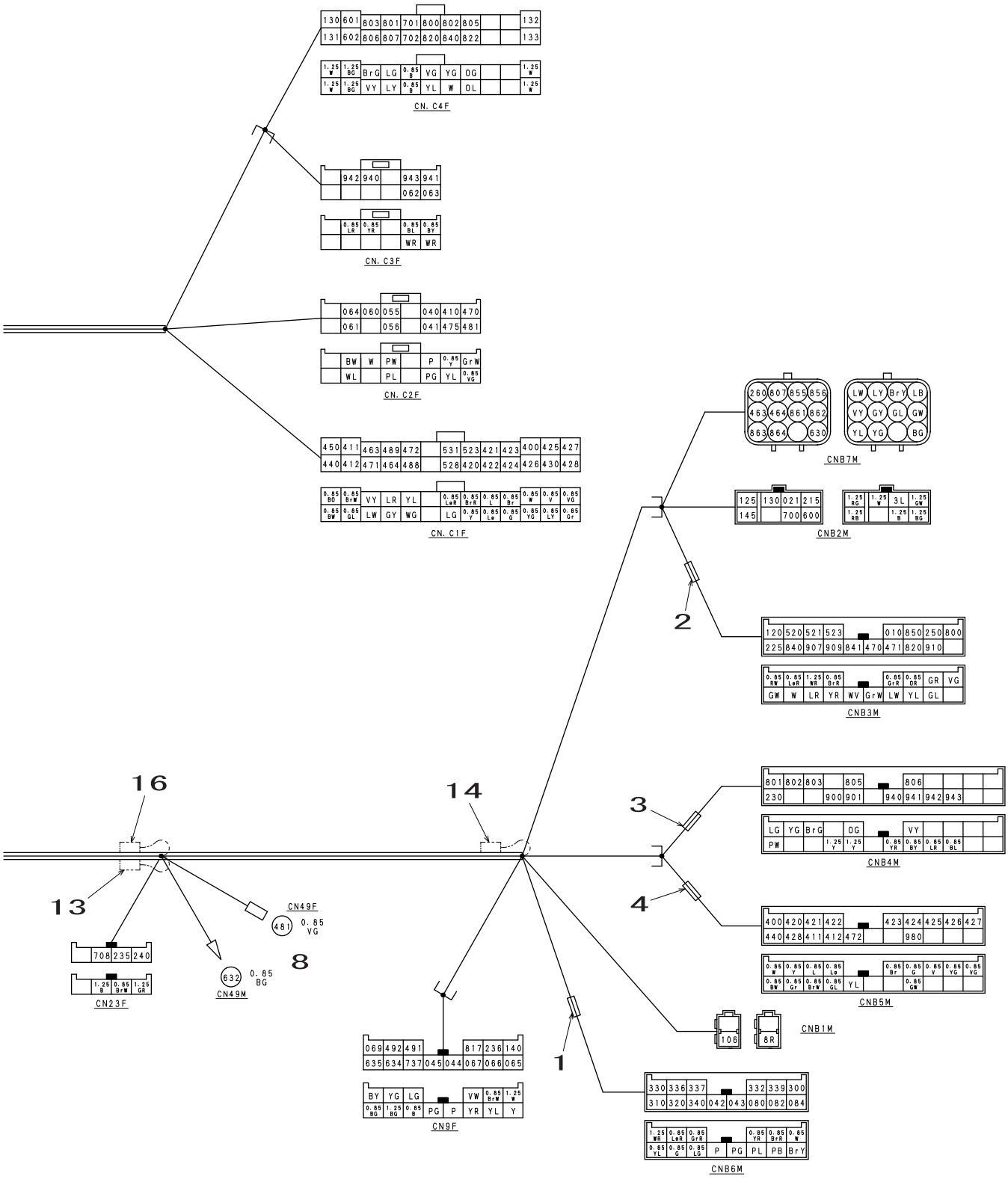

https://truckmanualshub.com/

1	Yellow tape
2	White tape
3	Red tape
4	Blue tape
5	Position of label
6	Hour meter
7	Fuse box KHR16012
8	Immobilizer SW
9	Fix connector (CN.80F) with yellow tape.
10	Fix connector (CN.24F) With red tape.
11	Fix connector (CN.79F) with red tape.
12	Fix connector (CN.21F) with red tape.
13	Fix connector (CN.23F) with red tape.
14	Fix connector (CN.9F) with red tape.
15	Fix pin terminal of circuit no. 481 & 632 with red tape.
16	Connect pin terminal of circuit no. 524 & 525 and fix with red tape.

CN.1F	Cab harness: A	CN.79F	Diode
CN.9F	Crane harness	CN.80F	GPS unit
CN.10F	Main relay	CN.4M	Cab harness: A
CN.11F	Glow relay	CN.5M	Cab harness: B
CN.12F	Lamp relay	CN.7M	Console (R) harness: A
CN.13F	Lamp CAB relay	CN.8M	Console (R) harness: B
CN.14F	Horn L relay	CN.A8F	Swing baro sensor
CN.15F	Horn R relay	CN.B1M	Frame main harness: A
CN.16F	Spk. R relay	CN.B2M	Frame main harness: B
CN.17F	Spk. L relay	CN.B3M	Frame main harness: C
CN.18F	Room lamp relay	CN.B4M	Frame main harness: D
CN.19F	Beacon relay	CN.B5M	Frame main harness: E
CN.22F	Dc converter	CN.B6M	Frame main harness: F
CN.24F	Joint connector	CN.B7M	Option line harness
CN.25F	GNDConnector	CN.C1F	Controller CN-1
CN.20F	Starter cut relay	CN.C2F	Controller CN-2
CN.21F	Back monitor	CN.C3F	Controller CN-3
CN.23F	Option power	CN.C4F	Controller CN-4

https://truckmanualshub.com/

Electrical Connector Wiring Diagram

2. Cab Sub Harness

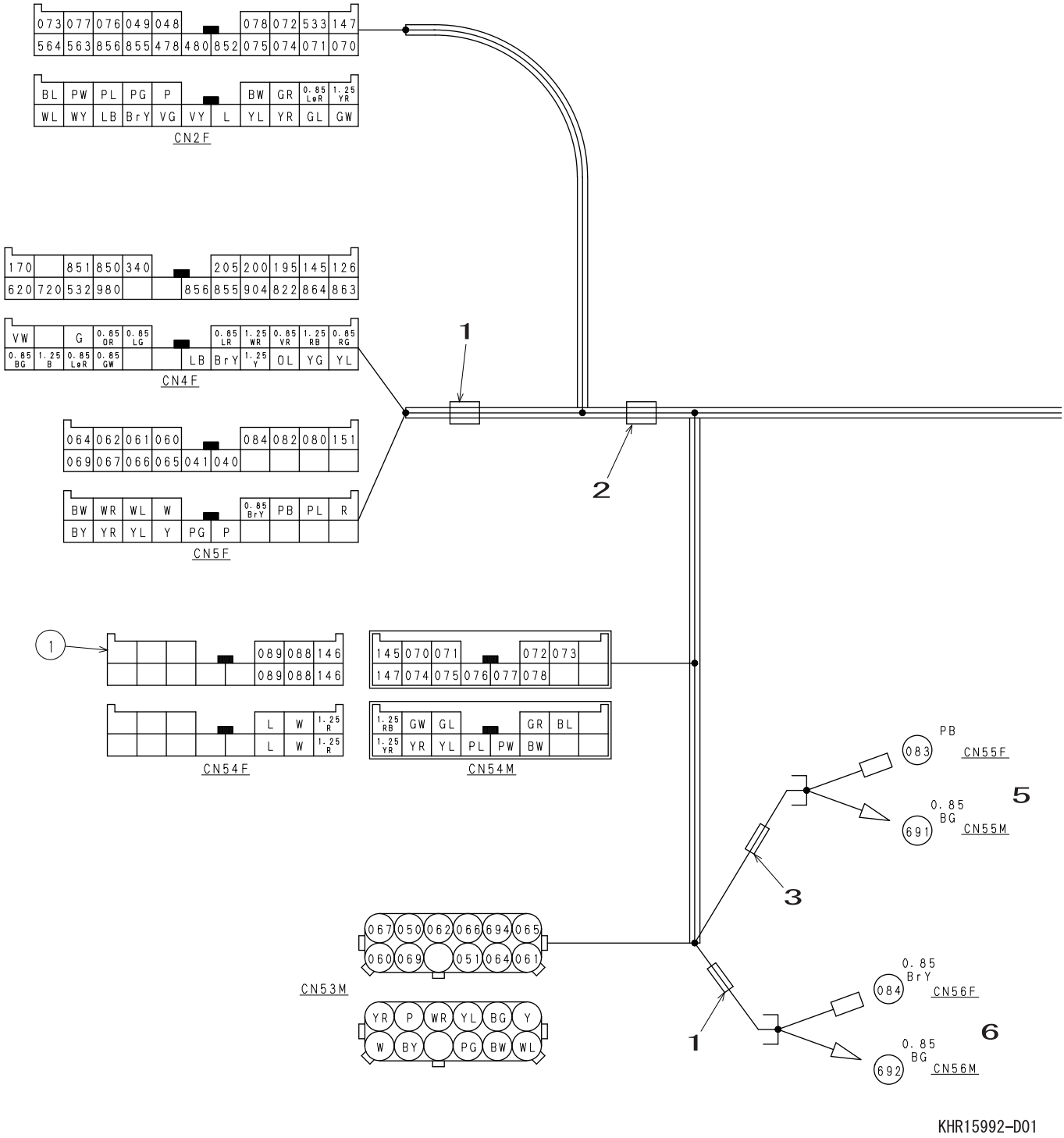

https://truckmanualshub.com/

Electrical Connector Wiring Diagram

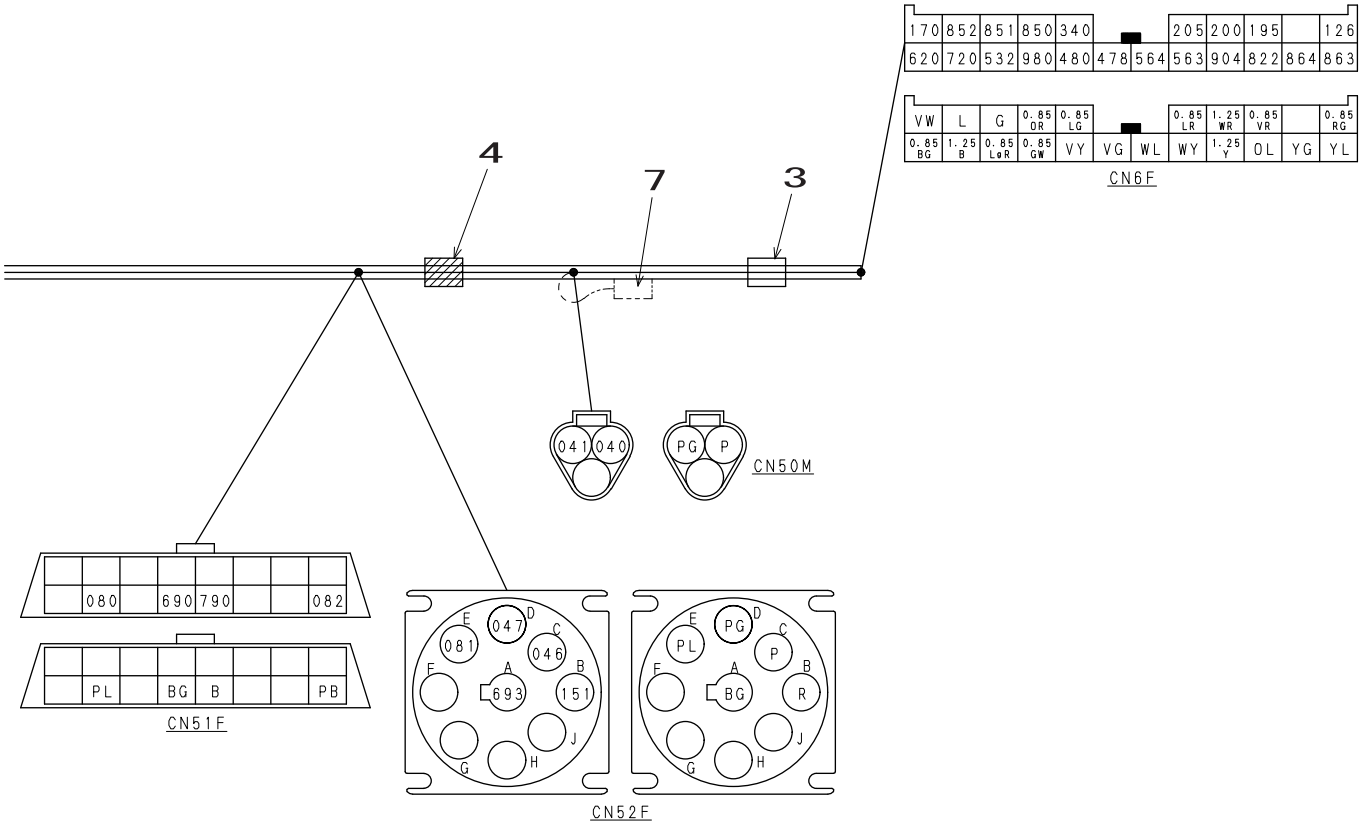

KHR15992-D01

1	Blue tape
2	White tape
3	Red tape
4	Position of label
5	Diag. switch
6	Memory clear
7	Fix connector (CN.50M) with red tape.

CN2F	Cab harness: B
CN4F	Cab main harness: A
CN5F	Cab main harness: B
CN6F	Console (L) harness
CN50M	J1939Connector

CN51F	Diag. connector
CN52F	ESTConnector: A
CN53M	ESTConnector: B
CN54F	GPS jumper harness
CN54M	GPS service connector

https://truckmanualshub.com/

Electrical Connector Wiring Diagram

3. In Cab

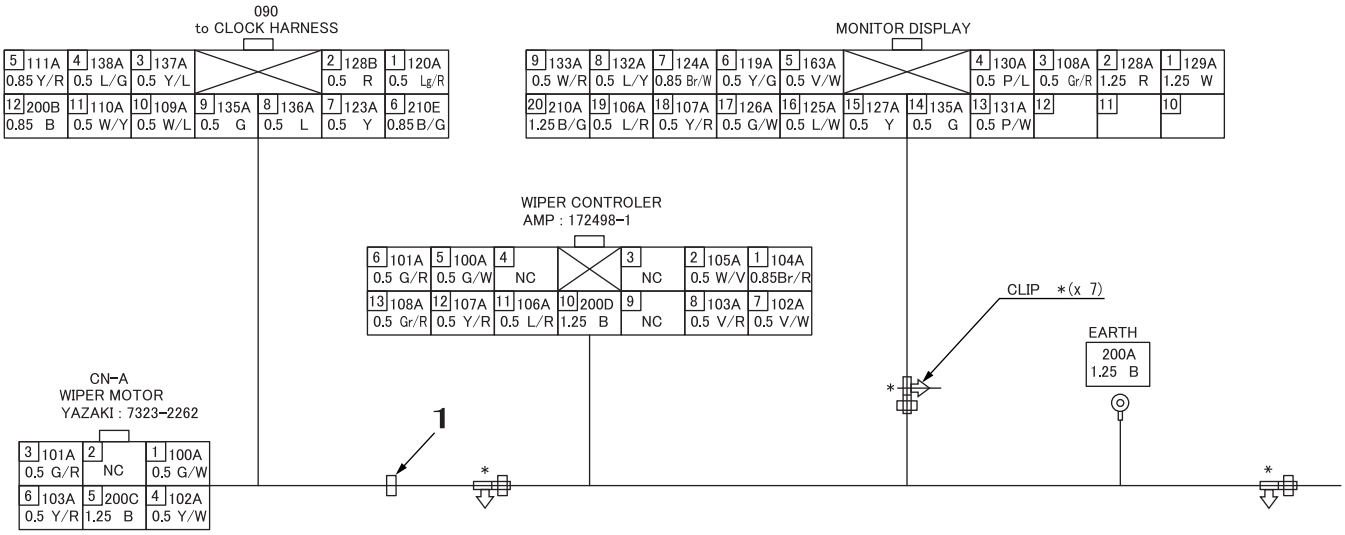

SE04012-001

https://truckmanualshub.com/

Electrical Connector Wiring Diagram

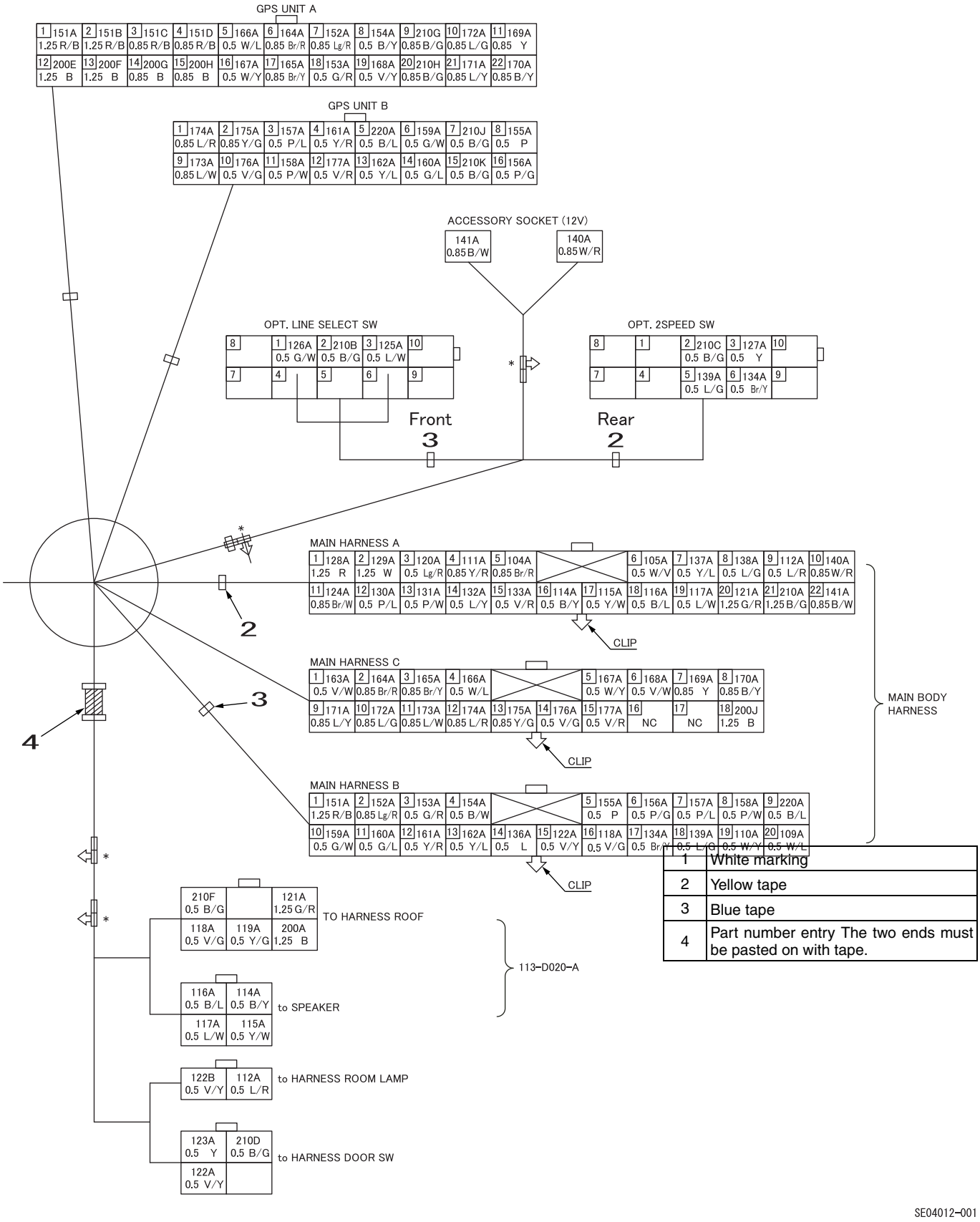

https://truckmanualshub.com/

4. Engine Harness

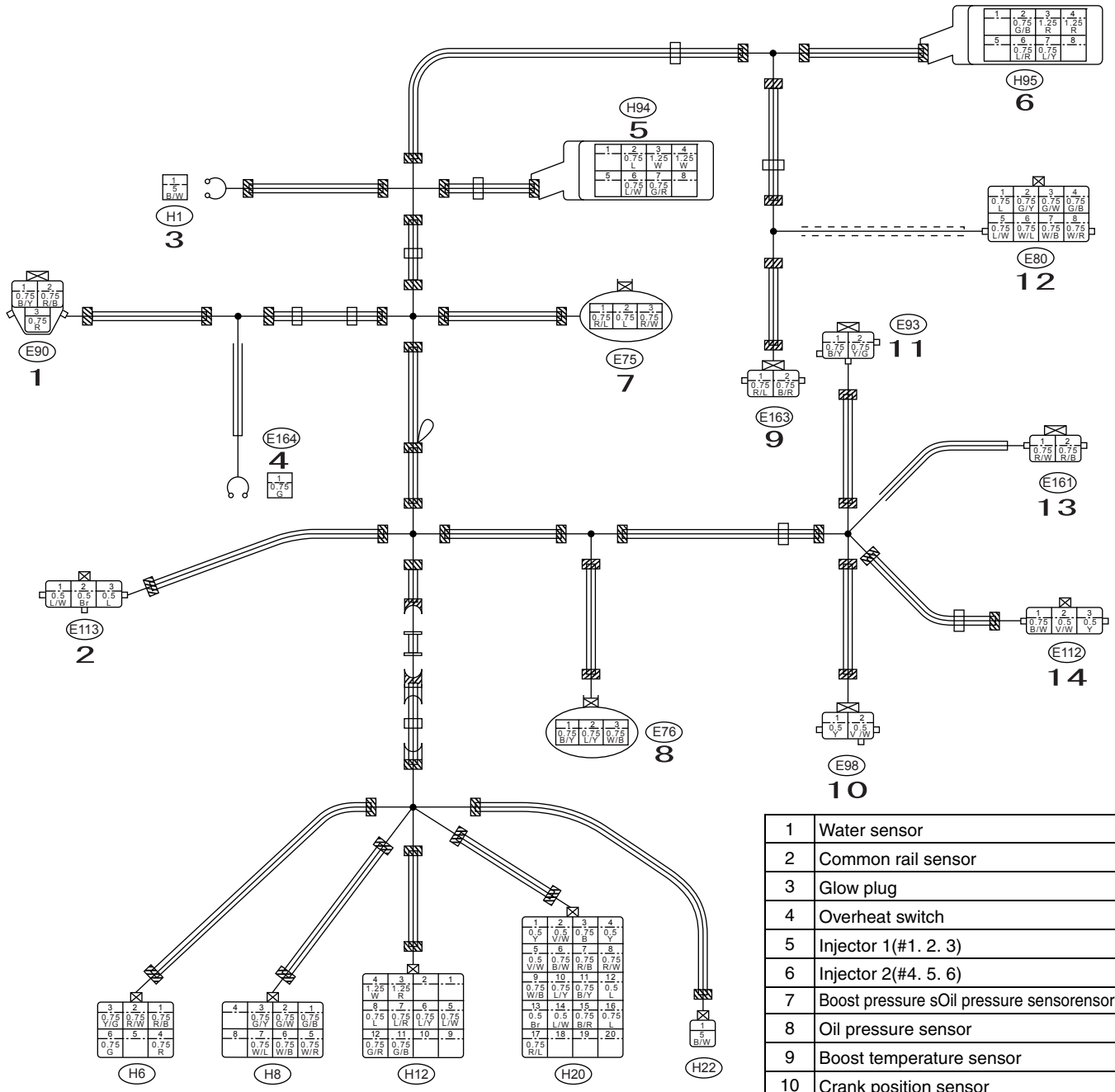

1	Water sensor
2	Common rail sensor
3	Glow plug
4	Overheat switch
5	Injector 1(#1. 2. 3)
6	Injector 2(#4. 5. 6)
7	Boost pressure sOil pressure sensorensor
8	Oil pressure sensor
9	Boost temperature sensor
10	Crank position sensor
11	Fuel temperature sensor
12	EGR valve
13	SCV
14	Cam angle sensor (G)

SE04012–002

https://truckmanualshub.com/

Electrical Connector Wiring Diagram

Console

1. Console Right Harness

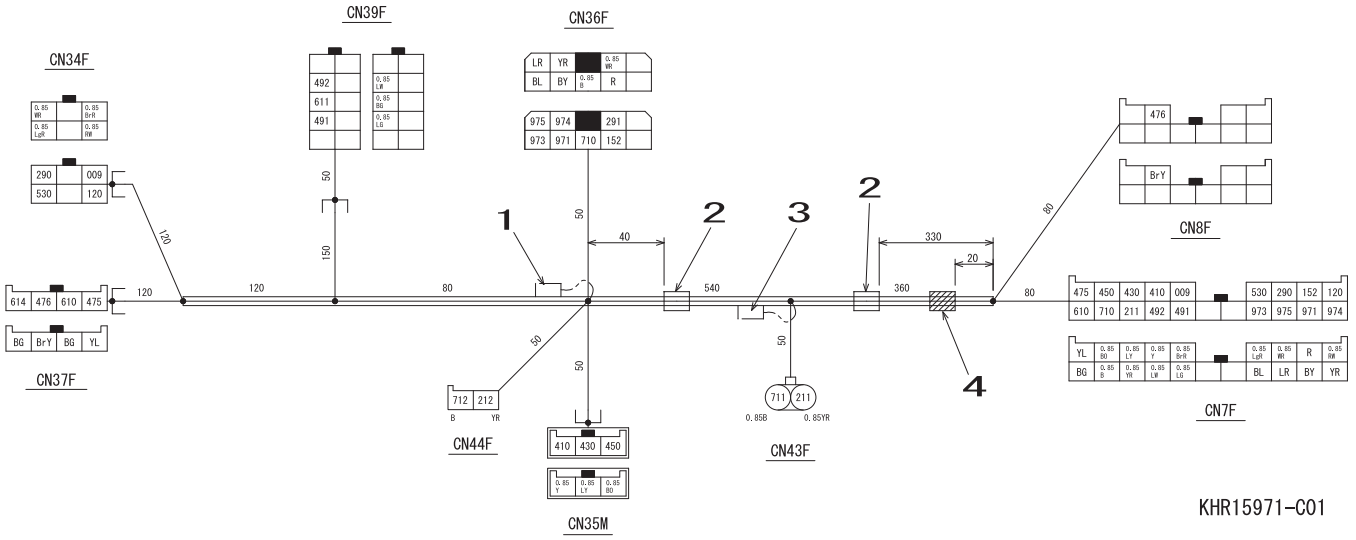

1	Fix connector (CN.44F) with red tape.
2	White tape
3	Fix connector (CN.43F) with red tape.
4	Position of label

CN.7F	Cab main harness: A
CN.8F	Cab main harness: B
CN.34F	Starter switch
CN.35M	Throttle volume
CN.36F	Radio
CN.37F	Knob (right) switch
CN.39F	Crane switch
CN.43F	KAB seat
CN.44F	Diode

2. Console Left Harness

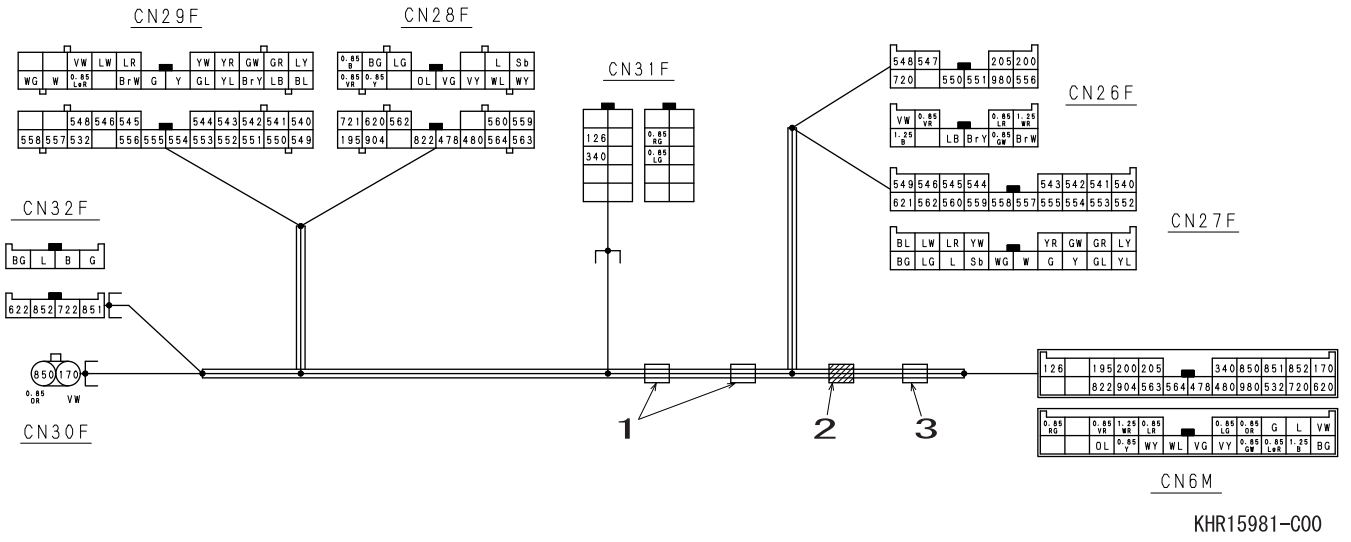

1	White tape
2	Position of labelPosition of label
3	Red tape

CN.6M	Cab harness
CN.26F	Air Conditioner unit: A
CN.27F	Air Conditioner unit: B
CN.28F	Air Conditioner panel: A
CN.29F	Air Conditioner panel: B
CN.30F	Limit switch
CN.31F	Engine stop SW
CN.32F	Knob (left) switch

https://truckmanualshub.com/

Electrical Parts and Wiring Assembly Diagram

Main Frame

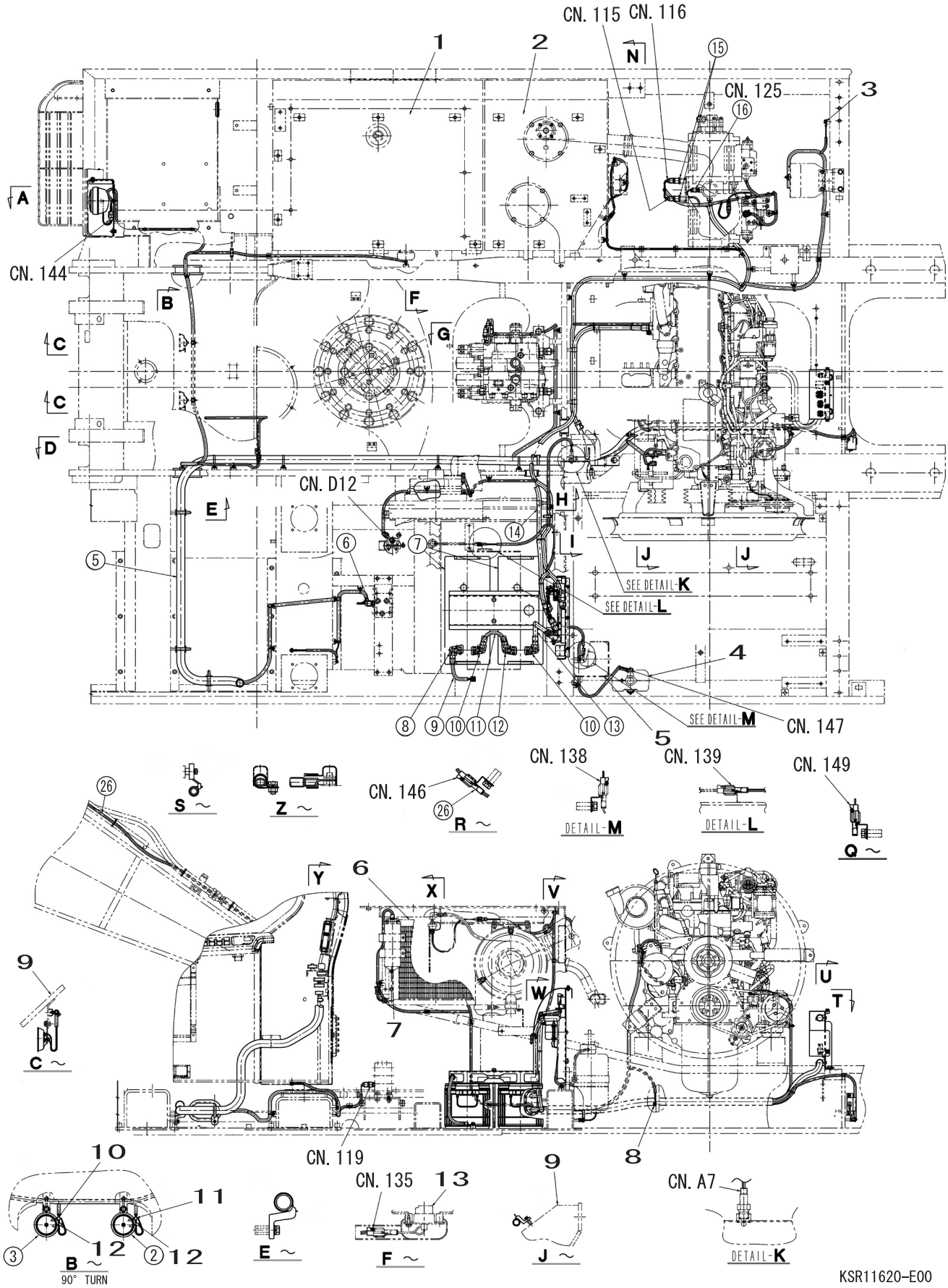

https://truckmanualshub.com/

Electrical Parts and Wiring Assembly Diagram

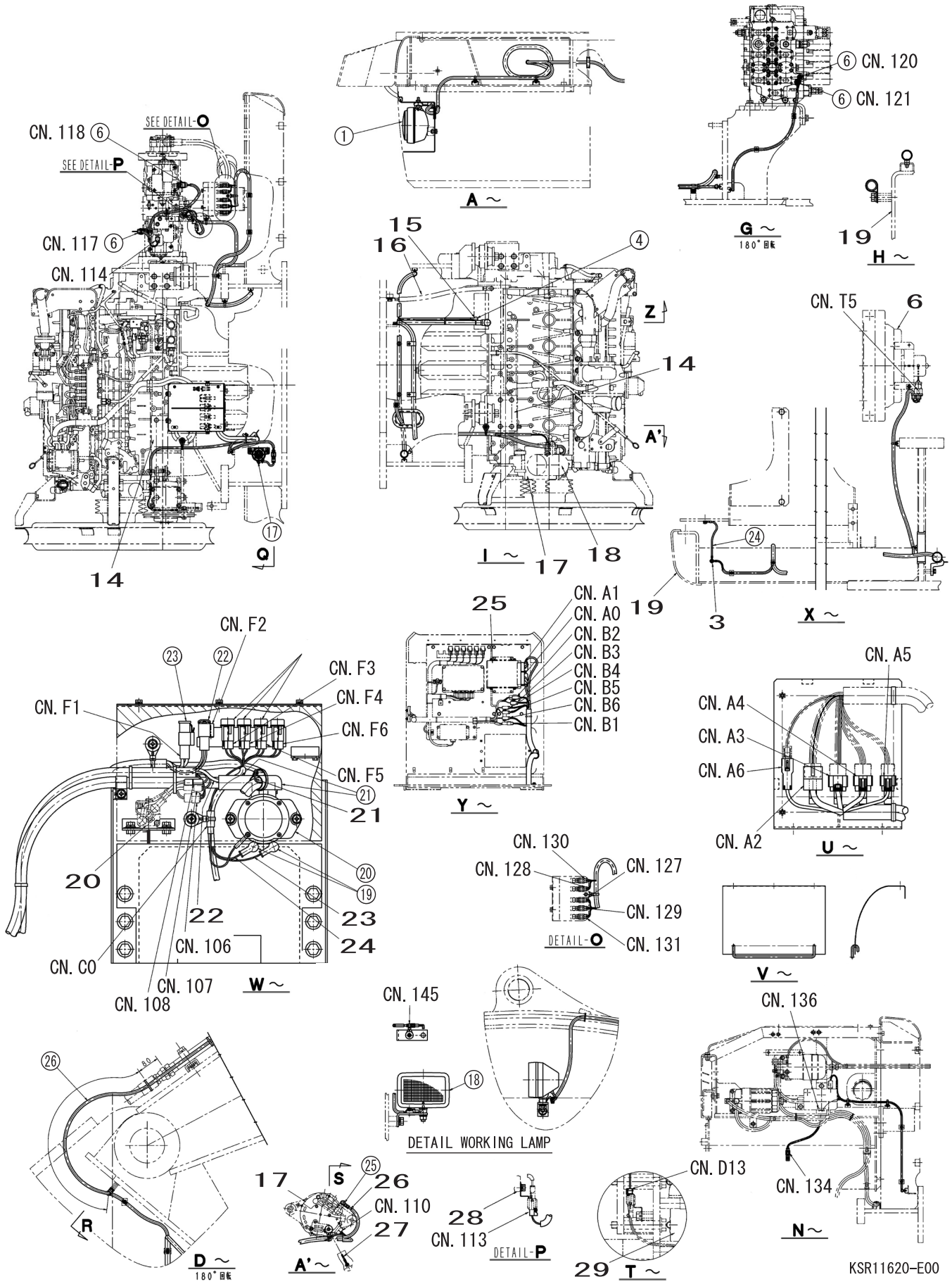

https://truckmanualshub.com/

Electrical Parts and Wiring Assembly Diagram

Code	Part name	Q'ty
1	Working light 24 V × 70 W	1
2	Horn; Electric (low)	1
3	Horn; Electric (high)	1
4	Terminal cap M5 × 3.8	1
5	Wire harness; Frame (Main)	1
6	Pressure sensor (5 MPa)	5
7	Battery 180G51 with terminal	2
8	Terminal cap (black)	1
9	Battery cable; Ground	1
10	Terminal cap (red)	2
11	Battery cable; Bridge	1
12	Terminal cap (red)	1
13	Battery cable; B+ (Relay)	1
14	Battery cable; Relay (Starter)	1
15	Pressure sensor (50 MPa)	2
16	Thermo-sensor	1
17	Travel alarm	1
18	Working light	1
19	Terminal cap M4 × 2.0	2
20	Battery relay	1
21	Terminal cap	2
22	Fuse; High current (Model A3)	1
23	Fuse (fusible link)	1
24	Ground wire; Floor	1
25	Terminal cap M6 × 5.3	1
26	Wire harness; Light (Main frame)	1

1	Fuel tank
2	Sump tank
3	Round terminal M8; Ground G2
4	Window washer tank
5	Reserve tank
6	Condenser (with electric fan)
7	Dryer receiver
8	Round terminal M8; Alternator ground
9	Swing frame
10	Wire color: red stripe on yellow background
11	Wire color: red stripe on blue background
12	Wire color: black
13	Fuel sensor
14	Engine support; Front
15	C starter motor (round terminal M5)
16	Engine ground (attached to engine main unit)
17	Alternator (attached to engine main unit)
18	Inlet pipe bracket (air cleaner)
19	Platform (L)
20	AEH0017 safety relay (attached to engine main unit)
21	Wire color: white stripe on red background
22	Wire color: red Wire color: red stripe on blue background Wire color: red stripe on green background
23	Wire color: red stripe on white background
24	Wire color: red stripe on light green background
25	Engine controller
26	Round terminal M6; Alternator B (wire color: red)
27	Round terminal M5; Alternator E (wire color: black)
28	Hydraulic pump
29	Air conditioner compressor
30	Starter motor (attached to engine main unit)

CN. 106	Safety relay S, R, E: 3-pin
CN. 107	Safety relay B: 1-pin
CN. 108	Safety relay C: 1-pin
CN. 110	Alternator L, R: 2-pin
CN. 113	Pump electromagnetic proportional valve: 2-pin
CN. 114	Pump proportional valve: 2-pin
CN. 115	Pressure sensor P1: 3-pin (no ID tape)
CN. 116	Pressure sensor P2: 3-pin (yellow ID tape)
CN. 117	Pressure sensor: 3-pin
CN. 118	Pressure sensor: 3-pin
CN. 119	Pressure sensor: 3-pin
CN. 120	Pressure sensor: 3-pin (blue ID tape)
CN. 121	Pressure sensor: 3-pin (red ID tape)
CN. 125	Oil temperature sensor: 2-pin
CN. 127	Lock lever SOL. V: 2-pin (yellow ID tape)
CN. 128	Swing brake SOL. V: 2-pin (white ID tape)
CN. 129	2-stage travel SOL. V: 2-pin (red ID tape)
CN. 130	2-stage relief SOL. V: 2-pin (yellow ID tape)
CN. 131	Power save SOL. V: 2-pin (green ID tape)
CN. 134	Filter indicator: 2-pin
CN. 135	Fuel sensor: 2-pin
CN. 136	Electromagnetic fuel pump: 2-pin
CN. 138	Reserve tank: 2-pin
CN. 139	Vacuum sensor: 2-pin
CN. 144	Housing lamp: 2-pin
CN. 145	Boom light: 2-pin (The connector should be fastened with an M6 clamp with a band (S).)
CN. 146	Boom light harness: 2-pin
CN. 147	Washer motor: 2-pin
CN. 149	Travel alarm: 2-pin
CN. A0	Engine controller C-1: 81-pin
CN. A1	Engine controller C-2: 40-pin
CN. A2	Engine harness A: 20-pin
CN. A3	Engine harness B: 12-pin
CN. A4	Engine harness C: 8-pin
CN. A5	Engine harness D: 6-pin
CN. A6	Engine harness E: 1-pin
CN. A7	Suction air temperature sensor: 2-pin
CN. B1	Cab main harness A: 2-pin
CN. B2	Cab main harness B: 8-pin
CN. B3	Cab main harness C: 18-pin
CN. B4	Cab main harness D: 22-pin
CN. B5	Cab main harness E: 20-pin
CN. B6	Cab main harness F: 14-pin
CN. C0	Battery relay ground: 1-pin (The connector should be fastened with an M8 clamp with a band (S).)
CN. D12	Receiver dryer: 2-pin
CN. D13	Air conditioner compressor: 1-pin
CN. F1	Fusible link: 2-pin
CN. F2	Fusible link: 2-pin (yellow ID tape)
CN. F3	Key fuse: 2-pin (no ID tape)
CN. F4	ECM fuse: 2-pin (red ID tape)
CN. F5	CONT fuse: 2-pin (blue ID tape)
CN. F6	GPS fuse: 2-pin (yellow ID tape)
CN. T5	Condenser fan: 2-pin

https://truckmanualshub.com/

Electrical Parts and Wiring Assembly Diagram

Cab

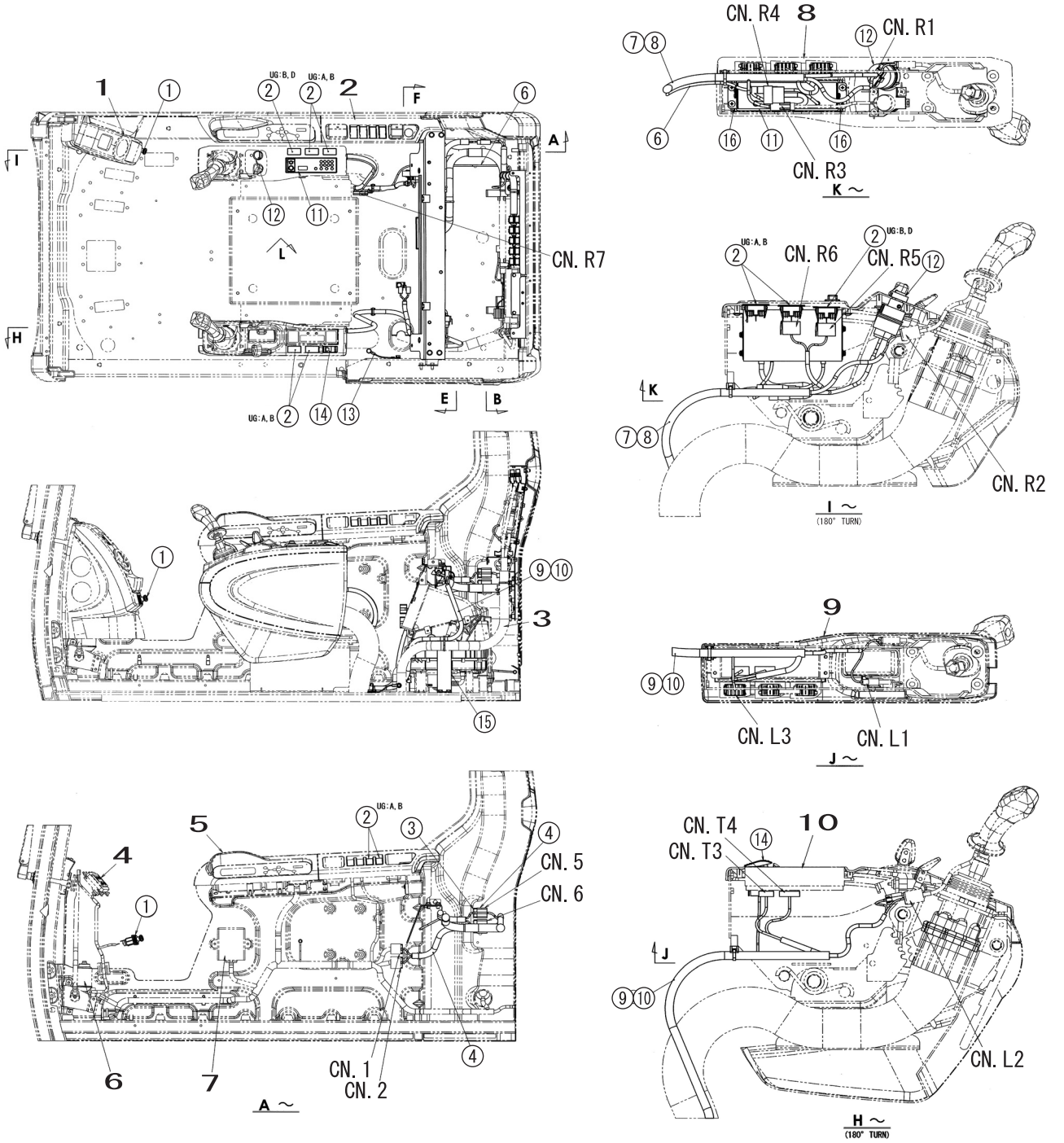

KHR14220-E04

https://truckmanualshub.com/

Electrical Parts and Wiring Assembly Diagram

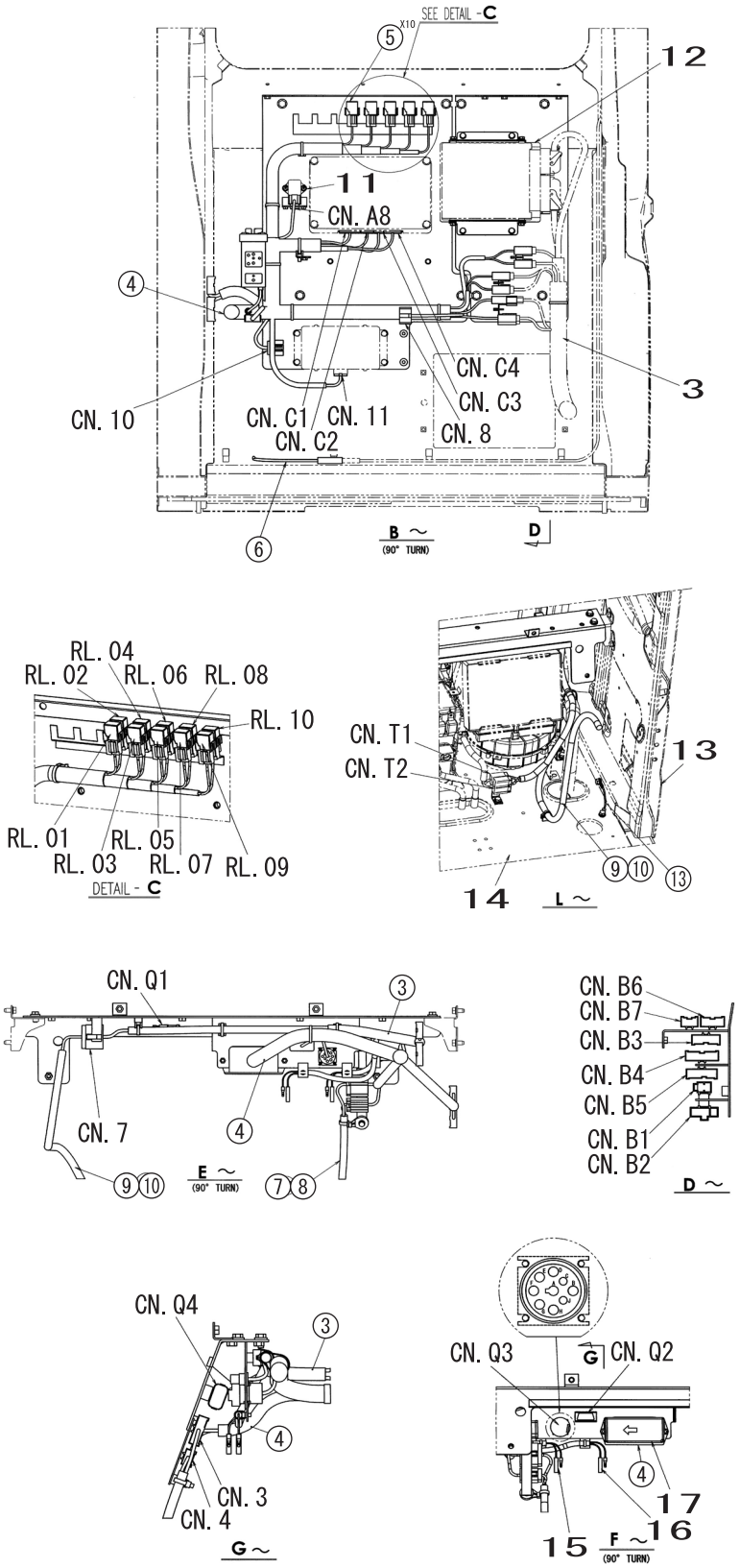

Code	Part name	Q'ty
1	Automatic lighter	1
2	Cap; Blind (rocker switch)	7
3	Wire harness; Cab (Sub)	1
4	Wire harness; Cab (Main)	1
5	Relay; Changeover (24 V)	10
6	Antenna code	1
7	Wire harness; Console (right)	1
8	Wire harness; Short console (right)	1
9	Wire harness; Console (left)	1
10	Wire harness; Short console (left)	1
11	Car radio; AM/FM ST (12/24 V) JPN	1
12	Switch; Starter (assembly)	1
13	Ground wire; Cab	1
14	Switch; Rocker (E. STOP)	1
15	Bracket; Harness	1
16	Bracket; Radio	2

1	Trim; Front (upper)
2	Trim; Side (upper)
3	Frame main harness
4	Clock
5	Monitor display
6	Wiper motor (cab accessory)
7	Wiper controller (cab accessory)
8	Cover; Top (Console right)
9	Cover; Top (Console left)
10	Air conditioner panel
11	Atmospheric pressure sensor (engine accessory)
12	Engine controller (engine accessory)
13	Operators cab
14	Floor
15	Knob (memory clear) white ID tape
16	Knob (diagnostic switch) red ID tape
17	Fuse box (cab main harness accessory)

KHR14220-E04

https://truckmanualshub.com/

Electrical Parts and Wiring Assembly Diagram

CN. 1	Cab harness A: 14-pin
CN. 2	Cab harness B: 18-pin
CN. 3	Right console harness A; 18-pin
CN. 4	Right console harness B; 10-pin
CN. 5	Cab sub-harness A: 22-pin
CN. 6	Cab sub-harness B: 18-pin
CN. 7	Left console harness: 22-pin
CN. 8	Liftcrane harness: 14-pin
CN. 10	GND connector: 6-pin
CN. 11	DC converter: 7-pin
CN. A8	Atmospheric pressure sensor: 3-pin
CN. B1	Frame main harness A: 2-pin
CN. B2	Frame main harness B: 8-pin
CN. B3	Frame main harness C: 18-pin
CN. B4	Frame main harness D: 22-pin
CN. B5	Frame main harness E: 20-pin
CN. B6	Frame main harness F: 14-pin
CN. B7	Option line harness: 10-pin
CN. C1	Computer CN-1: 26-pin
CN. C2	Computer CN-2: 16-pin
CN. C3	Computer CN-3: 12-pin
CN. C4	Computer CN-4: 22-pin
CN. L1	Limit switch: 2-pin
CN. L2	Left knob switch: 8-pin
CN. L3	Engine stop SW: 10-pin
CN. Q2	Diagnostic: 16-pin
CN. Q3	EST connector: 12-pin
CN. Q4	Maintenance connector: 12-pin
CN. R1	Starter switch: 6-pin
CN. R2	Right knob switch: 8-pin
CN. R3	Throttle volume: 3-pin
CN. R5	Rocker switch 1: 10-pin
CN. R6	Rocker switch 2: 10-pin
CN. R7	KAB seat: 2-pin (fastened with red tape)
CN. T1	Air conditioner unit A: 10-pin
CN. T2	Air conditioner unit B: 18-pin
CN. T3	Air conditioner panel A: 14-pin
CN. T4	Air conditioner panel B: 22-pin
CN. Q1	J1939: 3-pin (fastened with red tape)
CN. R4	Radio: 9-pin
RL. 01	Main
RL. 02	Glow (white marking)
RL. 03	Lamp 1
RL. 04	Lamp 2 (white marking)
RL. 05	Horn L
RL. 06	Horn R (white marking)
RL. 07	Speaker R
RL. 08	Speaker L (white marking)
RL. 09	Room lamp
RL. 10	Beacon (white marking)

https://truckmanualshub.com/

Explanation of Electrical Functions

Item	Control		Contents
Engine Speed Control	1.	Throttle Control	The engine speed, work mode, and boosted pressure state are switched by the throttle volume.
	2.	Idling Control (auto/one-touch)	With auto/one-touch switchover function
	3.	Idling Start	Runs the engine at low idle speed when it starts up.
	4.	Auto Warm-up	If the coolant temperature is low, warm-up operation is executed automatically when the engine starts
Engine Start/ Stop Control	1.	Engine Start/Stop Judgment	Judgment based on engine speed from ECM
	2.	Power-cut Delay	When key ON → OFF, 4-second delay; when engine running → OFF, 7-second delay
	3.	Engine Emergency Stop	When the emergency stop switch is pressed, the ECM recognizes this and stops the engine.
	4.	Neutral Start	Engine start load (cell not turning) when lever locked.
Pump Control	1.	Work Mode Control	Linked with the throttle, the SP/H/A mode is switched over and the pump horsepower is controlled.
	2.	Pump Horsepower Boost Control	Controls pump horsepower milli-amp in accordance with the work mode selected.
	3.	Pump Horsepower Cut Control	The milli-amp for pump horsepower control proportional valve is reduced by the transient load control, engine stall prevention control, and PID control conditions.
	4.	Power Save Control	The negative control relief pressure for non-operation is varied and the negative control pressure is lowered to reduce the pump load.
Swing	1.	Swing Brake	When the upper and swing are not operated, the swing brake is operated automatically and during travelling too.
	2.	Swing Free Swing (option for North America)	Swing option for North America
	3.	Swing Lock (for maintenance)	There is a swing lock function (for servicing) with monitor operations.
	4.	Swing Relief Cut	When a swing starts, the flow is reduced with the front side proportional valve and the excess oil is eliminated.
	5.	Swing Speed Limit	The front side flow is controlled to suppress the speed rise due to increased pump flow.
Travel	1.	Travel Speed Switchover	Travel speed low-speed/high-speed switchover
	2.	Travel Alarm	Buzzer sounded (for 10 sec.) during travel
Valve Control	1.	Lever Lock	Operation is not possible unless the gate lever is raised.
	2.	Solenoid Sticking Prevention	When key ON, solenoid switched ON/OFF for 0.25 sec.
	3.	Pressure Boost Control	The computer automatically raises the pressure from 34.3 MPa to 36.8 MPa when necessary.

https://truckmanualshub.com/

Explanation of Functions and Operations

Item	Control		Contents
Monitor Control	1.	Bar Graph (coolant temperature gauge, oil temperature gauge, fuel gauge)	Bar graph display of coolant temperature, oil temperature, and fuel level on monitor
	2.	Monitor Function	Output port control method change, liftcrane and option screen added to display screens, etc.
Accessories	1.	Horn	Switching between 1 or 2 horns with horn volume select switch
	2.	Working Light	Right housing and boom light illumination (option setting for 2 lights at top of cab)
	3.	Wiper and Washer	Wiper with rise-up used (intermittent, continuous, washer). Same one used as for Model 3
	4.	Room Lamp	The room lamp lights up when the door is opened and lights up for exactly 30 sec. from when the door is opened with the key OFF.
	5.	Radio Mute	Mute switch setting on the knob
Other	1.	Anti-theft	Anti-theft set with password input to monitor
	2.	Battery Save Function	When the key is ON, no output to travel switchover, boost, power save, bucket lock, option switchover and free swing solenoid valve.
	3.	Alternator Power Generation Detection	Alternator L terminal voltage judged with 10 V comparator
	4.	Overload Warning	Only mounted on machines for Europe.
Options	1.	Option line control	Switchover crusher ⇔ breaker with just rocker switch in cab
	2.	Option Line Control	There are 5 flow settings each for the breaker and crusher, for a total of 10 settings.
	3.	Feed Pump Automatic Stop	Feed pump automatic stop. Full tank detected by fuel level sensor and the pump stopped automatically
	4.	Return Filter Clogging Detected	Warning issued when return filter clogged (only for breaker specifications)
	5.	Beacon	Standard for Europe, Japan liftcrane specifications
	6.	DC-DC converter	Convert 24 V into 12 V.

https://truckmanualshub.com/

Engine Speed Control

1. Throttle Control

(1) Throttle display

[1] Configuration

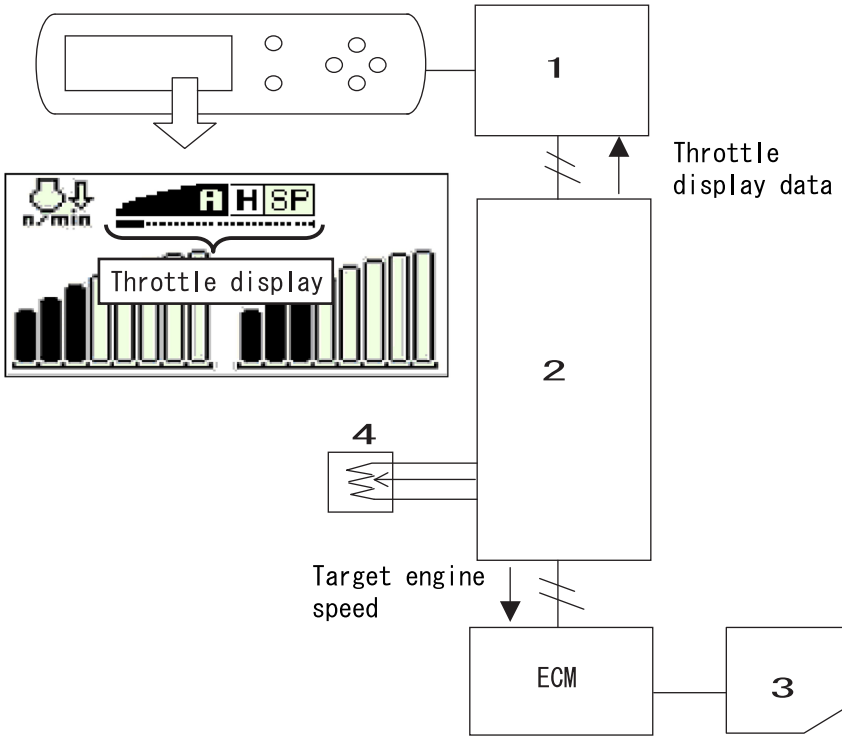

RST-05-06-001a

1	Monitor	3	Engine
2	Computer A	4	Throttle volume

[2] Summary

The throttle volume voltage signal is first input to computer A. Computer A converts the voltage signal to a target speed and sends it to the ECM via CAN communication.
At the same time, computer A sends the throttle display data to the monitor.

(2) Throttle volume position detection

[1] Configuration

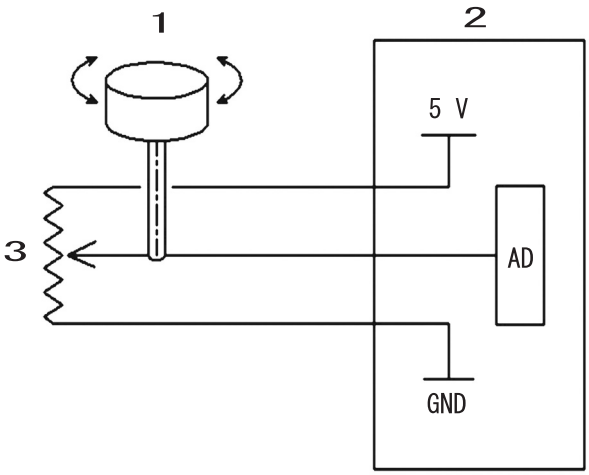

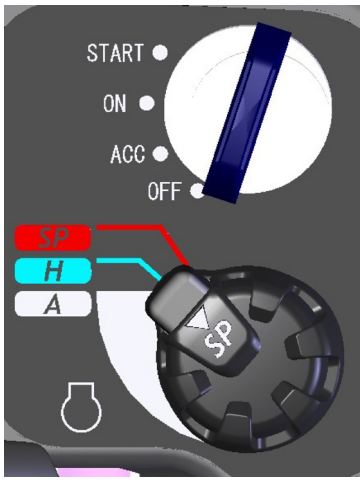

RE06004-012

1	Throttle volume
2	Computer A
3	Potentio-meter

https://truckmanualshub.com/

[2] Structure

The detent and notches provide a click feel. (15 notches; Notch 1 is the "SP mode" position.)

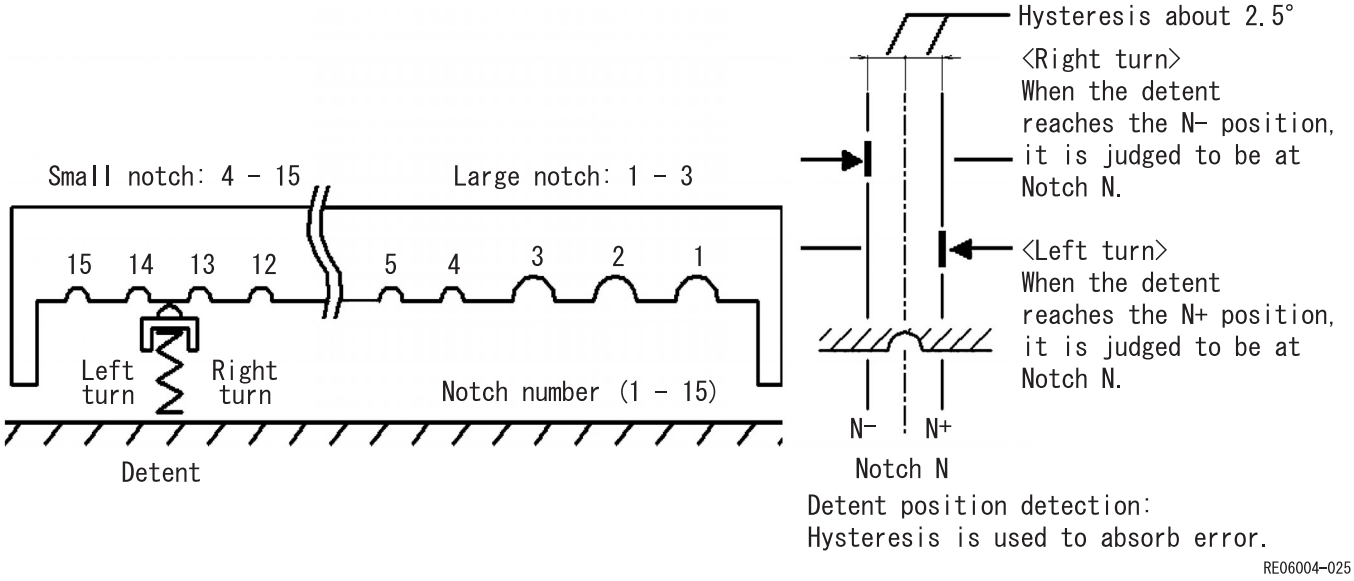

[3] Characteristic

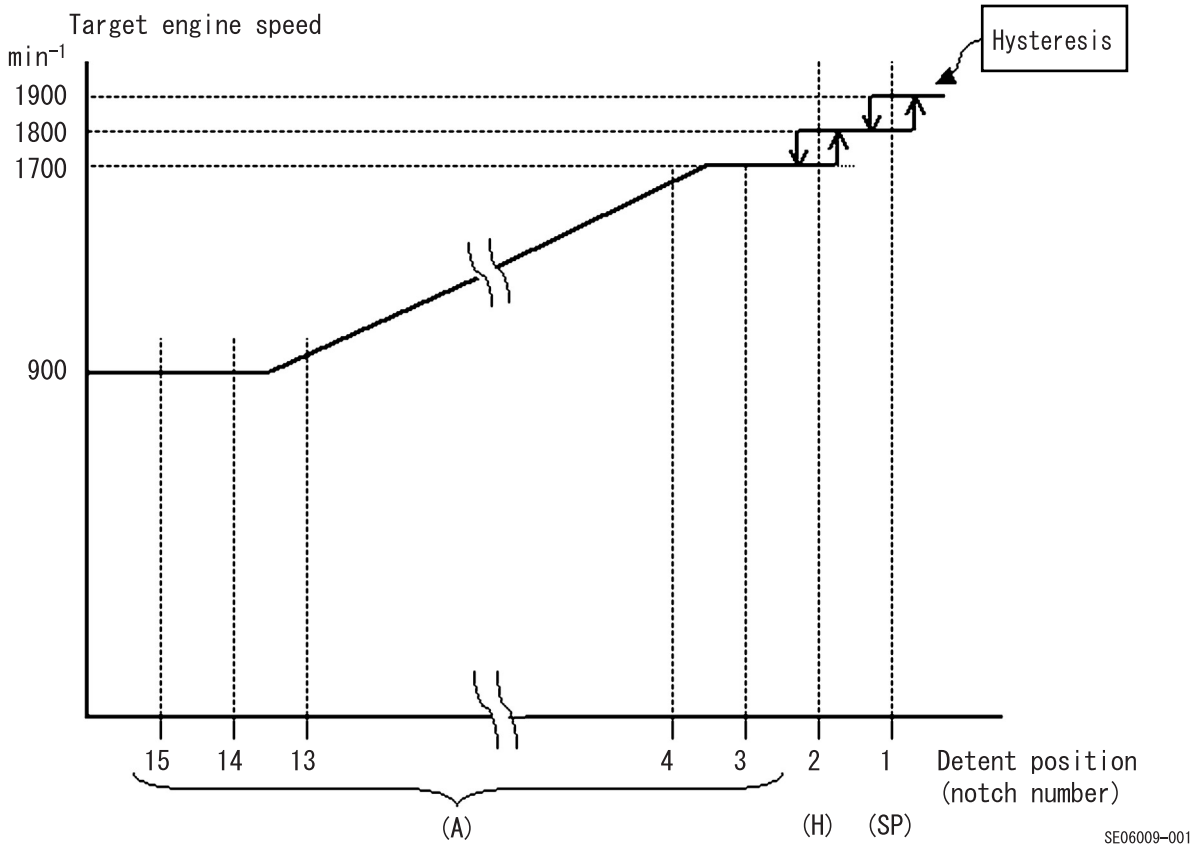

https://truckmanualshub.com/

[4] Potentio-meter characteristic

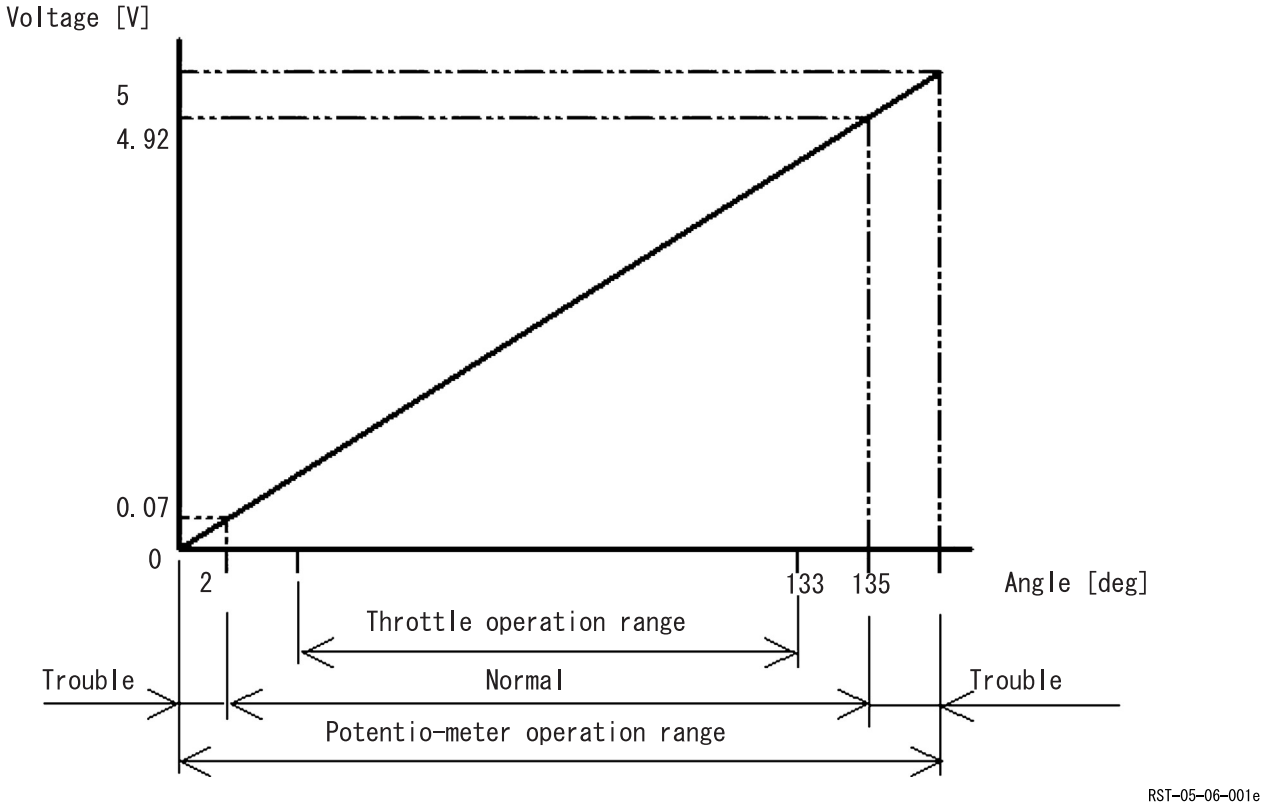

[5] Throttle volume degree of opening calculation

The throttle volume degree of opening (%) that can be checked on the CHK screen is calculated with the standard below.

100 % … When the detent is in the 1 + position

0 % … When the detent is in the 15 - position

Therefore, even if the detent is in the 1 position (SP), this does not necessarily mean that the degree of opening is 100 %.

In the same way, even if the detent is in the 15 position, the degree of opening is not necessarily 0 %.

https://truckmanualshub.com/

[6] List table

For the angle, voltage, and degree of opening for each detent position, see the following table.

Detent	Angle [deg]	Voltage [V]	Degree of opening [%]
1+	131.2	4.86	100.0
1	128.7	4.77	98.0
1-	126.2	4.67	96.1
2+	109.6	4.06	83.0
2	107.1	3.97	81.1
2-	104.6	3.87	79.1
3+	95.2	3.53	71.7
3	92.7	3.43	69.8
3-	90.2	3.34	67.8
4+	88.0	3.26	66.1
4	85.5	3.17	64.1
4-	83.0	3.07	62.2
5+	80.8	2.99	60.4
5	78.3	2.90	58.5
5-	75.8	2.81	56.5
6+	73.6	2.73	54.8
6	71.1	2.63	52.8
6-	68.6	2.54	50.9
7+	66.4	2.46	49.1
7	63.9	2.37	47.2
7-	61.4	2.27	45.2
8+	59.2	2.19	43.5
8	56.7	2.10	41.5
8-	54.2	2.01	39.6
9+	52.0	1.93	37.8
9	49.5	1.83	35.9
9-	47.0	1.74	33.9
10+	44.8	1.66	32.2
10	42.3	1.57	30.2
10-	39.8	1.47	28.3
11+	37.6	1.39	26.5
11	35.1	1.30	24.6
11-	32.6	1.21	22.6
12+	30.4	1.13	20.9
12	27.9	1.03	18.9
12-	25.4	0.94	17.0
13+	23.2	0.86	15.2
13	20.7	0.77	13.3
13-	18.2	0.67	11.3
14+	16.0	0.59	9.6
14	13.5	0.50	7.6
14-	11.0	0.41	5.7
15+	8.8	0.33	3.9
15	6.3	0.23	2.0
15-	3.8	0.14	0.0

https://truckmanualshub.com/

2. Idling Control (auto/one-touch)

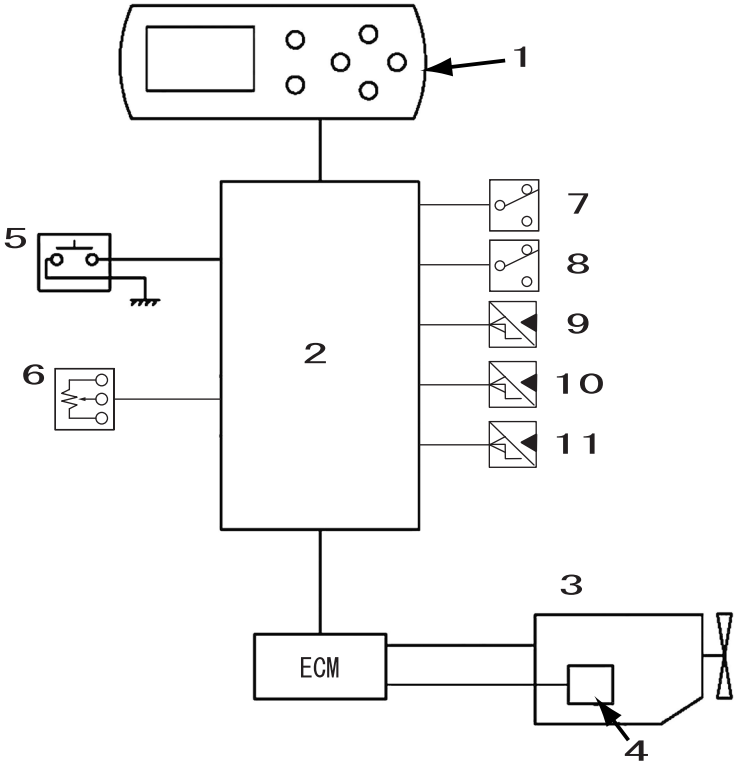

RE06009-002

1	Monitor display	5	One-touch idle switch	9	Pressure sensor (upper)
2	Computer A	6	Throttle volume	10	Pressure sensor (swing)
3	Engine	7	1st option pressure switch	11	Pressure sensor (travel)
4	Coolant temperature sensor	8	2nd option pressure switch		

Operation explanation

[1] Auto/one-touch switchover function

The operator can switch between one-touch and auto by pressing the auto idle switch on the monitor in the diagram below.

When auto idle is ON, the LED at the side of the switch lights up.

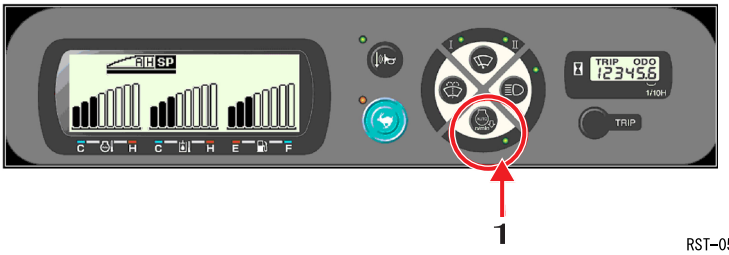

RST-05-06-001g

1	Auto idle switch

[2] Auto idle control

1) When auto idle is set, if the lever is left continuously unoperated for 5 sec., the engine speed automatically becomes the auto idling speed (1200 min^{-1}).

* This 5-second setting for auto idle operation is the default setting value. This setting can be changed to from 1 - 30 sec. with service support operations.

2) When the lever is operated, the engine speed is automatically returned to the engine speed set for the throttle volume.

3) Even with auto idle set, it is possible to move to auto idle or return from auto idle by pressing the knob switch (one-touch idle switch) on the right operation lever.

https://truckmanualshub.com/

[3] One-touch idle control
When auto idle is not set, regardless of lever operation, it is possible to move to auto idle or return from auto idle by pressing the knob switch (one-touch idle switch) on the right operation lever.
The idling speed for one-touch idle control is 900 min^{-1}.

[4] Idling speed

1) Auto idling speed 1200 min^{-1}
2) One-touch idling speed 900 min^{-1}
3) Low idling speed 900 min^{-1}

The speeds above are the default values. They can be set to from 900 - 1600 min^{-1} with service support operation. (See monitor operation procedures.) However, the settings are based on the following conditions.
Low idle speed = One-touch idle speed ≦ Auto-idle speed
(The one-touch idle speed and auto-idle speed settings can be changed.)

3. Idling Start

[1] When the engine starts, the engine speed becomes the low idle speed regardless of the throttle position.

[2] When the low idle speed is changed, the engine speed is controlled at this new speed.

[3] During an idling start, the "idling icon" is displayed at the top left of the monitor.
No message is displayed.

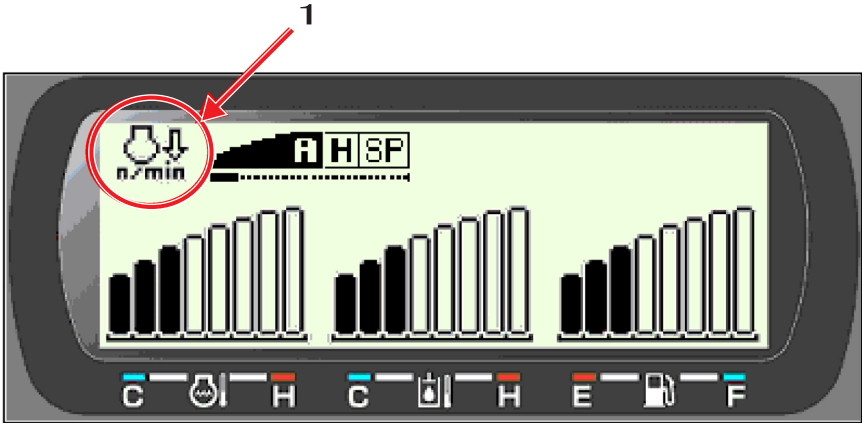

RST–05–06–001

1	Idling icon

[4] An idling start is ended in the following cases and control becomes normal.

1) When the one-touch idle switch is pressed
2) When the throttle volume is operated
3) When the operation lever is operated (upper, travel, swing pressure sensor ON)

[5] Back-up operation

1) Sensor trouble
If trouble occurs in a sensor (upper, travel, swing), idling start is ended.
2) Throttle volume trouble
Even if the throttle volume is operated, the idling start is not ended. Also, even if the idling start is ended with some other method, the throttle cannot be adjusted.
3) One-touch idle switch trouble
Even if the switch is pressed, the idling start is not ended.

https://truckmanualshub.com/

4. Auto Warm-up

If the coolant temperature is low when the engine starts up, warm-up operation is executed, automatically raising the engine speed in steps.

[1] Auto warm up is used if the coolant temperature is lower than 50 ℃ when the engine starts.

[2] If the coolant temperature is 50 ℃ or higher, auto warm up is not used and an "idling start" is executed.

[3] Operation

The engine speed is raised in steps from low idle speed up to 1900 min^{-1} as shown below.
When the low idle speed is changed, the engine speed starts from the newly set speed.
The warm-up time is the same, 14 min.
When the coolant temperature reaches 50 ℃ , the engine speed falls immediately to low idle. (Idling start)

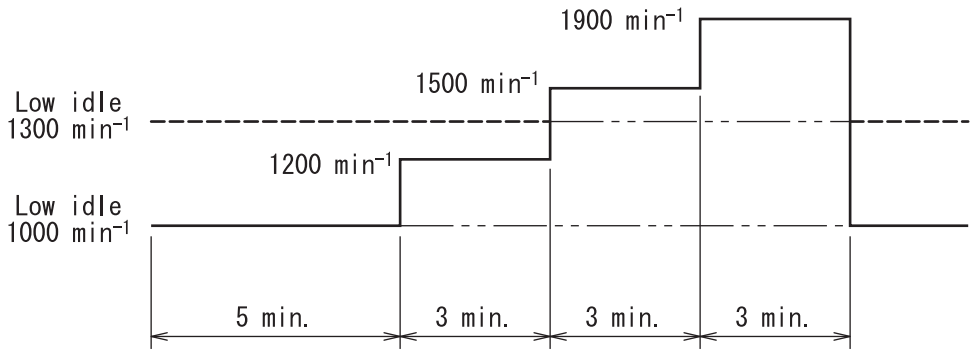

RE06009–003

[4] Monitor display

During auto warm up, the "auto warm up icon" is displayed at the top left of the monitor.

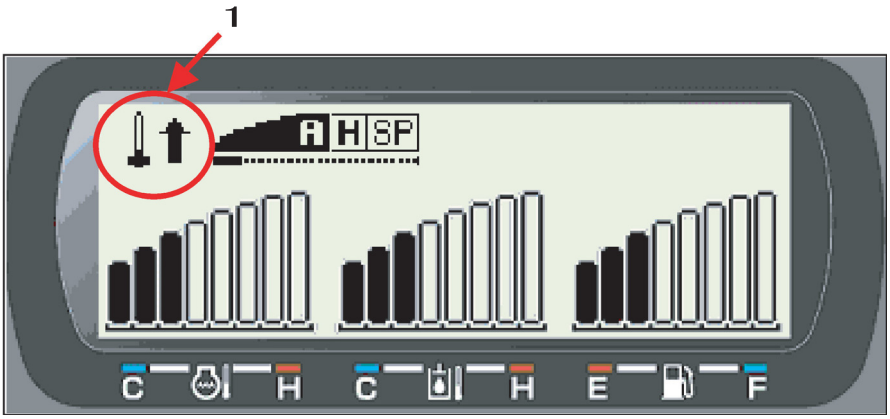

RST–05–06–001k

1	Auto warm up icon

https://truckmanualshub.com/

[5] In the cases below, auto warm up is ended and operation shifts to "idling start".

1) When the coolant temperature reaches 50 ℃
2) When the one-touch idle switch is pressed
3) When the entire auto warm up process ends (after 14 min.)

[6] In the cases below, auto warm up is ended and operation shifts to the engine speed for the throttle position.

1) When the lever is operated (as detected by a pressure sensor)
2) When the throttle volume is operated

[7] Back-up operation

1) Sensor trouble
   If trouble occurs in a sensor (upper, travel, swing, coolant temperature sensor), auto warm up is not operated. Also, even trouble occurs in a sensor partway through a warm up, the warm up is ended and operation shifts to normal control.
2) One-touch idle switch trouble
   Even if the switch is pressed, auto warm up is not ended.
3) Throttle volume trouble
   Even if the throttle volume is operated, the auto warm up is not ended.

https://truckmanualshub.com/

Engine Start/Stop Control

1. Engine Start/Stop Judgment

[1] Configuration

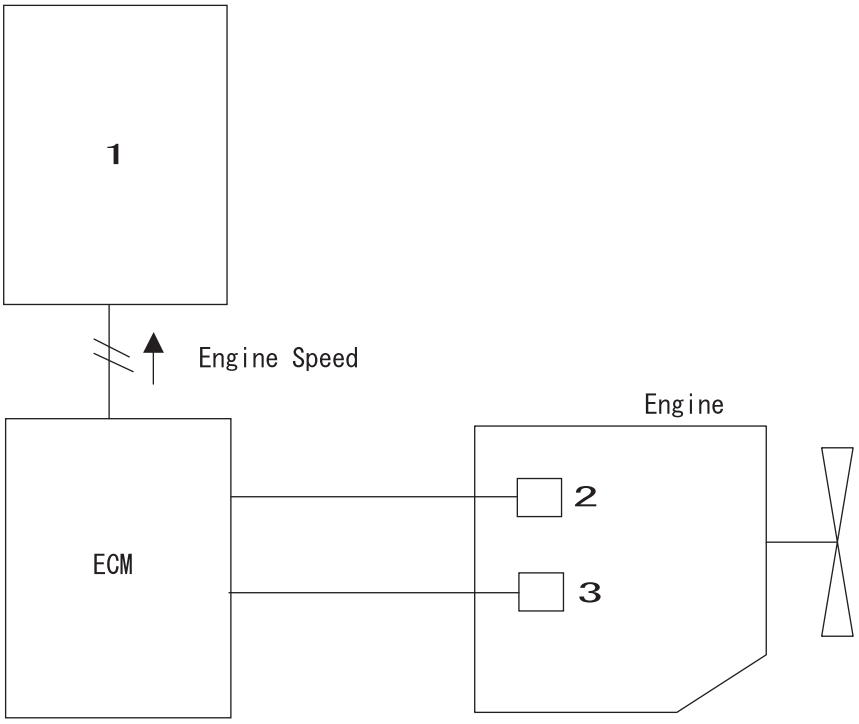

RST-05-06-0011

1	Computer A
2	Cam sensor
3	Crank sensor

[2] Summary

Engine start and stop is judged based on the engine speed sent from the ECM with CAN communication.

[3] Judgment values

Start 500 min^{-1}, stop 200 min^{-1}

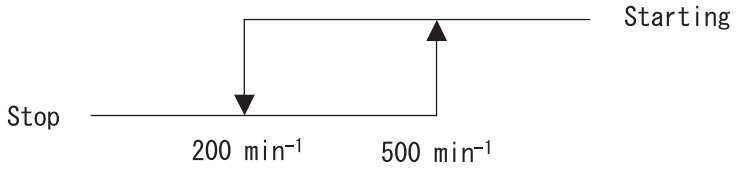

RE06004-026

☆) Concerning hysteresis: For Model 3B, judged at 500 min^{-1} with no hysteresis

https://truckmanualshub.com/

2. Power-cut Delay

[1] Configuration (fuses etc. omitted)

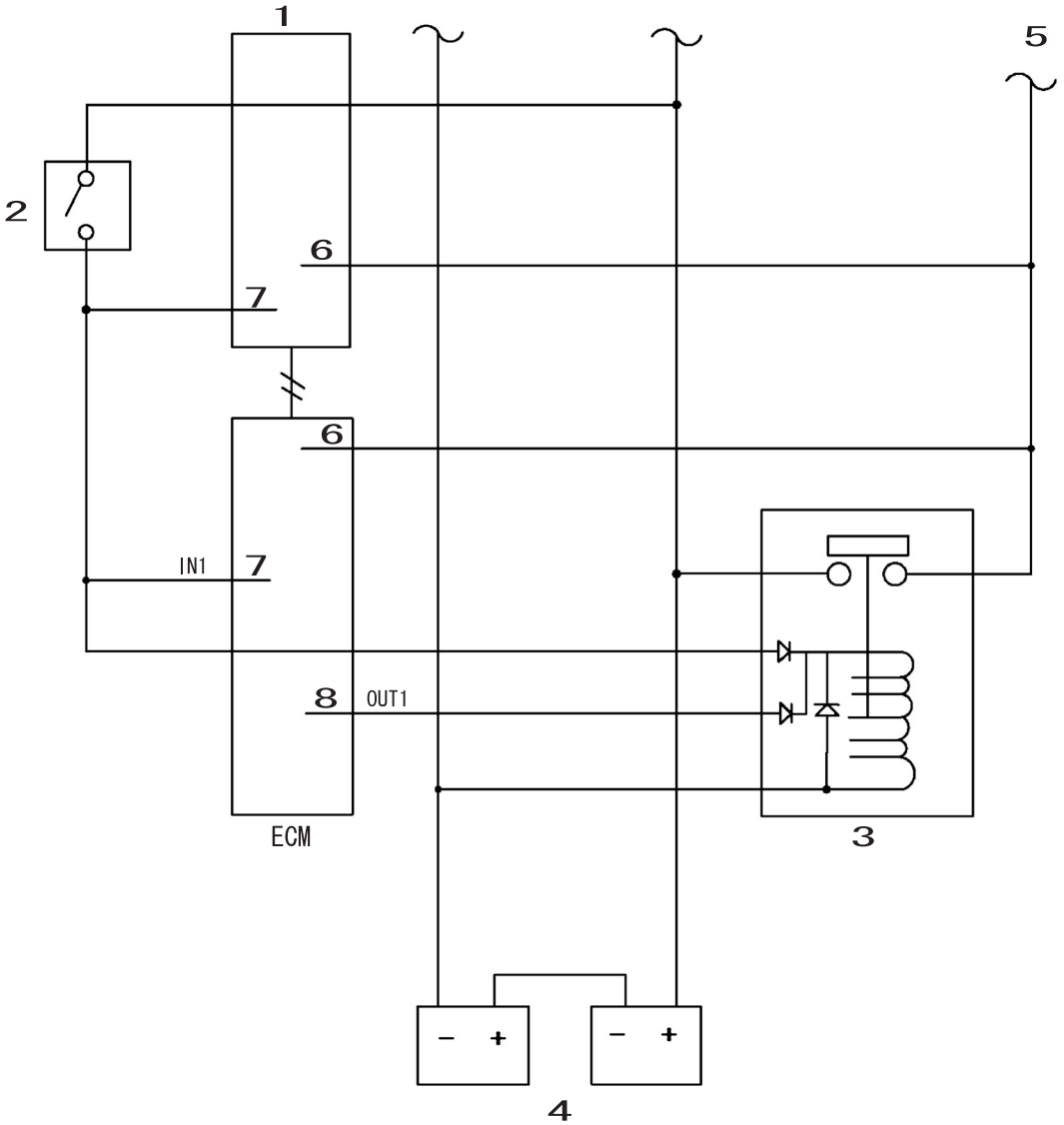

1	Computer A	5	Load A
2	Key switch	6	Power supply
3	Battery relay	7	Key switch signal
4	Battery	8	Battery relay hold

[2] Summary

After the key is switched OFF, after the battery relay is held for a certain period, the power supply is cut off.

[3] Purpose

1) This secures time after the key is switched OFF for data to be written in the EEPROM in the ECM and computer A.
2) This waits until the engine completely stops to avoid load dumping.

https://truckmanualshub.com/

[4] Operation

1) When the key is ON, the battery relay is held by the battery relay hold output (OUT1) from the ECM and the key switch.
2) After the key is switched OFF, the battery relay is only held by the ECM.
3) After it detects the key going OFF through the key switch signal input (IN1), the ECM starts the count down.
4) After a certain time has passed, the ECM stops output to the battery relay and the battery relay goes OFF.
   At the same time, the power supply to electrical parts, including the ECM and computer A is cut. (Except the backup power supply)
5) The time from the key being switched OFF until the power supply goes OFF (the delay time) depends on whether or not the engine was started.
   * After the key is switched ON, if the key is switched OFF without the engine being started = about 4 sec.
   * If the key is switched OFF after the engine was started = about 7 sec.

[5] Differences from Model 3B

With Model 3B, the main unit side computer (called computer A in Model 5) held the battery relay. With Model 5, the ECM bears this responsibility. (Engine manufacturer requirement)

3. Engine Emergency Stop

Function for stopping the engine in an emergency

When the emergency stop switch on top of the left console is pressed, the engine is stopped regardless of the key switch position.

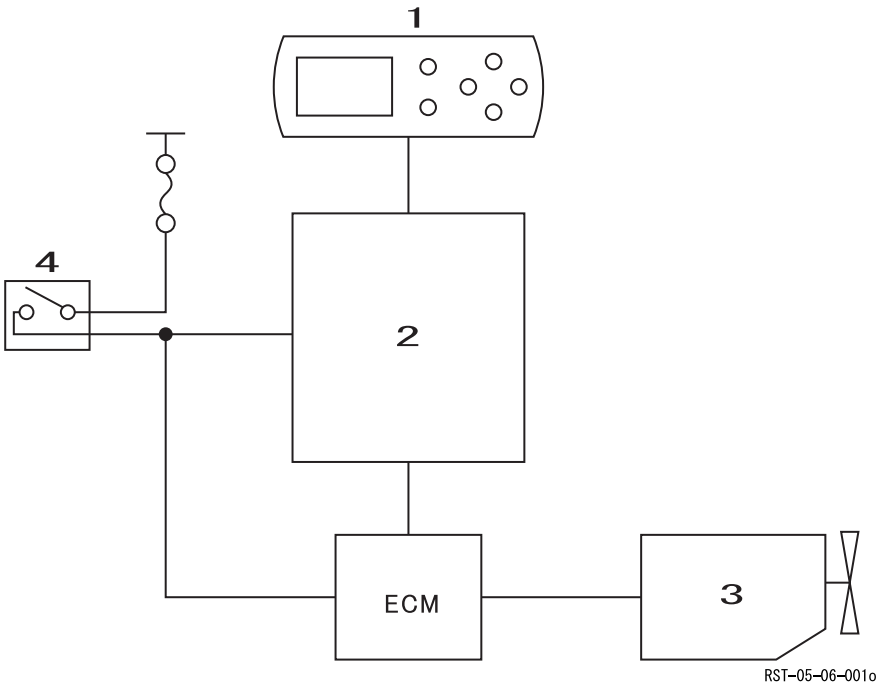

1	Monitor display
2	Computer A
3	Engine
4	Engine emergency stop switch

[1] Circuit

1) When the emergency stop switch is pressed, a 24 V signal enters the ECM input port.
2) When the 1) signal enters, the ECM controls the injector, suction control valve, and EGR valve to stop the engine.
3) The emergency stop switch signal also enters computer A, and computer A sends the engine stop command to the ECM with CAN communication.
4) At the same time, computer A sends the emergency stop display and buzzer instructions to the monitor with serial communication.

https://truckmanualshub.com/

[2] Display and warning

1) When the emergency stop switch is switched ON, the "ENGINE STOP" message is displayed on the monitor.
2) Even if there is another message, the "ENGINE STOP" message is displayed with priority for 5 sec. after the switch is switched ON.
3) At the same time as 1), the buzzer in the monitor buzzes intermittently at 1 Hz.
4) If any kind of trouble is detected during the 1 Hz intermittent buzzing of 3), after the 5-second continuous buzzing, which is the trouble warning, the buzzing returns to the 1 Hz intermittent buzzing.
5) Even if the buzzing continues after the switch ON/OFF message display (for 5 sec.), the message display is not extended.
6) The above message display and buzzer operate whether the engine is running or stopped.

RST-05-06-001p

[3] An emergency stop takes priority over any other control and stops the engine.
* The engine stops even during lifting magnet suction, elevator cab rising, and fan reverse operation (large machine only).

[4] When an emergency stop is made, it is not recorded in the trouble log.

[5] The engine can be cranked with the emergency stop switch ON, but the engine will not start.

https://truckmanualshub.com/

4. Neutral Start

[1] Purpose and summary

The engine will not start with the gate lever lifted. (It will not crank.)

This prevents accidental operation if the operation lever is accidentally bumped into when the engine is started.

[2] Configuration

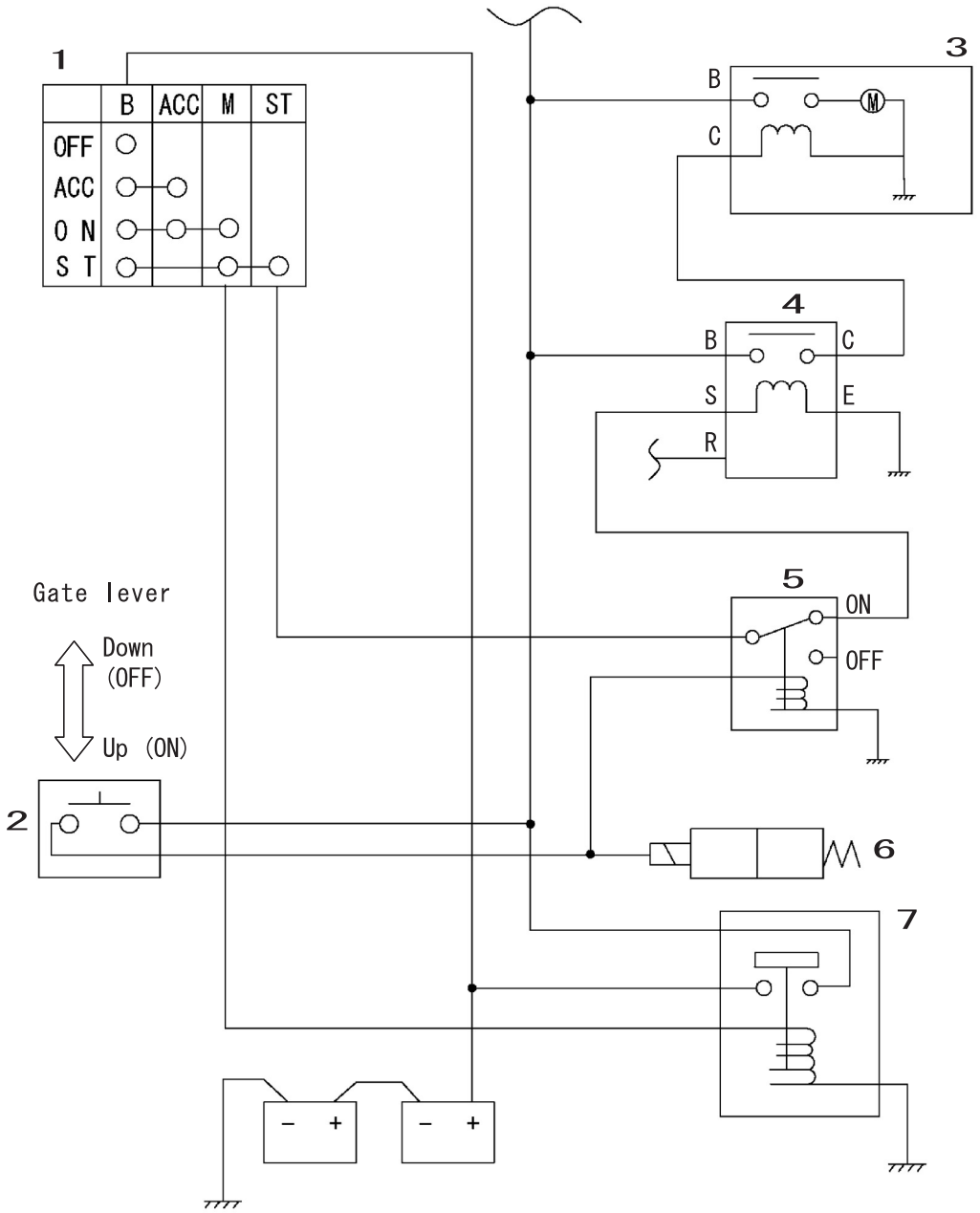

1	Key switch	5	Starter cut relay
2	Gate lock limit switch	6	Lever lock solenoid
3	Starter motor	7	Battery relay
4	Safety relay		

[3] Operation

When the gate lever is raised (and the limit switch comes ON), the starter cut relay is excited, the excitation to the safety relay is cut off, and the engine does not crank. At this time, nothing in particular is displayed on the monitor.

https://truckmanualshub.com/

Explanation of Functions and Operations

Pump Control

1. Work Mode Control

Purpose

Work mode control enables the operator to select the work mode to match the work contents, for example emphasizing speed, emphasizing fuel economy, etc.

At the same time, the engine speed is adjusted. (throttle adjustment)

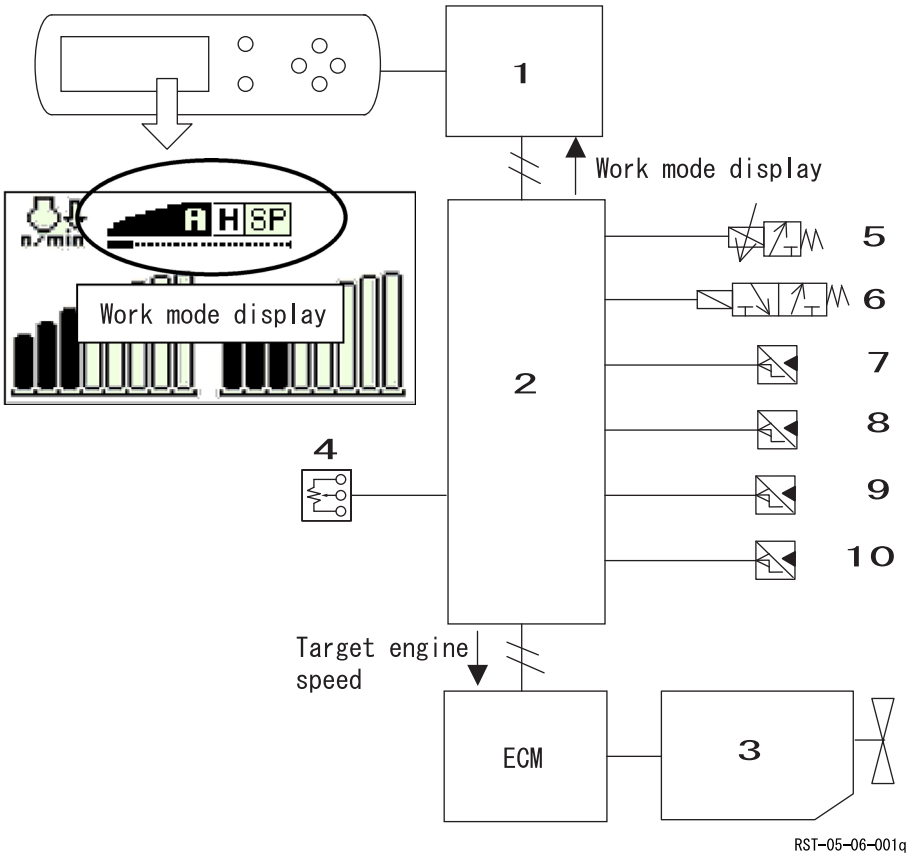

1	Monitor
2	Computer A
3	Engine
4	Throttle volume
5	Pump horsepower control proportional valve
6	Pressure boost solenoid
7	P1 pressure sensor
8	P2 pressure sensor
9	N1 pressure sensor
10	N2 pressure sensor

Operation

[1] Manual switchover (main mode)

The operator can select 1 of the following work modes by turning the throttle volume.

For the correspondence between the throttle volume detents and the work modes, see the attached table.

Mode	Aim	Display	Monitor buzzer
① SP mode	Speed emphasis	A H SP	The buzzer buzzes twice when this is selected.
② H mode	Balances speed and fuel economy	A H SP	The buzzer buzzes once when this is selected.
③ A mode	Fuel economy emphasis	A H SP	No buzzing

[2] Automatic switchover (submode)

Each of the three main modes that can be selected manually has two submodes (high and low).

These submodes are switched automatically based on the sensor input values.

* For the high and low milli-amp, see the explanation in 2. Pump Horsepower Boost Control on the next page.

https://truckmanualshub.com/

2. Pump Horsepower Boost Control

Purpose

Controls pump horsepower according to the work mode (engine speed).

Control milli-amp

Volume position (detent position)	1	2	3	4 - 8	9 - 15
Work mode	SP	H	A		
Engine speed (min^{-1})	1900	1800	1700	1699 - 1300	1299 - 900
Milli-amp for pump horsepower control proportional valve (mA)	500	500	500	380	50
Pressure boost	Auto	Auto	Normal		

Operation

[1] Controls milli-amp to the pump horsepower control proportional valve according to the selected work mode (engine speed).

[2] Increase/decrease control of milli-amp is not performed according to load variation.

[3] When SP mode is selected, the engine rotation increases to 2050 min^{-1} if low-speed (1st speed) travel is performed.

https://truckmanualshub.com/

3. Pump Horsepower Cut Control

Purpose

The pump milli-amp is controlled in order to prevent black smoke during excess loads and engine speed drops and in order to improve energy saving.

The control methods are the following 3.

[1] Overload reduction control

[2] Engine stalling prevention control

[3] PID control

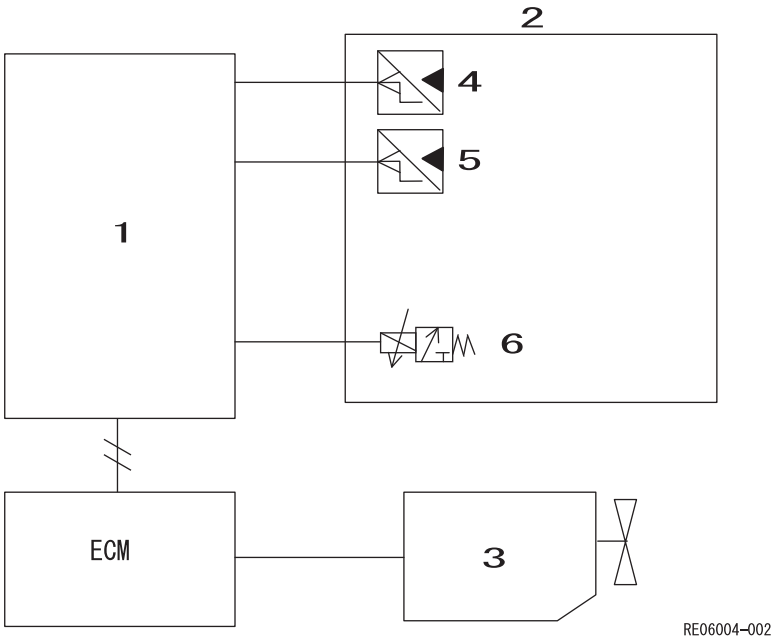

1	Computer A
2	Pump
3	Engine
4	P1 pressure sensor
5	P2 pressure sensor
6	Pump horsepower control proportional valve

(1) Overload reduction control

When the engine is overloaded, the milli-amp to the pump horsepower proportional valve first drops to 50 mA.

After that, the milli-amp is gradually raised while watching the difference between the actual engine speed and the target engine speed.

Overload reduction control is executed in all work modes.

- The engine is judged to be overloaded when the following conditions are met.

1) Sharp lever operation
   When there is lever operation, this is judged from the upper pressure sensor pressure rise state.

2) Operation for high loads and sharp loads
   Judged from the P1 or P2 pressure sensor and from the pump main pressure boost state

(2) Engine stalling prevention control

When the target engine speed is 1300 min^{-1} or less, the milli-amp is 50 mA.

(3) PID control

When the engine actual speed falls 30 min^{-1} or more below the target engine speed, the milli-amp is gradually lowered.

When the difference between the actual engine speed and the target engine speed falls below 30 min^{-1}, the milli-amp rises to the target milli-amp for each mode.

Backup control

If trouble occurs in a pressure sensor (P1, P2, upper), the overload restriction control is not carried out.

If trouble occurs in the pump horsepower control proportional valve, the output from the computer A stops.

https://truckmanualshub.com/

4. Power Save Control

Purpose

When no lever is operated, the pump load is reduced with the control below to reduce fuel consumption.

The control methods are the following 2.

[1] The negative control relief pressure is varied and the negative control pressure is lowered to reduce the pump load.

[2] The pump discharge volume is set to the minimum flow.

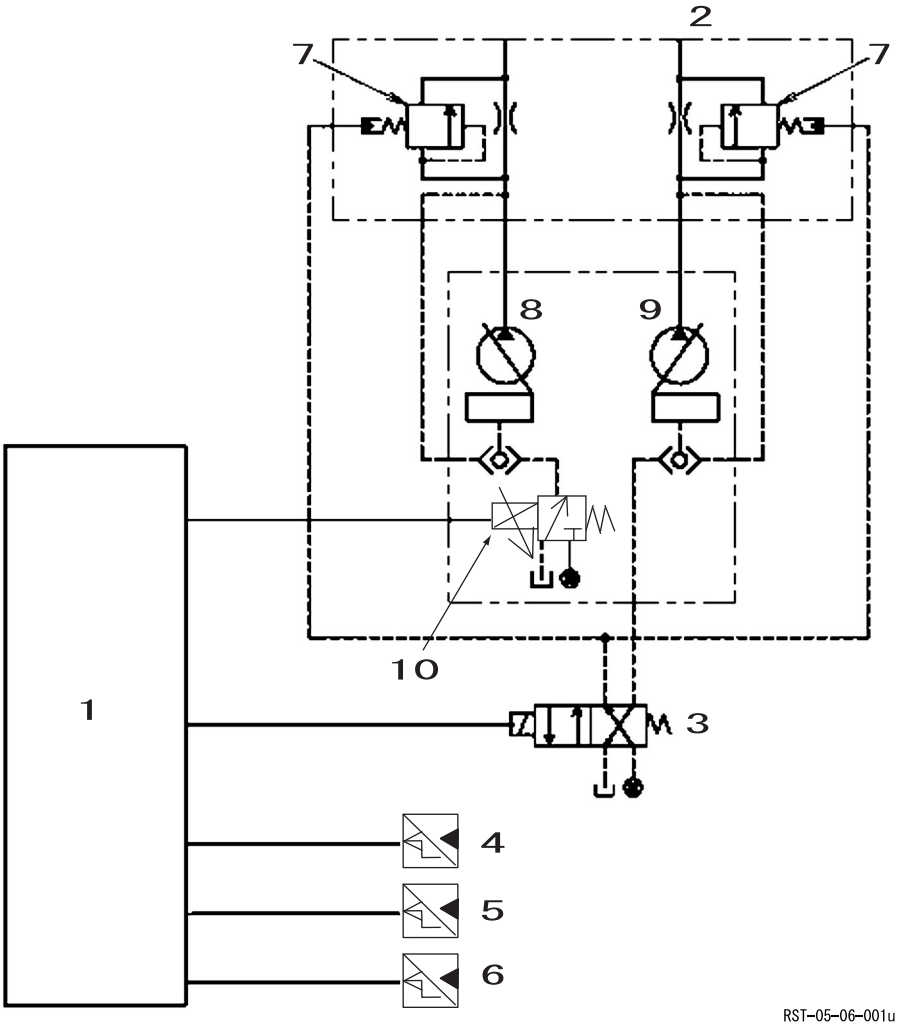

1	Computer A
2	Control valve
3	Power save solenoid
4	Upper pressure sensor
5	Swing pressure sensor
6	Travel pressure sensor
7	Negative control foot relief valve
8	Pump 1
9	Pump 2
10	P1 flow control proportional valve

Operation explanation

[1] Normal operation

If more than 1 sec. passes with all the sensor signals to the computer A OFF (upper, travel, and swing pressure), the computer A judges that no lever is being operated and outputs to the P1 flow control proportional valve and the power save solenoid valve.

1) P1 pump discharge volume reduced
   1. The milli-amp for P1 flow volume proportional valve is increased from 50 mA to 740 mA.
   2. The P1 pump swash plate is switched to the minimum tilting and the discharge volume is set to its minimum.
2) P2 pump discharge volume reduced
   1. When the power save solenoid valve is switched, the pilot source pressure is fed to the P2 pump negative control port via the solenoid valve.
   2. The P2 pump swash plate is switched to the minimum tilting and the discharge volume is set to its minimum.

https://truckmanualshub.com/

3) Negative control pressure reduction
   1. When the power save solenoid valve is switched, the negative control foot relief valve spring chamber is linked with the tank line and the negative control foot relief valve setting pressure drops from 3 MPa to 1 MPa.
   2. By reducing the negative control relief pressure, the pressure within the circuit is reduced, and the horsepower used by the pump is reduced. This saves energy.

[2] Operation when the engine is stopped with the key ON.
When the engine stops, the battery save function works and there is no output to the P1 flow control proportional valve or the power save solenoid valve.

[3] Operation for trouble
If an abnormality occurs on either the input side (upper, swing, travel pressure sensors) or the output side (P1 flow control proportional valve, power save solenoid valve), the system treats this as operation being underway and control is fixed to the following.
Milli-amp to the P1 flow volume valve … 50 mA, the power save solenoid valve is always OFF.

Caution
During a trouble, even if the abnormality is ended, trouble mode does not end until the key is switched OFF.

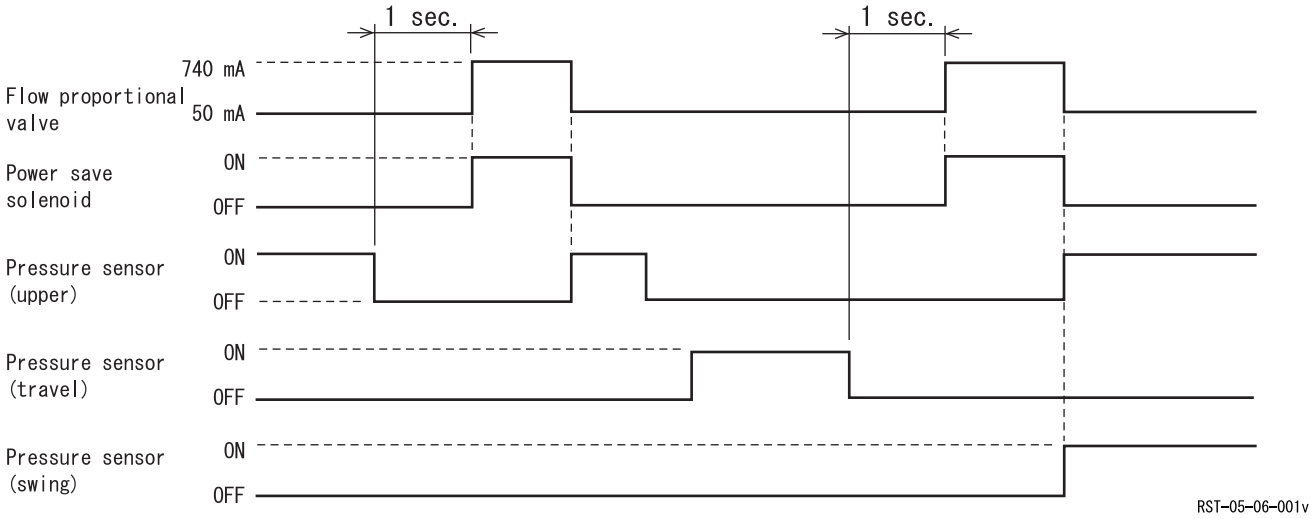

https://truckmanualshub.com/

Swing

1. Swing Brake

[1] Configuration

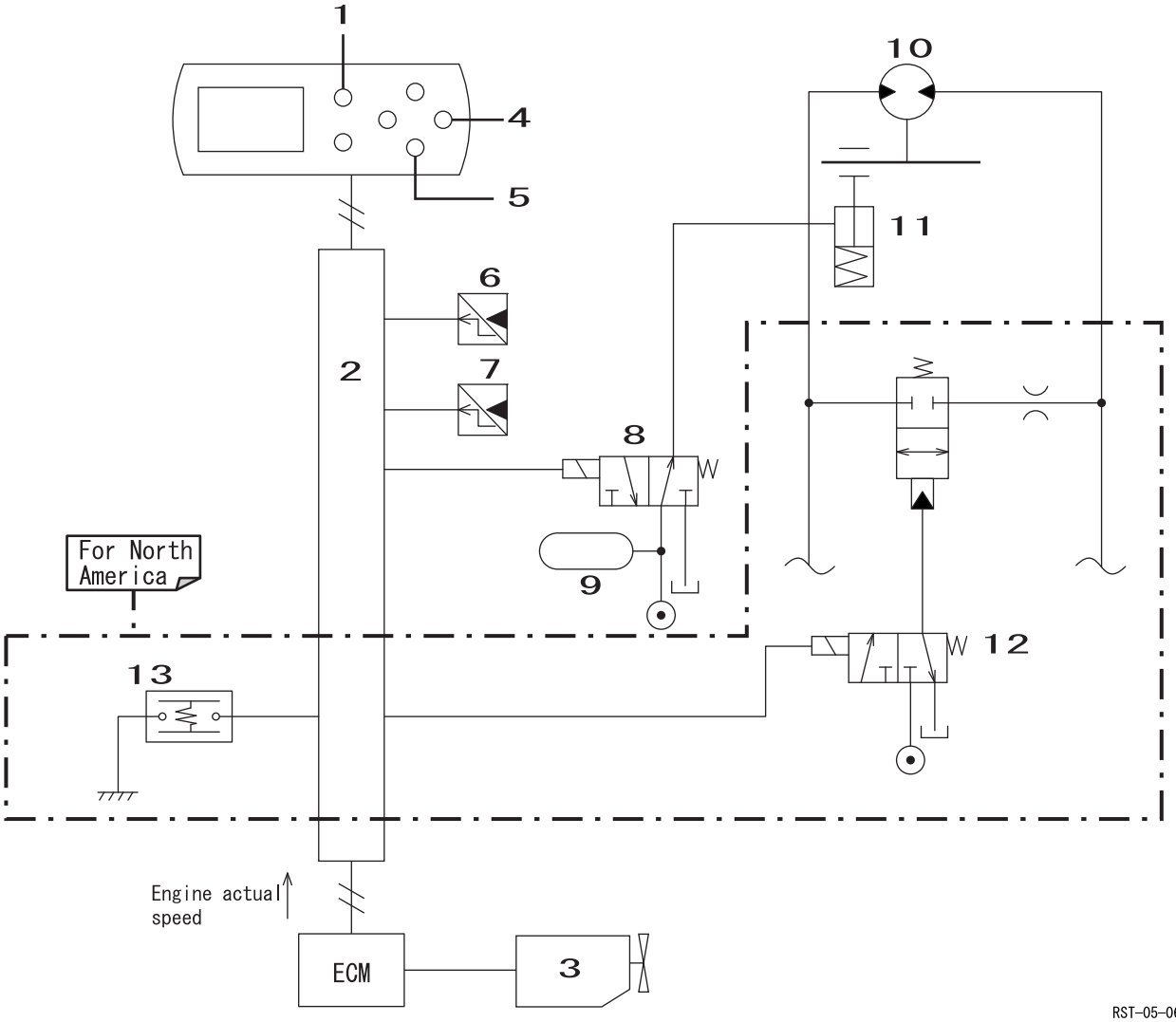

RST-05-06-001w

1	Horn volume select switch	8	Swing brake solenoid
2	Computer A	9	Accumulator
3	Engine	10	Swing motor
4	Working light switch	11	Swing Brake
5	Auto idle switch	12	Free swing solenoid
6	Upper pressure sensor	13	Free swing switch (momentary)
7	Swing pressure sensor		

https://truckmanualshub.com/

[2] Braking through upper operation
When the upper pressure sensor is ON, the brake goes OFF. 1 sec. after the upper pressure sensor goes OFF, the brake comes ON.

[3] Braking control through swing operation
When the swing pressure sensor is ON, the swing brake goes OFF (swing brake solenoid = OFF). 5 sec. after the swing pressure sensor goes OFF, the swing brake comes ON (swing brake solenoid = ON).

[4] Swing lock with key OFF
When the key is OFF (during power-cut delay), the swing brake comes ON unconditionally.

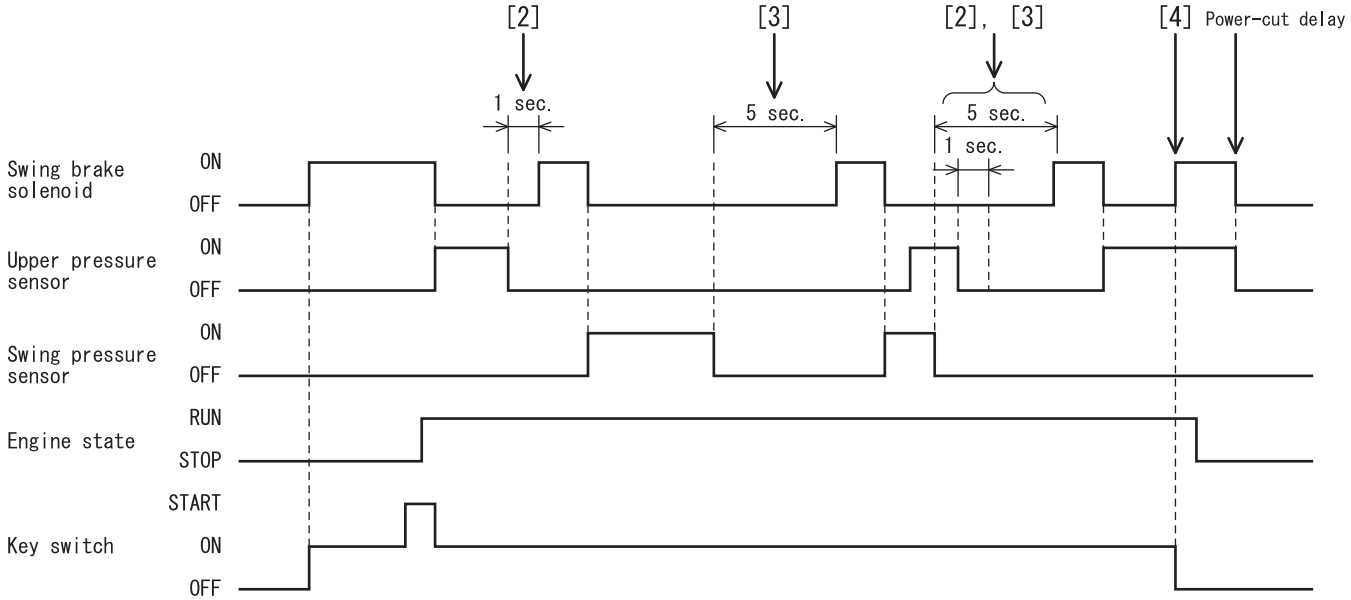

RST-05-06-001x

2. Swing Free Swing (option for North America)

[1] Free swing switchover
When the free swing switch is pressed, the free swing mode is switched ON ⇔ OFF. When the (momentary) key is OFF, always start with free swing OFF. (Previous data reset)

[2] Free swing control
When free swing is ON, the free swing solenoid is ON and the swing brake solenoid is OFF.

[3] Mode display
When free swing is ON, the icon in the diagram below is displayed on the monitor.

[4] Battery save
While the engine is stopped with the key ON, if free swing is switched ON, the icon is displayed, but the free swing solenoid does not come ON. It does come ON after the engine starts.

RST-05-06-001bu

https://truckmanualshub.com/

3. Swing Lock (for maintenance)

Purpose

This is used for measuring the swing relief pressure and other maintenance tasks.

[1] Swing lock switching

In order to prevent accidental operation under certain special circumstances, sometimes the swing brake need to be left ON all the time. (Swing lock) At this time, the swing lock can be switched ON/OFF by holding down the "horn volume select switch", the "working light switch", and the "auto idle switch" at the same time for 3 sec.

Additionally, turn the key OFF with the swing lock ON, have the swing lock ON when the key is turned ON again. (The previous data is held.)

[2] Swing lock control

When the swing lock is ON, even if the upper or the swing is operated, the swing brake keep working. Be particularly careful about swing operation because the swing brake plate is dragged. (The swing pilot pressure is not shut off. This is no more than a simple swing lock.)

[3] Competition with free swing

If the swing lock is used, even if free swing is ON, the swing brake solenoid comes ON and the free swing solenoid goes OFF. (Swing lock priority)

[4] Mode display

When swing lock is ON, the icon in the diagram below is displayed on the monitor.

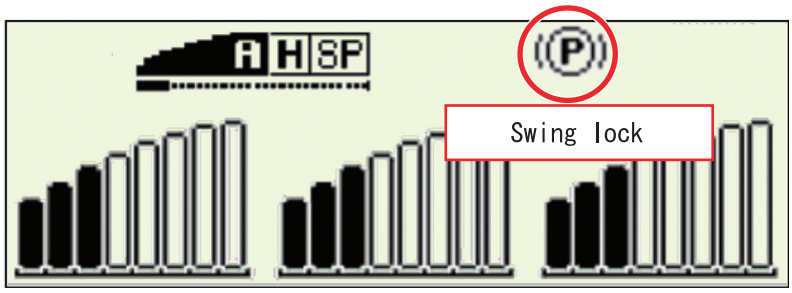

RST-05-06-001y

https://truckmanualshub.com/

[5] Time chart (free swing and swing lock)

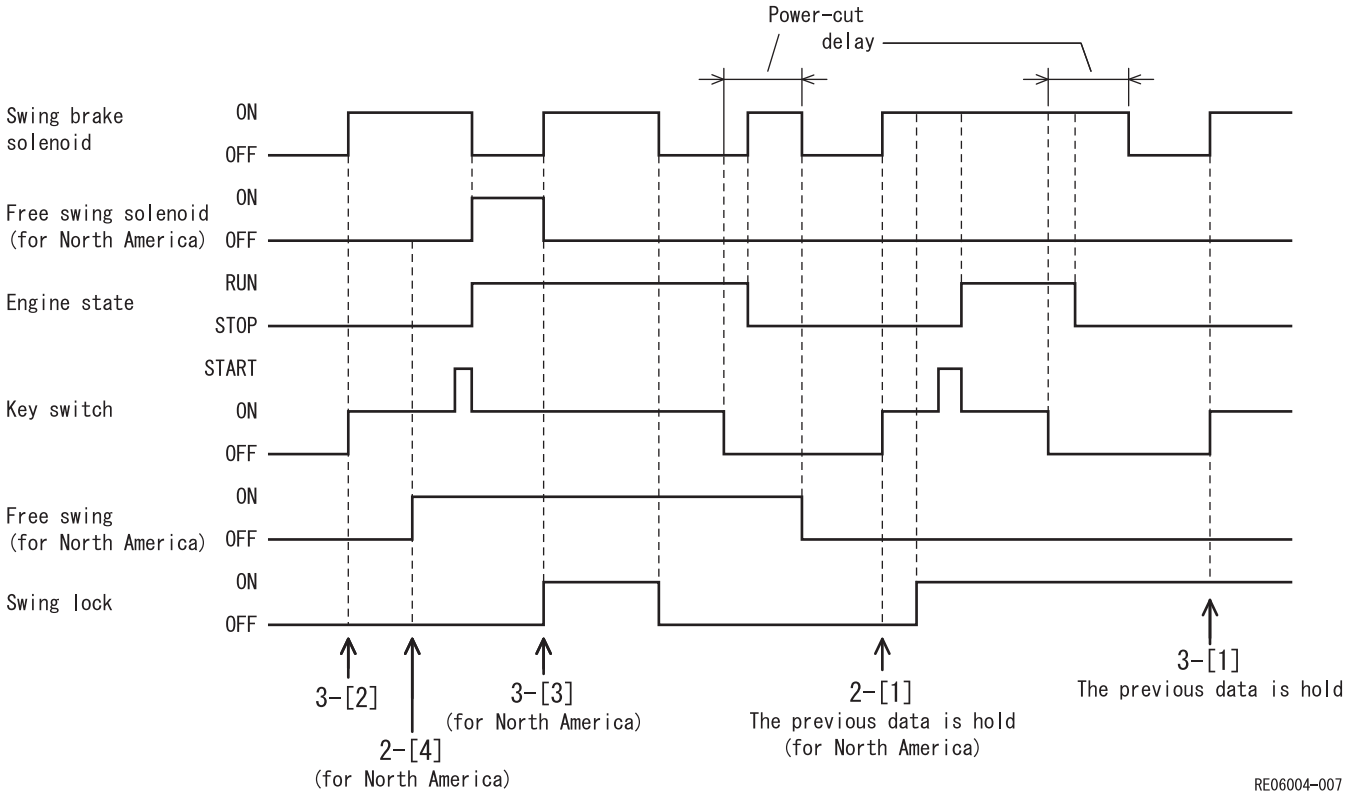

[6] Trouble mode

If trouble occurs in an input (upper/swing pressure sensor), communication (CAN), or output (swing brake solenoid/free swing solenoid), the system goes into trouble mode. In trouble mode, the swing brake solenoid is OFF and the free swing solenoid is OFF. Even if the trouble is recovered from, this does not recover the system from trouble mode.

https://truckmanualshub.com/

4. Swing Relief Cut

Purpose

When independent swing operation is running, the pump flow is reduced, and the excess oil ejected from the swing motor relief valve is eliminated.

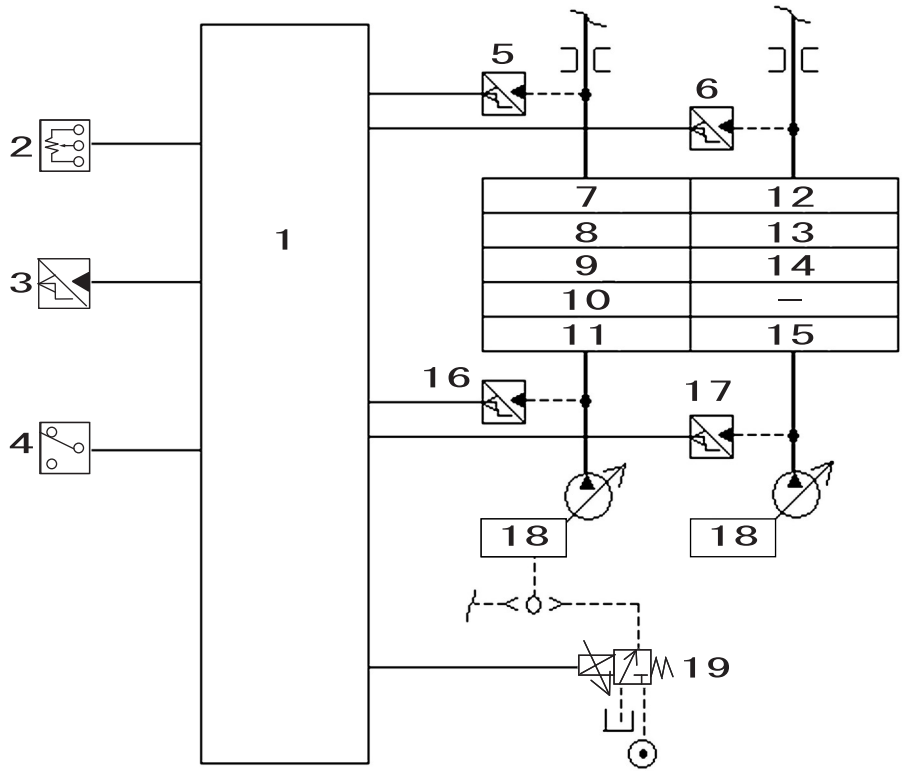

1	Computer A	8	Boom (2)	15	Travel (right)
2	Throttle volume	9	Swing	16	P1 pressure sensor
3	Travel pressure sensor	10	Option 1	17	P2 pressure sensor
4	1st option pressure switch	11	Travel (left)	18	Regulator
5	N1 pressure sensor	12	Arm (2)	19	P1 flow control proportional valve
6	N2 pressure sensor	13	Boom (1)		
7	Arm (1)	14	Bucket		

Operation explanation

[1] Operation conditions for swing relief cut control

The swing relief cut control provides relief when the pressure is boosted for the start of the swing due to sharp swing operation and the drained off excess oil is held to the lowest amount possible. The purpose is to provide an energy saving effect.

Control is executed when all the conditions below are satisfied.

1) Sharp swing operation … When the swing lever is operated, this is judged from the swing pilot pressure sensor pressure rise.
2) Within 1 sec. after start of swing
3) Travel non-operation … Travel pressure sensor OFF
4) Attachments other than boom down non-operation
   … Non-operation of attachments is judged from the N2 negative control pressure and P1 pressure sensor
5) Option line non-operation … Option pressure sensor OFF

https://truckmanualshub.com/

[2] Control contents

For the swing relief cut operation, after the milli-amp to the P1 flow control proportional valve is increased and the P1 flow is reduced, while checking the P1 pump discharge pressure, the system gradually reduces the output milli-amp to the P1 flow control valve and raises the P1 pump flow to the constant swing speed.

- Swing relief cut control flow

  Independent swing + sharp operation judged ⇒ Swing relief cut operation ⇒ Milli-amp to P1 flow control proportional valve increased ⇒ P1 pump flow reduced ⇒ Milli-amp gradually decreased while watching swing pressure fall status ⇒ P1 pump flow increased

  Caution

  P1 flow control proportional valve: milli-amp (high) ⇒ P1 pump flow (low); milli-amp (low) ⇒ P1 pump flow (high)

[3] Swing relief cut end conditions

1) When swing operation is stopped
2) Travel ON
3) Boom up, arm out/in, bucket open/close
4) Boom-down sharp operation
5) Boom-down pressure boost

5. Swing Speed Limit

Purpose

With the increase in the pump maximum flow, the swing speed at maximum flow is too fast. Therefore, the P1 pump flow is controlled to suppress the speed rise. (Control only in SP mode)

P1 maximum discharge volume held down from 285 L/min to 280 L/min for independent swing operation

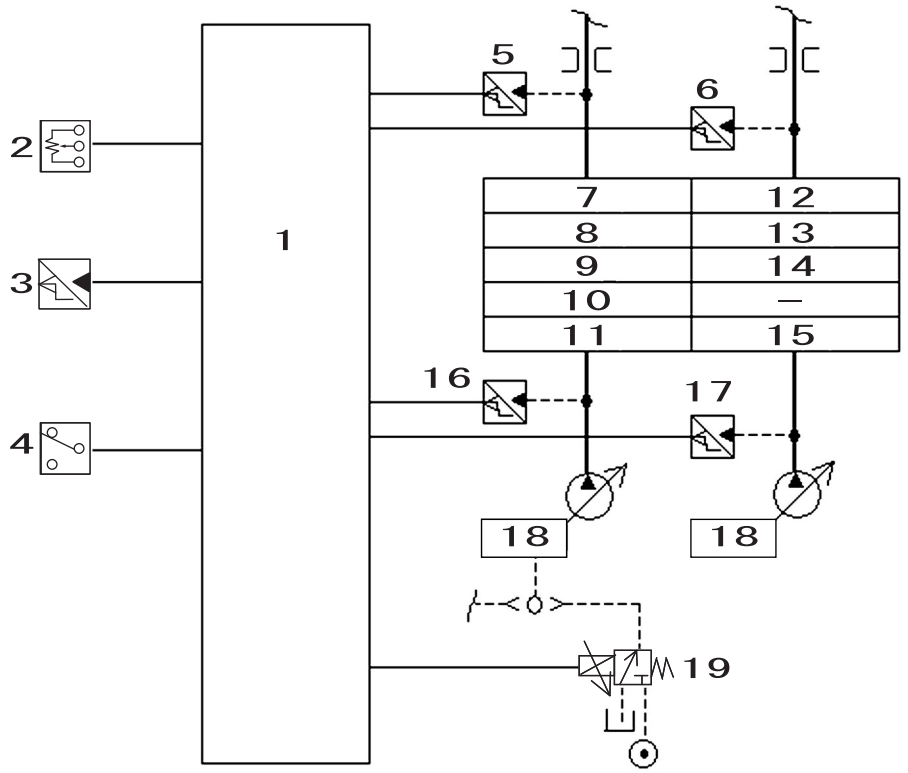

RE06004–039

1	Computer A	8	Boom (2)	15	Travel (right)
2	Throttle volume	9	Swing	16	P1 pressure sensor
3	Travel pressure sensor	10	Option 1	17	P2 pressure sensor
4	1st option pressure switch	11	Travel (left)	18	Regulator
5	N1 pressure sensor	12	Arm (2)	19	P1 flow control proportional valve
6	N2 pressure sensor	13	Boom (1)		
7	Arm (1)	14	Bucket		

https://truckmanualshub.com/

Operation explanation

[1] Operation conditions for swing speed limit control
Control is executed when all the conditions below are satisfied.

1) Swing single full lever operation … Judged from the N1 and N2 negative control pressure sensors and P1 and P2 pressure sensors
2) Travel non-operation … Travel pressure sensor OFF
3) The work mode is SP mode.

[2] Control contents
The output milli-amp to the P1 flow control valve is set to the maximum of 370 mA and the P1 pump flow is held down to 280 L/min.

[3] Swing speed limit end conditions

1) Travel operation ⇒ Immediate end (to prevent off travel)
2) Other attachment operation ⇒ Gradual end (to reduce shock)
3) Option circuit operation

https://truckmanualshub.com/

Travel

1. Travel Speed Switchover

The travel motor tilting angle is changed by switching the travel speed between low speed and high speed with the switch.
However, in high-speed mode, if the drive pressure becomes high due to the functioning of the travel motor itself, the tilting angle is automatically switched to low speed.
After that, when the drive pressure becomes low, the slope automatically returns to high speed.

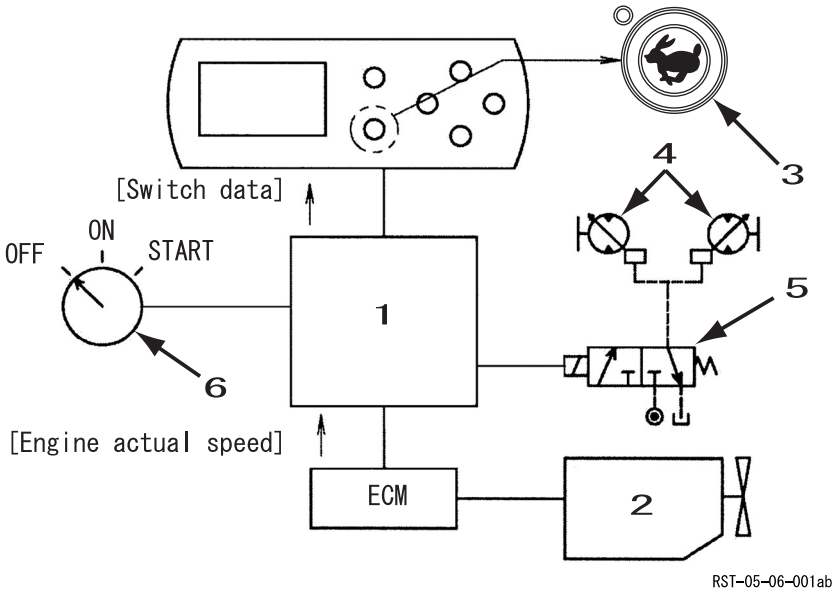

1	Computer A
2	Engine
3	Travel high-speed select switch
4	Travel motor
5	Travel high-speed solenoid
6	Key switch

[1] Operation

1) When the key is ON, the speed becomes low speed. The previous travel mode is reset.
(If the service support operation is changed, it is possible to hold the previous data.)
2) Each time the travel high-speed switch is pressed, the speed is switched between low speed and high speed. During high speed, the LED at the top left of the switch lights up.
3) While the engine is stopped with the key ON, if the travel high-speed switch is pressed, the solenoid does not operate. The LED lights up.
(To prevent the battery being run down)
4) In high-speed mode, the tilting angle is automatically switched between low speed and high speed by the travel motor drive pressure.
However, the electrical control remains at high speed, the high-speed LED remains lit, and the solenoid remains ON.

https://truckmanualshub.com/

[2] Trouble mode
If an abnormality occurs in communication (serial/CAN) or computer A solenoid output, the speed is fixed to low speed. (The travel high-speed solenoid comes OFF.)

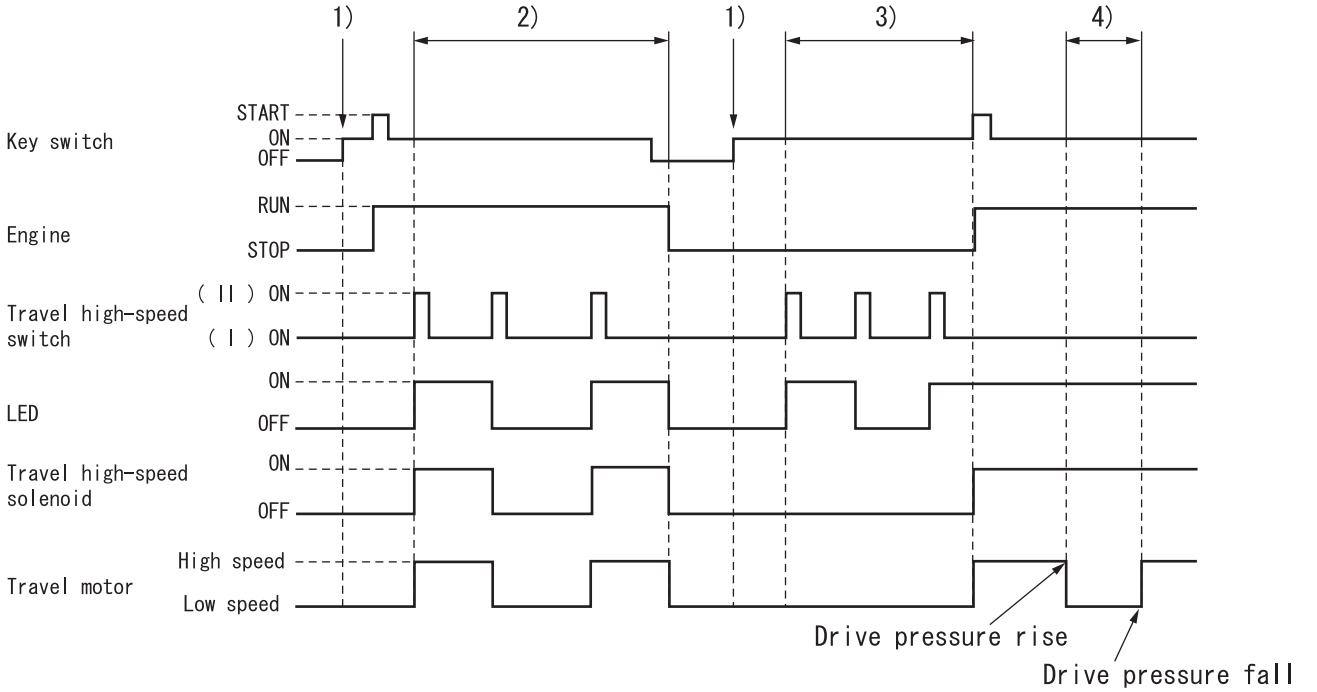

2. Travel Alarm

[1] Configuration

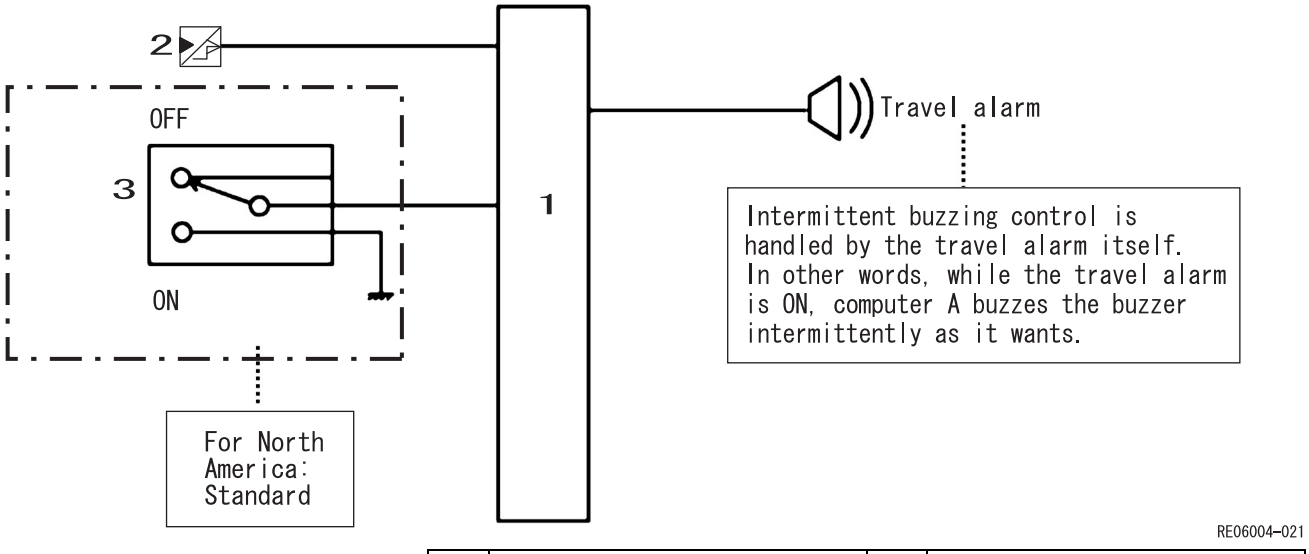

1	Computer A	3	Travel alarm mode select switch (alternator)
2	Travel pressure sensor		

[2] Travel alarm (automatic stop)
When the travel pressure sensor comes ON due to travel operation, the travel alarm starts 1 Hz continuous buzzing. This buzzing automatically stops after 10 sec.

[3] Travel alarm (continuous buzzing)
When the travel alarm mode select switch is switched ON, the buzzer buzzes continuously during travel. (Function for North America only)

[4] Signals when key is ON
After the key is switched ON, the travel alarm sounds for 0.4 sec. as a signal.

https://truckmanualshub.com/

[5] Time chart

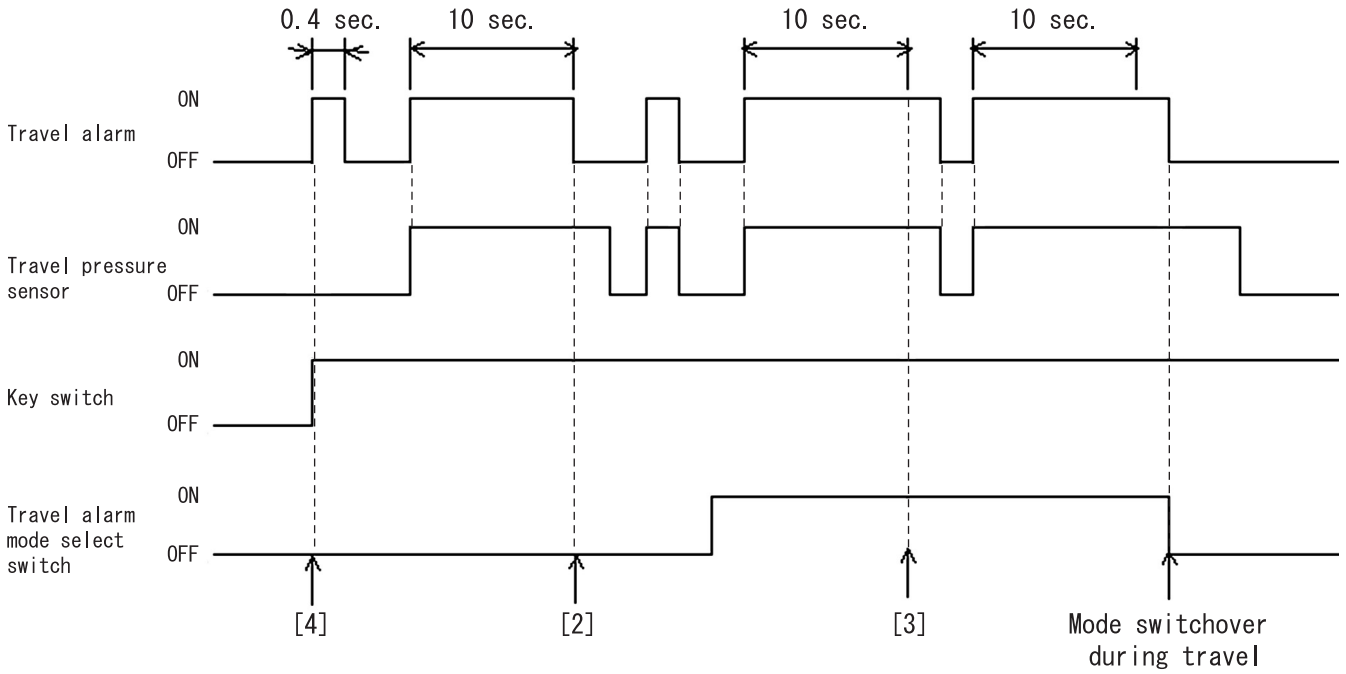

RST-05-06-001ae

[6] Trouble mode
If trouble occurs in the travel pressure sensor, the machine goes into trouble mode and the travel alarm is always OFF.

https://truckmanualshub.com/

Valve Control

1. Lever Lock

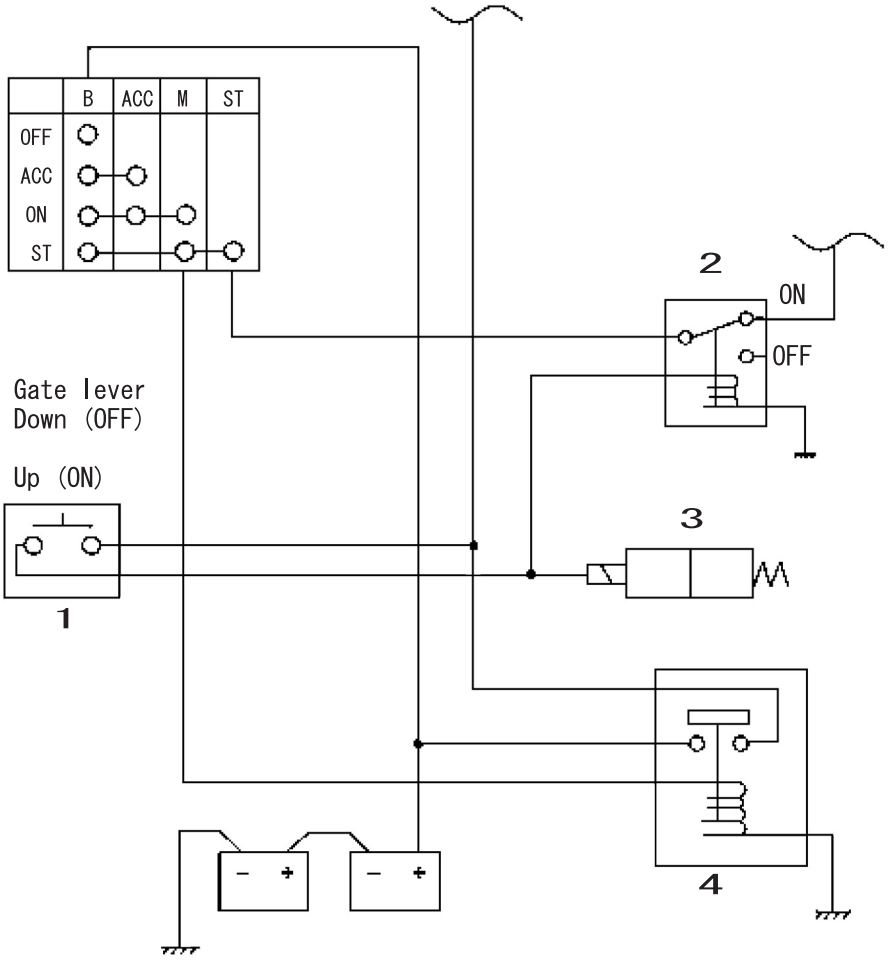

1	Gate lock limit switch	3	Lever lock solenoid
2	Starter cut relay	4	Battery relay

Operation explanation

When the battery relay is excited by the key being switched ON, the power enters the lever lock limit switch. When the gate lever is raised, the lever lock switch (limit switch) comes ON and the lever lock solenoid is operated. (For details on neutral start control, see Neutral Start in Explanation of Functions and Operations.)

https://truckmanualshub.com/

2. Solenoid Sticking Prevention

[1] Target solenoid

- Travel high-speed switchover solenoid
- Pressure boost solenoid
- Option switchover solenoid
- Fan reverse solenoid (only for models with hydraulic drive fan)
- Free swing solenoid
- Bucket lock solenoid (only liftcrane specification machines)
  * Because the swing brake, power save solenoid, and electromagnetic proportional solenoid go ON and OFF frequently in regular work, they are not subject to control.

[2] Operation

When key ON, switched ON/OFF for 0.25 sec.
After that, control is normal control. Control ends before the engine starts, so the machine does not operate accidentally.

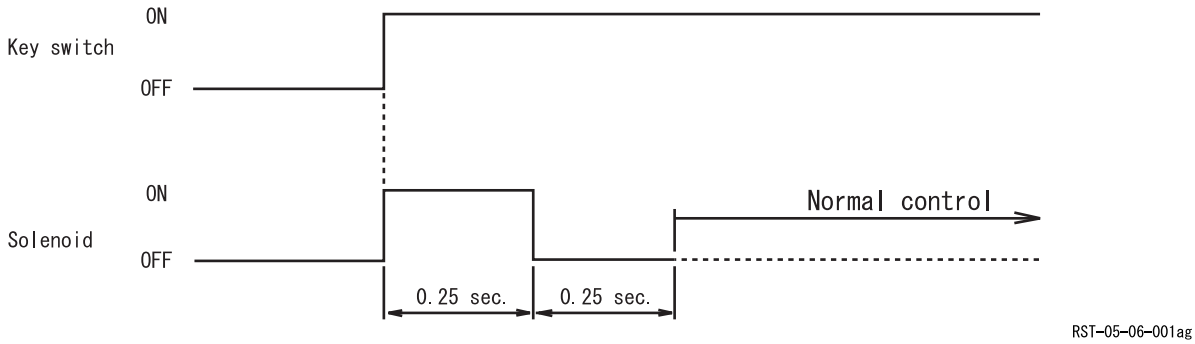

https://truckmanualshub.com/

3. Pressure Boost Control

[1] Configuration

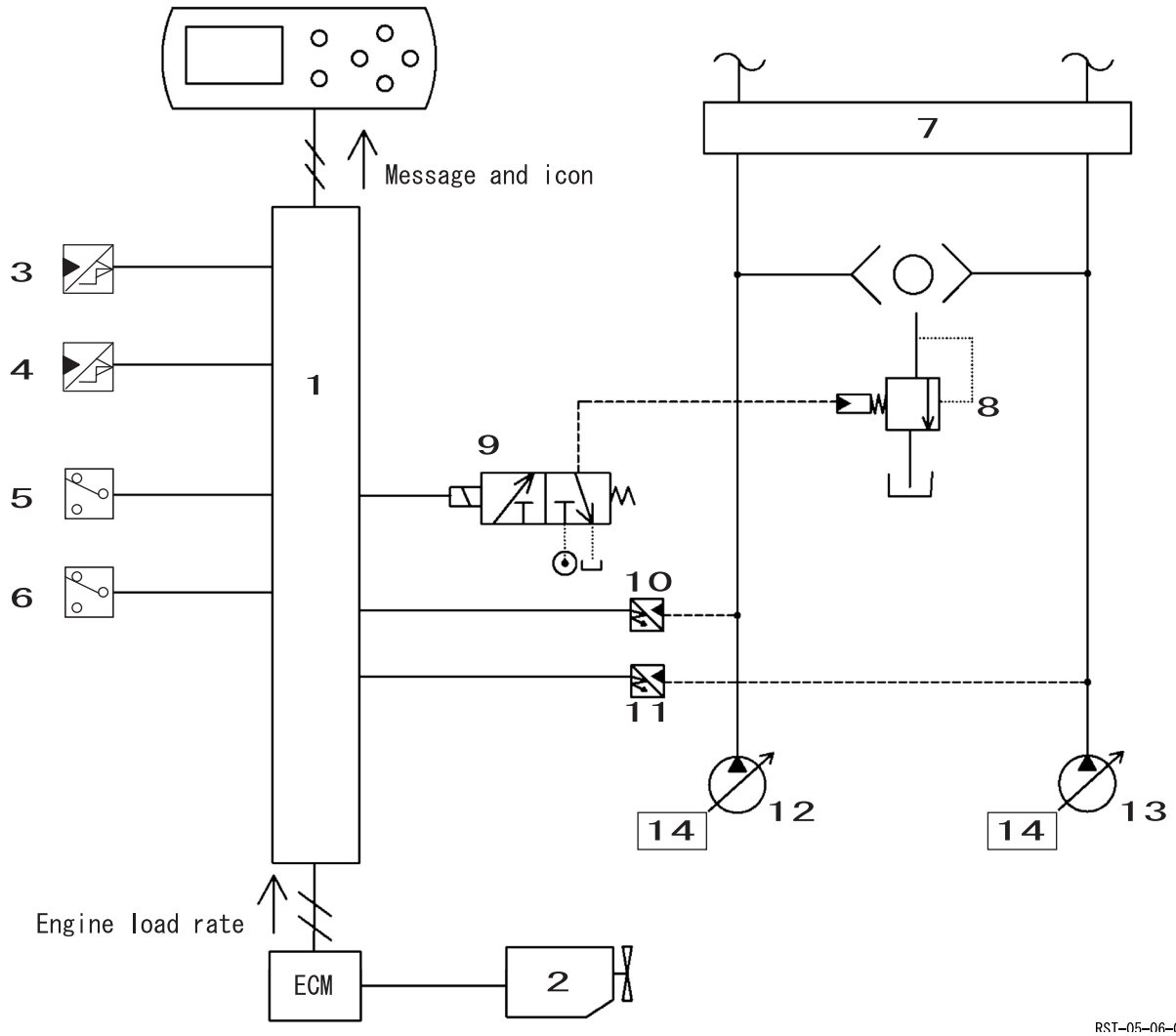

1	Computer A	6	2nd option line pressure switch	11	P2 pressure sensor
2	Engine	7	Control valve	12	Pump 1
3	Upper pressure sensor	8	Main relief valve	13	Pump 2
4	Travel pressure sensor	9	Pressure boost solenoid	14	Regulator
5	Option line pressure switch	10	P1 pressure sensor		

[2] During upper operation (upper pressure sensor = ON), the next time the high-load conditions are met, the pressure boost solenoid valve on the 5 stack solenoid valve comes ON, and the main relief valve pressure rises from 34.3 MPa to 36.8 MPa.
Conditions
When the engine load ratio rises and the P1 or P2 pump pressure is boosted.

[3] Auto pressure boost (ended by time restriction)
When the work mode is SP or H, the pressure boost continues a maximum of 8 sec., then is automatically ended (pressure boost solenoid = OFF). When the work mode is AUTO, this time restriction is eliminated and the pressure boost is always available.

[4] Auto pressure boost (ended by operation stop)
Even before the time limit for auto pressure boost, if the upper pressure sensor goes OFF, the boost is ended.

[5] Boost prohibition
During travel (travel pressure sensor = ON) or the breaker is in use (option line pressure switch = ON and
breaker mode), the boost is not used. (Actuator protection)

https://truckmanualshub.com/

[6] Auto pressure boost setting
Auto pressure boost ON/OFF and enabling/disabling of pressure boost during breaker operation can be set with service support operations.

[7] During boosting, the monitor displays an icon.

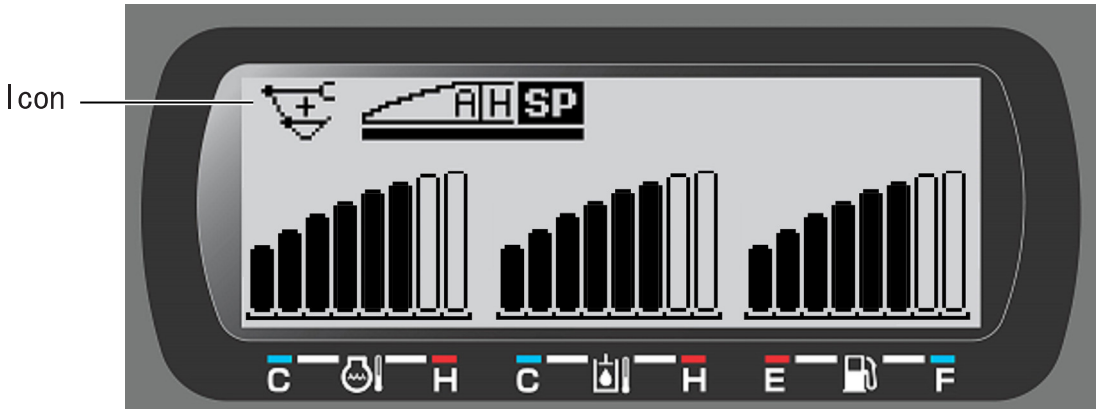

RE06004-003

[8] Time chart (when work mode = SP or H)

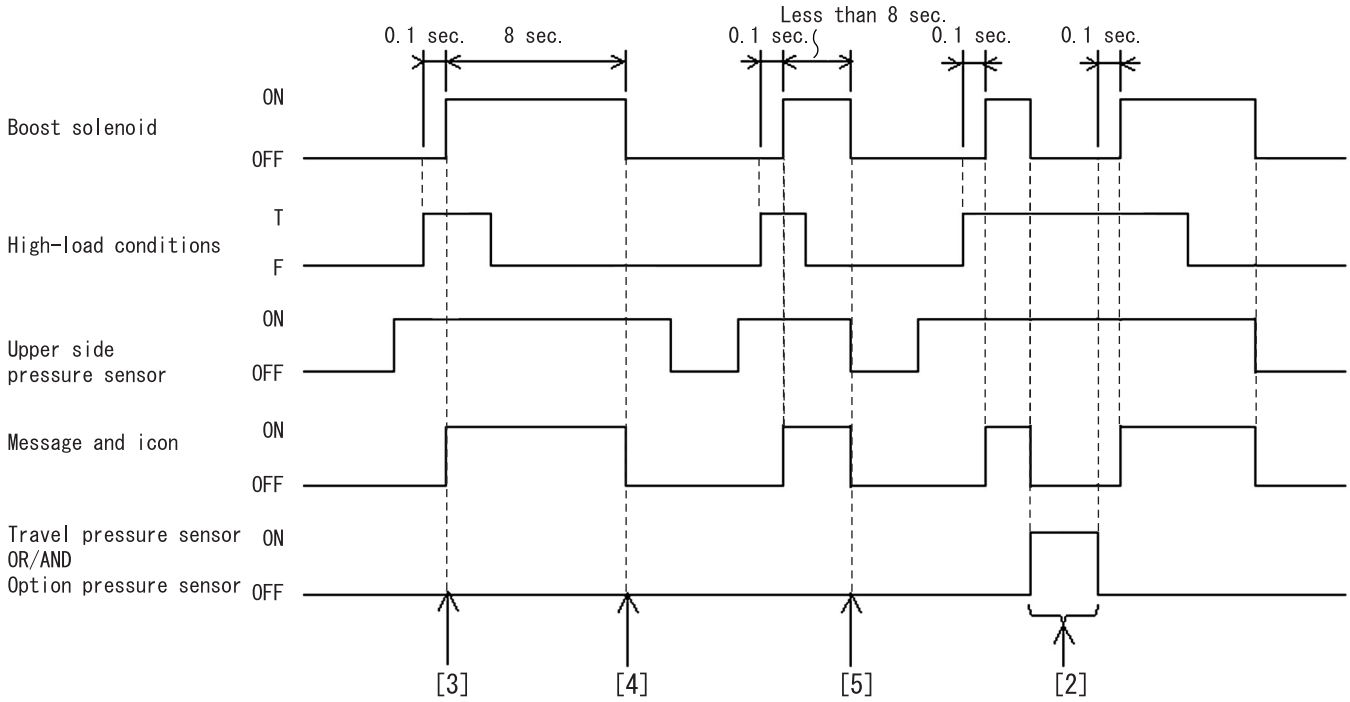

RST-05-06-001aj

[9] Trouble mode
If trouble occurs in an input (upper pressure sensor/travel pressure sensor), output (pressure boost solenoid) or communication (CAN), the system goes into trouble mode. In trouble mode, the pressure boost solenoid is fixed to OFF.
* Even if trouble occurs in UART communication, the system does not go into trouble mode.
* Trouble in the (2nd) option line pressure switch cannot be detected.

[10] Recovery from trouble mode
Even if the trouble is recovered from, trouble mode continues.

https://truckmanualshub.com/

Monitor Control

1. Bar Graph (coolant temperature gauge, oil temperature gauge, fuel gauge)

(1) Coolant temperature gauge

[1] Configuration

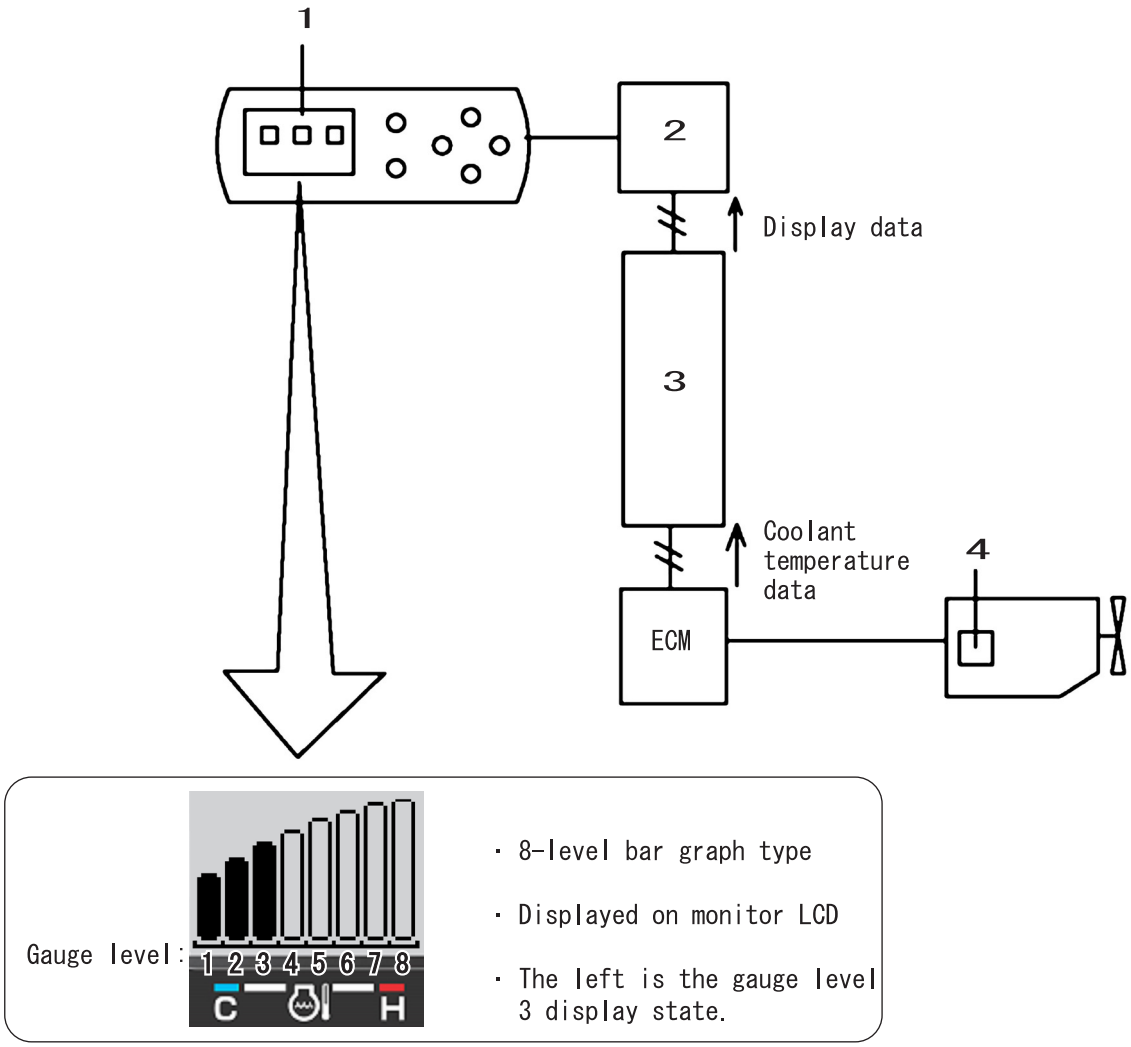

RE06004-016

1	Coolant temperature gauge	3	Computer A
2	Monitor	4	Coolant temperature sensor

[2] Operation summary

The ECM reads the coolant temperature from the coolant temperature sensor installed on the engine and send to computer A through CAN communication. After computer A receives the coolant temperature, it judges the gauge level, and sends the display data to the monitor with UART communication.

https://truckmanualshub.com/

[3] Gauge and coolant temperature
The gauge level is judged based on the diagram below.

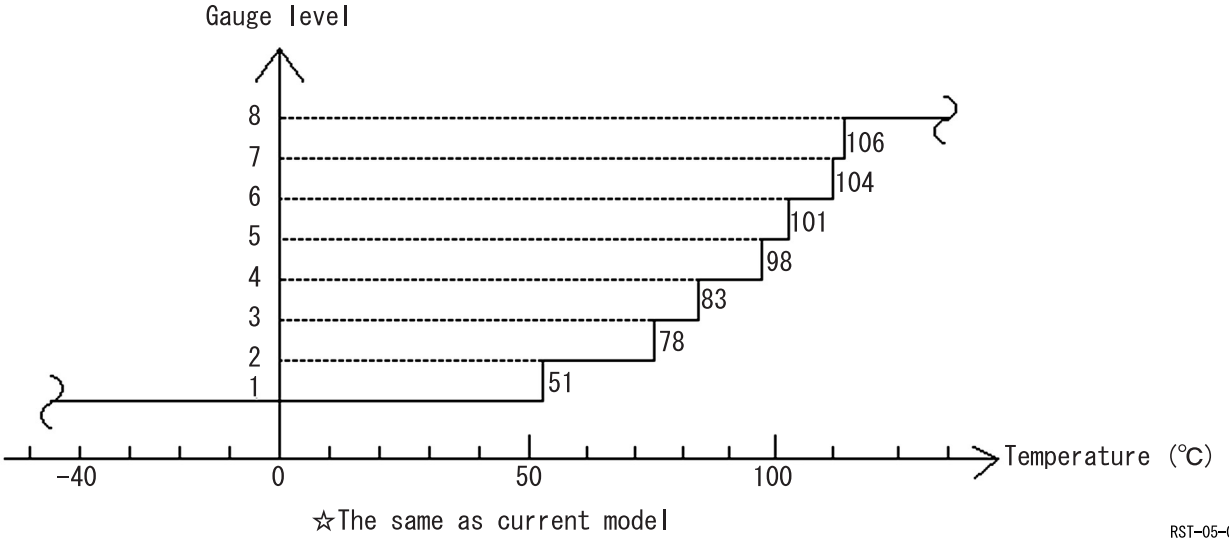

[4] Preventing flickering
When the temperature moves up or down near the gauge level fluctuation threshold (for example 51 ℃), the gauge goes on and off repeatedly causing flickering. In order to prevent that, the gauge level is judged using the temperature (judgment coolant temperature) after the following processing.

- Judgment coolant temperature = Average of the coolant temperatures obtained the past 32 times
- Coolant temperature obtained period = 1 sec.
- Bar graph update period = 32 sec. (updates when the 32nd coolant temperature obtained)

[5] Trouble mode
If trouble occurs in the coolant temperature sensor or CAN bus, the bar graph itself is not displayed.

1) If there is a short, the bar graph display is immediately ended.
2) For a disconnection, the display goes off 3 min. after the engine starts.

If trouble occurs in UART communication (computer A → monitor), the display is fixed at the last state sent.
When the trouble is recovered from, the display returns to normal.
For a disconnection, when the key is switched OFF more than 3 min. after the engine starts, then ON again, the display is recovered.

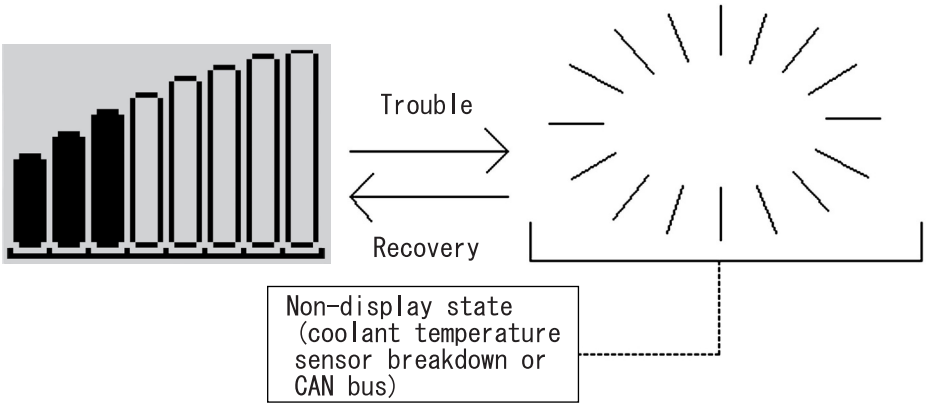

☆) Coolant temperature obtained during trouble
If a meaningless coolant temperature were obtained and the processing in [4] carried out, display upon recovery would be strange. In order to prevent this, the coolant temperature is not obtained during a coolant temperature sensor or CAN bus trouble.

[6] Message display
When the gauge level reaches 8, "OVERHEAT" is displayed on the monitor and the buzzer buzzes.

https://truckmanualshub.com/

(2) Oil temperature gauge

[1] Configuration

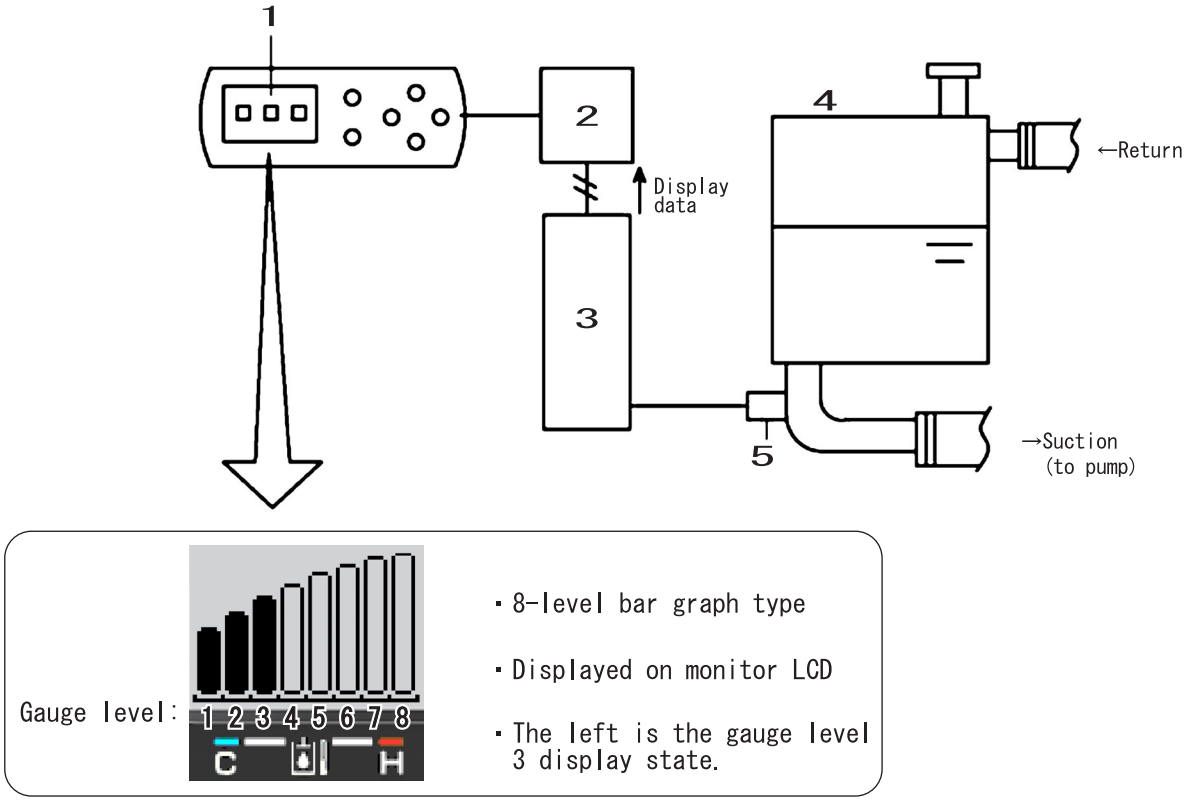

RE06004-018

1	Oil temperature gauge	4	Hydraulic oil tank
2	Monitor	5	Oil temperature sensor
3	Computer A		

[2] Operation summary

Computer A reads the oil temperature from the oil temperature sensor installed in the hydraulic oil tank outlet suction pipe and judges the gauge level. The gauge level is sent to the monitor with UART communication.

https://truckmanualshub.com/

[3] Gauge and oil temperature
The gauge level is judged based on the diagram below.

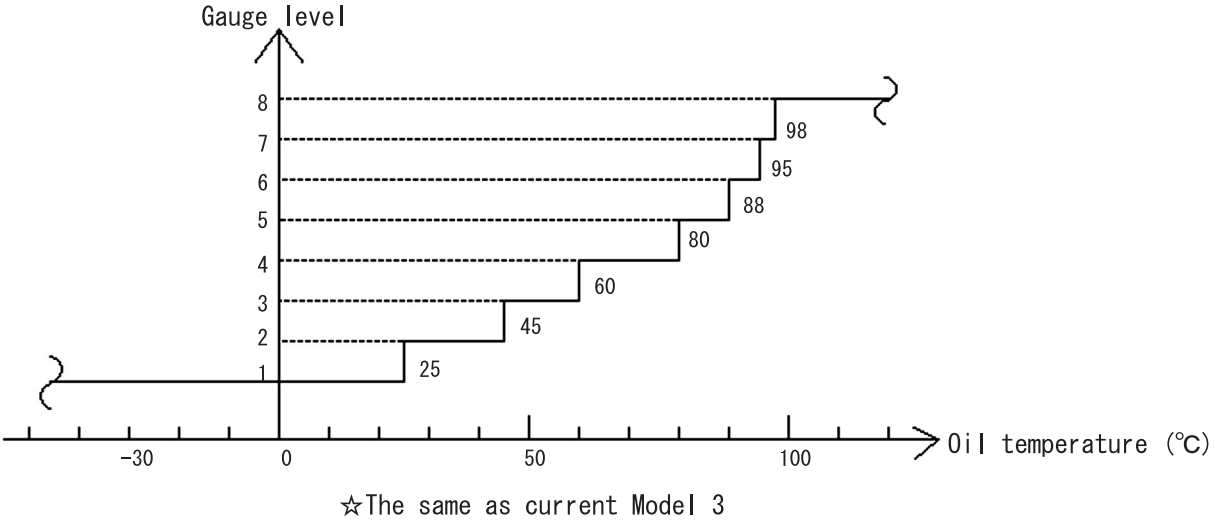

RST-05-06-001bq

[4] Preventing flickering
When the temperature moves up or down near the gauge level fluctuation threshold (for example 25 ℃), the gauge goes on and off repeatedly causing flickering. In order to prevent that, the gauge level is judged using the temperature (judgment oil temperature) after the following processing.

- Judgment oil temperature = Average of the oil temperatures obtained the past 32 times
- Oil temperature obtained period = 1 sec.
- Bar graph update period = 32 sec. (updates when the 32nd oil temperature obtained)

[5] Trouble mode
If trouble occurs in the oil temperature sensor, the bar graph itself is not displayed. (only for trouble due to short)
If trouble occurs in UART communication (send: computer A → monitor), the display is fixed at the last state sent.
When the trouble is recovered from, the display returns to normal.

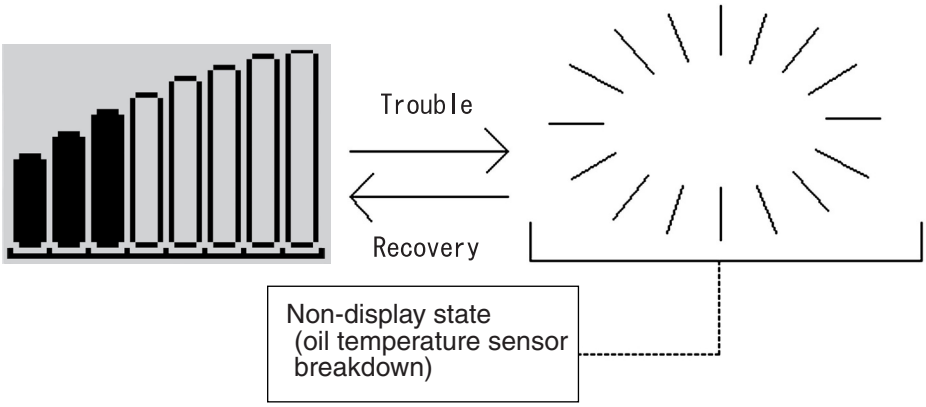

RE06004-023

☆) Oil temperature obtained during trouble
If a meaningless oil temperature were obtained and the processing in [4] carried out, display upon recovery would be strange. In order to prevent this, the oil temperature is not obtained during an oil temperature sensor trouble.

[6] Message display
When the gauge level reaches 8, "OVERHEAT" is displayed on the monitor and the buzzer buzzes.

https://truckmanualshub.com/

(3) Fuel gauge

[1] Configuration

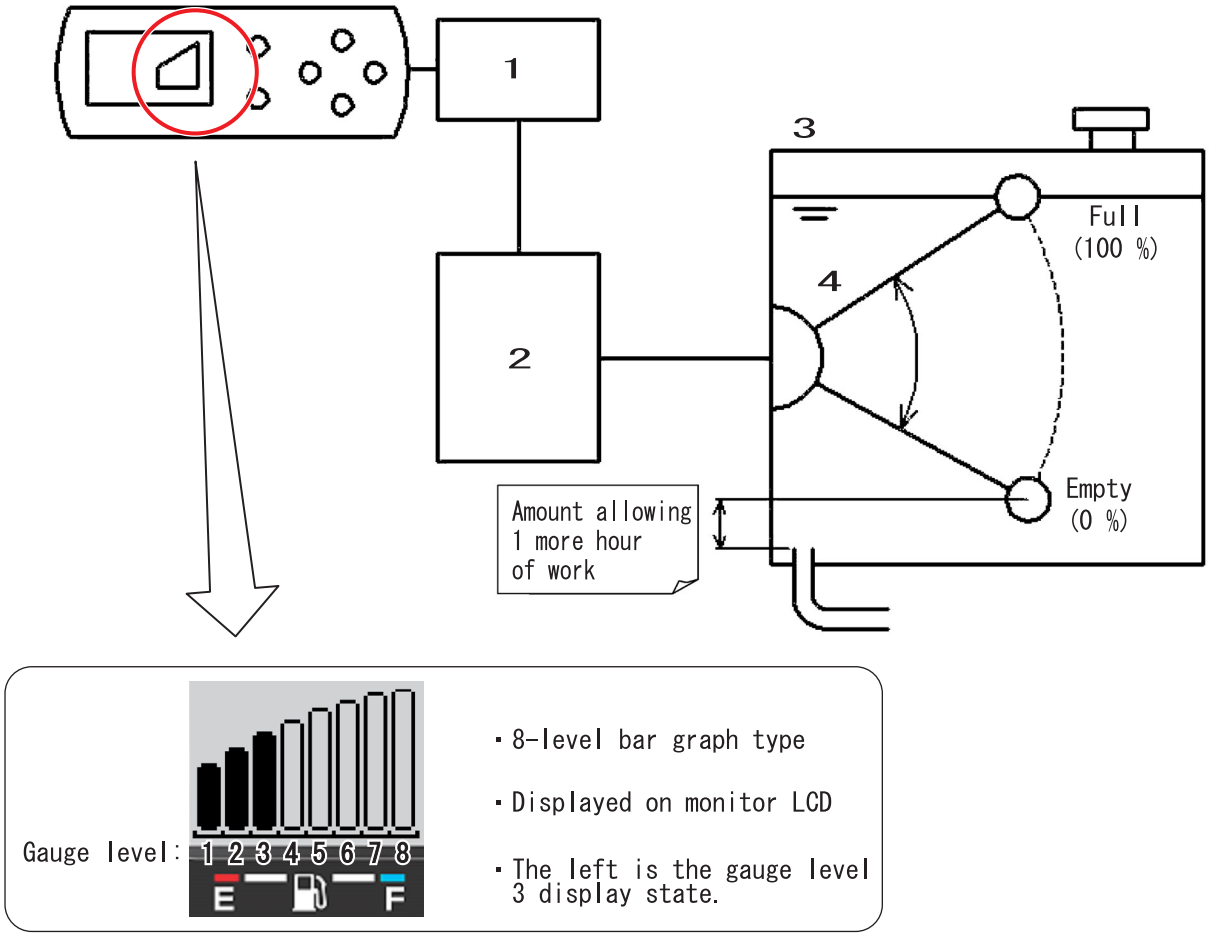

RE06004-006

1	Monitor	3	Fuel tank
2	Computer A	4	Fuel sensor

[2] Operation summary

Computer A reads the fuel level from the fuel sensor installed in the fuel tank and judges the gauge level.

The gauge level is sent to the monitor with UART communication.

https://truckmanualshub.com/

[3] Relationship between gauge level and lever angle

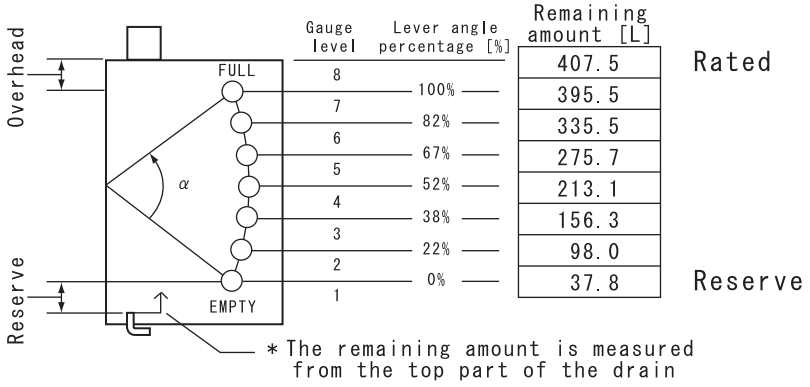

R: Lever angle percentage [%]

Gauge level and fuel level [L]							
1	2	3	4	5	6	7	8
(R ≦ 0 %)	(R < 22 %)	(R < 38 %)	(R < 52 %)	(R < 67 %)	(R < 82 %)	(R < 100 %)	(R ≧ 100 %)
- 37.8	- 98.0	- 156.3	- 213.1	- 275.7	- 335.5	- 395.6	- 407.5

[4] Message display
When the gauge level reaches 1, "LOW FUEL" is displayed on the monitor and the buzzer buzzes. (See "Message Display List".)

[5] Preventing flickering
When the fuel surface in the tank shakes and the fuel sensor lever angle moves up or down near the gauge level fluctuation threshold (for example 7%), the gauge goes on and off repeatedly causing flickering.
In order to prevent that, the gauge level is judged using the lever angle (judgment lever angle) after the following processing.

- Lever angle obtained period = 1 sec.
- Bar graph update period = 5 sec.
- The judgment value when the bar graph is updated = Average lever angle over the past 20 sec.

[6] Trouble mode
If trouble occurs in the fuel sensor, the bar graph itself is not displayed.
If trouble occurs in UART communication, the display is fixed at the last state sent.
(Send: Computer A → Monitor)
When the trouble is recovered from, the display returns to normal.

[7] Lever angle obtained during trouble
If lever angle were obtained and the processing in [5] carried out, display upon recovery would not be normal.
In order to prevent this, the lever angle is not obtained during a fuel sensor trouble.

https://truckmanualshub.com/

Accessories

1. Horn

Basic operation

[1] When the horn switch is pressed, the horn is driven via a relay.

[2] When the volume select switch is switched ON, the LED indicator lights up and only the horn (L) sounds. (horn volume down)
The volume select switch state is retained even when the key is switched OFF. (The previous data is held.)

[3] Communication with computer A
When this switch is pressed, the signal is first sent to the computer A and processed.
Then, the drive command is sent to the monitor and the monitor drives the horn (R) relay.

[4] Trouble mode
If there is an error in UART communication, the monitor goes into trouble mode.
In trouble mode, the monitor carries out the operation in [2] on its own without receiving commands from the computer A.
However, the previous data is not held. (The monitor always starts up with normal volume.)
When the error is recovered from, trouble mode ends too and the monitor returns to normal mode.

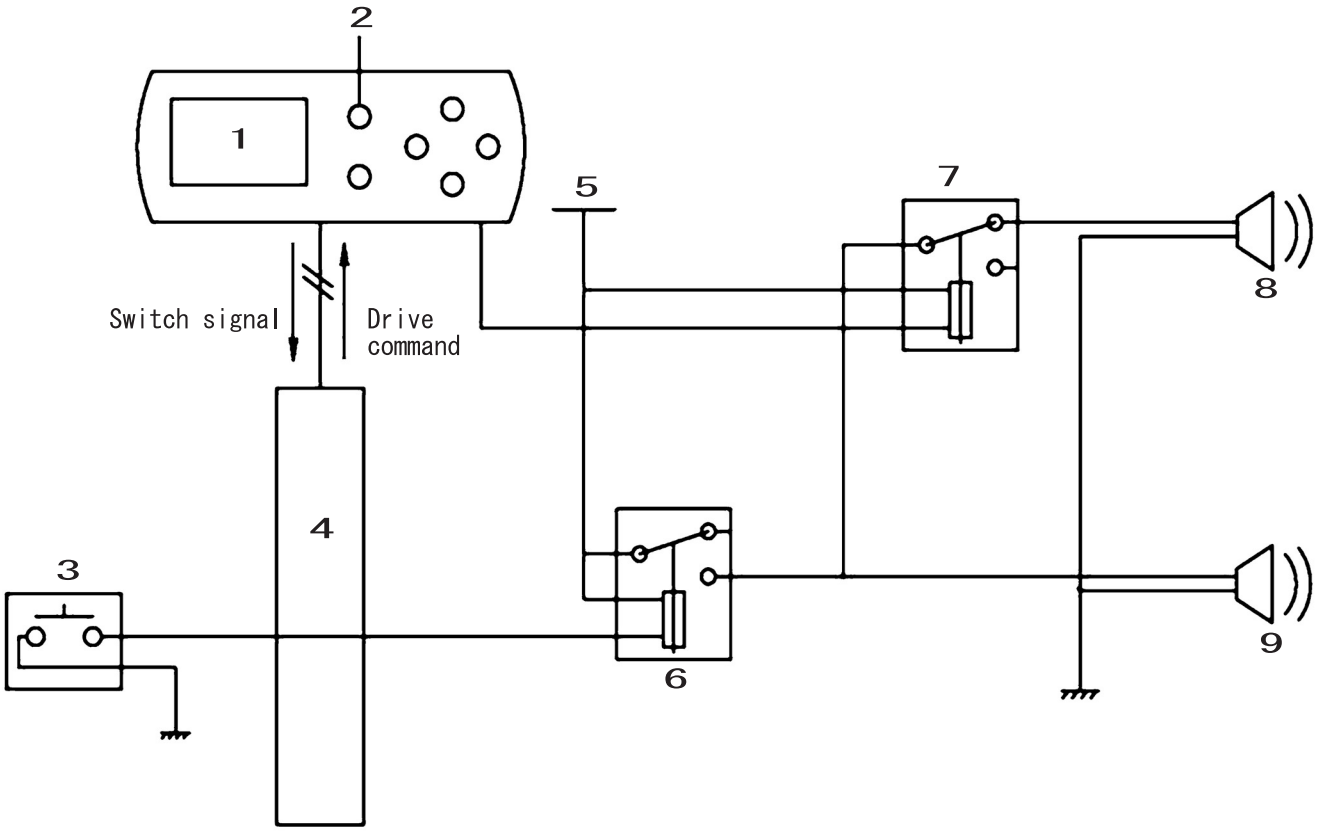

RE06004–004

1	Monitor panel	6	Horn (L) relay
2	Horn volume select switch (with LED indicator)	7	Horn (R) relay
3	Horn switch	8	Horn (R)
4	Computer A	9	Horn (L)
5	Key switch		

https://truckmanualshub.com/

2. Working Light

Basic operation

[1] When turning the key to ON, always start with the working light OFF. (Previous data reset)

[2] Each time the working light switch is pressed, the working light is switched between ON and OFF. (momentary)
When this light is ON, the LED indicator lights up.

[3] Communication with computer A
When the working light switch is pressed, the signal is first sent to the computer A and processed.
Then, the light command is sent to the monitor and the monitor drives the relay.

[4] Trouble mode
If there is an abnormality occurs in UART communication, the monitor goes into trouble mode.
In trouble mode, the monitor carries out the operation in [2] on its own rather than commands from the computer A.
When the communication abnormality is recovered from, trouble mode is exited and the monitor returns to normal mode.

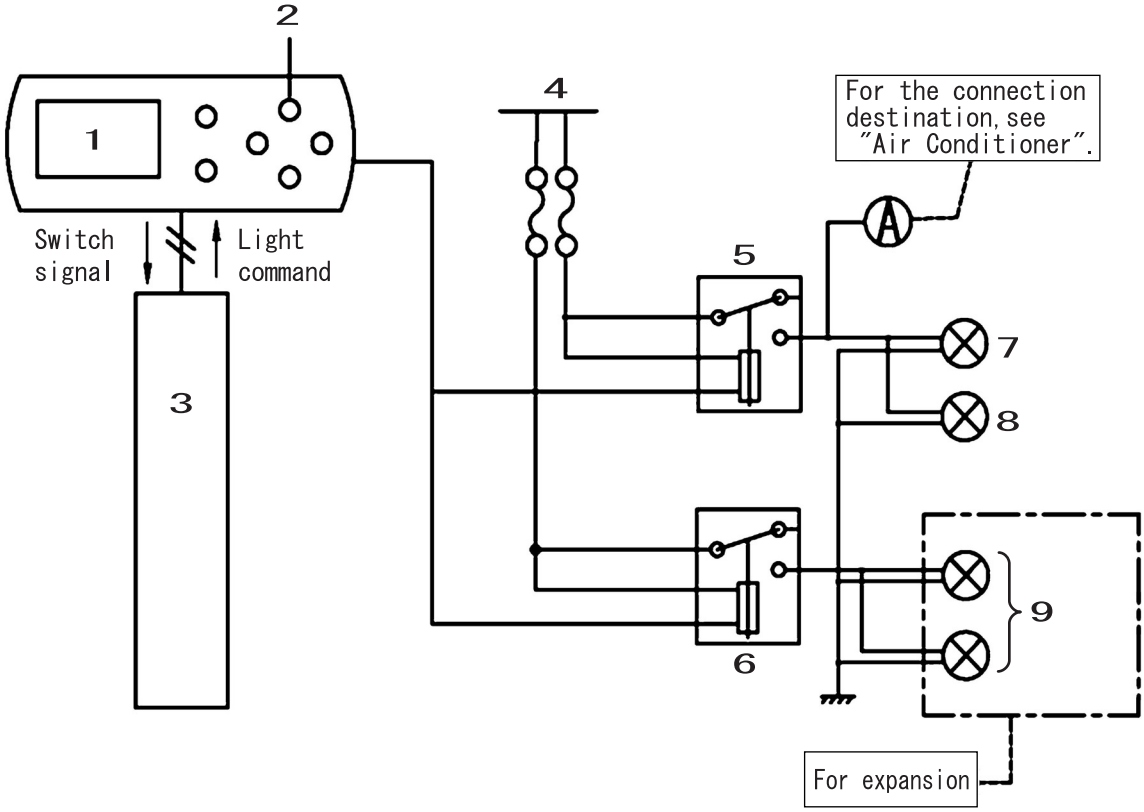

1	Monitor panel	6	Working light relay (cab)
2	Working light switch (with LED indicator)	7	Working light (boom)
3	Computer A	8	Working light (tool etc.)
4	Key switch	9	Working light (cab top)
5	Working light relay (upper)		

https://truckmanualshub.com/

3. Wiper and Washer

[1] Configuration

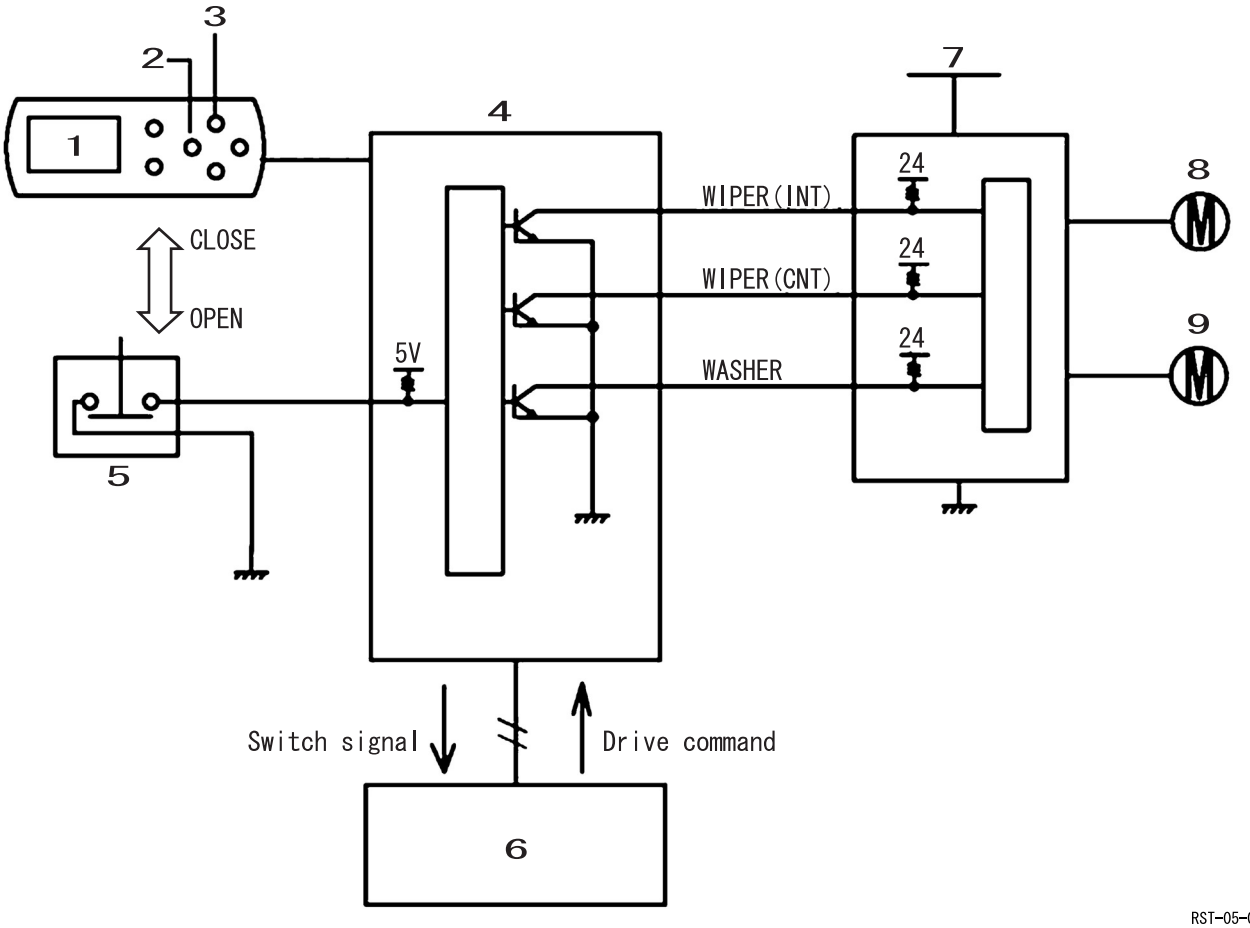

RST-05-06-001ap

1	Monitor panel	4	Monitor	7	Key switch
2	Washer switch	5	Front window limit SW	8	Wiper motor
3	Wiper switch (with LED indicator)	6	Computer A	9	Washer motor

[2] Wiper basic operation

When the wiper switch is pressed, it switches to the next state in the order: intermittent operation → continuous operation → OFF → intermittent. In intermittent operation, the I LED is lit and in continuous operation, the II LED lights up. (When the wipers are OFF, both are OFF.) When turning the key ON, always start from OFF. (Previous data reset)

[3] Washer basic operation

While the washer is pressed, the washer operates.

[4] Wiper linked with washer

While the washer switch is pressed, after 0.5 sec., the washer starts to operate linked with the wipers.
When the washer switch is released, the washer stops, and after 2 wipes, the wipers stop too.

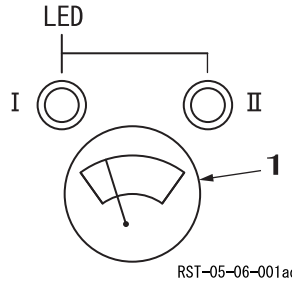

RST-05-06-001aq

1	Wiper switch

1) Auto rise up
Even during wiper operation, if the key is turned OFF, the wipers are automatically stopped and retracted.

2) Overload prevention
If the blades are locked, the monitor output is stopped.

[5] Front window open detection

If the front window is opened while the wipers or washer are operating, it is stopped.
The operations of [2] and [3] are not carried out while the front window is open.

https://truckmanualshub.com/

[6] Wiper controller duty
The wiper controller is responsible for [2] - [4]. [5] is provided by the monitor/controller detecting the front window being open and the output to the wiper controller being switched OFF.

[7] Computer A duty
Computer A receives switch signals from the monitor through UART communication (wiper switch, washer switch, front window limit switch).
This signal is processed by computer A and the 3 ports that control the wiper controller (WIPER (INT), WIPER (CNT), and WASHER) are controlled as in the following time chart.

[8] Time chart

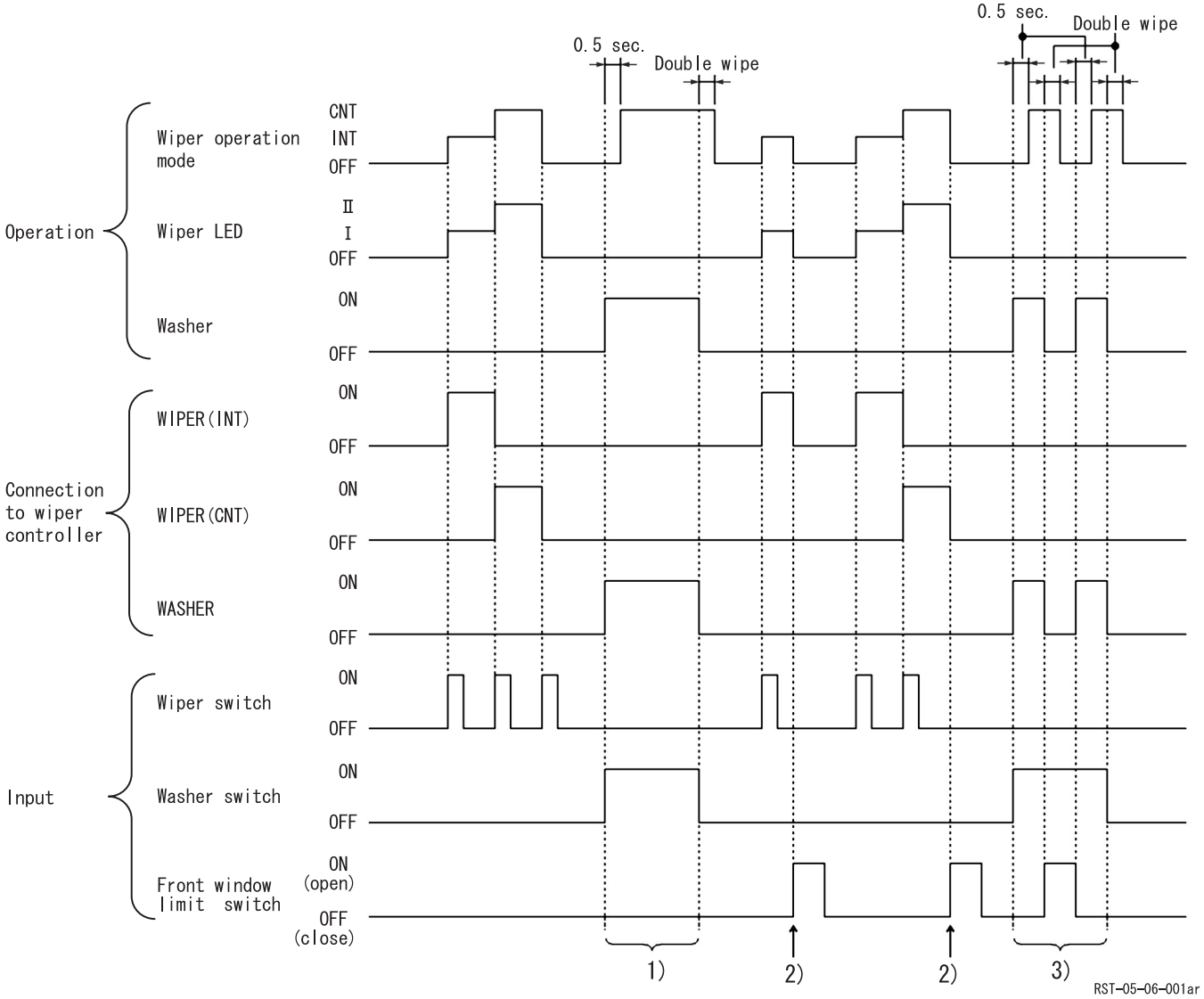

1) During washer operation, wiper operations are handled automatically by the wiper controller even if there is no output to WIPER (INT) or WIPER (CNT).
2) Wiper stop by front window open detection
3) Washer-linked wiper stop by front window open detection

[9] Trouble mode
If there is an error in UART communication, the monitor cannot receive drive commands from computer A.At this time, the monitor goes into trouble mode and independently executes the same control as in [8].
When the UART communication abnormality is recovered from, the monitor recovers from trouble mode and follows the drive commands from computer A.

https://truckmanualshub.com/

4. Room Lamp

[1] Configuration

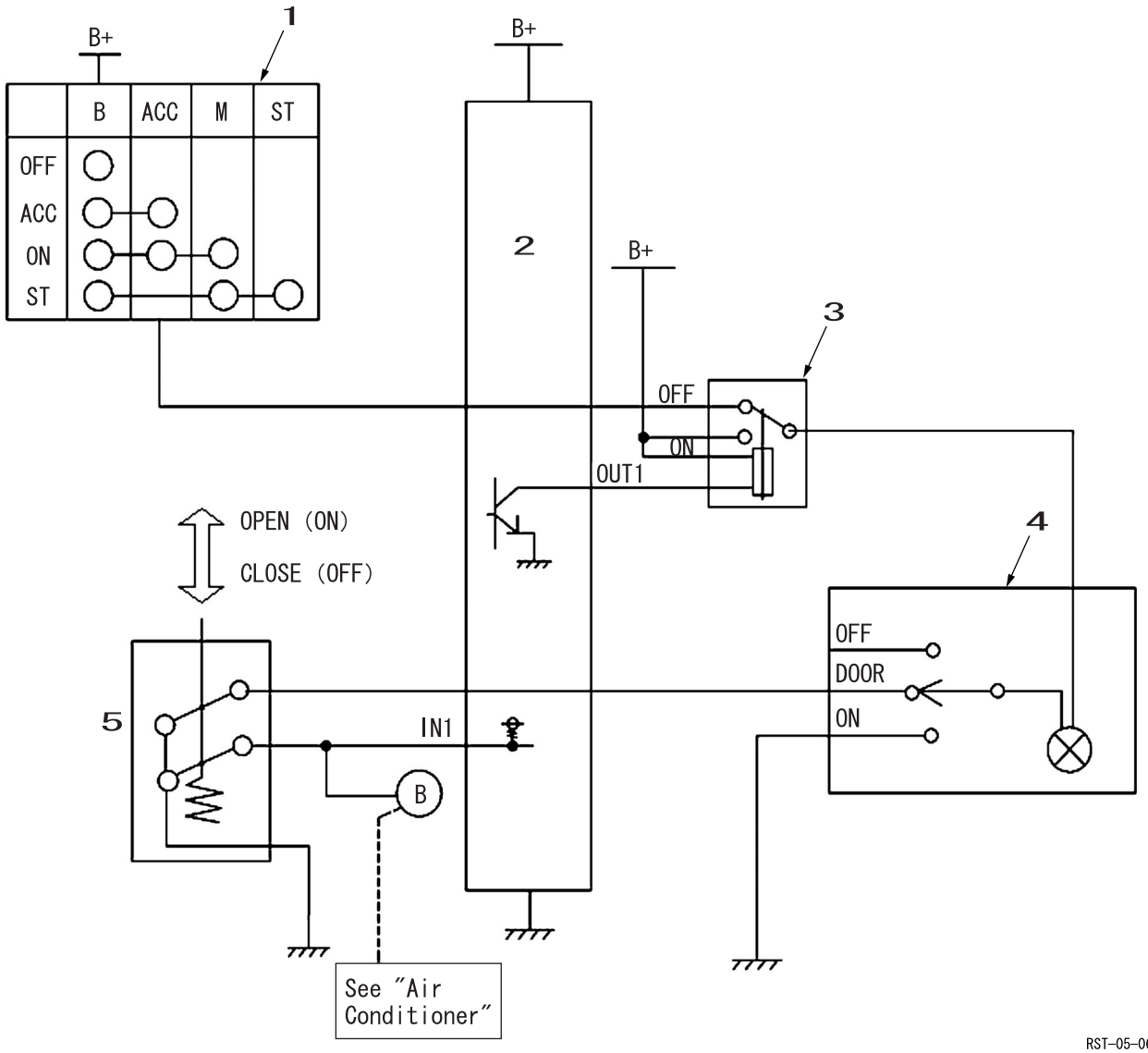

RST-05-06-001as

1	Key switch	4	Room lamp
2	Clock unit	5	Door limit switch
3	Room lamp relay		

- The clock unit is not connected with computer A or B and controls the room lamp relay on its own.
- For the Ⓑ connection destination, see "Air Conditioner".
- The clock unit is connected to the backup power supply and continues to operate even if the key is switched OFF.

[2] Door link

When the room lamp switch is set to the DOOR position, the lamp lights when the door is open and goes out when the door is closed.

[3] Auto lamp off

In [2], in order to prevent the battery from being run down, the room lamp goes out 30 sec. after the door is opened. However, this function only works when the key switch is OFF. If it is ACC or ON, auto lamp off does not work. (Because even if the room lamp relay is OFF, power is supplied from ACC.)

The only purpose of this auto lamp off function is to prevent the battery from being run down if the door is left open with the key OFF.

https://truckmanualshub.com/

[4] Time chart
The time chart shows how the function in [3] works. The room lamp switch is set to DOOR.

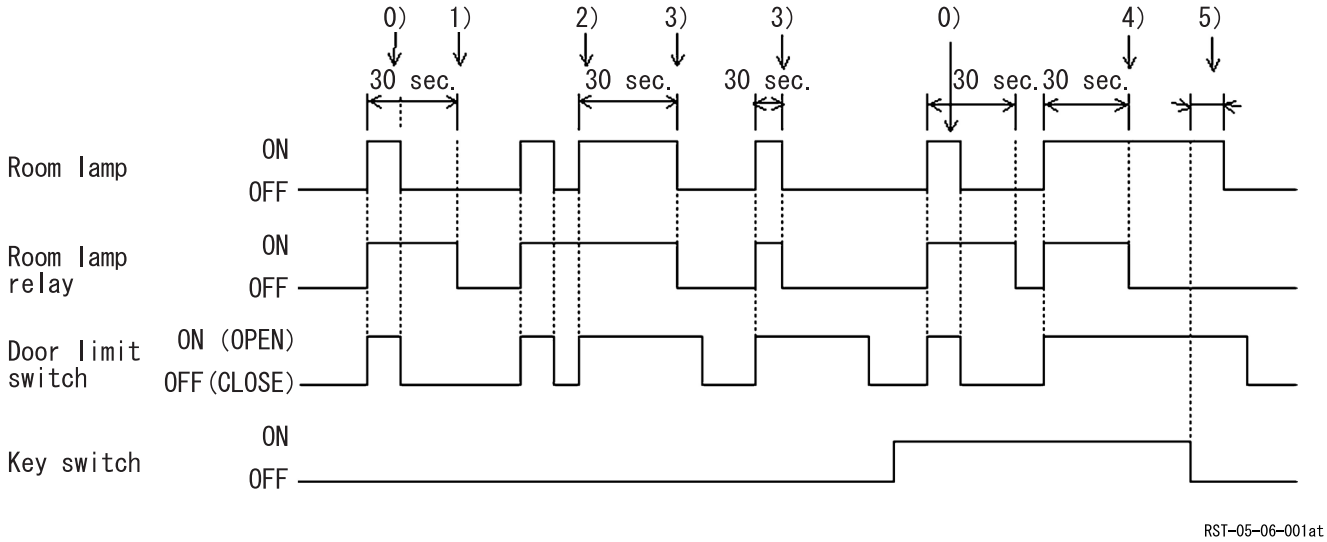

0) Door linked room lamp
1) Even after the door is closed, the room lamp relay is ON for 30 sec.
2) 30 sec. is counted from the last time the door was opened.
3) After 30 sec., the lamp goes off automatically.
4) Auto lamp off does not work if the key switch is ON or ACC.
5) When the key is switched OFF, the lamp goes out. (after power-cut delay)

[5] Trouble mode
Since the clock unit does not have a trouble detection function for either input (IN1) or output (OUT1), it does not go into trouble mode.

[6] Time chart
This shows the operation when the room lamp switch is ON.

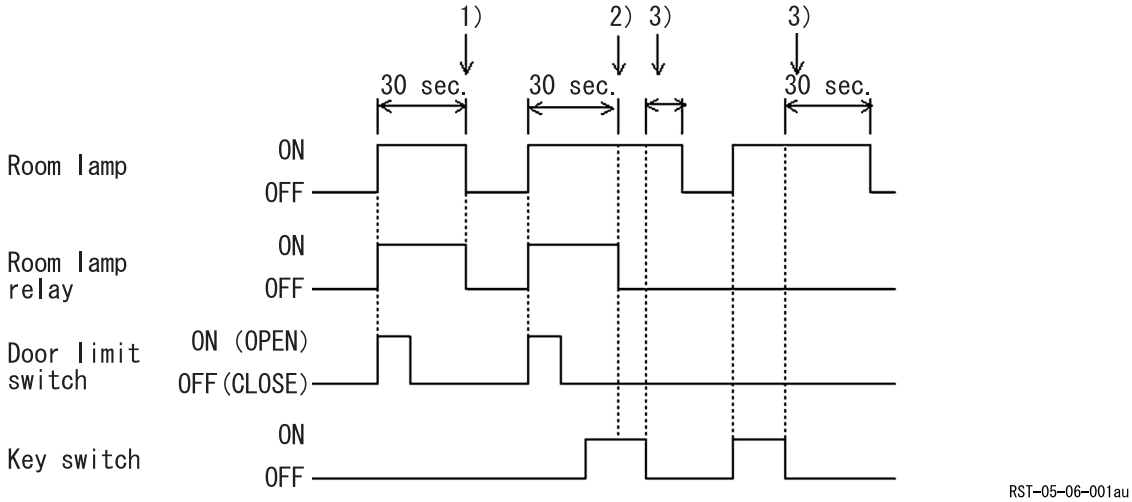

1) If the key is OFF, the lamp goes out automatically after 30 sec.
2) Auto lamp off does not work if the key switch is ON or ACC.
3) Power-cut delay

https://truckmanualshub.com/

5. Radio Mute

[1] Configuration

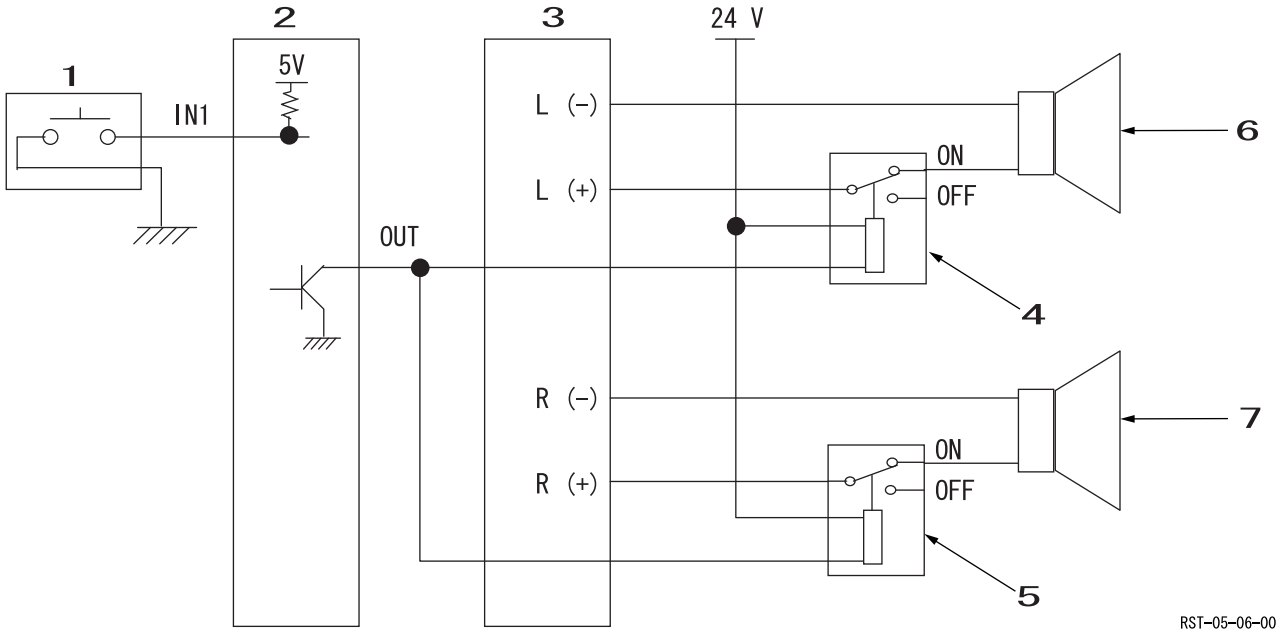

1	Mute switch (knob)	4	Speaker (L) relay	7	Speaker (R)
2	Clock unit	5	Speaker (R) relay		
3	Radio	6	Speaker (L)		

[2] Summary and purpose

The radio volume can be switched ON/OFF with one-touch control by switching the speaker (L and R) signal lines on and off with a relay.

[3] Operation

Each time the mute switch on the knob is pressed, the radio volume is switched between ON ⇔ OFF. (momentary)
When the key is switched ON, the radio always starts with mute off (normal radio volume). (Previous data reset)

[4] Battery save

In order to prevent the battery from being run down, when the key is at ACC (accessory), the radio is always set to mute off (normal radio volume).

[5] Time chart

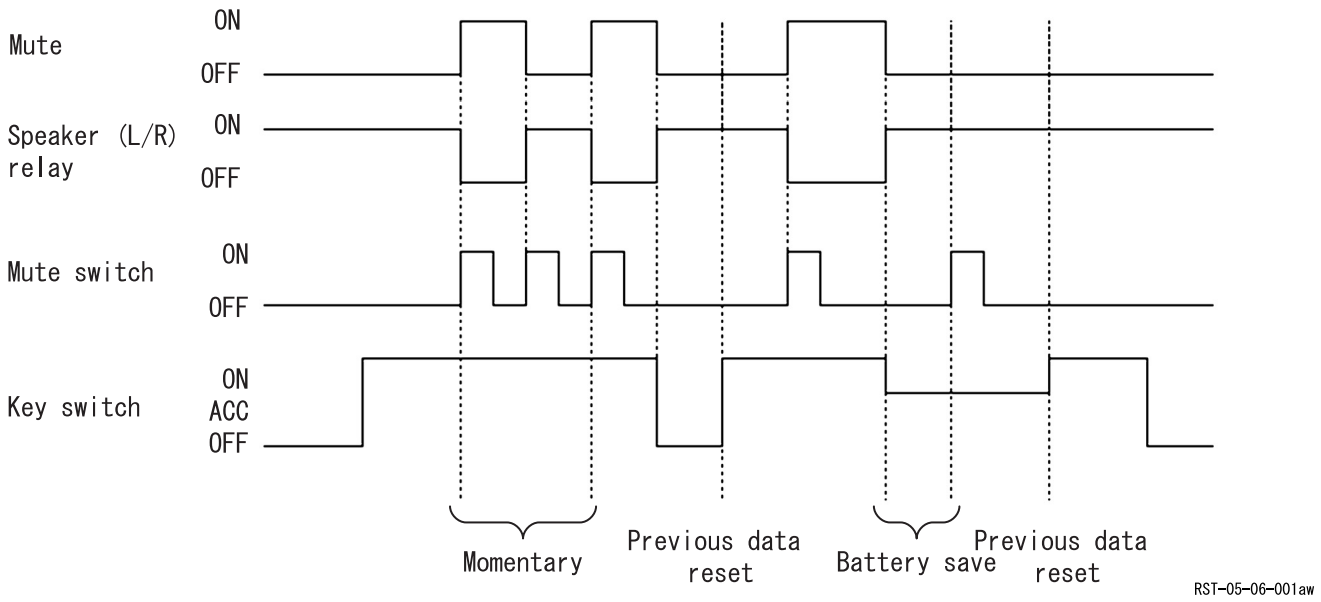

https://truckmanualshub.com/

Other

1. Anti-theft

(1) Anti-theft control

If the anti-theft password does not match (anti-theft is not ended), the machine operation is controlled.

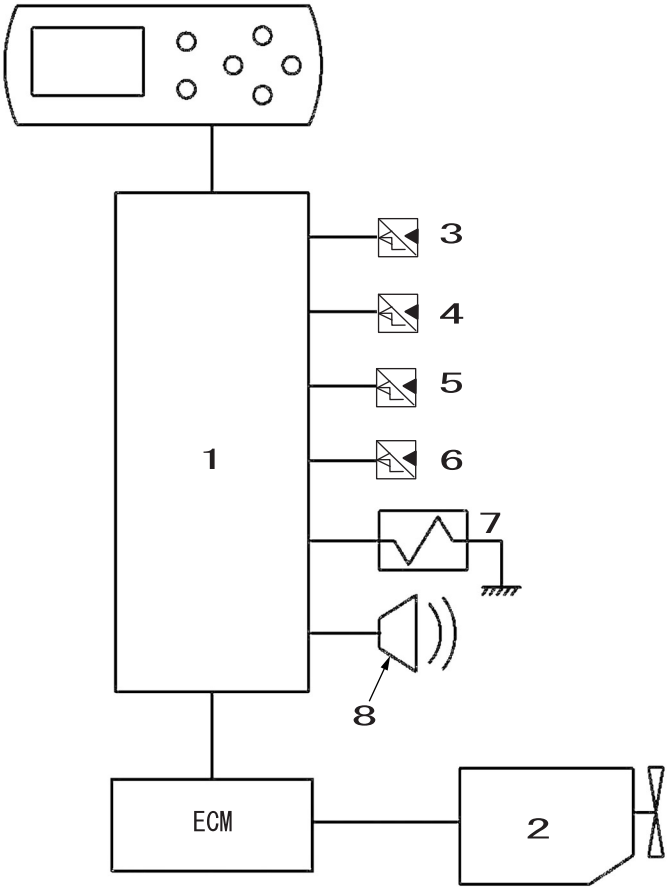

RST-05-06-001ba

1	Computer A	4	P2 pressure sensor	7	Swing brake solenoid
2	Engine	5	Travel pressure sensor	8	Travel alarm
3	P1 pressure sensor	6	Upper pressure sensor		

[1] If the engine is started without shutting off the anti-theft device, the machine is controlled.

1) The engine speed is fixed at low idle.
2) The swing brake cannot be released. (Solenoid operation is not possible.)
3) The travel alarm buzzes continuously.

[2] In the state in [1], if any of the following operations is executed, the engine is forced to stop.

1) Upper or travel operation (Detected by the corresponding sensor)
2) The P1 or P2 pressure rises to 5 MPa or higher.
3) The engine load ratio is 50 % or higher for 2 sec. cumulative.
4) The upper, travel, P1, or P2 pressure sensor is removed.

[3] Even in the state in [1], the anti-theft control can be ended by inputting the correct password.

https://truckmanualshub.com/

2. Battery Save Function

[1] Summary and purpose

In order to prevent the battery from being run down when the key is ON and the engine is stopped, solenoid and proportional valve output is suppressed.

[2] Operation

See the table below.

Control target	Operation when the engine is stopped with the key ON
Travel high-speed switchover solenoid	Fixed to OFF (low speed) whether the travel speed select switch ON or OFF. However, the LED at the side of the switch is linked with the switch.
Power save solenoid	Fixed to OFF (power save OFF)
Free swing solenoid	Fixed to OFF (free swing OFF) whether the free swing switch ON or OFF. However, the free swing icon on the monitor is linked with the switch.
Option return line switchover solenoid	Fixed at OFF (crusher side) regardless of whether the breaker/crusher mode switch is ON or OFF. However, the attachment icon on the monitor is linked with the switch.
Pressure boost solenoid	Fixed to OFF (no boost) regardless of the work mode (throttle volume position). However, the status icon on the monitor is linked with the throttle.
Pump horsepower proportional valve	0 mA, so the standby milli-amp for detecting disconnections of 50 mA does not flow. Disconnections are only detected after the engine has started.
Pump flow proportional valve	Same as above

https://truckmanualshub.com/

3. Alternator Power Generation Detection

[1] Configuration (fuses etc. omitted)

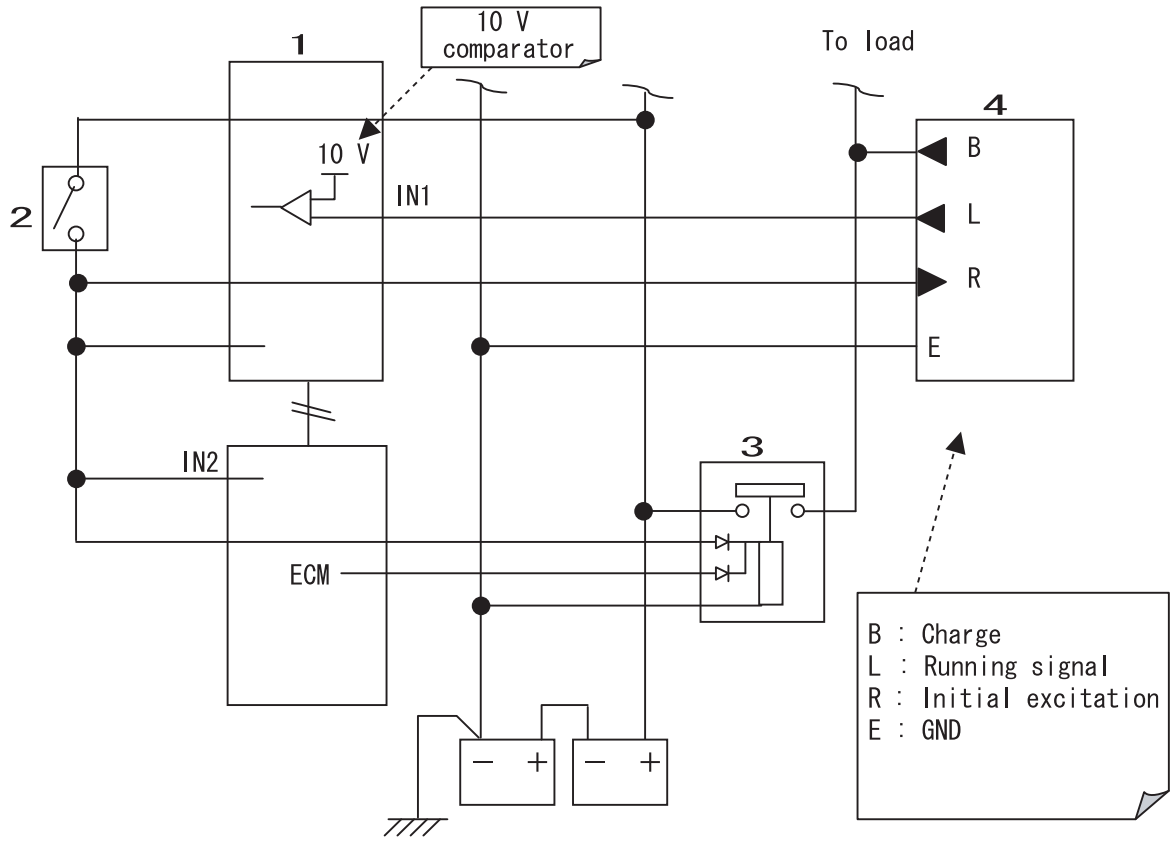

1	Computer A	3	Battery relay
2	Key switch	4	Alternator

[2] Separated from battery voltage
When the battery relay is closed, by looking not at the B terminal, where the battery voltage is applied, but rather to the independent L terminal, defects in the alternator alone are detected.
(The battery voltage is monitored by the ECM. (IN2))

[3] Operation
Alternator L terminal output voltage judged with 10 V comparator
ON when L terminal voltage ≧ 10 V
OFF when L terminal voltage < 10 V * The threshold value of 10 V has a tolerance of ± 1 V.

[4] Power generation defect judgment
If the 10 V comparator input is OFF even though the engine is running, it is judged that there is a power generation defect. For details on the judgment conditions, see the "Main Unit Diagnostic Trouble Code List".

https://truckmanualshub.com/

4. Overload Warning

[1] Configuration

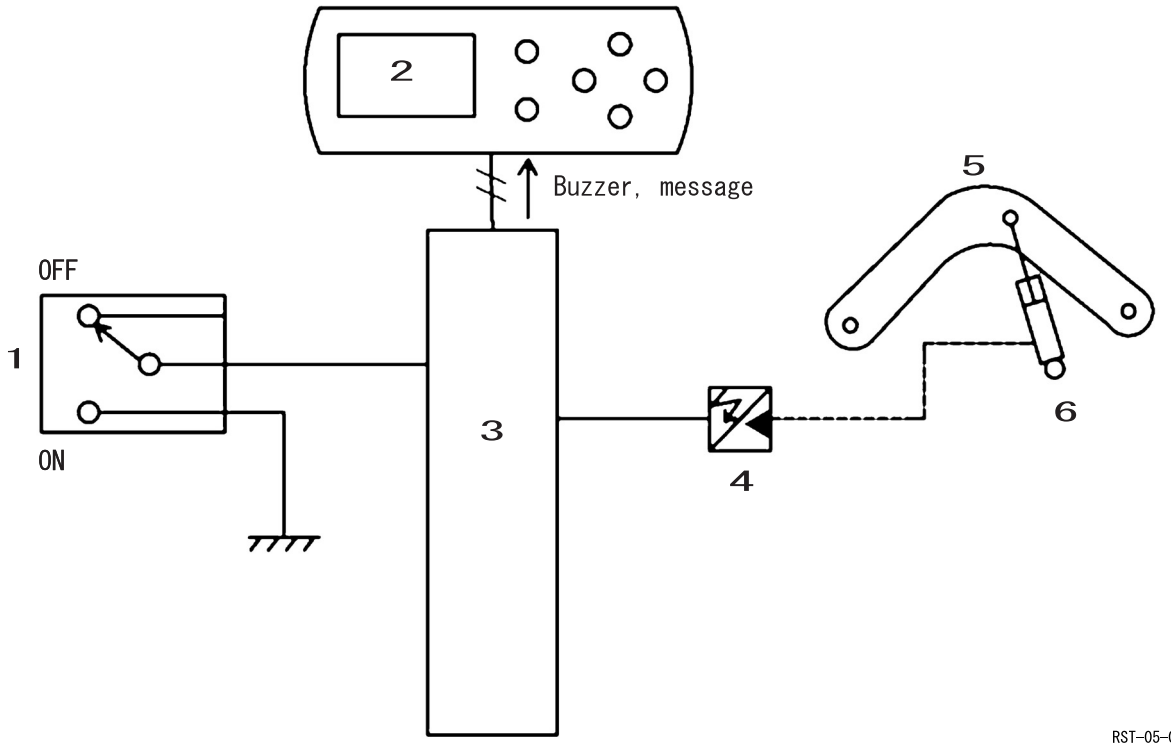

1	Overload warning switch (alternate)	4	Boom cylinder bottom pressure sensor
2	Monitor panel	5	Boom
3	Computer A	6	Boom cylinder

[2] This function is only mounted on machines for Europe.

[3] Warning judgment
When the overload warning switch is ON, the overload warning is switched ON/OFF according to the following conditions.
ON: (Boom cylinder bottom pressure ≧ set pressure) for continuously for 1 sec.
OFF: (Boom cylinder bottom pressure ≦ set pressure - 2 MPa) for continuously for 1 sec.
* For the set pressure for each model, see "Overload set pressure".
* The set pressure can be changed with CFG.

[4] Operation when warning judgment ON
The "OVERLOAD" message is displayed on the monitor and the buzzer buzzes continuously.
This message is handled as an "alert". For details, see "Message Display List".

[5] Ending the warning
To end a warning that has been issued, either switch the overload warning switch OFF or operate the attachment in such a way that the judgment in [2] goes OFF.
Be aware that there is no buzzer stop switch like the one in Model 3B.

[6] Trouble mode
If trouble occurs in the boom cylinder bottom pressure sensor, this function goes into trouble mode and the warning judgment is fixed to OFF.
Even if the trouble is recovered from, trouble mode continues until the key is switched OFF.

[7] Trouble judgment
The boom cylinder bottom pressure sensor trouble judgment is made after the overload warning switch has come ON once.

https://truckmanualshub.com/

[8] Time chart

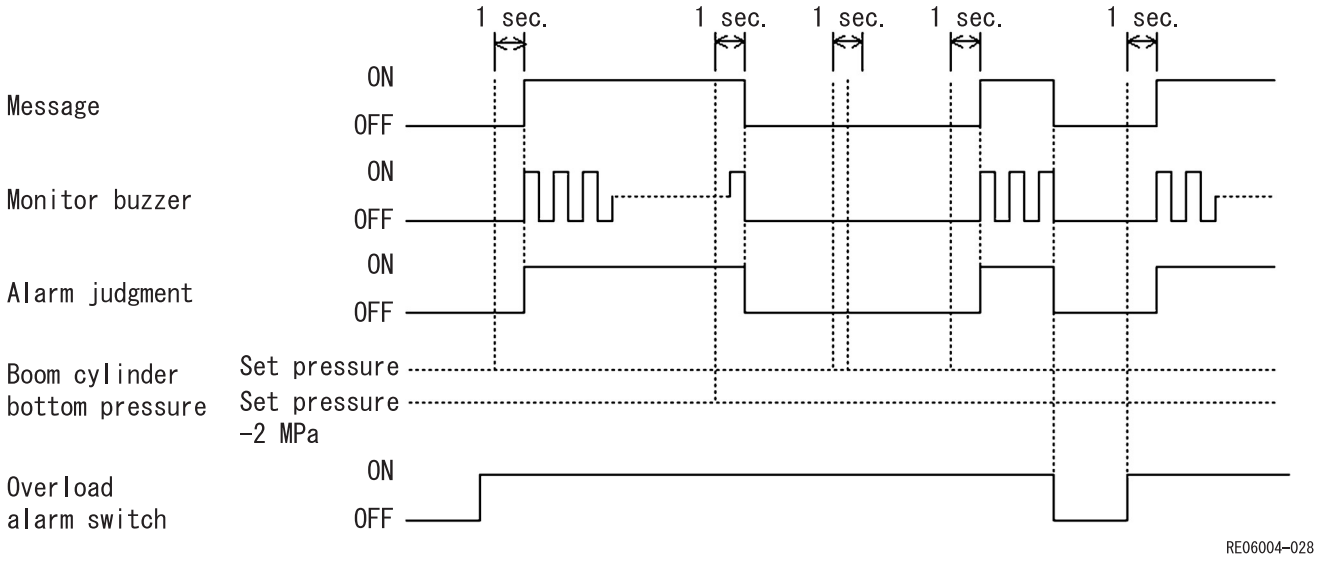

https://truckmanualshub.com/

Options

1. Option line control

[1] Configuration
[Multi-purpose circuit with 2nd option line]

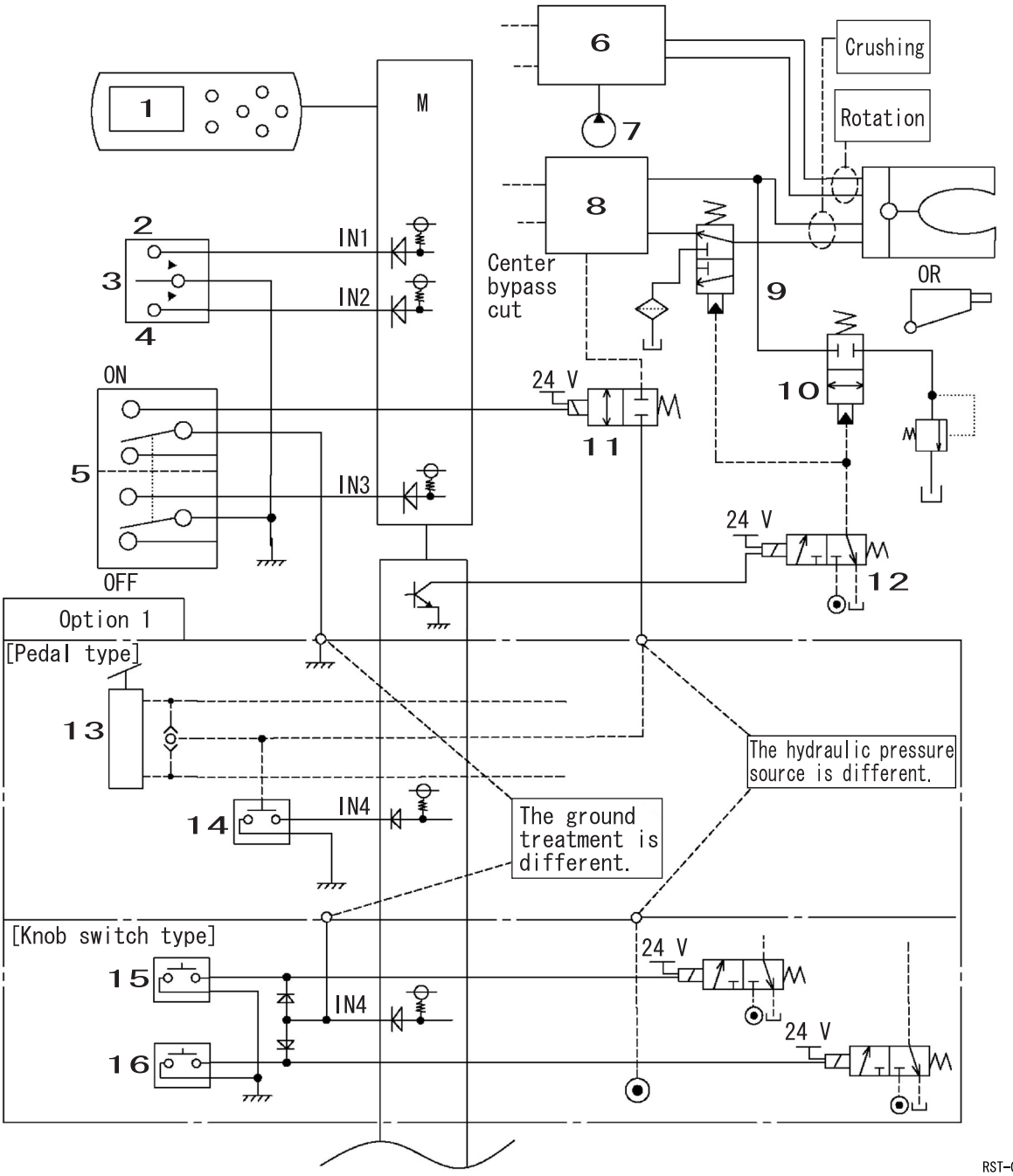

RST-05-06-001be

1	Monitor panel	7	4th pump	13	1st option pedal
2	Breaker mode switch	8	Control valve	14	1st option pressure switch
3	Option select switch	9	3-direction valve	15	1st option switch (L)
4	Crusher mode switch	10	Shut-off valve	16	1st option switch (R)
5	2 pumps flow switch	11	Solenoid valve for 2 pumps flow		
6	2nd option control valve	12	Option switchover solenoid valve		

https://truckmanualshub.com/

Option select switch switchover (breaker mode ⇔ crusher mode)

Operation

When the option select switch is set to the breaker mode switch side, the option switchover solenoid valve is operated and the and the shut-off valve and 3-direction valve are switched. When the switch is switched to crusher mode, the option switchover solenoid valve goes OFF.

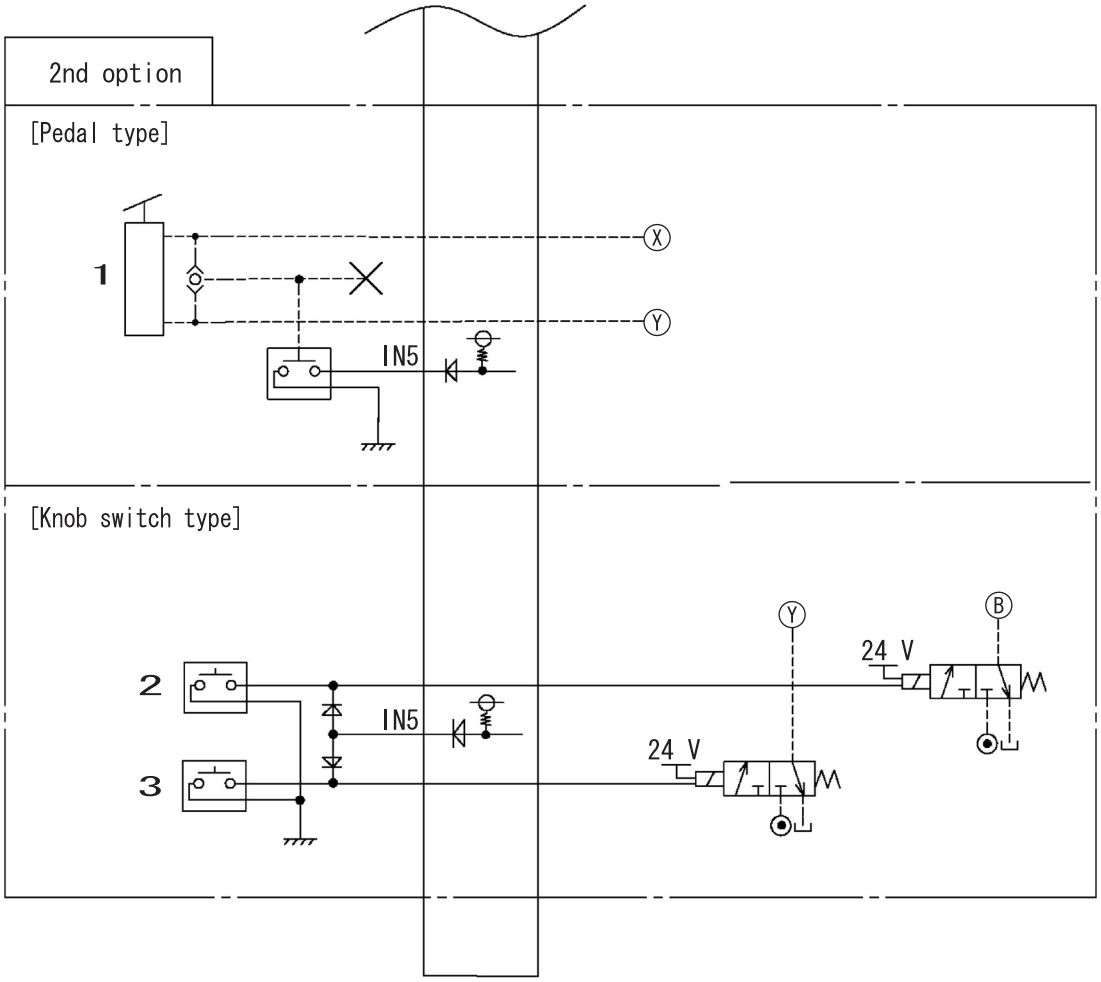

RST-05-06-001bf

1	2nd option pedal
2	2nd option switch (L)
3	2nd option switch (R)

2 pumps flow select switch (1 pump ⇔ 2 pumps)

Operation

When the 2 pumps flow switch is switched ON, the solenoid valve for 2 pumps flow switches to 2 pumps flow.

Difference between pedal type and knob switch type

For the pedal type, solenoid valve for 2 pumps flow hydraulic pressure source is the secondary pressure via the option 1 pedal shuttle, but for the knob switch type, the solenoid valve for 2 pumps flow hydraulic pressure source comes directly from the gear pump.

Therefore, when the 2 pumps flow switch is switched ON, operation becomes always 2 pumps flow.

In order to prevent this, whereas for the pedal type the ground treatment for the 2 pumps flow switch is to ground directly,

with the knob switch type, it is set so that the switch is not grounded unless one or the other of the option switches is ON.

* Be careful with Model 5, as the shuttle valve is built into the option 1 pedal remote control valve.

https://truckmanualshub.com/

Mode switchover
When the breaker mode switch/crusher mode switch is pressed, the option line mode changes as follows.

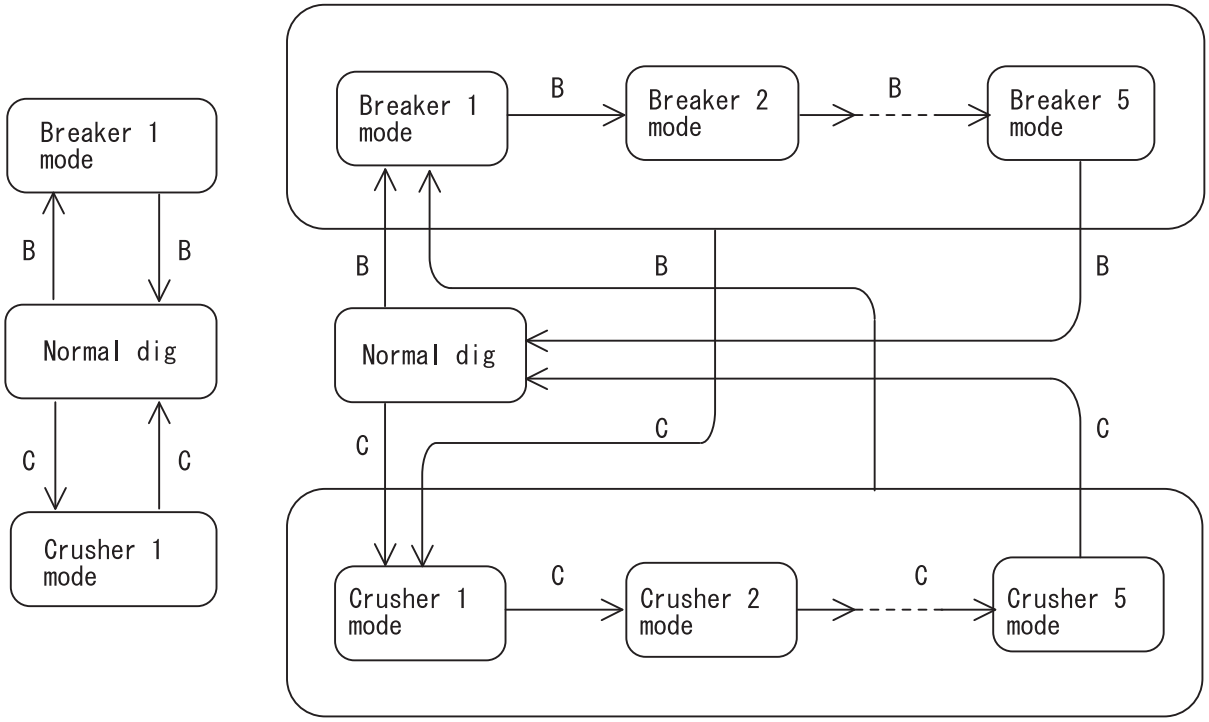

B : Breaker mode switch pressed
C : Crusher mode switch pressed

RST-05-06-001bg

* The factory setting is that only breaker 1 mode and crusher 1 mode can be selected.
* With settings on the service screen, the number of modes can be increased to 5 each for the breaker and for the crusher, for a total of 10.

[2] For [1], the following icons are displayed according to each mode.

	Breaker mode	Crusher mode	Normal dig mode
1:	1	1	None
2:	2	2	
3:	3	3	
4:	4	4	
5:	5	5	

RE06004-020

https://truckmanualshub.com/

2. Option Line Control

[1] Configuration

[Multi-purpose circuit with 2nd option line (pedal type)]

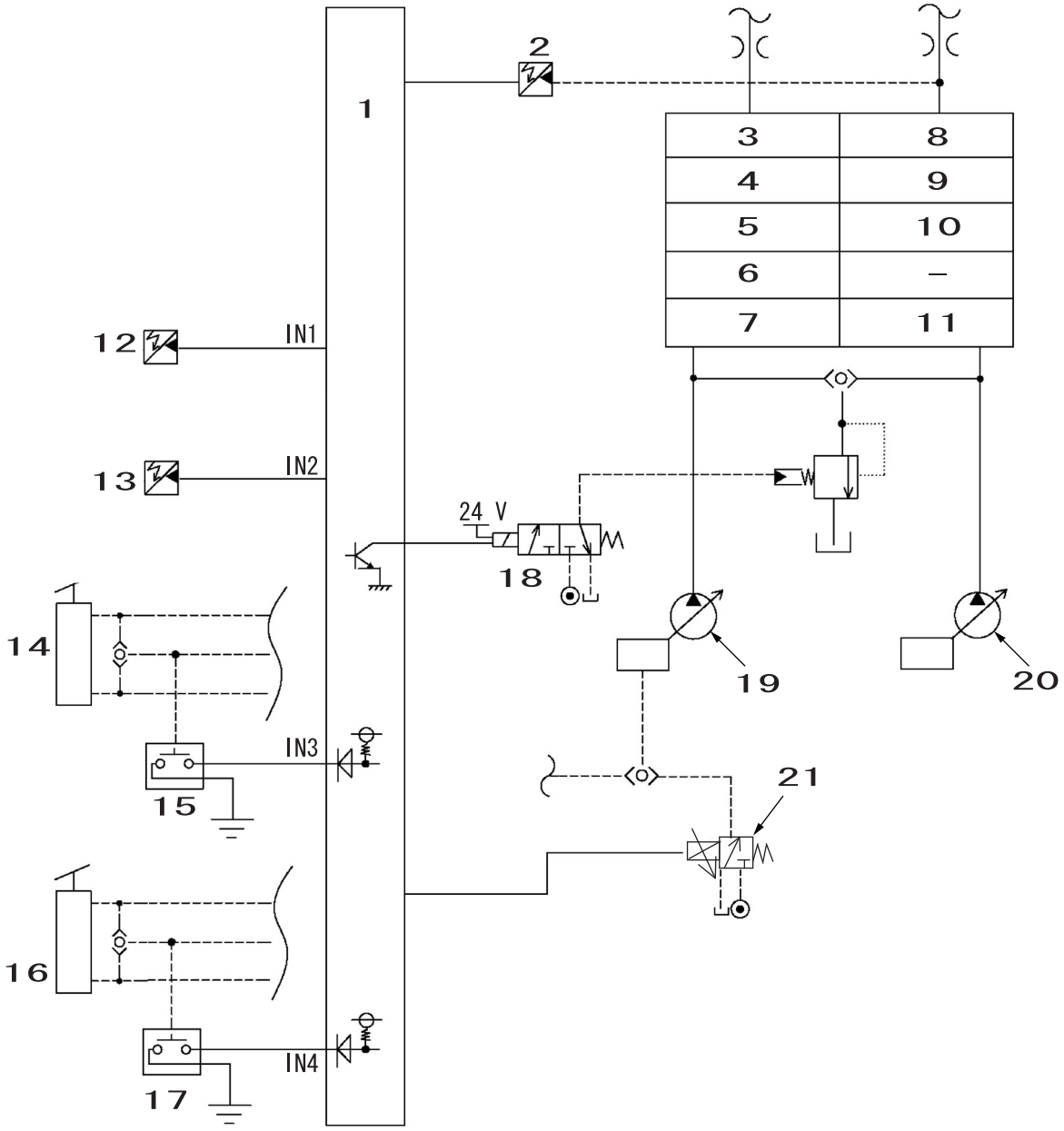

1	Computer A	8	Arm (2)	15	Option pressure switch
2	N2 pressure sensor	9	Boom (1)	16	2nd option pedal
3	Arm (1)	10	Bucket	17	2nd option pressure switch
4	Boom (2)	11	Travel (right)	18	Pressure boost solenoid
5	Swing	12	Swing pressure sensor	19	P1 pump
6	Option 1	13	Travel pressure sensor	20	P2 pump
7	Travel (left)	14	Option pedal	21	P1 flow control proportional valve

* There are 2 operating methods: the pedal type and the knob switch type. With either type, when the pedal or knob switch is operated, the switch input port (IN3, IN4 = IN4, IN5 of "Option select and operating method") is the same. (In other words, there is no need to be aware of the difference in operating method.)

- The explanation below uses the pedal method.

https://truckmanualshub.com/

[2] Option line operation control
The table below shows the control for operation of the independent option and compound operation.

Option line mode	Breaker		Crusher		2nd option	
Operation	1st option pressure switch … ON (IN3 is ground)		1st option pressure switch … ON (IN3 is ground)		2nd option pressure switch … ON (IN4 is ground)	
	Independent	Compound	Independent	Compound	Independent	Compound
Boost cut	Yes		Yes		No	
Flow restriction	Yes		Yes	No	No function (4th pump)	
Engine speed/milli-amp for pump horsepower control proportional valve	According to the command for the work mode selected with the throttle					

- The flow is not cut for compound crusher operation. (to secure speed for compound operation)
- Since the breaker often works while the machine is jacked up with the boom (compound operation), the flow is cut even for compound work. (the same as the engine reduction for the current breaker)
- The pressure boost is cut when Option 1 and Option 2 are operated at the same time. (boost cut priority)
- The engine speed and milli-amp for pump horsepower control proportional valve are according to the work mode currently selected with the throttle.
  (cannot be forced to change to another mode only for breaker/crusher.)

[3] Option 1 independent operation judgment conditions
When all the conditions below are satisfied, it is judged that this is independent operation.
Conditions

1st option pressure switch … ON	Swing pressure sensor … OFF
Travel pressure sensor … OFF	N2 pressure sensor ≧ 2.4 MPa

[4] Flow cut
The maximum flow during option line operation is restricted by the option line selected in "Option line selection and 2 pumps flow".
Also, be careful about the fact that since the flow set for the option line is the flow for SP mode, when used in H/A mode,
the flow is slightly less than the display.
When neither the breaker or crusher mode is selected (normal mode), the minimum flow amount (50 L/min) is produced when the pedal is pressed. (For prevention of damage to attachments)

[5] Trouble mode
If a trouble occurs in input (swing pressure sensor, travel pressure sensor, N2 pressure sensor) or output (pressure boost solenoid, flow proportional valve),
the machine goes into trouble mode and

- Output command to pressure boost solenoid = fixed to OFF
- Output command to flow proportional valve = fixed to OFF
  Mode continues until the key is switched OFF.

https://truckmanualshub.com/

3. Feed Pump Automatic Stop

[1] Configuration

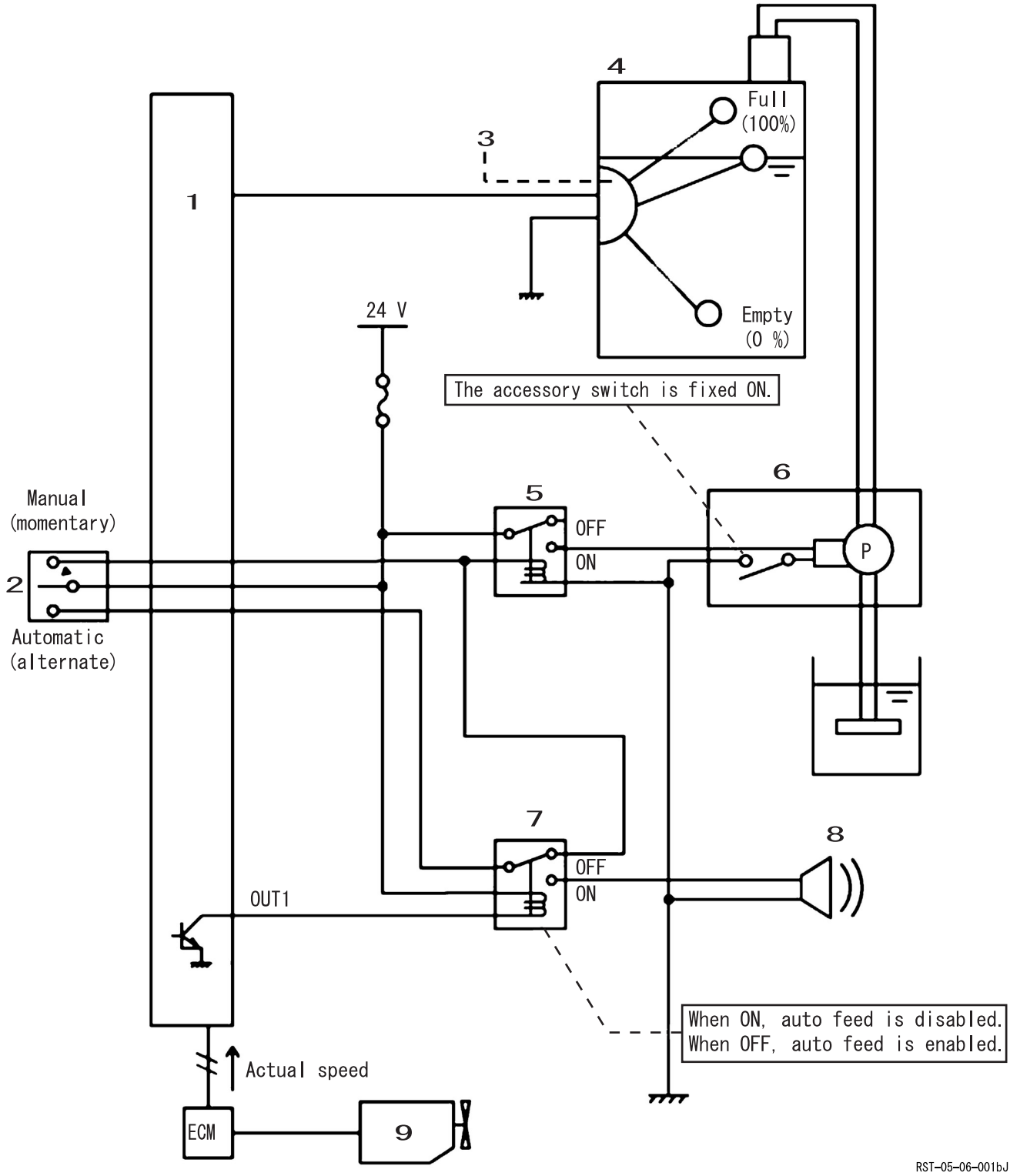

1	Computer A	4	Fuel tank	7	Feed stop relay
2	Feed switch	5	Oil feed start relay	8	Full tank detection buzzer
3	Fuel sensor	6	Oil feed pump made by Jabsco	9	Engine

1) Feed pump main unit accessory (original) switch
This must be fixed ON beforehand in order to use this function.

https://truckmanualshub.com/

[2] Operating method

1) With the engine stopped and the key ON, if the feed switch is flipped down to the Auto side, the fuel feed starts.
2) When the tank is full, the fuel feed stops automatically and the buzzer buzzes to announce that.
3) Returning the feed switch to the center stops the buzzer.
4) To feed more fuel
   Press the feed switch manual side. The fuel is fed while the switch is pressed.

[3] Computer A control targets
Input = Fuel sensor (0 - 100 %), engine state (running/stopped)
Output = Feed stop relay

[4] System state (when relay OFF)
When the feed switch is set to the Auto side, the start relay comes ON and the pump operates.

[5] System state (when relay ON)
When the feed switch is set to the Auto side, the start relay goes OFF, and the pump does not operate. Also, the buzzer buzzes.

[6] Feed stop relay control (while engine running and key ON)
Always ON (no feed)

[7] Feed stop relay control (while engine stopped and key ON)
OFF (auto feed enabled) when (fuel level < 94 % continuously for 3 sec.)
ON (auto feed disabled) when (fuel level ≧ 94 % continuously for 3 sec.)

https://truckmanualshub.com/

[8] Time chart

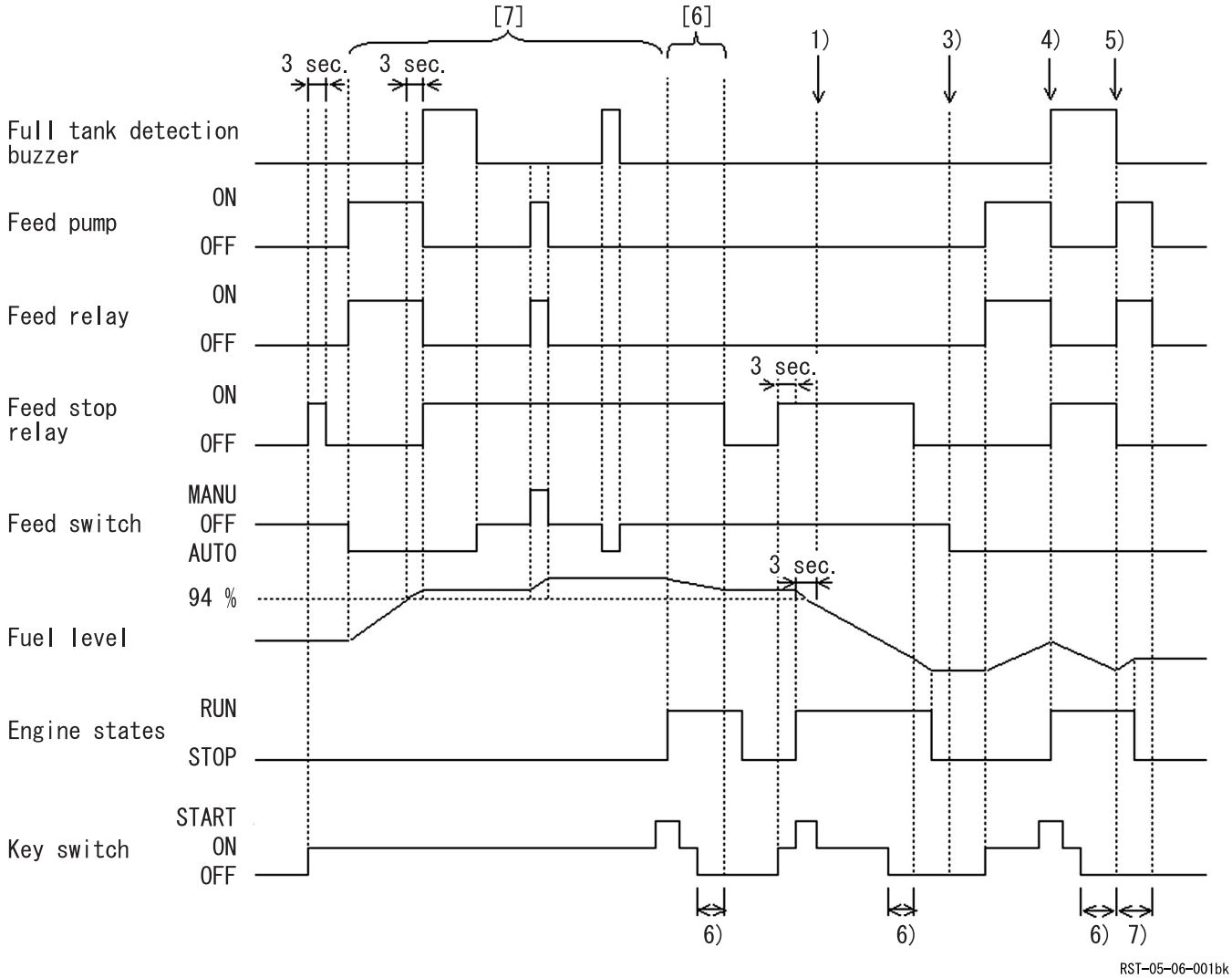

1) Even if the level falls below 94 %, no fuel can be fed as the engine is running.
2) Stopped, so fuel can be fed.
3) Fuel feed is not possible unless the key is switched ON.
4) If the engine is started during fuel feeding, the fuel feed stops.
5) When the operator forgets and leaves the switch switched to the Auto side, the pump operates during the power-cut delay. (When fuel level under 98 %)
6) Power-cut delay

[9] Trouble mode

If trouble occurs in an input (fuel sensor), output (feed stop relay) or communication (CAN), the system goes into trouble mode and the feed stop relay is fixed to OFF. Be careful. In trouble mode, even if the feed switch is set to Auto, the fuel feed is not stopped.

https://truckmanualshub.com/

4. Return Filter Clogging Detected

[1] Configuration

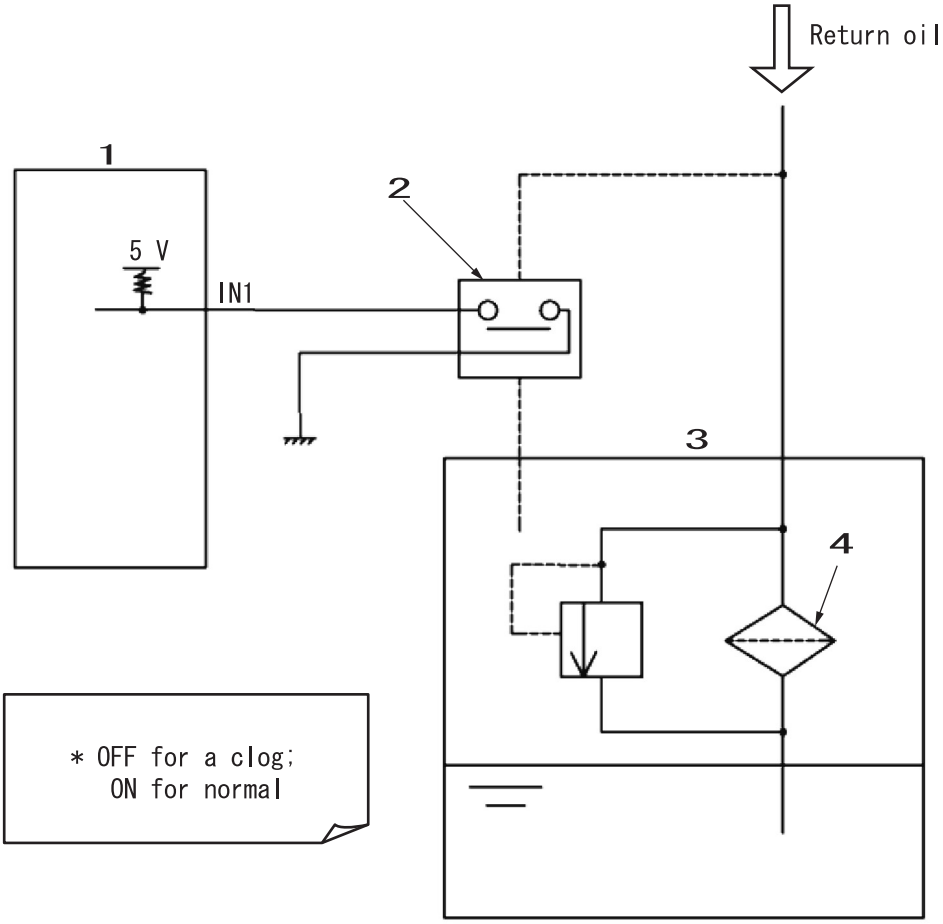

RST-05-06-001bl

1	Computer A
2	Return filter clog pressure switch
3	Hydraulic oil tank
4	Return filter

[2] Return filter clog pressure switch specifications

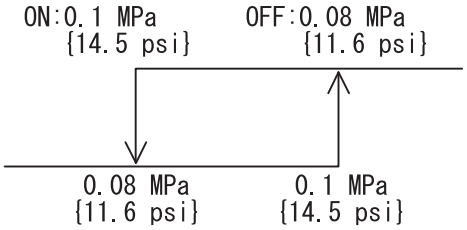

RE06004-029

[3] Detection cancellation when breaker used
When the breaker is used, the return oil pressure pulse is intense, so clog detection is not attempted.

[4] Detection cancellation when oil temperature low
When the oil temperature is less than 30 ℃ , its viscosity rises and filter pressure damage increases, so clog detection is not attempted.

https://truckmanualshub.com/

[5] Solution for machines with no breaker setting
Machines with no breaker setting in accordance with [3].
(= Machines with no return filter clog pressure switch) Even with these machines, filter clogs would be detected. In order to prevent this, a special connector is set that is always shorted.

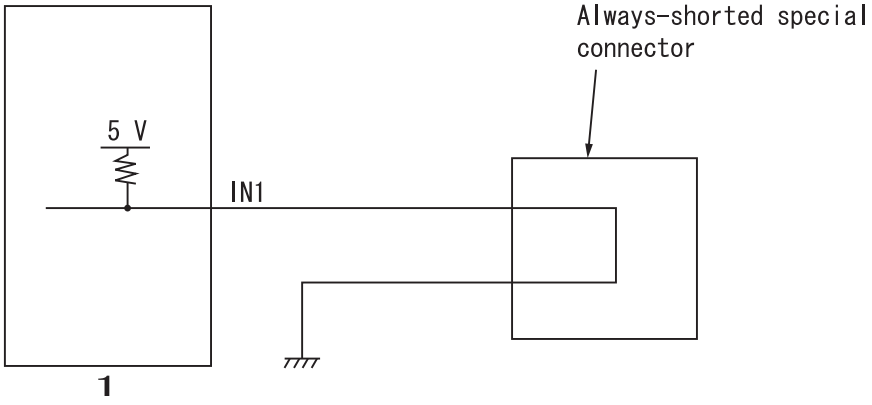

RST-05-06-001bn

1	Computer A

[6] Disconnection detection
When the key is ON, if IN1 was OFF before the engine was started, the situation is judged to be a disconnection abnormality.

5. Beacon

[1] Configuration

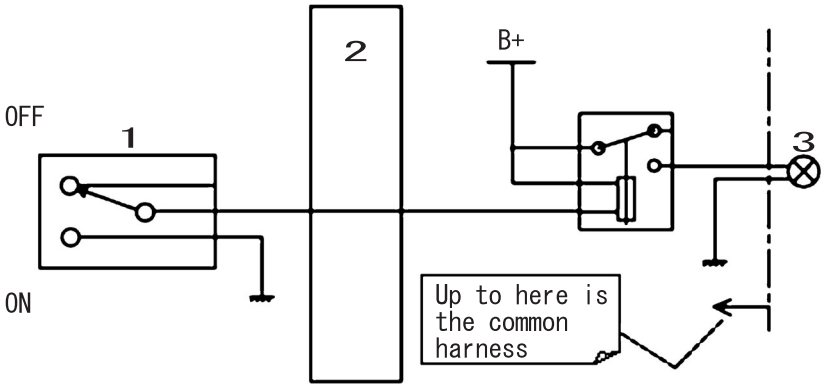

RST-05-06-001bo

1	Beacon switch (alternate)
2	Computer A
3	Beacon

[2] Destination
This function is for Europe.

[3] Operation
The beacon is driven via the beacon relay linked with the beacon switch.
This function is not mediated by the computer A.

https://truckmanualshub.com/

Screen Operations

1. Screen Shift

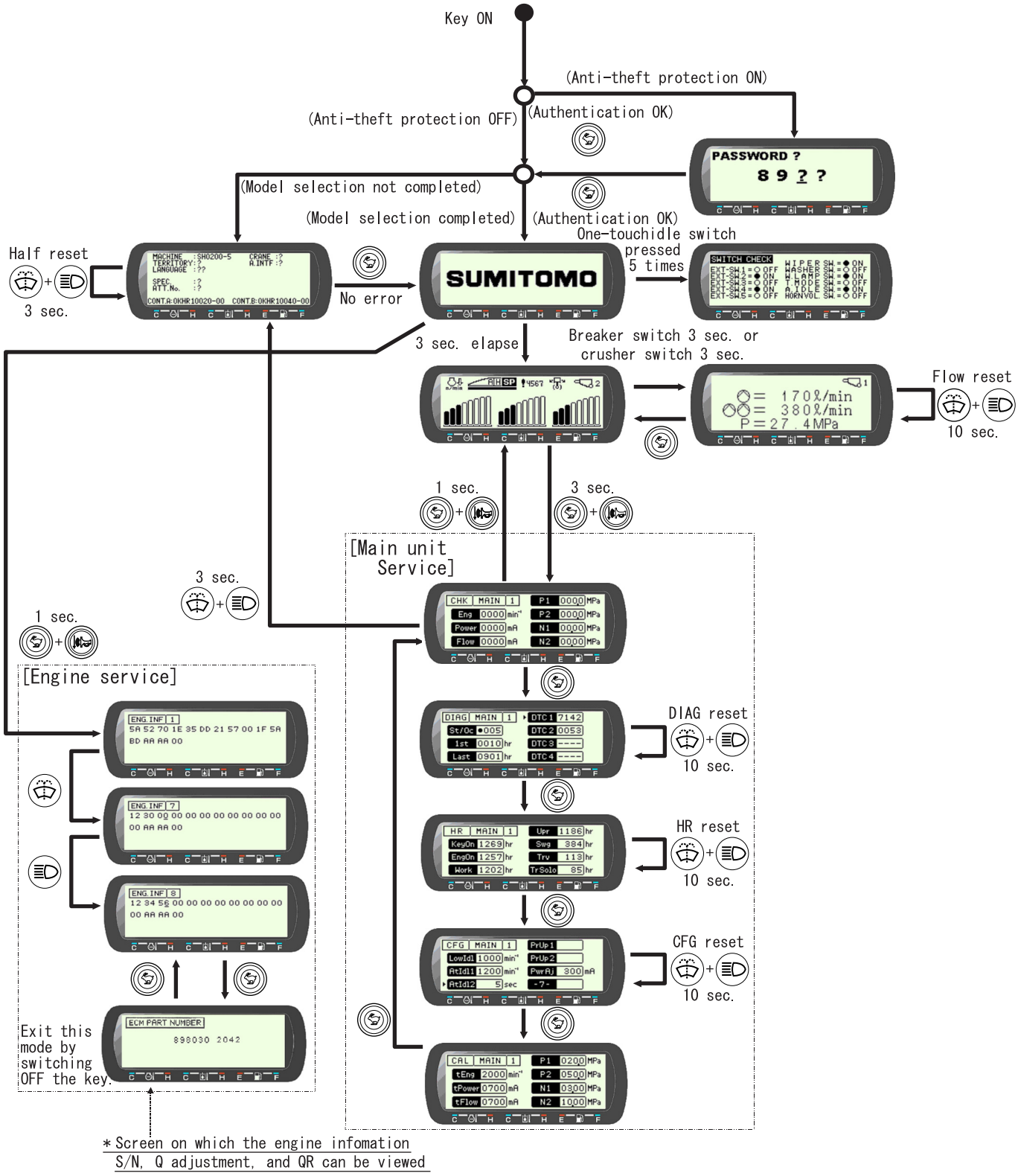

SE07012-001

子 EU, LX, NA
親 EN　　1、27 ページ　モニター変更　30 ページ　機種変更
単位変更（EN=EU）（LX=NA）

https://truckmanualshub.com/

Service Support

[1] Operation for shifting to service support screen

1) If both the travel high-speed switch and the horn volume select switch on the switch panel are held down for 3 sec., the display switches to the service support screen.
2) If both the travel high-speed switch and the horn volume select switch on the switch panel are held down again for 1 sec., the display returns to the normal screen.

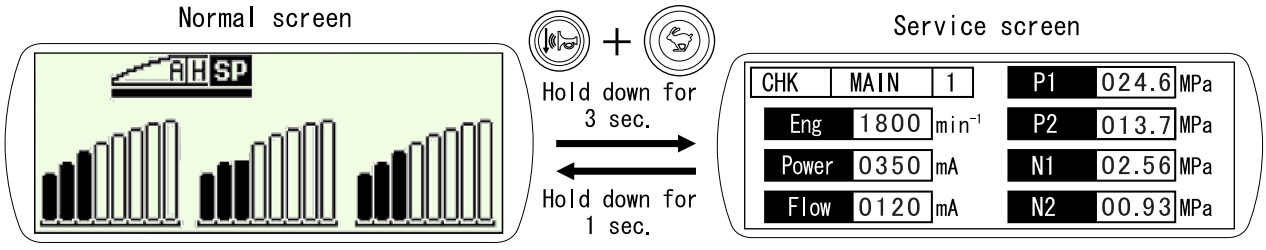

[2] Service support screen switching operation

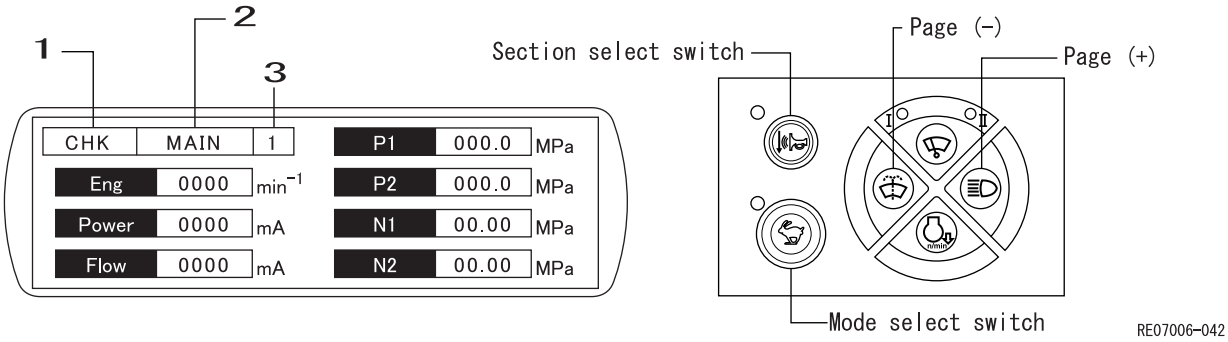

1	Mode	3	Page
2	Section		

1) Mode switchover; switching with travel high-speed switch
2) Section switch; switching with horn volume select switch
3) Page switchover; forward with light switch and back with washer switch

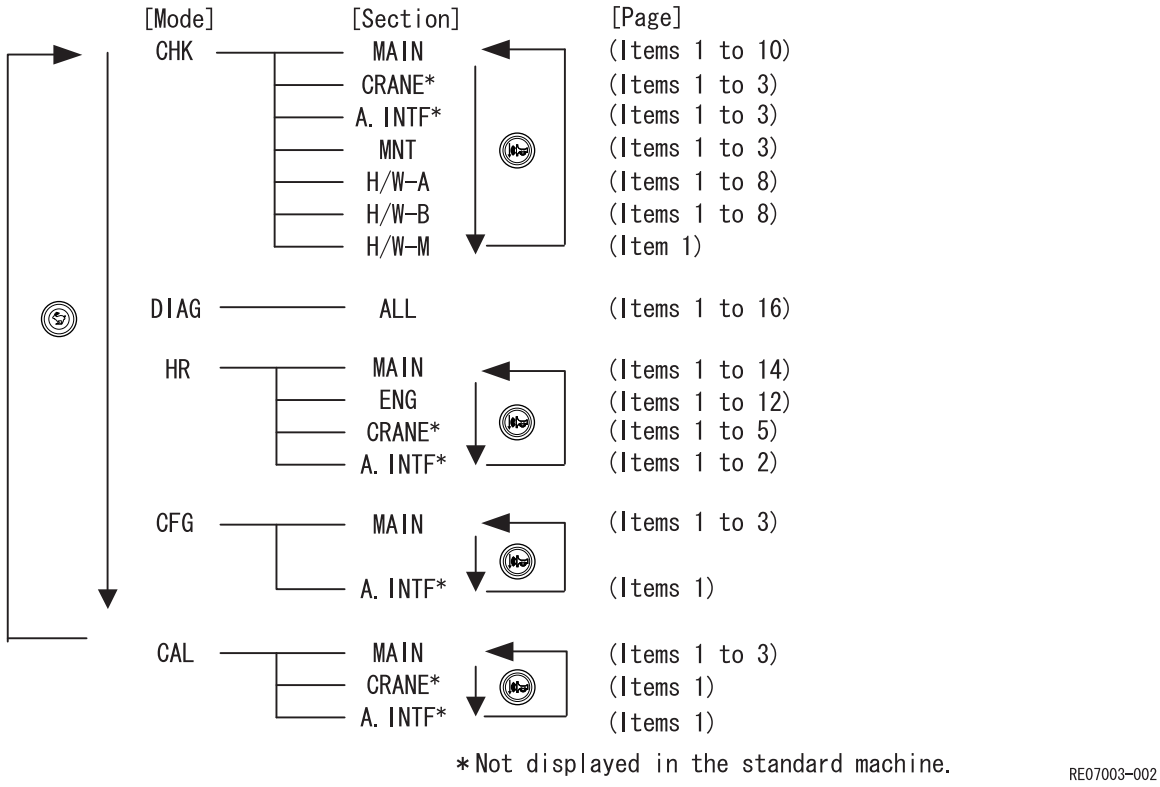

https://truckmanualshub.com/

Screen Display List

1. CHK (status display) Screen List

In CHK mode, in addition to the machine status (milli-amp, oil pressures, temperatures, etc.), it is possible to check sensor and switch input/output states, as well as the angle, load ratio and work radius, etc. at the applied machine (liftcrane specifications machine, lifting magnet machine).

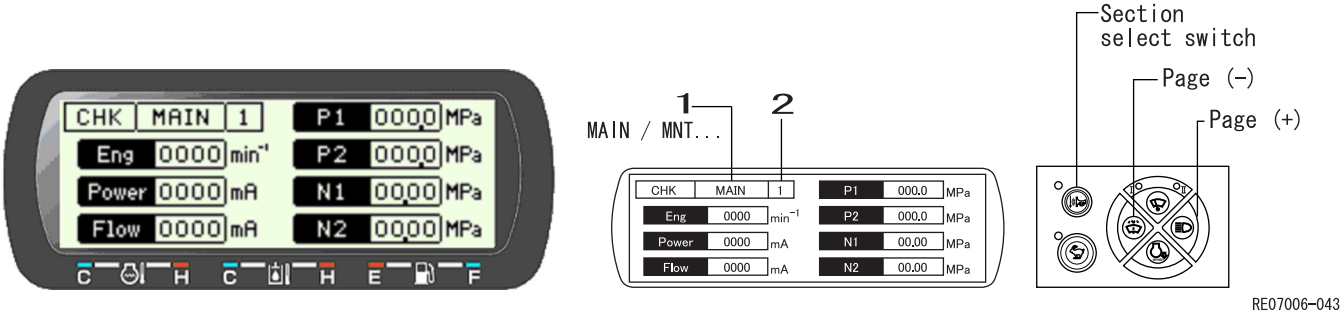

1	Section
2	Page

For the CHK mode section types and their contents, see the separate sheet.

* From the CHK mode screen, if the washer switch and the light switch are held down for 3 ≦ R ≦ R sec., the display shifts to the model selection screen.

MAIN

[1] Engine and pump

CHK	MAIN	1	P1	000.0	MPa
Eng	0000	min^{-1}	P2	000.0	MPa
Power	0000	mA	N1	00.00	MPa
Flow	0000	mA	N2	00.00	MPa

Eng	:	Engine speed	
Power	:	Actual milli-amp for horsepower control proportional valve	
Flow	:	Actual milli-amp for flow control proportional valve	
P1	:	Pump 1	Discharge pressure
P2	:	Pump 2	Discharge pressure
N1	:	Pump 1	Negative control pressure
N2	:	Pump 2	Negative control pressure

[2] Temperature and pressure

CHK	MAIN	2	Baro	0000	hPa
CoolInt	0000	°C	EngOil	0000	kPa
HydOil	0000	°C	BstT	0000	°C
FuelT	0000	°C	Air	0000	°C

CoolInt	:	Radiator coolant temperature
HydOil	:	Hydraulic oil temperature
FuelT	:	Fuel temperature
Baro	:	Atmospheric pressure
EngOil	:	Engine oil pressure
BstT	:	Boost temperature
Air	:	Suction air temperature

[3] Load and boost

CHK	MAIN	3	P1	000.0	MPa
Eng	0000	min^{-1}	P2	000.0	MPa
Load	0000	%	BstT	0000	°C
Power	0000	mA	BstP	0000	kPa

Eng	:	Engine speed	
Load	:	Load ratio	
Power	:	Actual milli-amp for horsepower control proportional valve	
P1	:	Pump 1	Discharge pressure
P2	:	Pump 2	Discharge pressure
BstT	:	Boost temperature	
BstP	:	Boost pressure	

https://truckmanualshub.com/

[4] Load and milli-amp for horsepower control proportional valve

CHK	MAIN	4		P1	000.0	MPa
Eng	0000	min^{-1}		P2	000.0	MPa
Load	0000	%		N1	00.00	MPa
Power	0000	mA		N2	00.00	MPa

Eng	:	Engine speed	
Load	:	Load ratio	
Power	:	Actual milli-amp for horsepower control proportional valve	
P1	:	Pump 1	Discharge pressure
P2	:	Pump 2	Discharge pressure
N1	:	Pump 1	Negative control pressure
N2	:	Pump 2	Negative control pressure

[5] Target and actual milli-amp for horsepower control proportional valve

CHK	MAIN	5		-4-		
Eng	0000	min^{-1}		tEng	0000	min^{-1}
Load	0000	%		ThVol	0000	%
Power	0000	mA		tPower	0000	mA

Eng	:	Engine speed
Load	:	Load ratio
Power	:	Actual milli-amp for horsepower control proportional valve
-4-	:	*
tEng	:	Target engine speed
ThVol	:	Throttle volume degree of opening
tPower	:	Target milli-amp for horsepower control proportional valve

[6] Target and actual milli-amp for flow control proportional valve

CHK	MAIN	6		P1	000.0	MPa
Eng	0000	min^{-1}		N1	00.00	MPa
Power	0000	mA		Swg	00.00	MPa
Flow	0000	mA		tFlow	0000	mA

Eng	:	Engine speed
Power	:	Actual milli-amp for horsepower control proportional valve
Flow	:	Actual milli-amp for flow control proportional valve
P1	:	Pump 1 Discharge pressure
N1	:	Pump 1 Negative control pressure
Swg	:	Swing pilot pressure
tFlow	:	Target milli-amp for flow control proportional valve

[7] Target and actual milli-amp for hydraulic fan proportional valve

CHK	MAIN	7		HydOil	0000	°C
Eng	0000	min^{-1}		FuelT	0000	°C
CoolInt	0000	°C		BstT	0000	°C
Fan	0000	mA		tFan	0000	mA

Eng	:	Engine speed
CoolInt	:	Radiator coolant temperature
Fan	:	Actual milli-amp for hydraulic fan proportional valve
HydOil	:	Hydraulic oil temperature
FuelT	:	Fuel temperature
BstT	:	Boost temperature
tFan	:	Target milli-amp for hydraulic fan proportional valve

[8] Pilot pressure

CHK	MAIN	8		Upr	00.00	MPa
P1	000.0	MPa		Swg	00.00	MPa
P2	000.0	MPa		Trv	00.00	MPa
Cyl(B)	000.0	MPa		AmCls	00.00	MPa

P1	:	Pump 1	Discharge pressure
P2	:	Pump 2	Discharge pressure
Cyl (B)	:	Boom bottom pressure	
Upr	:	Upper pilot pressure	
Swg	:	Swing pilot pressure	
Trv	:	Travel pilot pressure	
AmCls	:	Arm-in pilot pressure	

https://truckmanualshub.com/

[9] Input/output and pressure for hydraulic circuit

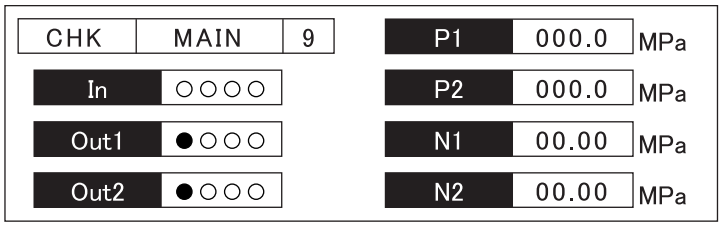

P1	:	Pump 1	Discharge pressure
P2	:	Pump 2	Discharge pressure
N1	:	Pump 1	Negative control pressure
N2	:	Pump 2	Negative control pressure

Hydraulic circuit input/output state (○ =OFF, ● =ON)

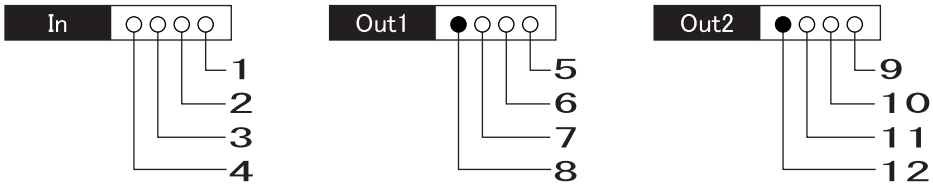

1	Pressure sensor; Arm in	5	Solenoid; Free swing/beacon	9	Relay; Travel alarm
2	Pressure sensor; Travel	6	Solenoid; Travel high-speed switchover	10	Solenoid; Fan reverse (large machine only)
3	Pressure sensor; Swing	7	Solenoid; Pressure boost	11	Solenoid; Option line switchover
4	Pressure sensor; Upper	8	Solenoid; Swing brake	12	Solenoid; Power save

[10] Input/output for electrical circuit

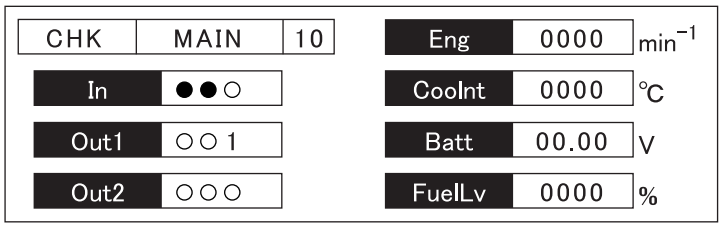

Eng	:	Engine speed
CoolInt	:	Radiator coolant temperature
Batt	:	Battery voltage
FuelLv	:	Fuel level

Electric circuit input/output state (○ =OFF, ● =ON)

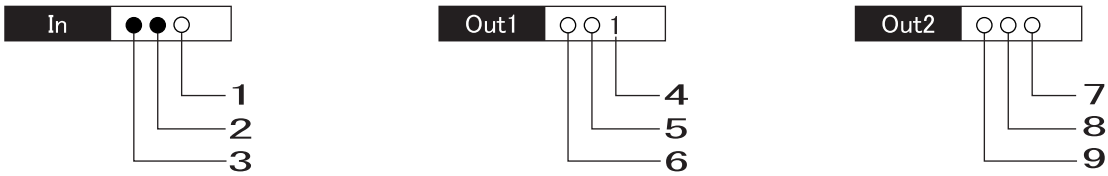

1	Switch; Anti-theft	6	Glow signal
2	Battery charge	7	Engine stop due to trouble
3	Switch; Key	8	Low idle restriction due to trouble
4	A/C coolant temperature sending mode (1: Low/2: Medium/3: High)	9	Restriction on milli-amp for horsepower control proportional valve due to trouble
5	Relay; Feed pump automatic stop		

https://truckmanualshub.com/

MNT

[1] Computer S information

CHK	MNT	1	4	0140
1	4401		5	4132
2	0035		6	31 3
3	4783		7	0530

7	0530	1

1	4401	2
2	0035	3
3	4783	
4	0140	4
5	4132	
6	31□3	5 6 7 8

* The longitude and latitude are displayed when the continuous GPS position measurement time is 5 min. or longer.

CHK	MNT	2	4	0052
1	0605		5	0130
2	2803		6	0130
3	1432		7	0122

1	0605	9
2	2803	
3	1432	
4	0052	10
5	0130	11
6	0130	12
7	0122	

* UTC is global standard time. Japan is +9 hr. from UTC.

Example:

If the time is May 28, 2006, 03:14:32 UTC, the time in Japan is May 28, 2006, 12:14:32.

If the time is May 27, 2006, 20:14:32 UTC, the time in Japan is May 28, 2006, 05:14:32.

* Displayed after the completion of GPS position measurement.
* For 3D position measurement, the altitude can be measured.
* GCC is a land station. 130 is the GCC for Japan. (122 is South Korea.)

1	GPS continuous position measurement time (For example, 5 min. 30 sec. of continuous position measurement)		
2	Computer S part number bottom 4-digit display (Example, KHR14401)		
3	Inside the O latitude, 0 = North latitude, 1 = South latitude (Example, 35 degrees 47.83 min. north latitude)		
4	Inside the O longitude, 0 = Longitude east, 1 = Longitude west (Example, 140 degrees 41.32 min. longitude east)		
5	GPS position measurement status 0 = GPS not yet operating, 1 = GPS measuring, 2 = 2D measurement status, 3 = 3D measurement status, 8 = GPS module abnormality, 9 = GPS antenna abnormality	7	Default setting send status 0 = Waiting for default settings send 1 = Waiting due to sending currently being prohibited 2 = Resending default settings 3 = Default settings send complete, sending prohibited 4 = Default settings send complete, sending permitted
6	Satellite communications status 0 = No satellite supplement, 1 = Satellite supplement, 9 = Satellite communication abnormality	8	BLANK
9	UTC (Example: May 28, 2006, 03:14:32) The time in Japan is May 28, 2006, 12:14:32.	10	Altitude (Example: 52 m)
		11	Send GCC number
		12	Data acquisition GCC number

https://truckmanualshub.com/

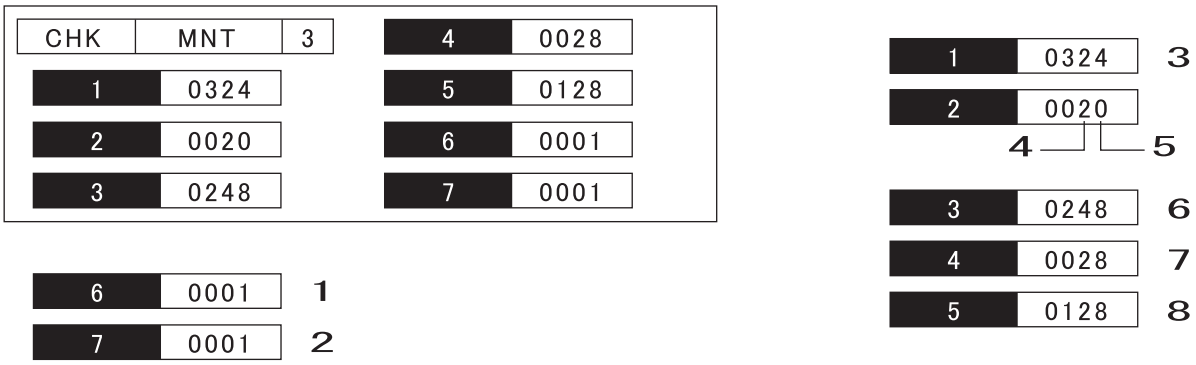

Event send setting
The default state is fuel volume warning, anti-theft operation warning event send prohibited.
These can be changed to enabled with signals from the web server. When this signal is received, No. 4 becomes the display below.

4	Fuel volume warning	Anti-theft operation warning (without position information)	Anti-theft operation warning (with position information)
0028	Prohibited	Prohibited	Prohibited
0156	Enabled	Prohibited	Prohibited
0220	Enabled	Enabled	Prohibited
0188	Enabled	Prohibited	Enabled
0092	Prohibited	Enabled	Prohibited
0060	Prohibited	Prohibited	Enabled

1	Engine start enable setting 0 = Prohibited, 1 = Enabled
2	Send destination count * The send destination is the server, so it is fixed at 1.
3	Time until next sending (Example: 3 hr. 24 min. more until the next sending)
4	Send wait message count (Example: 2)
5	Q1200 status 0 = Waiting 1 = Sending 4 = Receiving 5 = Receiving complete
6	Send distribution setting 0248 = STD 0252 = Liftcrane specifications
7	Event send setting 0028 = Default
8	Send prohibition setting 0 = Sending default settings 128 = Default settings send complete

https://truckmanualshub.com/

H/W-A

[1] Digital input/output

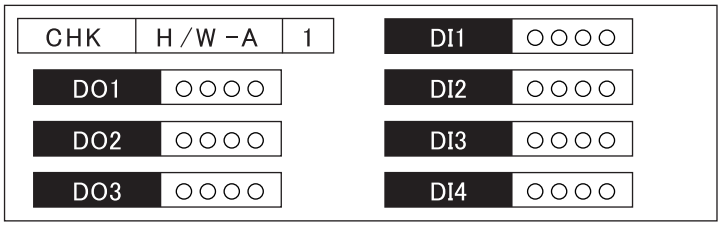

Input/output state (○ =OFF, ● =ON)

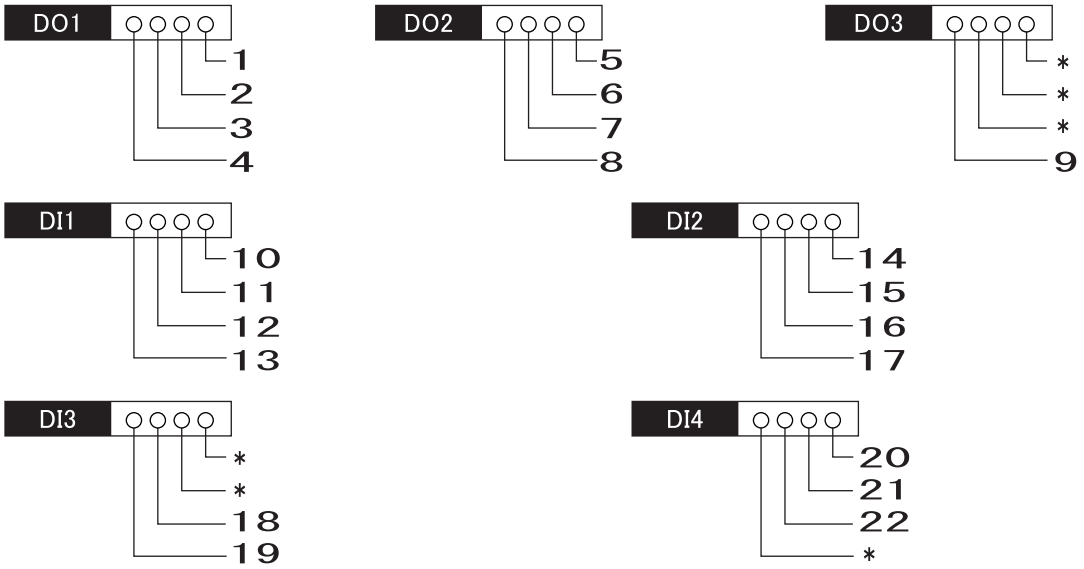

1	Solenoid; Power save	9	Relay; Feed pump	17	Switch; Pressure (Option)
2	Solenoid; Pressure boost	10	Switch; Clog (Air cleaner)	18	Switch; Fan reverse
3	Solenoid; Travel high-speed switchover	11	Switch; Level (Coolant)	19	Switch; Clog (Return filter)
4	Solenoid; Swing brake	12	Switch; Anti-theft	20	Alternator
5	Buzzer; Travel alarm	13	Switch; One-touch idle	21	Switch; Engine emergency stop
6	Solenoid; Option line switchover	14	Switch; Travel alarm/overload	22	Switch; Key
7	Solenoid; Free swing	15	Switch; Free swing		
8	Solenoid; Fan reverse	16	Switch; Pressure (2nd option)		

https://truckmanualshub.com/

[2] Digital output/output monitor

CHK	H/W-A	2	-4-	
DO1	○○○○		DOM1	○○○○
DO2	○○○○		DOM2	○○○○
DO3	○○○○		DOM3	○○○○

Input/output state (○ =OFF, ● =ON)

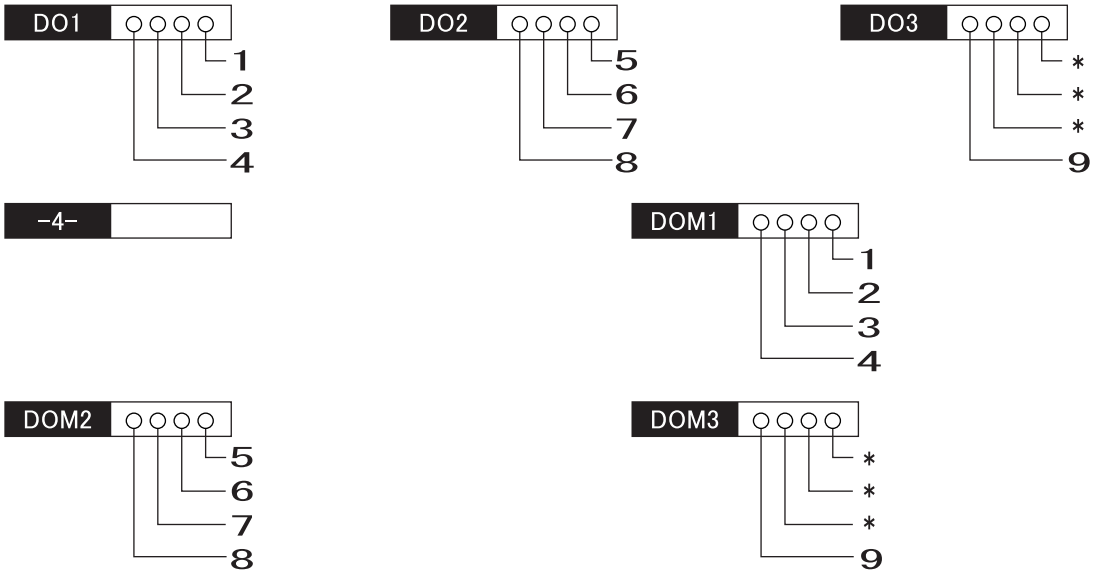

1	Solenoid; Power save	4	Solenoid; Swing brake	7	Solenoid; Free swing
2	Solenoid; Pressure boost	5	Buzzer; Travel alarm	8	Solenoid; Fan reverse
3	Solenoid; Travel high-speed switchover	6	Solenoid; Option line switchover	9	Relay; Feed pump

[3] Potentio-meter voltage

CHK	H/W-A	3	Pot4	00.00	V
Pot1	00.00	V	Pot5	00.00	V
Pot2	00.00	V	Pot6	00.00	V
Pot3	00.00	V	Pot7	00.00	V

Pot1	:	Sensor pressure	P1
Pot2	:	Sensor pressure	P2
Pot3	:	Sensor pressure	N1
Pot4	:	Sensor pressure	N2
Pot5	:	Sensor pressure	Swing
Pot6	:	Sensor pressure	Upper
Pot7	:	Sensor pressure	Travel

[4] Potentio-meter and sensor voltage (resistance)

CHK	H/W-A	4	Sn1	00.00	V
Pot8	00.00	V	Sn2	00.00	V
Pot9	00.00	V	Sn1	0000	Ω
Pot10	00.00	V	Sn2	0000	Ω

Pot8	:	Sensor pressure	Arm in
Pot9	:	Sensor throttle	
Pot10	:	Sensor pressure	Overload
Sn1	:	Sensor temperature	Hydraulic oil
Sn2	:	Sensor level	Fuel
Sn1	:	Sensor temperature	Hydraulic oil
Sn2	:	Sensor level	Fuel

[5] PWM data

CHK	H/W-A	5	duty	0000	%
PWM#	1		freq	0000	Hz
actcur	0000	mA	volt	00.00	V
tgtcur	0000	mA	ovc	----	

PWM#	:	PWM channel number
actcur	:	Actual milli-amp for horsepower control proportional valve
tgtcur	:	Target milli-amp for horsepower control proportional valve
duty	:	Duty
freq	:	Frequency
volt	:	Voltage
ovc	:	Overcurrent detection status (+: Overcurrent/-: Normal)

https://truckmanualshub.com/

[6] PWM data

CHK	H/W-A	6	duty	0000	%
PWM#	2		freq	0000	Hz
actcur	0000	mA	volt	00.00	V
tgtcur	0000	mA	ovc	----	

PWM#	:	PWM channel number
actcur	:	Actual milli-amp for hydraulic fan proportional valve
tgtcur	:	Target milli-amp for hydraulic fan proportional valve
duty	:	Duty
freq	:	Frequency
volt	:	Voltage
ovc	:	Overcurrent detection status (+: Overcurrent/-: Normal)

[7] PWM data

CHK	H/W-A	7	duty	0000	%
PWM#	3		freq	0000	Hz
actcur	0000	mA	volt	00.00	V
tgtcur	0000	mA	ovc	----	

PWM#	:	PWM channel number
actcur	:	Actual milli-amp for flow control proportional valve
tgtcur	:	Target milli-amp for flow control proportional valve
duty	:	Duty
freq	:	Frequency
volt	:	Voltage
ovc	:	Overcurrent detection status (+: Overcurrent/-: Normal)

[8] Frequency and communication

CHK	H/W-A	8	RS232	○
FreqIn	0000	Hz	-5-	
CAN	○○○		-6-	
UART	○		-7-	

FreqIn	:	Frequency input
CAN	:	CAN reception state
UART	:	UART reception state
RS232	:	RS232C communication state
-5-	:	*
-6-	:	*
-7-	:	*

Input/output state (● =receiving)

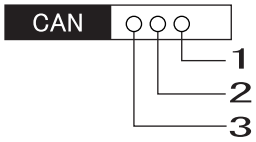

1	Computer S reception state
2	Computer B reception state
3	ECM reception state

https://truckmanualshub.com/

H/W-B

[1] Computer B digital input/output

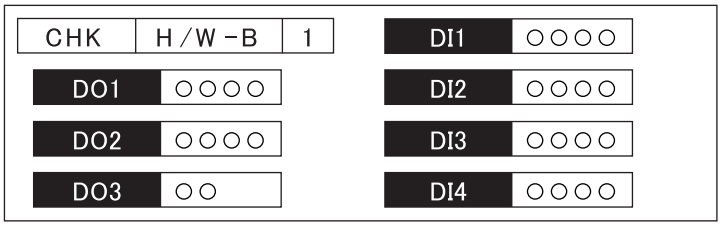

Input/output state (○ =OFF, ● =ON)

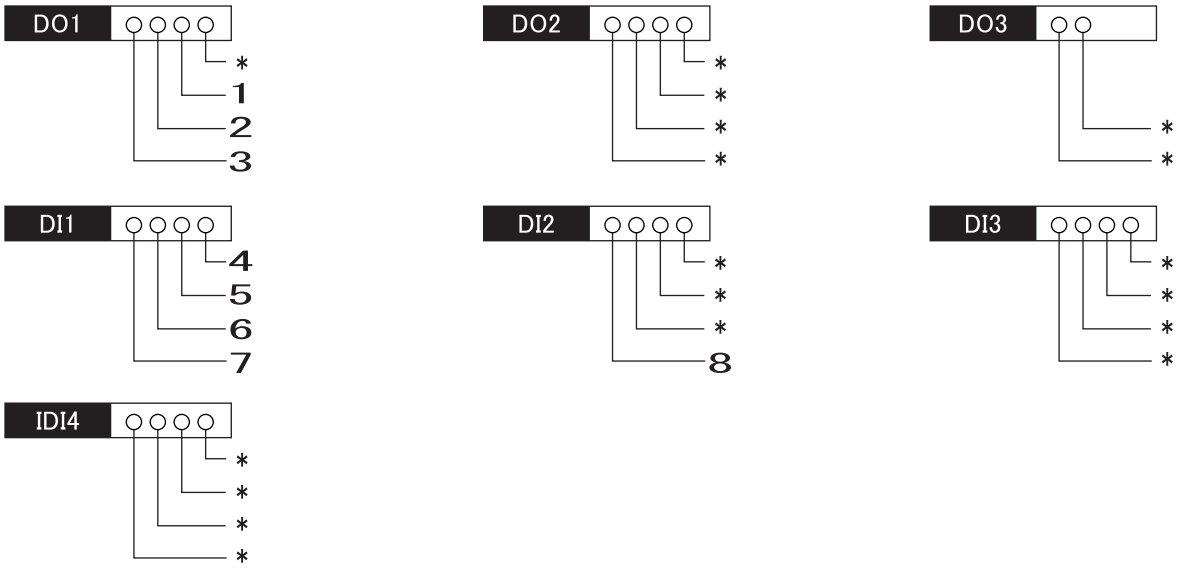

1	Solenoid; Lever lock	4	Switch; Liftcrane mode	7	Switch; Lifting magnet mode
2	Rotating light and bucket lock	5	Switch; Liftcrane (Display switching)	8	Switch; Interference (Shut-off release)
3	Buzzer; Liftcrane	6	Switch; Interference (Temporary end)		

https://truckmanualshub.com/

[2] Digital output/output monitor

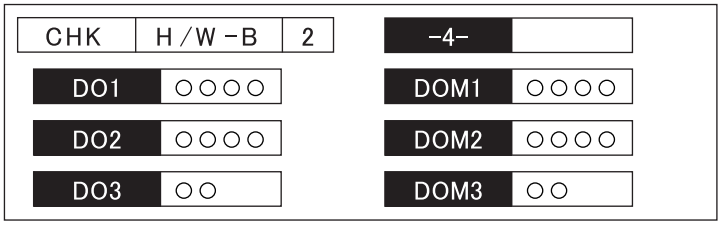

Input/output state (○ =OFF, ● =ON)

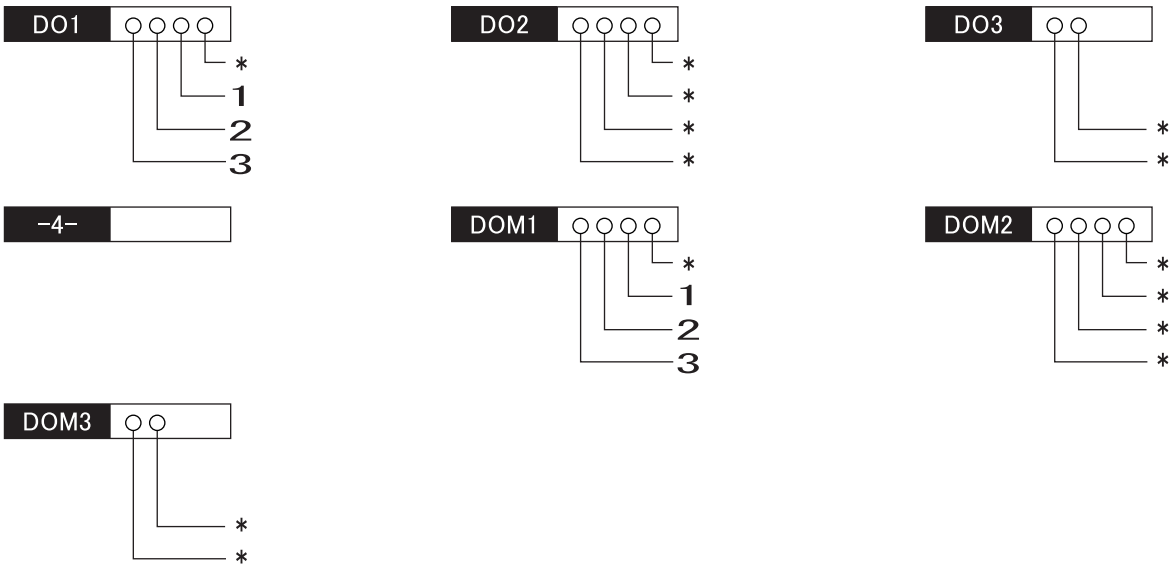

1	Solenoid; Lever lock
2	Rotating light and bucket lock
3	Buzzer; Liftcrane

[3] Potentio-meter voltage

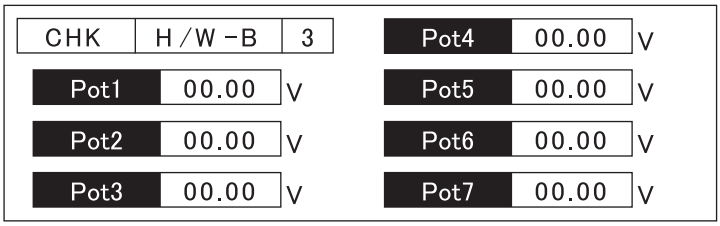

Pot1 : Sensor; Angle (Boom)
Pot2 : Sensor; Angle (Arm)
Pot3 : Sensor; Angle (Offset)
Pot4 : Sensor; Pressure (Bottom)
Pot5 : Sensor; Pressure (Rod)
Pot6 : *
Pot7 : *

[4] Potentio-meter and sensor voltage (resistance)

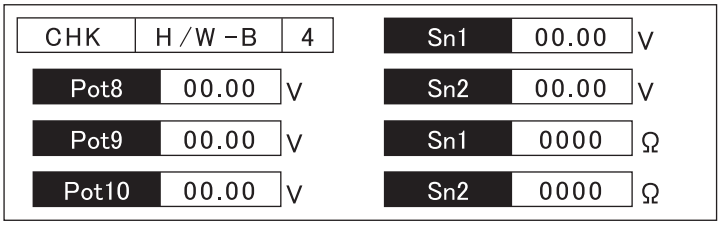

Pot8 : *
Pot9 : *
Pot10 : *
Sn1 : *
Sn2 : *
Sn1 : *
Sn2 : *

https://truckmanualshub.com/

[5] PWM data

CHK	H/W-B	5	duty	0000	%
PWM#	1		freq	0000	Hz
actcur	0000	mA	volt	00.00	V
tgtcur	0000	mA	ovc	----	

PWM#	:	PWM channel number
actcur	:	Actual milli-amp for boom proportional valve
tgtcur	:	Target milli-amp for boom proportional valve
duty	:	Duty
freq	:	Frequency
volt	:	Voltage
ovc	:	Overcurrent detection status (+: Overcurrent/-: Normal)

[6] PWM data

CHK	H/W-B	6	duty	0000	%
PWM#	2		freq	0000	Hz
actcur	0000	mA	volt	00.00	V
tgtcur	0000	mA	ovc	----	

PWM#	:	PWM channel number
actcur	:	Actual milli-amp for offset proportional valve
tgtcur	:	Target milli-amp for offset proportional valve
duty	:	Duty
freq	:	Frequency
volt	:	Voltage
ovc	:	Overcurrent detection status (+: Overcurrent/-: Normal)

[7] PWM data

CHK	H/W-B	7	duty	0000	%
PWM#	3		freq	0000	Hz
actcur	0000	mA	volt	00.00	V
tgtcur	0000	mA	ovc	----	

PWM#	:	PWM channel number
actcur	:	Actual milli-amp for arm proportional valve
tgtcur	:	Target milli-amp for arm proportional valve
duty	:	Duty
freq	:	Frequency
volt	:	Voltage
ovc	:	Overcurrent detection status (+: Overcurrent/-: Normal)

[8] Frequency and communication

CHK	H/W-B	8	RS232	
FreqIn	0000	Hz	-5-	
CAN			-6-	
UART			-7-	

FreqIn	:	Frequency input
CAN	:	CAN reception state
UART	:	UART communication state
RS232	:	RS232C communication state
-5-	:	*
-6-	:	*
-7-	:	*

https://truckmanualshub.com/

H/W-M

[1] Monitor

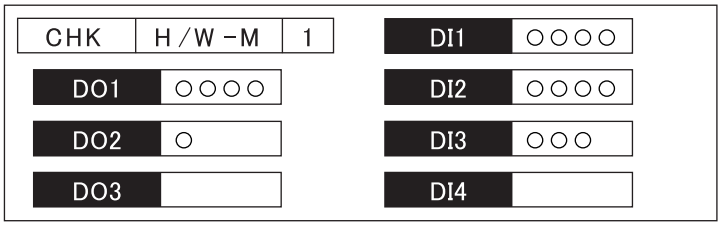

Input/output state (○ =OFF, ● =ON)

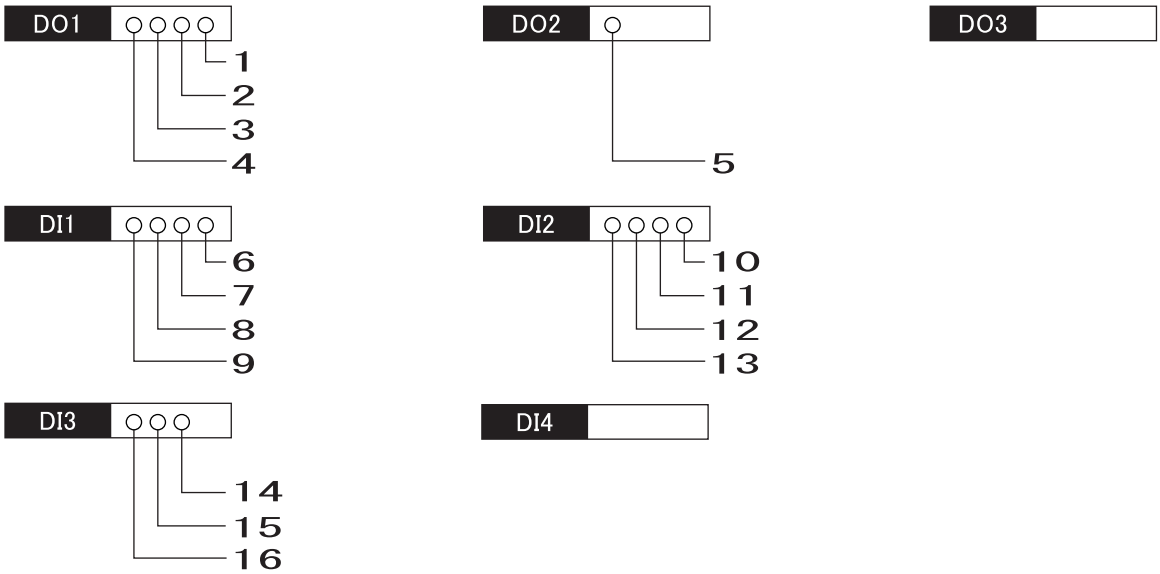

1	Working light	7	Switch; Travel high-speed select	13	Switch; Washer
2	Motor washer	8	Switch; Auto idle select	14	Switch; Reserve
3	Wiper CNT	9	Switch; Horn volume select	15	Switch; 2 pumps flow
4	Wiper INT	10	Switch; Breaker select	16	Switch; Crusher select
5	Relay horn volume switchover	11	Switch; Limit front window		
6	Switch; Working light	12	Switch; Wiper		

https://truckmanualshub.com/

2. DIAG (trouble diagnosis) Screen

[1] In diagnosis mode, the contents for the trouble currently occurring and a log of trouble that has occurred in the past can be checked.

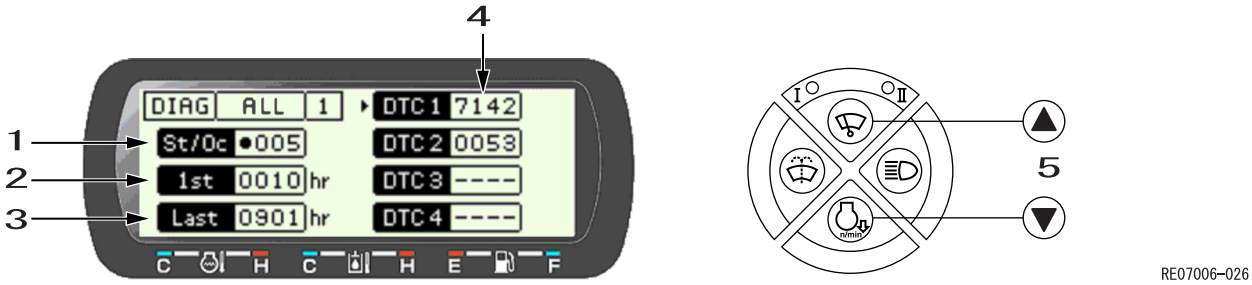

1	Status occurrence count	4	Diagnostic trouble code
2	Initial occurrence time	5	Cursor movement
3	Final occurrence time		

- In "DTC-1" - "DTC-4", the last diagnostic trouble codes that occurred are displayed starting with the most recent one.

1) The cursor is moved with the wiper switch and auto idle switch. (The cursor moves between "DTC-1" and "DTC-4".)
   * There is no "section" in diagnosis mode.

- The information for the diagnostic trouble code for the location under the cursor is displayed in the order "St/Oc", "1st", "Last".
- The ○ mark displayed at the left most of "St/Oc" shows whether or not the trouble is currently occurring.
  The black circle ● means the trouble is currently occurring.
  The clear circle ○ means the trouble is not occurring now, but has occurred in the past.
- "1st" indicates the time at which this trouble occurred the first time and "last" indicates the time at which this trouble occurred the last time.

[2] For details on the "Diagnostic trouble codes" that can be read in diagnosis mode and their contents, see the Main Unit Diagnostic Trouble Code List below.

(1) Screen

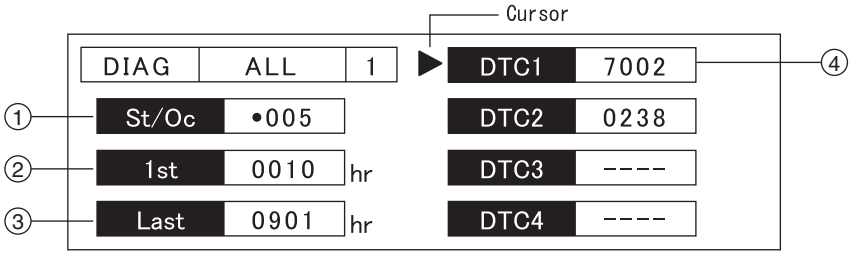

https://truckmanualshub.com/

[1] Displays the status at the cursor and the occurrence count.

St/Oc	•005

…7002 error now occurring / trouble has occurred 5 times in the past

Occurrence count

Status

[Status]

Displays whether the diagnostic trouble code under the cursor is current or from the past.

For ● , the trouble is current or continuing.

For ○ , the status is normal or recovered. (The trouble is not occurring now, but has occurred in the past.)

[Occurrence count]

The number of times that diagnostic trouble code under the cursor has occurred

[2] Displays the time at which the trouble under the cursor first occurred

1st	0010	hr

…Occurred first at 10 hours

[3] Displays the time at which the trouble under the cursor last occurred

Last	0901	hr

…Occurred last at 901 hours

[4] Diagnostic trouble code

The troubles are sorted with the last one to occur at the top of the list.

Displayed when the whether the diagnostic trouble code under the cursor is ① - ③ .

DTC1	7002
DTC2	0238
DTC3	----
DTC4	----

…7002 (faulty N1 pressure sensor)

…0238 (Boost pressure sensor abnormally high voltage)

For details on diagnostic trouble code, see the separate Main Unit Diagnostic Trouble Code List.

Maximum display count

4 codes per page × 16 pages = 64 diagnostic trouble codes are displayed. From the 65th code onward, the oldest code is erased. However, even though these codes are not displayed, the data is retained.

(2) Operation

[1] Cursor up/down

Up operation..... Wiper switch

Down operation ..... Auto idle switch

[2] Page forward/back

Forward operation .... Light switch

Back operation ..... Washer switch

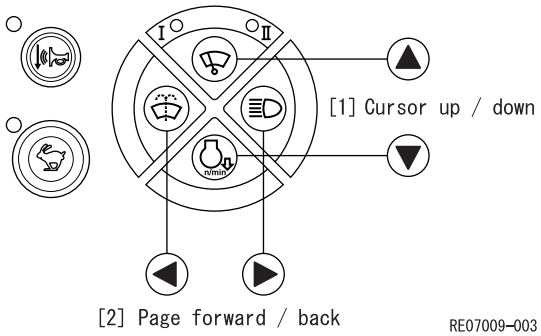

(3) Reset

If the washer switch and the light switch are held down for 10 sec., the trouble log is reset.

https://truckmanualshub.com/

3. HR (usage log) Screen List

Operation times for mechanical parts, electrical parts, etc., operation counts for switches and solenoids, as well as pressure distributions, etc. can be displayed.

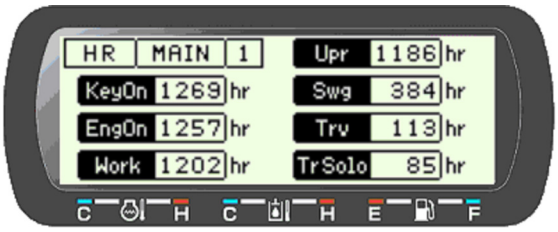

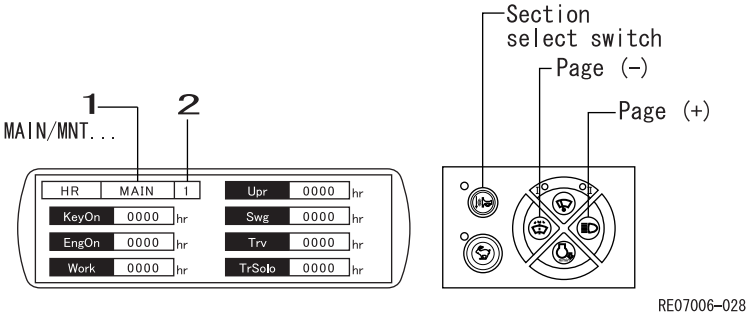

1	Section
2	Page

(1) MAIN

[1] Main unit operation time

HR	MAIN	1		Upr	0000	hr
KeyOn	0000	hr		Swg	0000	hr
EngOn	0000	hr		Trv	0000	hr
Work	0000	hr		TrSolo	0000	hr

KeyOn : Computer A power supply ON time
EngOn : Alternator power generation time
Work : Machine operation time (upper ON or travel ON)
Upr : Upper operation time
Swg : Swing operation time
Trv : Travel operation time
TrSolo : Independent travel operation time

[2] Electrical parts operation time

HR	MAIN	2		WLight	0000	hr
WpInt	0000	hr		HornLo	0000	hr
WpCnt	0000	hr		DrOpn		hr
Wsh	0000	hr		WinOpn	0000	hr

WpInt	:	Wiper (intermittent)	Operation time
WpCnt	:	Wiper (continuous)	Operation time
Wsh	:	Washer	Operation time
WLight	:	Working light	ON time
HornLo	:	Horn volume low time	
DrOpn	:	*	
WinOpn	:	Front window open time	

[3] Idle time

HR	MAIN	3		4	0000	hr
1	0000	hr		5	0000	hr
2	0000	hr		6		hr
3	0000	hr		7		hr

1 : Auto idle time
2 : One-touch idle time
3 : Boosted pressure time
4 : Low-speed travel time
5 : High-speed travel time
6 : *
7 : *

[4] Pressure switch operation count

HR	MAIN	4		4	0000	times
1	0000	times		5	0000	times
2	0000	times		6	0000	times
3	0000	times		7		times

1	:	Upper pressure sensor	ON count × 1000
2	:	Swing pressure sensor	ON count × 1000
3	:	Travel pressure sensor	ON count × 1000
4	:	Arm-in pressure switch	ON count × 1000
5	:	1st option pressure switch	ON count × 1000
6	:	2nd option pressure switch	ON count × 1000
7	:	*	

https://truckmanualshub.com/

[5] Operation switch operation count

HR	MAIN	5			
1	0000	times	4		times
2	0000	times	5	0000	times
3	0000	times	6	0000	times
			7	0000	times

1 : Key ON count × 10
2 : Engine start count × 10
3 : Front window open count × 10
4 : *
5 : Pressure boost solenoid ON count × 1000
6 : Swing brake solenoid ON count × 1000
7 : Power save solenoid ON count × 1000

[6] Work mode

HR	MAIN	6			
1	0000	hr	4	0000	hr
2	0000	hr	5	0000	hr
3	0000	hr	6	0000	hr
			7	0000	hr

1 : Mode usage time SP-hi
2 : Mode usage time SP-lo
3 : Mode usage time H-hi
4 : Mode usage time H-lo
5 : Mode usage time A1-hi
6 : Mode usage time A1-lo
7 : Mode usage time, other than above

[7] Breaker usage time

HR	MAIN	7			
1	0000	hr	4	0000	hr
2	0000	hr	5	0000	hr
3	0000	hr	6	0000	hr
			7		hr

1 : Breaker 1 operation time
2 : Breaker 2 operation time
3 : Breaker 3 operation time
4 : Breaker 4 operation time
5 : Breaker 5 operation time
6 : Breaker 1-5 operation time
7 : *

[8] Crusher usage time

HR	MAIN	8			
1	0000	hr	4	0000	hr
2	0000	hr	5	0000	hr
3	0000	hr	6	0000	hr
			7		hr

1 : Crusher 1 operation time
2 : Crusher 2 operation time
3 : Crusher 3 operation time
4 : Crusher 4 operation time
5 : Crusher 5 operation time
6 : Crusher 1-5 operation time
7 : *

[9] P1 pressure (P) distribution

HR	MAIN	9			
1	0000	hr	4	0000	hr
2	0000	hr	5	0000	hr
3	0000	hr	6	0000	hr
			7	0000	hr

1 : P < 10 MPa Time
2 : 10 MPa ≦ P < 15 MPa Time
3 : 15 MPa ≦ P < 20 MPa Time
4 : 20 MPa ≦ P < 25 MPa Time
5 : 25 MPa ≦ P < 30 MPa Time
6 : 30 MPa ≦ P < 35 MPa Time
7 : 35 MPa ≦ P Time

[10] P2 pressure (P) distribution

HR	MAIN	10			
1	0000	hr	4	0000	hr
2	0000	hr	5	0000	hr
3	0000	hr	6	0000	hr
			7	0000	hr

1 : P < 10 MPa Time
2 : 10 MPa ≦ P < 15 MPa Time
3 : 15 MPa ≦ P < 20 MPa Time
4 : 20 MPa ≦ P < 25 MPa Time
5 : 25 MPa ≦ P < 30 MPa Time
6 : 30 MPa ≦ P < 35 MPa Time
7 : 35 MPa ≦ P Time

https://truckmanualshub.com/

[11] N1 pressure (P) distribution

HR	MAIN	11			
			4	0000	hr
1	0000	hr	5	0000	hr
2	0000	hr	6	0000	hr
3	0000	hr	7	0000	hr

1	:	P < 1.0 MPa	Time
2	:	1.0 MPa ≦ P < 1.5 MPa	Time
3	:	1.5 MPa ≦ P < 2.0 MPa	Time
4	:	2.0 MPa ≦ P < 2.5 MPa	Time
5	:	2.5 MPa ≦ P < 3.0 MPa	Time
6	:	3.0 MPa ≦ P < 3.5 MPa	Time
7	:	3.5 MPa ≦ P	Time

[12] N2 pressure (P) distribution

HR	MAIN	12			
			4	0000	hr
1	0000	hr	5	0000	hr
2	0000	hr	6	0000	hr
3	0000	hr	7	0000	hr

1	:	P < 1.0 MPa	Time
2	:	1.0 MPa ≦ P < 1.5 MPa	Time
3	:	1.5 MPa ≦ P < 2.0 MPa	Time
4	:	2.0 MPa ≦ P < 2.5 MPa	Time
5	:	2.5 MPa ≦ P < 3.0 MPa	Time
6	:	3.0 MPa ≦ P < 3.5 MPa	Time
7	:	3.5 MPa ≦ P	Time

[13] P1 + P2 pressure (P) distribution

HR	MAIN	13			
			4	0000	hr
1	0000	hr	5	0000	hr
2	0000	hr	6	0000	hr
3	0000	hr	7	0000	hr

1	:	P < 20 MPa	Time
2	:	20 MPa ≦ P < 30 MPa	Time
3	:	30 MPa ≦ P < 40 MPa	Time
4	:	40 MPa ≦ P < 50 MPa	Time
5	:	50 MPa ≦ P < 60 MPa	Time
6	:	60 MPa ≦ P < 70 MPa	Time
7	:	70 MPa ≦ P	Time

[14] Oil temperature (T) distribution

HR	MAIN	14			
			4	0000	hr
1	0000	hr	5	0000	hr
2	0000	hr	6	0000	hr
3	0000	hr	7	0000	hr

1	:	T < 45 ℃	Time (bar graph 1st and 2nd gradations)
2	:	45 ℃ ≦ T < 60 ℃	Time (bar graph 3rd gradation)
3	:	60 ℃ ≦ T < 80 ℃	Time (bar graph 4 th gradation)
4	:	80 ℃ ≦ T < 88 ℃	Time (bar graph 5 th gradation)
5	:	88 ℃ ≦ T < 95 ℃	Time (bar graph 6 th gradation)
6	:	95 ℃ ≦ T < 98 ℃	Time (bar graph 7 th gradation)
7	:	98 ℃ ≦ T	Time (bar graph 8th gradation)

(2) ENG

[1] Oil temperature/coolant temperature/pressure maximum values (measured 10 min. after engine started)

HR	ENG	1			
			Air	0000	℃
CoolInt	0000	℃	BstT	0000	℃
HydOil	0000	℃	BstP	0000	kPa
FuelT	0000	℃	EngOil	0000	kPa

CoolInt	:	Radiator coolant maximum temperature
HydOil	:	Hydraulic oil maximum temperature
FuelT	:	Fuel maximum temperature
Air	:	Suction air maximum temperature
BstT	:	Boost maximum temperature
BstP	:	Boost maximum pressure
EngOil	:	Engine oil minimum pressure

https://truckmanualshub.com/

[2] Engine actual speed (S) distribution

HR	ENG	2			
1	0000	hr	4	0000	hr
2	0000	hr	5	0000	hr
3	0000	hr	6	0000	hr
			7	0000	hr

1	:	S < 1025 min^{-1}	Time
2	:	1025 min^{-1} ≦ S < 1225 min^{-1}	Time
3	:	1225 min^{-1} ≦ S < 1425 min^{-1}	Time
4	:	1425 min^{-1} ≦ S < 1625 min^{-1}	Time
5	:	1625 min^{-1} ≦ S < 1825 min^{-1}	Time
6	:	1825 min^{-1} ≦ S < 2025 min^{-1}	Time
7	:	2025 min^{-1} ≦ S	Time

[3] Coolant temperature (T) distribution

HR	ENG	3			
1	0000	hr	4	0000	hr
2	0000	hr	5	0000	hr
3	0000	hr	6	0000	hr
			7	0000	hr

1	:	T < 77 ℃	Time (bar graph 1st and 2nd gradations)
2	:	77 ℃ ≦ T < 82 ℃	Time (bar graph 3 th gradation)
3	:	82 ℃ ≦ T < 97 ℃	Time (bar graph 4 th gradation)
4	:	97 ℃ ≦ T < 100 ℃	Time (bar graph 5 th gradation)
5	:	100 ℃ ≦ T < 103 ℃	Time (bar graph 6 th gradation)
6	:	103 ℃ ≦ T < 105 ℃	Time (bar graph 7 th gradation)
7	:	105 ℃ ≦ T	Time (bar graph 8th gradation)

[4] Fuel temperature (T) distribution

HR	ENG	4			
1	0000	hr	4	0000	hr
2	0000	hr	5	0000	hr
3	0000	hr	6	0000	hr
			7	0000	hr

1	:	T < 40 ℃	Time
2	:	40 ℃ ≦ T < 50 ℃	Time
3	:	50 ℃ ≦ T < 60 ℃	Time
4	:	60 ℃ ≦ T < 70 ℃	Time
5	:	70 ℃ ≦ T < 80 ℃	Time
6	:	80 ℃ ≦ T < 90 ℃	Time
7	:	90 ℃ ≦ T	Time

[5] Suction air temperature (T) distribution

HR	ENG	5			
1	0000	hr	4	0000	hr
2	0000	hr	5	0000	hr
3	0000	hr	6	0000	hr
			7	0000	hr

1	:	T < -20 ℃	Time
2	:	-20 ℃ ≦ T < 0 ℃	Time
3	:	0 ℃ ≦ T < 15 ℃	Time
4	:	15 ℃ ≦ T < 30 ℃	Time
5	:	30 ℃ ≦ T < 45 ℃	Time
6	:	45 ℃ ≦ T < 60 ℃	Time
7	:	60 ℃ ≦ T	Time

[6] Boost temperature (T) distribution

HR	ENG	6			
1	0000	hr	4	0000	hr
2	0000	hr	5	0000	hr
3	0000	hr	6	0000	hr
			7	0000	hr

1	:	T < 50 ℃	Time
2	:	50 ℃ ≦ T < 80 ℃	Time
3	:	80 ℃ ≦ T < 110 ℃	Time
4	:	110 ℃ ≦ T < 140 ℃	Time
5	:	140 ℃ ≦ T < 170 ℃	Time
6	:	170 ℃ ≦ T < 200 ℃	Time
7	:	200 ℃ ≦ T	Time

[7] Atmospheric pressure (P) distribution

HR	ENG	7			
1	0000	hr	4	0000	hr
2	0000	hr	5	0000	hr
3	0000	hr	6	0000	hr
			7	0000	hr

1	:	P < 600 hPa	Time
2	:	600 hPa ≦ P < 690 hPa	Time
3	:	690 hPa ≦ P < 780 hPa	Time
4	:	780 hPa ≦ P < 870 hPa	Time
5	:	870 hPa ≦ P < 960 hPa	Time
6	:	960 hPa ≦ P < 1050 hPa	Time
7	:	1050 hPa ≦ P	Time

https://truckmanualshub.com/

[8] Engine oil pressure (P) distribution

HR	ENG	8			
			4	0000	hr
1	0000	hr	5	0000	hr
2	0000	hr	6	0000	hr
3	0000	hr	7	0000	hr

1	:	P < 0 kPa	Time
2	:	0 kPa ≦ P < 150 kPa	Time
3	:	150 kPa ≦ P < 300 kPa	Time
4	:	300 kPa ≦ P < 450 kPa	Time
5	:	450 kPa ≦ P < 600 kPa	Time
6	:	600 kPa ≦ P < 750 kPa	Time
7	:	750 kPa ≦ P	Time

[9] Boost pressure (P) distribution

HR	ENG	9			
			4	0000	hr
1	0000	hr	5	0000	hr
2	0000	hr	6	0000	hr
3	0000	hr	7	0000	hr

1	:	P < 150 kPa	Time
2	:	150 kPa ≦ P < 180 kPa	Time
3	:	180 kPa ≦ P < 210 kPa	Time
4	:	210 kPa ≦ P < 240 kPa	Time
5	:	240 kPa ≦ P < 270 kPa	Time
6	:	270 kPa ≦ P < 300 kPa	Time
7	:	300 kPa ≦ P	Time

[10] Load ratio (R) distribution

HR	ENG	10			
			4	0000	hr
1	0000	hr	5	0000	hr
2	0000	hr	6	0000	hr
3	0000	hr	7	0000	hr

1	:	R < 30 %	Time
2	:	30 % ≦ R < 40 %	Time
3	:	40 % ≦ R < 50 %	Time
4	:	50 % ≦ R < 60 %	Time
5	:	60 % ≦ R < 70 %	Time
6	:	70 % ≦ R < 80 %	Time
7	:	80 % ≦ R	Time

[11] Load ratio (R) distribution for SP mode

HR	ENG	11			
			4	0000	hr
1	0000	hr	5	0000	hr
2	0000	hr	6	0000	hr
3	0000	hr	7	0000	hr

1	:	R < 30 %	Time
2	:	30 % ≦ R < 40 %	Time
3	:	40 % ≦ R < 50 %	Time
4	:	50 % ≦ R < 60 %	Time
5	:	60 % ≦ R < 70 %	Time
6	:	70 % ≦ R < 80 %	Time
7	:	80 % ≦ R	Time

[12] Load ratio (R) distribution for H mode

HR	ENG	12			
			4	0000	hr
1	0000	hr	5	0000	hr
2	0000	hr	6	0000	hr
3	0000	hr	7	0000	hr

1	:	R < 30 %	Time
2	:	30 % ≦ R < 40 %	Time
3	:	40 % ≦ R < 50 %	Time
4	:	50 % ≦ R < 60 %	Time
5	:	60 % ≦ R < 70 %	Time
6	:	70 % ≦ R < 80 %	Time
7	:	80 % ≦ R	Time

https://truckmanualshub.com/

4. CFG (setting change) Screen

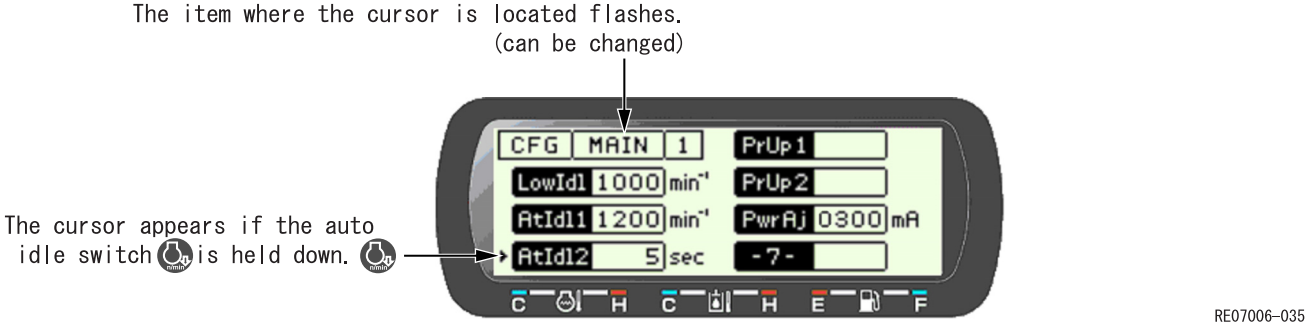

- Hold down the auto idle switch for 1 sec. The cursor is displayed and the value starts to flash.
- The flashing value can be changed with the washer switch /working light switch .
- When the travel high-speed switch is pressed, value is finalized and the change is reflected in the actual machine.
- When the horn volume select switch is pressed, the change is cancelled.

(1) Operation

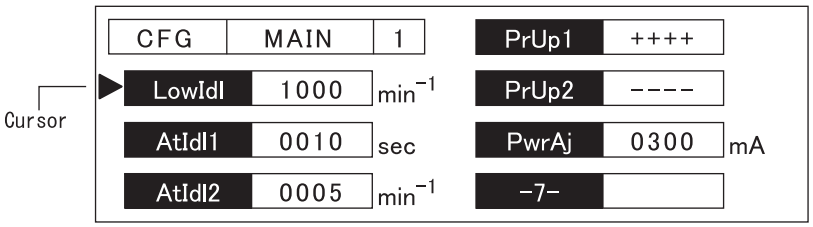

[1] View mode (screen switching operation)

1) Switching to edit mode
Press and hold down the auto idle switch for 1 sec.
The cursor will display when switching to edit mode is done.

2) Page forward/back
Forward operation ..... Light switch
Back operation .....Washer switch

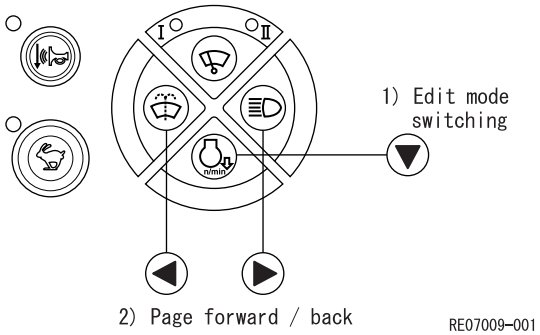

https://truckmanualshub.com/

[2] Edit mode (setting change operation)

1) Cursor up/down

Up operation ..... Wiper switch

Down operation .... Auto idle switch

2) Numeric value increase/decrease

Increase value ..... Light switch

Decrease value ..... Washer switch

3) Enter

Enters the set contents.

4) Cancel

Cancels the set contents.

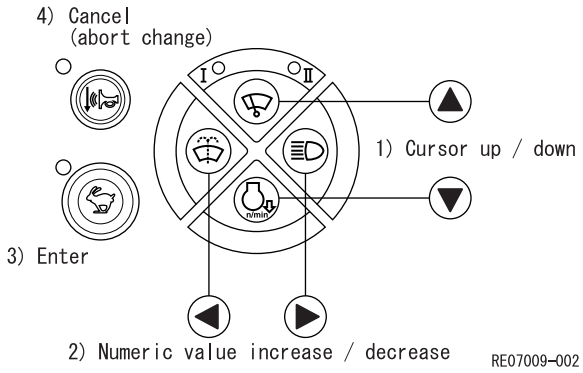

When 3) or 4) is executed, this exits edit mode and shifts the mode to view mode. (The cursor disappears.)

[3] Reset

If the washer switch and the light switch are held down for 10 sec., the setting contents are reset and all settings return to their default values.

(2) Screen

[1] MAIN 1

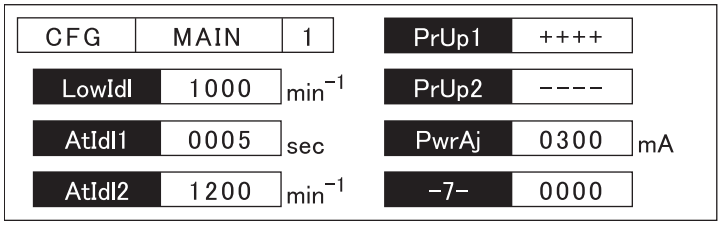

Item name	Explanation	Setting range	Default value
LowIdl	Low idling speed	Min speed - Auto-idle speed	1000
AtIdl1	Auto idling shift time	1 - 30	5
AtIdl2	Auto idling speed	Low idling speed - 1500	1200
PrUp1	Auto pressure boost yes/no	+: YES, -: NO	+
PrUp2	Auto pressure boost for option line usage yes/no	+: YES, -: NO	-
PwrAj	Transient load minimum milli-amp	50 - 400	300
-7-	High altitude correction milli-amp	0 - 250	0

* PwrAj is the previous high altitude mode.

https://truckmanualshub.com/

[2] MAIN 2

CFG	MAIN	2		CoolDn		min
TrSpd	----			EPF	++++	
TrAlm1	++++			Unit	0000	
TrAlm2	0010	sec		-7-		

Item name	Explanation	Setting range	Default value
TrSpd	Travel speed previous data held yes/no	+: YES, -: NO	-
TrAlm1	Travel alarm buzzing yes/no	+: YES, -: NO	+
TrAlm2	Travel alarm automatic stop time	1 - 30	10
CoolDn			
EPF	EPF (Engine Protection Feature) yes/no	+: YES, -: NO	+
Unit	Display unit	0: MPa, 1: PSI, 2: kgf/cm^2	0
-7-			

* Display units … MPa = {MPa, ℃ }, PSI = {psi, ℉}, kgf/cm^2 = {kgf/cm^2, ℃ }

[3] MAIN 3

CFG	MAIN	3		MntMsg	++++	
Spd1		min^{-1}		Cycle	0500	hr
Spd2		min^{-1}		Remain	0500	hr
OvLd	000.0	MPa		-7-	++++	

Item name	Explanation	Setting range	Default value
Spd1			
Spd2			
OvLd	Pressure at which alarm starts		
MntMsg	"SERVICE DUE" display yes/no	+: YES, -: NO	+
Cycle	"SERVICE DUE" display range	0 - 5000	500
Remain	Time until next "SERVICE DUE" display	0 - 5000	500
-7-	New harness yes/no	+: YES, -: NO	+

* OvLd is an option for Europe.
* -7- indicates replacement of the battery charge and engine emergency stop ports

https://truckmanualshub.com/

5. CAL (troubleshooting support) Screen

(1) Operation

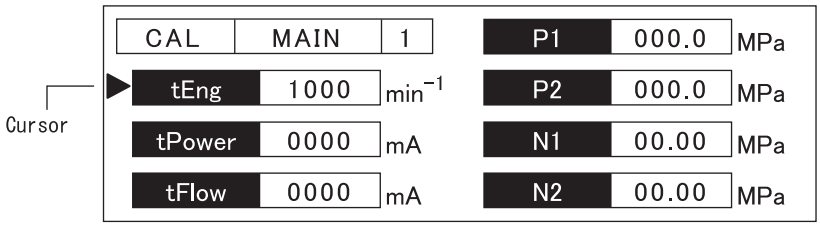

[1] View mode (screen switching operation)

1) Switching to edit mode
Press and hold down the auto idle switch for 1 sec.
The cursor will display when switching to edit mode is done.

2) Page forward/back
Forward operation .....Light switch
Back operation .....Washer switch

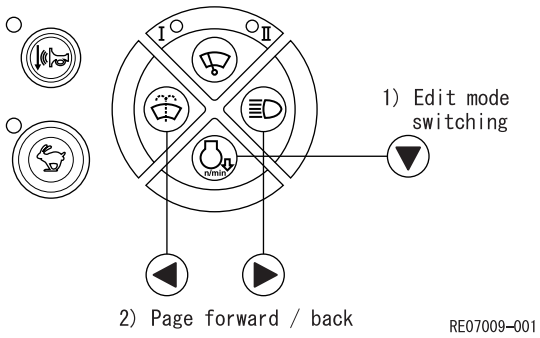

[2] Edit mode (setting change operation)

1) Cursor up/down
Up operation ..... Wiper switch
Down operation .... Auto idle switch

2) Numeric value increase/decrease
Increase value ..... Light switch
Decrease value ..... Washer switch

3) Enter
Enters the set contents.

4) Cancel
Use the travel high-speed select switch or horn volume select switch to cancel.
Exits edit mode and returns to view mode. (The cursor disappears.)

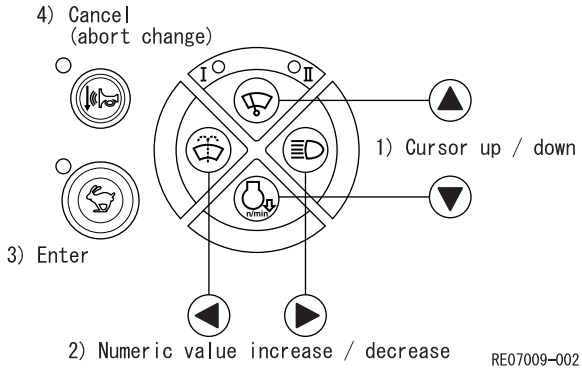

https://truckmanualshub.com/

(2) Screen

[1] Engine pump override 1

CAL	MAIN	1		P1	000.0	MPa
tEng	1000	min^{-1}		P2	000.0	MPa
tPower	0000	mA		N1	00.00	MPa
tFlow	0000	mA		N2	00.00	MPa

Item name	Explanation	Setting range	Default value
tEng	Target engine speed	500 - max. speed	Low idle
tPower	Target milli-amp for horsepower control proportional valve	50 - 740	50
tFlow	Target milli-amp for flow control proportional valve	50 - 740	50
P1	P1 pressure	-	-
P2	P2 pressure	-	-
N1	N1 pressure	-	-
N2	N2 pressure	-	-

[2] Engine pump override 2

CAL	MAIN	2		P1+P2	000.0	MPa
tEng	1000	min^{-1}		Eng	0000	min^{-1}
tPower	0500	mA		Power	0000	mA
tFlow	0500	mA		Flow	0000	mA

Item name	Explanation	Setting range	Default value
tEng	Target engine speed	500 - max. speed	Low idle
tPower	Target milli-amp for horsepower control proportional valve	50 - 740	50
tFlow	Target milli-amp for flow control proportional valve	50 - 740	50
P1+P2	P1+P2 pressure	-	-
Eng	Actual engine speed	-	-
Power	Actual milli-amp for horsepower control proportional valve	-	-
Flow	Actual milli-amp for flow control proportional valve	-	-

https://truckmanualshub.com/

[3] Hydraulic pressure drive fan override

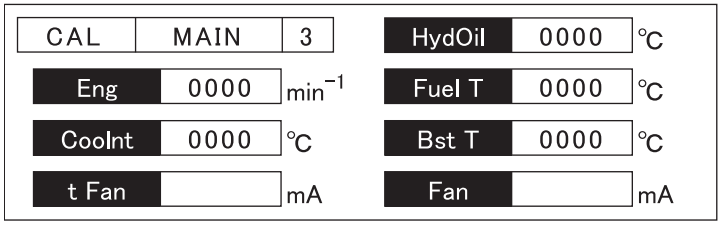

Item name	Explanation	Setting range	Default value
Eng	Actual engine speed	-	-
CoolInt	Coolant temperature	-	-
tFan	Target milli-amp for hydraulic fan proportional valve	-	-
HydOil	Oil temperature	-	-
FuelT	Fuel temperature	-	-
BstT	Boost temperature	-	-
Fan	Actual milli-amp for hydraulic fan proportional valve	-	-

6. Check the Monitor Switch (self-diagnosis function)

[1] After the key is switched ON, the "SUMITOMO" logo screen is displayed on the monitor.
At this time, the display can be switched to the monitor switch check screen by pressing the one-touch idle switch 5 times.

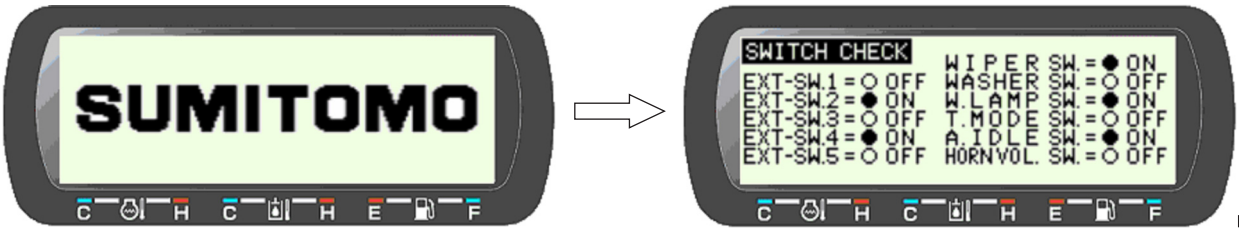

RE07003–005

The switch contents are as follows.

SW1	Front window limit switch
SW2	Breaker mode switch
SW3	Crusher mode switch
SW4	2 pumps flow mode switch
SW5	Not used
WIPER SW	Wiper switch
WASHER SW	Washer switch
W. LAMP SW	Working light switch
T. MODE SW	Travel high-speed select switch
A. IDLE SW	Auto idle switch
HORN VOL. SW	Horn volume select switch

https://truckmanualshub.com/

[2] Configuration

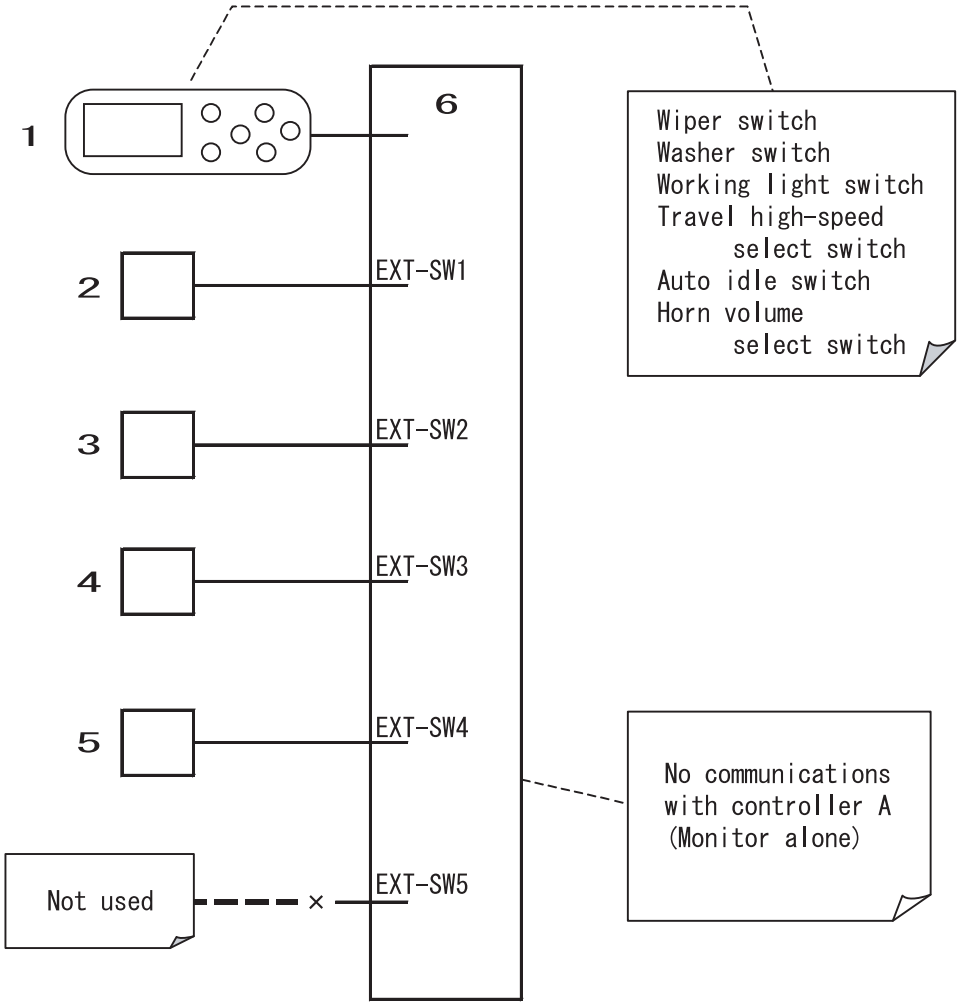

RST-05-07-001cb

1	Switch panel	4	Breaker mode switch
2	2 pumps flow switch	5	Crusher mode switch
3	Front window limit switch	6	Monitor

[3] Differences from CHK screen [CHK|H/W-M|1]

Monitor main unit input/output can also be checked on the CHK screen. However, for the CHK screen,

1) after the switch input is sent to computer A with communication,
2) the switch input is processed by computer A and
3) the results are sent to the monitor as screen data

and displayed. On the monitor switch check screen, the switch input recognized by the monitor itself is displayed directly on the screen (without involving communication or computer A), so it is possible to diagnose purely the switches themselves.

https://truckmanualshub.com/

7. Option Flow Setting

[1] When 3 sec. have passed, the logo screen shifts to the user screen.
With the user screen being displayed, if either the "breaker" or "crusher" rocker switch on the right panel is held down for 3 sec., the "option flow setting screen" is displayed on the monitor.

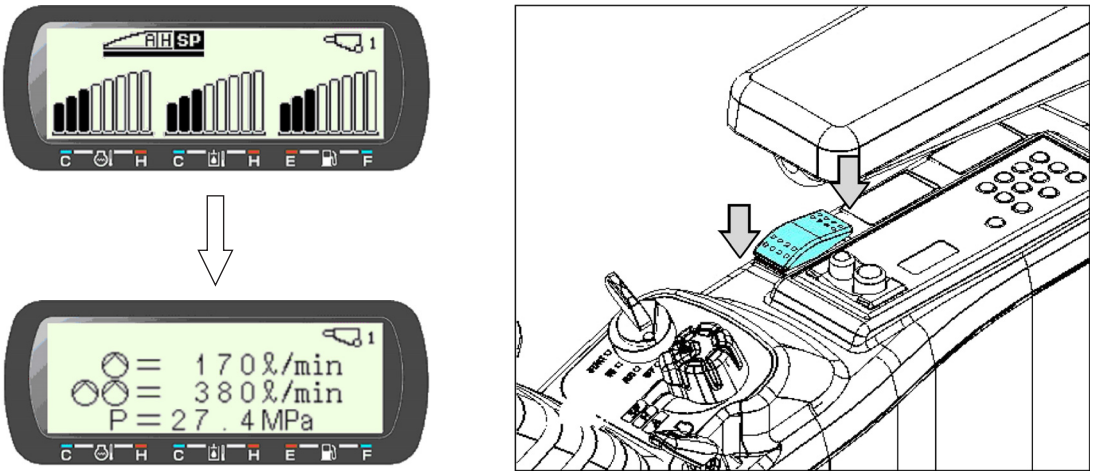

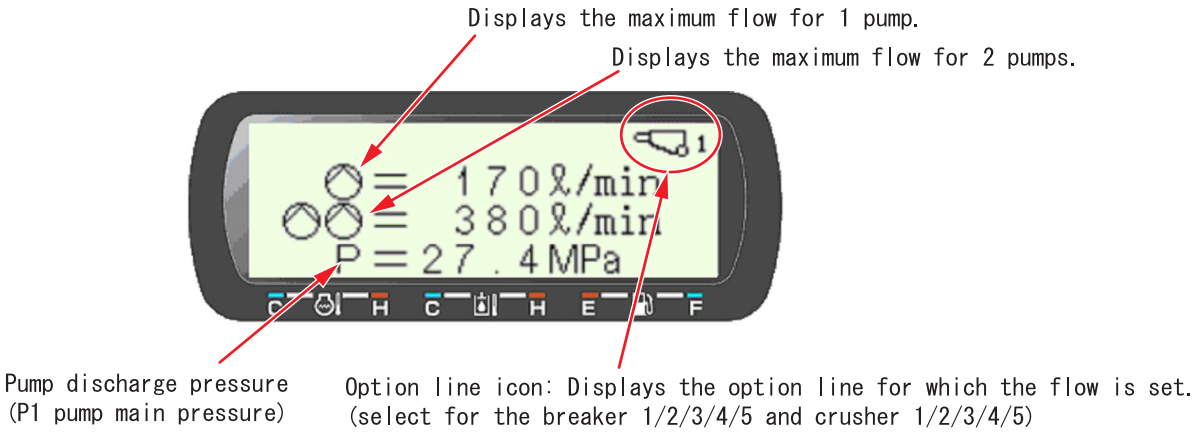

RE07003-006

[2] Flow setting

1) Press the breaker or crusher mode switch to select the mode to set the flow for.

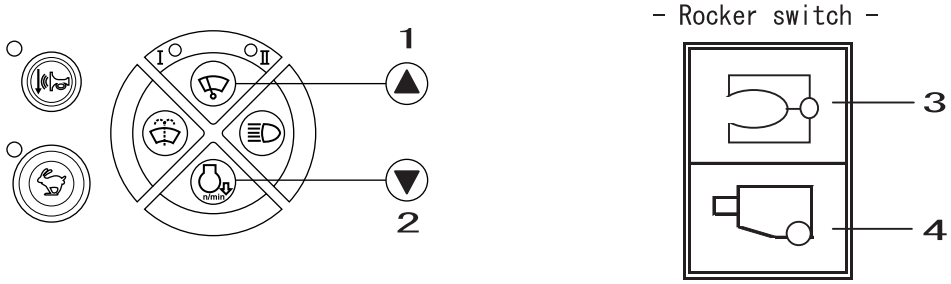

RST-05-07-001cw

1	Flow increase	3	Crusher mode (1 - 5) switchover
2	Flow decrease	4	Breaker mode (1 - 5) switchover

https://truckmanualshub.com/

2) The flow setting for the selected mode is selected by pressing the wiper switch or auto idle select switch .
The flow setting can be set to 10 levels from level 1 - level 10.
Caution
The set flow is the flow value when SP mode is selected.
Be careful. If run with the engine speed reduced, the actual flow is not the flow displayed.

	Unit	Model 5
1 pump flow (flow level 1)	L/min	285
1 pump flow (flow level 2)	L/min	262
1 pump flow (flow level 3)	L/min	233
1 pump flow (flow level 4)	L/min	205
1 pump flow (flow level 5)	L/min	176
1 pump flow (flow level 6)	L/min	148
1 pump flow (flow level 7)	L/min	119
1 pump flow (flow level 8)	L/min	91
1 pump flow (flow level 9)	L/min	62
1 pump flow (flow level 10)	L/min	49
2 pumps flow (flow level 1)	L/min	571
2 pumps flow (flow level 2)	L/min	547
2 pumps flow (flow level 3)	L/min	519
2 pumps flow (flow level 4)	L/min	490
2 pumps flow (flow level 5)	L/min	462
2 pumps flow (flow level 6)	L/min	433
2 pumps flow (flow level 7)	L/min	405
2 pumps flow (flow level 8)	L/min	376
2 pumps flow (flow level 9)	L/min	348
2 pumps flow (flow level 10)	L/min	335

[3] There is no need to do anything to finalize the setting. End by leaving this screen or switching OFF the key.
The factory settings for each mode are as follows.
There are no 4 or 5 settings for the breaker or crusher. Just a hyphen is displayed for these settings.

Mode	Flow display
Breaker circuit 1/Crusher 1	Level 3 flow
Breaker circuit 2/Crusher 2	Level 5 flow
Breaker circuit 3/Crusher 3	Level 7 flow
Breaker circuit 4/Crusher 4	---- (Not used)
Breaker circuit 5/Crusher 5	

https://truckmanualshub.com/

8. Anti-theft Setting

[1] Anti-theft setting and password registration

1) Enabling the anti-theft function
With the key OFF, connect the anti-theft knob terminal.
When the male and female knob terminals are connected on the cab main harness in the rear cover, the anti-theft function is enabled. The factory setting is for these knob terminals to be disconnected.

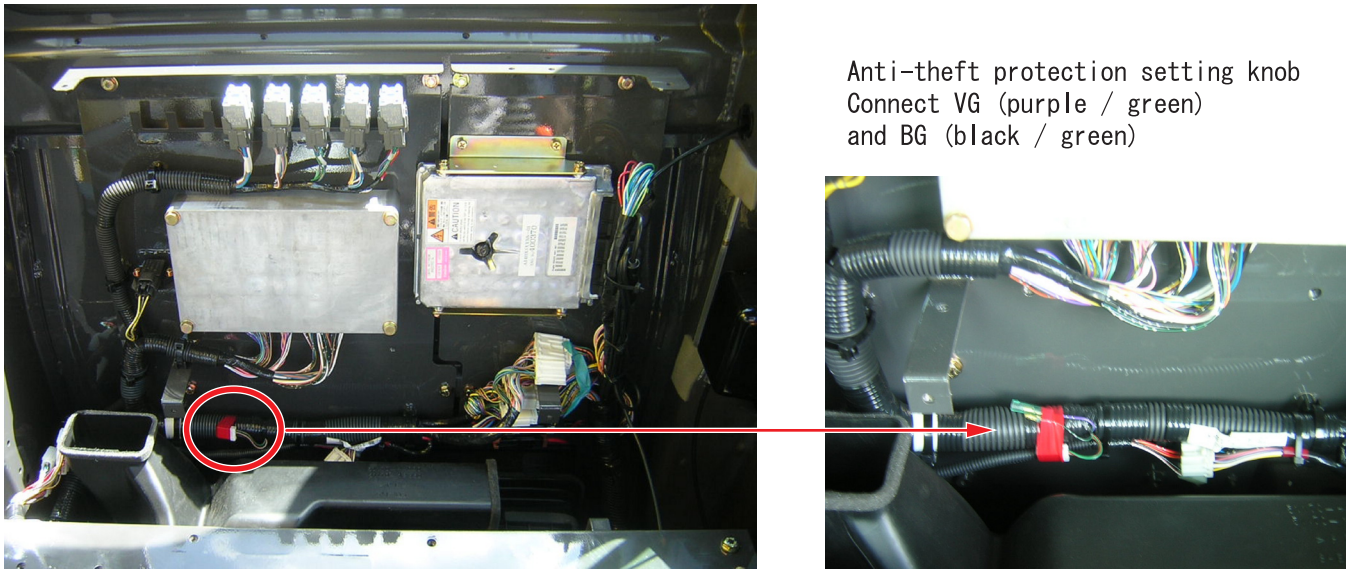

RST-05-07-001cx

2) Setting the password
When the knob terminals are connected, then the key switched ON, the following screen is displayed.
Enter any 4-digit number made up of the numbers 1 - 9.
(If all 4 digits are not input, "ERROR" is displayed.)
Input by using the monitor switches as follows.

1. When the Enter button is pressed, the password is stored into memory and display returns to the normal screen.

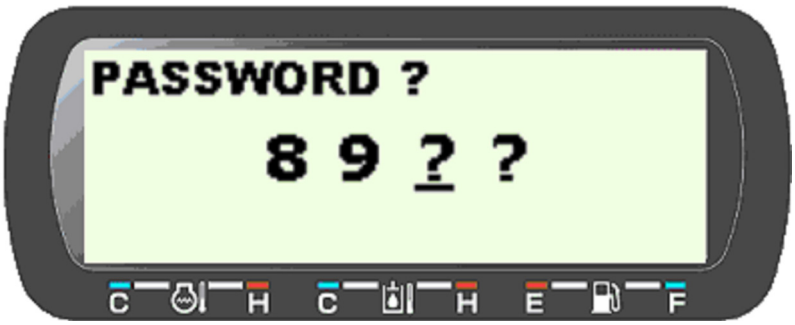

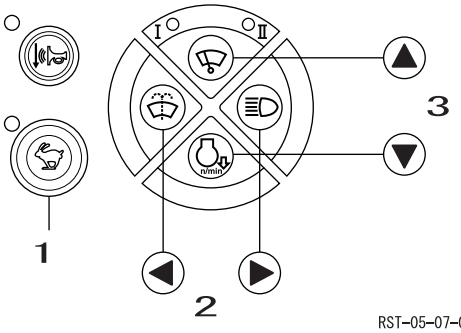

RST-05-07-001cy

1	Enter	3	Numeric value increase/decrease
2	Cursor movement		

3) Changing the password
If the password has been forgotten or if a password change is desired, the password is cleared if the knob terminal in [1]-1) is disconnected and the key switched ON. To re-input the password, repeat the procedure in [1].

https://truckmanualshub.com/

[2] Anti-theft function operation

1) Enabling the anti-theft function

1. If the key is switched twice in a row ON → OFF → ON → OFF with the engine stopped, the anti-theft function is switched ON.
   (All the key switching operations must be done within 2 sec.)
2. When the anti-theft comes ON, the monitor buzzes and the "key" icon is displayed.
   (Once the anti-theft is switched ON, this icon is displayed while the power is OFF.)

RST-05-07-001cz

3. The next time the key is switched ON, the anti-theft operates and the password input screen is displayed.
   Input the password made up of 4 digits 0 - 9.
   Input by using the monitor switches below.
   If an incorrect number is input, "ERROR" is displayed and the buzzer buzzes.
   The key must be switched OFF, then ON again before the password can be re-input.

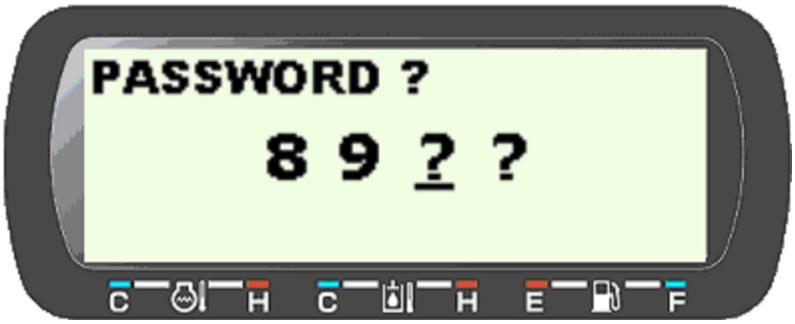

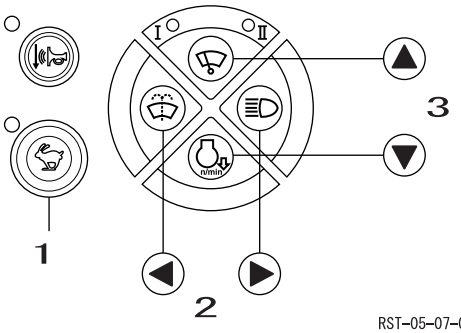

RST-05-07-001cy

1	Enter	3	Numeric value increase/decrease
2	Cursor movement		

2) Disabling the anti-theft function

1. If the engine is stopped by switching OFF the key, the anti-theft function does not operate.
2. To disable the anti-theft function, disconnect the anti-theft knob terminals VG (purple/green) and BG (black/green). The registered password is canceled.

https://truckmanualshub.com/

9. Model Setting

[1] If the model selection has not been completed, immediately after the key is switched ON, the "Model select screen" is displayed.

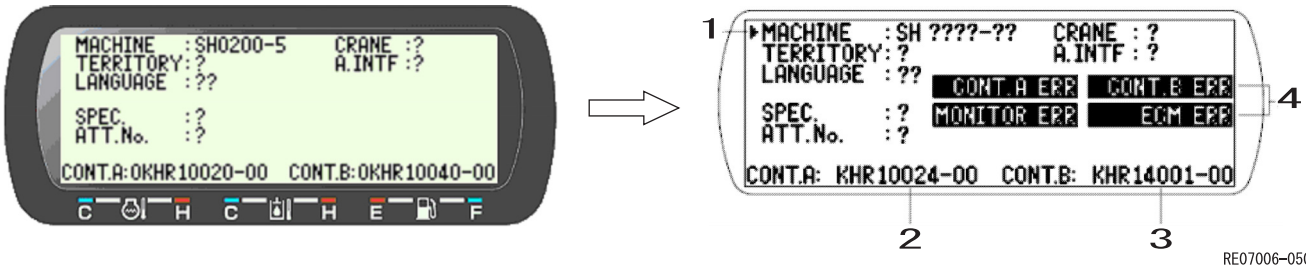

1	Cursor	3	Computer B; Part number
2	Computer A; Part number	4	Error display section

1) For the "CONT.A:" item, the part number for computer A is automatically displayed.
2) In the same way, if computer B is connected (for the liftcrane specifications or interference prevention specifications), the part number for computer B is automatically displayed for the "CONT.B:" item.
3) A "?" displays for items in which input is required.

a)	MACHINE	: Model	(SH120-5, SH150-5, SH180-5, SH200-5, SH240-5, SH290-5, SH330-5)
b)	TERRITORY	: Destination	(0: Domestic, general export, 1:LBX, 2:CASE NA, 3:CASE EU, 4: IHI)
c)	LANGUAGE	: Language	(00: Japanese, 01: English, 02: Thai, 03: Chinese, 04: German, 05: French, 06: Italian, 07: Spanish, 08: Portuguese, 09: Dutch, 10: Danish, 11: Norwegian, 12: Swedish, 13: Finnish, 14: Turkish, 15: Arabic, 16: Malay, 17: Indonesian, 18: Icon)
d)	SPEC	: Main unit specifications (Input 0)	
e)	ATT.No.	: Attachment specifications (input 0)	
f)	CRANE	: 0: No liftcrane 1: With liftcrane	
g)	A.INTF	: 0: No interference prevention function 1: With interference prevention function	

4) Input operating method
Input by using the monitor switches as follows.
* When the model select screen is displayed on the monitor, the normal monitor switch functions do not work.

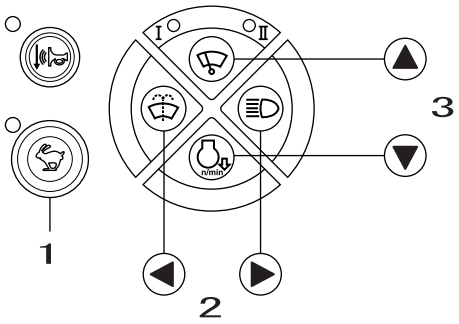

RST-05-07-001dc

1	Enter button
2	Numeric value change
3	Cursor movement

When the throttle volume position or all the input is complete, press " " (enter button). (The throttle volume must always be at the "H" mode position.)
If the input value is inappropriate (*), "CONT. A.ERR" is displayed.
* When there is still an item left with "?" displayed or the combination of model, destination, specification, and the like is inappropriate

https://truckmanualshub.com/

5) On the model setting screen, the ECM part number is automatically checked.
   If the input model and the ECM part number do not correspond, "ECM ERR" is displayed.
6) Even after the model selection is complete, it is possible to change just the LANGUAGE, CRANE, or ATT. No. setting without one of the half resets or all resets listed below.
7) Half reset
   On the model select screen, if the washer switch and the light switch are held down for 3 sec., data in the table below is erased.
8) All reset
   On the model select screen, if the washer switch and the light switch are held down for 10 sec., data in the table below is erased.

Difference between all reset and half reset

Reset . . . . . ○
Do not reset . . . . . ×
Reset when model information has changed . . . . . △

		Half reset	All reset
Computer A memory information	Model information (*1)	○	○
	Control data (*2)	○	○
	Usage log (*3)	×	○
	Trouble log (*4)	×	○
	Engine information (*5)	×	○
Computer B memory information	Angle sensor compensation value	△	○
	Liftcrane/interference prevention usage log	△	○
Computer S memory information	Transmission information (*6)	×	○

*1 Contents displayed on model selection screen
*2 Contents displayed on CFG screen
*3 Contents displayed on HR screen
*4 Contents displayed on DIAG screen
*5 Contents displayed on engine service screen
*6 When transmission information is reset, transmission with the G@NAV server is restarted from the initial send.
In this case, transmission with the G@NAV server cannot be done until a send permission signal is sent from the control center.

https://truckmanualshub.com/

10.Engine Information Screen

[1] Purpose
It has been made possible to copy the engine information (Q adjustment, QR code, engine serial number) stored in the ECM to the new ECM when the ECM and injector are replaced.

[2] How to go to this screen
See the service support screen operations.

[3] Engine start restriction
When this screen is displayed, the engine cannot be started.

[4] Screen
The engine information held in computer A can be checked as follows.

1) Pages 1 - 6: Injector cylinder 1 - 6 QR codes

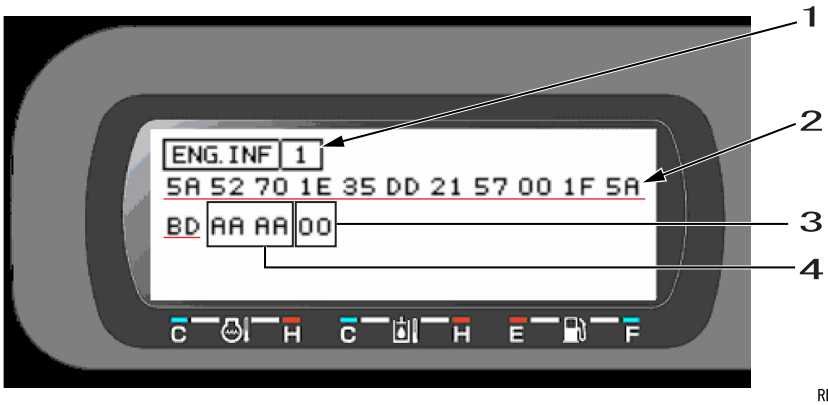

RE07003-040

1	Page
2	24-digit QR code
3	Error code
4	Indicates the display mode. Currently displays the information in computer A.

2) Page 7: Q resistance data

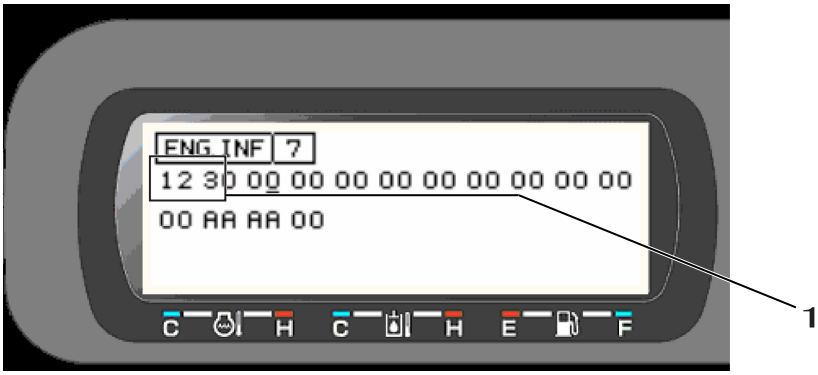

RE07003-041

1	3-digit Q resistance data

3) Page 8: Engine serial number

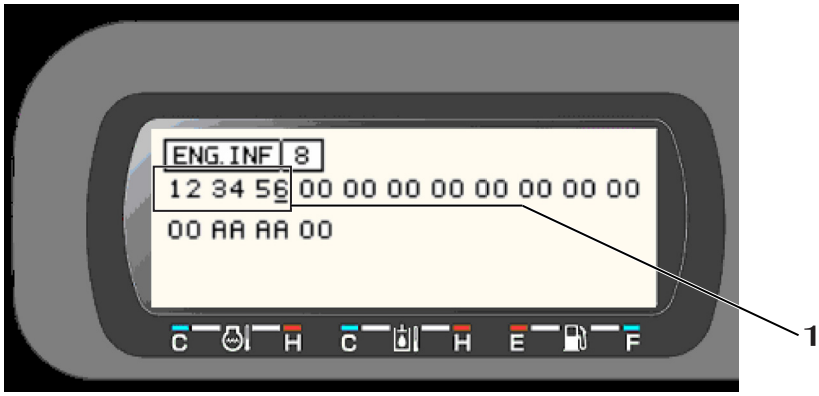

RE07003-042

1	6-digit engine serial number

https://truckmanualshub.com/

4) ECM part number

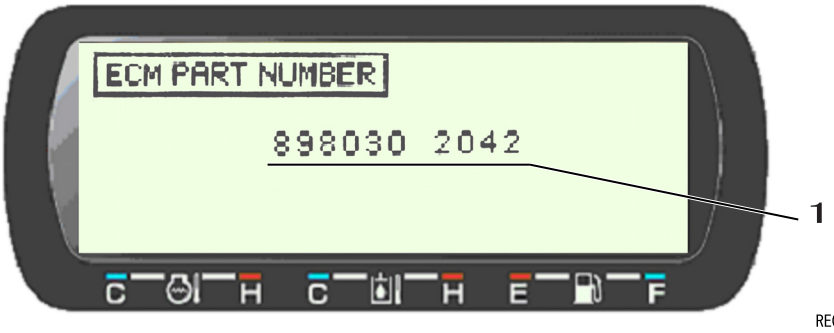

1	ECM part number

[5] Operating method
See the Engine Maintenance Standards.

https://truckmanualshub.com/

Screen Display Details

1. Message Display List

Display	Message type	Display ON timing	Display OFF timing
LOW OIL PRESS.	Warning	When the "Engine oil pressure abnormally low" trouble occurs	None Does not go off while the key is ON.
CHECK ENGINE	Warning	When the "ECM mismatch" trouble occurs Also, when a diagnostic trouble code is sent from the ECM	None Does not go off while the key is ON.
ELEC. PROB-LEM (*1)	Warning	When any of the troubles below occur "Sensor; Pressure (P1)", "Sensor: Pressure (P2)", "Sensor; Pressure (N1)", "Sensor; Pressure (N2)", "Sensor; Pressure (Overload)", "Sensor; Pressure (Bottom)", "Sensor; Pressure (Rod)", "Sensor; Pressure (Upper)", "Sensor; Pressure (Swing)", "Sensor; Pressure (Travel)" "Sensor; Fuel level", "Sensor; Oil temperature", "Sensor; Angle (Boom)", "Sensor; Angle (Arm)", "Sensor; Angle (Offset)", "Pressure switch; Return filter clog" "Solenoid; Swing brake", "Solenoid; Travel high-speed", "Solenoid; Power save" "Relay; Feed pump automatic stop", "Solenoid; Option return circuit", "Sole-noid; Free swing" "Solenoid; Fan reverse", "Air conditioner signal output", "Buzzer; Liftcrane" "Rotating light and solenoid; Bucket lock", "Solenoid; Lever lock" "Proportional valve; Pump horsepower", "Proportional valve; Pump flow" "Proportional valve; Fan", "Proportional valve; Boom", "Proportional valve; Offset", "Proportional valve; Arm", "Communication monitor", "Communication ECM", "Communication com-puter B", "Communication computer S", "CAN bus"	None Does not go off while the key is ON.
OVER HEAT	Warning	When any of the troubles below occur "Abnormally high coolant temperature 1", "Abnormally high oil temperature"	When all the troubles below are recovered from "Abnormally high coolant temperature 1", "Abnor-mally high oil temperature"
LOW COOL-ANT	Warning	When the "Coolant level low" trouble occurs	None Does not go off while the key is ON.
ALTERNATOR	Warning	When the "Abnormally low alternator voltage" trouble occurs	None Does not go off while the key is ON.
CHECK HYD.OIL FILTER	Warning	When the "Return filter clogged" trouble occurs	None Does not go off while the key is ON.
AIR FILTER	Warning	When the "Air cleaner clogged" trouble occurs	None Does not go off while the key is ON.
BOOST TEMP.HIGH	Warning	When the "Abnormally high boost temperature 1" trouble occurs	When the "Abnormally high boost temperature 1" trouble is recov-ered from
LOW FUEL	Warning	When the "Fuel level drop" trouble occurs	When the "Fuel level low" trouble is recovered from
SWITCH TO 1-PUMP	Alert	When the breaker mode is ON and 2 pumps flow is ON	When the conditions on the left are no longer met

https://truckmanualshub.com/

Display	Message type	Display ON timing	Display OFF timing
ENGINE STOP	Alert	When the engine emergency stop switch is ON	When the conditions on the left are no longer met
ENG. IDLING	Icon	During one-touch idling or auto idling	When the conditions on the left are no longer met
POWER UP	Icon	During auto pressure boost	When the conditions on the left are no longer met
ENG. PRE HEAT	Icon	When power ON to glow plug	When the conditions on the left are no longer met
AUTO WARM UP	Icon	During auto warm up	When the conditions on the left are no longer met
SERVICE DUE	Status	When the key is ON and the hour meter has reached the regulation time	After 1 min. after the key was switched ON

(*1) Even if one of the following troubles occurs, "ELEC. PROBLEM" is not issued.
"BZ travel alarm", "Monitor thermistor", "Air conditioner coolant signal output"

Message type

[1] Status .....Message only

[2] Alert .....The intermittent warning continues to sound at 1-second intervals.

[3] Warning .....The continuous warning sounds for just 5 sec.

[4] Icon .....Icon only

https://truckmanualshub.com/

Abnormality Display

1. Diagnostic Trouble Code Display

[1] Purpose and summary
When a trouble occurs, the diagnostic trouble code (DTC) is displayed on the user screen.
This enables the operator to verbally communicate the trouble to the service engineer.

[2] Screen
Displayed with the ! mark next to the work mode followed by a 4-digit number.
If there is no trouble, nothing at all is displayed.

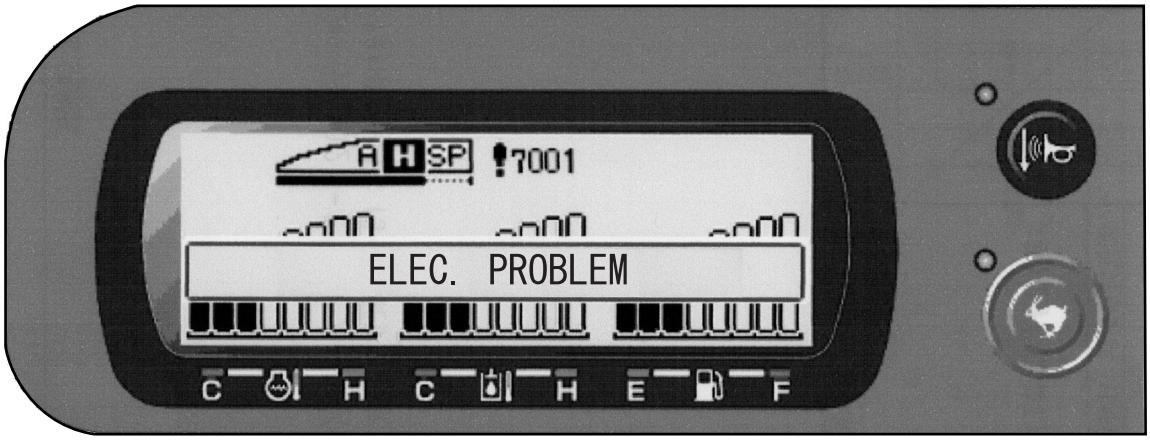

RE07003–039

[3] Trouble display
The "ELEC. PROBLEM" or "CHECK ENGINE" message is displayed.
When trouble occurs, the corresponding diagnostic trouble code is displayed. If the message makes clear the trouble location, the location is not displayed elsewhere.
For details, see the "Main Unit Diagnostic Trouble Code List". All the diagnostic trouble codes sent from the ECM are subject to display.

[4] Displayed trouble status
Only current and ongoing troubles are displayed. Troubles that have been recovered from are not displayed.

[5] Multiple trouble display
When multiple troubles occur, they are displayed in turn at 5-second intervals.

https://truckmanualshub.com/

2. Main Unit Diagnostic Trouble Code List

(1) Electrical troubles (input) [7000-7199]

Trouble location	Trouble mode	Diagnostic trouble code		Judgment timing	Prerequisites	Occurrence judgment	Recovery judgment
		DTC	Dis-play			Conditions	Conditions
Sensor; Pressure (P1)	Ground short/dis-connection	7000	○	Immediately after key switched ON	None	Voltage ≦ 0.25 V	0.25 V < Voltage < 4.75 V
	Power supply short					Voltage ≧ 4.75 V	
Sensor; Pressure (P2)	Ground short/dis-connection	7001	○	Immediately after key switched ON	None	Voltage ≦ 0.25 V	0.25 V < Voltage < 4.75 V
	Power supply short					Voltage ≧ 4.75 V	
Sensor; Pressure (N1)	Ground short/dis-connection	7002	○	Immediately after key switched ON	None	Voltage ≦ 0.25 V	0.25 V < Voltage < 4.75 V
	Power supply short					Voltage ≧ 4.75 V	
Sensor; Pressure (N2)	Ground short/dis-connection	7003	○	Immediately after key switched ON	None	Voltage ≦ 0.25 V	0.25 V < Voltage < 4.75 V
	Power supply short					Voltage ≧ 4.75 V	
Sensor; Pressure (Overload)	Ground short/dis-connection	7004	○	Immediately after key switched ON	EU selected as destination	Voltage ≦ 0.25 V	0.25 V < Voltage < 4.75 V
	Power supply short					Voltage ≧ 4.75 V	
Sensor; Pressure (Bottom)	Ground short/dis-connection	7005	○	Immediately after key switched ON	Liftcrane selected	Voltage ≦ 0.25 V	0.25 V < Voltage < 4.75 V
	Power supply short					Voltage ≧ 4.75 V	
Sensor; Pressure (Rod)	Ground short/dis-connection	7006	○	Immediately after key switched ON	Liftcrane selected	Voltage ≦ 0.25 V	0.25 V < Voltage < 4.75 V
	Power supply short					Voltage ≧ 4.75 V	
Sensor; Pressure (Upper)	Ground short/dis-connection	7020	○	Immediately after key switched ON	None	Voltage ≦ 0.25 V	0.25 V < Voltage < 4.75 V
	Power supply short					Voltage ≧ 4.75 V	
Sensor; Pressure (Swing)	Ground short/dis-connection	7021	○	Immediately after key switched ON	None	Voltage ≦ 0.25 V	0.25 V < Voltage < 4.75 V
	Power supply short					Voltage ≧ 4.75 V	
Sensor; Pressure (Travel)	Ground short/dis-connection	7022	○	Immediately after key switched ON	None	Voltage ≦ 0.25 V	0.25 V < Voltage < 4.75 V
	Power supply short					Voltage ≧ 4.75 V	
Sensor; Fuel level	Disconnection	7040	○	Immediately after key switched ON	None	Resistance ≧ 100 Ω	2 Ω < Resistance < 100 Ω
	Short					Resistance ≦ 2 Ω	
Sensor; Oil temperature	Disconnection	7041	○	3 min. after engine start	None	Resistance ≧ 67200 Ω (Voltage ≧ 4.93 V)	111 Ω < Resistance < 67200 Ω (0.5 V < Voltage < 4.93 V)
	Short			Immediately after key switched ON		Resistance ≦ 111 Ω (Voltage ≦ 0.5 V)	
Monitor; Thermistor (*1)	Disconnection	7045	×	Immediately after key switched ON	None	Trouble bit received from monitor	No trouble bit received from monitor
	Short						
Sensor; Angle (Boom)	Ground short/dis-connection	7060	○	Immediately after key switched ON	Liftcrane or inter-ference prevention selected	Voltage ≦ 0.2 V	0.2 V < Voltage < 4.8 V
	Power supply short					Voltage ≧ 4.8 V	
Sensor; Angle (Arm)	Ground short/dis-connection	7061	○	Immediately after key switched ON	Liftcrane or inter-ference prevention selected	Voltage ≦ 0.2 V	0.2 V < Voltage < 4.8 V
	Power supply short					Voltage ≧ 4.8 V	
Sensor; Angle (Offset)	Ground short/dis-connection	7062	○	Immediately after key switched ON	Liftcrane or inter-ference prevention selected	Voltage ≦ 0.2 V	0.2 V < Voltage < 4.8 V
	Power supply short					Voltage ≧ 4.8 V	
Pressure switch; Return filter clog	Disconnection	7063	○	From immediately after key switched ON until engine starts	None	Pressure switch = OFF	Pressure switch = ON

(*1) Even if trouble occurs, the "ELEC. PROBLEM" message is not displayed.
For items for which × is displayed, the "ELEC. PROBLEM" message is not displayed. Also, there is no DTC display on the user screen.
However, the DTC is recorded on the service (DIAG) screen.

https://truckmanualshub.com/

(2) Electrical troubles (output) [7200-7399]

Trouble location	Trouble mode	Diagnostic trouble code		Judgment timing	Prerequisites	Occurrence judgment	Recovery judgment
		DTC	Dis-play			Conditions	Conditions
Solenoid; Swing brake	Disconnection	7200	○	Immediately after key switched ON	None	Output ≠ Output monitor	Output = output monitor
	Short						
Solenoid; Travel high-speed	Disconnection	7201	○	Immediately after key switched ON	None	Output ≠ Output monitor	Output = output monitor
	Short						
Solenoid; Pressure boost	Disconnection	7202	○	Immediately after key switched ON	None	Output ≠ Output monitor	Output = output monitor
	Short						
BZ; Travel alarm (*1)	Disconnection	7203	×	Immediately after key switched ON	None	Output ≠ Output monitor	Output = output monitor
	Short						
Solenoid; Power save	Disconnection	7204	○	Immediately after key switched ON	None	Output ≠ Output monitor	Output = output monitor
	Short						
REL; Feed pump stop	Disconnection	7205	○	Immediately after key switched ON	None	Output ≠ Output monitor	Output = output monitor
	Short						
Solenoid; Option return cir-cuit	Disconnection	7206	○	Immediately after key switched ON	None	Output ≠ Output monitor	Output = output monitor
	Short						
Solenoid; Free swing	Disconnection	7207	○	Immediately after key switched ON	None	Output ≠ Output monitor	Output = output monitor
	Short						
Solenoid; Fan reverse	Disconnection	7208	○	Immediately after key switched ON	None	Output ≠ Output monitor	Output = output monitor
	Short						
Air conditioner coolant temperature sig-nal output (*1)	Disconnection	7209	×	Immediately after key switched ON	None	Output ≠ Output monitor	Output = output monitor
	Short						
BZ; Liftcrane	Disconnection	7210	○	Immediately after key switched ON	None	Output ≠ Output monitor	Output = output monitor
	Short						
REL; Rotating light and bucket lock	Disconnection	7211	○	Immediately after key switched ON	None	Output ≠ Output monitor	Output = output monitor
	Short						
Solenoid; Gate lock	Disconnection	7212	○	Immediately after key switched ON	None	Output ≠ Output monitor	Output = output monitor
	Short						
Proportional valve; Pump horsepower	Disconnection	7240	○	After engine start	None	Milli-amp ≦ 30 mA	30 mA < Milli-amp < 3 A
	Short			Immediately after key switched ON		Milli-amp ≧ 3 A	
Proportional valve; Pump flow	Disconnection	7241	○	After engine start	None	Milli-amp ≦ 30 mA	30 mA < Milli-amp < 3 A
	Short			Immediately after key switched ON		Milli-amp ≧ 3 A	
Proportional valve; Fan	Disconnection	7242	○	After engine start	None	Milli-amp ≦ 30 mA	30 mA < Milli-amp < 3 A
	Short			Immediately after key switched ON		Milli-amp ≧ 3 A	
Proportional valve; Boom	Disconnection	7243	○	After engine start	None	Milli-amp ≦ 30 mA	30 mA < Milli-amp < 3 A
	Short			Immediately after key switched ON		Milli-amp ≧ 3 A	
Proportional valve; Arm	Disconnection	7244	○	After engine start	None	Milli-amp ≦ 30 mA	30 mA < Milli-amp < 3 A
	Short			Immediately after key switched ON		Milli-amp ≧ 3 A	
Proportional valve; Offset	Disconnection	7245	○	After engine start	None	Milli-amp ≦ 30 mA	30 mA < Milli-amp < 3 A
	Short			Immediately after key switched ON		Milli-amp ≧ 3 A	

(*1) Even if trouble occurs, the "ELEC. PROBLEM" message is not displayed.
For items for which × is displayed, the "ELEC. PROBLEM" message is not displayed. Also, there is no DTC display on the user screen.
However, the DTC is recorded on the service (DIAG) screen.

https://truckmanualshub.com/

(3) Mechanical troubles [7400-7599]

Trouble location	Trouble mode	Diagnostic trouble code		Judgment timing	Prerequisites	Occurrence judgment	Recovery judgment
		DTC	Display			Conditions	Conditions
Coolant temperature	Abnormally high temperature 1	7400	○	1 min. after engine start	Coolant temperature sensor = Normal CAN communication = Normal ECM 5 V power supply voltage = Normal	Coolant temperature ≧ 105℃	Coolant temperature < 105 ℃
	Abnormally high temperature 2	7402	○			Coolant temperature ≧ 110℃	Coolant temperature < 105 ℃
	Abnormally high temperature 3	7403	○			Coolant temperature ≧ 120℃	Coolant temperature < 120 ℃
Oil temperature	Abnormally high temperature	7404	○	1 min. after engine start	Oil temperature sensor = Normal	Oil temperature ≧ 98 ℃	Oil temperature < 98 ℃
Boost temperature	Abnormally high temperature 1	7405	○	1 min. after engine start	Boost temperature sensor = Normal, CAN communication = Normal, ECM 5 V power supply voltage = Normal	Boost temperature ≧ 80 ℃	Boost temperature ≦ 70 ℃
	Abnormally high temperature 2	7406	○			Boost temperature ≧ 90 ℃	Boost temperature < 90 ℃
Alternator voltage	Abnormally low voltage	7420	○	10 sec. after engine start	None	Generated voltage ≦ 10 V	Generated voltage > 10 V
Coolant level	Drop	7421	○	Immediately after key switched ON	None	Level switch = ON	Level switch = OFF
Engine oil pressure	Abnormally low pressure	7422	○	30 sec. after engine start	Oil pressure sensor = Normal, CAN communication = Normal, ECM 5 V power supply voltage = Normal	Pressure ≦ 40 kPa	Pressure > 40 kPa
Air cleaner	Clog	7423	○	10 sec. after engine start	None	Vacuum switch = ON	Vacuum switch = OFF
Return filter	Clog	7424	○	10 sec. after engine start	Return filter pressure switch = Normal	Pressure switch = OFF	Pressure switch = ON

(4) Communication abnormality [7600-7799]

Trouble location	Trouble mode	Diagnostic trouble code		Judgment timing	Prerequisites	Occurrence judgment	Recovery judgment
		DTC	Display			Conditions	Conditions
CAN bus	Bus abnormality	7600	○	Immediately after key switched ON	None	Bus off or error passive	When the occurrence conditions are not met
Communication monitor	Reception abnormality	7601	○	Immediately after key switched ON	None	Packets not coming from monitor	When the occurrence conditions are not met
	Transmission abnormality					Reception from monitor Defective packet received	When the occurrence conditions are not met
Communication ECM	Time out	7602	○	Immediately after key switched ON	None	Messages not coming from ECM	When the occurrence conditions are not met
Communication computer S	Time out	7603	○	Immediately after key switched ON	None	Messages not coming from computer S	When the occurrence conditions are not met
Communication computer B	Time out	7604	○	Immediately after key switched ON	Liftcrane or interference prevention selected	Messages not coming from computer B	When the occurrence conditions are not met
ECM	Mismatch	7605	○	10 sec. after engine start	Model selection completed	Model ≠ ECM calibration No.	None No recovery
EEPROM	Data abnormality	7606	×	Immediately after key switched ON	None	Previously stored checksum ≠ Current calculated checksum	Previously stored checksum = Current calculated checksum

For items for which × is displayed, the "ELEC. PROBLEM" message is not displayed. Also, there is no DTC display on the user screen.
However, the DTC is recorded on the service (DIAG) screen.

https://truckmanualshub.com/

3. Diagnostic Trouble Code (monitor display)

Trouble content	Diagnostic trouble code	Main symptoms when trouble occurs	Diagnostic trouble code display conditions	Back-up function	Conceivable cause	Patterns for recovery from trouble
No pump pressure send (2nd stage)	1093	Engine vibration, idle instability, drop of output power, rev-up defect, black smoke, engine stalling	The ratio for the fuel flow command signal to the SCV is 33 % or less. Differential pressure send amount is 2800 mm^3/s or longer When any of the above occurs and the condition below At 1200 min^{-1} or higher, actual rail pressure is 30 MPa or more below the target rail pressure for 5 sec. or longer.	Multi-injection stop Target common rail pressure upper limit (80 MPa)	Fuel system clogged, line (hose) blocked Charge fuel pump defect (discharge defect) Wiring defect (short) between ECM and common rail pressure sensor Injector defect Supply pump defect Common rail pressure sensor defect (common rail) Pressure limiter defect (common rail)	1
Boost temperature sensor abnormality (abnormally low voltage)	1112	Nothing in particular	The boost temperature sensor voltage is 0.1 V or lower for 4 sec. or longer.	No backup	Wiring defect (disconnection, short, high resistance) between ECM and boost temperature sensor Boost temperature sensor defect ECM internal defect	*2
Boost temperature sensor abnormality (abnormally high voltage)	1113	Nothing in particular	The boost temperature sensor voltage is 4.95 V or higher for 4 sec. or longer.	No backup	Wiring defect (disconnection, short, high resistance) between ECM and boost temperature sensor Boost temperature sensor defect ECM internal defect	*2
Overheat	1173	Drop of output power If the coolant temperature exceeds 108 ℃ during overheating, the fuel flow is restricted.	The coolant temperature is higher than 120 ℃ for 5 sec. or longer.	No backup	Wiring defect (short) between ECM and engine coolant sensor Engine cooling system trouble (radiator clog or the like) Engine coolant level too low Engine coolant sensor defect	2
Injection nozzle common 1 drive system abnormality	1261	Engine vibration, idling instability, drop of output power Possibility of rev-up defect, engine stalling	Injector monitor inputs for all common 1 system No signal for 3 sec. or longer	Common 1 stop (No. 1, 4 cylinder stop) EGR stop	No 1, 4 injector harness defect (disconnection, short) Injector defect ECM defect	1
Injection nozzle common 2 drive system abnormality	1262	Engine vibration, idling instability, drop of output power Possibility of rev-up defect, engine stalling	Injector monitor inputs for all common 2 system No signal for 3 sec. or longer	Common 2 stop (No. 2, 3 cylinder stop) EGR stop	No 2, 3 injector harness defect (disconnection, short) Injector defect ECM internal defect	1
CMP sensor out of phase	1345	No fault during engine rotation, but when it is stopped once, it cannot be restarted.	No correct CMP sensor pulse in crank gap position	No change when error occurs (shift to crank sensor) However, engine cannot be restarted.	Wiring defect (disconnection, short, high resistance) between ECM and CMP sensor Camshaft gear installation defect Flywheel installation defect	1
Main relay system abnormality	1625	Engine starting difficulty, power supply not cut off	Main relay input power supply voltage 1 V or lower for 2 sec. or longer Even when the main relay coil OFF command is issued, the relay does not cut off within 5 sec.	No backup	Wiring defect (disconnection, short, high resistance) between ECM and main relay Wiring defect (disconnection, short, high resistance) with fusible link main relay Main relay defect ECM internal defect	2
A/D conversion abnormality	1630	Drop of output power, black smoke	Analog/digital conversion not possible	Analog sensor system default processing (sensors operating with default values, because conversion not possible) Multi-injection stop Target common rail pressure upper limit (80 MPa)	ECM internal defect	2
5 V power supply 2 voltage abnormality (atmospheric pressure sensor power supply)	1632	Black smoke at high altitudes, insufficient output at low altitudes	Key switch power supply voltage 5.5 V or higher or 4.5 V or lower for 0.5 sec. or longer	EGR control stop Default value setting 80 kPa (equivalent to 2500 m)	Power supply circuit wiring defect (short) between ECM and atmospheric pressure sensor ECM internal defect	2

https://truckmanualshub.com/

Trouble content	Diagnostic trouble code	Main symptoms when trouble occurs	Diagnostic trouble code display conditions	Back-up function	Conceivable cause	Patterns for recovery from trouble
5 V power supply 3 voltage abnormality (engine hydraulic pressure sensor)	1633	Poor starting and black smoke at low temperatures	Key switch power supply voltage 5.5 V or higher or 4.5 V or lower for 0.5 sec. or longer	Control using default values	Power supply circuit wiring defect (short) between ECM and oil pressure sensor ECM internal defect	2
5 V power supply 4 voltage abnormality (boost pressure sensor)	1634	Black smoke	Key switch power supply voltage 5.5 V or higher or 4.5 V or lower for 0.5 sec. or longer	Control using default values	Power supply circuit wiring defect (short) between ECM and boost pressure sensor ECM internal defect	2
5 V power supply 5 voltage abnormality (common rail pressure sensor, EGR position sensor)	1635	Possibility of poor engine rev-up, drop of output power, back smoke, engine stalling	Key switch power supply voltage 5.5 V or higher or 4.5 V or lower for 0.5 sec. or longer	Control using default values	Power supply circuit wiring defect (short) between ECM and common rail pressure sensor ECM internal defect	2
CAN bus abnormality	2104	Engine speed down to 1500 min^{-1}.	Engine rotation that computer A sends with CAN stops for 1 sec. or longer.	Engine speed down to 1500 min^{-1}.	Wiring defect (disconnection, short, high resistance) between ECM and computer A ECM internal defect Computer A internal defect	2
CAN time-out abnormality	2106	Control from actual machine side stops working because CAN communication become impossible. The engine speed drops to 1500 min^{-1}.	Engine rotation that computer A sends with CAN stops for 2 sec. or longer.	Engine speed down to 1500 min^{-1}.	Wiring defect (disconnection, short, high resistance) between ECM and computer A ECM internal defect Computer A internal defect	2
No pump pressure send (fuel leak)	0087	Possibility of engine vibration, idle instability, drop of output power, black smoke, excess output	Actual rail pressure of 15 MPa or lower for 3 sec. or longer	Multi-injection stop Target common rail pressure upper limit (80 MPa)	Fuel system clogged (element), line (hose), etc. blocked Wiring defect (short) between ECM and common rail pressure sensor Injector defect Common rail pressure sensor defect Supply pump defect Pressure limiter defect	1
Abnormal common rail pressure (1st stage, 2nd stage)	0088	Engine vibration, idle instability, drop of output power, rev-up defect	1st stage Rail pressure exceeds 185 MPa for 5 sec. or longer, common rail pressure sensor voltage is 3.9 V or higher 2nd stage 1st stage established, rail pressure exceeds 190 MPa for 5 sec. or longer, common rail pressure sensor voltage is 4 V or higher	Multi-injection stop Target common rail pressure upper limit (80 MPa)	Fuel system line (hose), etc. blocked Air in fuel system (check hose connection.) Common rail pressure sensor defect Supply pump defect	1
Common rail pressure abnormality (pump sending too much pressure)	0089	Engine vibration, idle instability, drop of output power, rev-up defect	Actual rail pressure 40 MPa or more above the target rail pressure for 5 sec. or longer	Multi-injection stop Target common rail pressure upper limit (80 MPa)	Common rail pressure sensor defect Supply pump defect ECM, SCV, common rail pressure sensor connector connection defect	1
SCV drive system disconnection, + B short, GND short	0090	Black smoke and excess output	When the SCV drive milliamp exceeds the rated milli-amp for 2 sec. or longer When the difference between the target and actual milli-amp exceeds the rated milli-amp for 2 sec. or longer	Multi-injection stop Target common rail pressure upper limit (80 MPa)	SCV defect Wiring defect (disconnection, short, high resistance) between ECM and SCV ECM internal defect	2

https://truckmanualshub.com/

Trouble content	Diagnostic trouble code	Main symptoms when trouble occurs	Diagnostic trouble code display conditions	Back-up function	Conceivable cause	Patterns for recovery from trouble
Atmospheric pressure sensor abnormality (abnormally low voltage)	0107	Black smoke at high altitudes, insufficient output at low altitudes	The atmospheric pressure sensor voltage is 0.5 V or lower for 5 sec. or longer.	EGR control stop Default value setting 80 kPa (equivalent to 2500 m)	Wiring defect (disconnection, short, high resistance) between ECM and atmospheric pressure sensor Atmospheric pressure sensor defect ECM internal defect	2
Atmospheric pressure sensor abnormality (abnormally high voltage)	0108	Black smoke at high altitudes, insufficient output at low altitudes	The atmospheric pressure sensor voltage is 3.8 V or higher for 4 sec. or longer.	EGR control stop Default value setting 80 kPa (equivalent to 2500 m)	Wiring defect (disconnection, short, high resistance) between ECM and atmospheric pressure sensor Atmospheric pressure sensor defect ECM internal defect	2
Suction air temperature sensor abnormality (abnormally low voltage)	0112	Possibility of white smoke when starting at low temperatures	The suction air temperature sensor voltage is 0.1 V or lower for 4 sec. or longer.	EGR control stop Default value setting Starting: -10 ℃ Running: 25 ℃	Wiring defect (short) between ECM and suction air temperature sensor Suction air temperature sensor defect ECM internal defect	*2
Suction air temperature sensor abnormality (abnormally high voltage)	0113	Possibility of white smoke when starting at low temperatures	The suction air temperature sensor voltage is 4.95 V or higher for 4 sec. or longer.	EGR control stop Default value setting Starting: -10 ℃ Running: 25 ℃	Wiring defect (disconnection, short, high resistance) between ECM and suction air temperature sensor Suction air temperature sensor defect ECM internal defect	*2
Engine coolant temperature sensor abnormality (abnormally low voltage)	0117	Poor starting at low temperatures, black smoke, drop of output power	The coolant temperature sensor voltage is 0.1 V or lower for 4 sec. or longer.	EGR control stop Default value setting Starting: -20 ℃ Running: 80 ℃	Wiring defect (short) between ECM and engine coolant sensor Engine coolant sensor defect ECM internal defect	*2
Engine coolant temperature sensor abnormality (abnormally high voltage)	0118	Increase in noise, white smoke at low temperatures, rough idling	The coolant temperature sensor voltage is 4.85 V or higher for 4 sec. or longer.	EGR control stop, default value setting Starting: -20 ℃ Running: 80 ℃	Wiring defect (disconnection, short, high resistance) between ECM and engine coolant sensor Engine coolant sensor defect ECM internal defect	*2
Fuel temperature sensor abnormality (abnormally low voltage)	0182	Nothing in particular	The fuel temperature sensor voltage is 0.1 V or lower for 4 sec. or longer.	Default value setting Starting: -20 ℃ Running: 70 ℃	Wiring defect (short) between ECM and fuel temperature sensor Fuel temperature sensor (supply pump) defect ECM internal defect	*2
Fuel temperature sensor abnormality (abnormally high voltage)	0183	Nothing in particular	The fuel temperature sensor voltage is 4.85 V or lower for 4 sec. or longer.	Default value setting Starting: -20 ℃ Running: 70 ℃	Wiring defect (disconnection, short, high resistance) between ECM and fuel temperature sensor Fuel temperature sensor (supply pump) defect ECM internal defect	*2
Common rail pressure sensor abnormality (abnormally low voltage)	0192	Engine rev-up defect, hunting	The common rail pressure sensor voltage is 0.7 V or lower.	Default value setting 80 MPa	Wiring defect (disconnection, short, high resistance) between ECM and common rail Common rail pressure sensor defect (common rail) ECM internal defect	2
Common rail pressure sensor abnormality (abnormally high voltage)	0193	Possibility of drop of output power and engine stalling	The common rail pressure sensor voltage is 4.5 V or higher.	Default value setting 80 MPa	Wiring defect (disconnection, short, high resistance) between ECM and common rail Common rail pressure sensor defect (common rail) ECM internal defect	2
Injection nozzle #1 drive system disconnection	0201	High engine vibration, idle instability, drop of output power, rev-up defect	No. 1 cylinder injector drive circuit disconnection/short detected No. 1 cylinder injector monitor input No signal for 2.4 sec. or longer	No. 1 cylinder injection stop EGR control stop	Wiring defect (disconnection, short, high resistance) between ECM and No. 1 injector intermediate connector No. 1 injector terminal looseness Wiring defect (disconnection, high resistance) between No. 1 injector intermediate connector and No. 1 injector terminal No. 1 injector defect ECM internal defect	1

https://truckmanualshub.com/

Trouble content	Diagnostic trouble code	Main symptoms when trouble occurs	Diagnostic trouble code display conditions	Back-up function	Conceivable cause	Patterns for recovery from trouble
Injection nozzle #2 drive system disconnection	0202	High engine vibration, idle instability, drop of output power, rev-up defect	No. 2 cylinder injector drive circuit disconnection/short detected No. 2 cylinder injector monitor input No signal for 2.4 sec. or longer	No. 2 cylinder injection stop EGR control stop	Wiring defect (disconnection, short, high resistance) between ECM and No. 2 injector intermediate connector No. 2 injector terminal looseness Wiring defect (disconnection, high resistance) between No. 2 injector intermediate connector and No. 2 injector terminal No. 2 injector defect ECM internal defect	1
Injection nozzle #3 drive system disconnection	0203	High engine vibration, idle instability, drop of output power, rev-up defect	No. 3 cylinder injector drive circuit disconnection/short detected No. 3 cylinder injector monitor input No signal for 2.4 sec. or longer	No. 3 cylinder injection stop EGR control stop	Wiring defect (disconnection, short, high resistance) between ECM and No. 3 injector intermediate connector No. 3 injector terminal looseness Wiring defect (disconnection, high resistance) between No. 3 injector intermediate connector and No. 3 injector terminal No. 3 injector defect ECM internal defect	1
Injection nozzle #4 drive system disconnection	0204	High engine vibration, idle instability, drop of output power, rev-up defect	No. 4 cylinder injector drive circuit disconnection/short detected No. 4 cylinder injector monitor input No signal for 2.4 sec. or longer	No. 4 cylinder injection stop EGR control stop	Wiring defect (disconnection, short, high resistance) between ECM and No. 4 injector intermediate connector No. 4 injector terminal looseness Wiring defect (disconnection, high resistance) between No. 4 injector intermediate connector and No. 4 injector terminal No. 4 injector defect ECM internal defect	1
Injection nozzle #5 drive system disconnection	0205	High engine vibration, idle instability, drop of output power, rev-up defect	No. 5 cylinder injector drive circuit disconnection/short detected No. 5 cylinder injector monitor input No signal for 2.4 sec. or longer	No. 5 cylinder injection stop EGR control stop	Wiring defect (disconnection, short, high resistance) between ECM and No. 5 injector intermediate connector No. 5 injector terminal looseness Wiring defect (disconnection, high resistance) between No. 5 injector intermediate connector and No. 3 injector terminal No. 5 injector defect ECM internal defect	1
Injection nozzle #6 drive system disconnection	0206	High engine vibration, idle instability, drop of output power, rev-up defect	No. 6 cylinder injector drive circuit disconnection/short detected No. 6 cylinder injector monitor input No signal for 2.4 sec. or longer	No. 6 cylinder injection stop EGR control stop	Wiring defect (disconnection, short, high resistance) between ECM and No. 6 injector intermediate connector No. 6 injector terminal looseness Wiring defect (disconnection, high resistance) between No. 6 injector intermediate connector and No. 4 injector terminal No. 6 injector defect ECM internal defect	1
Overrun	0219	Drop of output power	The engine speed is the set speed of 2000 min^{-1} or higher for 1 sec. or longer.	Injection quantity restriction When the speed drops, the restriction is ended.	Faulty engine main unit (common rail, supply pump, injector) It is necessary to check whether or not there is another diagnostic trouble code. Mechanical engine trouble (turbo damaged, engine oil mixed in) ECM internal defect	2
Boost pressure sensor abnormality (abnormally low voltage)	0237	Nothing in particular	The boost pressure sensor voltage is 0.1 V or lower for 3 sec. or longer.	Default value setting 150 kPa	Wiring defect (disconnection, short, high resistance) between ECM and boost pressure sensor Boost pressure sensor defect ECM internal defect	2
Boost pressure sensor abnormality (abnormally high voltage)	0238	Black smoke	The boost pressure sensor voltage is 4.9 V or higher for 3 sec. or longer.	Default value setting 150 kPa	Wiring defect (disconnection, short, high resistance) between ECM and boost pressure sensor Boost pressure sensor defect ECM internal defect	2
Crank position (CKP) sensor abnormality (no signal)	0335	Possibility of drop of output power, white smoke, engine vibration Possibility of engine stalling (when the CMP sensor is normal, restarting is possible.)	There is a CMP signal, but not a CKP signal.	When the CMP sensor is normal, cam standard control	Wiring defect (disconnection, short, high resistance) between ECM and CKP sensor CKP sensor defect ECM internal defect	1

https://truckmanualshub.com/

Trouble content	Diagnostic trouble code	Main symptoms when trouble occurs	Diagnostic trouble code display conditions	Back-up function	Conceivable cause	Patterns for recovery from trouble
Crank position (CKP) sensor abnormality (signal abnormality)	0336	Possibility of drop of output power, white smoke, engine vibration Possibility of engine stalling (when the CMP sensor is normal, restarting is possible.)	CKP signal pulses do not match	When the CMP sensor is normal, cam standard control	Wiring defect (short) between ECM and CKP sensor CKP sensor defect Flywheel ring gear tooth missing ECM internal defect	1
Cam position (CMP) sensor abnormality (no signal)	0340	No fault during engine rotation, but when it is stopped once, it cannot be restarted.	There is a CKP signal, but not a CMP signal.	While engine turning: When the CKP sensor is normal, crank standard After engine stop: Restart is impossible due to inability to discriminate cylinders	Wiring defect (disconnection, short, high resistance) between ECM and CMP sensor CMP sensor defect Faulty cam gear Supply pump defect ECM internal defect	1
Cam position (CMP) sensor abnormality (signal abnormality)	0341	No fault during engine rotation, but when it is stopped once, it cannot be restarted.	When excess cam pulses detected or insufficient cam pulses detected	While engine turning: When the CKP sensor is normal, crank standard After engine stop: Restart is impossible due to inability to discriminate cylinders	Wiring defect (short) between ECM and CMP sensor CMP sensor defect Faulty camshaft gear Supply pump defect ECM internal defect	1
Glow relay abnormality	0380	Low-temperature starting defect	The glow relay drive instruction signal and glow relay monitor signal (line 339 in electrical circuit diagram) are different.	No backup	Wiring defect (disconnection, short, high resistance) between fuse and glow relay Wiring defect (disconnection, short, high resistance) between ECM and glow relay Glow relay defect ECM internal defect	1
EGR position sensor abnormality	0487	Nothing in particular	Signal inputs from EGR position sensor U, V, and W all ON or all OFF for 3 sec. or longer	EGR valve all-close command	Wiring defect (disconnection, short, high resistance) between ECM and EGR position sensor EGR valve (position sensor) defect ECM internal defect	2
EGR valve control abnormality	0488	Nothing in particular	When the difference between the target valve lift and the actual position is larger than 20 % for 10 sec. or longer	EGR valve all-close command	Wiring defect (disconnection, short, high resistance) between ECM and EGR motor EGR valve defect ECM internal defect	2
Oil pressure sensor abnormality (abnormally low voltage)	0522	Nothing in particular	The oil pressure sensor voltage is 0.1 V or lower for 4 sec. or longer.	No backup	Wiring defect (short) between ECM and oil pressure sensor Oil pressure sensor defect ECM internal defect	2
Oil pressure sensor abnormality (abnormally high voltage)	0523	Nothing in particular	The oil pressure sensor voltage is 4.85 V or higher for 4 sec. or longer.	No backup	Wiring defect (disconnection, short, high resistance) between ECM and oil pressure sensor Oil pressure sensor defect ECM internal defect	2
ROM abnormality (ECM internal component part)	0601	Engine stop	ROM abnormality detected Reflash failure	No backup (engine stop)	ECM internal defect	2
EEPROM abnormality (ECM internal component part)	0603	Nothing in particular	EEPROM abnormality detected	No backup	ECM internal defect	2
CPU abnormality (ECM internal component part)	0606	Drop of output power, starting not possible	The CPU monitoring IC detects faulty main CPUs for 100 msec. after the key is switched ON. The RUN-SUB pulse (signal between CPU and SUB-CPU) was unchanging for 20 msec. or longer.	Multi-injection stop Injection quantity restriction The SUB-CPU stopped the CPU.	ECM internal defect	2
Abnormality with IC monitoring CPU	0606	Drop of output power	The RUN-SUB pulse (signal between CPU and SUB-CPU) was unchanging for 20 msec. or longer.	Injection quantity restriction	ECM internal defect	2

https://truckmanualshub.com/

Trouble content	Diagnostic trouble code	Main symptoms when trouble occurs	Diagnostic trouble code display conditions	Back-up function	Conceivable cause	Patterns for recovery from trouble
Charge circuit 1 abnormality	0611	Engine vibration, idling instability, drop of output power Possibility of rev-up defect, engine stalling	When the ECU charge circuit bank 1 voltage is low for 1.5 sec. or longer	Common 1 stop (No. 1, 4 cylinder stop) EGR stop	ECM terminal, ECM ground terminal defect (disconnection, high resistance) ECM internal defect	2
Charge circuit 2 abnormality	0612	Engine vibration, idling instability, drop of output power Possibility of rev-up defect, engine stalling	When the ECU charge circuit bank 2 voltage is low for 1.5 sec. or longer	Common 2 stop (No. 2, 3 cylinder stop) EGR stop	ECM terminal, ECM ground terminal defect (disconnection, high resistance) ECM internal defect	2
Pressure limiter open	1095	Drop of output power, hunting	When the pressure limiter is open or when the common rail pressure exceeds 200 MPa for 1 sec. or longer	Injection quantity restriction	Fuel system line (hose), etc. blocked Air in fuel system (check hose connection.) Pressure limiter defect Common rail pressure sensor defect Wiring defect (short) between ECM and common rail pressure sensor Supply pump defect ECM internal defect	1

https://truckmanualshub.com/

Note:

[1] Patterns for recovery from trouble
Trouble recovery can be roughly divided into 2 types.
Sometimes, one more cycle is required after the cycle below for the diagnostic trouble code displayed on the monitor screen by the actual machine to go out.

Pattern 1:

In the cycle in which the diagnostic trouble code was detected, even if the machine recovers to normal (including intermittent problems), the diagnostic trouble code does not disappear from the monitor screen and backup mode does not recover to normal mode. After the key is switched OFF, when the engine is restarted, the trouble judgment is made and if it is judged that the status is normal,

Time chart

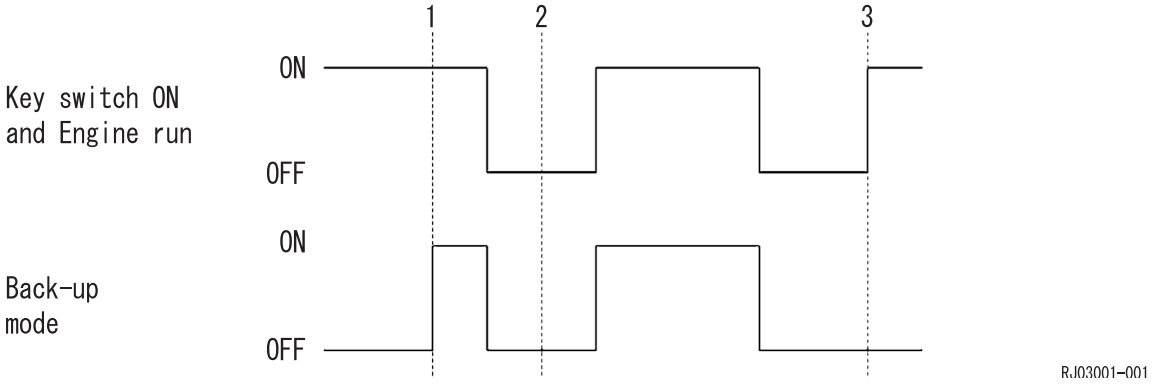

Name

1 Diagnostic trouble code detection
2 Repair and inspection
3 Recovery to normal

Pattern 2:

If the machine recovers to normal (including intermittent problems) in the cycle in which the diagnostic trouble code was detected, the diagnostic trouble code disappears from the monitor screen and backup mode recovers to normal mode.

- generally, the trouble judgment ends immediately and if it is judged that the status is normal, the diagnostic trouble code disappears and operation recovers to normal.
- For a temperature sensor or the like in the section marked *, trouble judgment takes 3 - 10 min. and if it is judged that the status is normal, the diagnostic trouble code disappears and operation recovers to normal.

Time chart

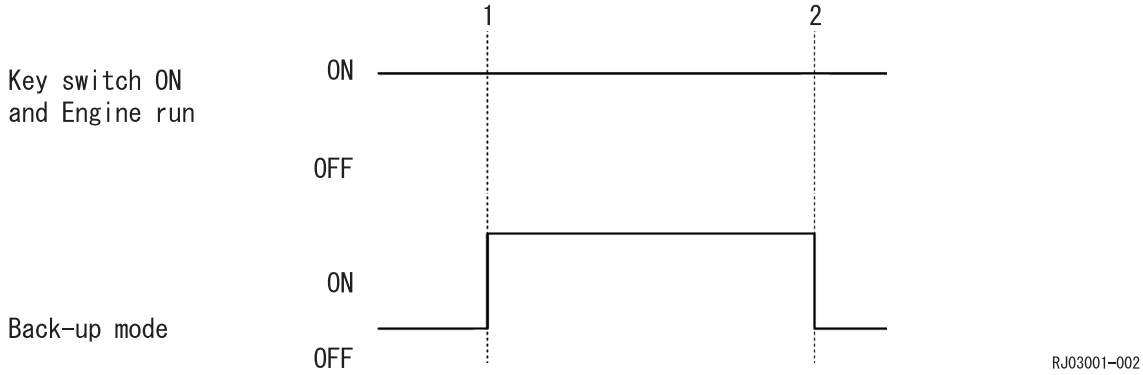

Name

1 Diagnostic trouble code detection
2 Recovery to normal

https://truckmanualshub.com/

4. Sensor Trouble Operation Table
   - The table below shows the operations when there is trouble with a sensor (current, recovered from, ongoing).
   - '*' indicates that it is not related to (not affected by) that trouble.

Input / Output and function		Upper pressure sensor	Swing pressure sensor	Travel pressure sensor	P1 pressure sensor	P2 pressure sensor	N1 pressure sensor	N2 pressure sensor	Oil temperature sensor	Coolant temperature sensor	Fuel sensor
Backup value	Trouble continuation	0 MPa	0 MPa	0 MPa	0 MPa	0 MPa	0 MPa	0 MPa	-40 ℃	214 ℃	0%
	Recovery	Input value	Input value	Input value	Input value	Input value	Input value	Input value	Input value	Input value	Input value
Engine target speed	Auto idle	Backup value control (*1)	Backup value control (*1)	Backup value control (*1)	*	*	*	*	*	*	*
	Idling start	Backup value control (*2)	Backup value control (*2)	Backup value control (*2)	*	*	*	*	*	*	*
	Auto warm-up	Backup value control (*3)	Backup value control (*3)	Backup value control (*3)	*	*	*	*	*	*	*
	Idle up	Backup value control (*4)	Backup value control (*4)	Backup value control (*4)	*	*	*	*	*	*	*
Engine	Anti-theft	Fixed to ON (*21)	*	Fixed to ON (*21)	Fixed to ON (*21)	Fixed to ON (*21)	*	*	*	*	*
Stop command											
Milli-amp for pump horsepower control proportional valve	Static horsepower control	*	*	*	*	*	*	*	*	*	*
	Dynamic horsepower control	Backup value control (*5)	*	*	Backup value control (*5)	Backup value control (*5)	*	*	*	*	*
	Travel horsepower boost	*	*	Backup value control (*6)	*	*	*	*	*	*	*
	Arm-in horsepower boost	*	*	*	*	*	*	*	*	*	*
	Engine stall prevention	*	*	*	*	*	*	*	*	*	*
Pump flow proportional valve	Relief cut	Fixed to 50 mA (*7)	Fixed to 50 mA (*7)	Fixed to 50 mA (*7)	Fixed to 50 mA (*7)	Fixed to 50 mA (*7)	Fixed to 50 mA (*7)	Fixed to 50 mA (*7)	*	*	*
	Speed limit	Fixed to 50 mA (*8)	Fixed to 50 mA (*8)	Fixed to 50 mA (*8)	Fixed to 50 mA (*8)	Fixed to 50 mA (*8)	Fixed to 50 mA (*8)	Fixed to 50 mA (*8)	*	*	*
	Power save	Fixed to 50 mA (*9)	Fixed to 50 mA (*9)	Fixed to 50 mA (*9)	Fixed to 50 mA (*9)	Fixed to 50 mA (*9)	Fixed to 50 mA (*9)	Fixed to 50 mA (*9)	*	*	*
Power save solenoid	Power save	Backup value control (*9)	Backup value control (*9)	Backup value control (*9)	*	*	*	*	*	*	*

https://truckmanualshub.com/

Input / Output and function		Upper pressure sensor	Swing pressure sensor	Travel pressure sensor	P1 pressure sensor	P2 pressure sensor	N1 pressure sensor	N2 pressure sensor	Oil temperature sensor	Coolant temperature sensor	Fuel sensor
Backup value	Trouble continuation	0 MPa	0 MPa	0 MPa	0 MPa	0 MPa	0 MPa	0 MPa	-40 ℃	214 ℃	0%
	Recovery	Input value	Input value	Input value	Input value	Input value	Input value	Input value	Input value	Input value	Input value
Pressure boost solenoid	Auto pressure boost	Backup value control (*10)	*	Fixed to OFF (*12)	Backup value control (*11)	Backup value control (*11)	*	*	*	*	*
	Continuous pressure boost	*	*	Fixed to OFF (*12)	*	*	*	*	*	*	*
	Pressure boost cut	*	*	Fixed to OFF (*12)	*	*	*	*	*	*	*
Swing brake solenoid	Auto brake	Fixed to OFF (*13)	Fixed to OFF (*13)	*	*	*	*	*	*	*	*
	Swing lock	Fixed to ON (*14)	Fixed to ON (*14)	*	*	*	*	*	*	*	*
	Anti-theft	Fixed to ON (*15)	Fixed to ON (*15)	*	*	*	*	*	*	*	*
Travel alarm	Travel alarm	*	*	Backup value control (*16)	*	*	*	*	*	*	*
	Key ON alarm	*	*	*	*	*	*	*	*	*	*
	Anti-theft	*	*	*	*	*	*	*	*	*	*
Coolant temperature gauge	Coolant temperature display	*	*	*	*	*	*	*	*	Not displayed (*17)	*
Oil temperature gauge	Oil temperature display	*	*	*	*	*	*	*	Not displayed (*18)	*	*
Fuel gauge	Fuel level display	*	*	*	*	*	*	*	*	*	Not displayed (*19)
Air conditioner	Cold blast prevention	*	*	*	*	*	*	*	*	Backup value control (*20)	*

https://truckmanualshub.com/

—Symptom—

(*1) Idle cannot be ended. Idles even during work.

(*2) Idle cannot be ended.

(*3) Auto warm up cannot be ended.

(*4) Idle speed cannot be raised.

(*5) Dynamic horsepower control (for transient loads) is not possible.

(*6) No horsepower boost even for travel.

(*7) No swing relief cut. (deterioration in fuel economy)

(*8) No swing speed limit. (Excessive swing speed)

(*9) No power save. (deterioration in fuel economy)

(*10) Auto pressure boost stops. (Constant pressure boost for A mode is executed.)

(*11) Auto pressure boost is not carried out for a pump load on only one side.

(*12) Pressure boost is always OFF.

(*13) Swing brake is always OFF.

(*14) During a swing lock, held ON even if there is trouble.

(*15) During swinging with anti-theft prevention, held ON even if there is trouble.

(*16) Travel alarm does not sound. (key ON alarm sounds)

(*17) Coolant temperature gauge is not displayed. (Goes out)

(*18) Oil temperature gauge is not displayed. (Goes out)

(*19) Fuel gauge is not displayed. (Goes out)

(*20) Air flow maximum

(*21) The engine cannot be started if the password has not been input.

https://truckmanualshub.com/

5. EPF (Engine Protection Feature)

This feature controls the engine speed or stopping when the coolant temperature rises, the boost temperature rises, or the oil pressure drops.

—Trouble state—
Recovered = State in which trouble recovered from during the key ON cycle
Ongoing = State in which the key was switched OFF, then ON again with the previous trouble underway (or continuing)

—Speed restriction control—
0: None
1: Backup speed
2: Low idle
3: Stop (restart possible, low idle)
4: Stop (restart not possible)

		Speed restriction control	Explanation
Coolant temperature over 105 ℃	Trouble underway	0: None	-
	Recovered	0: None	-
	Ongoing	0: None	-
Coolant temperature over 110 ℃	Trouble underway	2: Low idle	The engine goes to low idle at a coolant temperature of 110 ℃ or higher.
	Recovered	0: None	When the coolant temperature falls to 105 ℃ or less, the system recovers and controls returns to normal.
	Ongoing	2: Low idle	When the key is switched ON again and the engine starts, for the time (1 min.) until judgment starts, the engine speed is restricted to low idle. After that, the status moves to trouble underway or recovered based on the judgment results.
Coolant temperature over 120 ℃	Trouble underway	4: Stop (restart possible)	The engine stops at a coolant temperature of 120 ℃ or higher. The engine cannot be restarted until the key is turned to ON again or the coolant temperature falls to 120 ℃ or less.
	Recovered	0: None	When the coolant temperature falls to 120 ℃ or less, the system recovers and the degree of restriction due to the coolant temperature being over 120 ℃ goes to 0. (Normal control) However, if the restriction due to the coolant temperature being over 110 ℃ is not 0, that restriction is applied.
	Ongoing	2: Low idle	When the key is switched ON again and the engine starts, for the time (1 min.) until judgment starts, the engine speed is restricted to low idle. After that, the status moves to trouble underway or recovered based on the judgment results.
Boost temperature over 80 ℃	Trouble underway	2: Low idle	The engine goes to low idle at a boost temperature of 80 ℃ or higher.
	Recovered	0: None	When the boost temperature falls to 70 ℃ or less, the system recovers and controls returns to normal.
	Ongoing	2: Low idle	When the key is switched ON again and the engine starts, for the time (1 min.) until judgment starts, the engine speed is restricted to low idle. After that, the status moves to trouble underway or recovered based on the judgment results.

https://truckmanualshub.com/

		Speed restriction control	Explanation
Boost temperature over 90 ℃	Trouble underway	4: Stop (restart possible)	Engine stop. The engine cannot be restarted until either the key is switched ON again or the boost temperature recovers to the normal level.
	Recovered	0: None	When the boost temperature falls to 90 ℃ or less, the degree of restriction due to the boost temperature being over 90 ℃ goes to 0. (Normal control) However, if the degree of restriction due to the boost temperature being over 80 ℃ is not 0, that degree of restriction is applied.
	Ongoing	2: Low idle	When the key is switched ON again and the engine starts, for the time (1 min.) until judgment starts, the engine speed is restricted to low idle. After that, the status moves to trouble underway or recovered based on the judgment results.
Engine oil pressure drop	Trouble underway	4: Stop (restart possible)	Engine stop. The engine cannot be restarted until the key is switched ON again. Recovery cannot be judged until the engine is restarted, so the system does not move from trouble underway to be recovered.
	Recovered	0: None	The engine oil pressure recovers to 40 kPa or higher and control returns to normal.
	Ongoing	2: Low idle	When the key is switched ON again and the engine starts, for the time (30 sec.) until judgment starts, the engine speed is restricted to low idle. After that, the status moves to trouble underway or recovered based on the judgment.

https://truckmanualshub.com/

Main Data Table

		SH330/SH330LC/SH350HD-5/SH350LHD-5 (exhaust gas 3rd regulation)
Engine model name	-	Isuzu 6HK1
Type	-	4-cycle, water-cooled, overhead camshaft, vertical in-line, direct injection type
Dry weight	kg	640
Displacement	cc	7790
Number of cylinders - bore × stroke	mm	6 - 115 × 125
Compression ratio	-	17.5
Rated output	kW/min^{-1}	202/2000
Maximum torque	Nm/min^{-1}	1080/1500
No-load maximum speed	min^{-1}	2050
No-load minimum speed (idling)	min^{-1}	900
Rated fuel consumption ratio	g/kW•hr	221 max.
Fuel unit	-	HP4 model common rail from Denso Corp.
Control device	-	ECM made by Transtron Inc.
Cooling fan	-	6N suction ϕ850 plastic
Bell mouth-type fan guide	-	Yes
Fan belt	-	Drive by 1 V-rib belt (3-in-1 type)
Alternator	-	50 A-24 V made by Mitsubishi Electric Corp.
Starter	-	5.0 kW-24 V made by Mitsubishi Electric Corp.
Turbo	-	RHG6 model made by IHI
Preheat unit	-	QOS-II
Inter cooler	-	Yes
Fuel cooler	-	Yes
Charge fuel pump	-	Yes
Fuel filter	-	4 μ main unit remote type with water separator function
Fuel prefilter	-	10 μ main unit remote type with water separator function
Oil filter	-	Remote type
Oil pan capacity	L	28.0 - 38.0 (not including remote oil filter)
Oil pan drain cock	-	Yes

-Note-
1 ページ目の機種名のみ
仕向け毎に異なる。
内容は各仕向け共通

https://truckmanualshub.com/

Engine Summary

Overall Appearance Diagram

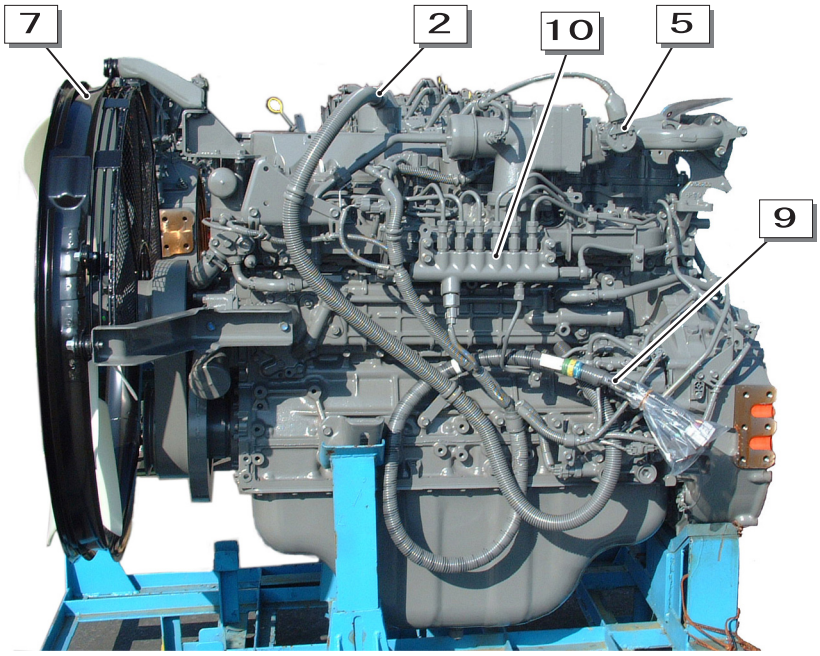

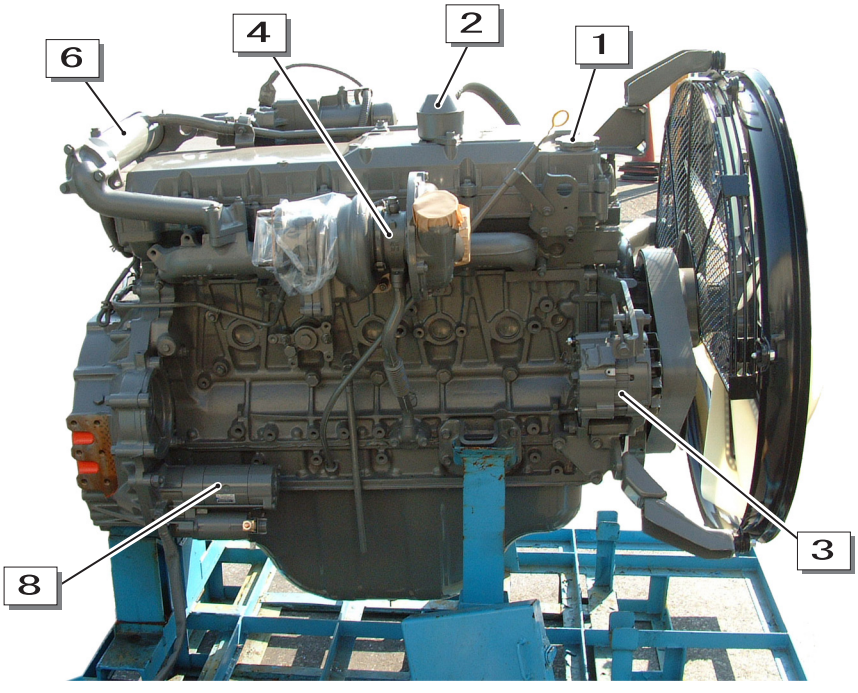

1	Engine oil fill port	6	EGR cooler
2	Air breather	7	Bell mouth-type fan guide
3	Alternator	8	Starter pump
4	Turbo	9	Supply pump (SCV)
5	EGR valve	10	Common rail

https://truckmanualshub.com/

Sensor and Auxiliary Equipment Layout (left)

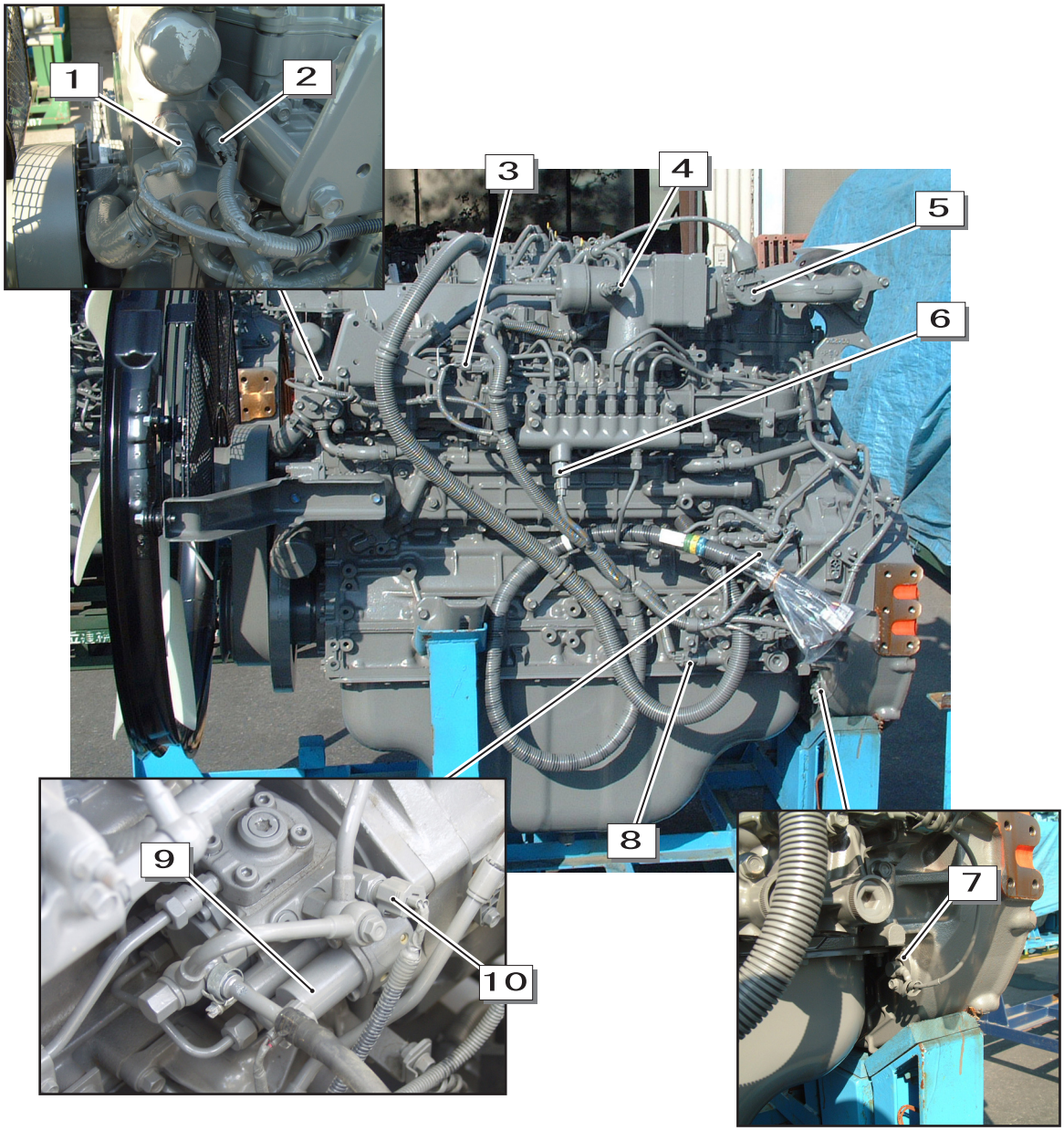

SF01009–002

1	Overheat switch	6	Common rail pressure sensor
2	Coolant temperature sensor	7	Crank position sensor
3	Boost pressure sensor	8	Engine oil pressure sensor
4	Boost temperature sensor	9	Suction control valve
5	ERG valve	10	Fuel temperature sensor

https://truckmanualshub.com/

Engine Summary

Sensor and Auxiliary Equipment Layout (rear)

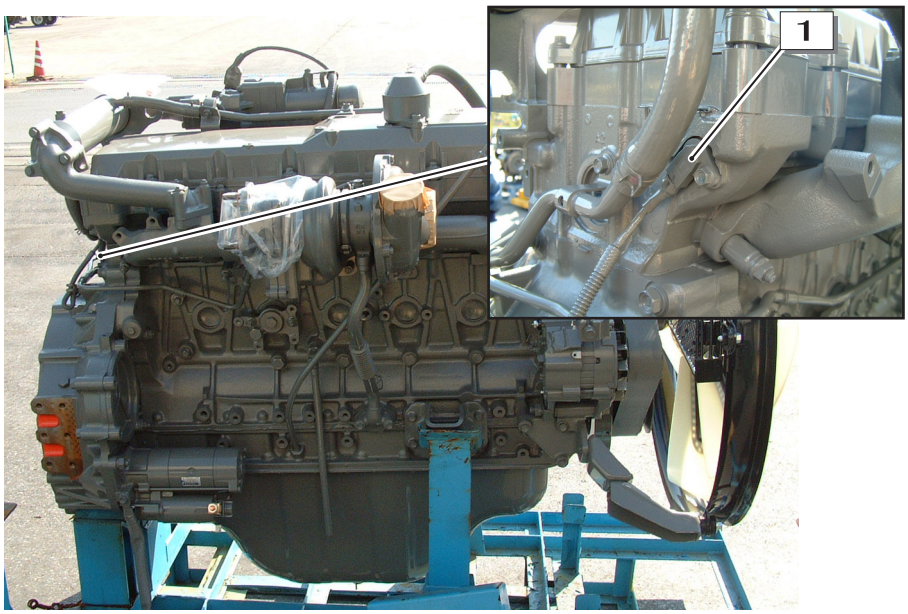

SF01009-003

1	Cam position sensor

Engine System Diagram

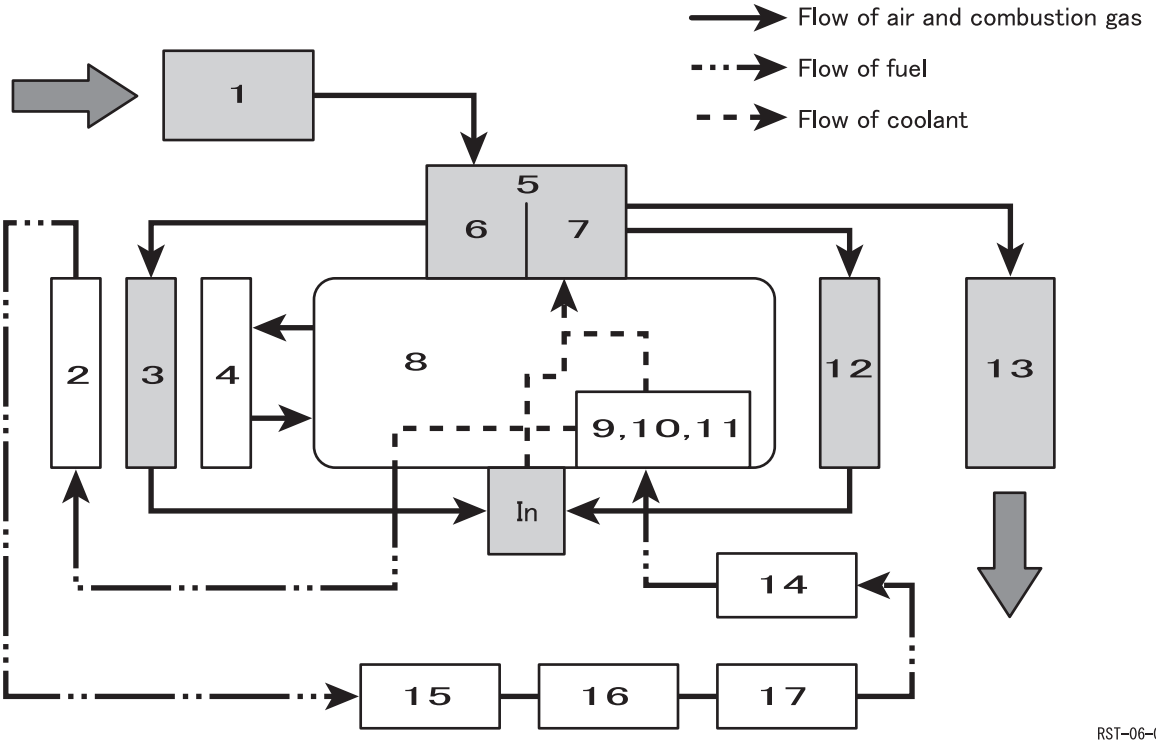

RST-06-01-001d

1	Air cleaner	7	Turbine side	13	Muffler
2	Fuel cooler	8	Engine	14	Fuel main filter
3	Inter cooler	9	Injector	15	Fuel tank
4	Radiator	10	Common rail	16	Fuel prefilter
5	Turbo	11	Supply pump	17	Charge fuel pump
6	Compressor side	12	EGR cooler		

https://truckmanualshub.com/

Fuel System Diagram

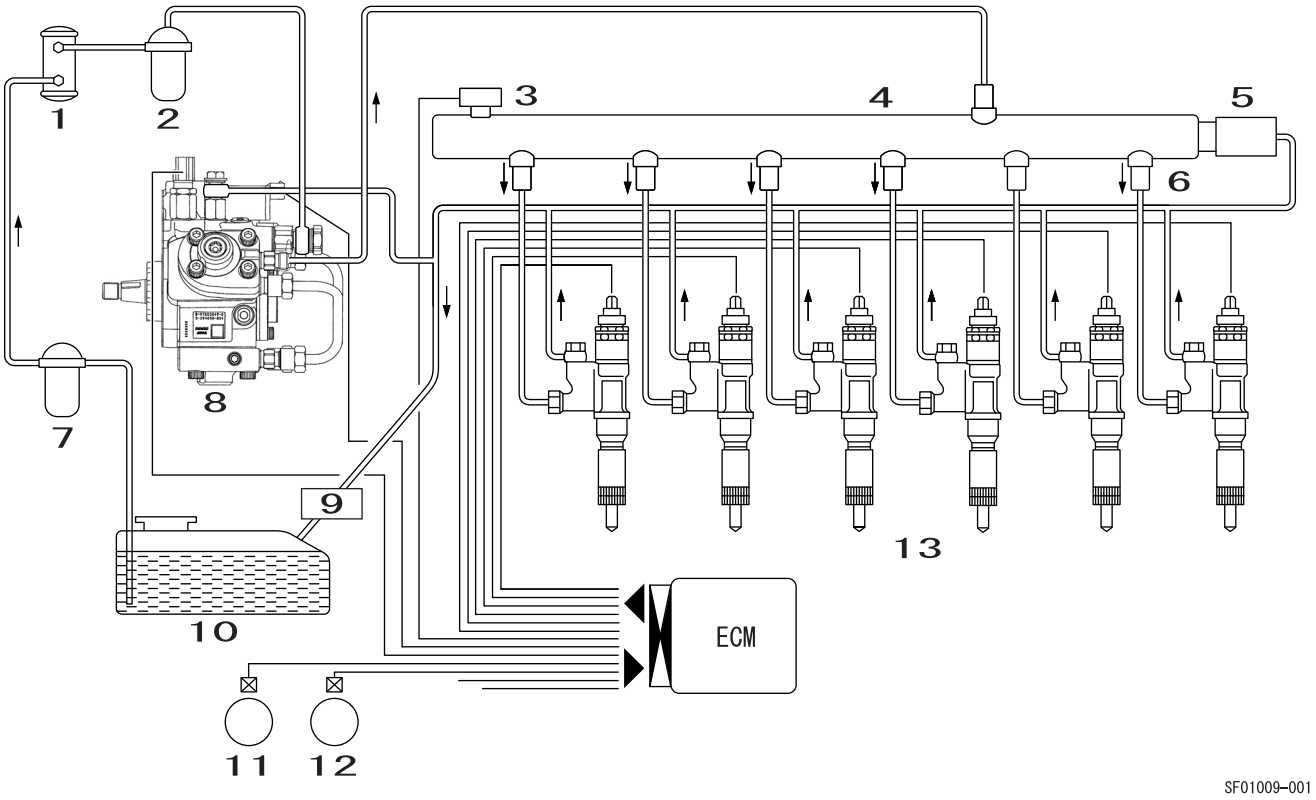

Sensors (accelerator, boost pressure, engine coolant temperature)

1	Charge fuel pump	6	Flow damper	11	Cam position sensor
2	Fuel main filter	7	Fuel prefilter	12	Crank position sensor
3	Common rail pressure sensor	8	Supply pump	13	Injector
4	Common rail	9	Fuel cooler		
5	Pressure limiter	10	Fuel tank		

https://truckmanualshub.com/

Engine Summary

Detailed Parts Diagrams

1. ECM (engine control module)

SF01009–004

3 roles of the ECM

[1] The ECM constantly monitors information sent from the various sensors and controls the power train systems.

[2] The ECM executes system function diagnosis, detects problems in system operation, issues trouble warnings to the operator and stores the diagnostic trouble code into memory.
The diagnostic trouble code identifies the area in which the problem occurred and supports repair work by the service engineer.

[3] The ECM puts out 5 V and other voltages to supply power to the various sensors and switches.
The ECM controls output circuits by controlling ground or power supply circuits via one device or another.

https://truckmanualshub.com/

2. Supply Pump/SCV (suction control valve)

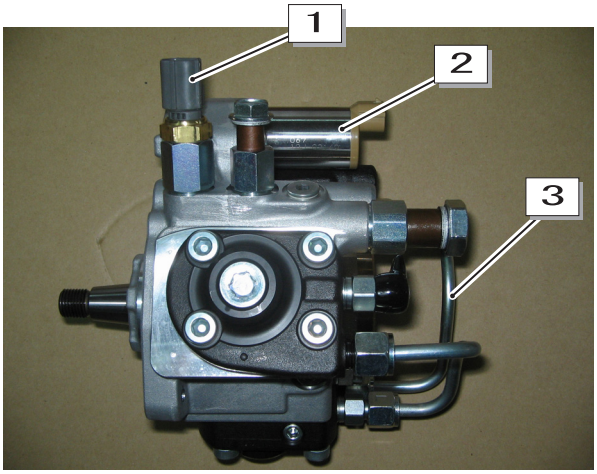

SF01009–005

1	Fuel temperature sensor
2	SCV (suction control valve)
3	Feed pipe

[1] Supply pump
The supply pump uses the force of the engine rotation to raise the fuel pressure and send fuel to the common rail. The SCV, fuel temperature sensor, and feed pump are installed on the supply pump.

[2] SCV (suction control valve)
The SCV is installed on the supply pump and controls the sending of fuel to the common rail (discharge volume). The ECM controls the electrified time to the SCV and controls the fuel discharge volume.

3. Common Rail/Flow Damper

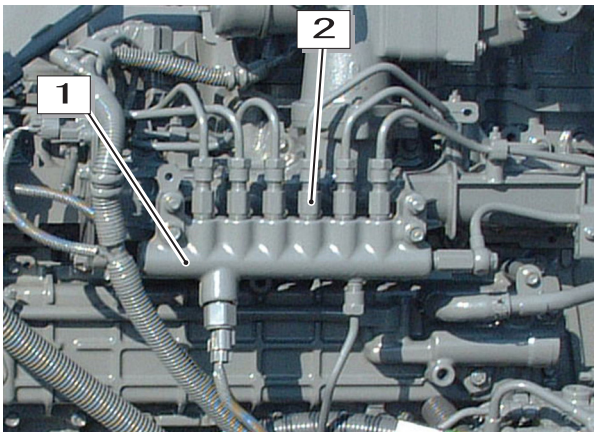

SF01009–006

1	Common rail
2	Flow damper

[1] Common rail
The common rail receives the fuel from the supply pump, holds the common rail (fuel) pressure, and distributes the fuel to each cylinder.The common rail pressure sensor, flow damper, and pressure limiter are installed on the common rail.

[2] Flow damper
The flow dampers are installed on the discharge port of each injector of the common rail. They suppress pressure pulses in the common rail and prevent excess fuel injection from the injectors. When a flow damper operates, the fuel supply to the injector stops.

https://truckmanualshub.com/

4. Common Rail Pressure Sensor/Pressure Limiter

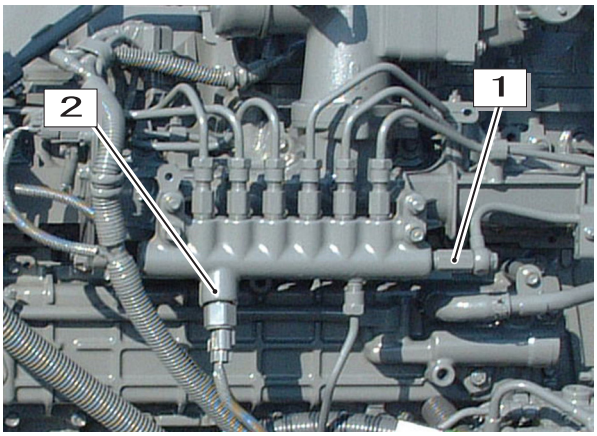

SF01009–007

1	Pressure limiter
2	Common rail pressure sensor

[1] Common rail pressure sensor
This sensor sends the pressure inside the common rail to the ECM as a voltage signal. From the signal sent, the ECM calculates the actual common rail pressure (fuel pressure) and uses this for fuel injection control.

[2] Pressure limiter
If the pressure in the common rail becomes abnormally high, the pressure limiter relieves the pressure by returning excess fuel to the tank.

5. Injector

RST–06–01–001j

The injectors are installed on the cylinder head sections. They are controlled from the ECM and inject fuel.The injector drive voltage is boosted (to 118 V) inside the ECM and applied to the injectors. By controlling the injector electrified time, the ECM controls the fuel injection, injection timing, etc.

https://truckmanualshub.com/

6. Engine Coolant Temperature Sensor

RST-06-01-001k

The engine coolant temperature sensor is installed on the engine block. The resistance of its thermistor varies with the temperature.
The resistance is low when the engine coolant temperature is high and high when the coolant temperature is low. From the ECM voltage variation, the ECM calculates the engine coolant temperature and uses this for fuel injection control etc.

7. Engine Oil Pressure Sensor

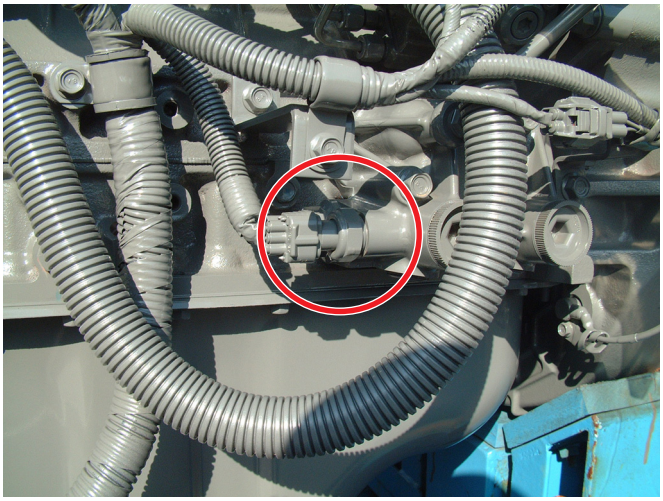

SF01009-008

The engine oil pressure sensor is installed near the cylinder block starter motor. It detects the engine oil pressure, converts this pressure into an electrical signal, and sends that signal to the ECM.

https://truckmanualshub.com/

8. Cam Position Sensor (CMP sensor)

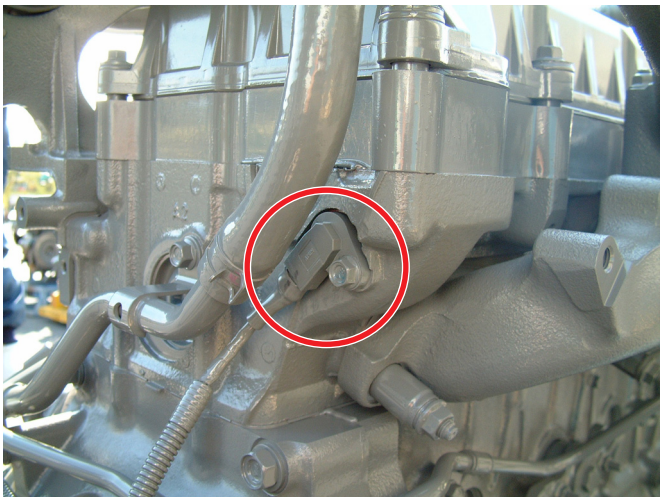

SF01009–009

This sensor sends a signal to the ECM when the engine camshaft cam section passes this sensor.
The ECM identifies the cylinders through this sensor input, determines the crank angle, and uses this information to control the fuel injection and to calculate the engine speed.
Also, it provides a back-up function in case of trouble in the CKP sensor. There is no change in behavior while the engine is running even if there is trouble in the CMP sensor system. However, it will be difficult to restart the engine after it has been stopped.

9. Crank Position Sensor (CKP sensor)

RST–06–01–001n

This sensor sends a signal to the ECM when the projection section of the engine flywheel passes this sensor.
The ECM uses this sensor input in the calculation of engine speed.
In case of trouble in the CKP sensor, the CMP sensor provides a back-up function.

https://truckmanualshub.com/

10.Atmospheric Pressure Sensor

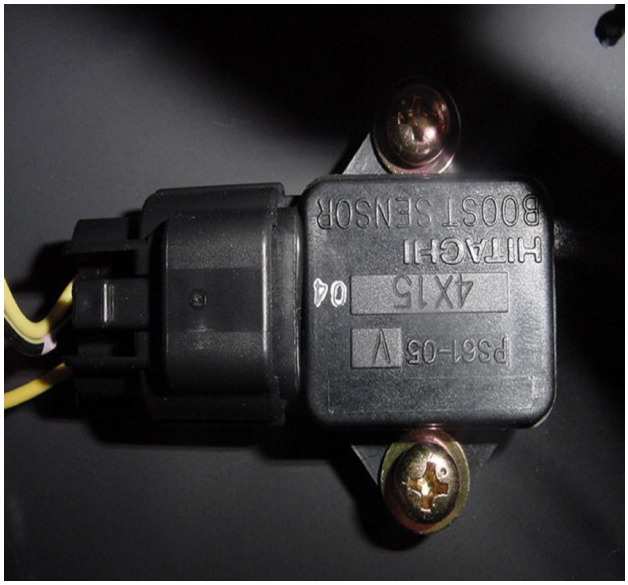

RST-06-01-001o

The atmospheric pressure sensor is installed in the cab. The ECM converts the atmospheric pressure into an electric signal and calculates the atmospheric pressure from this voltage signal and corrects the fuel injection quantity according to the atmospheric pressure.

11.Suction Air Temperature Sensor

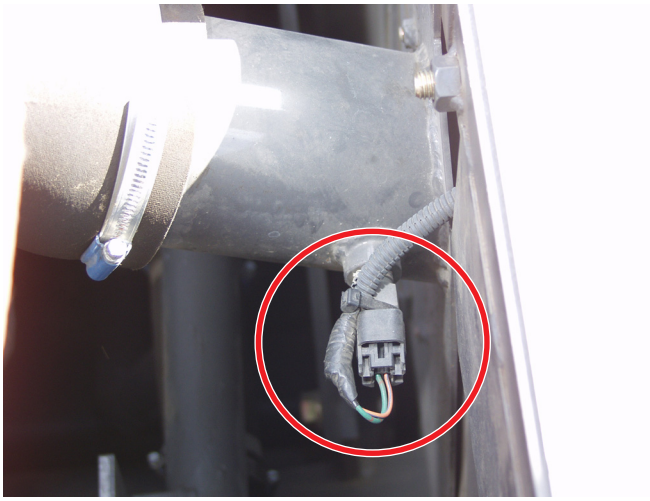

SF01009-010

The suction air temperature sensor is installed midway through the suction air duct. It detects the suction air temperature in order to optimize the fuel injection quantity.

https://truckmanualshub.com/

12.Boost Pressure Sensor

RST-06-01-001q

The boost pressure sensor uses a pressure hose between the boost pressure sensor and intake pipe to detect the boost (suction air pressure), converts this pressure into an electrical signal, and sends that signal to the ECM.

13.Boost Temperature Sensor

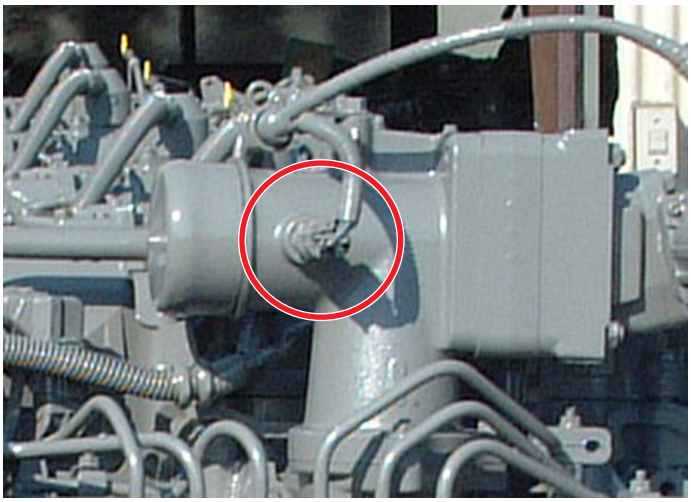

SF01009-011

The boost temperature sensor is installed on the upstream side of the EGR valve of the intake manifold.
This sensor is the thermistor type. The internal resistance of the sensor changes with the temperature.

https://truckmanualshub.com/

14.Charge Fuel Pump

Converting the fuel filter and pre-filter to remote operation increased the distance from the fuel tank to the feed pump.
Therefore, it was newly added to assist in drawing the fuel from the tank and to make it easy to bleed out air during maintenance.
The pump always operates when the key switch is ON.

RST-06-01-001w

15.EGR Cooler

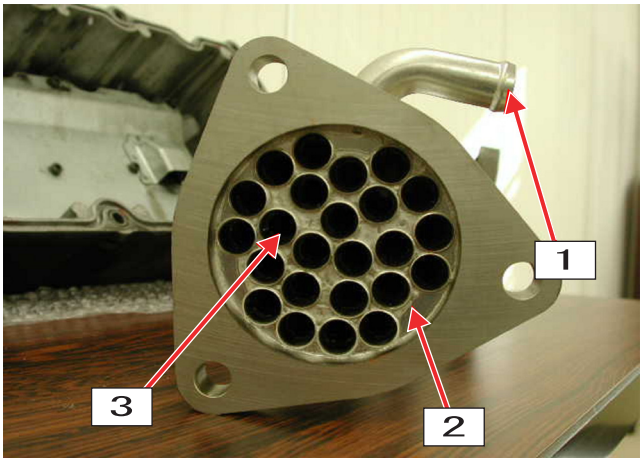

NF01005-002

1	Coolant inlet
2	Coolant path (outside of exhaust gas path)
3	Exhaust gas path

The cooled EGR (cooling system installed in the path) uses the engine coolant to cool exhaust gas at high temperature (about 700 ℃) to a lower temperature (about 200 ℃) in order to further drop the combustion temperature and reduce NOx.

https://truckmanualshub.com/

16.Lead Valve (check valve)

RST-06-01-001u

The lead valve is installed between the EGR valve outlet and the inlet manifold. It suppresses EGR gas back flow and allows the EGR gas to only flow in one direction.

17.EGR Valve

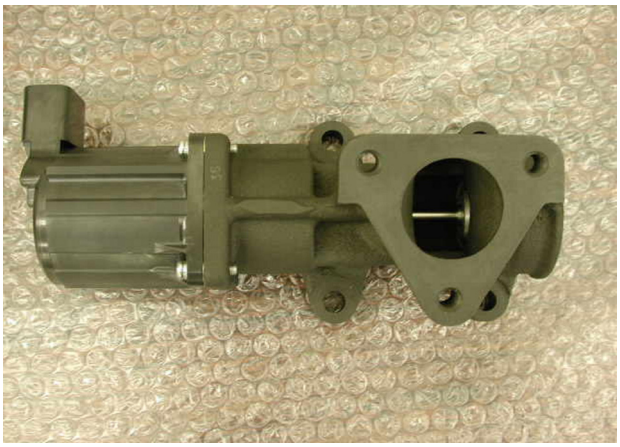

RST-06-01-001v

The operation of the EGR valve (lift amount) is controlled by signals from the ECM.

https://truckmanualshub.com/

Engine Control Summary

Electronic control fuel injection system (common rail type)

This is a system in which the engine speed, engine load, and other information (signals from many sensors) are acquired from the engine control module (ECM) and based on that information, the ECM sends electrical signals to the supply pump, injectors, etc. to appropriately control the fuel injection quantity and timing for each cylinder.

Injection quantity control

To provide the optimum injection quantity, the ECM controls the injectors based mainly on the engine speed and the instructed speed from computer A and controls the fuel injection quantity.

Injection pressure control

The injection pressure is controlled by controlling the fuel pressure in the common rail. The appropriate pressure in the common rail is calculated from the engine speed and fuel injection quantity and by controlling the supply pump, the appropriate quantity of fuel is discharged and the pressure sent to the common rail is controlled.

Injection timing control

Instead of a timer function, the injectors are controlled primarily by calculating the appropriate fuel injection timing from the engine speed, injection quantity, etc.

Injection ratio control

In order to improve the combustion in the cylinder, at first only a small amount of fuel is injected (pre-injection), the fuel is ignited, then once the fuel has ignited, a second injection (main injection) is carried out. This injection timing and quantity control is effected by controlling the injectors.

https://truckmanualshub.com/

Function Explanation Table

	Name	Function
1	Common rail	Receives the high-pressure fuel sent under pressure from the supply pump, holds the fuel pressure, and distributes the fuel to each injector.
2	Pressure limiter (common rail component part)	Operates to allow pressure within the common rail to escape if the pressure in the common rail becomes abnormally high.
3	Flow damper (common rail component part)	Installed on the discharge port of each injector. Suppress pressure pulses in the common rail and prevent fuel supply to the injectors when there is line damage.
4	Common rail pressure sensor (common rail component part)	Detects the pressure inside the common rail, converts it to a voltage, and sends that voltage to the ECM.
5	Injector	Controlled by the ECM and injects the fuel.
6	Supply pump	Raise the fuel pressure and send it under pressure to the common rail by using the force of the engine rotation.
7	SCV (suction control valve) (supply pump component part)	Controls the fuel pressure (discharge volume) sent to the common rail. The ECM controls the electrified time to the SCV to increase or decrease the volume of fuel discharged.
8	Fuel temperature sensor (supply pump component part)	Detects the fuel temperature and sends it to the ECM. Used for supply pump control etc.
9	EGR	Recirculates part of the exhaust gas in the intake manifold and mixes the EGR gas with the suction air to reduce the combustion temperature and reduce NOx.
10	EGR valve (EGR position sensor)	The EGR valve operation (open and close) timing and the lift amount are controlled by signals from the ECM. (The valve lift amount is detected by the EGR position sensor)
11	EGR cooler	Cools the high-temperature EGR gas by using the engine coolant.
12	Lead valve	Increases the amount of EGR by suppressing back flow of the EGR gas and letting it flow only in one direction.
13	ECM (engine control module)	Constantly monitors the information from each sensor and controls the engine system.
14	QOS (quick on start system)	Determines the glow time according to the engine coolant temperature, operates the glow relay, and makes starting at low temperatures easy and also reduces white smoke and noise immediately after the engine starts.
15	CKP sensor (crank position sensor)	This sensor sends a signal to the ECM when the projection section of the engine flywheel passes this sensor. The ECM uses this sensor input in the calculation of engine speed. In case of trouble in the CKP sensor, the CMP sensor provides a back-up function.
16	Oil pressure sensor	Detects the engine oil pressure and sends it to the ECM. Used for oil pressure drop alarms etc.
17	Engine coolant temperature sensor	Detects the engine coolant temperature and sends it to the ECM. Used for fuel injection control, QOS control, etc.

https://truckmanualshub.com/

Explanation of Engine Terms

	Name	Function
18	CMP sensor (cam position sensor)	This sensor sends a signal to the ECM when the engine camshaft cam section passes this sensor. The ECM identifies the cylinders through this sensor input, determines the crank angle, and uses this information to control the fuel injection and to calculate the engine speed. Also, it provides a back-up function in case of trouble in the CKP sensor. There is no change in behavior while the engine is running even if there is trouble in the CMP sensor system. However, it will be difficult to restart the engine after it has been stopped.
19	Atmospheric pressure sensor	Detects the atmospheric pressure and sends it to the ECM. The injection quantity is corrected according to the atmospheric pressure.
20	Suction air temperature sensor	Detects the suction air temperature and sends it to the ECM. Optimizes the fuel injection quantity.
21	Boost pressure sensor	Detects the boost (suction air pressure) inside the intake pipe and sends it to the ECM. Used to control fuel injection with the boost pressure.
22	Boost temperature sensor	Detects the boost temperature and sends it to the ECM. Used for fuel injection control etc.

https://truckmanualshub.com/

Technology for Exhaust Gases

1. Common Rail System

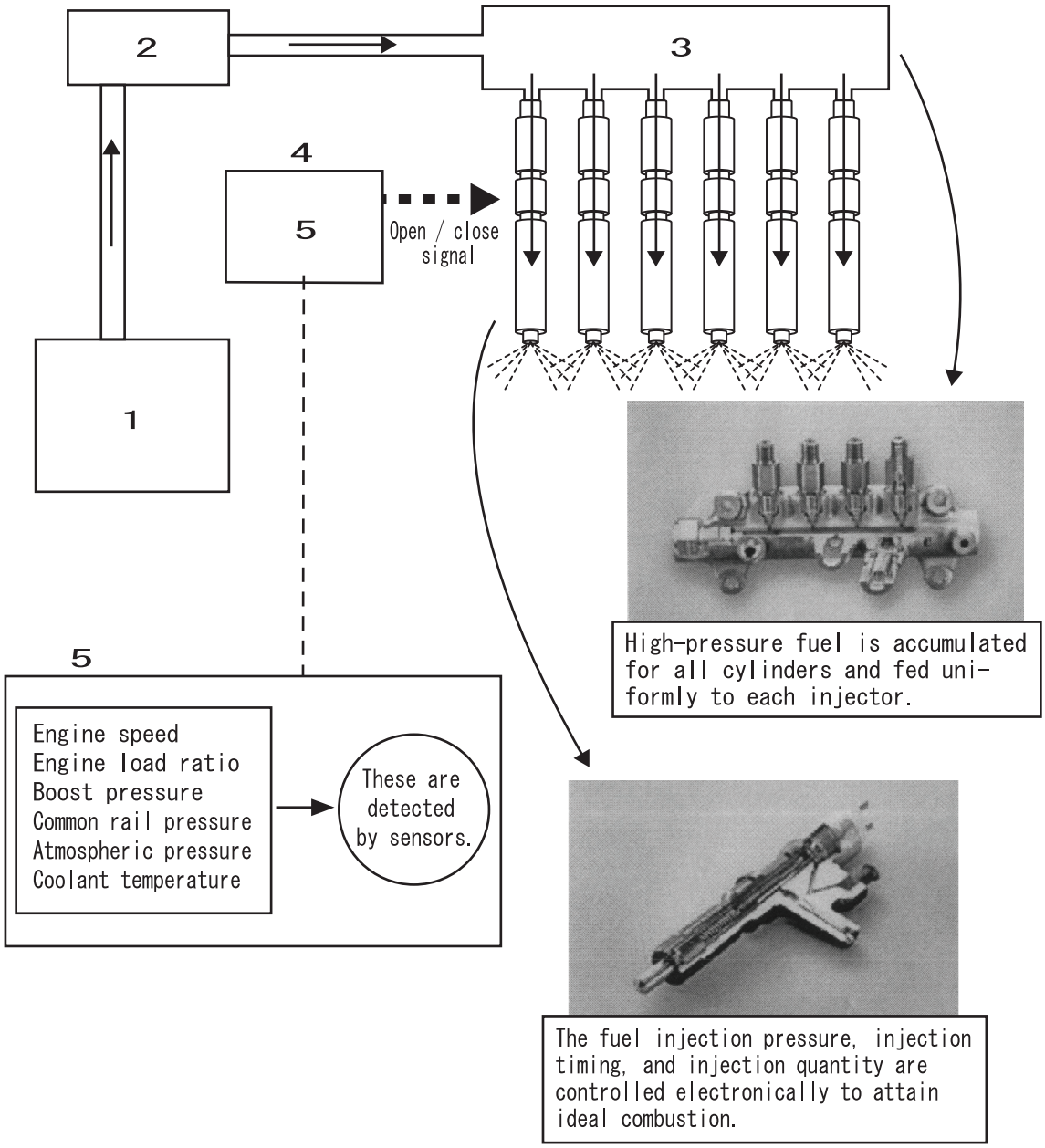

SF03008-001

1	Fuel tank
2	High-pressure pump
3	Common rail
4	Injector
5	Electronic control system

https://truckmanualshub.com/

2. Multi Stage Fuel Injection (multiple injection)

Injection start

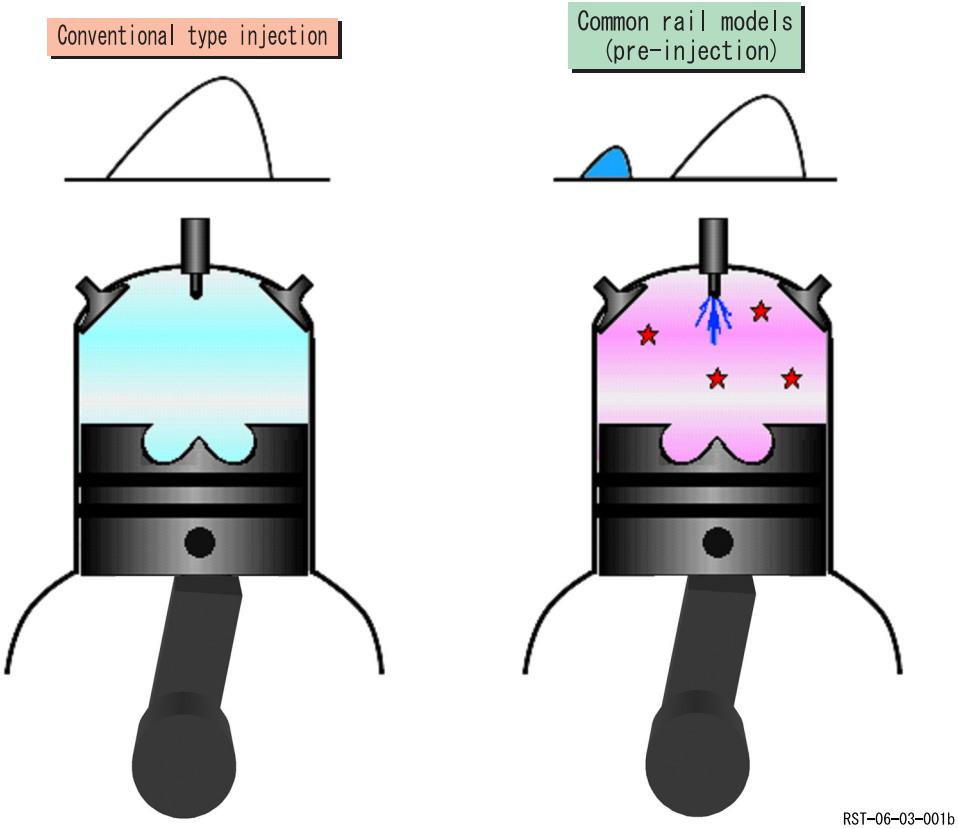

With conventional models, there is the no-injection state, but with common rail models, pre-injection is started and ignition starts.

Ignition

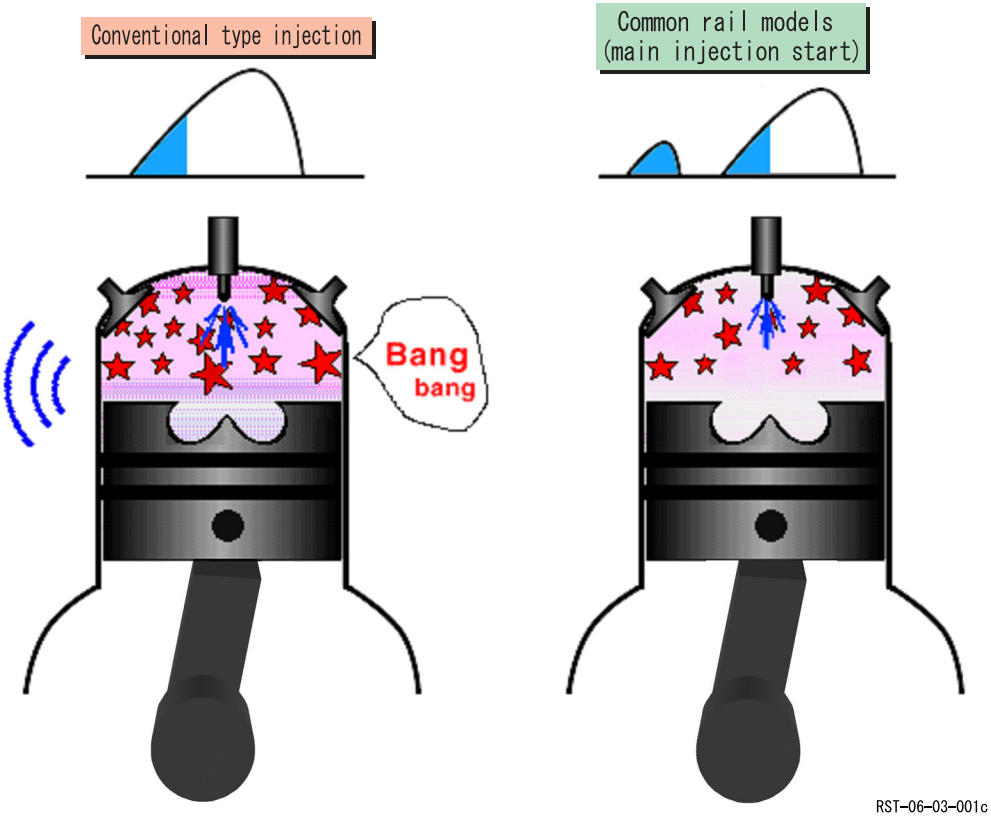

Conventional models start injection at this point in time, but common rail models have already ignited with pre-injection and now start the 2nd injection (main injection).

https://truckmanualshub.com/

Combustion

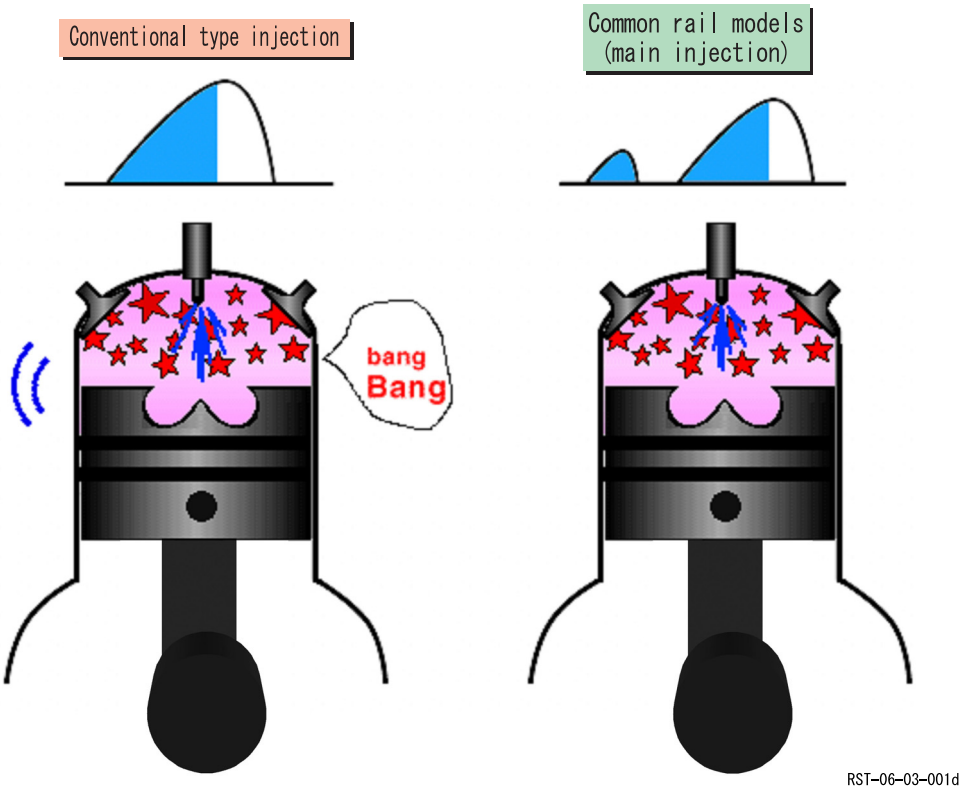

Common rail models divide the high-pressure fuel injection over many times to make it possible to create a uniform, complete combustion state in the combustion chamber and also to reduce the engine noise and vibration.

https://truckmanualshub.com/

3. Inter Cooler

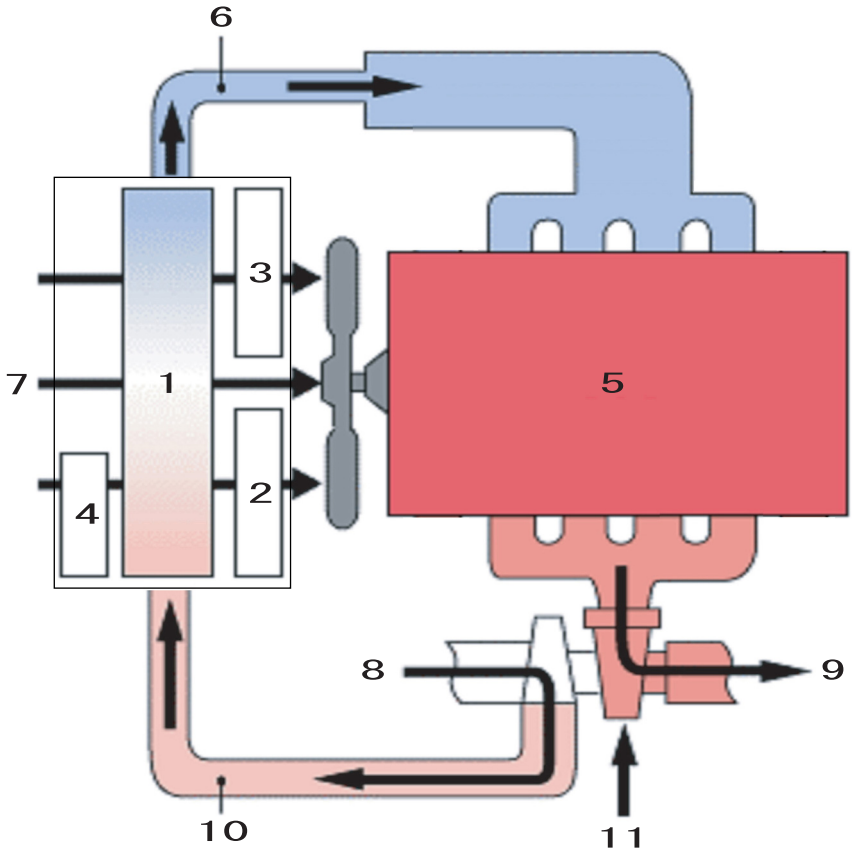

SF03008-012

By cooling intake air that has reached a high temperature due to turbo-charging, the air density rises and the charging efficiency rises.
This raises the engine fuel efficiency and improves fuel efficiency (CO/CO_2 reduction) and also has the effect of lowering the combustion temperature that reduces NOx.

1	Inter cooler
2	Radiator
3	Oil cooler
4	Fuel cooler
5	Engine
6	Air cooled and brought to high-density (to engine)
7	Outside air
8	Suction air
9	Exhaust gas
10	Air that has been compressed and become hot
11	Turbo charger

https://truckmanualshub.com/

4. EGR (exhaust gas recirculation)

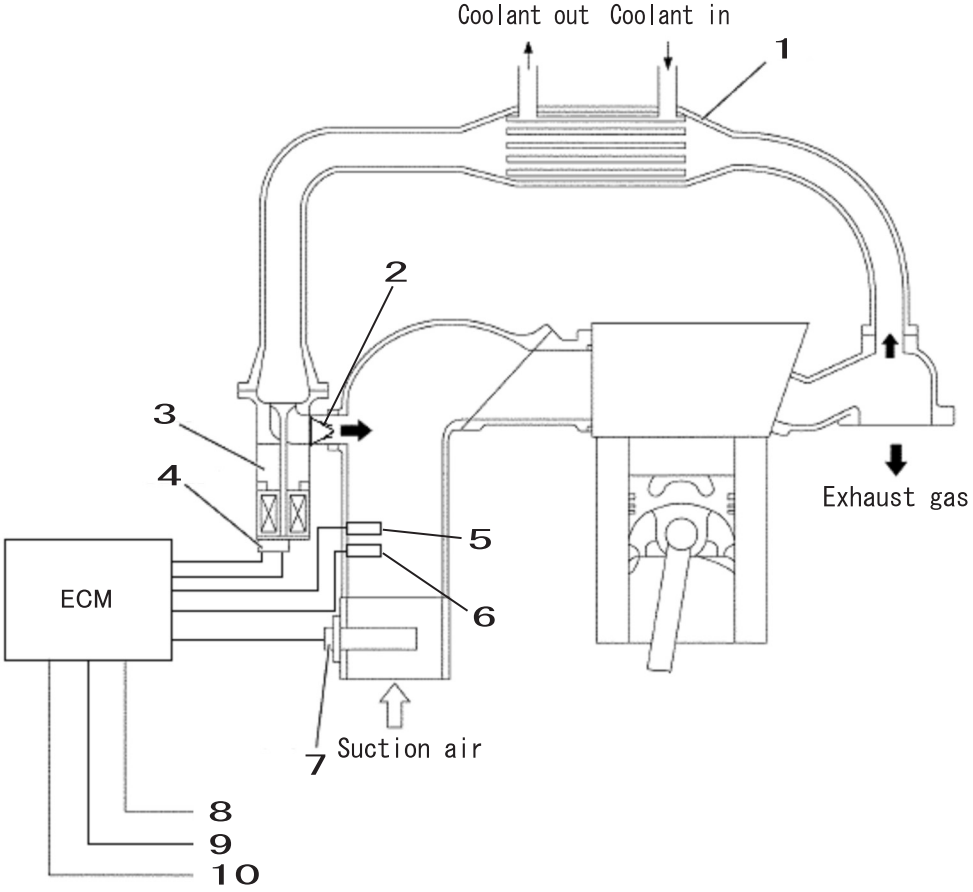

RST-06-03-001f

1	EGR cooler	6	Boost pressure sensor
2	Lead valve	7	Suction air temperature sensor
3	EGR valve	8	Engine speed
4	EGR position sensor	9	Engine coolant temperature
5	Boost temperature sensor	10	Engine load

EGR (exhaust gas recirculation)
EGR system is an abbreviation for "exhaust gas recirculation" system. The EGR system recirculates part of the exhaust gas in the intake manifold and mixes inactive gases with the suction air to reduce the combustion temperature and suppress the generation of nitrogen oxides (NOx). The EGR quantity is controlled by the operation (opening and closing) of the EGR valve, which is installed between the exhaust manifold and the intake manifold.

The ERG quantity is determined from the engine speed and engine load ratio (fuel injection quantity) and the EGR amount is controlled. A cooling system (EGR cooler) is installed in the EGR gas path to cool the high-temperature EGR gas with this EGR cooler. This cooled EGR gas is mixed with new air intake to make the combustion temperature lower than with normal EGR, which contributes to the reduction of NOx. (Cooled EGR)

Furthermore, a lead valve is used in the EGR system to suppress EGR gas back flow and allow the EGR gas to only flow in one direction.

https://truckmanualshub.com/

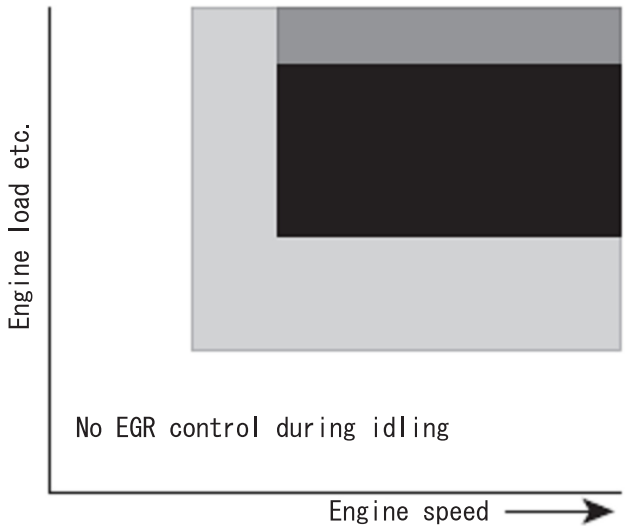

RST-06-03-001g

The ECM operates the motor according to such engine states as the speed and load and controls the EGR valve lift amount.1
The valve lift amount is detected by the EGR position sensor.The sections shown in darker color in the diagram have a larger valve lift amount. The darkest color indicates a lift amount near 100 %.

https://truckmanualshub.com/

Fuel Unit

1. Common Rail System Summary

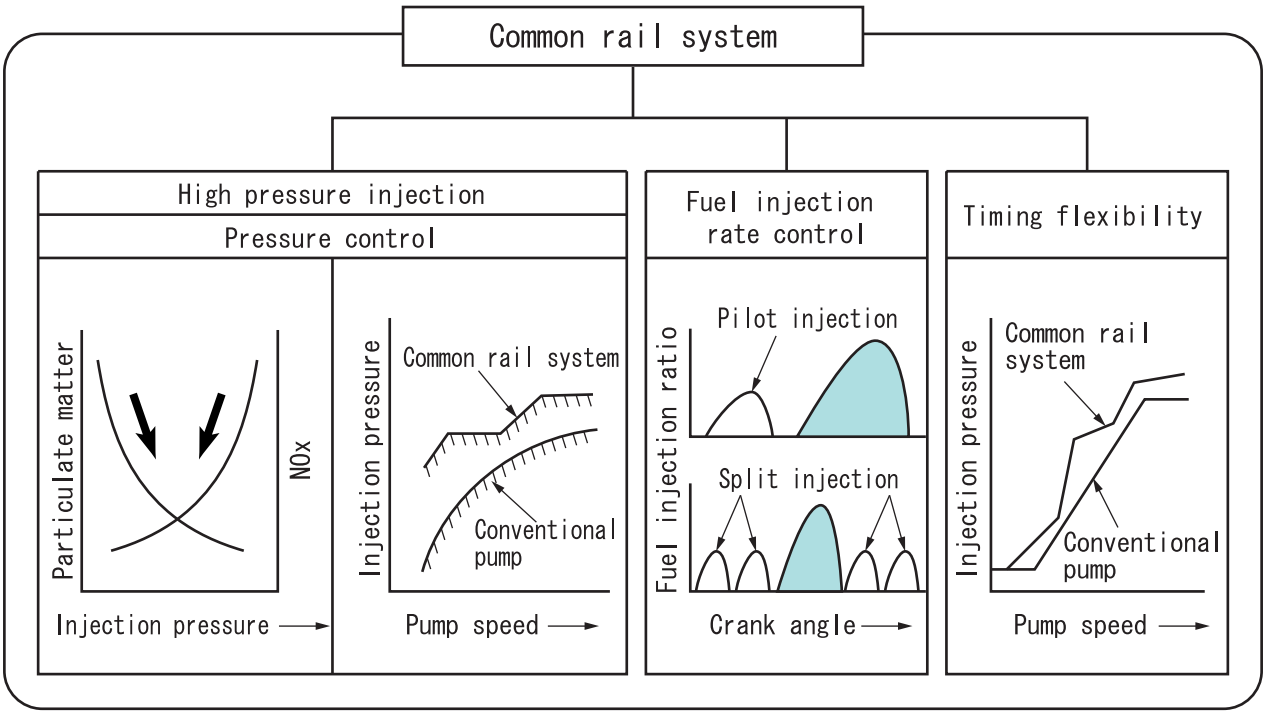

RST-06-04-001c

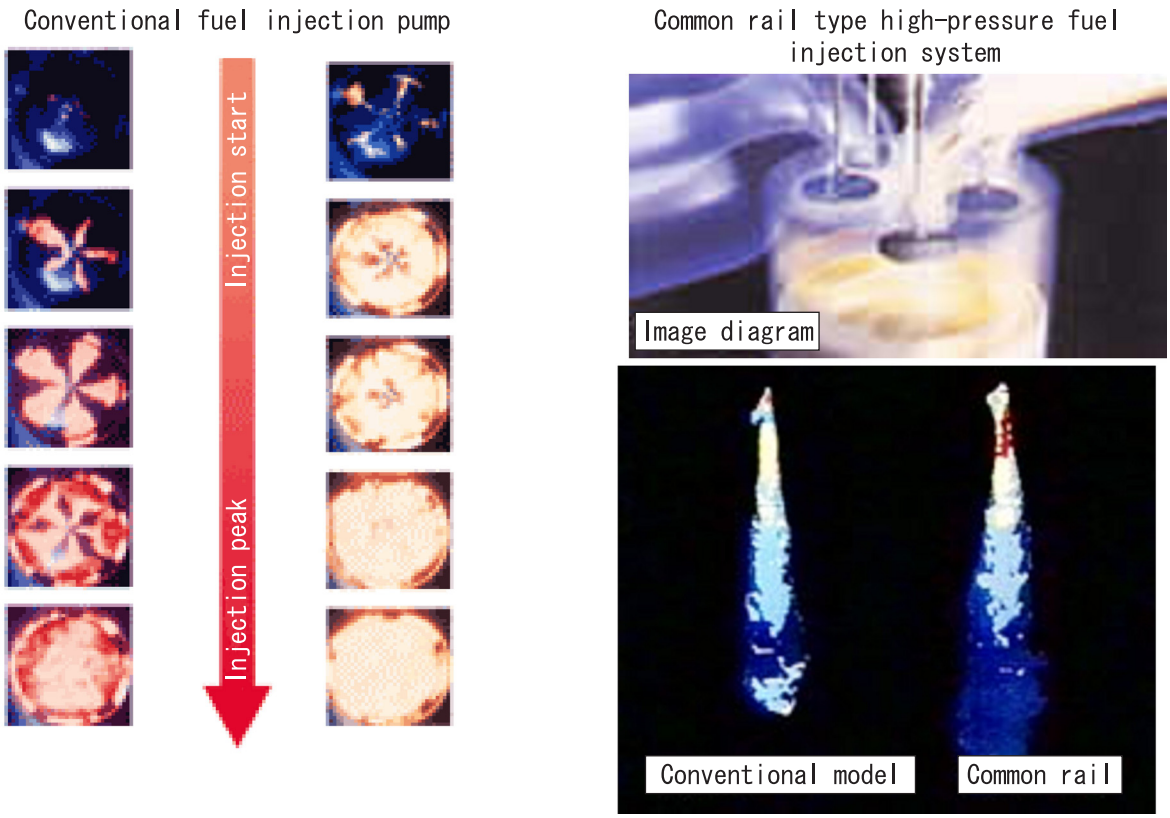

RF04001-003

The common rail system pressurizes the fuel to high pressure and injects the fuel mist widely into the cylinder to increase the surface of contact with the air and improve the combustion state.

https://truckmanualshub.com/

Relationship between ECM and sensor actuators

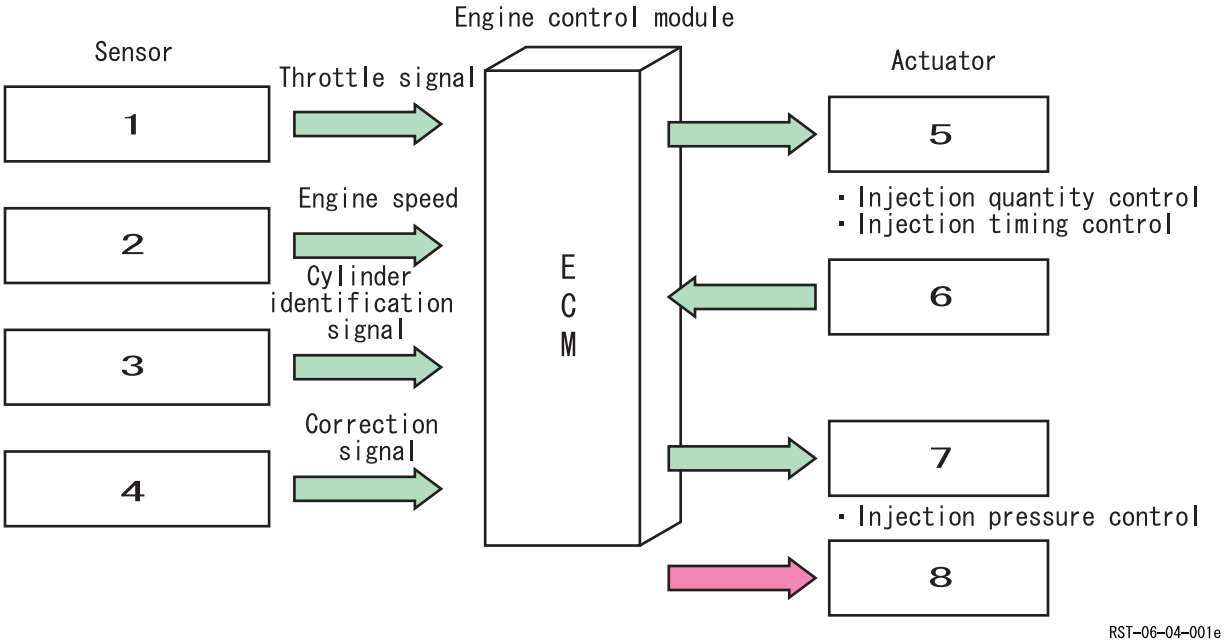

1	Throttle volume (computer A)	5	Injector
2	Crankshaft position sensor	6	Common rail pressure sensor
3	Camshaft position sensor	7	Supply pump
4	Other sensors	8	EGR valve

2. Change Points for Injection Method (governor, common rail)

	Inline type	Common rail system
System	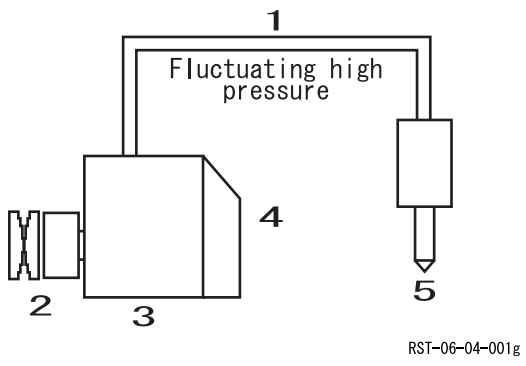	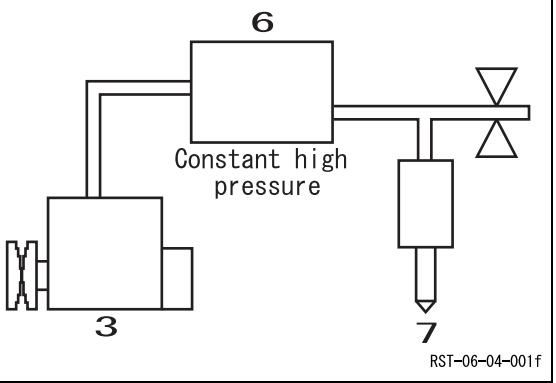
Injection quantity adjustment	Pump (governor)	ECM, injector
Injection timing adjustment	Pump (timer)	ECM, injector
Pressure boost	Pump	Supply pump
Distribution method	Pump	Common rail
Injection pressure adjustment	According to engine speed and injection quantity	Supply pump (SCV)

1	Pipe	5	Nozzle
2	Timer	6	Common rail
3	Supply pump	7	Injector
4	Governor		

https://truckmanualshub.com/

3. Explanation of Injector Operation

(1) When there is no signal from the ECM (state before injection)

The outer valve (1) in the injector is pushed down by the force of the spring A (6) and seals the fuel into the control chamber (8).
The hydraulic piston (4) and spring B (9) are pushed down by the fuel in the control chamber (8) and the nozzle (10) is in the closed state.

No signal

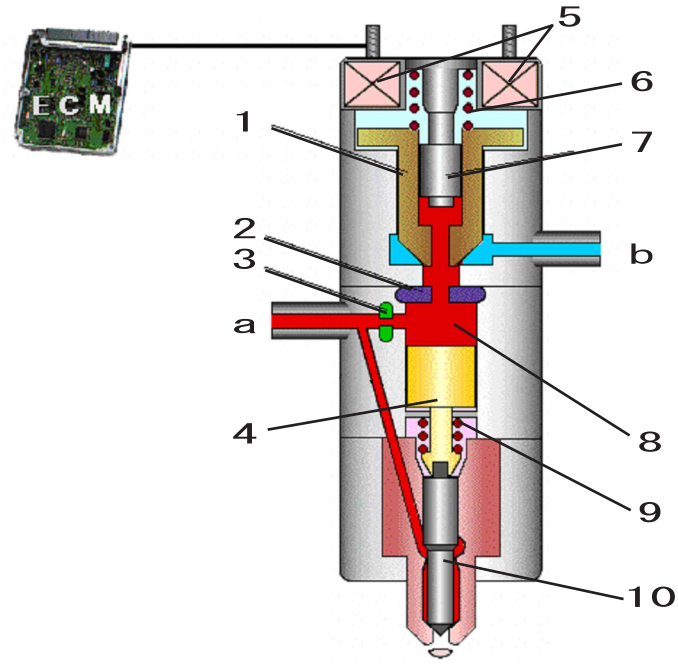

1	Outer valve
2	Orifice 1
3	Orifice 2
4	Hydraulic piston
5	Solenoid
6	Spring A
7	Inner valve
8	Control chamber
9	Spring B
10	Nozzle

a	Common rail
b	Return

(2) When there is a signal from the ECM

When the signal from the ECM passes power through the injector solenoid (5), the outer valve (1) compresses spring A (6) and moves up.
The outer valve (1) opening allows the fuel in the control chamber (8) to return to the tank via the return line.

Signal input

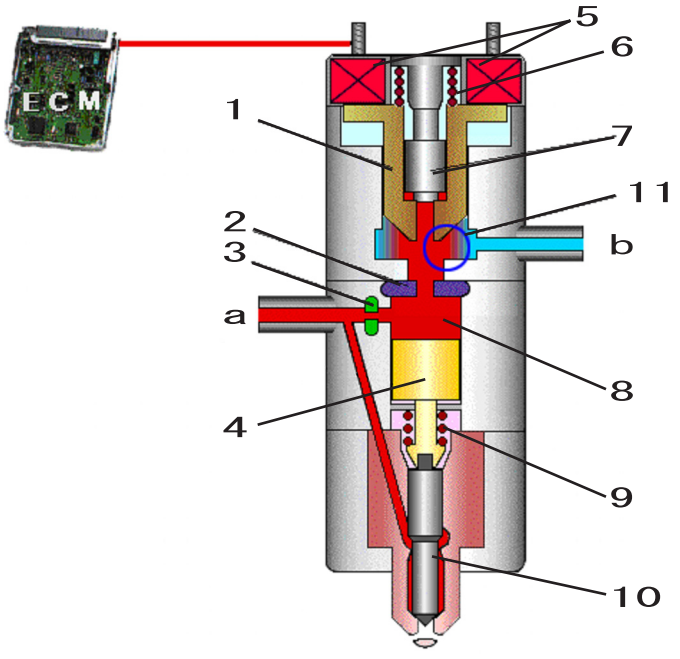

1	Outer valve
2	Orifice 1
3	Orifice 2
4	Hydraulic piston
5	Solenoid
6	Spring A
7	Inner valve
8	Control chamber
9	Spring B
10	Nozzle
11	Valve open

a	Common rail
b	Return

https://truckmanualshub.com/

(3) Injection start state

Fuel in the control chamber (8) flowing into the return line creates a pressure difference between the control chamber (8) side and the hydraulic piston (4) and nozzle (10), which causes the nozzle (10) to open and fuel to be injected.

Injection start

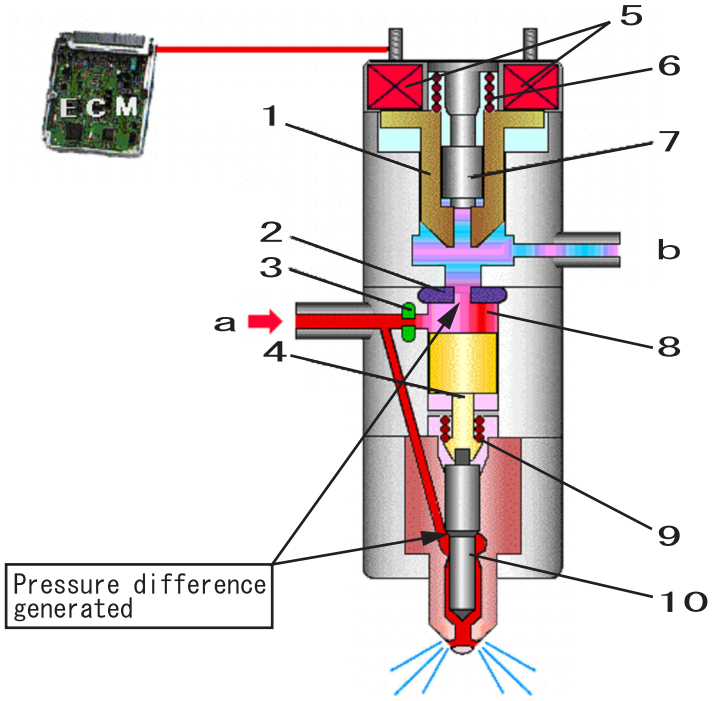

SF04010-016

1	Outer valve
2	Orifice 1
3	Orifice 2
4	Hydraulic piston
5	Solenoid
6	Spring A
7	Inner valve
8	Control chamber
9	Spring B
10	Nozzle

a	Common rail
b	Return

(4) When the signal from the ECM is cut off

Because the power to the injector solenoid (5) is cut off, the outer valve (1) is pushed back down by the force of the spring A (6) and the outer valve (1) closes the return line path.

Signal stop

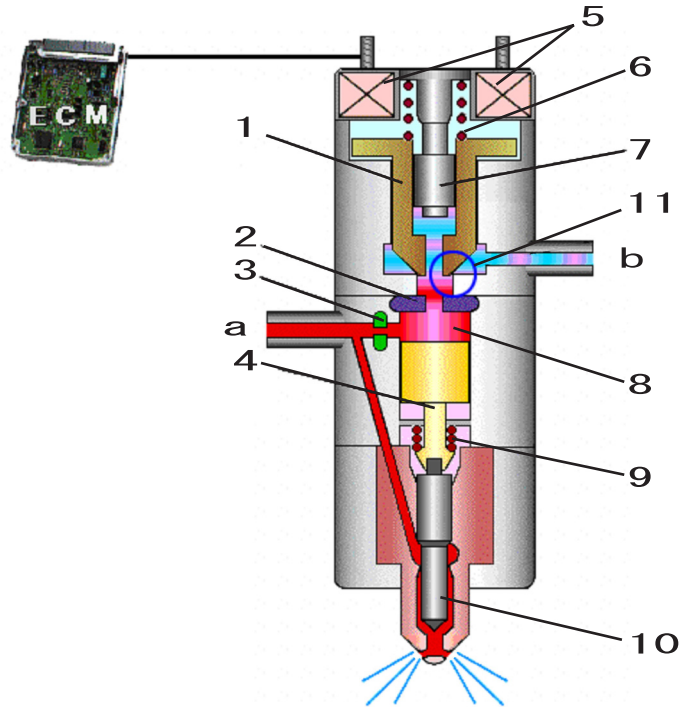

SF04010-017

1	Outer valve
2	Orifice 1
3	Orifice 2
4	Hydraulic piston
5	Solenoid
6	Spring A
7	Inner valve
8	Control chamber
9	Spring B
10	Nozzle
11	Valve close

a	Common rail
b	Return

https://truckmanualshub.com/

(5) Injection stop state (injection end)

Because the fuel is sealed into the return line, the control chamber (8) is filled with fuel again. The hydraulic piston (4) and the spring B (9) are compressed down by the filled fuel and the nozzle (10) is closed.
This ends the injection.

Injection stop

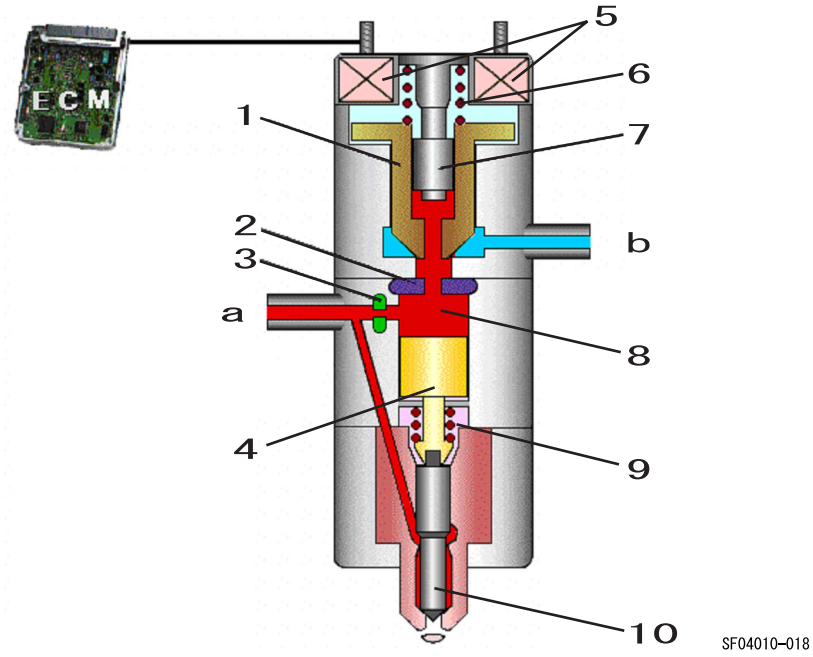

1	Outer valve
2	Orifice 1
3	Orifice 2
4	Hydraulic piston
5	Solenoid
6	Spring A
7	Inner valve
8	Control chamber
9	Spring B
10	Nozzle

a	Common rail
b	Return

https://truckmanualshub.com/

4. Explanation of Supply Pump Operation

The drive shaft is driven by the force of engine rotation.
The feed pump is turned by the power of the drive shaft and draws up fuel from the fuel tank.
The fuel pressurized by the feed pump has feed pressure pulse stabilized by the adjusting valve. Part of this fuel remains at the suction control valve to lubricate the plunger and cam and is returned to the fuel tank via the overflow.
The signal from the ECM is input to the suction control valve and the opening stroke varies according to the quantity of power passed through.
The quantity of fuel corresponding to the stroke is sent to the suction valve under pressure and is compressed to high pressure at the plunger.
The fuel raised to high pressure at the plunger is sent under pressure from the delivery valve to the common rail.
The fuel temporarily built up in the common rail is distributed to the injectors for each cylinder.

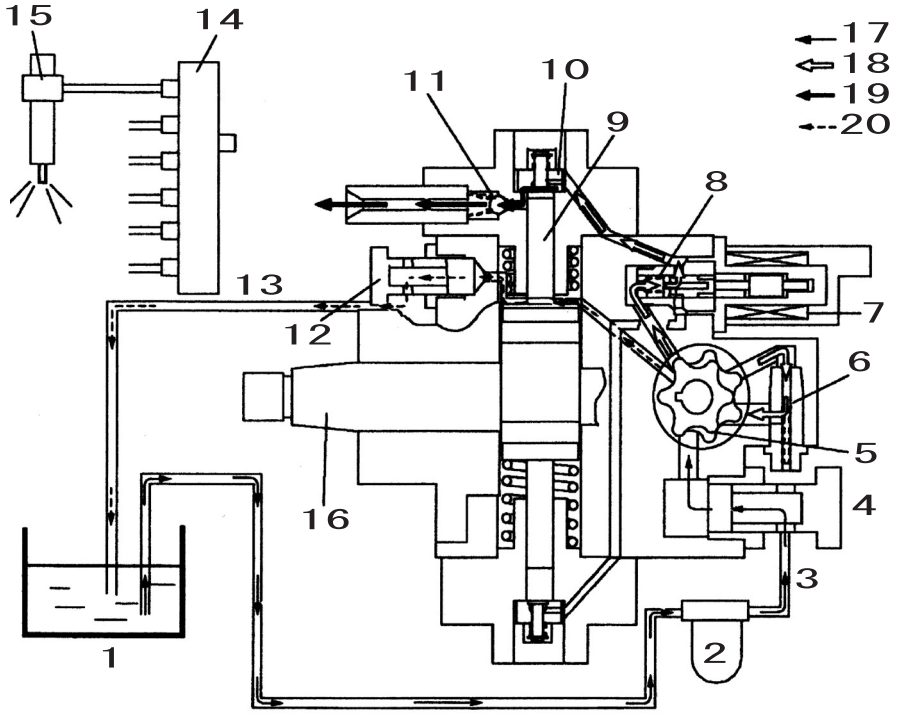

SF04010–010

1	Fuel tank	8	Return spring	15	Injector
2	Fuel filter	9	Plunger	16	Drive shaft
3	Suction	10	Suction valve	17	Suction pressure
4	Fuel inlet	11	Delivery valve	18	Feed pressure
5	Feed pump	12	Overflow	19	High pressure
6	Adjusting valve	13	Return	20	Return pressure
7	Suction control valve	14	Common rail		

https://truckmanualshub.com/

5. Supply Pump Disassembly Diagram

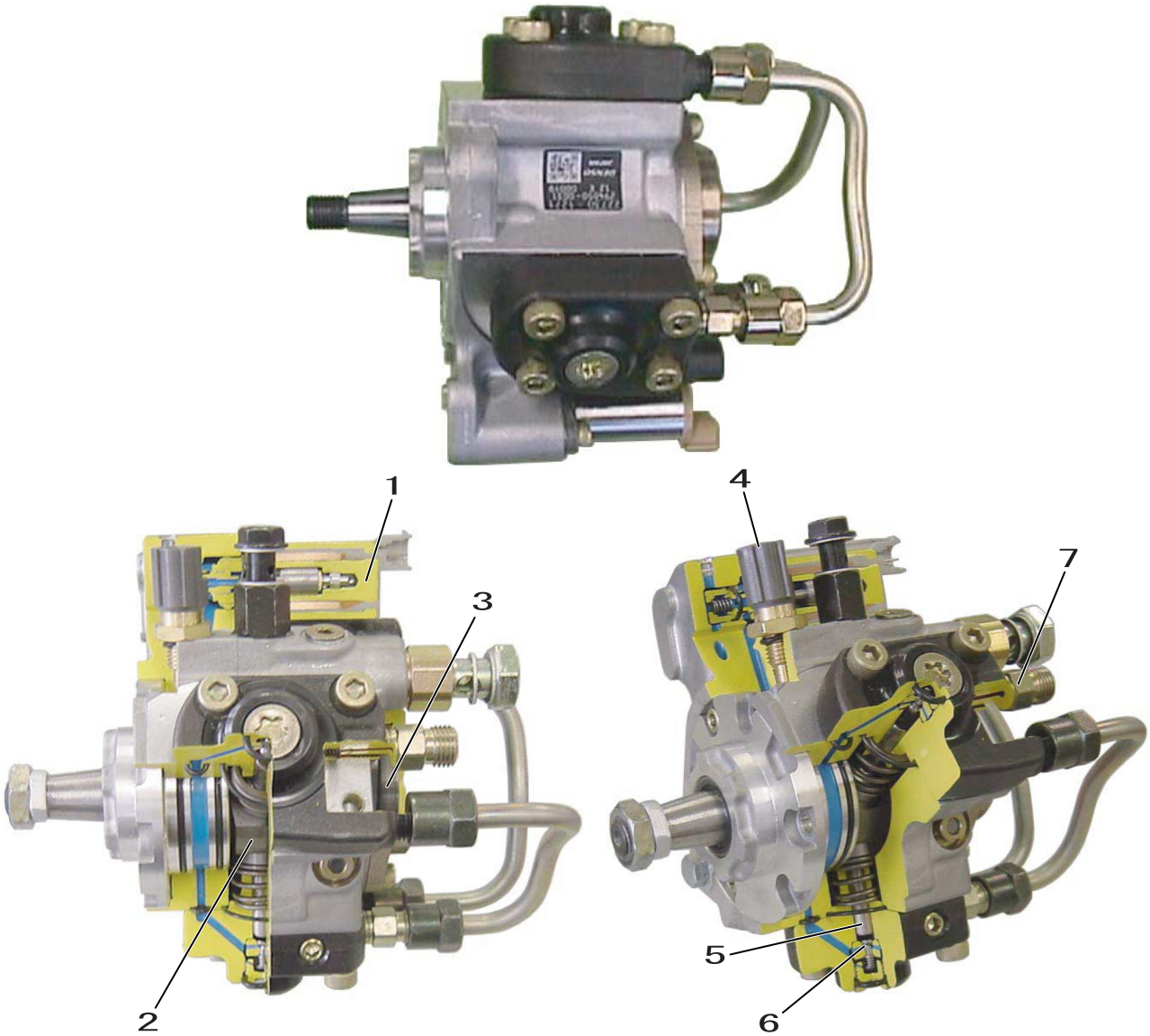

SF04010–001

1	SCV (suction control valve)	5	Plunger
2	Eccentric cam	6	Suction valve
3	Feed pump	7	Delivery valve
4	Fuel temperature sensor		

https://truckmanualshub.com/

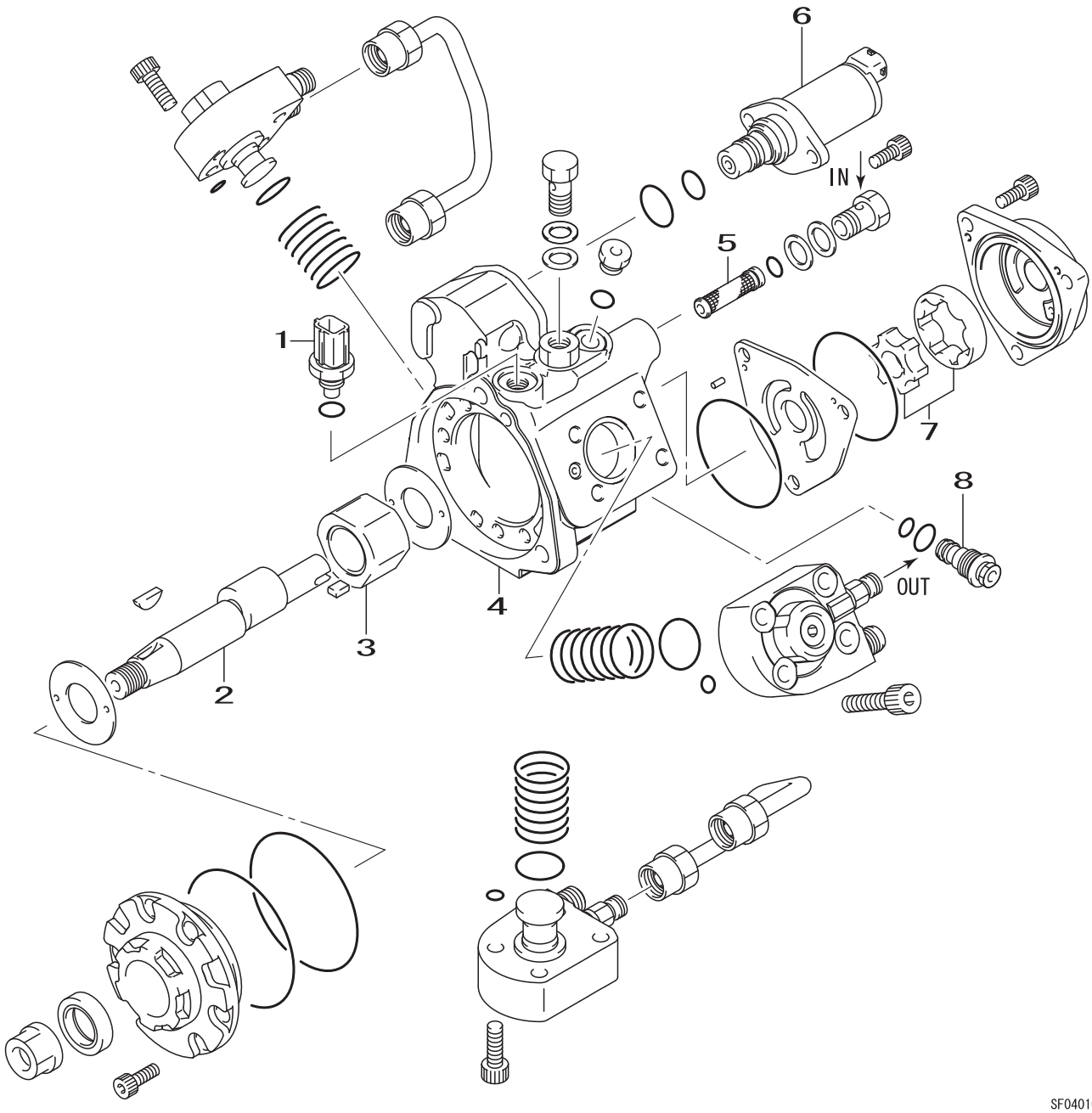

SF04010–002

1	Fuel temperature sensor	5	Filter
2	Camshaft	6	SCV (suction control valve)
3	Cam ring	7	Feed pump
4	Pump body	8	Adjusting valve

https://truckmanualshub.com/

6. Explanation of Flow Damper Operation

Internal structure diagram

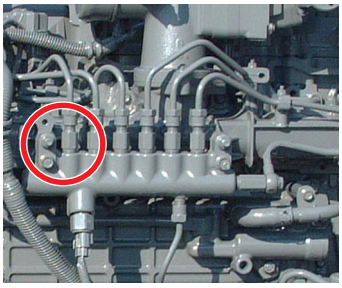

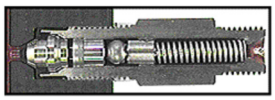

SF04010-011

Common rail side

Injector side

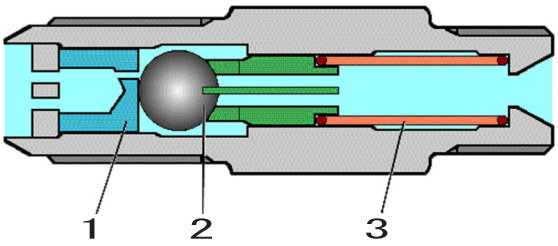

SF04010-012

1	Piston	3	Spring
2	Ball		

[1] When engine is stopped

Common rail side

Injector side

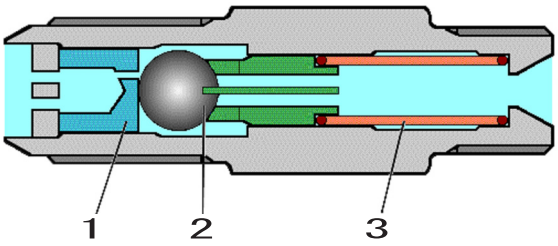

SF04010-012

1	Piston	3	Spring
2	Ball		

When the engine is stopped, the ball and piston are pressed to the common rail side by the tension of the spring.

[2] When engine starts (damping)

Common rail side

Injector side

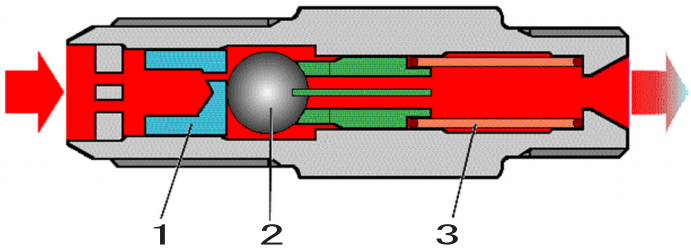

SF04010-013

1	Piston	3	Spring
2	Ball		

When the engine starts, the fuel pressure from the common rail side is applied and the piston and ball move to the injector side.
The fuel pulses (damping) are absorbed by the spring.

https://truckmanualshub.com/

[3] Faulty fuel outflow

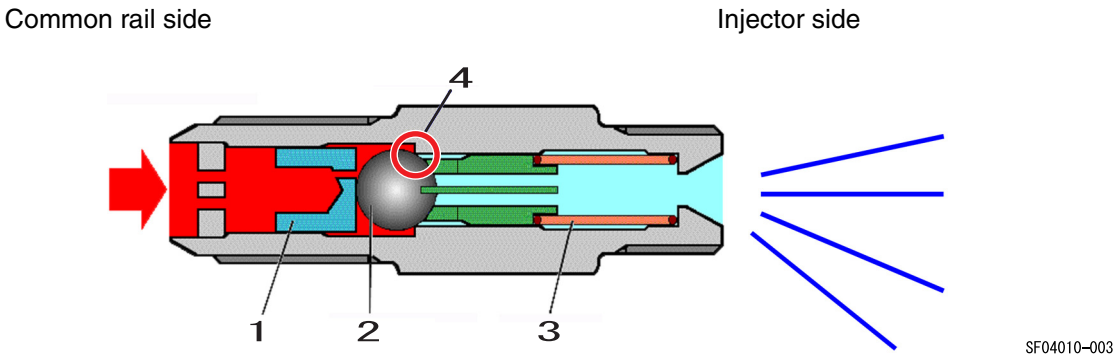

1	Piston	3	Spring
2	Ball	4	Adhering

When there is faulty fuel outflow from the injection pipe etc. on the injector side, the injector side pressure drops drastically, so the piston and ball are pushed out by the pressure difference with the common rail side to seal the flow damper with the ball and prevent fuel inflow from the common rail side.

7. Pressure Limiter

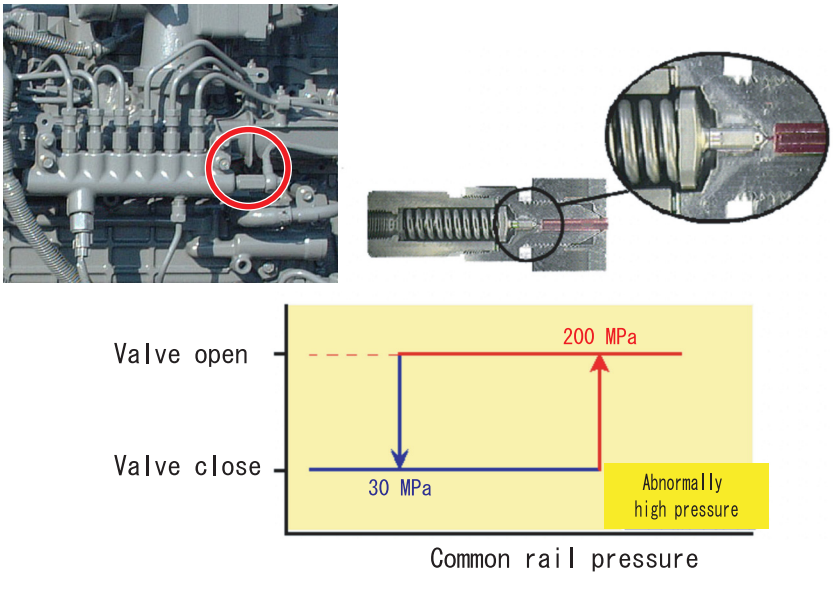

When the pressure within the common rail reaches 200 MPa, for the sake of safety, the pressure limiter opens and returns fuel to the tank.
When the pressure drops to 30 MPa, the valve closes to return operation to normal.

https://truckmanualshub.com/

8. Cautions for Maintenance

(1) Cautions concerning fuel used

With common rail engines, the supply pump and injector are lubricated by the fuel running through them.
Therefore, if any fuel other than diesel is used, this leads to engine trouble, so use of non-specified fuel is strictly prohibited.
Please be aware that troubles resulting from use are "not covered by the warranty".

Specified fuel
JIS No. 2 diesel, JIS No. 3 diesel, special No. 3 diesel

The parts of the fuel system (injector internal part etc.) and the holes and gaps that form the fuel path are made with extremely high precision.
Therefore, they are extremely sensitive to foreign matter. Foreign matter in the fuel path can damage it, so use great care to keep out foreign matter.

[1] Clean and care for the fuel line and its surroundings before starting maintenance.

[2] Those working on the fuel line must have hands clean of dirt and dust. Wearing gloves while working is strictly prohibited.

[3] After removing fuel hoses and fuel pipes, always seal the hoses and pipes by covering the open sections with plastic bags or the like.

[4] When replacing parts, do not open the packing for the new parts until it is time to install them.

[5] Do not reuse any gaskets or O-rings. Replace them with new ones.

- Do not reuse fuel system high-pressure lines or injector pipes. If they are removed, replace them with new parts.
- Do not replace a pressure limiter, fuel temperature sensor or flow damper alone. If there is any problem, replace the common rail assembly and all the fuel lines.

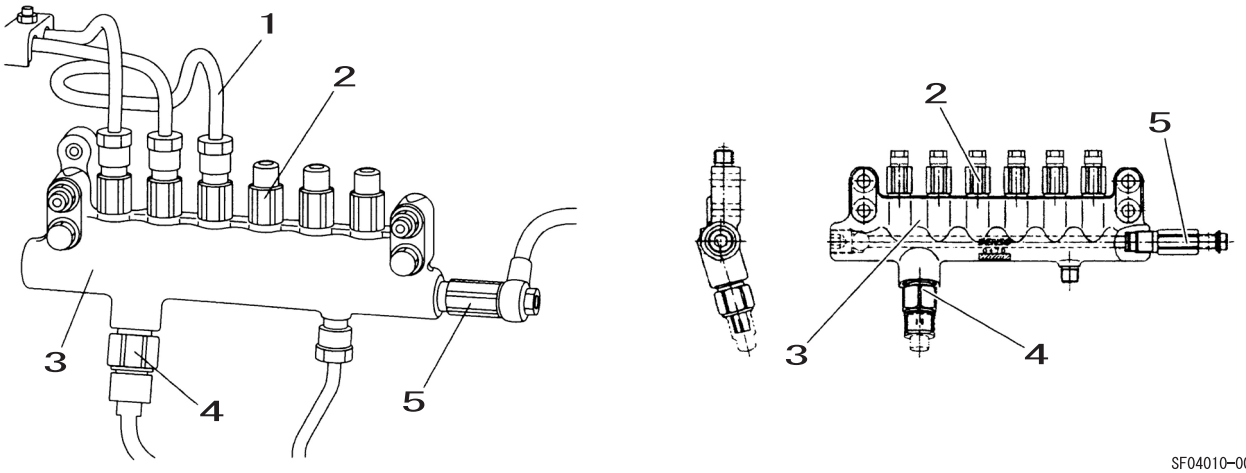

SF04010–005

1	Injector pipe	4	Common rail pressure sensor
2	Flow damper	5	Pressure limiter
3	Common rail		

https://truckmanualshub.com/

The SCV and fuel temperature sensor are installed on the supply pump main unit and cannot be individually replaced.
Always replace the supply pump assembly.

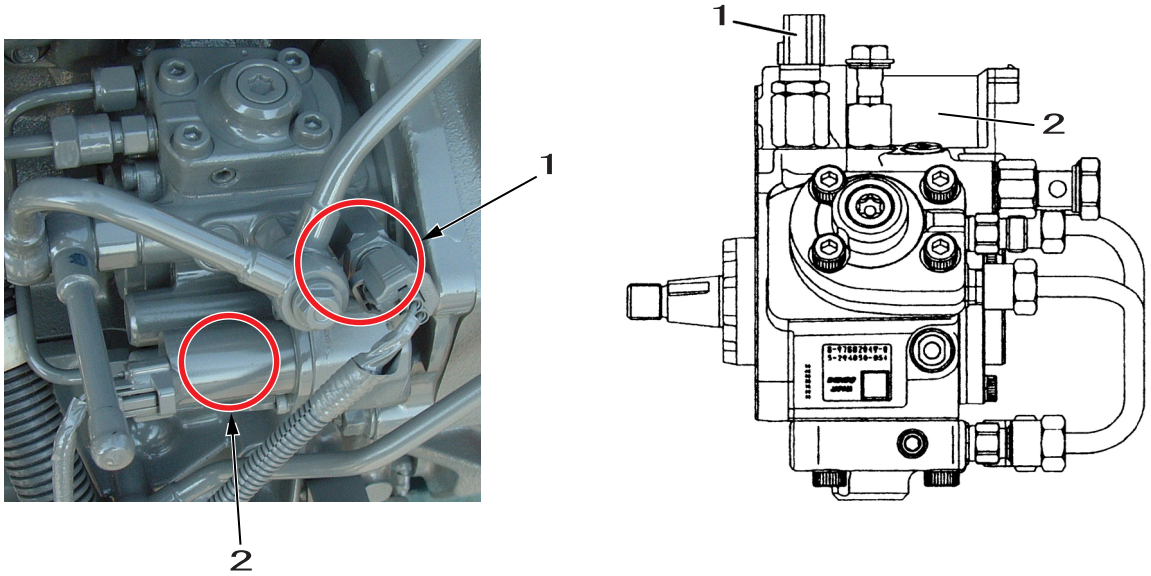

SF04010–006

1	Fuel temperature sensor
2	SCV (suction control valve)

Judging individual cylinders as OK or not by starting up the engine and loosening the injection pipes is strictly prohibited when there is engine trouble. (Never do this. The high-pressure fuel sprays out dangerously.)

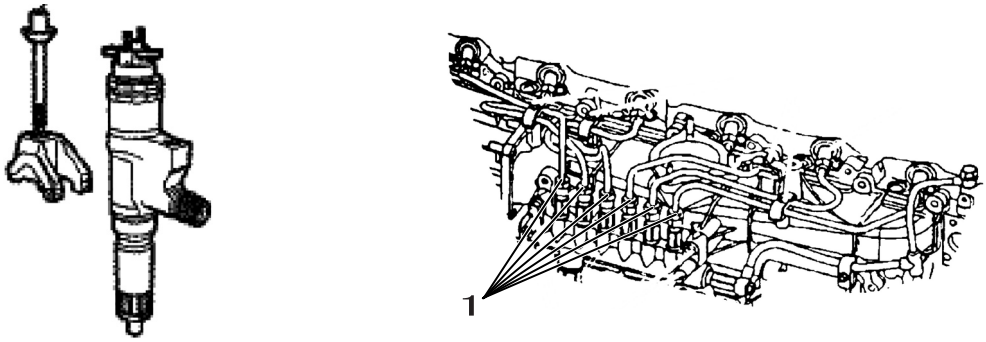

SF04010–007

1	Injector pipe

https://truckmanualshub.com/

Be careful. High voltage of 118 V or higher is applied to the injectors. Disconnect the battery cable ground before replacing injectors.

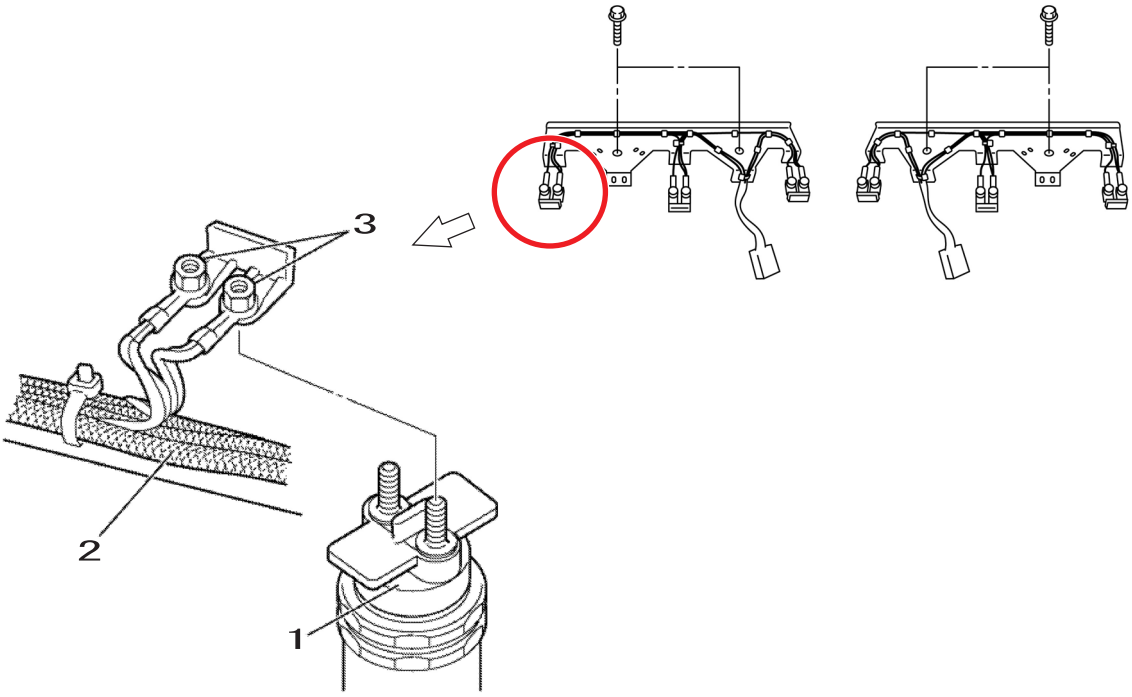

SF04010–008

1	Injector
2	Injector harness
3	Injector nut

https://truckmanualshub.com/

Explanation of Engine Control

1. Fuel Injection Quantity Correction

   The ECM calculates the basic injection quantity with the throttle volume, boost sensor, CKP sensor, CMP sensor, and other signals.
   According to the common rail pressure, engine coolant temperature, and other conditions at this time, the ECM controls the SCV and controls the injector electrified time to attain optimum injection timing and correct the injection quantity.

2. Starting Q Correction

   The engine starting Q correction is terminated at the idling speed + α min^{-1} (+ α depends on the coolant temperature.).

   Also, below the system recognition engine speed (30 min^{-1}), the ECM cannot recognize engine rotation, so starting Q correction and engine starting become impossible.

   * Minimum engine starting speed is 60 min^{-1}

3. Preheat Control (QOS: quick on start)

   The ECM determines the glow time (pre-glow, glow, and after-glow) according to the engine coolant temperature and makes the glow relay operate.
   The QOS system makes starting at low temperatures easier and reduces white smoke and noise immediately after starting.
   When the key is switched ON, the ECM detects the coolant temperature with the signal from the engine coolant sensor and varies the glow time to always obtain the optimum starting conditions.
   Also, the after-glow function makes it possible to stabilize the idling rotation immediately after starting.
   Also, if there is trouble in the engine coolant temperature sensor system, control assumes a fixed coolant temperature of -20 ℃ for engine starting and 80 ℃ for running.
   Also, EGR control stops.(Thermostat valve opening temperature is 82 ℃ .)

4. Atmospheric Pressure Correction (high altitude correction)

   The ECM calculates the current altitude from the atmospheric pressure sensor signals.
   The ECM controls the SCV and controls the injector electrified time to attain optimum fuel flow according to the altitude and other conditions at the time.
   Also, if there is sensor trouble, control assumes a fixed atmospheric pressure of 80 kPa (equivalent to an altitude of 2000 m) and stops EGR control too.

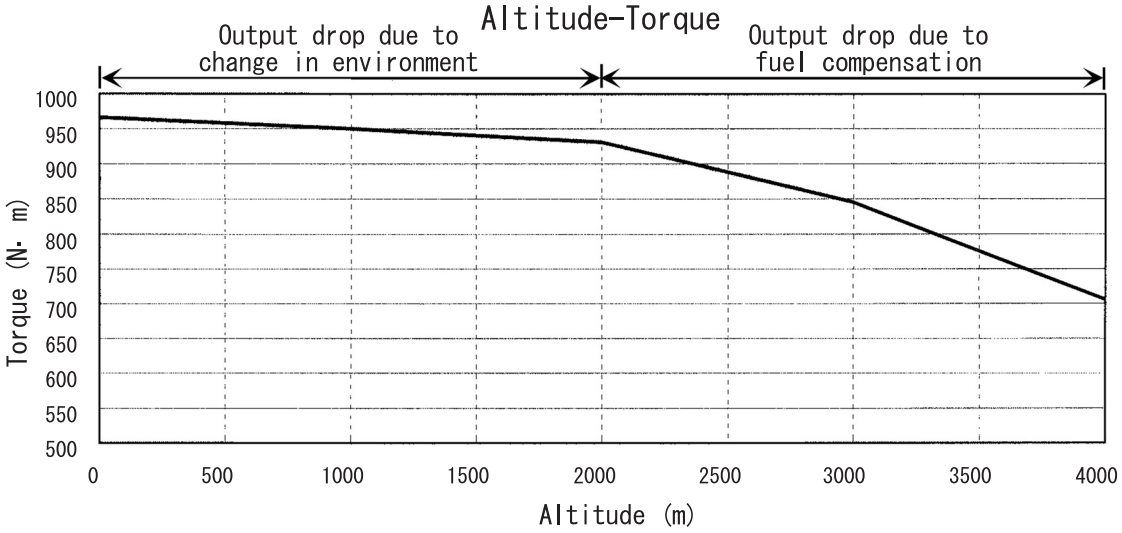

SF04010-019

https://truckmanualshub.com/

5. Control for Overheating

When the engine overheats, in order to protect the engine, if the engine coolant temperature exceeds 100 ℃ , fuel flow restriction is started.
If the temperature rises further, the fuel flow is further restricted.
If engine coolant temperature rises to 120 ℃ , the engine is stopped.

The protection function is started 1 min. after the engine starts. (In order to detect a stable coolant temperature)

Setting	Judgment time	Engine control	Recovery condition
100 ℃	-	ECM: Reduced fuel injection quantity Computer A: Normal	-
105 ℃	8th on coolant temperature gradation		7th or lower on coolant temperature gradation
110 ℃	5 sec.	ECM: Reduced fuel injection quantity Computer A: Idling	
120 ℃	5 sec.	ECM: Reduced fuel injection quantity Computer A: Engine stopped	Key switched ON after engine stopped

* The protection function does not work if any of the error codes below occurs.
0117 (coolant temperature sensor abnormally low voltage)
0118 (coolant temperature sensor abnormally high voltage)
2104 (CAN bus abnormality)
2106 (CAN time-out abnormality)
0090 (CAN communication error)

Overheat protection through Q control

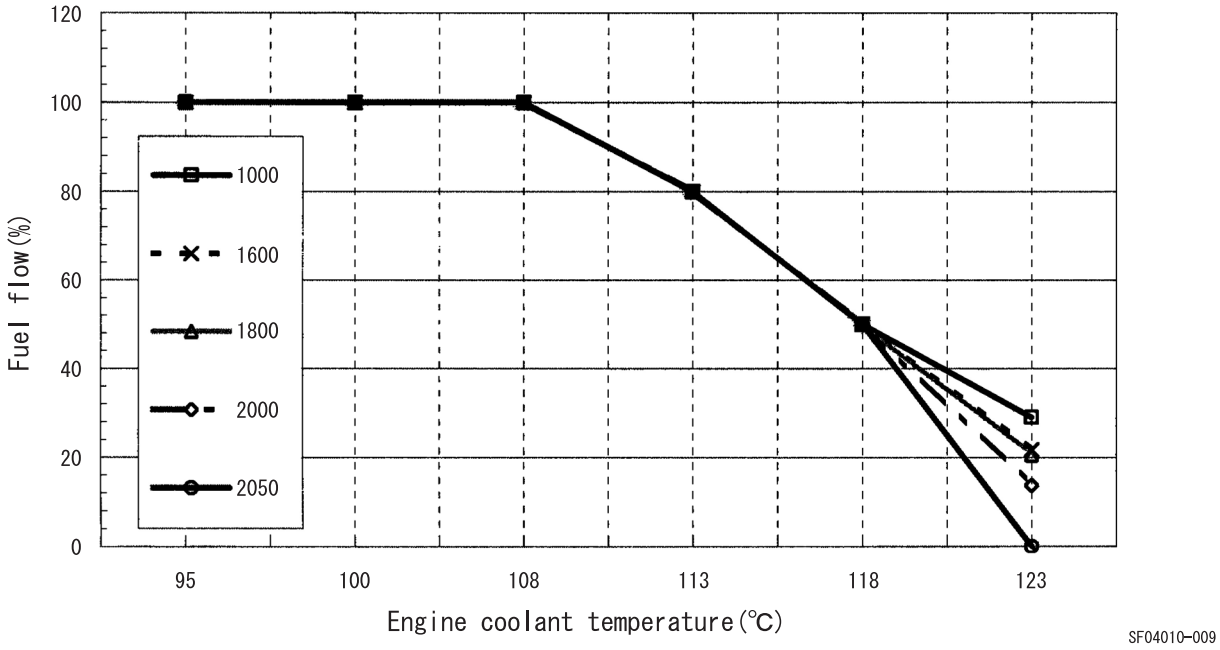

https://truckmanualshub.com/

6. Control for Boost Temperature Rise

If the boost temperature exceeds 80 ℃ , fuel flow restriction is started.
If temperature rises to 90 ℃ , the engine is stopped.
The protection function is started 1 min. after the engine starts. (In order to detect a stable boost temperature)

Setting	Judgment time	Engine control	Recovery condition
80 ℃	5 sec.	ECM: Normal Computer A: Idling control	State of 70 ℃ or less continues for 30 sec.
90 ℃	5 sec.	ECM: Normal Computer A: Engine stop control	Key switched ON after engine stopped

* The protection function does not work if any of the error codes below occurs.
1112 (boost temperature sensor abnormally low voltage)
1113 (boost temperature sensor abnormally high voltage)
2104 (CAN bus abnormality)
2106 (CAN time-out abnormality)
0090 (CAN communication error)

7. Control for Engine Oil Pressure Drop

If the engine oil pressure drops, the engine is stopped to prevent engine damage.
The protection function is started 30 sec. after the engine starts. (In order to detect a stable engine oil pressure)

Setting	Judgment time	Engine control	Recovery condition
40 kPa	5 sec.	ECM: Normal Computer A: Engine stop control	Key switched ON after engine stopped

* The protection function does not work if any of the error codes below occurs.
0522 (oil pressure sensor abnormally low voltage)
0523 (oil pressure sensor abnormally high voltage)
2104 (faulty CAN bus)
2106 (CAN time-out abnormality)
0090 (CAN communication error)
1633 (5 V power supply 3 voltage abnormality/sensor power supply)

8. Start Control (coolant temperature monitoring)

[1] Purpose
When the coolant temperature is 0 ℃ or lower, fuel injection is controlled according to the coolant temperature for stable engine starting at low temperatures.

https://truckmanualshub.com/

9. Long Cranking Control

[1] Purpose

For the purpose of reducing black smoke when starting the engine and as backup in case adequate starting Q (fuel injection) is not obtained, for example due to injector wear, after the stipulated time after the start of cranking, the starting Q is raised the stipulated amount to improve startability.

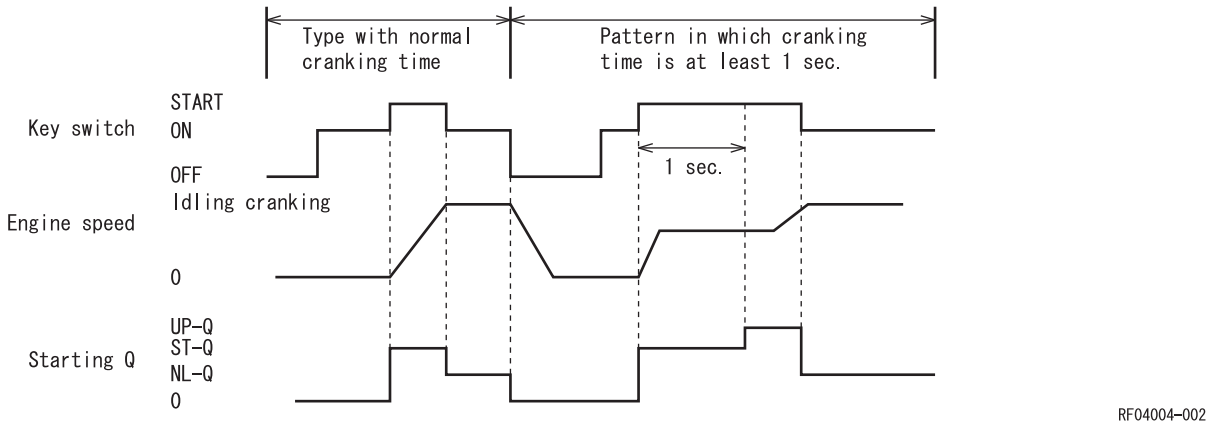

ST-Q	Standard starting Q
UP-Q	Starting Q after increase
NL-Q	Q for no load

10.Starting Control for Reduced Number of Cylinders

When the fact that there is a stopped injector is detected with trouble diagnosis (when an error code is detected), for the purpose of emergency escape, the fuel injection quantity is corrected to secure engine startability.

[1] The injection quantity for the troubled injector is allocated to the normal injectors. (The total injection quantity is made the same.)

* The injector correction factors are as follows.

Number of effective cylinders	6	5	4	3	2	1	0
Correction factor	1.0	1.2	1.5	2.0	1.0	1.0	1.0

Caution:
No control if there is trouble in injectors for 3 or more cylinders.
No control if an injector has a mechanical trouble.

11.Normal Stop (key switch OFF operation)

[1] The key switch is set OFF.

[2] When the ECM recognizes that the key is OFF, [3] - [5] are carried out at the same time.

[3] Injector injection quantity calculation stop

[4] Suction control valve (SCV) full close instruction

[5] EGR valve full close instruction, EGR valve initial correction

[6] When the operations in [3] - [5] end, the trouble log etc. are written to the EEPROM in the ECM.

[7] The main relay is switched OFF and the power feed to the ECM is switched OFF.

https://truckmanualshub.com/

12.Engine Start/Stop Judgment

Engine start and stop is judged based on the engine speed sent from the ECM with CAN communication.

Judgment values

Start: 500 min^{-1}

Stop: 200 min^{-1}

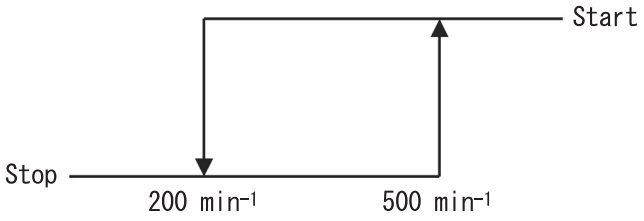

RST-06-04-001v01

Configuration diagram

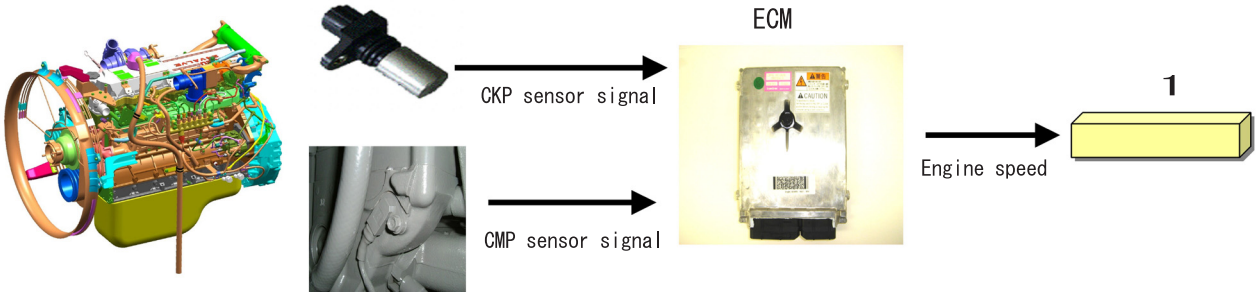

RST-06-04-001v02

1	Computer A

https://truckmanualshub.com/

Engine Information Screen

1. Purpose

   It has been made possible to copy the engine information (Q resistance, QR code, engine serial number) stored in the ECM to the new ECM when the ECM and injector are replaced.

2. How to Go to This Screen

   See the service support operation procedure.

3. Engine Start Restriction

   When this screen is displayed, the engine cannot be started.

4. Screen

   The engine information held in computer A can be checked as follows.
   The information inside the ECM is checked by changing the display mode with the method shown in "When Replacing Computer A at the Same Time".

[1] Pages 1 - 6: Injector cylinder 1 - 6 QR codes

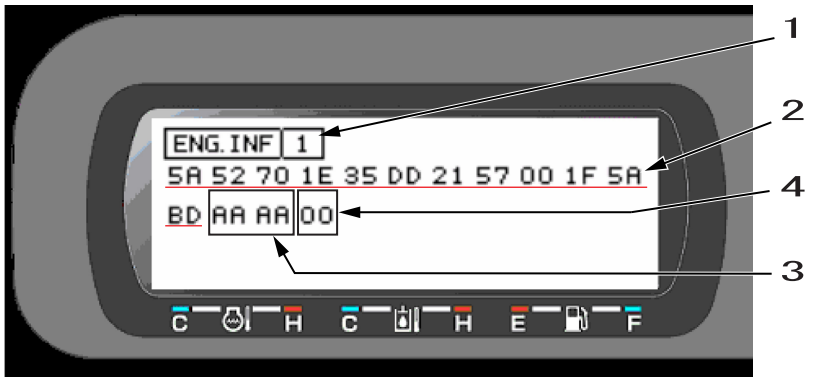

RST-06-06-001a

1	Page
2	24-digit QR code
3	Indicates the display mode. Currently displays the information in computer A.
4	Error code

[2] Page 7: Q resistance data

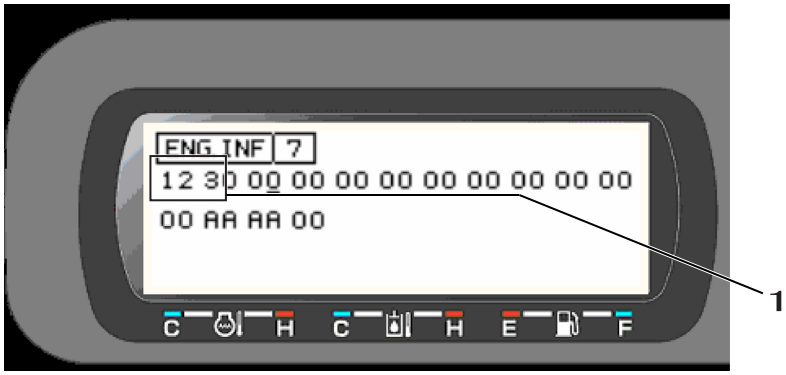

RST-06-06-001b

1	3-digit Q resistance data

https://truckmanualshub.com/

[3] Page 8: Engine serial number

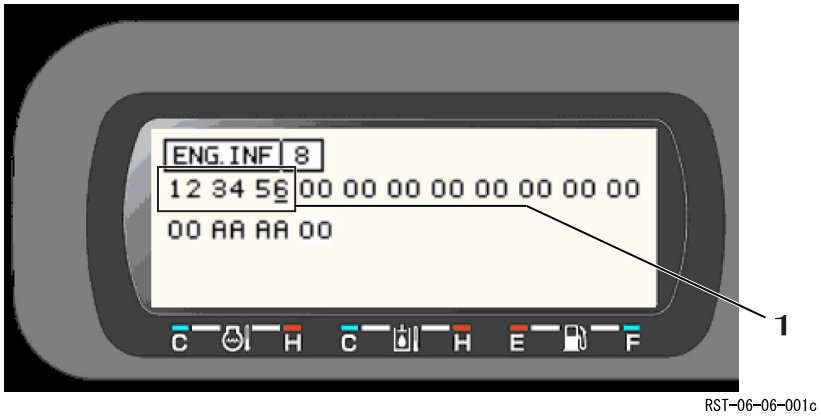

1	6-digit engine serial number

https://truckmanualshub.com/

Monitor Operating Method

1. View Mode

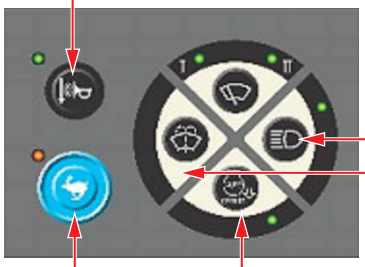

Display mode
(switching between information in computer A / information in ECM)

Each time this switch is pressed, the second line of each page is switched as follows.

AA AA (Mode displaying information in computer A)

EE EE (Mode displaying information in ECM)

Page
+/−

Hold down for 1 sec. to shift to edit mode
(Only valid while QR code is displayed and when in "AA AA" mode.)
Be careful. Shifting to edit mode will not be done when in "EE EE" mode.

Hold down for 3
seconds to start copying the engine information.
(for details, see "Engine Information Copying Method".)

RST-06-06-001d

2. Edit Mode

* Can only be shifted to during QR code display.

Cancel editing and exit edit mode

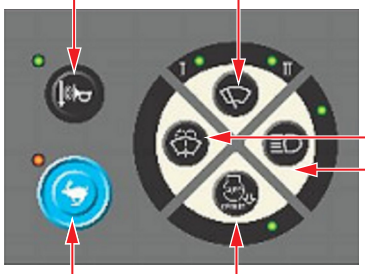

Value increased

Cursor movement

Value decreased

Start the QR code writing and exit edit mode
(For details, see "Rewriting Injector QR Codes".)

RST-06-06-001e

https://truckmanualshub.com/

Engine Information (Q resistance, QR code, engine serial number) Copying Method

If the ECM is replaced with a new one for any reason, the engine information is copied with the procedure below.

[1] Arrange for a service ECM.
Engine information can only be copied to a service ECM.

[2] Connect the service ECM and check the following.

1) The old ECM information must still be in computer A.
2) The ECM must match the model.
3) No display for EEPROM abnormality on computer A or EEPROM abnormality on ECM.

[3] Go to the engine information screen, then hold down for 3 sec. The buzzer buzzes and the copy starts.
* The display may be any page (1 - 8) and either display mode (computer A or ECM).

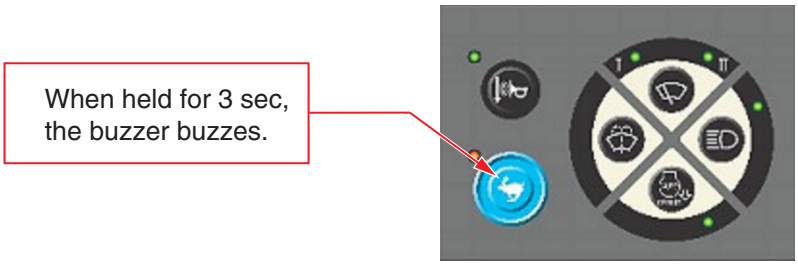

RST-06-06-001g

During copying, the display is as below. During writing, the error code 99 is displayed.
Wait about 10 sec.
When the copy ends normally, the error code 00 is displayed.
When the copy ends abnormally, the error code is displayed.
Example: Starting copying from the Q resistance screen

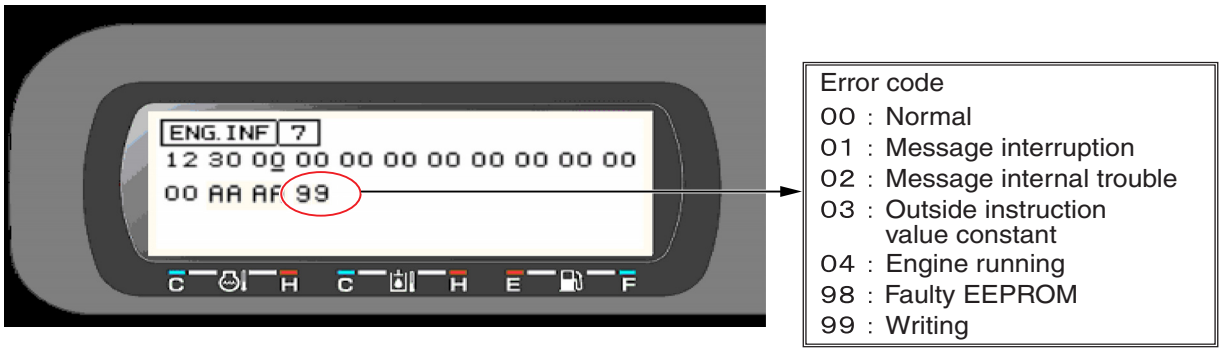

RST-06-06-001h

[4] When the copy ends normally, check that the information has been rewritten by switching the key switch OFF → ON once.

https://truckmanualshub.com/

Rewriting Injector QR Codes

When an injector is replaced, input and write the QR codes with the following procedure.

[1] Arrange for the replacement injector.
Input the part below from the character array written on the injector.

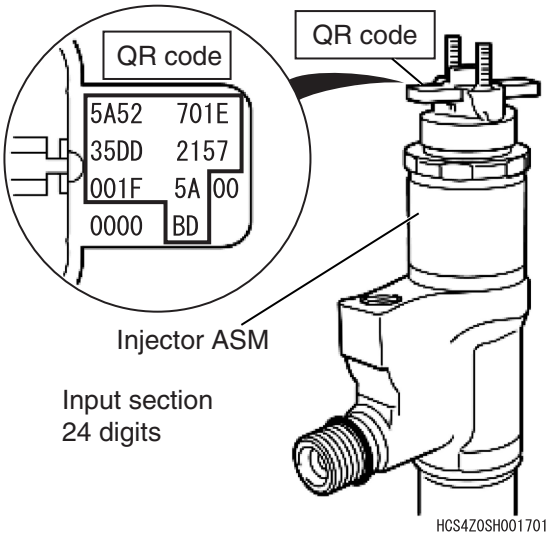

RST-06-06-001i

Input the QR codes one at a time.
Engine information screen pages 1 - 6 correspond to the injectors with those numbers. (See the diagram below.)

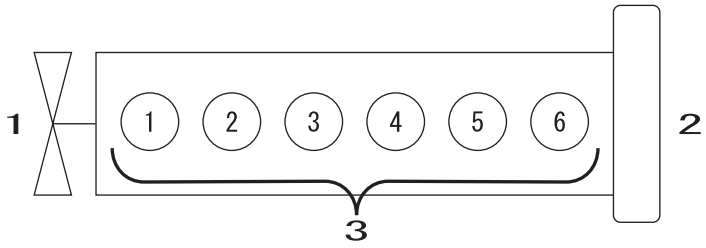

SF06007-001

1	Engine front
2	Engine rear
3	Injector No.

[2] Hold down for 1 sec. to shift to edit mode.

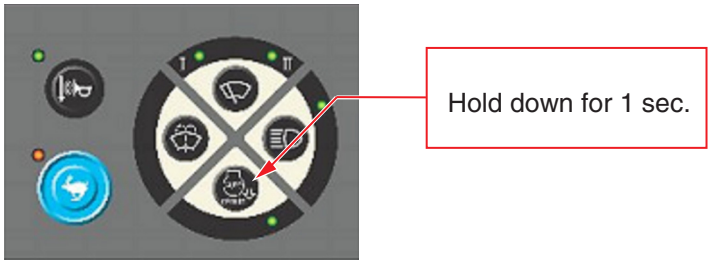

RST-06-06-001I

https://truckmanualshub.com/

[3] Cursor is displayed

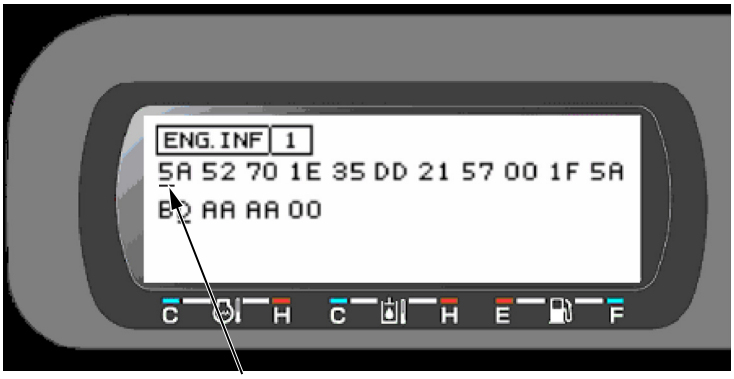

Cursor displayed

RST-06-06-001m

[4] Move the cursor with 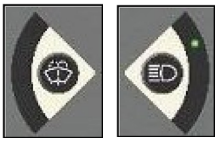 and raise and lower values with 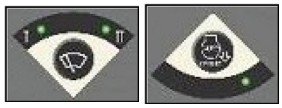 to input the QR codes written on the injector.

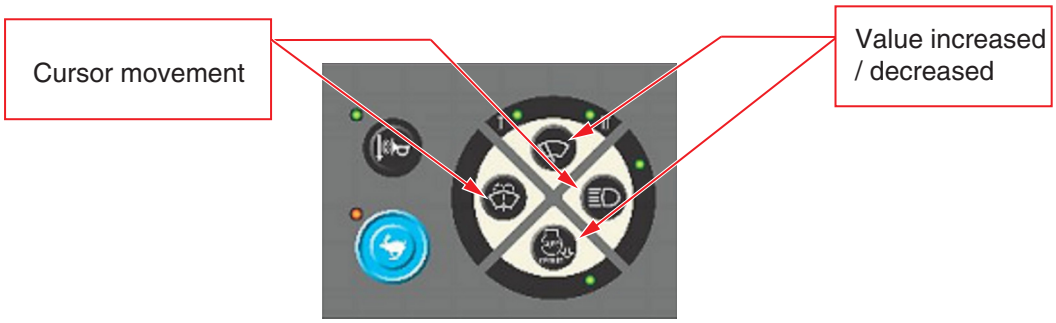

RST-06-06-001q

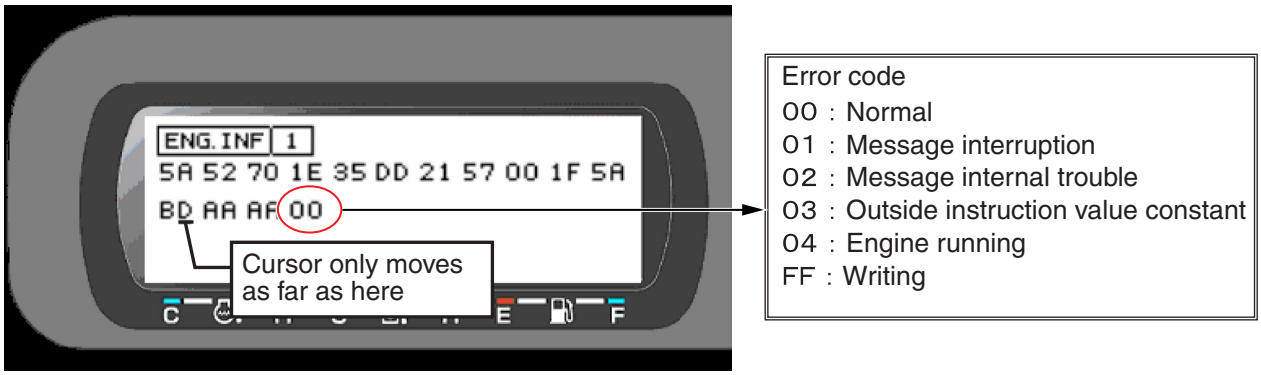

RST-06-06-001r

[5] When the QR code input is complete, press .

The buzzer buzzes once and the writing starts.
The error code 99 (writing) is displayed. When the copy ends normally, the error code 00 is displayed.

When the copy ends abnormally, the error code is displayed. (To cancel input, press .)

[6] Switch OFF the key switch, then ON again and check the QR codes have been rewritten.

https://truckmanualshub.com/

When Replacing Computer A at the Same Time

If the ECM and computer A have trouble at the same time and the engine information inside the ECM cannot be used, restore the engine information with the procedure below.

[1] Rather than a service ECM, arrange for an ECM with the engine information already written into it and use that as the replacement.

* An ECM with the engine information already written into it means one into which the Q resistance data has been written with EMPS.

[2] Input the injector QR codes 1 at a time. (With the procedure in the preceding item)

Engine Information Acquisition Timing

The engine information is acquired only the first time the key is switched ON after factory assembly.

Redoing Engine Information Acquisition

To re-acquire the engine information, hold down + on the engine information screen for 10 sec.

Abnormality Display

If the engine information cannot be displayed correctly due to an ECM time-out, CAN communication abnormality, or EEPROM abnormality, the display is all Fs.

[1] Display for EEPROM abnormality on ECM, CAN communication abnormality, or ECM time-out

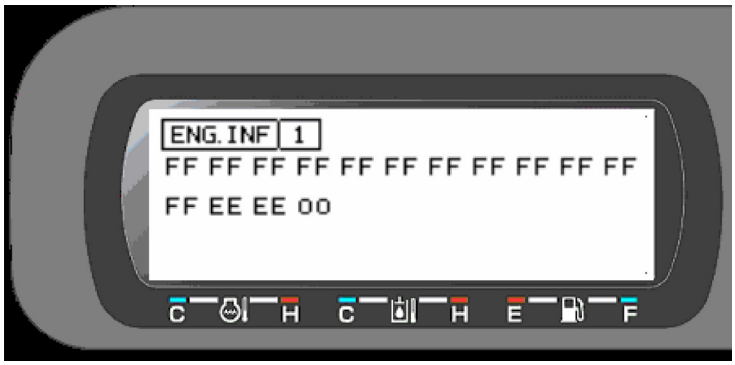

RST-06-06-001u

https://truckmanualshub.com/

Exhaust Gas 3rd Engine Accessory Electrical Parts Interchangeability (Isuzu part number)

Engine model	4J	4H	6H	6U	6 W
Supply pump	897381-5551	897306-0448	115603-5081	898013-9100	897603-4140
Common rail	898011-8880	897306-0632	897323-0190	897603-1211	
Injector	898011-6040	897329-7032		897603-4152	115300-4360
Starter	898045-0270	898001-9150	181100-4142	181100-4322	181100-3413
Alternator	898018-2040	897375-0171	181200-6032		181200-5304
EGR valve	897381-5602	898001-1910		116110-0173	
Crank position sensor	897312-1081	897306-1131		897306-1131	
Cam position sensor	897312-1081	898014-8310		Supply pump accessory part	
Coolant temperature sensor	897363-9360	897170-3270		897363-9360	
Fuel temperature sensor	Supply pump accessory part			897224-9930	
Suction air temperature sensor	812146-8300				
Boost temperature sensor	812146-8300				
Boost pressure sensor	809373-2691	180220-0140			
Common rail pressure sensor	Common rail accessory part				
Oil pressure sensor	897600-4340				
Atmospheric pressure sensor	897217-7780				
Glow plug	894390-7775				182513-0443

Caution

[1] For 4J, the crank position sensor and the cam position sensor have the same part number.

[2] The 6U/6W cam position sensor is a supply pump accessory part.

[3] The coolant temperature sensor part number is different for the 4H/6H and the 4J/6U/6W.

[4] Part numbers are subject to change without notice, so confirm part numbers on the engine parts table.

https://truckmanualshub.com/

Features of Materials Subject to Exhaust Gas Regulation

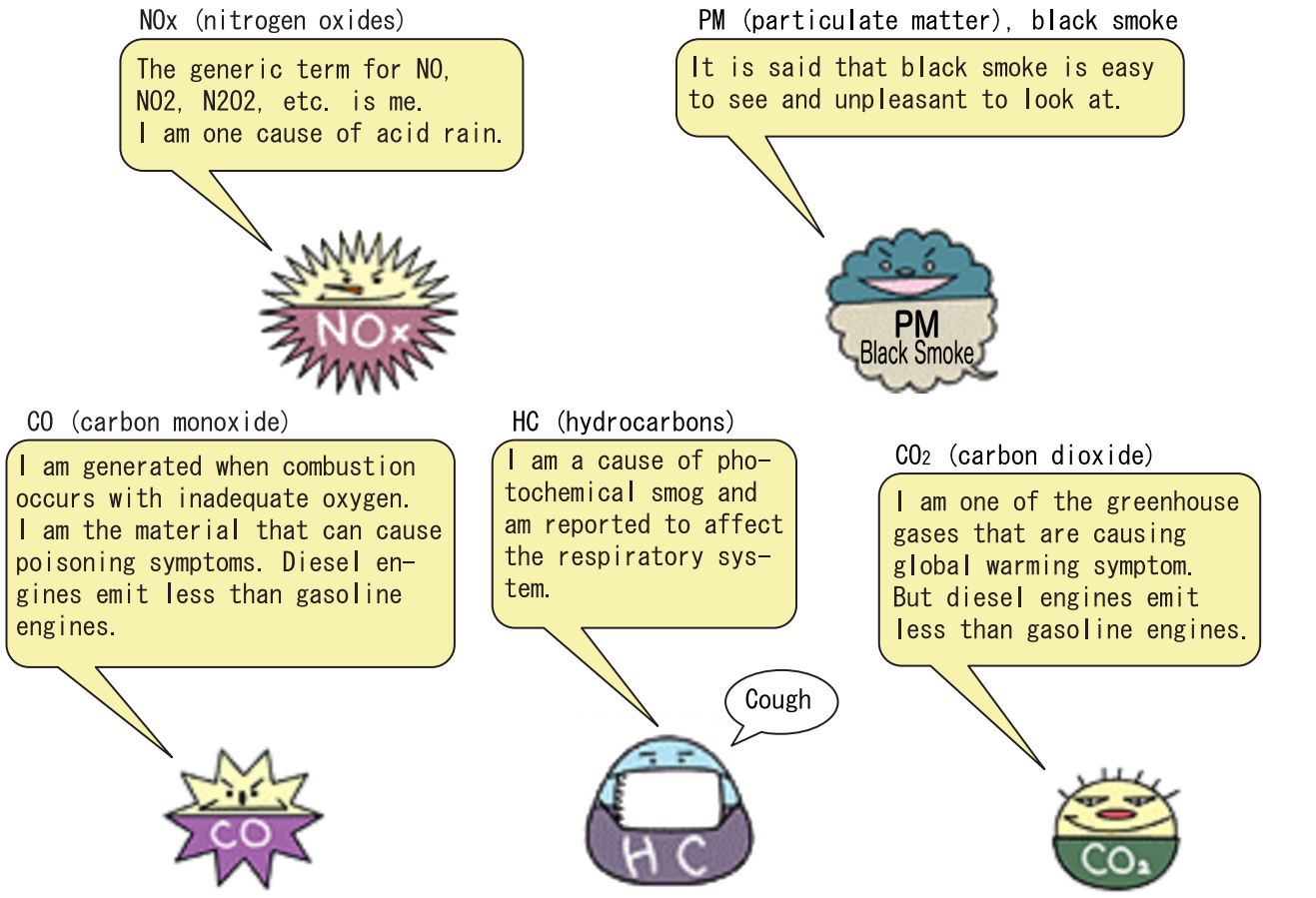

RF08002-003

Exhaust Gas Regulation Values

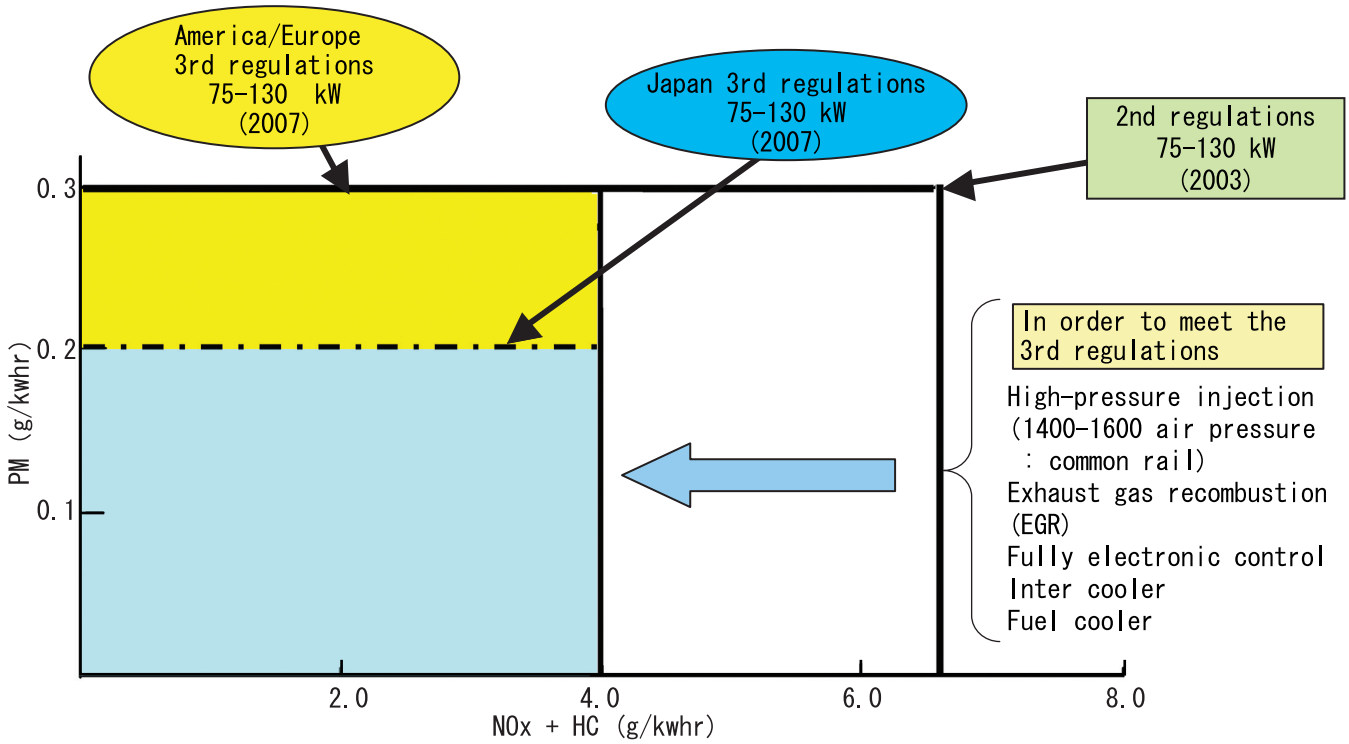

Compared to current engines { NOx + HC : 40 % reduction
PM : 30 % reduction in PM

RF08002-002

https://truckmanualshub.com/

Exhaust Gas Regulations

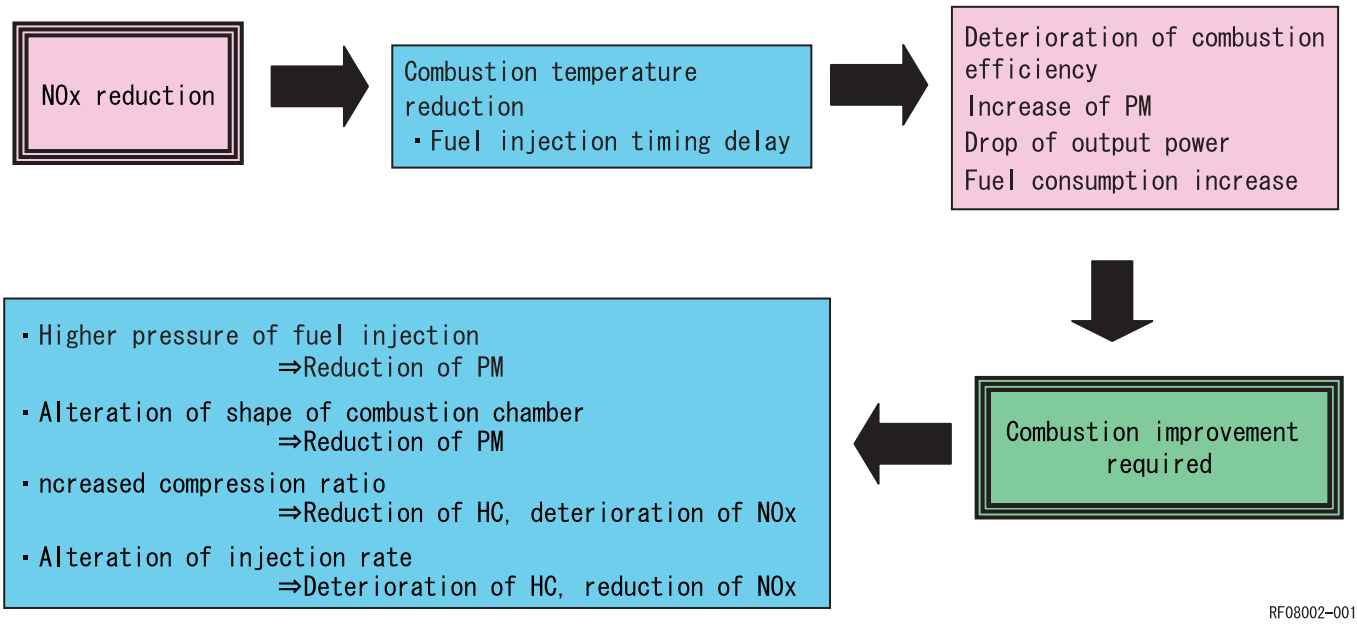

[Example of method for meeting exhaust gas 3rd regulations]

In order to simultaneously reduce both NOx and PM, which have a trade-off relationship, more complex fuel injection is required. Therefore, fuel injection is now completely electronically controlled.

Common rail engine (high pressure injection / multiple injection / injection ratio control)

In addition, depending on the engine size, it may be necessary to change from 2 to 4 valves, install an inter cooler, and use EGR (exhaust gas recombustion).

* With the Model 5 SPACE5, all these systems are used.

https://truckmanualshub.com/

Engine Fuel and Maintenance of Fuel Filters

In order to meet the emission control regulation of 3rd-stage, the engine components have been made precisely and they are to be used under high-pressure conditions.
Therefore, the specified fuel must be used for the engine.
As a matter of course, not only the guarantee will not be given for the use of a fuel other than the specified but also it may invite a serious breakdown.
In addition, since suitable specifications for the fuel filter elements have been established for this engine, use of the genuine filter is essential.
The following describes the specifications and the requirements of the fuel to be applied, and maintenance of the fuel and the fuel elements.

1. Fuel to be applied

Selection of fuel

Following conditions must be met for the diesel engines, that is the one;

[1] In which no dust even fine one is mixed
[2] With proper viscosity
[3] With high cetane rating
[4] With good flow properties in lower temperature
[5] With not much sulfur content
[6] With less content of carbon residue

(1) Applicable standards for diesel fuel

Applicable Standard	Recommendation
JIS (Japanese Industrial Standard)	No.2
DIN (Deutsche Industrie Normen)	DIN 51601
SAE (Society of Automotive Engineers) Based on SAE-J-313C	No. 2-D
BS (British Standard) Based on BS/2869-1970	Class A-1

If a standard applied to the fuel for the diesel engine is stipulated in your country, check the standard for details.

(2) Requirements for diesel fuel

Although conditions required for the diesel fuel are illustrated above, there are other requirements exerting a big influence on its service durability and service life.

Be sure to observe the following requirements for selecting fuel.

Sulfur content	2500 ppm or less
HFRR*	460 μm or less
Water content	0.05 wt% or less

* HFRR (High-Frequency Reciprocating Rig.): An index showing lubricating properties of the fuel.

https://truckmanualshub.com/

Cautions for Fuel Used

Sulfur content reacts to moisture to change into sulfuric acid after combustion.
Use of a fuel containing much sulfur content allows it to accelerate internal corrosion and wear.
In addition, much sulfur content quickens deterioration of engine oil allowing its cleaning dispersive property to be worse which results in acceleration of wear of sliding portions.
HFRR is an index that indicates lubricating property of a fuel.
Large value of the index means poor lubrication so that seizure of the machine components may result if such a fuel is used.
Since a fuel with high HFRR value also has lower viscosity, it can easily be leaked out.
If the fuel is mixed with the engine oil, the oil is diluted to deteriorate its lubricating property resulting in acceleration of wear.
Water content allows inside of the fuel tank to rust which in turn blocking the fuel line and the fuel filter.
This may also cause wear and seizure of the machine components.
If atmospheric temperature goes below the freezing point, moisture content in the fuel forms fine particle of ice allowing the fuel line to be clogged.
Obtain table of analysis for the fuel you are using from the fuel supplier to confirm that it meets the criteria described above.

Important

If a fuel which does not meet the specifications and the requirements for the diesel engine, function and performance of the engine will not be delivered.

In addition, never use such a fuel because a breakdown of the engine or an accident may be invited.
Guarantee will not be given to a breakdown caused by the use of a improper fuel.
Some fuels are used with engine oil or additives mixed together with diesel engine fuel.
In this case, do not use these fuels because damage to the engine may result as the fuel has been contaminated.
It is natural that the emission control regulation of 3rd-stage will not be cleared in case where a fuel that does not meet the specifications and the requirements is used.
Use the specified fuel for compliance of the exhaust gas control.

Important

It you use diesel fuel which contains much sulfur content more than 2500 ppm, be sure to follow the items below for the engine oil selection and maintenance of engine parts.

Guarantee will not be given to breakdowns caused by not to follow these items.

[1] Selection of engine oil
Use API grade CF-4 or JASO grade DH-1.

[2] Exchange the engine oil and engine oil filter element by periodical interval below.

Engine oil	Every 250 hour of use
Engine oil filter element	Every 250 hour of use

[3] Inspect and exchange the EGR parts and fuel injector parts of engine by periodical interval below.

EGR (*) parts	Every 3000 hour of use
Fuel injector parts	Every 3000 hour of use

* EGR : Exhaust Gas Recircultion
For the detail of inspection and replacement for the above engine parts, please contact your nearest Service factory outlet.

[4] In addition above if the value of HFRR or water content in the fuel you use is more then limitation in above table of this manual, please also contact your nearest Service factory outlet.

https://truckmanualshub.com/

2. Maintenance of fuel filters

Be sure to use the genuine fuel filters.

The fuel injection system is precisely constructed and the genuine filter employs finer mesh than conventional filters to improve protection of machine equipment.

If a filter with coarse mesh is used, foreign object passing through the filter enters into the engine so that machine equipment can wear out in a short period of time.

Important

If a fuel filter other than the genuine filter is used, guaranty will not be applied to a fault caused by the use of a wrong filter.

Two kinds of fuel filter, the pre-filter and the main filter, are mounted on the machine.

Be sure to use the genuine fuel filters and replace them at a periodic intervals.

Replacement criteria

	Every 250 hour of use	Every 500 hour of use
Pre-filter	○	
Main filter		○

Since the pre-filter also has a function of water separation, discharge water and sediment when the float reaches lower part of the filter elements.

Time to replace filters may be advanced according to properties of the fuel being supplied.

Running the engine with the fuel filter blocked may cause the engine to be stopped due to establishment of engine error code.

If much foreign objects are found in the fuel, carry out earlier inspection and regular replacement of the filters.

If dust or water get mixed with the fuel, It may cause the engine trouble and an accident.

Therefore, take measures to prevent dust or water from being entered in the fuel tank when supplying fuel.

When supplying fuel directly from a fuel drum can, leave the drum as it stands for a long period of time to supply clean fuel standing above a precipitate.
If it is hard to leave the drum for a long period of time, install a fuel strainer and a water separator before the fuel tank of the machine to supply clean fuel.

Water drain cock is provided on the bottom side of the fuel tank.

Drain water before starting the engine every morning.

In addition, remove the cover under the tank once a year to clean up inside of the tank.

https://truckmanualshub.com/

Change List

○ : Changed X: Deleted ● : Newly added

Change	Part name	Q'ty	Comment
×	Controller	1	Controller eliminated by use of one-piece controller with control panel
○	Motor control	3	Due to the controller change, the motor actuator was also changed. (step motor → DC motor + potentio-meter)
○	Cooler part evaporator	1	Changed due to change in expansion valve
○	Case unit, front	1	The hole position was changed due to the motor actuator change, so the case was also changed.
○	Case unit, rear	1	
○	Case unit, bottom	1	
○	Valve, expansion	1	Expansion valve shape change
○	Thermo-sensor	1	Connector changed
○	Heater core	1	Fuel line diameter increased (to ϕ17.3)
○	Blower controller (blower amp)	1	
○	Relay	2	Compressor clutch relay added
●	Inside air suction port packing	1	
○	Inside air filter	1	Changed from mesh to paper
○	Outside air filter	1	Thickness increased

https://truckmanualshub.com/

Layout Diagram

Air Conditioner Overall Diagram

1. Frame

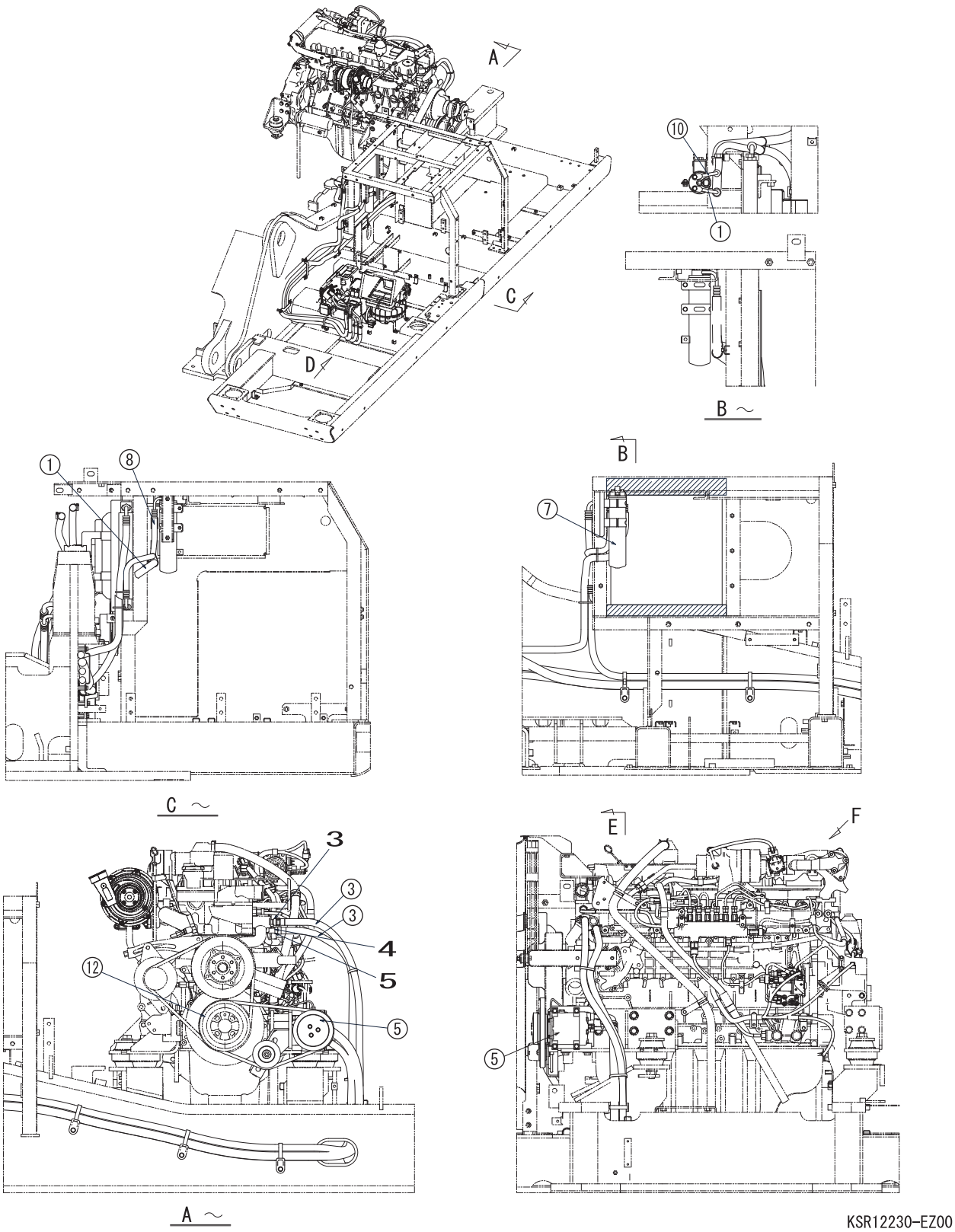

https://truckmanualshub.com/

Layout Diagram

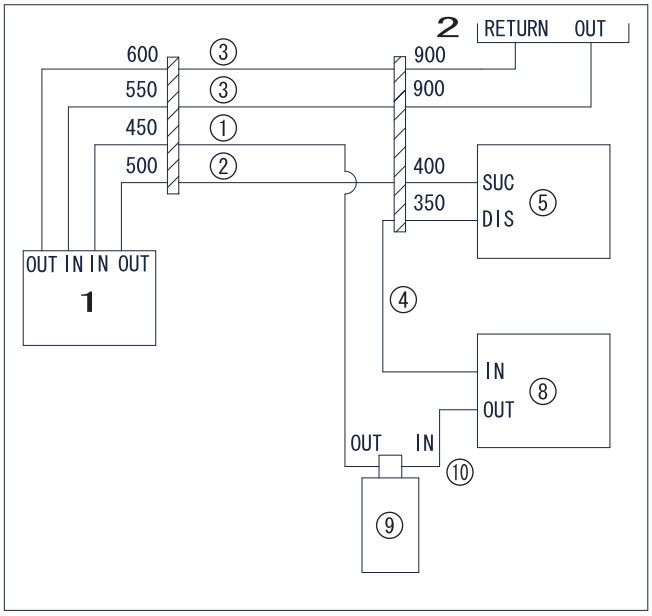

HOSE CONNECTION DIAGRAM

Code	Part name	Q'ty
1	Cooler hose (liquid 2)	1
2	Cooler hose (suction)	1
3	Rubber hose 16 × 5600	2
4	Cooler hose (discharge)	1
5	Compressor; Air conditioner	1
6	Slide shaft	1
7	Tension pulley (with cover)	1
8	Air condenser	1
9	Dryer receiver (D60.5)	1
10	Cooler hose (liquid 1)	1
11	Bracket receiver (D60.5)	1
12	V belt B-45.5	1

1	Air conditioner unit
2	Engine
3	Heater (eng. return)
4	White marking
5	Heater (eng. outlet)
6	Heater (unit outlet)
7	Heater (unit inlet)
8	Must be connected with the air conditioner unit
9	White marking Must be connected with the air conditioner unit.

* ▨ in the diagram indicates a clamp position. Figures indicate hose lengths.

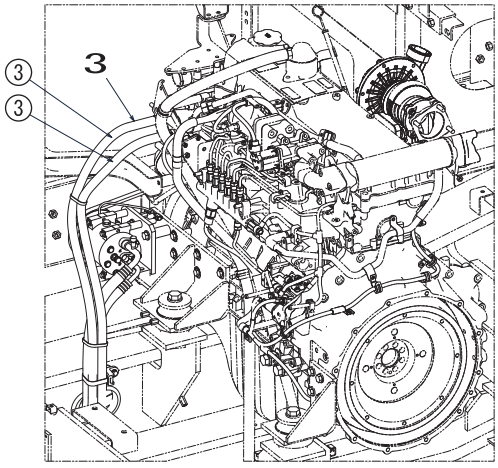

F ~

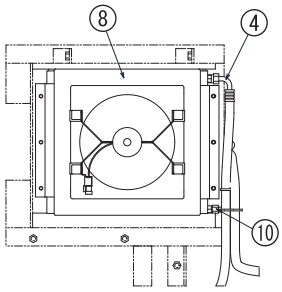

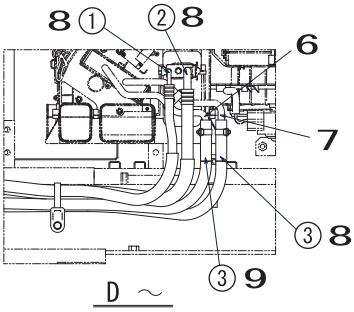

D ~

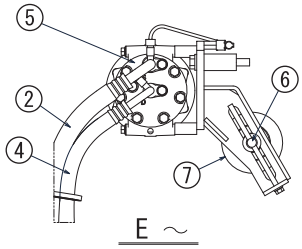

E ~

KSR12230-EZ00

https://truckmanualshub.com/

Layout Diagram

2. Cab

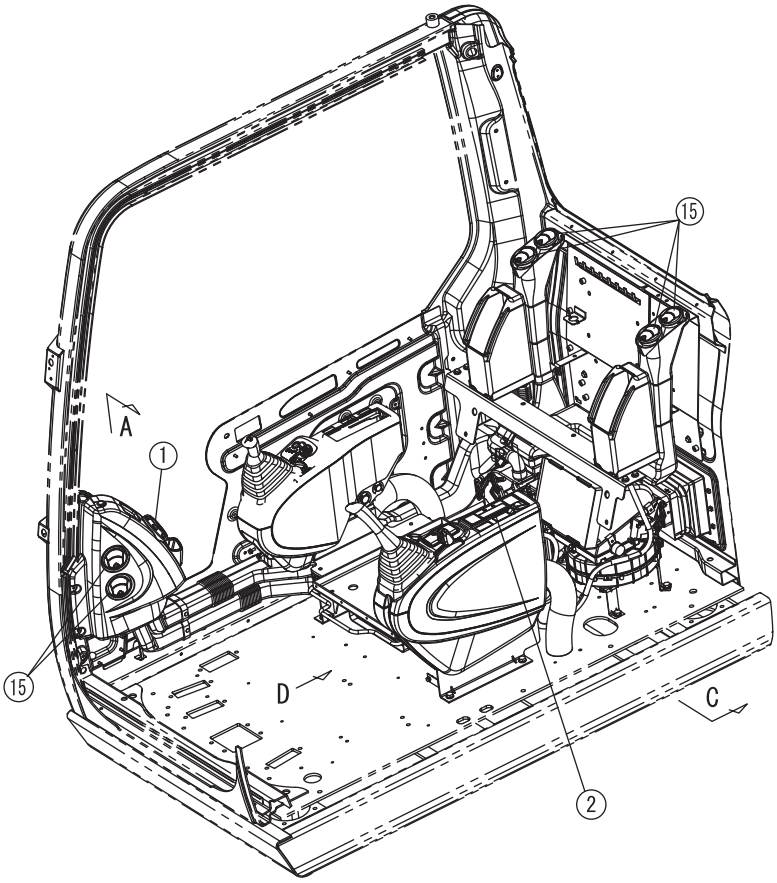

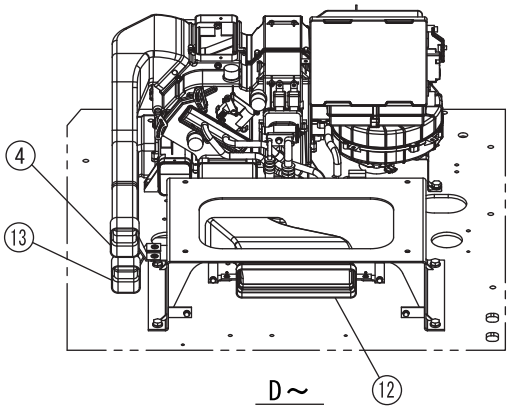

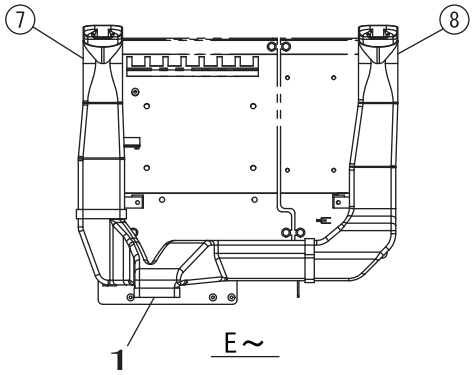

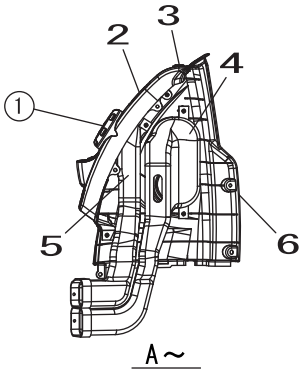

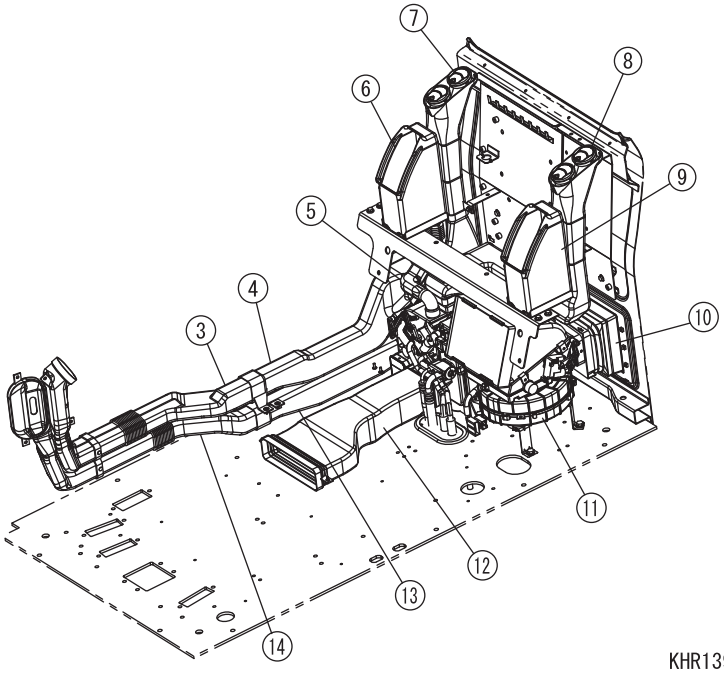

KHR13970-D02

https://truckmanualshub.com/

Layout Diagram

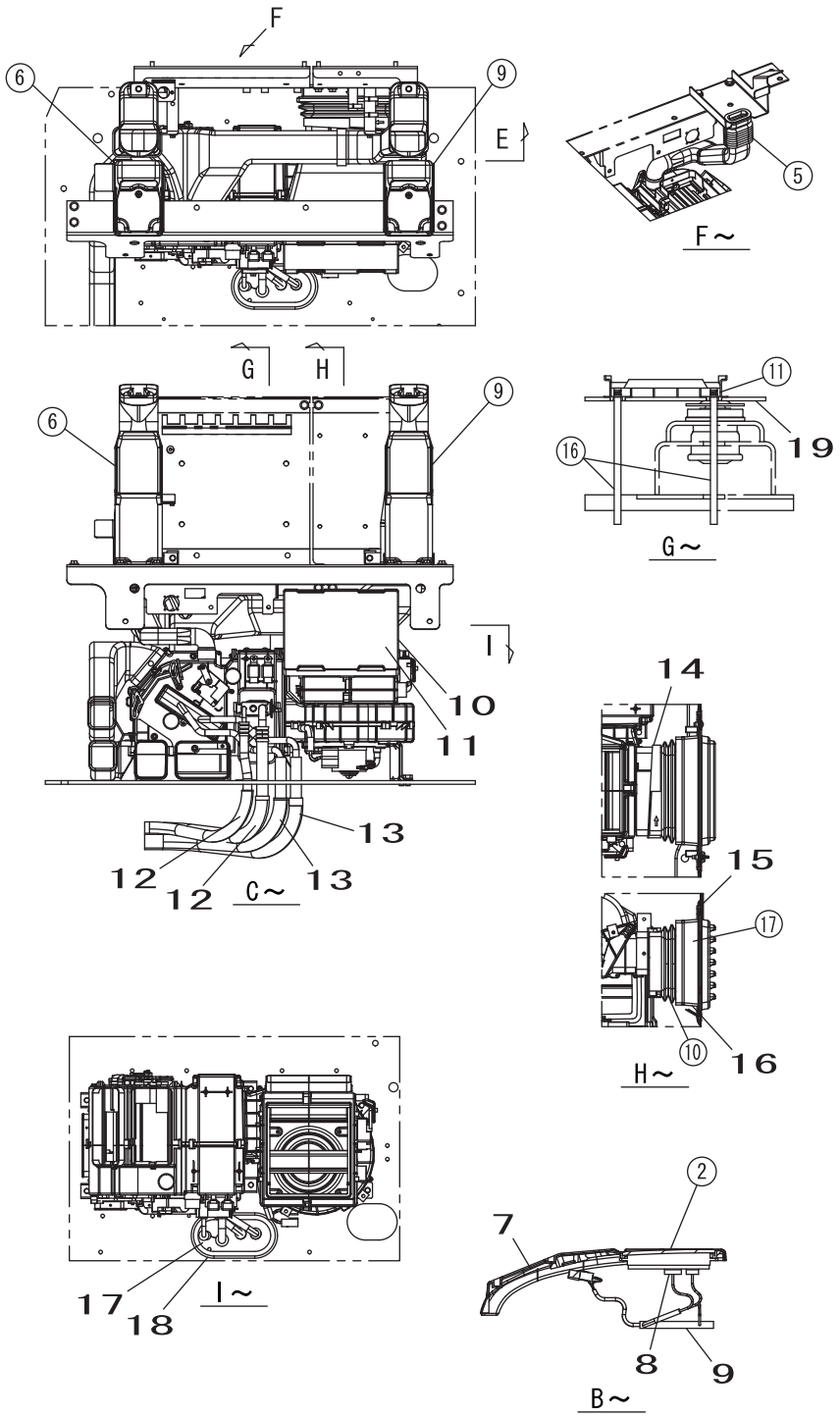

Code	Part name	Q'ty
1	Face grille	1
2	Control panel	1
3	Duct; FACE-B	1
4	Duct; FACE-C	1
5	Duct; H and C box	1
6	Box; Hot and cool	1
7	Duct; VENT (Right)	1
8	Duct; VENT (Left)	1
9	Box; Rear	1
10	Duct; Suction (Fresh)	1
11	Air conditioner unit	1
12	Duct; FOOT	1
13	Duct; DEF-C	1
14	Duct; DEF-B	1
15	Face grille	6
16	Drain hose	2
17	Air filter	1
18	Box; Bracket (left)	1

1	Duct
2	Trim; Side (Front upper)
3	Sensor; Air conditioner (Solar radiation)
4	Duct; DEF-A
5	Duct; FACE-A
6	Trim; Side (Front lower)
7	Cover; Top (Console left)
8	Console must be connected with the harness.
9	Harness; Wire (Console left)
10	Duct: suction
11	Filter; Inside air
12	Cooler hose
13	Heater hose
14	Duct; Flange
15	Cab; Operator
16	Filter case
17	Seal; Cushion
18	Grommet; Rubber
19	Floor

KHR13970-D02

https://truckmanualshub.com/

Layout Diagram

Equipment Layout Diagram

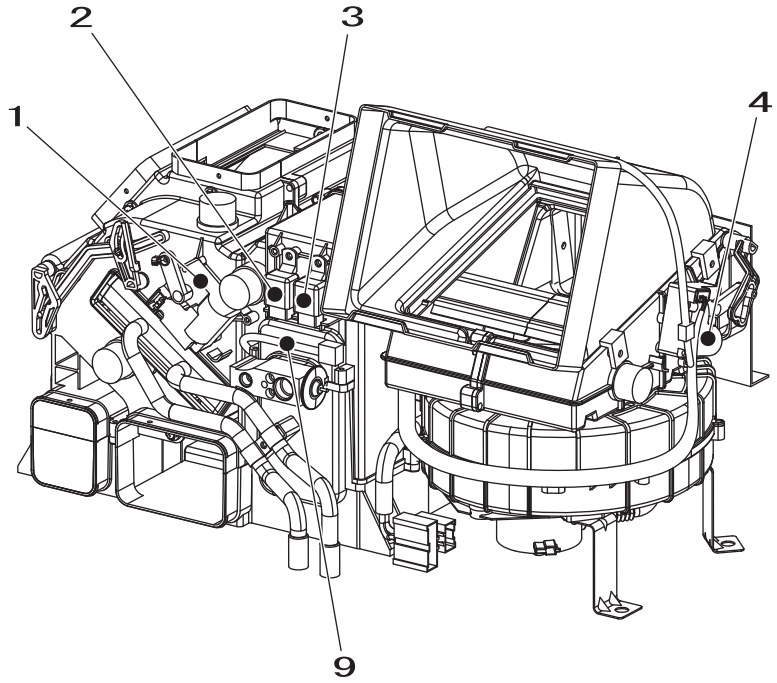

1	Motor actuator (mode)
2	Compressor relay
3	Blower OFF relay
4	Motor actuator (refresh/recirculate switch)
5	Interior temperature sensor
6	Blower motor
7	Blower amp
8	Motor actuator (air mix)
9	Evaporator sensor

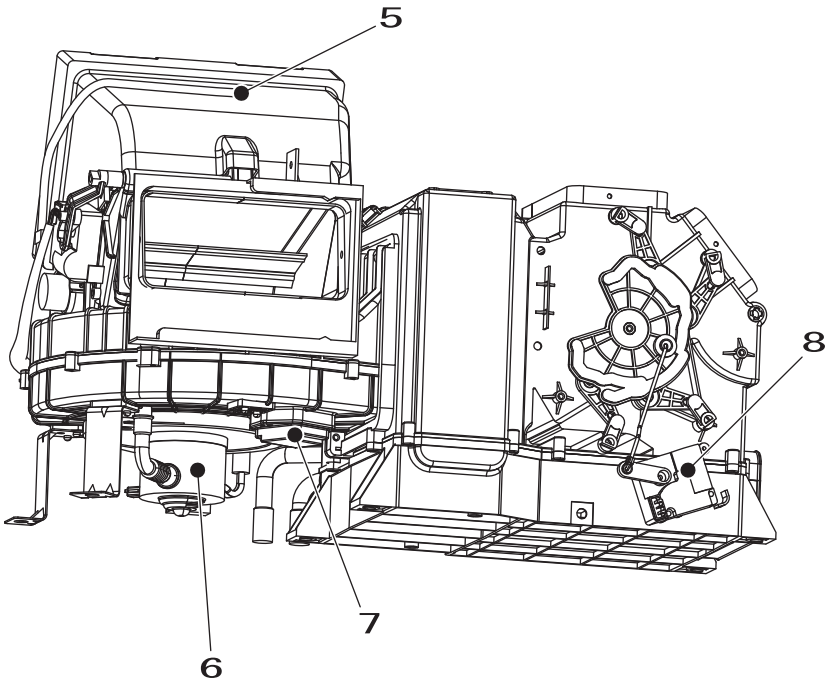

SG01007–001

https://truckmanualshub.com/

Circuit Diagram

Air Conditioner Circuit Diagram

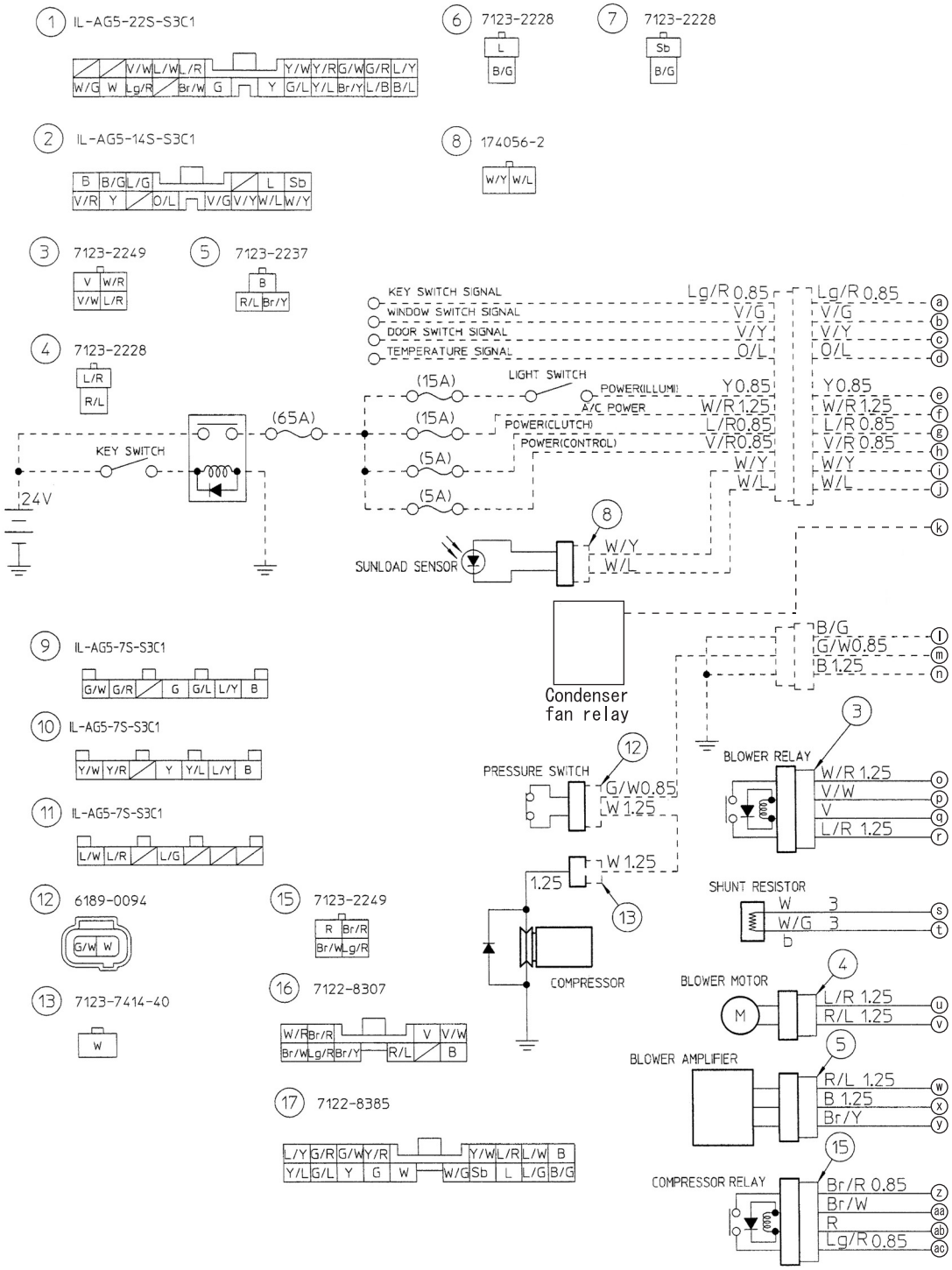

SG02005-001a

https://truckmanualshub.com/

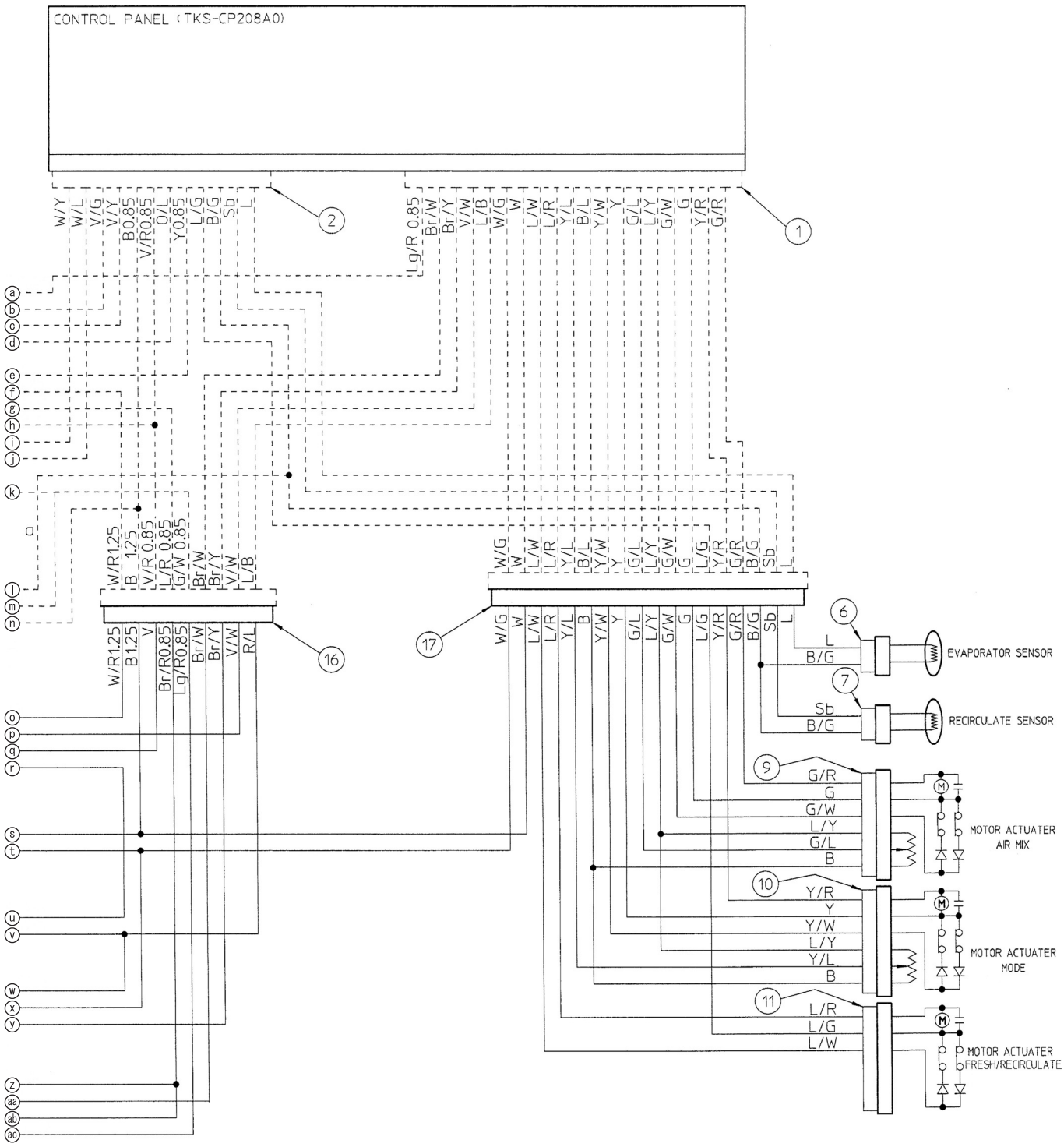

P	W	B	R	Y	G	L	Br	Lg	O	Sb	V
Pink	White	Black	Red	Yellow	Green	Blue	Brown	Light green	Orange	Sky blue	Purple

(Note)
1) Wire diameters that are not indicated are 0.5.
2) Broken lines indicate wiring on the vehicle side.
3) Codes displayed on the connectors indicate the code colors seen from the connection ports of the connectors.

https://truckmanualshub.com/

Explanation of Control

Back-up function

Even when air conditioner operation is stopped (switched OFF) with the ignition key power supply or operation panel ON/OFF switch, the set temperature and all the other setting states are stored in memory, so the next time air conditioner operation starts, it goes into the same state as before it was stopped.

When the ignition key power supply is cut off, the data is backed up by storing it in the internal EEPROM. However, if the main key power supply is cut off within 0.5 s of switch input, that switch input is not stored into memory. Also, the data read out from EEPROM when the power is switched ON is judged to see if it is within the valid range. If data outside the valid range was written into memory, for example due to noise, then operation starts from the default settings to avoid abnormal operation.

Fahrenheit temperature display

To switch, hold down both the temperature setting UP and DOWN switches for 5 s. The display toggles between Celsius and Fahrenheit display each time the switches are both held down for 5 s.

The Fahrentheit display is a two-digit integer and below the decimal point is not used, so "°F" is displayed. However, in case of trouble, this display takes priority.

When this display is switched, the new status is backed up in memory, so even if the main key power supply is switched OFF, the display status is retained. Internal calculations are all done in Celsius. Only the operation panel display is in Fahrenheit. Therefore, the display may differ slightly from the exact Fahrenheit temperature.

Below is shown the Fahrenheit temperature and the corresponding Celsius temperature used in internal processing.

Caution

These specifications are written with Celsius as the standard. Therefore, if the temperature is displayed in Fahrenheit, convert the temperature to centigrade by using the table below.

Fahrenheit and Celsius correspondence

Fahrenheit display [°F]	Interior recognition set temperature (Celsius) [°C]
63	18.0
64	18.5
65	19.0
:	:
77	25.0
:	:
91	32.0

https://truckmanualshub.com/

Explanation of Functions

1. Air Mix Motor Actuator Control

[1] Summary explanation
The provisional target degree of opening is determined from the target blow temperature and the current blow mode, various restrictions are applied, and the target degree of opening is calculated. Then drive is output to move the motor actuator position to the target degree of opening. Below are the details.

[2] Restrictions on operation angle according to the blow mode
When the blow mode motor actuator is in the B/L, FOOT, or DEF position, it is prohibited for this motor actuator degree of opening to be less than 20°

[3] Heater unit hysteresis correction operation (motor actuator one-direction stop)
After the actuator moves to the target degree of opening, it returns to the specified position. However, if the target degree of opening is less than 0° , the actuator is treated as having reached the target degree of opening when it reaches 0° , then it moves to the specified position.
(A stop in the fully-open direction is used as the standard.)

[4] Operation start / stop judgment

1) The operating motor actuator stops when the current position comes within the target position.
2) The stopped motor actuator operates when the current position goes beyond the target position.

[5] Motor actuator operation priority order
The operation priority for this motor actuator is No.1. This means that if the target degree of opening for this motor actuator changes and operation becomes necessary, even if some other motor actuator is operating, that other motor operation is paused, and this motor actuator operates.

2. Blow Mode Motor Actuator Control

[1] Summary explanation
The blow mode is switched by rotating the diffuser switching damper with the motor actuator. There are two types of control: auto and manual.

[2] Auto control
When the AUTO blow mode signal is recognized, the blow mode changes to auto control. During auto control, the diffuser is switched according to the target blow temperatureAuto control continues until operation of the blow mode select switch is recognized.

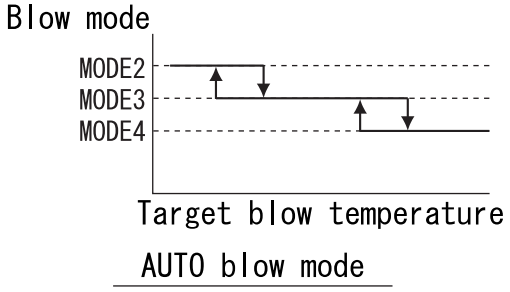

RST-07-03-001a

https://truckmanualshub.com/

[3] Manual control

1) When operation of the blow mode select switch is recognized, the motor actuators are driven to attain the output shaft angle below and the display is switched too. Each time operation of the switch is recognized, the display switches MODE1 → MODE2 → MODE3 → MODE4 → MODE1→ ... However, if this switch is pressed during auto control, auto control is ended and the diffuser is fixed at its current position.

2) MODE5 in the table below only occurs when operation of the DEF select switch is recognized. After that, when operation of the blow mode select switch is recognized, the blow mode becomes the one that was in effect just before operation of the DEF switch was recognized.

Blow mode and display and motor actuator angle

Blow mode	MODE 1	MODE 2	MODE 3	MODE 4	MODE 5
Blow mode motor actuator degree of opening	90°	65.5°	46.5°	26.6°	0°
Panel display	FACE	VENT	B/L	FOOT	DEF

[4] Mode unit hysteresis correction operation (motor actuator one-direction stop)
After the actuator moves to the target degree of opening a, it returns to the specified position. However, if a is less than 0 °, the actuator is treated as having reached the target degree of opening a when it reaches 0 °, then it moves to the specified position.
(A stop in the VENT or FACE direction is used as the standard.)

[5] Operation start / stop judgment

1) The operating motor actuator stops when the current position comes within the target position.

2) The stopped motor actuator operates when the current position goes beyond the target position.

[6] Blow mode control priority order
The priority order for auto control and manual control is as follows.

Control priority order

Priority order	Control
1	Manual control
2	Auto control

3. Refresh / Recirculate Switch Motor Actuator Control

[1] Recirculate mode
In refresh mode, when it is recognized that the refresh / recirculate switch on the operation panel has been closed, the system goes into recirculate mode. At this time, the display switches to recirculate and the refresh / recirculate switch motor actuator operates to the recirculate angle.

[2] Refresh mode
In recirculate mode, when it is recognized that the recirculate / refresh select switch on the operation panel has been closed, the system goes into refresh mode. At this time, the display switches to refresh and the refresh / recirculate switch motor actuator operates to the refresh angle.

https://truckmanualshub.com/

[3] Operation stop judgment
When one of the limiters is detected, operation stops.

Refresh / recirculate mode and refresh / recirculate display and motor actuator angle

Refresh / recirculate mode	Recirculate	Refresh
Refresh / recirculate motor actuator degree of opening	0 °	90 °
Panel display		

4. Blower Amp Control

[1] Summary explanation
The air flow is controlled by outputting to the blower amp connected in series with the blower motor. The air flow is switched by varying the analog voltage output by changing the PWM output duty ratio and increasing or decreasing the blower motor speed.
There are two types of air flow control: auto air flow control and manual air flow control. Also, in auto air flow control, the air flow is restricted by the cold blast prevention control etc.
Auto air flow control has no levels and manual control has four levels.

[2] Manual air flow control
Each time it is recognized that the air flow UP switch has been closed,
Lo → M1 → M2 → Hi
the air flow is fixed to the next higher level of air flow. When Hi is already displayed, the air flow is not changed.
In the same way, each time it is recognized that the air flow DOWN switch has been closed,
Hi → M2 → M1 → Lo
the air flow is fixed to the next lower level of air flow. When Lo is already displayed, the air flow is not changed.
The same is true when air flow control is switched from auto to manual. For example, when AUTO M1 is displayed, if it is recognized that the air flow DOWN switch has been closed, the display becomes Lo and AUTO is no longer displayed.
Also, the change speed for air flow output switchover is the same as discussed for auto below.

Relationship between air flow and PWM output

Air flow	Display	Target % (approx.)
Hi (maximum air flow)		100 %
M2		75 %
M1	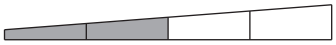	59 %
Lo (minimum air flow)		40 %

https://truckmanualshub.com/

[3] Auto air flow control
When it is recognized that the AUTO switch has been closed, the air flow is controlled automatically and AUTO is displayed.

1) During auto air flow control, the air flow is set according to the target blowing temperature as in Figure 3.
2) Auto air flow control continues until closing of either the air flow UP or air flow DOWN switch is recognized.
3) The auto air flow amount calculation results are continuous, not divided into levels.
4) When it is recognized that the AUTO switch has been closed, the display becomes as in Table 10 according to the results of the auto air flow amount calculation.
5) The normal auto air flow output change is roughly 5 V/s.
6) Auto air flow control is restricted by the cold blast prevention control described in [4], which is the next item.

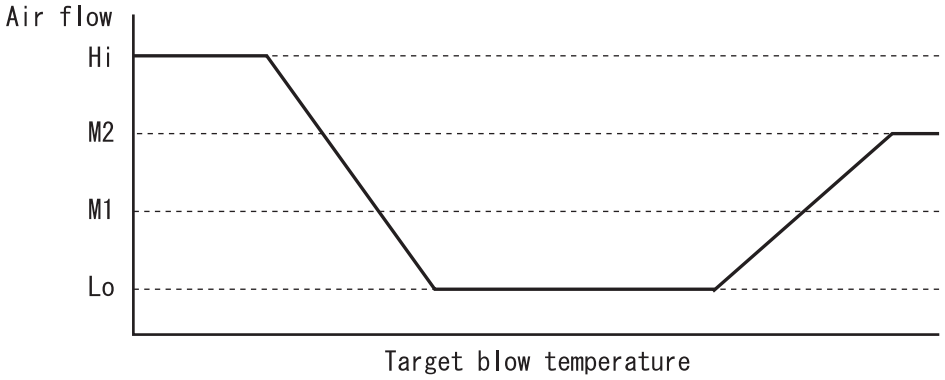

RST-07-03-001j

Relationship between air flow and target blow temperature

Display refreshing and air flow output correspondence table

Current display	Item	Target % (approx.)
Lo display	Output range changed to M1	When 53 % or higher
M1 display	Output range changed to Lo	When 46 % or lower
	Output range changed to M2	When 70 % or higher
M2 display	Output range changed to M1	When 64 % or lower
	Output range changed to Hi	When 92 % or higher
Hi display	Output range changed to M2	When 83 % or lower

https://truckmanualshub.com/

[4] Cold blast prevention control

The air flow is restricted according to the value of the coolant temperature and other parameters sent from the vehicle side. The air flow restriction has two levels - air flow 0 and air flow Lo. Whether or not to use the restriction is determined from the judgment results.

1) Conditions under which cold blast prevention control is used

1. Auto air flow
2. When set temperature - inside air sensor temperature ≥ 11
3. When the coolant temperature signal from vehicle is the less than 35°C signal or the 35 °C or higher but less than 45 °C signal

Under the condition above, the inside air sensor temperature is the value immediately after the ignition key power is switched ON and AUTO and Tset are according to the current switch states. Therefore, when the AUTO switch is pressed after the air flow has been set manually, if the coolant temperature is within the cold blast prevention range, the air flow is restricted. In the same way, even if the set temperature is changed, if the conditions are met, the air flow is restricted.

While cold blast prevention control is being executed, the display corresponds to the restricted air flow.

2) Air flow 0 control

When the coolant temperature signal from vehicle is the less than 35 °C signal, the air flow is set to 0. This continues until a coolant temperature signal of 30 °C or higher is received. Once a coolant temperature signal of 30 °C or higher is received and these conditions are no longer met, air flow 0 is ended.

3) Air flow Lo control

When the coolant temperature signal from vehicle is the 35 °C or higher but less than 45 °C signal, the air flow is set to Lo. This continues until a coolant temperature signal of 45°C or higher is received. Also, the same as for 2), this shift is irreversible. Once a coolant temperature signal of 45 °C or higher is received, control is normal.

Coolant temperature signal sent from the vehicle (one cycle)

* Finalized by the same waveform for three cycles. However, for the first combustion after the ignition switch is switched ON, judged with the latest one cycle.
* The default state for the coolant temperature signal when the ignition is switched ON is 45°C or higher.

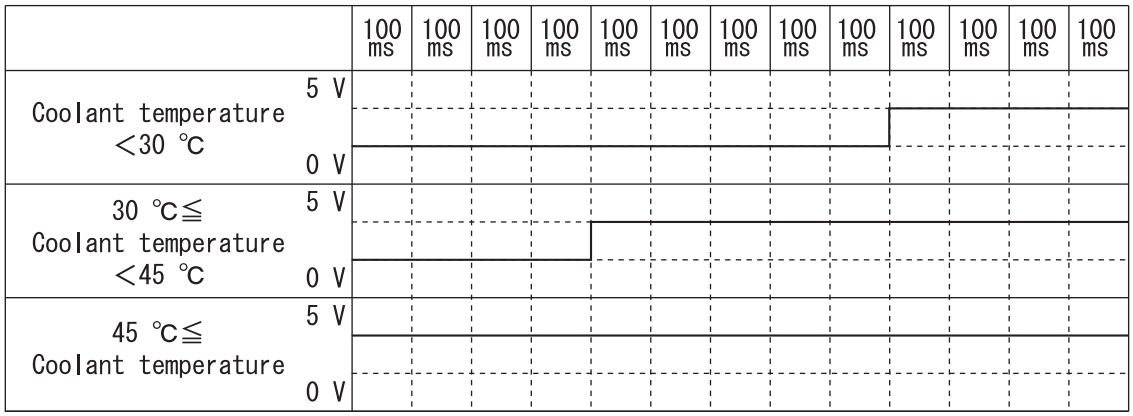

RST-07

https://truckmanualshub.com/

[5] Air flow control priority order
The priority order for auto air flow control, manual air flow control, and cold blast prevention control is as follows.

Control priority order

Priority order	Control
1	Blower air flow control when mode motor actuator angle switched
2	Manual air flow control
3	COOLMAX control
4	Cold blast prevention control
5	HOTMAX control
6	Auto air flow control

5. Compressor Clutch Control

[1] Summary explanation
The compressor clutch is controlled by the power to the clutch coil being switched ON/OFF by an external relay. This control is executed by thermo operation, the condensation prevention function, and the fletching prevention function. Thermo operation has control mode 1 and control mode 2. These modes are applied according to the blow mode and other conditions. However, for blower air flow 0, the compressor clutch is switched OFF. The operation temperature does not include the thermistor variation.

[2] Thermo operation (AC switch ON)

1) Control mode switchover
- When the blow mode is B/L and the target blow temperature is as in the figure below, control mode 2 is used.
  As the figure shows, there is hysteresis between control modes 1 and 2.
- Other than the above is all control mode 1.

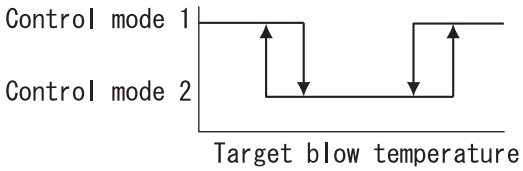

Relationship between control mode and target blow temperature for B/L

2) Control mode 1
- OFF temperature: 5 ± 1 °C
  When this temperature or lower is detected, the compressor clutch is switched OFF.
  (It is kept OFF until a temperature at or above the ON temperature is detected.)
- ON temperature: OFF temperature + 2 ± 0.5 °C
  When this temperature or higher is detected, the compressor clutch is switched ON.
  (It is kept ON until a temperature at or below the OFF temperature is detected.)

3) Control mode 2
- OFF temperature: 5 ± 1 °C
- ON temperature: OFF temperature + 2 ± 0.5 °C

https://truckmanualshub.com/

[3] Condensation prevention function

1) Timer set temperature: 8 ± 2 °C
When this temperature or lower is detected, the timer is set and starts counting.(It is not reset until a temperature at or above the timer cancel temperature is detected.)

2) Timer cancel temperature: Timer set temperature + 1 ± 1 °C
When this temperature or higher is detected, the timer is reset.

3) Count-up time: 10 ± 1 minutes
When the timer count reaches this time, the compressor clutch is switched OFF. After this, when the timer recovery temperature or higher is detected, the compressor clutch is switched ON and timer setting is prohibited.

4) Timer recovery temperature: Timer set temperature + 2 ± 1 °C
When this temperature or higher is detected, the compressor clutch is switched ON and timer setting is permitted.

[4] Fletching prevention function

1) Operation conditions
After the end of initial operation, if 5 ± 1 minutes continue with the air flow M2 or higher and the compressor clutch not coming ON even once, the compressor clutch is switched ON one time.
This control is cleared by the ignition key power being switched OFF and this control starts again when this power supply is switched ON again.
Compressor clutch ON time: 1 ± 0.6 s

2) This control takes priority over all other control.

[5] AUTO switch link function
When operation of the AUTO switch is recognized, compressor clutch control comes ON and AUTO is displayed.

1) Compressor clutch control is the same control as for the AC switch being switched ON.

2) When it is recognized that the AC switch has been switched OFF, the AUTO display goes out. Even when it is recognized that the AC switch has been switched ON again, AUTO is not displayed.

However, at this time, if the main key power is switched OFF, then ON again, since the AC ON, air flow AUTO, and blow mode AUTO conditions are all met, AUTO is displayed.

6. COOLMAX Control and HOTMAX Control

[1] When the set temperature is 18.0 °C [COOLMAX] (or 18. E)

1) The air mix motor actuator is set to the 0° limiter position (fully closed).

2) For auto air flow control, the air flow is set to Hi.

3) For AUTO blow mode control, the blow mode is set to VENT.

[2] When the set temperature is 32.0 °C [HOTMAX]

1) The air mix motor actuator is set to the 90 ° limiter position (fully open).

2) For auto air flow control, the air flow is set to M2.

3) For auto blow mode control, the blow mode is set to FOOT.

https://truckmanualshub.com/

7. Trouble Detection and Control after Trouble Detected

[1] Summary explanation

If there is trouble in a motor actuator drive line or sensor controller input circuit, the trouble is detected and control from then on changed as described below.

In any of these cases, once trouble has been detected, even when that location is returned to normal, trouble control is not ended. Trouble control is only ended when the ignition key power supply is switched OFF or when air conditioner operation is stopped with the ON/OFF switch on the operation panel. However, motor actuator restriction is only ended by switching OFF the main key power supply.

[2] Trouble in a motor actuator and its input / output circuits

1) Disconnection detection

Immediately after the main key power supply is switched ON, if a motor actuator potentio-meter line is disconnected or shorted, the display in the table below for that motor actuator is carried out and that motor actuator is not driven until the main key power is switched OFF, then ON again.

Disconnection detection display

Trouble location	Trouble display
Air mix motor actuator	HL.E is displayed on the set temperature display LCD.(See the figure below.)
Blow mode motor actuator	The passenger icon display flashes.
Refresh / recirculate motor actuator	Potentio-meter line not used

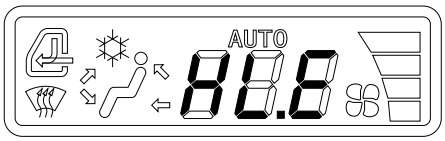

RST-07-03-001m

2) Motor lock detection

If the output shaft rotation angle for a motor actuator does not reach its target value within 15 s, this is treated as lock detection, output to that motor is stopped, and trouble is displayed on the controller according to the trouble location.

Motor lock detection display

Trouble location	Operation panel trouble display
Air mix motor actuator	HL.E is displayed on the set temperature display LCD.(See the figure below.)
Blow mode motor actuator	The passenger icon display flashes.
Refresh / recirculate switch motor actuator	The refresh / recirculate mark flashes.

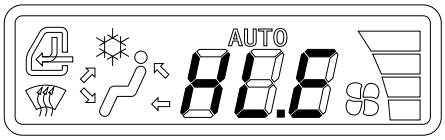

RST-07-03-001m

https://truckmanualshub.com/

[3] Trouble in a sensor or its input / output circuits (disconnection or short)

1) Disconnection or short in the inside air sensor or its input / output circuits

1. Operator compartment temperature control end
   - All control related to the operator compartment temperature (target blow temperature) is stopped and the air mix degree of opening is directly adjusted according to the temperature adjustment switch input.
   - Accompanying this, the operation panel set temperature display changes as in the figure below.

HL. *

* is a value from 0 to 9. Each time the DOWN switch is closed, this value decreases by 1.
Each time the UP switch is closed, this value increases by 1.

For any blow mode other than FACE or VENT, the minimum value is set to 1.

Display and control for inside air sensor trouble

* value	Motor actuator degree of opening (°)
0	0 °
1 to 8	* value x 10 °
9	90 °

2. Auto air flow control end
   - The air flow is temporarily fixed at that in effect when the inside air temperature sensor trouble was detected.
   - The AUTO display is set flashing.
   - After this, the air flow is switched by the manual air flow switch.
3. AUTO blow mode control end
   - The blow mode is temporarily fixed at that in effect when the inside air temperature sensor trouble was detected.
   - The AUTO display is set flashing.
   - After this, the blow mode is switched by the manual blow mode switch.
4. Air mix damper degree of opening display priority
   - Even if the trouble shown by one of the items below occurs during inside air sensor trouble, E is not displayed in the * section below the decimal point and the air mix damper degree of opening display is given priority.
   - HL.E is only displayed for air mix motor actuator trouble.
5. Thermo operation control mode fixed
   - Switching of the control mode according to the blow mode and target blow temperature is stopped and the control mode is fixed at control mode 1.

2) Disconnection or short in evaporator sensor or its input / output circuits

1. Compressor control is not executed and the compressor clutch is always OFF. However, fletching prevention control is executed.
2. E is displayed in the first fraction position of the set temperature display LCD.
   (See the figure below.) (The temperature setting is in 1 °C steps.)
   However, E is not displayed for inside air sensor trouble.

https://truckmanualshub.com/

3. The AC mark flashes.

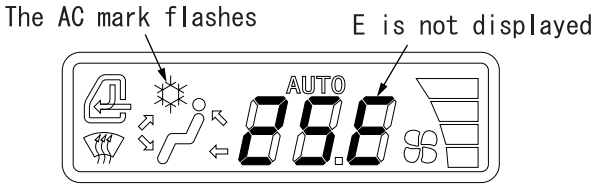

RST-07-03-001o

3) Disconnection or short in solar radiation sensor or its input / output circuits
   1. The solar radiation compensation data is set to 0.
   2. E is not displayed in the first fraction position of the set temperature display LCD as it is for other sensors.
4) Coolant temperature signal trouble
   Cold blast prevention control does not work and normal control is used.

8. Monitor Mode

[1] Summary explanation
Monitor mode is a mode for understanding trouble in the controller itself or in other control. The system goes into monitor mode when there is the special switch input below on the operation panel.

[2] Starting monitor mode
When the air conditioner is operating with basic control, if the operation panel ON/OFF switch closed path continues for 1 s while the refresh / recirculate switch closed path is ongoing, monitor mode is started.

[3] Monitor contents
1) LCD segment diagnosis
   When monitor mode is entered, the target LCD lights up for 1 s. An LCD with trouble does not light up.
2) Sensor diagnosis
   The detection value (AD value or °C) for each sensor is displayed.
3) Coolant temperature signal recognition value
   This displays the reception status for the coolant temperature signal sent from the vehicle.

[4] Monitor contents
1) LCD segment diagnosis
   When monitor mode is entered, the target LCD lights up for 1 s. An LCD with trouble does not light up.
2) Sensor diagnosis
   The detection value (°C) for each sensor is displayed.

[5] Display contents in monitor mode
In monitor mode, the data (detection value for each sensor, coolant temperature signal recognition, etc.) is displayed in the 3 digits of the 7-segment display for the temperature setting. The data displayed is selected with the blower UP/DOWN switches and AUTO switch. The blower UP/DOWN switches move the display on the dedicated monitor mode 7-segment display through 16 displays, 0 to F, and the corresponding data is displayed.(Table A on next page) Hexadecimal data display and decimal data display can be selected with the AUTO switch. Only for the coolant temperature signal recognition value, the value detected immediately before entry into monitor mode is displayed.
The difference between hexadecimal data and decimal data is indicated by the 3 digit of the 7-segment display. For hexadecimal data, "H" is displayed there and for decimal data, numbers (0 to 9) are displayed there.

https://truckmanualshub.com/

Explanation of Functions

1) Hexadecimal display
AD values 00H through FFH are displayed. When the AD value corresponds to that in Table B on the next page (or Table C for the solar radiation sensor), this indicates a disconnection or short. In the hexadecimal display, when the value of a sensor changes in monitor mode, the hexadecimal display changes with it. If the display before entering monitor mode was HL.*, the error judgment value is displayed.(In other words, the value detected before the trouble was detected) In the same way, if the display before entering monitor mode was **.E, the display becomes **.E and the error judgment value is displayed.

2) Decimal display
From -99.9 °C to 99.9 °C is decimal display. Also, the "-" minus display displays the arrow mark for FOOT mode.

[6] Air conditioner operation in monitor mode
When the system enters monitor mode, all output (operation) through control is stopped and until monitor mode is ended, operations and settings of basic control through all the switches are not possible.

[7] Ending monitor mode
In monitor mode, if the operation panel ON/OFF switch closed path continues for 1 s while the refresh / recirculate switch closed path is ongoing, monitor mode is ended and the system returns to the basic control state. The same also occurs if the ignition key power supply is switched OFF.

Table A

Dedicated monitor mode 7-segment display	Display contents				
0	Inside air sensor temperature data				
1	Evaporator sensor temperature data				
2	Solar radiation compensation data				
C	Coolant temperature signal status data				
		Trouble	Lower than 30 °C	30 °C or higher and lower than 45 °C	45 °C or higher
		4	1	2	3
3 to 9 and B to F	Data (sensor diagnosis etc.)				

Table B

Sensor name	Short	Disconnection
Inside air sensor	F6H	0CH
Evaporator sensor	F6H	0CH

Table C

Sensor name	5 V short	Ground short
Solar radiation sensor	C7H	0CH

https://truckmanualshub.com/

9. Door Switch Control

[1] Summary explanation
This control adds a restriction to air conditioner operation with the door switch or front window switch. Its purpose is to prevent overheating of the ignition unit. Concretely, it suppresses condenser heating and controls in a way restricted in order to obtain a feeling of comfort.

[2] Door switch / front window switch signal
The signal input into the controller is as follows for both the door and front window switches.

1) When door / front window open
When contact closedIn other words, the control controller input is at ground level.

2) When door / front window closed
When contact openPulled up to 5 VDC inside the control controller

[3] Control restricted by door switch / front window switch

1) Starting restricted control
When either the door or front window is open continuously for 1 s or longer, it is recognized that the switch is open. At the count of 60 s, the buzzer buzzes the same way as for switch input to tell the operator that restricted control is starting and that control starts.

2) Restricted control

1. For both auto and manual blow mode control
Even if auto or manual blow mode is selected, unless the blow mode is FACE, the following air flow restriction is executed.(If the blow mode is FACE, the air flow is not restricted.)
I. If the target blow temperature < 20 °C, the air flow upper limit is set to M1.
II. If the target blow temperature ≥ 25 °C, the air flow restriction in I is ended.

2. When the current blow mode control is AUTO
Auto control with the AUTO blow mode VENT changed to FACE is used.

3. When the current blow mode control is manual selection
Only if the blow mode is VENT immediately after the open switch is recognized, that mode is changed to FACE. After this, all the blow modes can be selected with manual operation.

3) Ending the restriction
When both the door and front window are closed continuously for 1 s or longer, it is recognized that the switches are closed. After a count of 1 s, the buzzer buzzes the same way as for switch input to tell the operator that restricted control has been ended.
When the restricted control is ended, the restriction on the air flow discussed in 1. above and the change from VENT to FACE in 3. are ended and control returns to normal. However, if the blow mode has been manually selected, even if the mode was changed from VENT to FACE by the above restriction, it does not return to VENT when the restricted control is ended.

10.Inside Air Filter Clogging Detection Control

[1] Summary explanation
This control recognizes the blower current with the dedicated shunt resistor voltage input, judges from that value whether or not the AC unit inside air filter is clogged and if it judges that that filter is clogged, it issues a warning to encourage the operator to replace the filter.

[2] Filter detection control

1) Starting detection control (detection timing)
5 s after the end of initial operation, if the air conditioner is operating and the cold blast prevention conditions are not present, this control is started. Also, this control is executed every 50 hours of air conditioner (blower) operation. However, during a temporary filter clog or filter clog, it is executed every time.

2) Detection method
Cooling / heating is judged from the operation mode and in this way the air mix motor actuator target position is determined. Also, the mode motor actuator target value is set to FOOT, the blower air flow target value is set to M1, and output is made to attain the target values. When all

https://truckmanualshub.com/

the target values are attained, the blower current from the shunt resistor voltage is recognized, and the filter clog is judged by comparing this current with the default current value.

(Cooling / heating judgment)

When the operation mode is	FACE or VENT,	: Cooling (COOLMAX)
	When FOOT or DEF	: Heating (HOTMAX)
	When B/L: Final inside air temperature	If < 22 °C, heating
	When B/L: Final inside air temperature	If ≥ 22 °C, cooling

(Detection current threshold)

Relative to the default current value	For cooling	: 0.37 ± 0.02 A min.
	For heating	: 0.51 ± 0.03 A min.

If the value is below this three times in a row, it is judged that there is a clog.

(Default current value)

Current found in the initialization operation described below.

3) Clog warning

(Buzzer)

The buzzer buzzes intermittently at 1 Hz for 10 s.

(Display)

"FIL" is displayed on the 7-segment display for the set temperature for 10 s. Other marks go out.

However, if there is any switch input, the "FIL" display is ended immediately.

4) Alarm reset

If a reset detection value is recognized during the clog state, the clog state is reset.

The reset detection value is 50 % of the clog detection threshold.

5) ON/OFF switching

This function is switched ON/OFF by pressing the [Refresh / Recirculate], [MODE], and [DEF] switches at the same time. The factory setting for this function is OFF. This function does not come ON until the initialization operation discussed below is executed.

(Buzzer)

When operation of this switch is recognized, there is the normal switch input sound.

(Display)

ON or OFF is displayed on the set temperature 7-segment display, whichever is the state after switching. Other marks go out.

6) Initialization operation

When the [Refresh / Recirculate] and [DEF] switches are pressed at the same time, the default current value is detected and all the data for filter detection is initialized. Before executing this operation, make sure that the air conditioner unit (with a new inside air filter installed), ducts, and grilles (with all grilles fully open) are all installed in their normal states on the vehicle. If initialization is carried out in any other state, there is a danger of the clog detection judgment control making an incorrect judgment. Immediately after replacing the inside air filter with a new one, execute the initialization operation.

(Buzzer)

When operation of the switch is recognized, the buzzer buzzes with the normal switch input sound. When the detection ends, the buzzer buzzes for 3 s.

7) Detection processing avoidance

- When the inside / outside air damper is not at the recirculate position immediately before the current value is read
- When the power supply voltage is not in the tolerance range for the voltage during the initialization operation
- Trouble in any of the motor actuators

https://truckmanualshub.com/

Air Mix Motor Actuator Inspection

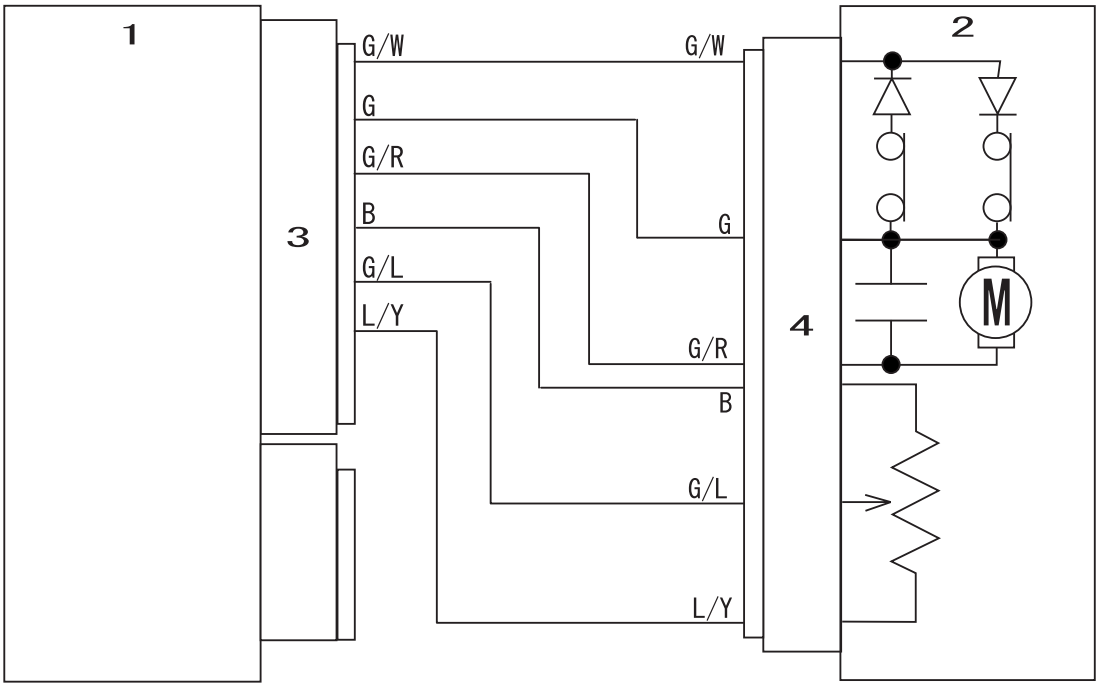

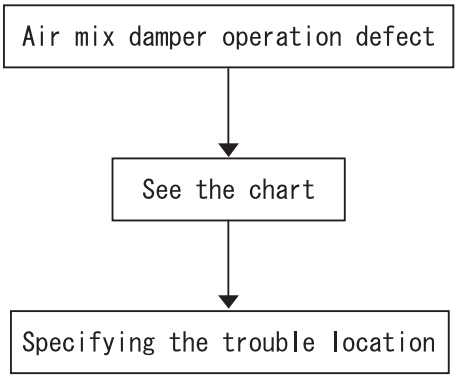

RG04003-001

1	Control amp
2	Air mix motor actuator
3	Connector 1
4	Connector 9

https://truckmanualshub.com/

Actuator Inspection

•Chart

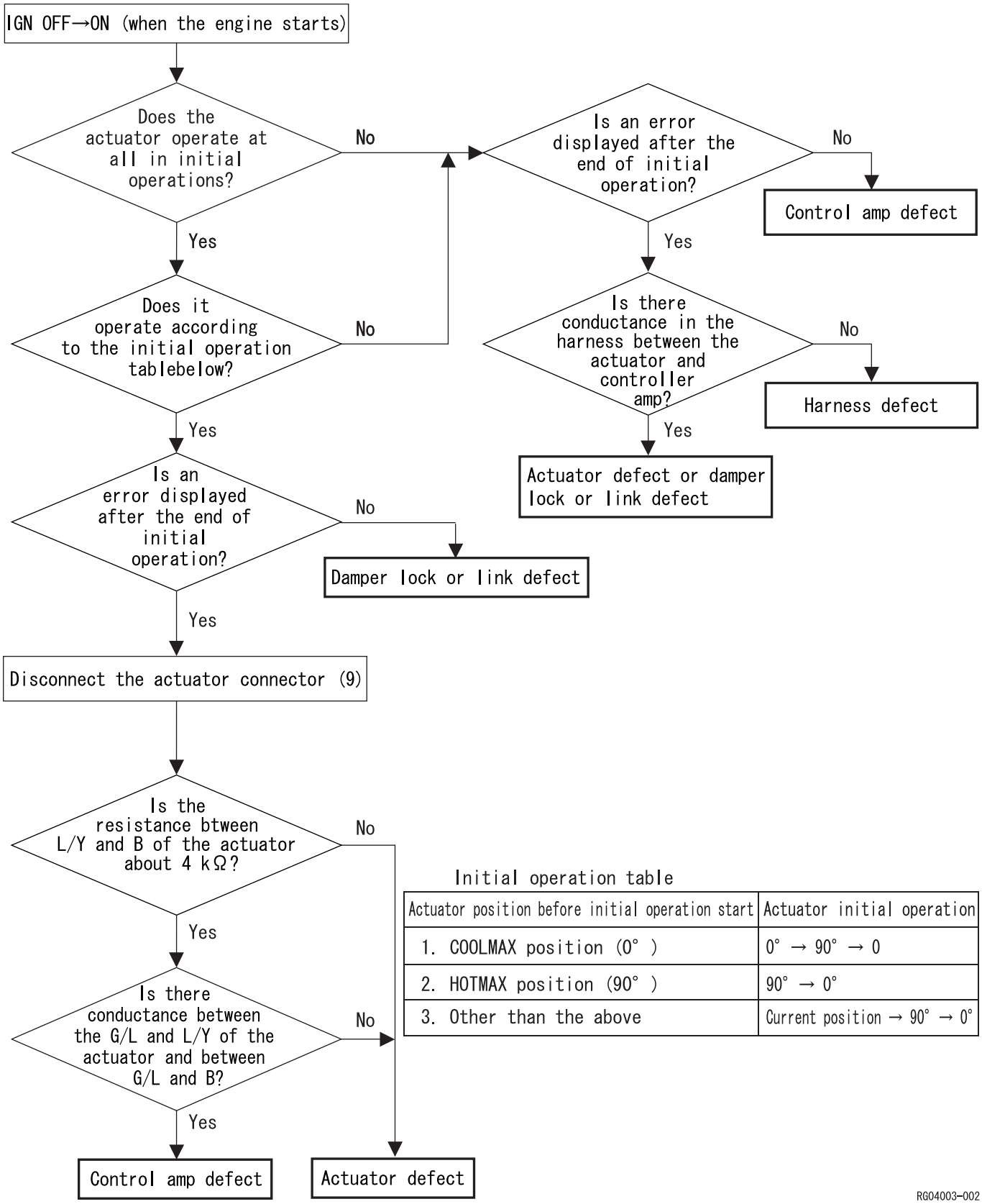

Initial operation table

Actuator position before initial operation start	Actuator initial operation
1. COOLMAX position (0°)	0° → 90° → 0
2. HOTMAX position (90°)	90° → 0°
3. Other than the above	Current position → 90° → 0°

https://truckmanualshub.com/

Refresh / Recirculate Motor Actuator Inspection

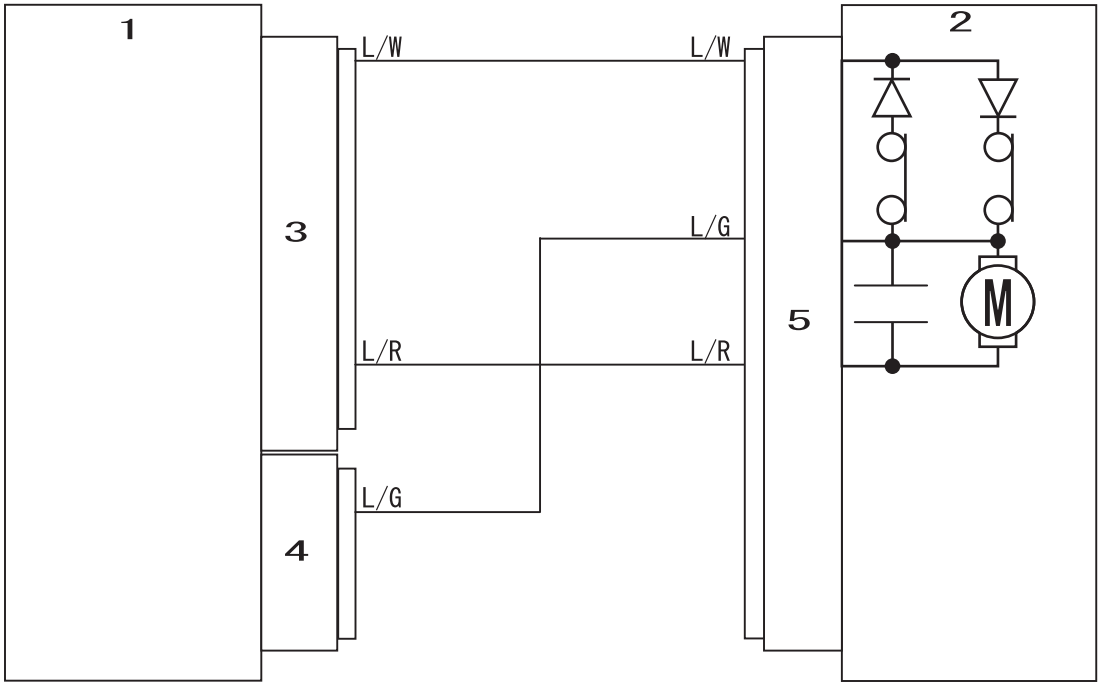

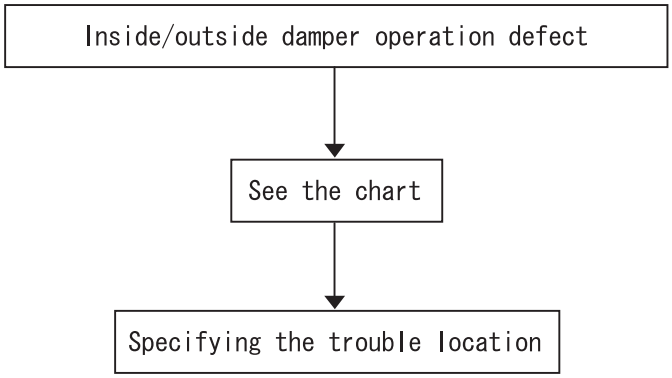

RG04003–003

1	Control amp
2	Refresh/recirculate motor actuator
3	Connector 1
4	Connector 2
5	Connector 11

https://truckmanualshub.com/

Actuator Inspection

•Chart

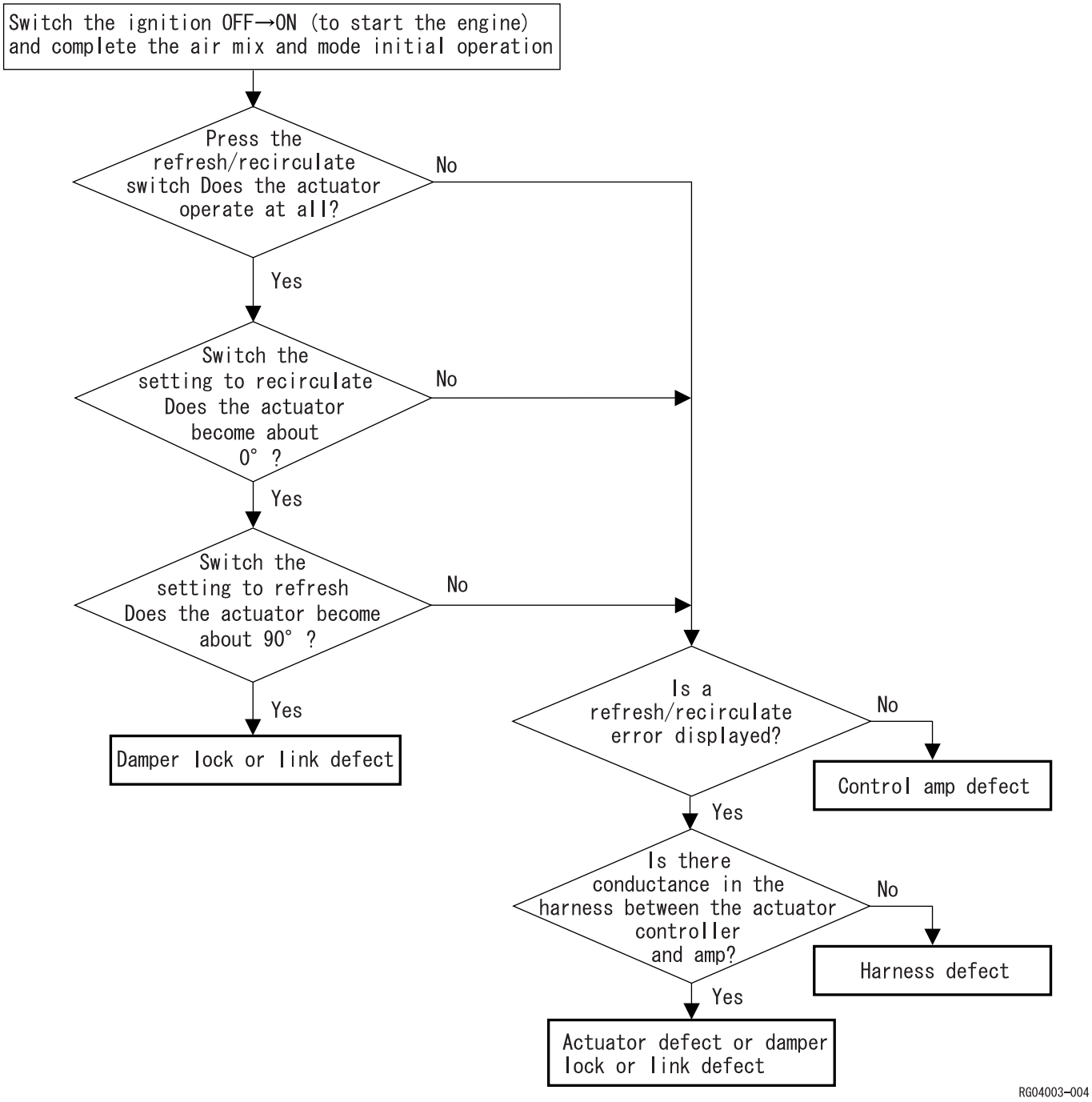

https://truckmanualshub.com/

Mode Motor Actuator Inspection

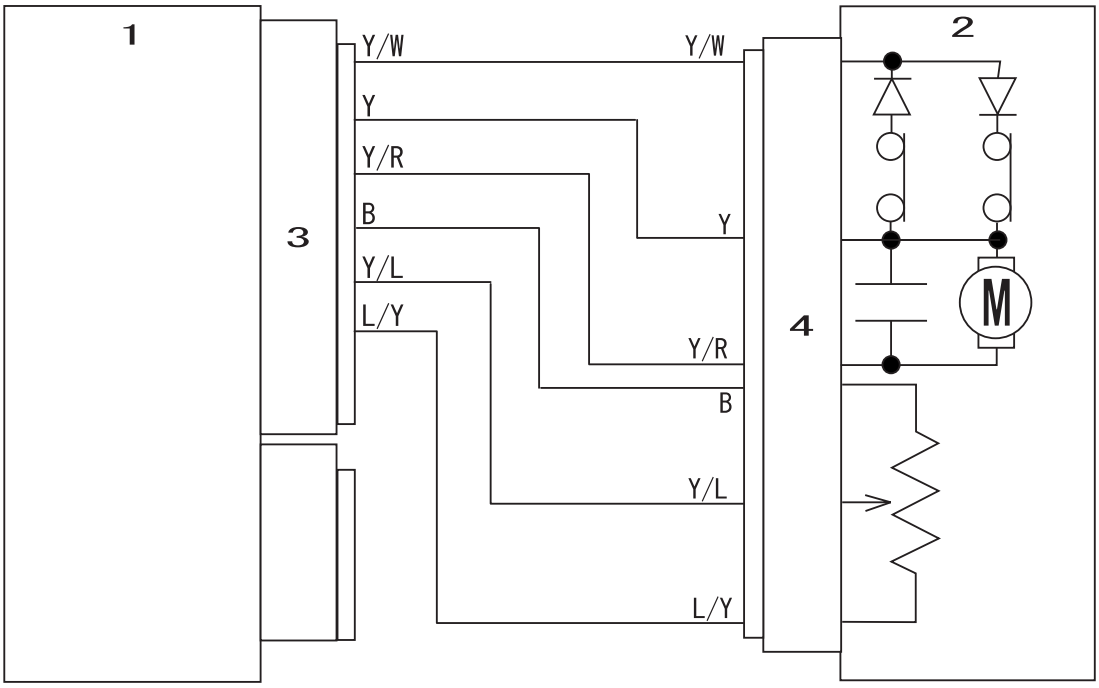

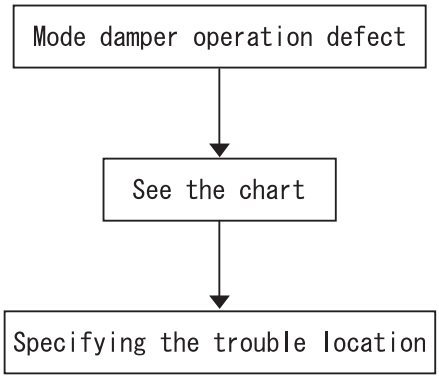

RG04003–005

1	Control amp
2	Mode motor actuator
3	Connector 1
4	Connector 10

https://truckmanualshub.com/

Actuator Inspection

•Chart

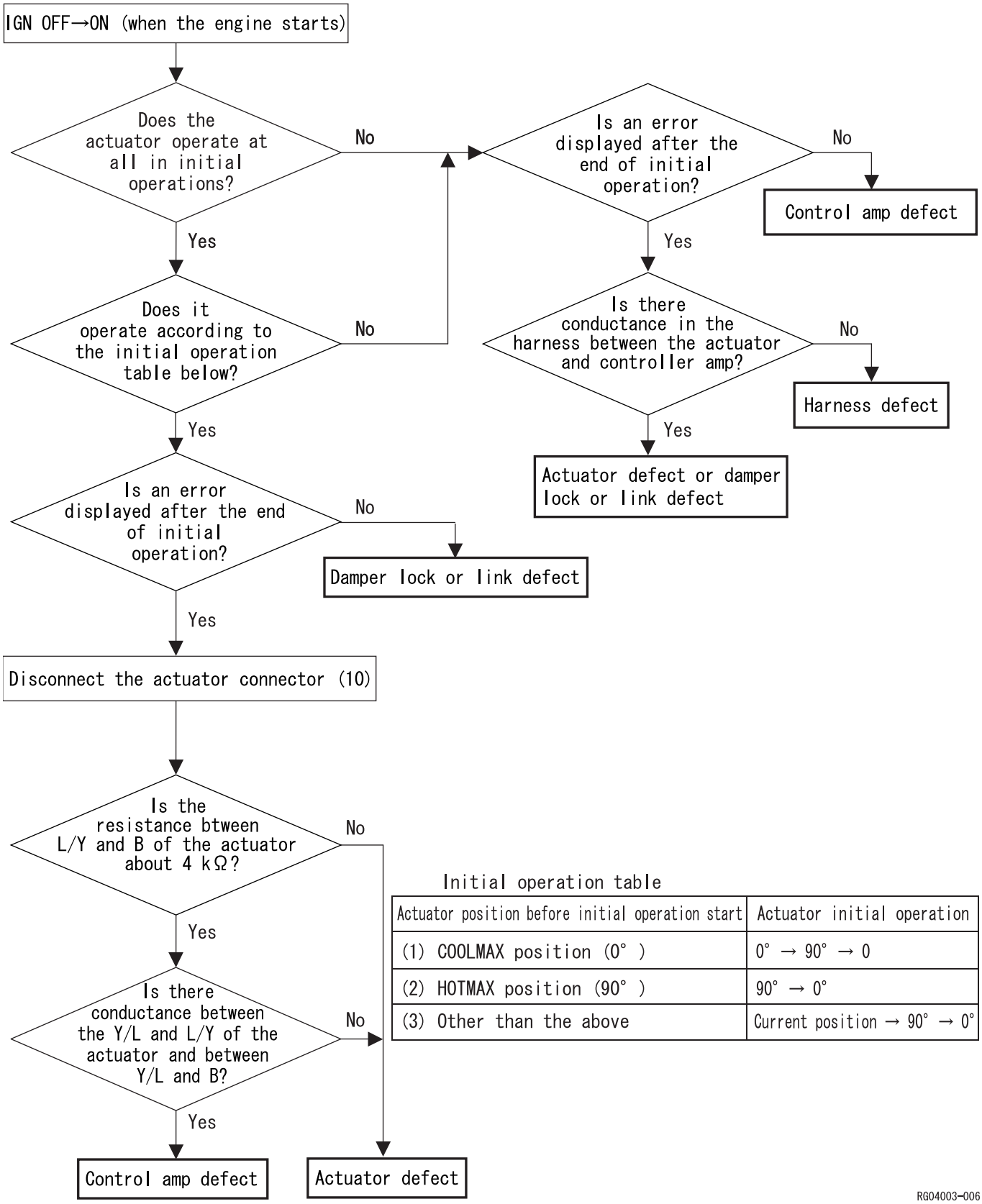

Initial operation table

Actuator position before initial operation start	Actuator initial operation
(1) COOLMAX position (0°)	0° → 90° → 0
(2) HOTMAX position (90°)	90° → 0°
(3) Other than the above	Current position → 90° → 0°

https://truckmanualshub.com/

Abnormality Display and Self-check Procedures

Motor actuator and sensor abnormalities can be checked on the panel display.

1. Abnormality Display Position

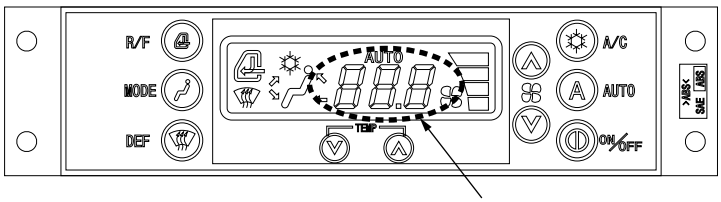

Error displayed on 3-digit 7-segment display

RST-07-05-001a

2. Explanation of Abnormality Display

(1) Motor actuator abnormality

[1] HL.E displayed on 3-digit 7-segment display.

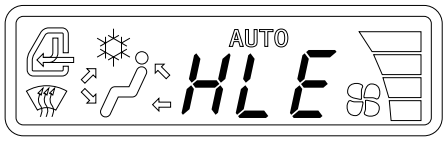

RST-07-05-001b

Check the air mix damper motor actuator for a harness disconnection or disconnected connector.

[2] MODE flashes.

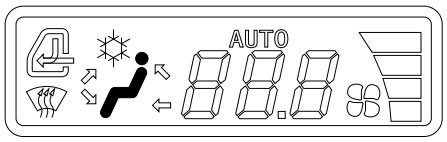

RST-07-05-001c

Check the blow mode damper motor actuator for a harness disconnection or disconnected connector.

[3] The R/F flashes.

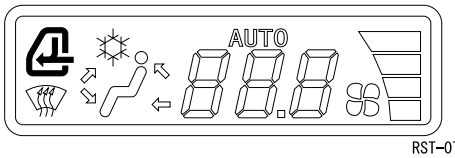

RST-07-05-001d

Check the refresh/recirculate damper motor actuator for a harness disconnection or disconnected connector.

Caution

With the panel ON/OFF switch ON, the above display and flashing does not function even if a harness disconnection or disconnected connector occurs.

After trouble occurs, when the panel ON/OFF switch is switched ON, the function is displayed.

After trouble is resolved, the abnormality display and flashing are not ended until the main switch is switched OFF → ON.

https://truckmanualshub.com/

(2) Sensor abnormality

[1] HL.* displayed on 3-digit 7-segment display

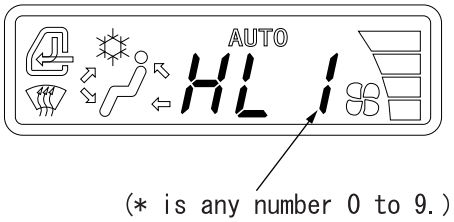

RST-07-05-001e

Check the inside air sensor and check its harness for disconnections, shorts, or connector connection defects.

[2] **.E and the ❄ mark flashing are flashing on the 3-digit 7-segment display. (** displays the set temperature value at that time still remaining.)

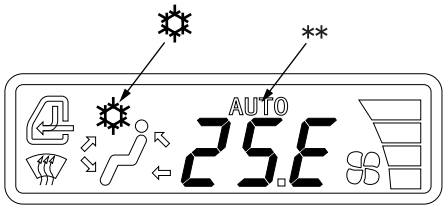

RST-07-05-001f

Check the evaporator sensor and check its harness for disconnections, shorts, or connector connection defects.

Caution

The display in [1] and [2] above is displayed on the 3-digit 7-segment display when trouble occurs with the panel ON/OFF switch ON status.

After the trouble section is repaired, end the abnormality display by switching the panel ON/OFF switch OFF → ON.

https://truckmanualshub.com/

3. Explanation of Monitor Mode

2. (2) When sensor trouble is displayed, the sensor status (disconnection, short) can be checked in monitor mode.

(1) Monitor mode display position

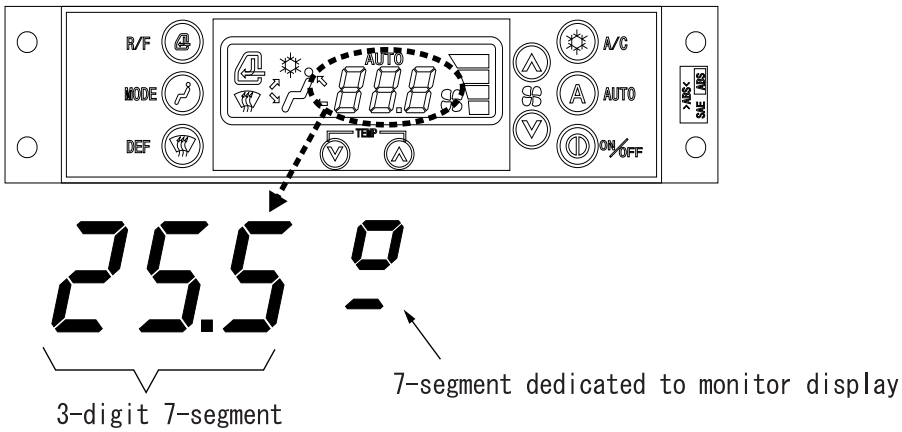

(2) Monitor mode display operating method

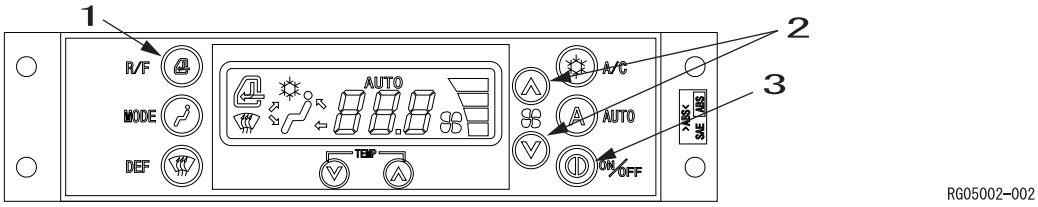

1	Refresh/recirculate select switch
2	Blower switch UP/DOWN switch
3	ON/OFF switch

[1] Hold down the refresh/recirculate select switch and the ON/OFF switch at the same time for 1 sec. or longer.

[2] Press the AUTO switch.
(All the 7 segments light up for 1 sec., then the system enters monitor mode.)

[3] Numbers 0 - 9 or letters A - F are displayed in the 2nd and 3rd digit of the 3-digit 7-segment display.
"H" is displayed in the 1st-digit.

[4] The display of 0 - 2 on the dedicated 7-segment display is carried out with the blower UP/DOWN switches. The necessary sensor is selected from the table below.

7-segment display
table dedicated to monitor

0	Inside air sensor
1	Evaporator sensor
2	Solar radiation sensor

(Display other than the above (3 to 9, B to F) is not used during service.)

RG05002-003

[5] To end the monitor display, either hold down the refresh/recirculate select switch and the ON/OFF switch at the same time for 1 sec. or longer or switch the vehicle main switch OFF.

Caution

1. **During monitor mode, operations and settings of basic control through all the switches are not possible until the air conditioner control operation is stopped and monitor mode ended.**
2. **During monitor mode, even if a sensor is repaired, the abnormality display is recorded in memory, and until the ON/OFF switch is switched OFF, then ON again, the abnormality display is not ended.**

https://truckmanualshub.com/

(3) Display contents in monitor mode

See the dedicated monitor 7-segment display table and 3-digit 7-segment table.

[1] Display example 1

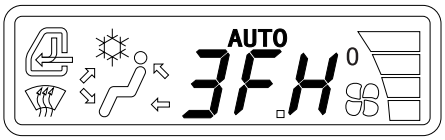

RST-07-05-001j

The dedicated monitor 7-segment display is 0 (indicates the inside air sensor state).

From the 3-digit 7-segment table 3F → The sensor is normal.

→ The inside air sensor is normal.

[2] Display example 2

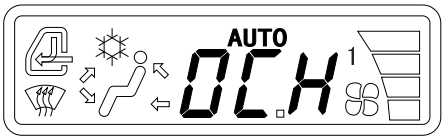

RST-07-05-001k

The dedicated monitor 7-segment display is 1 (indicates the evaporator sensor state).

From the 3-digit 7-segment table 00 → The sensor is disconnected.

→ The evaporator sensor is disconnected.

[3] Display example 3

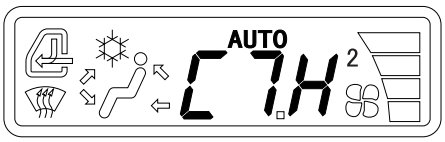

RST-07-05-001l

The dedicated monitor 7-segment display is 2 (indicates the solar radiation sensor state).

From the 3-digit 7-segment table FF → The sensor is shorted.

→ The solar radiation sensor is shorted.

3-digit 7-segment table

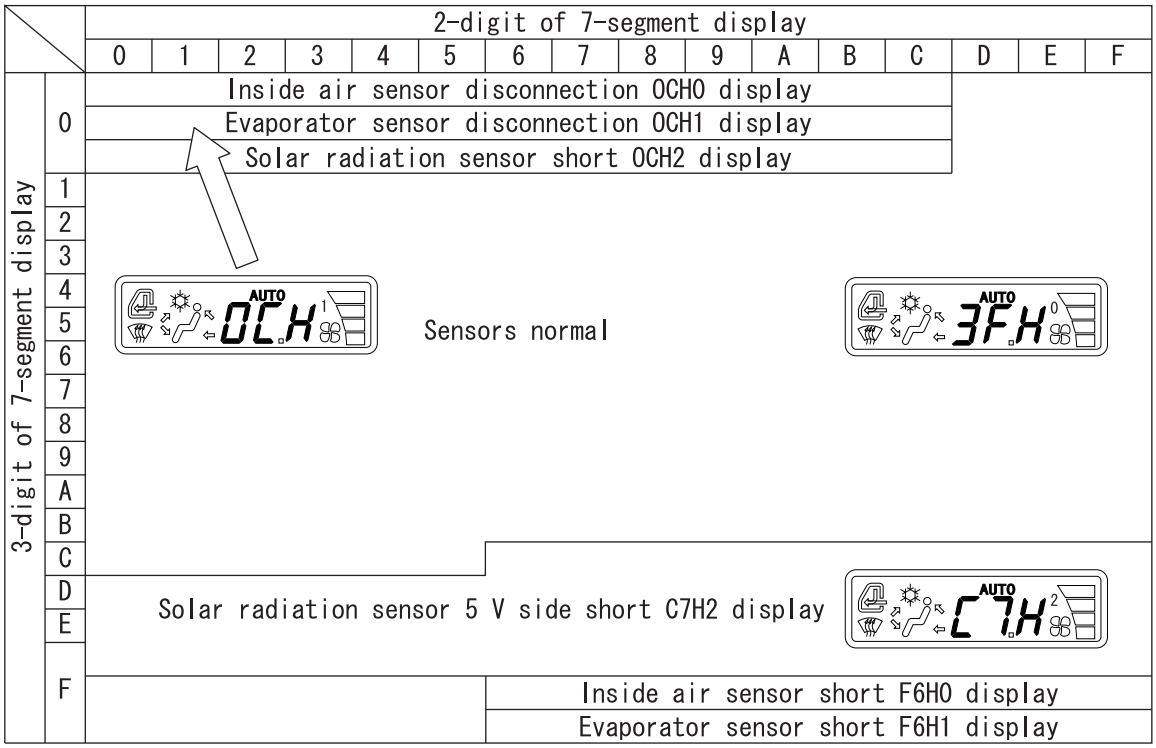

RST-07-05-001m

https://truckmanualshub.com/

Air conditioner troubleshooting

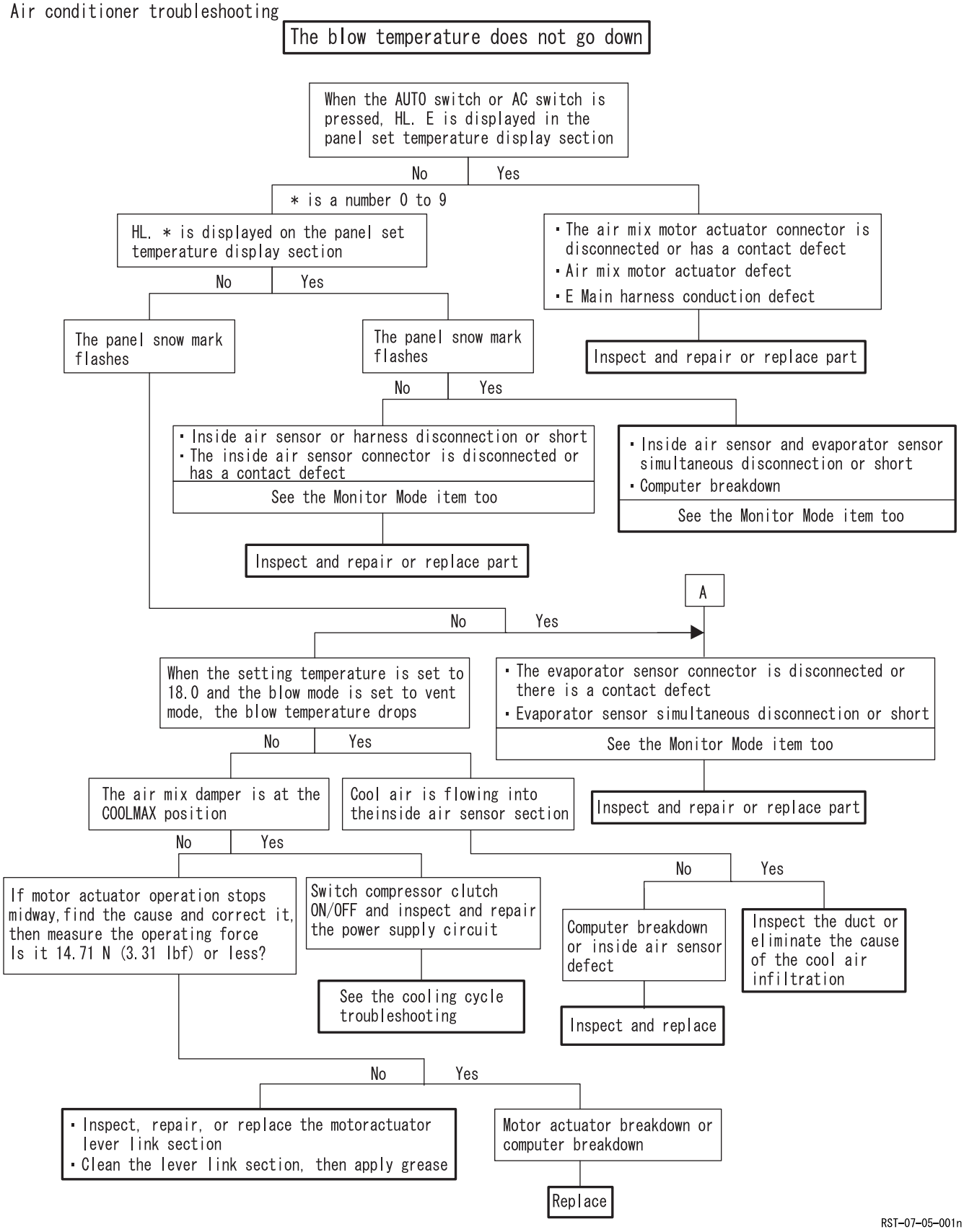

https://truckmanualshub.com/

Self-diagnosis Function with Panel Display

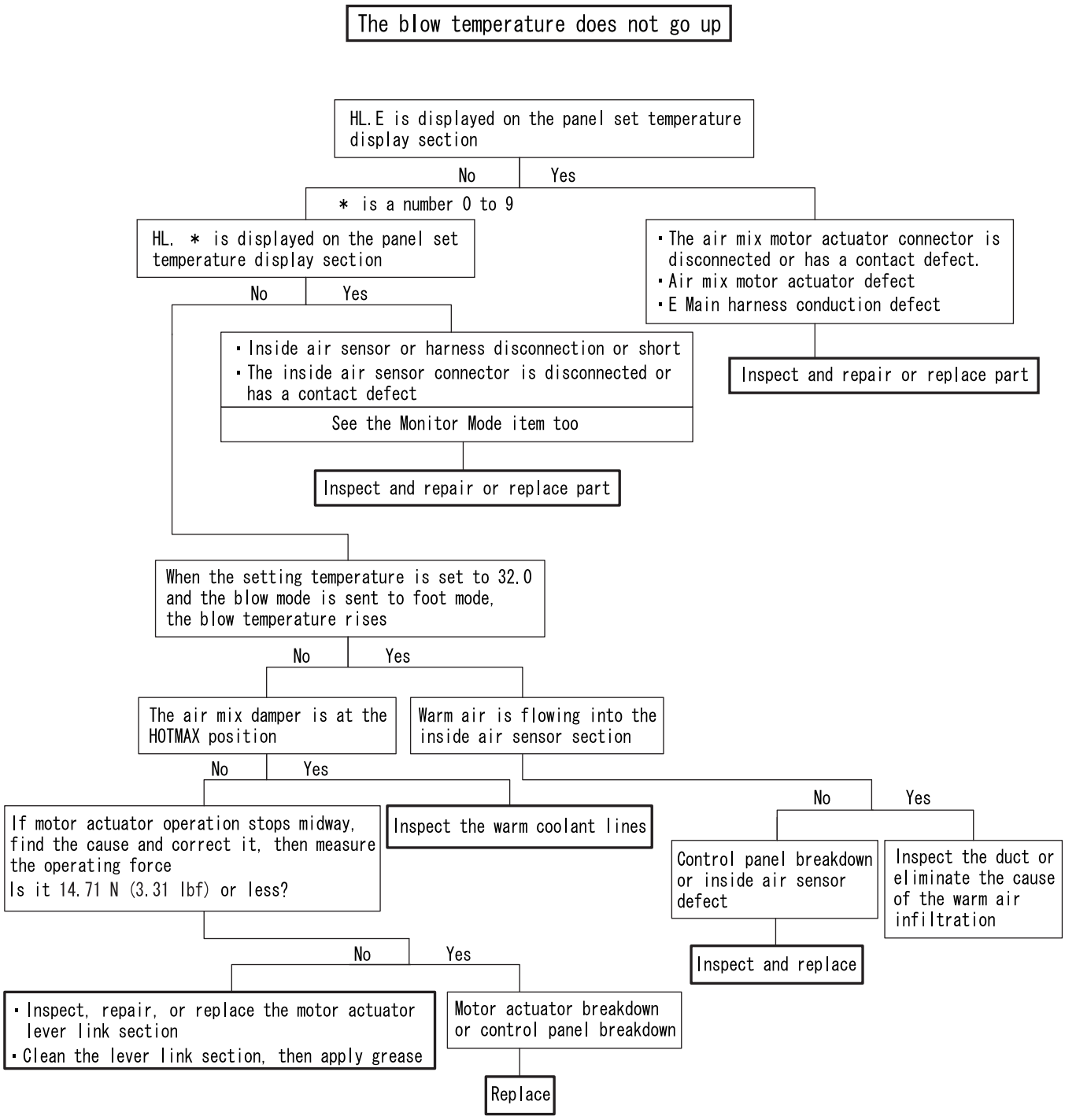

RST-07-05-001o

https://truckmanualshub.com/

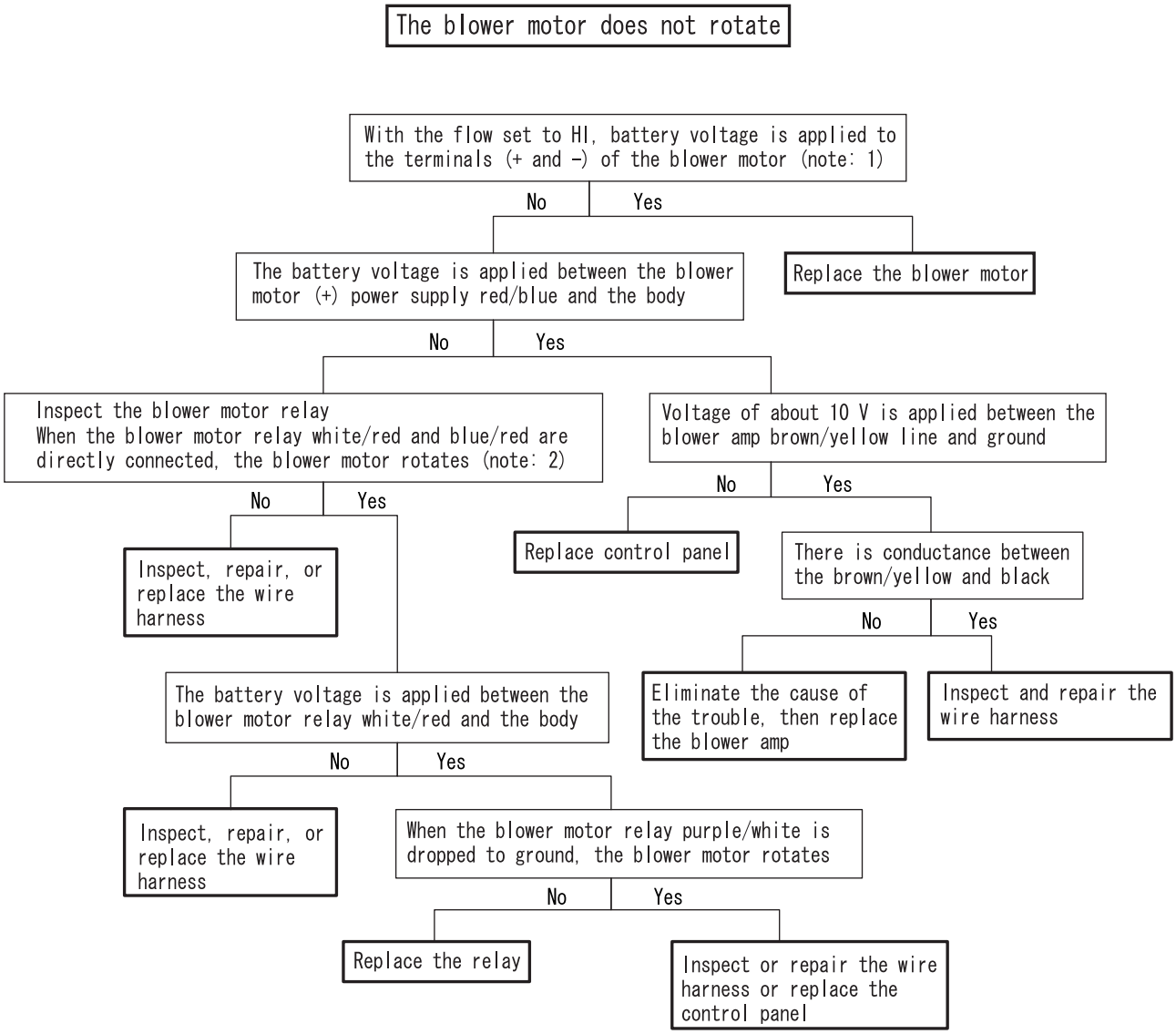

(Note: 1) Measure with the connector connected.
(Note: 2) For the sake of safety, have the air conditioner, vehicle key and light switches all OFF when working with direct connections in place.

RST-07-05-001p

https://truckmanualshub.com/

Self-diagnosis Function with Panel Display

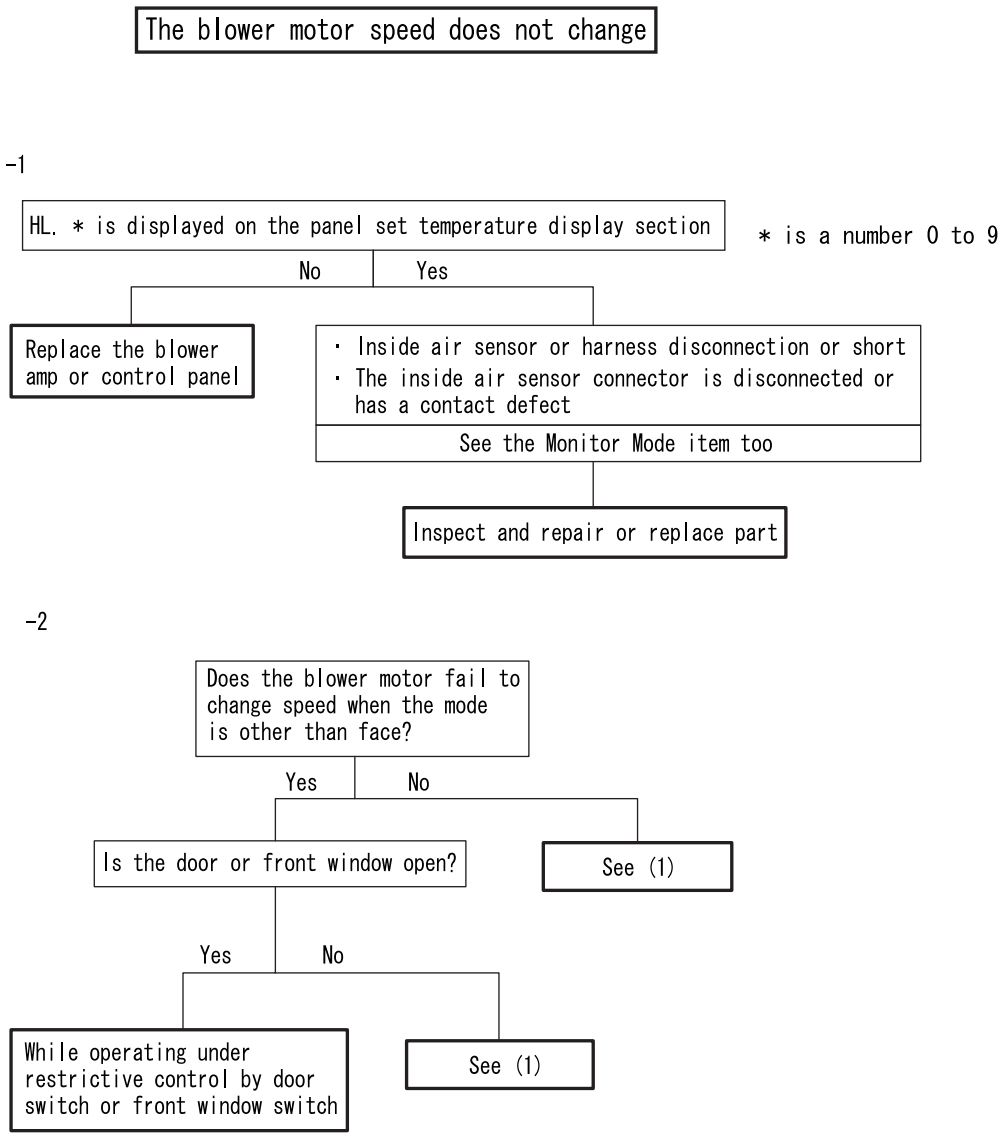

RST-07-05-001q

https://truckmanualshub.com/

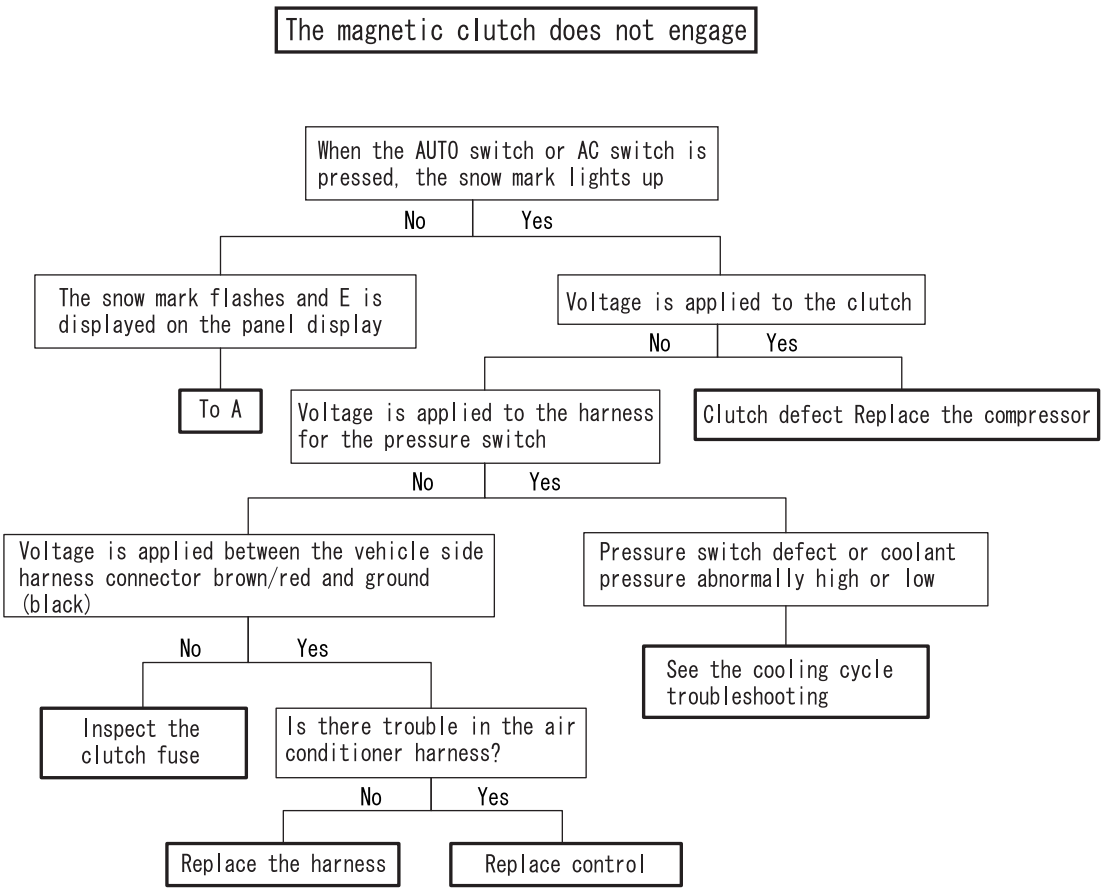

RG05002-001

https://truckmanualshub.com/

Self-diagnosis Function with Panel Display

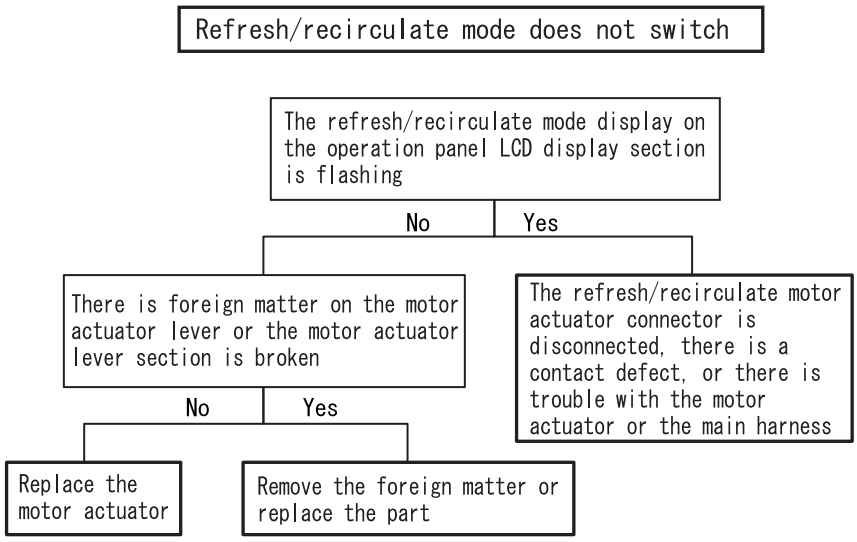

RST-07-05-001s

https://truckmanualshub.com/

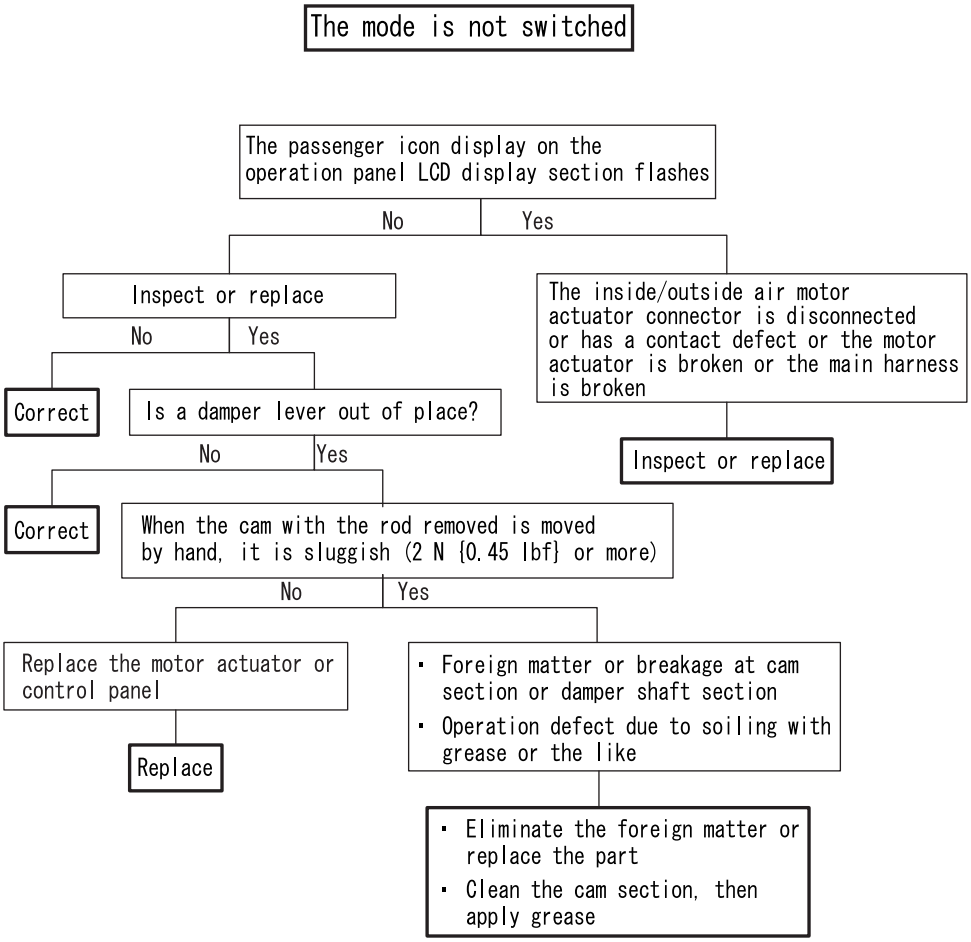

RST-07-05-001t

https://truckmanualshub.com/

Control Panel and Control Unit

The control panel and control unit are formed into one piece. The operation of its built-in microcomputer compares, operates on, and processes the sensor input signals and control panel switch input signals, switches the output side actuators (refresh / recirculate switching, air mix) and comprehensively controls the fan motor and compressor.
It is equipped with self-diagnosis functions to make trouble diagnosis easier. (For details see the control specifications.)

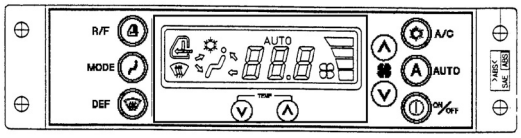

RST-07-06-001a

Blower Amp

The blower amp receives the control signals from the control unit and changes the speed of the blower motor.

Normal

	Terminal number			Conductance
	1	2	3	
Tester	+		-	Conductance (4.7 kΩ ± 5 %)
	-	+		No conductance
	+	-		Conductance (diode parallel forward direction)

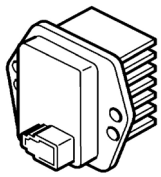

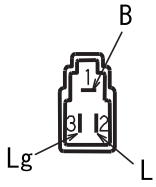

RST-07-06-001b

[1] Remove the blower amp connector.

[2] Check the conductance between the blower amp side terminals.

* The installation position is on the left side of the air conditioner unit.

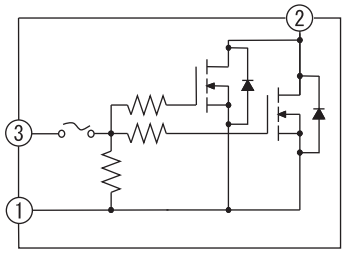

RST-07-06-001c

https://truckmanualshub.com/

Part Function and OK/NG Judgment

Relay

4-pole relays are used for the blower OFF relay and compressor relay.

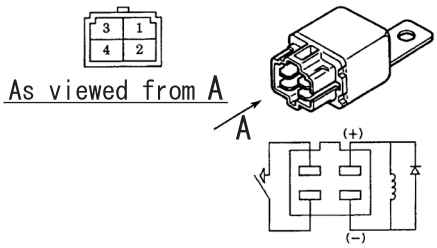

RST-07-06-001d

Blower OFF relay

This relay receives the signal from the control amp and switches the blower OFF relay ON.
When the blower OFF relay is switched ON, the power supply voltage is fed to the blower motor via the blower amp and the blower motor is started.

Compressor relay

The compressor relay is switched ON/OFF by the control amp compressor control;

Relay inspection contents

[1] Relay

[2] Coil resistor: 320 Ω

[3] Specification voltage: 20 - 30 V DC

[4] Be careful. The coil side of this relay must be installed with the poles facing correctly.

[5] Inspection: Inspect the conductance between 3 and 4 under the conditions below.

20 - 30 V applied between Terminals 1 and 2	:	Conductance
No voltage applied between Terminals 1 and 2	:	No conductance

Air Mix Actuator

The air mix actuator is installed at the center of the air conditioner unit. It opens and closes the air mix damper via the link. Built into the air mix actuator is the potentio-meter which varies linked with the actuator shaft.

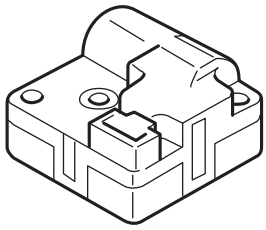

RST-07-06-001e

When the target air mix door position is determined by the temperature control switch, the control unit reads in the potentio-meter position in the actuator and determines whether the motor turns forward or reverse.The contacts move linked with the motor. When the contacts move open or the target potentio-meter position is reached, the control unit output signal goes OFF and the motor stops.
(See "Air Mix Motor Actuator Inspection".)

Refresh / Recirculate Actuator

The refresh / recirculate switch actuator is installed on the blower intake unit. It opens and closes the refresh / recirculate damper via the link.
Built into the refresh / recirculate switch actuator is the position detection switch that changes linked with the actuator shaft.

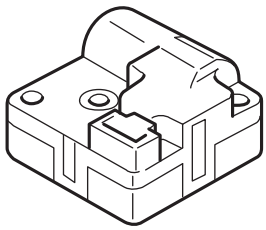

RST-07-06-001e

When the refresh / recirculate damper position is determined by the refresh / recirculate switch on the control panel, the control unit reads in the signal of the position detection switch in the actuator and determines whether the motor turns forward or reverse.The contact moves linked with the motor and when the contact reaches the position detection switch and separates, the motor stops.
(See "Refresh / Recirculate Motor Actuator Inspection".)

https://truckmanualshub.com/

Blow Mode Actuator

The blow mode actuator is installed on the back surface of the air conditioner unit. It opens and closes the blow damper via the link.
Built into the blow mode actuator is the potentio-meter which varies linked with the actuator shaft.

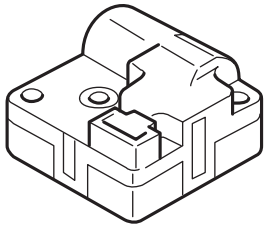

RST-07-06-001e

When the blow mode position is determined by the temperature control switch, the control unit reads in the potentio-meter position in the actuator and determines whether the motor turns forward or reverse.The contacts move linked with the motor. When the contacts move open or the target potentio-meter position is reached, the control unit output signal goes OFF and the motor stops.
(See "Mode Motor Actuator Inspection".)

Evaporator Sensor

In order to prevent the evaporator freezing, the evaporator blow temperature is detected and the compressor ON/OFF controlled.

- Evaporator sensor inspection method
  (specifications value)
  Disconnect the evaporator connector from the main harness and measure the resistance between the sensor side connector terminals using the tester.

Resistance between terminals	When the sensor section detection temperature is 0 ℃	: 7.2 kΩ
	When the sensor section detection temperature is 25 ℃	: 2.2 kΩ

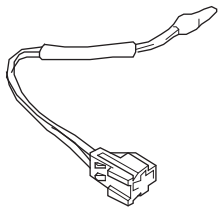

RST-07-06-001f

Dual Pressure Switch

The dual pressure switch is installed on the receiver dryer. When there is pressure trouble in the coolant high-pressure side line (abnormally high pressure or abnormally low pressure), the dual pressure switch contacts open up to cut off the compressor power and protect the cooling cycle.

RST-07-06-001g

- Simple inspection method for dual pressure switch

[1] With the cooling cycle stopped, disconnect the connector from the switch and check the conductance between the switch side connector terminals using the tester.If there is conductance, the switch is normal.(When the outside air temperature is 0 ℃ or higher)

[2] Connect the gauge manifold high-pressure side hose to the high-pressure side charge port. With the cooling cycle operating, the condenser front surface is covered with the plate top and the high-pressure rises.If the compressor stops around 3.14 MPa, the switch is normal.

[3] With the coolant removed, check the conductance between the switch side connector terminals using the tester.If there is no conductance, the switch is normal.

Dual pressure switch specifications

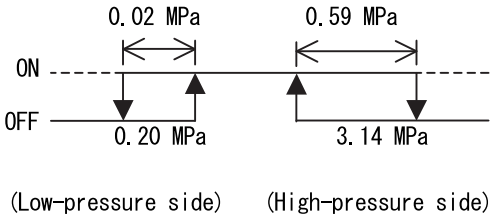

RG06002-001

https://truckmanualshub.com/

Part Function and OK/NG Judgment

Solar Radiation Sensor

This is the air conditioner solar radiation correct sensor. It detec -
diode, converts it into current and sends that to the control pane

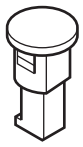

RST-07-06-001i

- Solar radiation sensor inspection method
  Disconnect the solar radiation sensor connector from the harness and measure the resistance between the sensor side connector terminals using the tester's voltage measurement mode.
  The voltage must be different when light is striking the photoreceiver section and when it is not.(The voltage is 0 V when absolutely no light is striking the photoreceiver.)

Caution

Always measure with the tester in voltage measurement mode (V mode).

Measuring with the tester in resistance mode (Ω mode) would destroy the sensor.

https://truckmanualshub.com/

Performance Judgment Check Sheet

✓ Checked, S Measured, A Adjusted

Inspection item	Check	Remarks
Water and oil amount inspection		
1. Radiator coolant amount		
2. Engine oil amount		
3. Hydraulic oil amount		
Pre-conditioning operation inspection		
1. Engine start/stop		
2. Air bleeding implementation		
3. Operation check for each section		
4. Oil leak inspection		
Hydraulic oil cleanliness inspection		
Electrical system inspection		
1. Model selection check		
2. Monitor display check		
3. Throttle volume function check		
4. One-touch/auto idle function check		
5. Lever lock function check		
6. Neutral start function check		
7. Travel high-speed function check		
8. Horn volume switching function check		
9. Travel alarm function check		
10. Power-cut delay function		
11. Accessory operation check ① Radio ② Air conditioner ③ Wiper ④ Horn ⑤ Working light ⑥ Room lamp ⑦ Clock ⑧ Hour meter ⑨ Backlight		

Inspection item	Check	Remarks
Engine inspection		(as required)
1. Engine speed Idling min^{-1} No-load maximum min^{-1}		
2. Engine rotation condition ① During idling ② No load		
3. Engine exhaust gas color		
4. Engine noise, vibration		
5. Engine Stop ① Key switch OFF ② Emergency stop switch		
Hydraulic equipment inspection		(as required)
1. Pressure at each section check (separate sheet)		
2. Noise check for each section		
3. Natural drop for each cylinder (separate sheet)		
4. Operation speed for each cylinder (separate sheet)		
5. Swing speed (separate sheet)		
6. Swing brake performance (separate sheet)		
7. Swing status and noise		
8. Travel speed (separate sheet)		
9. Turn		
10. Travel status and noise		
Operability inspection		
1. Operation state for each lever		
Shoe tension status		
Other		
1. Oil leak inspection for each section		
2. Rubber hose lines oil leak inspection		
3. Bolt and nut loosening, falling off		
4. Cab inspection		
5. Cylinder inspection		

https://truckmanualshub.com/

New Machine Performance Judgment Table

Performance Measurement Entry Table

Model name:		Serial No.			Measurement date Date		Measurer	
Hour meter:		Attachment Arm m^3Bucket			Remarks			
1	Engine speed	Idling rotation			min^{-1}			
		No-load maximum speed			min^{-1}			
2	Check the pressure at each section (and measure as necessary).	Relief name	Operation		Measurement pressure			
		Main relief	Standard		MPa			
			Pressure boost		MPa			
		Swing relief	Left and right		MPa			
		Pilot relief	—		MPa			
	For the measurement and adjustment methods, see the hydraulic measurement adjustment procedures.							
3	Natural fall distance for each cylinder (in 10 min.)	Boom cylinder			mm			
		Arm cylinder			mm			
		Bucket cylinder (open)			mm			
		Overall (for 10 min.)			mm			
4	Operating speed for each cylinder (sec.)			1 rotations	2 rotations	3 rotations	Total	Average
		Boom	Up					
			Down					
		Arm	Open					
			Close					
		Bucket	Open					
			Close					
5	Swing speed (sec./rotation)			1 rotations	2 rotations	3 rotations	Total	Average
		Left swing						
		Right swing						
6	Swing 180° neutral brake flow angle (degrees)			1 rotations	2 rotations	3 rotations	Total	Average
7	Travel speed (sec./6 meters)			1 rotations	2 rotations	3 rotations	Total	Average
			Front					
			Rear					
8	Drive sprocket speed (sec./10 rotations)			1 rotations	2 rotations	3 rotations	Total	Average
			Low front					
			Low rear					
			High front					
			High rear					
9	Turntable bearing movement distance		Left and right		mm			
			Up and down		mm			
10	Shoe extension distance from the side frame bottom surface to the shoe top surface				mm			
11	Travel turning amount				mm			
12	Travel motor leakage amount				L/min			
13	Swing motor leakage amount				L/min			
14	Bucket tip movement amount				mm			

https://truckmanualshub.com/

Engine Speed

Measurement method

[1] No load operation mode at high idle:
SP mode, H mode and A mode speed

[2] Operation mode at low idle: SP mode speed

Main unit posture: bucket on ground

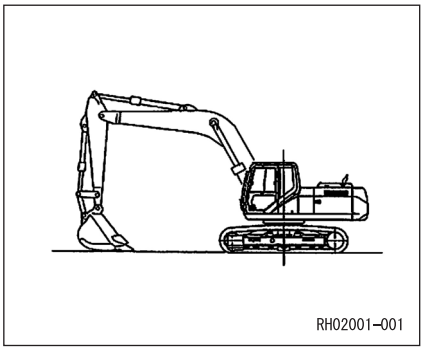

Pressure in Each Section

Measurement method

[1] Engine high idle

[2] Oil temperature is 45 ℃ - 55 ℃

[3] Travelling and swing is measured between the counter balance and motor.

[4] Measure the main relief pressure before adjusting the overload pressure, and then measure the overload pressure after the main pressure has been increased to a level as high or higher than the overload pressure. Return the main pressure to regulation pressure after measurement.

Main unit posture: operate each attachment in the travel posture.

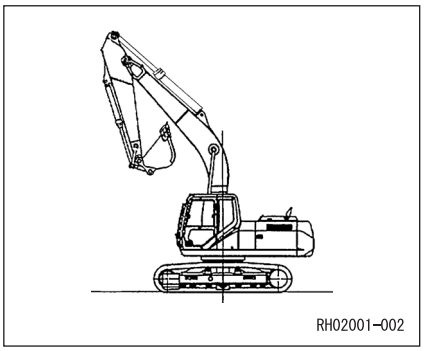

Cylinder Falling Amount

Measurement method

[1] Have oil flow into each cylinder before measurement with the oil at 45 ℃ - 55 ℃
(Record the oil temperature before and after measurement)

[2] Make the height of the boom foot pin and the bucket pin the same.
The arm cylinder is fully retracted, and the bucket cylinder is fully opened.

[3] Engine is stopped.

[4] After 10 min., measure the extension amount and retraction amount of the boom, arm, and bucket cylinder rod.

[5] Along with measuring the movement amount of the cylinders after 10 min., measure the tip displacement.

Main unit posture

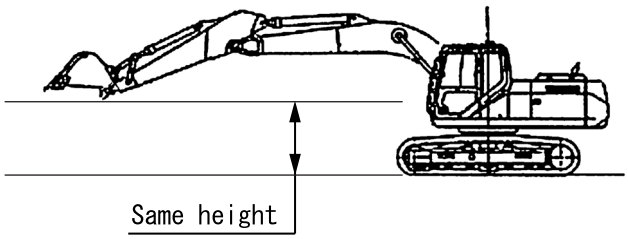

RH02001–003

https://truckmanualshub.com/

Measurement Method and Main Unit Posture

Attachment Speed

Measurement method

[1] Engine high idle

[2] Oil temperature is 45 ℃ - 55 ℃ .

[3] No load

Main unit posture

Boom cylinder

With the arm fully out and the bucket fully opened, measure the operation time it takes the boom cyclinder to go from fully upwards to the ground and also from the ground to fully upwards

[Note] When the boom is lowered, make sure not to directly hit the concrete (place tires on the ground).

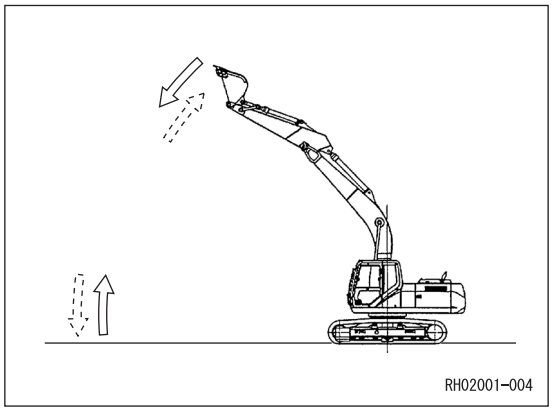

Arm cylinder

With the arm cylinder fully out and the arm horizontal to the ground, measure the operation time it takes the arm cylinder to do a full stroke with bucket cylinder fully out

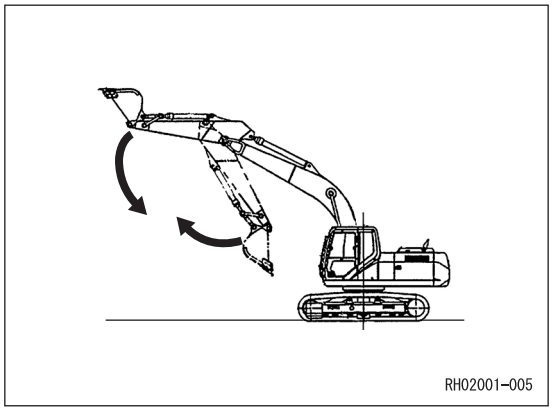

Bucket cylinder

Measure the operation time for a full stroke at the maximum radius.

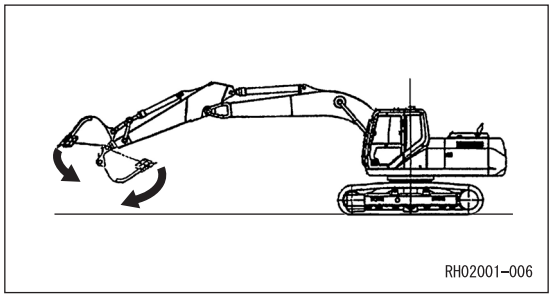

https://truckmanualshub.com/

Swing Speed

Measurement method

[1] Engine high idle

[2] Oil temperature is 45 ℃ - 55 ℃ .

[3] No load

[4] The time required for the next rotation after one rotation

Main unit posture

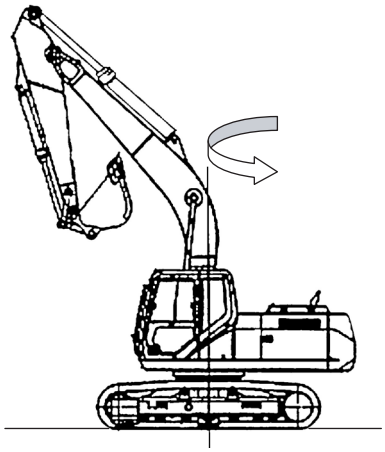

RH02001–007

Swing (180°) Brake Angle

Measurement method

[1] Engine high idle

[2] Oil temperature is 45 ℃ - 55 ℃ .

[3] No load

[4] Swing 180° and measure the flow angle after neutral braking

Main unit posture: same as the above

Travel Speed

Measurement method

[1] Engine high idle and oil temperature is 45 ℃ - 55 ℃ with no load.

[2] Measure the required time to travel 6 m after a 4 - 5 m running start. If the off travel distance is 1 m or more, however, use the off travel distance as a reference value to correct the off travel, then measure the travel speed again.

[3] Travelling should be done on concrete.

[4] Conduct both high-speed and low-speed travelling.

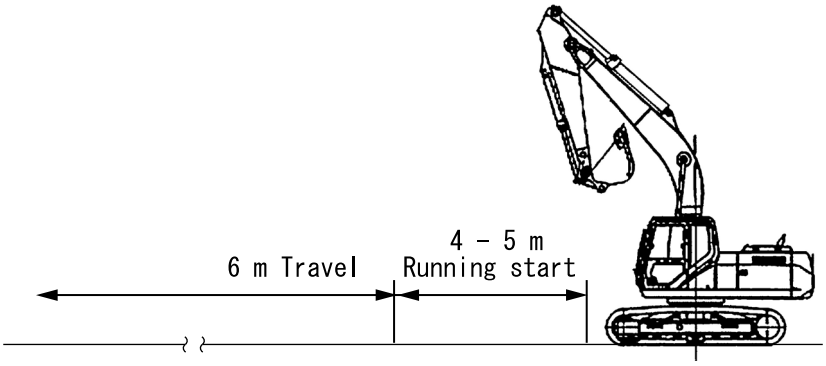

RH02001–008

https://truckmanualshub.com/

Measurement Method and Main Unit Posture

Off Travel Amount

Measurement method

[1] Engine high idle and oil temperature is 45 ℃ - 55 ℃ with no load.

[2] Measure the required time to travel 20 m after a 4 - 5 m running start.

[3] Shoe tension amount should be standard.

[4] Measure for both forward and backward traveling.

[5] Measure for both high-speed and low-speed traveling.

Main unit posture: same as with travel speed measurement.

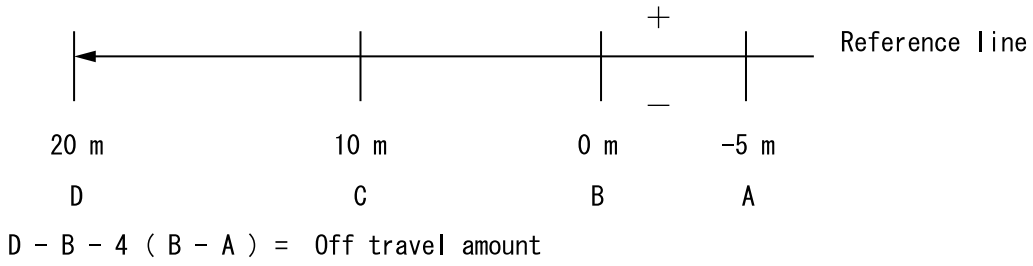

RH02001-009

Travel Sprocket Speed

Measurement method

[1] Engine high idle

[2] Oil temperature is 45 ℃ - 55 ℃ .

[3] Raise a shoe, and after achieving a constant speed, measure the time required for the sprocket to rotate 10 times both forwards and backwards.

[4] Measure for both high-speed and low-speed traveling.

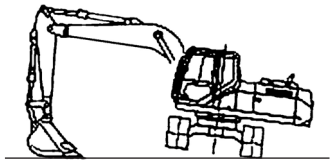

RH02001-01

Main unit posture: 90° swing, shoe raised.

Shoe Tension Amount

Measurement method

[1] Raise the shoe and, at the central position of the track, measure the gap between the underside of lower side frame and the topside of the shoe plate.

[2] Measure for both the left and right sides.

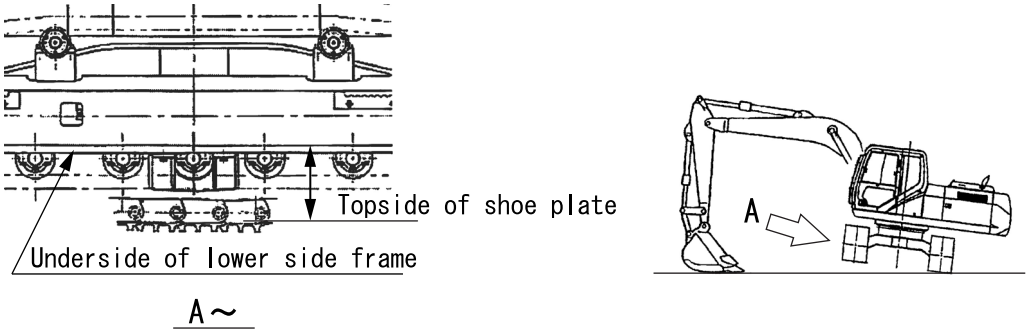

SH03005-001

https://truckmanualshub.com/

Swing Ball Race Bearing Movement Amount and Bucket Tip Movement Amount

Measurement method

A) Up and down direction measurement

[1] Measure the up and down movement amount at two locations in front of and behind the ball race.

[2] Move the arm cylinder out and close the bucket cylinder, and move the bottom surface of the bucket 30 cm above the ground. Attach a dial gauge to the lowering section as shown in the figure below and do zero point adjustment.

[3] Jack up the main unit and measure the amount of movement with the dial gauge.
* Jack up the main body until the swinging of the dial gauge becomes constant.

Main unit posture

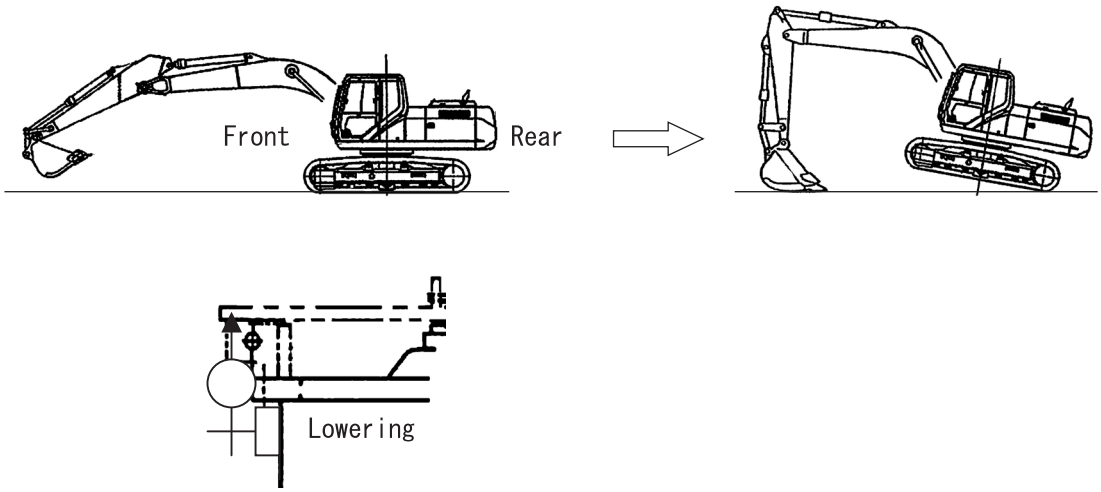

RH02001-012

B) Left and right direction measurement

[1] Measure the left to right movement amount at the front side of the ball race and the left to right movement amount of the bucket tip.

[2] The arm cylinder and bucket cylinder are in the open position, apply 294.2 - 392.3 N of force to one side, and zero point adjustment is done for these conditions.

[3] 294.2 - 392.3 N of force is applied to the opposite side and the left to right movement is measured.

Main unit posture

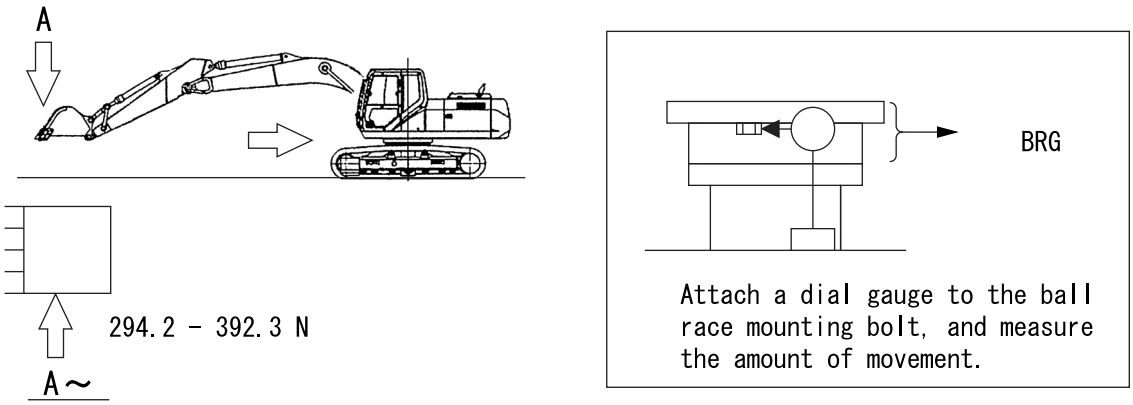

RH02001-013

https://truckmanualshub.com/

Pressure Measurement and Adjustment Procedures

Procedures for Pressure Measurement from the Monitor Display

■ Monitor and switch panel

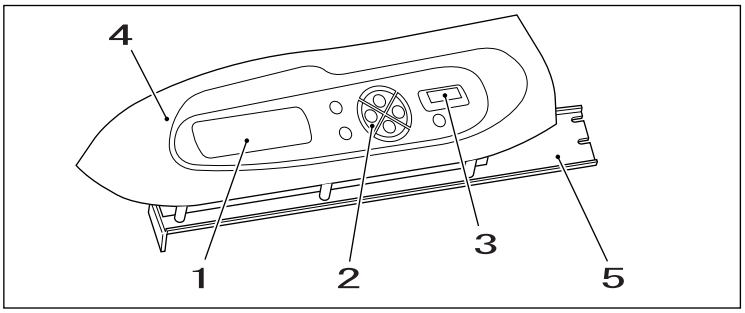

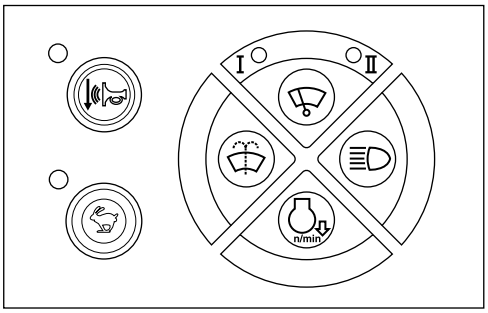

RST-09-01-001a

1	Liquid crystal monitor	4	Design panel
2	Switch panel	5	Installation bracket
3	Hour meter		

1. Pressure Measurement Method

   The P1, P2, N1, and N2 pressure can be measured from the monitor display.
   (The pilot pressure cannot be measured.)

2. Operating Method

   [1] If both the travel mode select switch and the horn volume select switch on the switch panel are held down for 3 sec., the display switches to the service support screen.

   [2] The respective pressures are displayed in the service support screen's "P1" (P1 pump main pressure), "P2" (P2 pump main pressure), "N1" (N1 negative control pressure), and "N2" (N2 negative control pressure) columns.
   * If both the travel mode select switch and the horn volume select switch on the switch panel are held down again for 1 sec., the display returns to the normal screen.

(A) Normal screen (B) Service support screen

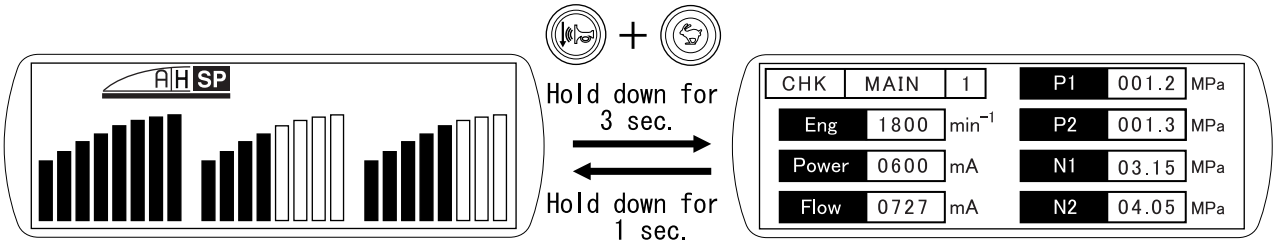

SI01009-002

-Note-
M（親）- F（子）
1, 2, 6, 7 ページ液晶パネルが異なる

https://truckmanualshub.com/

Pressure Measurement and Adjustment Procedures

Procedures for Measuring Hydraulic Oil Temperature from the Monitor Display

1. Hydraulic Oil Temperature Measurement Method

   The hydraulic oil temperature can be measured from the monitor display.

2. Operating Method

   [1] If both the travel mode select switch and the horn volume select switch on the switch panel are held down for 3 sec., the display switches to the service support screen.

   [2] With the travel mode select switch (mode switch), set the mode to "CHK".

   [3] With the horn volume select switch (section switch), set the section to the "MAIN" section.

   [4] With the light switch (page +), switch to page "2".

   [5] The hydraulic oil temperature is displayed in the "Hydoil" column.

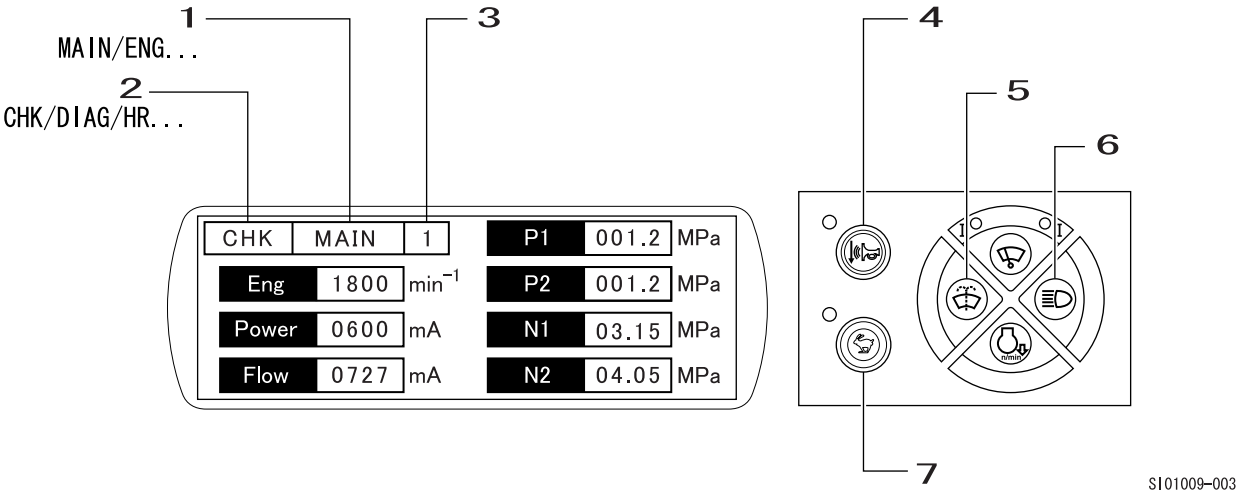

Page switch operation

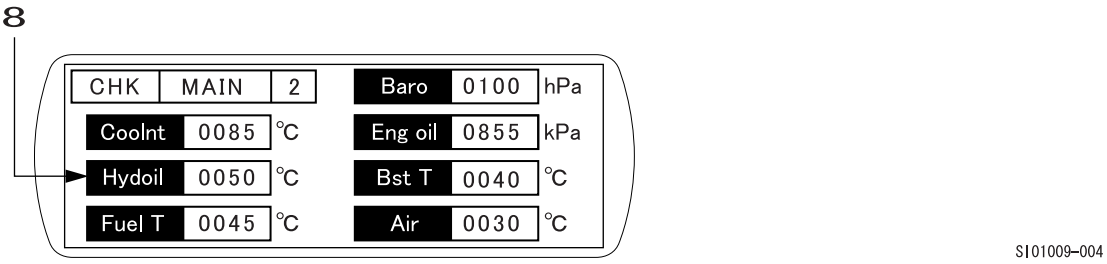

1	Section	5	Page (-)
2	Mode	6	Page (+)
3	Page	7	Mode switchover
4	Section switch	8	Hydraulic oil temperature (℃)

https://truckmanualshub.com/

Procedures for Pressure Measurement by Installing Pressure Gauge

1. Preparations

Workers 2 Role (worker 1: work supervisor, pressure adjustment)
Role (worker 2: operator)

2. Items to Prepare

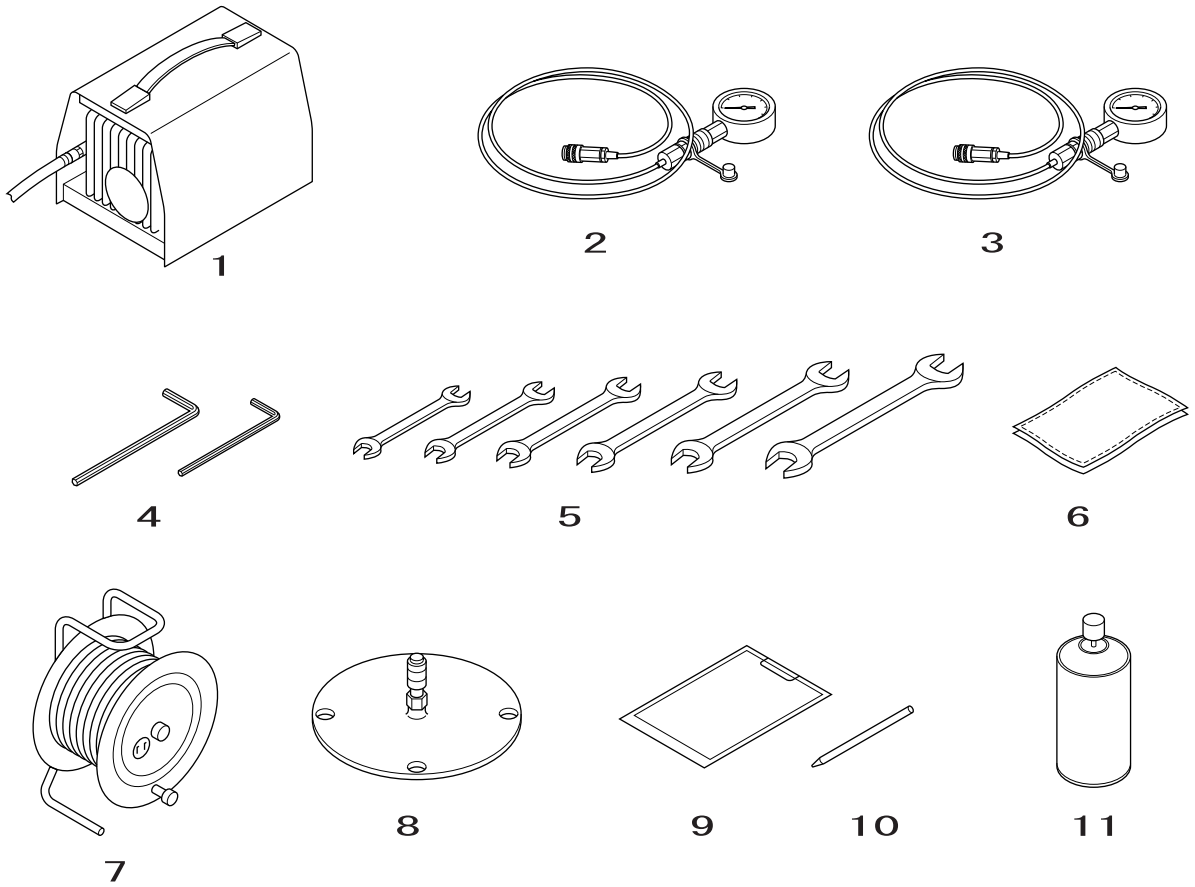

RI01004–017

1	Vacuum pump power supply (for vacuum pump)	5	Wrenches (17, 19, 24, 27 × 2, 32, 36 × 2)	9	Recording sheet
2	Pressure gauge (10 MPa-1)	6	Rag	10	Pen
3	Pressure gauge (60 MPa-2)	7	Extension cable	11	Cleaning fluid
4	Hexagon wrench (8 mm, 6 mm)	8	Hydraulic oil tank lid (vacuum pump)		

https://truckmanualshub.com/

Pressure Measurement and Adjustment Procedures

Pressure Measuring Ports

There are the following 3 ports for pressure measurement.

- Main pressure: pressure ports (P1, P2)
- Negative control pressure: pressure ports (N1, N2)
- Pilot pressure: pressure port (P3)

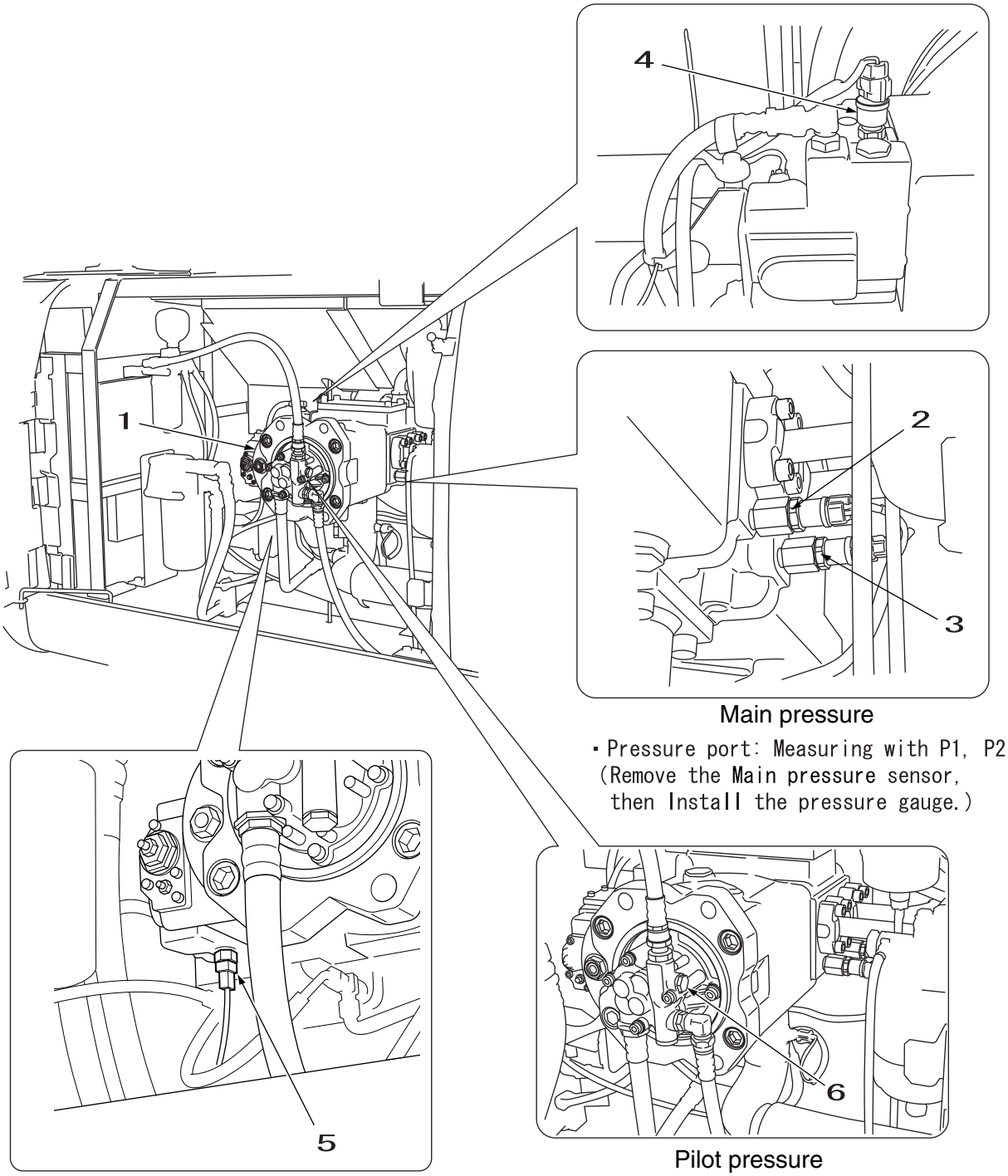

Main pressure

・Pressure port: Measuring with P1, P2
(Remove the Main pressure sensor, then Install the pressure gauge.)

Negative control pressure

・Pressure port: Measuring with N1, N2
(Remove the negative control pressure sensor, then Install the pressure gauge.)

Pilot pressure

・Pressure port: Measuring with P3

SI01009-501

1	Pump	4	Pressure port: N1
2	Pressure port: P2	5	Pressure port: N2
3	Pressure port: P1	6	Pressure port: P3

https://truckmanualshub.com/

Control Valve

1. Location of Relief Valves

Position			Tool		Set pressure (MPa)	Pressure per rotation of adjusting screw (MPa)	Measuring port
			Lock nut	Adjusting screw			
①	a	Main (normal use)	Hexagon diameter 27 mm	Hexagon diameter 27 mm	34.3	21.3	Monitor P1
①	b	Main (boosted pressure)	Hexagon diameter 32 mm	Hexagon diameter 27 mm	37.3	28.4	Monitor P1
②		Boom up	Hexagon diameter 17 mm	Hexagon diameter 6 mm	39.2	21.2	Monitor P2
③		Boom down			27.4	21.2	Monitor P2
④		Arm in			39.2	21.2	Monitor P1
⑤		Arm out			39.2	21.2	Monitor P1
⑥		Bucket close			39.2	21.2	Monitor P2
⑦		Bucket open			39.2	21.2	Monitor P2
⑧		Pilot	Hexagon diameter 24 mm		3.92	2.0	

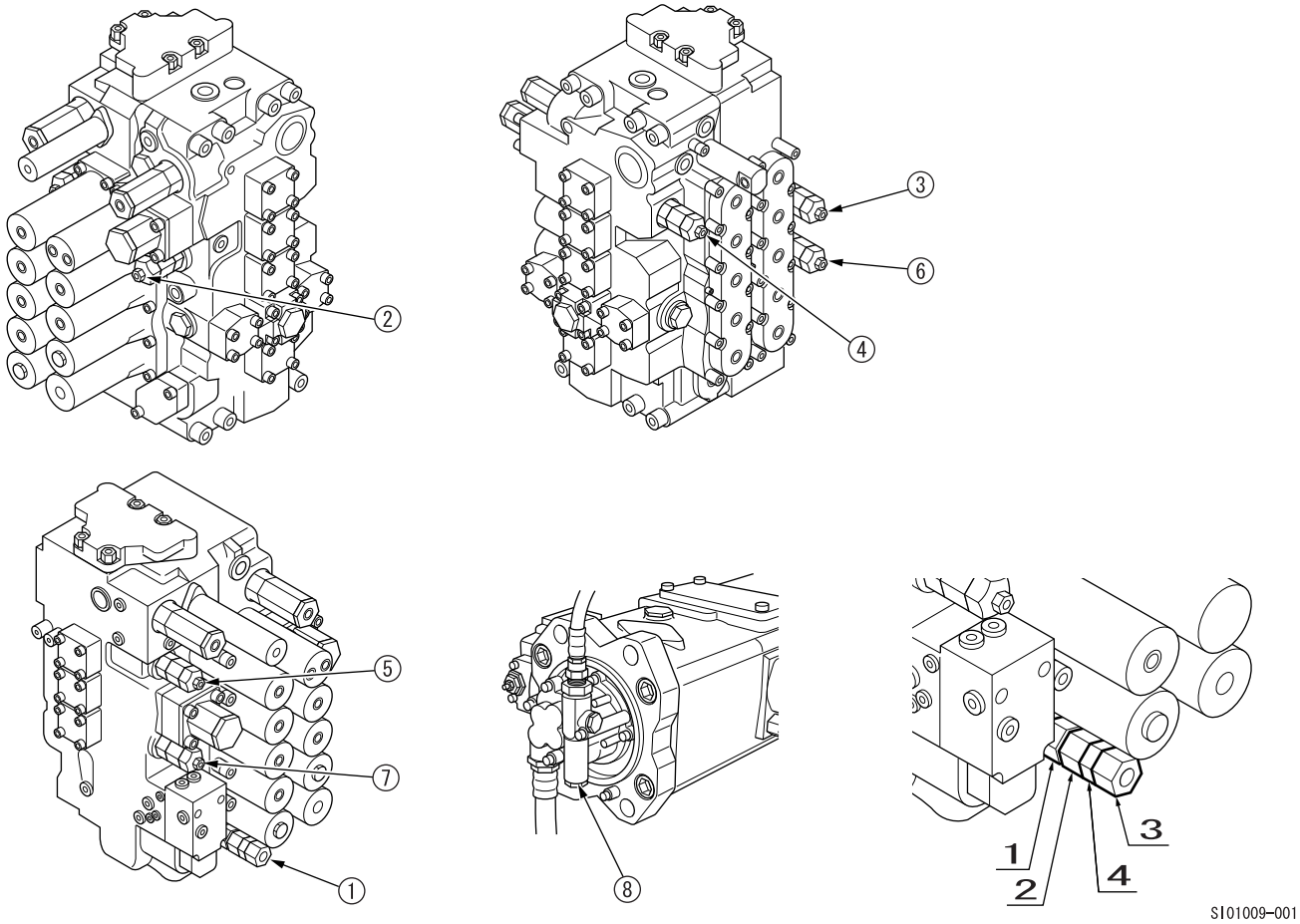

Detailed diagram of main relief valve adjustment

1	Pressure boost lock nut
2	Pressure boost adjusting screw
3	Standard pressure adjusting screw
4	Standard lock nut

https://truckmanualshub.com/

Pressure Measurement and Adjustment Procedures

Pressure Measurement Preparations

[1] Items to prepare

1) Pressure gauge	For 10 MPa (for pilot and negative control pressure measurement) For 60 MPa (for main pressure measurement)
2) Tool	Wrench (closed wrench) 17 mm Hexagon wrench 6 mm
3) Others	Rag Cleaning fluid

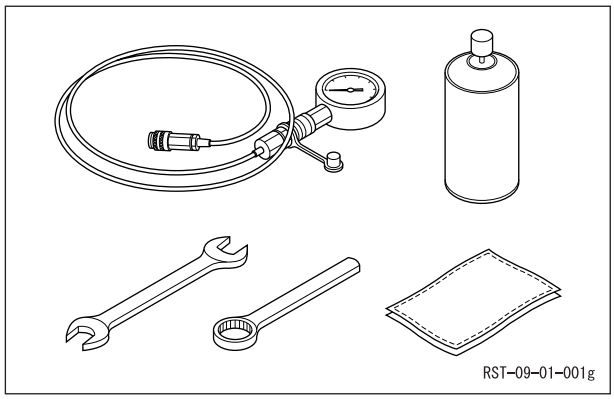

[2] Monitor check
Use the service check to check the no-load engine maximum speed and the SP mode pump input milli-amp.

Engine max.	SP mode milli-amp
1900 min^{-1}	500 mA (during operation)

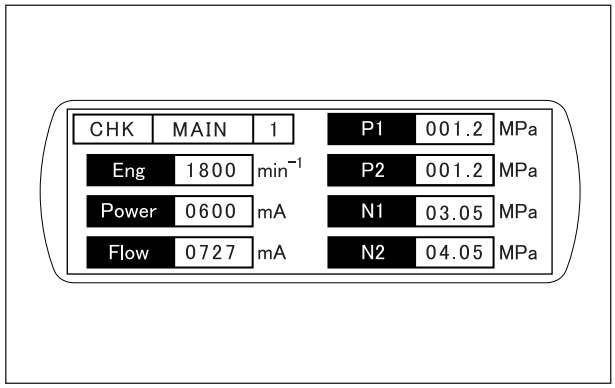

[3] Main unit installation
Put the main unit on solid, level ground, put the bucket cylinder at its open stroke end, the arm cylinder at its out stroke end, lower the boom, and touch the arm top to the ground.

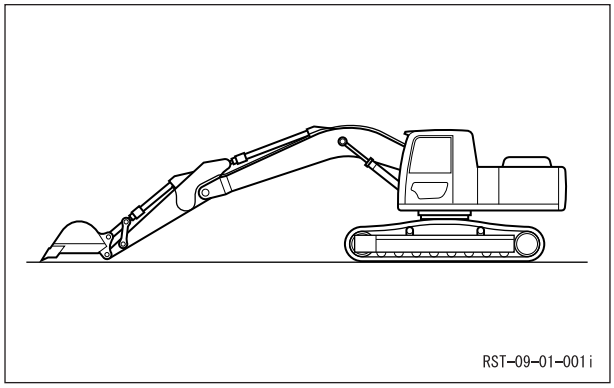

[4] Ignition key
Switch OFF the ignition key (1), check that the engine has stopped, then switch the ignition key ON again. (Do not start the engine.)

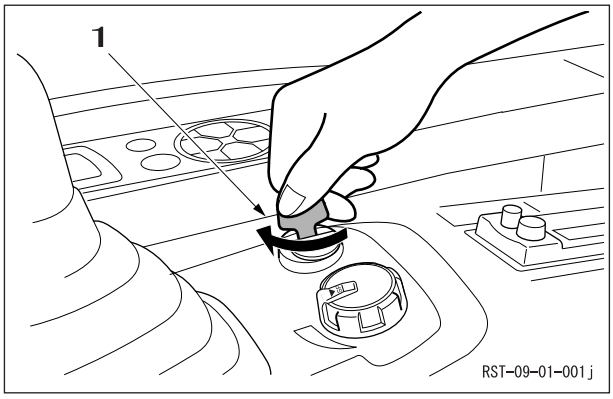

https://truckmanualshub.com/

[5] Oil temperature check
Use the service check to check the hydraulic oil temperature.

Oil temperature	45 - 55 ℃

If the oil temperature is low, raise the oil temperature according to the warm-up operation procedure in the operator's manual.

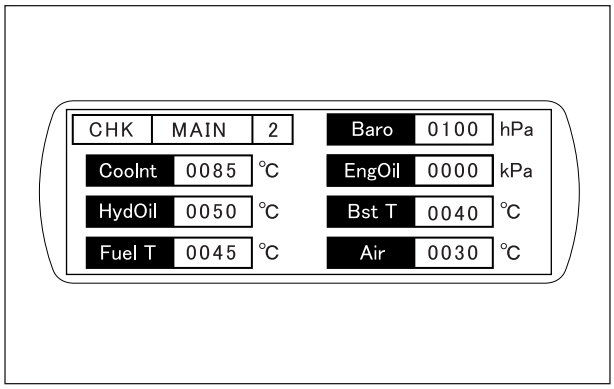

[6] Bleeding pressure from inside circuits
Flip the gate lock lever (2) forward, then turn the upper operation lever (3) about 10 times to bleed out the pressure.

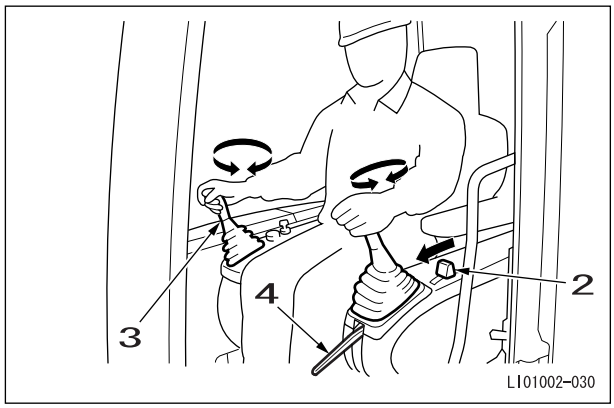

4	Gate lever

Move the travel lever (5) back and forth about 5 times to bleed out the pressure.

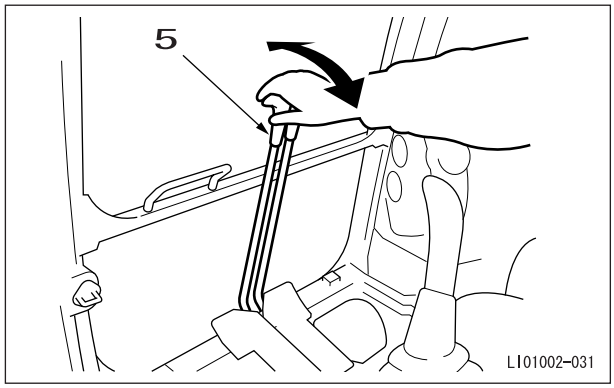

[7] Bleeding pressure from inside the hydraulic oil tank
Press the air breather button (6) on top of the hydraulic oil tank to release the pressure inside the tank.

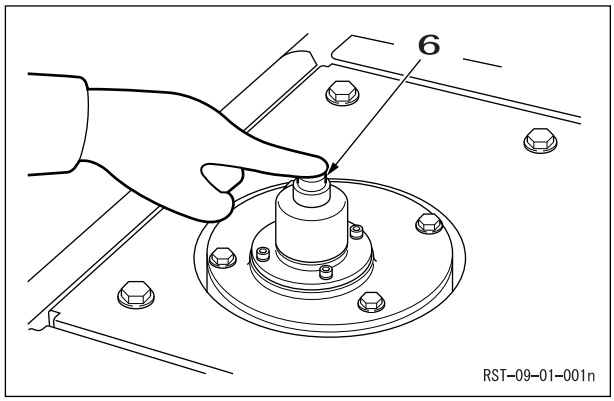

https://truckmanualshub.com/

[8] Side door opening and closing
Open the side door (7). At this time, be sure to use the lock (8).

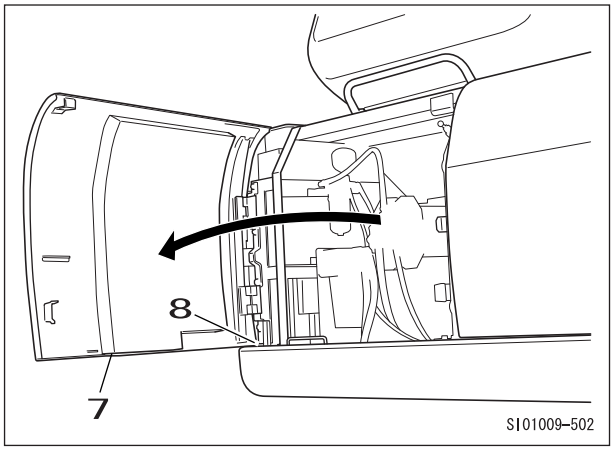

This completes the preparations.

https://truckmanualshub.com/

Pressure Measurement and Adjustment Procedures

1. Main Pressure Measurement

[1] Pressure gauge installation
Remove the pressure sensor and install the pressure gauge.

a1: Can be measured	a2: Can be measured
Travel left	Travel right
Option	Bucket
Swing	
Arm 1 pump flow	Arm 2 pumps flow
Boom 2 pumps flow	Boom 1 pump flow

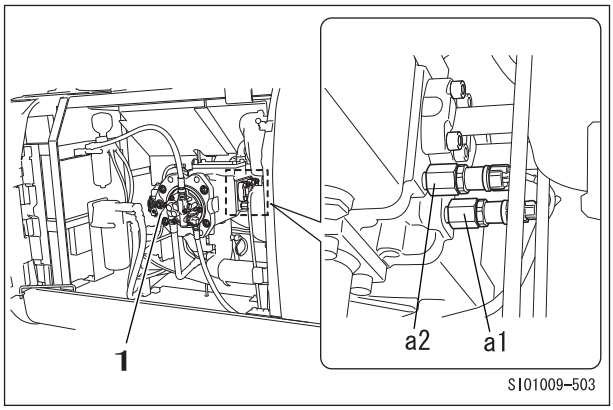

1	Pump

Remove the pressure sensor.

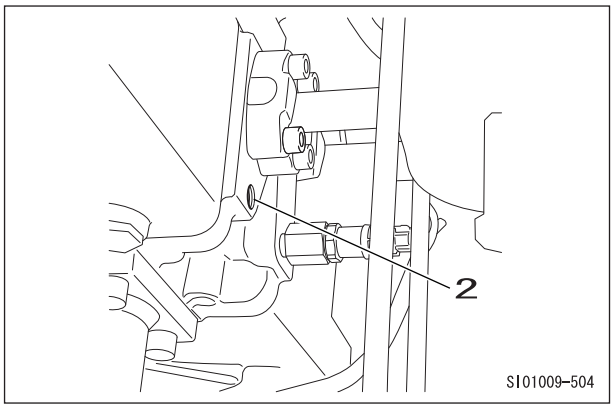

2	Gauge port

Install the adapter (3).

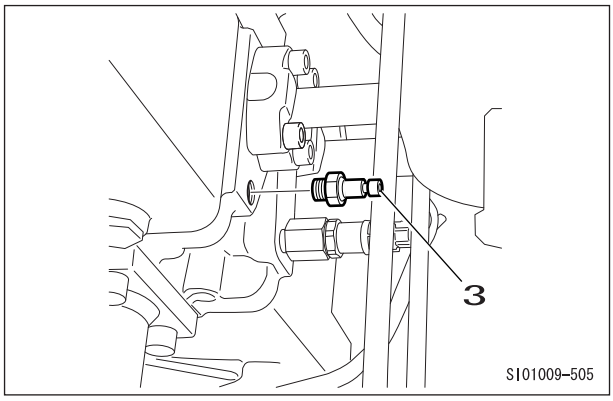

Install the pressure gauge (4) on the adapter and fasten it.

Pressure gauge	for 60 MPa
Port size	G1/4

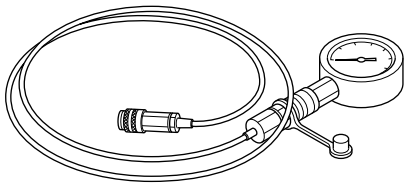

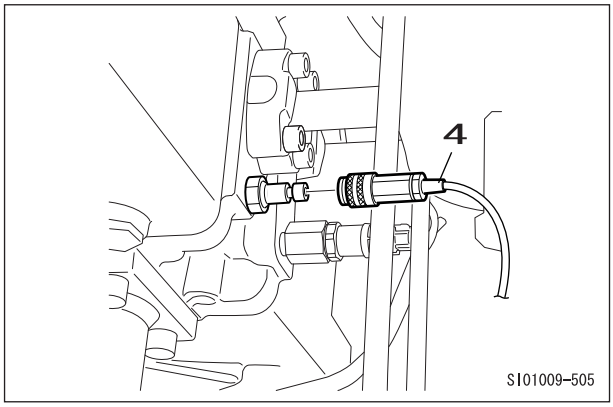

https://truckmanualshub.com/

A Attachment pressure measurement

Example: Arm-out pressure measurement

Measure with the following operations.

Engine speed	1900 min^{-1}
Work mode	SP mode
Lever operation	Arm-out relief
Oil temperature	45 - 55 ℃
Measuring port	1 pump: P1 port
	2 pumps: P2 port
Set pressure	Boosted pressure: 37.3 MPa
	Standard: 34.3 MPa

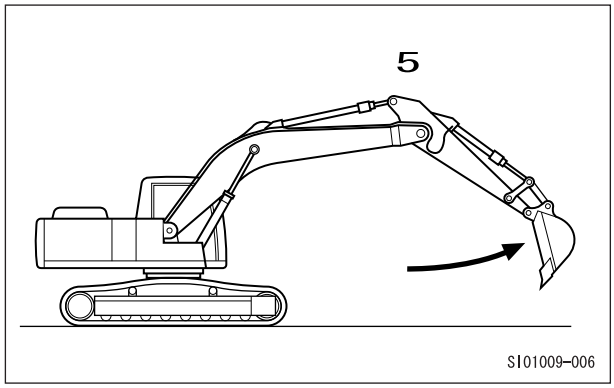

5	Arm-out relief

When the attachment operates, since the pressure boost operates automatically, the pressure resulting from the pressure boost setting can be checked for about 8 sec. After 8 sec. or more, the standard set pressure can be checked.

Measure relieving each cylinder with the arm out/in, the bucket open/close, and the boom up.

Lever operation	Arm out	Arm in	Bucket open	Bucket close	Boom up	Boom down
Engine speed	1900 min^{-1}					
Work mode	SP mode					
Oil temperature	45 - 55 ℃					
1 pump flow measuring port	P1	P1	P2	P2	P2	P2
2 pumps flow measuring port	P2	P2	No	No	P1	P1
Pressure boost	37.3 MPa	37.3 MPa	37.3 MPa	37.3 MPa	37.3 MPa	27.4 MPa
Standard pressure	34.3 MPa	34.3 MPa	34.3 MPa	34.3 MPa	34.3 MPa	27.4 MPa

Boom-down pressure measurement

For pressure measurement with the boom down, put the arm cylinder at its out stroke end, open the bucket, put the bucket tip on the ground, carry out the boom-down operation, and measure.

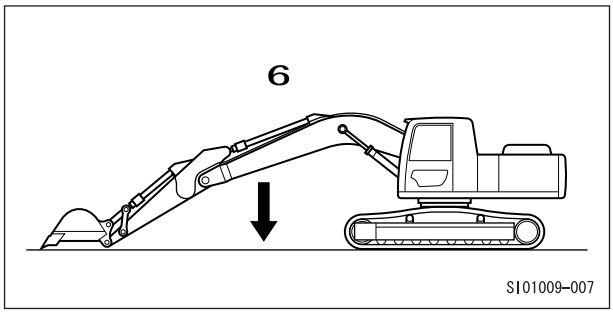

6	Boom-down relief

https://truckmanualshub.com/

B Travel pressure measurement

[1] Install the stopper (5) on the crawler sprocket section (6) and lock the travel motor.

[2] Measure with the following operations.

Engine speed	2050 min^{-1}
Work mode	SP mode (1st speed)
Lever operation	Travel relief
Oil temperature	45 - 55 ℃
Measuring port	Left travel: P1 port
	Right travel: P2 port
Set pressure	34.3 MPa

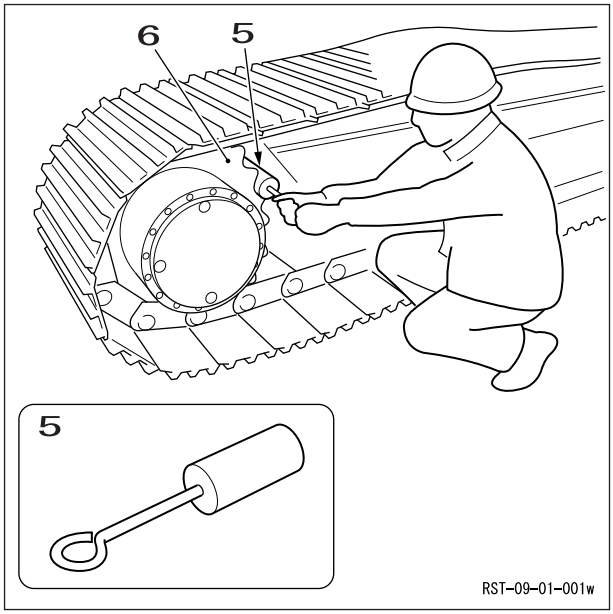

C Swing pressure measurement

[1] Set the swing lock with the monitor.

[2] Measure with the following operations.

Engine speed	1900 min^{-1}
Work mode	SP mode
Lever operation	Swing relief
Oil temperature	45 - 55 ℃
Measuring port	P1 port
Set pressure	30.4 MPa

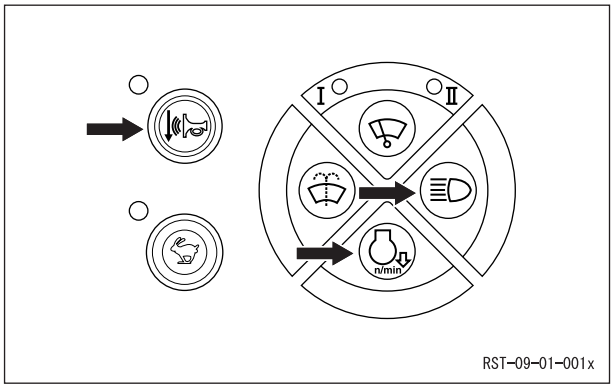

[3] After the end of pressure measurement, release the swing lock with the monitor.

Swing lock switching

In order to prevent accidental operation under certain special circumstances, sometimes the swing brake need to be left ON all the time.(Swing lock) At this time, the swing lock can be switched ON/OFF by holding down the "horn volume select switch", the "working light switch", and the "auto idle switch" at the same time for 2 sec. Additionally, turn the key OFF with the swing lock ON, have the swing lock ON when the key is turned ON again. (The previous data is held.)

https://truckmanualshub.com/

D Option line pressure measurement

[1] Close the option line stop valve (7).

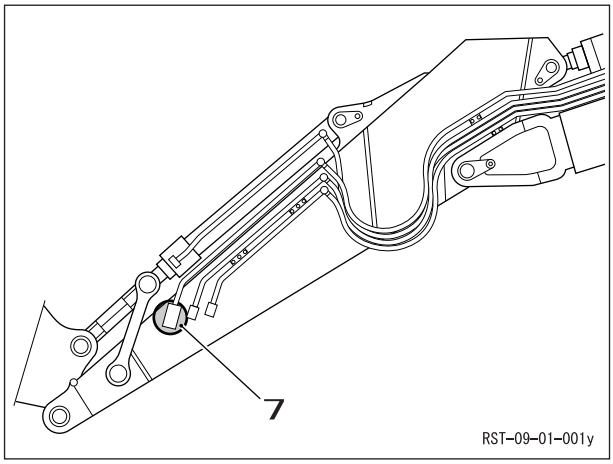

[2] With the option operation select switch in the cab, switch to the option line to measure. (Breaker, double-acting)

[3] Measure with the following operations.

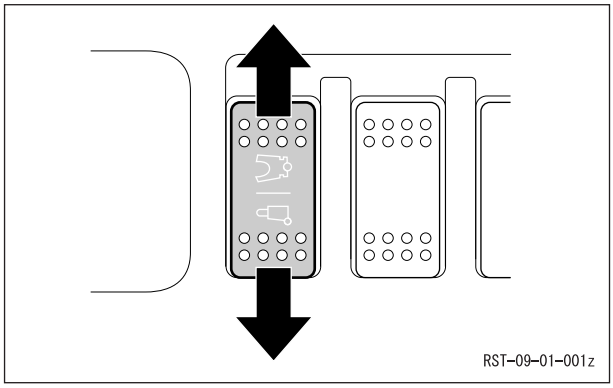

Engine speed	1900 min^{-1}
Work mode	SP mode
Pedal operation	Option relief
Oil temperature	45 - 55 ℃
Measuring port	1 pump: P2 port
	2 pumps: P1 port
Set pressure	* 29.4 MPa

* Adjust the set pressure to match the specifications of the attachment used.
Factory pressure settings
Breaker circuit: 2.94 MPa
Double-acting, multi-purpose (crusher) circuit: 17.8 MPa

https://truckmanualshub.com/

2. Pilot Pressure Measurement

(1) Pressure gauge installation

Remove the plug with the wrench (8) to install a pressure gauge at the pump pressure measuring port (P3).

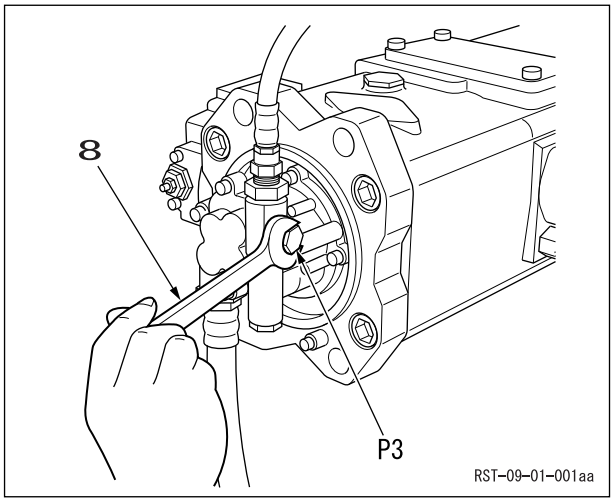

Install the adapter (9).

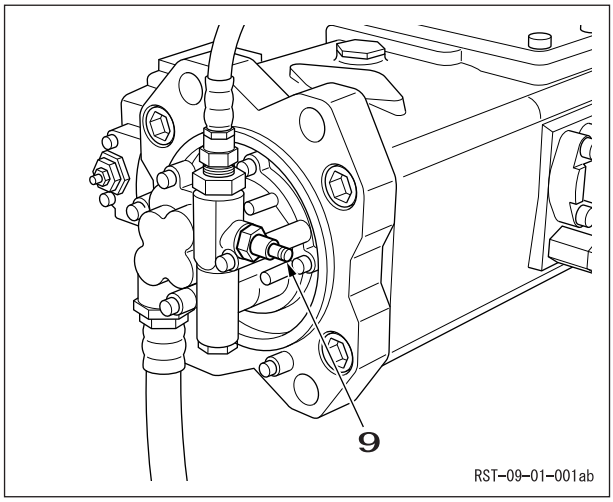

Install the pressure gauge (10) and measure the pressure.

Engine speed	1900 min^{-1}
Work mode	SP mode
Oil temperature	45 - 55 ℃
Measuring port	P3 port
Set pressure	3.9 MPa

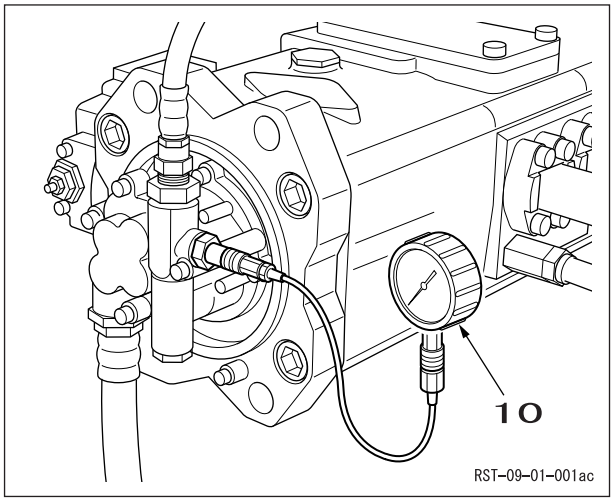

Pressure gauge for 10 MPa
Port size G1/4

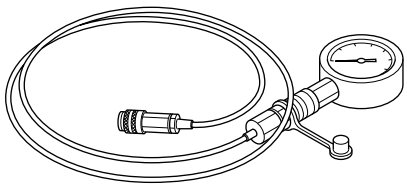

https://truckmanualshub.com/

3. Negative Control Pressure Measurement

(1) Pressure gauge installation

Remove the pump N1 or N2 pressure sensor connector (11), and remove the pressure sensor. (N1, N2: pressure port)
(The pressure sensor location becomes the measurement port.)

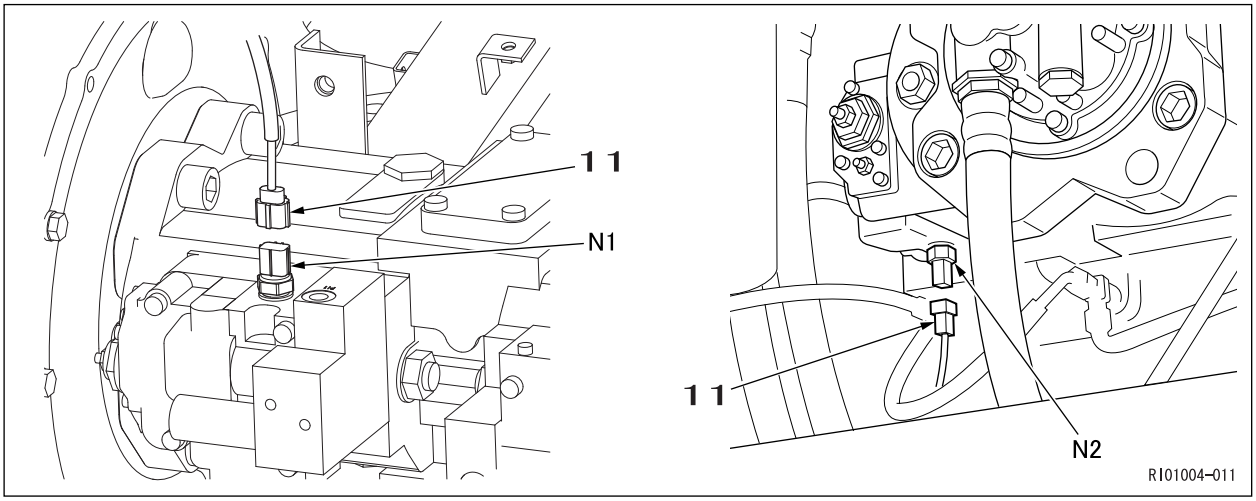

Install the pressure gauge at the port from which the N1 or N2 pressure sensor was removed.

Pressure gauge	for 10 MPa
Port size	G1/4

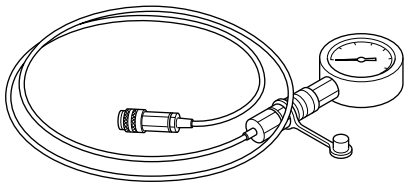

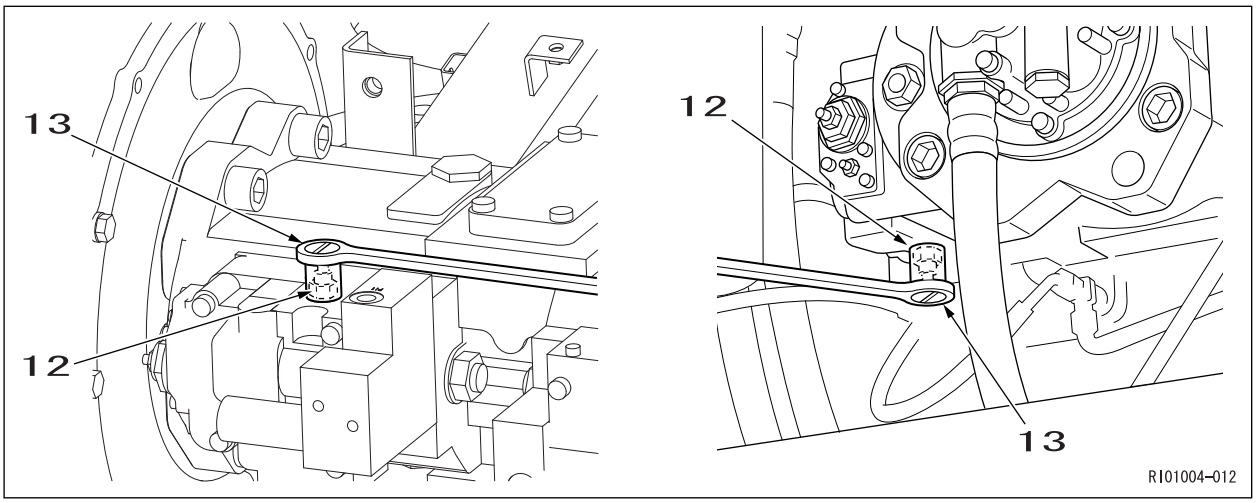

12	Adapter
13	Ratchet

https://truckmanualshub.com/

Measure the negative control pressure for each operation.

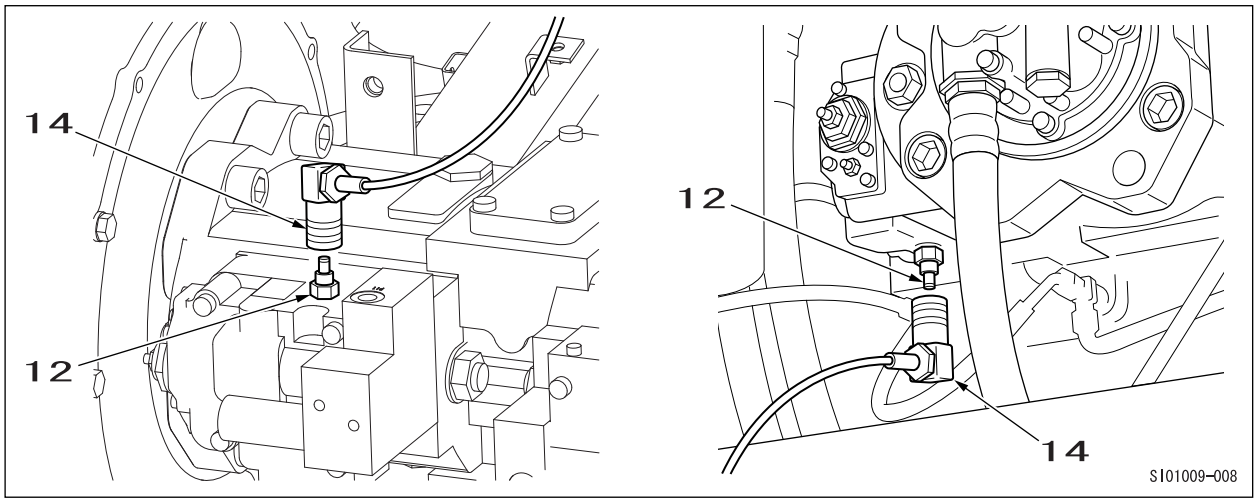

14	Pressure gauge

Engine speed	1900 min^{-1}
Work mode	SP mode
Oil temperature	45 - 55 ℃
Measuring port	P1 pump side: N1 port
	P2 pump side: N2 port
Set pressure	3.9 MPa max.

https://truckmanualshub.com/

Pressure Adjustment

1. Main Pressure Adjustment

■ Pressure measurement and adjustment preparation work

Pressure is adjusted with control valves.
The following preparations are required for adjusting with control valves.

[1] Engine hood opening and closing
Pull the engine hood lock release lever (2) to release the lock.

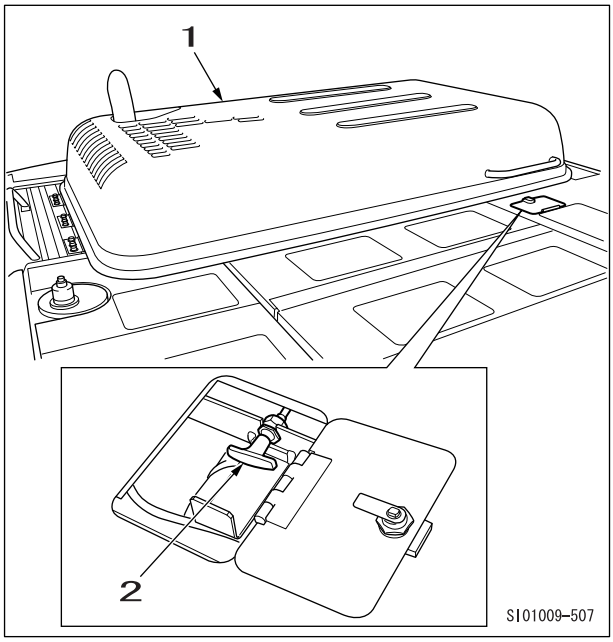

Open the engine hood (1).
At this time, always check that the lock (3) is locked.

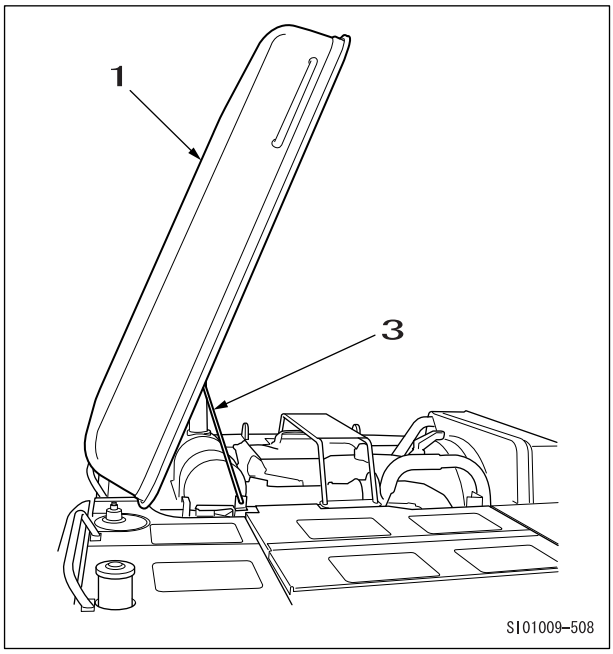

[2] Cover removal
Remove the 6 bolts (4), then remove the cover (5).

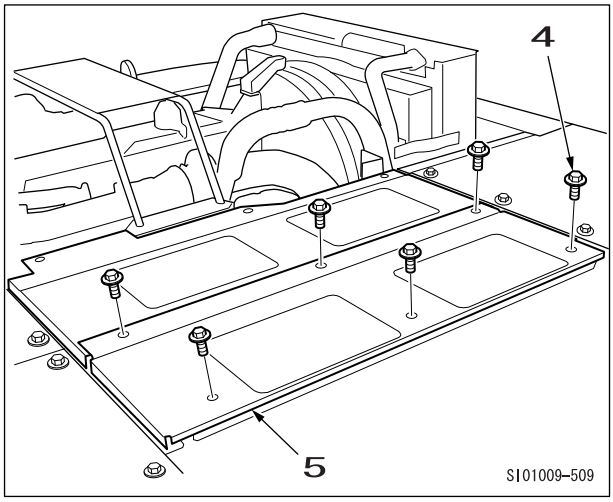

https://truckmanualshub.com/

(1) Main relief pressure adjustment

Engine speed	1900 min^{-1}
Work mode	SP mode
Lever operation	Arm-in relief
Oil temperature	45 - 55 ℃
Measuring port	P1 port
Measurement pressure	Boosted pressure: 37.3 MPa
	Standard: 34.3 MPa
Pressure per rotation of adjusting screw	Boosted pressure: 28.4 MPa/rotation
	Standard: 21.3 MPa/rotation

Before adjusting, remove the pilot hose for the pressure boost signal (10) connected to the main relief valve (7), then insert the plug (8) into the hose side. The procedures for boosted pressure and standard pressure are different.

For boosted pressure

a) Loosen the standard lock nut (27 mm) (14) and tighten the adjusting screw (27 mm) (13). Fasten with a wrench (27 mm) so that the pressure boost adjusting screw does not turn.

b) After tightening until the adjusting screw stops turning, tighten the lock nut (11).

c) Start the engine and run it at maximum rotation.

d) Move the arm lever to the in side, set the relief state, and hold.

e) Loosen the pressure boost lock nut (32 mm) (11) and adjust the set pressure with the adjusting screw (27 mm) (12).

- When lower than the set pressure, tighten.
- When higher than the set pressure, first lower below the set pressure, then adjust on the tightening side.

f) After adjustment, fasten the adjusting screw with a wrench (27 mm), then tighten the lock nut.

g) After locking, check the pressure on the boosted pressure side.
Repeat a) - f) until the set pressure is correctly adjusted.

For standard pressure

h) Loosen the standard lock nut (27 mm) (14).

i) Loosen the adjusting screw (13), lower below the set pressure, then adjust on the tightening side.

j) After adjustment, tighten the lock nut while fastening the adjusting screw (13) with a wrench (9).

k) After locking, check the pressure.
Repeat h), i), and j) until the set pressure is correctly adjusted.

l) Stop the engine.

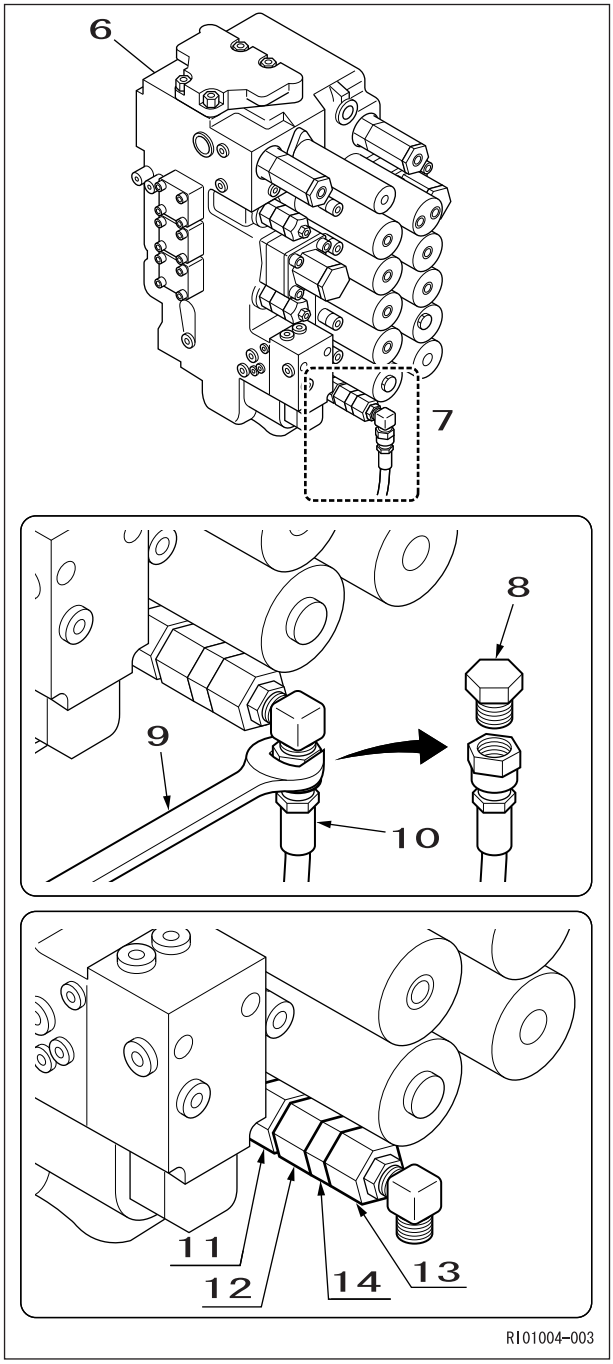

6	Control valve
9	Wrench (19 mm)

https://truckmanualshub.com/

(2) Overload relief pressure adjustment

Engine speed	1900 min^{-1}
Work mode	SP mode
Oil temperature	45 - 55 ℃
Measuring port	P1/P2 port
Measurement pressure	Boom down: 27.4 MPa
	Others: 39.2 MPa
Pressure per rotation of adjusting screw	21.2 MPa/rotation

Since the overload relief pressure is set higher than the main relief pressure, it is necessary to provisionally set the main relief pressure higher than the overload relief pressure. (Except for boom down)

Main relief pressure provisional setting

- Using the main pressure adjustment procedure for reference, temporarily set the boosted pressure and standard pressure to at least 39.2 MPa.
  * For boom down (19), since the overload set pressure is lower than the main relief set pressure, there is no need to temporarily set the main relief pressure.

Pressure adjustment

Example: Arm-out (17) overload relief adjustment

[1] Loosen the lock nut (21) with the wrench (23) and adjust by turning the adjusting screw (22) with the hexagon wrench (24).
- When lower than the set pressure, tighten.
- When higher than the set pressure, first loosen to a pressure lower than the set pressure, then adjust on the tightening side.

[2] After adjustment, lock the lock nut (21).

[3] After adjusting the overload relief pressure, adjust the boosted pressure and standard pressure to their normal values referencing the main pressure adjustment procedure.
  * For the position of each overload relief, see the "Control Valve Relief Locations".

15	Control valve
16	Boom up
18	Bucket open
20	Bucket close

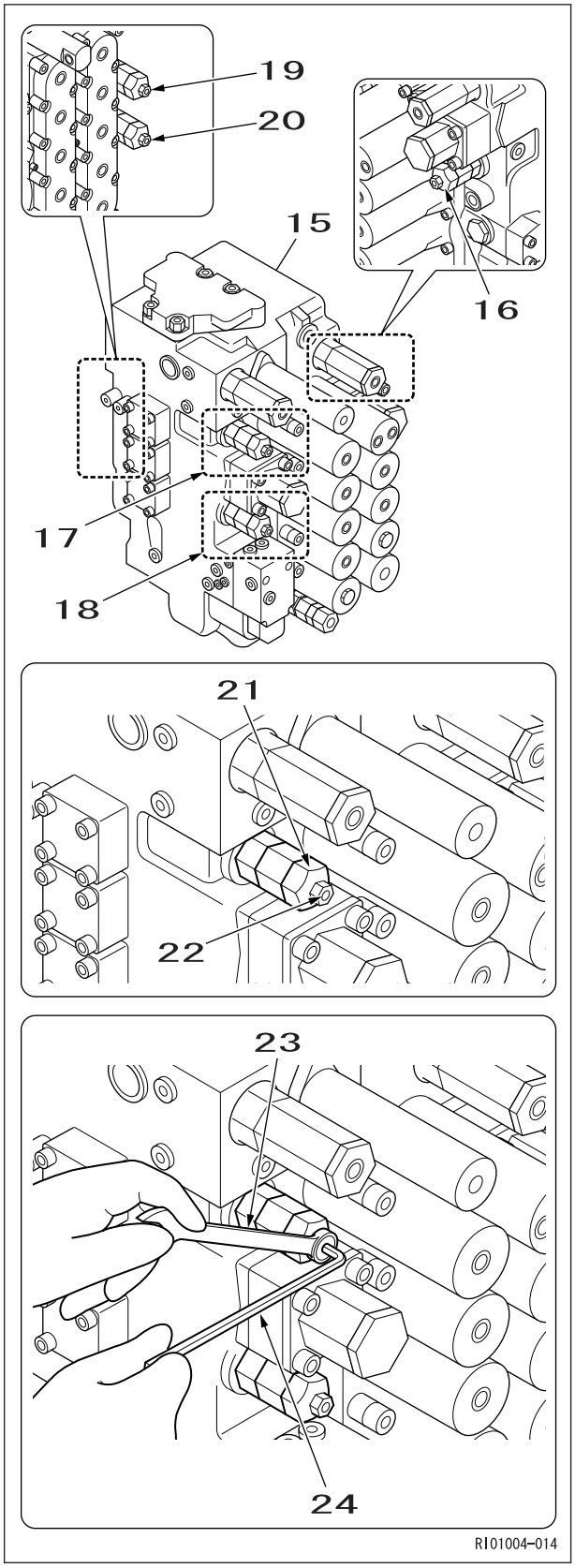

https://truckmanualshub.com/

(3) Swing relief pressure adjustment

Engine speed	1900 min^{-1}
Work mode	SP mode
Oil temperature	45 - 55 ℃
Measuring port	P1 port
Measurement pressure	30.4 MPa
Pressure per rotation of adjusting screw	11.6 MPa/rotation

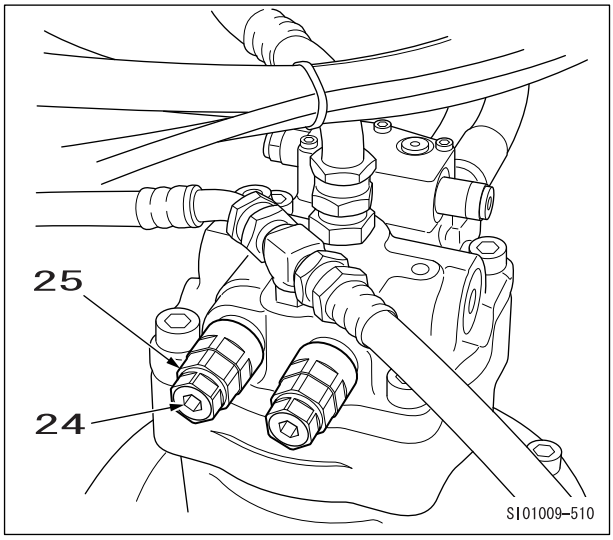

Swing pressure

[1] Using the swing pressure measurement procedure for reference, lock the swing, and check the swing pressure.

[2] Loosen the lock nut (25) and adjust by turning the adjusting screw (24).

- When lower than the set pressure, tighten.
- When higher than the set pressure, first loosen to a pressure lower than the set pressure, then adjust on the tightening side.

[3] After adjustment, lock the lock nut (25).

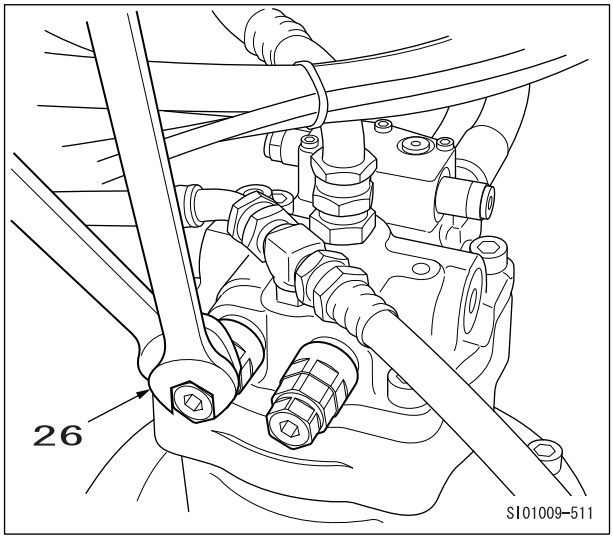

26	Wrench

https://truckmanualshub.com/

2. Pilot Pressure Adjustment
   (1) Pressure measurement
      a) Install the pressure gauge (28).
      b) While holding the plug with a wrench (24 mm) (26), adjust with a hexagon wrench (6 mm) (27).

Engine speed	1900 min^{-1}
Lever operation	Neutral
Measuring port	P3
Set pressure	3.9 MPa

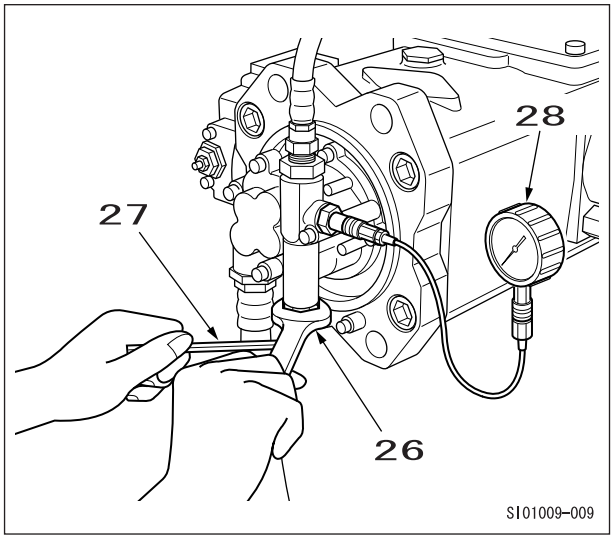

https://truckmanualshub.com/

Hydraulic Pump Flow Measurement Procedures

Preparations

Workers 3 Role (worker 1: work supervisor, pressure adjustment)

Role (worker 2: operator)

Role (worker 3: flow, pressure measurement, recording)

1. Items to Prepare

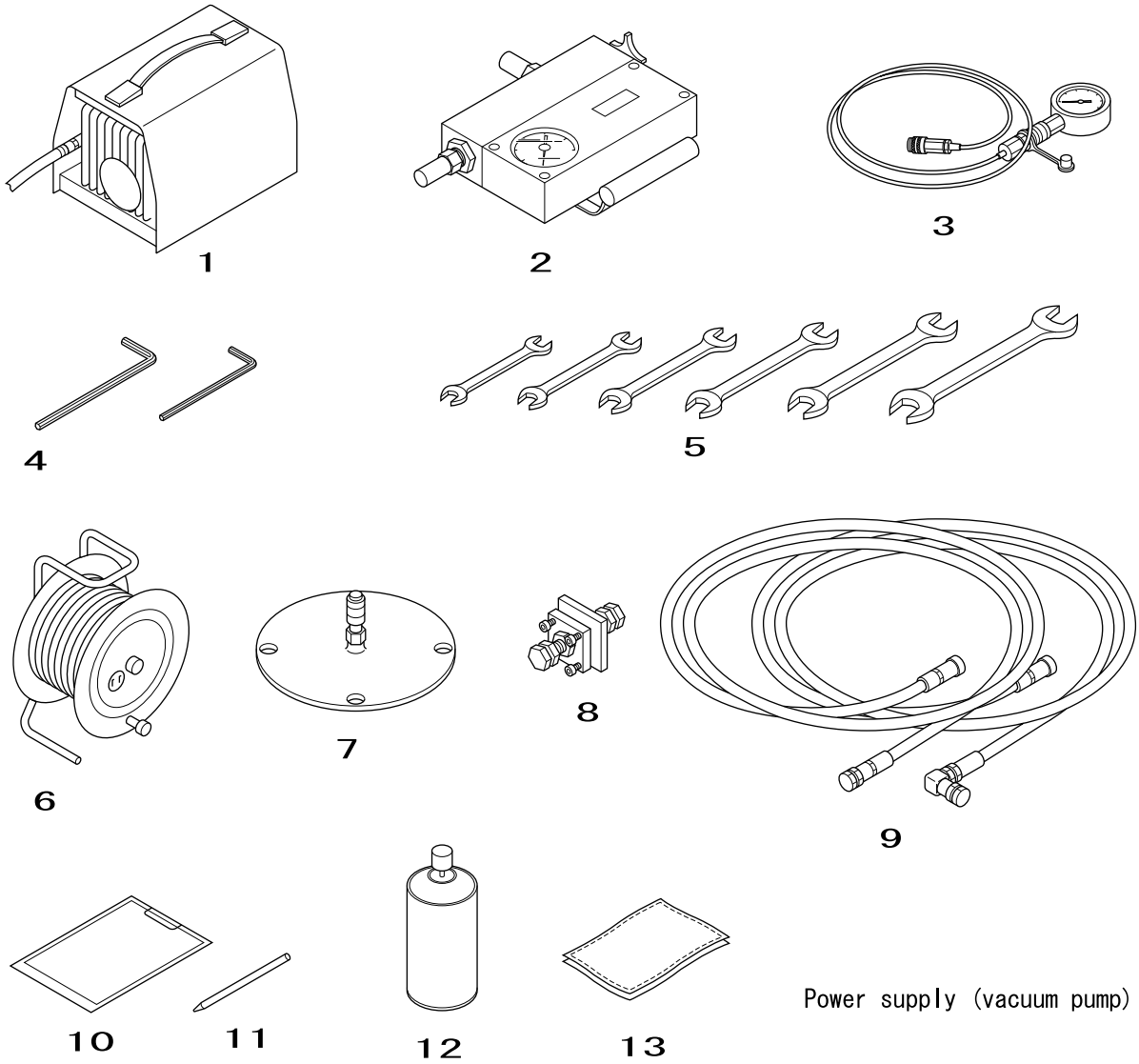

1	Vacuum pump	8	Adapter (flange type)
2	Flow meter	9	Hydraulic hose (for flow measurement)
3	Pressure gauge (60 MPa × 2)	10	Recording sheet
4	Hexagon wrench (6 mm, 10 mm)	11	Pen
5	Wrenches (17, 19, 24, 27 × 2, 32, 36 × 2)	12	Cleaning fluid
6	Extension cable	13	Rag
7	Hydraulic oil tank lid (for vacuum pump)		

https://truckmanualshub.com/

Hydraulic Pump Flow Measurement Procedures

Work Preparations

[1] Check that the main unit is in its work posture (arm-vertical).

[2] Bleed out the pressure. (See the details on Bleeding Pressure in the Pressure Measurement and Adjustment Procedures.)
* Perform a swing prevention check.

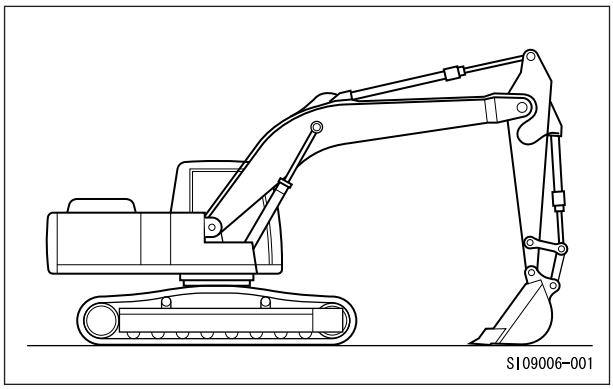

[3] Use a wrench (17 mm) to remove the feed port cover (1).

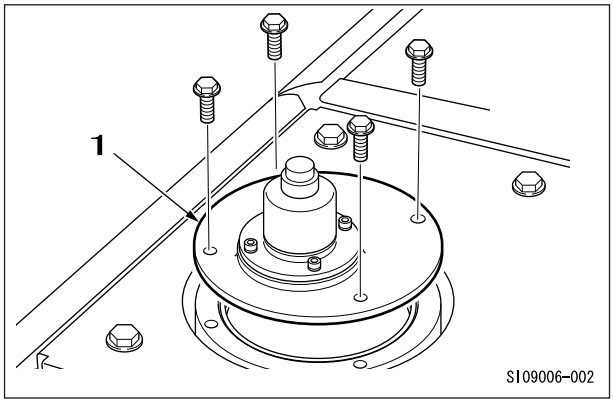

[4] Use the bolts removed in [3] to install the hydraulic oil tank lid (for vacuum pump) (2).

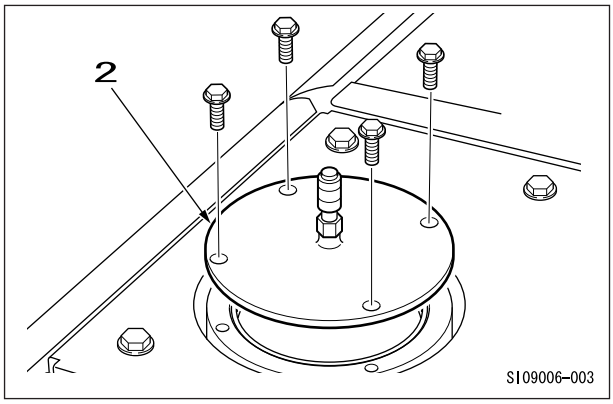

[5] Install the vacuum pump (3) on the hydraulic oil tank lid.

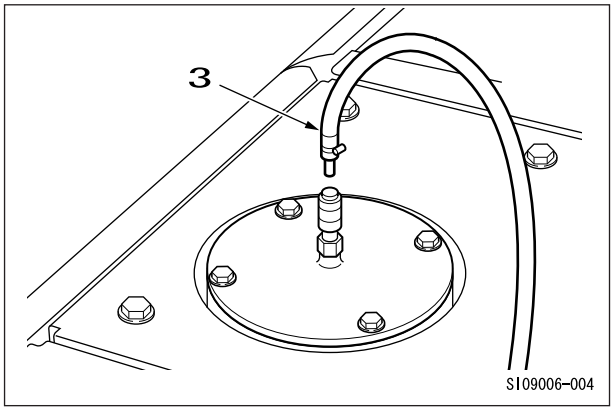

https://truckmanualshub.com/

[6] After setting the vacuum pump (3) as in the diagram on the right, switch on the power.
(If the cable is too short, use an extension cable.)

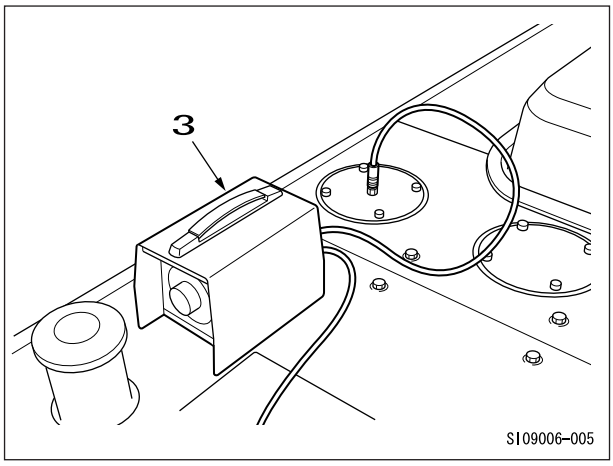

[7] Use a hexagon wrench (7) (10 mm) to remove the split flanges (4) and hydraulic hose (6).
(This section explains flow measurement at the P2 pump.)

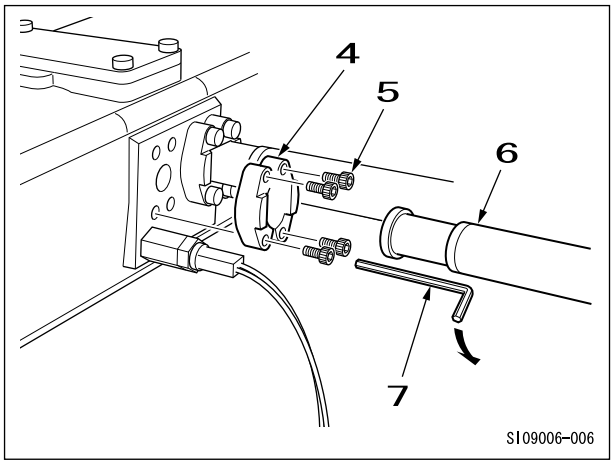

5	Bolt

https://truckmanualshub.com/

Hydraulic Pump Flow Measurement Procedures

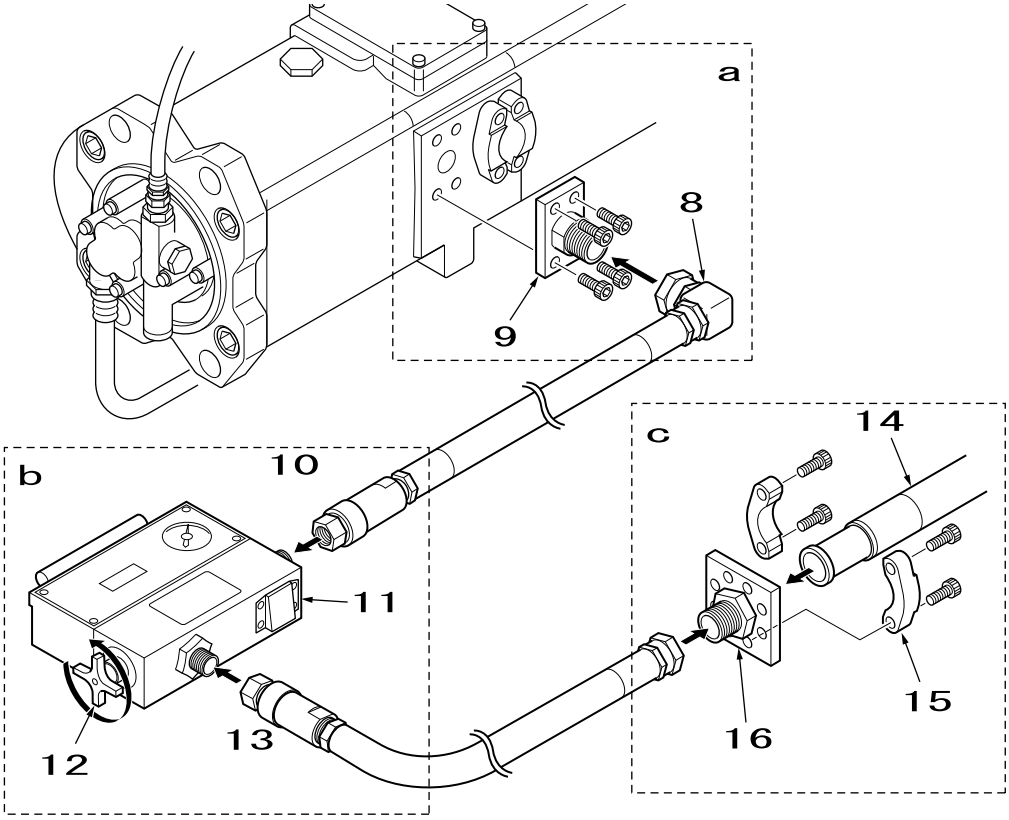

SI09006–007

a	Procedure 9 - 12
b	Procedure 13 - 15
c	Procedure 8

8	Elbow adapter	13	Hydraulic hose (OUT)
9	Adapter	14	Hydraulic hose
10	Hydraulic hose (IN)	15	Split flange
11	Flow meter	16	Adapter (flange type)
12	Orifice		

[8] Use the split flange to install the adapter (flange type) on the tip of the hydraulic hose removed in [7].

[9] Install the adapter at the position from which the hydraulic hose was removed.

[10] When the parts are set as in the diagram above, remove the plug.

[11] Use the wrench to connect the adapter installed on the pump in [9].

[12] If necessary, install an "elbow adapter" on the (prepared) hydraulic hose connected to the flow meter IN side.

[13] Install the hydraulic hose on the flow meter IN side, then fasten with the wrench.

[14] Install the (prepared) hydraulic hose on the flow meter OUT side, then fasten with the wrench.
* When connecting, always check the connection positions.
* Always have the orifice fully open.

[15] Install pressure gauges on P1 and P2.
(See "Main Pressure Measurement".)

[16] Remove the vacuum pump and re-install the hydraulic oil tank the same way it was.

[17] Open the engine hood.
(See "Main Pressure Adjustment".)

[18] Remove the cover.

[19] Remove the pilot hose for the pressure boost signal, then plug the hose side.
(See "Main relief pressure adjustment".)

This completes the preparation for flow measurement.

https://truckmanualshub.com/

Flow Measurement

[1] Measure the flow.
When measuring the flow, position the workers as in the diagram on the right.
(Worker 1: Work supervisor, pressure adjustment)
(Worker 2: Operator)
(Worker 3: Flow, pressure measurement, recording)

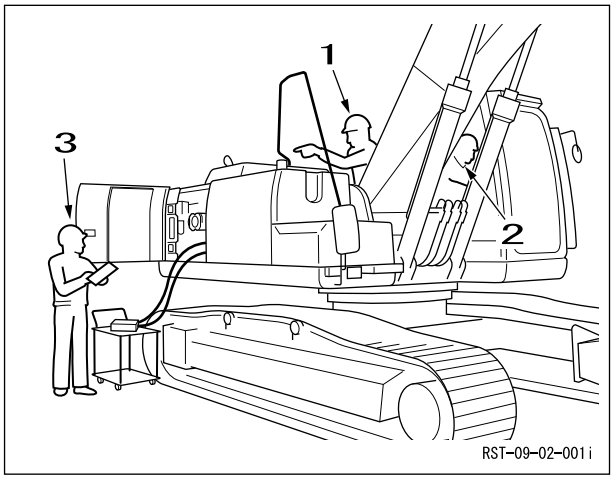

[2] At the signal from the work supervisor, the operator starts the engine.

[3] Check the hydraulic oil temperature on the monitor. (50 ℃)
Check that the engine rotation and pump milliamp is normal.

[4] The operator signals the arm-out relief operation to worker 1.

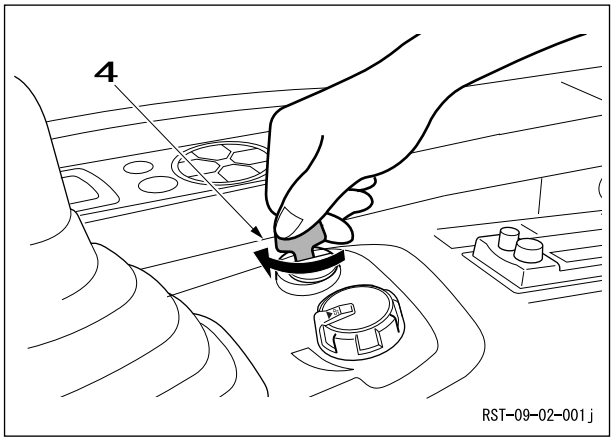

4	Ignition key

[5] Worker 2 lowers the arm-out port relief. (Min: 24 MPa P1+P2)

[6] Start of flow measurement

[7] The arm-out relief operation is carried out.

[8] Data measured in units of 2.0 MPa (P1+P2)
* The measurement is carried out from 24.0 - 76.0 MPa and ends when the maximum pressure is reached.

[9] Remove the flow meter.
* Because the maximum limit of the flow meter pressure gauge is exceeded starting from 40 MPa.

[10] Reset the arm-in port relief valve to normal pressure. (For details on this adjustment, see "Pressure Adjustment".)

[11] Remove the pressure gauges etc. and put everything back to normal. This completes the work.

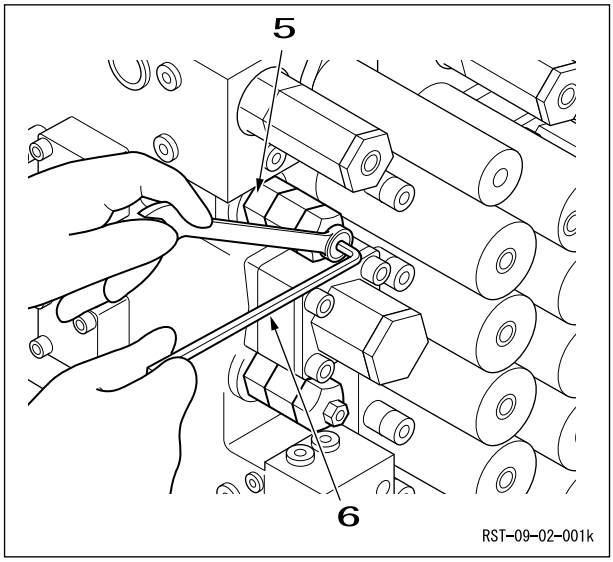

5	Lock nut 17 mm
6	Hexagon wrench 6 mm

https://truckmanualshub.com/

Drain Volume Measurement Procedures

Preparations

Measuring conditions

Engine speed	1st speed	1900 min^{-1}
	2nd speed	2050 min^{-1}
Mode		SP mode
Oil temperature		About 50 ℃

* Be careful. The drain volume varies greatly with the oil temperature.

Travel Motor Drain Volume Measurement

[1] Allow the bucket (2) to touch the ground so as to elevate one shoe crawler (1) as in the diagram on the right.

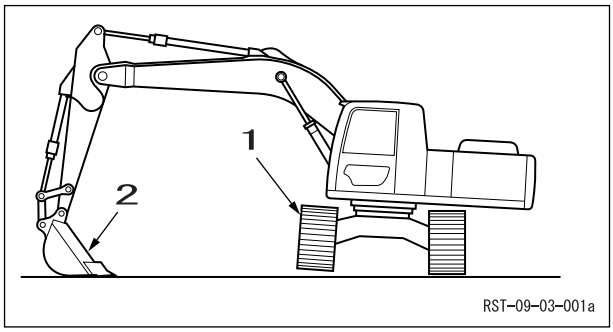

[2] Remove the bolts (4), then remove the cover (3).

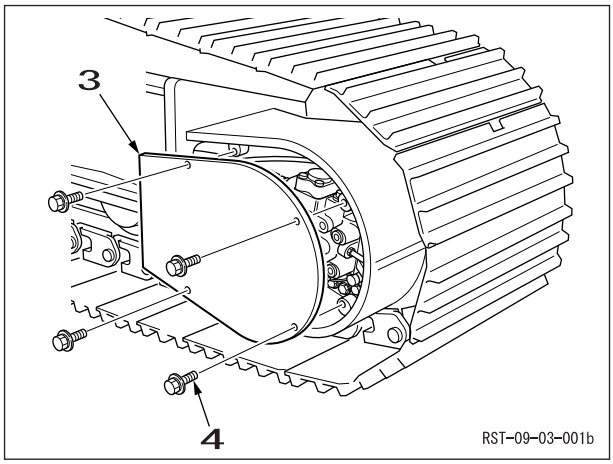

[3] Always lay a rag (6) underneath before removing the drain hose (5).

[4] Use a wrench to remove the drain hose (5). (Always install a cap on the removed drain hose (5).)

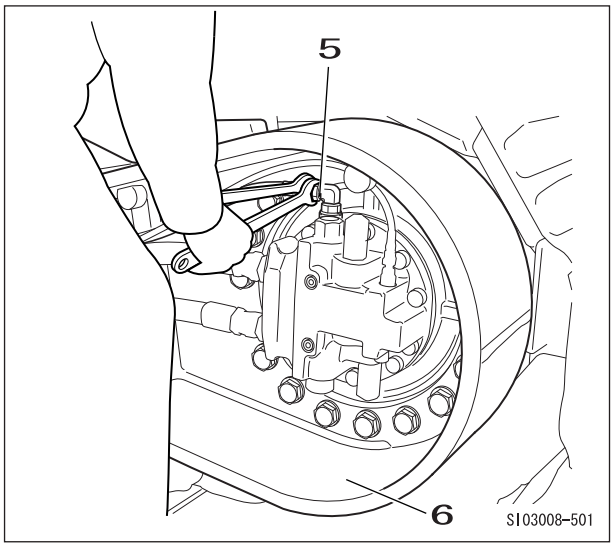

https://truckmanualshub.com/

Drain Volume Measurement Procedures

[5] Install the extension hose for measurement (7) on the side of the motor from which the drain hose was removed.

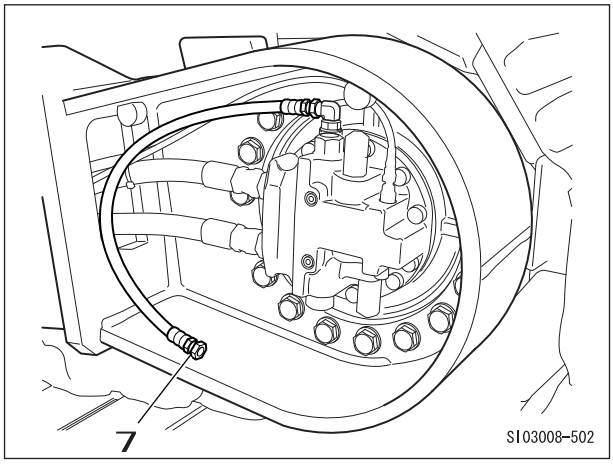

[6] Prepare a waste oil can (8) and measuring container (9) and set them as in the diagram on the right.

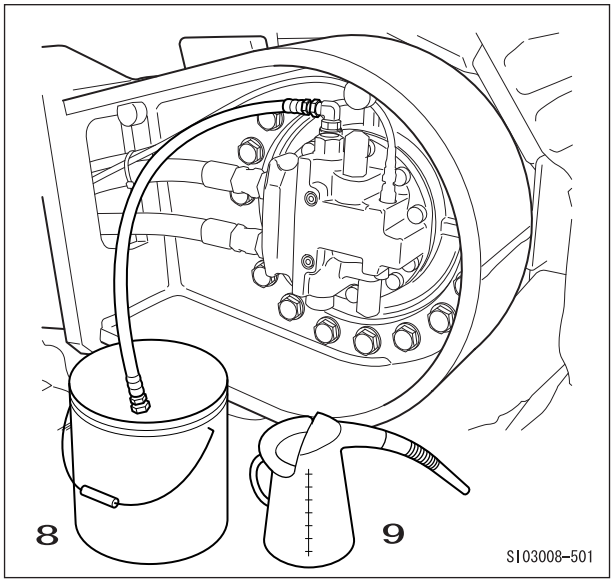

[7] Catch the stopper (10) between the sprocket section and the frame and lock the travel motor.

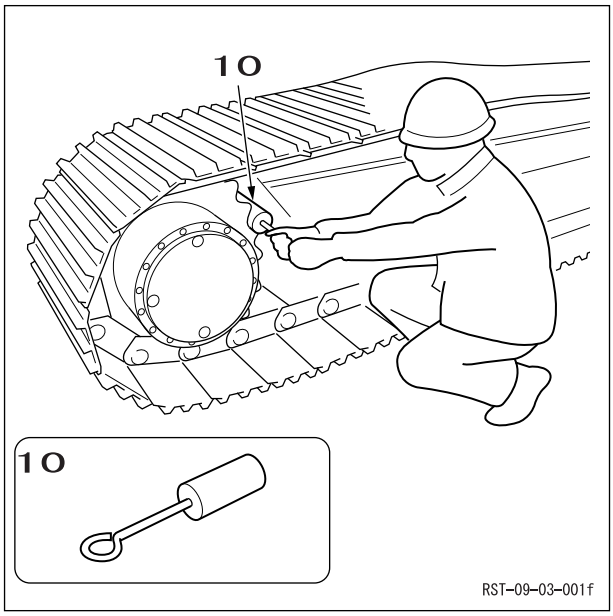

https://truckmanualshub.com/

[8] In SP mode at medium speed, relieve the travel operation, and move the extension hose to the measuring container (9) at the same time the motor starts.
(At starting, start measurement with a stop watch (11).)

[9] After 30 sec., move the extension hose to the waste oil can (8).

[10] Measure the volume of oil in the measuring container (9) as the drain volume for 30 sec.

	Forward		Backward	
	1st speed	2nd speed	1st speed	2nd speed
Right				
Left				

* Measure at least 3 times each for left, right, forward, and backward.

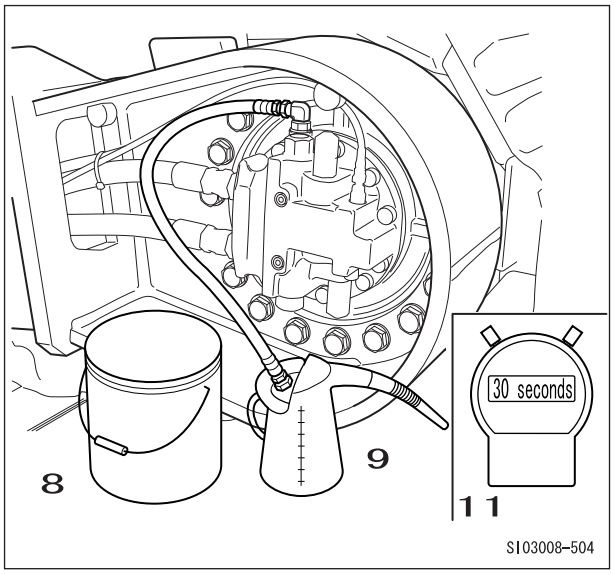

https://truckmanualshub.com/

Drain Volume Measurement Procedures

Swing Motor Drain Volume Measurement

[1] Remove the 2 drain hoses (1) and put plugs in the hose side of each.
(wrench size: 27 mm, clamp 22 mm (hose side))

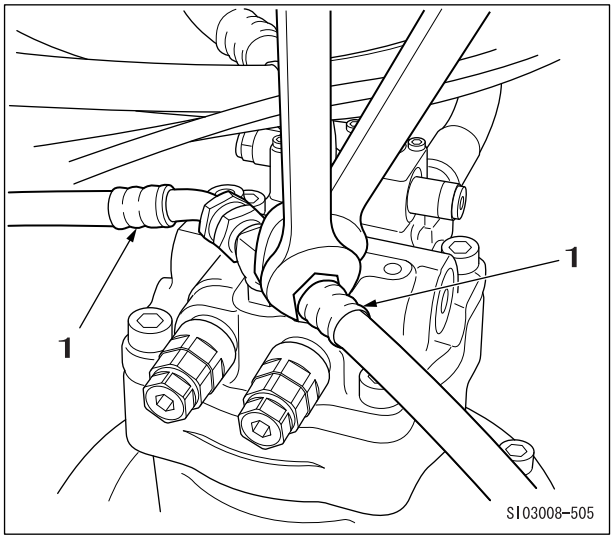

[2] Install the extension hose (3) for measuring the drain volume on one side of the T nipple. Install the hose facing in a direction that makes measurement easy and install a plug (2) on the other side.

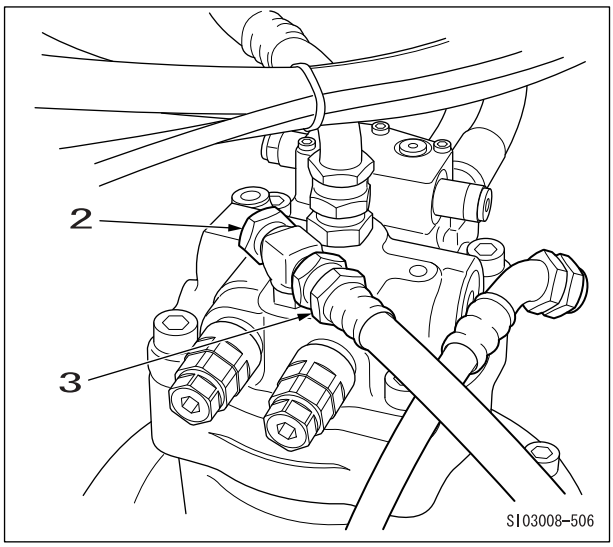

[3] Prepare a waste oil receiver and measuring container (5) and set them as in the diagram on the right.
For details on the method for locking the swing motor, see "Swing relief pressure adjustment".

[4] In SP mode, relieve the swing operation and move the extension hose to the measuring container (5) at the same time the motor starts.
(At starting, start measurement with a stop watch (4).)

[5] After 60 sec., move the extension hose to the waste oil can (6).

[6] Measure the volume of oil in the measuring container (5) as the drain volume for 60 sec.
Measure at least 3 times each for left and right.

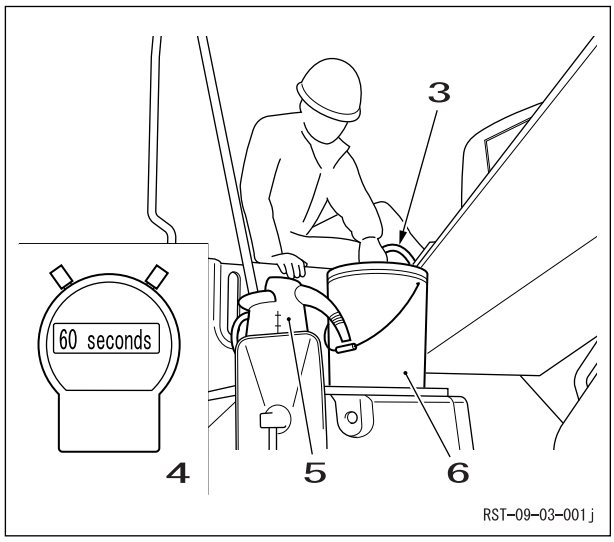

Right	Left

https://truckmanualshub.com/

Caution	Always bleed off any air in the hydraulic circuits after replacing the hydraulic oil, repairing or replacing hydraulic equipment, or removing hydraulic pipes.

	Air bleed procedure mode (when bleeding, follow the procedure below.)				
	Hydraulic pump air bleeding	Cylinder air bleeding	Swing motor air bleeding	Travel motor air bleeding	Check
Hydraulic oil or hydraulic pump replacement	○ →	○ →	○	→	○
Cylinder replacement		○	→	→	○
Travel motor replacement			○	→	○
Swing motor replacement				○ →	○

RST-09-04-001a

* Failure to completely bleed off all the air can reduce the service life of hydraulic equipment and lead to damage.

Hydraulic Pump

[1] Loosen the air bleed plug (1) and check that oil oozes from the air bleed port (2).

[2] If oil does not ooze out, remove the air bleed plug (1), and fill hydraulic oil(3) from the air bleed port (2) into the pump case.

[3] Temporarily tighten the air bleed plug (1).

[4] Run the engine at low idle, slightly loosen the air bleed port, and run until oil oozes from the air bleed port (2) section.

[5] Completely tighten the air bleed plug (1).

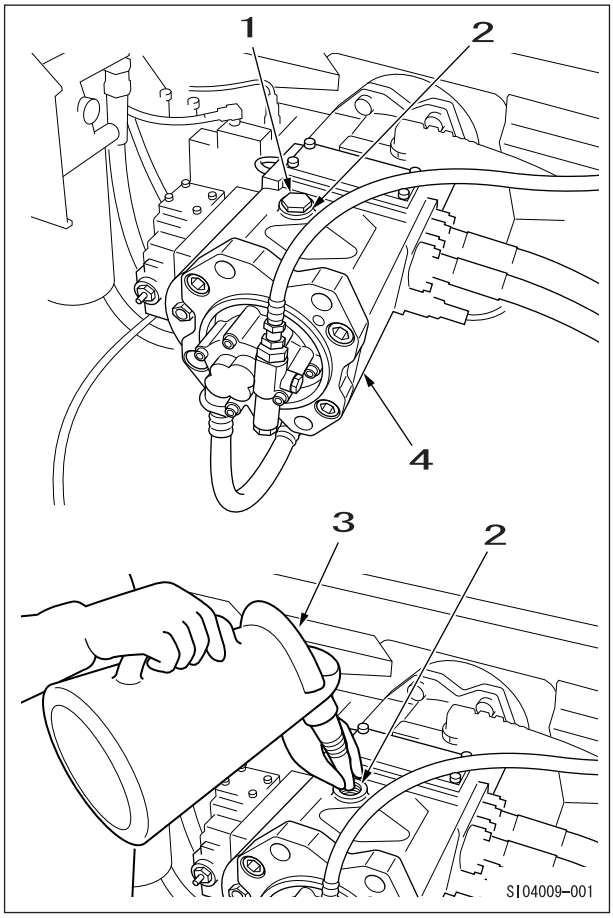

https://truckmanualshub.com/

Air Bleed Procedure

Travel Motor

[1] Remove the bolts (2), then remove the cover (1).

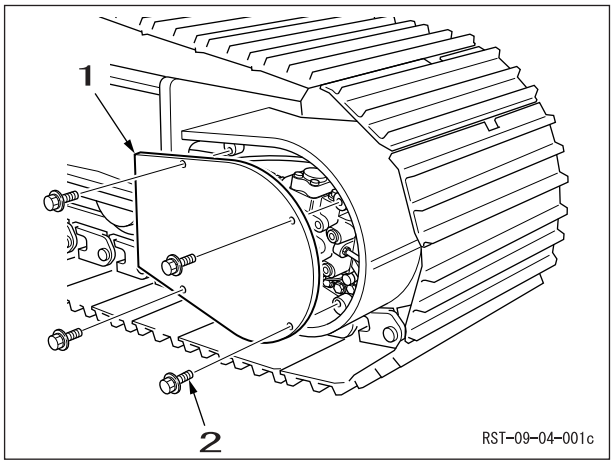

[2] Remove the hose (3) of drain port and elbow (4).

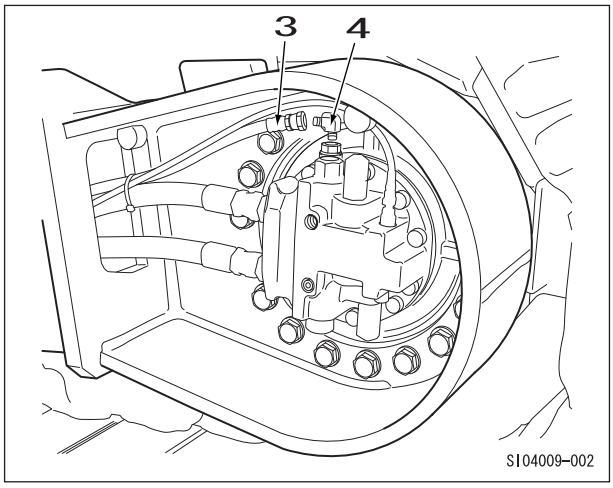

[3] Pour in of hydraulic oil (5) from the air bleed port.

[4] When inside the motor is filled with hydraulic oil, tighten the elbow and hose.

[5] Start the engine and execute a slow travel operation.

[6] Repeatedly travelling forward and backward bleeds off the air.

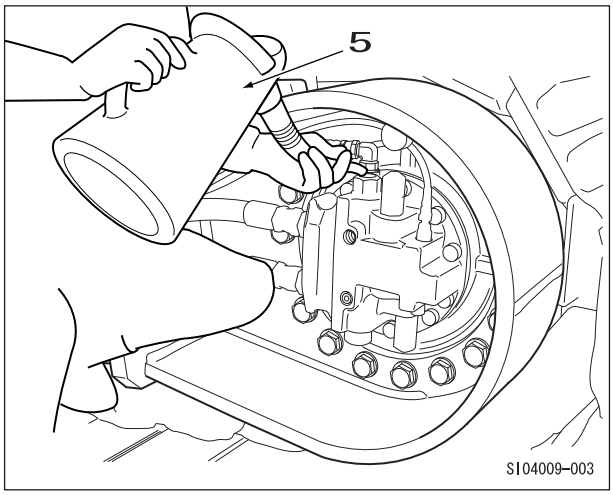

https://truckmanualshub.com/

Swing Motor

[1] Run the engine at low idle, loosen the tee (1) of drain hose (3), and check that oil oozes from the air bleed port section (2).
* Do not execute a swing operation.

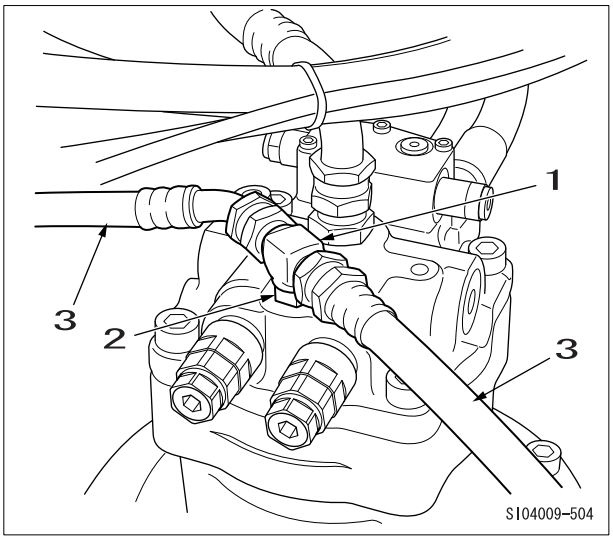

[2] If oil does not ooze out, stop the engine for now, remove the tee (1) of drain hose (3), and fill hydraulic oil (4) into the motor case.

[3] Temporarily tighten the tee (1) of drain hose (3).

[4] Run the engine at low idle, slightly loosen the tee (1) of drain hose, and run until oil oozes from the port section (2).

[5] Completely tighten the tee (1) of drain hose.

[6] With the engine at low idle, slowly swing evenly left and right at least 2 rotations.

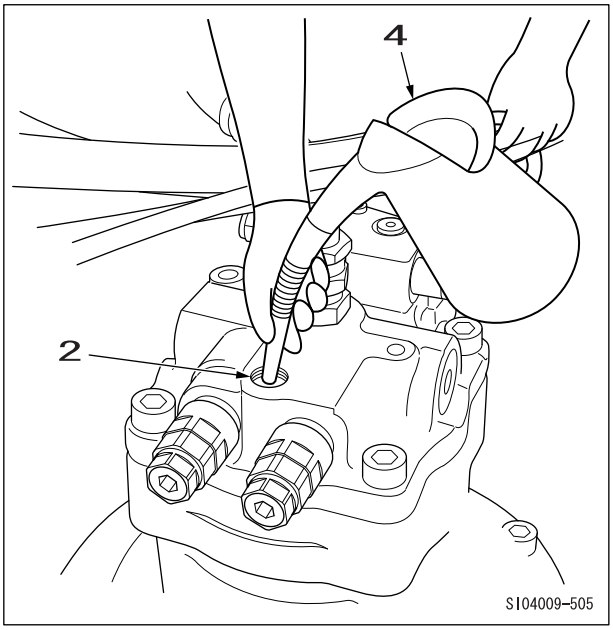

Check

After the air bleeding is complete, stop the engine for at least 5 minutes to allow any air bubbles in the hydraulic oil tank to dissipate.

https://truckmanualshub.com/

Air Bleed Procedure

HBCV (Option)

Caution	The HBCV air bleeding work requires 2 workers: an operator and an air bleed worker. Decide the signals beforehand and work safely. Set the main unit so that the arm HBCV is at the highest position. (See the figure below)

1. Boom Cylinder HBCV

[1] Start the engine and lower the boom without jacking up the main unit.

[2] at the position in the figure.

[3] Foaming hydraulic oil comes out from the hose mouthpiece section.
When foaming hydraulic oil stops coming out, tighten the hose mouthpiece (1).

[4] Execute steps [2] and [3] for the opposite side boom cylinder too.

[5] Check boom operations. If there is a delay in the operation response, bleed the air again with the same procedure.

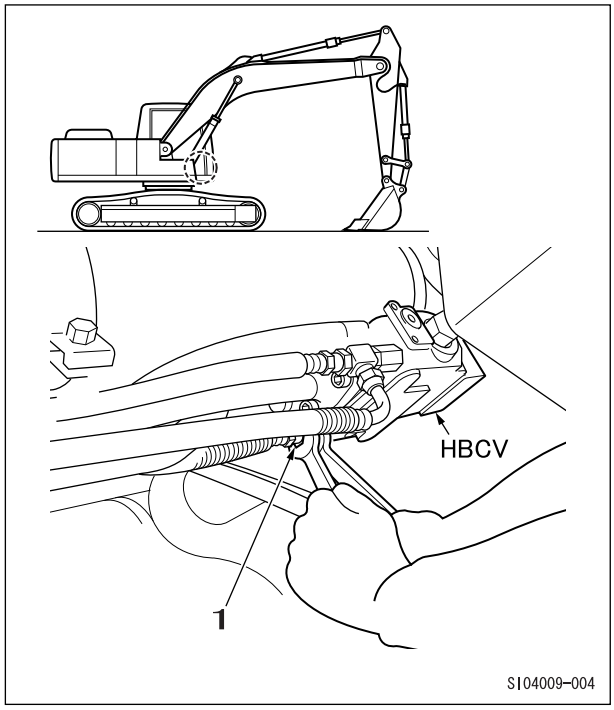

2. Arm Cylinder HBCV

For arm-in operations, bleed the air from the arm cylinder HBCV using the same procedure as for boom cylinder HBCV air bleeding.

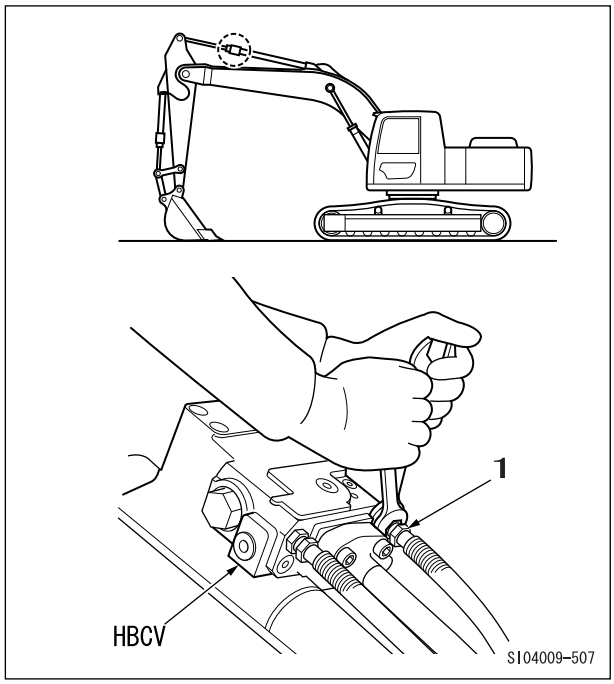

1	hose mouthpiece

https://truckmanualshub.com/

Measurement Equipment

[1] Hydraulic pump electromagnetic proportional valve (horsepower, flow)
[2] Solenoid valve
[3] Oil temperature sensor
[4] Pressure sensor
[5] Fuel sensor
[6] Atmospheric pressure sensor
[7] Suction air temperature sensor
[8] Glow plug
[9] Fuel feed pump
[10] EGR
[11] Injector
[12] Other sensors included on the engine

https://truckmanualshub.com/

Electricity Measurement Procedures

Measurement Tools

[1] Tester

[2] Service connector kit
Models 1 - 3 common kit part number: KG0HP202-00

No.	Part number	Old part number	Name	-1/-2 series	-3 series	-3B series	-5 series
1	KHP11810	WDB0055-1	Throttle motor (12P)	●	-	-	-
2	KHP11820	WDB0055-2	Throttle motor (12P) (main harness side)	●	-	-	-
3	KHP11830	WDB0055-3	Stop motor (6P)	●	●	-	-
4	KHP11840	WDB0055-4	Stop motor (6P) (main harness side)	●	●	-	-
5	KHP11850	WDB0055-5	Solenoid valve (2P)	●	●	●	●
6	KHP11860	WDB0055-6	Hydraulic pump electromagnetic proportional valve 1 (2P) (main harness side)	●	●	●	●
7	KHP11870	WDB0055-7	Hydraulic pump electromagnetic proportional valve 2 (2P)	●	●	●	●
8	KHP11880	WDB0055-8	Pressure switch (2P)	●	●	●	●
9	KHP11890	WDB0055-9	Pressure switch (2P) (main harness side)	●	●	●	●
10	KHP11900	WDB0055-10	Receiver dryer (2P)	●	●	●	●
11	KHP11910	WDB0055-11	Oil filter switch (1P)	●	-	-	-
12	KHP11920	WDB0055-12	Oil filter switch (1P) (main harness side)	●	-	-	-
13	KHP1576		Backup sensor (2P) 120 - 290	-	●	-	-
14	KHP1732		Backup sensor (2P) 330 - 460	-	●	-	-
15	KHP11930		Backup sensor (3P) 800	-	●	-	-
16	KHP1578		Engine governor A (8P)	-	●	-	-
17	KHP1579		Engine governor B (6P)	-	●	-	-
18	KHP1579		Engine governor B (3P)	-	●	-	-
19	KHP1575		Oil temperature sensor (2P)	-	●	●	●
20	KHP1577		Pressure sensor (3P)	-	●	●	-
21	KHP11020		Atmospheric pressure sensor/pressure sensor (3P)	-	-	●	●
22	KHP11030		Suction air temperature sensor (2P)	-	-	●	●
23	KHP11060		Glow (1P)	-	-	●	●
24	KHP11070		Fuel pump (6P)	-	-	●	●
25	KHP11080		EGR (8P)	-	-	●	●
26	KHP11090		Injector (12P)	-	-	●	●
27	KHP11100		Sensor (20P)	-	-	●	●
28	KHP11970		Breaker ECM main harness assembly	-	-	●	●
29	KHP11040		Fan motor proportional valve (2P) 460 - 800	-	-	●	-
30	KHP11050		Fan motor reverse valve (2P) 460 - 800	-	-	●	-
31	KHP13650		Fuel sensor/solenoid valve (2P)	-	-	-	●
32	KHP13660		Angle sensor (3P) (liftcrane specifications)	-	-	-	●
33	KHP13670		Fuel feed pump (2P)	-	-	-	●
34	KHP13680		Fuel pump harness (3P)	-	-	-	●
35	KHP13690		Fuel pump (2P)	-	-	-	●
36	KHP13700		Air conditioner compressor (1P)	-	-	-	●
37	KHP13710		Engine sensor (20P)	-	-	-	●
38	KHP13720		Engine EGR (8P)	-	-	-	●

https://truckmanualshub.com/

Model 3B additional kit part number: KG0HP203-00

No.	Part number	Q'ty	Name	-1/-2 series	-3 series	-3B series
1	KHP11020	1	Atmospheric pressure sensor (3P)	-	-	●
2	KHP11030	1	Suction air temperature sensor (2P)	-	-	●
3	KHP11060	1	Glow (1P)	-	-	●
4	KHP11070	1	Fuel pump (6P)	-	-	●
5	KHP11080	1	EGR (8P)	-	-	●
6	KHP11090	1	Injector (12P)	-	-	●
7	KHP11100	1	Sensor (20P)	-	-	●
8	KHP11970	1	Breaker ECM main harness assembly	-	-	●
9	KHP11040	1	Fan motor proportional valve (2P) 460 - 800	-	-	●
10	KHP11050	1	Fan motor reverse valve (2P) 460 - 800	-	-	●

[3] Service connector

1) Solenoid valve

Part number : KHP11850

Old part number : WDB0055-5

- Solenoid valve
- Fuel sensor

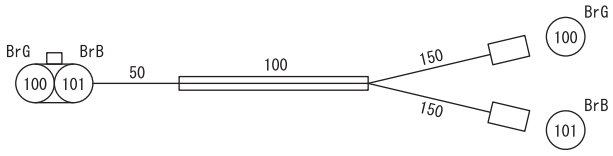

330-1-04-02-13_02a

2) Hydraulic pump electromagnetic proportional valve (main harness side)

Part number : KHP11860

Old part number : WDB0055-6

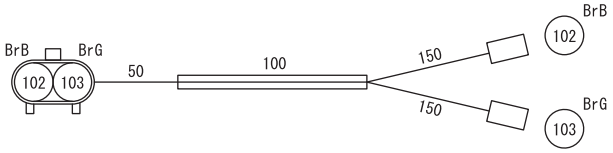

330-1-04-02-13b

3) Hydraulic pump electromagnetic proportional valve

Part number : KHP11870

Old part number : WDB0055-7

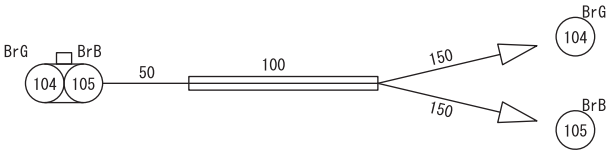

330-1-04-02-13c

https://truckmanualshub.com/

4) Pressure switch

Part number : KHP11880

Old part number : WDB0055-8

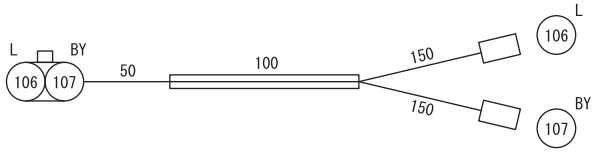

330-1-04-02-13d

5) Pressure switch (main harness side)

Part number : KHP11890

Old part number : WDB0055-9

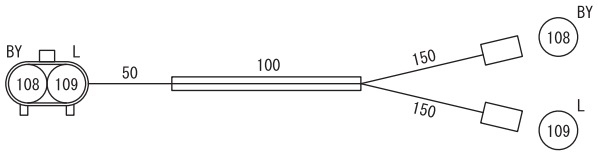

330-1-04-02-13e

6) Receiver dryer

Part number : KHP11900

Old part number : WDB0055-10

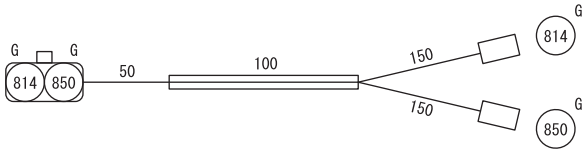

330-1-04-02-13f

7) Oil temperature sensor

Part number : KHP1575

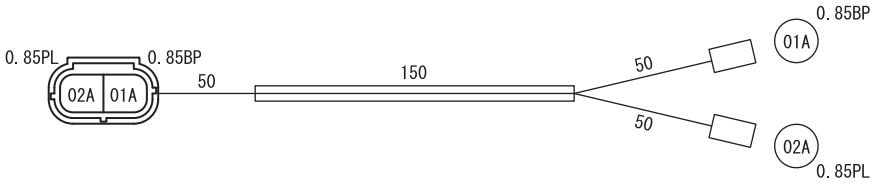

330-1-04-02-13g

8) Atmospheric pressure sensor

Part number : KHP11020

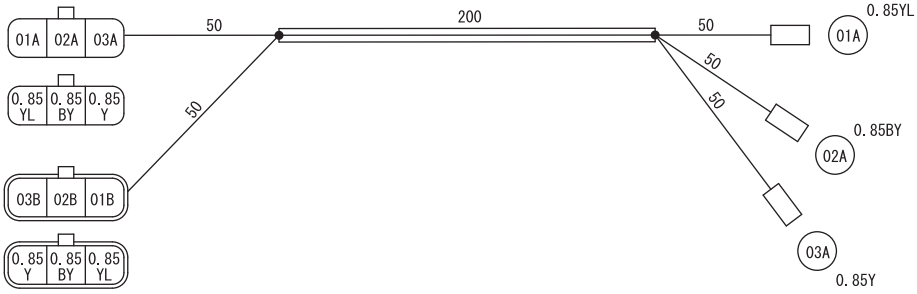

330-1-04-02-13i

https://truckmanualshub.com/

9) Suction air temperature sensor

Part number : KHP11030

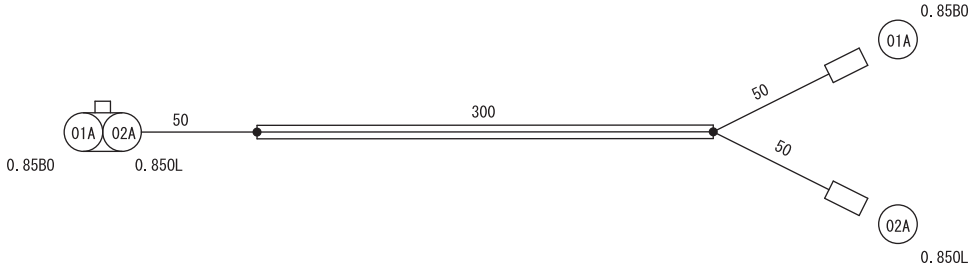

330-1-04-02-13j

10) Glow

Part number : KHP11060

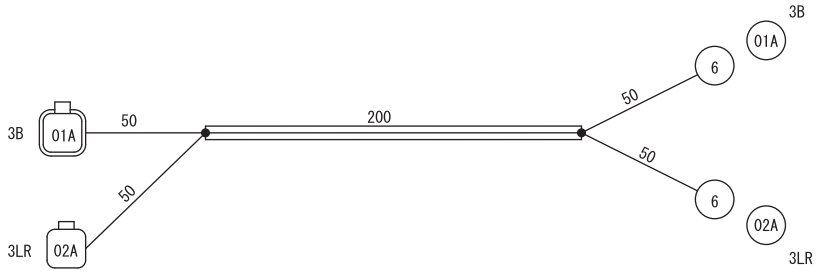

330-1-04-02-13k

11) Fuel pump

Part number : KHP11070

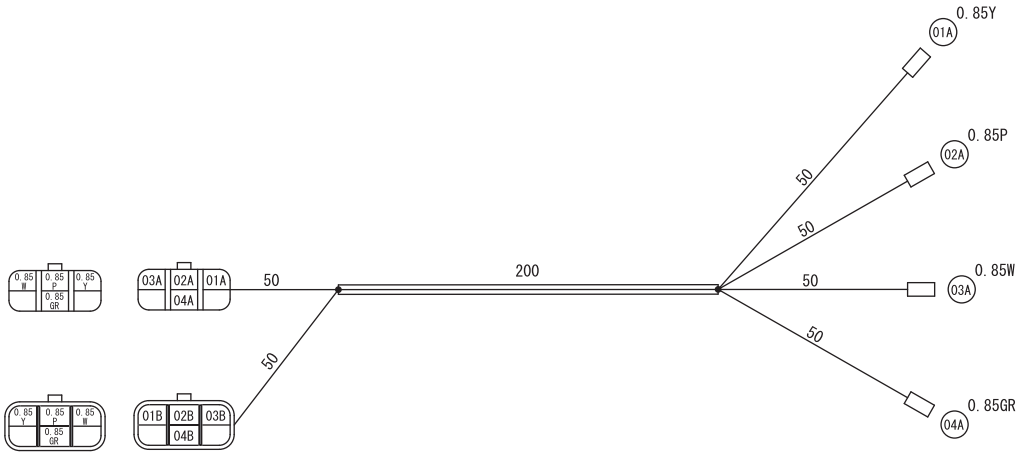

330-1-04-02-13l

https://truckmanualshub.com/

12) EGR

Part number : KHP11080

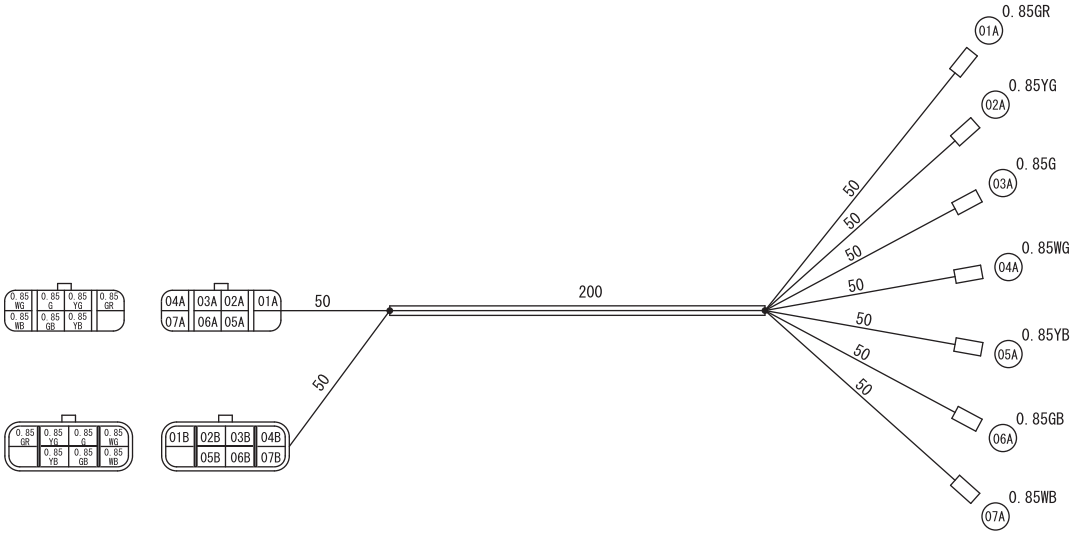

330-1-04-02-13m

13) Injector

Part number : KHP11090

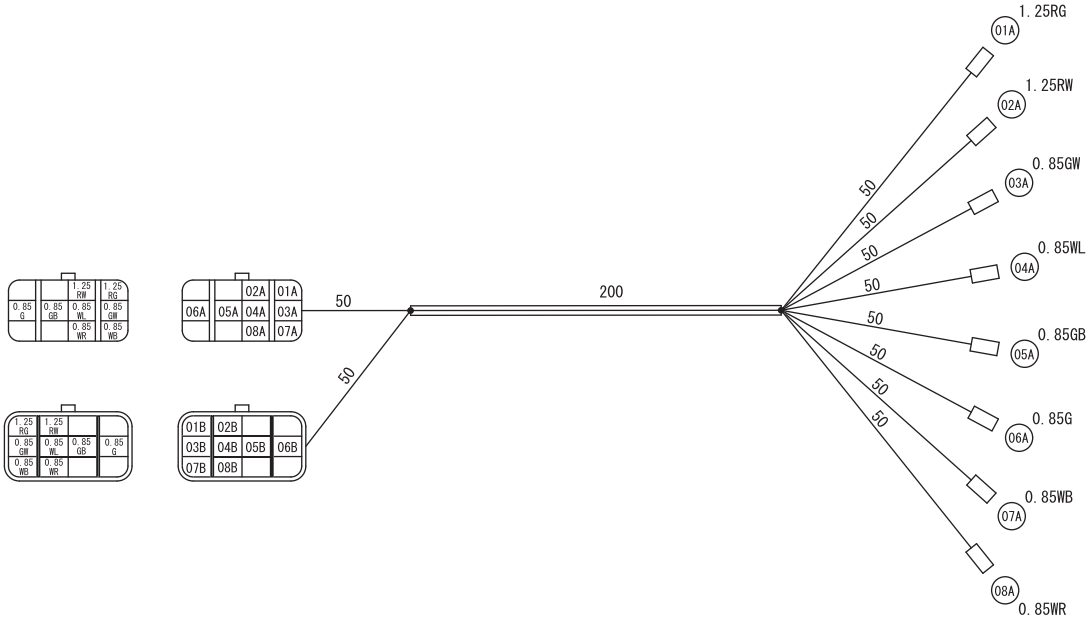

330-1-04-02-13n

https://truckmanualshub.com/

14) Sensor

Part number : KHP11100

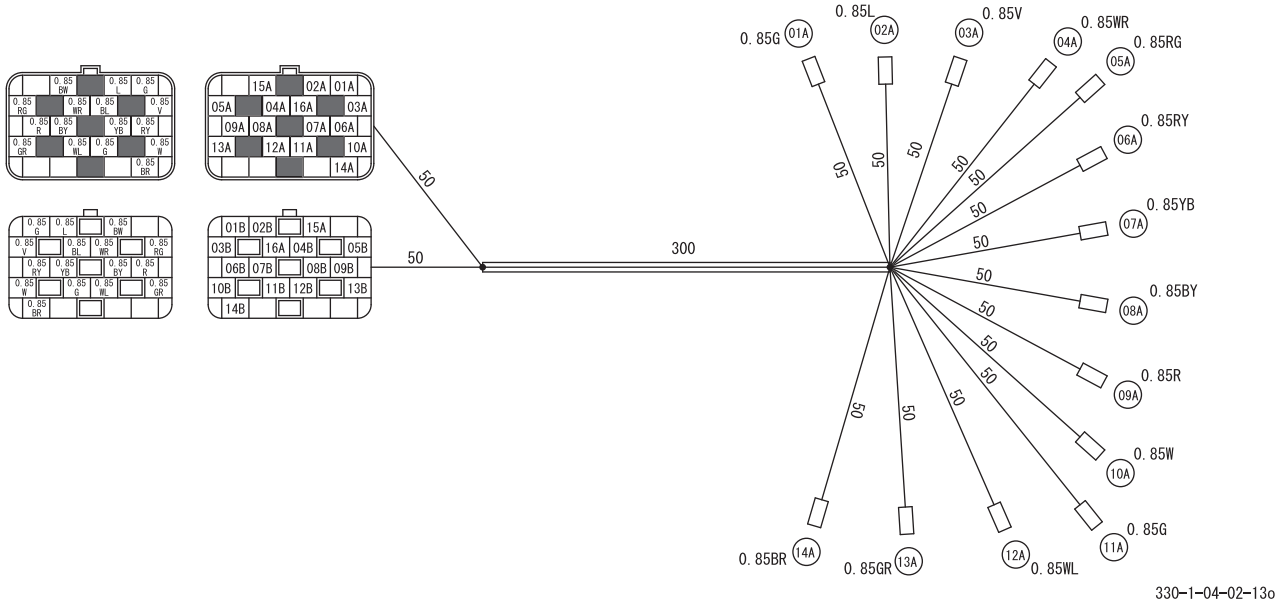

https://truckmanualshub.com/

15) Breaker ECM main harness assembly

Part number : KHP11970

Component parts

Part number	Part name	Q'ty
KHP11980	Wire harness (for ECM to knob)	1
KHP11990	Wire harness (for main harness to knob)	1
KHP12000	Wire harness (for joint knob)	3

1. Wire harness (for ECM to knob)

Part number : KHP11980

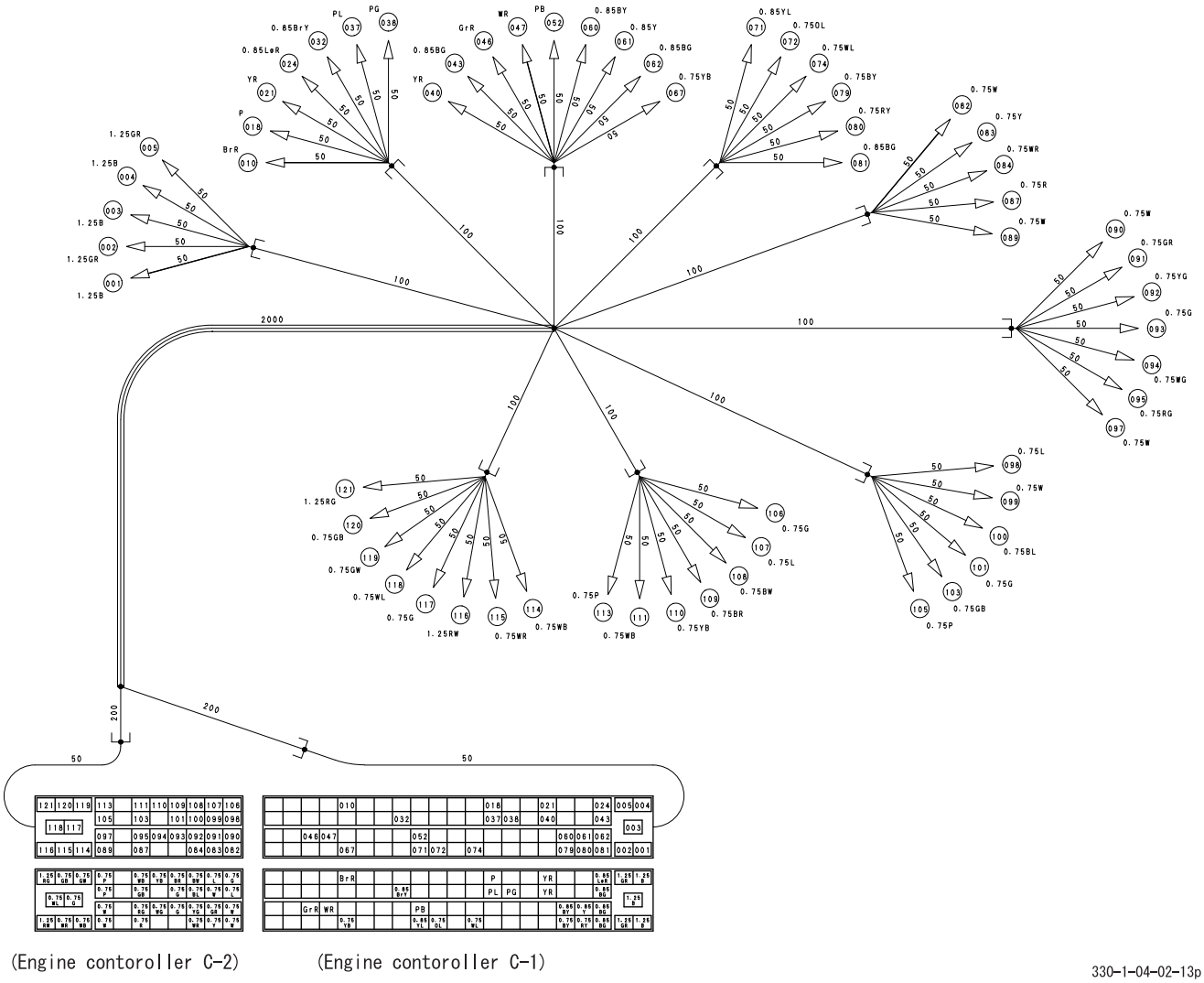

https://truckmanualshub.com/

2. Wire harness (for main harness to knob)

Part number : KHP11990

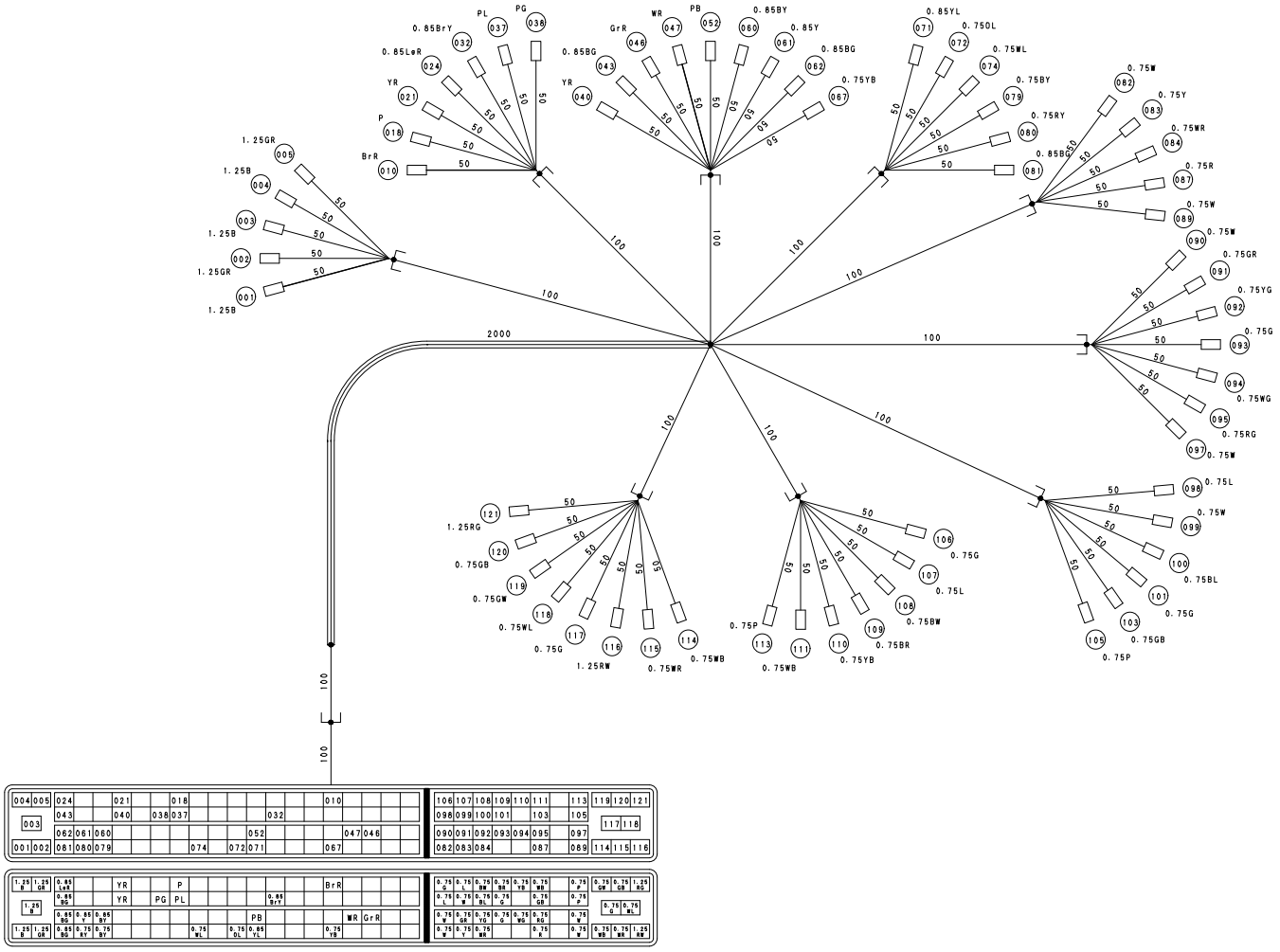

(Engine contoroller)

330-1-04-02-13q

3. Wire harness (for joint knob)

Part number : KHP12000

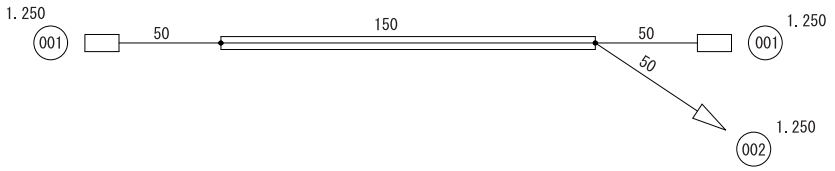

330-1-04-02-13r

https://truckmanualshub.com/

16) Solenoid valve and fuel sensor

Part number : KHP13650

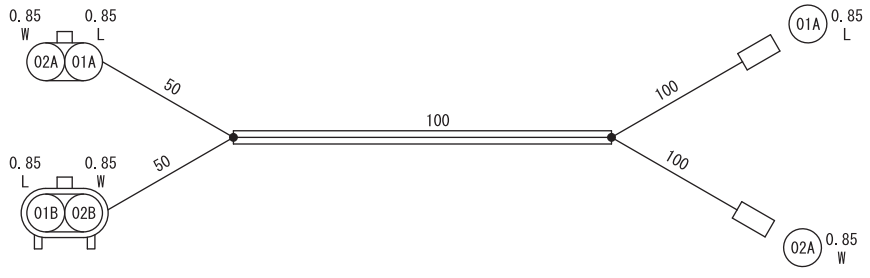

NI10001-001

17) Angle sensor (3P) (liftcrane specifications)

Part number : KHP13660

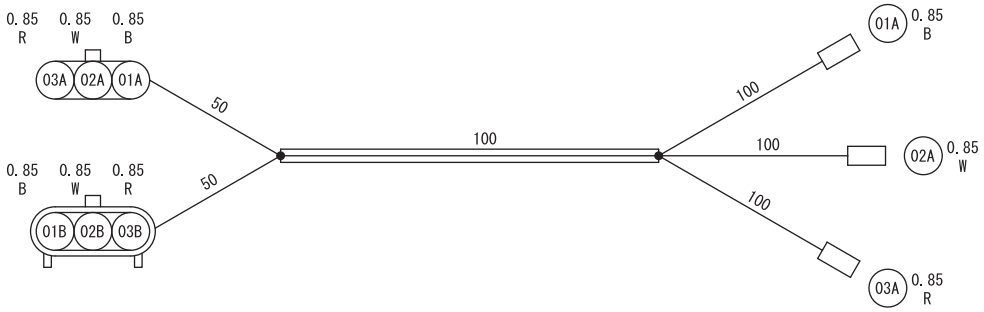

NI10001-002

18) Fuel feed pump (2P)

Part number : KHP13670

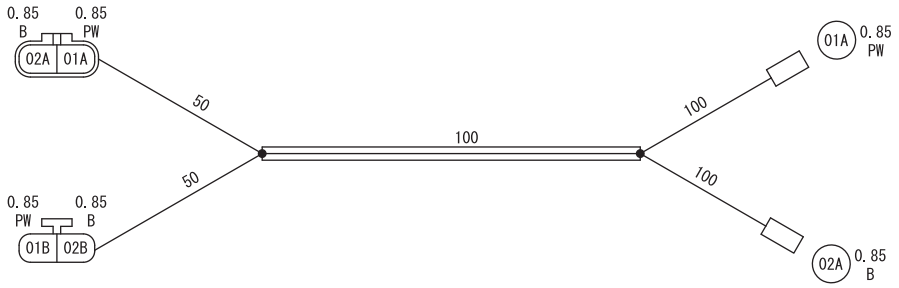

NI10001-003

19) Fuel pump harness (3P)

Part number : KHP13680

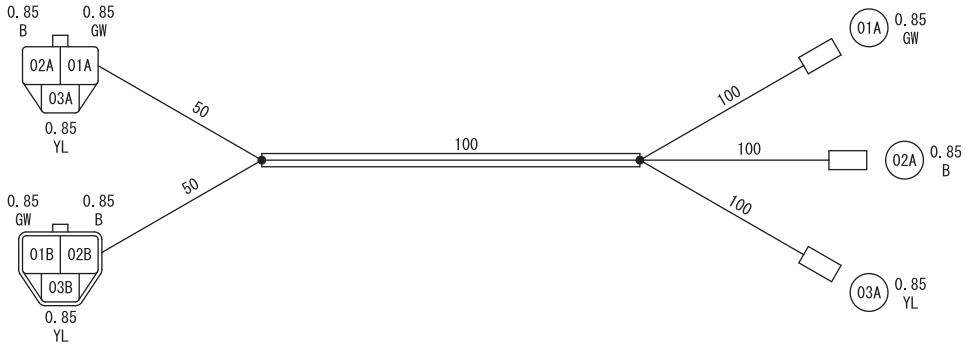

NI10001-004

https://truckmanualshub.com/

20) Fuel pump (2P)

Part number : KHP13690

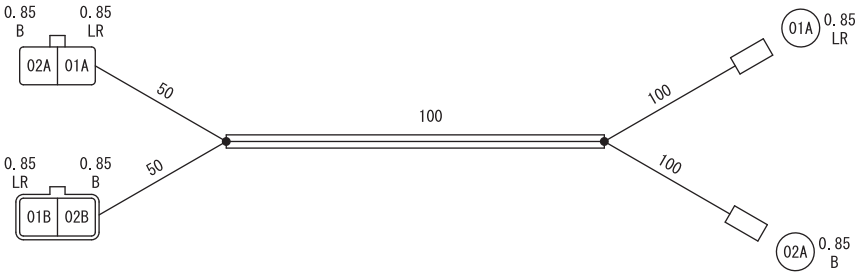

NI10001-005

21) Air conditioner compressor (1P)

Part number : KHP13700

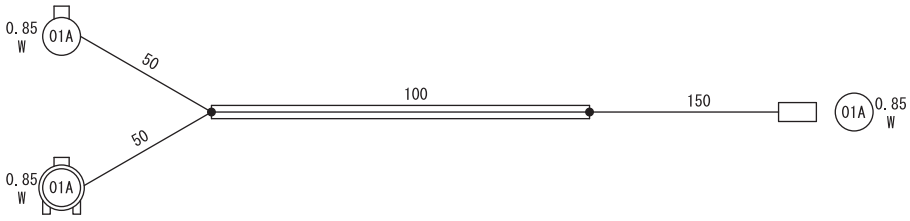

NI10001-006

22) Engine sensor (20P)

Part number : KHP13710

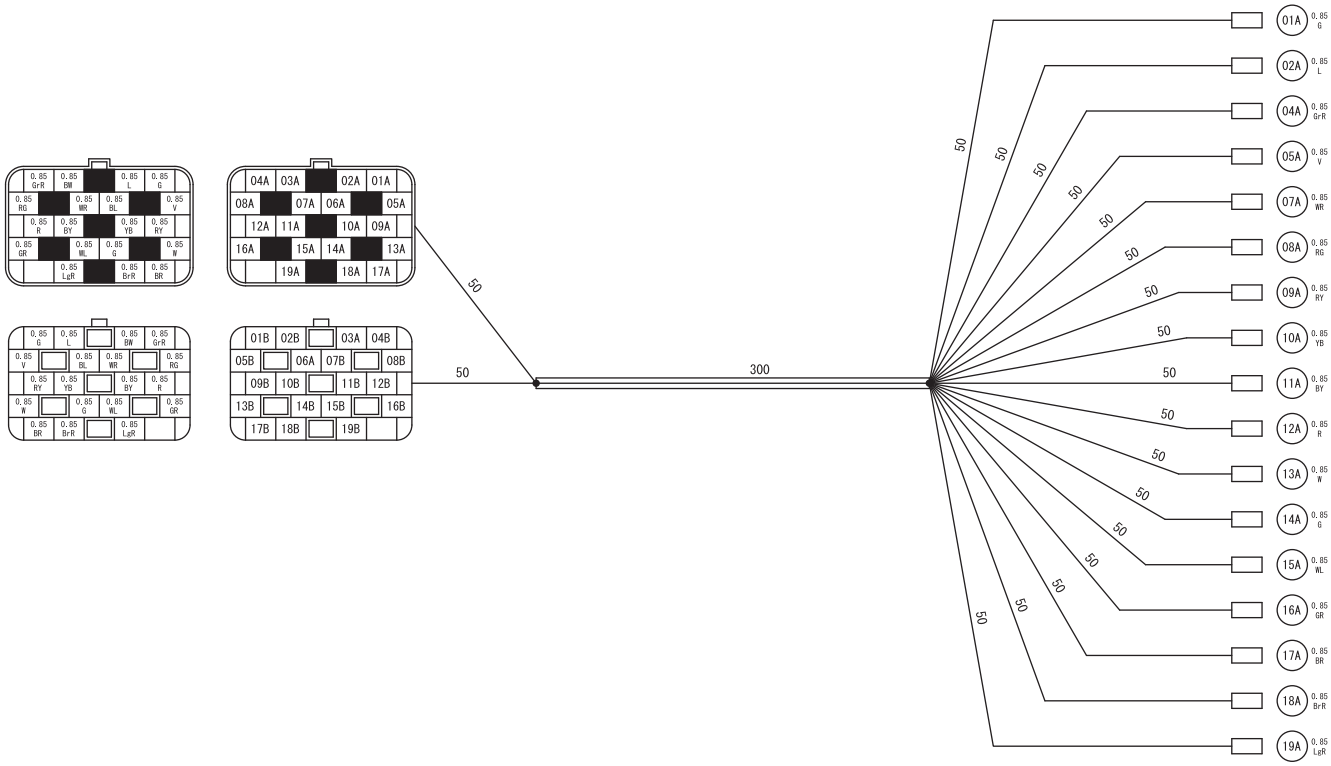

NI10001-007

https://truckmanualshub.com/

23) Engine EGR (8P)

Part number : KHP13720

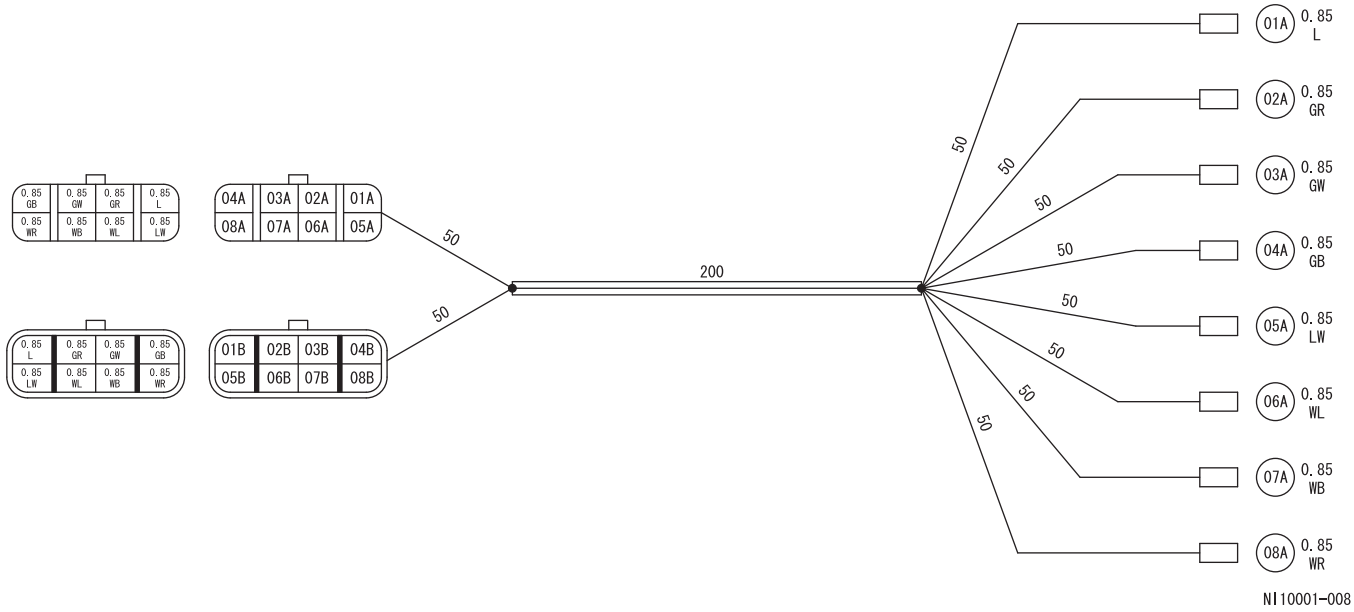

https://truckmanualshub.com/

Measurement Method

1. Hydraulic Pump Electromagnetic Proportional Valve

Specified connectors

KHP11860

KHP11870

- Remove the connector of the electromagnetic proportional valve (horsepower, P1 flow) connected to the hydraulic pump.

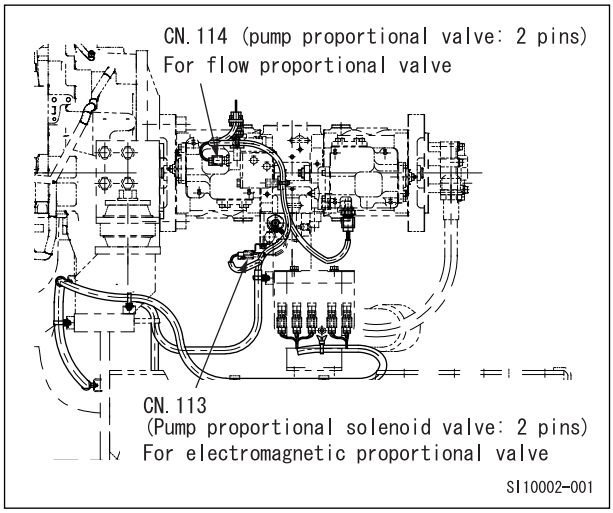

- Connect 2P service connectors in between the removed connectors.
- Be careful at this time that the knob terminals do not make the lines intersect.

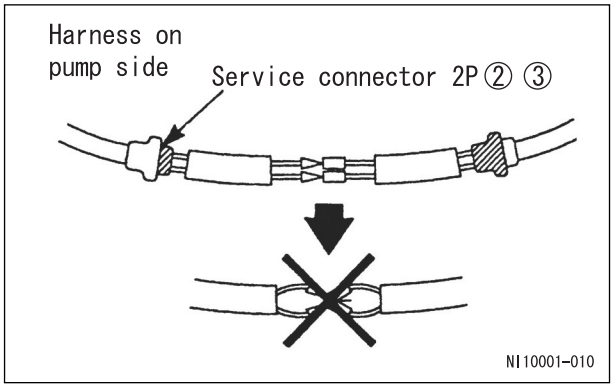

- For the tester connections, check that the harness from the operator's seat side is brown/black (service connector side is the same color), and connect the red tester terminal to the operator's seat side and the black tester terminal to the hydraulic pump side.
- After connection is completed, start the engine and check the milli-amp of each mode at the maximum rotation.

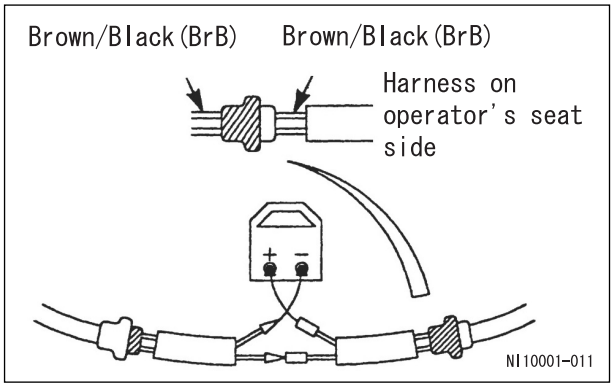

Control milli-amp

*= When the target engine speed is 1300 min^{-1} or less, milli-amp for pump horsepower control proportional valve is 50 mA.

	Volume position (detent position)	1	2	3	4 - 8	9 - 15
	Work mode (upper)	SP	H	A		
SH330-5	Engine speed (min^{-1})	1900	1800	1700	1699 - 1300	1299 - 900
	Milli-amp for pump horsepower control proportional valve (mA)	500	500	500	380	50
	Pressure boost	Auto	Auto	Normal		

https://truckmanualshub.com/

2. Solenoid Valve (5 stack)

Specified connectors

KHP13650

- Remove the 1 connector attached to the solenoid valve to be measured.

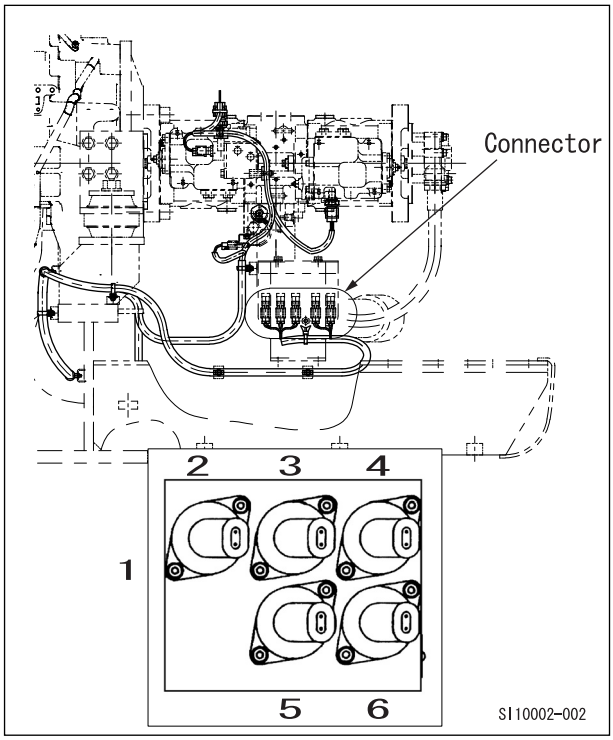

1	5 stack solenoid valve
2	For swing brake (white)
3	For pressure boost (yellow)
4	For travel 2nd speed (red)
5	For power save (green)
6	For lever lock (blue)

- There are 5 solenoid valves that are attached, but the application of each location is as explained in the diagram on the right.(view from front)
  Color bands are attached to the connector sections.
  Functions are different for each color, so use caution when measuring.

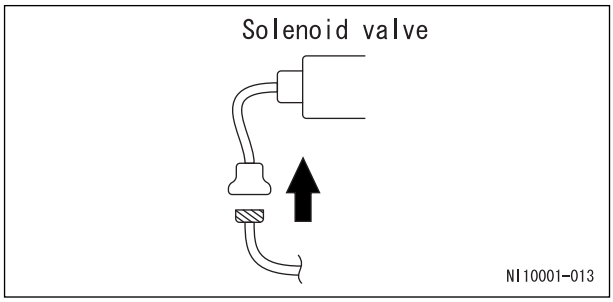

- Connect 2P service connectors in between the removed connectors.(solenoid valve side only)

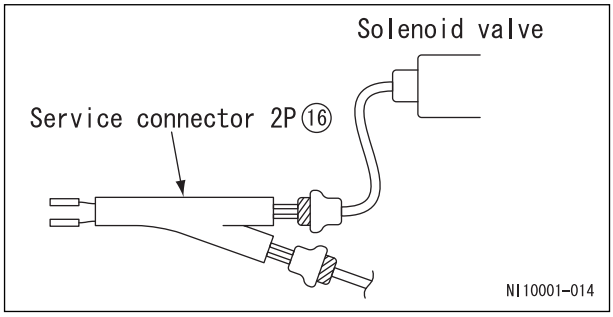

- For the tester connections, connect the red and black terminals to the service connector knob terminals.
- After connection is complete, check the resistance.
  Resistance 40 Ω (at 20 ℃)
  * The resistance value changes to a slight degree due to temperature.

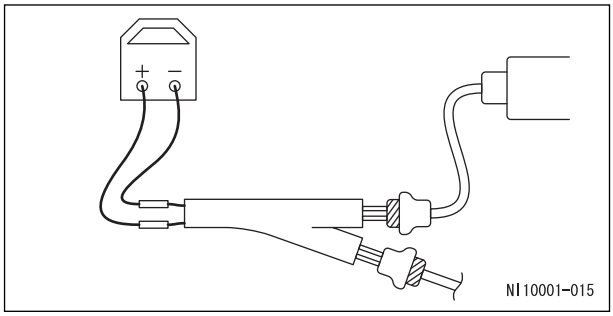

https://truckmanualshub.com/

3. Oil Temperature Sensor

Specification connector

KHP1575

- Remove the oil temperature sensor.
- Connect 2P service connectors to the removed sensors.
- For the tester connections, connect the red and black terminals to the service connector knob terminals.
- After connection is complete, slowly raise the temperature and check the resistance.

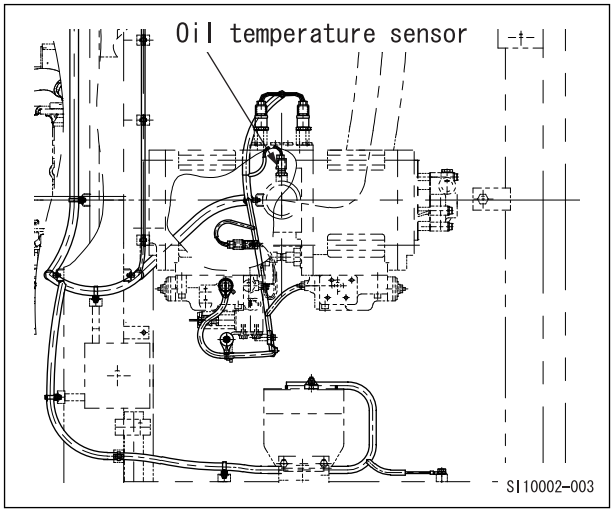

Resistance value for each temperature Unit: kΩ

Oil temperature	Oil temperature sensor
20 ℃	2.45
30 ℃	1.66
40 ℃	1.15
50 ℃	0.81
60 ℃	0.58
70 ℃	0.43
80 ℃	0.32

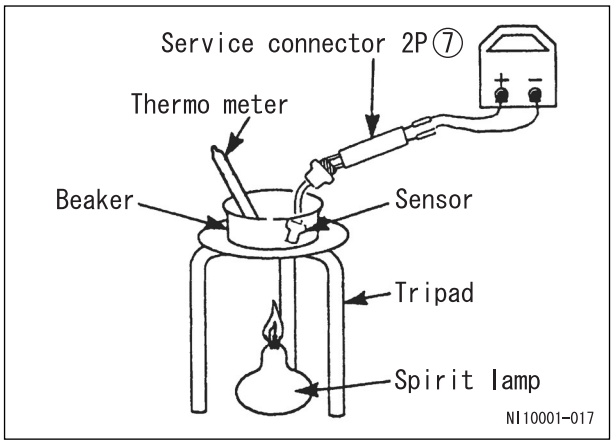

https://truckmanualshub.com/

4. Pressure Sensor

Specification connector

KHP11020

Remove the connector of the pressure sensor connected to the hydraulic pump.

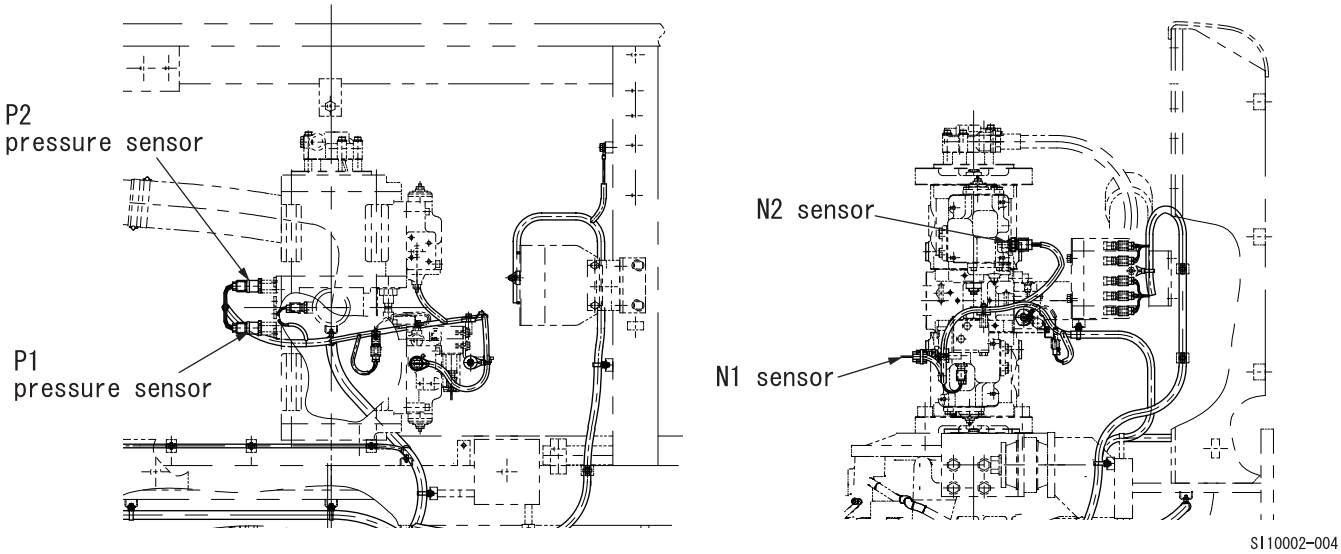

Pump pressure sensor side

- Connect 3P service connectors in between the removed connectors.
- For the tester connections, connect the red terminal to the service connector knob terminals WY (white/yellow).Connect the black terminal to the ground.
- After connection is complete, turn the key switch ON and check the voltage.

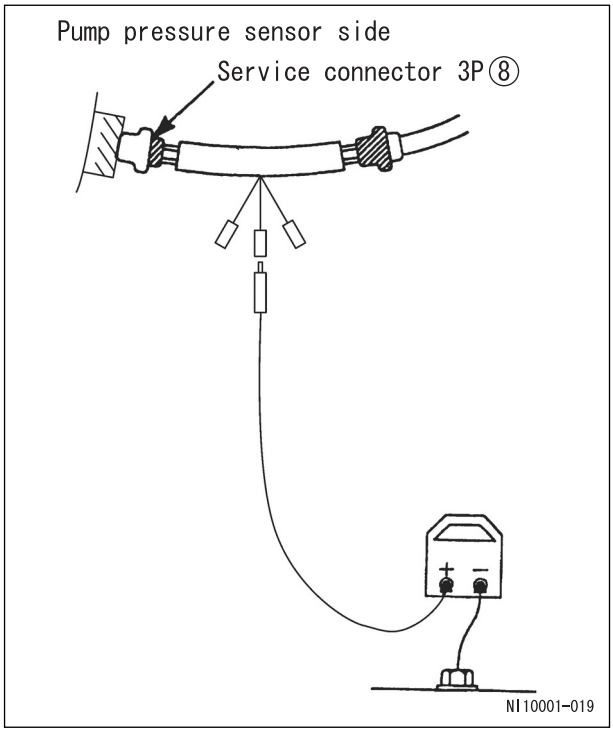

For engine-side sensor OK/NG judgment, see the engine troubleshooting manual.

https://truckmanualshub.com/

Pressure sensor voltage

Pressure and voltage

[1] P1, P2 pressure sensors

Pressure MPa	Voltage (V)
50	4.5
43.7	4
37.5	3
25.0	2
17.5	1
0	0.5

[2] Negative control pressure sensor

Pressure MPa	Voltage (V)
5.0	4.5
4.37	4
3.75	3
2.5	2
1.25	1
0	0.5

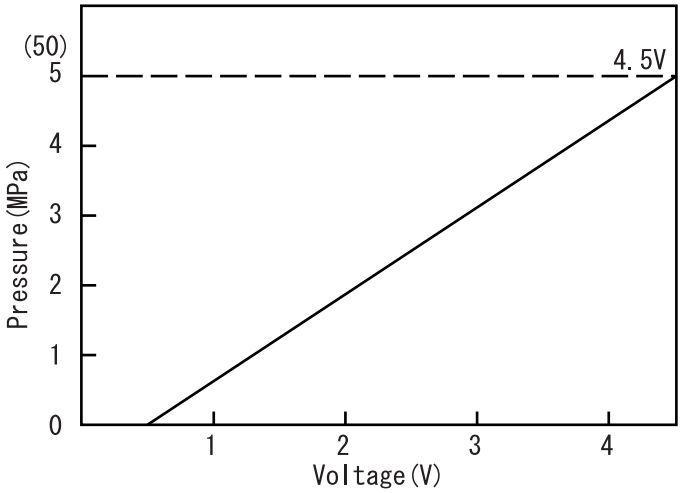

NI10001-020

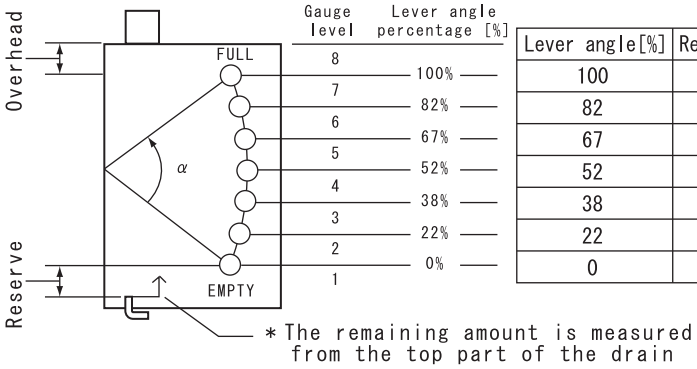

Lever angle[%]	Resistance[Ω]
100	10.0
82	22.6
67	33.1
52	43.6
38	53.4
22	64.6
0	80.0

NI10001-021

https://truckmanualshub.com/

Air Conditioner Belt and Fan Belt Replacement

If the belt is loose, battery charging defects, engine overheating, and rapid belt wear occur.

1. Air Conditioner Belt Replacement

[1] Use a box wrench (19 mm) to remove the bolts, then remove the bottom cover (1).

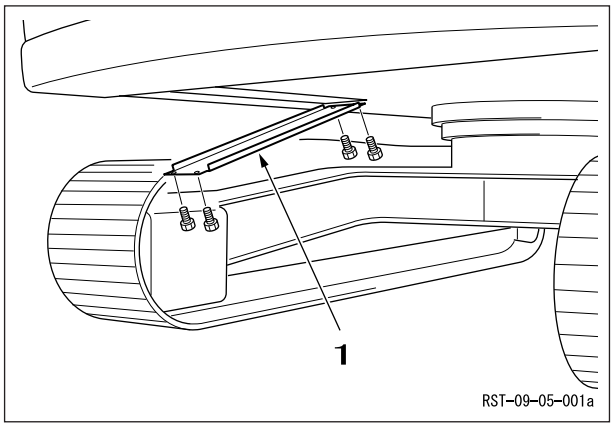

[2] The air conditioner belt (3) is at the position in the figure on the right.

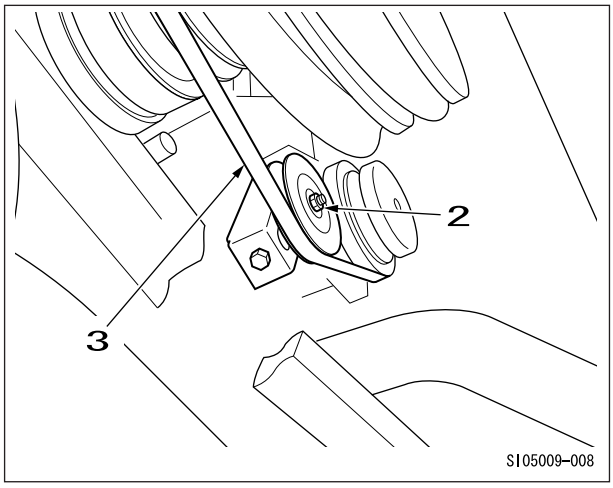

[3] Use a box wrench (14 mm) (5) to remove the nut (2).

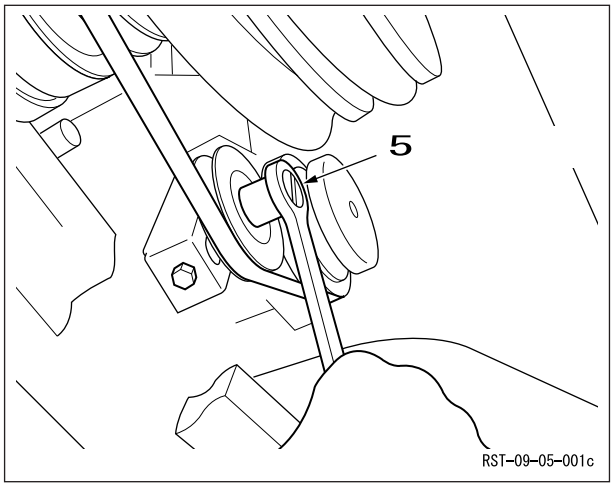

https://truckmanualshub.com/

[4] Use a box wrench (14 mm) (5) to remove the tension bolt (4).

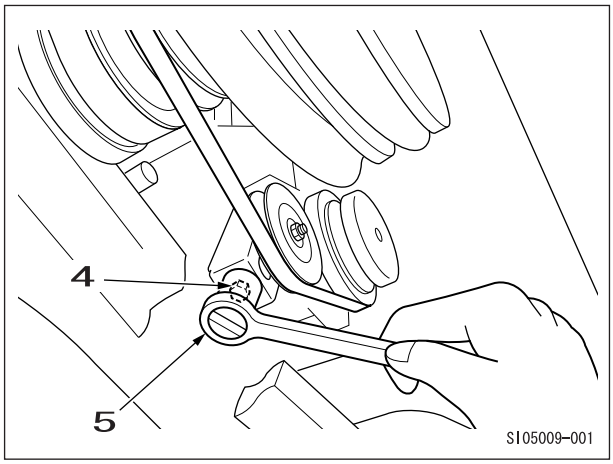

[5] Remove the air conditioner belt (7) from the tension pulley (6) and replace it.

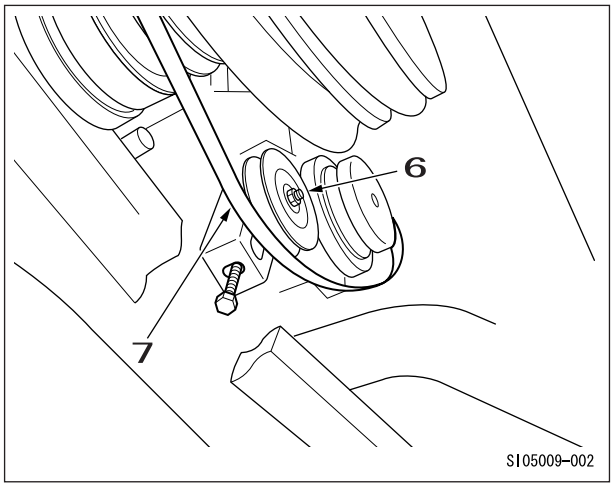

Tension adjustment

After replacing the air conditioner belt, it is necessary to adjust the belt tension.

[1] Use a box wrench (14 mm) (5) to tighten the tension bolt (4).

[2] Adjust the belt so that when the center section of the belt is pressed with a finger, it deflects about 1 cm. (See the figure on the right.)

[3] Securely fasten the nut (8).

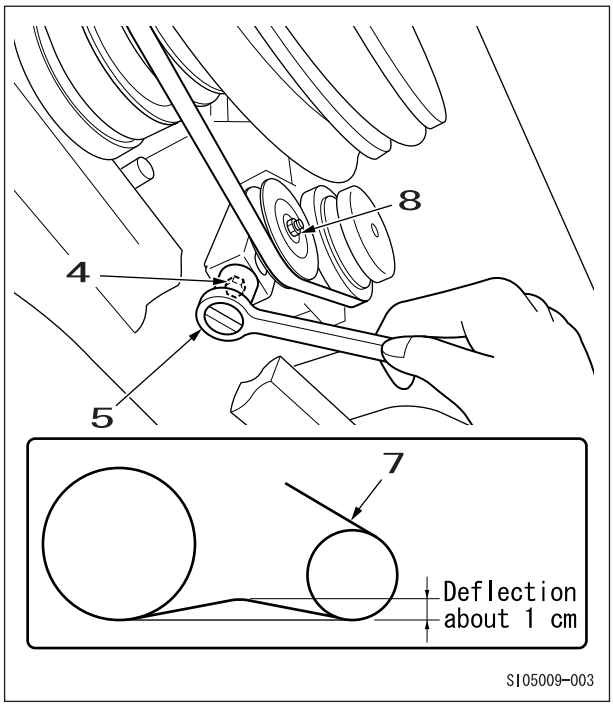

https://truckmanualshub.com/

2. Fan Belt Replacement

[1] Remove the air conditioner belt.
(See "Air Conditioner Belt Replacement".)

[2] Use a wrench (14 mm) to remove the bolt (1).

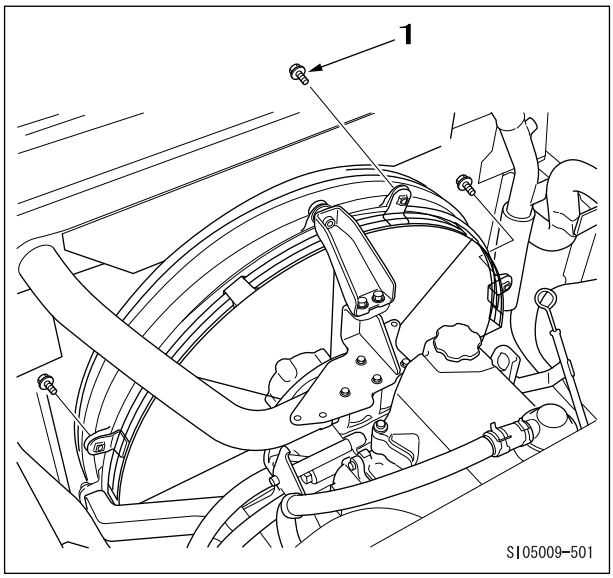

[3] Use a wrench (14 mm) to remove the bolt (1).

[4] Remove the bracket (2).

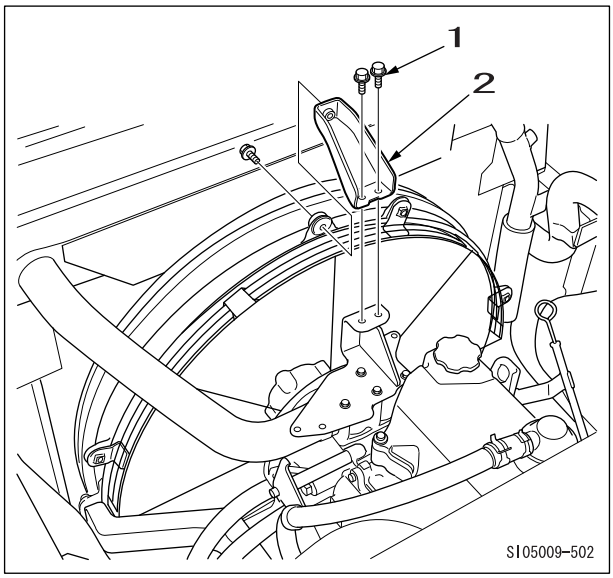

[5] Remove the fan guard (3).

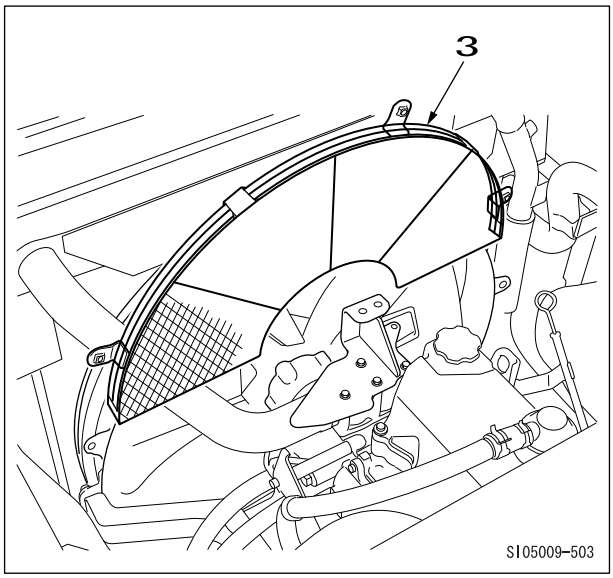

https://truckmanualshub.com/

[6] Use box wrench (17 mm) to loosen the alternator lower installation bolts (7).

- The lower installation bolts (7) is loosend while holding the nut (6) by the wrench and the spanner (17 mm), etc.

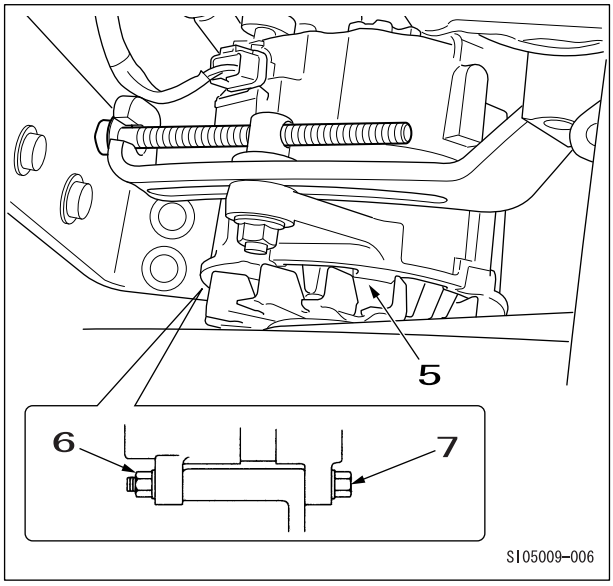

[7] Use a box wrench (17 mm) (4) to loosen the nut (9), then free the adjust plate (8) of alternater.

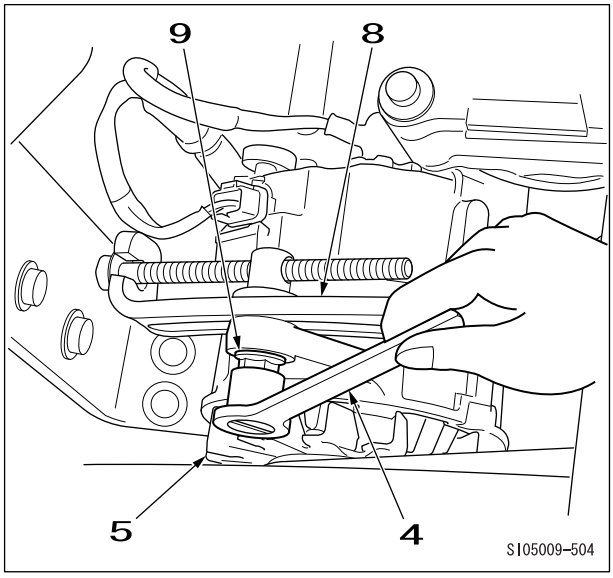

[8] Use a box wrench (17 mm) (4) to loosen the alternator (5) tension bolt (10).

[9] Remove the fan belt from the alternator (5).

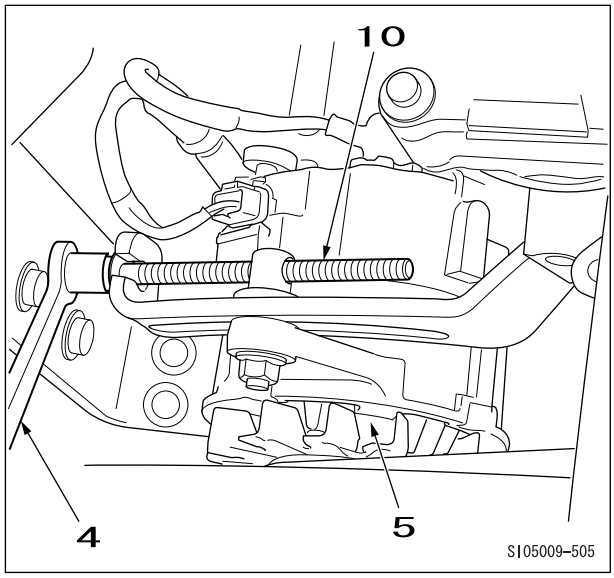

https://truckmanualshub.com/

[10] While slowly turning the fan (11), pass the fan belt (12) over the five one at a time and remove it.

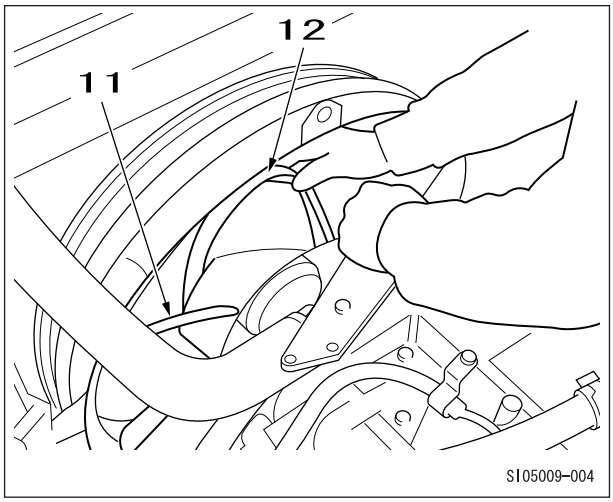

Tension adjustment

After replacing the fan belt, it is necessary to adjust the belt tension.

[1] Use a box wrench (17 mm) (4) to tighten the alternator (5) tension bolt (10).

[2] Adjust the fan belt (12) so that when the center section of the belt is pressed with a finger, it deflects about 1 cm.

[3] Securely fasten the nut (9).

[4] The lower instllation bolt (7) is firmly tightened with the box wrench (17 mm) (4).

- The lower installation bolt (7) is tightend while holding the nut (6) by the wrench and the spanner (17 mm), etc.

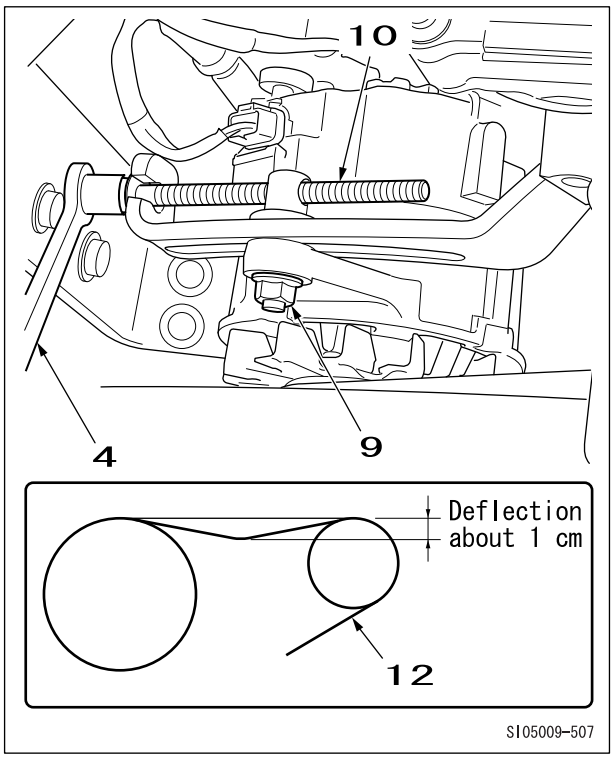

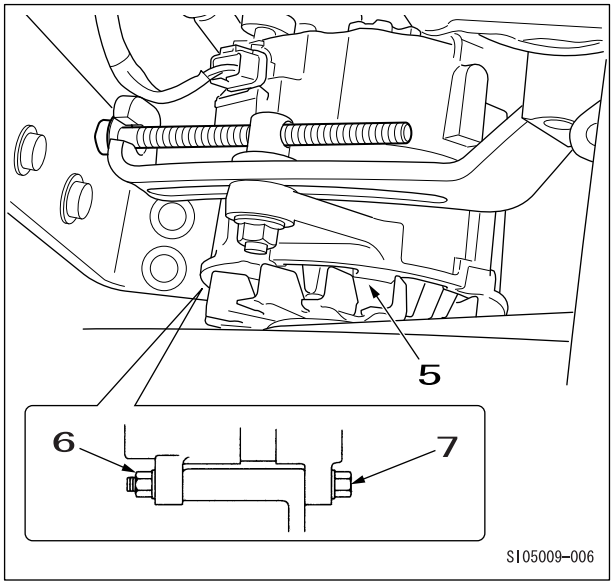

https://truckmanualshub.com/

Fuel Filter Replacement

1. Filter Replacement

(1) Main filter

When replacing the fuel filter, always bleed the air.

[1] Tighten the fuel line (1) stop valve (2).

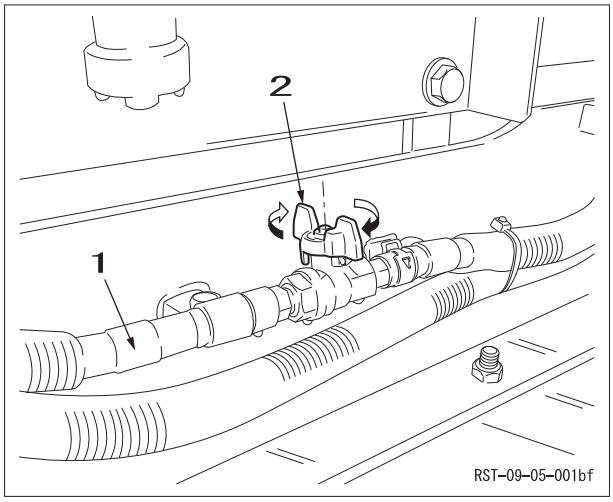

[2] Use a wrench (10 mm) (3) to loosen the air bleed plug (4).

[3] Loosen the cap (5) at the bottom and drain out any remaining fuel.

* Put a waste oil case (6) underneath.

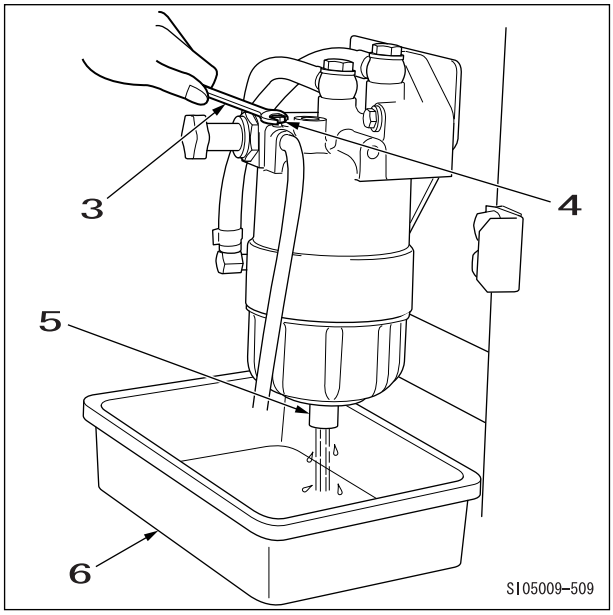

[4] Remove the filter cover (8) with the special filter wrench (7).

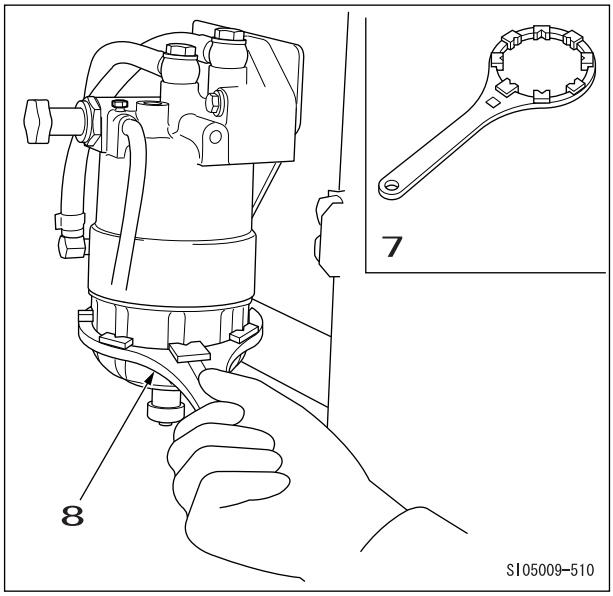

https://truckmanualshub.com/

[5] Remove the element (9) and replace it.

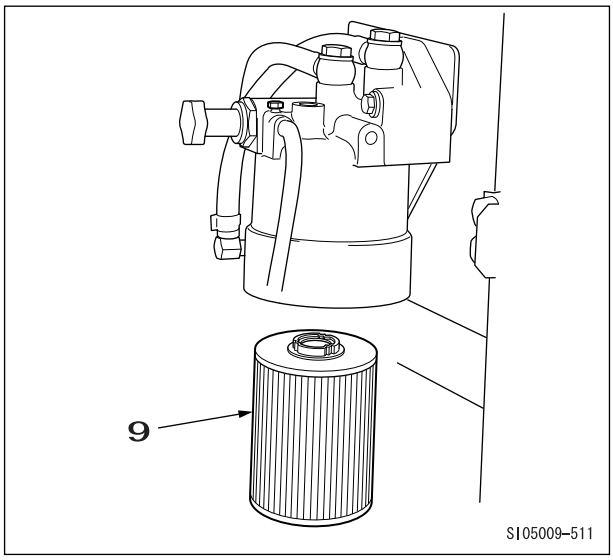

[6] Open the fuel line stop valve.

(2) Pre-filter

[1] Close the fuel line (1) stop valve (2).

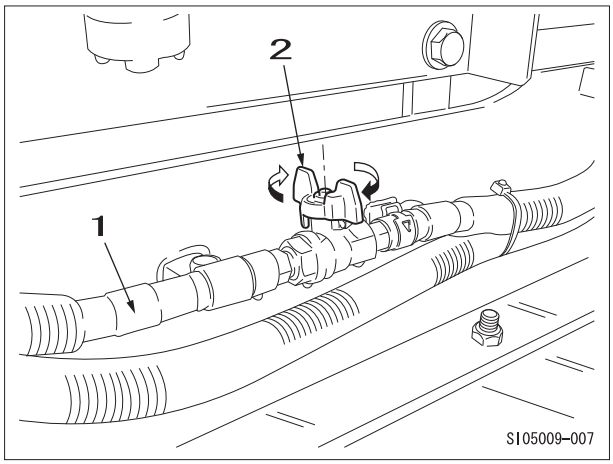

[2] Use a wrench (10 mm) to loosen the air bleed plug (5).

[3] Loosen the cap (3) at the bottom and drain out any remaining fuel.
* Put a waste oil case (4) underneath.

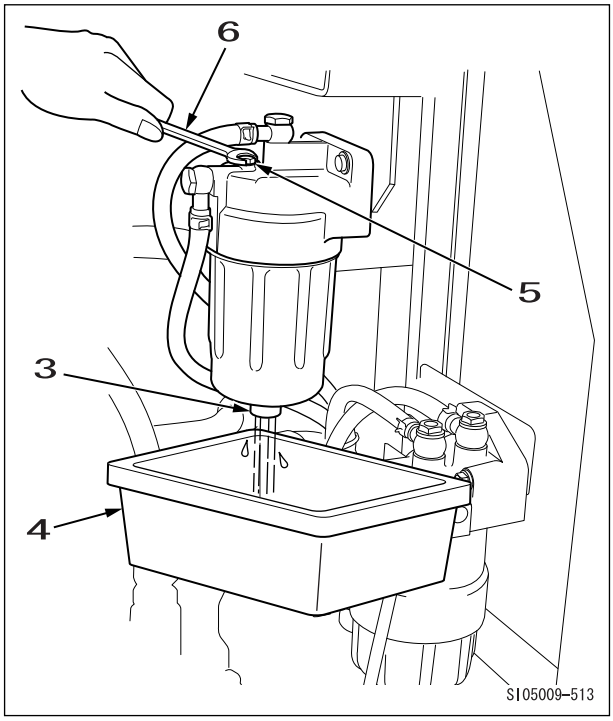

6	Wrench

https://truckmanualshub.com/

[4] Remove the pre-filter cover (8) with the special filter wrench (8).

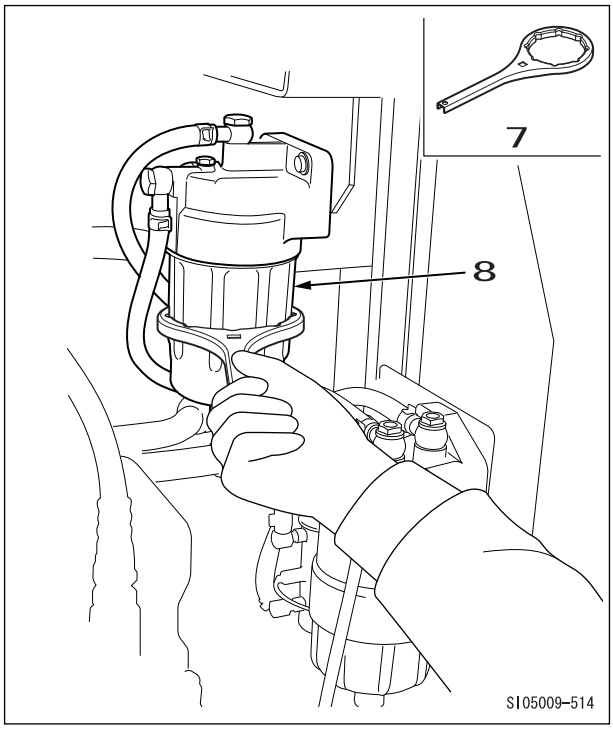

[5] Remove the element (10) and replace it.

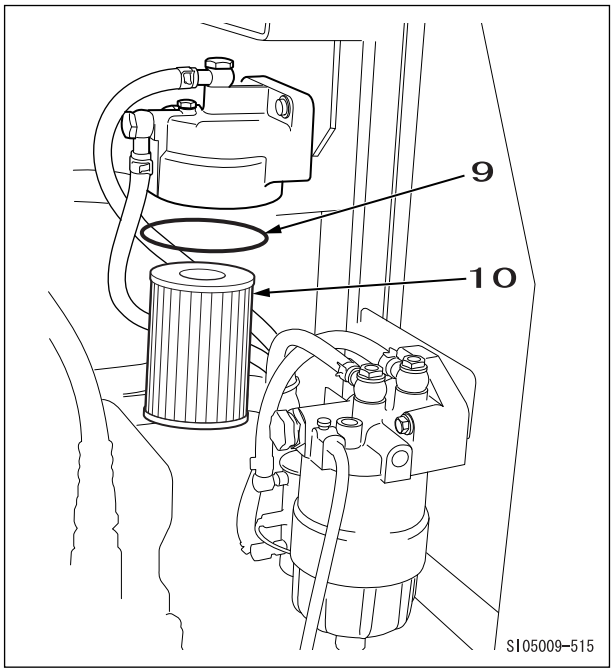

9	O-ring

[6] Open the fuel line stop valve.

https://truckmanualshub.com/

2. Air Bleeding

If air gets into the fuel system, this can cause difficulty starting and poor engine condition. When the fuel tank has been emptied, water drained from the fuel, the element replaced, or other such work carried out, always bleed the air.

[1] Install the air bleed hose (1) at the position in the figure on the right.

[2] Use a wrench (10 mm) (2) to loosen the air bleed plug (3).

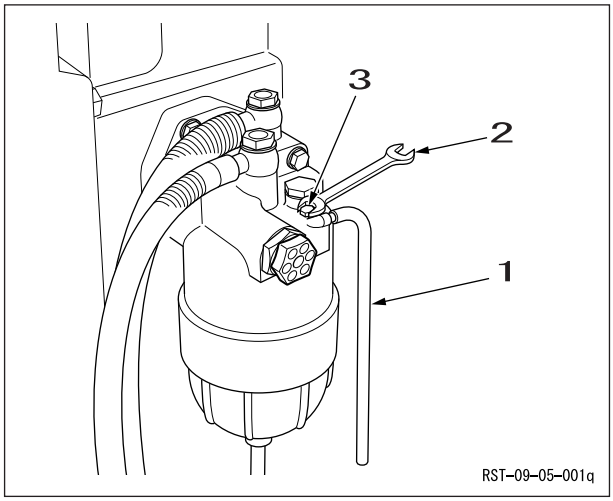

[3] When the filter case priming pump is turned in the direction of the arrow, the knob (4) pops out.

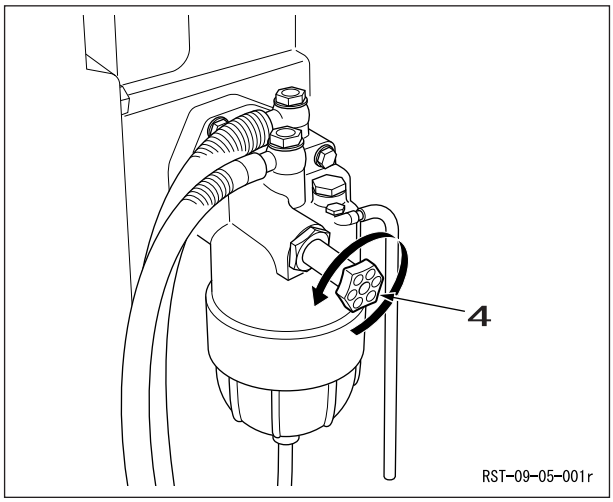

[4] Press the knob a few times.
When fuel appears inside the filter case, gently tighten the air bleed plug for now. Press the knob a few times with the plug and knob as they are.
Finally, hold the knob pressed in and slightly loosen the air bleed plug.
Fuel oozes out from the hose like bubbles.

[5] Repeat the operation in [4] until no more bubbles appear.

[6] Tighten the air bleed plug, then turn the knob and lock it.

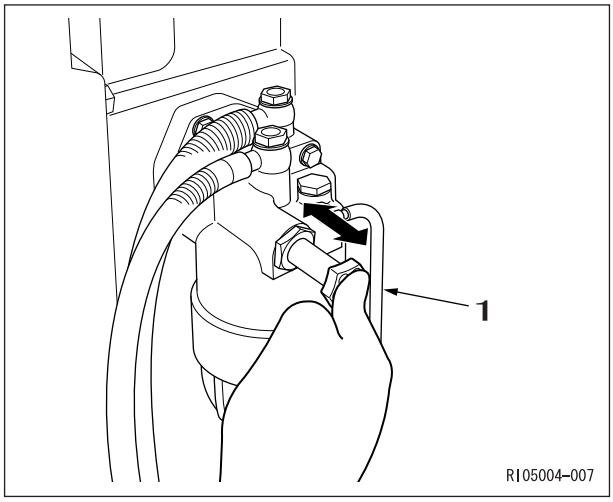

https://truckmanualshub.com/

Procedures for Replacing Consumable Parts

Engine Oil Filter and Engine Oil Replacement

Caution	If the engine oil is severely dirty or deteriorated, replace it quickly even if it is not yet time for periodic replacement.

1. Engine Oil Replacement

[1] Open the engine hood.

[2] Remove the engine oil cap (1).

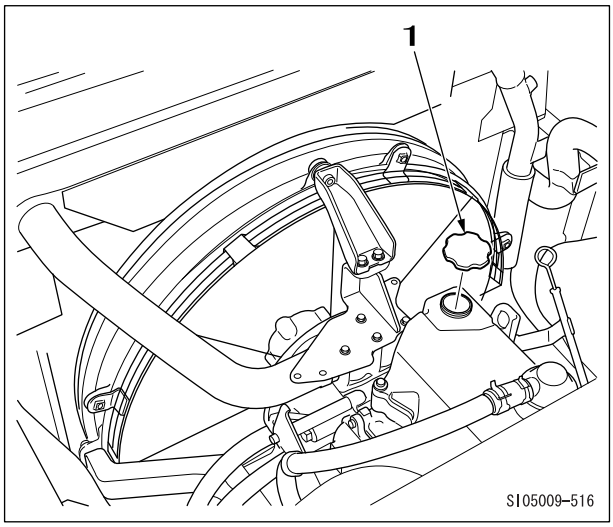

[3] Put a waste oil can (2) underneath the engine oil drain port.

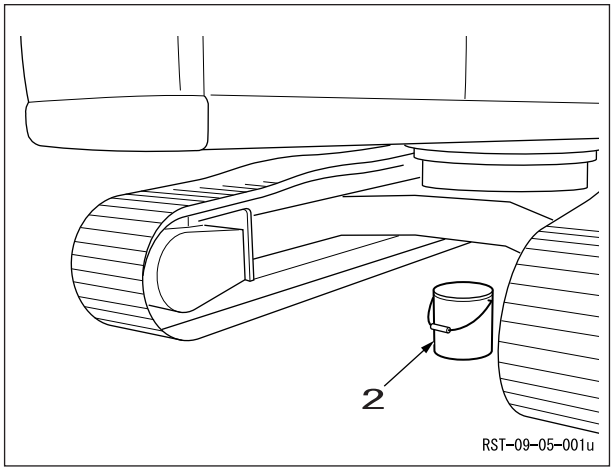

[4] Remove the bottom cover (3).

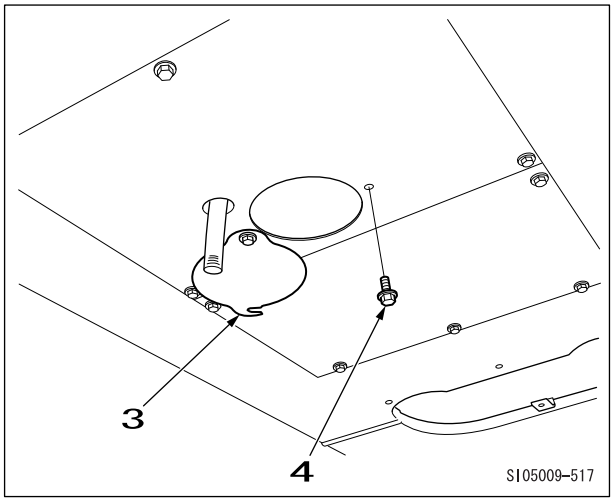

4	Bolt

https://truckmanualshub.com/

[5] Remove the drain plug (5).

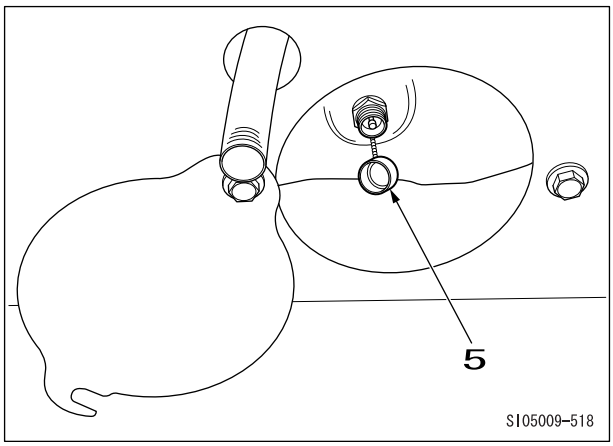

[6] Install the drain plug (6) with hose and screw it in.
The valve is pressed automatically and the oil is drained.

[7] After draining the oil, securely install the drain plug.

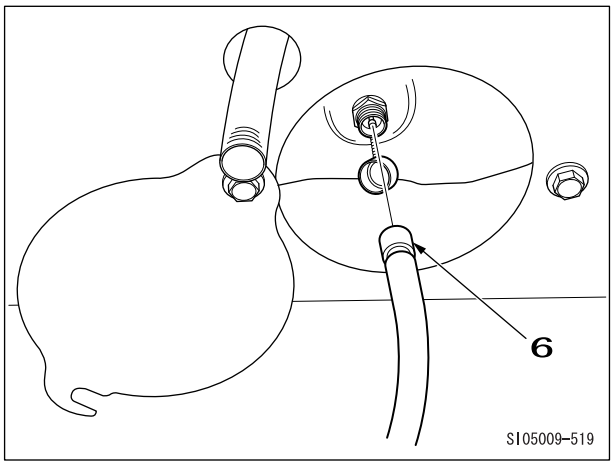

2. Engine Oil Filter Replacement

[1] Remove the engine oil filter cover with the special filter wrench (1).

[2] Replace the engine oil filter (2).

[3] When installing the engine oil filter (2), check that the O-ring is not damaged, then install.
Also, if the O-ring is replaced, apply oil to it before installing it.

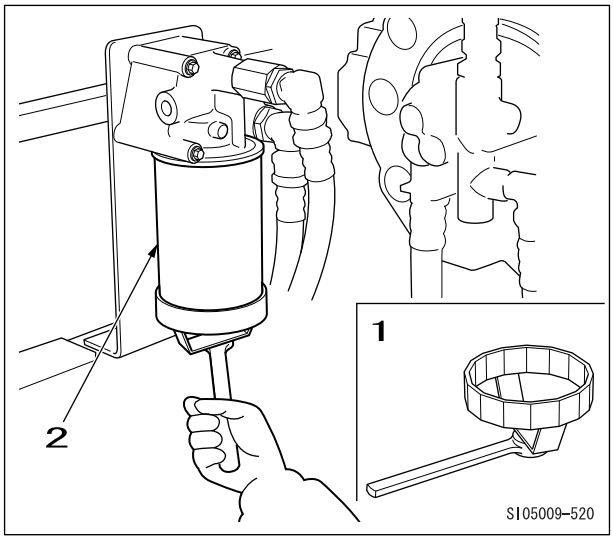

https://truckmanualshub.com/

[4] Fill engine oil (3) from the feed port at the top.

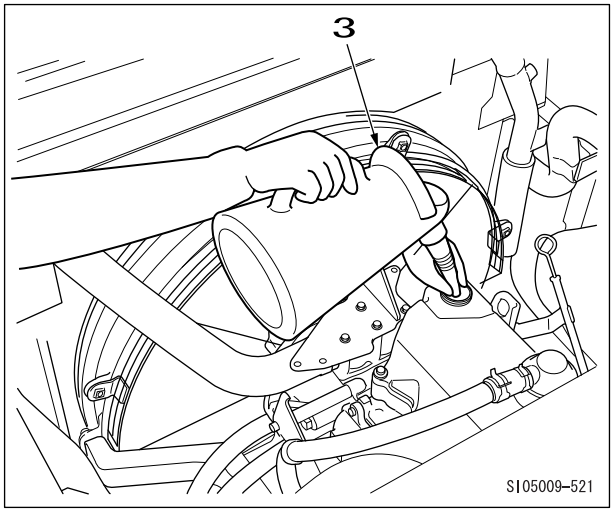

[5] Check on the oil gauge (4) that the oil volume is correct.

[6] Start the engine and let it idle for a few minutes. During this idling, check for oil leaking.

[7] Stop the engine, wait about 20 minutes, then inspect the oil volume again.
If the oil volume is correct now, the oil change is OK.
If the oil is low, fill more.

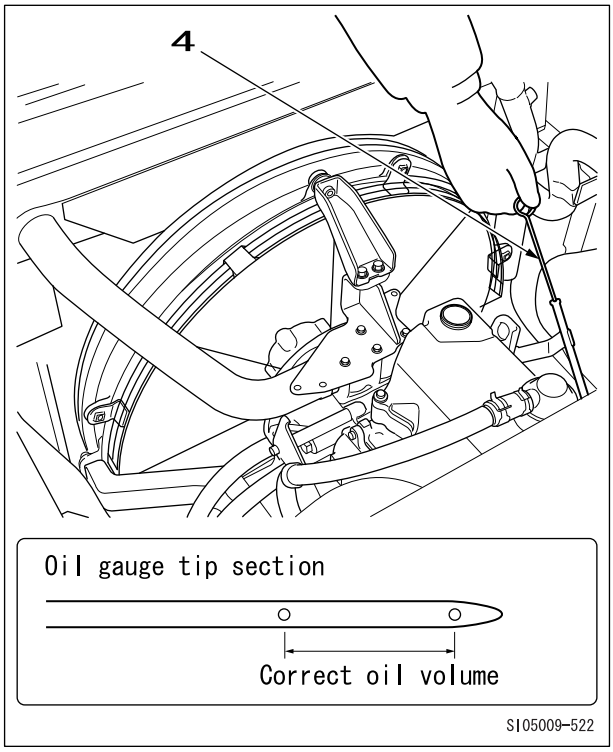

https://truckmanualshub.com/

Radiator Coolant Replacement

[1] Open the engine hood.

[2] Remove the radiator cap (1).

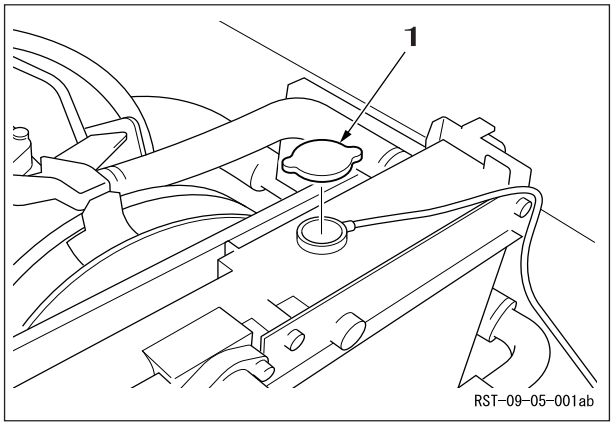

[3] Use a box wrench (19 mm) to remove the bolts, then remove the bottom cover (2).

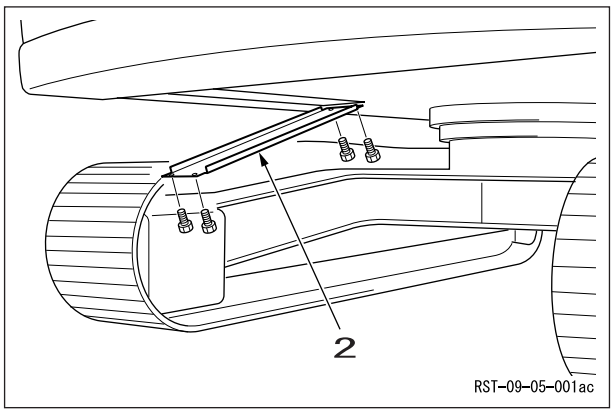

[4] Turn the drain cock (3) to the left and drain the coolant.

[5] Return the drain cock (3) to its original position, fill the radiator with hot water up to the radiator port, then run the engine slightly faster than idling.
Run for about 10 minutes to raise the water temperature to 80 ℃ , then drain the water.

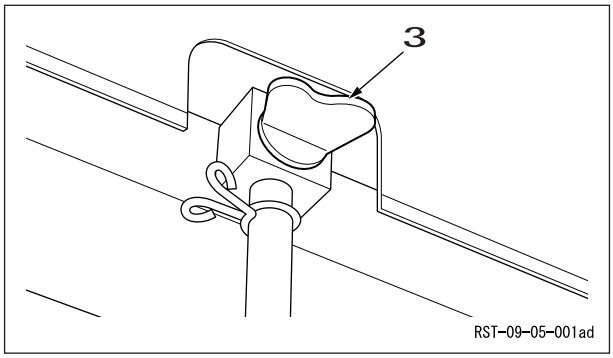

[6] Fill the radiator with coolant (4) up to the radiator port.
Run the engine for about 10 minutes, then adequately bleed the air from the cooling system.

[7] Stop the engine and check the coolant level.
If the coolant level is low, fill in more.

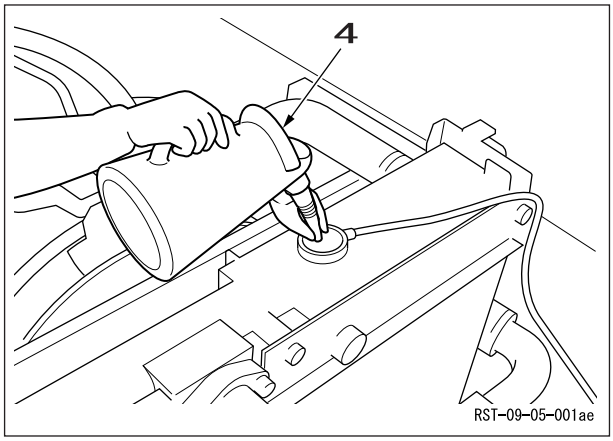

https://truckmanualshub.com/

Air Cleaner Cleaning and Replacement

[1] Open the door (1).

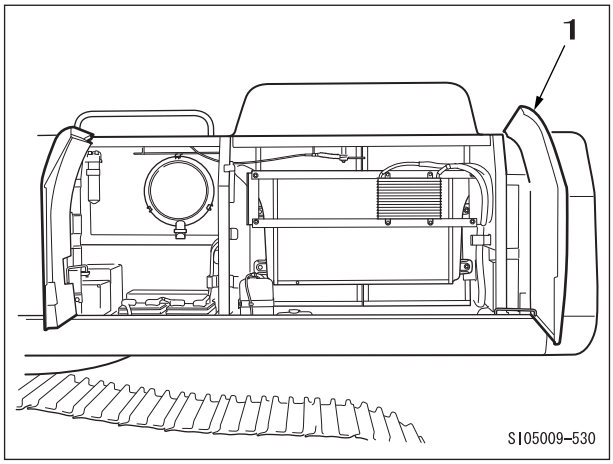

[2] Release the 4 locks (2), then remove the cover (3).

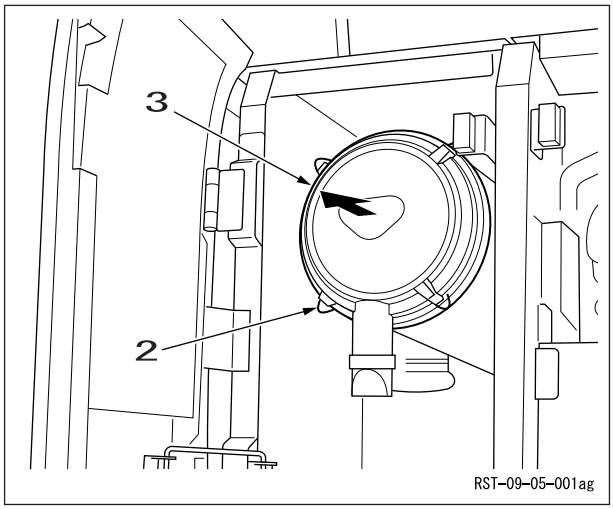

[3] Remove the air cleaner (outer) (4).

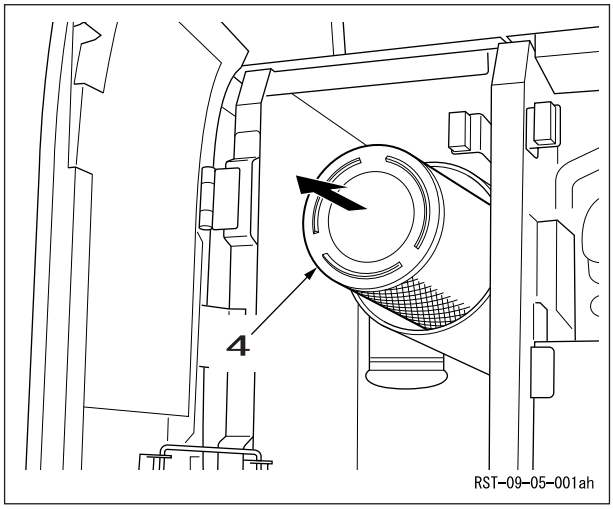

https://truckmanualshub.com/

[4] Use a compressed air gun (5) to blow out from the inside of the air cleaner (outer) (6) and clean it.

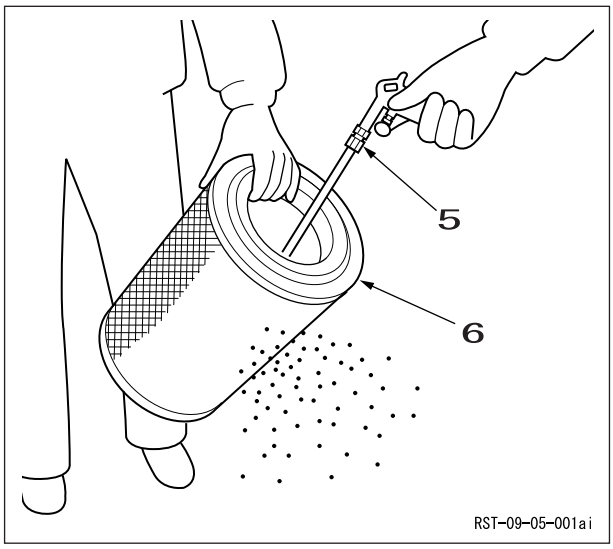

[5] Remove the air cleaner (inner) (7) and replace it.
This air cleaner cannot be cleaned. Always replace it.

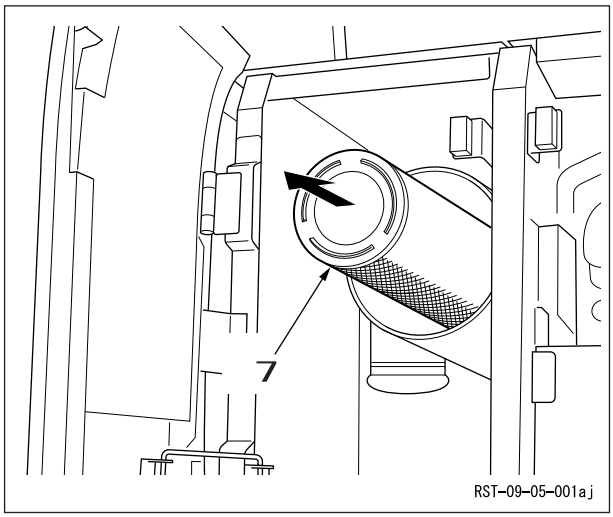

https://truckmanualshub.com/

Hydraulic Oil Filter Replacement

Caution	・When replacing the hydraulic oil, be careful to keep dirt, water, sand, and all other foreign matter out of the tank. ・When replacing the hydraulic oil, always replace the filter and element with new ones. ・When using with a hydraulic breaker mounted, the deterioration of the hydraulic oil is more severe than for normal excavation work, so maintain the hydraulic oil frequently enough. ・Manage the hydraulic oil (by checking samples for contamination and deterioration) every 1000 hour per engine running time. ”We recommend the Sumitomo Oil Analysis System (Oiltech).”

Put the main unit into the posture for transport or shipping.

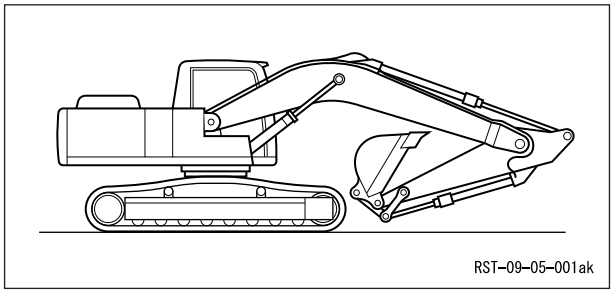

1. Return Filter Replacement

[1] Press the rubber cap at the breather section on the top of the hydraulic oil tank to bleed off the pressure in the tank.

[2] Use a wrench (17 mm) to remove the bolts (1), then remove the cover (2).
(There is an O-ring (6) on the rear.)

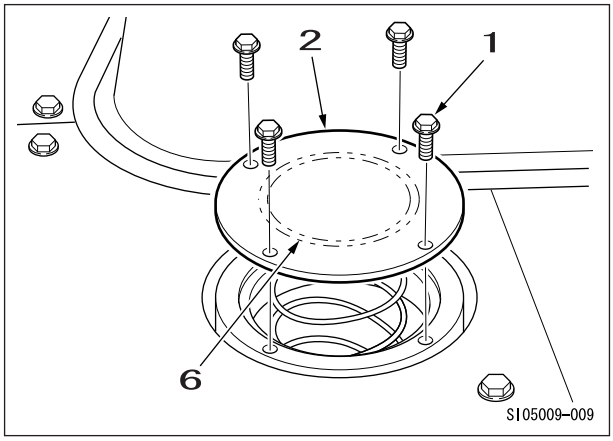

[3] Take the spring (3), valve (4), and return filter (5) out from the tank.

[4] Replace the return filter.

[5] If the O-ring (6) on the rear of the cover is worn or damaged, replace it.

[6] The installation procedure is the reverse of the removal procedure.

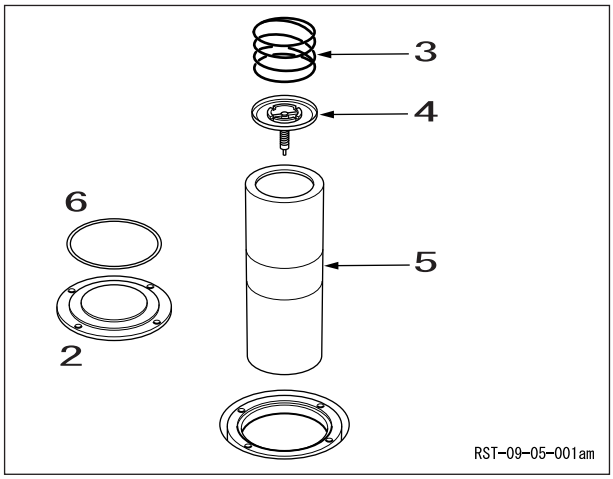

https://truckmanualshub.com/

2. Suction Filter Replacement

[1] Press the rubber cap at the breather section on the top of the hydraulic oil tank to bleed off the pressure in the tank.

[2] Use a wrench (17 mm) to remove the bolts (1), then remove the feed port cover (2).
(There is an O-ring (3) on the rear.)

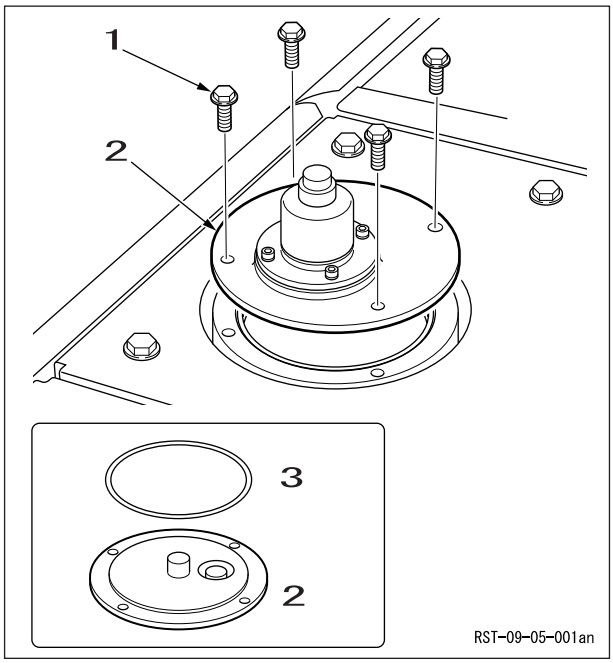

[3] Remove the suction strainer (4).

[4] Replace the suction strainer (4) with a new one.

[5] If the O-ring is worn or damaged, replace it.

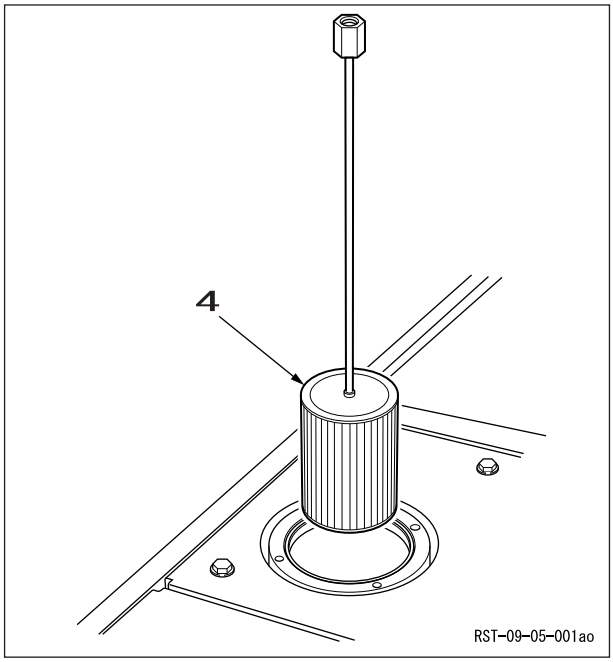

[6] The installation procedure is the reverse of the removal procedure.
* When installing the feed port cover (2), align it with the position in the figure on the right, then install it.

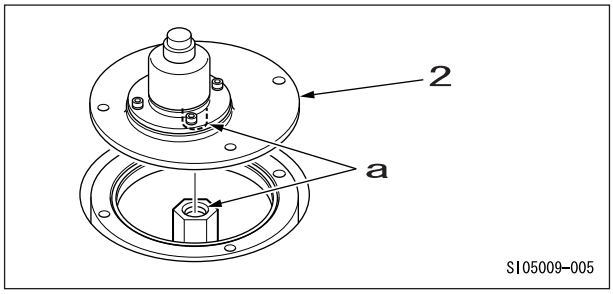

a	Align

https://truckmanualshub.com/

3. Air Breather Element Replacement

[1] Press the rubber cap (1) at the breather section on the top of the hydraulic oil tank to bleed off the pressure in the tank.

[2] Remove the rubber cup (1).

[3] Use a wrench (19 mm) to remove the hexagon nut (2).

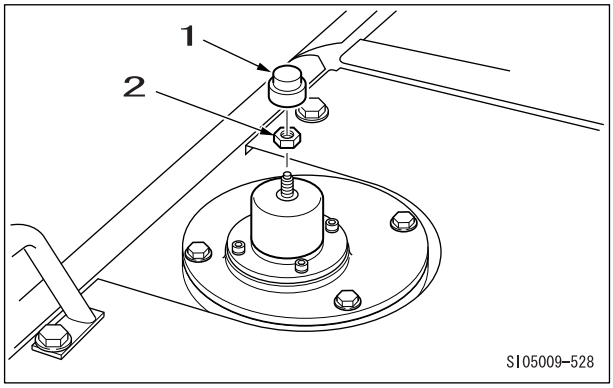

[4] Remove the cover (3).

[5] Replace the filter element (4) with a new one.

[6] The installation procedure is the reverse of the removal procedure.

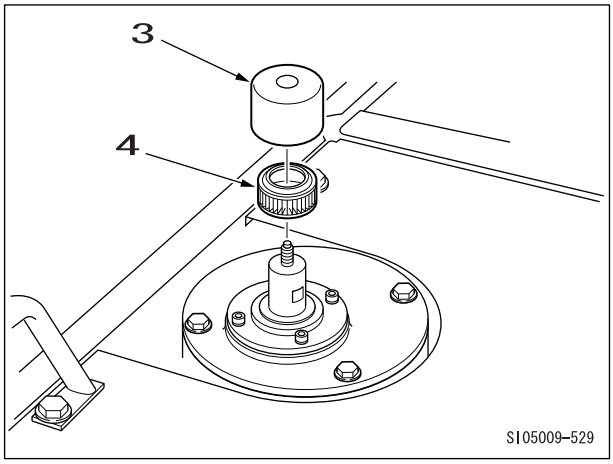

4. Pilot Oil Filter Replacement

[1] Use a filter wrench (1) or the like to remove the pilot oil filter cover.

[2] Replace the pilot oil filter (2).

[3] When installing the pilot oil filter (2), check that the O-ring is not damaged, then install.
Also, if the O-ring is replaced, apply oil to it before installing it.

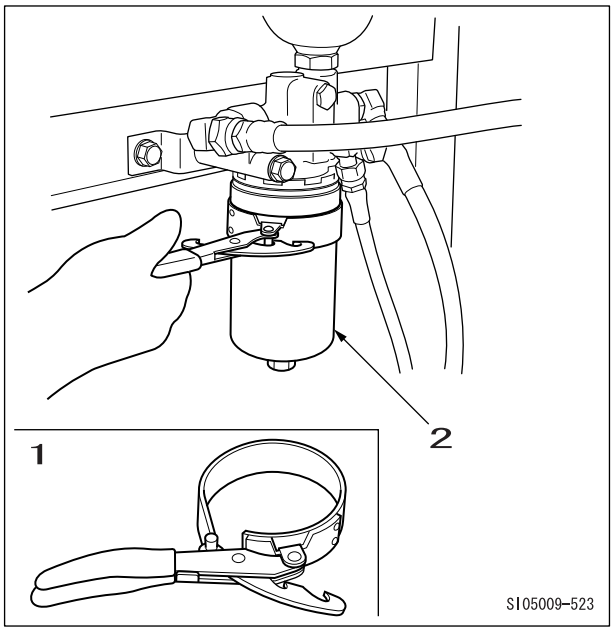

https://truckmanualshub.com/

5. Hydraulic Oil Replacement

[1] Rotate the main unit slightly before replacing the hydraulic oil. (Enough to make the work easy)

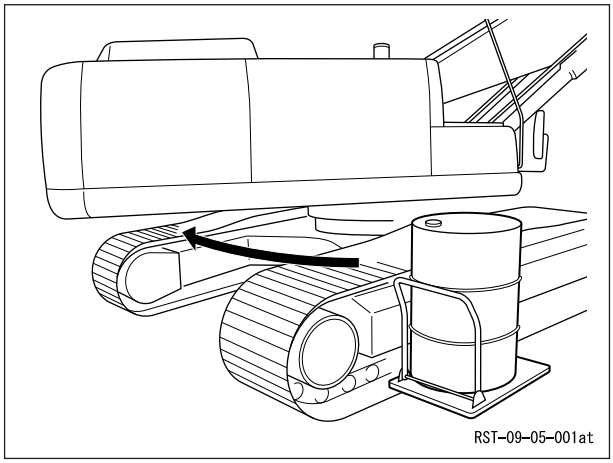

[2] Use a wrench (17 mm) to remove the bolts (1), then remove the feed port cover (2).

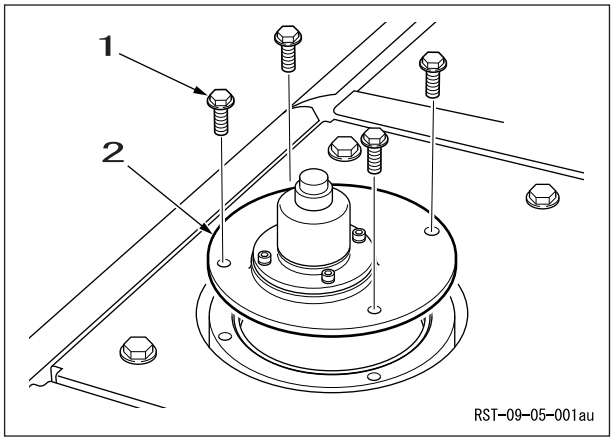

[3] Insert the feed pump into the feed port (3).

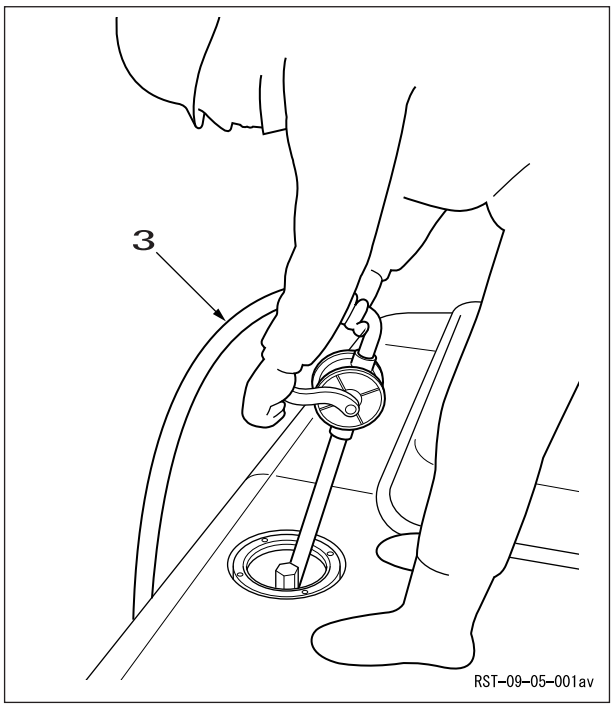

https://truckmanualshub.com/

[4] Prepare a can (4) to drain the hydraulic oil into.

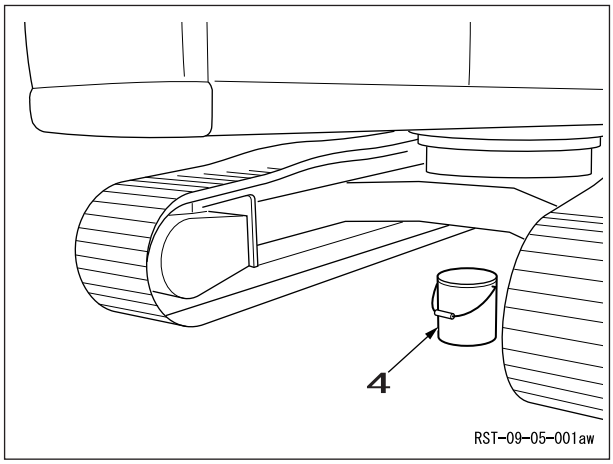

[5] Use a box wrench (19 mm) to loosen the bolt (6), and remove the under cover (5).

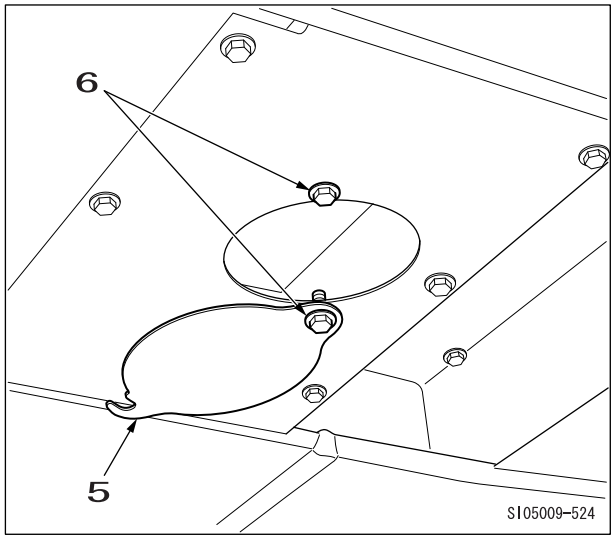

[6] Use a box wrench (17 mm) (7) to remove the drain plug (8).

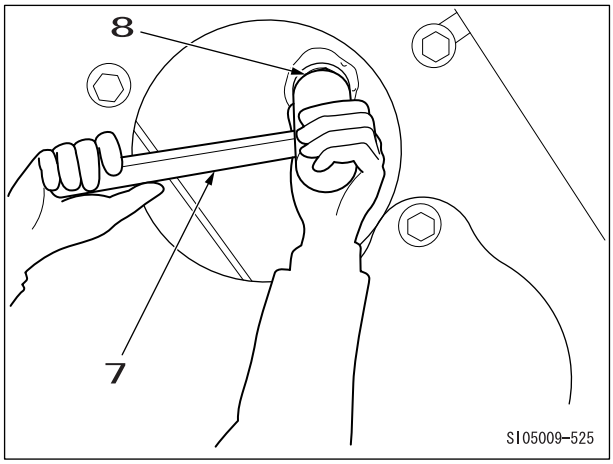

https://truckmanualshub.com/

[7] Drain the waste oil into the drain can (9).

[8] After draining the waste oil, securely install the drain plug.

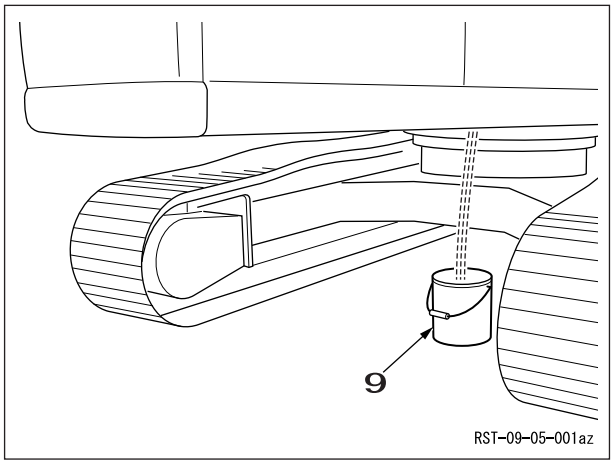

Hydraulic oil filling

[1] Fill with the feed pump (10) as in the figure on the right.

[2] Check that the hydraulic oil comes to the correct position on the level gauge (11).

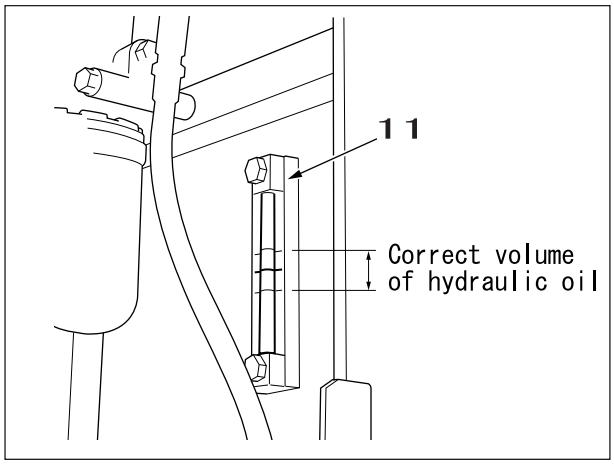

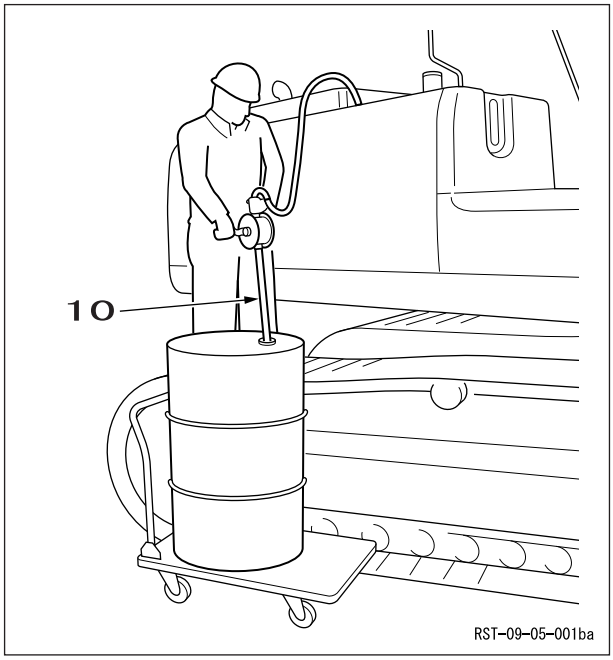

https://truckmanualshub.com/

Others

1. Coolant Filling

   Remove the reserve tank (1) cap and pour in coolant (2).

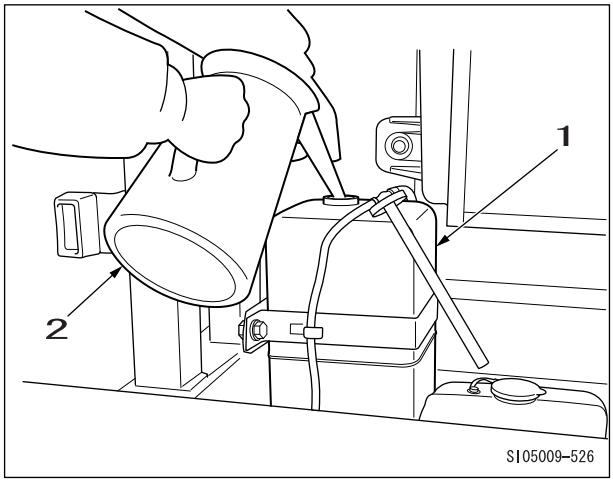

2. Washer Fluid Filling

   Remove the washer tank (1) cap and pour in washer fluid (2).

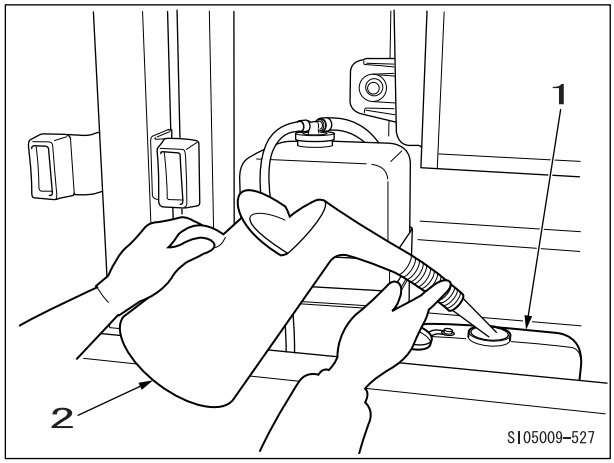

https://truckmanualshub.com/

Maintenance Every 250 Hours

1. Battery Inspection and Replacement

Check the color from the battery cover inspection window.

Green : OK
Black : Charge (Charge the battery.)
White : Replace (Replace the battery.)

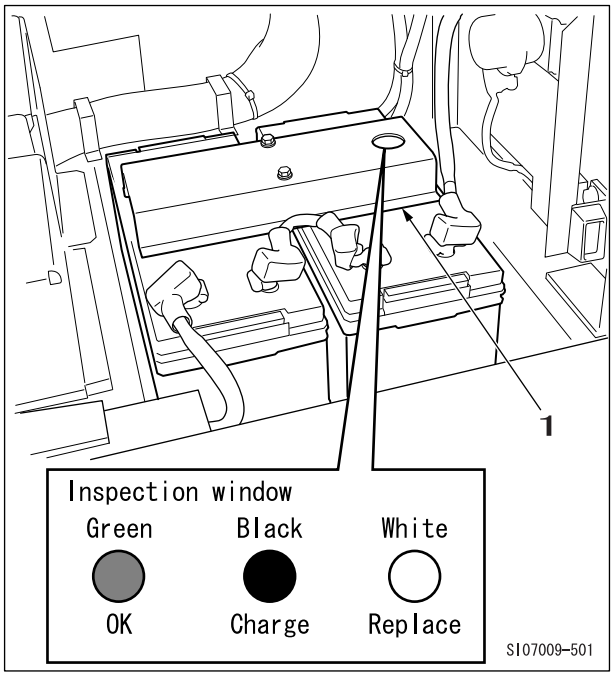

■ Battery replacement can

[1] Remove the 2 screws (2), then remove the battery cover (1).

[2] Remove the 2 cables (4) connected to the battery terminals, then replace the battery (3) with a new one.

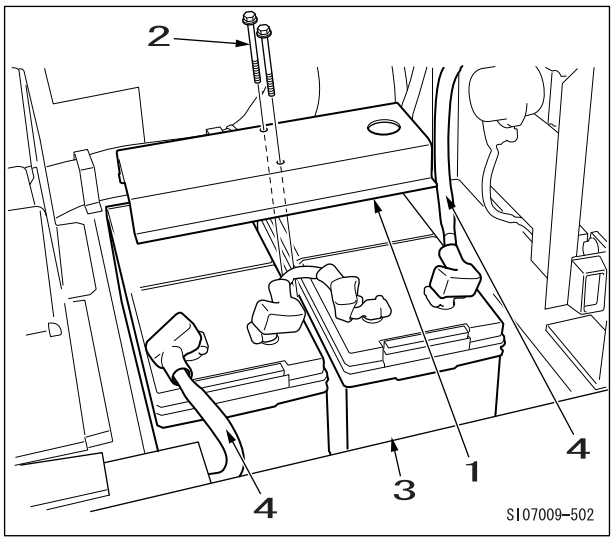

https://truckmanualshub.com/

Maintenance after First 250 Hours for New Machine / Every 1000 Hours from Then on

1. Swing Reduction Gear Oil Replacement

[1] Use a wrench (19 mm) to remove the bolts (2), and remove the under cover(1).

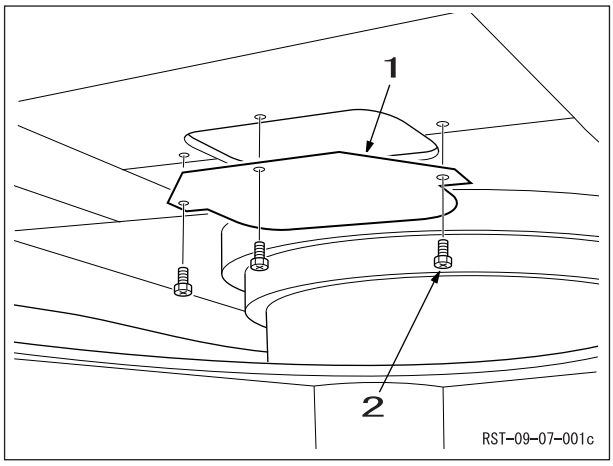

[2] Prepare a waste oil can (3).

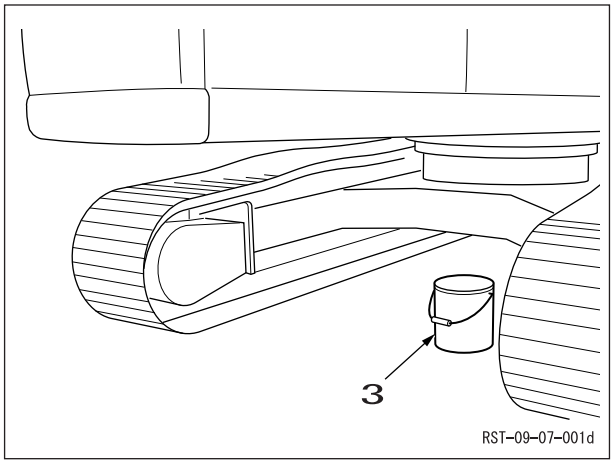

[3] Remove the level gauge (4).

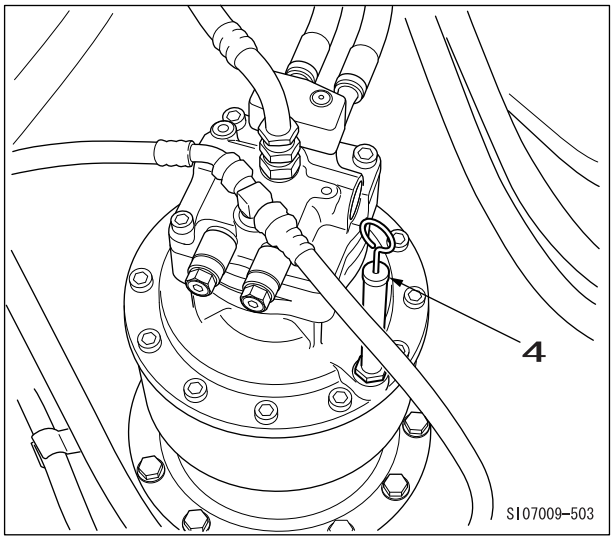

https://truckmanualshub.com/

[4] Use a wrench (22 mm) (5) to remove the drain plug (6) and drain off the oil.

[5] After oil draining is complete, tighten the drain plug (6).

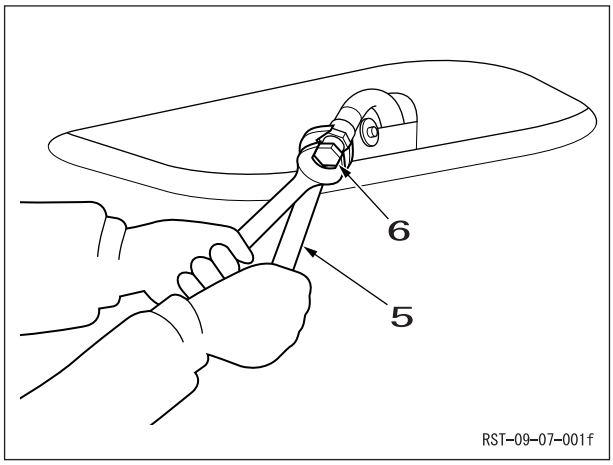

2. Gear Oil Filling

[1] Remove the level gauge (2), fill the stipulated a mount of gear oil from the gauge port.

[2] After about 10 minutes, check the oil volume with the level gauge.

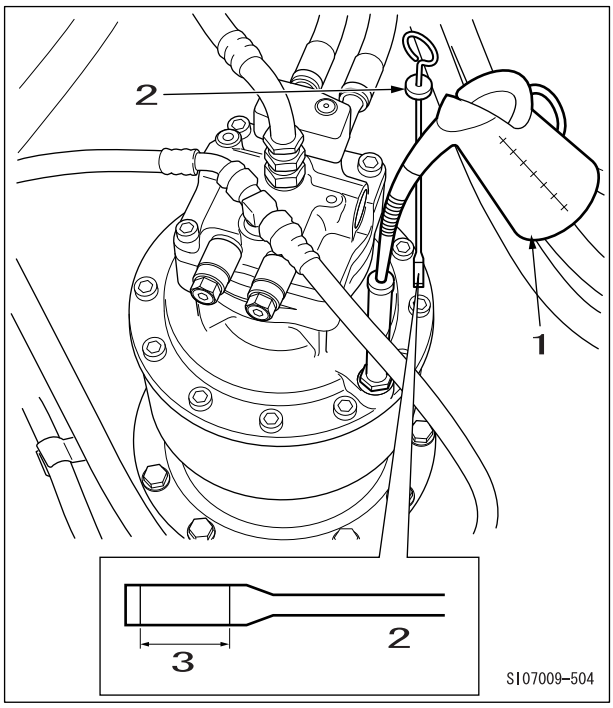

3	Stipulated volume of oil

https://truckmanualshub.com/

Replace the Flange Packing at the Bottom of the Fuel Tank

[1] Whenever the fuel tank bottom cover (1) is removed, for example for cleaning the fuel tank, replace the packing (2).

[2] When installing the packing (2), apply liquid packing. (See the figure below)

- Replacement parts

Part name	Part number
Joint seat packing	KSH0503
Liquid packing 1104	KTC0075

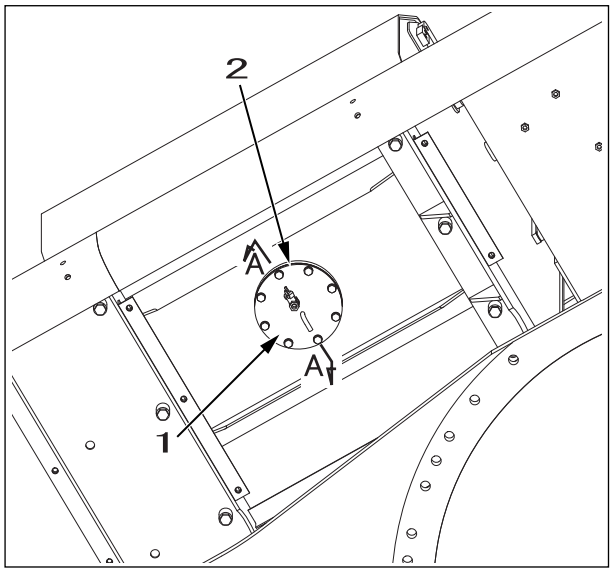

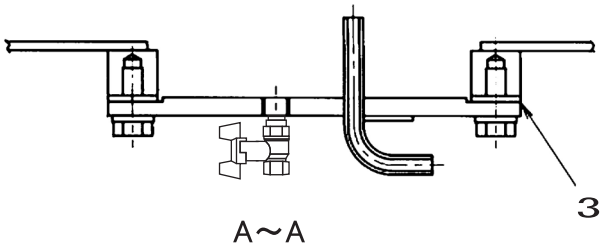

A~A

SI07009-001

3	Liquid packing must be applied.

https://truckmanualshub.com/

Bolt and Nut Tightening

- Tighten alternating between left and right and top and bottom so that uniform tightening force is applied.

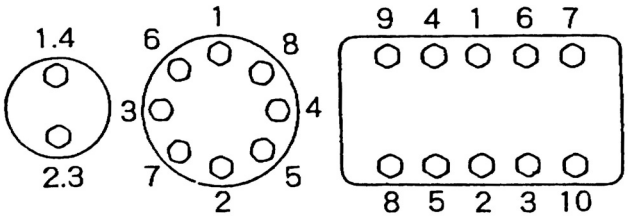

RST-09-08-001a

- For bolts at critical locations, apply engine oil to the threads for a uniform tightening force without catching on the thread peaks.
- For bolts and nuts at critical locations and at locations that cannot be inspected from the outside, use wire, cotter pins, folded washers, or the like to securely prevent turning.

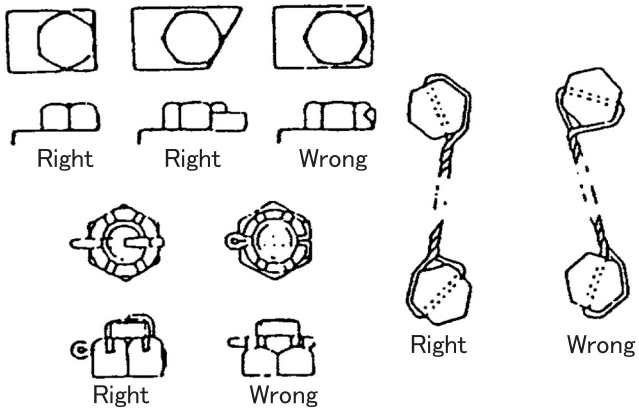

RST-09-08-001b

- If Loctite was used on a removed bolt (there is something white sticking to the bolt when it is removed), clean the old Loctite off with cleaning fluid, dry the bolt, then apply 2 - 3 drops of Loctite to the thread section of the bolt.

Bolt and nut retightening [after 1st 50 hr. for new machine] [every 250 hr.]

Tighten and retighten bolts and nuts in each section according to the table. Also before and after day-to-day work, inspect for loose or fallen out bolts and nuts. Retighten any that are loose and replace any that have come out.
Inspect and retighten after the first 50 hr. for a new machine and every 250 hr. after that.

https://truckmanualshub.com/

Bolt Size and Torque Table

Retightening Torque Table

Code	Retightening location		Bolt nominal diameter	Wrench	Tightening torque [N•m]
①	Travel motor		M24	36 mm	900 - 1051
②	Drive sprocket		M20	30 mm	521 - 608
③	Take-up roller		M16	24 mm	267 - 312
④	Upper roller		M20	30 mm	521 - 608
⑤	Lower roller		M24	36 mm	902 - 1049
⑥	Track guard		M24	36 mm	902 - 1049
7	Shoe		M24	32 mm	1236 - 1510
8	Counterweight		M33	50 mm	1685 - 1960
⑨	Turntable bearing		M24	36 mm	900 - 1050
⑩	Swing unit		M24	36 mm	900 - 1050
⑪	Engine	Mount	M20	30 mm	289 - 337
⑫		Front bracket	M10	17 mm	64 - 73
⑬		Rear bracket	M12	19 mm	109 - 127
⑭	Radiator		M16	24 mm	147 - 176
⑮	Hydraulic pump	Flange	M10	17 mm	64 - 73
⑯		Pump	M20	17 mm hexagon socket head	367 - 496
⑰	Hydraulic oil tank		M16	24 mm	233 - 276
⑱	Fuel tank		M16	24 mm	233 - 276
⑲	Control valve		M16	24 mm	267 - 312
⑳	Center joint	Lock bar	M16	24 mm	267 - 312
㉑		Joint	M12	19 mm	54 - 64
22	Cab		M16	24 mm	78 - 80
			M10	17 mm	35 - 42
23	Battery		M10	17 mm	20 - 29

Caution: For items marked with ○ , always apply Loctite #262 or the equivalent and tighten to the specified torque.
The tightening torque in kgf•m is determined with N•m ÷ 9.8.

The tightening for bolts and nuts not otherwise specified in the table above is as follows.

Bolt nominal diameter (size)			M6	M8	M10	M12	M14	M16	M18	M20
Hexagon bolt	Wrench	[mm]	10	13	17	19	22	24	27	30
	Tightening torque	[N•m]	6.9	19.6	39.2	58.8	98.1	156.9	196.1	294.2
Hexagon socket head bolt	Wrench	[mm]	5	6	8	10	12	14	14	17
	Tightening torque	[N•m]	8.8	21.6	42.1	78.5	117.7	176.5	245.2	343.2

https://truckmanualshub.com/

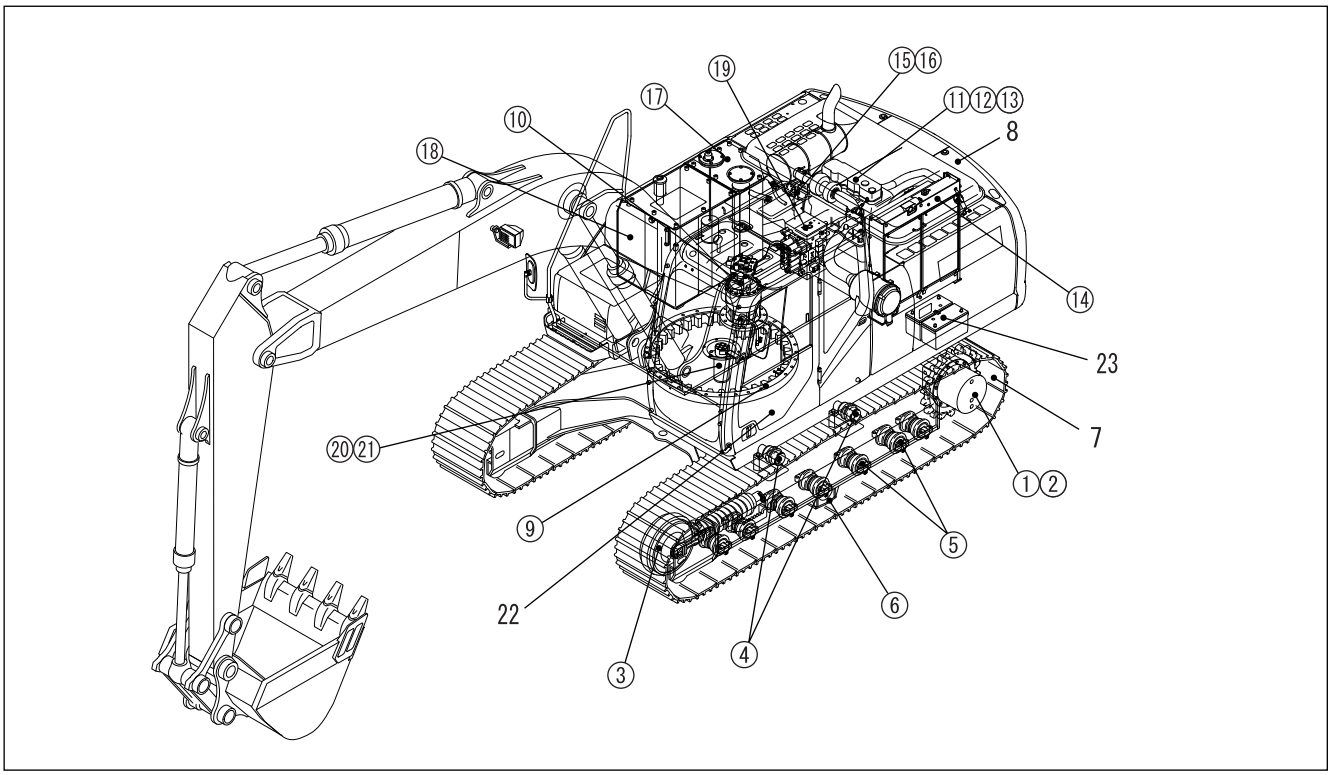

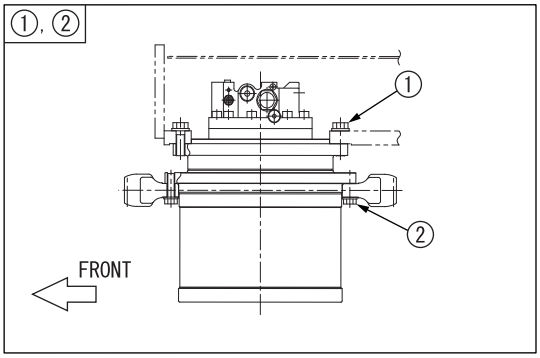

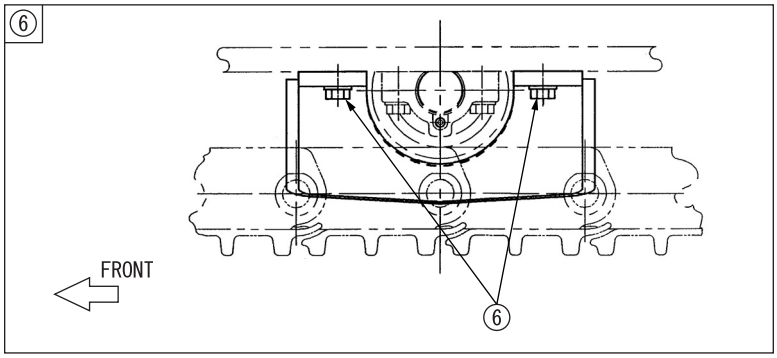

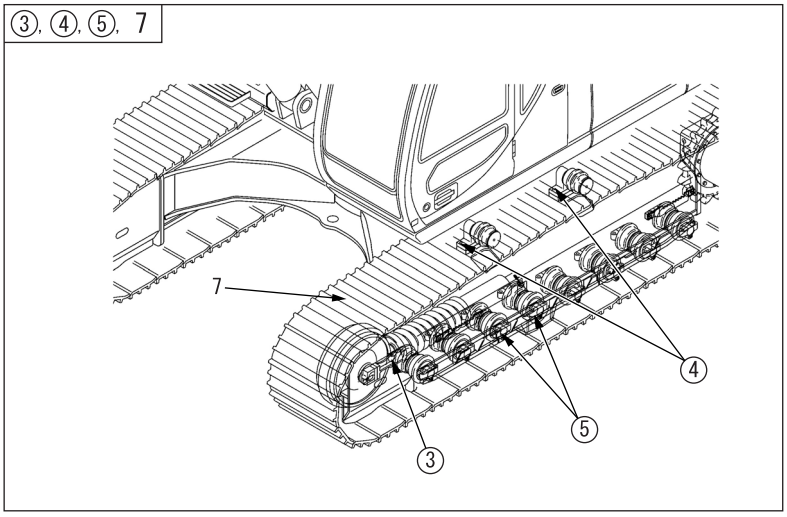

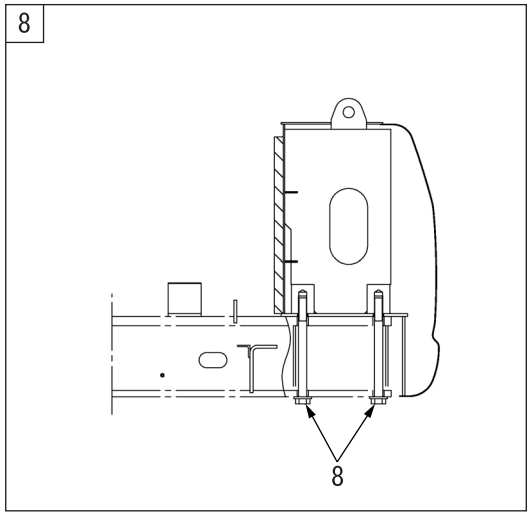

RI08008-001

https://truckmanualshub.com/

Bolt Size and Torque Table

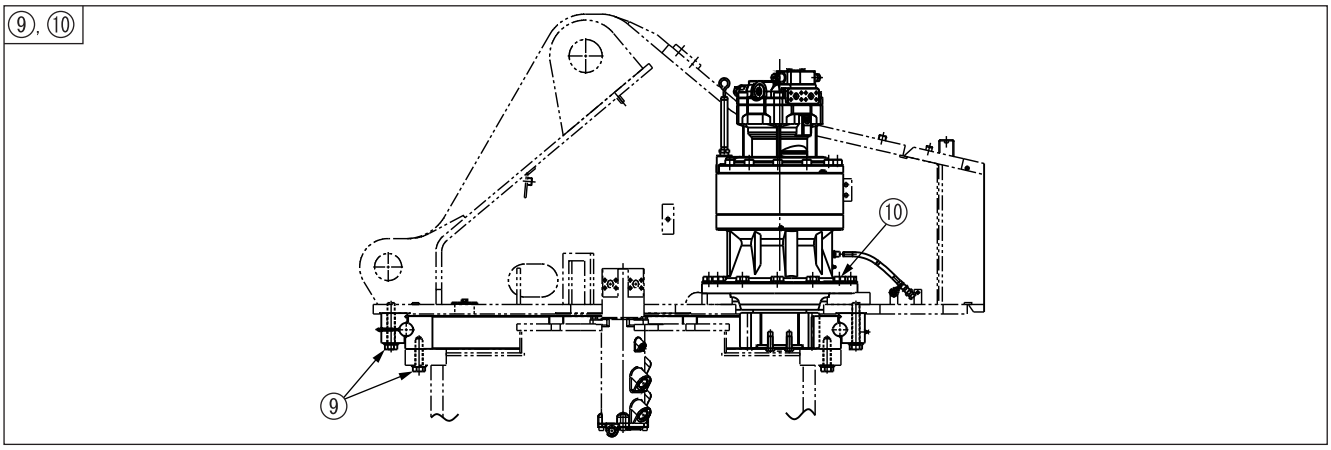

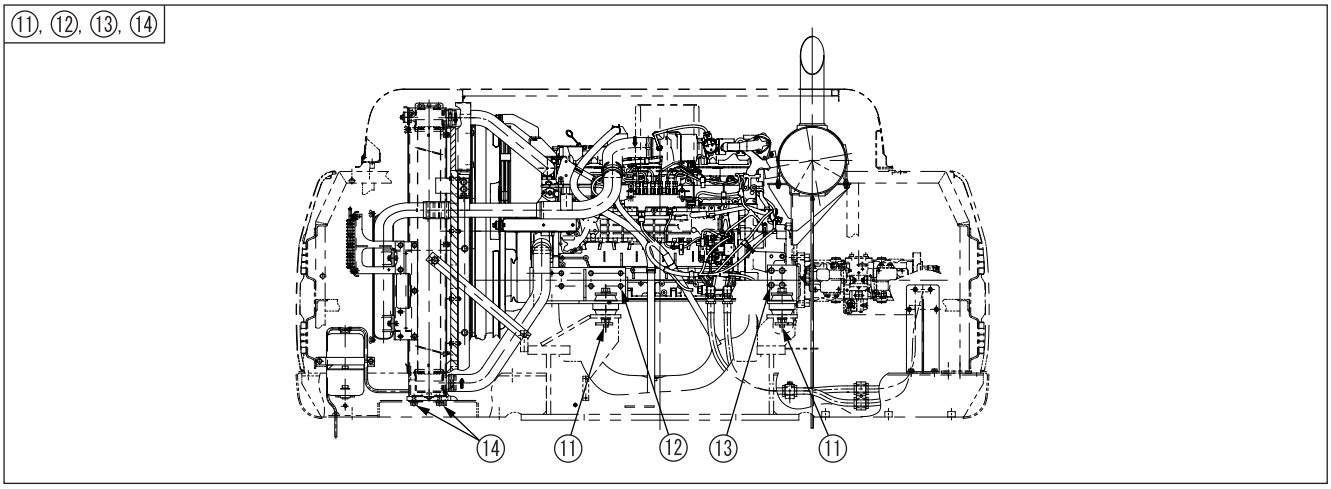

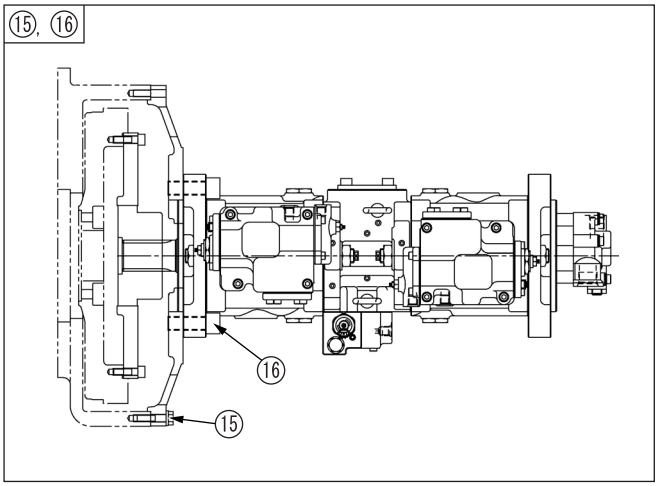

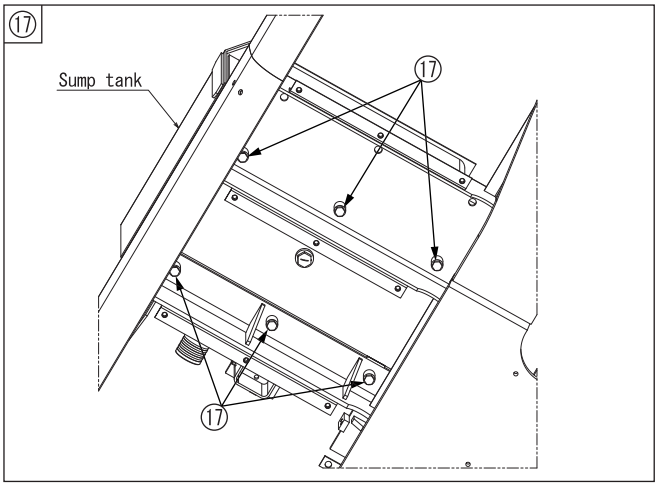

RI08008-002

https://truckmanualshub.com/

⑱

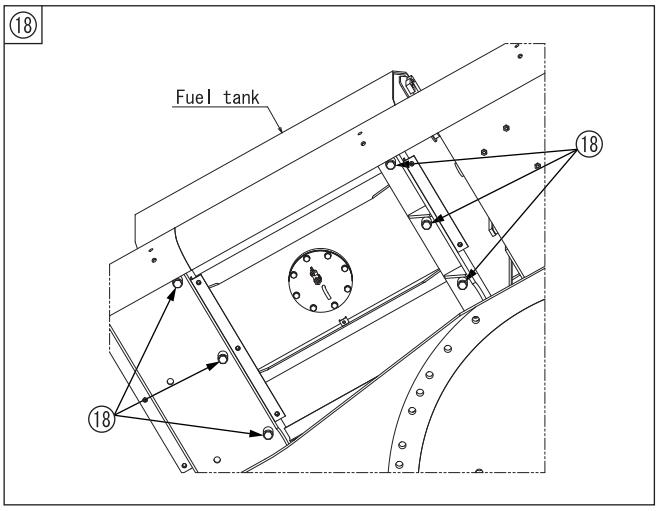

⑲

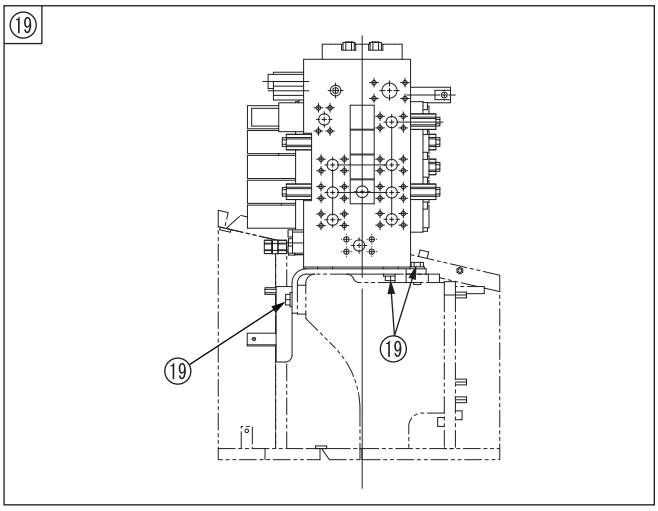

⑳, ㉑

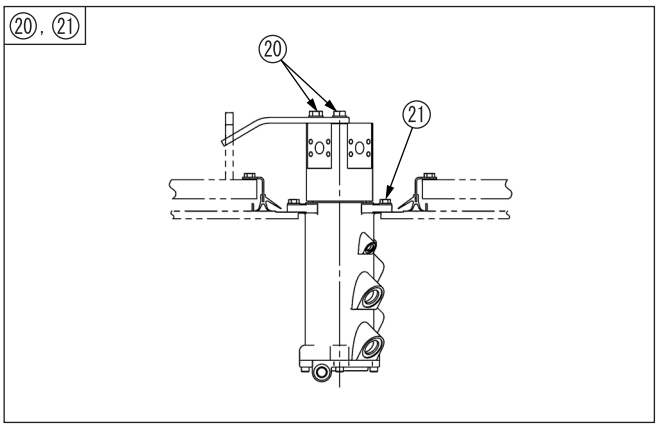

22

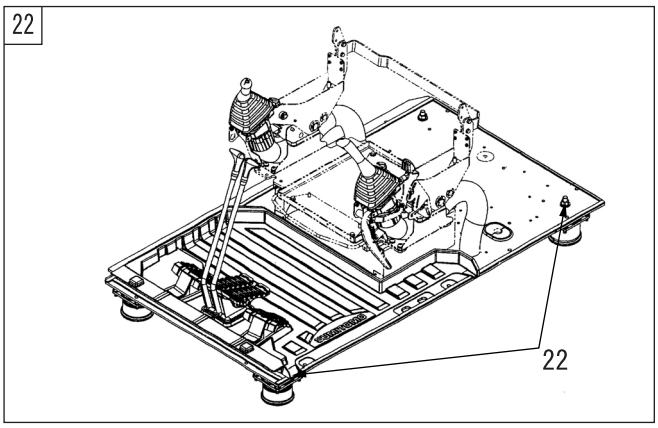

23

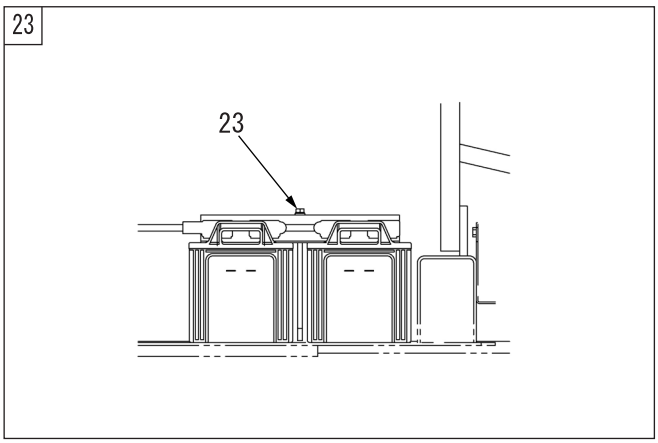

RI08008-003

https://truckmanualshub.com/

Divided Weight (standard specifications)

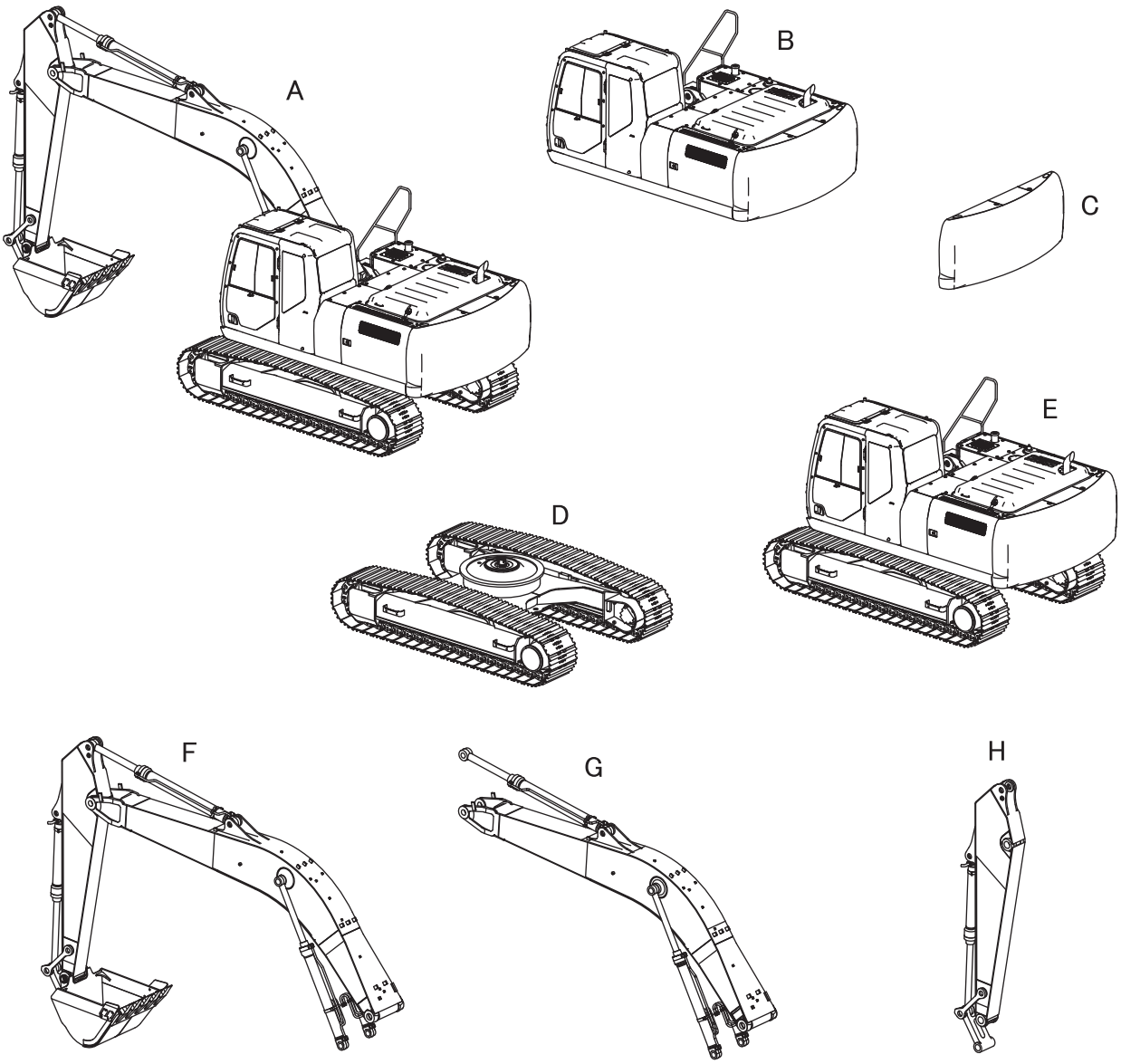

RST-11-01-001a

Weight (kg)

Symbol	Component name	SH330-5	SH330LC-5	SH350HD-5	SH350LHD-5
A	Operating weight	33430	34050	35610	36100
B	Upper component (including counterweight and turntable bearing)	14020	14020	15070	15070
C	Counterweight	64100	6410	7400	7400
D	Lower component (with grouser shoe)	11690	12300	11910	12470
E	Main unit weight	26630	27250	27910	28490
F	Attachments	6730	6730	7630	7630
G	Boom (including cylinders)	3840	3840	4130	4130
H	Arm (including cylinders and linkage)	1720	1720	1990	1990

* The weights displayed are approximate weights.

https://truckmanualshub.com/

Main Unit Weight

Stand Alone Part Weight

Weight (kg)

	Component name	SH330-5	SH330LC-5	SH350HD-5	SH350LHD-5
1	Travel unit	505	←	←	←
2	Take-up roller	165	←	←	←
3	Upper roller	44	←	←	←
4	Lower roller	62	←	←	←
5	Swing unit	475	←	←	←
6	Turntable bearing	590	←	←	←
7	Engine	700	←	←	←
8	Radiator	166	←	←	←
9	Hydraulic pump	281	←	←	←
10	Fuel tank	241	←	←	←
11	Hydraulic oil tank	202	←	←	←
12	Control valve	193	←	←	←
13	Center joint	58	←	←	←
14	Boom	2650	←	2950	←

Shoe Weight (per side)

Weight (kg)

	Component name	SH330-5	SH330LC-5	SH350HD-5	SH350LHD-5
1	600 mm grouser shoe	2100	2222	2100	2222
2	800 mm grouser shoe	2470	2630	2470	2630

Arm Weight

Weight (kg)

	Component name	SH330-5	SH330LC-5	SH350HD-5	SH350LHD-5
1	Standard arm	1105	1105	-	-
2	Standard arm (HD)	-	-	1380	←
3	Short arm	1070	←	-	-
4	Short arm (HD)	-	-	1280	←
5	Long arm	1440	←	-	-

https://truckmanualshub.com/

Bucket Weight

SH330-5/SH330LC-5

Weight (kg)

	Bucket capacity (m^3)	Weight (kg)	L1 (mm)	L2 (mm)
1	1.15	1046	1100	1233
2	1.4	1169	1302	1435
3	1.4 HD	1498	1310	1424
4	1.6	1239	1442	1575
5	1.8	1316	1600	1733

SH350HD-5

Weight (kg)

	Bucket capacity (m^3)	Weight (kg)	L1 (mm)	L2 (mm)
1	1.4 HD	1498	1310	1424
2	1.6 HD	1573	1450	1564

Bucket shape

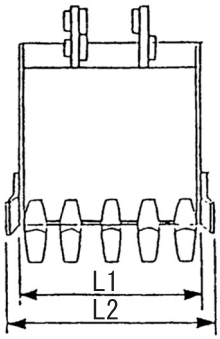

R037001–002

Hoe bucket

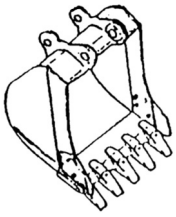

R037001–003

https://truckmanualshub.com/

Interchangeability

1. Main Part Interchangeability Table (SH330-5)

Position		Part name	SH330-3B	Inter-change-ability	SH330-5	Remarks
Lower-related	A	Travel motor	KSA10220	←○→	KSA10220	
		Shoe (600 mm)	KSA10370	←○→	KSA10370	
		Lower roller	KSA1068	←○→	KSA1068	
		Upper roller	KBA1141	←○→	KBA1141	
		Take-up roller	KSA1307	←○→	KSA1307	
		Recoil spring	KSA1310	←○→	KSA1310	
		Drive sprocket	KSA1061	←○→	KSA1061	
		Center joint	KSA1305	←○→	KSA1305	
Upper-related	B	Counterweight	KSB0850	← × →	KSB12950	Shape change
		Turntable bearing	KSB10070	←○→	KSB10070	
	C	Swing motor	KSC0247	← × →	KSC10070	Manufacturer change
		Swing reduction gear	KSC0252	← × →	KSC10080	Along with motor change
	H	Engine	KSH1027	←○→	KSH1027	Output change
		Radiator/oil cooler	KSH1028	←○→	KSH1028	
		Air cleaner	KSH0895	←○→	KSH0895	
		Muffler	KSH0948	←○→	KSH0948	
		Fuel tank	KSH0903	← × →	KSH10270	Shape change
	J	Hydraulic pump	KSJ2851	← × →	KSJ12240	Specifications change
		Control valve	KSJ3106	← × →	KSJ12250	Specifications change
		Remote control valve (operating machine)	KRJ5804	← × →	KHJ13270	Specifications change
		Remote control valve (travel)	KNJ2557	←○→	KRJ5803	Manufacturer change
		Hydraulic oil tank	KSJ11130	← × →	KSJ12260	Shape change
	N	Cab	KHN11660	← × →	KHN16440	Structure change
		Operator's seat	KHN3470	← × →	KHN10500	Suspension change
		Console box	KHN3237	← × →	KHN12200	Design alteration
	R	Computer	KHR2688	← × →	KHR10026	Specifications change
		Monitor display	KHR3825	← × →	KHR10051	Design alteration
		Air conditioner unit	-		-	Only main unit interchangeable
Attachment-related	V	Boom	KSV13810	← × →	KSV15490	Line seating differs
		Arm	KSV1934	← × →	KSV15530	Line seating differs
		Bucket (1.4 m^3)	KSV1327	←○→	KSV1327	
		Bucket link	KSV1936	←○→	KSV1936	
		Arm link	KSV1319 KSV1320	←○→	KSV1319 KSV1320	
		Boom cylinder	KSV1925 KSV1926	←○→	KSV1925 KSV1926	
		Arm cylinder	KSV1927	←○→	KSV1927	
		Bucket cylinder	KSV1928	←○→	KSV1928	
		Pin and bushing	-	←○→	-	

The parts numbers are for reference. When arranging for parts, check with the parts manual.

https://truckmanualshub.com/

Interchangeability

2. Main Part Interchangeability Table (SH330LC-5)

Position		Part name	SH330LC-3B	Inter-change-ability	SH330LC-5	Remarks
Lower-related	A	Travel motor	KSA10220	←○→	KSA10220	
		Shoe (600 mm)	KSA10450	←○→	KSA10450	
		Lower roller	KSA1068	←○→	KSA1068	
		Upper roller	KBA1141	←○→	KBA1141	
		Take-up roller	KSA1307	←○→	KSA1307	
		Recoil spring	KSA1310	←○→	KSA1310	
		Drive sprocket	KSA1061	←○→	KSA1061	
		Center joint	KSA1305	←○→	KSA1305	
Upper-related	B	Counterweight	KSB0850	← × →	KSB12950	Shape change
		Turntable bearing	KSB10070	←○→	KSB10070	
	C	Swing motor	KSC0247	← × →	KSC10070	Manufacturer change
		Swing reduction gear	KSC0252	← × →	KSC10080	Along with motor change
	H	Engine	KSH1027	←○→	KSH1027	Output change
		Radiator/oil cooler	KSH1028	←○→	KSH1028	
		Air cleaner	KSH0895	←○→	KSH0895	
		Muffler	KSH0948	←○→	KSH0948	
		Fuel tank	KSH0903	← × →	KSH10270	Shape change
	J	Hydraulic pump	KSJ2851	← × →	KSJ12240	Specifications change
		Control valve	KSJ3106	← × →	KSJ12250	Specifications change
		Remote control valve (operating machine)	KRJ5804	← × →	KHJ13270	Specifications change
		Remote control valve (travel)	KNJ2557	←○→	KRJ5803	Manufacturer change
		Hydraulic oil tank	KSJ11130	← × →	KSJ12260	Shape change
	N	Cab	KHN11660	← × →	KHN16440	Structure change
		Operator's seat	KHN3470	← × →	KHN10500	Suspension change
		Console box	KHN3237	← × →	KHN12200	Design alteration
	R	Computer	KHR2688	← × →	KHR10026	Specifications change
		Monitor display	KHR3825	← × →	KHR10051	Design alteration
		Air conditioner unit	-		-	Only main unit interchangeable
Attachment-related	V	Boom	KSV13810	←○→	KSV15490	Line seating differs
		Arm	KSV1934	←○→	KSV15530	Line seating differs
		Bucket (1.4 m^3)	KSV1327	←○→	KSV1327	
		Bucket link	KSV1936	←○→	KSV1936	
		Arm link	KSV1319 KSV1320	←○→	KSV1319 KSV1320	
		Boom cylinder	KSV1925 KSV1926	←○→	KSV1925 KSV1926	
		Arm cylinder	KSV1927	←○→	KSV1927	
		Bucket cylinder	KSV1928	←○→	KSV1928	
		Pin and bushing	-	←○→	-	

The parts numbers are for reference. When arranging for parts, check with the parts manual.

https://truckmanualshub.com/

3. Main Part Interchangeability Table (SH350HD-5)

Position		Part name	SH330LC-3B	Inter-change-ability	SH350HD-5	Remarks
Lower-related	A	Travel motor	KSA10220	←○→	KSA10220	
		Shoe (600 mm)	KSA10370	←○→	KSA10370	
		Lower roller	KSA1068	←○→	KSA1068	
		Upper roller	KBA1141	←○→	KBA1141	
		Take-up roller	KSA1307	←○→	KSA1307	
		Recoil spring	KSA1310	←○→	KSA1310	
		Drive sprocket	KSA1061	←○→	KSA1061	
		Center joint	KSA1305	←○→	KSA1305	
Upper-related	B	Counterweight	KSB0861	← × →	KSB12490	Shape change
		Turntable bearing	KSB10070	←○→	KSB10070	
	C	Swing motor	KSC0247	← × →	KSC10070	Manufacturer change
		Swing reduction gear	KSC0252	← × →	KSC10080	Along with motor change
	H	Engine	KSH1027	←○→	KSH1027	
		Radiator/oil cooler	KSH1028	←○→	KSH1028	
		Air cleaner	KSH0895	←○→	KSH0895	
		Muffler	KSH0948	←○→	KSH0948	
		Fuel tank	KSH0903	← × →	KSH10270	Shape change
	J	Hydraulic pump	KSJ2851	← × →	KSJ12240	Specifications change
		Control valve	KSJ3106	← × →	KSJ12250	Specifications change
		Remote control valve (operating machine)	KRJ5804	← × →	KHJ13270	Specifications change
		Remote control valve (travel)	KNJ2557	←○→	KRJ5803	Manufacturer change
		Hydraulic oil tank	KSJ11130	← × →	KSJ12260	Shape change
	N	Cab	KHN10050	← × →	KHN20750	Structure change
		Operator's seat	KHN3470	← × →	KHN10500	Suspension change
		Console box	KHN3237	← × →	KHN12200	Design alteration
	R	Computer	KHR2688	← × →	KHR10026	Specifications change
		Monitor display	KHR3825	← × →	KHR10051	Design alteration
		Air conditioner unit	-		-	Only main unit interchangeable
Attachment-related	V	Boom	KSV13870	← × →	KSV17540	Line seating differs
		Arm	KSV13330	← × →	KSV17560	Line seating differs
		Bucket (1.4 m^3)	KSV1328	←○→	KSV1328	
		Bucket link	KSV1936	←○→	KSV1936	
		Arm link	KSV1319 KSV1320	←○→	KSV1319 KSV1320	
		Boom cylinder	KSV1925 KSV1926	←○→	KSV1925 KSV1926	
		Arm cylinder	KSV1927	←○→	KSV1927	
		Bucket cylinder	KSV1928	←○→	KSV1928	
		Pin and bushing	-	←○→	-	

The parts numbers are for reference. When arranging for parts, check with the parts manual.

https://truckmanualshub.com/

Attachment Dimensions

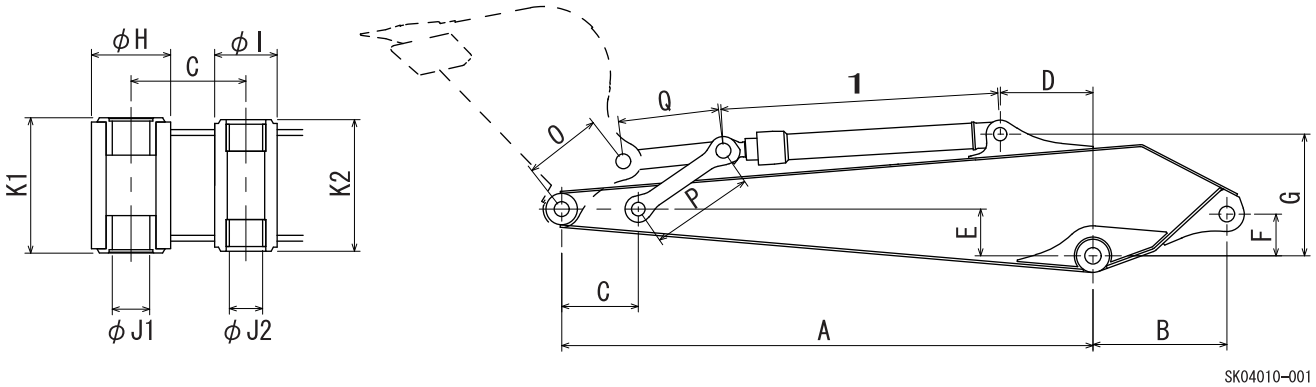

Arm boss

1	Maximum retracted length stroke

Position	Standard arm												
	A	B	C	D	E	F	G	H	I	J1	J2	K1	K2
Dimension (mm)	3240	952	535	286	265	270	895	210	170	90	90	400	375

Position	Bucket cylinder		
	Maximum retracted length	Stroke	Cylinder top width
Dimension (mm)	1870	1210	120

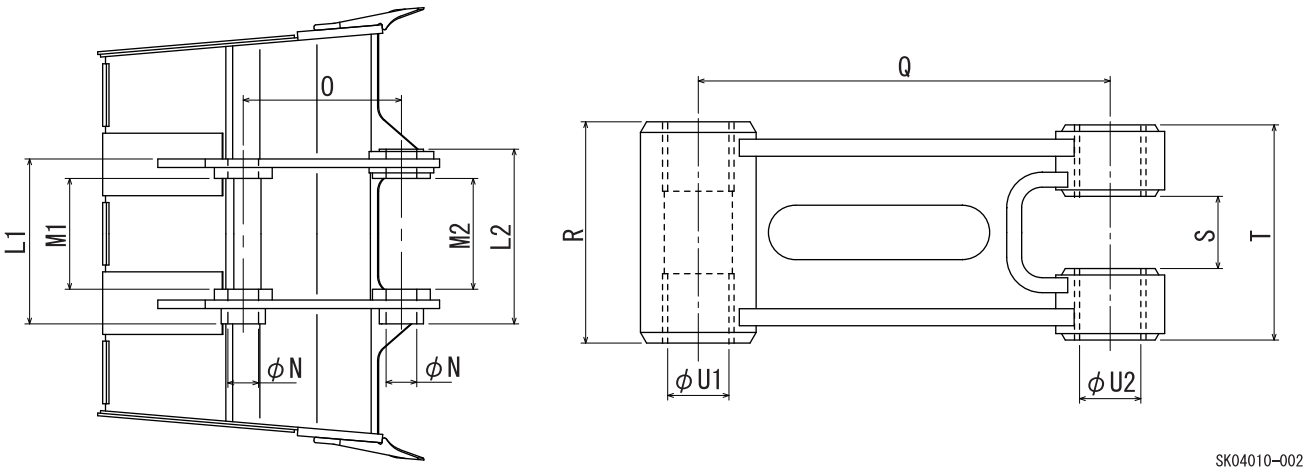

Bucket link

Position	Bucket						Arm link	Bucket link					
	L1	L2	M1	M2	N	O	P	Q	R	S	T	U1	U2
Dimension (mm)	611	632	401	401	90	535	710	675	400	121	375	90	105

https://truckmanualshub.com/

Attachment Installation Dimensions

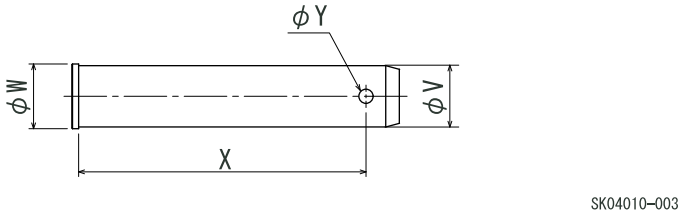

Bucket pin

Position	Bucket pin							
	Bucket and arm connection section				Bucket and bucket link connection section			
	V	W	X	Y	V	W	X	Y
Dimension (mm)	90	90	638	25	90	90	591	25

https://truckmanualshub.com/

Paint Colors

		Sumitomo No.	MUNSELL No.
1	Vivid yellow	Y-003	2.5Y 7.4/12.2
2	MS37 gray	N-300	1.2Y 3.8/0.3
3	Black	S-141	9.0YR 3.3/0.1

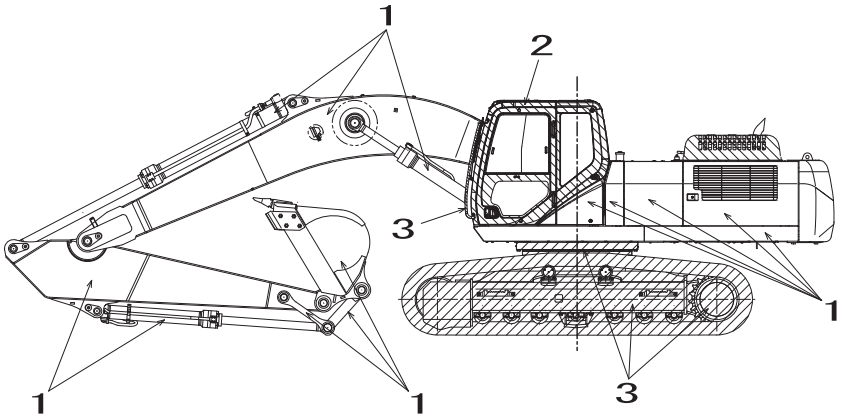

SK05012-001

Paint location	Color	Sumitomo No.	Paint part number
• Upper (However, the cab, engine, muffler, exhaust pipe, housing door, engine hood, frame duct, electric parts, and plastic parts are excluded.) • Swing frame (front section) • Attachments	Vivid yellow	Y-003	KHN1444 (urethane paint)
• Inside housing • Swing frame (except front section and bottom section))	MS37 gray	N-300	KHP1193 (one coat)
• Upper undercover	MS37 gray	N-003	KHN1444 (urethane paint)
• Outside of cab	Vivid yellow	Y-003	- (melamine)
	MS37 gray	N-003	
• In cab	MS37 gray	N-003	- (melamine)
• Front window (both inside and outside), cab handrail	Black	S-141	- (melamine)
• In cab, floor, bracket trim	MS37 gray	N-003	KHP1193 (one coat)
• Lower overall Swing frame (A frame bottom) Turntable bearing	Black	S-141	KHN1189 (acrylic paint)
• Swing frame (engine bottom and inside)	MS37 gray	N-003	KHN1189 (acrylic paint)
• Lower under cover	MS37 gray	N-003	KHP1193 (one coat)
• Muffler and exhaust pipe	Black	Ceramic Coating (KK)	KHP1200 (heat resistant)
• Housing door, side cover	Vivid yellow	Y-003	KHP1445 (baked)
• Engine hood	MS37 gray	N-003	KHP1445 (baked)
• Handrail	Black	S-141	Powder paint
• House cover, frame duct, tool box	MS37 gray	N-003	KHP1445 (baked)
• House cover	Black	S-141	KHP1445 (baked)

https://truckmanualshub.com/

Unit Conversion Ratio

Weight unit	—(×) → ← (÷)—	SI unit
Kgf	9.807	N
lbf	4.448	N
Kgf •cm	0.0981	N•m
lbf•ft	1.356	N•m
lbf•in	0.113	N•m
Kgf/cm^2	0.0981	MPa
atm	0.1013	MPa
$lbf•in^2$	0.0069	MPa
mmHg	133.3	Pa
inHg	3386	Pa
Kgf •m/s	0.00981	kW
lbf•ft/s	0.00136	kW
PS	0.7355	kW
HP	0.746	kW
Kgf •m	9.807	J
Kcal	4186	J
$Kgf•s/cm^2$	98067	Pa•s
cP	0.001	Pa•s
P	0.1	Pa•s
cSt	$1×10^{-6}$	m^2/s
St	0.0001	m^2/s