https://truckmanualshub.com/

ATLAS

1404 ZW · 1404 ZW Friction wheel · 1604 ZW · 16.5 to 22 Tons

RAIL-ROAD EXCAVATORS

SAFE. POWERFUL. RELIABLE.

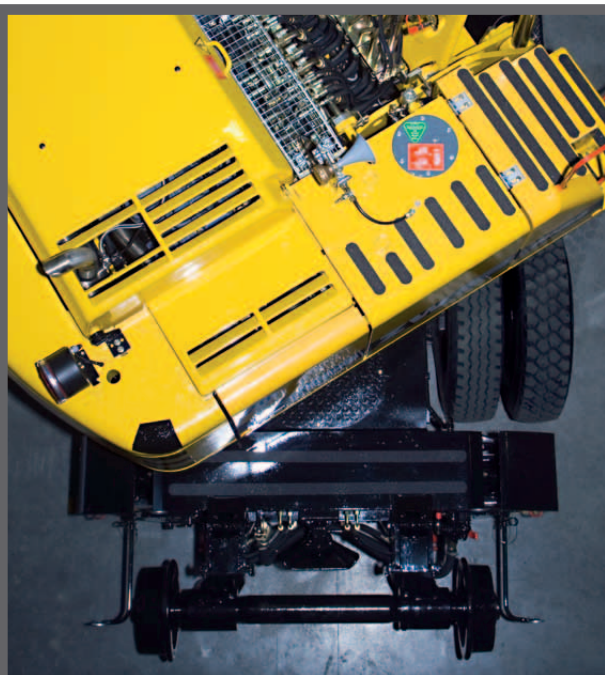

ATLAS

https://truckmanualshub.com/

SAFE. POWERFUL. RELIABLE.

BUILDING ON TECHNOLOGY – High-tech excavator for use on rails

ATLAS rail-road excavators were especially developed for use on rails and combine optimum mobile excavator technology with the most up-to-date know-how for rail use. This is your guarantee for top performance, even with difficult track conditions.

We were the first to put an excavator on rails in 1965. We were market and technology leaders in this field back then and still are today. As the sole world-wide supplier, we offer the computer assisted rail contact pressure system (CARSY). We are the sole manufacturer in Europe of rail-road, short tailswing excavators with a swing radius of less than 2000 mm. We can offer any chassis configuration to fit any rail network for our world-wide customers.

Take advantage of our many years of know-how and experience for your application: on rail, alongside the track and mounted on the railway wagon.

The right choice every time –
We offer rail-road excavators of two types.
In particular, the excavators comply with the latest construction requirements of the German Federal Railways

1404 ZW with the CARSY-System
17 - 20 t
75kW (102HP)
Tailswing: 1575, 1750, 2000 mm

1404 Friction wheel
16.5 - 17.5 t
75kW (102HP)
Tailswing: 1575, 1750, 2000 mm

1604 ZW with the CARSY-System
21 - 22 t
95kW (129HP)
Tailswing: 1750, 2000 mm

https://truckmanualshub.com/

RAIL-ROAD EXCAVATOR

ATLAS – Construction machinery manufacturer with tradition

When in 1919 Hinrich Weyhausen started selling construction and agricultural machinery, he stated that the machines his clients actually needed did not exist. So he listened carefully and just built the machines by himself – having in mind the requirements of people who used his tools every day. Under the brand ATLAS he passionately performed his pioneer work. However, the technology was never the really important thing, so were always only the benefits. Preserving these values, nothing has changed for us.

https://truckmanualshub.com/

ATLAS

The rail-road excavator

A PLEASURE IN OPERATION

Safety, power and fast and comfortable operation set our rail-road excavator apart, making it amongst the most pleasurable machines to operate on rail or on site.

Speed – working faster than ever

- The required pressures on the rail guidance wheels are automatically set when the 1404 ZW and 1604 ZW are re-railed. No awkward external adjusting screw to set the contact pressure on the tyres.
- Innovative AWE 4 technology for sensitive, proportional control of all movements irrespective of load. Travel and work simultaneously. This is the big advantage to you.
- Front and rear wheels can be controlled independently (not with the friction wheel version).
- Simple de- and re-railing ensure high operating comfort for fast, safe and efficient operation.

Tractive force

- Faster on the construction site: the enormous power allows you to use our rail-road excavator as a “shunting locomotive”. Both models are approved for 40 T un-braked trailer weight and 120 T braked trailer weight. We can also supply with a wagon brake on request.

Precise operation – optimised for the track

- 4 outrigger stabilisers (with the 1604 chassis) adapt optimally to the rail embankment.
- Customised specification: tailor your excavator precisely to your requirements from the various superstructures and chassis, for example the superstructure of the 1404 ZW can be mounted on the chassis of the 1604 ZW for maximum stability with ultra short tailswing.
- Counterweights suitable for the application can be rapidly changed.
- The loading gauge for wagons is met.

https://truckmanualshub.com/

A space-saver – great when it gets tight

- Rail-road excavator with ultra short tailswing. Choose between the different counterweight options.
- The 1404 ZW features the shortest tailswing on the market at 1575 mm making it suitable without restriction for any spacings between rail tracks.
- For narrow gauge tracks, use the 1404 ZW rail-road excavator friction wheel with its up to 1000mm narrow axles.

Reliable – because every minute counts

Our market leadership is based on our well-proven technology – tried and tested a thousand times over in the most arduous applications. High-tensile steels, robust electric and electronic components as well as excellent workmanship in all hydraulic components ensure that the excavator is the reliable heart on any construction site.

https://truckmanualshub.com/

ATLAS

You work, we protect

THOROUGHLY DESIGNED

Stability

- Low centre of gravity ensures optimum stability in operation. Assisted by a transverse mounted engine.

Safe on rails

- The outriggers are automatically lifted when the “drive” function is selected. This avoids damage during rail operation.
- Continuous monitoring of contact pressure. (not friction wheel version)
- The air reservoirs of the wagon brake are located in the superstructure and chassis and are very well protected.
- De-railing of the bogie by the outriggers is automatically eliminated.

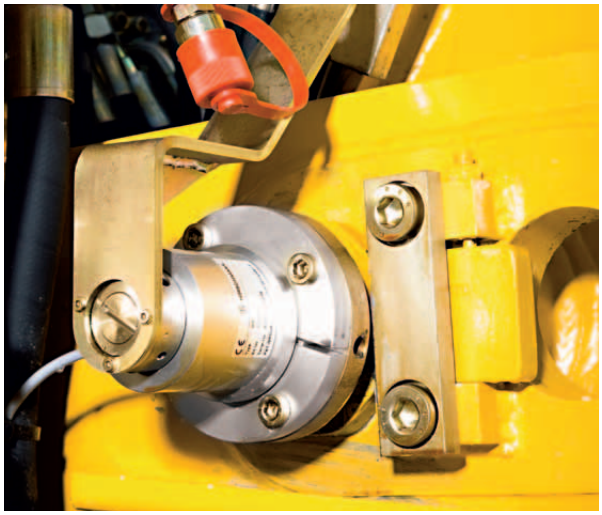

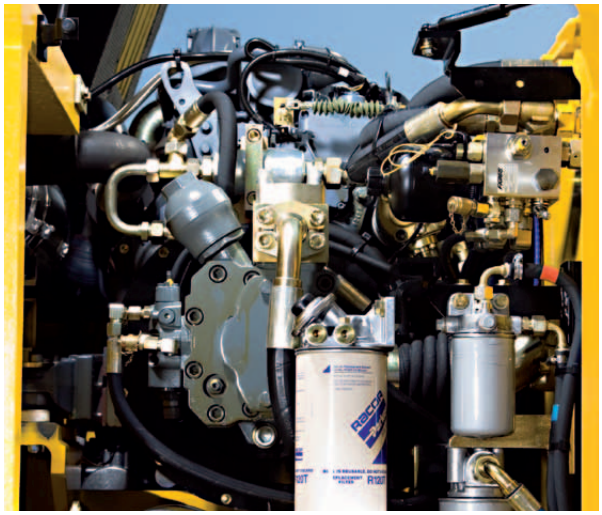

https://truckmanualshub.com/

Electronic swing and height limitation

- Computer assisted swing limitation, which proportionally reduces the superstructure speed electronically when the limit is reached.
- Electronic height limitation eliminates the risk of the excavator boom from coming into contact with obstacles above such as power cables. The maximum articulating boom height, relative to the point of reference, is taken into account. The system recognises whether the clamshell or bucket are fitted and adjusts the programmed operating height accordingly. The motion stops when the programmed limit is reached.
- Swing and height limitation can be comfortably programmed from the operator's seat. It is not necessary to get out of the machine.

Emergency de-railing

- Emergency de-railing is permanently available and doubly protected. Firstly by connecting the hydraulics to the cigarette lighter via an electric cable. Secondly by a fixed emergency hydraulic hand-pump.
- An electric emergency pump is available as an option.
- Emergency lowering of the rail bogie is permanently available.

https://truckmanualshub.com/

ATLAS

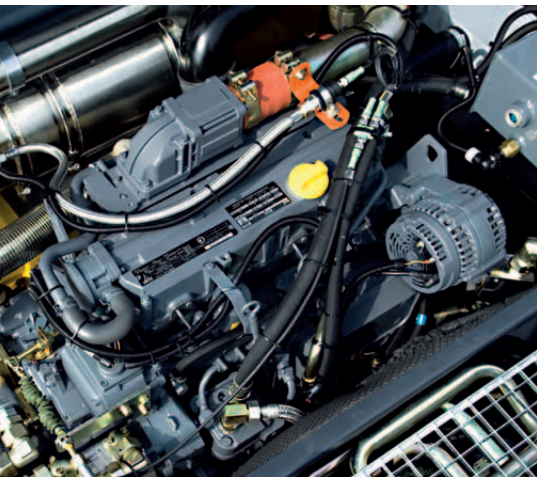

Superstructure - highlights

Engine

POWER

Deutz turbo-charged engines provide fast and powerful motions, a powerful drive train, fast cycle times and dynamic development in performance.

Outstanding engine characteristics:

- Exceptional power development from 1500 rpm.
- Turbo-charged with intercooler.
- Maintenance friendly filter change.
- High degree of comfort thanks to the low noise level.
- Low operating costs through exceptional fuel efficiency and low maintenance costs.
- Current emission standards are met.
- Option: automatic idle running. When the excavator is not working or moving, the engine speed automatically reduces and fuel consumption is lowered.

Hydraulic system

PRECISION CONTROL

- The rail-road excavators are fitted with well-proven load-sensing hydraulics. Our intelligent AWE 4 hydraulic management system allows simultaneous movements to be carried out irrespective of load. For more productivity and safe operations.

- The power you need, at the right time. For fast cycles or high lifting capacity: our load-sensing system attunes the method of operation of the excavator exactly to your application. For greater economy – you save fuel and maintenance costs.

What you should also know

- Primary and secondary overload protection.
- Suction valves for all operating functions.
- Overload lock valves, precision lowering valves and travel brake valve.
- Pipe break protection valves for lifting cylinders. Optionally also on adjusting and articulating cylinders.
- Emergency steering and pressure reservoir for emergency lowering of the boom system.
- Proportional control of attachments by slider in joystick in the 1604ZW as standard.

https://truckmanualshub.com/

Cab

FAR-SIGHTEDNESS

Our roomy two-man cab is the largest on the market and provides everything you need to work comfortably and efficiently.

The cab with more view

- Two-man cab with excellent all-round vision.
- Optimum lay-out of the controls provides clear view of the attachment.
- Optional: rear view monitoring with camera and display.

Welcome to the “Feel-good” workplace

- The cab is very well isolated from vibrations.
- The sound pressure level is very low thanks to the high quality sound insulation.
- Air conditioning is standard including a defrosting function for fast de-misting and de-icing of the windscreen.
- The air-cushioned operator’s seat is individually adjustable in all movements. Backrest, lumbar support, cushion length and angle can all be easily adjusted.
- The narrow steering column gives excellent vision to the attachment and the rail bogie.

https://truckmanualshub.com/

ATLAS

Chassis - Highlights

GUIDANCE FORCE

Numerous components ensure safe and strong contact between chassis and rail.

Go into (rail) guidance mode

Our CARSY system (Computer assisted rail contact pressure system) **electronically ensures the optimum pressure on the rail is maintained continuously and automatically.**

- The required pressures are automatically set, continuously monitored and adjusted if necessary.
- The front and rear bogie wheels can be independently switched to permit simple de-railing and positive by-passing of rail points.
- Automatic self-diagnostics of the electronics.
- Available for 1404 ZW and 1604 ZW models.

Operation at the optimum level

- Continuous self-levelling of the rail running gear ensures smooth movement of the rail-road excavator when travelling on rail.

Optimum grip

- Bogie axle box with optimum oscillation in the axle mountings.
  The successful result: safe operation especially on uneven construction site tracks and in cornering.
- With the friction wheel model, traction is provided via a non-slip friction roller.

https://truckmanualshub.com/

RAIL-ROAD EXCAVATOR

Stable

The low centre of gravity and our compact design guarantee high stability with excellent off-road mobility. 1604ZW also has a bilateral barrier on the track wheel cylinder at a swing of 5 ° from the longitudinal axis and at a standstill.

First choice

The right chassis for any application: with or without outriggers with different track gauges and different wheelbases.

Driving power

Whether in crawling speed or top speed – the high torque drives the excavator quickly and safely through any terrain, assisted by the well-proven traction characteristics of our tires. The sensitive power assisted steering on the oscillating axle transforms any rough terrain into a “straight road”. Even at high-speed road travel, the 04 series impresses through its road holding and thereby provides excellent handling characteristics. Further, 1604ZW has a traction increase at the push of a button that if needed increases the contact pressure of the drive wheels on the track by about 20%. The so-optimized driving leads to improved load starting.

The chassis incorporates robust, specially designed excavator axles with planetary drives in all 4 wheel hubs. All-wheel drive, a variable displacement motor (1604ZW with power shift transmission) and a double-action brake valve are standard.

Reliability – here we are playing it safe

- Tie-down lugs for fast and safe securing of the excavator for transport on rail or road.
- Steering axle with automatic oscillation lockout to allow travel with heavy loads in any terrain. Activation of the lockout either automatically when braking or manually.

Other safety aspects

- Brakes: wet, maintenance-free multi-disc brake
- Excellent emergency steering characteristics

https://truckmanualshub.com/

ATLAS

Attachments-Highlights

SELECTED

**All components are designed for high lifting capacity, optimum handling curves, fast working movements and travel speeds. The design advantages of our arms lie in our well proven welding methods.
They are lighter while maintaining the same robustness.**

Large choice – booms and sticks

Lifting capacities, ranges, breakout and ripping forces can be adjusted for the specific task through a wide selection of boom/stick combinations.

Adjustable boom

Our variable adjustable booms, which can be extended and retracted hydraulically, provide for loading and reaching at great height.

Sticks – specially developed for rail laying

Our special stick can be fully extended for maximum height of lift under the cat wire.

Long-life cylinders

Every cylinder is designed for maximum power, taking the size of the machine into account. The high level of buckle resistance, the high-quality surface finish of the piston rod and special sealing systems all contribute to long service life.

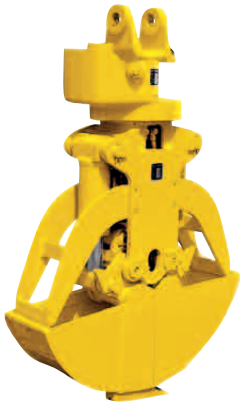

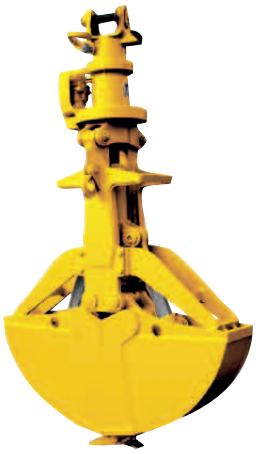

https://truckmanualshub.com/

Equipment-Highlights

PROFESSIONAL ATTACHMENTS

Manufacture of both our standard and special attachments takes account of state-of-the-art developments in machine building and steel engineering. High-strength steels, proven technology and decades of experience result in work that is cost-effective and practice-based.

Buckets

All especially well worn parts are made of high-strength, hardened and tempered fine grained steel. The easy penetration is achieved through the fine cut based on the slightly conical shape of the bucket. The tooth holders are held particularly flat and are integrated into the cutting edge. This creates less digging resistance and enables more working cycles. We also have different teeth shapes for different types of ground.

Grabs

The right grab for any job – the multifaceted palette includes devices with single or multiple cylinders as well as double or multiple shell models. The models are made up of graduated base types and a series of assigned shell sizes. All grab types are designed for maximum closing pressure and excellent filling performance. The grab rotating hydraulics are standard.

Special attachments for use on rail

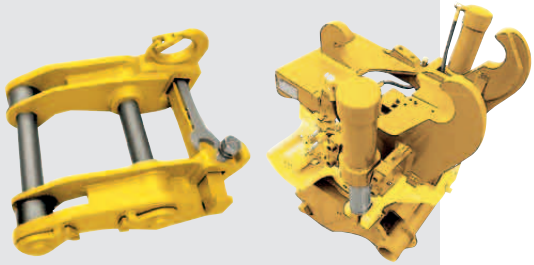

- Multi-functional rotator for bucket tools
- Short design double clamshells for digging between sleepers
- Short design gravel grab
- Sleeper replacer with hydraulic sleeper grab
- Mulcher
- Tamping attachment
- Keyhole shears/keyhole saw

Optionally, all additional hydraulic attachments can be controlled by an easy to use pressure balance.

The greatest flexibility – quick attach systems

Our quick attach systems give you the highest flexibility when selecting the required attachment. The simple and robust design of our mechanical and hydraulic quick attach system helps you retool with the least amount of effort in the shortest possible period of time.

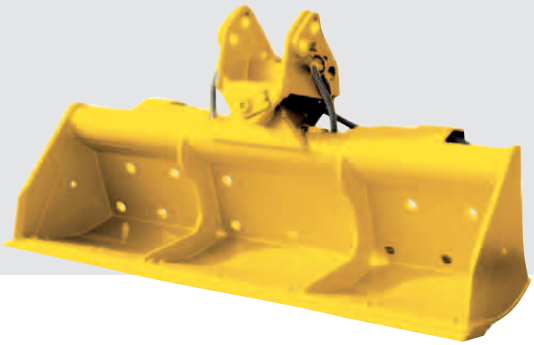

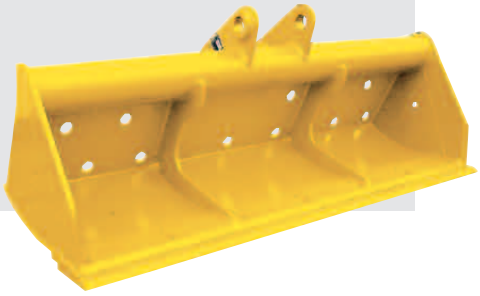

https://truckmanualshub.com/

ATLAS

Service and maintenance

SIMPLICITY

Simple and convenient maintenance of the machine to preserve the residual value

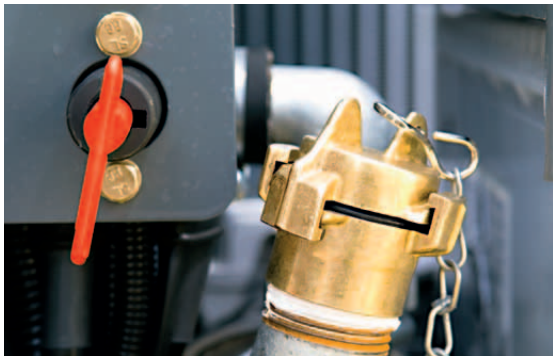

Designed for ease of service

- Service-friendly maintenance flaps make work easier.
- All lubrication points for the rotating assembly and the arm equipment are consolidated.
- For oil monitoring all the main components are directly visible and, like the battery, easily accessible.
- To enable the machine to be quickly checked by our customer service technicians, monitoring points have been placed at all operationally relevant positions.
- Good maintenance: the CARSY system records operational data, which can be quickly and easily read by our service personnel.

Expert service partners

Our dealers' customer service staff undergo intensive technical training at our works, so that they can provide you with expert advice whenever you need it.

The hydraulic oil filter

The special process which we have adopted enables the filter basket to be repeatedly re-used. Only the 'lifetime' filter element needs to be changed. This is good for the environment and significantly reduces the costs of disposal.

Long service life

Your Terex® Rail-road excavator has a long service life.
Please make sure that servicing intervals are adhered to and original spare parts are used.

https://truckmanualshub.com/

https://truckmanualshub.com/

ATLAS

TECHNICAL SPECIFICATIONS

Technical specification sheet road-rail excavator 1404ZW

Main dimensions

Base machine A41.5 – with 4 outriggers

Travel configuration with grab

Base machine A41.4 – without outriggers

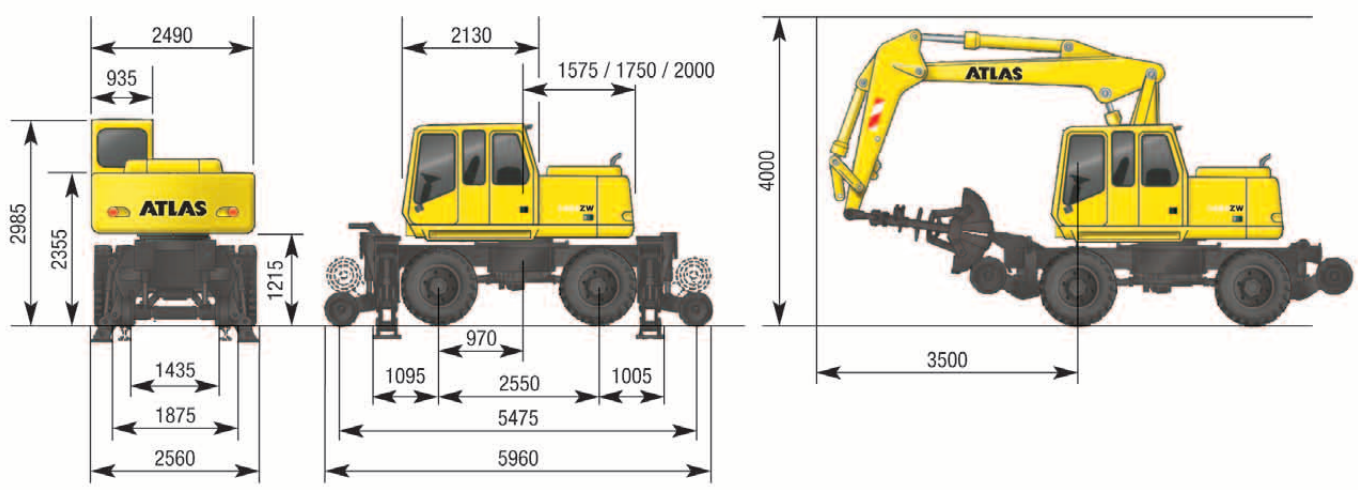

Working equipment:

Base machine		Weight/kg
A41.4	Rail-Road hydraulic excavator 1404 ZW, without outriggers, tailswing 1575 mm	13100
A41.5	Rail-Road hydraulic excavator 1404 ZW, with 4 outriggers, tailswing 1575 mm	15500
Additional and special equipment		
B41.20	Heavy counterweight, tailswing 1750 mm	400
B41.21	Heavy counterweight, tailswing 2000 mm	1000
B41.39	Additional hydraulic unit for variable boom cylinder	20
B41.41	Hose-rupture safety device for lifting cylinder, overload warning device.	10
B41.23	Two man fully glazed cab	300
Base section of arm and boom		
C53.41P	Base arm with two lift cylinders and an internally mounted operating cylinder	1090
C53.46	Boom with articulating cylinder only for base arm C53.41P	930
Sticks		
D41.22	Rail-road excavator stick, working length 2200 mm	490
Bucket tipping cylinder		
F53.1	Bucket tipping cylinder with reversing linkage	165

Standard equipment

- Maintenance point for filtration system
- Hydraulic system for grab and grab rotation function
- Tank indicator
- Battery main switch in negative lead.
- “Travel” function via foot control
- Accumulator for emergency lowering of boom system
- Sliding window in cab door
- Windshield washer system
- Central lubrication
- Tilt and height adjustable steering column
- Radio pre-installation
- Storage box in the cab
- Comfort seat with armrests and lumbar support
- Toolbox on chassis
- Sealed pivot points in the base section of the boom
- Boom and stick with 50 hour maintenance intervals
- Securing lug for securing the grab during road travel
- Air-conditioning
- Air dryer for compressed air system
- Narrow axles for underground and suburban railways

Rail guidance

CARSY (Computer assisted rail contact pressure system). Automatic system for regulating and monitoring the force of the rail guide wheels. The required pressures are automatically set, continuously monitored and adjusted if necessary. Depending on the pre-selected operating condition, each separate guidance bogie wheel is set to a different pressure in accordance with a pre-scribed schedule, locked or hydraulically trailed.

The front and rear bogie wheels can be independently switched to permit simple de-railing and positive crossing of rail points.

Automatic self-diagnosis of the electronic system. Emergency function: de-railing is assured even in the event of a fault or complete breakdown.

Track gauge 1435 mm, other widths on request.

https://truckmanualshub.com/

Technical specification sheet road-rail excavator 1404ZW

Engine

Power rating acc. to ISO 1585	74.9 kW (102 HP)
Effective output locked	69 kW (94 HP)
Manufacturer	Deutz
Type	BF4M 2012
Displacement	4000 cm^3
Rotational speed	2100 rpm
Design	Turbocharger/charge-air cooling

Hydraulic system

Computer controlled AWE4 system with a load limiting high performance piston pump and fuel efficient on-demand power control for sensitive, proportional and load independent ramp-up of all operational movements • Primary and secondary protection of the hydraulic system against overload • Suction valve for all operational functions as well as restrictors in the lift and articulating circuits • Fine lowering and load-retaining valve in the lifting circuit.

Hydraulic system	1 x AKP
Main pump	HPR 105
Max. flow variable capacity pump	220 l/min
Max. operating pressure for operating movements	340 bar

Noise level

Noise level* is significantly below EC limits

Ambience level (L_wA)	98 dB (A)
Cab level (L_pA)	75 dB (A)

*Dynamic sound level measurement according to 2000/14 EC

Electrical system

Operating voltage	24 Volt
Cold-start heavy duty battery	2 x 100 Ah

Electrical system in compliance with StVZO (Regulations Authorizing the Use of Vehicles for Road Traffic in Germany) and European standard

Brakes

Service brake	pneumatic-hydraulically actuated drum brake
Parking brake	pneumatically-operated spring-loaded parking brake

Emergency brake for use on rail

Max. un-braked trailer load	40 t
Max. trailer load with wagon brake	120 t

Fluid capacities

Fuel tank	190 l
Hydraulic tank	200 l
Engine oil	10 l

Cab

Flexibly mounted • Heat absorbing extra wide windscreen for all-round vision • Glare-free interior • Ergonomic pilot control levers • Adjustable steering column • Lengthways adjustment of the seat independent of the control console • Front windscreen slidable under the cab roof • Second seat for mate

Type	Terex 935 two-man comfort cab
Overall length	2130 mm
Width	935 mm

Swing assembly

Swing motor	axial piston motor with priority valve
Swing gear	planetary reduction
Swing brake*	multi-disc brake

Drive via an internally toothed swing bearing

Swing speed	8.5 rpm
Swing torque	37.5 kNm

* simple swinging on slopes against the incline is assured, with locking foot pedal when slewing pressure of 120 bar is exceeded.

Power Transmission

40 t special excavator axles with planetary drives to all four wheel hubs

• All-wheel drive • Variable drive engine • Double acting travel brake valve • Travel direction selector with steering column mounted lever or switch on pilot control lever • Steering axle with automatic oscillation lock • Travel controls via foot pedal valve

Travel speed

Road and rail operation

Creep speed	max. 1.0 km/hour
Off-road speed	max. 5.0 km/hour
Highway speed	max. 20 km/hour

Rail guidance, track gauge 1435 mm, other widths on request

Tires

8 x	10.00 - 20

(inner tire - highway, outer tire - off highway tread pattern)

Weight

Operating weight	17.0 - 20.0 t

TECHNICAL SPECIFICATIONS

https://truckmanualshub.com/

ATLAS

TECHNICAL SPECIFICATIONS

Technical specification sheet road-rail excavator 1404ZW

Working range grab

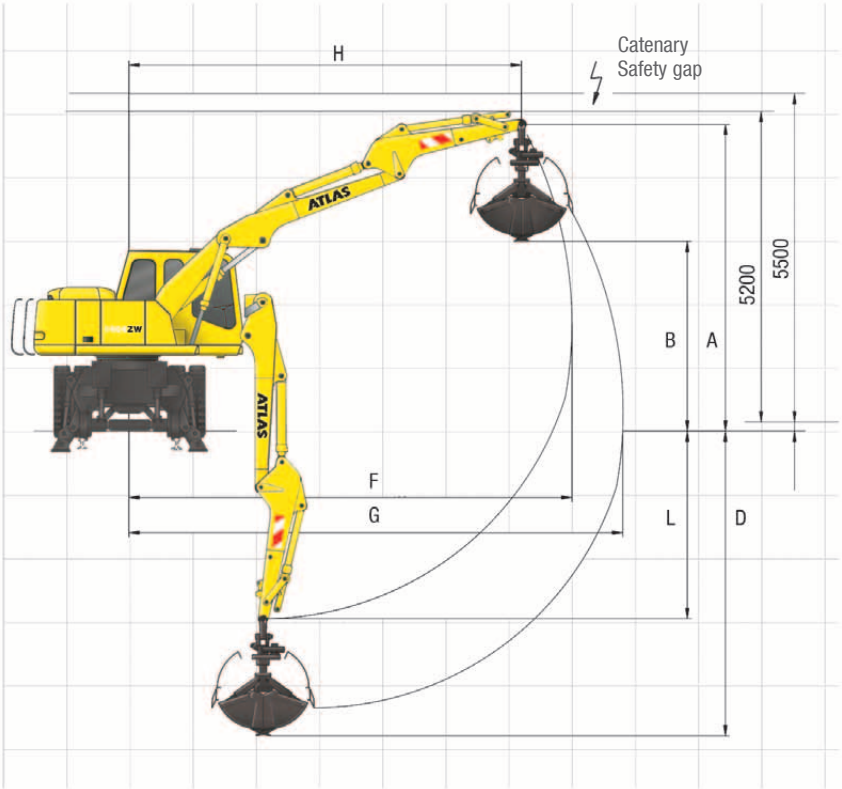

Stick D41.22, working length 2200 mm			
Equipment: A41.5, C53.41P, C53.46, D41.22, F31, E332, E344			Grab
A	Height of stick	mm	4980
B	Discharge height	mm	3020
D	Max digging depth	mm	5170
F	Max. radius	mm	7400
G	Max. reach	mm	8250
H	Max. arm position	mm	6605
J	Max. reach height	mm	–
L	Bucket pivot point	mm	3205
	Grab	l	350
	Grab clamping force	kN	73.0
	Operating weight	t	19.3

Working range bucket

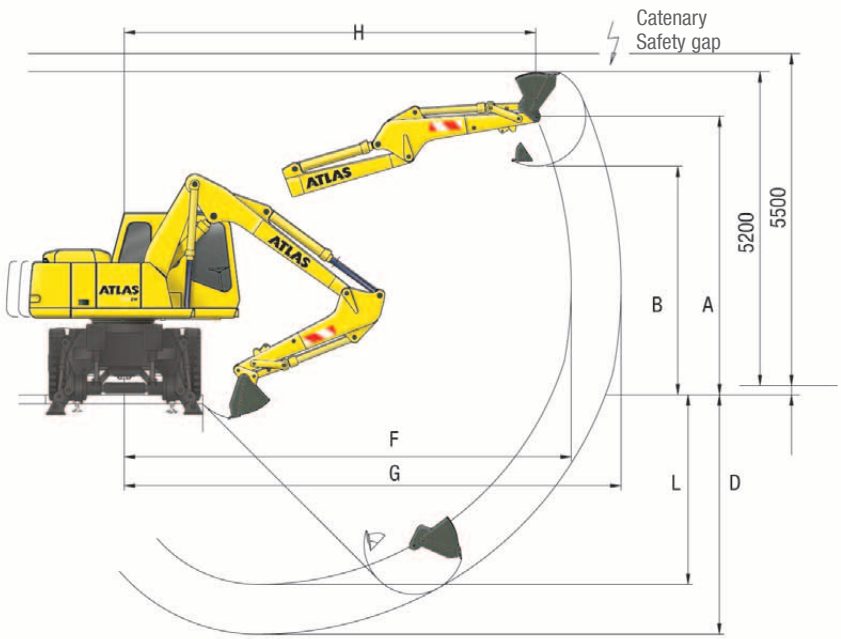

Stick D41.22, working length 2200 mm			
Equipment: A41.5, C53.41P, C53.46, D41.22, F53.1, G649			Bucket
A	Height of stick	mm	4465
B	Discharge height	mm	3715
D	Max digging depth	mm	4300
F	Max. radius	mm	7400
G	Max. reach	mm	8495
H	Max. arm position	mm	6850
J	Max. reach height	mm	5200
L	Bucket pivot point	mm	3205
	Bucket	l	700
	Stick digging force	kN	82
	Bucket digging force	kN	130
	Operating weight	t	19.0

https://truckmanualshub.com/

Technical specification sheet road-rail excavator 1404ZW

Base machine A41.5, C53.41P, C53.46, D41.22

Tailswing 1750 mm — 4 outriggers

Hook height m		3.0 m		4.0 m		5.0 m		6.0 m		7.0 m	
		l	q	l	q	l	q	l	q	l	q
5	a	–	–	5.3	5.3	5.4	4.6	4.9	3.4	–	–
	b	–	–	5.3	4.0	5.4	2.9	4.9	2.2	–	–
4	a	–	–	6.6	6.3	5.6	4.6	4.9	3.5	3.8	2.6
	b	–	–	6.6	3.9	5.6	2.9	4.9	2.2	3.8	1.6
3	a	–	–	7.5	6.1	6.0	4.5	5.1	3.5	4.6	2.6
	b	–	–	7.5	3.8	6.0	2.8	5.1	2.2	4.6	1.6
1	a	10.5	8.6	8.5	6.1	6.6	4.4	5.4	3.3	4.6	2.6
	b	10.5	4.9	8.5	3.7	6.6	2.8	5.4	2.1	4.6	1.5
0	a	11.6	8.4	8.5	5.9	6.6	4.3	5.4	3.2	4.2	2.5
	b	11.6	4.6	8.5	3.6	6.6	2.8	5.4	2.0	4.2	1.5
-1	a	12.1	8.2	8.6	5.8	6.7	4.2	5.4	3.2	–	–
	b	12.1	4.5	8.6	3.4	6.7	2.6	5.4	1.9	–	–
-2	a	12.4	8.1	8.9	5.7	6.6	4.1	–	–	–	–
	b	12.4	4.4	8.9	3.4	6.6	2.4	–	–	–	–

Tailswing 1750 mm — no outriggers

Hook height m		3.0 m		4.0 m		5.0 m		6.0 m		7.0 m	
		l	q	l	q	l	q	l	q	l	q
5	a	–	–	5.3	4.7	5.4	3.4	4.2	2.5	–	–
	b	–	–	5.3	3.6	5.4	2.6	4.9	1.9	–	–
4	a	–	–	6.6	4.6	5.6	3.4	4.3	2.6	3.2	1.9
	b	–	–	6.6	3.5	5.6	2.6	4.9	1.9	3.8	1.4
3	a	–	–	7.5	4.5	5.5	3.3	4.3	2.5	3.2	1.9
	b	–	–	7.5	3.4	6.0	2.5	5.1	1.9	4.6	1.4
1	a	10.5	6.7	7.6	4.4	5.5	3.3	4.1	2.4	3.1	1.8
	b	10.5	4.8	8.5	3.3	6.6	2.4	5.4	1.8	4.6	1.3
0	a	11.6	6.4	7.7	4.3	5.4	3.1	4.0	2.3	3.1	1.8
	b	11.6	4.6	8.5	3.1	6.6	2.3	5.4	1.7	4.2	1.3
-1	a	12.1	6.2	7.7	4.1	5.3	3.0	3.9	2.3	–	–
	b	12.1	4.4	8.6	3.0	6.7	2.2	5.4	1.6	–	–
-2	a	12.4	6.1	7.6	4.1	5.2	2.9	–	–	–	–
	b	12.4	4.3	8.9	3.0	6.6	2.1	–	–	–	–

Tailswing 2000 mm — 4 outriggers

Hook height m		3.0 m		4.0 m		5.0 m		6.0 m		7.0 m	
		l	q	l	q	l	q	l	q	l	q
5	a	–	–	5.3	5.3	5.4	5.0	4.9	3.8	–	–
	b	–	–	5.3	4.4	5.4	3.2	4.9	2.4	–	–
4	a	–	–	6.6	6.6	5.6	4.9	4.9	3.8	3.8	2.9
	b	–	–	6.6	4.3	5.6	3.2	4.9	2.5	3.8	1.8
3	a	–	–	7.5	6.6	6.0	4.9	5.1	3.8	4.6	2.9
	b	–	–	7.5	4.2	6.0	3.2	5.1	2.4	4.6	1.8
1	a	10.5	9.9	8.5	6.5	6.6	4.8	5.4	3.7	4.6	2.8
	b	10.5	6.0	8.5	4.1	6.6	3.1	5.4	2.3	4.6	1.8
0	a	11.6	9.9	8.5	6.5	6.6	4.7	5.4	3.6	4.2	2.8
	b	11.6	5.8	8.5	4.0	6.6	3.0	5.4	2.2	4.2	1.7
-1	a	12.1	9.7	8.6	6.3	6.7	4.6	5.4	3.5	–	–
	b	12.1	5.6	8.6	3.9	6.7	2.9	5.4	2.2	–	–
-2	a	12.4	9.7	8.9	6.3	6.6	4.5	–	–	–	–
	b	12.4	5.6	8.9	3.8	6.6	2.8	–	–	–	–

Tailswing 2000 mm — no outriggers

Hook height m		3.0 m		4.0 m		5.0 m		6.0 m		7.0 m	
		l	q	l	q	l	q	l	q	l	q
5	a	–	–	5.3	5.2	5.4	3.8	4.6	2.8	–	–
	b	–	–	5.3	4.0	5.4	2.9	4.9	2.2	–	–
4	a	–	–	6.6	5.1	5.6	3.7	4.6	2.9	3.5	2.1
	b	–	–	6.6	3.9	5.6	2.9	4.9	2.2	3.8	1.6
3	a	–	–	7.5	5.0	5.9	3.7	4.6	2.8	3.5	2.1
	b	–	–	7.5	3.8	6.0	2.8	5.1	2.2	4.6	1.6
1	a	10.5	7.4	8.2	4.9	5.9	3.6	4.5	2.7	3.5	2.1
	b	10.5	5.4	8.5	3.7	6.6	2.8	5.4	2.1	4.6	1.5
0	a	11.6	7.1	8.2	4.8	6.0	3.5	4.4	2.6	3.4	2.0
	b	11.6	5.2	8.5	3.6	6.6	2.7	5.4	2.0	4.2	1.5
-1	a	12.1	6.9	8.3	4.6	5.9	3.4	4.3	2.0	–	–
	b	12.1	5.0	8.6	3.4	6.7	2.6	5.4	1.9	–	–
-2	a	12.4	6.9	8.3	4.6	5.7	3.3	–	–	–	–
	b	12.4	5.0	8.9	3.4	6.6	2.5	–	–	–	–

a = auf der Straße verfahrbar, b = auf der Schiene verfahrbar, q = quer, l = längs

All values in tonnes (t) were determined acc. to ISO 10567 and include a stability factor of 1.33 or 87% of the hydraulic lifting capacity.
These values are applicable at the top of the arm with optimum positioning of the corresponding boom system.

Operating weights, tailswing

Type	Configuration	Operating weight with boom adjusting mechanism	Tailswing mm
1404 ZW	A41.4	16.6 t	1575
1404 ZW	A41.4	17.0 t	1750
1404 ZW	A41.4	17.6 t	2000
1404 ZW, 4 outriggers	A41.5	19.0 t	1575
1404 ZW, 4 outriggers	A41.5	19.4 t	1750
1404 ZW, 4 outriggers	A41.5	20.0 t	2000

Approvals
The equipment marked * is an essential requirement of the German Federal Railways for operation on their network.
The safety testing is conducted by the health and safety executive (Berufsgenossenschaft), compliance with the appropriate regulations is verified by the German Federal Railways and the TÜV.

Additional and special equipment

- Short tailswing version (1575, 1750, 2000 mm tailswing)*
- Two-man cab*
- Auxiliary heating
- Narrow axles for underground and suburban railways
- Combined check point for ease of filter maintenance
- Hose-rupture safety device for lifting operation, overload warning device*
- Trailer hitch on chassis*
- Emergency manual hydraulic pump*
- Special tow bar*
- German Federal Railways approved lights*
- Lift limitation electronically adjustable from the cab*
- Swing limitation adjustable from the cab*
- Wagon brake unit with footplate brake valve, permitted trailer load is 120 t
- Factory Federal German Railways approval with appropriate certification and all necessary accessories: fire extinguisher, first aid kit, earth cable, red/white flag, torch with red dimmable light, loud hailer, digital speed measurement instrument, oil spill tarpaulin and oil binder*
- Rotating beacons
- Working floodlight(s)
- Radio/CD/MP3, front AUX in, USB
- Refueling pump
- Rail bogie with track gauges of up to approx. 1700 mm
- TÜV-approval

Items marked with * are a requirement for Federal German Railway approval

https://truckmanualshub.com/

ATLAS

TECHNICAL SPECIFICATIONS

Technical specification sheet rail-road excavator / friction wheel 1404ZW

Main dimensions

Base machine A41.4S

Travel setup with grab

Base machine A41.4S

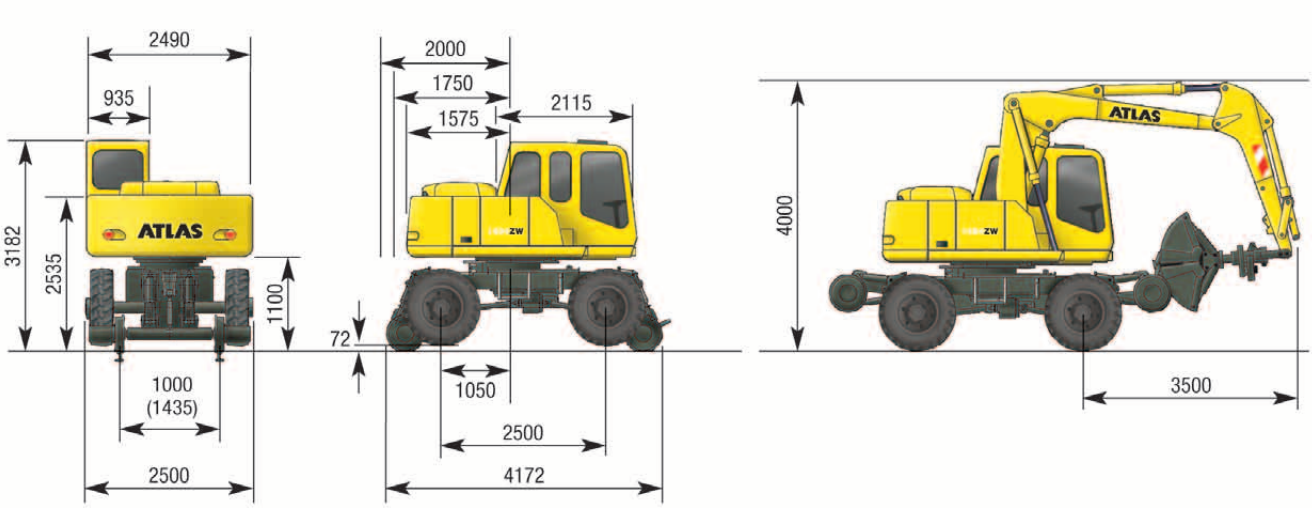

Working equipment:

Base machine		Weight/kg
A41.4S	Rail-road hydraulic excavator 1404 ZW, with 1000 mm track gauge, tailswing 1575 mm	13100
Additional and special equipment		
B41.20	Heavy counterweight, tailswing 1750 mm	400
B41.21	Heavy counterweight, tailswing 2000 mm	1000
B41.39	Additional hydraulic unit for variable boom cylinder	20
B41.41	Hose-rupture safety device for lifting cylinder, overload warning device.	10
B41.23	Two-man fully glazed cab 6032281 Conversion kit 1435 mm track gauge	300
Base section of arm and boom		
C53.41P	Base arm with two lift cylinders and an internally mounted operating cylinder	1090
C53.46	Boom with articulating cylinder only for base arm C53.41P	930
Sticks		
D41.22	Rail-road excavator stick, working length 2200 mm	490
Bucket tipping cylinder		
F53.1	Bucket tipping cylinder with reversing linkage	165

Rail guidance

Four separate rail guidance wheels drive by a friction wheel activated by 4 hydraulic cylinders with appropriate safety equipment. During rail travel the chassis is lifted so rail points (Indusi) are not damaged when crossing. Greater loads can picked up laterally to the direction of travel by lowering the chassis onto the sleeper heads. All movements can be controlled from the cab. An adapter allows the excavator to work on other track gauges.

Standard equipment

- Maintenance point for filtration system
- Hydraulic system for grab and grab rotation function
- Tank indicator
- Battery main switch in negative lead.
- “Travel” function via foot control
- Accumulator for emergency lowering of boom system
- Sliding window in cab door.
- Windshield washer system
- Central lubrication
- Tilt and height adjustable steering column
- Preparation for radio installation
- Storage box in the cab
- Air-cushioned comfort seat with armrests and lumbar support
- Toolbox on chassis
- Sealed pivot points in the base section of the boom
- Boom and stick with 50 hour maintenance intervals
- Securing lug for securing the grab during road travel
- Air-conditioning
- Air dryer for compressed air system
- Narrow axles for underground and suburban railways

https://truckmanualshub.com/

Technical specification sheet rail-road excavator / friction wheel 1404ZW

Engine

Power rating acc. to ISO 1585	74.9 kW (102 HP)
Effective output locked	69 kW (94 HP)
Manufacturer	Deutz
Type	BF4M 2012
Displacement	4000 cm^3
Rotational speed	2100 rpm
Design	Turbocharger/charge-air cooling

Hydraulic system

Computer controlled AWE4 system with a load limiting high performance piston-pump and fuel efficient on-demand power control for sensitive, proportional and load independent ramp-up of all operational movements • Primary and secondary protection of the hydraulic system against overload • Suction valve for all operational functions as well as restrictors in the lift and articulating circuits • Fine lowering and load-retaining valve in the lifting circuit.

Hydraulic system	1 x AKP
Main pump	HPR 105
Max. flow variable capacity pump	220 l/min
Max. operating pressure for operating movements	340 bar

Noise level

Noise level* is significantly below EC limits

Ambience level (L_WA)	98 dB (A)
Cab level (L_PA)	75 dB (A)

*Dynamic sound level measurement according to 2000/14 EC

Electrical system

Operating voltage	24 Volt
Cold-start heavy duty battery	2 x 100 Ah

Electrical system in compliance with StVZO (Regulations Authorizing the Use of Vehicles for Road Traffic in Germany) and European standard

Brakes

Service brake	pneumatic-hydraulically actuated drum brake
Parking brake	pneumatically-operated spring-loaded parking brake

Emergency brake for use on rail

Max. un-braked trailer load	40 t
Max. trailer load with wagon brake	120 t

Fluid capacities

Fuel tank	190 l
Hydraulic tank	200 l
Engine oil	10 l

Cab

Flexibly mounted • Heat absorbing extra wide windscreen for all-round vision • Glare-free interior • Ergonomic pilot control levers • Adjustable steering column • Lengthways adjustment of the seat independent of the control console • Front windscreen stowable under the cab roof • Second seat for mate

Type	Terex 935 two-man comfort cab
Overall length	2130 mm
Width	935 mm

Swing assembly

Swing motor	axial piston motor with priority valve
Swing gear	planetary reduction
Swing brake*	multi-disc brake

Drive via an internally toothed swing bearing

Swing speed	8.5 rpm
Swing torque	37.5 kNm

* simple swinging on slopes against the incline is assured, with locking foot pedal when slewing pressure of 120 bar is exceeded.

Power Transmission

40 t special excavator axles with planetary drives to all four wheel hubs

• All-wheel drive • Variable drive engine • Double acting travel brake valve • Travel direction selector with steering column mounted lever or switch on pilot control lever • Steering axle with automatic oscillation lock • Travel controls via foot pedal valve

Travel speed

Road and rail operation	Road	Rail
Crawling speed	0 - 1.3 km/hour	0 - 3.5 km/hour
Off-road speed	0 - 5.6 km/hour	0 - 10.9 km/hour
Highway speed	0 - 20 km/hour	0 - 40 km/hour

Tires

4 x	12.00 - 20

(Tread: Titan)

Weight

Operating weight	16.5 - 17.5 t

https://truckmanualshub.com/

ATLAS

TECHNICAL SPECIFICATIONS

Technical specification sheet road-rail excavator / friction wheel 1404ZW

Working range grab

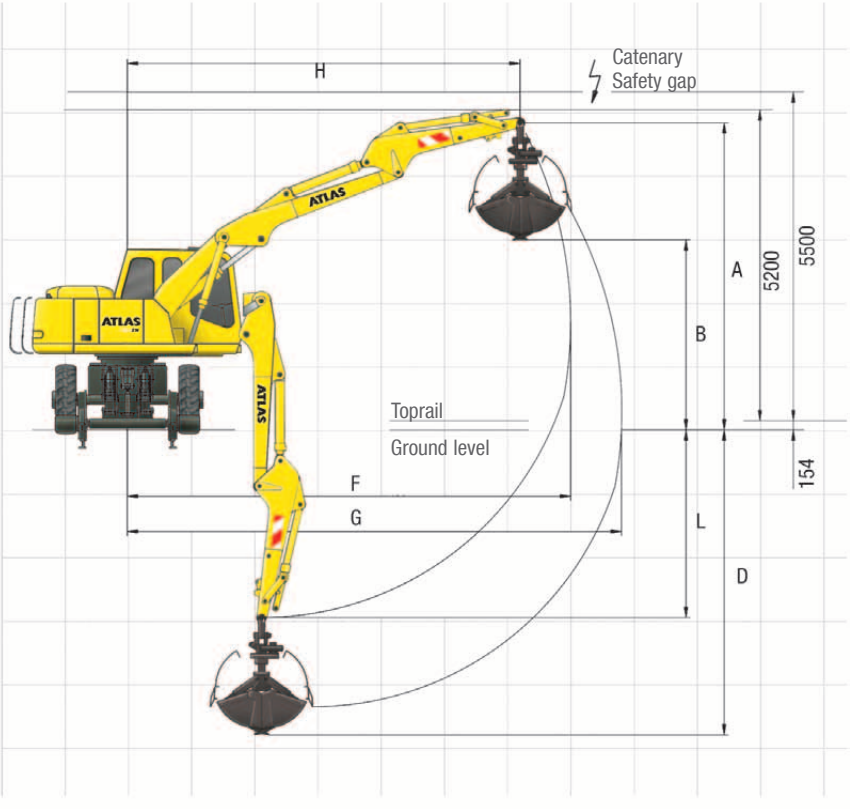

Stick D41.22 - working length 2200 mm			
Equipment: A41.4S, C53.41P, C53.46, D41.22, F31, E332, E344			Grab
A	Height of stick	mm	5140
B	Discharge height	mm	3180
D	Max. digging depth	mm	5100
F	Max. radius	mm	7400
G	Max. reach	mm	8250
H	Max. arm position	mm	6560
J	Max. reach height	mm	–
L	Bucket pivot point	mm	–
	Grab	l	350
	Grab clamping force	kN	73.0
	Operating weight	t	18.0

Working range bucket

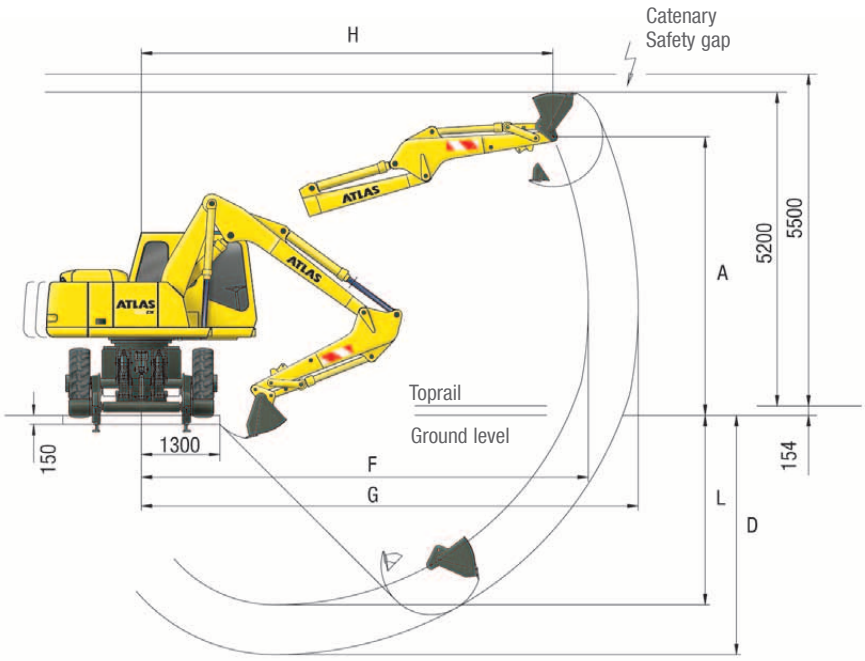

Stick D41.22 - working length 2200 mm			
Equipment: A41.5, C53.41P, C53.46, D41.22, F53.1, G649			Bucket
A	Height of stick	mm	4615
B	Discharge height	mm	–
D	Max digging depth	mm	3965
F	Max. radius	mm	7400
G	Max. reach	mm	8225
H	Max. arm position	mm	6815
J	Max. reach height	mm	–
L	Bucket pivot point	mm	3140
	Bucket	l	700
	Stick digging force	kN	82
	Bucket digging force	kN	130
	Operating weight	t	17.8

https://truckmanualshub.com/

Technical specification sheet road-rail excavator / friction wheel 1404ZW

Tailswing 1750 mm — 1000 mm track gauge

Hook height m		3.0 m		3.5 m		4.0 m		5.0 m		6.0 m		7.0 m	
		l	q	l	q	l	q	l	q	l	q	l	q
5	a	–	–	–	–	5.3	4.7	5.4	3.4	4.2	2.5	–	–
	b	–	–	–	–	5.3	2.6	5.4	1.9	4.7	1.3	–	–
4	a	–	–	7.6	5.4	7.5	4.5	5.5	3.3	4.3	2.5	3.2	1.9
	b	–	–	7.6	2.8	7.5	2.4	6.0	1.8	4.7	1.3	3.6	0.9
3	a	8.7	6.7	8.4	5.3	7.6	4.4	5.5	3.3	4.2	2.5	3.2	1.9
	b	8.7	3.3	8.4	2.7	8.0	2.3	6.0	1.8	4.7	1.3	3.6	0.9
1	a	10.5	6.7	9.4	5.3	7.6	4.4	5.5	3.3	4.1	2.4	3.1	1.8
	b	10.5	3.3	9.6	2.7	8.2	2.3	6.0	1.7	4.6	1.2	3.6	0.8
0	a	11.6	6.4	9.5	5.1	7.7	4.3	5.4	3.1	4.0	2.3	3.1	1.8
	b	11.6	3.1	10.0	2.5	8.3	2.2	6.0	1.6	4.5	1.1	3.5	0.8
-1	a	12.1	6.2	9.7	5.0	7.7	4.1	5.3	3.0	3.9	2.3	–	–
	b	12.1	2.9	10.1	2.4	8.4	2.0	6.0	1.5	4.4	1.1	–	–
-2	a	12.4	6.1	9.6	4.9	7.6	4.1	5.2	2.9	–	–	–	–
	b	12.4	2.8	10.3	2.3	8.4	2.0	5.8	1.4	–	–	–	–

Tailswing 2000 mm — 1000 mm track gauge

Hook height m		3.0 m		3.5 m		4.0 m		5.0 m		6.0 m		7.0 m	
		l	q	l	q	l	q	l	q	l	q	l	q
5	a	–	–	–	–	5.3	5.2	5.4	3.8	4.6	2.8	–	–
	b	–	–	–	–	5.3	2.9	5.4	2.2	4.9	1.6	–	–
4	a	–	–	7.6	6.0	7.5	5.0	5.9	3.7	4.6	2.8	3.5	2.1
	b	–	–	7.6	3.2	7.5	2.7	6.0	2.1	5.0	1.6	3.9	1.1
3	a	8.7	7.4	8.4	5.9	8.0	4.9	5.9	3.7	4.6	2.8	3.5	2.1
	b	8.7	3.8	8.4	3.1	8.0	2.7	6.4	2.0	5.0	1.5	3.9	1.1
1	a	10.5	7.4	9.6	5.9	8.2	4.9	5.9	3.6	4.5	2.7	3.5	2.1
	b	10.5	3.8	9.6	3.1	8.5	2.7	6.3	2.0	5.0	1.5	3.9	1.1
0	a	11.6	7.1	10.0	5.7	8.2	4.8	6.0	3.5	4.4	2.6	3.4	2.0
	b	11.6	3.6	10.0	3.0	8.5	2.5	6.4	1.9	4.9	1.4	3.8	1.0
-1	a	12.1	6.9	10.1	5.6	8.3	4.6	5.9	3.4	4.3	2.6	–	–
	b	12.1	3.4	10.1	2.8	8.6	2.4	6.5	1.8	4.8	1.3	–	–
-2	a	12.4	6.9	10.3	5.5	8.3	4.6	5.7	3.3	–	–	–	–
	b	12.4	3.4	10.3	2.8	8.9	2.4	6.3	1.7	–	–	–	–

Tailswing 1750 mm — 1435 mm track gauge

Hook height m		3.0 m		3.5 m		4.0 m		5.0 m		6.0 m		7.0 m	
		l	q	l	q	l	q	l	q	l	q	l	q
5	a	–	–	–	–	5.3	4.7	5.4	3.4	4.2	2.5	–	–
	b	–	–	–	–	5.3	3.6	5.4	2.6	4.7	1.9	–	–
4	a	–	–	7.6	5.4	7.5	4.5	5.5	3.3	4.3	2.5	3.2	1.9
	b	–	–	7.6	4.0	7.5	3.4	6.0	2.5	4.7	1.9	3.6	1.4
3	a	8.7	6.7	8.4	5.3	7.6	4.4	5.5	3.3	4.2	2.5	3.2	1.9
	b	8.7	4.8	8.4	3.9	8.0	3.3	6.0	2.5	4.7	1.9	3.6	1.4
1	a	10.5	6.7	9.4	5.3	7.6	4.4	5.5	3.3	4.1	2.4	3.1	1.8
	b	10.5	4.8	9.6	3.9	8.2	3.3	6.0	2.4	4.6	1.8	3.6	1.3
0	a	11.6	6.4	9.5	5.1	7.7	4.3	5.4	3.1	4.0	2.3	3.1	1.8
	b	11.6	4.6	10.0	3.7	8.3	3.1	6.0	2.3	4.5	1.7	3.5	1.3
-1	a	12.1	6.2	9.7	5.0	7.7	4.1	5.3	3.0	3.9	2.3	–	–
	b	12.1	4.4	10.1	3.6	8.4	3.0	6.0	2.2	4.4	1.6	–	–
-2	a	12.4	6.1	9.6	4.9	7.6	4.1	5.2	2.9	–	–	–	–
	b	12.4	4.3	10.3	3.5	8.4	3.0	5.8	2.1	–	–	–	–

Tailswing 2000 mm — 1435 mm track gauge

Hook height m		3.0 m		3.5 m		4.0 m		5.0 m		6.0 m		7.0 m	
		l	q	l	q	l	q	l	q	l	q	l	q
5	a	–	–	–	–	5.3	5.2	5.4	3.8	4.6	2.8	–	–
	b	–	–	–	–	5.3	4.0	5.4	2.9	4.9	2.2	–	–
4	a	–	–	7.6	6.0	7.5	5.0	5.9	3.7	4.6	2.8	3.5	2.1
	b	–	–	7.6	4.5	7.5	3.8	6.0	2.8	5.0	2.2	3.9	1.6
3	a	8.7	7.4	8.4	5.9	8.0	4.9	5.9	3.7	4.6	2.8	3.5	2.1
	b	8.7	5.4	8.4	4.4	8.0	3.7	6.4	2.8	5.0	2.1	3.9	1.6
1	a	10.5	7.4	9.6	5.9	8.2	4.9	5.9	3.6	4.5	2.7	3.5	2.1
	b	10.5	5.4	9.6	4.4	8.5	3.8	6.3	2.8	5.0	2.1	3.9	1.5
0	a	11.6	7.1	10.0	5.7	8.2	4.8	6.0	3.5	4.4	2.6	3.4	2.0
	b	11.6	5.2	10.0	4.2	8.5	3.6	6.4	2.7	4.9	2.0	3.8	1.5
-1	a	12.1	6.9	10.1	5.6	8.3	4.6	5.9	3.4	4.3	2.6	–	–
	b	12.1	5.0	10.1	4.1	8.6	3.4	6.5	2.6	4.8	1.9	–	–
-2	a	12.4	6.9	10.3	5.5	8.3	4.6	5.7	3.3	–	–	–	–
	b	12.4	5.0	10.3	4.0	8.9	3.4	2.5	2.5	–	–	–	–

a = travel on road permitted, b = travel on rail permitted, q = lateral, l = longitudinal

All values in tonnes (t) were determined acc. to ISO 10567 and include a stability factor of 1.33 or 87% of the hydraulic lifting capacity.
These values are applicable at the top of the arm with optimum positioning of the corresponding boom system.

Operating weights, tailswing

Type	Configuration	Operating weight with boom adjusting mechanism	Tailswing mm
1404 ZW	A41.4S	16.5 t	1575
1404 ZW	A41.4S	16.9 t	1750
1404 ZW	A41.4S	17.5 t	2000

Approvals
The equipment marked * is an essential requirement of the German Federal Railways for operation on their network.
The safety testing is conducted by the health and safety executive (Berufsgenossenschaft), compliance with the appropriate regulations is verified by the German Federal Railways and the TÜV.

Additional and special equipment

- Short tailswing version (1575, 1750, 2000 mm tailswing)*
- Two-man cab*
- Auxiliary heating
- Hose-rupture safety device for lifting operation, overload warning device*
- Trailer hitch on chassis*
- Emergency manual hydraulic pump*
- Special tow bar*
- German Federal Railways approved lights*
- Lift limitation electronically adjustable from the cab*
- Swing limitation adjustable from the cab*
- Wagon brake unit with footplate brake valve, permitted trailer load is 120 t
- Factory Federal German Railways approval with appropriate certification and all necessary accessories: fire extinguisher, first aid kit, earth cable, red/white flag, torch with red dimmable light, loud hailer, digital speed measurement instrument, oil spill tarpaulin and oil binder*
- Rotating beacons
- Working floodlight(s)
- Radio
- Refueling pump
- Track gauge 1435 mm*
- TÜV-approval

Items marked with * are a requirement for Federal German Railway approval

https://truckmanualshub.com/

ATLAS

TECHNICAL SPECIFICATIONS

Technical specification sheet road-rail excavator 1604ZW

Main dimensions

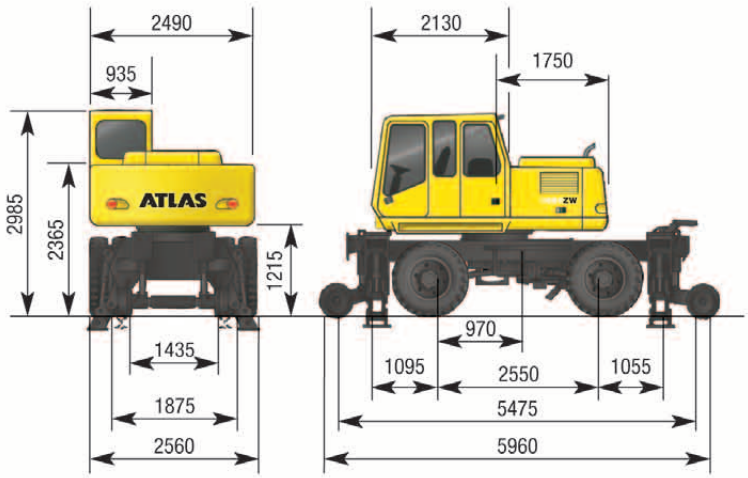

Travel configuration with grab

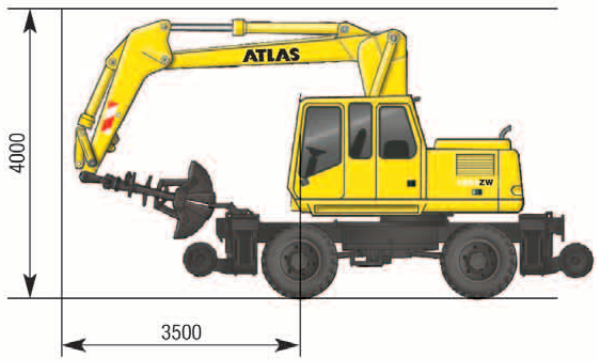

Working equipment:

Base machine		Weight/kg
A67.5	Rail-Road hydraulic excavator 1604 ZW, with 4 outriggers, tailswing 1750 mm	16500
Additional and special equipment		
B66.41	Hose-rupture safety device for lifting cylinder, overload warning device	10
B67.20	Heavy counterweight, tailswing 2000 mm	400
B66.39	Additional hydraulic unit for variable boom cylinder	
B41.23	Two man fully glazed cab	300
Base section of arm and boom		
C67.41P	Base arm with two lift cylinders and an internally mounted operating cylinder	1350
C66.46	Boom with articulating cylinder only for base arm C67.41P, working length 3300 mm	930
Sticks		
D67.22	Rail-road excavator stick, working length 2240 mm	600
Bucket tipping cylinder		
F66.1	Bucket tipping cylinder with reversing linkage	180

Standard equipment

- Narrow axles for underground and suburban railways
- Central lubrication
- Maintenance point for filtration system
- Proportional Grab-rotation
- Hydraulic system for grab and grab rotation function
- Tank indicator
- Battery main switch in negative lead
- “Travel” function via foot control
- Accumulator for emergency lowering of boom system
- Traction increase
- Sliding window in cab door
- Power shift transmission
- Windshield washer system
- Tilt and height adjustable steering column
- Radio pre-installation
- Storage box in the cab
- Comfort seat with armrests and lumbar support
- Toolbox on chassis
- Sealed pivot points in the base section of the boom
- Boom and stick with 50 hour maintenance intervals
- Securing lug for securing the grab during road travel
- Air-conditioning
- Air dryer for compressed air system

https://truckmanualshub.com/

Technical specification sheet road-rail excavator 1604ZW

Engine

Power rating acc. to ISO 1585	95 kW (129 HP)
Effective output locked	93 kW (127 HP)
Manufacturer	Deutz
Type	BF4M 2012 EC
Displacement	4000 cm^3
Rotational speed	2300 rpm
Design	Turbocharger/charge-air cooling

Hydraulic system

Computer controlled AWE4 system with a load limiting high performance piston-pump and fuel efficient on-demand power control for sensitive, proportional and load independent ramp-up of all operational movements
• Primary and secondary protection of the hydraulic system against overload
• Suction valve for all operational functions as well as restrictors in the lift and articulating circuits • Pipe break protection valves for lifting cylinders

Hydraulic system	1 x AKP
Main pump	HPR 135
Max. flow variable capacity pump	300 l/min
Max. operating pressure for operating movements	340 bar

Noise level

Noise level* is significantly below EC limits

Ambience level (L_wA)	104 dB (A)
Cab level (L_wA)	76 dB (A)

*Dynamic sound level measurement according to 2000/14 EC

Electrical system

Operating voltage	24 Volt
Cold-start heavy duty battery	2 x 100 Ah

Electrical system in compliance with StVZO (Regulations Authorizing the Use of Vehicles for Road Traffic in Germany) and European standard

Brakes

Service brake	pneumatic-hydraulically actuated drum brake
Parking brake	pneumatically-operated spring-loaded parking brake

Emergency brake for use on rail

Max. un-braked trailer load	40 t
Max. trailer load with wagon brake	120 t

Fluid capacities

Fuel tank	230 l
Hydraulic tank	300 l
Engine oil	10 l

Cab

Flexibly mounted • Heat absorbing extra wide windscreen for all-round vision • Glare-free interior • Ergonomic pilot control levers • Adjustable steering column • Lengthways adjustment of the seat independent of the control console • Front windscreen stowable under the cab roof • Second seat for mate

Type	Terex 935 two-man comfort cab
Overall length	2130 mm
Width	935 mm

Swing mechanism

Swing motor	axial piston motor with priority valve
Swing gear	planetary reduction
Swing brake	multi-disc brake

Drive via an internally toothed swing bearing

Swing speed	9 rpm
Swing torque	59 kNm

Power Transmission

40 t special excavator axles with planetary drives to all four wheel hubs
• All-wheel drive • Variable drive engine • Double acting travel brake valve
• Travel direction selector with steering column mounted lever or switch on pilot control lever • Steering axle with automatic oscillation lock
• Travel controls via foot pedal valve • Power shift transmission • Traction increase

Travel speed

Road and rail operation

Crawling speed	max. 1.3 km/hour
Off-road speed	max. 5.6 km/hour
Highway speed	max. 20 km/hour

Rail guidance, track gauge 1435 mm, other widths on request

Tires

8 x	10.00 - 20

(inner tyre - highway, outer tyre - off highway tread pattern)

Weight

Operating weight	21.0 - 22.0 t

TECHNICAL SPECIFICATIONS

https://truckmanualshub.com/

ATLAS

TECHNICAL SPECIFICATIONS

Technical specification sheet road-rail excavator 1604ZW

Working range grab

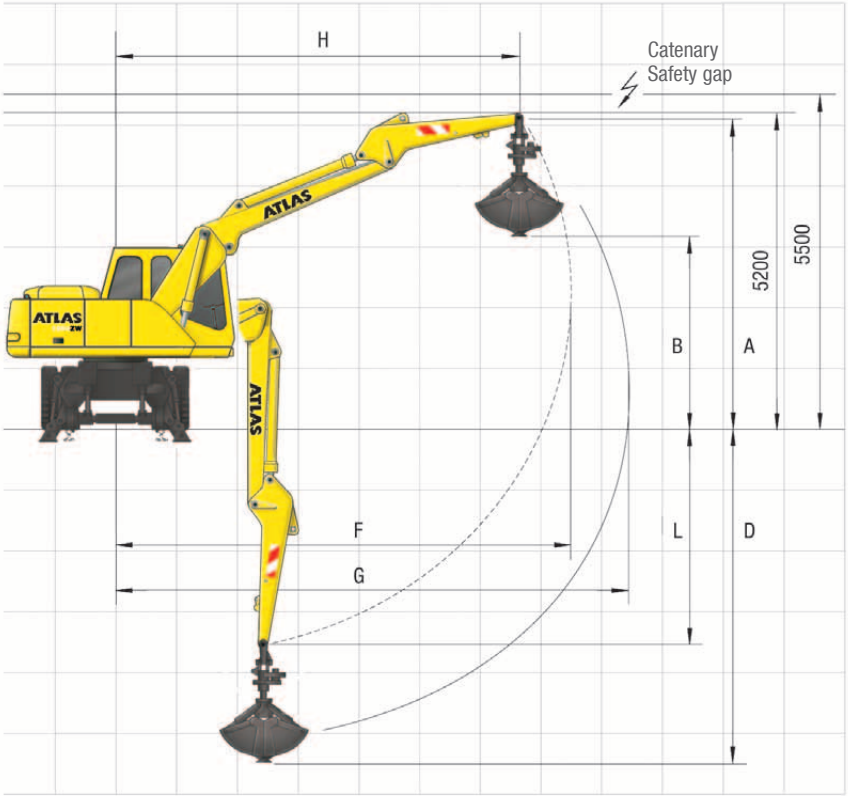

Stick D67.22 - working length 2240 mm			
Equipment: A67.5, C67.41P, C66.46, D67.22, T31, E332, E346			Grab
S	Height of stick	mm	5100
B	Discharge height	mm	3150
D	Max. Digging depth	mm	5500
F	Max. Reach	mm	7450
G	Max. Reach	mm	8300
H	Max. arm position	mm	6600
J	Max. reach height	mm	–
L	Bucket pivot point	mm	3550
	Grab	l	450
	Grab clamping force	kN	72.8
	Operating weight	t	21.3

Working range bucket

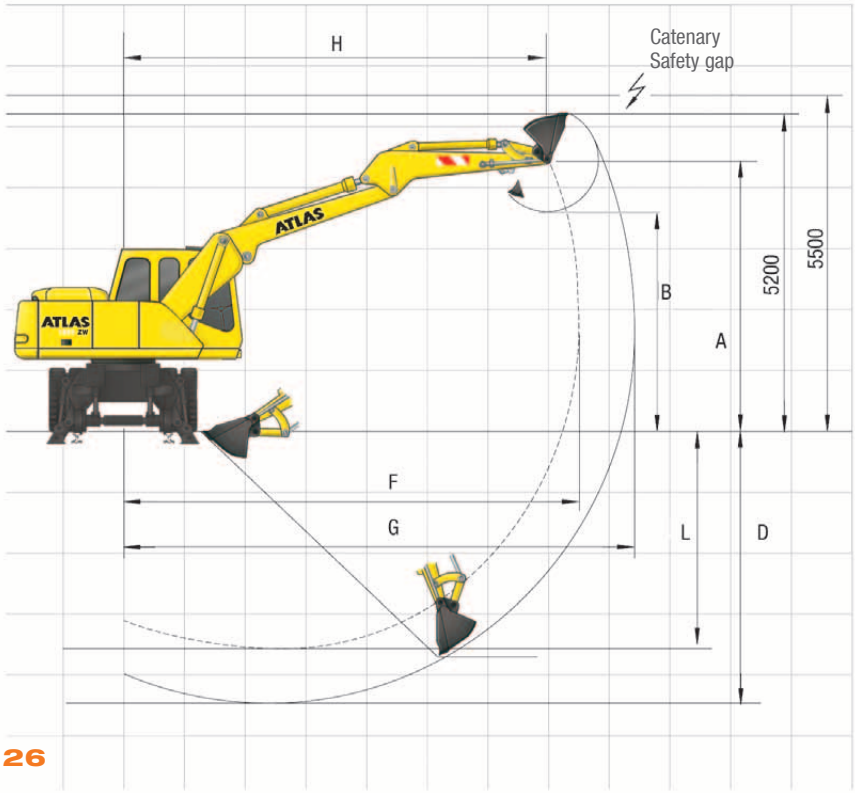

Stick D67.22 - working length 2240 mm			
Equipment: A67.5, C67.41P, C66.46, D67.22, G649			Bucket
S	Height of stick	mm	4400
B	Discharge height	mm	3650
D	Max. Digging depth	mm	4450
F	Max. Reach	mm	7450
G	Max. Reach	mm	8350
H	Max. arm position	mm	6950
J	Max. reach height	mm	–
L	Bucket pivot point	mm	3550
	Buckets	l	800
	Stick digging force	kN	112
	Bucket digging force	kN	141
	Operating weight	t	21.0

https://truckmanualshub.com/

Technical specification sheet road-rail excavator 1604ZW

Base machine A67.5, C67.41P, C66.46

Stick D67.22 - working length 2240 mm
Tailswing 1750 mm

Hook height m		3.0 m		4.0 m		4.5 m		5.0 m		6.0 m		7.0 m	
		l	q	l	q	l	q	l	q	l	q	l	q
5	a	–	–	–	–	6.9	5.7	6.5	4.9	6.0	3.7	–	–
	b	–	–	–	–	6.9	3.6	6.5	3.1	6.0	2.3	–	–
4	a	–	–	7.7	6.7	7.2	5.7	6.7	4.9	6.0	3.7	–	–
	b	–	–	7.7	4.1	7.2	3.5	6.7	3.1	6.0	2.3	–	–
3	a	11.0	10.1	9.4	6.5	8.3	5.5	7.5	4.8	6.4	3.7	5.7	2.8
	b	11.0	5.8	9.4	4.0	8.3	3.4	7.5	3.0	6.4	2.3	5.7	1.7
1	a	12.7	9.9	10.6	6.4	9.2	5.5	8.2	4.8	6.8	3.6	5.8	2.7
	b	12.7	5.7	10.6	3.9	9.2	3.4	8.2	3.0	6.8	2.2	5.8	1.6
0	a	14.6	9.7	10.7	6.3	9.4	5.3	8.4	4.6	6.9	3.4	5.7	2.7
	b	14.6	5.5	10.7	3.8	9.4	3.2	8.4	2.8	6.9	2.1	5.7	1.6
-1	a	15.1	9.3	10.9	6.1	9.5	5.1	8.6	4.4	6.7	3.3	–	–
	b	15.1	5.2	10.9	3.5	9.5	3.0	8.6	2.6	6.7	1.9	–	–
-2	a	15.0	9.4	10.1	5.9	8.3	5.0	–	–	–	–	–	–
	b	15.0	5.2	10.1	3.4	8.3	2.9	–	–	–	–	–	–

Stick D67.22 - working length 2240 mm
Tailswing 2000 mm

Hook height m		3.0 m		4.0 m		4.5 m		5.0 m		6.0 m		7.0 m	
		l	q	l	q	l	q	l	q	l	q	l	q
5	a	–	–	–	–	6.9	6.0	6.5	5.1	6.0	3.9	–	–
	b	–	–	–	–	6.9	3.8	6.5	3.3	6.0	2.5	–	–
4	a	–	–	7.7	7.1	7.2	6.0	6.7	5.1	6.0	3.9	–	–
	b	–	–	7.7	4.4	7.2	3.8	6.7	3.3	6.0	2.5	–	–
3	a	11.0	10.5	9.4	6.9	8.3	5.8	7.5	5.0	6.4	3.9	5.7	2.9
	b	11.0	6.2	9.4	4.2	8.3	3.6	7.5	3.2	6.4	2.5	5.7	1.8
1	a	12.7	10.4	10.6	6.8	9.2	5.8	8.2	5.0	6.8	3.8	5.8	2.9
	b	12.7	6.1	10.6	4.2	9.2	3.6	8.2	3.2	6.8	2.4	5.8	1.8
0	a	14.6	10.2	10.7	6.6	9.4	5.6	8.4	4.8	6.9	3.6	5.7	2.8
	b	14.6	5.9	10.7	4.0	9.4	3.5	8.4	3.0	6.9	2.2	5.7	1.7
-1	a	15.1	9.9	10.9	6.4	9.5	5.4	8.6	4.6	6.7	3.5	–	–
	b	15.1	5.6	10.9	3.8	9.5	3.3	8.6	2.8	6.7	2.1	–	–
-2	a	15.0	9.9	10.1	6.3	8.3	5.2	–	–	–	–	–	–
	b	15.0	5.6	10.1	3.7	8.3	3.1	–	–	–	–	–	–

a = travel on road permitted, b = travel on rail permitted, q = lateral, l = longitudinal

All values in tonnes (t) were determined acc. to ISO 10567 and include a stability factor of 1.33 or 87% of the hydraulic lifting capacity.
These values are applicable at the top of the arm with optimum positioning of the corresponding boom system.

Rail guidance

Track gauge 1435 mm, other widths on request.

CARSY (Computer assisted rail contact pressure system)

Automatic system for regulating and monitoring the force of the rail guide wheels. The required pressures are automatically set, continuously monitored and adjusted if necessary. Depending on the pre-selected operating condition, each separate guidance bogie wheel is set to a different pressure in accordance with a prescribed schedule, locked or hydraulically trailed.

The front and rear bogie wheels can be independently switched to permit simple de-railing and positive crossing of rail points.

Automatic self-diagnosis of the electronic system. Emergency function: de-railing is assured even in the event of a fault or complete breakdown.

Operating weights, tailswing

Type	Configuration	Operating weight with boom adjusting mechanism	Tailswing mm	Can be operated on the network of the German Federal Railways.
1604 ZW, with 4 outriggers	A67.5	approx. 21.0 t	1750	Track spacing ≥3700 mm
1604 ZW, with 4 outriggers	A67.5	approx. 21.5 t	2000	Track spacing ≥4,000 mm

Approvals
The equipment marked * is an essential requirement of the German Federal Railways for operation on their network.
The safety testing is conducted by the health and safety executive (Berufsgenossenschaft), compliance with the appropriate regulations is verified by the German Federal Railways and the TÜV.

Additional and special equipment

- Short tailswing version (1750 or 2000 mm tailswing)*
- Two-man cab*
- Auxiliary heating
- Hose-rupture safety device for lifting operation, overload warning device*
- Trailer hitch on chassis*
- Emergency manual hydraulic pump*
- Special tow bar*
- German Federal Railways approved lights*
- Lift limitation electronically adjustable from the cab*
- Swing limitation adjustable from the cab*
- Wagon brake unit with footplate brake valve, permitted trailer load is 120 t
- Factory Federal German Railways approval with appropriate certification and all necessary accessories: fire extinguisher, first aid kit, earth cable, red/white flag, torch with red dimmable light, loud hailer, digital speed measurement instrument, oil spill tarpaulin and oil binder*
- Rotating beacons
- Working floodlight(s)
- Radio
- Refueling pump
- Rail bogie with track gauges of up to approx. 1700 mm
- TÜV-approval

Items marked with * are a requirement for Federal German Railway approval

https://truckmanualshub.com/

ATLAS

ATLAS Maschinen GmbH
EXCAVATORS
Atlasstrasse 6
27777 Ganderkesee, Germany
T: +49 (0) 4222 954 0
F: +49 (0) 4222 954 343
info@atlasgmbh.com

Distributor

www.atlasgmbh.com

ZW Rail-road excavators EN (1) Effective date: August 2010. Product specifications and prices are subject to change without notice or obligation. The photographs and/or drawings in this document are for illustrative purposes only. Refer to the appropriate Operator's Manual for instructions on the proper use of this equipment. Failure to follow the appropriate Operator's Manual when using our equipment or to otherwise act irresponsibly may result in serious injury or death. The only warranty applicable to our equipment is the standard written warranty applicable to the particular product and sale and Atlas makes no other warranty, express or implied. The only warranty applicable to our equipment is the standard written warranty applicable to the particular product and sale and Atlas makes no other warranty, express or implied. Products and services listed may be trademarks, service marks or trade-names of Atlas Maschinen GmbH and/or its subsidiaries. All rights are reserved. Atlas® is a registered trademark of Atlas Maschinen GmbH. Copyright © 2010 Atlas Maschinen GmbH.

Ref. no. 6141754