https://truckmanualshub.com/

SERVICE MANUAL

L221 / L228
Tier 4B (final)
200 Series Skid Steer Loader

L221 PIN NEM479941 and above; L228 PIN NFM401546 and above

C227 / C232
Tier 4B (final)
200 Series Compact Track Loader

C227 PIN NDM471836 and above; C232 PIN NFM402195 and above

Part number 47851950
English
May 2015
Replaces part number 47712047

NEW HOLLAND
CONSTRUCTION

Link Product / Engine

Product	Market Product	Engine
C227 TIER 4B Final [NDM471836 -]	North America	F5HFL463A*F001
C227 TIER 4B Final [NDM471836 -]	Europe	F5HFL463A*F001
C232 TIER 4B (FINAL)	North America	F5HFL463A*F001
C232 TIER 4B (FINAL)	Europe	F5HFL463A*F001
L221 TIER 4B Final [NEM479941 -]	North America	F5HFL463A*F001
L221 TIER 4B Final [NEM479941 -]	Europe	F5HFL463A*F001
L228 TIER 4B (FINAL)	Europe	F5HFL463A*F001
L228 TIER 4B (FINAL)	North America	F5HFL463A*F001

Find manuals at https://best-manuals.com

https://truckmanualshub.com/

Contents

INTRODUCTION

Engine 10

[10.001] Engine and crankcase 10.1

[10.216] Fuel tanks 10.2

[10.501] Exhaust Gas Recirculation (EGR) - Diesel Particulate Filter (DPF) exhaust treatment 10.3

[10.400] Engine cooling system 10.4

[10.414] Fan and drive 10.5

[10.304] Engine lubrication system 10.6

Power coupling 19

[19.121] Pump-drive assembly 19.1

Front axle system 25

[25.450] Chain drive system 25.1

Rear axle system 27

[27.650] Chain drive system 27.1

Hydrostatic drive 29

[29.200] Mechanical control 29.1

[29.218] Pump and motor components 29.2

[29.202] Hydrostatic transmission 29.3

[29.134] Two-speed assembly 29.4

Brakes and controls 33

[33.110] Parking brake or parking lock 33.1

Hydraulic systems 35

[35.000] Hydraulic systems 35.1

[35.300] Reservoir, cooler, and filters 35.2

[35.104] Fixed displacement pump 35.3

Find manuals at https://best-manuals.com

[35.359] Main control valve 35.4
[35.525] Auxiliary hydraulic valves and lines 35.5
[35.600] High flow hydraulics 35.6
[35.724] Front loader hydraulic system control 35.7
[35.701] Front loader arm hydraulic system 35.8
[35.734] Tool quick coupler hydraulic system 35.9

Frames and ballasting 39
[39.140] Ballasts and supports 39.1

Wheels 44
[44.511] Front wheels 44.1
[44.520] Rear wheels 44.2

Tracks and track suspension 48
[48.130] Track frame and driving wheels 48.1
[48.100] Tracks 48.2
[48.134] Track tension units 48.3
[48.138] Track rollers 48.4

Cab climate control 50
[50.100] Heating 50.1
[50.200] Air conditioning 50.2

Electrical systems 55
[55.000] Electrical system 55.1
[55.010] Fuel injection system 55.2
[55.011] Fuel tank system 55.3
[55.012] Engine cooling system 55.4
[55.019] Hydrostatic drive control system 55.5
[55.036] Hydraulic system control 55.6
[55.051] Cab Heating, Ventilation, and Air-Conditioning (HVAC) controls 55.7
[55.100] Harnesses and connectors 55.8

Find manuals at https://best-manuals.com

https://truckmanualshub.com/

[55.202] Cold start aid 55.9
[55.302] Battery 55.10
[55.408] Warning indicators, alarms, and instruments 55.11
[55.512] Cab controls 55.12
[55.518] Wiper and washer system 55.13
[55.640] Electronic modules 55.14
[55.DTC] FAULT CODES 55.15
Front loader and bucket 82
[82.100] Arm 82.1
[82.300] Bucket 82.2
Platform, cab, bodywork, and decals 90
[90.150] Cab 90.1
[90.154] Cab doors and hatches 90.2

Find manuals at https://best-manuals.com

https://truckmanualshub.com/

Find manuals at https://best-manuals.com

https://truckmanualshub.com/

INTRODUCTION

Find manuals at https://best-manuals.com

https://truckmanualshub.com/

Contents

INTRODUCTION

Foreword - Important notice regarding equipment servicing (*) 3
Safety rules - Ecology and the environment (*) 4
Safety rules (*) 5
Safety rules (*) 6
Safety rules - Personal safety (*) 7
Torque - Standard torque data for hydraulics (*) 8
Basic instructions - Shop and assembly (*) 10
Torque - Minimum tightening torques for normal assembly (*) 12
General specification - Biodiesel fuels (*) 17
Capacities (*) 20
Product identification 22
Product identification - Machine orientation (*) 24

(*) See content for specific models

Find manuals at https://best-manuals.com

Foreword - Important notice regarding equipment servicing

C227	
C232	
L221	
L228	

All repair and maintenance work listed in this manual must be carried out only by qualified dealership personnel, strictly complying with the instructions given, and using, whenever possible, the special tools.

Anyone who performs repair and maintenance operations without complying with the procedures provided herein shall be responsible for any subsequent damages.

The manufacturer and all the organizations of its distribution chain, including - without limitation - national, regional, or local dealers, reject any responsibility for damages caused by parts and/or components not approved by the manufacturer, including those used for the servicing or repair of the product manufactured or marketed by the manufacturer. In any case, no warranty is given or attributed on the product manufactured or marketed by the manufacturer in case of damages caused by parts and/or components not approved by the manufacturer.

The manufacturer reserves the right to make improvements in design and changes in specifications at any time without notice and without incurring any obligation to install them on units previously sold. Specifications, descriptions, and illustrative material herein are as accurate as known at time of publication but are subject to change without notice.

In case of questions, refer to your NEW HOLLAND CONSTRUCTION Sales and Service Networks.

Find manuals at https://best-manuals.com

Safety rules - Ecology and the environment

C227	
C232	
L221	
L228	

Soil, air, and water quality is important for all industries and life in general. When legislation does not yet rule the treatment of some of the substances that advanced technology requires, sound judgment should govern the use and disposal of products of a chemical and petrochemical nature.

Familiarize yourself with the relative legislation applicable to your country, and make sure that you understand this legislation. Where no legislation exists, obtain information from suppliers of oils, filters, batteries, fuels, anti-freeze, cleaning agents, etc., with regard to the effect of these substances on man and nature and how to safely store, use, and dispose of these substances.

Helpful hints

- Avoid the use of cans or other inappropriate pressurized fuel delivery systems to fill tanks. Such delivery systems may cause considerable spillage.
- In general, avoid skin contact with all fuels, oils, acids, solvents, etc. Most of these products contain substances that may be harmful to your health.
- Modern oils contain additives. Do not burn contaminated fuels and or waste oils in ordinary heating systems.
- Avoid spillage when you drain fluids such as used engine coolant mixtures, engine oil, hydraulic fluid, brake fluid, etc. Do not mix drained brake fluids or fuels with lubricants. Store all drained fluids safely until you can dispose of the fluids in a proper way that complies with all local legislation and available resources.
- Do not allow coolant mixtures to get into the soil. Collect and dispose of coolant mixtures properly.
- The air-conditioning system contains gases that should not be released into the atmosphere. Consult an air-conditioning specialist or use a special extractor to recharge the system properly.
- Repair any leaks or defects in the engine cooling system or hydraulic system immediately.
- Do not increase the pressure in a pressurized circuit as this may lead to a component failure.
- Protect hoses during welding. Penetrating weld splatter may burn a hole or weaken hoses, allowing the loss of oils, coolant, etc.

Battery recycling

Batteries and electric accumulators contain several substances that can have a harmful effect on the environment if the batteries are not properly recycled after use. Improper disposal of batteries can contaminate the soil, groundwater, and waterways. NEW HOLLAND CONSTRUCTION strongly recommends that you return all used batteries to a NEW HOLLAND CONSTRUCTION dealer, who will dispose of the used batteries or recycle the used batteries properly. In some countries, this is a legal requirement.

Mandatory battery recycling

NOTE: *The following requirements are mandatory in Brazil.*

Batteries are made of lead plates and a sulfuric acid solution. Because batteries contain heavy metals such as lead, CONAMA Resolution 401/2008 requires you to return all used batteries to the battery dealer when you replace any batteries. Do not dispose of batteries in your household garbage.

Points of sale are obliged to:

- Accept the return of your used batteries
- Store the returned batteries in a suitable location
- Send the returned batteries to the battery manufacturer for recycling

Find manuals at https://best-manuals.com

Safety rules

C227	
C232	
L221	
L228	

Personal safety

This is the safety alert symbol. It is used to alert you to potential personal injury hazards. Obey all safety messages that follow this symbol to avoid possible death or injury.

Throughout this manual you will find the signal words DANGER, WARNING, and CAUTION followed by special instructions. These precautions are intended for the personal safety of you and those working with you.

Read and understand all the safety messages in this manual before you operate or service the machine.

⚠ DANGER indicates a hazardous situation that, if not avoided, will result in death or serious injury.

⚠ WARNING indicates a hazardous situation that, if not avoided, could result in death or serious injury.

⚠ CAUTION indicates a hazardous situation that, if not avoided, could result in minor or moderate injury.

FAILURE TO FOLLOW DANGER, WARNING, AND CAUTION MESSAGES COULD RESULT IN DEATH OR SERIOUS INJURY.

Machine safety

NOTICE: *Notice indicates a situation that, if not avoided, could result in machine or property damage.*

Throughout this manual you will find the signal word Notice followed by special instructions to prevent machine or property damage. The word Notice is used to address practices not related to personal safety.

Information

NOTE: *Note indicates additional information that clarifies steps, procedures, or other information in this manual.*

Throughout this manual you will find the word Note followed by additional information about a step, procedure, or other information in the manual. The word Note is not intended to address personal safety or property damage.

Safety rules

C227	NA
C232	NA ---
L221	NA
L228	

BT09A213 1

Safety rules - Personal safety

C227	
C232	
L221	
L228	

Carefully study these precautions, and those included in the external attachment operators manual, and insist that they be followed by those working with and for you.

1. Thoroughly read and understand this manual and the attachment Operator's Manual before operating this or any other equipment.
2. Be sure all people and pets are clear of the machine before starting. Sound the horn, if equipped, three times before starting engine.
3. Only the operator should be on the machine when in operation. Never allow anyone to climb on to the machine while it is in motion. If the machine is equipped with an Instructors Seat, this must only be used for training purposes. Passengers must not be allowed to use the Instructors Seat.
4. Keep all shields in place. Never work around the machine or any of the attachments while wearing loose clothing that might catch on moving parts.
5. Observe the following precautions whenever lubricating the machine or making adjustments.

   - Disengage all clutching levers or switches.
   - Lower the attachment, if equipped, to the ground or raise the attachment completely and engage the cylinder safety locks. Completing these actions will prevent the attachment from lowering unexpectedly.
   - Engage the parking brake.
   - Shut off the engine and remove the key.
   - Wait for all machine movement to stop before leaving the operators platform.

6. Always keep the machine in gear while travelling downhill.
7. The machine should always be equipped with sufficient front or rear axle weight for safe operation.
8. Under some field conditions, more weight may be required at the front or rear axle for adequate stability. This is especially important when operating in hilly conditions or/when using heavy attachments.
9. Always lower the attachment, shut off the engine, set the parking brake, engage the transmission gears, remove the key and wait for all machine movement to stop before leaving the operators platform.
10. If the attachment or machine should become obstructed or plugged; set the parking brake, shut off the engine and remove the key, engage the transmission gears, wait for all machine or attachment motion to come to a stop, before leaving the operators platform to removing the obstruction or plug.
11. Never disconnect or make any adjustments to the hydraulic system unless the machine and/or the attachment is lowered to the ground or the safety lock(s) is in the engaged position.
12. Use of the flashing lights is highly recommended when operating on a public road.
13. When transporting on a road or highway, use accessory lights and devices for adequate warning to the operators of other vehicles. In this regard, check local government regulations. Various safety lights and devices are available from your NEW HOLLAND CONSTRUCTION dealer.
14. Practice safety 365 days a year.
15. Keep all your equipment in safe operating condition.
16. Keep all guards and safety devices in place.
17. Always set the parking brake, shut off the engine and remove the key, engage the transmission gears, wait for all machine or attachment motion to come to a stop, before leaving the operators platform to service the machine and attachment.
18. Remember: A careful operator is the best insurance against an accident.
19. Extreme care should be taken in keeping hands and clothing away from moving parts.

Torque - Standard torque data for hydraulics

C227	
C232	
L221	
L228	

INSTALLATION OF ADJUSTABLE FITTINGS IN STRAIGHT THREAD O RING BOSSES

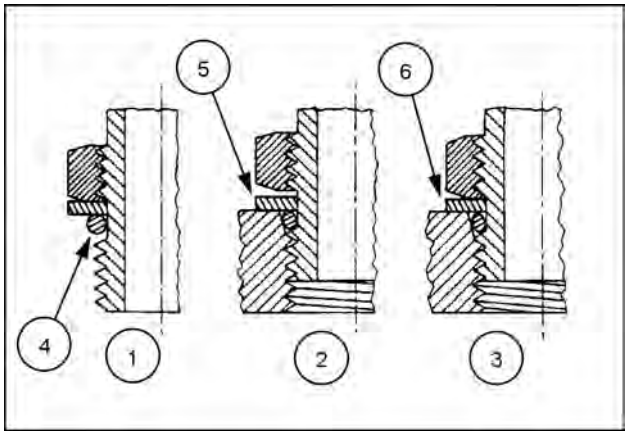

23085659 1

1. Lubricate the O-ring by coating it with a light oil or petroleum. Install the O-ring in the groove adjacent to the metal backup washer which is assembled at the extreme end of the groove **(4)**.
2. Install the fitting into the SAE straight thread boss until the metal backup washer contacts the face of the boss **(5)**.

   NOTE: *Do not over tighten and distort the metal backup washer.*
3. Position the fitting by turning out (counterclockwise) up to a maximum of one turn. Holding the pad of the fitting with a wrench, tighten the locknut and washer against the face of the boss **(6)**.

STANDARD TORQUE DATA FOR HYDRAULIC TUBES AND FITTINGS

TUBE NUTS FOR 37° FLARED FITTINGS				O-RING BOSS PLUGS ADJUSTABLE FITTING LOCKNUTS, SWIVEL JIC- 37° SEATS
SIZE	**TUBING OD**	**THREAD SIZE**	**TORQUE**	**TORQUE**
4	**6.4 mm (1/4 in)**	7/16-20	**12 - 16 N·m (9 - 12 lb ft)**	**8 - 14 N·m (6 - 10 lb ft)**
5	**7.9 mm (5/16 in)**	1/2-20	**16 - 20 N·m (12 - 15 lb ft)**	**14 - 20 N·m (10 - 15 lb ft)**
6	**9.5 mm (3/8 in)**	9/16-18	**29 - 33 N·m (21 - 24 lb ft)**	**20 - 27 N·m (15 - 20 lb ft)**
8	**12.7 mm (1/2 in)**	3/4-16	**47 - 54 N·m (35 - 40 lb ft)**	**34 - 41 N·m (25 - 30 lb ft)**
10	**15.9 mm (5/8 in)**	7/8-14	**72 - 79 N·m (53 - 58 lb ft)**	**47 - 54 N·m (35 - 40 lb ft)**
12	**19.1 mm (3/4 in)**	1-1/16-12	**104 - 111 N·m (77 - 82 lb ft)**	**81 - 95 N·m (60 - 70 lb ft)**
14	**22.2 mm (7/8 in)**	1-3/16-12	**122 - 136 N·m (90 - 100 lb ft)**	**95 - 109 N·m (70 - 80 lb ft)**
16	**25.4 mm (1 in)**	1-5/16-12	**149 - 163 N·m (110 - 120 lb ft)**	**108 - 122 N·m (80 - 90 lb ft)**
20	**31.8 mm (1-1/4 in)**	1-5/8-12	**190 - 204 N·m (140 - 150 lb ft)**	**129 - 158 N·m (95 - 115 lb ft)**
24	**38.1 mm (1-1/2 in)**	1-7/8-12	**217 - 237 N·m (160 - 175 lb ft)**	**163 - 190 N·m (120 - 140 lb ft)**
32	**50.8 mm (2 in)**	2-1/2-12	**305 - 325 N·m (225 - 240 lb ft)**	**339 - 407 N·m (250 - 300 lb ft)**

These torques are not recommended for tubes of **12.7 mm** (**1/2 in**) OD and larger with wall thickness of **0.889 mm** (**0.035 in**) or less. The torque is specified for **0.889 mm** (**0.035 in**) wall tubes on each application individually.

Before installing and torquing **37 °** flared fittings, clean the face of the flare and threads with a clean solvent or Loctite cleaner and apply hydraulic sealant **LOCTITE® 569** to the **37 °** flare and the threads.

Install fitting and torque to specified torque, loosen fitting and retorque to specifications.

PIPE THREAD FITTING TORQUE

Before installing and tightening pipe fittings, clean the threads with a clean solvent or Loctite cleaner and apply sealant **LOCTITE® 567 PST PIPE SEALANT** for all fittings including stainless steel or **LOCTITE® 565 PST** for most metal fittings. For high filtration/zero contamination systems use **LOCTITE® 545**.

PIPE THREAD FITTING	
Thread Size	**Torque (Maximum)**
1/8-27	**13 N·m** (**10 lb ft**)
1/4-18	**16 N·m** (**12 lb ft**)
3/8-18	**22 N·m** (**16 lb ft**)
1/2-14	**41 N·m** (**30 lb ft**)
3/4-14	**54 N·m** (**40 lb ft**)

INSTALLATION OF ORFS (O-RING FLAT FACED) FITTINGS

When installing ORFS fittings thoroughly clean both flat surfaces of the fittings **(1)** and lubricate the O-ring **(2)** with light oil. Make sure both surfaces are aligned properly. Torque the fitting to specified torque listed throughout the repair manual.

NOTICE: *If the fitting surfaces are not properly cleaned, the O-ring will not seal properly. If the fitting surfaces are not properly aligned, the fittings may be damaged and will not seal properly.*

NOTICE: *Always use genuine factory replacement oils and filters to ensure proper lubrication and filtration of engine and hydraulic system oils.*

The use of proper oils, grease, and keeping the hydraulic system clean will extend machine and component life.

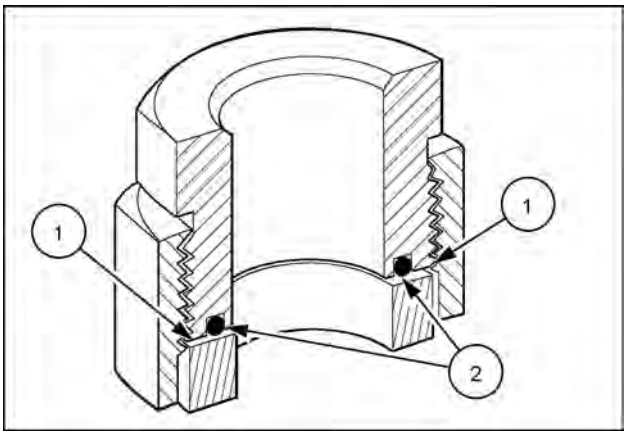

50011183 2

Basic instructions - Shop and assembly

C227	
C232	
L221	
L228	

Shimming

For each adjustment operation, select adjusting shims and measure the adjusting shims individually using a micrometer, then add up the recorded values. Do not rely on measuring the entire shimming set, which may be incorrect, or the rated value shown on each shim.

Rotating shaft seals

For correct rotating shaft seal installation, proceed as follows:

1. Before assembly, allow the seal to soak in the oil it will be sealing for at least thirty minutes.
2. Thoroughly clean the shaft and check that the working surface on the shaft is not damaged.
3. Position the sealing lip facing the fluid.

   NOTE: *With hydrodynamic lips, take into consideration the shaft rotation direction and position the grooves so that they will move the fluid towards the inner side of the seal.*
4. Coat the sealing lip with a thin layer of lubricant (use oil rather than grease). Fill the gap between the sealing lip and the dust lip on double lip seals with grease.
5. Insert the seal in its seat and press down using a flat punch or seal installation tool. Do not tap the seal with a hammer or mallet.
6. While you insert the seal, check that the seal is perpendicular to the seat. When the seal settles, make sure that the seal makes contact with the thrust element, if required.
7. To prevent damage to the seal lip on the shaft, position a protective guard during installation operations.

O-ring seals

Lubricate the O-ring seals before you insert them in the seats. This will prevent the O-ring seals from overturning and twisting, which would jeopardize sealing efficiency.

Sealing compounds

Apply a sealing compound on the mating surfaces when specified by the procedure. Before you apply the sealing compound, prepare the surfaces as directed by the product container.

Spare parts

Only use CNH Original Parts or NEW HOLLAND CONSTRUCTION Original Parts.

Only genuine spare parts guarantee the same quality, duration, and safety as original parts, as they are the same parts that are assembled during standard production. Only CNH Original Parts or NEW HOLLAND CONSTRUCTION Original Parts can offer this guarantee.

When ordering spare parts, always provide the following information:

- Machine model (commercial name) and Product Identification Number (PIN)
- Part number of the ordered part, which can be found in the parts catalog

Protecting the electronic and/or electrical systems during charging and welding

To avoid damage to the electronic and/or electrical systems, always observe the following practices:

1. Never make or break any of the charging circuit connections when the engine is running, including the battery connections.
2. Never short any of the charging components to ground.
3. Always disconnect the ground cable from the battery before arc welding on the machine or on any machine attachment.
   - Position the welder ground clamp as close to the welding area as possible.
   - If you weld in close proximity to a computer module, then you should remove the module from the machine.
   - Never allow welding cables to lie on, near, or across any electrical wiring or electronic component while you weld.
4. Always disconnect the negative cable from the battery when charging the battery in the machine with a battery charger.

   NOTICE: *If you must weld on the unit, you must disconnect the battery ground cable from the machine battery. The electronic monitoring system and charging system will be damaged if this is not done.*
5. Remove the battery ground cable. Reconnect the cable when you complete welding.

⚠ WARNING

Battery acid causes burns. Batteries contain sulfuric acid.
Avoid contact with skin, eyes or clothing. Antidote (external): Flush with water. Antidote (eyes): flush with water for 15 minutes and seek medical attention immediately. Antidote (internal): Drink large quantities of water or milk. Do not induce vomiting. Seek medical attention immediately.
Failure to comply could result in death or serious injury.

W0111A

Special tools

The special tools that NEW HOLLAND CONSTRUCTION suggests and illustrate in this manual have been specifically researched and designed for use with NEW HOLLAND CONSTRUCTION machines. The special tools are essential for reliable repair operations. The special tools are accurately built and rigorously tested to offer efficient and long-lasting operation.

By using these tools, repair personnel will benefit from:

- Operating in optimal technical conditions
- Obtaining the best results
- Saving time and effort
- Working in safe conditions

Torque - Minimum tightening torques for normal assembly

C227	
C232	
L221	
L228	

METRIC NON-FLANGED HARDWARE

NOM. SIZE	CLASS 8.8 BOLT and CLASS 8 NUT		CLASS 10.9 BOLT and CLASS 10 NUT		LOCKNUT CL.8 W/CL8.8 BOLT	LOCKNUT CL.10 W/CL10.9 BOLT
	UNPLATED	PLATED W/ZnCr	UNPLATED	PLATED W/ZnCr		
M4	2.2 N·m (19 lb in)	2.9 N·m (26 lb in)	3.2 N·m (28 lb in)	4.2 N·m (37 lb in)	2 N·m (18 lb in)	2.9 N·m (26 lb in)
M5	4.5 N·m (40 lb in)	5.9 N·m (52 lb in)	6.4 N·m (57 lb in)	8.5 N·m (75 lb in)	4 N·m (36 lb in)	5.8 N·m (51 lb in)
M6	7.5 N·m (66 lb in)	10 N·m (89 lb in)	11 N·m (96 lb in)	15 N·m (128 lb in)	6.8 N·m (60 lb in)	10 N·m (89 lb in)
M8	18 N·m (163 lb in)	25 N·m (217 lb in)	26 N·m (234 lb in)	35 N·m (311 lb in)	17 N·m (151 lb in)	24 N·m (212 lb in)
M10	37 N·m (27 lb ft)	49 N·m (36 lb ft)	52 N·m (38 lb ft)	70 N·m (51 lb ft)	33 N·m (25 lb ft)	48 N·m (35 lb ft)
M12	64 N·m (47 lb ft)	85 N·m (63 lb ft)	91 N·m (67 lb ft)	121 N·m (90 lb ft)	58 N·m (43 lb ft)	83 N·m (61 lb ft)
M16	158 N·m (116 lb ft)	210 N·m (155 lb ft)	225 N·m (166 lb ft)	301 N·m (222 lb ft)	143 N·m (106 lb ft)	205 N·m (151 lb ft)
M20	319 N·m (235 lb ft)	425 N·m (313 lb ft)	440 N·m (325 lb ft)	587 N·m (433 lb ft)	290 N·m (214 lb ft)	400 N·m (295 lb ft)
M24	551 N·m (410 lb ft)	735 N·m (500 lb ft)	762 N·m (560 lb ft)	1016 N·m (750 lb ft)	501 N·m (370 lb ft)	693 N·m (510 lb ft)

NOTE: *M4 through M8 hardware torque specifications are shown in pound-inches. M10 through M24 hardware torque specifications are shown in pound-feet.*

METRIC FLANGED HARDWARE

NOM. SIZE	CLASS 8.8 BOLT and CLASS 8 NUT		CLASS 10.9 BOLT and CLASS 10 NUT		LOCKNUT CL.8 W/CL8.8 BOLT	LOCKNUT CL.10 W/CL10.9 BOLT
	UNPLATED	PLATED W/ZnCr	UNPLATED	PLATED W/ZnCr		
M4	2.4 N·m (21 lb in)	3.2 N·m (28 lb in)	3.5 N·m (31 lb in)	4.6 N·m (41 lb in)	2.2 N·m (19 lb in)	3.1 N·m (27 lb in)
M5	4.9 N·m (43 lb in)	6.5 N·m (58 lb in)	7.0 N·m (62 lb in)	9.4 N·m (83 lb in)	4.4 N·m (39 lb in)	6.4 N·m (57 lb in)
M6	8.3 N·m (73 lb in)	11 N·m (96 lb in)	12 N·m (105 lb in)	16 N·m (141 lb in)	7.5 N·m (66 lb in)	11 N·m (96 lb in)
M8	20 N·m (179 lb in)	27 N·m (240 lb in)	29 N·m (257 lb in)	39 N·m (343 lb in)	18 N·m (163 lb in)	27 N·m (240 lb in)
M10	40 N·m (30 lb ft)	54 N·m (40 lb ft)	57 N·m (42 lb ft)	77 N·m (56 lb ft)	37 N·m (27 lb ft)	53 N·m (39 lb ft)
M12	70 N·m (52 lb ft)	93 N·m (69 lb ft)	100 N·m (74 lb ft)	134 N·m (98 lb ft)	63 N·m (47 lb ft)	91 N·m (67 lb ft)
M16	174 N·m (128 lb ft)	231 N·m (171 lb ft)	248 N·m (183 lb ft)	331 N·m (244 lb ft)	158 N·m (116 lb ft)	226 N·m (167 lb ft)
M20	350 N·m (259 lb ft)	467 N·m (345 lb ft)	484 N·m (357 lb ft)	645 N·m (476 lb ft)	318 N·m (235 lb ft)	440 N·m (325 lb ft)
M24	607 N·m (447 lb ft)	809 N·m (597 lb ft)	838 N·m (618 lb ft)	1118 N·m (824 lb ft)	552 N·m (407 lb ft)	

IDENTIFICATION

Metric Hex head and carriage bolts, classes 5.6 and up

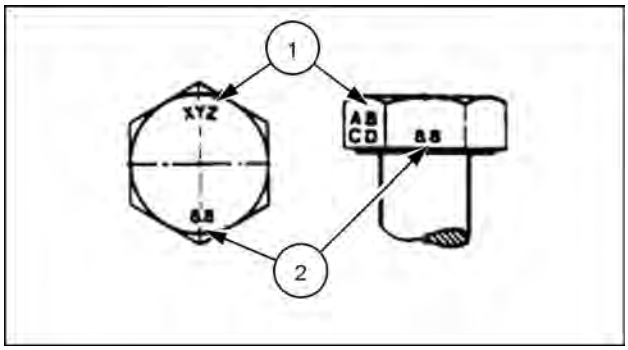

20083680 1

1. Manufacturer's Identification
2. Property Class

Metric Hex nuts and locknuts, classes 05 and up

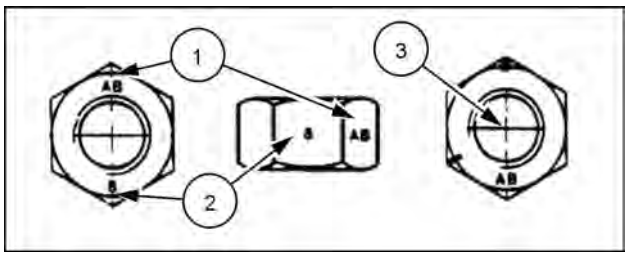

20083681 2

1. Manufacturer's Identification
2. Property Class
3. Clock Marking of Property Class and Manufacturer's Identification (Optional), i.e. marks **60 °** apart indicate Class 10 properties, and marks **120 °** apart indicate Class 8.

INCH NON-FLANGED HARDWARE

NOMINAL SIZE	SAE GRADE 5 BOLT and NUT		SAE GRADE 8 BOLT and NUT		LOCKNUT GrB W/ Gr5 BOLT	LOCKNUT GrC W/ Gr8 BOLT
	UN-PLATED or PLATED SILVER	PLATED W/ZnCr GOLD	UN-PLATED or PLATED SILVER	PLATED W/ZnCr GOLD		
1/4	**8 N·m (71 lb in)**	**11 N·m (97 lb in)**	**12 N·m (106 lb in)**	**16 N·m (142 lb in)**	**8.5 N·m (75 lb in)**	**12.2 N·m (109 lb in)**
5/16	**17 N·m (150 lb in)**	**23 N·m (204 lb in)**	**24 N·m (212 lb in)**	**32 N·m (283 lb in)**	**17.5 N·m (155 lb in)**	**25 N·m (220 lb in)**
3/8	**30 N·m (22 lb ft)**	**40 N·m (30 lb ft)**	**43 N·m (31 lb ft)**	**57 N·m (42 lb ft)**	**31 N·m (23 lb ft)**	**44 N·m (33 lb ft)**
7/16	**48 N·m (36 lb ft)**	**65 N·m (48 lb ft)**	**68 N·m (50 lb ft)**	**91 N·m (67 lb ft)**	**50 N·m (37 lb ft)**	**71 N·m (53 lb ft)**
1/2	**74 N·m (54 lb ft)**	**98 N·m (73 lb ft)**	**104 N·m (77 lb ft)**	**139 N·m (103 lb ft)**	**76 N·m (56 lb ft)**	**108 N·m (80 lb ft)**
9/16	**107 N·m (79 lb ft)**	**142 N·m (105 lb ft)**	**150 N·m (111 lb ft)**	**201 N·m (148 lb ft)**	**111 N·m (82 lb ft)**	**156 N·m (115 lb ft)**
5/8	**147 N·m (108 lb ft)**	**196 N·m (145 lb ft)**	**208 N·m (153 lb ft)**	**277 N·m (204 lb ft)**	**153 N·m (113 lb ft)**	**215 N·m (159 lb ft)**
3/4	**261 N·m (193 lb ft)**	**348 N·m (257 lb ft)**	**369 N·m (272 lb ft)**	**491 N·m (362 lb ft)**	**271 N·m (200 lb ft)**	**383 N·m (282 lb ft)**
7/8	**420 N·m (310 lb ft)**	**561 N·m (413 lb ft)**	**594 N·m (438 lb ft)**	**791 N·m (584 lb ft)**	**437 N·m (323 lb ft)**	**617 N·m (455 lb ft)**
1	**630 N·m (465 lb ft)**	**841 N·m (620 lb ft)**	**890 N·m (656 lb ft)**	**1187 N·m (875 lb ft)**	**654 N·m (483 lb ft)**	**924 N·m (681 lb ft)**

NOTE: *For Imperial Units,* ***1/4 in*** *and* ***5/16 in*** *hardware torque specifications are shown in pound-inches.* ***3/8 in*** *through* ***1 in*** *hardware torque specifications are shown in pound-feet.*

INCH FLANGED HARDWARE

NOM-INAL SIZE	SAE GRADE 5 BOLT and NUT		SAE GRADE 8 BOLT and NUT		LOCKNUT GrF W/ Gr5 BOLT	LOCKNUT GrG W/ Gr8 BOLT
	UNPLATED or PLATED SILVER	PLATED W/ZnCr GOLD	UNPLATED or PLATED SILVER	PLATED W/ZnCr GOLD		
1/4	9 N·m (80 lb in)	12 N·m (106 lb in)	13 N·m (115 lb in)	17 N·m (150 lb in)	8 N·m (71 lb in)	12 N·m (106 lb in)
5/16	19 N·m (168 lb in)	25 N·m (221 lb in)	26 N·m (230 lb in)	35 N·m (310 lb in)	17 N·m (150 lb in)	24 N·m (212 lb in)
3/8	33 N·m (25 lb ft)	44 N·m (33 lb ft)	47 N·m (35 lb ft)	63 N·m (46 lb ft)	30 N·m (22 lb ft)	43 N·m (32 lb ft)
7/16	53 N·m (39 lb ft)	71 N·m (52 lb ft)	75 N·m (55 lb ft)	100 N·m (74 lb ft)	48 N·m (35 lb ft)	68 N·m (50 lb ft)
1/2	81 N·m (60 lb ft)	108 N·m (80 lb ft)	115 N·m (85 lb ft)	153 N·m (113 lb ft)	74 N·m (55 lb ft)	104 N·m (77 lb ft)
9/16	117 N·m (86 lb ft)	156 N·m (115 lb ft)	165 N·m (122 lb ft)	221 N·m (163 lb ft)	106 N·m (78 lb ft)	157 N·m (116 lb ft)
5/8	162 N·m (119 lb ft)	216 N·m (159 lb ft)	228 N·m (168 lb ft)	304 N·m (225 lb ft)	147 N·m (108 lb ft)	207 N·m (153 lb ft)
3/4	287 N·m (212 lb ft)	383 N·m (282 lb ft)	405 N·m (299 lb ft)	541 N·m (399 lb ft)	261 N·m (193 lb ft)	369 N·m (272 lb ft)
7/8	462 N·m (341 lb ft)	617 N·m (455 lb ft)	653 N·m (482 lb ft)	871 N·m (642 lb ft)	421 N·m (311 lb ft)	594 N·m (438 lb ft)
1	693 N·m (512 lb ft)	925 N·m (682 lb ft)	979 N·m (722 lb ft)	1305 N·m (963 lb ft)	631 N·m (465 lb ft)	890 N·m (656 lb ft)

IDENTIFICATION

Inch Bolts and free-spinning nuts

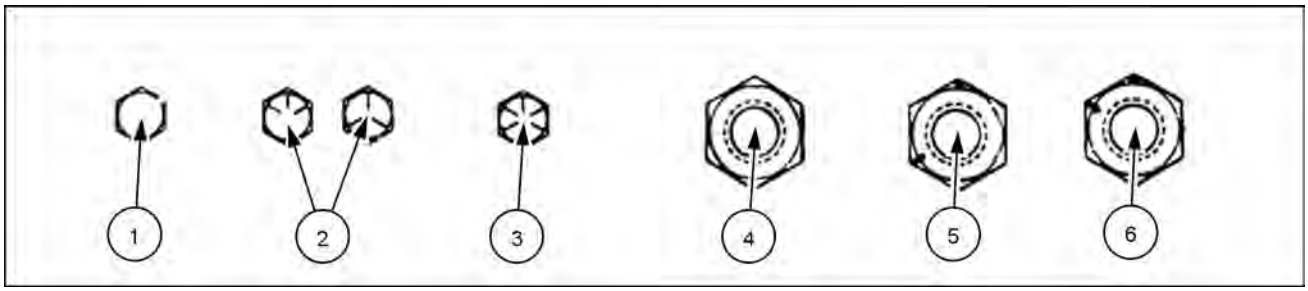

20083682 3

Grade Marking Examples

SAE Grade Identification			
1	Grade 2 - No Marks	4	Grade 2 Nut - No Marks
2	Grade 5 - Three Marks	5	Grade 5 Nut - Marks **120 °** Apart
3	Grade 8 - Five Marks	6	Grade 8 Nut - Marks **60 °** Apart

Inch Lock Nuts, All Metal (Three optional methods)

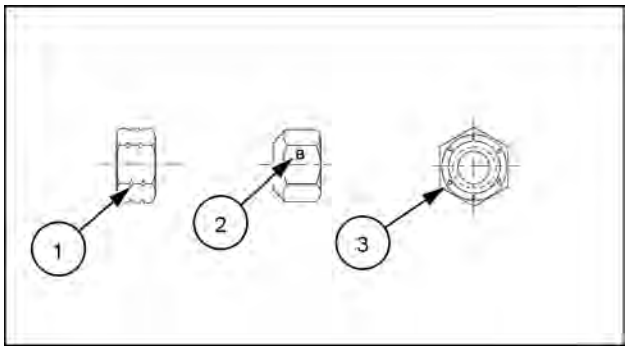

20090268 4

Grade Identification

Grade	Corner Marking Method (1)	Flats Marking Method (2)	Clock Marking Method (3)
Grade A	No Notches	No Mark	No Marks
Grade B	One Circumferential Notch	Letter B	Three Marks
Grade C	Two Circumferential Notches	Letter C	Six Marks

General specification - Biodiesel fuels

C227	
C232	
L221 TIER 4B Final [NEM479941 -]	
L228	

Biodiesel usage in NEW HOLLAND CONSTRUCTION products

Introduction to Fatty Acid Methyl Ester (FAME) biodiesel

FAME biodiesel, called biodiesel fuel in the following section, consists of a family of fuels derived from vegetable oils treated with methyl esters.

There are two main biodiesel fuel types: Rapeseed Methyl Ester (RME) and Soybean Methyl Ester (SME). RME is a blend of rapeseed and sunflower methyl ester, and is the preferred crop in Europe. SME is the preferred crop in the United States.

Biodiesel fuel is a renewable alternative fuel source. Its use and development is promoted worldwide, especially in Europe and in the United States.

NOTICE: *Your Selective Catalytic Reduction (SCR) system is compatible with up to* ***20 %*** *biodiesel fuel (B20). Be aware that the use of biodiesel fuel that does not comply with the standards mentioned in this section could lead to severe damage to the engine, fuel system or aftertreatment system of your machine. The use of non-approved fuels may void NEW HOLLAND CONSTRUCTION Warranty coverage.*

Biodiesel fuel can be used to run diesel engines as pure biodiesel fuel or when blended with standard diesel fuel:

- B5: indicates the blend of **5 %** biodiesel and **95 %** diesel fuels.
- B7: indicates the blend of **7 %** biodiesel and **93 %** diesel fuels.
- B20: indicates the blend of **20 %** biodiesel and **80 %** diesel fuels.
- B100: indicates pure biodiesel, or **100 %** biodiesel fuel. Do not use.

Biodiesel fuel has several positive features in comparison with diesel fuel:

- Biodiesel fuel adds lubricity to the fuel, which is beneficial in many circumstances, particularly as sulfur and aromatics are removed from the fuel.
- Biodiesel has a greater cetane number and burns cleaner.
- Biodiesel produces less particulate matter and reduces smoke emissions.
- Biodiesel is fully biodegradable and non-toxic.

Diesel and biodiesel fuel specifications

Tier 4a diesel fuel specifications are covered by the following:

- **ASTM D975-10**, Standard Specification for Diesel Fuel Oils. (15 ppm sulfur maximum.)

Biodiesel blends are covered by:

- United States Diesel Fuel Specification **ASTM D6751-09A** allows up to **5 %** biodiesel since 2009. United States fuel suppliers are allowed to use up to **5 %** biodiesel fuel (B5) to supply the network.
- United States Biodiesel Fuel Specification **ASTM D7467-09A** provides specifications for diesel and biodiesel blends from B5 to B20.

Pure biodiesel (B100) specification is covered by the following requirements:

- **ASTM D6751-09A** - Standard specification for biodiesel fuel blend stock (B100) for middle distillate fuels.

  NOTE: ASTM D6751 *specification has been updated to improve the quality of biodiesel in the market place.*

Before raw oil can be converted into usable biodiesel fuel, it must undergo transesterification to remove glycerides. During the transesterification process, the oil reacts with an alcohol to separate the glycerine from the fat or vegetable oil. This process leaves behind two products: methyl ester (the chemical name for biodiesel) and glycerine (a byproduct usually sold for use in soaps or other products).

NOTICE: *Biodiesel fuels approved for use in the NEW HOLLAND CONSTRUCTION equipment must be transesterified and comply with the North America Standard* ***ASTM D6751****.*

NOTICE: *Cold Pressed Biodiesel, Cold Pressed Oil, Straight Vegetable Oil (SVO), or more generally unrefined vegetable oils used as motor fuel, are fuels that are normally made from Rapeseed oil or similar high oil content crops. These kinds of fuel are not transesterified, so they do not fulfil the* ***ASTM D6751*** *requirements. There is no recognized quality standard available for these types of fuel. Therefore the use of Cold Pressed Biodiesel, Cold Pressed Oil, Straight Vegetable Oil (SVO), or more generally unrefined vegetable oils used as motor fuel are NOT APPROVED at any blend in any NEW HOLLAND CONSTRUCTION product.*

NOTICE: *Any engine and fuel injection equipment fitted to a NEW HOLLAND CONSTRUCTION vehicle found to have run with any blend of NON-APPROVED fuel (fuel not fulfilling the specification described in the requirement* ***ASTM D6751****) will no longer be covered for Warranty by NEW HOLLAND CONSTRUCTION.*

Biodiesel fuel usage conditions

You must stringently follow the biodiesel fuel usage conditions. Incorrect application of the biodiesel fuel usage conditions could lead to severe damage to the engine, fuel injection equipment and aftertreatment system.

The main concerns related to operation with biodiesel fuels are:

- Filters and injector blockage caused by poor fuel quality.
- Wear and corrosion of internal components due to water content, which affects lubricity.
- Deterioration of some rubber sealing compounds in the fuel system.
- Biodiesel oxidation, which can lead to the formation of deposits that can harm the fuel injection system.

NOTICE: *Any problem in the engine fuel injection equipment associated with non-compliance to the following conditions for biodiesel fuel handling and maintenance will not be covered for Warranty by NEW HOLLAND CONSTRUCTION.*

Purchase biodiesel fuel from a trusted supplier who understands the product and maintains acceptable fuel quality. It is highly recommended that you use biodiesel from BQ 9000 accredited suppliers to maintain the quality and consistency of the fuel. The BQ 9000 Quality Management Program is accredited by the National Biodiesel Board for producers and marketers of biodiesel fuel. See the National Biodiesel Board website at www.biodiesel.org for more information.

The use of biodiesel blends above B5 through B20 will not void the NEW HOLLAND CONSTRUCTION warranty as long as the following conditions for biodiesel fuel handling and maintenance are stringently followed:

Biodiesel fuel must be pre-blended by the supplier. Mixing biodiesel fuels on-site can result in an incorrect mixture that could damage the engine and/or fuel system.

For machines using Tier 4a engines with SCR aftertreatment:

1. If the biodiesel blend stock to **ASTM D6751-09A** is used, special precautions need to be taken to insure that it fully complies with the following special requirements:
   - Group I Metals content (Sodium + Potassium) is ≤ **5 mg/kg** per **EN14538** as specified in the biodiesel spec.
   - Group II Metals content (Calcium + Magnesium) is ≤ **5 mg/kg** per **EN14538** as specified in the biodiesel spec.
   - Phosphorus content lower than specified is a mandatory requirement. Phosphorus must not exceed **4 mg/kg** per **ASTM D4951**.
2. The resulting greater than B5 through B20 blend must not exceed **1 mg/kg** for Group I Metals (Sodium + Potassium) and for Group II Metals (Calcium + Magnesium).

NOTICE: For machines using Tier 4a engines with SCR aftertreatment in regions where the biodiesel blend stock is supplied to the ASTM D6751-09A standard, it is essential that evidence of compliance to the special limits for Group I Metals, Group II Metals and the reduced phosphorus content specified above be obtained on every delivery of fuel from the fuel supplier. Failure to comply with this requirement can result in damage to the SCR system which will not be covered under warranty.

NOTICE: *NEW HOLLAND CONSTRUCTION may void your warranty if the problem is associated with poor fuel quality due to improper blending. It is the responsibility of the fuel supplier and/or yourself to ensure the right type of fuel and blend is delivered and used.*

Maintenance intervals

For machines using the all electronic engines with a high pressure common rail fuel system, the engine oil and filter change interval is reduced down to 50% of the standard value when using biodiesel blends greater than B5 up to B20. Please refer to the maintenance intervals specified in the Operator Manual for all engines.

Check all hoses, connections and gaskets to ensure integrity and cleanliness every 3 months or 150 hours of operation, whichever comes first.

Regular oil sampling is highly recommended to monitor for oil and engine deterioration.

NOTE: *Oil sampling kits are available from your authorized NEW HOLLAND CONSTRUCTION dealer.*

When switching back from biodiesel to regular #2 diesel, all fuel filter, oil and oil filter should be changed even if this falls between routine service intervals.

Storage

The machine should not be stored for more than three months with biodiesel in the fuel system. For longer storage time, it is strongly suggested that only regular #2 diesel fuel is used.

NOTE: *If storage for longer than 3 months is necessary, the engine must be run on regular #2 diesel for a minimum of* ***20 h*** *to flush the biodiesel fuel out of the fuel system prior to storage.*

Biodiesel is highly hygroscopic and tends to collect water more than diesel fuel. This increases the risk of algae and bacteria growth which can cause severe damage to the fuel injection system. Keep the machine fuel tanks and on-site storage tanks as full as possible to limit the amount of air and water vapors inside the tank. Drain water from the tanks at least once a week.

NOTICE: *Do not use biocide additives on Tier 4a engines with an exhaust aftertreatment system.*

Capacities

C227 TIER 4B Final [NDM471836 -]	
C232	
L221 TIER 4B Final [NEM479941 -]	
L228	

Fuel tank

Capacity	
L213, L216	**60.5 L** (**16.0 US gal**)
L218, L220, L221, C227	**75.5 L** (**20.0 US gal**)
L228, C232	**95.5 L** (**25.5 US gal**)
Specifications	#1 or #2 Diesel ultra low sulfur

Cooling system

Capacity	
L213	**15.0 L** (**4.0 US gal**)
L216 L218, L220	**15.6 L** (**4.2 US gal**)
L221, C227	**17.0 L** (**4.5 US gal**)
L228, C232	**19.0 L** (**5.0 US gal**)
Specifications	**NEW HOLLAND AMBRA ACTIFULL™ OT EXTENDED LIFE COOLANT**

Hydraulic system

Reservoir capacity	**15.0 L** (**3.96 US gal**)
System capacity:	
L213, L216	**29.9 L** (**7.9 US gal**)
L218, L220, L221, C227	**38.1 L** (**10.0 US gal**)
L228, C232	**45.4 L** (**12.0 US gal**)
Specifications	**TUTELA AUTO SUPREME™ ENGINE OIL SAE 10W-30**

Chain compartments

Capacity - each side	
L213, L216	**6.25 L** (**6.6 US qt**)
L218, L220	**7.4 L** (**7.9 US qt**)
L221	**26.0 L** (**27.5 US qt**)
L228	**22.2 L** (**23.5 US qt**)
Specifications	**TUTELA AUTO SUPREME™ ENGINE OIL SAE 10W-30**

Grease fittings

Quantity	As required
Specifications	**TUTELA MOLY GREASE GR-75** (Molydisulfide)

Engine crank case oil

Capacity - with filter change	
L213, L216, L218, L220	**7.0 L** (**7.5 US qt**)
L221, L228, C227, C232	**8.5 L** (**9.0 US qt**)
Specifications	**NEW HOLLAND AMBRA UNITEK MASTERGOLD SBL CJ-4**

Final track drive

Capacity - each side	**1.0 l** (**1.06 US qt**) +/- **0.1 l** (**0.1 US qt**)
Specifications	**TUTELA HYPOIDE EP GEAR LUBE SAE 80W-90**

Product identification

Product Identification Number (PIN).

- Outside right-hand side of chassis - vertical lift

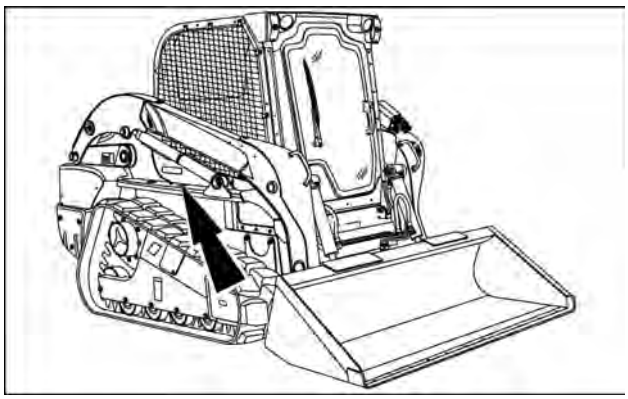

9310748611 1

- Inside left-hand side loader arm tower - radial lift

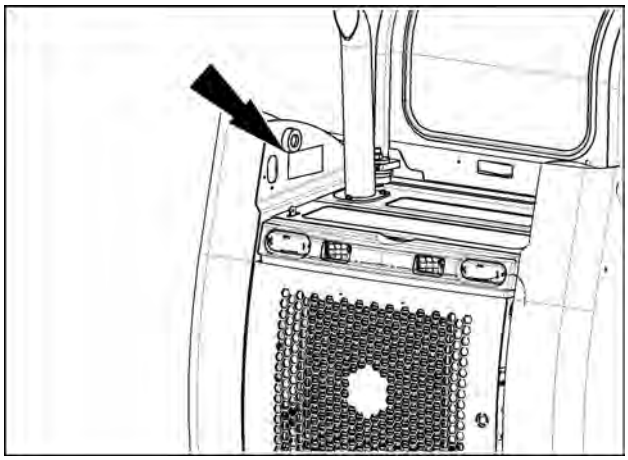

931002296A 2

Roll Over Protective Structure (ROPS) certification plate.

- Front edge (lower) inside cab.

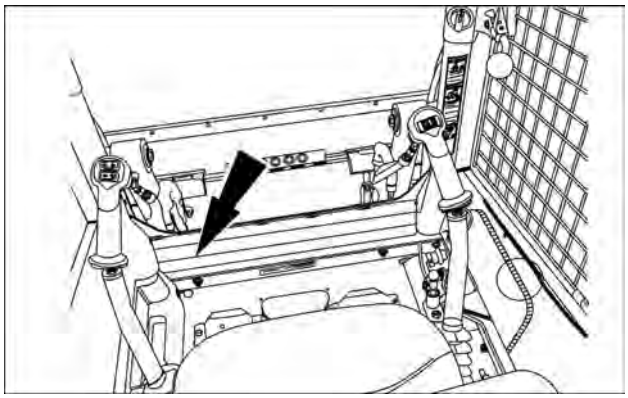

931007505A 3

Engine serial number plate location for Models L213 and L216

- On the fuel injection pump.

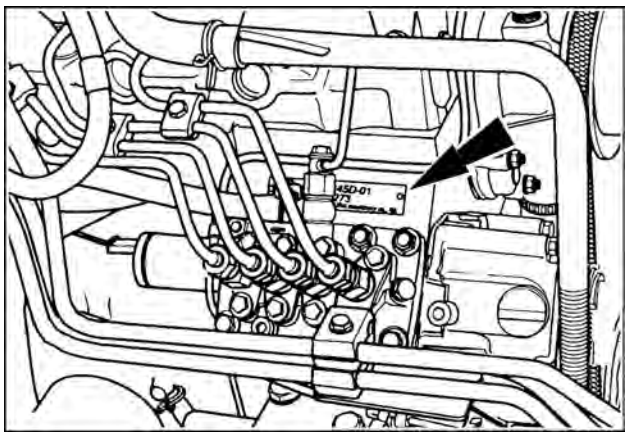

76075756 4

https://truckmanualshub.com/

Engine serial number plate location for Models L218 and L220

- On the right-hand side of the engine.

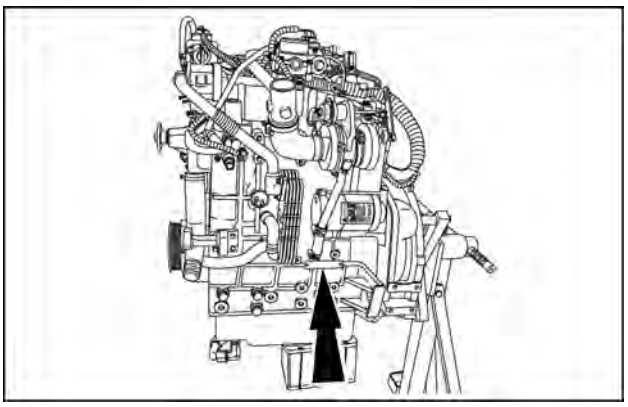

RAPH12SSL0406AA 5

Engine serial number plate location for Models L221, L228, C227, and C232

- On the side of the Exhaust Gas Recirculation (EGR) cooler.
- On top of the valve cover.
- The serial number is also stamped on the engine front cover.

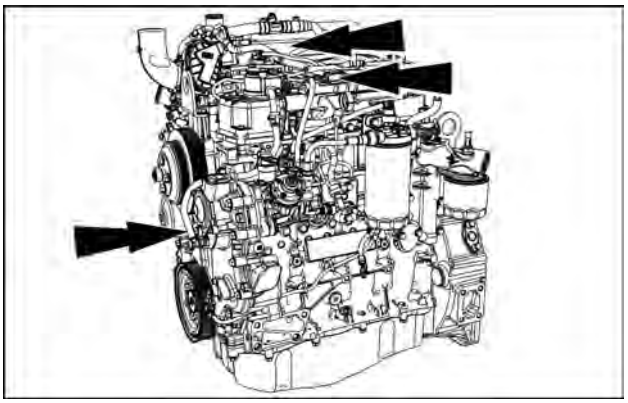

23119866 6

Bucket identification plate

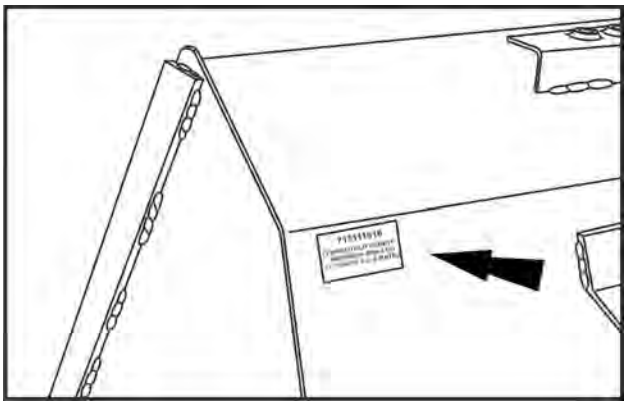

BT04F026-01 7

Product identification - Machine orientation

C227	
C232	
L221	
L228	

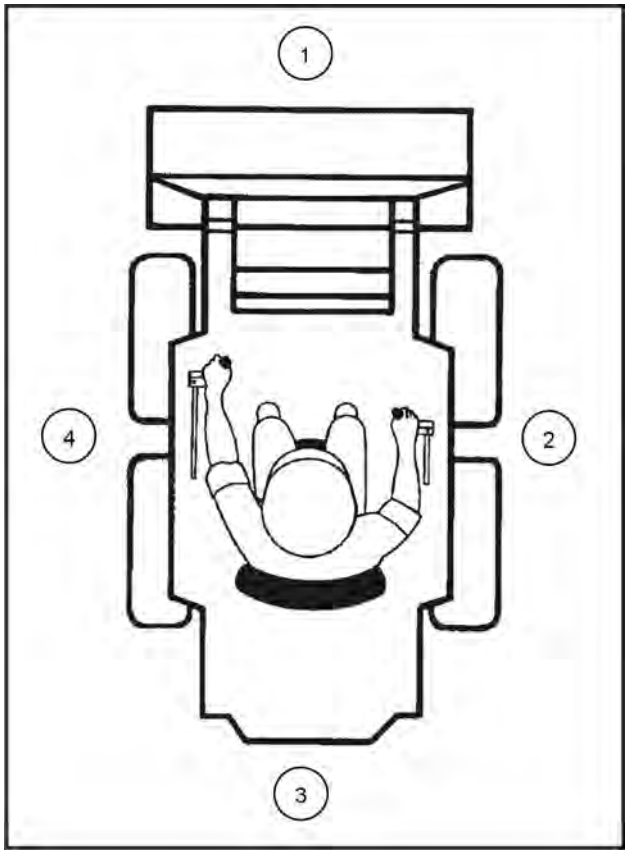

RAPH12SSL0057BA 1

The terms front (1), right (2), rear (3), and left (4) are used in this manual to indicate the direction as seen from the operator's seat.

https://truckmanualshub.com/

NEW HOLLAND
CONSTRUCTION

SERVICE MANUAL

Engine

C227 TIER 4B Final [NDM471836 -]
C232 TIER 4B (FINAL)
L221 TIER 4B Final [NEM479941 -]
L228 TIER 4B (FINAL)

https://truckmanualshub.com/

Contents

Engine - 10

[10.001] Engine and crankcase 10.1

[10.216] Fuel tanks 10.2

[10.501] Exhaust Gas Recirculation (EGR) - Diesel Particulate Filter (DPF) exhaust treatment 10.3

[10.400] Engine cooling system 10.4

[10.414] Fan and drive 10.5

[10.304] Engine lubrication system 10.6

https://truckmanualshub.com/

Engine - 10

Engine and crankcase - 001

C227 TIER 4B Final [NDM471836 -]
C232 TIER 4B (FINAL)
L221 TIER 4B Final [NEM479941 -]
L228 TIER 4B (FINAL)

https://truckmanualshub.com/

Contents

Engine - 10

Engine and crankcase - 001

SERVICE

Engine

Drain fluid (*) 3
Remove (*) 4
Install (*) 16
Filling (*) 27

(*) See content for specific models

https://truckmanualshub.com/

Engine - Drain fluid

C227 TIER 4B Final [NDM471836 -]	
C232	
L221 TIER 4B Final [NEM479941 -]	
L228	

1. Remove the access cover at the rear, lower left of the machine, exposing the engine oil drain hose and remote oil filter.
2. Remove the drain plug to drain the oil.
3. When the oil has completely drained, reinstall the drain plug and torque to **68 - 82 N·m** (**50 - 61 lb ft**).

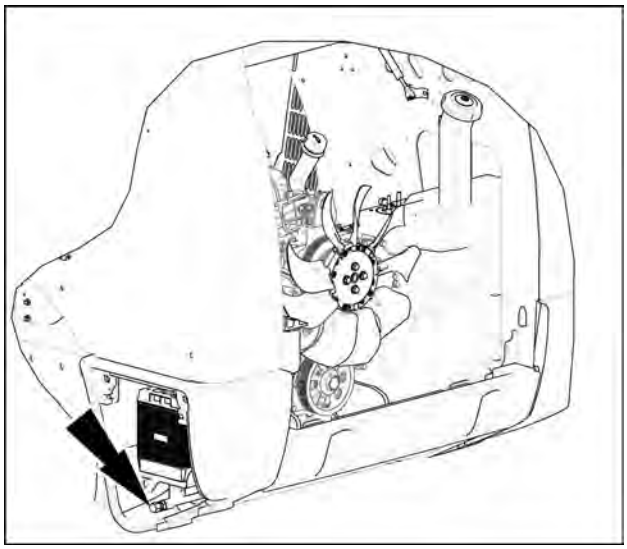

63109370 1

Engine - Remove

C227 TIER 4B Final [NDM471836 -]	
C232	
L221 TIER 4B Final [NEM479941 -]	
L228	

⚠ WARNING

Heavy objects!
Lift and handle all heavy components using lifting equipment with adequate capacity. Always support units or parts with suitable slings or hooks. Make sure the work area is clear of all bystanders. Failure to comply could result in death or serious injury.

W0398A

The following procedure has been performed on a radial lift machine. Engine removal for vertical lift machines is very similar.

Prior operation:
Tilt the cab. Please see **Cab tilting system - Tilt (90.150)**.
Prior operation:
Disconnect the battery. See **Battery - Disconnect (55.302)**.
Prior operation:
Drain the engine oil. Please see **Engine - Drain fluid (10.001)**.
Prior operation:
Drain the coolant. Please see **Radiator - Drain fluid (10.400)**.
Prior operation:
Discharge the A/C system (if equipped). See **Air conditioning - Discharging (50.200)**.

1. Remove access plate **(1)** for the engine oil pan from the chassis.

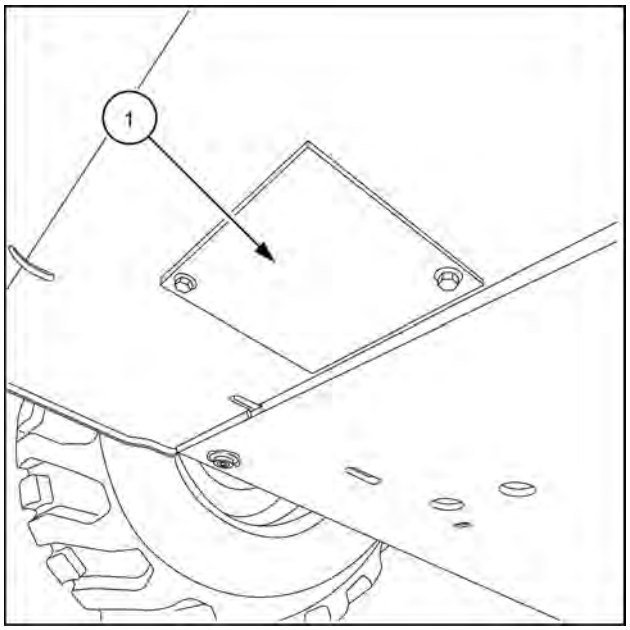

RAPH12SSL0233AA 1

2. Disconnect the hose **(1)** for the oil drain plug from the engine oil pan.

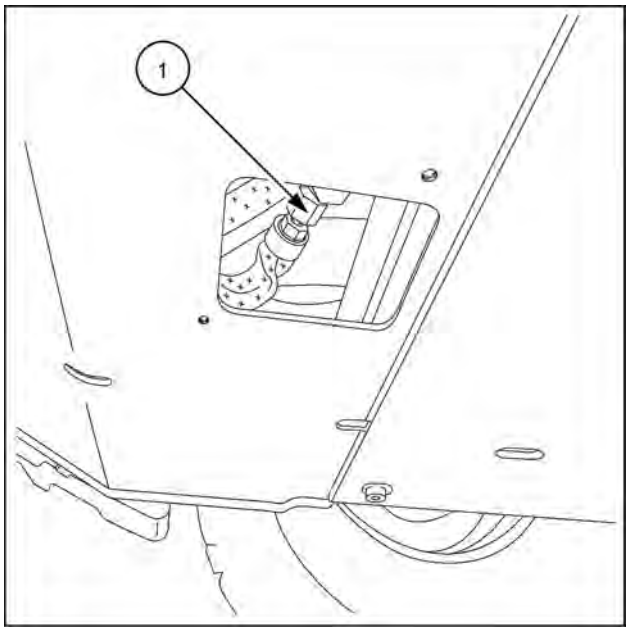

RAPH12SSL0232AA 2

3. Remove the mounting bolts for the overflow bottle.
4. Remove the overflow bottle from the chassis.

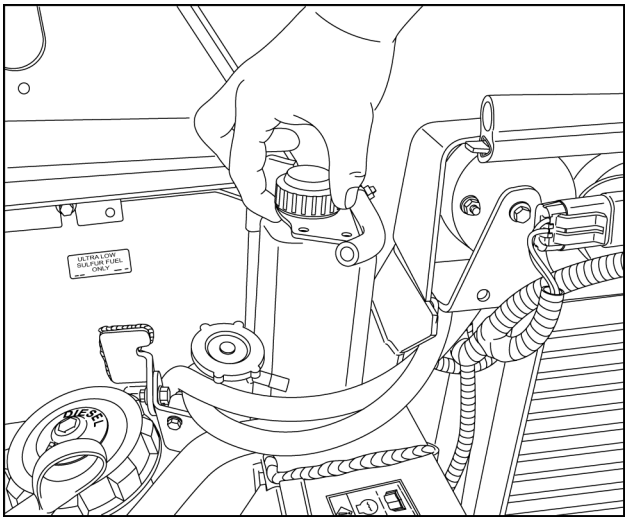

RAIL14SSL0845BA 3

5. If equipped with A/C, disconnect the A/C lines **(1)** from the condenser.
6. Disconnect the fan motor **(2)** from the wiring harness.

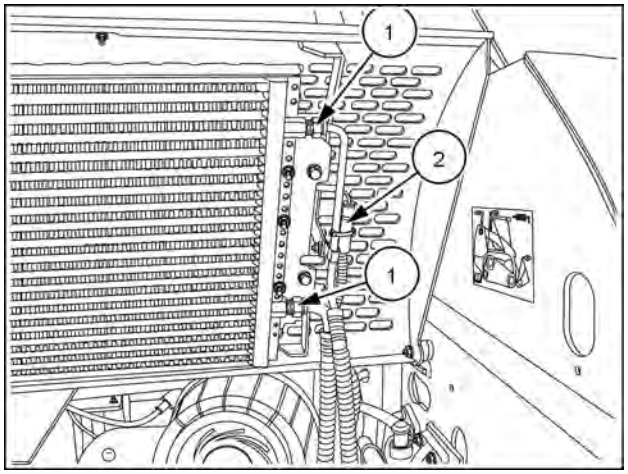

RAPH12SSL0075AA 4

7. Support the engine hood with a suitable lifting device.
8. Disconnect the engine hood strut **(1)** from the engine hood.

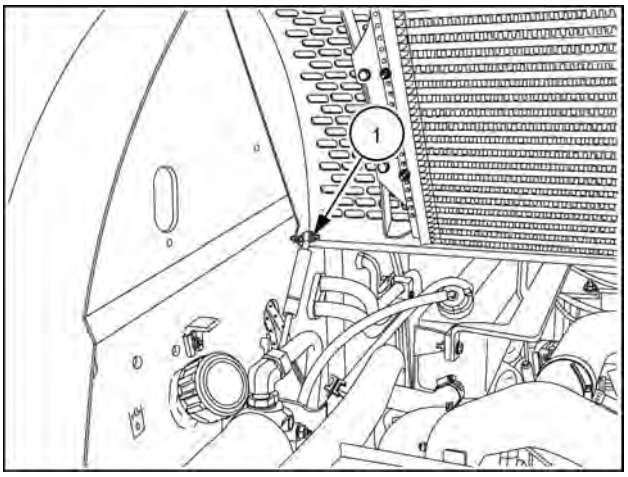

RAPH12SSL0074AA 5

9. Remove the mounting hardware **(2)** from the engine hood.
10. Remove the engine hood **(1)** from the chassis.

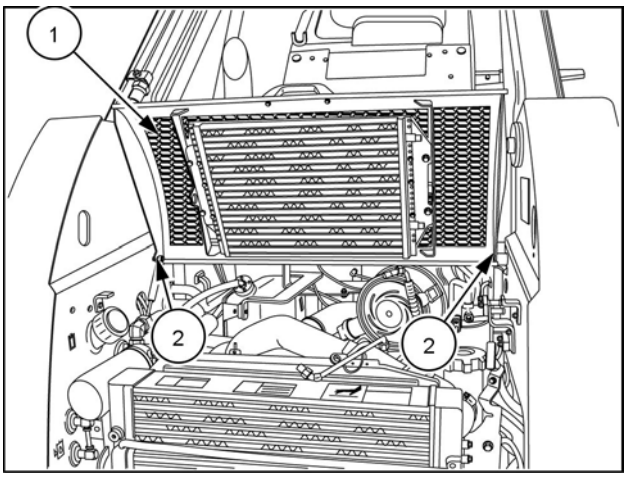

RAPH12SSL0073AA 6

11. Remove the engine cover **(1)** from the chassis.

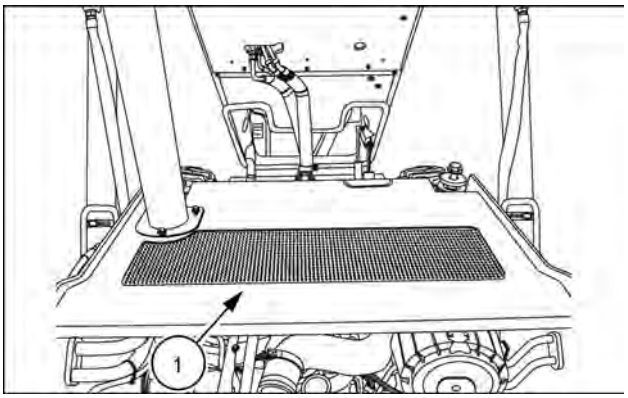

931001899 7

12. Remove the air cooler **(1)** from the shroud.

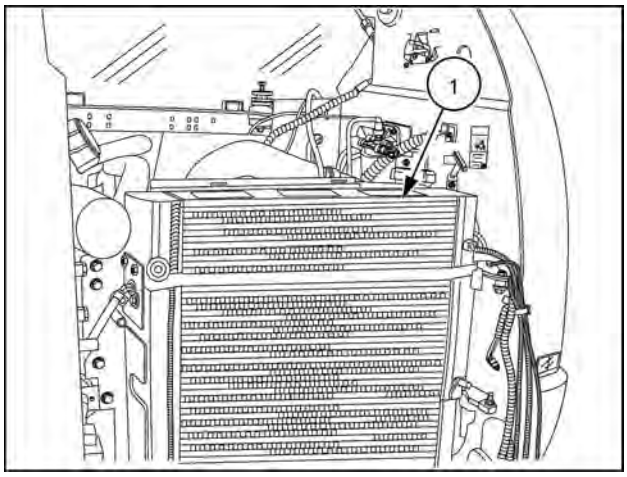

RAPH12SSL0067AA 8

13. Disconnect the upper radiator hose **(1)** from the radiator.

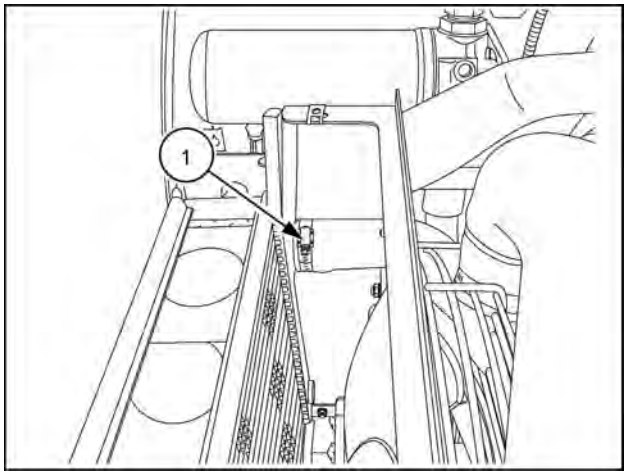

RAPH12SSL0065AA 9

14. Disconnect the lower radiator hose **(1)** from the radiator.

NOTE: *The rear access door has been removed for picture clarity.*

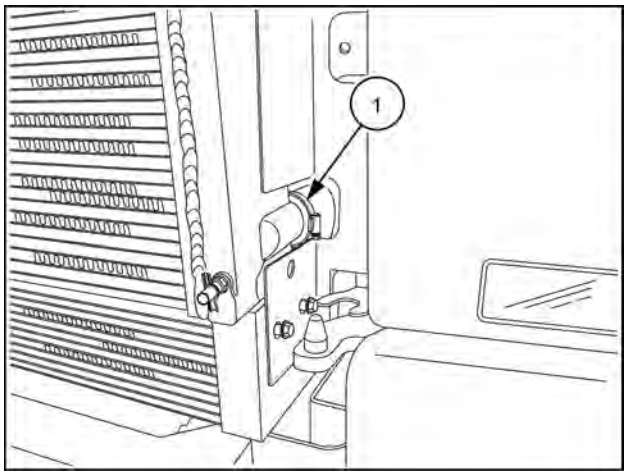

RAPH12SSL0083AA 10

15. Remove the radiator **(2)** from the shroud.
16.

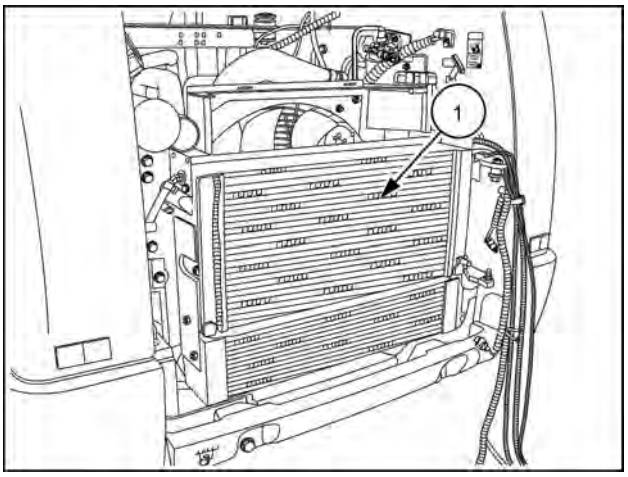

RAPH12SSL0066AA 11

17. Remove the radiator fan **(1)** from the engine.

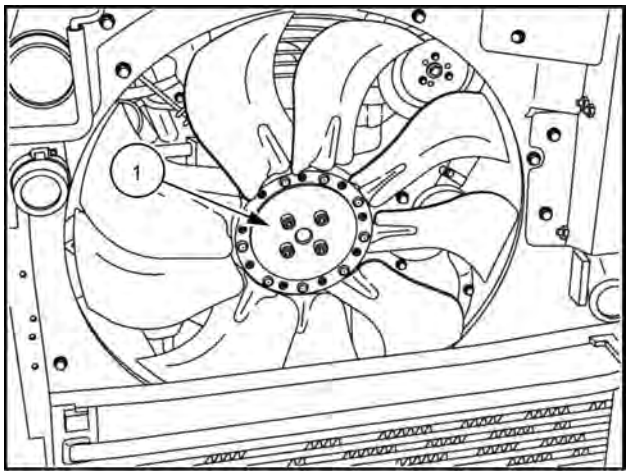

RAPH12SSL0062AA 12

18. Unbolt and remove the shroud **(1)**.

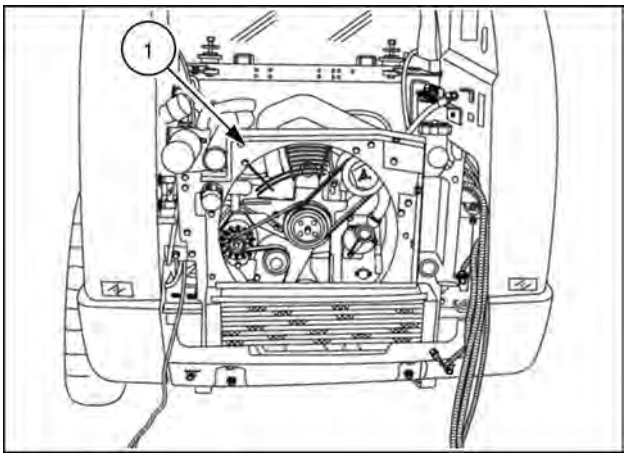

RAPH12SSL0264AA 13

19. Remove the oil cooler **(1)**.

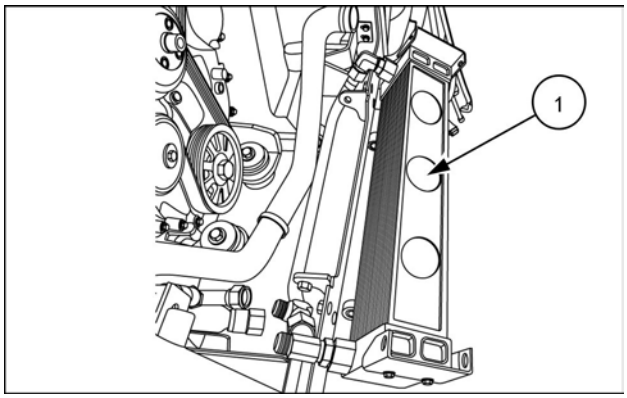

931001884 14

20. Remove the mounting bolts **(1)** retaining the mounting flange for the muffler inlet pipe to the turbocharger.

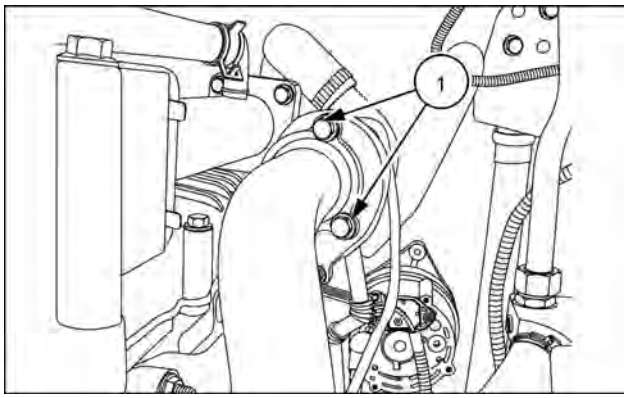

931001896 15

21. Remove the retaining bolts **(1)** from the muffler support.
22. Remove the muffler.

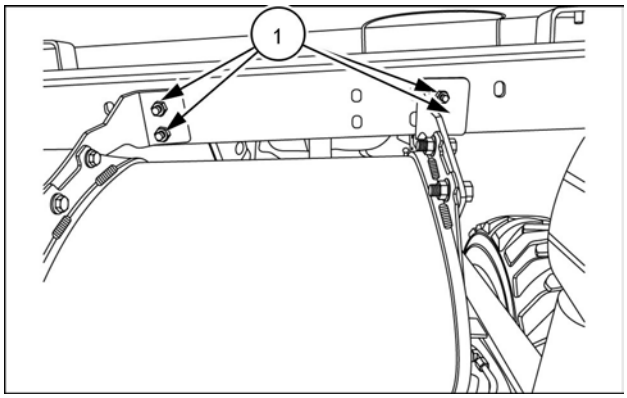

931001895 16

23. Disconnect the air restriction sensor **(1)** from the wiring harness.

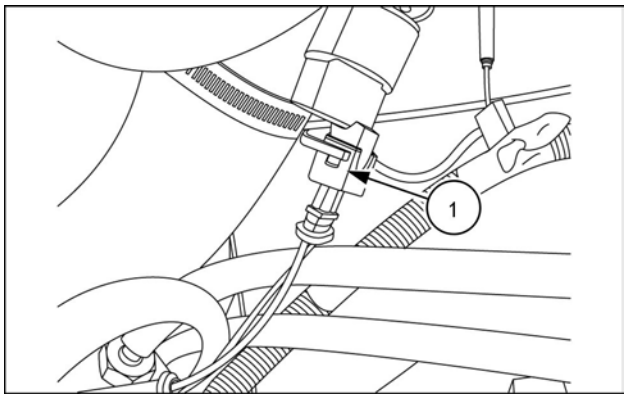

931002030 17

24. Loosen the hose clamps on the intake tube at both ends.
25. Remove the tube **(1)** for the air cleaner and turbocharger.

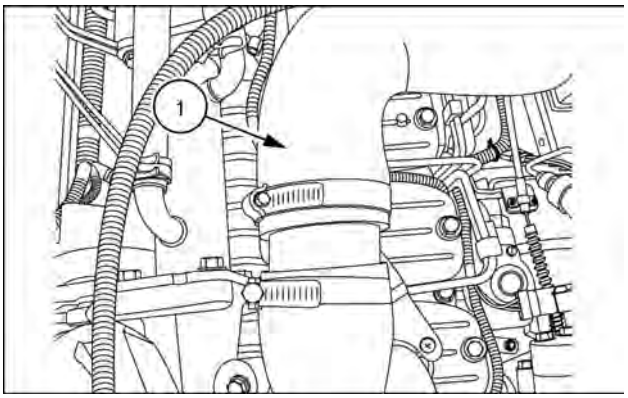

931001898 18

26. Remove the air cleaner housing **(1)** from the chassis.

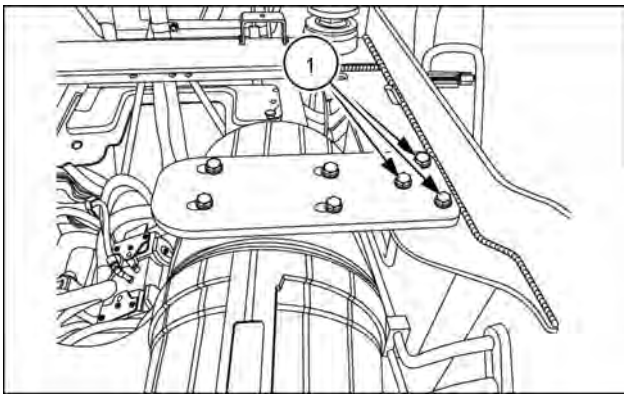

931001900 19

27. Disconnect the alternator **(1)** from the wiring harness.

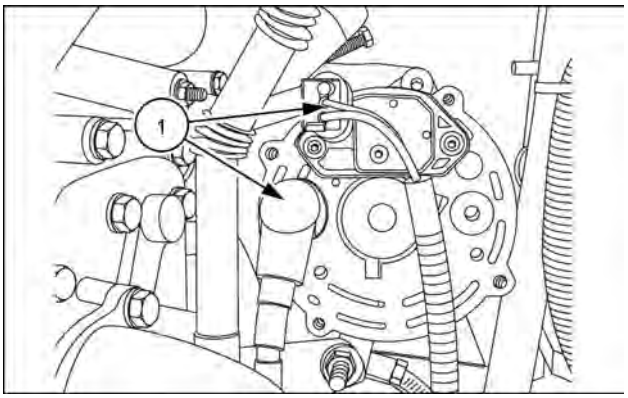

931001908 20

28. Disconnect the starter **(1)** from the wiring harness.

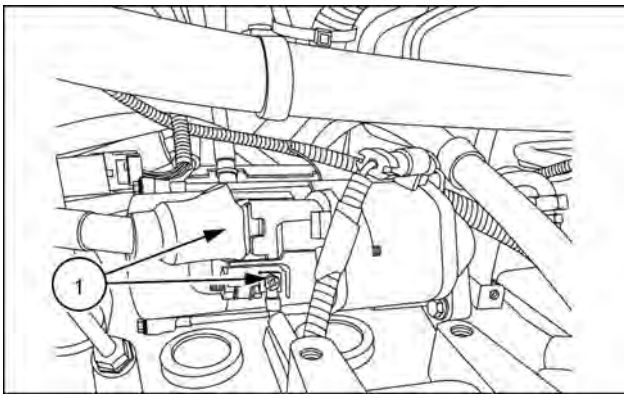

931001909 21

29. Disconnect the ground connection **(1)** below the starter **(2)**.

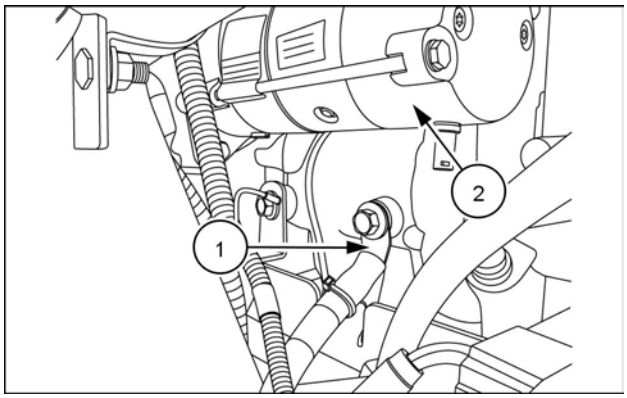

931001910 22

30. Remove the oil filler neck **(1)** from the engine.
31. If equipped with A/C, disconnect the low pressure line **(2)** on the A/C compressor.

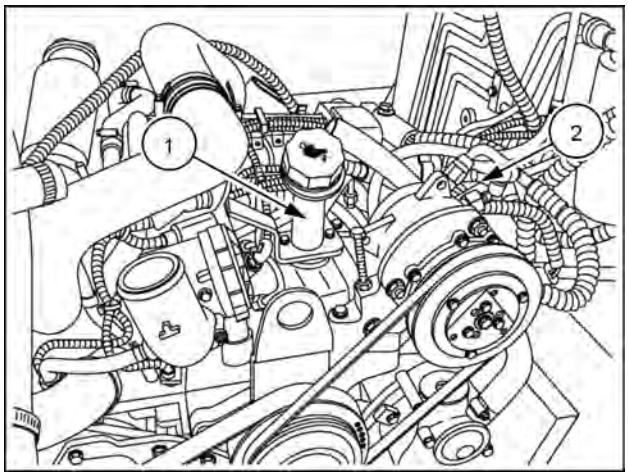

RAPH12SSL0266AA 23

32. Disconnect the fuel return line **(1)** on the tank.

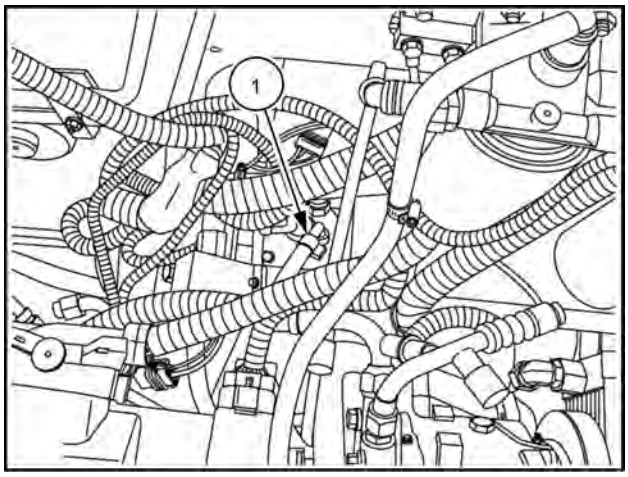

RAPH12SSL0053AA 24

33. Disconnect the fuel feed line **(1)** on the fuel filter housing.

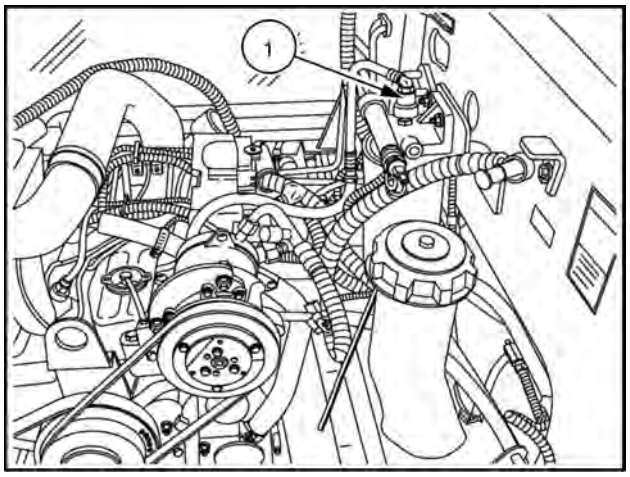

RAPH12SSL0054AA 25

34. Disconnect the engine harness connectors **(1)**.

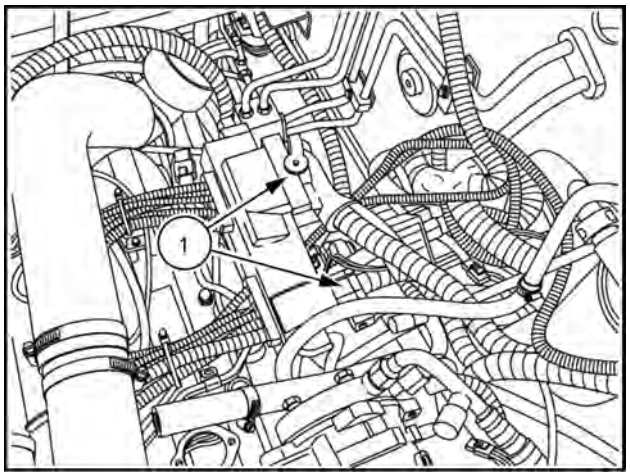

RAPH12SSL0052AA 26

35. Disconnect the fuel temperature sensor **(1)** from the wiring harness.
36. Disconnect the fuel feed line **(2)** from the engine.

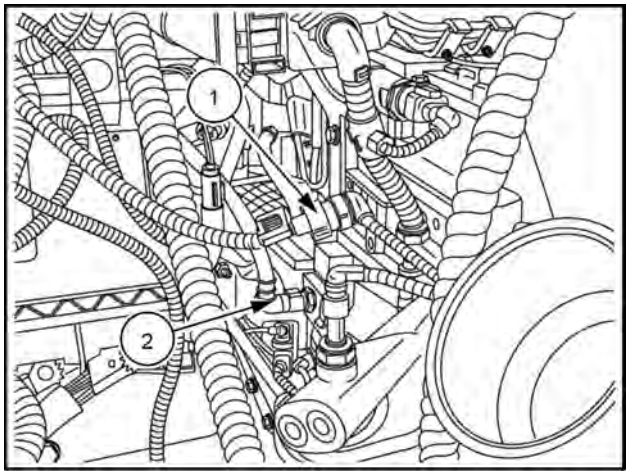

RAPH12SSL0055AA 27

37. Place a suitable container under the remote engine oil filter lines **(1)**.
38. Label and disconnect oil filter lines **(1)**.

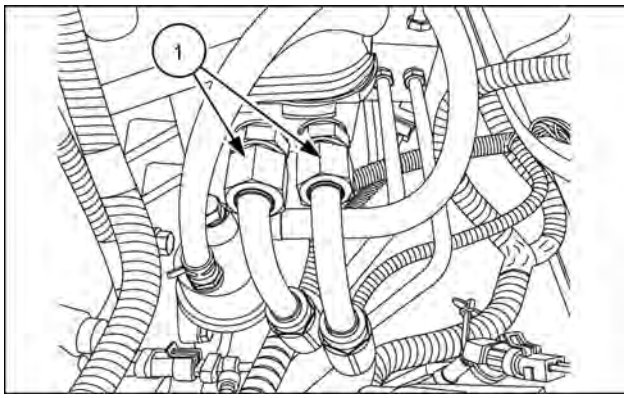

931001923 28

39. Place a suitable support beam **(1)** across the skid steer frame.
40. Tie a suitable strap **(2)** around the pump **(3)** and secure to the support beam.

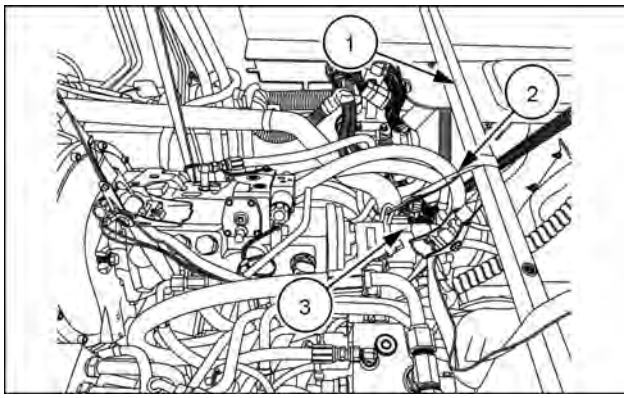

931001929 29

41. Remove the pump mounting bolts **(1)**.

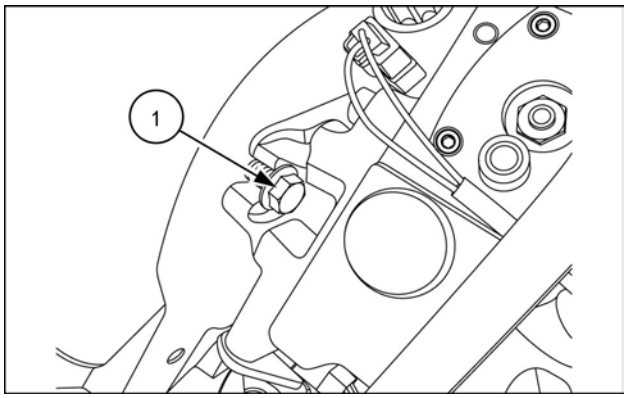

931001928 30

42. Disengage the pump assembly **(1)** from the engine housing **(2)**.

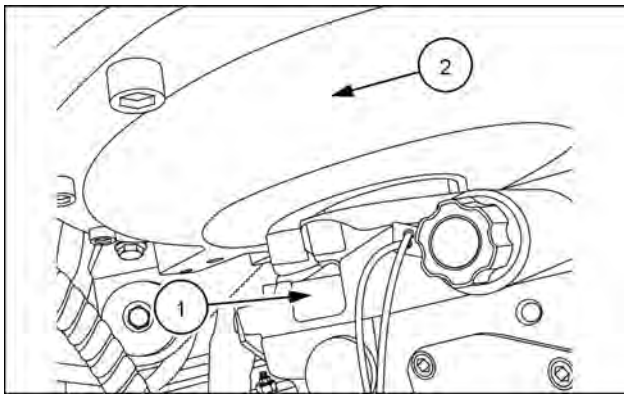

931001936 31

43. **⚠ DANGER**

Heavy parts!
Support designated component(s) with adequate lifting equipment.
Failure to comply will result in death or serious injury.

D0018A

Attach proper lifting equipment **(1)** to support the engine **(2)**.

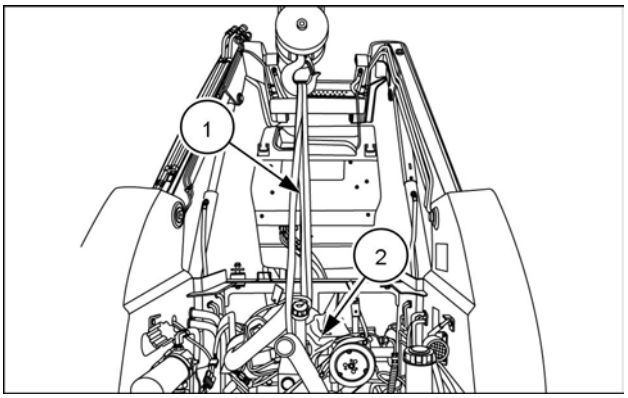

931001944 32

44. Remove the front and rear engine mounts bolts **(1)**.

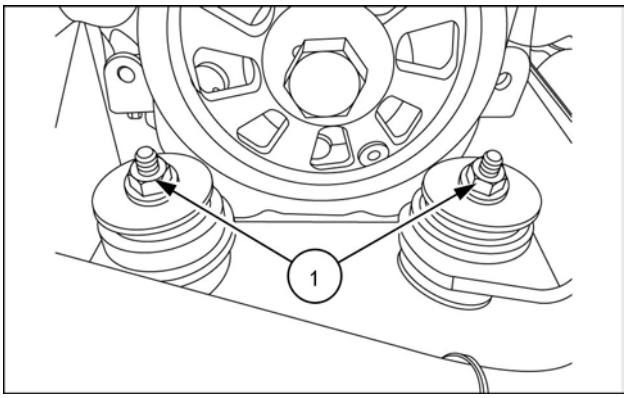

931001933 33

45. Remove heater hose clamp **(1)**.

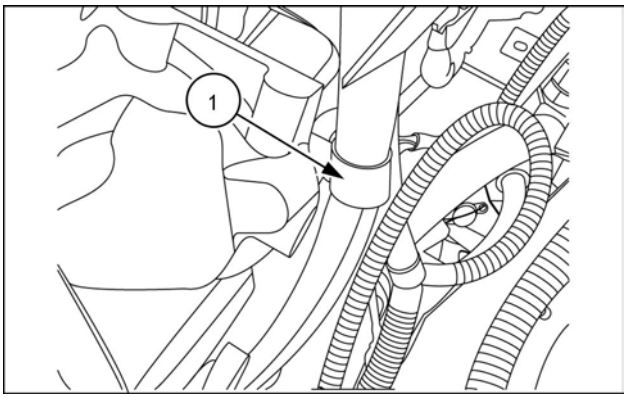

931001943 34

46. Remove upper heater hose **(1)**.

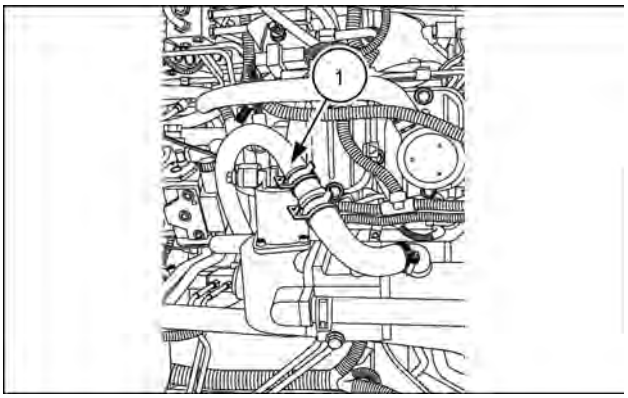

931002114 35

47. Remove the lower heater hose **(1)**.

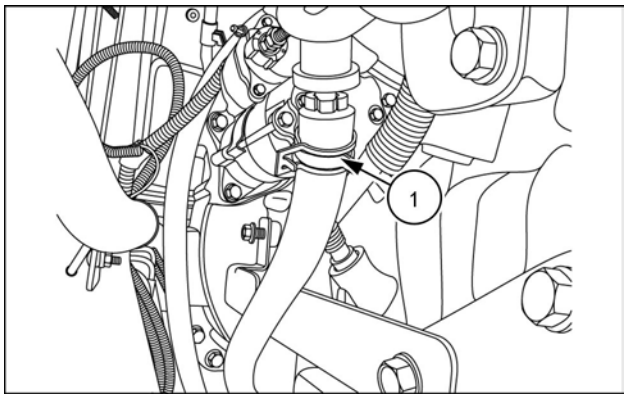

931001940 36

48. **⚠ WARNING**

Heavy object!
ALWAYS use adequate lifting equipment (heavy-duty hoist, loader, or forklift) to lift the component.
Failure to comply could result in death or serious injury.

W0101A

Remove engine **(1)** from the chassis.

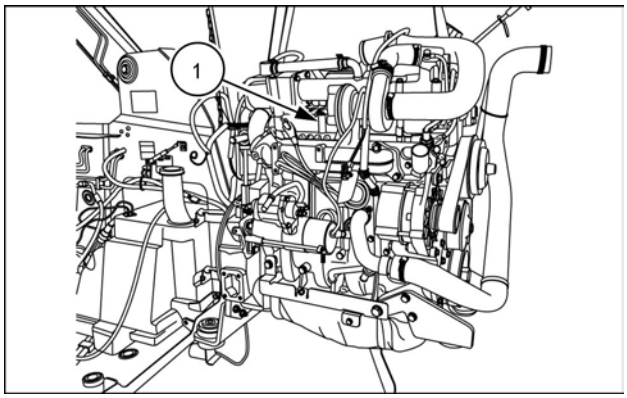

931001946 37

Engine - Install

C227 TIER 4B Final [NDM471836 -]	
C232	
L221 TIER 4B Final [NEM479941 -]	
L228	

⚠ DANGER

Heavy objects!
Lift and handle all heavy components using lifting equipment with adequate capacity. Always support units or parts with suitable slings or hooks. Make sure the work area is clear of all bystanders. Failure to comply will result in death or serious injury.

D0076A

The following procedure has been performed on a radial lift machine. Engine installation for vertical lift machines is very similar.

1. Attach proper lifting equipment to the front and rear of the engine, and carefully lower the engine into the chassis.

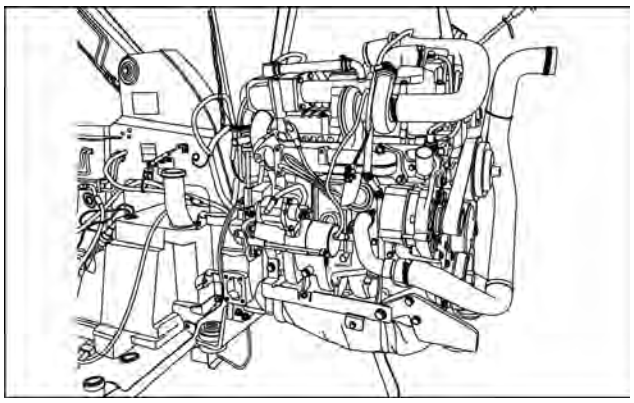

931001946 1

2. Orient the hydraulic pump coupler to the adapter on the engine, ensuring the attachment of the engine plate to the flywheel housing.

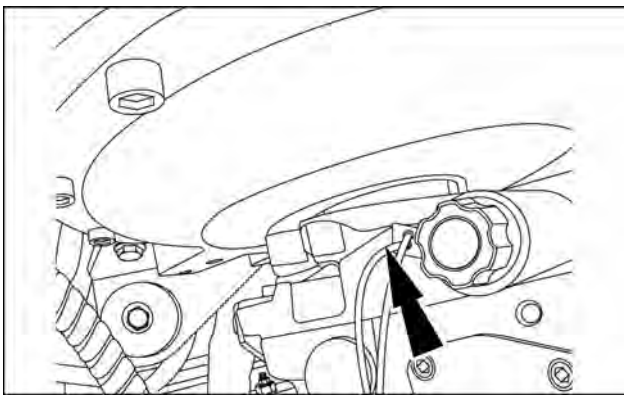

931001936 2

3. Apply **LOCTITE® 243™** to the threads of the mounting bolts **(1)** for the hydrostatic drive assembly.
4. Install the mounting bolts and washers **(1)** into pump housing. Torque the mounting bolts **(1)** for the hydrostatic drive assembly to **87 - 117 N·m** (**64 - 86 lb ft**).

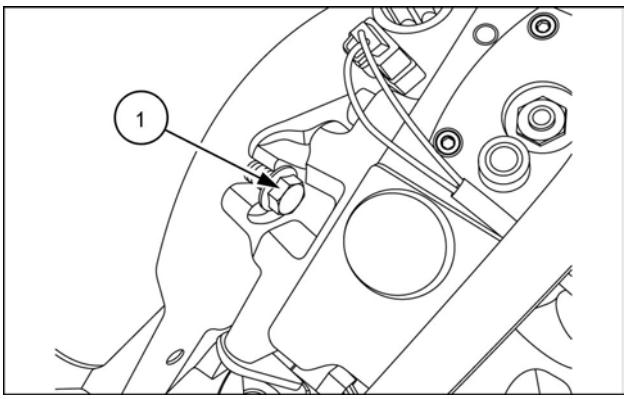

931001928 3

5. Apply **LOCTITE® 243™** to the threads of the rear mounting bolts **(3)** for the engine.
6. Install the two rear mounting bolts **(3)** and bushings for the engine. Torque the rear mounting bolt **(3)** to a torque of **163 - 176 N·m** (**120 - 130 lb ft**).

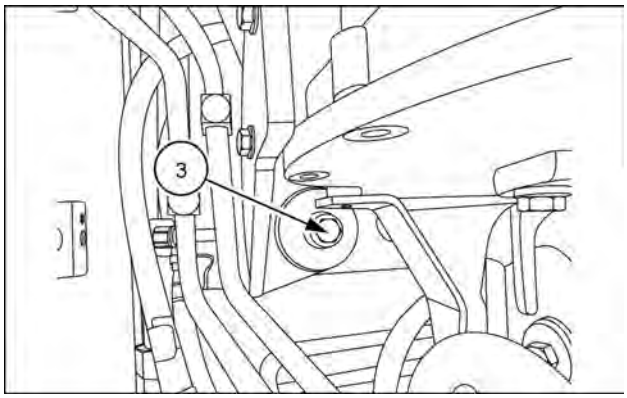

931002047 4

7. Apply **LOCTITE® 243™** to the threads of the front mounting bolts **(2)** for the engine.
8. Install the two front mounting bolts **(2)** and bushings for the engine. Torque the front mounting bolts **(2)** to **163 - 176 N·m** (**120 - 130 lb ft**).

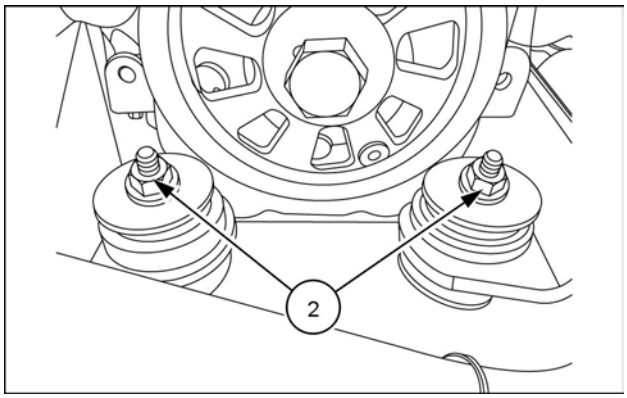

931001933 5

9. Verify that the mounting bolts for the pump are secure, and carefully remove support brace **(4)** and straps **(5)** from pump.

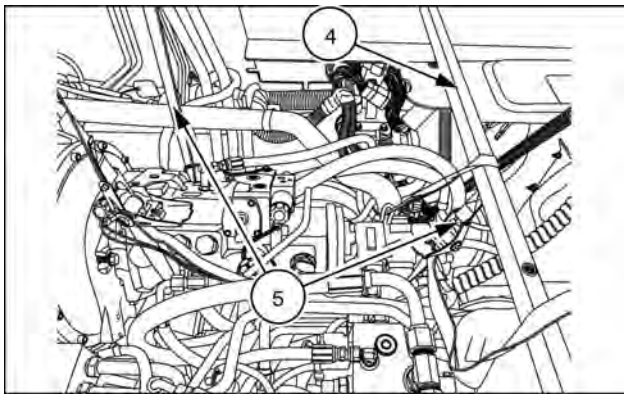

931001929 6

10. Connect the lower heater hose **(6)** to the engine.

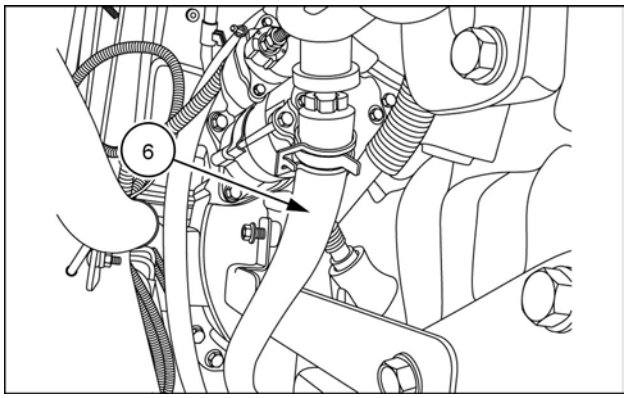

931001940 7

11. Connect the upper heater hose **(7)** to the engine.

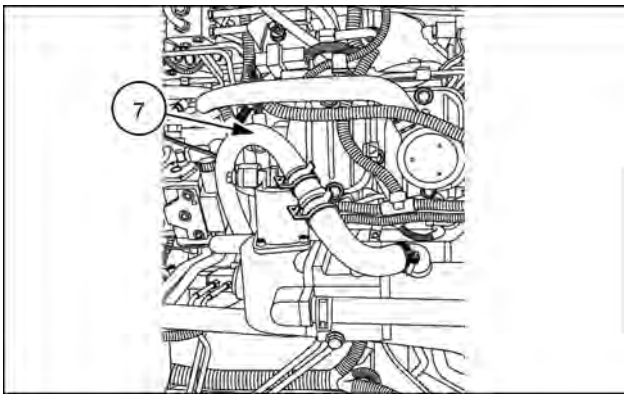

931002114 8

12. Connect the two remote lines **(12)**, **(13)** for the oil filter.

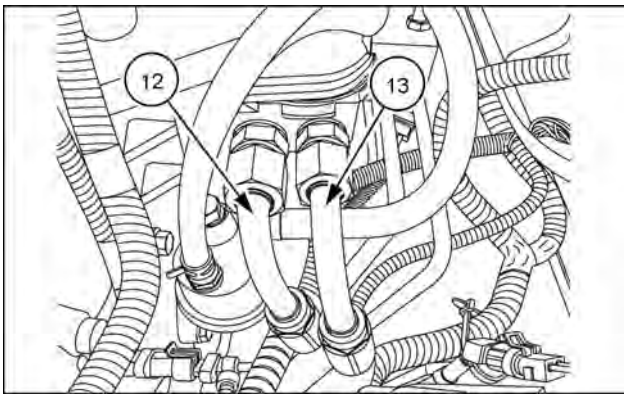

931001923 9

13. Connect the fuel temperature sensor **(1)** to the wiring harness.
14. Connect the fuel feed line **(2)** to the engine.

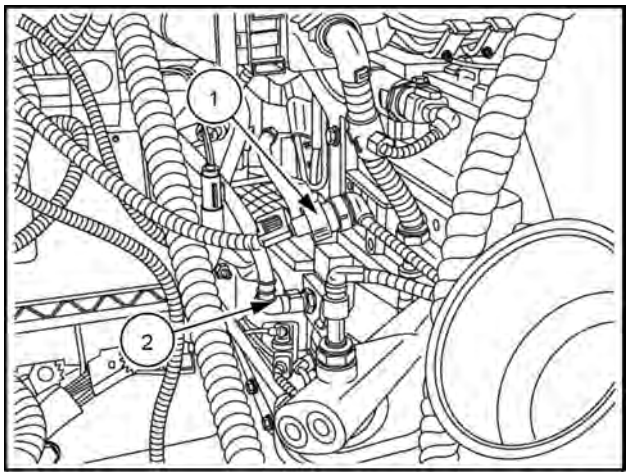

RAPH12SSL0055AA 10

15. Connect the engine harness connectors **(1)** to the engine.

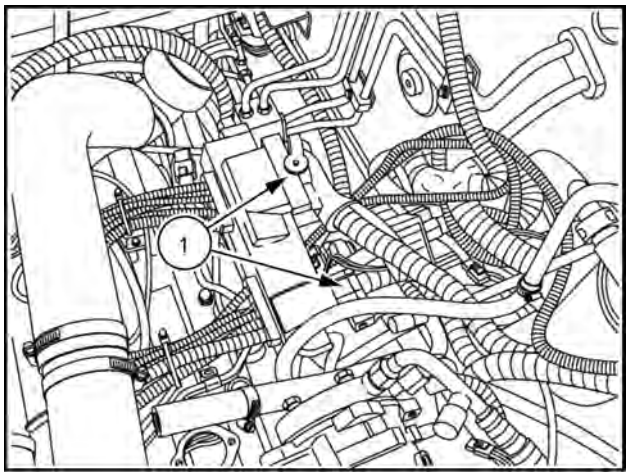

RAPH12SSL0052AA 11

https://truckmanualshub.com/

This as a preview PDF file from **best-manuals.com**

Best Manuals

Download full PDF manual at **best-manuals.com**