https://truckmanualshub.com/

PACCAR PX-8

Operator's Manual

Downloaded from www.Manualslib.com manuals search engine

https://truckmanualshub.com/

Downloaded from www.Manualslib.com manuals search engine

https://truckmanualshub.com/

PACCAR PX-8

Operator's Manual

Y53-1030A 12/09

Downloaded from www.Manualslib.com manuals search engine

https://truckmanualshub.com/

©2010 PACCAR INC - ALL RIGHTS RESERVED

This manual illustrates and describes the operation of features or equipment which may be either standard or optional onthis vehicle. This manual may also include a description of features and equipment which are no longer available or were not ordered on this vehicle. Please disregard any illustrations or descriptions relating to features or equipment which are not on this vehicle.

PACCAR reserves the right to discontinue, change specifications, or change the design of its vehicles at any time without notice and without incurring any obligation.

The information contained in this manual is proprietary to PACCAR. Reproduction, in whole or in part, by any means is strictly prohibited without prior written authorization from PACCAR Inc.

Downloaded from www.Manualslib.com manuals search engine

https://truckmanualshub.com/

FOREWORD

This manual contains information for the correct operation and maintenance of your PACCAR engine.

Read and follow all safety instructions. Refer to the WARNING in the "General Safety Instructions" on page 5.

Keep this manual with the vehicle. If the vehicle is traded or sold, give the manual to the new owner.

The information, specifications, and recommended maintenance guidelines in this manual are based on information in effect at the time of printing. PACCAR Inc reserves the right to make changes at any time without obligation. If you find differences between your engine and the information in this manual, contact your local PACCAR Authorized Repair Location or write to PACCAR Inc c/o Medium Duty Engines, PO Box 1518, Bellevue, WA 98009.

The latest technology and the highest quality components were used to produce this engine. When replacement parts are needed, we recommend using only genuine parts from PACCAR.

NOTE: Warranty information including the EPA and California Emission Warranty is located in the section entitled "WARRANTY," beginning on page 73. Make sure you are familiar with the warranty or warranties applicable to your engine.

Downloaded from www.Manualslib.com manuals search engine

https://truckmanualshub.com/

Downloaded from www.Manualslib.com manuals search engine

https://truckmanualshub.com/

Foreword

Introduction

Safety Signals 3
Illustrations 4
General Safety Instructions 5
Acronyms and Abbreviations 8

Engine Identification

Engine Dataplate 11
PACCAR Engine Nomenclature 12

Operating Instructions

General Information 13
Normal Starting Procedure 15
Cold Weather Starting 19
Starting Procedure After Extended Shutdown or Oil Change 20
Operating the Engine 20
Cold Weather 24
Coolant Recommentations and Specifications 24
Lubricating Recommentations and Specifications 25
Diesel Fuel Recommendations 25
Engine Indicator Lamps 25
Engine Operating Range 27
Engine Braking System 28
Tips for Operation on Level and Dry Pavement 36
Tips for Operation on Grades with Dry Pavement 37
Tips for Operation on Slick Roads 40
Engine Shutdown 42
Electromagnetic Interference (EMI) 42

Maintenance Guidelines

Overview 45
Maintenance Schedule 45
Maintenance Record Form 51

Service Literature

Additional Service Literature 53

Maintenance Specifications

General Engine Specifications 55
Lubricating Oil System 56
Cooling System 57
Filter Specifications 58
Diesel Exhaust Fluid Recommendations and Specifications 59
Fuel Recommendations and Specifications 59
Lubricating Oil Recommendations and Specifications 62

Downloaded from www.Manualslib.com manuals search engine

https://truckmanualshub.com/

Coolant Recommendations and Specifications 66

WARRANTY

PACCAR PX-8 Engine United States and Canada Coverage 73
United States and Canada Fire Apparatus Truck Applications Coverage 76
Emission Warranty 79
California Emission Control System Warranty, On-Highway 81
California Emissions Components Statement for the PX-8 Engine (2010) Emission Engine Coverage 82

Downloaded from www.Manualslib.com manuals search engine

https://truckmanualshub.com/

INTRODUCTION

Safety Signals

A number of alerting messages are in this manual. Please read and follow them. They are there for your protection and information. These messages can help you avoid injury to yourself, your passengers, and help prevent costly damage to the vehicle.

Key symbols and “signal words” are used to indicate what kind of message is going to follow. Pay special attention to instructions prefaced by symbols and signal words “WARNING”, “CAUTION”, or “NOTE”. Please do not ignore any of these alerts.

WARNING

When you see this symbol & word, the message that follows is especially vital. This signals something that can cause injury or even death. This message will tell you what the hazard is, what can happen if you don’t heed the warning, and how to avoid it.

Example:

WARNING! Do not carry additional fuel containers in your vehicle. Fuel containers, either full or empty, may leak, explode, and cause or feed a fire. Do not carry extra fuel containers, even empty ones are dangerous.

CAUTION

This symbol and word signals something that could damage your vehicle.

Example:

CAUTION: Continuing to operate your vehicle with insufficient oil pressure will cause serious engine damage.

Downloaded from www.Manualslib.com manuals search engine

https://truckmanualshub.com/

NOTE

This symbol and word gives you information we feel you would like to have. It could have to do with care of your vehicle or with driving more efficiently.

Example:

NOTE: Pumping the accelerator will not assist in starting the engine.

Please take the time to read these messages when you see them, and remember:

WARNING!

Something that could cause an injury or even death.

CAUTION:

Something that could cause damage to your vehicle.

NOTE:

Useful information.

Illustrations

General Information

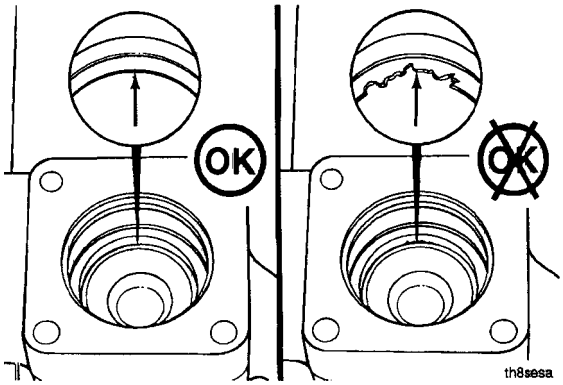

Some of the illustrations throughout this manual are generic and will **not** look exactly like the engine or parts used in your application. The illustrations can contain symbols to indicate an action required and an acceptable or **not** acceptable condition.

The illustrations are intended to show repair or replacement procedures. The procedure will be the same for all applications, although the illustration can differ.

Downloaded from www.Manualslib.com manuals search engine

https://truckmanualshub.com/

General Safety Instructions

Important Safety Notice

WARNING! Improper practices, carelessness, or ignoring the warnings can cause burns, cuts, mutilation, asphyxiation or other personal injury or death.

Read and understand all of the safety precautions and warnings before performing any repair. This list contains the general safety precautions that must be followed to provide personal safety. Special safety precautions are included in the procedures when they apply.

- Work in an area surrounding the product that is dry, well lit, ventilated, free from clutter, loose tools, parts, ignition sources and hazardous substances. Be aware of hazardous conditions that can exist.
- Always wear protective glasses and protective shoes when working.
- Rotating parts can cause cuts, mutilation or strangulation.
- Do not wear loose-fitting or torn clothing. Remove all jewelry when working.
- Disconnect the battery (negative [-] cable first) and discharge any capacitors before beginning any repair work.
- Disconnect the air starting motor if equipped to prevent accidental engine starting. Put a "Do Not Operate" tag in the operator's compartment or on the controls.
- Use ONLY the proper engine barring techniques for manually rotating the engine. Do not attempt to rotate the crankshaft by pulling or prying on the fan. This practice can cause serious personal injury, property damage, or damage to the fan blade(s) causing premature fan failure.
- If an engine has been operating and the coolant is hot, allow the engine to cool before slowly loosening the filler cap to relieve the pressure from the cooling system.
- Always use blocks or proper stands to support the product before performing any service work. Do not work on anything that is supported ONLY by lifting jacks or a hoist.
- Relieve all pressure in the air, oil, fuel, and cooling systems before any lines, fittings, or related items are removed or disconnected. Be alert for possible pressure when disconnecting any device from a system that utilizes pressure. Do not check for pressure leaks with your hand. High pressure oil or fuel can cause personal injury.

Downloaded from www.Manualslib.com manuals search engine

https://truckmanualshub.com/

- To reduce the possibility of suffocation and frostbite, wear protective clothing and ONLY disconnect liquid refrigerant (Freon) lines in a well ventilated area. To protect the environment, liquid refrigerant systems must be properly emptied and filled using equipment that prevents the release of refrigerant gas (fluorocarbons) into the atmosphere. Federal law requires capturing and recycling refrigerant.
- To reduce the possibility of personal injury, use a hoist or get assistance when lifting components that weigh 23 kg [50 lb] or more. Make sure all lifting devices such as chains, hooks, or slings are in good condition and are of the correct capacity. Make sure hooks are positioned correctly. Always use a spreader bar when necessary. The lifting hooks must not be side-loaded.
- Corrosion inhibitor, a component of SCA and lubricating oil, contains alkali. Do not get the substance in eyes. Avoid prolonged or repeated contact with skin. Do not swallow internally. In case of contact, immediately wash skin with soap and water. In case of contact, immediately flood eyes with large amounts of water for a minimum of 15 minutes. IMMEDIATELY CALL A PHYSICIAN. KEEP OUT OF REACH OF CHILDREN.
- Naptha and Methyl Ethyl Ketone (MEK) are flammable materials and must be used with caution. Follow the manufacturer's instructions to provide complete safety when using these materials. KEEP OUT OF REACH OF CHILDREN.
- To reduce the possibility of burns, be alert for hot parts on products that have just been turned off, exhaust gas flow, and hot fluids in lines, tubes, and compartments.
- Always use tools that are in good condition. Make sure you understand how to use the tools before performing any service work. Use ONLY genuine replacement parts from PACCAR.
- Always use the same fastener part number (or equivalent) when replacing fasteners. Do not use a fastener of lesser quality if replacements are necessary.
- Do not perform any repair when fatigued or after consuming alcohol or drugs that can impair your functioning.
- Some state and federal agencies in the United States of America have determined that used engine oil can be carcinogenic and can cause reproductive toxicity. Avoid inhalation of vapors, ingestion, and prolonged contact with used engine oil.

Downloaded from www.Manualslib.com manuals search engine

https://truckmanualshub.com/

- Liquefied petroleum gas is heavier than air and can accumulate near the floor, in sumps, and low-lying areas.
- Natural gas is lighter than air and can accumulate under hood and awnings.
- To reduce the possibility of suffocation and frostbite, wear protective clothing and ONLY disconnect natural gas and liquefied petroleum gas lines in a well ventilated area.
- Close the manual fuel valves prior to performing maintenance and repairs, and when storing the vehicle inside.
- Coolant is toxic. If not reused, dispose of in accordance with local environmental regulations.
- The Diesel Exhaust Fluid contains urea. Do not get the substance in your eyes. In case of contact, immediately flood eyes with large amounts of water for a minimum of 15 minutes. Avoid prolonged contact with skin. In case of contact, immediately wash skin with soap and water. Do not swallow internally. In the event the Diesel Exhaust Fluid is ingested, contact a physician immediately.
- The catalyst substrate contains Vanadium Pentoxide. Vanadium Pentoxide has been determined by the State of California to cause cancer. Always wear protective gloves and eye protection when handling the catalyst assembly. Do not get the catalyst material in your eyes. In Case of contact, immediately flood eyes with large amounts of water for a minimum of 15 minutes. Avoid prolonged contact with skin. In case of contact, immediately wash skin with soap and water.
- The Catalyst substrate contains Vanadium Pentoxide. Vanadium Pentoxide has been determined by the State of California to cause cancer. In the event the catalyst is being replaced, dispose of in accordance with local regulations.
- California Proposition 65 Warning - Diesel engine exhaust and some of its constituents are known to the State of California to cause cancer, birth defects, and other reproductive harm.

CAUTION: Corrosive chemicals can damage the engine. Do not expose the engine to corrosive chemicals.

Downloaded from www.Manualslib.com manuals search engine

https://truckmanualshub.com/

Acronyms and Abbreviations

General Information

The following list contains some of the acronyms and abbreviations used in this manual.

API	American Petroleum Institute
ASTM	American Society of Testing and Materials
ATS	After-Treatment System
BTU	British Thermal Unit
°C	Celsius
CARB	California Air Resources Board
C.I.D.	Cubic Inch Displacement
CPL	Control Parts List
cSt	Centistokes
DEF	Diesel Exhaust Fluid
DPF	Diesel Particulate Filter
ECM	Electronic Control Module
EGR	Exhaust Gas Recirculation
ELC	Extended Life Coolant
EMI	Electromagnetic Interference
EPA	Environmental Protection Agency
ESN	Engine Serial Number
°F	Fahrenheit
FMI	Failure Mode Indentifier
GVW	Gross Vehicle Weight
HEST	High Exhaust System Temperature
LPG	Liquified Petroleum Gas
Hg	Mercury
hp	Horsepower
H_2O	Water
ICM	Ignition Control Module
km/l	Kilometers per Liter
kPa	Kilopascal
LTA	Low Temperature Aftercooling
MPa	Megapascal
mph	Miles Per Hour
mpq	Miles Per Quart

Downloaded from www.Manualslib.com manuals search engine

https://truckmanualshub.com/

N•m	Newton-meter
NG	Natural Gas
OEM	Original Equipment Manufacturer
PID	Parameter Identification Descriptions
ppm	Parts Per Million
psi	Pounds Per Square Inch
PTO	Power Takeoff
RGT	Rear Gear Train
rpm	Revolutions Per Minute
SAE	Society of Automotive Engineers
SCA	Supplemental Coolant Additive
SCR	Selective Catalytic Reduction
STC	Step Timing Control
SID	Subsystem Identification Descriptions
VGT	Variable Geometry Turbocharger
VS	Variable Speed
VSS	Vehicle Speed Sensor

Downloaded from www.Manualslib.com manuals search engine

https://truckmanualshub.com/

Downloaded from www.Manualslib.com manuals search engine

https://truckmanualshub.com/

ENGINE IDENTIFICATION

Engine Dataplate

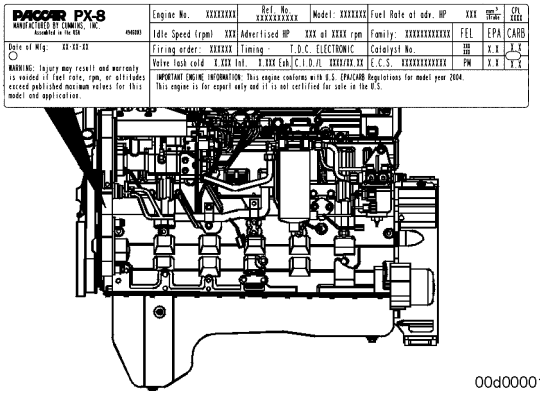

00d00001

The engine dataplate provides important facts about the engine. The engine serial number (ESN) and control parts list (CPL) provide information for service and ordering parts. The engine dataplate must not be changed unless approved by PACCAR Inc.

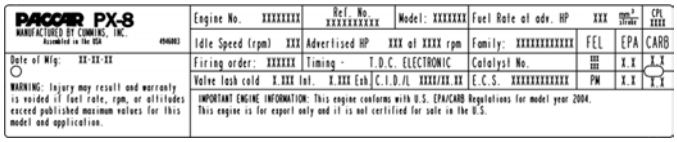

The dataplate is located on the top side of the gear housing.

Have the following engine data available when communicating with a PACCAR Authorized Repair Location:

- Engine serial number (ESN).
- Control parts list (CPL).
- Model.
- Horsepower and rpm rating.

Downloaded from www.Manualslib.com manuals search engine

https://truckmanualshub.com/

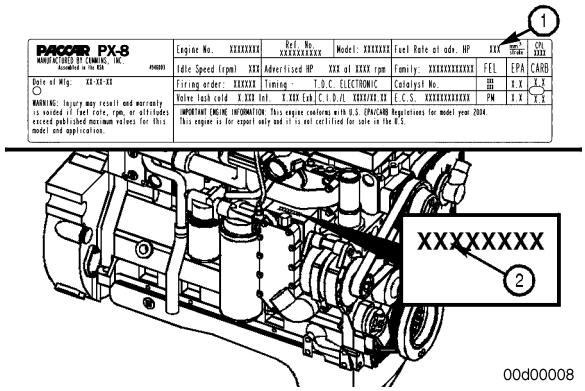

If the engine dataplate (1) is not readable, the ESN (2) can be found on the engine block on top of the lubricating oil cooler housing. Additional engine information is on the electronic control module (ECM) dataplate.

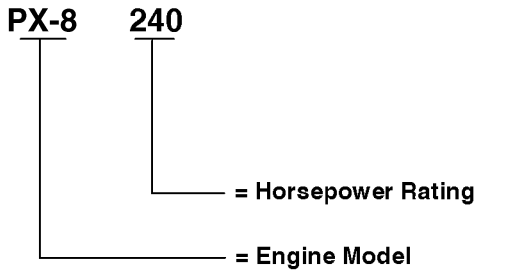

17d00047

PACCAR Engine Nomenclature

The PACCAR engine nomenclature provides the engine model and horsepower rating.

Downloaded from www.Manualslib.com manuals search engine

https://truckmanualshub.com/

OPERATING INSTRUCTIONS

General Information

Correct care of your engine will result in longer life, better performance, and more economical operation.

Follow the daily maintenance checks listed in “Maintenance Schedule” on page 45.

The new PACCAR engine associated with this manual does not require a ”break-in” procedure. This section of the manual provides all of the necessary information required for proper engine operation.

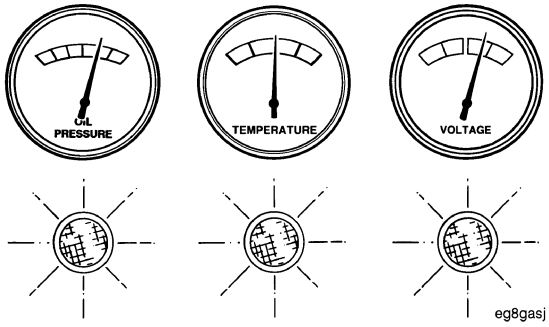

Check the oil pressure indicators, temperature indicators, warning lights, and other gauges daily to make sure they are operational.

Downloaded from www.Manualslib.com manuals search engine

https://truckmanualshub.com/

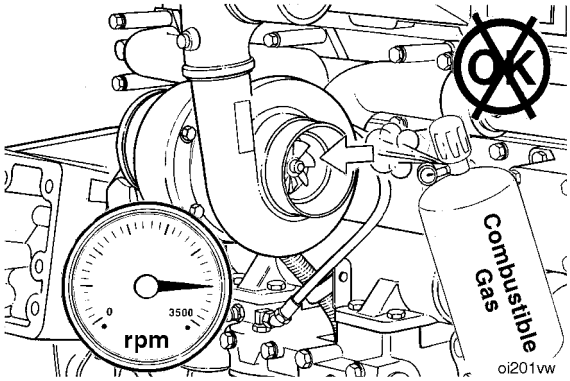

WARNING! Combustible vapors near the air intake system could be ingested into the engine, causing the engine to suddenly accelerate and overspeed or explode. This condition could result in an unexpected increase in engine rpm and/or fire, resulting in personal injury or property damage. Do not operate your vehicle in area where combustible chemicals or vapors may be present.

IT IS THE RESPONSIBILITY OF THE OWNER AND OPERATOR TO OPERATE THE VEHICLE IN A SAFE ENVIRONMENT.

NOTE: Numerous safety devices (ie engine shutoff devices) are available to minimize the risk of engine overspeeding caused by combustible vapors being ingested into the air intake system.

Downloaded from www.Manualslib.com manuals search engine

https://truckmanualshub.com/

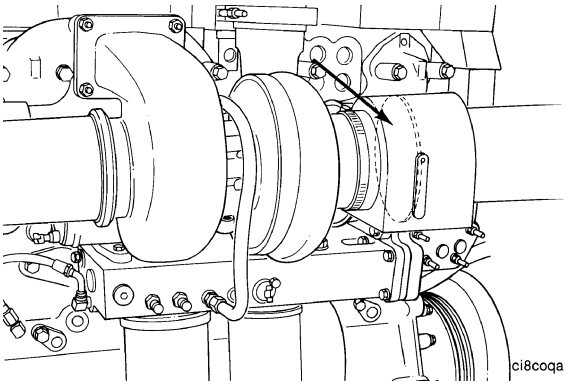

PACCAR recommends the installation of an air intake shutoff device or a similar safety device to minimize the risk of overspeeding, as can occur when the vehicle, is being operated in a combustible environment, such as from a fuel spill or gas leak.

Normal Starting Procedure

Starting

Ensure the parking brake is set and the transmission is in neutral.

With the accelerator pedal in the idle position, turn the key switch to the ON position.

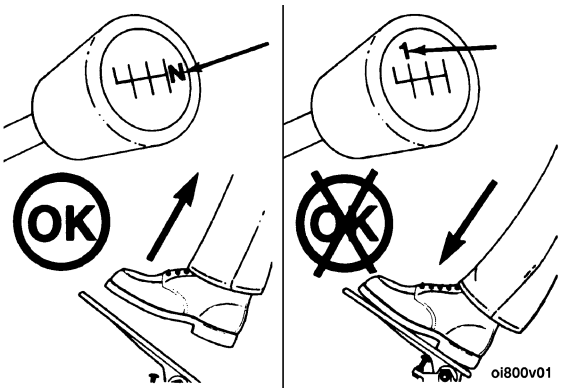

Downloaded from www.Manualslib.com manuals search engine

https://truckmanualshub.com/

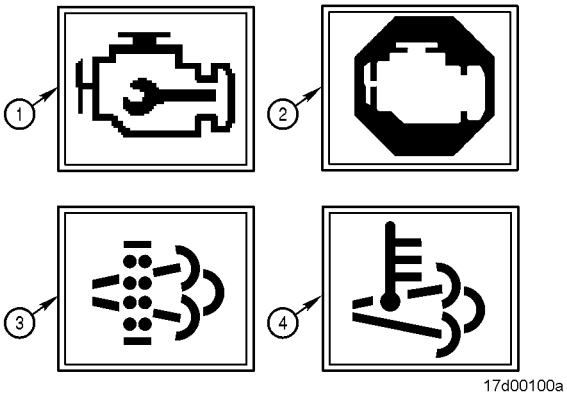

With the key in the ON position, the engine indicator lamps will come on momentarily and then go out. The engine indicator lamps include:

1. Check engine lamp; amber in color.
2. STOP engine lamp; red in color.
3. Diesel Particulate Filter (DPF) status indicator; amber in color.
4. High Exhaust System Temperature (HEST); amber in color.

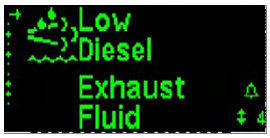

The DEF Warning screen is displayed when the DEF Fluid level has reached a critically low level. It may be suppressed by pushing enter on the MCS (Menu Control Switch). This warning may be accompanied by the DEF Level in the low range, DEF Lamp on solid or flashing, the Check Engine lamp, the Stop Engine lamp, the MIL lamp, and/or engine derate.

If any of the lamps remain on or begin to flash, refer to “Engine Indicator Lamps” on page 25.

Under cold conditions, the Wait-to-Start lamp will illuminate at key on, and will stay on for a period of up to 30 seconds.

Downloaded from www.Manualslib.com manuals search engine

https://truckmanualshub.com/

NOTE: The length of time the Wait-to-Start lamp remains illuminated depends on the ambient temperature. The lower the ambient temperature, the longer the lamp will be illuminated.

Once the Wait-to-Start lamp turns off, turn the key to the starting position to start the engine.

CAUTION: Engaging the starter motor for more than 30 seconds may cause it to overheat and can damage the starter motor. Never engage the starter motor for more than 30 seconds and wait 2 minutes between each attempt to start the engine to allow the starter motor to cool. This caution does not apply to air starters.

CAUTION: The engine must have adequate oil pressure within 15 seconds after starting the engine. If the oil pressure gauge does not register the minimum pressure, or drops below the minimum pressure, a red warning light in the gauge will come on, a warning buzzer will sound, and the Stop Engine Lamp will come on. This should be considered an emergency. Operating the engine in this condition may cause severe engine damage. You should stop the vehicle as safely as possible. The vehicle must be serviced and the problem corrected before driving again.

Downloaded from www.Manualslib.com manuals search engine

https://truckmanualshub.com/

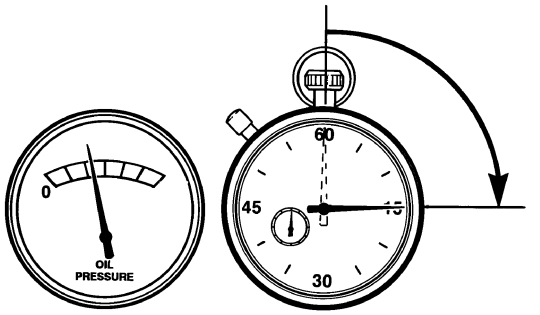

eg8gask

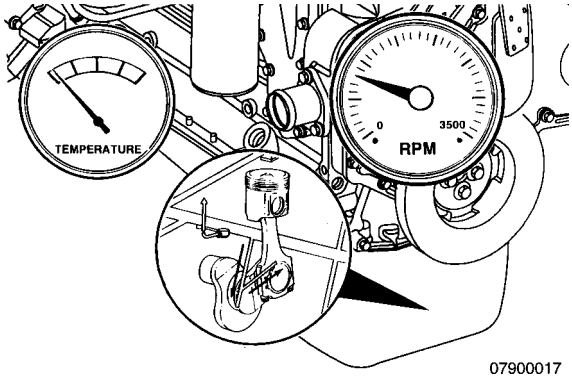

07900017

Idle the engine 3 to 5 minutes before operating with a load.

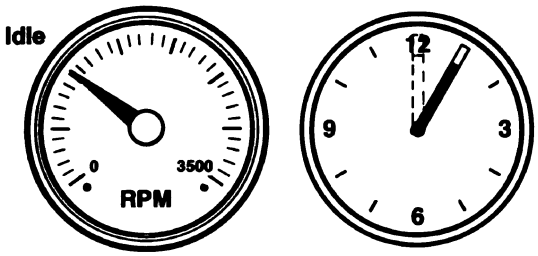

3 to 5 minutes

oi800v02

After starting a cold engine, increase the engine speed (rpm) slowly to provide adequate lubrication to the bearings and to allow the oil pressure to stabilize.

Some engines are equipped with a Fast Idle Warm Up feature. When enabled, this feature elevates the idle speed of the engine in cold ambient conditions, in order to shorten the time necessary to warm up the engine. When the idle speed is elevated, the engine noise may change, this is normal. To bring the engine back to low idle speed:

- For vehicles equipped with a manual transmission and clutch switch: Depress the clutch pedal.
- For vehicles equipped with a brake switch: Depress the service brake pedal.
- Depress the accelerator pedal.

Downloaded from www.Manualslib.com manuals search engine

https://truckmanualshub.com/

For more information on the Fast Idle Warm Up feature, contact a PACCAR authorized repair location.

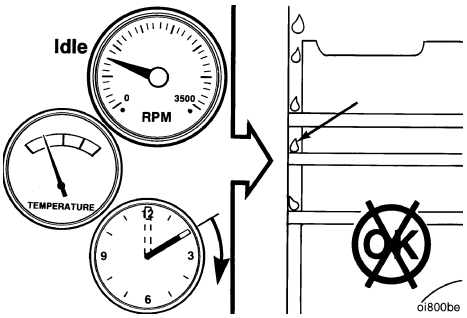

CAUTION: Do not operate the engine at low idle for long periods with engine coolant temperature below the minimum specification in "Cooling System" on page 57. This can result in the following:

- ***Fuel dilution of the lubricating oil.***
- ***Carbon build up in the cylinder.***
- ***Cylinder head valve sticking.***
- ***Reduced performance.***

If an engine must idle for an extended period of time, it should be done at fast idle (1,000 rpm or greater) until the coolant temperature meets the specification.

Cold Weather Starting

General Information

Follow the Normal Starting Procedure in this section. If equipped with an intake air heater, the Wait-To-Start lamp will stay on longer.

Refer to the vehicle operator's manual instructions for any additional cold weather starting procedures.

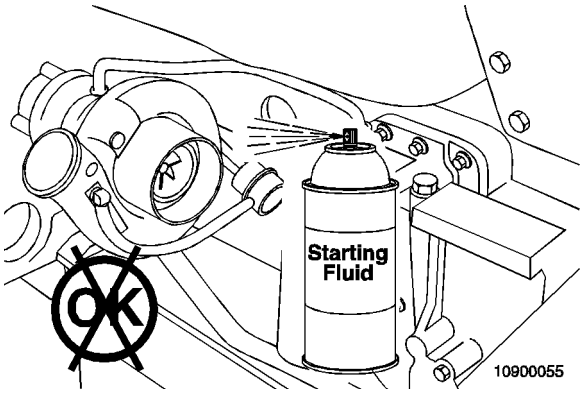

Downloaded from www.Manualslib.com manuals search engine

https://truckmanualshub.com/

Using Starting Aids

This engine is equipped with an intake grid heater to help start the engine in cold weather conditions. Contact your authorized PACCAR repair location for other cold weather starting aid options.

WARNING! Using starting fluid to help start the engine could cause a fire or explosion, resulting in personal injury, property damage and severe engine damage. Do not use starting fluid to start this engine.

Starting Procedure After Extended Shutdown or Oil Change

General Information

Follow the Normal Starting Procedure in this section. The engine will run at idle only until the minimum oil pressure is detected by the ECM. It can take more cranking time to start the engine after an extended shut down or oil change.

Operating the Engine

Normal

Monitor the oil pressure and coolant temperature gauges frequently. Refer to "Lubricating Oil System" on page 56 and "Cooling System" on page 57 for recommended operating pressures and temperatures. Shut off the engine if any pressure or temperature does **not** meet the specifications.

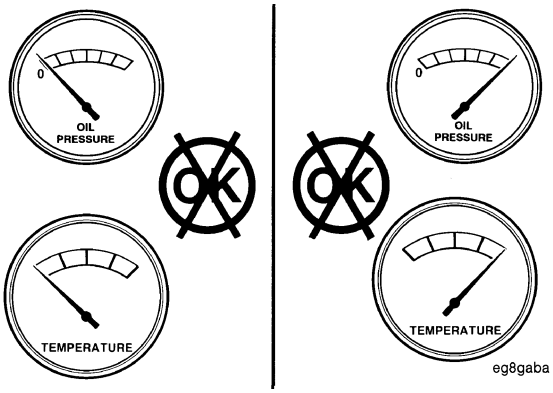

Continuous operation with engine coolant temperature above or below the engine coolant temperature specifications listed in "Cooling System" on page 57 can damage the engine.

Downloaded from www.Manualslib.com manuals search engine

https://truckmanualshub.com/

Engine Overheating

CAUTION: The cooling system may overheat if the engine coolant is the minimum level. A sudden loss of coolant, caused by a split hose or broken hose clamp could also lead to an overheat condition. Always inspect to ensure hoses and clamps are not cracked, worn or loose.

NOTE: The system may also temporarily overheat during severe operations conditions such as:

- *Climbing a hill on a hot day.*
- *Stopping after high–speed driving.*

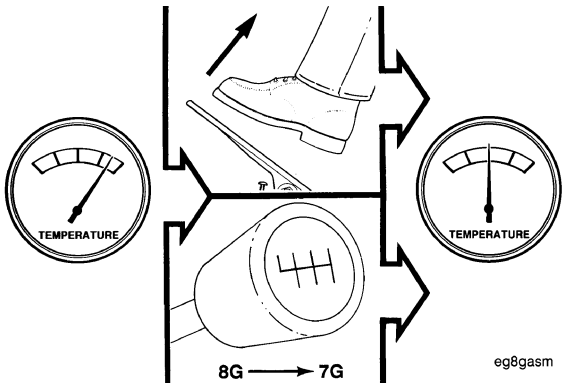

If an overheating condition starts to occur, reduce the power output of the engine by releasing the accelerator pedal or shifting the transmission to a lower gear, or both, until the temperature returns to the normal operating range. If the engine temperature does not return to normal, shut off the engine, and refer to Troubleshooting Symptoms, or contact a PACCAR Authorized Repair Location.

Downloaded from www.Manualslib.com manuals search engine

https://truckmanualshub.com/

NOTE: If the "Engine Coolant Temperature" warning light comes on and the audible alarm sounds showing an overheat condition, or if you have any other reason to suspect the engine may be overheating, DON'T TURN OFF THE ENGINE unless a low water warning device indicates a loss of coolant. Follow these steps:

- *Reduce engine speed or stop. When stopped, place the transmission in Neutral and set the parking brake. See the Truck Operator's Manual for instructions on transmission shifting and parking brake information.*
- *Check to ensure that the oil pressure gauge reads normal.*
- *Increase the engine speed to about one–half of full operating speed, or 1,100 to 1,200 rpm, maximum.*
- *Return the engine speed to normal idle after two or three minutes.*
- *Monitor the engine temperature. After the temperature returns to normal, allow the engine to idle 3 to 5 minutes before shutting it off. This allows the engine to cool gradually and uniformly.*
- *If the overheating came from severe operating conditions, the temperature should have cooled by this time.*
- *Check the sight gauge (glass level indicator) on the side of the coolant expansion tank.*

CAUTION: Never leave the engine idling when the vehicle is unattended. If the engine should overheat, immediate action is required to correct the condition. Failure to take immediate action may result in serious engine damage. If you must leave your vehicle unattended, shut down the engine.

Downloaded from www.Manualslib.com manuals search engine

https://truckmanualshub.com/

WARNING! Removing the radiator fill cap while the engine is hot can be dangerous. Never remove the caps of the expansion tank while the engine is still hot; you could be badly burned.

- ***Scalding steam and fluid under pressure may escape and cause serious personal injuries.***
- ***Wait until the coolant temperature is below 122°F (50°C).***
- ***Protect your face, hands, and arms by covering the cap with a large, thick rag to protect against escaping fluid and steam.***
- ***Carefully and slowly turn cap one turn to allow excess pressure to escape, then push down and turn for final removal. See the Truck Operator's Manual for instructions on checking and filling the coolant expansion tank.***

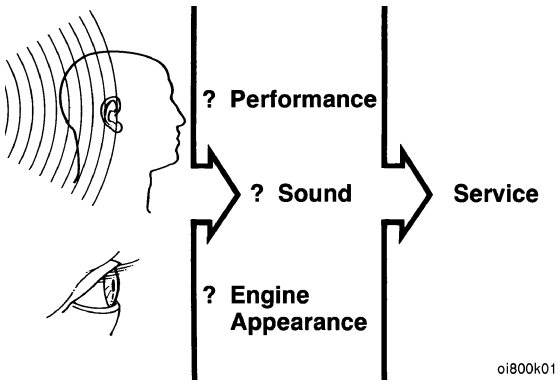

Take the time to learn what normal operating conditions are for your engine so that when an abnormal condition arises, you will be able to recognize it as such and take the appropriate action.

Most failures give an early warning. Look and listen for changes in performance, sound, or engine appearance that can indicate service or engine repair is needed. Some changes to look for are:

- Engine misfires.
- Vibration.
- Unusual engine noises.
- Sudden changes in engine operating temperatures or pressures.
- Excessive smoke.

Downloaded from www.Manualslib.com manuals search engine

https://truckmanualshub.com/

- Loss of power.
- An increase in oil consumption.
- An increase in fuel consumption.
- Fuel, oil, or coolant leaks.

CAUTION: Do not allow your engine to idle, at low rpm's (400-600 rpm), longer than five minutes. Long periods of idling after the engine has reached operating temperatures can decrease engine temperature and cause gummed piston rings, clogged injectors, and possible engine damage from lack of lubrication. The normal torsional vibrations generated by the engine can also cause transmission wear. If an engine must idle for an extended period of time, it should be done at fast idle (1,000 rpm or greater).

NOTE: An idle shutdown feature, available on PACCAR Engines, can be programmed to shut the engine down after a period of low idle speed operation with no driver activity. A flashing warning lamp will inform the driver of an impending shutdown.

NOTE: The power take off (PTO) feature, available on PACCAR engines, can be programmed to adjust engine idle speed with the use of switches to pre-programmed set points.

Cold Weather

It is possible to operate engines in extremely cold environments if they are properly prepared and maintained. Satisfactory performance of an engine in low ambient temperature conditions requires modification of the engine, surrounding equipment, operating practices and maintenance procedures.

The correct engine coolant lubricating oil and fuels must be used for the cold weather range in which the engine is being operated. Below are the recommendations for these critical engine fluids.

Coolant Recommentations and Specifications

The cooling system in your vehicle was factory filled with Extended Life Coolant (ELC) that meets or exceeds all ASTM D 6210 requirements. PACCAR recommends only using a 50/50 mixture of distilled water and ELC when cooling system service is required. A 50/50 mixture of ELC and distilled water will provide freeze protection down to -34°F (- 36.7°C), which is adequate for most locations in North America. For extremely cold operating conditions, a 60/40 mixture (coolant/water ratio) can be used to provide freeze protection down to -62°F (-52.2°C).

Downloaded from www.Manualslib.com manuals search engine

https://truckmanualshub.com/

Lubricating Recommentations and Specifications

Refer to "Lubricating Oil Recommendations and Specifications" on page 62 for the correct specifications.

Diesel Fuel Recommendations

The Diesel fuel must have maximum cloud and pour points 6°C (10°F) lower than the ambient temperature in which the engine operates.

Engine Indicator Lamps

General Information

The following engine indicator lamps cover only the lamps controlled by the engine's ECM. The vehicle manufacturer can provide additional indicator lamps. Please refer to the vehicle's operator's manual for additional lamp information.

Wait to Start Lamp

The WAIT TO START lamp illuminates when the intake air heater (grid heater) needs to warm the intake air prior to starting the engine.

The WAIT TO START lamp on time will vary depending on the ambient air temperature. See "Normal Starting Procedure" on page 15

Downloaded from www.Manualslib.com manuals search engine

https://truckmanualshub.com/

For vehicles equipped with an engine starting motor protection feature, another function of the WAIT TO START lamp is to flash for two minutes if the starting motor is engaged for 30 seconds or more.

The WAIT TO START lamp can look like:

- The words WAIT TO START spelled out
- A symbol similar to the graphic illustrated
- The color of the symbol or words can vary, based on the manufacturer of the vehicle, but will typically be red or amber.

Check Engine Lamp

The CHECK ENGINE lamp illuminates when the engine needs service at the first available opportunity.

The CHECK ENGINE lamp is located on the face of the tachometer and illuminates amber when a problem exists, but the vehicle can still be safely driven. Vehicle should be serviced to correct the problem, but the situation should not be considered an emergency. The Check Engine lamp will activate for several reasons. These include but are not limited to Water in Fuel and Diesel Particulate Filter (DPF) generation required.

Stop Engine Lamp

The STOP ENGINE lamp indicates, when illuminated, the need to stop the engine as soon as it can be safely done. The engine must remain shut down until the engine can be repaired.

For engines with the Engine Protection Shutdown feature enabled, if the STOP ENGINE lamp begins to flash, the engine will automatically shut down after 30 seconds. The flashing STOP engine lamp alerts the operator to the impending shutdown.

The STOP ENGINE lamp is red in color, and can look like:

- The words STOP or STOP ENGINE spelled out

Downloaded from www.Manualslib.com manuals search engine

https://truckmanualshub.com/

Refer to PACCAR Engine Aftertreatment Systems Operator's Manual for additional information.

- A symbol of an engine with an exclamation point in the center, similar to the graphic.

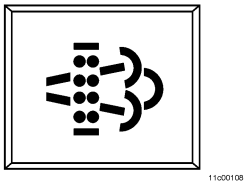

Engine Operating Range

General Information

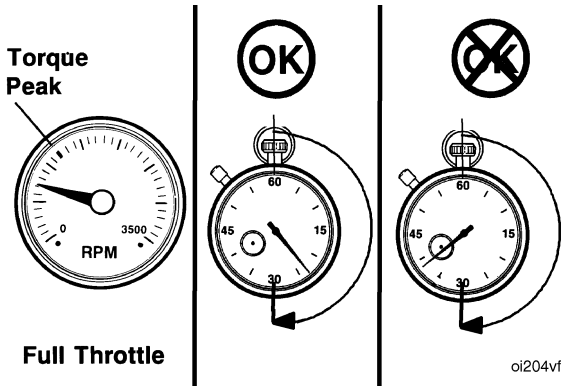

CAUTION: Operating the engine at full throttle below peak torque will shorten engine life to overhaul, can cause serious engine damage, and is considered engine abuse. Do not operate the engine at full throttle operation below peak torque rpm (refer to engine dataplate for peak torque rpm) for more than 30 seconds.

Downloaded from www.Manualslib.com manuals search engine

https://truckmanualshub.com/

PACCAR engines are designed to operate successfully at full throttle under transient conditions down to peak torque engine speed. This is consistent with recommended operating practices.

CAUTION: Operating the engine beyond the maximum engine speed can cause severe engine damage. Do not operate the engine beyond the maximum engine speed. Use proper operating techniques for the vehicle to prevent engine overspeed. The maximum engine speed specification is listed in the "General Engine Specifications" on page 55.

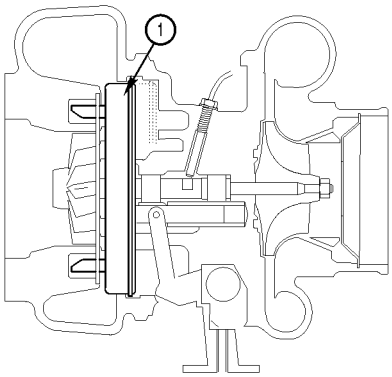

10d00376

Engine Braking System

Variable Geometry Turbo (VGT) Brake System General Information

This engine is equipped with a variable geometry turbocharger (VGT) with an exhaust brake feature. This feature allows the variable geometry turbocharger to act as an exhaust brake by retarding the speed of the engine to provide additional vehicle braking power and extend the life of the vehicle service brakes. The on/off function is controlled by a switch located on the dash of the vehicle. The engine (VGT) exhaust brake works by retarding engine speed by creating high exhaust back pressure. This back pressure is obtained by restricting airflow through the turbine housing of the turbocharger. This restriction through the turbine housing of the turbocharger is created through positioning of the sliding nozzle (1) located internally to the variable geometry turbocharger (VGT). the position of the sliding nozzle is controlled by the engine electronic control module (ECM).

Downloaded from www.Manualslib.com manuals search engine

https://truckmanualshub.com/

WARNING! The exhaust brake is not intended as the primary brake for the vehicle, nor is it an emergency brake. The service brakes must be used in an emergency. Relying solely on the exhaust brake to stop the vehicle in an emergency could cause an accident and lead to personal injury. The exhaust brake only helps the service brakes by using pressure to slow the drive train. You must use the service brakes for quick or emergency stops.

WARNING! Do not use the exhaust brake when operating on surface with poor traction (such as wet, icy or snow covered roads). Retarders can cause the wheels to skid on a slippery surface. You could lose control of the vehicle and jacknife if the wheels begin to skid, resulting in an accident.

WARNING! Do not use an exhaust brake when driving bobtail or with an unloaded trailer. There may not be enough weight on the rear axle to provide traction. This could cause a lose of control and jackknife resulting in an injury accident. Make sure the exhaust brake is switched OFF when bobtailing or with an unloaded trailer.

When the engine (VGT) exhaust brake switch is in the ON position, the engine's electronic control module (ECM) monitors inputs (such as accelerator pedal position and engine speed). From these inputs, the ECM determines when to enable the engine (VGT) exhaust brake feature when the proper braking conditions are present.

Other features/switches like cruise control, can also affect when the engine (VGT) exhaust brake activates. For more information on how the engine (VGT) exhaust brake functions, refer to vehicle operation manual or contact a PACCAR Authorized Repair Location.

WARNING! To reduce the possibility of personal injury or property damage, always be prepared to use the vehicle service brakes for emergency stopping. The safe control speed of a vehicle will vary with the size of the load, the type of load, the grade, and the road conditions.

NOTE: The exhaust brake can only be activated when the accelerator pedal is at its low idle position. With the throttle at low idle position, fueling commands to the cylinders will not detract from the braking power of the brake system.

NOTE: The engine (VGT) exhaust brake is designed to assist the vehicle's service brakes when slowing the vehicle to a stop.

Downloaded from www.Manualslib.com manuals search engine

https://truckmanualshub.com/

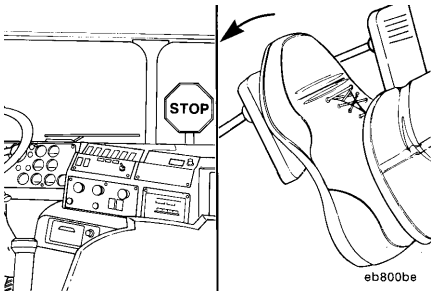

Vehicle service brakes must always be used. The engine brake is not intended to be used as the primary brake of the vehicle, nor is it an emergency brake. The engine retarder only helps the service brakes by using pressure to slow the divetrain. Use the service brakes for quick stops.

CAUTION: Exceeding governed engine speed can cause engine damage. Operating the engine beyond the maximum engine speed may cause serious engine damage and is considered engine abuse. Use the engine and vehicle braking systems to control engine speed.

The optimum braking power of the engine (VGT) exhaust brake is reached at rated engine speed. Correct gear selection, therefore, is critical.

Typically, on vehicles equipped with automatic transmissions, the engine electronic control module (ECM) and the transmission will determine the correct gear selection.

Downloaded from www.Manualslib.com manuals search engine

https://truckmanualshub.com/

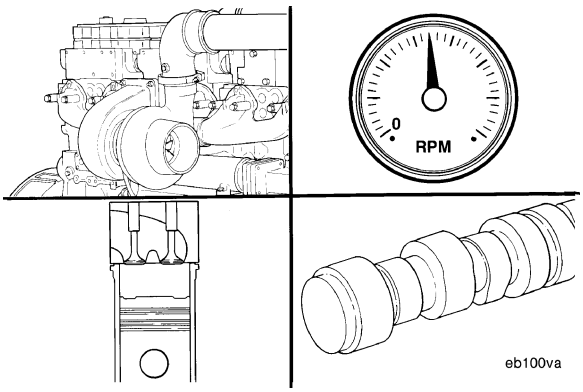

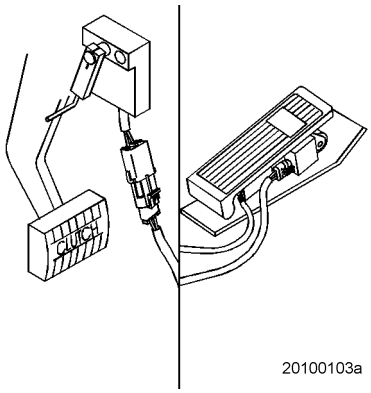

Compression Brake System

The amount of braking power available in a given engine series varies. Braking power depends on turbocharger boost pressure, engine speed, compression ratio, injector timing, and when the engine brakes open the exhaust valves.

Engine brake controls, with the fuel system, consists of the following:

- A two-position selector switch standard (three-position selector optional) .
- An on/off switch.
- A clutch switch.
- A throttle sensor.

With the ON/OFF switch in the ON position, the brake automatically creates its braking effect when you remove your foot from the accelerator pedal.

Downloaded from www.Manualslib.com manuals search engine

https://truckmanualshub.com/

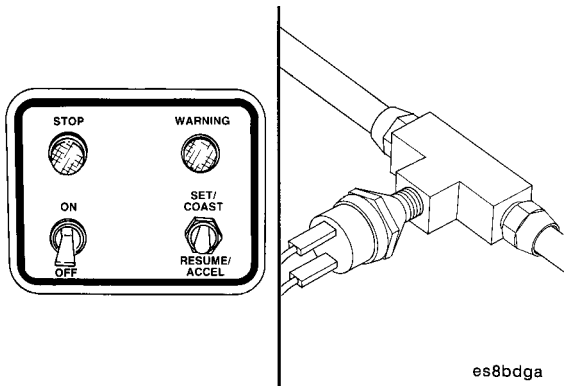

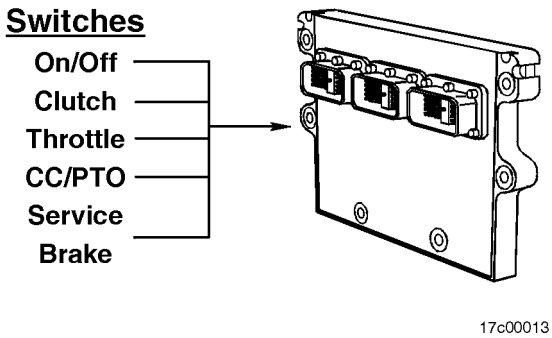

Other switches for cruise control that affect engine brake operations are:

- Service brake air pressure switch (if service brake actuator feature is selected).
- Clutch switch.
- Throttle sensor.

The ECM allows the engine brakes to operate while the cruise control is turned on.

The two-position selector switch (standard) or three-position (optional) is located next to the on/off switch in the cab, and allows you to select the retarding power of one or two brakes.

LOW activates the engine brake on three cylinders, and HI activates the engine brake on six cylinders.

Signals from the on/off switch, clutch switch, throttle sensor, and the cruise/PTO switches are fed into the ECM.

NOTE: Any one of these switches can de-activate the engine brakes.

Downloaded from www.Manualslib.com manuals search engine

https://truckmanualshub.com/

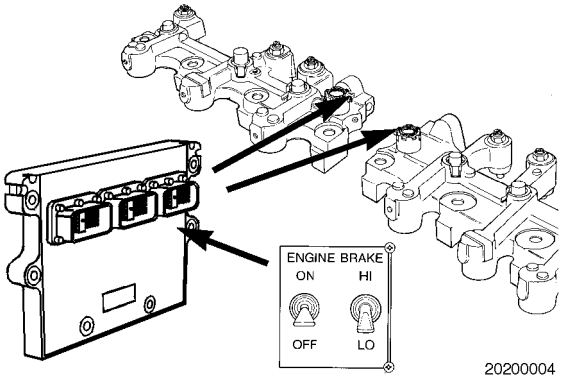

The ECM then electronically enables or disables the engine brakes.

Engine brakes cannot be enabled:

- *When cruise control is active and the Engine brakes in Cruise Control feature is turned off.*
- *When engine speed goes below 850 rpm.*
- *When the Engine Computer recognizes a system problem.*

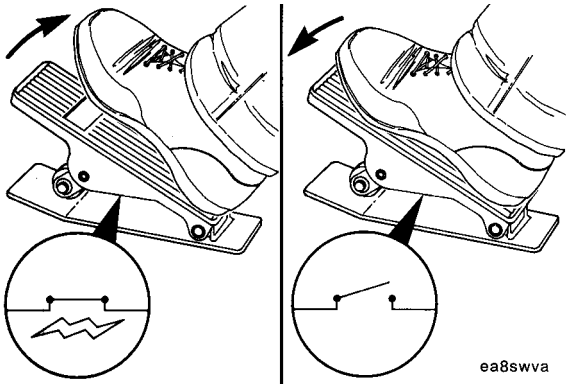

The throttle sensor is part of the accelerator pedal assembly located in the cab and will deactivate the engine brakes when the acceleration pedal is depressed.

Downloaded from www.Manualslib.com manuals search engine

https://truckmanualshub.com/

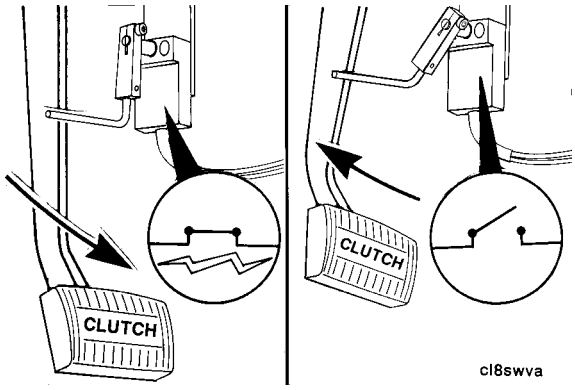

The clutch switch uses the motion of the clutch linkage to deactivate the engine brakes when the clutch pedal is depressed.

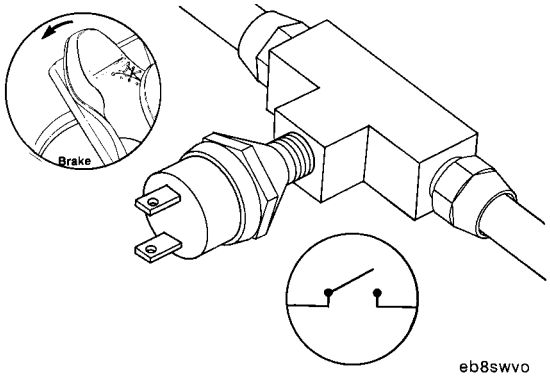

The service brake pressure switch is attached to the service brake air supply line.

Applying the service brakes while in cruise control will disengage the cruise control and enable the engine brakes.

If the pedal-activated engine brake feature is enabled, the service brake pedal must be depressed (tapped) before the engine brakes will be activated.

CAUTION: Do not operate the engine brake until the engine oil temperature is above 30°C [86°F]. Operation below 30°C [86°F] could cause severe damage to the engine. Idle the engine 3 to 5 minutes at approximately 1000 rpm to warm the engine before activating the engine brakes.

Downloaded from www.Manualslib.com manuals search engine

https://truckmanualshub.com/

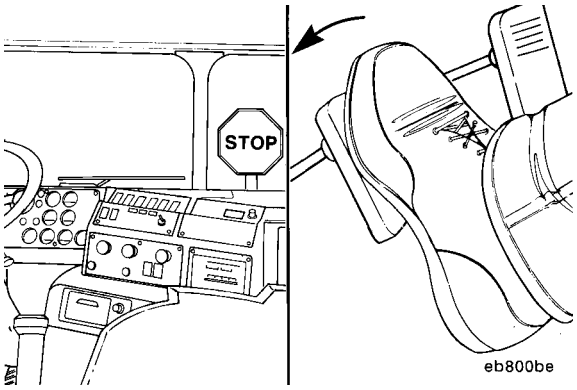

To activate the engine brakes, switch the on/off switch to the ON position. Once activated, the operation of the engine brake is fully automatic.

NOTE: See the "Tips for Operation" steps in this section for specific information about engine brake operation under certain road conditions.

NOTE: The engine brakes are designed to assist the vehicle's service brakes when slowing the vehicle to a stop.

Remember, service brakes will be required to bring the vehicle to a stop.

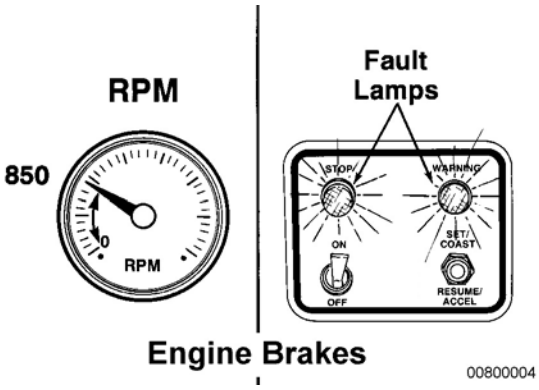

CAUTION: Using the engine brakes to aid in clutchless gear shifting will cause the engine to stall or lead to engine damage. Engine brakes used in clutchless shifting causes additional strain on the engine valve train and causes severe internal engine damage. Do not use engine brakes to assist in gear shifting.

The ECM will disable the engine brakes when engine speed is below 850 rpm or when an electronic fault code is active.

Downloaded from www.Manualslib.com manuals search engine

https://truckmanualshub.com/

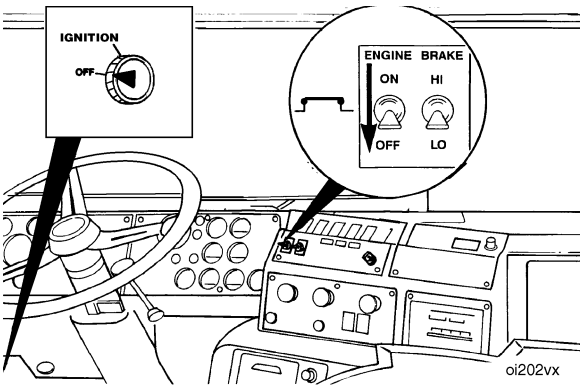

CAUTION: Operating the engine with an engine brake that will not deactivate will cause severe engine damage. Inoperable engine brakes can cause an additional strain on the engine valve train causing severe internal engine damage. Do not operate the engine if the engine brake will not deactivate.

If the engine brakes will not shut off, shut off the engine immediately, and contact a PACCAR Authorized Repair Location.

Tips for Operation on Level and Dry Pavement

WARNING! Do not use the engine brake when operating on road surfaces with poor traction (such as wet, icy, or snow covered roads or gravel). Retarders can cause the wheels to skid on a slippery surface. You could lose control of the vehicle and/or jackknife if the wheels begin to skid, resulting in an accident.

WARNING! Do not use an engine brake when driving bobtail or with an unloaded trailer. There may not be enough weight on the rear axle to provide traction. This could cause a lose of control and jackknife resulting in an injury accident. Make sure the engine brake is switched OFF when bobtailing or with an unloaded trailer.

Downloaded from www.Manualslib.com manuals search engine

https://truckmanualshub.com/

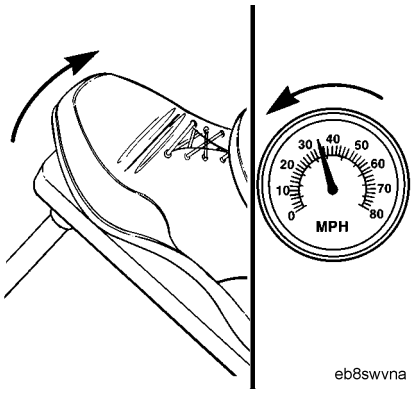

To reduce vehicle speed, put the engine brake on/off switch in the ON position. Remove your foot from the accelerator pedal and clutch pedal. The engine brakes will immediately begin to operate, slowing the vehicle.

For operation on dry pavement when maximum retarding power is required, put the two-position selector switch in the HI position.

For operation on dry and relatively flat surfaces, when greater retarding power is not required, put the two-position selector switch in the LOW position.

Tips for Operation on Grades with Dry Pavement

WARNING! The engine brake is not intended as the primary brake for the vehicle, nor is it an emergency brake. The service brakes must be used in an emergency. Relying solely on the engine brake to stop the vehicle in an emergency could cause an accident and lead to personal injury. The engine brake only helps the service brakes by using pressure to slow the drive train. You must use the service brakes for quick or emergency stops.

WARNING! Do not use the engine brake when operating on surface with poor traction (such as wet, icy, or snow covered roads). Retarders can cause the wheels to skid on a slippery surface. You could lose control of the vehicle and jacknife if the wheels begin to skid, resulting in an accident.

Downloaded from www.Manualslib.com manuals search engine

https://truckmanualshub.com/

WARNING! Do not use an engine brake when driving bobtail or with an unloaded trailer. There may not be enough weight on the rear axle to provide traction. This could cause a lose of control and jackknife resulting in an injury accident. Make sure the engine brake is switched OFF when bobtailing or with an unloaded trailer.

Control speed is the speed at which the forces pushing a vehicle down a grade are equal to the forces holding it back.

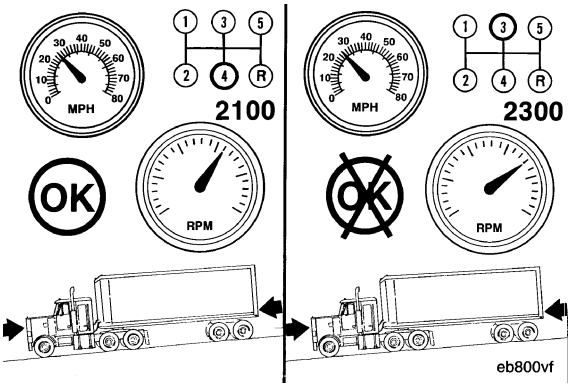

CAUTION: Never exceed governed engine speed because engine damage can occur. Operating engine beyond the governed speed causes additional strain on valve train and internal engine components. Operate the engine within governed engine speed.

NOTE: Once you have determined what the safe speed is for your vehicle, operate the engine brakes with the transmission in the lowest gear that will not cause the engine speed to exceed the rated engine speed. The optimum braking power of the engine brakes is reached at rated engine speed. Correct gear selection, therefore, is critical.

The two-position selector switch can be used to vary braking power as road conditions change.

Downloaded from www.Manualslib.com manuals search engine

https://truckmanualshub.com/

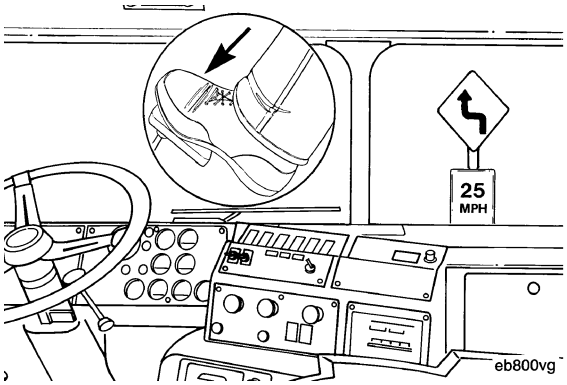

The engine brake is NOT intended as the primary brake for the vehicle, nor is it an emergency brake. The engine brake only helps the service brakes by using pressure to slow the drivetrain. Use the service brakes for quick stops.

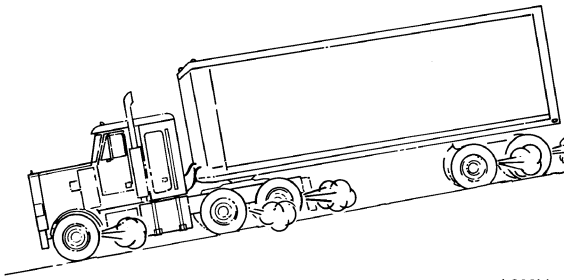

WARNING! Do not drive with frequent or continuous use of the service brakes. This can overheat the brakes and result in excessive lining wear, increased stopping distances, possibly an accident and may lead to personal injury. Before descending a steep grade, shift to a lower gear, keep the vehicle speed low, and avoid continuous application to the brakes.

NOTE: The longer or steeper the hill, the more important it is to use your engine brakes. Make maximum use of your engine brakes by gearing down and letting the engine brakes do the work.

Downloaded from www.Manualslib.com manuals search engine

https://truckmanualshub.com/

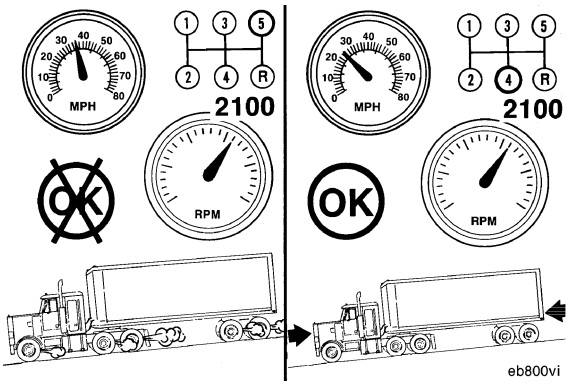

eb800vi

If frequent use of the vehicle service brakes is required, it is recommended that a slower control speed be used by selecting a lower transmission gear.

Tips for Operation on Slick Roads

The operation of any vehicle is difficult to predict on slick roads. The first 10 to 15 minutes of rainfall are the most dangerous, as road dirt and oil mixed with rain create a very slippery surface.

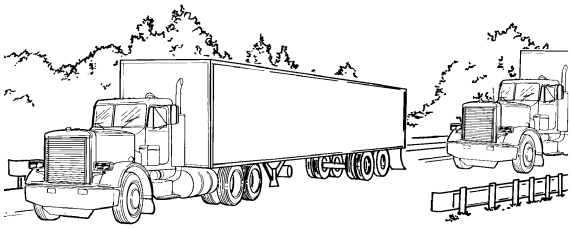

eb800bc

WARNING! Do not operate the engine brake when driving/operating your vehicle bobtail or with a loaded or unloaded trailer on road surfaces with poor traction (wet, icy, or snow covered roads) or in heavy traffic. Braking caused by the normal operation of the engine brake could cause you to lose control of the vehicle resulting in an injury accident.

When driving on slick roads, start with the on/off switch in the “OFF” position and the two-position selector switch in the LOW position.

Downloaded from www.Manualslib.com manuals search engine

https://truckmanualshub.com/

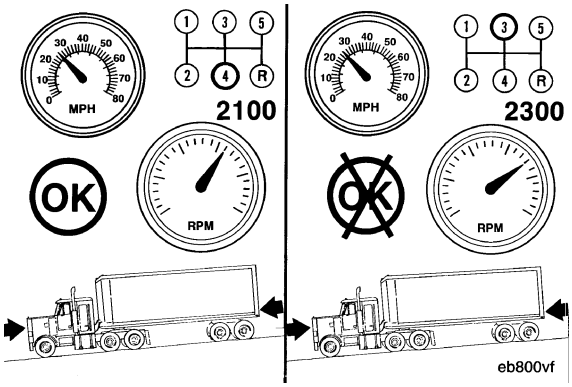

If your tractor is equipped with a twin-screw rear axle, position the power divider switch in the unlocked position.

Remove your foot from the accelerator pedal to make sure the vehicle will maintain traction with the retarding power of the engine alone.

If the vehicle drive wheels begin to skid or if there is a fishtailing motion, do not activate the engine brakes.

f traction is maintained using the retarding power of the engine alone and more braking power is required, switch the two-position selector switch to the LOW position and activate the engine brakes by switching the on/off switch to the ON position.

If the vehicle's drive wheels begin to skid or there is a fishtailing motion, switch the on/off switch to the OFF position.

If traction is maintained when the engine brakes are activated and more braking power is required, move the two-position selector switch to the HI position.

Again, if the vehicle has lost traction or if there is a fishtailing motion, switch the on/off switch to the OFF position. Do not attempt to use the engine brakes in the HI position.

Downloaded from www.Manualslib.com manuals search engine

https://truckmanualshub.com/

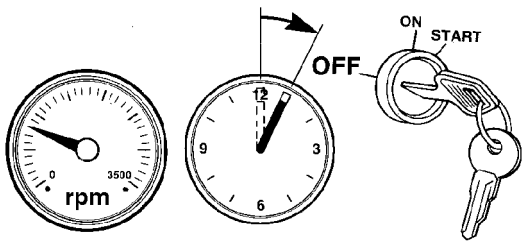

3 TO 5 MINUTES

oi800v05

Engine Shutdown

General Information

NOTE: Allow the engine to idle 3 to 5 minutes before shutting it off after a full-load operation. This allows adequate cool down of pistons, cylinders, bearings, and turbocharger components.

Electromagnetic Interference (EMI)

General Information

Some engine applications utilize accessories (CB radios, mobile transmitters, etc.) that generate and use radio frequency energy that, if not installed and used properly, can cause electromagnetic interference (EMI) conditions to exist between the accessory and PACCAR electronic controlled fuel system. PACCAR is not liable for any performance problems with either the fuel system or the accessory due to EMI. EMI is not considered by PACCAR to be an engine failure and therefore is not warrantable.

System EMI Susceptibility

PACCAR'S electrical system design will protect your engine from most, if not all, electromagnetic energy-emitting devices that meet the Federal Communications Commission legal requirements.

System EMI Radiation Levels

Your PACCAR product has been designed to emit minimum electromagnetic energy. Electronic components are required to pass various PACCAR EMI specifications. Testing has shown that when the engine is properly maintained, it will not

Downloaded from www.Manualslib.com manuals search engine

https://truckmanualshub.com/

interfere with onboard communication equipment or with the vehicle's ability to meet any applicable EMI standards and regulated specifications.

If an interference condition is observed, follow the suggestions below to reduce the amount of interference:

1. Locate the receiving antenna as far away from the engine and as high as possible.
2. Locate the receiving antenna as far away as possible from all metal obstructions (e.g., exhaust stacks).
3. Consult a representative of the accessory supplier in your area to:
   - Calibrate accurately the device for proper frequency, power output, and sensitivity (both base and remote site devices must be properly calibrated)
   - Obtain antenna reflective energy data measurements to determine the optimum antenna location
   - Obtain optimum antenna type and mounting arrangement for your application
   - Make sure your accessory equipment model is built for maximum filtering to reject incoming electromagnetic noise.

Downloaded from www.Manualslib.com manuals search engine

https://truckmanualshub.com/

Downloaded from www.Manualslib.com manuals search engine

https://truckmanualshub.com/

MAINTENANCE GUIDELINES

Overview

General Information

PACCAR recommends that the engine be maintained according to the Maintenance Schedule in this section.

If the engine is operating in ambient temperatures below 18°C [0°F] or above 38°C [100°F], perform maintenance at shorter intervals. Shorter maintenance intervals are also required if the engine is operated in a dusty environment or if frequent stops are made. Contact your local PACCAR Authorized Repair Location for recommended maintenance intervals.

Some of these maintenance procedures require special tools or must be completed by qualified personnel. Contact your local PACCAR Authorized Repair Location for detailed information.

If your engine is equipped with a component or accessory not manufactured by PACCAR Inc, refer to the component manufacturer's maintenance recommendations.

Use the chart provided in this section as a convenient way to record maintenance performed.

Maintenance Schedule

General Information

Perform maintenance at whichever interval occurs first.

At each scheduled maintenance interval, perform all previous maintenance checks that are due for scheduled maintenance.

Daily or Refueling – Maintenance Check

- Engine Lubrication Oil Level - Check/Correct
  To check engine oil level, park vehicle on level ground and wait 5 minutes after shutting engine OFF.
  - Remove dipstick and wipe it off with a clean, lint free rag.
  - Reinsert dipstick all the way in and pull it out again to check oil level.
  - Correct oil level is between the low (L) and high (H) marks on dipstick.
- Fuel – Water Separator – Drain
- Crankcase Breather Tube - Check
- Aftertreatment Diesel Exhaust Fluid Level - Check
- Air Intake Piping – Inspect

Downloaded from www.Manualslib.com manuals search engine

https://truckmanualshub.com/

  - Hose/Pipe condition – Chaffing, Deterioration, Leaks
  - Hose clamps for tightness
  - Clearance to other components
- Aftertreatment Exhaust Piping – Inspect
  - Cracks
  - Clearance to other components (i.e. electrical harnesses, etc)
  - Hose/pipe condition – cracks, chaffing, exhaust leaks.
- Cooling Fan – Inspect
  - Cracks
  - Clearance to other components
- Air Tank and Reservoirs (if equipped) Inspect
- Engine Coolant Level - Check/Correct

  With the engine off and temperature cool:
  - Check coolant level. It should be visible within the sight glass (glass level indicator) on the surge tank.
  - Add coolant as necessary by removing the pressure cap on the neck of the surge tank.
  - Replacement or top up coolant should have the same antifreeze concentration and corrosion inhibitor content as the original coolant in the cooling system.
  - Never add 100% antifreeze to the cooling system. Always dilute antifreeze to the correct concentration based on freeze protection prior to adding it to the cooling system. Adding or using 100% antifreeze in a cooling system may result in cooling system plugging and overheating problems.

Every 16,000 km (10,000mi), 250 Hours, or 3 months – Maintenance Check

- Air Cleaner Restriction - Check/Correct
  - Service filter element when Air Cleaner Restriction Gauge (option) locks in the extreme High position.
  - Hose/pipe condition - deterioration/signs of leaking
  - Hose clamp torque
- Charge Air Piping – check/Correct
  - Hose/pipe condition – chaffing, deterioration, leaks
  - Hose clamps for tightness
  - Clearance to other components
- Charge Air Cooler – Check/Correct
  - Cracked tubes or header
  - Clogged fins/tubes
  - Hose/pipe condition - deterioration/signs of leaking
  - Hose clamp torque
- Exhaust system - Check/Correct
  - * check for leaks and proper support

Every 32,000 km (20,000 mi), 500 Hours, or 6 months – Maintenance Check

- Fuel Filter, Spin on type replace
- Lubricating Oil – Change

Downloaded from www.Manualslib.com manuals search engine

https://truckmanualshub.com/

- Lubricating Oil filters – Replace
- Antifreeze Concentration - Check
- Radiator Pressure Cap - Check
- Batteries – Check
- Battery Cables and Connections – Check
- Battery condition - electrolyte level, cracks, signs of leaking, overcharging
- Harness/cables for loose connections, corrosion, chafing, broken retention clips
- Battery hold-downs for tightness
- Battery box mounting bolt torque

Every 64,000 km [40,000 mi], 1000 Hours, or 1 Year - Maintenance Check

- Fuel Filter (Spin-On Type - Change
- Drive Belt, Cooling Fan - Change
- Belt Tensioner, Automatic (Water Pump) - Check
- Cooling System Check
  - Radiator Pressure Cap Check
  - Supplemental additive/conditioner level
  - Coolant level
  - Coolant protection
  - Replace coolant filter

Every 128,000 km [80,000 mi], 2000 Hours, or 2 Years - Maintenance Check

- Cooling System - Drain/Flush/Fill
- Engine Steam Cleaning - Clean
- Air Compressor Discharge Lines - Clean
- Radiator Hoses – Check
  - Hose condition - deterioration/signs of leaking
  - Hose clamp torque
- Vibration Damper – Check
  - Damper for cracks, nicks, gouges
  - Condition of damper rubber isolator
  - Damper fastener torque
- Crankcase Ventilation Filter – Replace

Every 241,000 km [150,000 mi], 5000 Hours, or 4 Years - Maintenance Check

- Overhead Set – Adjust
- Exhaust System - Change
  - Replace exhaust flex pipe(s)

Every 321,500 km [200,000 mi], 6500 Hours - Maintenance Check

- Aftertreatment Diesel Particulate Filter – Clean
  - Complete Cleaning of filter using a DPF cleaning machine
  - Replace filter if necessary

Downloaded from www.Manualslib.com manuals search engine

https://truckmanualshub.com/

Every 1,200,000 km (750,000 mi), 22,000 Hours, or 6 years - Maintenance Check

- Change extended life coolant
  **(See note 1 below)

NOTE:
1.A heavy-duty extended life coolant (ELC) that meets ASTM D 6210 chemical composition specifications must be used. The change interval is 750,000 miles (1,200,000 km) or 22,000 hours on-road use (8 years or 15,000 hours off-highway use) on initial fill with no extender added. The change interval is 1,000,000 miles (1,600,000 km)/20,000 hours/8 years with an extender addition at 500,000 miles (800,000 km)/10,000 hours/4 years. Antifreeze is essential for freeze, overheat, and corrosion protection. The use of supplemental coolant additives (SCAs) is not recommended.
2.Follow the manufacturers' recommended maintenance procedures for the starter, alternator, batteries, electrical components, radiator, air compressor, air cleaner, refrigerant compressor, and fan clutch.
3.Reset valve lash, if needed, to nominal specifications.
4. The aftertreatment DPF clean/replace interval is based on the use of lubricating oils that meet the CJ-4 15W40 oil specification.

NOTE:
1. *The lubricating oil and lubricating oil filter interval can be adjusted based on application, fuel consumption, gross vehicle weight, and idle time. See the Oil Drain Intervals table in this procedure.*
2. *Service interval is every oil change or 24,000 km [15,000 mi], 500 hours, or 6 months, whichever occurs first. A heavy-duty year-round antifreeze that meets the chemical composition of GM6038M must be used. The change interval is 2 years or 385,000 km [240,000 mi], whichever occurs first. Antifreeze is essential for freeze, overheat, and corrosion protection. SCA is essential for liner pitting and scaling protection.*
3. *Service interval is 2 years or 385,000 km [240,000 mi], whichever occurs first.*
4. *Follow the manufacturers' recommended maintenance procedures for the starter, alternator, batteries, electrical components,*

Downloaded from www.Manualslib.com manuals search engine

https://truckmanualshub.com/

engine brake, exhaust brake, charge-air cooler, radiator, air compressor, air cleaner, refrigerant compressor, and fan clutch.

5. *Reset valve lash, if needed, to nominal specifications. Refer to "General Engine Specifications" on page 55.*

- The aftertreatment diesel particulate filter clean/replace interval is based on the use of lubricating oils that meet the Cummins Engineering Standard (C.E.S.) 20081 oil specification. If a non-low ash lubricating oil meeting the American Petroleum Institute (API) performance classification CI-4/SL and/or C.E.S. 20078 is used, the service intervals for the aftertreatment systems will be reduced to 241,000 [150,000 mi] or 5000 hours.
- Replace the primary (or suction side) fuel filter at every oil change.
- Replace the secondary (or pressure side) fuel filter at every other oil change.

Oil Drain Intervals

See the following flowchart to determine the maximum recommended oil change and filter change intervals in kilometers [miles], hours, or months, whichever comes first.

If yours is a refuse or Mixer/dumper, use table 2. For other applications, use table 1.

If No -

If the vehicle has not been listed, select the correct oil drain interval from Table 1.

Table 1—Maximum Oil Drain Intervals

(A) Severe Duty (If the Vehicle Meets Any of These Conditions)	(B) Normal Duty (If the Vehicle Meets Both of These Conditions)
Average fuel economy is less than 2.98 km/liter [7.0 mpg], or idle time is 40 percent or greater, or vehicle operates in dusty areas, or gross vehicle weight is greater than 27,215 kg [60,000 lbs].	Average fuel economy is greater than 2.98 km/liter [7.0 mpg], and gross vehicle weight is less than 27,215 kg [60,000 lbs].
Vehicle uses the severe-duty oil drain interval (A).	Vehicle uses the normal-duty oil drain interval (B).

Downloaded from www.Manualslib.com manuals search engine

https://truckmanualshub.com/

Table 1—Maximum Oil Drain Intervals

(A) Severe Duty (If the Vehicle Meets Any of These Conditions)	(B) Normal Duty (If the Vehicle Meets Both of These Conditions)
14,500 km [9000 mi], 500 hours, 6 months, or 7571 liters [2000 US gal] of fuel, whichever occurs first.	24,000 km [15,000 mi], 500 hours, 6 months, or 7571 liters [2000 US gal] of fuel, whichever occurs first.
Vehicle uses the severe-duty oil drain interval (A).	Vehicle uses the normal-duty oil drain interval (B)

Table 2—Oil Drain Intervals

Refuse Truck, Mixer, or Dump Truck	Kilometers	Miles	Hours	Months
Below 10 mph average	4,850	3,000	500	6
10 to 15 mph average	9,650	6,000	500	6
15 to 20 mph average	13,700	8,500	500	6
20 to 25 mph average	14,500	9,000	500	6
Higher than 25 mph average	19,000	12,000	500	6

PACCAR bases its oil drain specifications on duty cycle and oil contamination. This contamination occurs in all engines at varying rates regardless of design.

Maintaining the correct oil and filter change interval is a vital factor in preserving the integrity of an engine. Filters must be changed when the oil is changed.

Downloaded from www.Manualslib.com manuals search engine

https://truckmanualshub.com/

Maintenance Record Form

Engine Serial No.	Engine Model:
Owner's Name:	Equipment Name/No.

Date	km (Miles), Hours, or Time Interval	Actual km (Miles) or Hours	Maintenance Check Performed	Check Performed By	Comments

Downloaded from www.Manualslib.com manuals search engine

https://truckmanualshub.com/

Downloaded from www.Manualslib.com manuals search engine

https://truckmanualshub.com/

SERVICE LITERATURE

Additional Service Literature

General Information

The following publications can be purchased from your authorized PACCAR Engine dealer.

Bulletin Number	Title of Publication
4022257	Engine Service Manual
4022225	Electronic Control System Troubleshooting and Repair Manual
2883353	Operation and Maintenance Manual
2883352	Owners Manual
3666255	Warranty Fail Code Manual - Midrange Engines
3379000	Air for Your Engine
3379001	Fuel for Diesel Engines
3379009	Operation of Diesel Engines in Cold Climates
3666132	Coolant Requirements and Maintenance
3810340	Engine Oil and Oil Analysis Recommendations
4021566	Diesel Exhaust Fluid Specifications for Selective Catalytic Reduction Systems

Downloaded from www.Manualslib.com manuals search engine

https://truckmanualshub.com/

Downloaded from www.Manualslib.com manuals search engine

https://truckmanualshub.com/

MAINTENANCE SPECIFICATIONS

General Engine Specifications

Horsepower		See engine dataplate
Firing Order		1, 5, 3, 6, 2, 4
Crankshaft Rotation (viewed from front of engine)		Clockwise
Displacement		8.3 liters (504.5 in^3)
Bore and Stroke		114 mm (4.49 in.) × 135 mm (5.32 in.)
Dry Weight		754 kg (1,662 lb)
Wet Weight		788 kg (1,737 lb)
Overhead Adjustment	Intake Valve Adjustment	0.305 mm (0.012 in.)
	Exhaust Valve Adjustment	0.559 mm (0.022 in.)
Engine Brake Adjustment		2.286 mm (0.090 in.)
Maximum Overspeed Capability (15 seconds maximum)		3,600 rpm

Downloaded from www.Manualslib.com manuals search engine

https://truckmanualshub.com/

Lubricating Oil System

Oil Pressure	At Low Idle (minimum allowable)	69 kPa (10 psi)
	At Rated Speed (minimum allowable)	207 kPa (30 psi)
Regulated Oil Pressure		517 kPa (75 psi)
Lubricating Oil Filter Capacity		3.78 liters (4 qt)
Oil Pan Capacity, Low to High	Standard Oil Pan	15.1 to 18.9 liters (16 to 20 qt)
	Standard Oil Pan with Cylinder Block Stiffener Plate	16.1 to 19.9 liters (17 to 21 qt)
Total System Capacity (Oil Pan and New Oil Filter)	Standard Oil Pan	22.7 liters (24 qt)
	Standard Oil Pan with Cylinder Block Stiffener Plate	23.7 liters (25 qt)

Downloaded from www.Manualslib.com manuals search engine

https://truckmanualshub.com/

Cooling System

Coolant Capacity (engine only)		12.4 liters (13.1 qt)
Standard Modulating Thermostat Range		82 to 93°C (180 to 200°F)
Minimum Recommended Pressure Cap		103 kPa (15 psi)
Maxiumum Top Tank Coolant Temperature		107°C (225°F)
Winterfronts	Minimum Allowed Air Passage Area	774 cm² (120 in.²)

Downloaded from www.Manualslib.com manuals search engine

https://truckmanualshub.com/

Filter Specifications

General Information

Fleetguard filters are standard on new PACCAR engines. PACCAR recommends their use.

Fleetguard products meet all PACCAR test standards to provide the quality filtration necessary to achieve the engine's design life. If other brands are substituted, the purchaser should ensure the filter specification meet or exceed the Fleetguard specifications.

PACCAR can not be responsible for problems caused by non-genuine filters that do not meet PACCAR performance or durability requirements.

Filter Part Numbers	
Lubricating Oil Filter Fleetguard Part Number	LF9009
Fuel Filter (primary, pressure side) Fleetguard Part Number	FF5636
Fuel Filter (secondary, suction side, with water-in-fuel sensor) Fleetguard Part Number	FS1065
Crankcase Breather Element Fleetguard Part Number	CV5060300
Aftertreatment DEF Dosing Unit Filter	2880298

NOTE: An LF9009 lubricating oil filter must be used. A venturi type lubricating oil filter must be used in order to benefit from the bypass filtration section of the lubricating oil filter. Do not use an LF3000 lubricating oil filter. Engine durability will be reduced by using the wrong lubricating oil filter.

Downloaded from www.Manualslib.com manuals search engine

https://truckmanualshub.com/

Diesel Exhaust Fluid Recommendations and Specifications

General Information

WARNING! It is unlawful to tamper with or remove any component of the aftertreatment system. It is also unlawful to use a Diesel Exhaust Fluid (DEF) that does not meet the specifications provided or to operate the vehicle/equipment with no Diesel Exhaust Fluid (DEF).

WARNING! Diesel Exhaust Fluid (DEF) contains urea. do not get the substance in your eyes. In case of contact, immediately flush eyes with large amounts of water for a minimum of 15 minutes. Do not swallow internally. In the event the diesel exhaust fluid is ingested, contact a physician immediately. Reference the Materials Safety Data Sheets (MSDS) for additional information.

CAUTION: Never attempt to create Diesel Exhaust Fluid by mixing agricultural grade urea with water. Agricultural grade urea does not meet the necessary specifications required and the aftertreatment system may be damaged.

Fuel Recommendations and Specifications

Fuel Recommendations

WARNING! Mixing other fuels with diesel can cause an explosion. Do not mix gasoline, alcohol, or gasohol with diesel fuel. Make sure you know your fuel source and use the recommended diesel fuel as indicated in this section of the Operator's manual.

CAUTION: Dirt or water in the fuel system can cause severe damage to both the fuel pump and the fuel injectors. Due to the precise tolerances of diesel injection systems, it is extremely important that the fuel be kept clean and free of dirt or water. Know your fuel source and make sure all steps are taken for dispensing or using clean fuel in your vehicle.

CAUTION: Lighter fuel can reduce economy or possibly damage fuel system components. Lighter fuels typically do not have enough lubricity elements in the fuel to properly lubricate the fuel injection system. Be sure you follow the fuel recommendations as indicated in this section of the operator's manual.

Downloaded from www.Manualslib.com manuals search engine

https://truckmanualshub.com/

CAUTION: Using diesel fuels blended with lubricating may cause damage to your exhaust aftertreatment system. Service intervals for aftertreatment systems will be reduced. Do not use diesel fuel blended with lubricating oil in engines equipped with an aftertreatment system.

CAUTION: Do not use high sulfur diesel fuel as it will damage the exhaust aftertreatment system. Also, the engine will not meet emission regulations. Use only Ultra Low Sulfur Diesel (ULSD) fuel.

NOTE: The engine has been optimized for use with an aftertreatment system together with ULSD fuel to meet the 2010 U.S. Environmental Protection Agency (EPA) regulations.

Ultra-low sulfur diesel fuel is defined as diesel fuel not exceeding 0.0015 (15 ppm) mass percent sulfur content (ultra-low diesel fuel is also defined by ASTM 5-15). There are no acceptable substitutes.

PACCAR recommends the use of ASTM number 2D fuel. The use of number 2 diesel fuel will result in optimum engine performance.

At operating temperatures below 0°C [32°F], acceptable performance can be obtained by using blends of number 2D and number 1D.

Downloaded from www.Manualslib.com manuals search engine

https://truckmanualshub.com/

The following chart lists acceptable types of fuels for this engine.

Acceptable Types of Fuels									
Number 1D Diesel[ab]	**Number 2D Diesel[b]**	**Number 1K Kerosene**	**Jet-A**	**Jet-A1**	**JP-5**	**JP-8**	**Jet-B**	**JP-4**	**CITE**
OK	OK	NOT OK	NOT OK	NOT OK	NOT OK	NOT OK	NOT OK	NOT OK	NOT OK
48-34[c]	40-24[c]	50-35[c]	51-37[c]	51-37[c]	48-36[c]	51-37[c]	57-45[c]	57-45[c]	57-45[c]

a. Any adjustment to compensate for reduced performance with a fuel system using alternate fuel is not warrantable.
b. Winter blend fuels, such as found at commercial fuel dispensing outlets, are combinations of number 1D and number 2D diesel fuel and are acceptable.
c. BTU Content/Degree API Gravity - Low API gravity fuels have a higher thermal energy content (BTU). As a general rule, there is a 3 to 5 percent decrease in BTU content for every 10 degree increase in API gravity, there is also a 0.7 degree API gravity increase with an increase in fuel temperature. This decrease in energy content equates roughly to the same percentage of power loss. Use of fuels with higher API gravity will cause higher than normal fuel consumption.

NOTE: PACCAR recommends that the cetane number of diesel fuel be a minimum of 45 for engines that are expected to operate at temperatures below 0°C (32°F) and a minimum of 42 for engines that are operated at temperatures above 0°C (32°F).

NOTE: Using diesel fuel with a lower than recommended cetane number can cause hard starting, instability, and excessive white smoke. To maintain satisfactory operation at low ambient temperatures, it is important to specify diesel fuel of the correct cetane number.

Downloaded from www.Manualslib.com manuals search engine

https://truckmanualshub.com/

NOTE: PACCAR requires all permissible fuels to have adequate fuel lubricity. Lubricity can be measured by ASTM, specification D6079, ISO 12156, High Frequency Reciprocating Rig (HFRR) in which the fuel must have a wear scar diameter of 0.52 mm [0.02 in] or less.

Warranty and the Use of Biodiesel Fuel

PACCAR Inc approves the use of biodiesel fuel blends up to 5% by volume in diesel fuel that meets all of the following three conditions:

- The biodiesel used in the blend meets ASTM Standard D 6751 or EN 14214 specifications.
- The biodiesel used in the blend is sourced from a BQ-9000 Accredited Producer.
- The finished blend meets the fuel properties of ASTM Standard D 975 or EN 590 specifications.

The use of approved biodiesel fuel does not affect the PACCAR engine warranty. Failures caused by the use of non-approved biodiesel fuels or other fuel additives that are of unacceptable quality or do not meet specified industry standards are not defects of PACCAR parts or workmanship and therefore will not be a covered by the PACCAR engine warranty.

Lubricating Oil Recommendations and Specifications

General Information

CAUTION: Extending the oil and filter change interval beyond the recommendations will decrease the engine life due to factors such as corrosion, deposits, and wear. Engine oil filters capture dirt and remove deposits from the oil to prolong the life of internal moving components. Follow the oil and filter change intervals as recommended in this section of the manual.

The use of quality engine lubricating oils, combined with appropriate oil drain and filter change intervals, is a critical factor in maintaining engine performance and durability. Extending the oil and filter change interval beyond the recommendations will decrease engine life due to factors such as corrosion, deposits, and wear. Refer to “Oil Drain Intervals” on page 49 to determine which oil drain interval to use for an application.

NOTE: The responsibility is with the owner. If recommendations are ignored, warranty could be affected.

API: American Petroleum Institute

Downloaded from www.Manualslib.com manuals search engine

https://truckmanualshub.com/

CES: Cummins Engineering Standard

PACCAR allows, for midrange applications, the use of lubricating oils that meet or exceed CES 20078 or CES 20081 with no change in oil drain interval. But, if a non-low ash lubricating oil meeting the Cummins Engineering Standard (CES) classification CES 20078 is used, the service interval(s) for the aftertreatment system will be reduced.

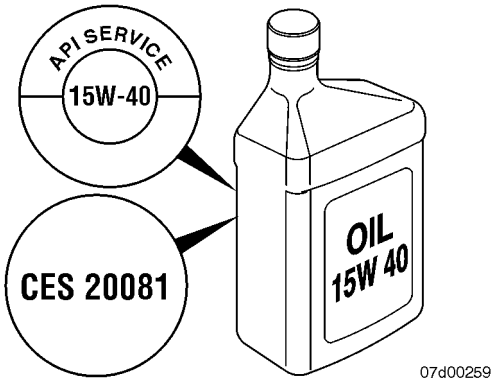

Downloaded from www.Manualslib.com manuals search engine

https://truckmanualshub.com/

To determine if the lubricating oil meets CES 20078 or CES 20081, review the label on the back of the lubricating oil bottle for the CES 20078 or CES 20081 reference. If acquiring the lubricating oil in bulk, contact the supplier for the lubricating oil specifications and confirm that the oil meets CES 20078 or CES 20081.

Also located on the lubricating oil bottle is the API service symbol which is shown in the illustration. The upper half of the symbol displays the appropriate oil categories. The center section identifies the SAE oil viscosity grade.

The table below shows how the Cummins Engineering Standard (CES) compares to the American Petroleum Institute (API) classification.

Cummins Engine Standard Classification (CES)	American Petroleum Institute Classification (API)	Comments
CES-20071 CES-20072 CES-20076 CES-20077	API CH-4/SJ	**Not** recommended. Lubricating oil drain interval **must** be reduced by 50%. Aftertreatment maintenance interval will be reduced.
CES-20078	CI-4/SL	Aftertreatment maintenance interval will be reduced.
CES-20081	CJ-4/SL	Maximum aftertreatment maintenance interval. No change in lubricating oil drain interval.

NOTE: A lubricating oil that meets the American Petroleum Institute (API) performance classification CJ-4/SL may not meet the CES 20081 requirement. Always make sure the lubricating oil used meets the CES 20081 requirement in addition to the API performance classification CJ-4/SL.

PACCAR recommends the use of high-quality SAE 15W-40 heavy-duty engine oil.

The primary PACCAR recommendation is for the use of 15W-40 multigrade lubricating oil for normal operation at ambient temperatures above -15°C [5°F]. The use of multigrade oil reduces deposit formation, improves engine cranking in low temperature conditions and increases engine

Downloaded from www.Manualslib.com manuals search engine

https://truckmanualshub.com/

durability by maintaining lubrication during high temperature operating conditions. Since multigrade oils have been shown to provide approximately 30 percent lower oil consumption compared with monograde oils, it is important to use multigrade oils to be certain the engine will meet applicable emissions requirements.

Use of "synthetic engine oils" (those made with API group 3 or group 4 base stocks) is permitted subject to the same performance and viscosity limitations of petroleum (mineral) based engine oils. The same oil change intervals must be applied to synthetic oils that are applied to petroleum (mineral) based engine oils.

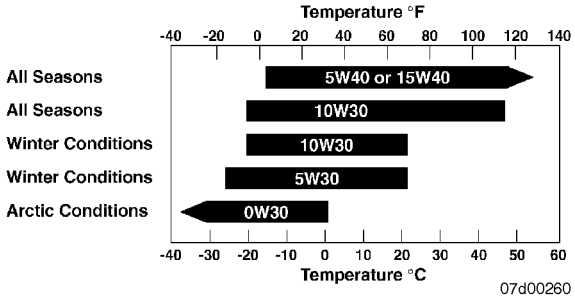

While the preferred viscosity grade is 15W-40, lower viscosity multigrade oils can be used in colder climates. See the accompanying chart. Any viscosity grade lower than 15W-40 must still meet CES 20081.

Synthetic engine oils, API Group III and Group IV basestocks, are recommended for use in PACCAR engines operating in ambient temperature conditions consistently below -25°C [-13°F]. Synthetic 0W-30 oils that meet the requirements of API Group III or Group IV basestocks, can be used in operations where the ambient temperature never exceeds 0°C [32°F]. Multiviscosity oils rated 0W-30 do not offer the same level of protection against fuel dilution as do higher multigrade oils. Higher cylinder wear can be experienced when using 0W-30 oils in high-load situations.

As these oils have directionally thinner oil films than 15W-40 oils, top-quality Fleetguard® filters must be used above 20°C [70°F]. Some oil suppliers might claim better fuel economy for these oils. PACCAR can neither approve nor disapprove any product not manufactured by PACCAR. These claims are between the customer and oil supplier. Obtain a commitment from the oil supplier that the oil will give satisfactory performance in PACCAR engines or do not use the oil.

New Engine Break-In Oils

Special “break-in” engine lubricating oils are not recommended for new or rebuilt PACCAR engines. Use the same lubricating oil that will be used during normal operation.

Downloaded from www.Manualslib.com manuals search engine

https://truckmanualshub.com/

CAUTION: A sulfated ash limit of 1.85 percent has been placed on all engine lubricating oils recommended for use in PACCAR engines. Higher ash oils can cause valve and/or piston damage and lead to excessive oil consumption.

CAUTION: The use of a synthetic-base oil does not justify extended oil change intervals. Extended oil change intervals can decrease engine life due to factors such as corrosion, deposits, and wear.

Aftermarket Oil Additive Usage

PACCAR does not recommend the use of aftermarket oil additives. The present high-quality fully additive engine lubricating oils are very sophisticated, with precise amounts of additives blended into the lubricating oil to meet stringent requirements. These furnished oils meet performance characteristics that conform to the lubricant industry standards. Aftermarket lubricating oil additives are not necessary to enhance engine oil performance and in some cases can reduce the furnished oil's capability to protect the engine.

Coolant Recommendations and Specifications

Fully Formulated Coolant/Antifreeze

The cooling system in your vehicle was factory filled with Extended Life Coolant (ELC) that meets or exceeds all ASTM D 6210 requirements. PACCAR recommends only using a 50/50 mixture of distilled water and ELC when cooling system service is required. A 50/50 mixture of ELC and distilled water will provide freeze protection down to -34°F (-36.7°C), which is adequate for most locations in North America. For extremely cold operating conditions, a 60/40 mixture (coolant/water ratio) can be used to provide freeze protection down to -62°F (-52.2°C).

Your engine is also equipped with a Coolant Filter designed to capture and remove harmfuil deposits from the cooling system to help prolong system life.

Downloaded from www.Manualslib.com manuals search engine

https://truckmanualshub.com/

Good-quality water is important for cooling system performance. Excessive levels of calcium and magnesium contribute to scaling problems, and excessive levels of chlorides and sulfates cause cooling system corrosion.

Water Quality	
Calcuim Magnesium (hardness)	**Maximum 170 ppm as ($CaCO_3$ + $MgCO_3$)**
Chloride	40 ppm as (Cl)
Sulfur	100 ppm as (SO_4)

Fully formulated antifreeze must be mixed with good quality water at a 50/50 ratio (40- to 60-percent working range). A 50/50 mixture of antifreeze and water gives a -36°C [-33°F] freezing point and a 108°C [226°F] boiling point, which is adequate for locations in North America. The actual lowest freezing point of ethylene glycol antifreeze is at 68 percent. Using higher concentrations of antifreeze will raise the freezing point of the solution and increase the possibility of a silica gel problem.

PACCAR vehicle engine-cooling systems are filled with fully formulated extended-life coolant (ELC).

PACCAR recommends the use of fully formulated extended life coolant that meets the requirements of Cummins Engineering Standard (C.E. S.) 14603 for top off and service.

If the replacement coolant is Chevron Texaco, Shell Rotella or their private label counterparts which do not meet the elastomer compatibility section of CES 14603, the coolant must be treated by adding 0.24 liter (8oz) of liquid silicate fluid for every 45 liters (12 gal) of total coolant system volume. It is critical to not over treat the coolant with silicate fluid. If over-treatment is suspected, drain the cooling system and discard the filter. Clean the cooling system immediately. Symptoms of silicate over-treatment can be thickened coolant in the lower radiator tank, water pump seal leakage soon after silicate addition, reduced heater output and/or elevated engine temperatures.

To obtain order forms or ask questions relative to ordering the silicate fluid, contact:

Silicate Fluid Order Program
P.O. Box 27388
Houston, TX 77277-7388

Phone: 800-346-9041
Fax: 800-876-5317

Downloaded from www.Manualslib.com manuals search engine

https://truckmanualshub.com/

If the replacement coolant is Chevron Texaco, Shell Rotella or their private label counterparts the coolant must be replaced with new coolant whenever the engine is overhauled or repairs involve the replacement of the following components:

- Rocker lever housing gasket.
- Lubricating oil cooler housing gasket.
- Cylinder head gasket.
- Thermostat housing gasket.

For further details of engine coolant for PACCAR PX-8 engines, refer to Cummins Coolant Requirements and Maintenance Bulletin 3666132.

Checking Coolant Condition

To ensure the Extended Life Coolant (ELC) in your vehicle always provides maximum freeze protection, perform the following tests:

1. Check the coolant color at every maintenance interval. It should be a bright red with no signs of debris or any oil.
2. Test the freeze point at least two times a year. A refractometer or test strips can be used to measure the protection level.
3. Keep the cooling system at full levels by topping-up using ELC pre-diluted 50/50.

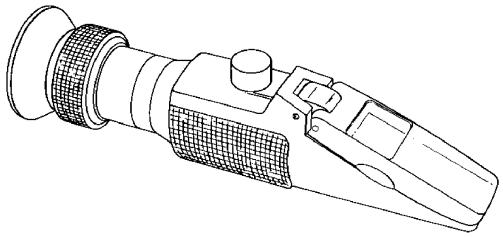

ra8toda

A refractometer must be used to measure the freezing point of the coolant accurately. Use Fleetguard® refractometer, Part Number C2800.

Downloaded from www.Manualslib.com manuals search engine

https://truckmanualshub.com/

Recommended Extended Life Coolant Suppliers

Brand Name	Supplier
TRP™	Authorized PACCAR engine dealer

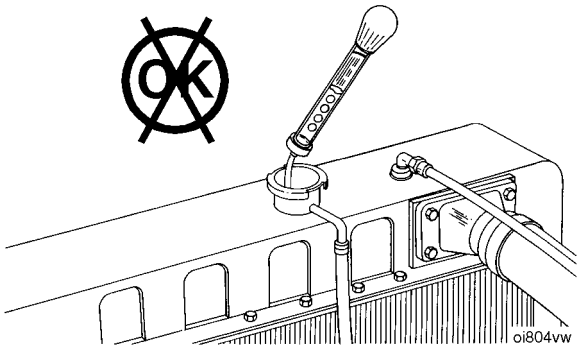

CAUTION: Do not use a floating ball hydrometer. The use of floating ball hydrometers can give an incorrect reading. Using a floating ball hydrometer for testing the freezing point of the coolant is an inaccurate test and will cause a false reading of the coolant freezing point. Use a refractometer to obtain an accurate test of the coolant freezing point.

Downloaded from www.Manualslib.com manuals search engine

https://truckmanualshub.com/

Cooling System Sealing Additives

CAUTION: The use of sealing additives in the cooling system will cause damage to the engine. Sealing additives will plug various areas of the radiators and oil cooler. The plugging of the cooling system will hamper heat transfer thus, causing internal engine damage. Do not use sealing additives in the cooling system. The use of sealing additives will:

- ***Buildup in coolant low-flow areas***
- ***Plug the radiator and oil cooler***
- ***Possibly damage the water pump seal.***

Failure to comply may result in equipment or property damage.

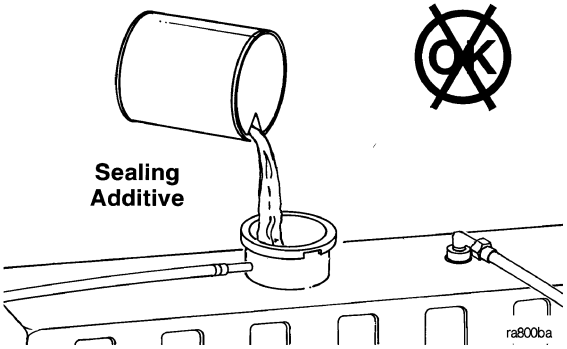

Downloaded from www.Manualslib.com manuals search engine

https://truckmanualshub.com/

Cooling System Soluble Oils

CAUTION: Do not use soluble oils in the cooling system. The use of soluble oils in the cooling system will cause damage to the engine. Soluble oils in the cooling system will:

- ***Corrode brass and copper***
- ***Damage heat transfer surfaces***
- ***Damage seals and hoses.***

Failure to comply may result in equipment or property damage.

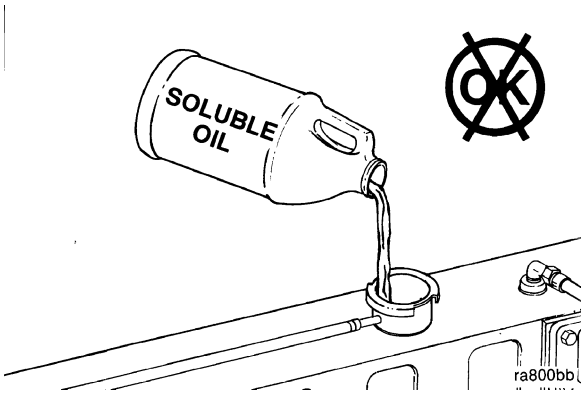

Downloaded from www.Manualslib.com manuals search engine

https://truckmanualshub.com/

Downloaded from www.Manualslib.com manuals search engine

https://truckmanualshub.com/

WARRANTY

PACCAR PX-8 Engine United States and Canada Coverage

Products Warranted

This warranty applies to new PACCAR PX-8 Engines sold and used in the United States[1] or Canada and operated in on-highway applications with one exception - there is different warranty coverage for engines used in the fire apparatus truck applications.

The PACCAR PX-8 Engine is warranted directly to the first purchaser by PACCAR.

Base Engine Warranty

This warranty covers any failures of the Engine which result, under normal use and service, from a defect in material or factory workmanship (Warrantable Failure). This coverage begins on the date of delivery and ends two years or 250,000 miles (402,336 kilometers) or 6,250 hours, whichever occurs first after the date of delivery of the Engine to the first purchaser. Additional coverage is outlined in the Emission Warranty section.

PACCAR Responsibilities

PACCAR will pay for all parts and labor needed to repair the damage to the Engine resulting from a Warrantable Failure.

PACCAR will pay for the lubricating oil, antifreeze, filter elements, belts, hoses, and other maintenance items that are not reusable due to the Warrantable Failure. PACCAR will pay for reasonable labor costs for Engine removal and reinstallation when necessary to repair a Warrantable Failure.

PACCAR will pay for the first year from the date of delivery of the Engine to the first purchaser reasonable costs for towing a vehicle disabled by a Warrantable Failure to the nearest authorized repair station. In lieu of the towing expense and in its sole discretion, PACCAR may pay reasonable costs for a mechanic to travel to and from the location of the vehicle when an engine repair is performed at the site of the failure.

1. United States includes American Samoa, the Commonwealth of Northern Mariana Islands, Guam, Puerto Rico, and the U.S. Virgin Islands.

Downloaded from www.Manualslib.com manuals search engine

https://truckmanualshub.com/

Owner Responsibilities

Owner is responsible for the operation and maintenance of the Engine as specified in the applicable PACCAR Operator's Manual. Owner is also responsible for providing proof that all recommended maintenance has been performed.

Before the expiration of the applicable warranty, Owner must notify a PACCAR authorized dealer or an authorized Cummins Distributor of any Warrantable Failure and make the engine available for repair by such facility. The Warrantable Failure must be brought to the attention of a PACCAR authorized engine dealer within 30 days of discovery. Owner must also deliver the Engine to the authorized engine repair facility during the warranty period unless deliver is impossible because the Engine has been disabled by a Warrantable failure.

Owner is responsible for the cost of lubricating oil, antifreeze, filter elements and other maintenance items provided during warranty repairs unless such items are not reusable due to the Warrantable Failure. Owner is responsible for communication expenses, meals, lodging and similar costs incurred as a result of a Warrantable Failure.

Owner is responsible for non-Engine repairs and for "downtime" expenses, cargo damage, fines, all applicable taxes, all business costs and other losses resulting from a Warrantable Failure.

Limitations

Your sole and exclusive remedy against PACCAR and the Selling Dealer arising from your purchase and use of this Engine is limited to the repair or replacement of "warrantable failures" at authorized United States and Canadian PACCAR Engine Dealers, or an authorized Cummins Distributor, or an authorized PACCAR Engine facility where applicable, subject to PACCAR's time, mileage, and hour limitations of the engine warranty. The maximum time, mileage and hour limitations of the engine warranty begin running on the Date of Delivery to the First Purchaser. The accrued time, mileage, or hours is calculated when the engine is brought into an Authorized Dealer for correction of warrantable failures.

PACCAR is not responsible for failures or damage resulting from what PACCAR determines to be abuse or neglect, including, but not limited to: damage due to accident; operation without adequate coolants or lubricants; overfueling; overspeeding; lack of maintenance of lubricating, cooling or intake systems; improper storage, starting, warm-up, run-in or shutdown practices; unauthorized modifications of the Engine. PACCAR is also not responsible for failures caused by incorrect oil or fuel or diesel exhaust fluid or by water, dirt or other contaminants in the fuel, oil, or diesel exhaust fluid. Failure of replacement parts used in repairs due to the above non-warrantable conditions is not warrantable.

Downloaded from www.Manualslib.com manuals search engine

https://truckmanualshub.com/

This warranty does not apply to accessories supplied by the vehicle OEM which are covered by the OEM vehicle warranty.

Failures resulting in excessive oil consumption are covered for the duration of the coverage or 250,000 miles (402,336 kilometers) or 6,250 hours from the date of delivery of the Engine to the first purchaser, whichever of the three occurs first. Before a claim for excessive oil consumption will be considered, Owner must submit adequate documentation to show that consumption exceeds PACCAR published standards.

Failures of belts and hoses supplied by PACCAR are covered for the first year from the date of delivery of the Engine to the first purchaser.

PACCAR does not warrant antifreeze, lubricants, filters, filter elements, or any other part which is considered a maintenance item.

Parts used to repair a Warrantable Failure may be new parts, approved rebuilt parts, or repaired parts. PACCAR is not responsible for failures resulting from the use of parts not approved by PACCAR. A new approved rebuilt part used to repair a Warrantable Failure assumes the identity of the part it replaced and is entitled to the remaining coverage hereunder.

PACCAR is not responsible for damage or loss resulting from Engine horsepower/torque upgrades.

PACCAR Inc reserves the right to interrogate Electronic Control Module (ECM) data for purposes of failure analysis.

PACCAR DOES NOT COVER WEAR OR WEAROUT OF COVERED PARTS.

THIS WARRANTY AND THE EMISSION WARRANTY SET FORTH HEREINAFTER ARE THE SOLE WARRANTIES MADE BY PACCAR IN REGARD TO THESE ENGINES.

THIS LIMITED WARRANTY IS THE SOLE WARRANTY MADE BY PACCAR AND THE SELLING DEALER. EXCEPT FOR THE ABOVE LIMITED WARRANTY, PACCAR AND THE SELLING DEALER MAKE NO OTHER WARRANTIES, EXPRESS OR IMPLIED. PACCAR AND THE SELLING DEALER EXPRESSLY DISCLAIM ANY WARRANTY OF MERCHANTABILITY OR WARRANTY OF FITNESS FOR A PARTICULAR PURPOSE.

PACCAR AND THE SELLING DEALER SHALL NOT BE LIABLE FOR INCIDENTAL OR CONSEQUENTIAL DAMAGES INCLUDING, BUT NOT LIMITED TO: LOSS OF INCOME OR LOST PROFITS; ENGINE OR VEHICLE DOWNTIME; THIRD PARTY DAMAGE, INCLUDING DAMAGE OR LOSS TO OTHER ENGINES, VEHICLES OR PROPERTY, ATTACHMENTS, TRAILERS AND CARGO; LOSS OR DAMAGE TO PERSONAL CONTENTS; COMMUNICATION EXPENSES; LODGING AND/OR MEAL EXPENSES; FINES; APPLICABLE TAXES OR BUSINESS

Downloaded from www.Manualslib.com manuals search engine

https://truckmanualshub.com/

COSTS OR LOSSES; ATTORNEYS' FEES; AND ANY LIABILITY YOU MAY HAVE IN RESPECT TO ANY OTHER PERSON OR ENTITY.

This warranty gives you specific legal rights, and you may also have other rights which vary from state to state.

United States and Canada Fire Apparatus Truck Applications Coverage

Products Warranted

This warranty applies to new PACCAR PX-8 Engines sold and used in the United States[1] or Canada and operated in fire apparatus truck applications.

Base Engine Warranty

The Base Engine Warranty covers any failures of the Engine which result, under normal use and service, from a defect in material or factory workmanship (Warrantable Failure). This coverage begins on the date of delivery to the first purchaser and ends five years or 100,000 miles (160,935 kilometers), whichever occurs first.

1. United States includes American Samoa, the Commonwealth of Northern Mariana Islands, Guam, Puerto Rico, and the U.S. Virgin Islands.

Engine aftertreatment components included in the PACCAR Critical Parts List (CPL) and marked with a PACCAR part number are covered under Base Engine Warranty. Additional coverage is outlined in the Emission Warranty section.

PACCAR Responsibilities

PACCAR will pay for all parts and labor needed to repair the damage to the Engine resulting from a Warrantable Failure.

PACCAR will pay for the lubricating oil, antifreeze, filter elements, belts, hoses and other maintenance items that are not reusable due to the Warrantable Failure. PACCAR will pay for reasonable labor costs for Engine removal and reinstallation when necessary to repair a Warrantable Failure.

PACCAR will pay reasonable costs for towing a vehicle disabled by a Warrantable Failure to the nearest authorized repair location. In lieu of the towing expense and at its sole discretion, PACCAR will pay reasonable costs for a mechanic to travel to and from the location of the vehicle when its engine repair is performed at the site of the failure.

Owner Responsibilities

Owner is responsible for the operation and maintenance of the Engine as specified in PACCAR Operator's Manual. Owner is also responsible for providing proof that all recommended maintenance has been performed.

Downloaded from www.Manualslib.com manuals search engine

https://truckmanualshub.com/

Before the expiration of the applicable warranty, Owner must notify a PACCAR authorized dealer or an authorized Cummins Distributor of any Warrantable Failure and make the engine available for repair by such facility. The Warrantable Failure must be brought to the attention of a PACCAR authorized engine dealer within 30 days of discovery. Except for Engines disabled by a Warrantable Failure, Owner must also deliver the Engine to the repair facility.

Owner is responsible for the cost of lubricating oil, antifreeze, filter elements and other maintenance items provided during warranty repairs unless such items are not reusable due to the Warrantable Failure.

Owner is responsible for communication expenses, meals, lodging and similar costs incurred as a result of a Warrantable Failure.

Owner is responsible for non-Engine repairs and for downtime expenses, cargo damage, fines, all applicable taxes, all business costs and other losses resulting from a Warrantable Failure.

Owner is responsible for a $100 (U.S. Dollars) deductible per each service visit under this plan in the 3rd, 4th, and 5th years of base engine warranty. The deductible will not be charged during the first two years of the base engine warranty.

Limitations

Your sole and exclusive remedy against PACCAR and the Selling Dealer arising from your purchase and use of this Engine is limited to the repair or replacement of "warrantable failures" at authorized United States and Canadian PACCAR Engine Dealers, or an authorized Cummins Distributor, or an authorized PACCAR Engine facility where applicable, subject to PACCAR's time, mileage, and hour limitations of the engine warranty. The maximum time, mileage and hour limitations of the engine warranty begin running on the Date of Delivery to the First Purchaser. The accrued time, mileage, or hours is calculated when the engine is brought into an Authorized Dealer for correction of warrantable failures.

PACCAR is not responsible for failures or damage resulting from what PACCAR determines to be abuse or neglect, including but not limited to: damage due to accident; operation without adequate coolants or lubricants; overfueling; overspeeding; lack of maintenance of lubricating, cooling or intake systems; improper storage, starting, warm-up, run-in or shutdown practices; unauthorized modifications of the Engine. PACCAR is also not responsible for failures caused by incorrect oil, fuel or diesel exhaust fluid or by water, dirt or other contaminants in the fuel, oil or diesel exhaust fluid. Failure of replacement parts used in repairs due to the above non-warrantable conditions is not warrantable.

This warranty does not apply to accessories supplied by PACCAR which are covered by the OEM vehicle warranty.

Downloaded from www.Manualslib.com manuals search engine

https://truckmanualshub.com/

Failures resulting in excessive oil consumption are not covered beyond the duration of the coverage or 100,000 miles (160,935 kilometers) or 6,250 hours from the date of delivery of the Engine to the first purchaser, whichever of the three occurs first. Before a claim for excessive oil consumption will

be considered, Owner must submit adequate documentation to show that consumption exceeds PACCAR published standards.

Failures of belts and hoses supplied by PACCAR are not covered beyond the first year from the date of delivery of the Engine to the first purchaser.

PACCAR does not warrant antifreeze, lubricants, filters, filter elements, or any other part which is considered a maintenance item.

Parts used to repair a Warrantable Failure may be new parts, approved rebuilt parts, or repaired parts. PACCAR is not responsible for failures resulting from the use of parts not approved by PACCAR. A new approved rebuilt part used to repair a Warrantable Failure assumes the identity of the part it replaced and is entitled to the remaining coverage hereunder.

PACCAR is not responsible for damage or loss resulting from Engine horsepower/torque upgrades.

PACCAR Inc reserves the right to interrogate Electronic Control Module (ECM) data for purposes of failure analysis.

PACCAR DOES NOT COVER WEAR OR WEAROUT OF COVERED PARTS.

THIS WARRANTY AND THE EMISSION WARRANTY SET FORTH HEREINAFTER ARE THE SOLE WARRANTIES MADE BY PACCAR IN REGARD TO THESE ENGINES.

THIS LIMITED WARRANTY IS THE SOLE WARRANTY MADE BY PACCAR AND THE SELLING DEALER. EXCEPT FOR THE ABOVE LIMITED WARRANTY, PACCAR AND THE SELLING DEALER MAKE NO OTHER WARRANTIES, EXPRESS OR IMPLIED. PACCAR AND THE SELLING DEALER EXPRESSLY DISCLAIM ANY WARRANTY OF MERCHANTABILITY OR WARRANTY OF FITNESS FOR A PARTICULAR PURPOSE.

PACCAR AND THE SELLING DEALER SHALL NOT BE LIABLE FOR INCIDENTAL OR CONSEQUENTIAL DAMAGES INCLUDING, BUT NOT LIMITED TO: LOSS OF INCOME OR LOST PROFITS; ENGINE OR VEHICLE DOWNTIME; THIRD PARTY DAMAGE, INCLUDING DAMAGE OR LOSS TO OTHER ENGINES, VEHICLES OR PROPERTY, ATTACHMENTS, TRAILERS AND CARGO; LOSS OR DAMAGE TO PERSONAL CONTENTS; COMMUNICATION EXPENSES; LODGING AND/OR MEAL EXPENSES; FINES; APPLICABLE TAXES OR BUSINESS COSTS OR LOSSES; ATTORNEYS' FEES; AND ANY LIABILITY YOU MAY HAVE IN RESPECT TO ANY OTHER PERSON OR ENTITY.

Downloaded from www.Manualslib.com manuals search engine

https://truckmanualshub.com/

This warranty gives you specific legal rights, and you may also have other rights which vary from state to state.

Emission Warranty

Products Warranted

This emission warranty applies to new PACCAR Engines marketed by PACCAR that are used in the United States[1] in vehicles designed for transporting persons or property on a street or highway.

Coverage

PACCAR warrants to the first purchaser and each subsequent purchaser that the Engine is designed, built and equipped so as to conform at the time of sale by PACCAR with all U.S. Federal emission regulations applicable at the time of manufacture and that it is free from defects in material or factory workmanship which would cause it not to meet these regulations within the longer of the following periods: (A) Five years or 100,000 miles (160,935 kilometers) of operation, whichever occurs first, as measured from the date of delivery of the Engine to the first purchaser or (B) The Base Engine Warranty.

If the vehicle in which the Engine is installed is registered in the state of California, a separate California Emission Warranty also applies.

Replacement Parts

PACCAR recommends that any service parts used for maintenance, repair or replacement of emission control systems be new or genuine approved rebuilt parts and assemblies, and that the engine be serviced by an authorized PACCAR Engine dealer or an authorized Cummins Distributor. Your vehicle contains air, fuel, and electrical components that may affect engine emission controls. The use of non-genuine engine or vehicle replacement parts that are not equivalent to the PACCAR engine or OEM vehicle manufacturer's original part may impair the engine and vehicle emissions control system from working or functioning effectively, and may jeopardize your emissions warranty coverage.

Limitations

Your sole and exclusive remedy against PACCAR and the Selling Dealer arising from your purchase and use of this Engine is limited to the repair or replacement of "warrantable failures" at authorized United States and Canadian PACCAR

1. United States includes American Samoa, the Commonwealth of Northern Mariana Islands, Guam, Puerto Rico, and the U.S. Virgin Islands.

Downloaded from www.Manualslib.com manuals search engine

https://truckmanualshub.com/

Engine Dealers, or an authorized Cummins Distributor, or an authorized PACCAR Engine facility where applicable, subject to PACCAR's time, mileage, and hour limitations of the engine emission warranty. The maximum time, mileage and hour limitations of the engine emission warranty begin running on the Date of Delivery to the First Purchaser. The accrued time, mileage, or hours is calculated when the engine is brought into an Authorized Dealer for correction of warrantable failures.

Failures, other than those resulting from defects in material or factory workmanship, are not covered by this Warranty. PACCAR is not responsible for failures or damage resulting from what PACCAR determines to be abuse or neglect, including, but not limited to: damage due to accident; operation without adequate coolants or lubricants; overfueling; overspeeding; lack of maintenance of lubricating, cooling or intake systems; improper storage, starting, warm-up, run-in or shutdown practices; unauthorized modifications of the Engine. PACCAR is also not responsible for failures caused by incorrect oil, fuel or diesel exhaust fluid or by water, dirt or other contaminants in the fuel, oil or diesel exhaust fluid. Failure of replacement parts used in repairs due to the above non-warrantable conditions is not warrantable.

PACCAR is not responsible for non-Engine repairs, downtime expenses, cargo damage, fines, all applicable taxes, all business costs or other losses resulting from a Warrantable Failure.

THIS LIMITED EMISSION WARRANTY IS THE SOLE WARRANTY MADE BY PACCAR RELATING TO THE EMISSION EQUIPMENT. EXCEPT FOR THE ABOVE LIMITED WARRANTY, PACCAR MAKES NO OTHER WARRANTIES, EXPRESS OR IMPLIED. PACCAR EXPRESSLY DISCLAIMS ANY WARRANTY OF MERCHANTABILITY OR WARRANTY OF FITNESS FOR A PARTICULAR PURPOSE.

PACCAR AND THE SELLING DEALER SHALL NOT BE LIABLE FOR INCIDENTAL OR CONSEQUENTIAL DAMAGES INCLUDING, BUT NOT LIMITED TO: LOSS OF INCOME OR LOST PROFITS; ENGINE OR VEHICLE DOWNTIME; THIRD PARTY DAMAGE, INCLUDING DAMAGE OR LOSS TO OTHER ENGINES, VEHICLES OR PROPERTY, ATTACHMENTS, TRAILERS AND CARGO; LOSS OR DAMAGE TO PERSONAL CONTENTS; COMMUNICATION EXPENSES; LODGING AND/OR MEAL EXPENSES; FINES; APPLICABLE TAXES OR BUSINESS COSTS OR LOSSES; ATTORNEYS' FEES; AND ANY LIABILITY YOU MAY HAVE IN RESPECT TO ANY OTHER PERSON OR ENTITY.

Downloaded from www.Manualslib.com manuals search engine

https://truckmanualshub.com/

California Emission Control System Warranty, On-Highway

Products Warranted

This Emission Control System Warranty applies to diesel engines (hereafter, engines) certified with the California Air Resources Board beginning with the year 2009, marketed by PACCAR, and registered in California for use in on-highway applications.

Your Warranty Rights and Obligations

The California Air Resources Board and PACCAR Inc are pleased to explain the emission control system warranty on your 2009 and subsequent model year diesel engine. In California, new motor vehicle engines must be designed, built and equipped to meet the State's stringent anti-smog standards. PACCAR must warrant the emission control system on your diesel engine for the periods of time listed below provided there has been no abuse, neglect or improper maintenance of your diesel engine.

Your emission control system may include parts such as the fuel injection system and engine electronic control module. Also included may be hoses, connectors and other emission related assemblies.

If an emission-related part on your engine is found to have a defect in material or factory the part will be repaired or replaced by PACCAR. This is your emission control system defects warranty.

Manufacturer's Warranty Coverage

This warranty coverage is provided for five years or 100,000 miles (160,935) km or 3,000 hours of engine operation, whichever first occurs from the date of delivery of the engine to the first purchaser. Where a Warrantable Condition exists, PACCAR will repair your engine at no cost to you including diagnosis, parts and labor.

Owner's Warranty Responsibilities

As the engine owner, you are responsible for the performance of the required maintenance listed in your PACCAR Operator's Manual. You are responsible for presenting your engine to an authorized PACCAR Dealer or an authorized Cummins Distributor as soon as a problem exists. The warranty repairs should be completed in a reasonable amount of time, not to exceed 30 days.

PACCAR recommends that you retain all receipts covering maintenance on your engine, but PACCAR cannot deny warranty solely for the lack of receipts or for the failure to ensure the performance of all scheduled maintenance.

Downloaded from www.Manualslib.com manuals search engine

https://truckmanualshub.com/

As the engine owner, you should also be aware that PACCAR may deny you warranty coverage if your engine or a part has failed due to abuse, neglect, improper maintenance or unapproved modifications.

If you have any questions regarding your warranty rights and responsibilities, you should contact the vehicle OEM manufacturer at the customer center telephone number provided with your vehicle operating instructions or the California Air Resource Board at 9528 Telstar Avenue, El Monte, CA 91731.

A warranted part which is scheduled for replacement as required maintenance is warranted up to the first scheduled replacement point.

Prior to the expiration of the applicable warranty, Owner must give notice of any warranted emission control failure to an authorized PACCAR Engine dealer or an authorized Cummins Distributor and deliver the engine to such facility for repair.

Owner is responsible for incidental costs such as: communication expenses, meals, lodging incurred by Owner or employees of Owner as a result of a Warrantable Condition.

Owner is responsible for downtime expenses, cargo damage, fines, all applicable taxes, all business costs, and other losses resulting from a Warrantable Condition.

California Emissions Components Statement for the PX-8 Engine (2010) Emission Engine Coverage

This list of emission control parts may be covered by the Emission Control System Warranty under certain failure modes.

Aftertreatment System

- Aftertreatment Diesel Oxidation Catalyst
- Aftertreatment Diesel Particulate Filter
- Aftertreatment Selective Catalyst Element
- Aftertreatment Decomposition Tube
- Exhaust Piping from Turbocharger Outlet to Diesel Particulate Filter
- Selective Catalyst Reduction Outlet Temperature Sensor
- Pressure Protection Valve
- Plumbing between Pressure Protection Valve and HC Doser

Crankcase Ventilation System

- Selective Catalyst Intake Temperature Sensor
- Crankcase Breather and Associated Plumbing Parts
- Crankcase Pressure Sensor

Downloaded from www.Manualslib.com manuals search engine

https://truckmanualshub.com/

Dash Lamps
- Diesel Exhaust Fluid (DEF) Lamp

Diesel Exhaust Fluid (DEF) System
- DEF Dosing Unit and Wiring
- DEF Tank and Associated Plumbing
- DEF Solution Level/Temperature Sensor
- DEF Dosing Valve and Associated Plumbing
- DEF Lines and Heating Elements
- Line Heater Control Relay

Electronic Control System
- Engine Control Module and Wiring Harness
- Coolant Temperature Sensor
- Compressor Inlet Temperature Sensor
- Fuel Pressure Sensor
- Charge Temperature/ Pressure Sensor
- Engine Position Sensor
- Exhaust Pressure Sensor
- Ambient Air Temperature Sensor
- Wire harness circuits connected at both ends to emissions warrantable components

Exhaust Gas Recirculation System
- Compressor in Temperature/Pressure Sensor
- Exhaust Gas Recirculation Valve and Associated Plumbing Parts
- Exhaust Gas Recirculation Cooler Outlet Temperature Sensor
- Exhaust Gas Recirculation Cooler and Associated Plumbing Parts
- Exhaust Gas Recirculation Flow Delta Pressure Sensor and Associated Plumbing
- Exhaust Gas Recirculation Flow Venturi
- Turbocharger Speed Sensor

Exhaust System
- Exhaust Manifold
- Aftertreatment Temperature Sensors
- Aftertreatment Delta Pressure Sensor

Fueling System
- Injectors
- Fuel Pump and Associated Plumbing Parts

Downloaded from www.Manualslib.com manuals search engine

https://truckmanualshub.com/

Intake System

- Intake Manifold
- Charge Air Cooler and Associated Plumbing Parts
- Turbocharger and Associated Plumbing Parts
- Turbocharger Actuator
- Grid Heater
- Intake NOx Sensor
- Outlet NOx Sensor

Replacement Parts

PACCAR recommends that any service parts used for maintenance, repair or replacement of emission control systems be new or genuine approved rebuilt parts and assemblies, and that the engine be serviced by an authorized PACCAR Engine dealer or an authorized Cummins Distributor. Your vehicle contains air, fuel, and electrical components that may affect engine emission controls. The use of non-genuine engine or vehicle replacement parts that are not equivalent to the PACCAR engine or OEM vehicle manufacturer's original part may impair the engine and vehicle emissions control system from working or functioning effectively, and may jeopardize your emissions warranty coverage.

The owner may elect to have maintenance, replacement or repair of the emission control parts performed by a facility other than a PACCAR authorized dealer or an authorized Cummins Distributor and may elect to use parts other than new genuine approved rebuilt parts and assemblies for such maintenance, replacement or repair; however, the cost of such service or parts and subsequent failures resulting from such service or parts will not be covered under this emission control system warranty, except for Emergency Repairs as described below.

PACCAR Responsibilities

The warranty coverage begins when the engine is delivered to the first purchaser. Repairs and service will be performed by any authorized PACCAR Engine, dealer or an authorized Cummins Distributor using new or genuine approved rebuilt parts and assemblies. PACCAR will repair any of the emission control parts found by PACCAR to be defective without charge for parts or labor (including diagnosis which results in determination that there has been a failure of a warranted emission control part).

Emergency Repairs

In the case of an emergency where an authorized PACCAR Engine dealer or an authorized Cummins Distributor is not available, repairs may be performed by any available repair location or by any individual using any replacement parts. A part not being available within 30 days or a repair not being complete within 30 days constitutes an emergency. PACCAR will reimburse the Owner for expenses (including diagnosis), not to exceed the manufacturers suggested retail price for all

Downloaded from www.Manualslib.com manuals search engine

https://truckmanualshub.com/

warranted parts replaced and labor charges based on the manufacturers recommended time allowance for the warranty repair and the geographically appropriate hourly labor rate. Replaced parts and paid invoices must be presented at an authorized PACCAR Engine dealer or authorized Cummins Distributor as a condition of reimbursement for emergency repairs not performed by an authorized PACCAR Engine dealer or an authorized Cummins Distributor.

Warranty Limitations

Your sole and exclusive remedy against PACCAR and the Selling Dealer arising from your purchase and use of this Engine is limited to the repair or replacement of "warrantable failures" at authorized United States and Canadian PACCAR Engine Dealers, or an authorized PACCAR Engine facility where applicable, subject to PACCAR's time, mileage, and hour limitations of the engine emission warranty. The maximum time, mileage and hour limitations of the engine emission warranty begin running on the Date of Delivery to the First Purchaser. The accrued time, mileage, or hours is calculated when the engine is brought into an Authorized Dealer for correction of warrantable failures.

PACCAR is not responsible for failures or damage resulting from what PACCAR determines to be abuse or neglect, including, but not limited to: damage due to accident; operation without adequate coolants or lubricants; overfueling; overspeeding; lack of maintenance of cooling, lubricating or intake systems; improper storage, starting, warm-up, run-in or shutdown practices; unauthorized modifications to the engine. PACCAR is also not responsible for failures caused by incorrect oil, fuel or diesel exhaust fluid or by water, dirt or other contaminants in the fuel, oil or diesel exhaust fluid. Failure of replacement parts used in repairs due to the above non-warrantable conditions is not warrantable.

PACCAR is not responsible for failures resulting from improper repair or the use of parts which are not genuine approved parts.

PACCAR is not responsible for the material and labor costs of emission control parts and assemblies replaced during Scheduled Maintenance of the engine as specified in PACCAR Operator's Manuals.

THIS WARRANTY, TOGETHER WITH THE EXPRESS COMMERCIAL WARRANTIES ARE THE SOLE WARRANTIES MADE BY PACCAR IN REGARD TO THESE ENGINES.

THIS LIMITED EMISSIONS WARRANTY IS THE SOLE WARRANTY MADE BY PACCAR AND THE SELLING DEALER. EXCEPT FOR THE ABOVE LIMITED WARRANTY, PACCAR AND THE SELLING DEALER MAKE NO OTHER WARRANTIES, EXPRESS OR IMPLIED. PACCAR AND THE SELLING DEALER EXPRESSLY DIS-

Downloaded from www.Manualslib.com manuals search engine

https://truckmanualshub.com/

CLAIM ANY WARRANTY OF MERCHANTABILITY OR WARRANTY OF FITNESS FOR A PARTICULAR PURPOSE.

PACCAR AND THE SELLING DEALER SHALL NOT BE LIABLE FOR INCIDENTAL OR CONSEQUENTIAL DAMAGES INCLUDING, BUT NOT LIMITED TO: LOSS OF INCOME OR LOST PROFITS; ENGINE OR VEHICLE DOWNTIME; THIRD PARTY DAMAGE, INCLUDING DAMAGE OR LOSS TO OTHER ENGINES, VEHICLES OR PROPERTY, ATTACHMENTS, TRAILERS AND CARGO; LOSS OR DAMAGE TO PERSONAL CONTENTS; COMMUNICATION EXPENSES; LODGING AND/OR MEAL EXPENSES; FINES; APPLICABLE TAXES OR BUSINESS COSTS OR LOSSES; ATTORNEYS' FEES; AND ANY LIABILITY YOU MAY HAVE IN RESPECT TO ANY OTHER PERSON OR ENTITY.

Downloaded from www.Manualslib.com manuals search engine

https://truckmanualshub.com/

Downloaded from www.Manualslib.com manuals search engine

https://truckmanualshub.com/

PACCAR Inc
Medium Duty Engines
P.O. Box 1518
Bellevue, WA 98009

Y53-1030A

Downloaded from www.Manualslib.com manuals search engine