Picture top: Beverage application
Picture middle: Beverage version
Picture bottom: CNG version

Standard Equipment/Optional Equipment

Standard Equipment

Linde twin drive pedals to control forward/reverse travel and braking
Original Linde Load Control integrated in armrest
Hydraulic suspended comfort-class seat with extensive range of adjustment
Hydrostatic steering, kickback free
High safety and stability ensured by Linde ProtectorFrame
Anti-glare display with fuel gauge, clock, hour meter and service information
Control lights on display for engine oil pressure, engine overheating, parking brake, audible warning signal for engine and hydraulic oil temperature, blocked intake filter and low fuel level
Plenty of storage space for writing utensils, beverage cans...
Air intake filter with integrated cyclone separator
High-performance hydraulic filter concept, guarantees maximum oil purity and extends life of all hydraulic components
LPG truck fitted with a two-way catalytic converter
The mounting of the gas bottle is ergonomically designed for easy changing
LPG truck fitted with accurate ultrasonic fuel level indicator for exchange bottles
LPG volumetric fuel tank version with fuel level indicator at the display
Superelastic tyres

New STANDARD features for the Evo models:
Variable displacement pump for best energy consumption
Integrated diesel particulate filter for EU models with 44 kW
New seat/armrest generation for outstanding ergonomics
H25/600 replaces H25/500
LEPS (Linde-Engine-Protection-System) as monitoring of the most important truck parameter
Curve Assist for automatic speed adaption
Intelligent drive dynamic modi now integrate lift hydraulic
New development timing belt protection
Enhanced steering axle
Handhold for safe access at A-pillar
Energy-efficient electric fan

Optional Equipment

Single drive pedal with direction selector on armrest
Overhead guard can be upgrated to full cabine with roof, front and rear screens and doors (also available with tinted glass)
Wiper-washers for front, rear and roof screens
Further seats with additional comfort and adjustments
Cab heater with integrated pollen filter
Air Conditioning
Radio with SD-card, Bluetooth and speakers
Sun screens, clipboard, interior lighting, height adjustable steering column
Standard masts from 3,150 mm to 6,550 mm lift
Duplex masts (full free lift) from 3,165 mm to 4,765 mm lift
Triplex masts (full free lift) from 4,705 mm to 6,455 mm lift
Integrated sideshift
Integrated fork positioner
Load backrest
One or two auxiliary hydraulic circuits for all mast types
Alternative fork lengths
Tilt cylinder- and roof protection
Truck lighting, working lamps
Audible reversing alarm, flasher and strobe beacons
Mirrors
Linde original Blue Spot
Camera and colour monitor
Road traffic specifications
Air precleaner
Oilbath air precleaner
Volumetric tank (LPG) with capacities of 45 l or 55 l
3-way catalytic converter (LPG)
Unregulated catalyst (Diesel)
CNG (natural gas) version
Linde Forklift Data Management
Custom paintwork

Other options available on request

https://truckmanualshub.com/

Diesel, LPG and CNG Forklift Trucks
Capacity 2500 - 3500 kg
H25/600 EVO®, H30/500 EVO®, H35/500 EVO®

393_02

Linde Material Handling

Safety

Linde ProtectorFrame: The protective overhead guard and its supporting frame together form a strong protective zone providing optimum safety and protection for the operator. Top-mounted tilt cylinders provide seamless and smooth control of the tilt movements for excellent load stability in all operating conditions. This unique design also enables slimmer mast profiles to be fitted for outstanding visibility.

Performance

Low consumption and exhaust level and nevertheless this truck range continues to impress with its excellent performance. Advanced engine and drive technology combined with the original Linde Load Control system enables the operator to use the trucks vast potential to maximise productivity. Precise fingertip control of all mast functions.

Comfort

Step in relaxed, leave again relaxed. Linde brings to this forklift a generously sized automobile-class workspace. A perfect interface between operator and truck has been achieved with the Linde ergonomic design concept. The spacious cab, comfort-class seat with adjustable armrest and intuitive controls allow fast and stress-free working.

Reliability

Proven in tough applications. Decoupling of mast and drive axle with chassis and cabine results in reduced shock and vibration. The enclosed robot-welded chassis is designed for maximum strength and durability. The resilient, maintenance-free mountings of the axles and tilt jacks cut downtime and operating costs.

Productivity

50 years of permanent optimisation of the original Linde hydraulic system leads to effective and cost-efficient work: The original Linde hydrostatic transmission requires no differential, no drum brake, no gearshift and no clutch. As a result, uptime is optimised, productivity is increased and maintenance costs are low.

Features

Original Linde hydrostatic drive
→ Sensitive, smooth, and precise driving
→ Variable displacement pump for best energy consumption
→ No clutch, no differential, and no drum brakes thanks to hydrostatic direct drive
→ Robust drive even in extreme environments

Linde ProtectorFrame
→ Enclosed, robot-welded chassis for maximum durability and protection of components
→ A hinged engine cover and removable service panels give wide, easy access for maintenance
→ Hand grip on A-pillar for safe on/off access

Linde twin drive pedals
→ Fast and smooth travel direction-changes without constantly moving feet from one pedal to the other
→ Short pedal travel
→ No strain on ankles or legs
→ Operator maintains high efficiency levels

Linde Load Control
→ Mini levers for all mast funtions mounted on an adjustable armrest
→ Precise and effortless fingertip control of all mast functions for safe, efficient load handling
→ Engine rpm is automatically synchronised to precisely match hydraulic demands

High-economy engine technology
→ Modern, advanced technology Diesel, LPG and CNG engines matched to Linde's demanding requirements
→ High torque for impressive and flexible performance
→ Extremely fuel efficient
→ Exhaust emissions significantly below the current European limits

Linde operator's compartment
→ Advanced functional design for optimum operator comfort and efficiency
→ Superb working environment with spacious leg and headroom
→ Excellent visibility of load and surrounding environment through the slim-line mast sections
→ Resilient mounting of mast and drive axle absorbs road shocks and vibrations
→ Quiet, stress-free working

Variable displacement pump
→ For mast functions and additional hydraulic circuits
→ Electrically controlled by Linde Load Control levers
→ The Linde pump only provides the required oil volume
→ Less fuel consumption
→ Less noise
→ Extended oil change intervals

Linde clear-view mast
→ Superb visibility through the slim profile mast sections
→ Full load capacity available up to maximum lift height
→ Excellent residual capacities
→ Maintenance-free resilient rubber mounting of mast/drive axle and tilt jacks
→ Electronic control of tilt angle
→ Electronic cushioning of end travel for forward/back tilt

Subject to modification in the interest of progress. Illustrations and technical details could include options and not binding for actual construction. All dimensions always in mm (millimetres).

Linde Material Handling GmbH, Postfach 10 01 36, 63701 Aschaffenburg, Germany
Phone +49.60 21.99-0, Fax +49.60 21.99-15 70, www.linde-mh.com, info@linde-mh.com

Linde Material Handling

Printed in Germany 143.e.3.2014.kd(.K)

https://truckmanualshub.com/

Technical Data according to VDI 2198

Characteristics	1.1	Manufacturer		LINDE	LINDE	LINDE	LINDE	LINDE	LINDE	LINDE	LINDE	LINDE	LINDE	LINDE
	1.2	Model designation		**H25/600D (3B)** [1]	**H30D (3B)** [1]	**H35D (3B)** [1]	**H25/600D (3A)** [1]	**H30D (3A)** [1]	**H35D (3A)** [1]	**H25/600T**	**H30T**	**H35T**	**H30 CNG** [1]	**H30D (3B) Beverage** [4] [1]
	1.2a	Series		393-02	393-02	393-02	393-02	393-02	393-02	393-02	393-02	393-02	393-02	393-02
	1.3	Power unit		Diesel	Diesel	Diesel	Diesel	Diesel	Diesel	LPG	LPG	LPG	CNG	Diesel
	1.4	Operation		Seat	Seat	Seat	Seat	Seat	Seat	Seat	Seat	Seat	Seat	Seat
	1.5	Load capacity	Q (t)	2.5	3.0	3.5	2.5	3.0	3.5	2.5	3.0	3.5	3.0	3.0
	1.6	Load centre	c (mm)	600	500	500	600	500	500	600	500	500	500	500
	1.8	Axle centre to fork face	x (mm)	442	445	450	442	445	450	442	445	450	445	445
	1.9	Wheelbase	y (mm)	1905	1930	1965	1905	1930	1965	1905	1930	1965	1930	1930
Weights	2.1	Service weight	(kg)	4090	4220	4680	4090	4220	4680	4070	4200	4665	4200	4400
	2.2	Axle load with load, front/rear	(kg)	5797 / 793	6419 / 801	7242 / 938	5797 / 793	6419 / 801	7242 / 938	5757 / 813	6379 / 821	7207 / 958	6379 / 821	6529 / 871
	2.3	Axle load without load, front/rear	(kg)	1930 / 2160	1950 / 2270	2050 / 2630	1930 / 2160	1950 / 2270	2050 / 2630	1890 / 2180	1910 / 2290	2015 / 2650	1910 / 2290	2060 / 2340
Wheels/Tyres	3.1	Tyres rubber, SE, pneumatic, polyurethane		SE [9]	SE [9]	SE [9]	SE [9]	SE [9]	SE [9]	SE [9]	SE [9]	SE [9]	SE [9]	SE [9]
	3.2	Tyre size, front		250/75-12 [8]	250/75-12 [6]	250/75-12 [6]	250/75-12 [8]	250/75-12 [6]	250/75-12 [6]	250/75-12 [8]	250/75-12 [6]	250/75-12 [6]	250/75-12 [8]	250/75-12 [8]
	3.3	Tyre size, rear		225/75-10 (23x9-10)	225/75-10 (23x9-10)	225/75-10 (23x9-10)	225/75-10 (23x9-10)	225/75-10 (23x9-10)	225/75-10 (23x9-10)	225/75-10 (23x9-10)	225/75-10 (23x9-10)	225/75-10 (23x9-10)	225/75-10 (23x9-10)	225/75-10 (23x9-10)
	3.5	Wheels, number front/rear (x = driven)		2x (4x) / 2 [7]	2x (4x) / 2 [7]	2x (4x) / 2 [7]	2x (4x) / 2 [7]	2x (4x) / 2 [7]	2x (4x) / 2 [7]	2x (4x) / 2 [7]	2x (4x) / 2 [7]	2x (4x) / 2 [7]	2x (4x) / 2 [7]	2x (4x) / 2 [7]
	3.6	Track width, front	b10 (mm)	1008	1008	1008	1008	1008	1008	1008	1008	1008	1008	1008
	3.7	Track width, rear	b11 (mm)	932	932	932	932	932	932	932	932	932	932	932
Dimensions	4.1	Mast/fork carriage tilt, forward/backward	a/b (°)	5.0 / 8.0	5.0 / 8.0	5.0 / 8.0	5.0 / 8.0	5.0 / 8.0	5.0 / 8.0	5.0 / 8.0	5.0 / 8.0	5.0 / 8.0	5.0 / 8.0	4.0 / 8.0
	4.2	Height of mast, lowered	h1 (mm)	2264	2264	2264	2264	2264	2264	2264	2264	2264	2264	2714
	4.3	Free lift	h2 (mm)	150	150	150	150	150	150	150	150	150	150	150
	4.4	Lift	h3 (mm)	3050	3050	3050	3050	3050	3050	3050	3050	3050	3050	3950
	4.5	Height of mast, extended	h4 (mm)	3840	3840	3840	3840	3840	3840	3840	3840	3840	3840	4740
	4.7	Height of overhead guard (cabin)	h6 (mm)	2210	2210	2210	2210	2210	2210	2210	2210	2210	2210	2630
	4.8	Height of seat/stand on platform	h7 (mm)	1105	1105	1105	1105	1105	1105	1105	1105	1105	1105	1525
	4.12	Towing coupling height	h10 (mm)	698	698	690	698	698	690	698	698	690	698	698
	4.19	Overall length	l1 (mm)	3724	3755	3795	3724	3755	3795	3724	3755	3795	3755	3755
	4.20	Length to fork face	l2 (mm)	2724	2755	2795	2724	2755	2795	2724	2755	2795	2755	2755
	4.21	Overall width	b1/b2 (mm)	1256 [6]	1256 [6]	1256 [6]	1256 [6]	1256 [6]	1256 [6]	1256 [6]	1256 [6]	1256 [6]	1256 [6]	1256 [6]
	4.22	Fork dimensions	s/e/l (mm)	45 x 100 x 1000	45 x 100 x 1000	50 x 120 x 1000	45 x 100 x 1000	45 x 100 x 1000	50 x 120 x 1000	45 x 100 x 1000	45 x 100 x 1000	50 x 120 x 1000	45 x 100 x 1000	45 x 100 x 1000
	4.23	Fork carriage to ISO 2328, class/type A, B		2A	3A	3A	2A	3A	3A	2A	3A	3A	3A	3A
	4.24	Width of fork carriage	b3 (mm)	1150 [9]	1150 [9]	1150 [9]	1150 [9]	1150 [9]	1150 [9]	1150 [9]	1150 [9]	1150 [9]	1150 [9]	1150 [9]
	4.31	Ground clearance, below mast	m1 (mm)	119	119	117	119	119	117	119	119	117	119	119
	4.32	Ground clearance, centre of wheelbase	m2 (mm)	173	173	172	173	173	172	173	173	172	173	173
	4.33	Aisle width with pallet 1000 x 1200 across forks	Ast (mm)	4062 [10]	4089 [10]	4126 [10]	4062 [10]	4089 [10]	4126 [10]	4062 [10]	4089 [10]	4126 [10]	4089 [10]	4089 [10]
	4.34	Aisle width with pallet 800 x 1200 along forks	Ast (mm)	4262 [10]	4289 [10]	4326 [10]	4262 [10]	4289 [10]	4326 [10]	4262 [10]	4289 [10]	4326 [10]	4289 [10]	4289 [10]
	4.35	Turning radius	Wa (mm)	2420	2444	2476	2420	2444	2476	2420	2444	2476	2444	2444
	4.36	Minimum pivoting point distance	b13 (mm)	580	580	580	580	580	580	580	580	580	580	580
Performance	5.1	Travel speed, with/without load	(km/h)	22 / 22	22 / 22	22 / 22	22 / 22	22 / 22	22 / 22	22 / 22	22 / 22	22 / 22	22 / 22	22 / 22
	5.2	Lifting speed, with/without load	(m/s)	0.53 / 0.55	0.53 / 0.55	0.53 / 0.55	0.53 / 0.55	0.53 / 0.55	0.53 / 0.55	0.53 / 0.55	0.53 / 0.55	0.51 / 0.55	0.53 / 0.55	0.53 / 0.55
	5.3	Lowering speed, with/without load	(m/s)	0.54 / 0.52	0.54 / 0.52	0.54 / 0.52	0.54 / 0.52	0.54 / 0.52	0.54 / 0.52	0.54 / 0.52	0.54 / 0.52	0.54 / 0.52	0.54 / 0.52	0.54 / 0.52
	5.5	Tractive force, with/without load	(N)	19790 / 15150	19790 / 15300	19790 / 16090	19790 / 15150	19790 / 15300	19790 / 16090	20030 / 15150	19790 / 14990	19790 / 15810	19790 / 14990	19790 / 15300
	5.7	Climbing ability, with/without load	(%)	32.0 / 33.0	27.0 / 30.0	24.0 / 28.0	32.0 / 33.0	27.0 / 30.0	24.0 / 28.0	32.0 / 33.0	27.0 / 30.0	23.0 / 28.0	27.0 / 30.0	27.0 / 31.0
	5.9	Acceleration time, with/without load	(s)	5.1 / 4.5	5.3 / 4.6	5.6 / 4.7	5.3 / 4.6	5.6 / 4.7	5.8 / 4.9	5.6 / 4.7	5.7 / 4.8	5.8/ 4.9	5.9 / 5.0	5.3 / 4.6
	5.10	Service brake		hydrostatic	hydrostatic	hydrostatic	hydrostatic	hydrostatic	hydrostatic	hydrostatic	hydrostatic	hydrostatic	hydrostatic	hydrostatic
IC-Drive	7.1	Engine manufacturer/type		VW CPYB	VW CPYB	VW CPYB	VW CPYC	VW CPYC	VW CPYC	VW BEF	VW BEF	VW BEF	VW CBS	VW CPYB
	7.2	Engine performance according to ISO 1585	(kW)	44	44	44	36	36	36	39	39	39	37	44
	7.3	Rated speed	(1/min)	2700	2700	2700	2700	2700	2700	2600	2600	2600	2600	2700
	7.4	Number of cylinders/displacement	(-/cm3)	4 / 1968	4 / 1968	4 / 1968	4 / 1968	4 / 1968	4 / 1968	4 / 1984	4 / 1984	4 / 1984	4 / 1984	4 / 1968
	7.5	Fuel consumption according to VDI cycle	(l/h)	3.0	3.2	3.4	2.9	3.1	3.3	-	-	-	-	3.2
	7.5a	Fuel consumption according to VDI cycle	(kg/h)	-	-	-	-	-	-	2.5	2.6	2.8	-	-
	7.5b	Fuel consumption according to VDI cycle	(m3/h)	-	-	-	-	-	-	-	-	-	3.7 (H); 4.0 (L) [11]	-
Others	8.1	Type of drive control		LTC	LTC	LTC	LTC	LTC	LTC	LTC	LTC	LTC	LTC	LTC
	8.2	Operating pressure for attachments	(bar)	170	170	170	170	170	170	170	170	170	170	170
	8.3	Oil flow for attachments	(l/min)	38	38	38	38	38	38	38	38	38	38	38
	8.4	Noise level at operator's ear	(dB(A))	77	77	77	77	77	77	77	77	77	77	77
	8.5	Towing coupling, design/type, DIN 15 170		similar to form H	similar to form H	similar to form H	similar to form H	similar to form H	similar to form H	similar to form H	similar to form H	similar to form H	similar to form H	similar to form H

1) With diesel particle filter to comply with legal requirements 2004/26/EG Stage 3 B
2) Without diesel particle filter to comply with legal requirements 2004/26/EG Stage 3 A
3) Other truck models upon request
4) Technical specifications for LPG version upon request
5) Alternative pneumatic tyres
6) 27x10-12, alternative pneumatic tyres, twin tyres 7.00-12 or SE 28x12,5-15
7) Figures in parenthesis refer to twin front tyres.
8) With SE twin tyres = 1611 mm
9) Alternative with SE twin tyres = 1600 mm
10) Including a 200 mm (min.) operating aisle clearance.
11) (H)= high quality, (L)= low quality

Lifting capacity diagrams

H25/600

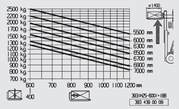

H30/500

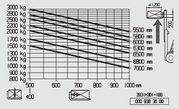

H35/500

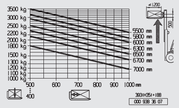

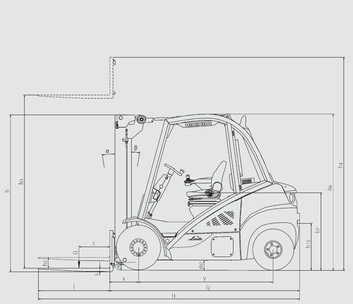

Overall height and lift heights, Standard (in mm)							
Height of Mast, lowered	**h1**	2264	2414	2564	2714	2964	3214
Free lift	**h2**	150	150	150	150	150	150
Lift	**h3**	3050	3350	3650	3950	4450	4950
Height of Mast, extended	**h4**	3840	4140	4440	4740	5240	5740
Overall height and lift heights, Duplex (in mm)							
Height of Mast, lowered	**h1**	2190	2490	2640	-	-	-
Free lift	**h2**	1424	1724	1874	-	-	-
Lift	**h3**	3115	3715	4015	-	-	-
Height of Mast, extended	**h4**	3905	4505	4805	-	-	-
Overall height and lift heights, Triplex (in mm)							
Height of Mast, lowered	**h1**	2191	2241	2491	2641	2841	-
Free lift	**h2**	1424	1474	1724	1874	2074	-
Lift	**h3**	4655	4805	5505	5955	6455	-
Height of Mast, extended	**h4**	5445	5595	6295	6745	7245	-

Alternative lift heights available on request.