https://truckmanualshub.com/

XL Pulverizer
28 through 36 Models
Operator's Manual

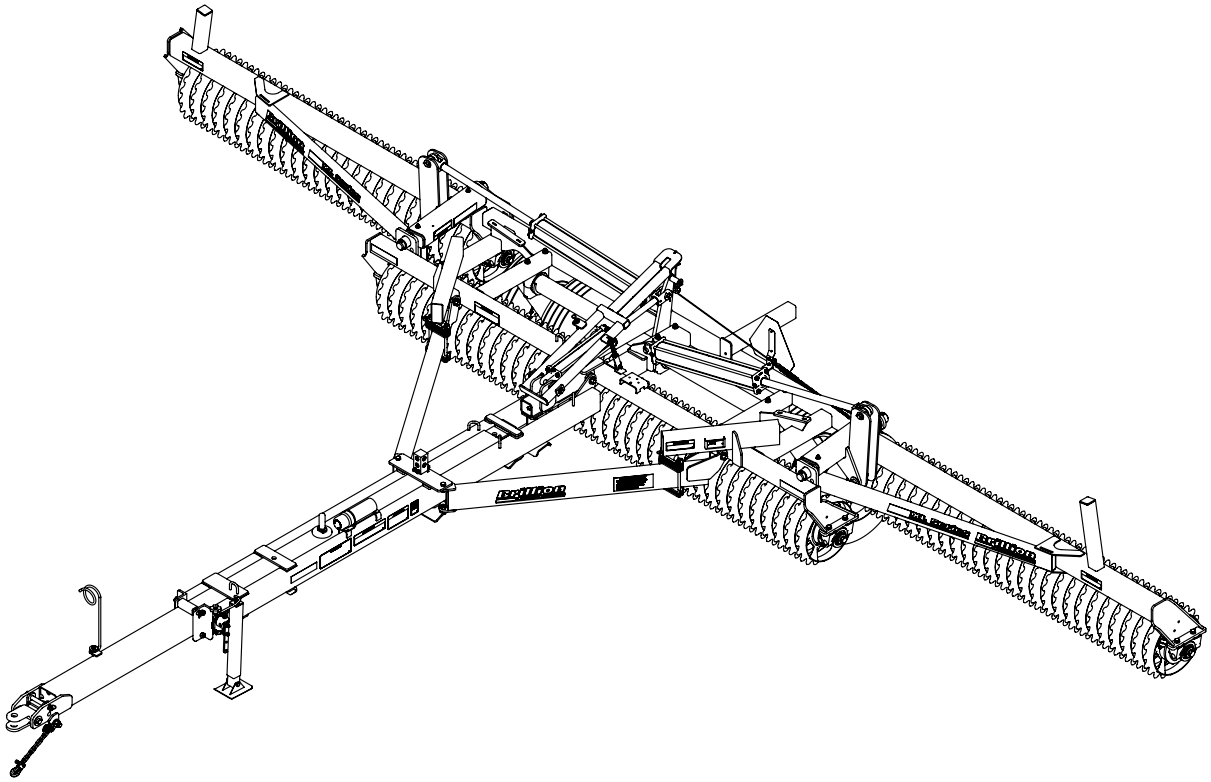

LANDOLL CORPORATION
1900 North Street
Marysville, Kansas 66508
(785) 562-5381
800-428-5655 ~ WWW.LANDOLL.COM

F-791R0

https://truckmanualshub.com/

https://truckmanualshub.com/

Table of Contents

1 Introduction and Safety Information

Introduction **1-1**
Description of Unit 1-1
Owner Assistance 1-1
Warranty Registration 1-1

Safety **1-2**
Understanding Safety Statements 1-2
Transporting Safety 1-2
Attaching, Detaching and Storage 1-2
Maintenance Safety 1-3
Protective Equipment 1-3
Tire Safety 1-3
Chemical Safety 1-3
Prepare for Emergencies 1-3
High Pressure Fluid Safety 1-3
Safety Chain 1-4
Decals 1-5

2 Assembly

Frame and Transport Axle Assembly 2-2
Tire Installation 2-2
Transport Lock Installation 2-4
Center Roller Assembly Installation 2-5
Drawbar and Brace Installation 2-8
Drawbar Components 2-9
Wing Cylinder Installation 2-10
Hydraulics 2-11
Hydraulic System 2-11
Purging the Lift and Fold Cylinders 2-14

https://truckmanualshub.com/

Wing to Frame Installation 2-15
Transport Lock Linkage Assembly 2-16
Wing Roller Assembly Installation 2-17
LED Installation Instructions 2-20
LED Warning Lights 2-21
Center Scraper Installation - Optional 2-22
Wing Scraper Installation - Optional 2-23
Center V-Wheel Scraper Installation - Optional 2-25
Wing V-Wheel Scraper Installation - Optional 2-26
Acre Meter - Optional 2-27
Weight Kit - Optional 2-29

3 Operation

General Operation 3-1
Tractor Preparation 3-1
Pulverizer Preparation 3-1
Attaching to the Tractor 3-1
Drawbar Positions 3-2
Hitch Lock 3-3
Hydraulic System 3-4
Operation of Transport Lock 3-5
Road to Field 3-5
Field to Road 3-5
Scraper Adjustment 3-9
Settings for Loup Acre Meters 3-10
Changing the Acre Meter Password 3-10
Battery Replacement for Acre Meters 3-11
Transport 3-12

4 Maintenance

General Torque Specifications 4-1
Hydraulic Fitting Torque Specifications 4-2
Fasteners 4-2
Tires 4-3
Hydraulic Maintenance 4-3
Purging the Lift and Fold Cylinders 4-3
Lubrication 4-4
Roller Axle Assembly 4-5
Clamp Tightening 4-5
Clamp End Spacers - Optional 4-7
Storage 4-9

5 General Reference and Specifications

https://truckmanualshub.com/

Chapter 1

Introduction and Safety Information

Introduction

The implement described in this manual has been designed with care and built by skilled workers using quality materials and processes. Proper assembly and maintenance will provide you with satisfactory use for seasons to come.

DANGER

Read this entire manual before attempting to assemble, adjust or operate this implement. Failure to comply with this warning can result in personal injury or death, damage to the implement or its components and inferior operation.

Description of Unit

Based off of the X-folding concept, the slightly wider center section of the XL Series offers a manageable transport width and transport height. The XL Series offers a telescoping drawbar to better accommodate use as a companion tool with a disc, finisher or field cultivator. The XL Series uses a single remote hydraulic system and transport lock. Choice of Notched, Crowfoot, Optimizer or V-Wheel ductile iron wheels allow these machines to be set-up to match your soil conditions.

Using this Manual

This manual will familiarize you with safety, assembly, operation, adjustment, and maintenance. Read this manual and follow the recommendations to help ensure safe and efficient operation.

- The information in this manual is current at time of printing. Some parts may have changed to assure top performance.
- Location reference: Right and Left designations in this manual are determined by facing the direction the implement will travel during field operation, unless otherwise stated.

Owner Assistance

If customer service or repairs are needed, contact your Brillion dealer. They have trained personnel, parts and service equipment specially designed for Brillion products. Your implement's parts should only be replaced with Brillion parts. If items covered in this manual are not understood, contact your local Brillion Dealer.

Warranty Registration

Brillion Farm Equipment, by Landoll, shall have no warranty obligation unless each product is registered within 10 days of retail purchase, using the Landoll Corporation Ag Products on-line registration process. Please refer to the Ag Products Policy and Procedures Manual, accessible at www.landoll.com for step by step instructions regarding product registration.

Enter your product information below for quick reference.

MODEL NUMBER

SERIAL NUMBER

DATE OF PURCHASE

Refer to the ID plate as shown. See Figure 1-1.

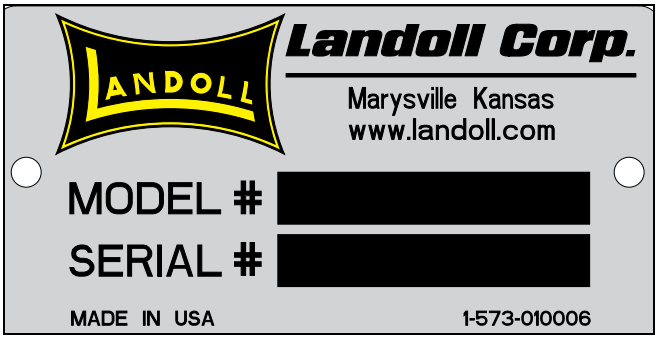

Figure 1-1: ID Plate

https://truckmanualshub.com/

Safety

NOTE

Investigation has shown that nearly 1/3 of all farm accidents are caused by careless use of machinery. Insist that all people working with you or for you abide by all safety instructions.

Understanding Safety Statements

You will find various types of safety information on the following pages and on the implement decals (signs) attached to the implement. This section explains their meaning.

NOTICE

Special notice - read and thoroughly understand.

CAUTION

Proceed with caution. Failure to heed caution may cause injury to person or damage product.

WARNING

Proceed with caution. Failure to heed warning will cause injury to person or damage product.

DANGER

Proceed with extreme caution. Failure to heed notice will cause injury or death to person and/or damage product.

NOTE

You should read and understand the information contained in this manual and on the implement decals before you attempt to operate or maintain this equipment.

Examine safety decals and be sure you have the correct safety decals for the implement. See Figure 1-3.

Order replacement decals through your Brillion dealer.

Keep these signs clean so they can be observed readily. It is important to keep these decals cleaned more frequently than the implement. Wash with soap and water or a cleaning solution as required.

Replace decals that become damaged or lost. Also, be sure that any new implement components installed during repair include decals which are assigned to them by the manufacturer.

When applying decals to the implement, be sure to clean the surface to remove any dirt or residue. Where possible, sign placement should protect the sign from abrasion, damage, or obstruction from mud, dirt, oil etc.

DANGER

- **Do not allow anyone to ride on the tractor or implement. Riders could be struck by foreign objects or thrown from the implement.**
- **Never allow children to operate equipment.**
- **Keep bystanders away from implement during operation.**

Transporting Safety

IMPORTANT

It is the responsibility of the owner/operator to comply with all state and local laws.

When transporting the implement on a road or highway, use adequate warning symbols, reflectors, lights and slow moving vehicle sign as required. Slow moving tractors and towed implements can create a hazard when driven on public roads. They are difficult to see, especially at night.

Do not tow an implement that, when fully loaded, weighs more than 1.5 times the weight of the towing vehicle.

Carry reflectors or flags to mark the tractor and implement in case of breakdown on the road.

Do not transport at speeds over 20 MPH under good conditions. Never travel at a speed which does not allow adequate control of steering and stopping. Reduce speed if towed load is not equipped with brakes.

Avoid sudden stops or turns because the weight of the implement may cause the operator to lose control of the tractor. Use a tractor heavier than the implement.

Use caution when towing behind articulated steering tractors; fast or sharp turns may cause the implement to shift sideways.

Keep clear of overhead power lines and other obstructions when transporting. Know the transport height and width of your implement.

Attaching, Detaching and Storage

- Do not stand between the tractor and implement when attaching or detaching implement unless both are blocked from moving.
- Block implement so it will not roll when unhitched from the tractor.

https://truckmanualshub.com/

Maintenance Safety

- Block the implement so it will not roll when working on or under it to prevent injury.
- Do not make adjustments or lubricate the machine while it is in motion.
- Make sure all moving parts have stopped.
- Understand the procedure before doing the work. Use proper tools and equipment.

Protective Equipment

- Wear protective clothing & equipment appropriate for the job. Avoid loose fitting clothing.
- Because prolonged exposure to loud noise can cause hearing impairment or hearing loss, wear suitable hearing protection, such as earmuffs or earplugs.

Tire Safety

Tire changing can be dangerous and should be performed by trained personnel using correct tools and equipment.

When inflating tires, use a clip-on chuck and extension hose long enough to allow you to stand to one side, not in front of or over the tire assembly. Use a safety cage if available.

When removing and installing wheels use wheel-handling equipment adequate for the weight involved.

Chemical Safety

Agricultural chemicals can be dangerous. Improper use can seriously injure persons, animals, plants, soil & property.

Read chemical manufacture's instructions and store or dispose of unused chemicals as specified. Handle chemicals with care & avoid inhaling smoke from any type of chemical fire.

Store or dispose of unused chemicals as specified by the chemical manufacturer.

Prepare for Emergencies

- Keep a First Aid Kit and Fire Extinguisher handy.
- Keep emergency numbers for doctor, ambulance, hospital and fire department near phone.

High Pressure Fluid Safety

Escaping fluid under pressure can be nearly invisible and have enough force to penetrate the skin causing serious injury. Use a piece of cardboard, rather than hands, to search for suspected leaks.

Any fluid injected into the skin must be surgically removed within a few hours or gangrene may result.

Avoid the hazard by relieving pressure before disconnecting hydraulic lines.

NOTE

Relieve hydraulic pressure by shifting the control valve lever to float.

Wear protective gloves and safety glasses or goggles when working with hydraulic systems.

https://truckmanualshub.com/

Safety Chain

Use a safety chain to help control drawn machinery should it separate from the tractor drawbar.

Use a chain with a strength rating equal to or greater than the gross weight of towed machinery, in accordance with ASAE S338.2 specifications. If two or more machines are pulled in tandem, a larger chain may be required. Chain capacity must be greater that the total weight of all towed implements.

A second chain should be used between each implement.

Attach the chain to the tractor drawbar support or specified anchor location. Never attach the chain to an intermediate support. Allow only enough slack in the chain to permit turning. The distance from hitch pin to attachment point or intermediate support point should not exceed 9 inches. If the distance from the drawbar pin to either the front or rear chain attachment point exceeds 9 inches, intermediate chain support is required.

Replace chain if any links or end fittings are broken, stretched or damaged.

Do not use a safety chain for towing.

See page 3-3 for Hitch Lock functionality.

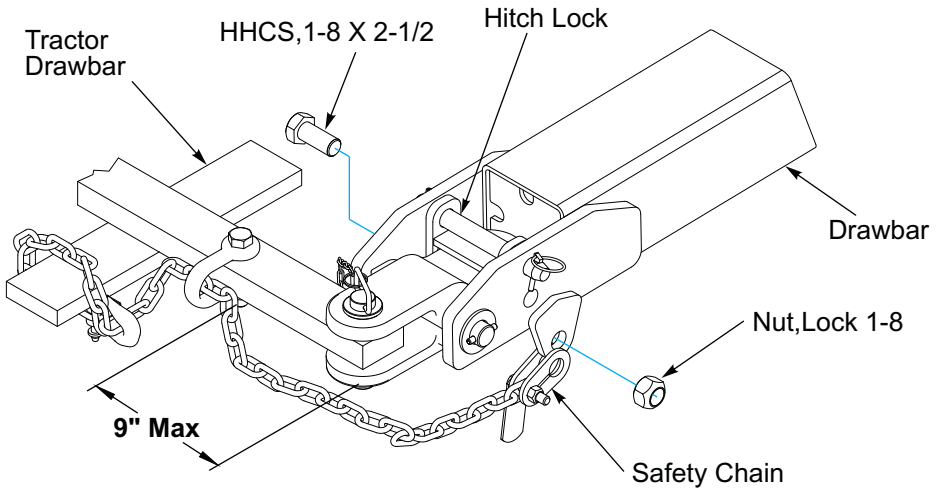

DRAWBAR WITH HAMMER STRAP

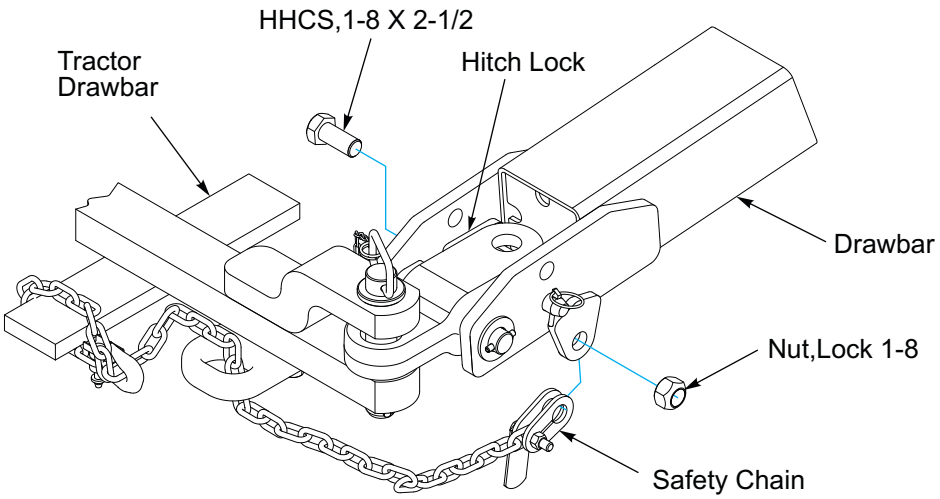

Figure 1-2: Safety Chain

https://truckmanualshub.com/

Decals

5J859

528938

528933

528934

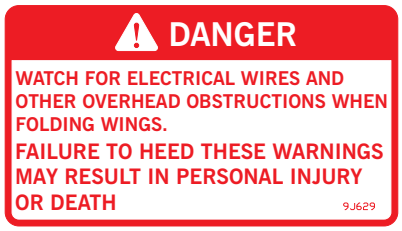

9J629

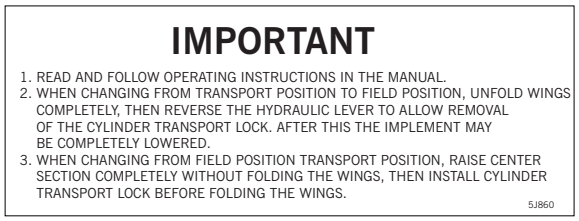

5J860

193501

193665

3J675

3J678

170510
193500

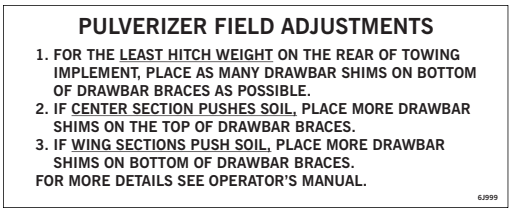

6J999

2P151

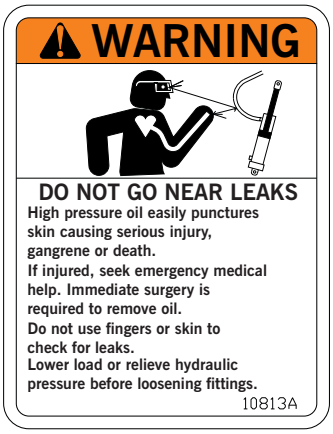

3K706

Figure 1-3: Decals

https://truckmanualshub.com/

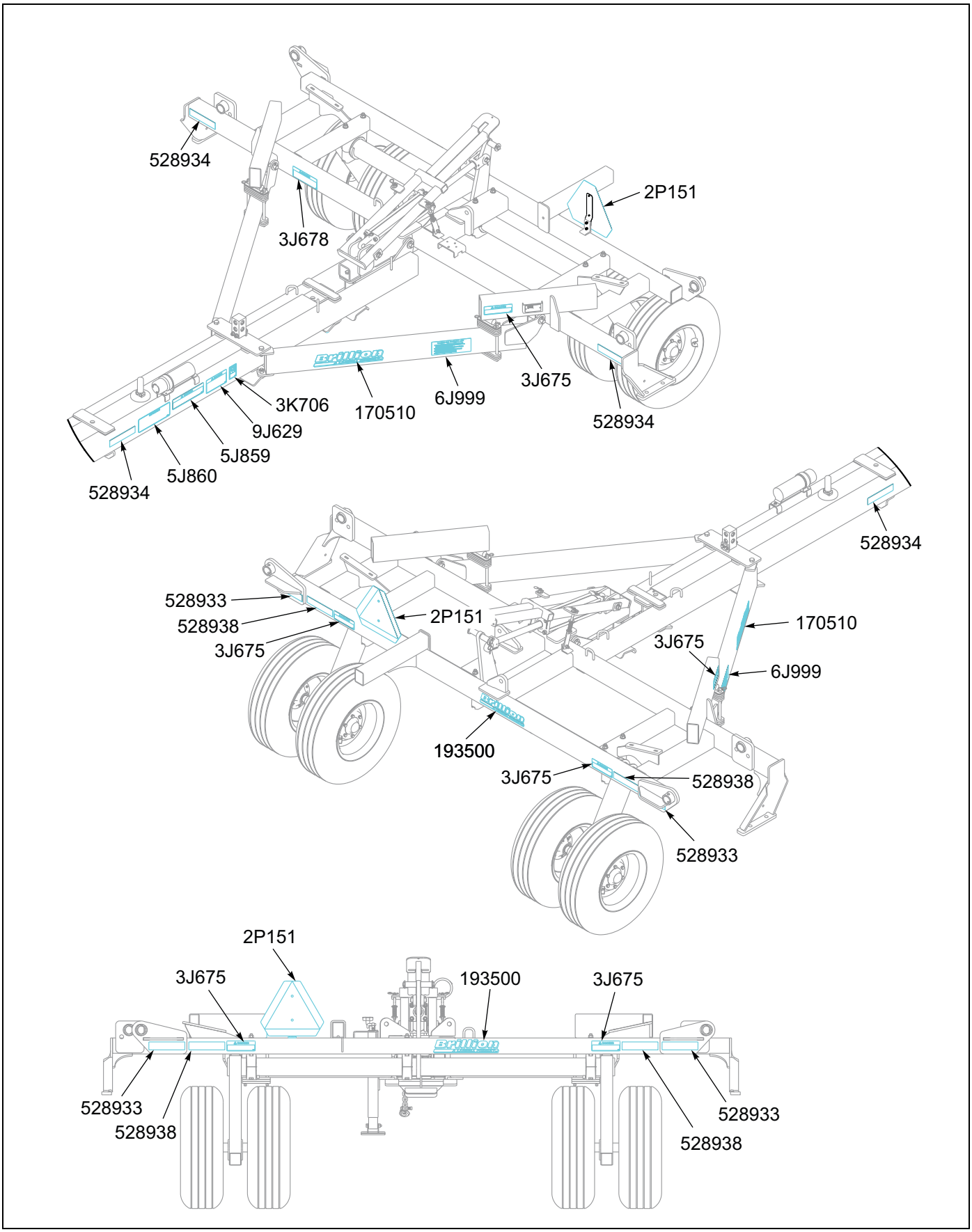

Figure 1-4: Decal Locations, Center Frame (1 of 4)

https://truckmanualshub.com/

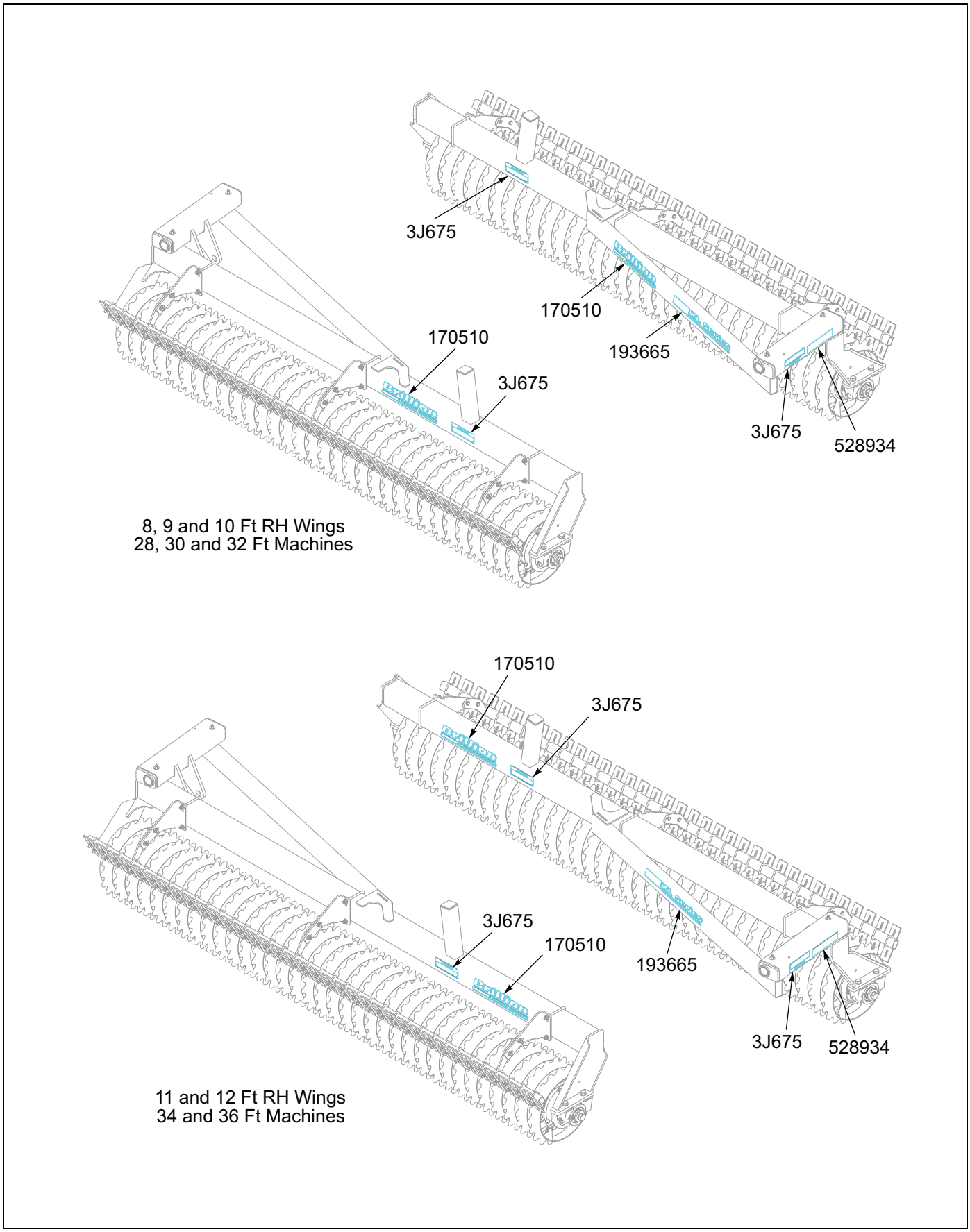

Figure 1-5: Decal Locations, Right Hand Wing (2 of 4)

https://truckmanualshub.com/

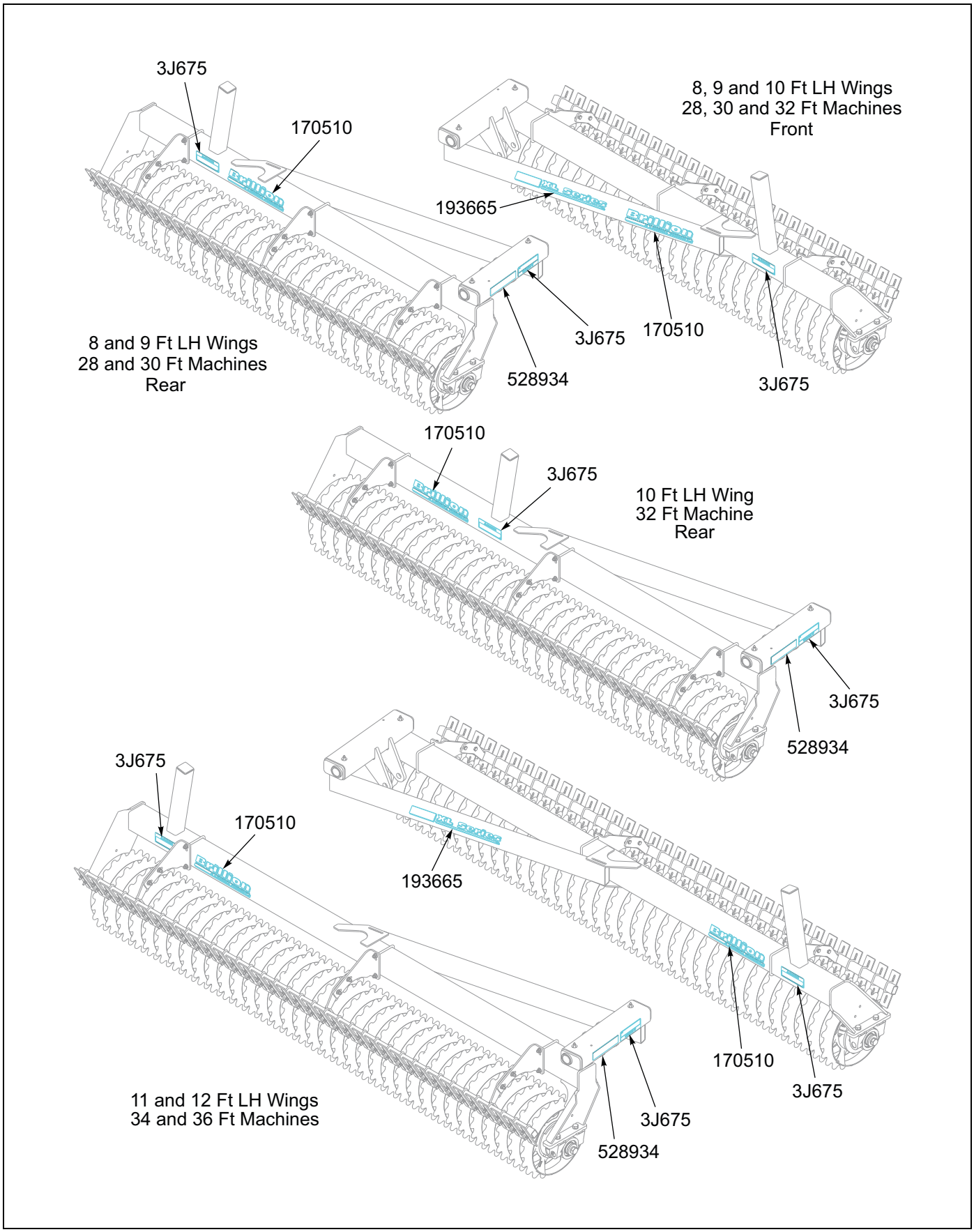

Figure 1-6: Decal Locations, Left Hand Wing (3 of 4)

https://truckmanualshub.com/

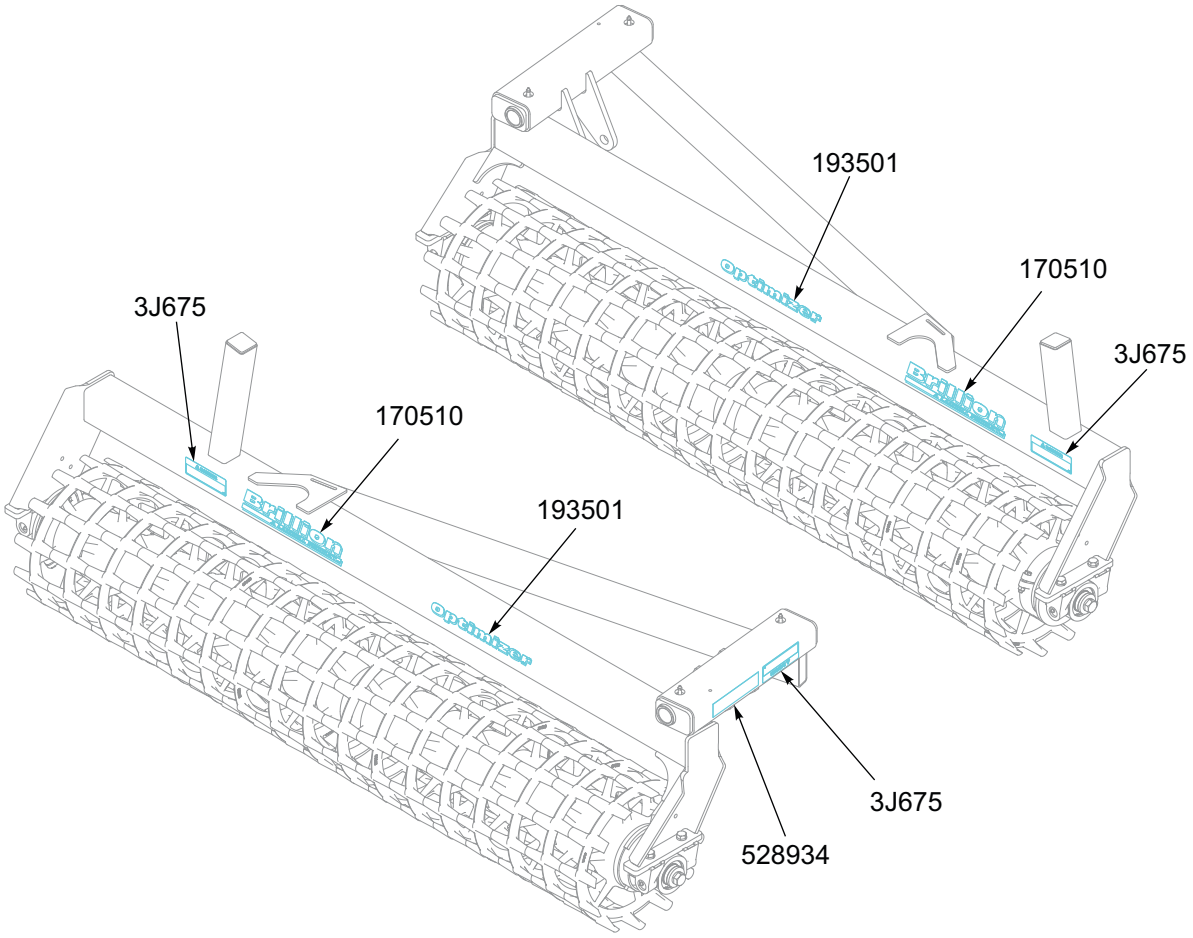

Figure 1-7: Decal Locations, Optimizer Wings (4 of 4)

https://truckmanualshub.com/

Table provided for general use.

NOTES:

https://truckmanualshub.com/

Chapter 2

Assembly

CAUTION

Do not work on or under this machine unless securely blocked and supported by a hoist or tractor or by other sufficient means.

WARNING

Do not attempt to lift heavy parts (such as the frame, rock shaft, and pull hitch) manually. Use a hoist or a fork lift to move these parts into position.

NOTE

Refer to the repair parts manual F-790 for identification of parts and for the approximate relationship of the parts in assembly.

IMPORTANT

- If pre-assembled parts or fasteners are temporarily removed, remember where they go. It is best to keep the parts separated.
- Check that all working parts move freely, bolts are tight and cotter pins are spread.
- Refer to the Torque Table for proper bolt torque values. Note the different torque requirement for bolts with lock nuts. **See Page 4-1**.

"Left" and "Right" refer to directions seen as if standing behind the machine and facing in the direction of forward travel.

https://truckmanualshub.com/

Frame and Transport Axle Assembly

Position the Transport Axle on a level surface under the designated frame assembly area. **See Figure 2-2**.

Using blocks or other supports, block up the Frame approximately 17”. Be sure that it is secure and cannot topple. The Transport Axle should be positioned approximately middle of the Frame.

NOTE

The Plastic Bearing Inserts are maintenance free and require no grease.

Place two Bearing Inserts into two Bearing Halves. Position one set under and one on top of the transport axle pipe near the center of the Transport Axle Arm. Slide two 5/8-11 x 11 Bolts up into both halves and into the frame holes. Attach with Flat Washers and Locknuts. Repeat for the left and right hand side. Tighten all hardware.

Attach the SMV sign to the rear of the frame using two 5/16-18 x 1 Bolts, Flat Washer and Locknuts.

Tire Installation

Install a Tire Assembly onto each Transport Axle Hub, using six 1/2-20 x 1 wheel bolts. Torque to **80-85 Ft/Lbs**.

Leave supports under frame to support the machine in case of weight shift while adding components.

WARNING

Use a torque wrench to assure proper torque. Insufficient torque can cause stud breakage and damage the wheel pilots. Over torque can over stress the studs and strip the threads.

NOTE

All tire/wheel assemblies are mounted with the valve stem facing outward from Hub and Spindle.

NOTE

Block machine wheels securely so they will not roll while working on or under it.

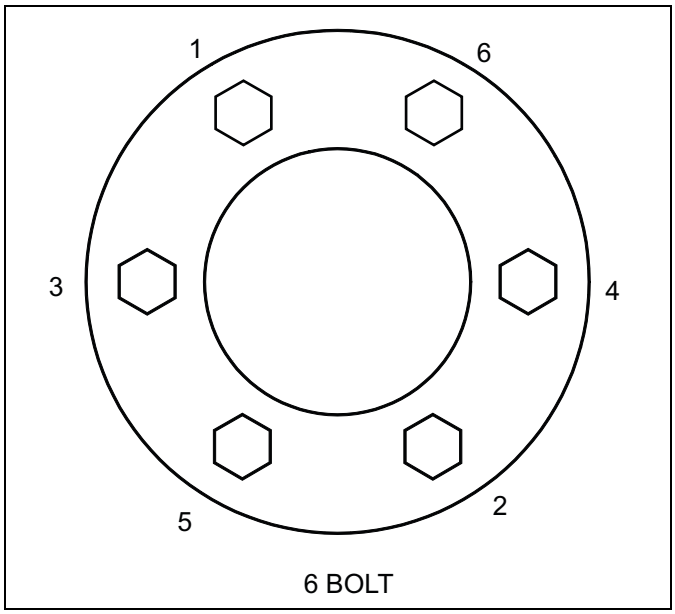

Figure 2-1: Stud Tightening Sequence

NOTE

Torque will drop after the first 10 hours of operation. Check the nuts for proper torque after this interval and re-tighten them.

https://truckmanualshub.com/

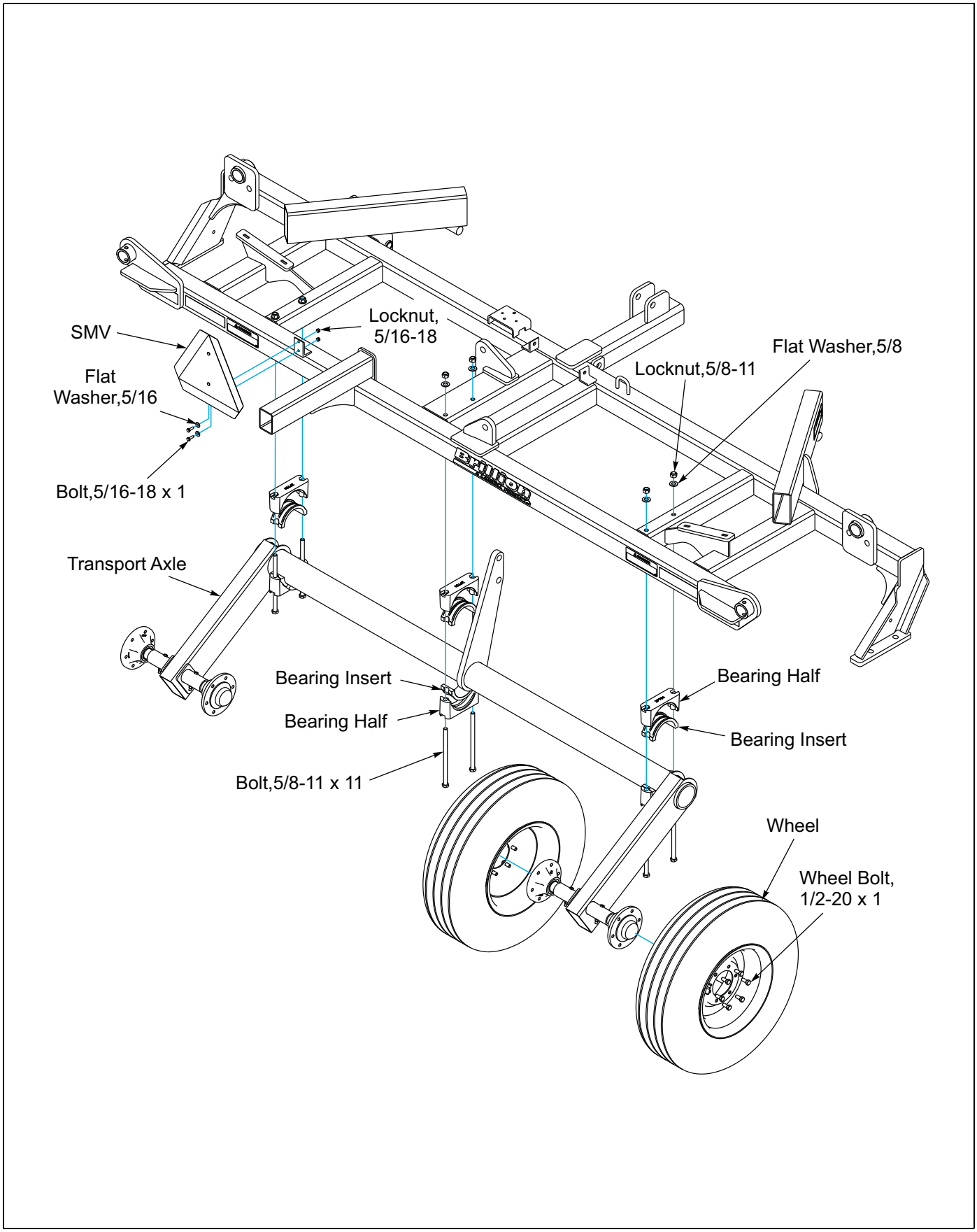

Figure 2-2: Frame and Transport Axle

https://truckmanualshub.com/

Transport Lock Installation

Attach the two Spring Holders to the frame angles using 1/2-13 x 1-1/2, Bolts and Locknuts. Place a 1/2” Washer, Compression Spring, another 1/2” Washer onto the Spring Holder.

Position the base end of the 3-1/2 x 16 Hydraulic Cylinder port side up between the frame lugs. Place a Machinery Bushing on each side of the cylinder. Lower the Transport Lock over the frame lugs. *The Transport Lock must be centered over the hydraulic cylinder*. Place a machinery bushing on the inside and outside of the Transport Lock and slide 1 x 11-1/8 Pin through all. Secure using 1/4 x 1-1/2 Slotted Pin.

Attach the rod end of the 3-1/2 x 16 Hydraulic Cylinder to the bottom hole of the Transport Axle Arm using vendor supplied hardware. Slide 1 x 8-5/8 Pin into the top hole of the Transport Axle Arm.

Place a Sleeve over each end, then a 1 inch Washer. Secure with 3/16 x 2 Slotted Pins.

Push down on the Transport Lock and align the Spring Holders with the tabs on the side of the transport lock. Place a Washer and Locknut onto the Spring Holder and tighten until the first hole on the Spring Holder is visible. Insert Hairpin Cotter. *The Transport Lock is now in the unlocked position.*

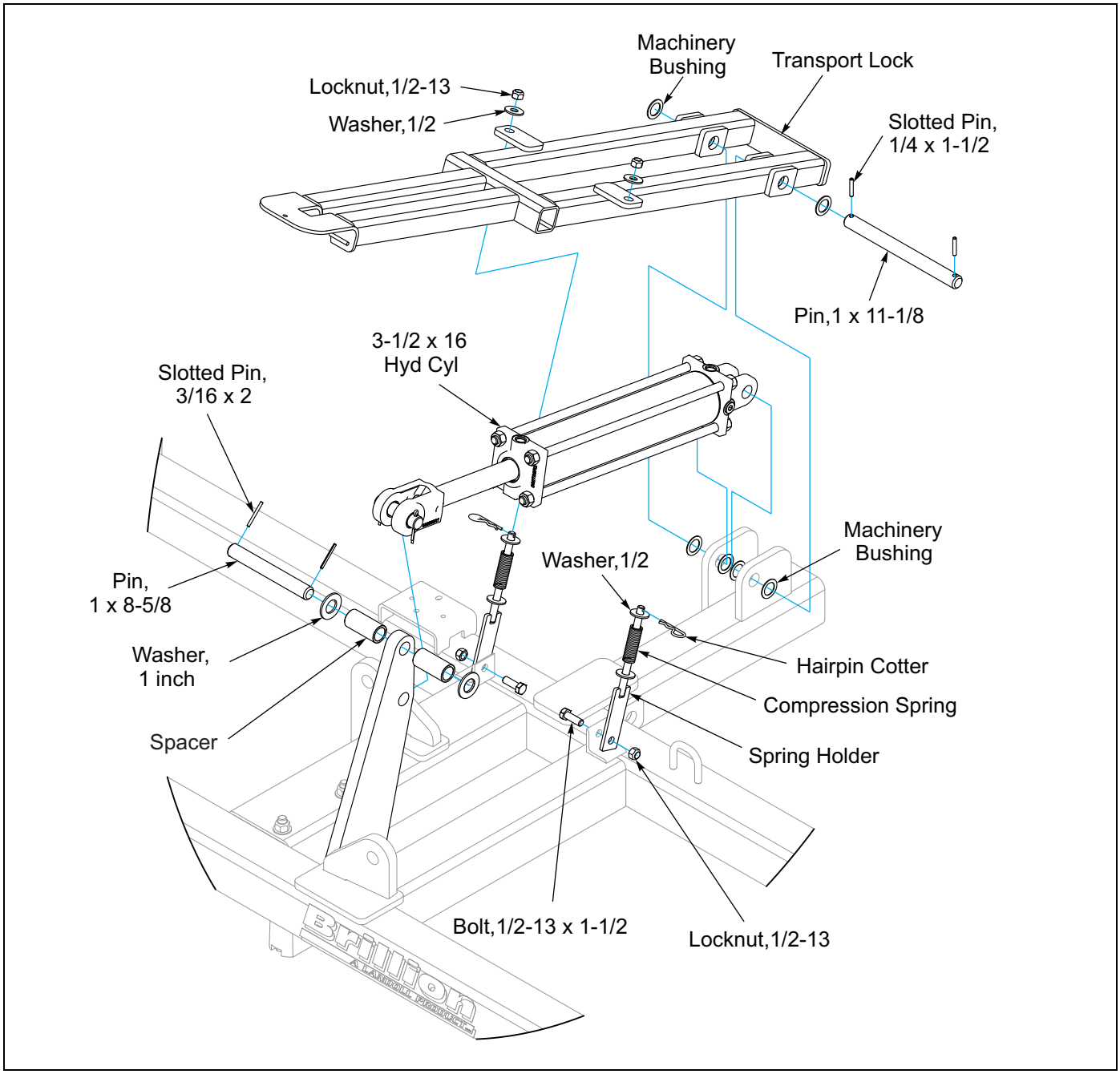

Figure 2-3: Transport Lock

https://truckmanualshub.com/

Center Roller Assembly Installation

1. Roller Assemblies are pre-assembled from the factory with stub shafts, bearings, shims, and retaining washers. ***NOTE**: Crowfoot Wheel Rotation Arrow must follow the direction of travel.* ***See Figure 2-4.***

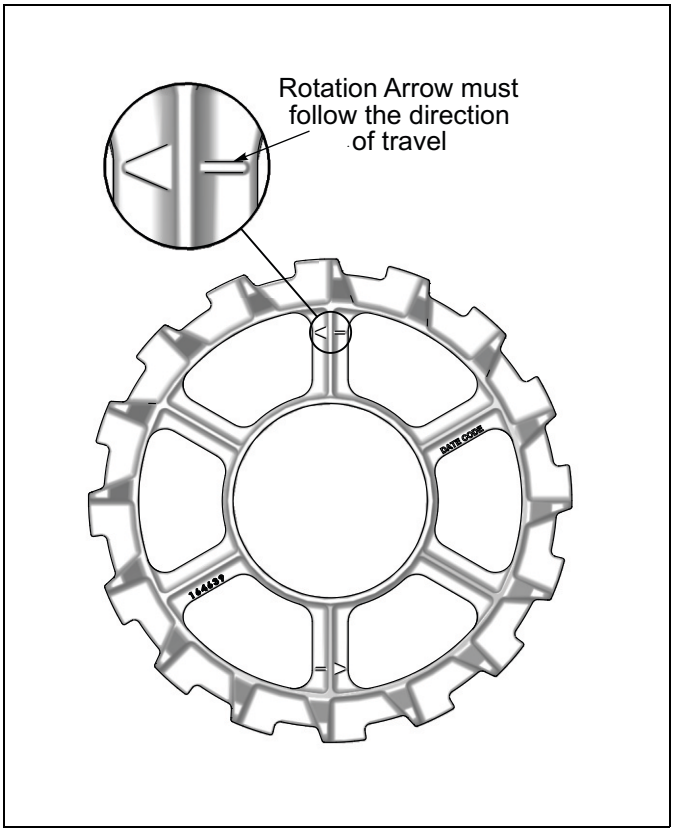

Figure 2-4: Crowfoot Wheel Rotation Arrow

2. Loosen the 1-8 Bolt on each end of the Roller Assembly approximately 4 turns.
3. With the Bearing Grease Fitting facing towards the rear of the machine, slide the Trunnion Bearing Mounts onto the Trunnion Bearings and lift the Roller Assembly up to the Center Frame. Hand tighten 3/4-10 hardware to hold Trunnion Bearing Mounts in place.
4. Look at each Trunnion Bearing Mount to make sure that it is sitting perpendicular to the Center Frame Bearing Hanger. If not adjust the Shim Washers accordingly, for each side there are two 11ga and one 14ga Shim Washers. Shim Washers can be all three on the inside between the Stub Shaft shoulder and the Trunnion Bearing, all three can be on the outside between the Trunnion Bearing and Flat Top Washer, or a combination on either side, but all three must be used to minimize the gap. If gap cannot be properly minimized with bearing snap rings to outside, turn bearing around to have snap ring to inside. The bearing inner race is offset with respect to the trunnion bosses by 1/32”. By installing bearings with snap rings in versus out, 1/16” difference can be made up at assembly if needed. **See Figure 2-6.**
5. Tighten 3/4-10 and 1-8 hardware to specification per torque chart. **See Page 4-1**.

https://truckmanualshub.com/

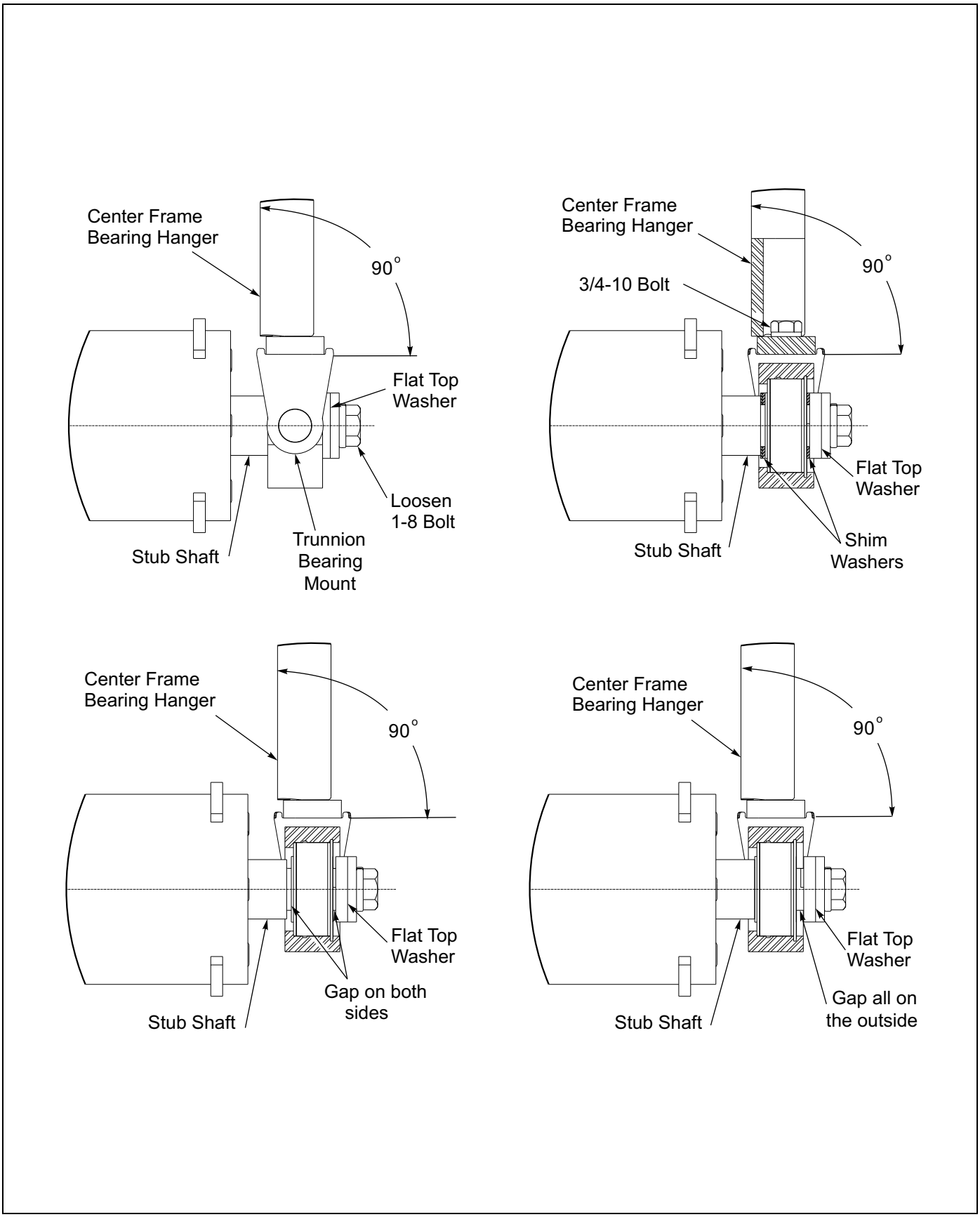

Figure 2-5: Trunnion Spacers

https://truckmanualshub.com/

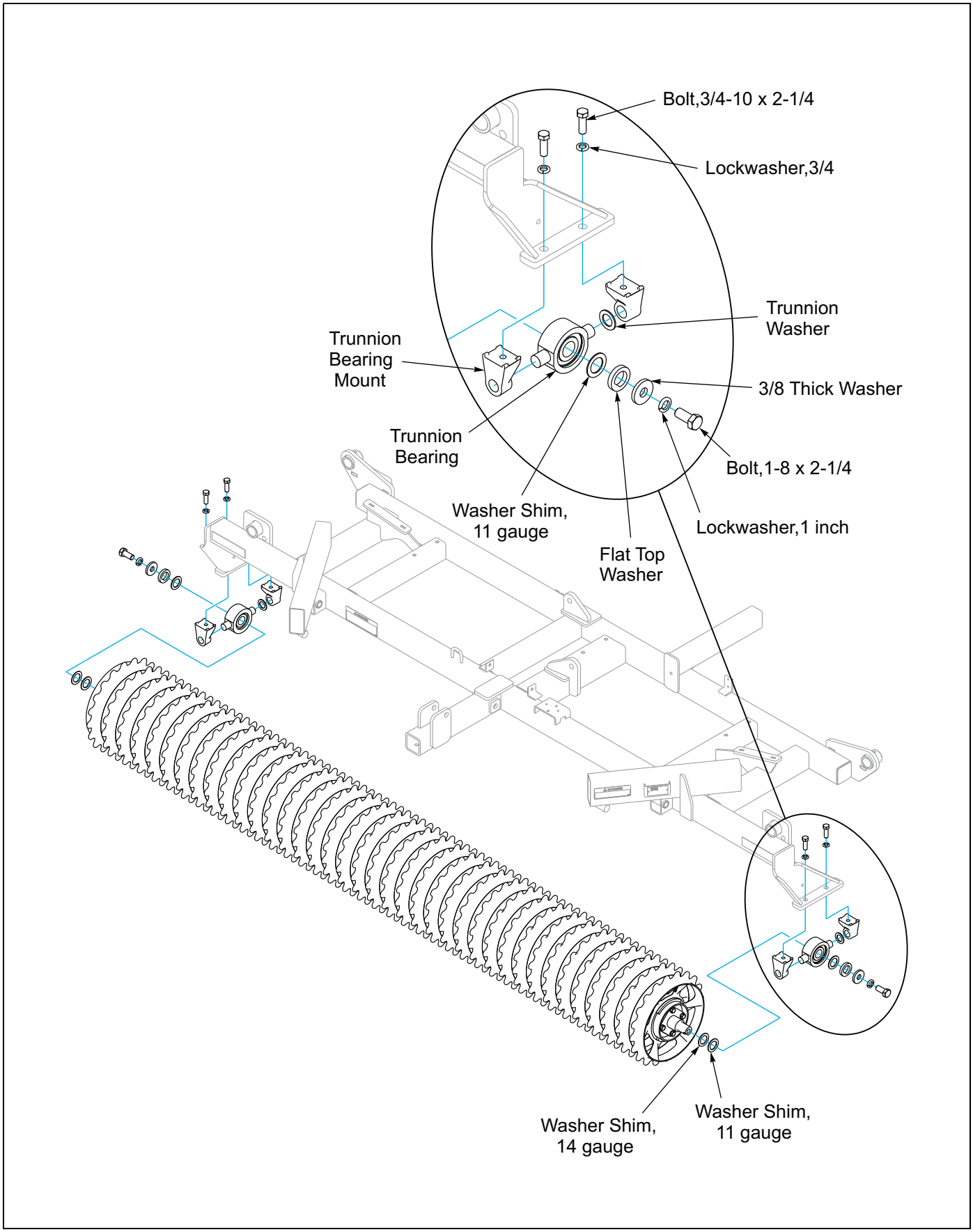

Figure 2-6: Center Roller Assembly Installation

https://truckmanualshub.com/

Drawbar and Brace Installation

Attach the drawbar to the frame by inserting 1 x 8-3/16 Pin through the drawbar lugs and the frame mounting tubes. Place a 1 inch flat washer on each side and secure with 5/16 x 2 slotted pin. The drawbar braces are left and right. Set the end of the brace with straight straps between the straps on the Drawbar. Attach the end of the brace with bent plates to the center frame using 1 x 6-3/4 Pin with a flat washer on each end and 5/16 x 2 slotted pins.

Secure the drawbar end with 3/4-10 x 2 bolts and locknuts. Do not tightens these bolts until both drawbar braces are assembled. Use the same procedure to assemble the drawbar brace on the opposite side.

For the initial settings of the Drawbar, set one 1/8, one 1/4 and three 1/2 drawbar shims on top of the strap that is welded on the drawbar brace. Insert 5/8 x 11-5/8 pins through the shims and the remaining three 1/2 shims on the bottom of the drawbar brace Secure with hairpin cotters at the top and 3/16 x 1-1/8 slotted pins on the bottom.

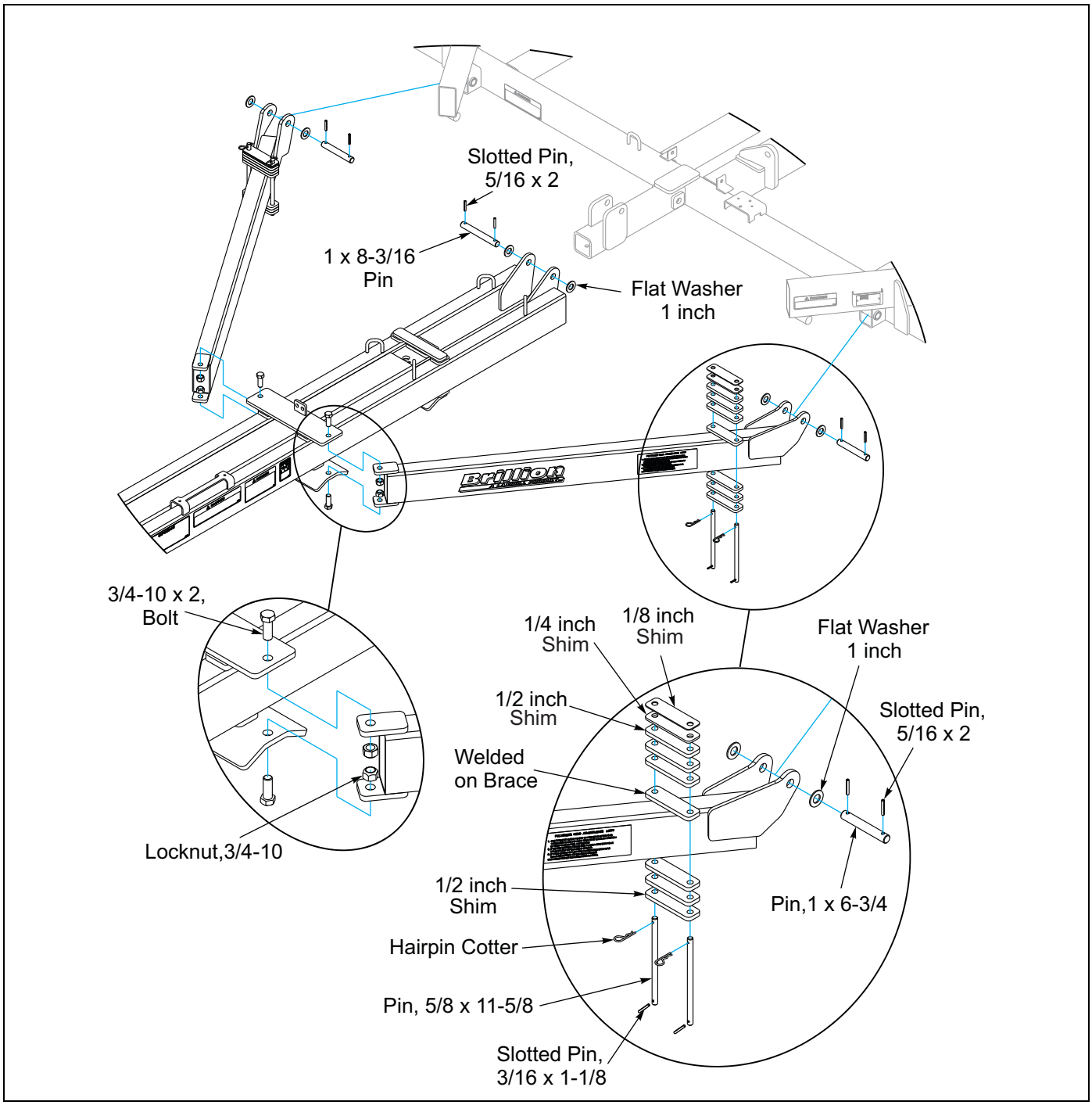

Figure 2-7: Drawbar and Brace Installation

https://truckmanualshub.com/

Drawbar Components

Attach the Manual Canister on the top of the drawbar bracket using two 1/4-20 x 1, Bolts, Flat Washers and Locknuts.

Attach the Jack Mount to the Jack using 1/2-13 x 1-1/2 Bolts and Locknuts and secure. Position the Jack onto the drawbar swivel and secure with 3/4 Pin with chain.

Attach Drawbar Stop to the frame tube using two 5/8-11 x 2 Bolts, Lockwashers and Nuts. *Purpose of the Drawbar Stop is to limit the drawbar vertical travel*.

Attach the Hose Support to the lug using 5/8-11 x 2-1/4 Bolt, Washer and Locknut.

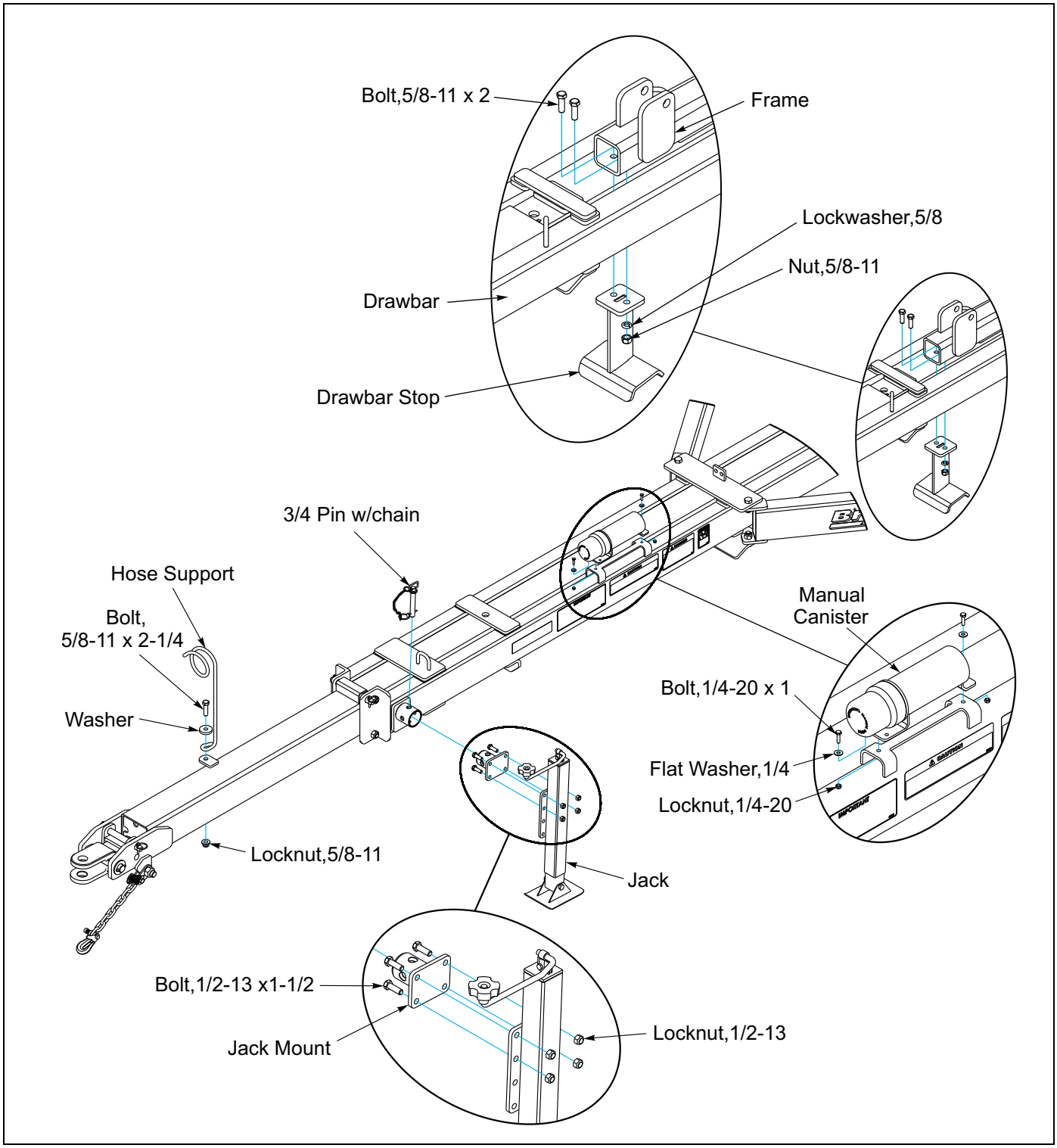

Figure 2-8: Drawbar Components

https://truckmanualshub.com/

Wing Cylinder Installation

Install the wing fold hydraulic cylinders base end to the center frame lugs with ports facing the front of machine, using the supplied hardware. **See Figure 2-9**.

On the Right Hand cylinder do not spread the cotter pins at this time. **See Figure 2-14.**

NOTE

28' - 30' Models receive 3" x 30" Hydraulic Cylinders.

32' - 36' Models receive 4" x 30" Hydraulic Cylinders.

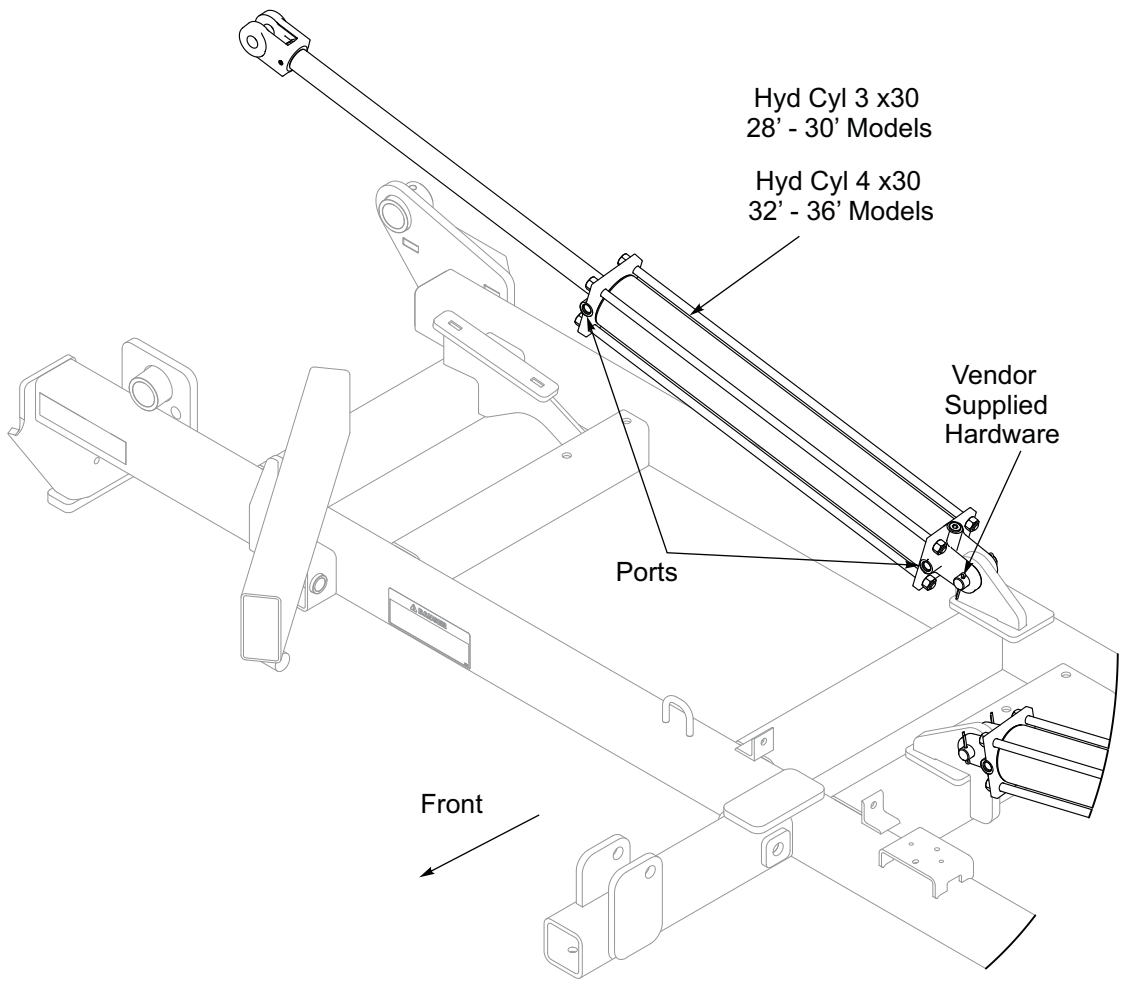

Figure 2-9: Wing Cylinder Installation

https://truckmanualshub.com/

Hydraulics

CAUTION

Restrictors are installed in the wing fold cylinders to prevent uncontrolled dropping of wings. Removal of these restrictors, or improper installation can result in serious damage to the implement

Remove Fitting Caps prior to installing Fittings.

Tightening Procedure For JIC 37° Swivel Female Nuts

1. Check flare and seat for defects.
2. Lubricate the connection.
3. Install hoses without twists.
4. Hand tighten until connection bottoms.
5. Using 2 wrenches to prevent twisting, rotate the swivel nut 2 wrench flats (1/3 turn).
6. For reassembly, follow the same procedure but tighten only 1 wrench flat (1/6 turn).

Tightening Procedure For Swivel O-Ring Fittings

1. Lubricate o-ring and install the fitting until the metal washer which backs up the o-ring contacts the face of the boss.
2. Orient the fitting by turning counterclockwise up to 1 turn.
3. Tighten the Locknut using 50-60 foot pounds torque.

(See "Hydraulic Fitting Torque Specifications" on page 4-2.)

WARNING

Escaping fluid under pressure can be nearly invisible and have enough force to penetrate the skin causing serious injury. Use a piece of cardboard, rather than your hands, to search for suspected leaks. Wear protective gloves & safety glasses or goggles when working with hydraulic systems.

Hydraulic System

Pulverizer model will determine hydraulic fluid capacity.

28 - 30 Models = 2 gallons of Hydraulic fluid.

32 - 36 Models = 3.2 gallons of Hydraulic fluid.

Manifold Installation

1. Attach the 8 Port Manifold to the front of the manifold bracket located on top of the drawbar strap with 1/2-13 x 3-3/4 Bolts, Flat Washers and Locknuts. Install the fittings into the manifold with the elbow fittings pointing rearward. **See Figure 2-10.**

Hose Installation

Use the Hydraulic Schematic as a reference. **See Figure 2-10.**

2. Install four straight restrictors into the base end and rod end of the wing fold cylinders, and 90 degree fitting on the restrictor in the rod end port of the wing fold cylinders. Install 90 degree fittings into the lift cylinder.
3. Attach hoses to the Fold Cylinders route the hoses through the loops to the manifold. Left Hand cylinder goes to the left side of manifold, right hand cylinder goes to the right side. Attach hoses from the lift cylinder to the rear of manifold. **See Figure 2-11.**
4. Route the two hoses from the front of the manifold under the manual bracket through the loop and Hose Holder Support to the front of the Drawbar. Install couplers and fittings into the end of the hoses.

NOTE

The Magnet provided is used to prevent hoses from dragging with drawbar extended.

5. Assemble the Magnet and related components to the hoses. Position halfway between drawbar assembly and hose support.
6. Secure all hoses with cable ties and tie-wraps.

https://truckmanualshub.com/

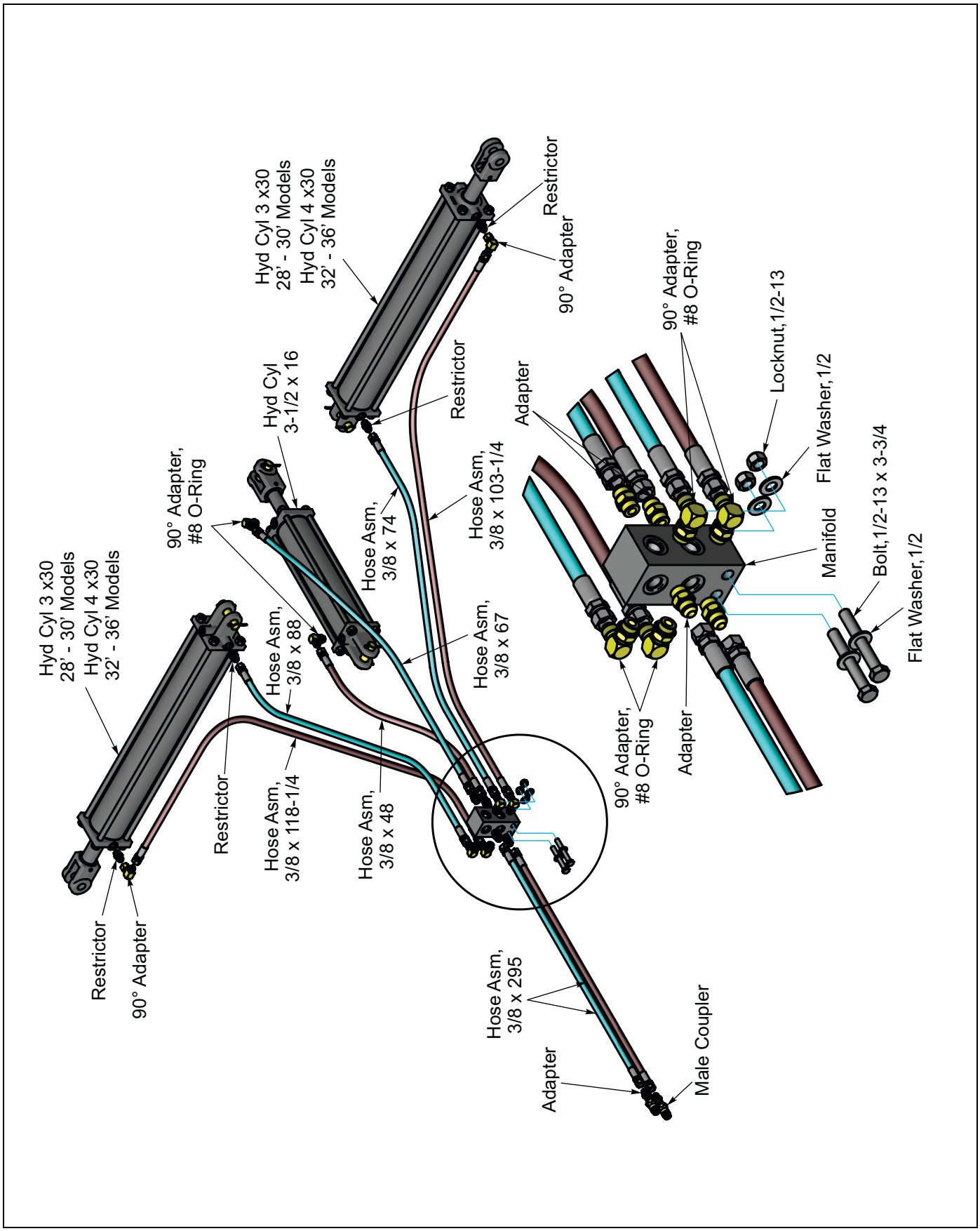

Figure 2-10: Hydraulic Schematic

https://truckmanualshub.com/

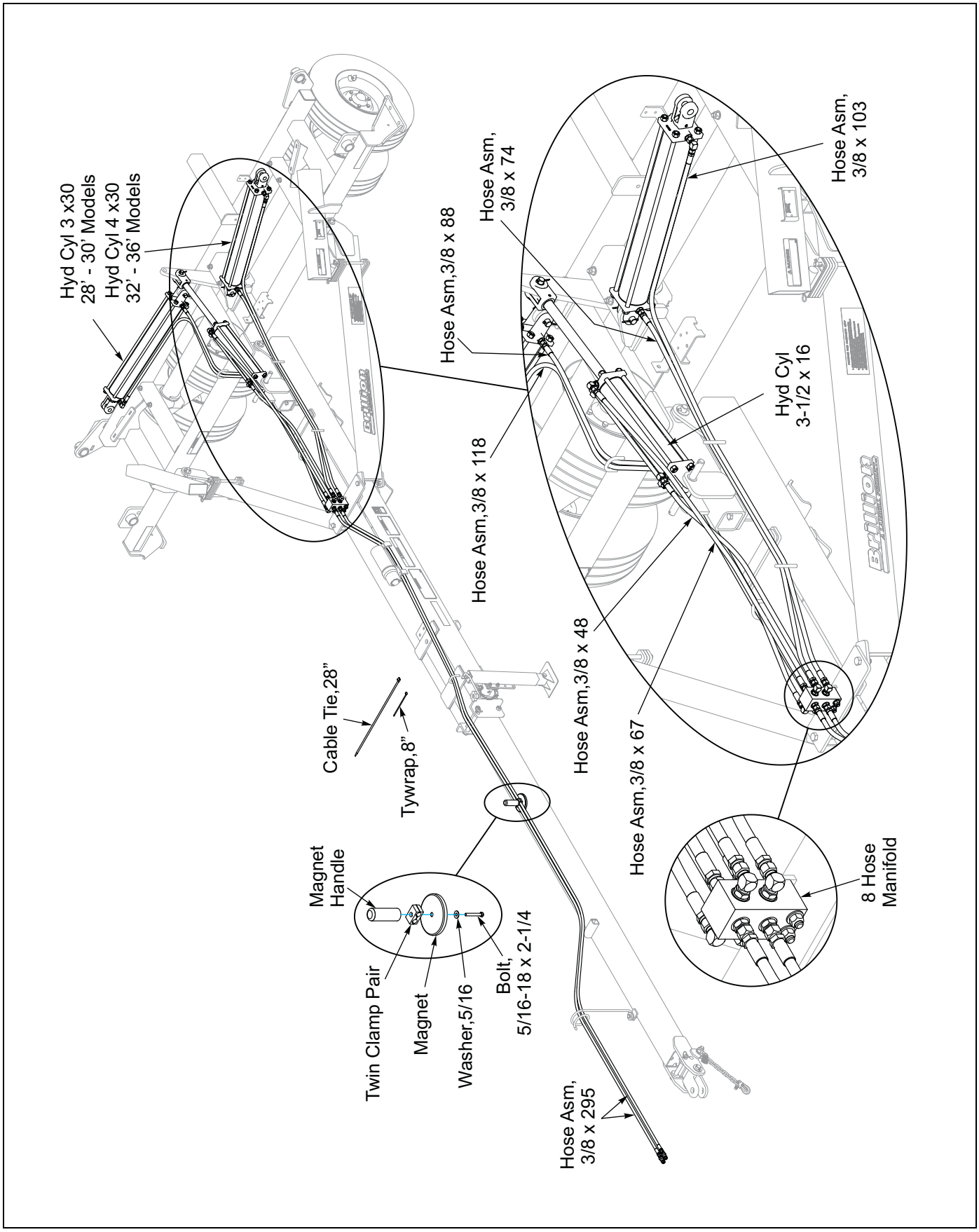

Figure 2-11: Hydraulic Layout

https://truckmanualshub.com/

Purging the Lift and Fold Cylinders

WARNING

Escaping hydraulic fluid can cause serious personnel injury. Relieve system pressure before repairing, adjusting, or disconnecting. Wear proper hand and eye protection when searching for leaks. Use cardboard instead of hands. Keep all components (cylinders, hoses, fittings, etc.) in good repair.

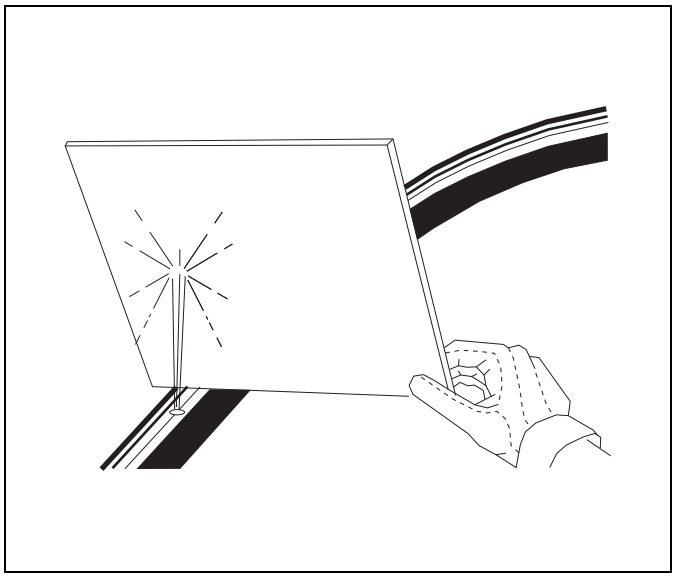

Figure 2-12: Hydraulic Leak Detection

The hydraulic system is not filled with oil and should be purged of air before transporting and field operations. Carefully hitch the Pulverizer to the tractor and connect the hydraulic hoses. Check to make sure the tractor hydraulic reservoir is full of the manufacturer's recommended oil.

With the wings unfolded and cylinder rods not pinned. Purge the system by turning the wing fold cylinders so the rod ends are upward. Slowly raise the machine, and continue to hold the hydraulic lever until lift cylinder is extended and the fold cylinders are retracted. Fully extend and fully retract all cylinders 5 or 6 times or more, until all air is out of the system. Lower and raise the unit to verify that the cylinders are working smoothly throughout the stroke. If the cylinders are not working smoothly, fully extend the cylinders and continue to hold the lever to purge any remaining air. Do not loosen any hoses or fittings. Rod ends can now be assembled to the fold links. Recheck tractor reservoir to make sure it is within operating limits.

CAUTION

The wings depend upon the passage of oil through a flow restrictor to keep from free falling. If the cylinder is not full of oil the wing will drop and may cause damage to the machine.

NOTE

Never unfold the wings past center until all air is out of the hydraulic system, as Free Falling may occur.

DANGER

FALLING WINGS CAN CAUSE INJURY OR DEATH. STAND CLEAR WHEN WINGS ARE BEING RAISED OR LOWERED.

3J675

DANGER

BLEED THE AIR FROM WING LIFT CYLINDERS BEFORE OPERATING. FAILURE TO DO SO WILL ALLOW WINGS TO FREE-FALL AND MAY CAUSE SERIOUS PERSONAL INJURY. SEE OPERATORS MANUAL FOR CORRECT PROCEDURE.

3J678

https://truckmanualshub.com/

Wing to Frame Installation

Position the right hand wing frame between the right center frame bushings. Insert two Machinery Bushings on each side of the wing frame. Align the holes and insert Hinge Pin. Secure one end with 1/2-13 x 3-1/2 Bolt and Locknut and opposite end with 1/2 x 3 Roll Pin.

Place 1-/1/4 end of the link on the inside of each wing frame lug. Position spacer between links. Align the holes and insert 1-1/4 x 7-5/16 Pin.

Place washers on the ends of the pin against the wing frame lug. Secure with 5/16 x 2 Slotted Pins.

Position the 1 inch hole end of the link on each side of the fold cylinder rod clevis. Insert Roller Assembly between Rod Clevis, place a 1 inch Flat Washer on the outside of each Link. Align holes and slide 1 x 5-1/2 Pin through. Secure with 5/16 x 2 Slotted Pins. Repeat procedure for the Left Hand Wing.

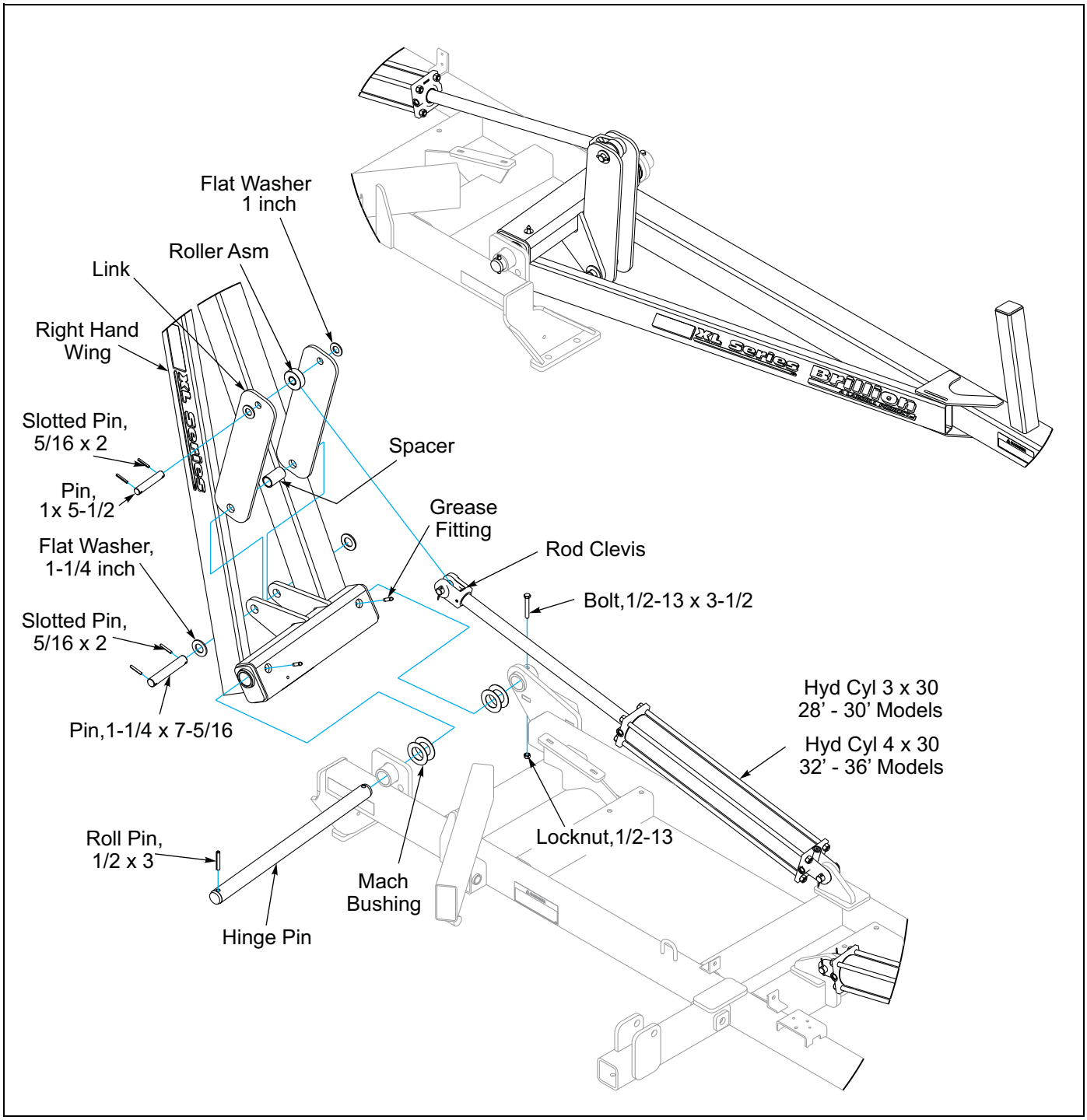

Figure 2-13: Wing to Frame Installation

https://truckmanualshub.com/

Transport Lock Linkage Assembly

At the rear of machine on the Right Hand Cylinder Lug place the Transport Lock Linkage Assembly Strap against the cylinder base clevis, secure with cotter pin. Insert Eye Bolt into the hole on top of the Left Hand Wing Frame and secure with Lockwasher and Nut. On the opposite end attach the S-Hook to the Transport Lock. Pinch the S-Hook closed so it cannot come unhooked.

Ensure Linkage is not bent or kinked. ***See Figure 2-14.***

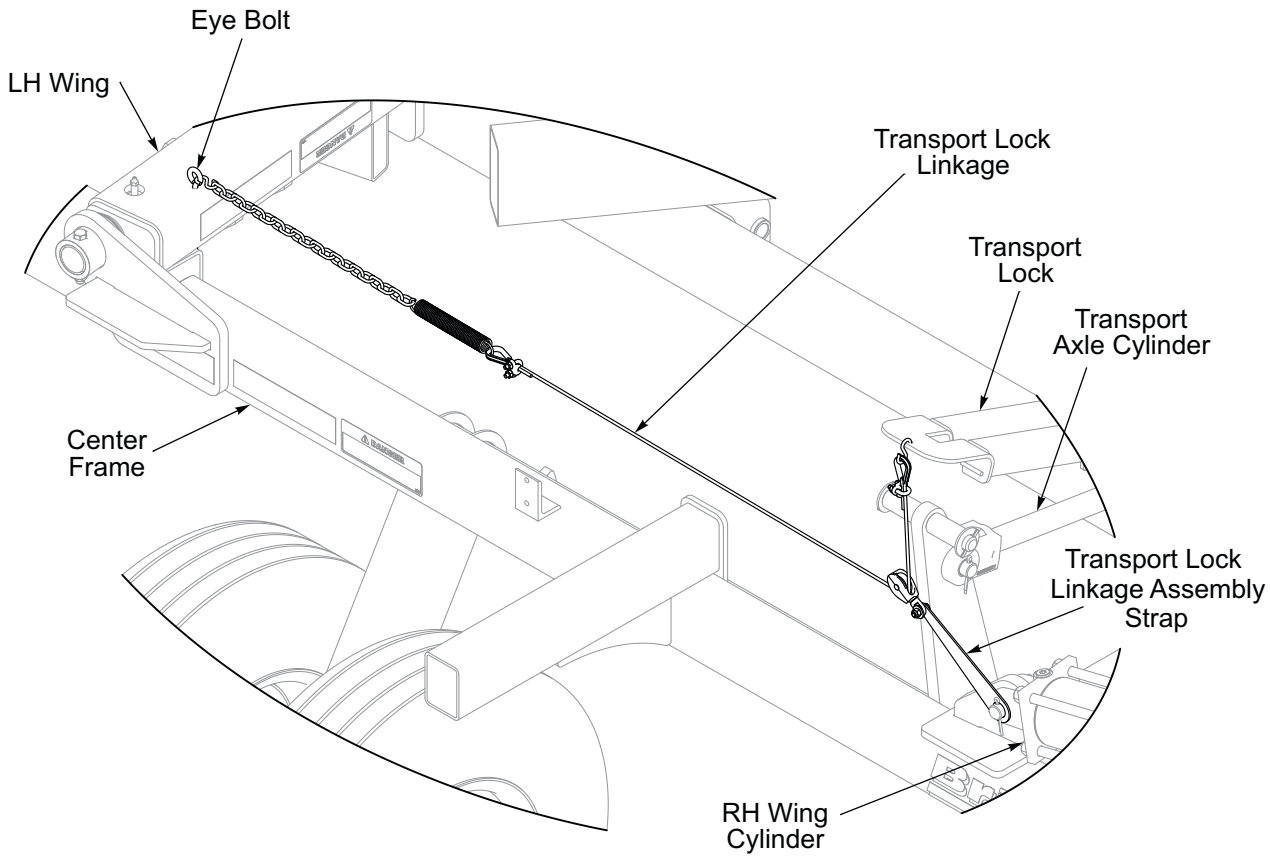

Figure 2-14: Transport Lock Linkage

https://truckmanualshub.com/

Wing Roller Assembly Installation

1. Roller Assemblies are pre-assembled from the factory with stub shafts, bearings, shims, and retaining washers. ***NOTE**: Crowfoot Wheel Rotation Arrow must follow the direction of travel.* ***See Figure 2-15.***

NOTE

Roller Axle Assembly clamped end must be on the outer extremity of the wing.

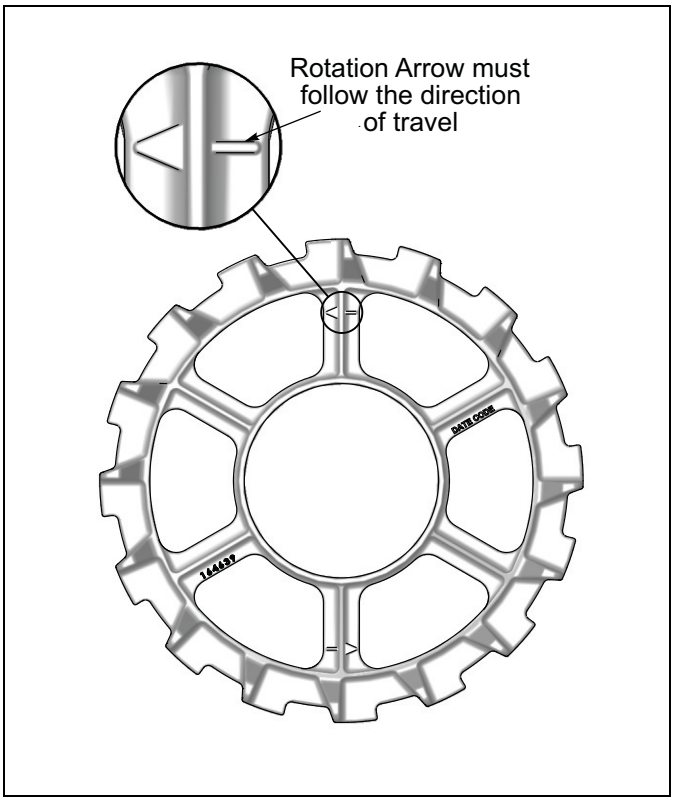

Figure 2-15: Crowfoot Wheel Rotation Arrow

2. Loosen the 1-8 Bolt on each end of the Roller Assembly approximately 4 turns.
3. With the Bearing Grease Fitting facing towards the rear of the machine, slide the Trunnion Bearing Mounts onto the Trunnion Bearings and lift the Roller Assembly up to the Wing Frame. Hand tighten 3/4-10 hardware to hold Trunnion Bearing Mounts in place.
4. Look at each Trunnion Bearing Mount to make sure that it is sitting perpendicular to the Center Frame Bearing Hanger. If not adjust the Shim Washers accordingly, for each side there are two 11ga and one 14ga Shim Washers. Shim Washers can be all three on the inside between the Stub Shaft shoulder and the Trunnion Bearing, all three can be on the outside between the Trunnion Bearing and Flat Top Washer, or a combination on either side, but all three must be used to minimize the gap. If gap cannot be properly minimized with bearing snap rings to outside, turn bearing around to have snap ring to inside. The bearing inner race is offset with respect to the trunnion bosses by 1/32”. By installing bearings with snap rings in versus out, 1/16” difference can be made up at assembly if needed. **See Figure 2-16.**
5. Tighten 3/4-10 and 1-8 hardware to specification per torque chart. **See Page 4-1**.

https://truckmanualshub.com/

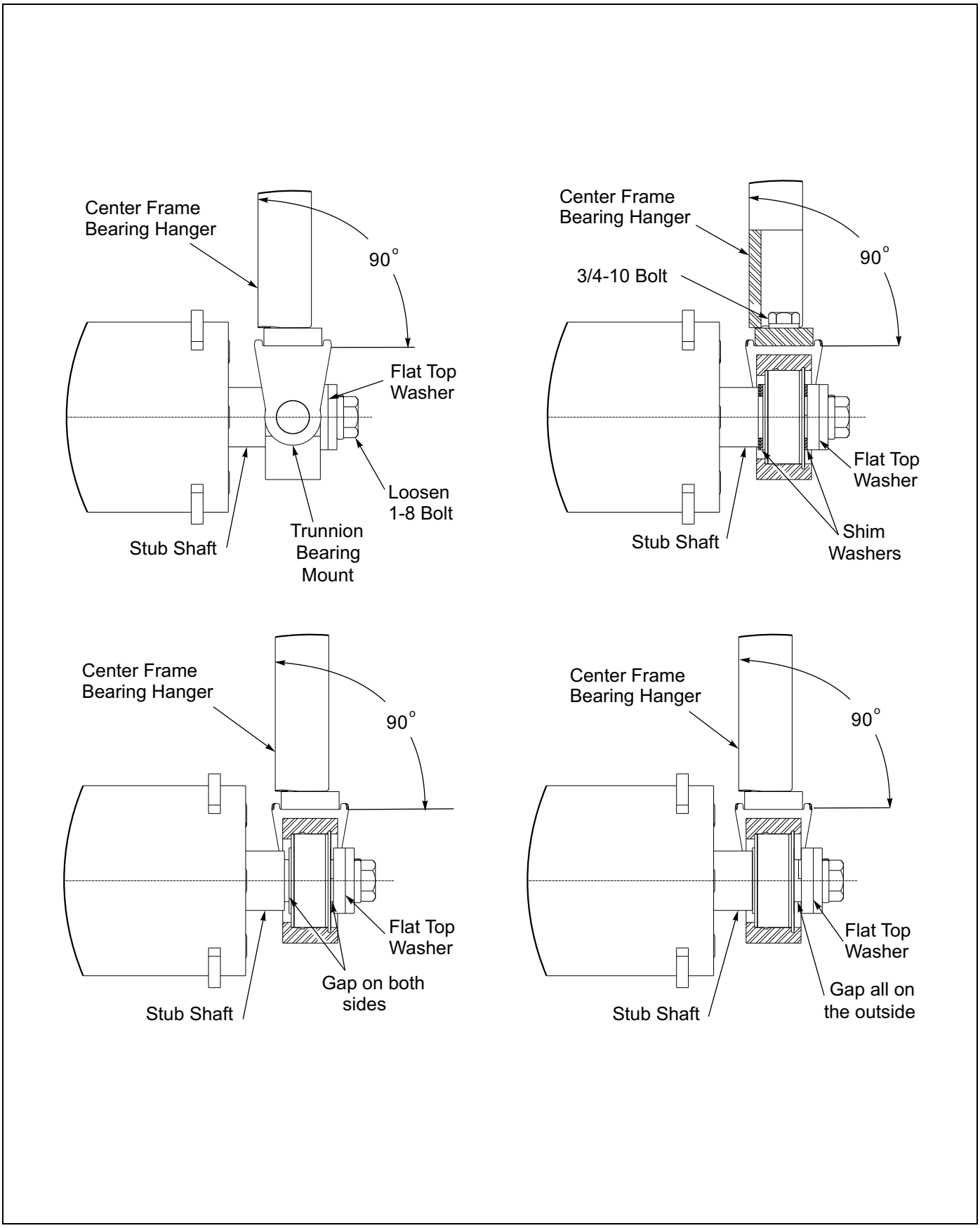

Figure 2-16: Trunnion Spacers

https://truckmanualshub.com/

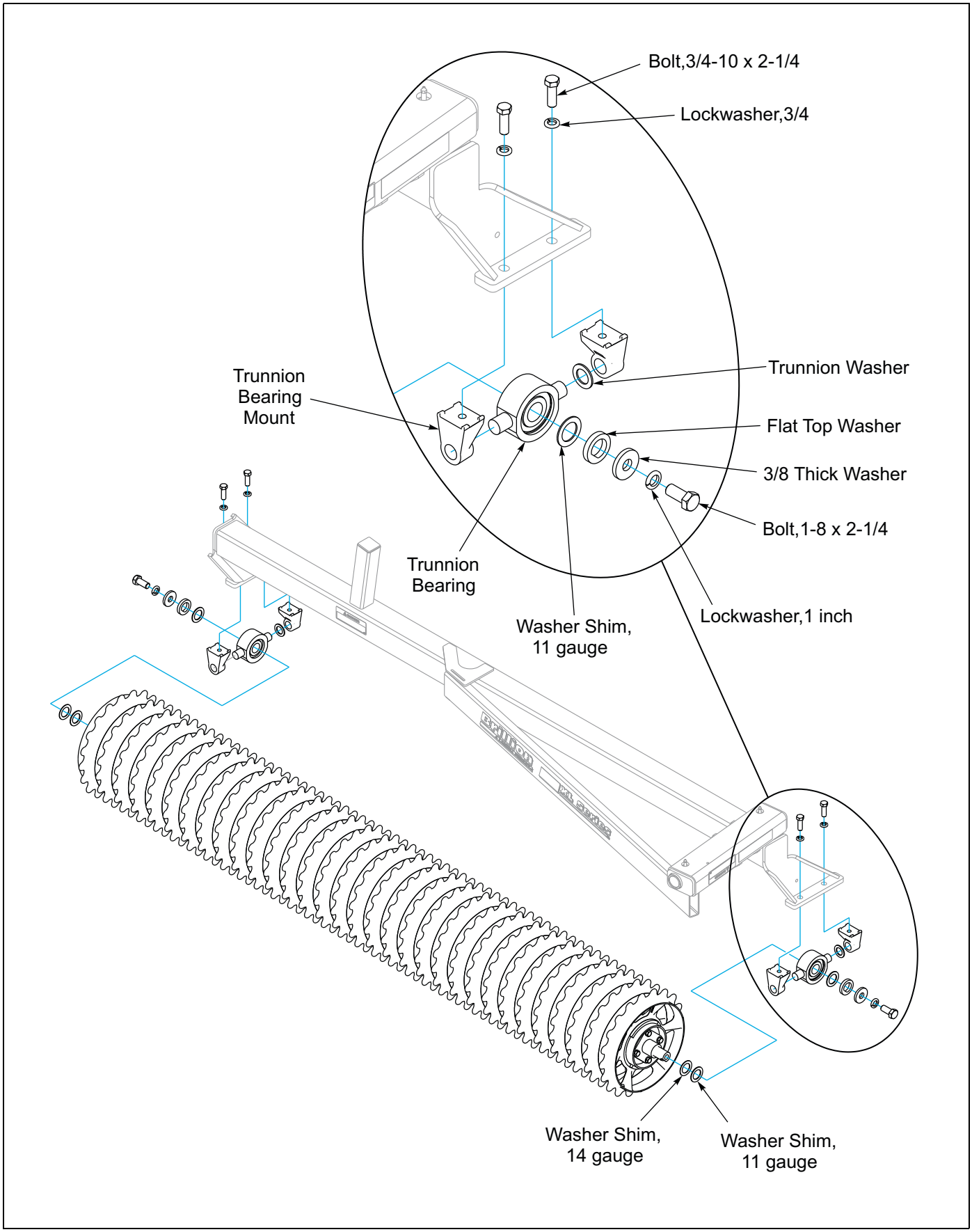

Figure 2-17: Wing Roller Assembly Installation

https://truckmanualshub.com/

LED Installation Instructions

NOTE

28' - 36' models similar.

1. Attach two Light Mounts to the rear frame using 5/8-11 U-Bolts and Flanged Locknuts.
2. Attach Red LED's to the Light Mounts with four 1/4-20 x 1-1/2 Bolts and Locknuts. Ensure LED pigtail lays on top of mount. Ensure Red LED faces rearward.
3. Attach the Flasher Control Module to the Module Bracket with two 1/4-20 x 1-1/2 Bolts and Locknuts.
4. Layout the LED Harness, noting that the connectors marked with Green Tape is Right Side and Yellow Tape is Left Side. Attach LED Harness to the Flasher Module.
5. On the Left Hand side (Yellow Tape) lay the harness along the top of the front frame. At the inner cross member route the 3 prong cord along the side, at the rear frame turn the cord inward and down, plug into the Red LED.
6. Route the 2 prong cord along the top of the front frame. Use cutout in upper mount hole to keep wire on top of frame. Channel the end of the cord up and through the Lamp Bracket. Attach the lamp bracket to the frame using 1/2-13 U-Bolt and Flanged Locknut.
7. Position the Amber LED inside the Lamp Bracket and connect the two harnesses. Attach the Amber LED to the bracket with four 1/4-20 x 1-1/2 Bolts and Locknuts.
8. Repeat for the Right Side (Green Tape).
9. Plug the 7 Pin AG Harness into the Flasher Module, then route the harness along the Drawbar with hoses, through the Hose Support, secure with Tie Straps.
10. Bundle and secure excess cord to the Light Bracket with Tie Straps. Secure cords along frame using Tie Straps.

NOTE

All wires must be firmly attached to machine frame members so they do not sag or become torn loose by field debris.

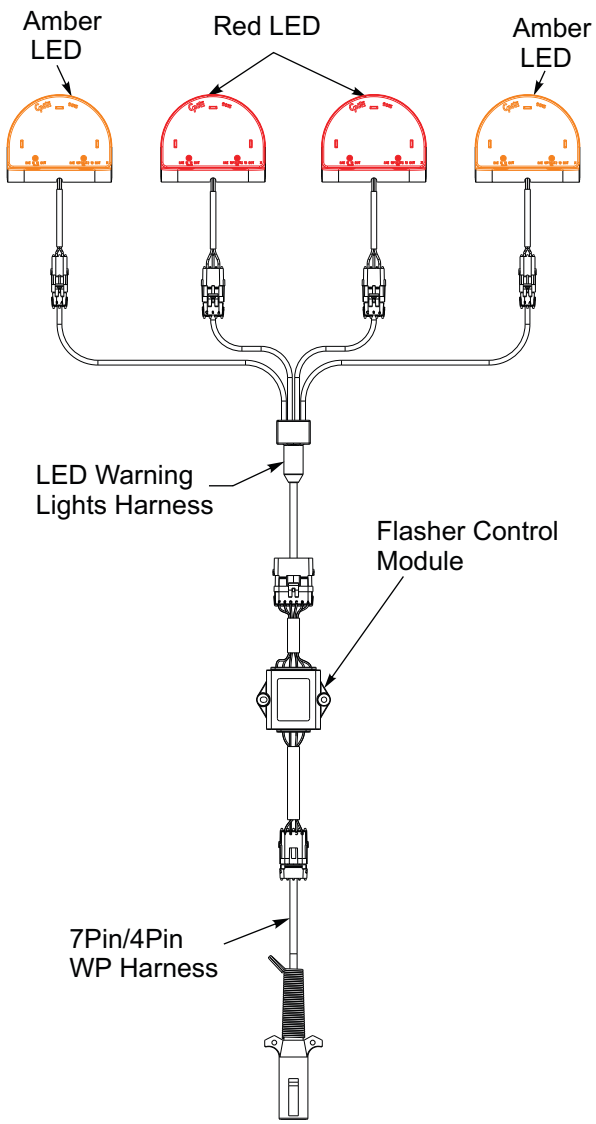

Figure 2-18: LED Schematic

https://truckmanualshub.com/

LED Warning Lights

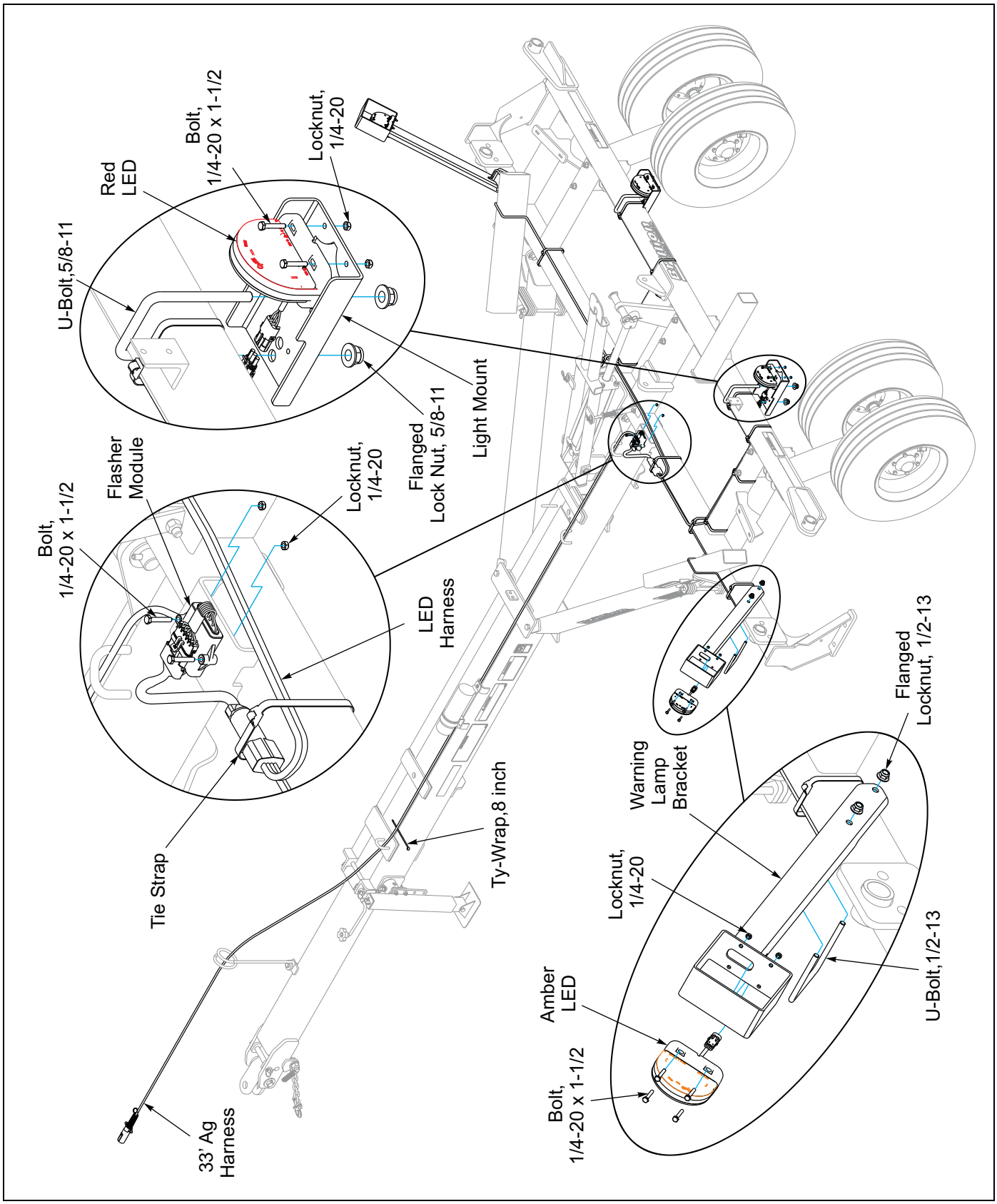

Figure 2-19: LED Warning Lights Layout

https://truckmanualshub.com/

Center Scraper Installation - Optional

With the Rollers on level ground, Place six 1/2-13 U-Bolts over the center and outer frame cross tubes and through the Scraper Brackets, Hand tighten Flanged Locknuts. Attach the Scrapers in the bottom of the top two slots to the Scraper Tube, except for the three that will be attached when the tube is attached to the scraper bracket (spaced approximately 4 inches apart). Secure with 3/8-16 U-Bolt and Flanged Locknuts. Roughly center and attach the Scraper Tube to the Scraper Brackets with the three remaining scrapers, 3/8-16 U-Bolts and Flanged Locknuts. Adjust the Scrapers to obtain 1/4” clearance from the Notched Wheels. **See Figure 2-22.** Tighten all hardware.

Heavy Notch Scraper assembly similar.

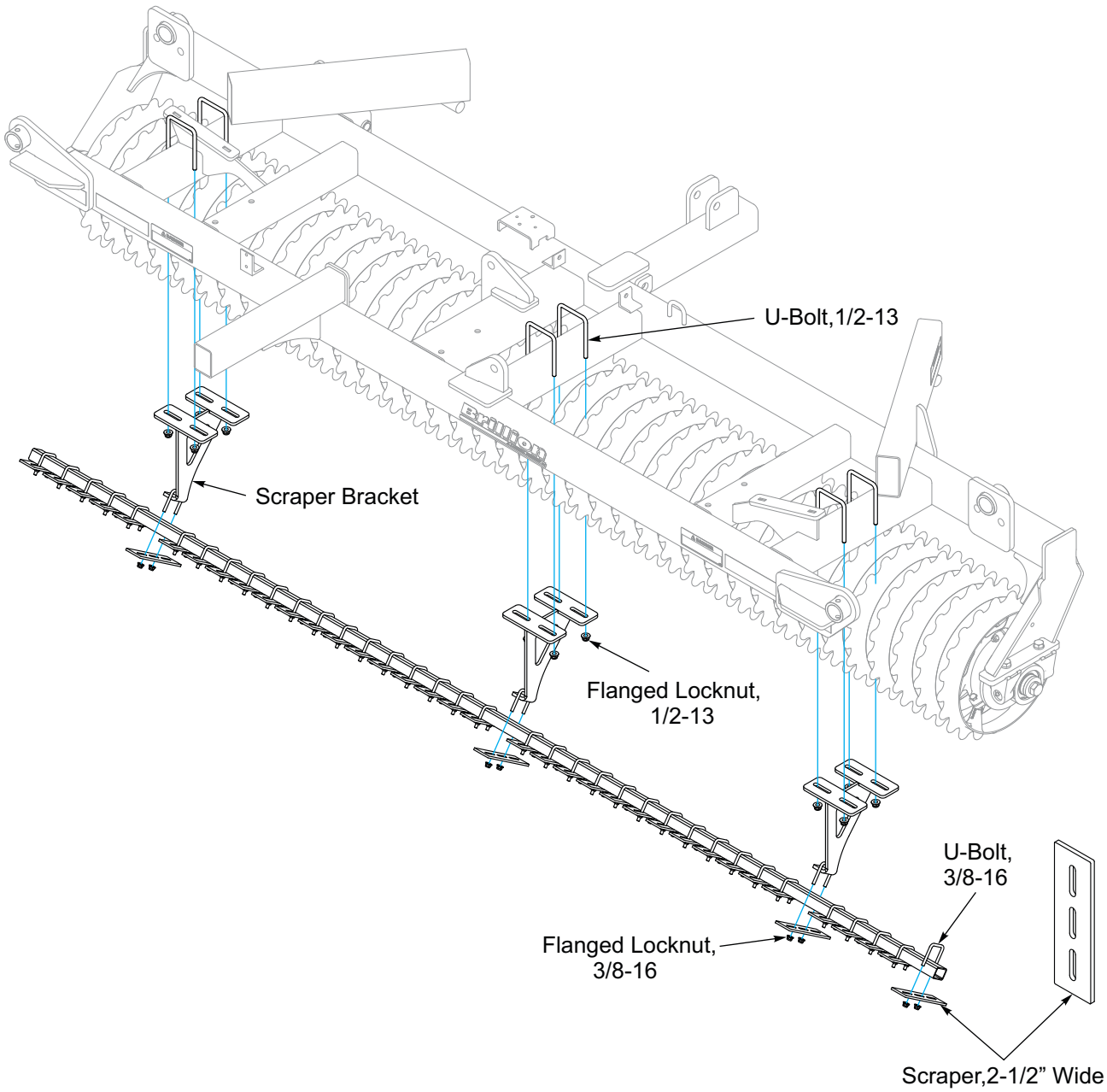

Figure 2-20: Center Scraper Installation

https://truckmanualshub.com/

Wing Scraper Installation - Optional

Right Hand shown Left Hand similar.

With the Rollers on level ground, place the 1/2-13 U-Bolts from the front of the frame tube and through the Wing Scraper Brackets, secure with Flanged Locknuts. Attach the Tube Scraper Bracket to the Wing Scraper Bracket with 1/2-13 x 1-3/4 Bolts and Flanged Locknuts. Attach the Scrapers in the bottom of the top two slots to the Scraper Tube, except for the three that will be attached when the tube is attached to the Tube Scraper Bracket (spaced approximately 4 inches apart). Secure with 3/8-16 U-Bolt and Flanged Locknut. Attach the Tube and the remaining three scrapers to the Tube Scraper Bracket using 3/8-16 U-Bolts and Flanged Locknuts. Adjust the Scrapers to obtain 1/4” clearance from the Notched Wheels. **See Figure 2-22**. Tighten all hardware.

Heavy Notch Scraper assembly similar.

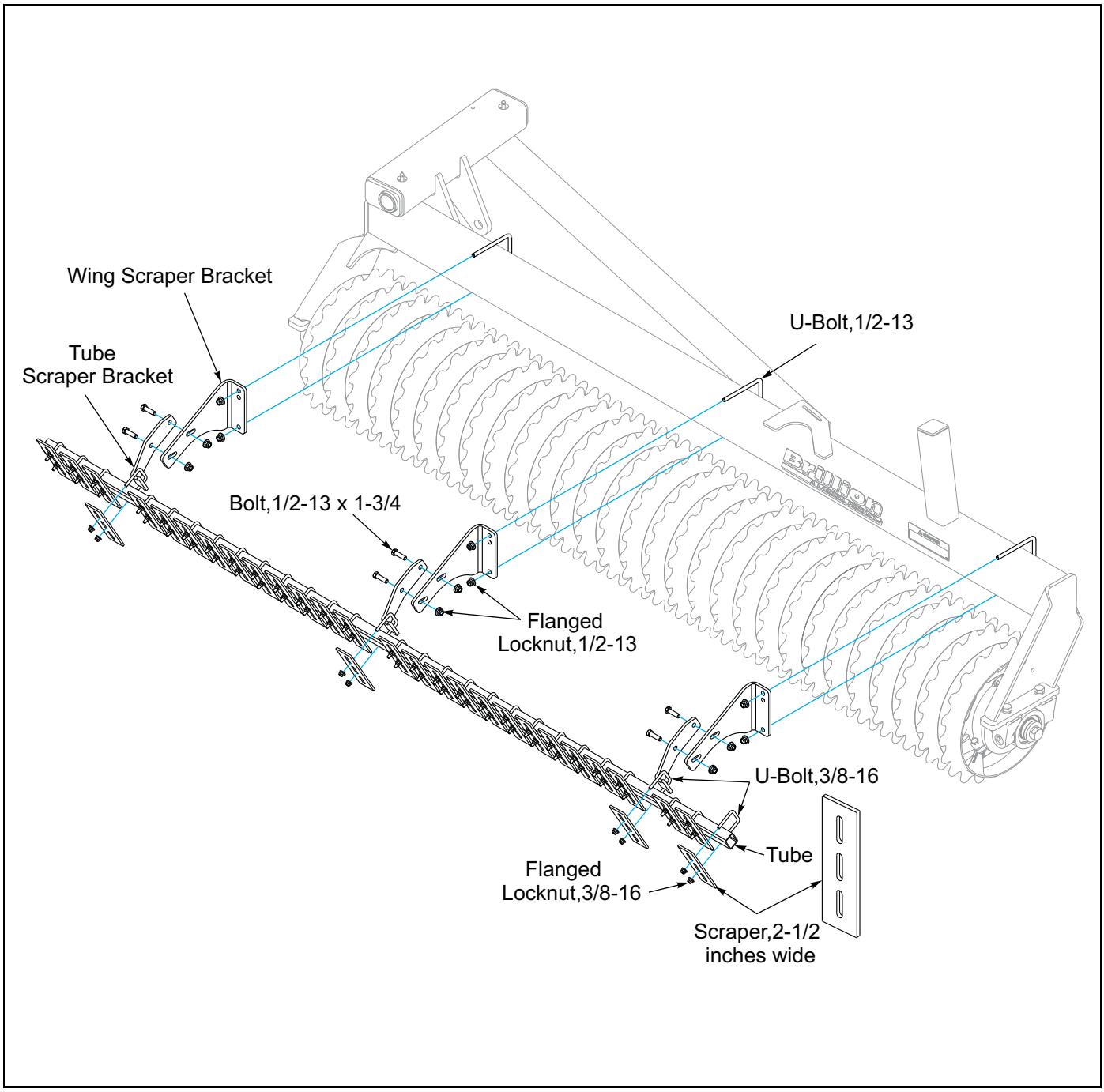

Figure 2-21: Wing Scraper Installation

https://truckmanualshub.com/

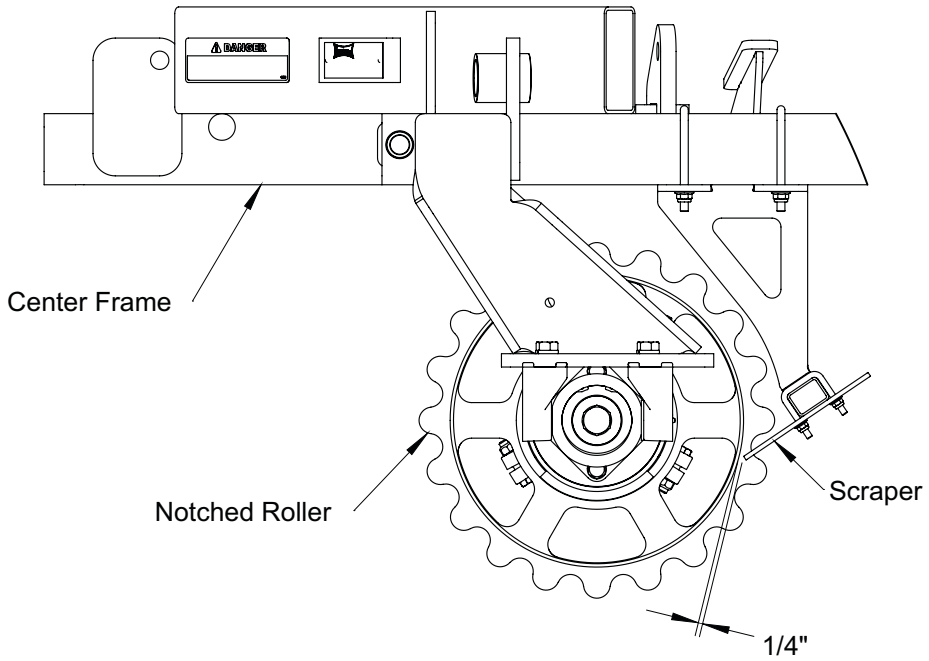

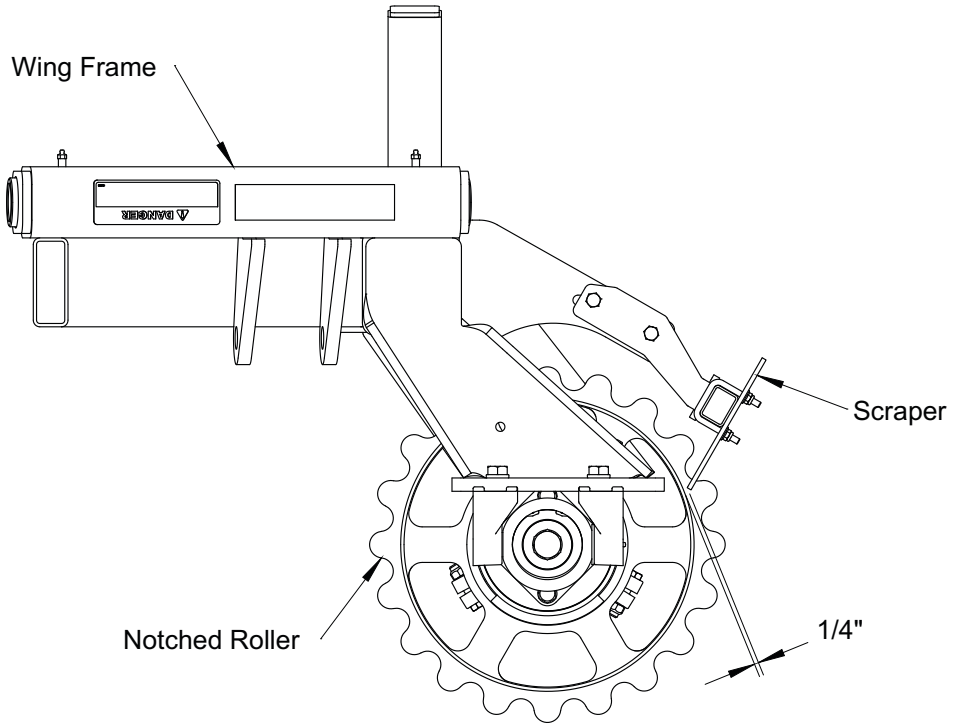

Figure 2-22: Scraper Clearance

https://truckmanualshub.com/

Center V-Wheel Scraper Installation - Optional

With the Rollers on level ground, Place three 5/8-11 U-Bolts over the center and outer frame cross tubes and through the Scraper Brackets. Hand tighten Locknuts.

The Scraper Bar is pre-assembled with scrapers attached (spaced approximately 6 inches apart). Remove the twelve 1/2-13 Locknuts and U-Bolts where the Scraper Bar will attach to the Scraper Brackets. **See Figure 2-23.** Insert the six 1/2-13 U-Bolts through the rear of the Scraper Brackets. Attach the Scraper Bar to the Scraper Brackets, slide the six Scrapers onto the U-Bolts and secure with previously removed twelve 1/2-13 Locknuts. Tighten all hardware.

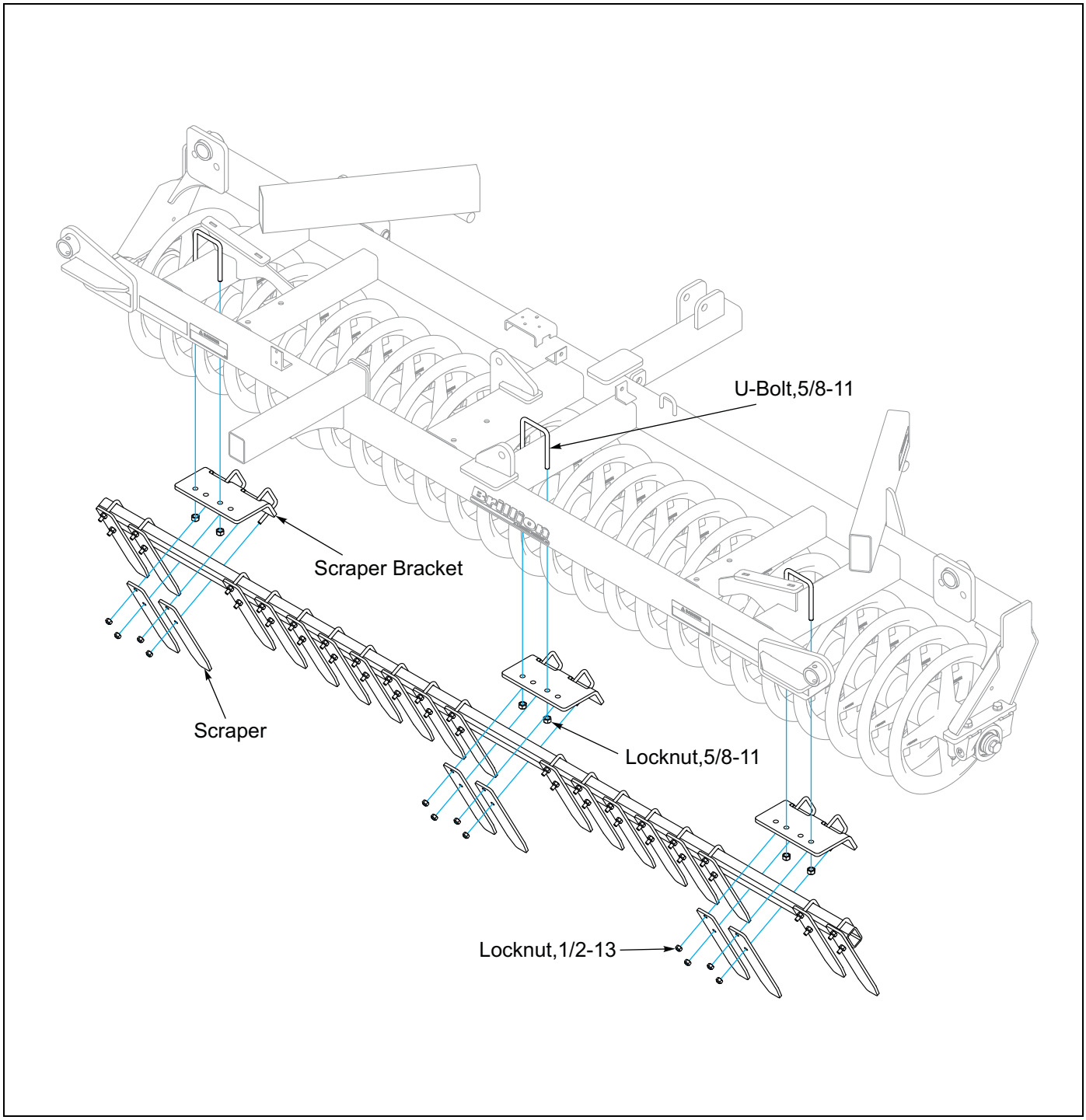

Figure 2-23: Center V-Wheel Scraper Installation

https://truckmanualshub.com/

Wing V-Wheel Scraper Installation - Optional

Right Hand shown Left Hand similar.

With the Rollers on level ground, place the 5/8-11 U-Bolts from the front of the frame tube and through the Scraper Brackets, secure with Locknuts. The Scraper Bar is pre-assembled with scrapers attached (spaced approximately 6 inches apart).

Remove the 1/2-13 Locknuts and four Scrapers from the U-Bolts where the Scraper Bar will attach to the Scraper Brackets. **See Figure 2-24.** Place U-Bolts onto Scraper Brackets. Attach the Scraper Bar to the Scraper Brackets with previously removed four Scrapers and eight 1/2-13 Locknuts. Tighten all hardware.

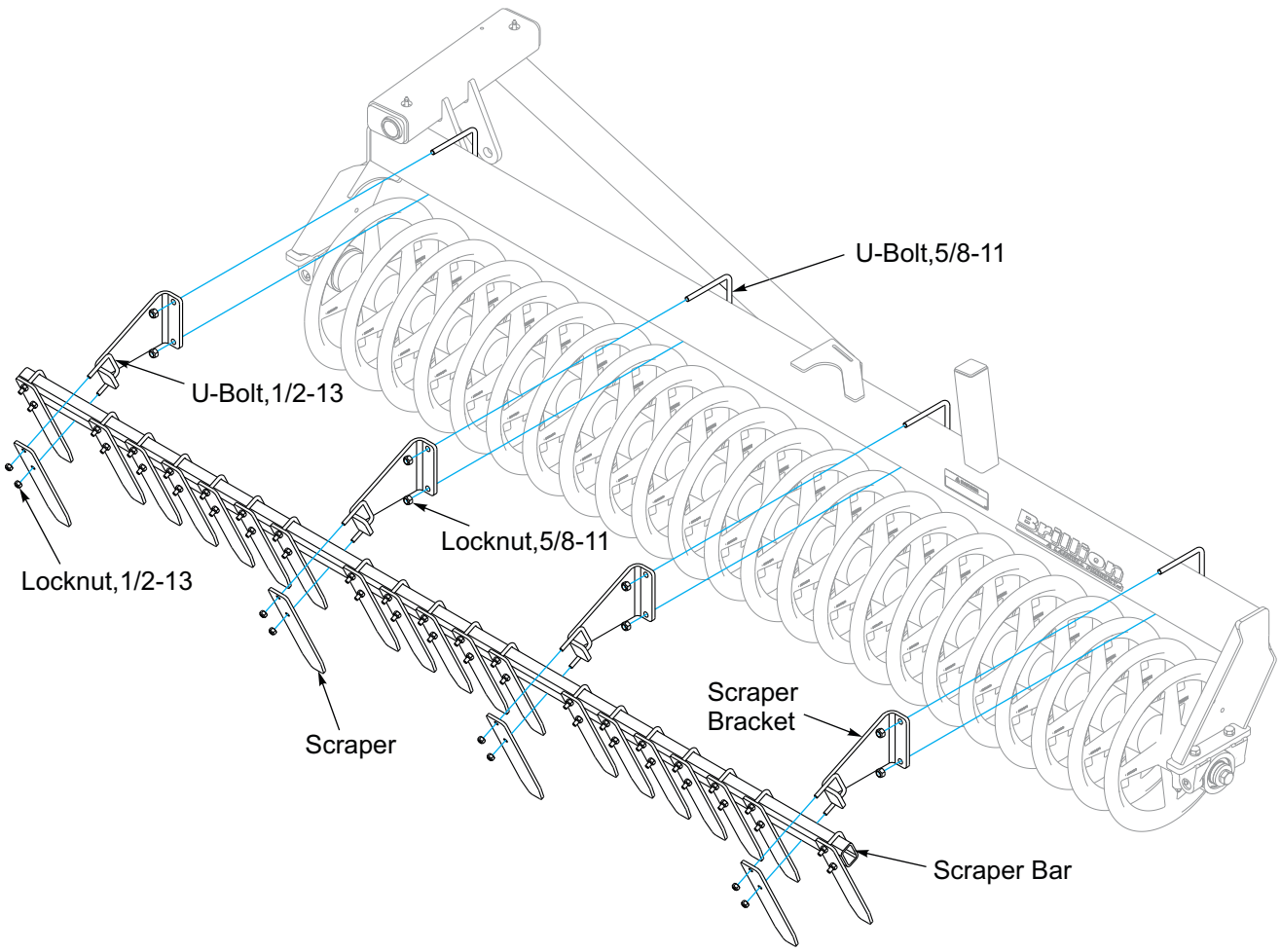

Figure 2-24: Wing V-Wheel Scraper Installation

https://truckmanualshub.com/

Acre Meter - Optional

IMPORTANT

Unfold and lower machine prior to performing any steps.

1. Attach the Acre Meter Assembly to the front frame tube using 5/8-11 U-Bolt and Locknuts. **See Figure 2-26.**
2. Attach the Acre Meter Switch to the Acre Meter Bracket using #8-32 x 1-1/4” Screws, Flat Washers, Lockwashers, and Hex Nuts. Attach the short pickup switch ground wire under one of the screw heads, removing paint under the wire connector to assure a good electrical ground connection. ***Do not tighten at this time***. Set aside.
3. Remove the existing 1- 8 x 2-1/4 bolt, 1” Lockwasher and 3/8” Thick Washer from the roller end. Slide existing Lockwasher, a 3/8” Thick Washer, Magnet Wheel and existing 3/8” Thick Washer onto 1-8 x 3 bolt. Insert into end of roller and fully tighten.
4. Remove the existing Trunnion Bearing Bolts and Lockwashers from bearing hanger. Place the Acre Meter Bracket onto the bearing hanger and re-install existing Trunnion Bearing Bolts and Lockwashers. Fully tighten.
5. Adjust the Acre Meter Switch so the center line of magnet wheel and pickup switch are horizontally and vertically aligned with a maximum 1/8” between magnet wheel and pickup switch. Now firmly tighten all screws. **See Figure 2-25.**

NOTE

Alignment of pickup switch and magnet wheel is critical. Improper alignment will cause the acre counter to record acres erratically or not at all.

6. Route the wire from the acre meter across the front frame to the Acre Meter Switch and connect the mating plugs.
7. Secure harness to existing light harness with tie straps to prevent harness from rubbing or becoming entangled. Install hose clamp into 1/2” hole in the trunnion bearing plate with 3/8-16 x 1-1/4 Bolt, Flat Washer and Locknut and Nut.

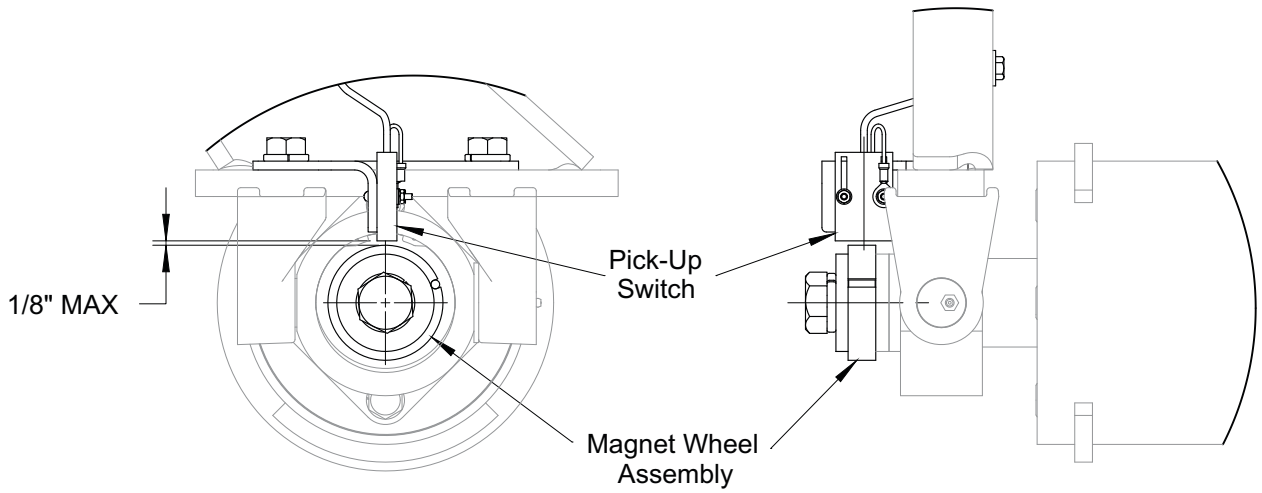

Figure 2-25: Pick-Up Switch Side View

https://truckmanualshub.com/

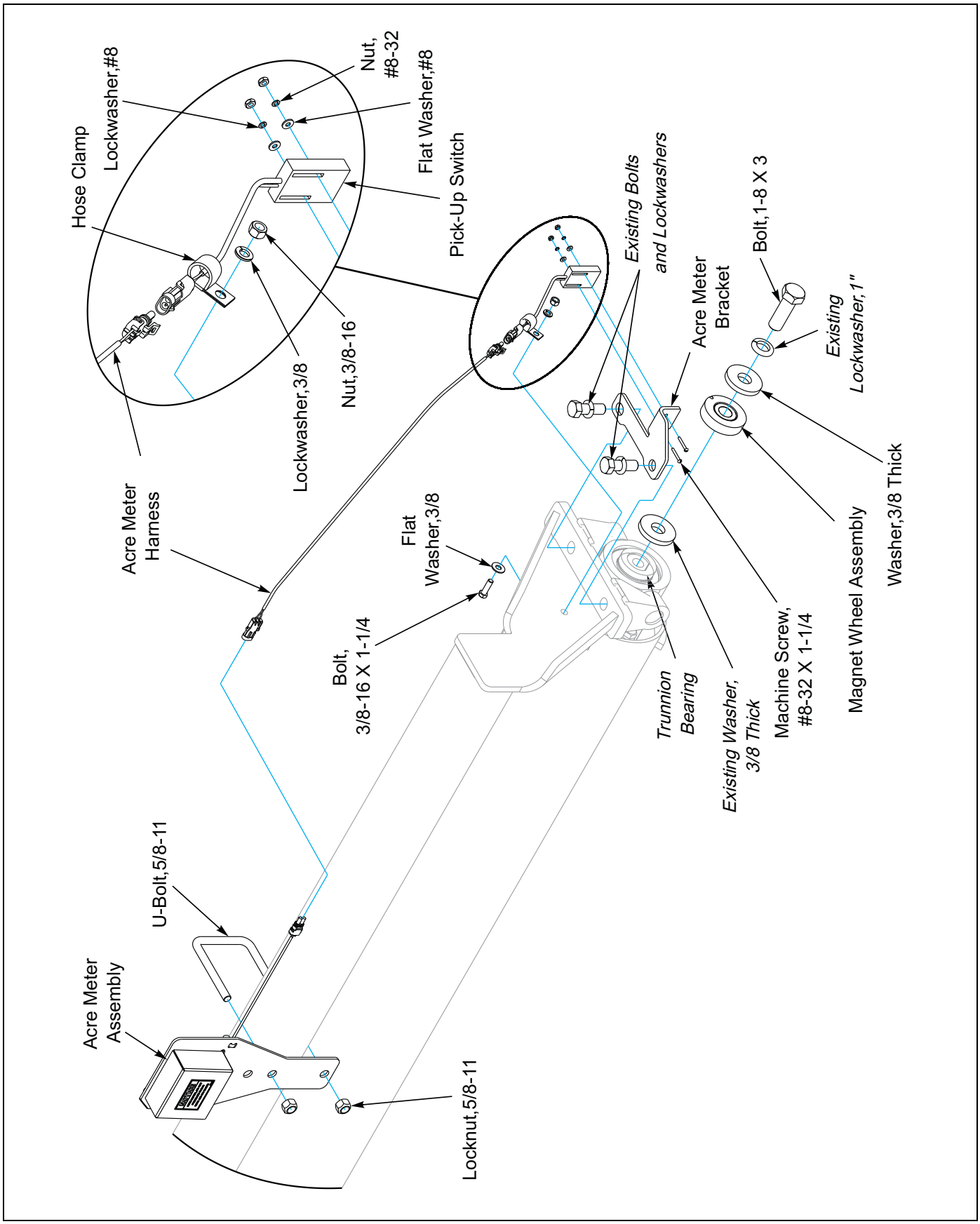

Figure 2-26: Acre Meter Installation

https://truckmanualshub.com/

Weight Kit - Optional

Weights should be mounted as close to the outer end of the wings as possible. They may be mounted with one weight per wing (Approx. 100 lbs) or two weights per wing. Weights can be positioned either above or below or front or rear of wing tube. Use the orientation that will provide the most clearance.

IMPORTANT

After attaching weights, fold the wings slowly to check for interference between the weights and transport lock or opposite wing when folded, adjust as necessary.

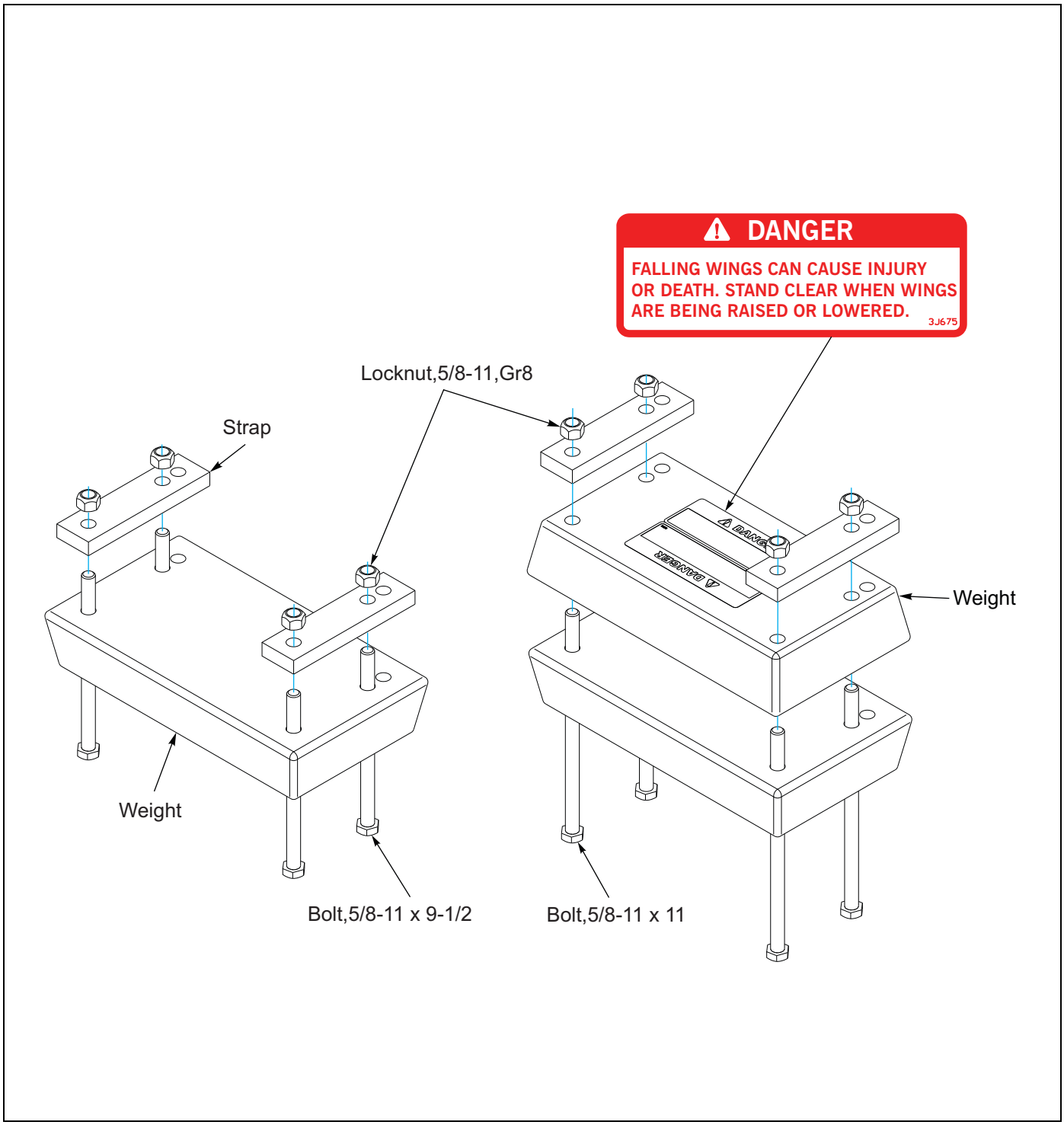

Figure 2-27: Weight Kit

https://truckmanualshub.com/

Table provided for general use.

NOTES:

https://truckmanualshub.com/

Chapter 3

Operation

DANGER

Never allow anyone to ride on the Pulverizer at any time. Allowing a person to ride on the machine can inflict serious personal injury or death to that person.

WARNING

All hydraulically elevated equipment must have cylinder lockouts installed or be lowered to the ground, when servicing or when equipment is idle. Failure to take preventive measures against accidental lowering can result in serious personal injury.

DANGER

Always lock the tractor drawbar in the center position when transporting the unit. Failure to do so can result in serious injury or death and cause damage to the equipment.

DANGER

When transporting the unit, place cylinder lockouts in the transport lock position after fully extending the cylinders. Insert the lockout pins to secure the cylinder lockouts. Failure to lockout the cylinders can cause the unit to settle during transport, which can result in serious injury or death and cause damage to the equipment.

CAUTION

When transporting farm implements on public roads, it is the responsibility of the operator to abide by state and local laws concerning wide loads, speed, safety emblems and safety lighting equipment. Drive at safe speeds, particularly when rounding corners, crossing rough ground or driving on hillsides, to prevent tipping the tractor.

General Operation

Horsepower Requirements as Independent Tool: 3 to 5 HP per Foot.

Horsepower Requirements as Companion Tool: 1 to 3 HP per Foot.

Tractor Preparation

The Brillion/Landoll Pulverizer is designed to be pulled by a tractor equipped with or without a hammer strap. **See Figures 3-3 and 3-4.**

Before attaching the implement, prepare the tractor as follows:

1. Inflate the rear tractor tires equally and add ballast according to the tractor operator's manual.

Pulverizer Preparation

1. Prior to operating the Pulverizer, inspect it thoroughly for good operating condition.
2. Replace worn or missing parts.
3. When the machine is new, check the bolt tightness after a few hours of operation. Tighten any loose nuts or bolts. Check the lift wheel lug bolts daily.
4. Check the lift wheel tire inflation. Inflate all tires equally to avoid side draft. Follow the tire manufacturer's recommended pressures listed on the sidewall of the tires.

Attaching to the Tractor

1. Align the tractor drawbar with the machine. Raise or lower the hitch, as needed, using the jack. Attach the unit with proper size hitch pin. **See Table 3-1.**
2. Attach safety chain to tractor allowing plenty of movement for turning both directions. The safety chain should latch securely to prevent it coming loose. **See Figure 1-2.**
3. Always swing the jack to the up position and pin it before setting the machine in motion.
4. Clean all hydraulic couplings and attach to the tractor.
5. Fully extend the hydraulic lift cylinders, and retract the wing fold cylinders. Transport lock will engage when lift cylinder is extended. Secure transport lock with hairpin cotters. **See Figure 3-6.**

https://truckmanualshub.com/

6. Plug in the 7 pin connector for the lights.
   - Make sure the tractor has a good clean receptacle, free of dirt and corrosion.
   - Make sure the 7 pin connector is inserted ALL the way in. With tighter fitting pins, operator may think the connector is all the way in, but really isn't.
   - Make sure the tractor receptacle cover latches over the keyway on the 7 pin connector to hold the connector in place.
   - If an operator plugs in the 7 pin connector, but the lights do not seem to work right, check the above items to make sure there is a good connection with the 7 pin connector.

Table 3-1: Hitch Pin Size

DRAWBAR CAT	Min Pin Size	Max PTO HP
2	1-1/4" (30mm)	154 (115 Kw)
3	1-1/2" (38mm)	248 (185 Kw)

Drawbar Positions

The Drawbar is designed to be operated with the Drawbar Extension retracted or extended. The Drawbar must be extended when used with companion equipment.

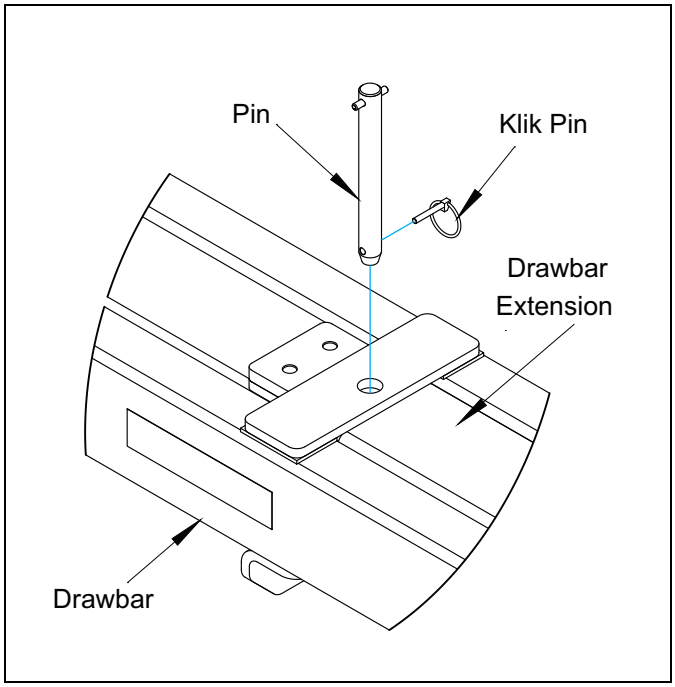

Figure 3-1: Extended Position

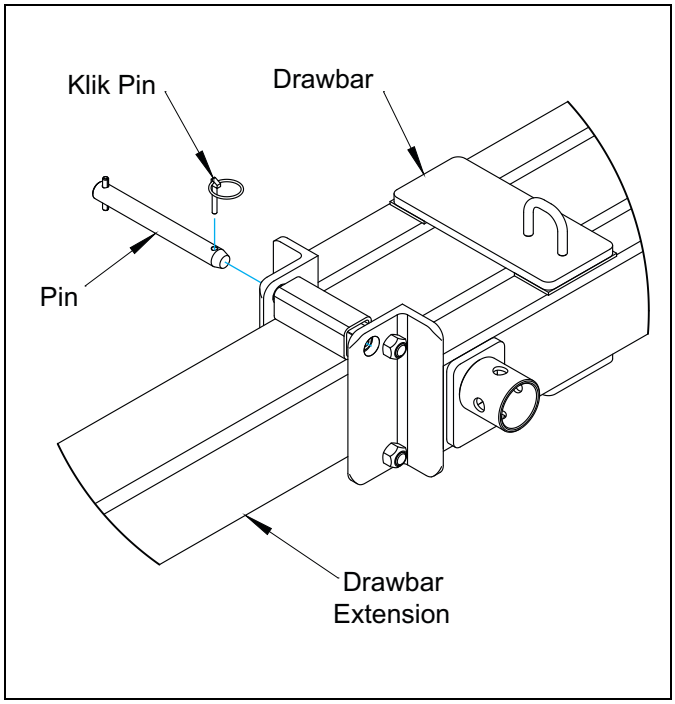

Figure 3-2: Retracted Position

https://truckmanualshub.com/

Hitch Lock

The Hitch Lock prevents the hitch from moving in either the Spade or Clevis position. *Note the different orientation of the Hitch Lock.*

In the Spade position insert the Hitch Lock into the clevis end opening. Secure the Hitch Lock with 1 x 9-1/4 Pin and 1/4 x 1-1/4 Lynch Pin. **See Figure 3-3.**

In the Clevis position insert the spade end of the hitch into the Hitch Lock opening. Secure the Hitch Lock with 1 x 9-1/4 Pin and 1/4 x 1-1/4 Lynch Pin. **See Figure 3-4.**

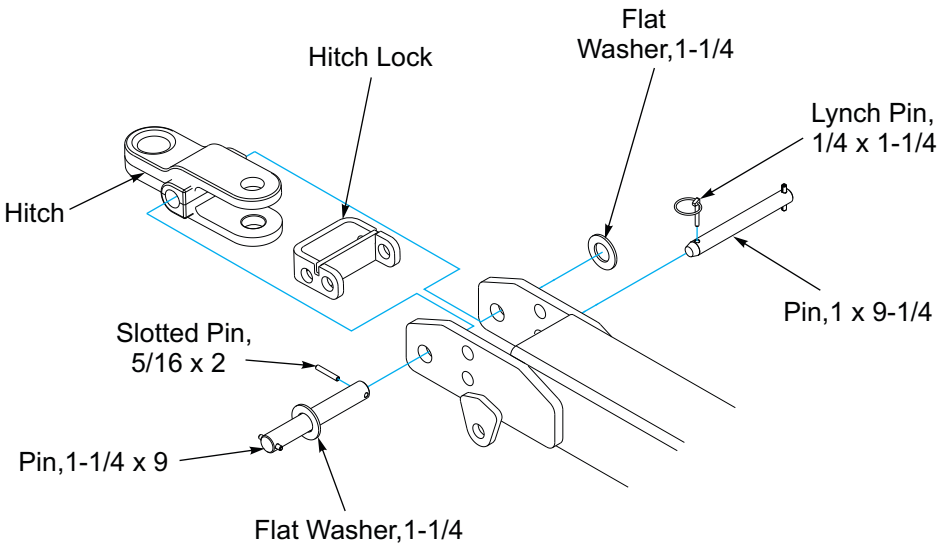

Figure 3-3: Spade Position

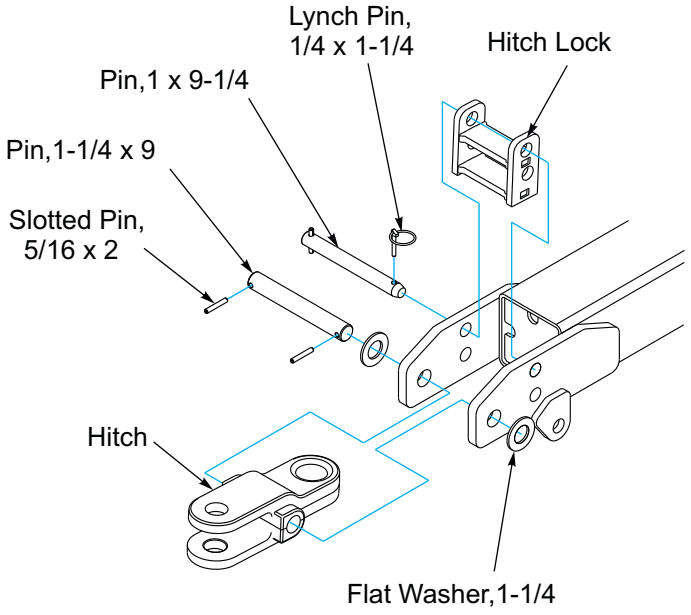

Figure 3-4: Clevis Position

https://truckmanualshub.com/

Hydraulic System

The Pulverizer is equipped with a hydraulic system to raise and lower the unit and fold and unfold the wings.

WARNING

Escaping hydraulic fluid can cause serious personnel injury. Relieve system pressure before repairing, adjusting, or disconnecting. Wear proper hand and eye protection when searching for leaks. Use cardboard instead of hands (See Figure 3-5.) Keep all components (cylinders, hoses, fittings, etc.) in good repair.

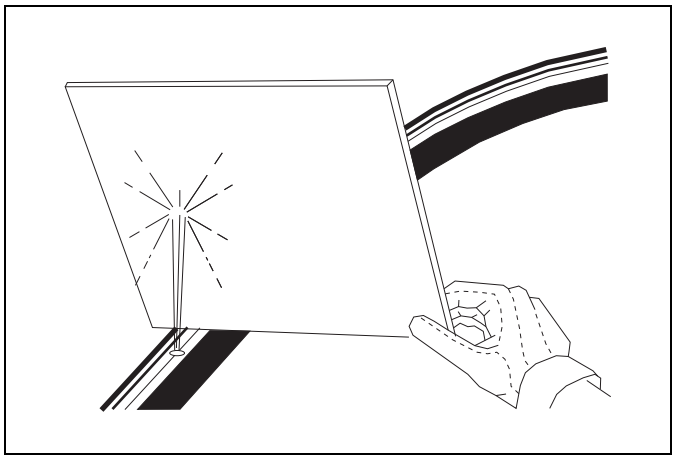

Figure 3-5: Hydraulic Leak Detection

The wing fold cylinders are equipped with restrictors to prevent uncontrolled falling of wing frames when unfolding. Removal or improper assembly of these restrictors can cause the machine to fold improperly and result in serious machine damage.

Whenever raising/folding or lowering/unfolding, find a level area large enough to accommodate the unit when it is fully unfolded. The tractor should be stopped and not moving with the unit fully raised.

If the hydraulic system is not filled with oil it should be purged of air before transporting and field operations. Carefully hitch the Pulverizer to the tractor and connect the hydraulic hoses. Check to make sure the tractor hydraulic reservoir is full of the manufacturer's recommended oil.

Be sure the system is fully charged with hydraulic oil before attempting to raise/fold and lower/unfold the unit. Air in the system can allow uncontrolled dropping of the wing frames causing serious personal injury or machine damage. The system needs to be charged with oil initially and any time the system has been opened for repair such as cylinder, hose, or fitting replacement/repair.

Wings Folded

If repairs were made with wings folded, cycle fold cylinders, but limit travel to keep weight of wing pushing on cylinder. Cycle minimum of 5 times.

Wings Unfolded

If repairs were made with wings unfolded, remove pins from fold cylinder rods. Block cylinders up and cycle cylinders minimum of 5 times to purge air from system.

Do not loosen any hoses or fittings. Recheck tractor reservoir to make sure it is within operating limits.

NOTE

Never unfold the wings past center until all air is out of the hydraulic system, as Free Falling may occur.

DANGER

FALLING WINGS CAN CAUSE INJURY OR DEATH. STAND CLEAR WHEN WINGS ARE BEING RAISED OR LOWERED.

3J675

DANGER

BLEED THE AIR FROM WING LIFT CYLINDERS BEFORE OPERATING. FAILURE TO DO SO WILL ALLOW WINGS TO FREE-FALL AND MAY CAUSE SERIOUS PERSONAL INJURY. SEE OPERATORS MANUAL FOR CORRECT PROCEDURE.

3J678

https://truckmanualshub.com/

Operation of Transport Lock

Be sure Transport Lock is either locked or unlocked. **See Figures 3-6 and 3-7**.

Road to Field

Remove the Hairpin Cotter from the lower hole of the Spring Holder and insert it into the top hole. Actuate the tractor lever to unfold wings completely, slackening the cable/spring linkage. Reverse hydraulic lever to extend the Transport Axle Cylinder completely allowing the pair of compression springs to push the Transport Lock up and out of the way of the Transport Axle Cylinder. Retract the Transport Axle Cylinder lowering the machine to the ground. The Tire and Wheel Assemblies should be off the ground approximately 4 inches. Continue holding the tractor lever until the Wing Cylinders are completely extended for field operation.

During field operation, it is not necessary to raise the machine for turns, but turns should be as wide as possible. Slow down when operating on rocky soil.

Field to Road

Actuate the tractor lever to raise the center and fold the Wings for transport. Once raised and folded the transport lock will be positioned over the lift system by the cable/spring. Remove the Hairpin Cotter from the top hole of the Spring Holder and insert it into the lower hole locking the Transport Lock in place.

NOTE

Adjust the chain length by repositioning the S-Hook on the chain if lock fails to be pulled down completely.

https://truckmanualshub.com/

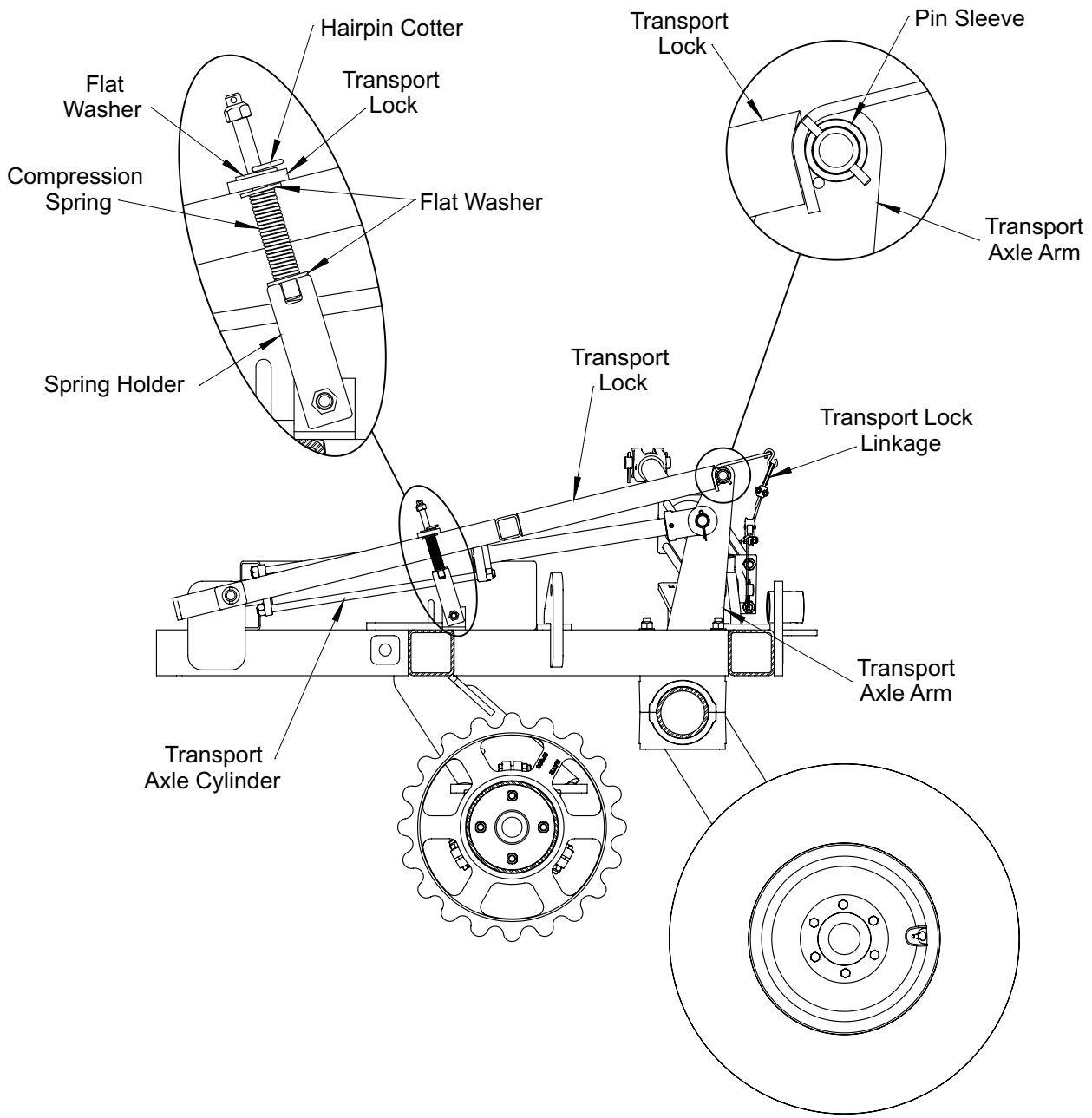

Figure 3-6: Transport Lock Locked Position

https://truckmanualshub.com/

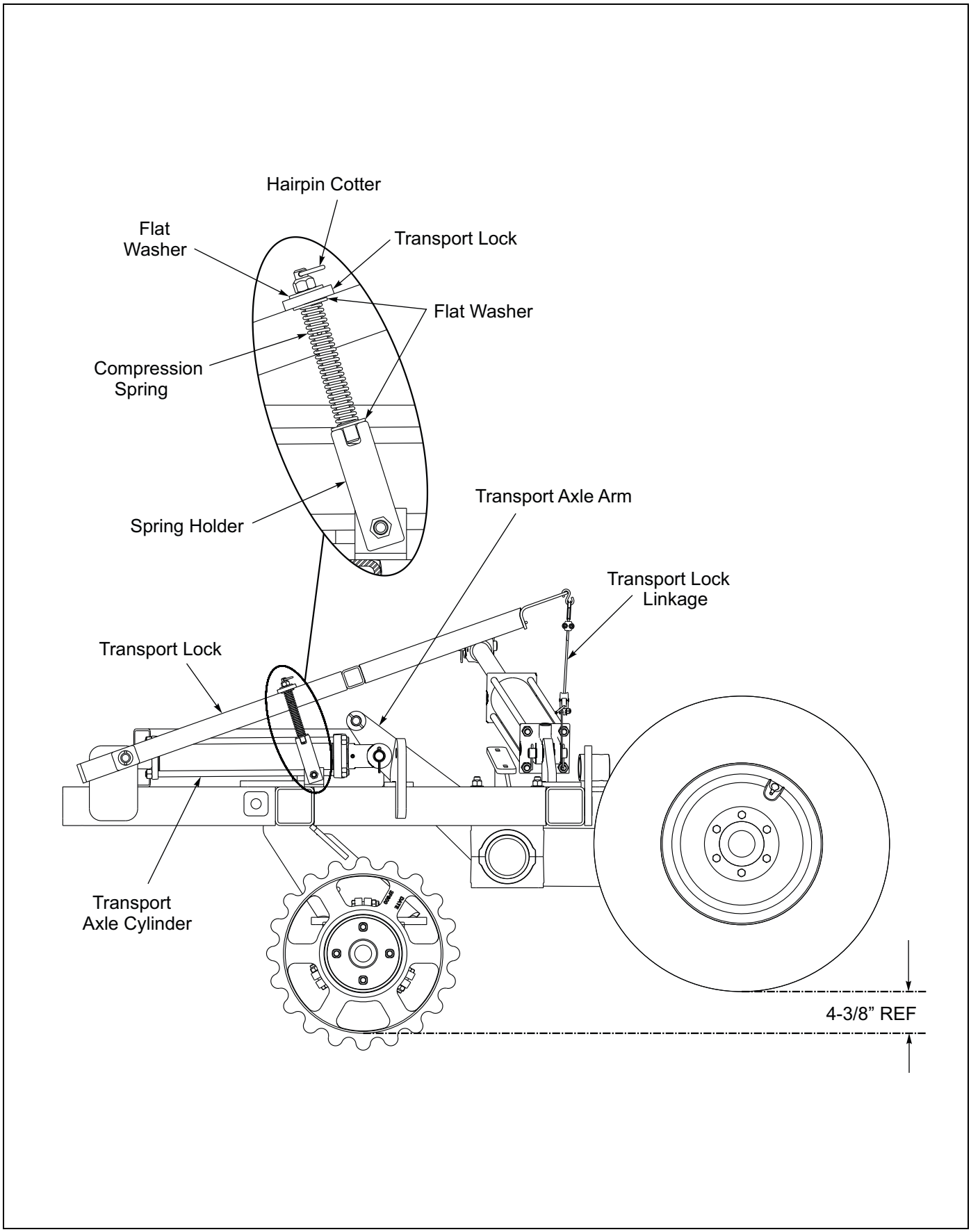

Figure 3-7: Transport Lock Unlocked Position

https://truckmanualshub.com/

Drawbar Adjustment (Used to limit soil pushing)

The Pulverizer drawbar can pivot vertically in field operation. Place shims on top of the brace if the center roller pushes soil and place shims under the brace if wing rollers push soil. The placement of shims must be identical on both sides of Pulverizer. **See Figure 3-9.**

Ensure the Drawbar Stop Is installed. **See Figure 3-8.** *Purpose of the Drawbar Stop is to limit the drawbar vertical travel.*

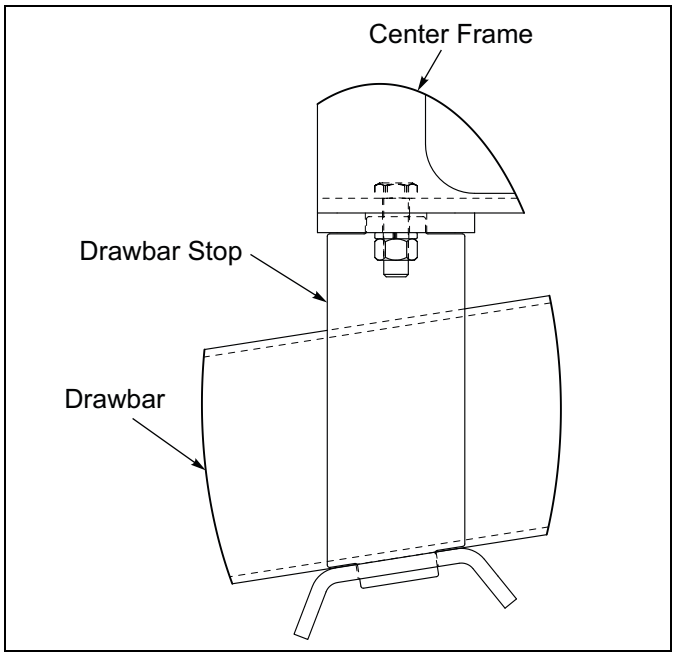

Figure 3-8: Drawbar Stop

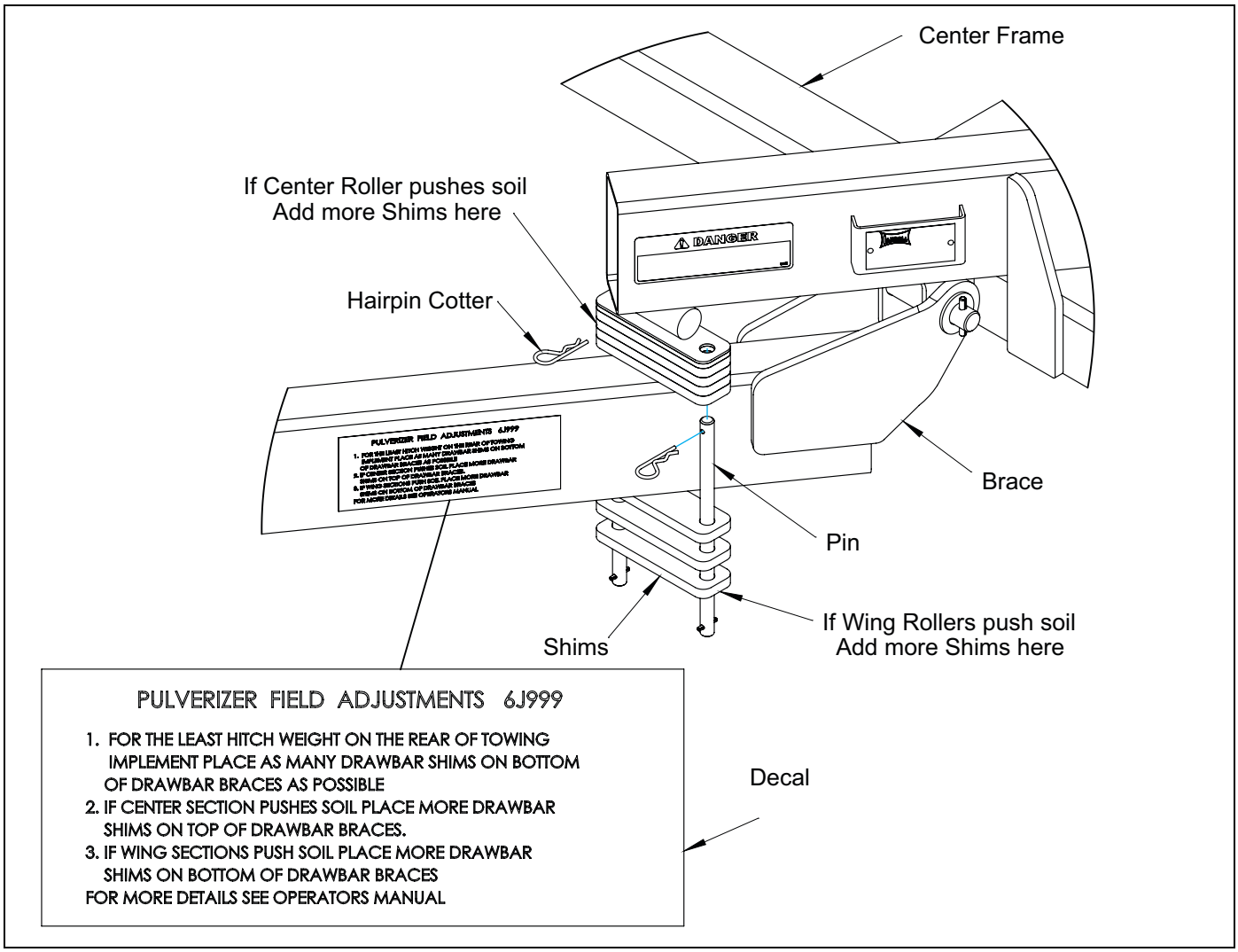

Figure 3-9: Drawbar Adjust

https://truckmanualshub.com/

Scraper Adjustment

To adjust scrapers; lower machine on level surface. Adjust scrapers to obtain 1/4” gap between scraper and wheel.

NOTE

Scrapers are optional on notched and heavy notched rollers. Adjustment procedure is the same for the wings.

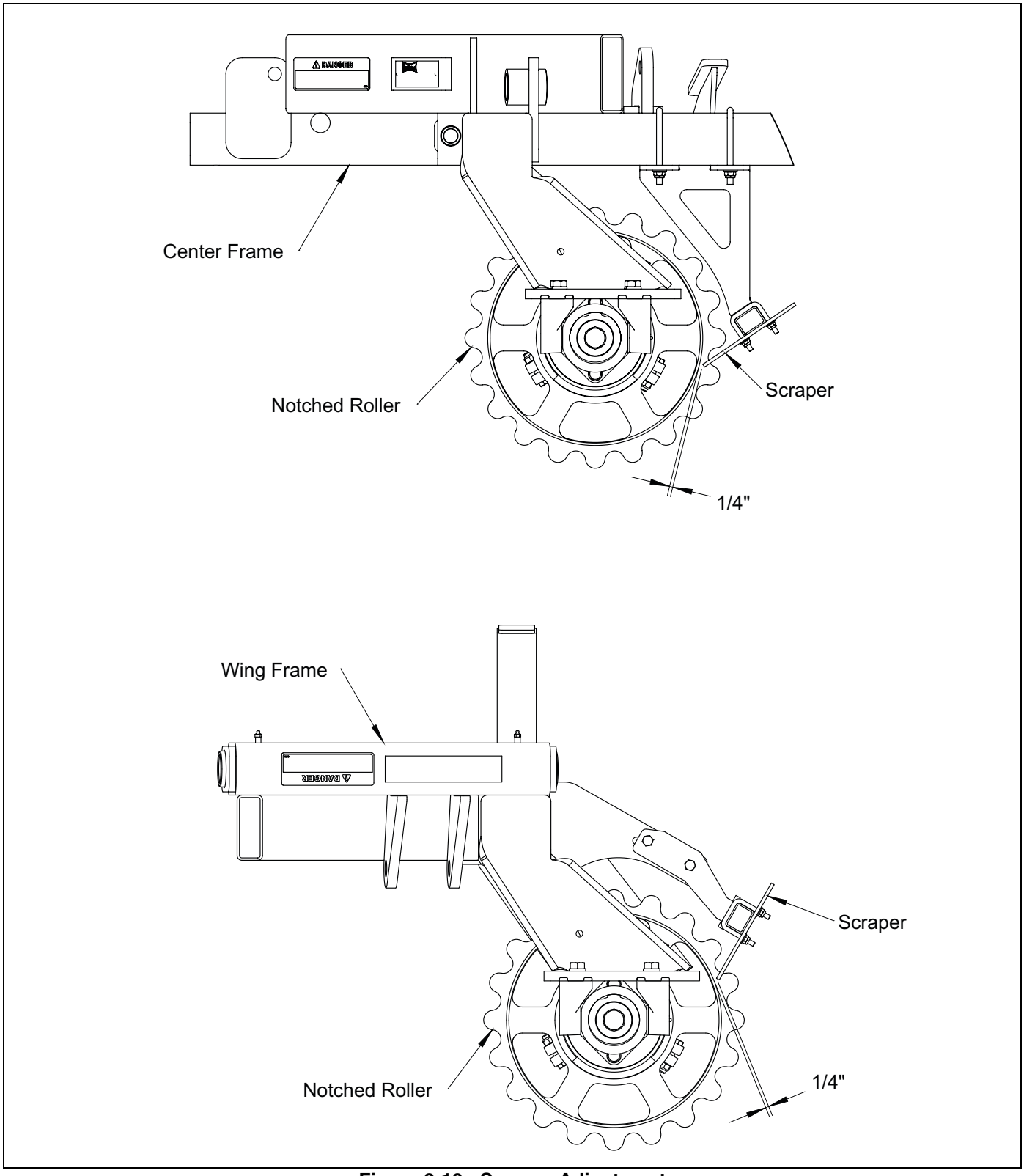

Figure 3-10: Scraper Adjustment

https://truckmanualshub.com/

Settings for Loup Acre Meters

The battery operated acre counter operates in one of two modes. In sleep mode, the display is blank, and the counter is accumulating acres. Sleep mode will be entered if a button is not pressed for 20 seconds. In entry mode, the display is on, and the operator can enter values. To get into entry mode, press the ***/FUNC** button. If you continue to press the ***/FUNC** button, the acre counter will cycle through the functions that it can perform. The LEDs above the display indicate which function is selected.

The available functions are:

Field Acres, Total Acres, Pulses per 400 ft, Width, Password and Low Battery

Field Acres

Press the ***/FUNC** button until the "**FIELD**" LED is lit. The digits indicate the acres covered since the field acre counter was cleared.

To clear the field acre count, press the **UP** and **DOWN** buttons simultaneously for two seconds. If a password has been entered, you will not be able to clear the total acre count. Field acres will count in tenths of an acre up to 9999.9 acres.

Total Acres

Press the ***/FUNC** button until the "**FIELD**" and "**TOTAL**" LEDs are lit. The digits indicate the acres covered since the total acre counter was cleared.

To clear the total acre count, press and hold the **UP** and **DOWN** buttons for two seconds. If a password has been entered, you will not be able to clear the total acre count. Total acres will count from.1 to 99999 acres.

Pulses Per 400 Feet

Press the ***/FUNC** button until the "**PULSES**" LED is lit. The number in the display indicates how many pulses are generated for every 400 feet driven. There are two methods to enter the pulses per 400 feet:

If you know the number, select it using the **UP** and **DOWN** buttons. When you press the ***/FUNC** button, the Acre Counter will accept the number in the display as the new pulses per 400 feet. **See Table 3-2.**

If you do not know the pulses per mile, press and hold the **UP** and **DOWN** buttons until the "0000" appears in the display. The "**PULSES**" LED will blink. The acre counter is now counting shaft rotations. Enter the cab and drive 400 feet. Press the ***/FUNC** button to wake up the acre counter. The "**PULSES**" LED will again blink. The number displayed is the pulses per 400 feet. Press the ***/FUNC** button to accept the setting. The "**PULSES**" LED will stop blinking and remain on.

If a password is set, you will not be able to adjust the pulses per mile.

Width

Press the ***/FUNC** button until the "**WIDTH**" LED is lit. The number displayed is the length of your implement in feet.

To adjust the width, press the **UP** and **DOWN** buttons. If a password has been entered, you will not be able to adjust the width.

The length can be adjusted from .1 to 99.9 feet, in tenths of a foot.

Acre Meter Password

The password function allows you to protect the total acre count, pulses per 400 feet, and width settings with a password. This stops anyone from accidentally changing those settings. When the acre counter is shipped, the password is disabled. You can modify the pulses per 400 feet and implement width at any time.

Press the ***/FUNC** button until the "**PASS**" LED is lit. The digits will display the word "**Ent**" or "**dIS**".

If the display shows "**dIS**": The password is disabled. The total acre count, pulses/400 ft, width, and password settings can be adjusted using the **UP** and **DOWN** buttons. The password can also be changed using the **UP** and **DOWN** buttons.

If the display shows "**Ent**": You must enter your password using the **UP** and **DOWN** buttons. When your password is displayed, press the ***/FUNC** button to test the password. If the password is correct, you will be able to change the acre counter settings. The password will be viewable until the acre counter powers down. When the acre counter is powered up again, you will have to re-enter the password to change settings.

If the password is not correct, you will not be able to change the acre counter settings. When the "**PASS**" function is selected again, "**Ent**" will appear in the display.

Changing the Acre Meter Password

Select a new password using the **UP** and **DOWN** buttons. Press the ***/FUNC** button until the word "**SEt**" appears in the display. Release the ***/FUNC** button. The number in the display is your new pass code. Make sure you record this number. Press and hold the ***/FUNC** button until the word "**dIS**" appears in the display.

If the password is forgotten, it can be disabled by removing the batteries. The password is intended for rental units. It is recommended that a seal be affixed to the rear plate of the acre counter to determine if the settings have been tampered with.

https://truckmanualshub.com/

Battery Replacement for Acre Meters

The battery operated acre counter uses 3 AA batteries. The batteries should last between 5 and 10 years. The acre counter will last much longer than that. Eventually, you will have to replace the batteries. The “**BATT**” LED will light when the batteries require replacement. Remove the acre counter from the implement and undo the 4 screws on the back of the case. This will separate the housing from the rear plate. Replace the batteries with 3 high quality AA alkaline batteries.

This unit is dust and splash resistant, under no circumstances should this unit be submerged in any conductive, corrosive, or flammable liquid.

Table 3-2: Acre Meter Settings

Wheel Type		Pulses
2P800	Notched Ductile	90

https://truckmanualshub.com/

Transport

1. Check and follow all federal, state, and local requirements before transporting the Pulverizer.
2. The Pulverizer should be transported only by tractor required for field operation. The implement weight should not exceed more than 1.5 times the tractor weight. Maximum transport speed for the Pulverizer is 20 mph for the implement.

CAUTION

Excessive speed may result in loss of control of the tractor and implement, reduced braking ability, or failure of the implement tire or structure. Do not exceed the implement maximum specified ground speed regardless of the capability of the maximum tractor speed.

3. When towing equipment in combination, the maximum equipment ground speed shall be limited to the lowest specified ground speed of any of the towed implements.
4. Maximum transport speed shall be the lesser of travel speed specified in the operator's manual, speed identification symbol, information sign of towed equipment, or limit of road conditions.
5. Slow down when driving on rough roads. Reduce speed when turning, or on curves and slopes to avoid tipping. Equipment altered other than the place of manufacture may reduce the maximum transport speed. Additional weight, added tanks, harrowing attachments, etc. may reduce implement load carrying capabilities.
6. A safety chain is provided with the implement to insure safe transport.

- The safety chain should have a tensile strength equal to or greater than the gross weight of the implement. The chain is attached to the lower hitch clevis hole with two flat washers between the clamp plates to assure a tight connection. Always use a 1” diameter Grade 8 bolt for this connection.
- Attach the safety chain to the tractor drawbar **(See Figure 1-2.)** Provide only enough slack in the chain for turning. Do not use an intermediate chain support as the attaching point for the chain on the tractor. Do not pull the implement by the safety chain.

Regularly inspect the safety chain for worn, stretched, or broken links and ends. Replace the safety chain if it is damaged or deformed in any way.

7. Check that tires are of proper size, load rating, and inflated to manufacture specifications before transporting. Check wheel lug bolts to ensure tightness.
8. Know the transport heights and widths of the unit before transporting. Use caution when transporting near bridges and power lines.

WARNING

Electrocution can occur without direct contact

9. Raise the machine to full transport height.
10. Transport during daylight hours when ever possible. Always use flashing warning lights, except where such use is prohibited by law. Make sure lights, reflectors and SMV emblem are clearly visible and operating. remove any obstructions such as dirt, mud, stalks or residue that restricts view before transporting.

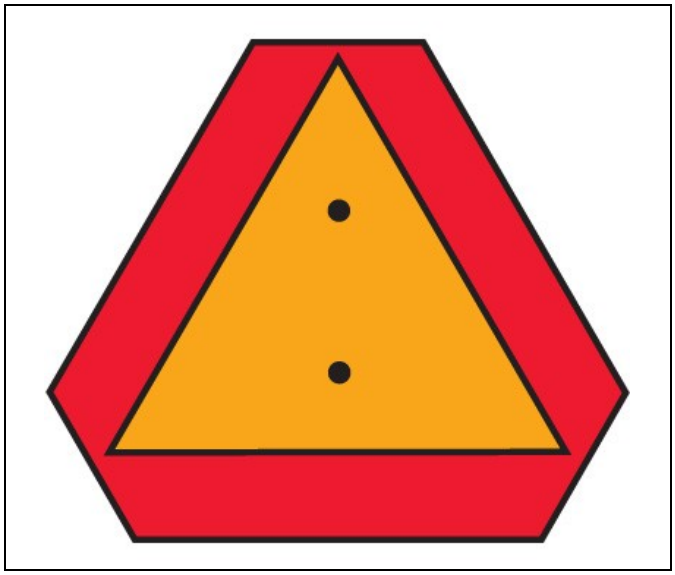

Figure 3-11: SMV Sign

https://truckmanualshub.com/

Chapter 4

Maintenance

General Torque Specifications

(rev. 4/97)

This chart provides tightening torques for general purpose applications when special torques are not specified on process or drawing. Assembly torques apply to plated nuts and capscrews assembled without supplemental lubrication (as received condition). They do not apply if special graphite moly-disulfide or other extreme pressure lubricants are used. When fasteners are dry (solvent cleaned) add 33% to as received condition torque. Bolt head identification marks indicate grade and may vary from manufacturer to manufacturer. Thick nuts must be used on grade 8 capscrews. Use value in [ ] if using prevailing torque nuts

TORQUE SPECIFIED IN FOOT POUNDS

UNC SIZE	SAE Grade 2	SAE Grade 5	SAE Grade 8	UNF SIZE	SAE Grade 2	SAE Grade 5	SAE Grade 8
1/4-20	4 [5]	6 [7]	9 [11]	1/4-28	5 [6]	7 [9]	10 [12]
5/16-18	8 [10]	13 [13]	18 [22]	5/16-24	9 [11]	14 [17]	20 [25]
3/8-16	15 [19]	23 [29]	35 [42]	3/8-24	17 [21]	25 [31]	35 [44]
7/16-14	24 [30]	35 [43]	55 [62]	7/16-20	27 [34]	40 [50]	60 [75]
1/2-13	35 [43]	55 [62]	80 [100]	1/2-20	40 [50]	65 [81]	90 [112]
9/16-12	55 [62]	80 [100]	110 [137]	9/16-18	60 [75]	90 [112]	130 [162]
5/8-11	75 [94]	110 [137]	170 [212]	5/8-18	85 [106]	130 [162]	180 [225]
3/4/10	130 [162]	200 [250]	280 [350]	3/4-16	150 [188]	220 [275]	320 [400]
7/8-9	125 [156]	320 [400]	460 [575]	7/8-14	140 [175]	360 [450]	500 [625]
1-8	190 [237]	408 [506]	680 [850]	1-14	210 [263]	540 [675]	760 [950]
1-1/8-7	270 [337]	600 [750]	960 [1200]	1-1/8-12	300 [375]	660 [825]	1080 [1350]
1-1/4-7	380 [475]	840 [1050	1426 [1782]	1-1/4-12	420 [525]	920 [1150]	1500 [1875]
1-3/8-6	490 [612]	1010 [1375]	1780 [2225]	1-3/8-12	560 [700]	1260[1575]	2010 [2512]
1-1/2-6	650 [812]	1460 [1825]	2360 [2950]	1-1/2-12	730 [912]	1640[2050]	2660 [3325]

METRIC:

Coarse thread metric class 10.9 fasteners and class 10.0 nuts and through hardened flat washers, phosphate coated, Rockwell “C” 38-45. Use value in [ ] if using prevailing torque nuts

Nominal thread diameter (mm)	Newton Meters (Standard Torque)	Foot Pounds (Standard Torque)	Nominal Thread Diameter (mm)	Newton Meters (Standard Torque)	Foot Pounds (Standard Torque
6	10 [14]	7 [10]	20	385 [450]	290 [335]
7	16 [22]	12 [16]	24	670 [775]	500 [625]
8	23 [32]	17 [24]	27	980 [1105]	730 [825]
10	46 [60]	34 [47]	30	1330 [1470]	990 [1090]
12	80 [125]	60 [75]	33	1790 [1950]	1340 [1450]
14	125 [155]	90 [115]	36	2325 [2515]	1730 [1870]
16	200 [240]	150 [180]	39	3010 [3210]	2240 [2380]
18	275 [330]	205 [245]			

https://truckmanualshub.com/

Hydraulic Fitting Torque Specifications

37 degree JIC, ORS, &ORB (REV. 10/97)

This chart provides tightening torques for general purpose applications when special torques are not specified on process or drawing. Assembly torques apply to plated nuts and capscrews assembled without supplemental lubrication (as received condition). They do not apply if special graphite moly-disulfide or other extreme pressure lubricants are used. When fasteners are dry (solvent cleaned) add 33% to as received condition torque. Bolt head identification marks indicate grade and may vary from manufacturer to manufacturer. Thick nuts must be used on grade 8 capscrews. Use value in [ ] if using prevailing torque nuts

TORQUE SPECIFIED IN FOOT POUNDS

PARKER® BRAND FITTINGS

Dash Size	37 Deg. JIC	O-ring (ORS)	O-ring boss
-4	11-13	15-17	13-15
-5	14-16	----------	21-23
-6	20-22	34-36	25-29
-8	43-47	58-62	40-44
-10	55-65	100-110	58-62
-12	80-90	134-146	75-85
-16	115-125	202-218	109-121
-20	160-180	248-272	213-237
-24	185-215	303-327	238-262
-32	250-290	----------	310-340

AEROQUIP® BRAND FITTINGS

Dash Size	37 Deg. JIC	O-ring (ORS)	O-ring boss
-4	11-12	10-12	14-16
-5	15-16	----------	16-20
-6	18-20	18-20	24-26
-8	38-42	32-35	50-60
-10	57-62	46-50	75-80
-12	79-87	65-70	125-135
-14	----------	----------	160-180
-16	108-113	92-100	200-220
-20	127-133	125-140	210-280
-24	158-167	150-165	270-360

GATES® BRAND FITTINGS

Dash Size	37 Deg. JIC	O-ring (ORS)	O-ring boss
-4	10-11	10-12	14-16
-5	13-15	----------	----------
-6	17-19	18-20	24-26
-8	34-38	32-40	37-44
-10	50-56	46-56	50-60
-12	70-78	65-80	75-83
-14	----------	65-80	----------
-16	94-104	92-105	111-125
-20	124-138	125-140	133-152
-24	156-173	150-180	156-184
-32	219-243	----------	----------

Fasteners

Before operating your Brillion machine, check all hardware for tightness. Use the Tightening Torque Table as a guide. See Page 4-1.

After a few hours of use, check entire machine and tighten any loose nuts or bolts. Daily or periodic checks should be made thereafter.

When replacing bolts, be sure to use fasteners of equal grade.

https://truckmanualshub.com/

Tires

Recommended tire size is 11L X 15 - 8 Ply and should be inflated to 36 PSI.

When Re-Installing the Wheel Nuts tighten to 50 foot-pounds using the sequence in **Figure 4-1**. Then tighten to full torque of **85-100 Ft-Lbs.**

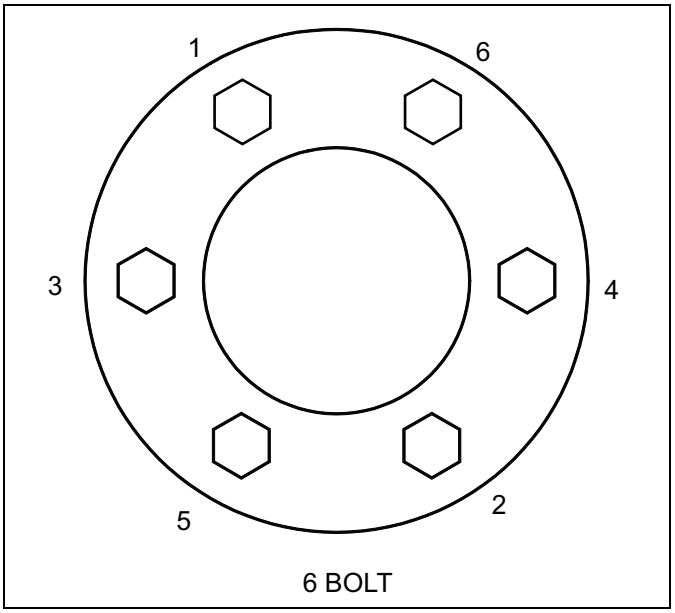

Figure 4-1: Stud Tightening Sequence

Hydraulic Maintenance

IMPORTANT

Unfold, lower the unit to the ground, and relieve hydraulic pressure before attempting to service any hydraulic component.

1. Check the tractor hydraulic fluid level per tractor owners manual and after any leakage. Check fluid level with the cylinders in the retracted position.
2. If a cylinder or valve leaks, disassemble the parts to determine the cause of the leak. Any time a cylinder is opened up, or whenever any seal replacement is necessary, it is advisable to clean all parts and replace all seals. Seal kits are available from your Brillion dealer.
3. Check all hydraulic hoses weekly. Look for binding or cracking. Replace all worn or defective parts immediately.
4. Transport locks are provided to hold the implement in a raised position. Do not attempt to perform any service work under the implement without the transport lock engaged. Before servicing any hydraulic component, lower the implement to the ground and relieve all system pressure. If a hydraulic component is disconnected, repaired, or replaced, it will be necessary to purge the system of air before operation.

Purging the Lift and Fold Cylinders

WARNING

Escaping hydraulic fluid can cause serious personnel injury. Relieve system pressure before repairing, adjusting, or disconnecting. Wear proper hand and eye protection when searching for leaks. Use cardboard instead of hands. Keep all components (cylinders, hoses, fittings, etc.) in good repair.

With the wings unfolded and cylinder rods not pinned. Purge the system by turning the wing fold cylinders so the rod ends are upward. Slowly raise the machine, and continue to hold the hydraulic lever until lift cylinder is extended and the fold cylinders are retracted. Fully extend and fully retract all cylinders 5 or 6 times or more, until all air is out of the system. Lower and raise the unit to verify that the cylinders are working smoothly throughout the stroke. If the cylinders are not working smoothly, fully extend the cylinders and continue to hold the lever to purge any remaining air. Do not loosen any hoses or fittings. Rod ends can now be assembled to the fold links. Recheck tractor reservoir to make sure it is within operating limits.

CAUTION

The wings depend upon the passage of oil through a flow restrictor to keep from free falling. If the cylinder is not full of oil the wing will drop and may cause damage to the machine.

NOTE

Never unfold the wings past center until all air is out of the hydraulic system, as Free Falling may occur.

https://truckmanualshub.com/

Lubrication

CAUTION

Over lubrication of these bearings can cause premature bearing failure.

Lubricate trunnion bearings and hinge pins with quality grease per recommended lubrication frequency intervals indicated or if machine is not used for an extended period. Greasable components are the same on each side.

Lubricating Wheel Hub: Grease Wheel Hubs every 50 hours.

Repack Wheel Hub bearings annually before each season usage. **See Figure 4-2.**

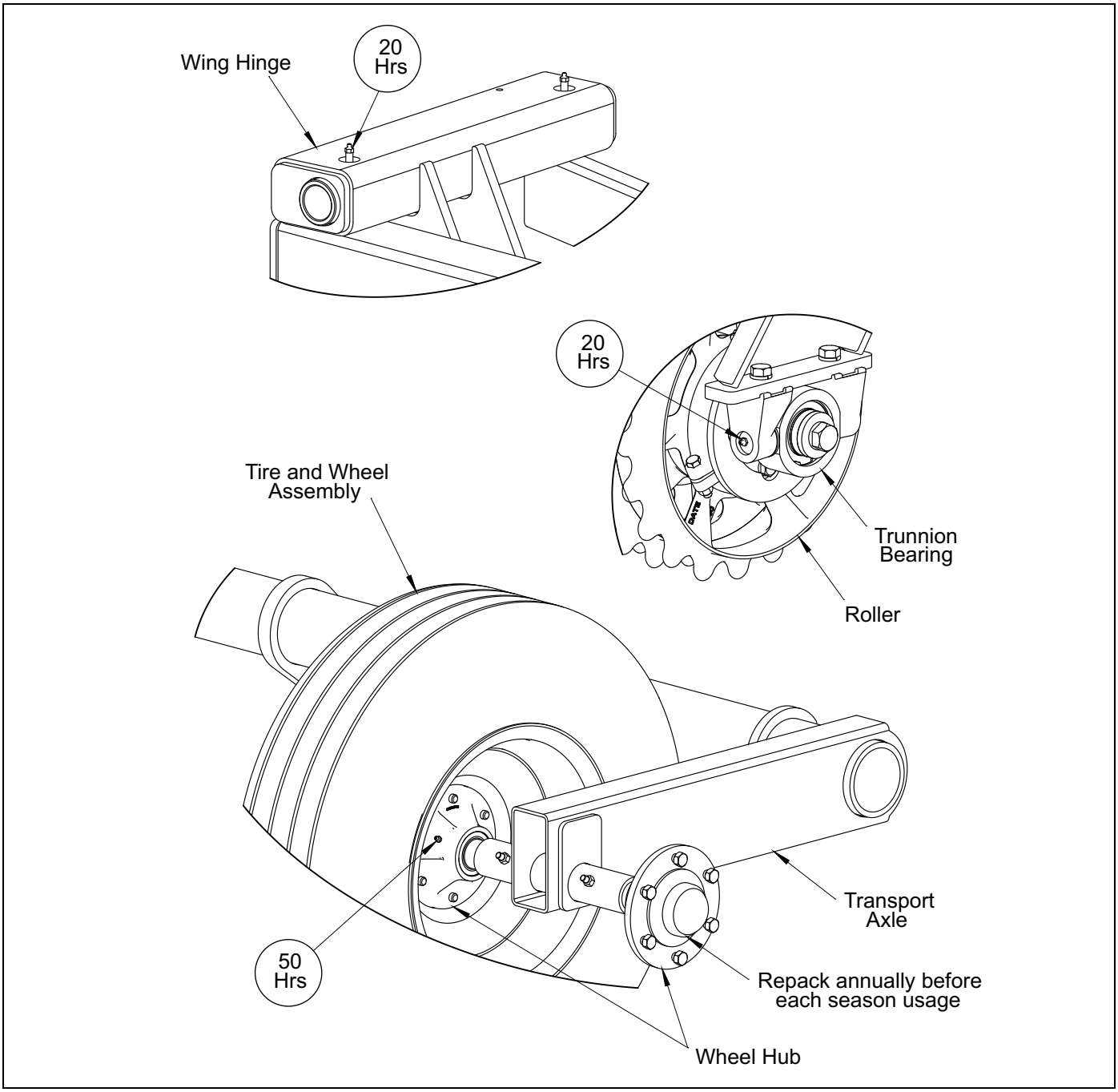

Figure 4-2: Lubrication Points and Intervals

https://truckmanualshub.com/

Roller Axle Assembly

After an initial run of 5-10 hours, check the Roller Axle Assemblies to insure that the wheels are tight to one another. Allow just enough looseness so each wheel will turn by itself. If not slide the wheels tight together and adjust the Axle Clamps. Thereafter check assemblies every 50-100 hours. **See Figure 4-3.**

Clamp Tightening

Tighten the Clamp bolts evenly to achieve equal spacing between clamp section. Torque to 75 Ft/Lbs. Thereafter check assemblies every 50-100 hours.
See Figure 4-4.

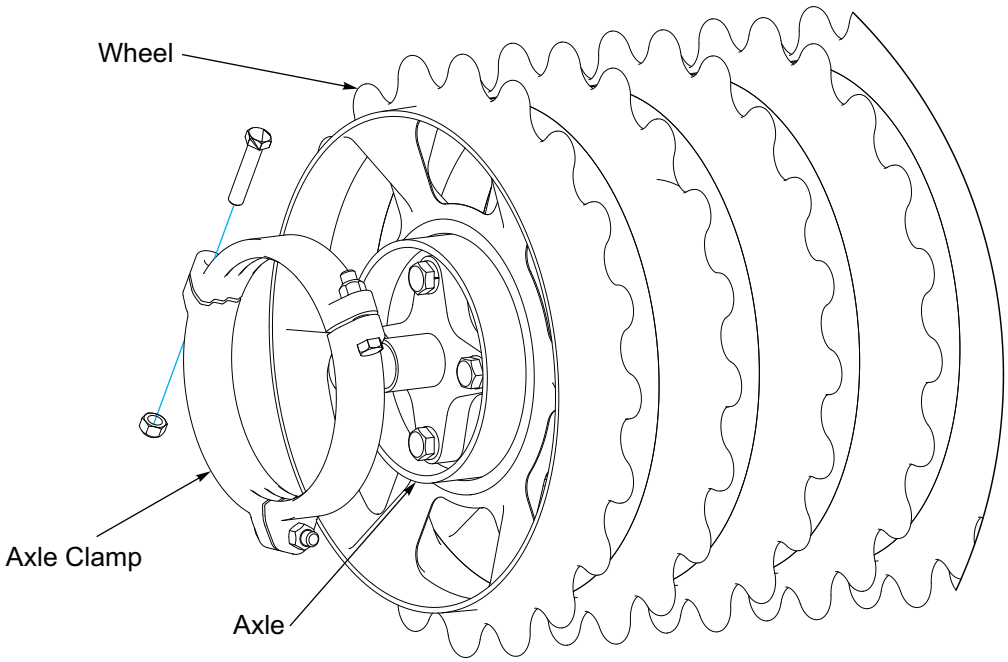

Figure 4-3: Roller Axle Assembly

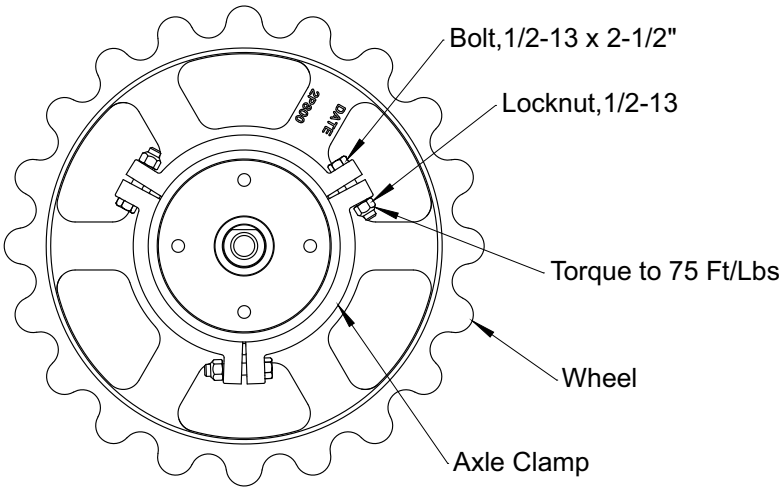

Figure 4-4: Clamp Tightening (1 of 2)

https://truckmanualshub.com/

Clamp Tightening Continued

Clamp Tightening Procedure:

1. Check axle and clamp for burrs on mating surfaces.
2. Remove end play between wheels by sliding wheels toward the fixed end of the axle.
3. Position clamp snugly against the end wheel.
4. Tighten the U-Bolt evenly to 57 Ft/Lbs. **See Figure 4-5.**

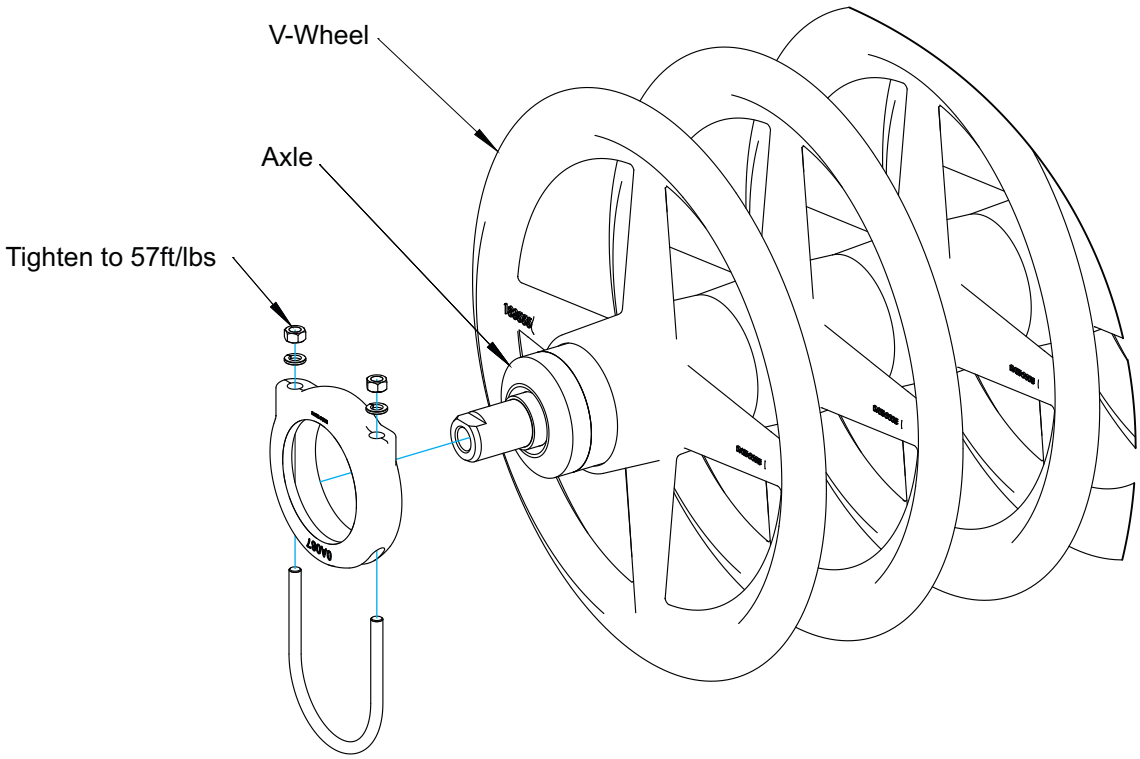

Figure 4-5: Clamp Tightening (2 of 2)

https://truckmanualshub.com/

Clamp End Spacers - Optional

The Clamp End Spacer Kits are used to eliminate space between the Axle Clamp and the Wheel Stop.

IMPORTANT

Unfold and lower machine prior to performing any steps.

Kit Part Number 201442 - 3/4" Axle Spacer
Kit Part Number 201443 - 1/2" Axle Spacer

Installation is the same for either kit.

1. Place the two Axle Spacers between the Axle Clamp and the Wheel Stop.
2. Insert two 3/8-16 x 1-3/4 Bolts through the Axle Spacers and secure with 3/8-16 Locknuts.

Refer to the Torque Table for proper bolt torque values. Note the different torque requirement for Bolts with Locknuts. **See Page 4-1.**

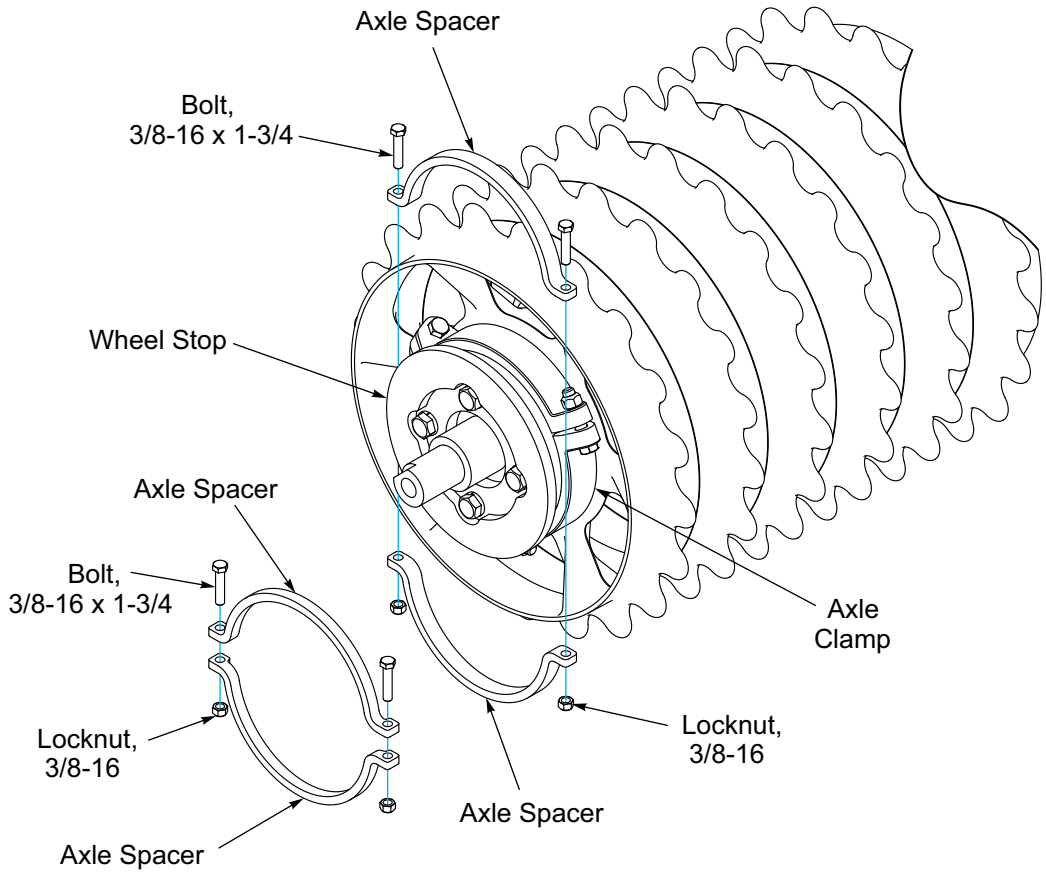

Figure 4-6: Clamp End Spacer Kit 1 of 2 - Optional

https://truckmanualshub.com/

Kit Part Number 204831 - 1” Axle Spacer
Kit Part Number 204832 - 1-1/4” Axle Spacer
Kit Part Number 204833 - 1-1/2” Axle Spacer

1. Place the two Axle Spacers between the Axle Clamp and the Wheel Stop.
2. Insert two 3/8-16 x 1 Bolts through the Axle Spacers and secure with 3/8-16 Locknuts.

Refer to the Torque Table for proper bolt torque values. Note the different torque requirement for Bolts with Locknuts. **See Page 4-1.**

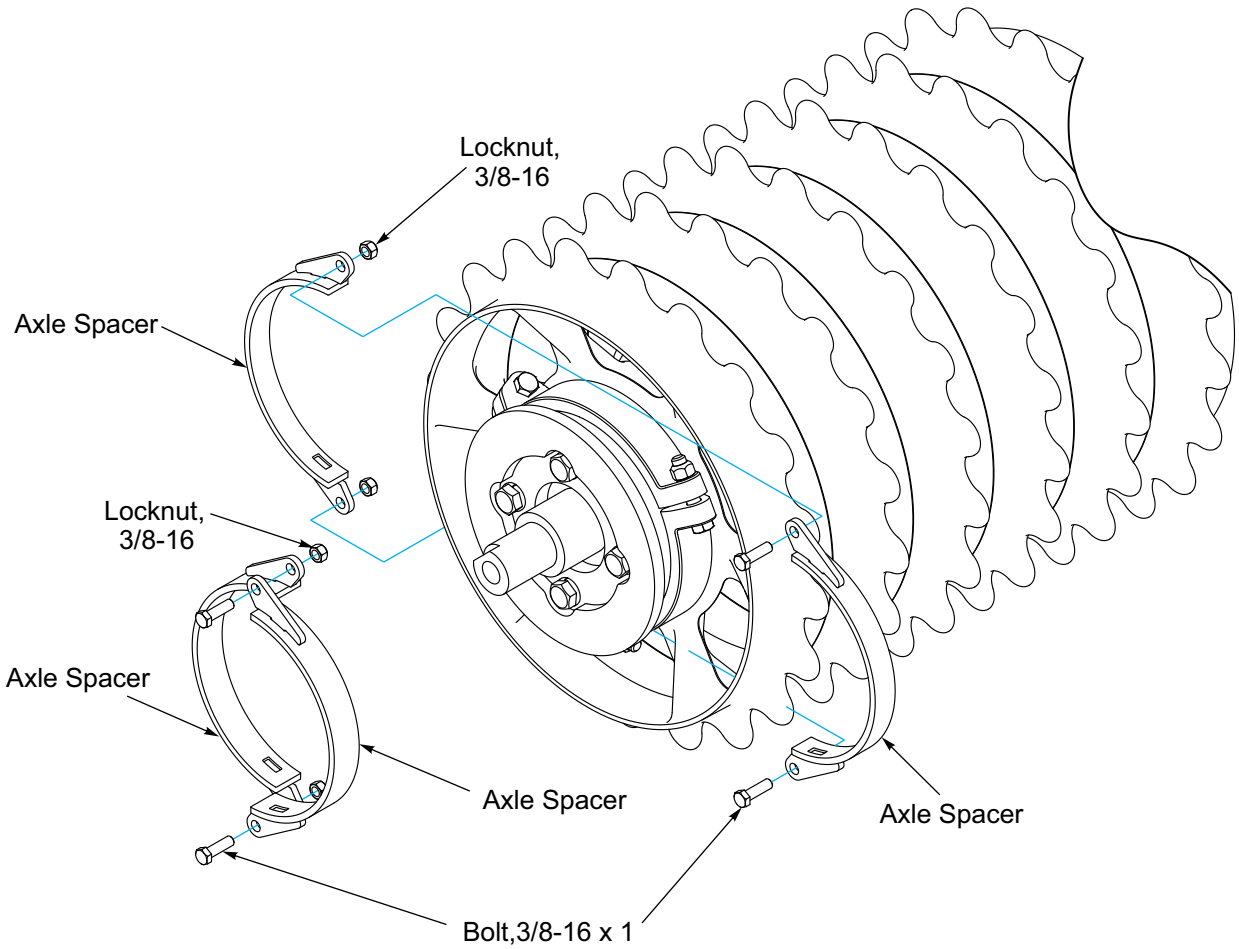

Figure 4-7: Clamp End Spacer Kit 2 of 2 - Optional

https://truckmanualshub.com/

Storage

1. The service life of the Pulverizer will be extended by proper off-season storage practices. Prior to storing the unit, complete the following procedures:
   a. Completely clean the unit.
   b. Inspect the machine for worn or defective parts. Replace as needed.
   c. Repaint all areas where the original paint is worn off.
   d. Grease all exposed metal surfaces of shanks and points.
   e. Apply a light coating of oil or grease to exposed cylinder rods to prevent them from rusting.
   f. Lubricate each point of the machine as stated in **“Lubrication Points and Intervals” on page 4-4.**
2. Store the unit in a shed or under a tarpaulin to protect it from the weather. The ground tools and tires should rest on boards, or some other object, to keep them out of the soil.
3. If the unit is stored in the folded position, make sure the transport lock is installed to prevent settling.
4. Relieve Hydraulic Pressure in hoses after lock is installed.
5. Block wheels before unhitching from tractor.

https://truckmanualshub.com/

Table provided for general use.

NOTES:

https://truckmanualshub.com/

Chapter 5

General Reference and Specifications

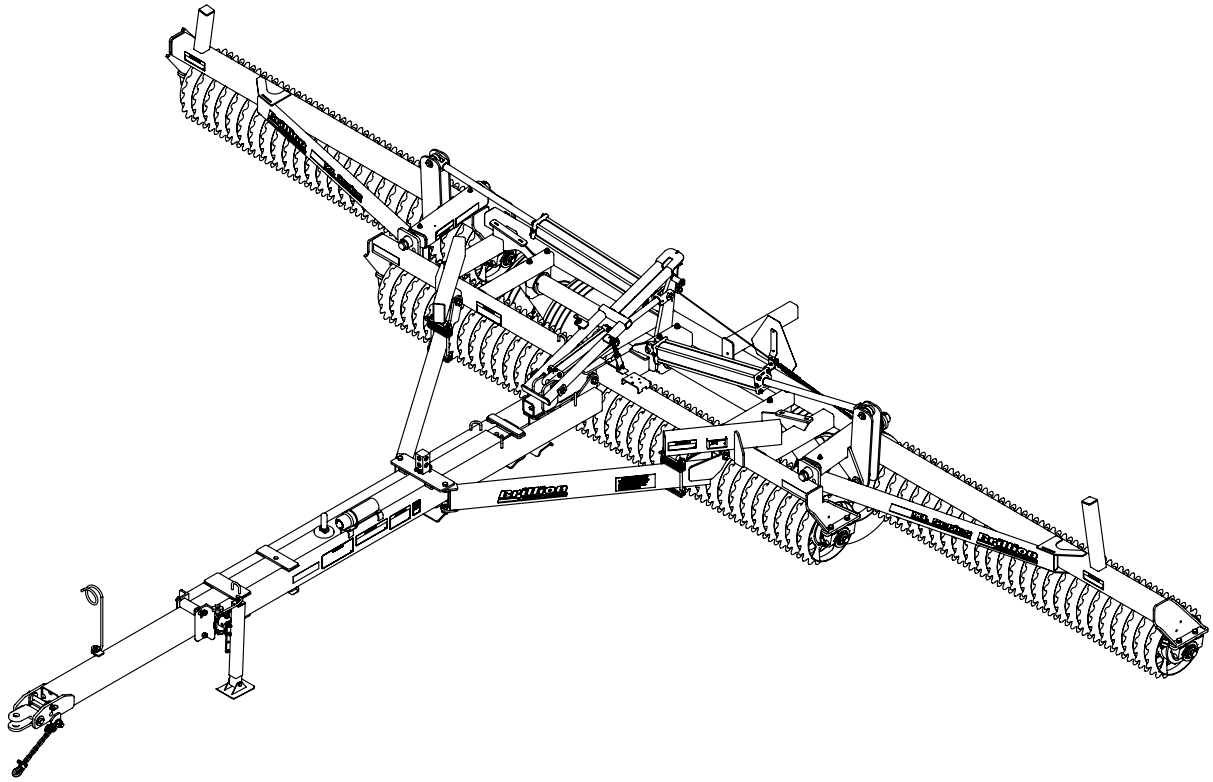

https://truckmanualshub.com/

	XL28	XL30
Approximate Weight in Pounds		
Notched Ductile	7218	7472
Notched Ductile with Scrapers	7536	7805
Optimizer	7884	8190
Crowfoot	6843	7076
V-Wheel	7734	8020
Hvy Notched	8228	8550
Hvy Notched with Scrapers	8540	8876
Hvy Notched with Sprockets	9568	9982
Approximate Tongue Weight		
Drawbar Retracted, Transport	922	928
Drawbar Extended, Transport	776	780
Operation	under 500 lbs	under 500 lbs
Working Width	344 inches	368 inches
Transport Width	181 inches	181 inches
Transport Height	91 inches	93 inches
Overall Length, Drawbar Retracted	271 inches	274 inches
Overall Length, Drawbar Extended	349 inches	352 inches
Road Clearance		
Notch, Optimizer, Crowfoot, Hvy Notch Series	12 inches	12 inches
V-Wheel Series	11 inches	11 inches
Mechanical Transport Lock	Standard	Standard
Hydraulic Circuits Required	1	1
Pulverizer Wheels		
Notched Series	20" (500 mm) Notched Ductile Iron	20" (500 mm) Notched Ductile Iron
Optimizer Series	20" (500 mm) Optimizer Ductile Iron	20" (500 mm) Optimizer Ductile Iron
Crowfoot Series	20" (500 mm) Crowfoot Ductile Iron	20" (500 mm) Crowfoot Ductile Iron
V-Wheel Series	22" V-Wheel Ductile Iron	22" V-Wheel Ductile Iron
Hvy Notched Series	20" (500 mm) Crowfoot Ductile Iron	20" (500 mm) Crowfoot Ductile Iron
Number of Wheels		
Notched Series	90	96
Optimizer Series	59	63
Crowfoot Series	59	63
V-Wheel Series	59	63
Hvy Notched Series	90	96
Axle Size		
Notched, Optimizer, Crowfoot Series	8 in. (203 mm)	8 in. (203 mm)
V-Wheel Series	4-1/2 in	4-1/2 in
Hitch	Pull-Type with Hydraulic Transport	Pull-Type with Hydraulic Transport
Tire Size	11L x 15 Tires on 6 Bolt Rims	11L x 15 Tires on 6 Bolt Rims
LED Safety Warning Lights & SMV Emblem	Standard	Standard
Scraper Kit		
Notched Series		
Hvy Notched Series		
Safety Chain Kit	Standard	Standard
Powder Coat Paint, Red	Standard	Standard
Telescoping Drawbar	Standard	Standard
Horsepower Requirements	3 to 5 HP per ft (2.2 to 3.7 kW)	3 to 5 HP per ft (2.2 to 3.7 kW)
Horsepower Requirements As Companion Tool	1 to 3 HP per ft. (2.5 kW per m)	1 to 3 HP per ft. (2.5 kW per m)
Recommended Operating Speed	3 to 8 MPH (4.8 to 12.8 km/h)	3 to 8 MPH (4.8 to 12.8 km/h)

https://truckmanualshub.com/

XL32	XL34	XL36
7773	8027	8141
8121	8391	8520
8541	8847	9013
7355	7587	7679
8352	8637	9037
8917	9239	9421
9258	9595	9790
10443		
940	946	937
789	793	784
under 500 lbs	under 500 lbs	under 500 lbs
392 inches	416 inches	440 inches
181 inches	181 inches	181 inches
95 inches	95 inches	97 inches
276 inches	279 inches	281 inches
354 inches	357 inches	359 inches
12 inches	12 inches	12 inches
11 inches	11 inches	11 inches
Standard	Standard	Standard
1	1	1
20" (500 mm) Notched Ductile Iron	20" (500 mm) Notched Ductile Iron	20" (500 mm) Notched Ductile Iron
20" (500 mm) Optimizer Ductile Iron	20" (500 mm) Optimizer Ductile Iron	20" (500 mm) Optimizer Ductile Iron
20" (500 mm) Crowfoot Ductile Iron	20" (500 mm) Crowfoot Ductile Iron	20" (500 mm) Crowfoot Ductile Iron
22" V-Wheel Ductile Iron	22" V-Wheel Ductile Iron	22" V-Wheel Ductile Iron
20" (500 mm) Crowfoot Ductile Iron	20" (500 mm) Crowfoot Ductile Iron	20" (500 mm) Crowfoot Ductile Iron
102	108	114
67	71	75
67	71	75
67	71	75
102	108	114
8 in. (203 mm)	8 in. (203 mm)	8 in. (203 mm)
4-1/2 in	4-1/2 in	4-1/2 in
Pull-Type with Hydraulic Transport	Pull-Type with Hydraulic Transport	Pull-Type with Hydraulic Transport
11L x 15 Tires on 6 Bolt Rims	11L x 15 Tires on 6 Bolt Rims	11L x 15 Tires on 6 Bolt Rims
Standard	Standard	Standard
Standard	Standard	Standard
Standard	Standard	Standard
Standard	Standard	Standard
3 to 5 HP per ft (2.2 to 3.7 kW)	3 to 5 HP per ft (2.2 to 3.7 kW)	3 to 5 HP per ft (2.2 to 3.7 kW)
1 to 3 HP per ft. (2.5 kW per m)	1 to 3 HP per ft. (2.5 kW per m)	1 to 3 HP per ft. (2.5 kW per m)
3 to 8 MPH (4.8 to 12.8 km/h)	3 to 8 MPH (4.8 to 12.8 km/h)	3 to 8 MPH (4.8 to 12.8 km/h)

https://truckmanualshub.com/

Table provided for general use.

NOTES:

https://truckmanualshub.com/

Document Control Revision Log:

Date	Revision	Improvement(s) Description and Comments	Team Member
03/2015	R0	Initial Release	WML

https://truckmanualshub.com/

Equipment from Landoll Corporation is built to exacting standards ensured by ISO 9001 registration at all Landoll manufacturing facilities.

XL Pulverizer
28 through 36 Models

Operator's Manual

Re-Order Part Number F-791R0

LANDOLL CORPORATION
1900 North Street
Marysville, Kansas 66508
(785) 562-5381
800-428-5655 ~ WWW.LANDOLL.COM

Copyright 2014. Landoll Corporation
"All rights reserved, including the right to reproduce this material or portions thereof in any form."