https://truckmanualshub.com/

TERBERG SPECIAL VEHICLES

TERBERG

RT-SERIES

HANDLING HEAVY CARGO WITH TOTAL CONFIDENCE

https://truckmanualshub.com/

BASED ON PROVEN DESIGNS

- Gross Combination Weights up to 375 tonnes
- Fifth wheel lifting capacity up to 45 tonnes
- Ergoturn 180° swivelling seat
- The fully welded chassis is a perfect combination of modular construction, strength, weight and easy access
- The spacious and strong, all-steel cab structure (fully FOPS and ROPS tested) ensures maximum driver protection
- The large rear window gives excellent driver visibility under all working conditions
- The curved windscreen ensures an excellent view forward
- Based on proven designs, ensuring reliability and lowest operating and maintenance costs
- Incorporates high quality components, available throughout the world

RT-series 4x4

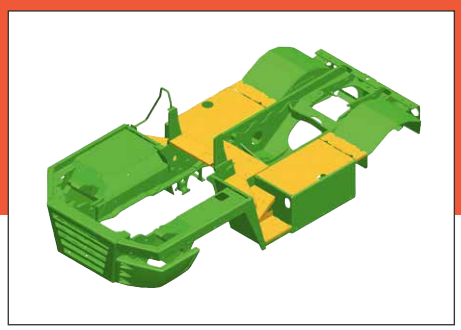

The fully welded chassis is a perfect combination of strength, weight and easy access

All-steel cab structure (FOPS and ROPS tested)

Standard feature: sound insulation material to ensure low noise level

https://truckmanualshub.com/

THE PERFECT CHOICE

RT223 / RT283 / RT323 / RT403

- Designed for RoRo operations in ports, operating in RoRo vessels and negotiating steep ramps
- Also widely used in industry because of their robust design and powerful driveline
- The RT403 is the perfect choice for extremely demanding applications
- Our worldwide distributor network and our efficient spare parts service ensure professional after-sales support

RoRo tractors

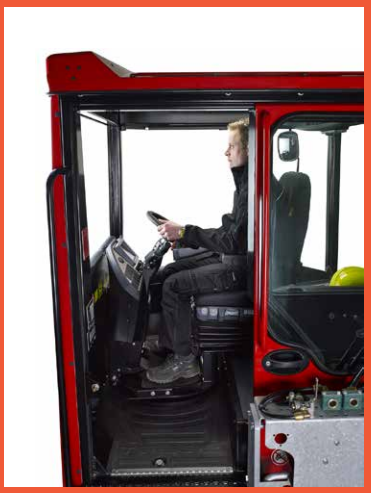

Ergoturn 180° swivelling seat

https://truckmanualshub.com/

RT-series 4x4 RoRo tractors

1. Transmission oil level
2. Coolant level
3. Optional: electric cab tilt
4. Access to electrical system
5. Easy topping up engine oil
6. Optional: overriders for extra safety
7. Standard feature: galvanized cover plates with anti-slip surface
8. Standard feature: rear sliding door, provides safe and easy cab access from either side of the tractor

https://truckmanualshub.com/

4x4 heavy duty tractor

1. Convenient, comprehensive access to vehicle information without the need for a laptop computer or other equipment
2. Hydraulic oil level
3. Optional: rear axle air suspension for extra driver comfort
4. Optional: raised high positioned air inlet with additional cyclone filter
5. Easy cab access from either side of the tractor
6. Optional: joystick in arm rest
7. The cab interior provides a high degree of comfort and an excellent working environment for the driver

https://truckmanualshub.com/

RT403
4x4 heavy duty tractor

The Terberg RT403 is designed for extremely demanding applications in ports, steelworks and other industrial plants.

Its fifth wheel lifting capacity of 45 tonnes and heavy-duty chassis and power-train design make the RT403 the perfect choice for the steel industry, extremely heavy RoRo operations and handling MTS trains. Depending on the application and operating environment, the GCW can reach up to 375 tonnes.

https://truckmanualshub.com/

SafeNeck®

Improving safety, increasing loads

The SafeNeck provides improved stability and extra safety during RoRo ramp operations.

The unique Terberg SafeNeck® option further increases safety and capacity when handling heavy trailers on ramps. The patented SafeNeck ensures optimum weight distribution between the front and rear axles which can increase permissible payloads by up to 250%.

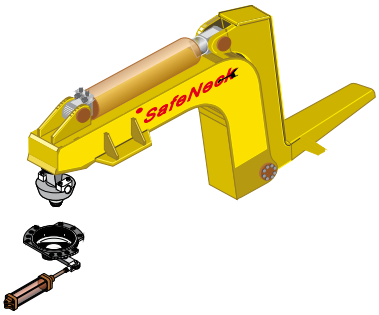

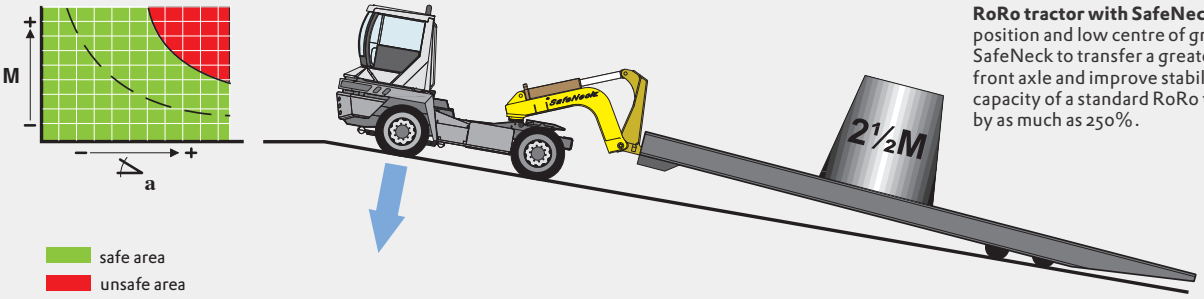

RoRo tractor with SafeNeck: forward mounting position and low centre of gravity. This enables the SafeNeck to transfer a greater load to the tractor front axle and improve stability. The safe working capacity of a standard RoRo tractor can be increased by as much as 250%.

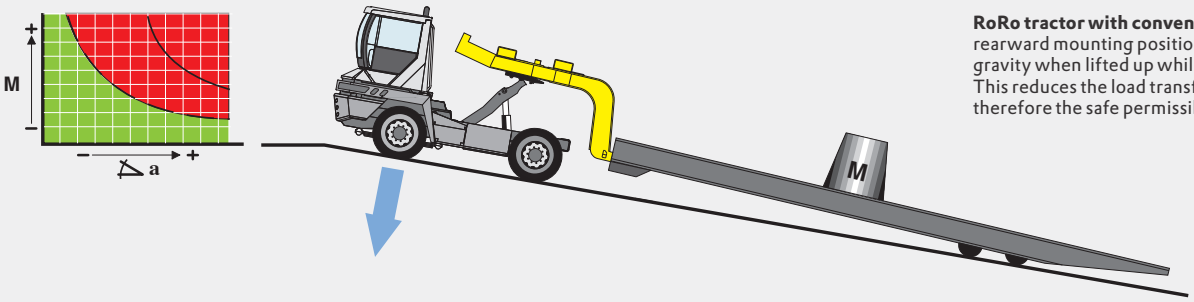

RoRo tractor with conventional gooseneck: rearward mounting position and high centre of gravity when lifted up while crossing a ship's ramp. This reduces the load transfer to the front axle and therefore the safe permissible payload.

https://truckmanualshub.com/

TERBERG SPECIAL VEHICLES

Terberg Special Vehicles
P.O. Box 2
NL-3405 ZG Benschop
The Netherlands

Tel. +31 348 45 92 11
info@terbergbenschop.nl

TERBERGSPECIALVEHICLES.COM