https://truckmanualshub.com/

HINO

KK-XZU215C

HINO 300 SERIES
Body Mounting Manual

TRUCK CHASSIS	
MODEL SERIES	XZU & XKU (Hybrid vehicle)

Hino Motors, Ltd.

https://truckmanualshub.com/

No part of this manual may be reproduced or transmitted in any form without the express written permission of Hino Motors, Ltd.

© 2010, Hino Motors, Ltd. All rights reserved. Printed in Japan.

Hino Motors, Ltd.

PRODUCT PLANNING DIVISION

3-1-1, HINO-DAI, HINO-SHI, TOKYO, 191-8660 JAPAN

Telephone : 042-586-5249

Facsimile : 042-586-5868

2010 - 02

KK-XZU215C

https://truckmanualshub.com/

RECORD OF CHANGES

We have published the new revised edition of Body Mounting Manual with the following changes.

Consequently, please discard the current Body Mounting Manual **CD-ROM NO.KK-XZU215B**, and use the new **CD-ROM NO.KK-XZU215C** from now on.

CONTENTS OF CHANGES

The information about XKU417L-HKFQB3 (Hybrid vehicle) has been added.

https://truckmanualshub.com/

WARNING

Request for alteration to make when reading MODEL NAME.

- The MODEL NAME in this manual of BODY MOUNTING MANUAL is described according to the “PRODUCTION CODE” name.
- When making use of the BODY MOUNTING MANUAL, use the MODEL NAME after replacing it in accordance with the following table.

(MODEL)	(PRODUCTION CODE)
HINO 3414	XZU307L-HKMLB3
HINO 3614	XZU307L-HKMMB3
	XZU347L-HKMMB3
HINO 3616	XZU407L-HKMMD3
	XZU407L-HKMQD3
	XZU417L-HKMMD3
HINO 3716	XZU407L-HKFQD3
	XZU417L-HKFQD3
	XZU427L-HKFQD3
HINO 3816	XZU407L-HKFRD3
	XZU417L-HKFRD3
	XZU427L-HKFRD3
HINO 3714	XKU417L-HKFQB3

AUSXZU201 00T001

https://truckmanualshub.com/

ABOUT THIS MANUAL

Purpose

This manual is provided the Body and Equipment Manufacturers, including inter-mediate and/or final stage manufacturers (hereinafter collectively referred to as Body and Equipment Manufacturers), to provide :

(1) Technical instructions for Hino truck chassis with cab for modification and mounting of bodies.

(2) An aid to Body and Equipment Manufacturers for producing safe vehicles under their own discretion and responsibility.

(3) Other general advice for installation, modification or alteration.

When Body and Equipment Manufacturers install any body or other equipment or device on Hino truck chassis with cab (hereinafter collectively referred to as Hino Chassis), or modify or alter a Hino Chassis.

Content

This manual contains chassis specifications and instructions particular to model 300 series with US-04 emission control in the Hino light duty trucks.

Important

This instruction manual must be used in combination with the Common Manual, No. KC-AA102.

- For more information on mounting of bodies and equipments or on chassis modifications, refer to the appropriate workshop manuals, parts catalogs, and maintenance guides and owner's or driver's manual.
- The information in this manual is accurate to the best of Hino's Knowledge at the time of going to press.
  Hino reserves the right to modify any and all information without notice and without obligation.
- Should more detailed data or information be needed, please contact authorized Hino distributor.

https://truckmanualshub.com/

ABOUT THIS MANUAL

Warning

- It is the responsibility of Body and Equipment Manufacturers or modification companies to make sure that the completed vehicle with body and equipment, or after modification, conforms to all applicable laws and regulations of the country in which the vehicle is to be used (e. g. regulations on lighting, tilt, overall size, axle load, external noise control etc.)
- This manual does not guarantee the safety of a Hino chassis once a body or equipment has been mounted or modification has been made by a Body and Equipment Manufacturers or a modification company.
- This manual does not affect that ultimate responsibility for the manufacture and mounting of the body, installation, modification or alteration on Hino Chassis devolves upon the Body and Equipment Manufacturer.
- Each individual Body and Equipment Manufacturer has the sole responsibility for the design, functions, materials and work concerning the body and equipment.
- Hino Motors, Ltd. does not assume any liability whatsoever for any injury to persons or damage to property caused as a result of the utilization of this manual.

https://truckmanualshub.com/

CONTENTS

1. VEHICLE SUMMARY

2. GENERAL PRECAUTIONS

3. CHASSIS MASS & FRAME SECTION MODULUS

4. SPRING & REAR AXLE

5. PTO AND CONTROL

6. ELECTRICAL SYSTEMS

7. PAINTING

8. CHASSIS DRAWINGS

9. CHASSIS FRAME DRAWINGS

10. MOUNTING OF CHASSIS EQUIPMENT

https://truckmanualshub.com/

1. VEHICLE SUMMARY

PRODUCTION CODE ..... 1 - 1
IDENTIFICATION NUMBER ..... 1 - 2
CHASSIS SPECIFICATIONS ..... 1 - 3

https://truckmanualshub.com/

PRODUCTION CODE

①	②	③	④	⑤	-	⑥	⑦	⑧	⑨	⑩	⑪	⑫
XZ	U	41	4	L	-	H	K	F	R	D	W	3

① ENGINE TYPE CODE	
XZ	N04C-TR/TS/TT, N04C-TP/TW, N04C-TU/TV
W	W04D, W04D-TM, W04D-TN
XK	N04C-TN/TU (N04C-H1)

② VEHICLE MODEL CODE	
U	300 SERIES

③ MODEL SERIES CODE			
CODE	WHEEL BASE	CAB	DRIVE
30	2525	NARROW	4 X 2
32			
33	2800		
34	3400		
40	2810	WIDE	
41	3430		
42	3870		
43	4200		

④ ENGINE AND SUSPENSION CODE			
CODE	ENGINE	EMISSION CONTROL	FRONT SUSPENSION
0	W04D	EURO-1/2	RIGID
1	-	-	-
2	W04D-TM/TN	EURO-1/2	RIGID
3	N04C-TR/TS/TT	EURO-3	
4	-	-	-
5	N04C-TP/TW	EURO-4	RIGID
6	N04C-TU	US04	INDEPENDENT
7	N04C-TU/TV		RIGID
8	N04C-TN	-	RIGID

⑤ CHASSIS TYPE CODE	
L	LEFT HAND DRIVE
R	RIGHT HAND DRIVE

⑥ CAB TYPE CODE	
H	SINGLE
Q	DOUBLE

⑦ BODY DECK HEIGHT CODE	
B	HIGH FLOOR
K	
Q	LOW FLOOR
M	DUMP

⑧ TRANSMISSION CODE	
F	6 SPEEDS (MECH.)
M	5 SPEEDS (MECH.)
P	4 SPEEDS (AUTO.)
T	6 SPEEDS (AUTO.)

⑨ GVMR AND REAR TIRE TYPE CODE		
CODE	GVMR (ton)	REAR TIRE TYPE
L	4.8-5.1	SINGLE
	4.495(FOR AUS.)	
M	5.5	DOUBLE
	4.495(FOR AUS.)	
Q	6.5	
	4.495(FOR AUS.)	
R	7.5	
	4.495(FOR AUS.)	
S	8.0	
T	8.5	

⑩ ENGINE CODE	
S	NA
A	W/TURBO
B	
D	

⑪ DESTINATION CODE	
NIL	EXPORT STANDARD
D	INDONESIA
N	SOUTH AFRICA
Q	AUSTRALIA & NEW ZEALAND
R	TAIWAN
T	THAI
V	GCC
W	EURO

⑫ SHIPPING CODE	
3	CAB WITH CHASSIS

AUSXZU201 01T001

https://truckmanualshub.com/

IDENTIFICATION NUMBER

CHASSIS

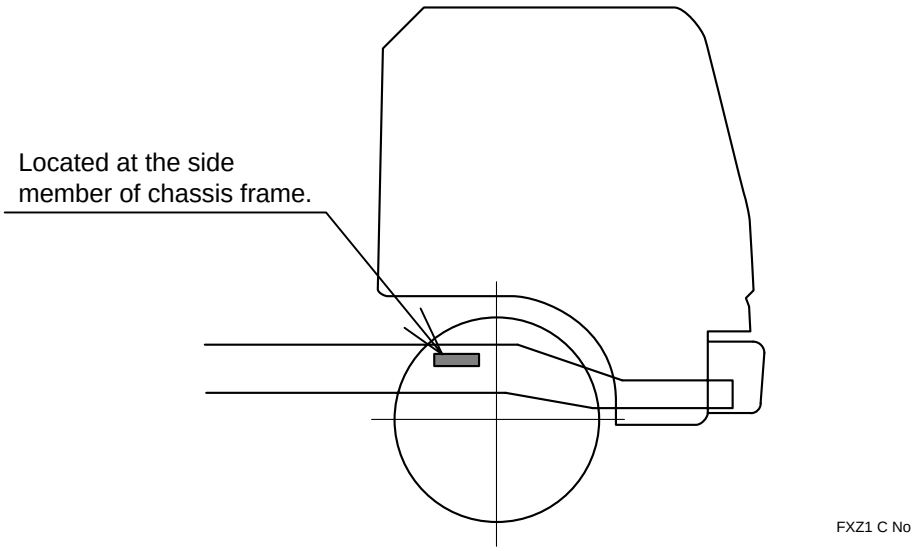

ENGINE

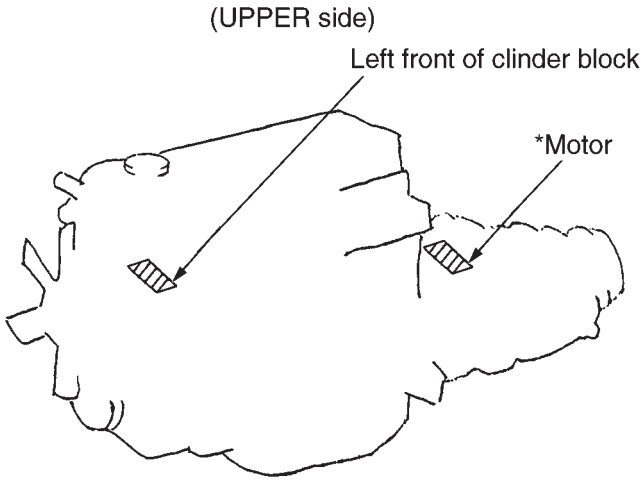

*XKU417L-HKFQB3 only

https://truckmanualshub.com/

CHASSIS SPECIFICATIONS

Cab type			STANDARD CAB SERIES			WIDE CAB SERIES									
Item \ Chassis model			XZU307L-HKMLB3	XZU307L-HKMMB3	XZU347L-HKMMB3	XZU407L-HKMMD3	XZU407L-HKMQD3	XZU407L-HKFQD3	XZU407L-HKFRD3	XZU417L-HKMMD3	XZU417L-HKFQD3	XZU417L-HKFRD3	XZU427L-HKFQD3	XZU427L-HKFRD3	XKU417L-HKFQB3
Drive system (number of wheels)			4x2 (4)	4x2 (6)	4x2 (6)	4x2 (6)	4x2 (6)	4x2 (6)	4x2 (6)	4x2 (6)	4x2 (6)	4x2 (6)	4x2 (6)	4x2 (6)	4x2 (6)
Wheel base (mm)			2525	2525	3400	2810	2810	2810	2810	3430	3430	3430	3870	3870	3430
Tread (mm)		Front	1400	1400	1400	1660	1665	1665	1655	1660	1665	1655	1655	1655	1655
		Rear	1350	1435	1435	1480	1520	1520	1520	1480	1520	1520	1520	1520	1520
Max. GVM Rating (kg)			4300	5500	5500	5500	5500	6500	7500	5500	6500	7500	6500	7500	6500
Capacity (kg) (On std. Spec.)	Axle	Front	2600	2600	2600	2600	3100	3100	3100	2600	3100	3100	3100	3100	3100
		Rear	4400	4400	4400	4400	5100	5100	5500	4400	5100	5500	5100	5500	5100
	Tire	Front	2300	2300	2300	2300	2800	2800	3200	2300	2800	3200	2800	3200	2430
		Rear	2300	4360	4360	4360	5280	5280	6200	4360	5280	6200	5280	6200	4480
Chassis mass (kg)			Refer to page 3-1	Refer to page 3-1	Refer to page 3-1	Refer to page 3-1	Refer to page 3-1	Refer to page 3-1	Refer to page 3-1	Refer to page 3-1	Refer to page 3-1	Refer to page 3-1	Refer to page 3-1	Refer to page 3-1	Refer to page 3-1
Engine	Model		N04C-TU	N04C-TU	N04C-TU	N04C-TV	N04C-TV	N04C-TV	N04C-TV	N04C-TV	N04C-TV	N04C-TV	N04C-TV	N04C-TV	N04C-UK
	Max. Out put (kW{PS}/rpm)	JIS gross	103{140}/2700	103{140}/2700	103{140}/2700	114{155}/2700	114{155}/2700	114{155}/2700	114{155}/2700	114{155}/2700	114{155}/2700	114{155}/2700	114{155}/2700	114{155}/2700	103{140}/3000
		ISO net	100{136}/2700	100{136}/2700	100{136}/2700	110{150}/2700	110{150}/2700	110{150}/2700	110{150}/2700	110{150}/2700	110{150}/2700	110{150}/2700	110{150}/2700	110{150}/2700	100{136}/3000
	Max. Torque (N·m{kgf·m}/rpm)	JIS gross	364{37.1}/1800	364{37.1}/1800	364{37.1}/1800	404{41.2}/1800	404{41.2}/1800	404{41.2}/1800	404{41.2}/1800	404{41.2}/1800	404{41.2}/1800	404{41.2}/1800	404{41.2}/1800	404{41.2}/1800	359{36.6}/1600
		ISO net	358{36.5}/1800	358{36.5}/1800	358{36.5}/1800	397{40.5}/1800	397{40.5}/1800	397{40.5}/1800	397{40.5}/1800	397{40.5}/1800	397{40.5}/1800	397{40.5}/1800	397{40.5}/1800	397{40.5}/1800	353{36.05}/1600
Emission			US04	US04	US04	US04	US04	US04	US04	US04	US04	US04	US04	US04	US04
Height of gravity from ground (m)			Refer to page 3-1	Refer to page 3-1	Refer to page 3-1	Refer to page 3-1	Refer to page 3-1	Refer to page 3-1	Refer to page 3-1	Refer to page 3-1	Refer to page 3-1	Refer to page 3-1	Refer to page 3-1	Refer to page 3-1	Refer to page 3-1
Tire and disc	Tire	Front	205/75R16C	205/75R16C	205/75R16C	205/75R16C	215/85R16	215/85R16	215/75R17.5	205/75R16C	215/85R16	215/75R17.5	215/85R16	215/75R17.5	215/85R16
		Rear	205/75R16C	205/75R16C	205/75R16C	205/75R16C	215/85R16	215/85R16	215/75R17.5	205/75R16C	215/85R16	215/75R17.5	215/85R16	215/75R17.5	215/85R16
	Disc	Front	16x5.5K-115mm	16x5.5K-115mm	16x5.5K-115mm	16x5.5K-115mm	16x5.5K-122mm	16x5.5K-122mm	17.5x6.00-127mm	16x5.5K-115mm	16x5.5K-122mm	17.5x6.00-127mm	16x5.5K-122mm	17.5x6.00-127mm	16x5.5K-122mm
		Rear	16x5.5K-115mm	16x5.5K-115mm	16x5.5K-115mm	16x5.5K-115mm	16x5.5K-122mm	16x5.5K-122mm	17.5x6.00-127mm	16x5.5K-115mm	16x5.5K-122mm	17.5x6.00-127mm	16x5.5K-122mm	17.5x6.00-127mm	16x5.5K-122mm
Fuel tank (L)			70	70	100	100	100	100	100	100	100	100	100	100	100
Battery V - kC {Ah} - No.			12-216{60}x2	12-216{60}x2	12-216{60}x2	12-216{60}x2	12-216{60}x2	12-216{60}x2	12-216{60}x2	12-216{60}x2	12-216{60}x2	12-216{60}x2	12-216{60}x2	12-216{60}x2	12-288{80}x2
Alternator V - A			24-60	24-60	24-60	24-60	24-60	24-60	24-60	24-60	24-60	24-60	24-60	24-60	24-80
Body width (See notes.) (mm)			1896			2095									

AUSXZU201 01T002

[NOTE]
- Permissible axle capacity and GVM or GCM capacity listed above table must not be exceeded.
- The front axle load must exceed 30% of the gross vehicle mass under full loaded condition.
- The height of center of gravity from ground on the unloaded vehicle with body mounted should be 0.82m (XZU307L-HKMLB3 only) or less.
- The height of center of gravity from ground on the unloaded vehicle with body mounted should be 0.88m (STANDARD CAB SERIES), 1.00m (WIDE CAB SERIES) or less.
- Weight distribution on the left and right wheels should be balanced.
- Both front axle and rear axle loads must not exceed the permissible load based on the tire load capacity according to the tire standards in your country.
- The dimension of tires to be mentioned in above chassis specification shows design figure according to JATMA or ETRTO standard.

https://truckmanualshub.com/

2. GENERAL PRECAUTIONS

FIRE SHIELD ····· 2 - 1
CLEARANCE BETWEEN CAB AND REAR BODY OR EQUIPMENT ····· 2 - 2
RECOMMENDED POSITIONS OF U-BOLTS ····· 2 - 3
RECOMMENDED POSITIONS OF REAR FENDERS AND MUDGUARDS ····· 2 - 4
ELECTRIC WELDING WORK ····· 2 - 5
NOTES ON ADDITIONAL WIRING IN THE ENGINE COMPARTMENT ····· 2 - 6
NOTES ON ENGINE CONTROL, BRAKE ABS SYSTEM COMPUTERS AND DC-DC CONVERTER ····· 2 - 7
HANDLING OF PARTS FOR MEETING THE EXTERNAL NOISE CONTROL REGULATION ····· 2 - 8
* PRECAUTION ON BODY MOUNTING WORK ····· 2 - 9
* THE NOISE MEASURES OF THE AM RADIO ····· 2 - 10

* Peculiar to XKU417L-HKFQB3

https://truckmanualshub.com/

FIRE SHIELD

1) Gap Between Cab Rear End and Body

When a flat bed or similar body has been mounted, a fire shield should be fitted across the gap between the cab rear end and the front end of the load platform frame to prevent fires that may be caused by flammable materials falling off from the load platform onto the exhaust pipe (see figure below).

A fire shield is not necessary if the body is fitted with a sheet carrier attached directly to the top of the front guard.

A fire shield is also not necessary for such bodies as dump trucks, mixers, tankers, and aluminum vans, where there is no danger of flammable materials falling off.

[NOTE] When you mount the fire shield, use bolts, etc., that can be taken out to allow for replacement of the chassis parts which are located at the rear part of cab.

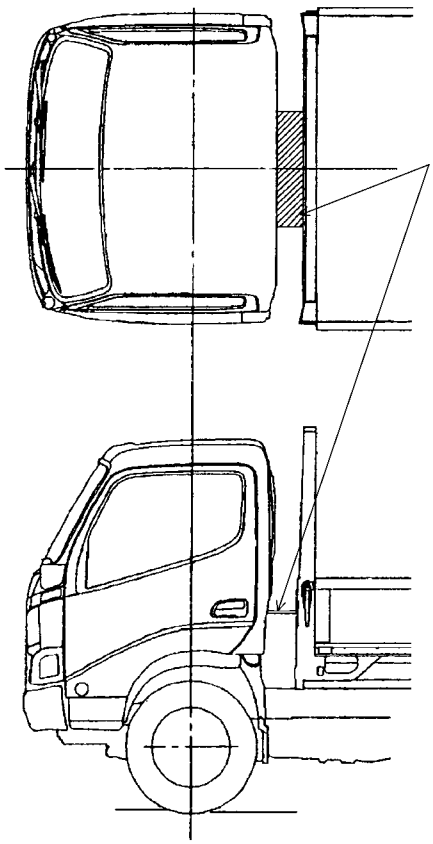

- For approximately 50 mm from the front edge of fire shield (the cab side), use rubber to match the shape of the fire shield to that of the cab rear end such as rear arch cover.
- You may also install the fire shield so that it covers only the exhaust pipe.

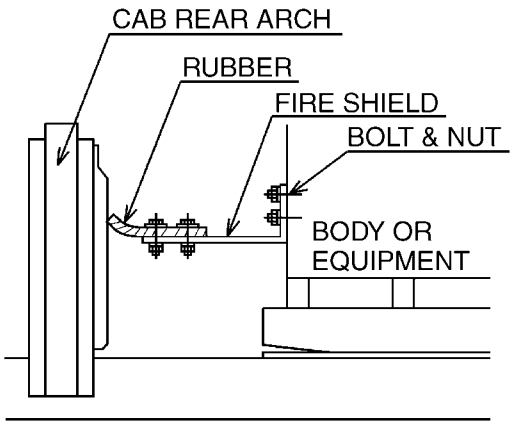

FXZ2 FIRE SHIELD

https://truckmanualshub.com/

CLEARANCE BETWEEN CAB AND REAR BODY OR EQUIPMENT

The rear part of the cab contains the cab lock mechanism or stack exhaust pipe as well as the engine cylinder block.

When mounting the rear body or equipment, allow at least the minimum clearance between the rear end of the cab or stack exhaust pipe and the front end of the rear body, to avoid obstructing the operation of cab lock mechanism or avoiding fire.

1) Minimum Clearance with Cab Rear End

(1) STANDARD CAB series

Unit : mm

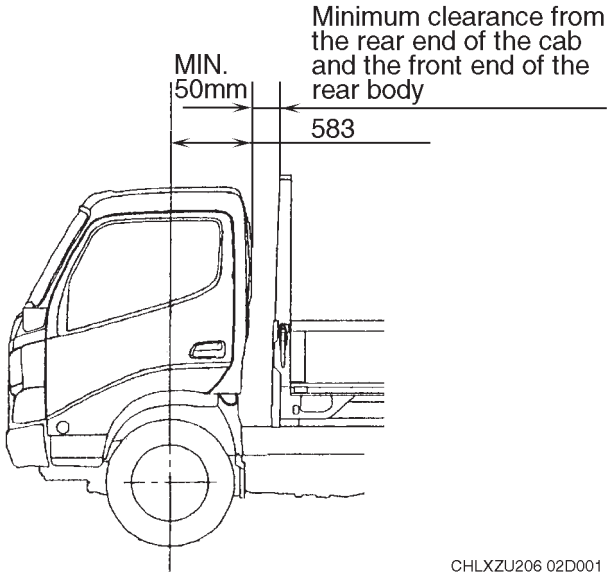

(2) WIDE CAB series

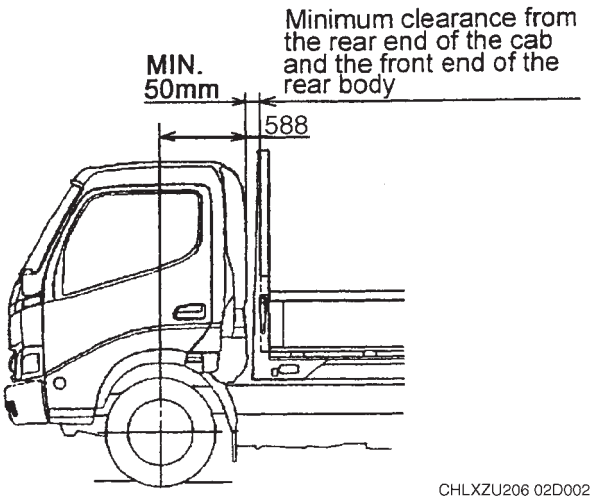

https://truckmanualshub.com/

2) Measurement of the Engine Air Intake Port

- **STANDARD CAB series**

Unit : mm

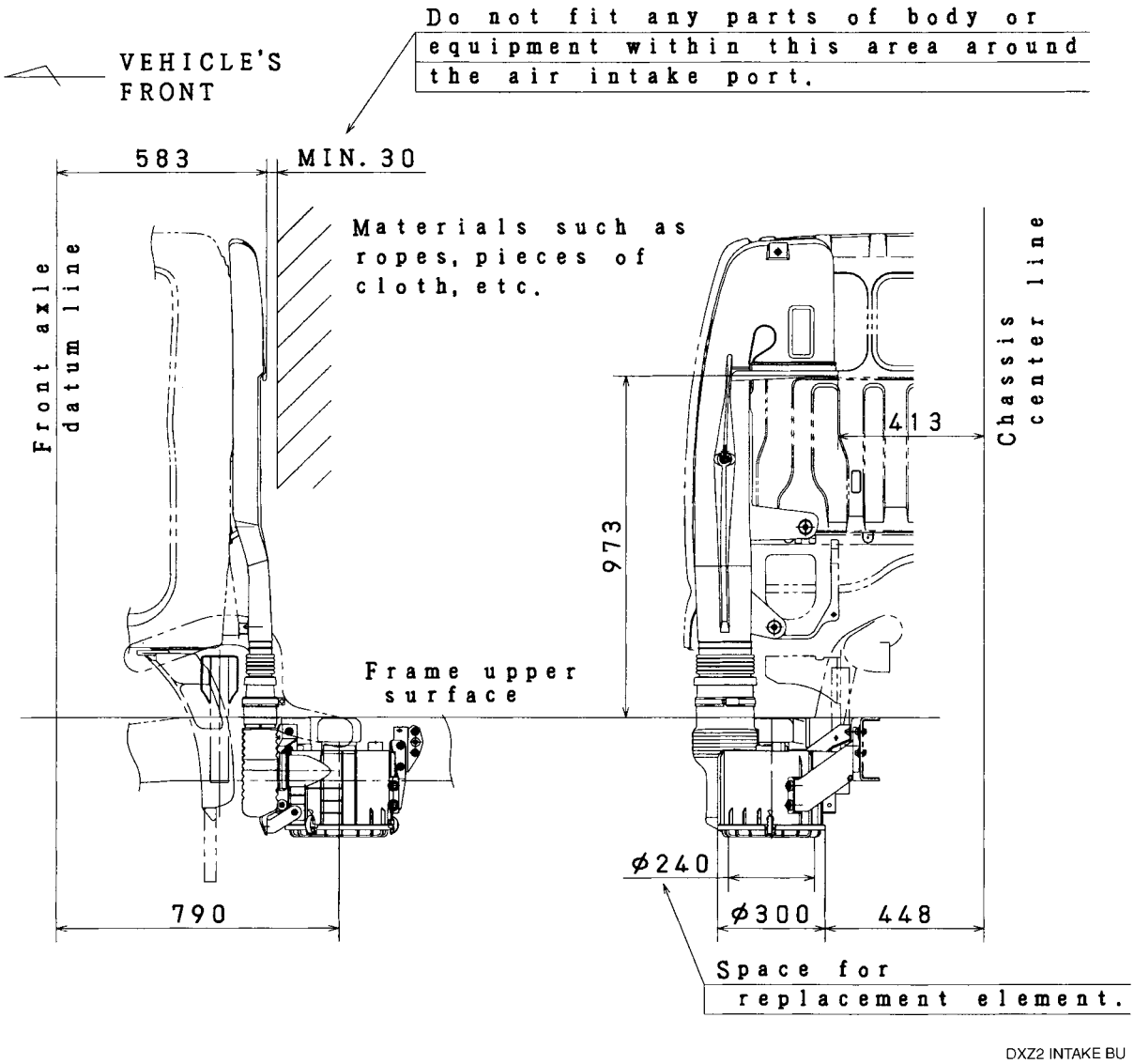

SIDE VIEW (LEFT SIDE)

REAR VIEW (LEFT SIDE)

https://truckmanualshub.com/

• **WIDE CAB series** Unit : mm

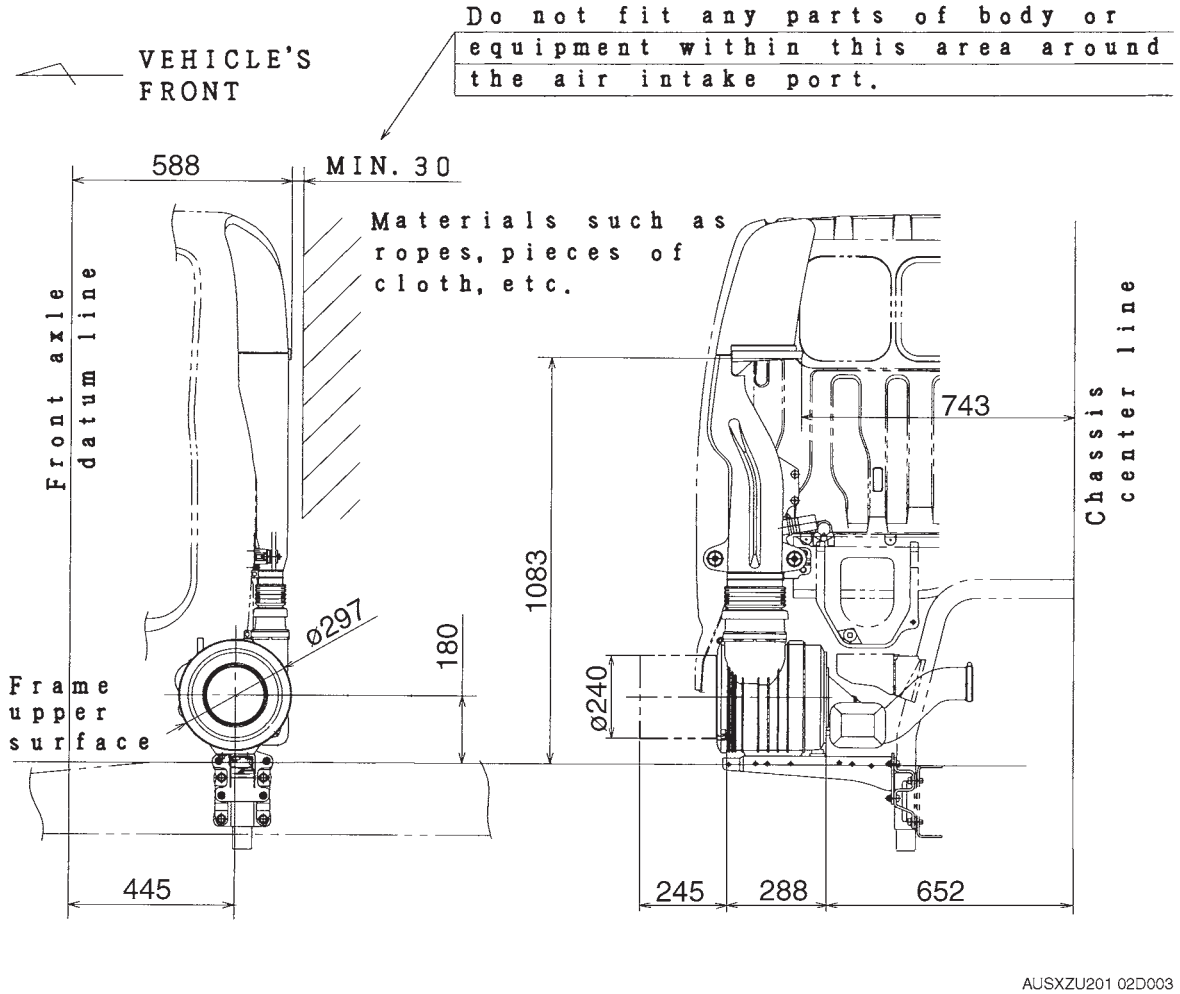

SIDE VIEW (LEFT SIDE) REAR VIEW (LEFT SIDE)

Caution

The blocking of the smooth flow of air into the air intake pipe caused by any materials such as ropes, pieces of cloth, etc. leads to the increase of exhaust temperature if driven long intervals. The increase in exhaust temperature is caused by the decreased efficiency in the combustion process, as the proportion of air in the combustion chamber is also decreased by the above mentioned factor. This situation will lead to major malfunctions such as the cracking of the exhaust manifold and the breaking down of the turbocharger. To avoid such malfunctions, please keep the air intake pipe free from any blocking materials at all times.

https://truckmanualshub.com/

3) Minimum Clearance with Cab Outer Shell

- Even under normal driving conditions, when the cab is not tilted, it moves back and front, right and left, and up and down. The body or equipment must not interfere with cab movement.
- Allow at least 30 mm clearance between the cab and rear body or equipment.

UNIT : mm

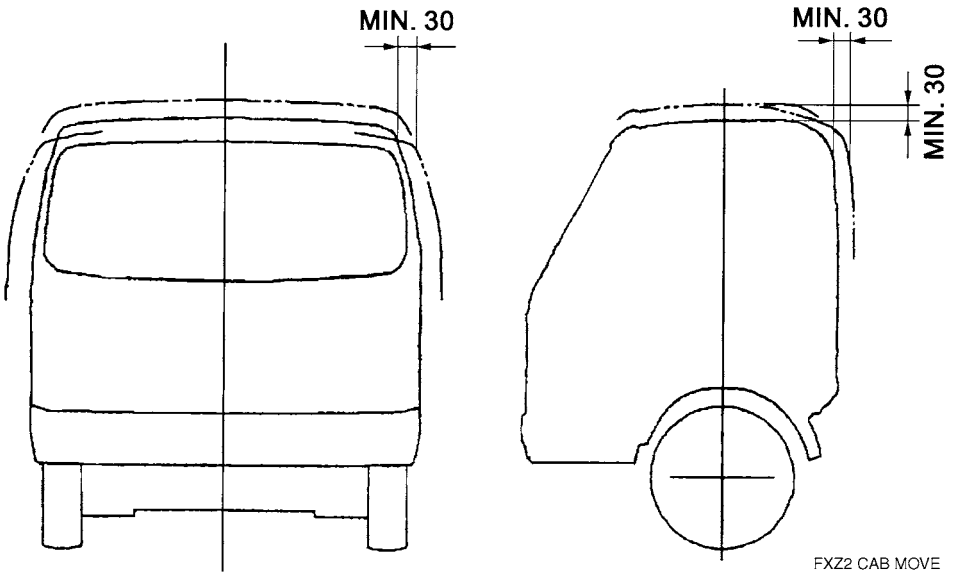

FXZ2 CAB MOVE

- When cab tilt, allow at least 70 mm clearance the cab and rear body or equipment. For details of cab tilt dimensions, see the Body Mounting Manual for the respective model series.

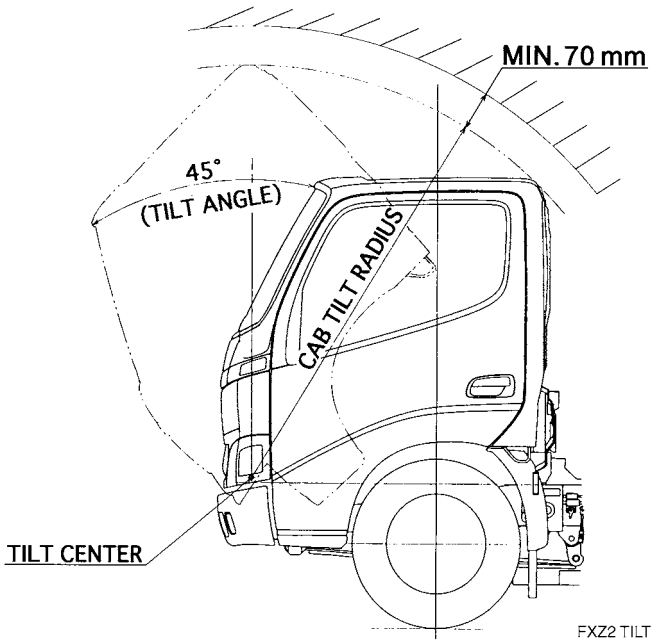

FXZ2 TILT

https://truckmanualshub.com/

4) Contained Equipment of Cab Rear End

The rear part of the cab contains the cab lock mechanism and the tilt mechanism, as well as the engine cylinder block or other various equipment.

When mounting the body or equipment, allow at least the minimum clearance between the rear end of the cab and the front end of the rear body or equipment, to avoid obstructing the operation and maintenance of these mechanisms or various equipment.

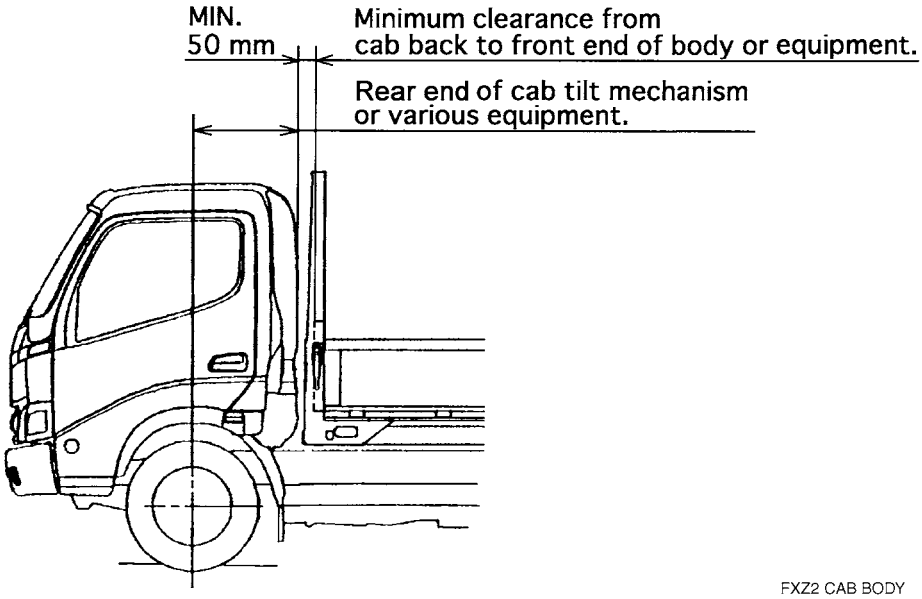

FXZ2 CAB BODY

For details of cab dimensions, see chassis drawings.

[EXAMPLE]

EQUIPMENT	OPERATION, MAINTENANCE, ETC.
• CAB LOCK MECHANISM AND LEVER	CAB LOCK OPERATION
• CAB LOCK SAFETY LEVER	CAB TILT OPERATION
• CAB TILT LEVER, UP AND DOWN	CAB TILT OPERATION (VEHICLE W/ELECTRICAL CAB TILT PUMP) INSPECTION OF OIL LEVEL REPLENISH THE OIL
• CAB TILT SWITCH	
• CAB STOPPER RELEASE LEVER	
• TILT PUMP HAND LEVER	
• POWER STEERING OIL RESERVOIR	INSPECTION & REPLENISH THE OIL
• COOLING WATER HEADER TANK	INSPECTION & REPLENISH THE COOLING WATER
• ENGINE OIL LEVEL GAUGE	INSPECTION OF OIL LEVEL
• ENGINE OIL FILLER	REPLENISH THE OIL
• OIL LEVEL GAUGE & FILLER OF AUTO-T/M	INSPECTION & REPLENISH THE OIL
• AIR CLEANER	INSPECTION & CLEANING OF ELEMENT

TXZ2 CAB BACK CON

https://truckmanualshub.com/

RECOMMENDED POSITIONS OF U-BOLTS

[NOTES]

(1) The details of setting positions of the U-bolt are shown in following figure.

Fasten the U-bolt as much as possible to the positions described in following figure when a body or equipment are going to be mounted to the chassis.

(2) If the U-bolt positions are to be altered according to the constructions or kinds of the body, determine the place where U-bolt to be fastened after carefully studies the condition of the chassis to prevent contact with the brake pipes, hoses and harness wires.

(3) The position of U-bolts at forward of No.3 crossmember should be observed according to the figure shown next page due to structure and layout of each component parts of the chassis.

U-bolt

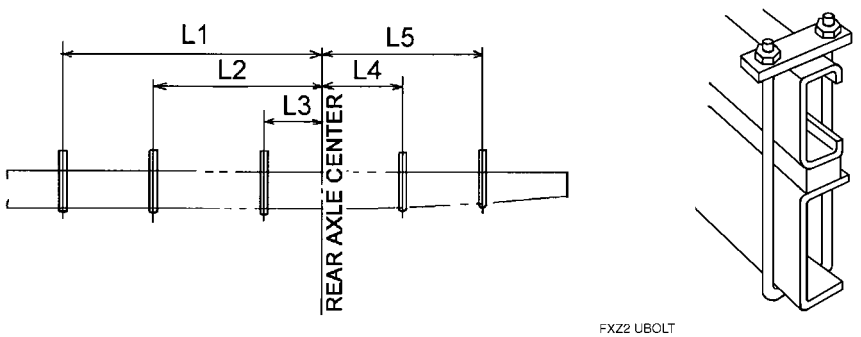

No.	MODEL	W/B (mm)	CAB TYPE	POSITION	DIMENSION (mm)				
					L1	L2	L3	L4	L5
1	XZU307L-HKMLB3	2525	STD	RH	1595	–	264	–	1000
				LH	1495	–	264	–	1035
2	XZU307L-HKMMB3			RH	1595	–	264	–	1000
				LH	1495	–	264	–	1035
3	XZU347L-HKMMB3	3400		RH	2470	935	–	–	1410
				LH	2362	935	–	–	1410
4	XZU407L-HKMMD3	2810	WIDE	RH	1780	–	236	–	950
				LH	1780	–	236	–	950
5	XZU407L-HKMQD3			RH	1780	–	236	–	950
				LH	1780	–	236	–	950
6	XZU407L-HKFQD3			RH	1780	–	236	–	950
				LH	1780	–	236	–	950
7	XZU407L-HKFRD3			RH	1780	–	236	–	950
				LH	1780	–	236	–	950
8	XZU417L-HKMMD3	3430	WIDE	RH	2400	–	233	–	1360
				LH	2400	–	233	–	1360
9	XZU417L-HKFQD3			RH	2400	–	233	–	1360
				LH	2400	–	233	–	1360
10	XZU417L-HKFRD3			RH	2400	–	233	–	1360
				LH	2400	–	233	–	1360
11	XZU427L-HKFQD3	3870	WIDE	RH	2820	1120	–	–	1560
				LH	2820	900	–	–	1560
12	XZU427L-HKFRD3			RH	2820	1120	–	–	1560
				LH	2820	900	–	–	1560
13	XKU417L-HKFQB3	3430	WIDE	RH	2400	–	233	–	1360
				LH	2400	–	233	–	1360

AUSXZU201 02T002

https://truckmanualshub.com/

RECOMMEND POSITIONS OF REAR FENDERS AND MUDGUARDS

When mounting rear fenders and mudguards, determine required clearances with reference to the following table and figures of "MAXIMUM VERTICAL DEFLECTION OF REAR WHEEL" in 4-2.

1) Rear Fender

Unit : mm

CAB TYPE	MODEL	TIRE SIZE	A	B	C	D	REAR TIRE
STD	XZU307L-HKMLB3	205/75R16C	1636	1656	1350	210	SINGLE
	XZU307L-HKMMB3	205/75R16C	1876	1896	1435	137	DOUBLE
	XZU347L-HKMMB3	205/75R16C	1876	1896	1435	137	
WIDE	XZU407L-HKMMD3	205/75R16C	1921	1941	1480	135	
	XZU407L-HKMQD3	215/85R16	1986	2006	1520	142	
	XZU407L-HKFQD3	215/85R16	1986	2006	1520	142	
	XZU407L-HKFRD3	215/75R17.5	1994	2014	1520	138	
	XZU417L-HKMMD3	205/75R16C	1921	1941	1480	135	
	XZU417L-HKFQD3	215/85R16	1986	2006	1520	142	
	XZU417L-HKFRD3	215/75R17.5	1994	2014	1520	138	
	XZU427L-HKFQD3	215/85R16	1986	2006	1520	142	
	XZU427L-HKFRD3	215/75R17.5	1994	2014	1520	138	
	XKU417L-HKFQB3	215/85R16	1989	2009	1520	141	

AUSXZU201 02T003

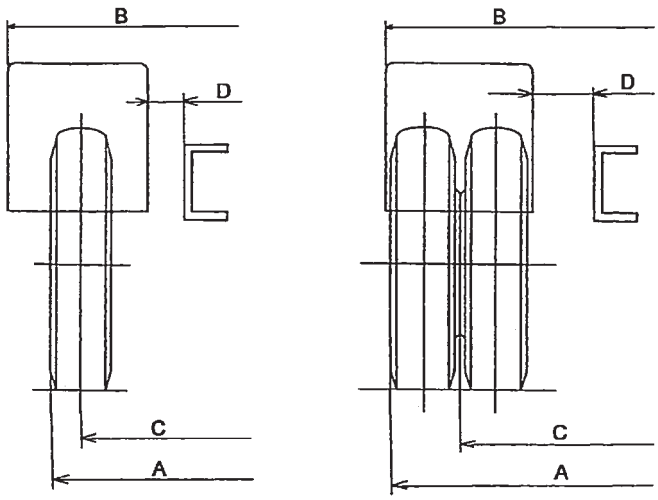

1 (REAR SINGLE TIRE)

2 (REAR DOUBLE TIRE)

AUSXZU201 02D004

[NOTE]
The dimension of tire to be mentioned in above table shows design figure according to JATMA or ETRTO standard.

https://truckmanualshub.com/

2) Mudguards

Unit:mm

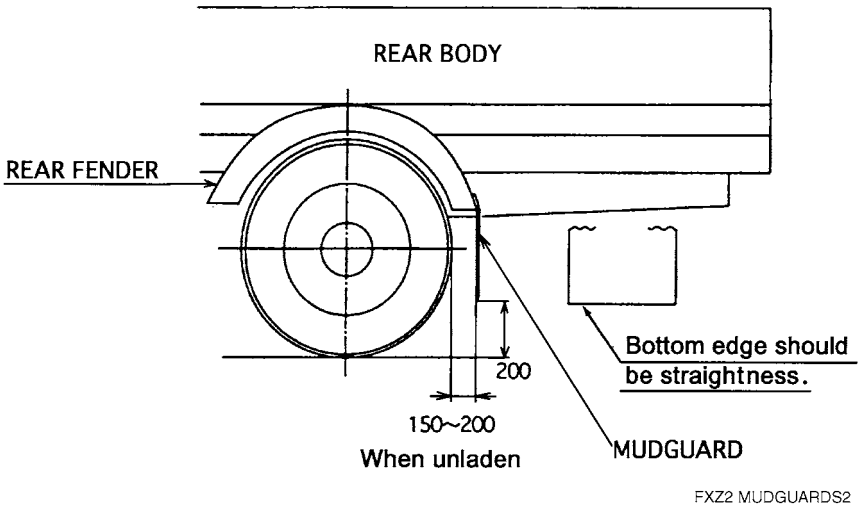

https://truckmanualshub.com/

ELECTRIC WELDING WORK

Electrical components such as the alternator and tachograph are directly connected to the battery and one end is grounded to the chassis frame. Under these conditions, welding current will flow back along the ground circuit if electric welding is carried out and damage may be caused to the alternator, tachograph, electrical components, etc.

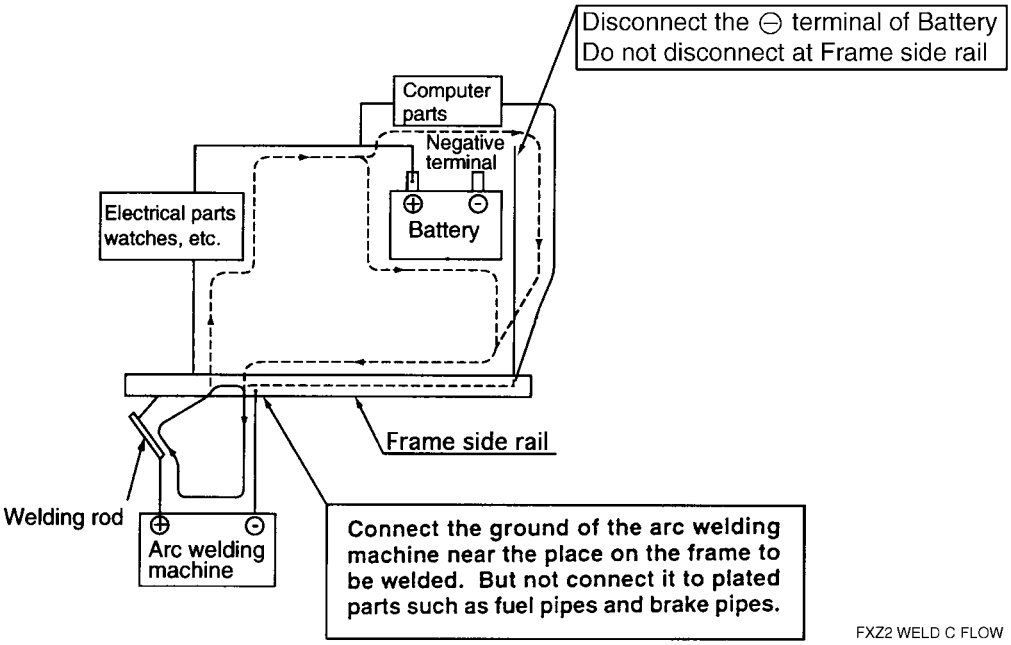

* Be sure to follow all instructions to be described to chapter 2, 2-9 PRECAUTION ON BODY MOUNTING WORK and following precautions at performing any electric welding.

(1) procedure before welding

* • Make sure to always wear the electric insulation equipment(insulation rubber gloves .etc)while working.
  • Turn the starter switch OFF.
* • Pull out the SERVICE PLUG of PCU and wait more than 7 minutes.
  • Disconnect the battery's negative terminal.
  • Disconnect the connector of DC-DC Converter.
  • Disconnect fuse of ECU of the each electronic instrument (except DC-DC Converter).
* • Dinconnect all signal circuit connectors in PCU, after taking off the front under cover of PCU.
  (See the page 2-5-3)

* Peculiar to XKU417L-HKFQB3

https://truckmanualshub.com/

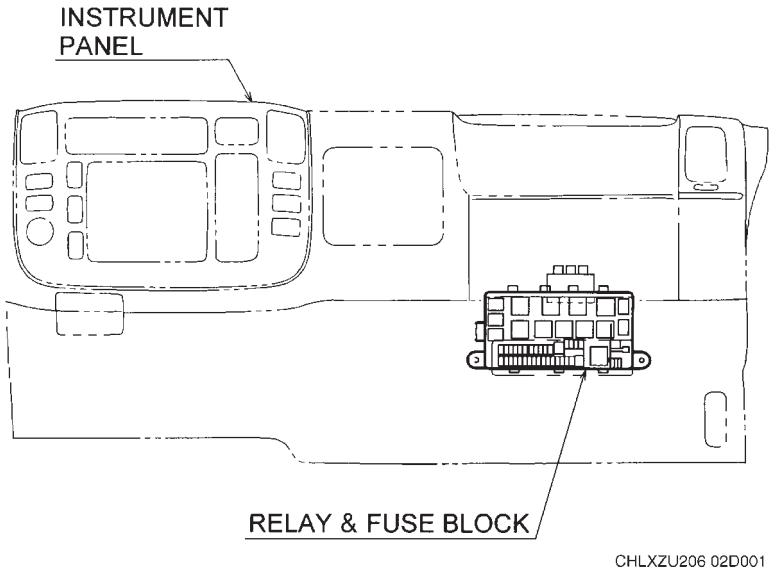

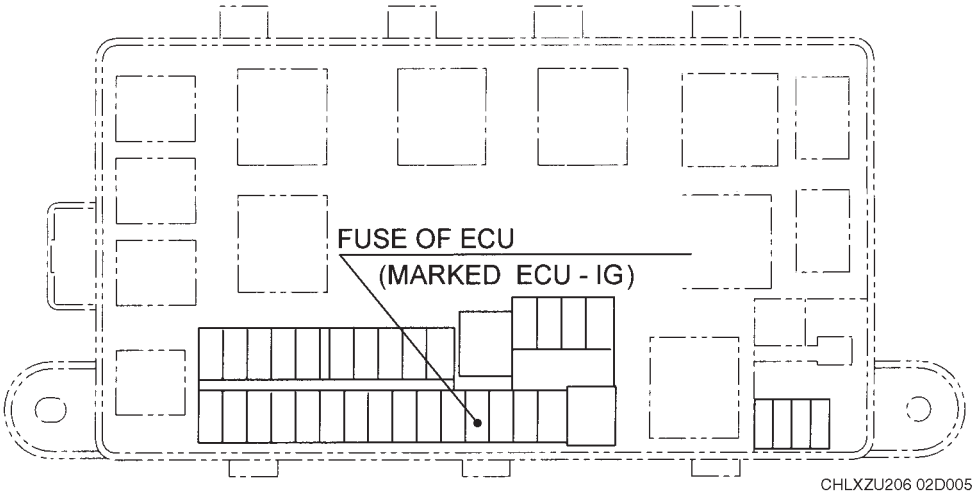

DETAILS, RELAY & FUSE BLOCK

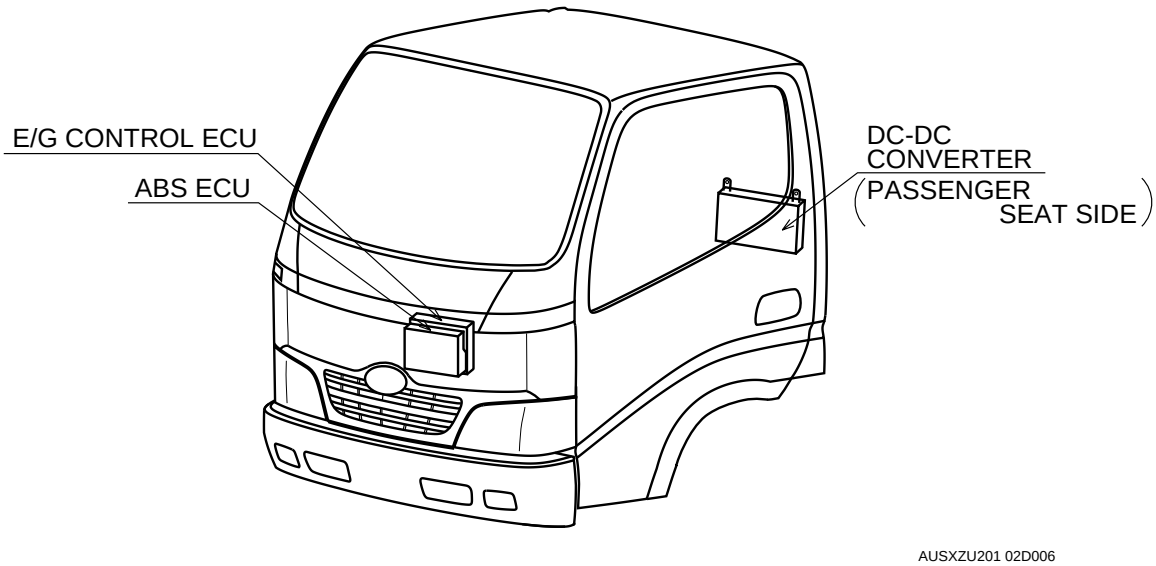

https://truckmanualshub.com/

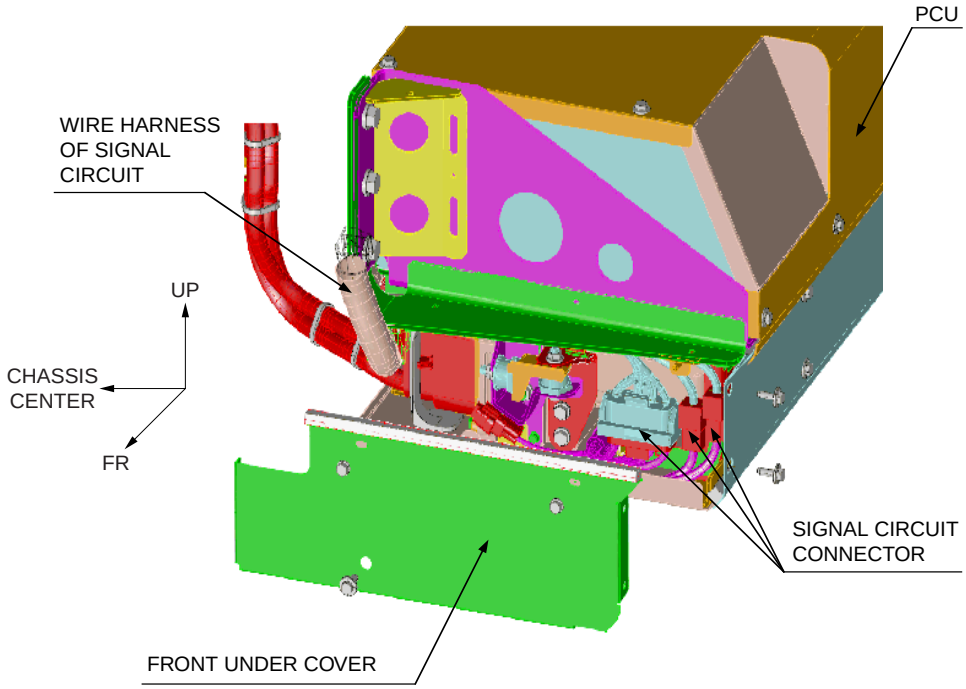

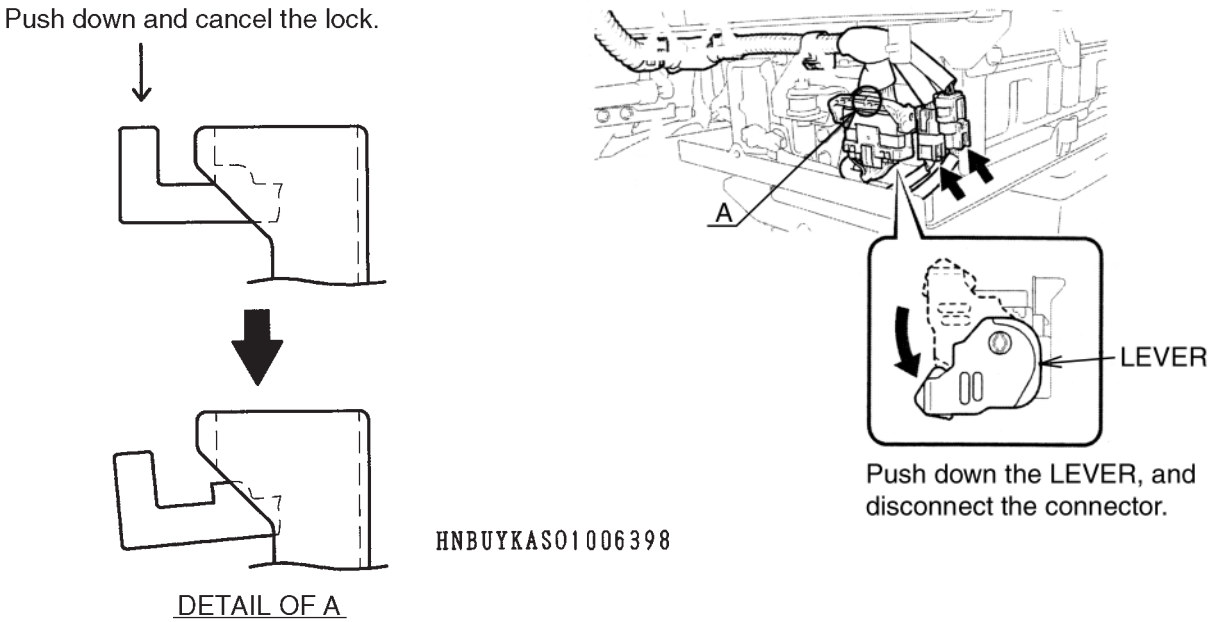

https://truckmanualshub.com/

(2) Ground of the Welding Equipment

Connect the ground of the welding equipment near the place where to be welded.

Welding to the chassis frame

- Connect the ground to the bolt (plating bolt) or chassis frame near the place where to be welded.
- Peel off the paint where to be welded.
- Connecting the ground to the chassis spring is strictly prohibited to prevent damage of the spring.

Welding to the cab body

- Connect the ground to the fixing bolt of cab hinge after dismounting the front grille or to the cab body.

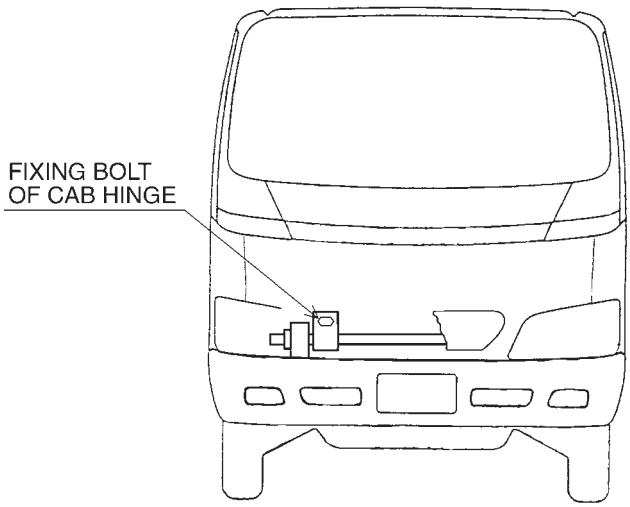

AUSXZU201 02D008

(3) Other Precautions

- To protect ancillary equipment from sparks during welding, place fire-resistant covers over the rubber hoses, wire harness, pipes, chassis spring and tires, etc.
- Perform to weld under most suitable conditions of the welding, and minimize the heat influence to the circumference where to be welded, and as far as possible to keep the welding quality.

https://truckmanualshub.com/

(4) After Welding

* • Make sure to connect all signal circuit connectors in PCU.

• Put back fuses as original condition.

• Make sure to connect the DC-DC Converter.

• Make sure to connect the negative terminal of the battery.
And the terminal should be horizontally setting.

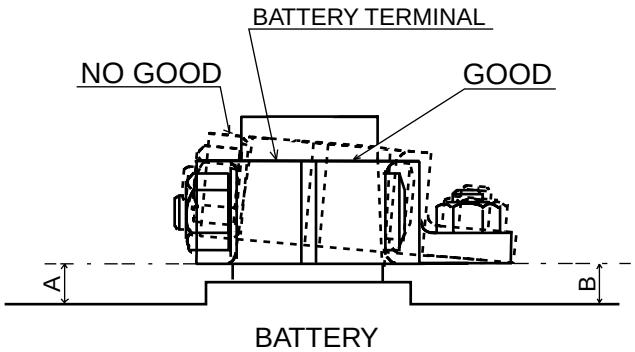

A : B = SAME HEIGHT

FXZ2 BATTERY

• Re-paint the place where to be peeled off the paint for grounding the welding equipment by same color.

(5) Final Inspection after Welding

• Restore each electronic instrument and equipment to its original site.

* • Install the SERVICE PLUG.
(Refer the 2-9 PRECAUTION ON BODY MOUNTING WORK)

• Inspect the operation and function of all electronic instruments and equipments.

• Consult to each Hino sales dealer or distributor for the details of inspection's procedure.

* Peculiar to XKU417L-HKFQB3

https://truckmanualshub.com/

NOTES ON ADDITIONAL WIRING IN THE ENGINE COMPARTMENT

Since the engines in HINO trucks are covered with sound arrest plates, the engine compartment tends to heat up.

Avoid wiring in the engine compartment if possible.

Additional wiring harness or cable should be kept away from heated elements, and should be wired along the main harness.

https://truckmanualshub.com/

NOTES ON ENGINE CONTROL, BRAKE ABS SYSTEM COMPUTERS AND DC-DC CONVERTER

Engine control and brake ABS computers are installed center part, inside of the instrument panel, and DC-DC converter is installed on right side of the cab back panel as described following figure.

Therefore, give great care to the computer and converter when performing any body mounting work or modification as following points.

(1) Be sure to follow the all instruction to be described to chapter 2, 2-5 ELECTRIC WELDING WORK and 2-9 PRECAUTION ON BODY MOUNTING WORK (XKU417L-HKFQB3 only) before peforming any electric welding.

(2) Be sure to cover the computer and converter to protect the water penetration when performing cleaning up the inside of cab.

(3) When mounting such devices as a radiophone, a wireless communication device, be sure to use the devices that conforms to the electric control act and install the devices on the places which are as far as possible from the computers and it's harness.
Do not install any high output (over 50w) device.
Be sure to check that no abnormal electric wave or electromagnetic wave is found, after having installed the device, which affects on the electronic signals passing through in computer harness.

(4) Do not alter the computer and converter, harness wire or sensors.

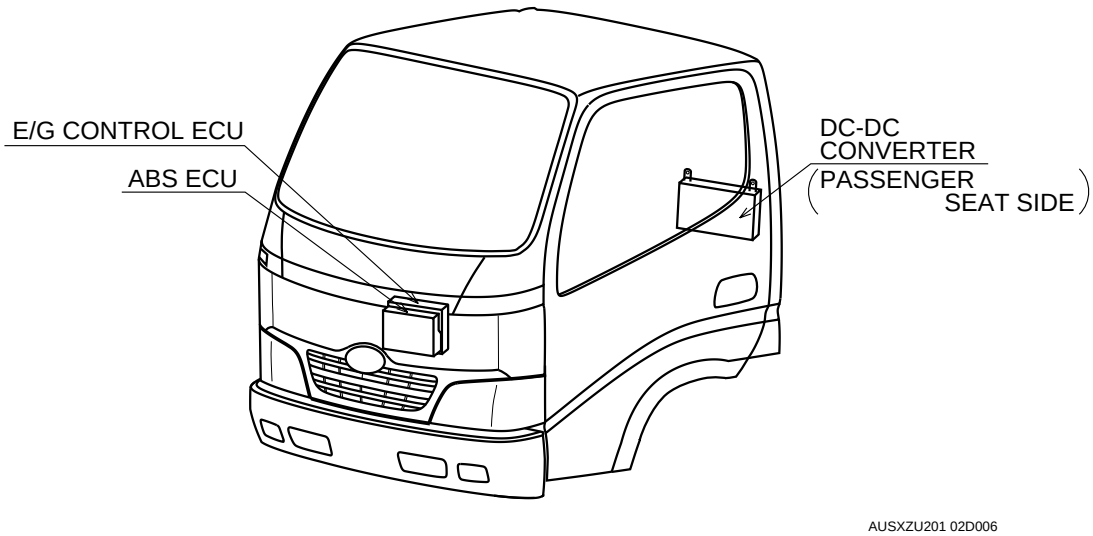

https://truckmanualshub.com/

HANDLING OF PARTS FOR MEETING THE EXTERNAL NOISE CONTROL REGULATION

To comply with the external noise control regulation, parts for external noise reduction, such as sound-insulating materials (cover, rubber) sound-absorbing materials, muffler etc., are equipped on the cab, the engine and the chassis. Since the parts for external noise reduction and their fitting locations are depending on the vehicle model, refer to the corresponding explanatory example drawing shown in the following. To ensure external noise reductions, following items must be observed when mounting a superstructure.

(1) The parts for external noise reduction must not be modified or detached, since their specifications are determined to comply with the limiting value of the external noise regulation. The position and/or direction of the tail pipe must also not be changed.

(2) If the parts for external noise reduction are temporarily detached for mounting a superstructure, handle them carefully to prevent their deformation and/or damage, and be sure attach them on original position after completion of mounting the superstructure.
If the parts for external noise reduction have been deformed and/or damaged, replace them with genuine parts and never use rectified parts.

https://truckmanualshub.com/

PRECAUTION ON BODY MOUNTING WORK

Installation position of hybrid related equipment.

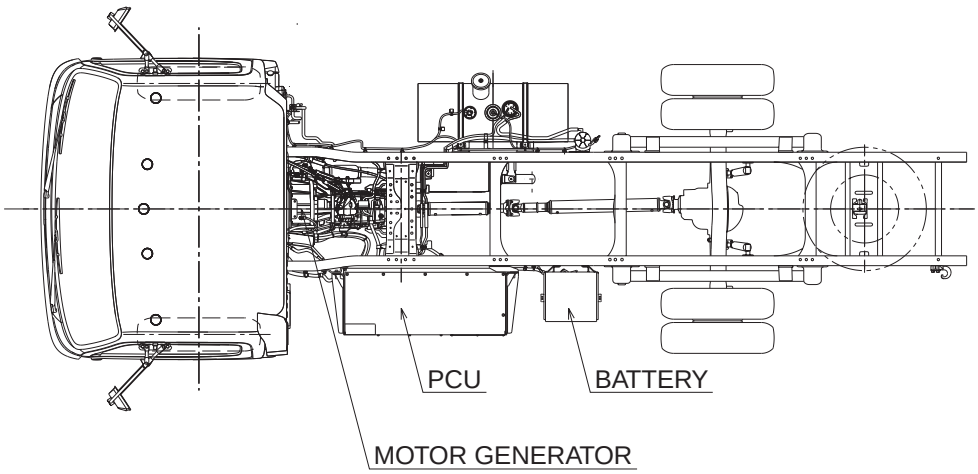

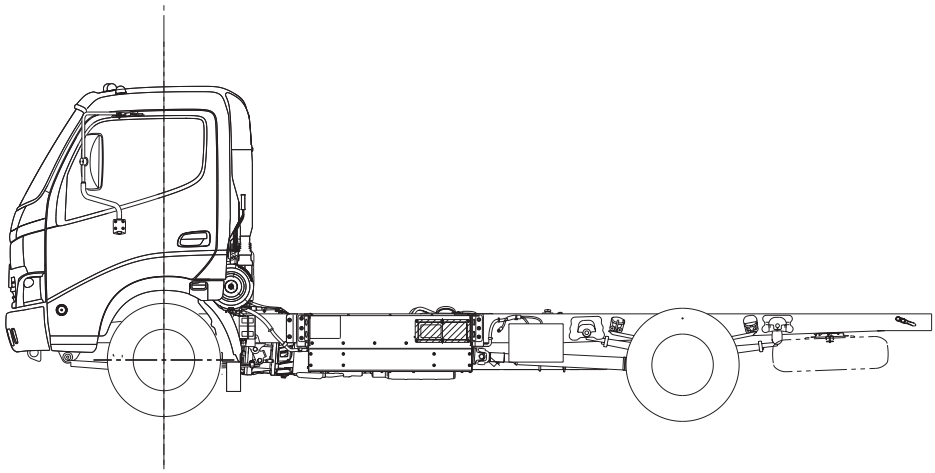

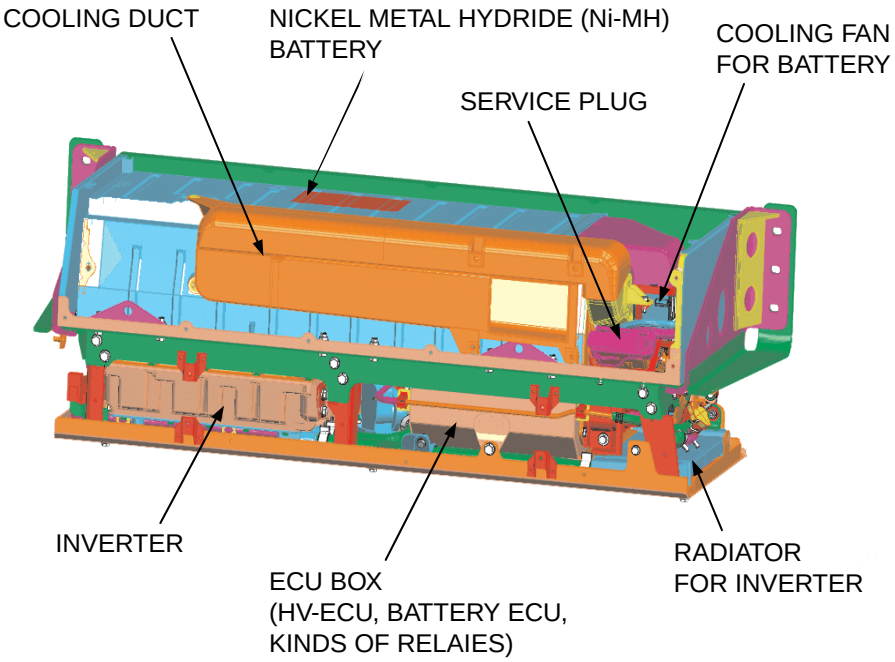

INNER STRUCTURE OF PCU

https://truckmanualshub.com/

Precaution on body mounting work.

Before starting to mount a body please make sure to contact a distributor and receive suitable advice.

Carry out mounting a body paying attention to following precautions.

- Make sure to always wear the electric insulation equipment (insulation rubber gloves .etc) while working.
- Prior to performing the body mounting, turn the starter switch to OFF, pull out the SERVICE PLUG of PCU and wait more than 7 minutes. (see following figures)
  Strictly observe abouve precautions to avoid receiving electric shock.
- Do not attach the SERVICE PLUG which removed till the end of work.

* It takes 7 minutes to discharge the electricity of high-voltage condenser of the inverter.

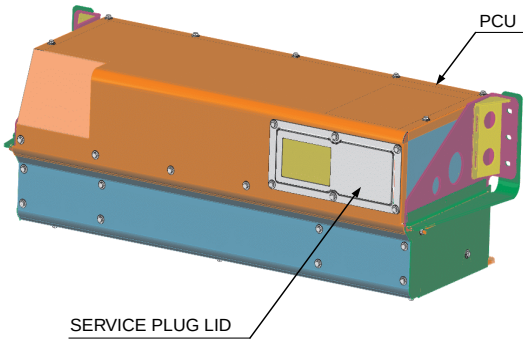

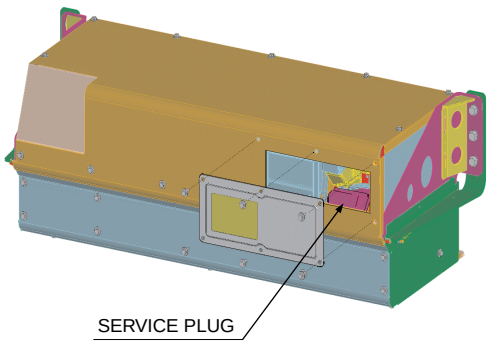

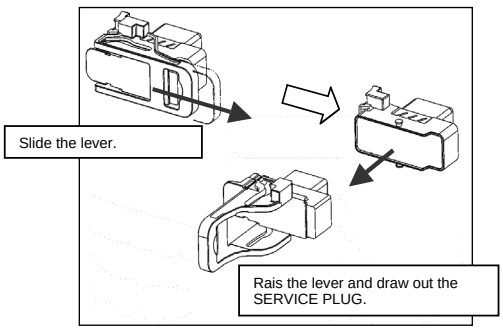

Procedure of the SERVICE PLUG removal

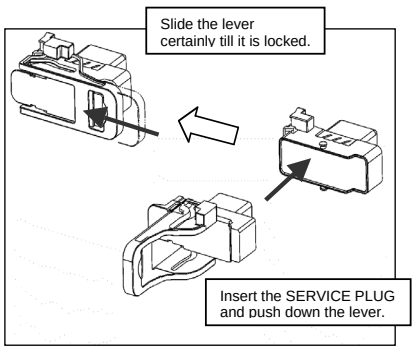

Procedure of the SERVICE PLUG installation

https://truckmanualshub.com/

- Pay attention to handle high voltage harness wires which are rolled by orange color tape.
- Never get on the hybrid system equipment such as the battery and the inverter. You might get an electric shock or damage a equipment.
- During work, protect PCU cover to prevent blemish and dirt adheres.
- The SERVICE PLUG LID (hereinafter termed LID) is directional.
  When attaching the LID, the air intake port of LID must be placed in the direction of vehicle front. (see following figures)
  If the LID is placed in the wrong direction, the intake port of Ni-MH BATTERY COOLING DUCT will be coverd and the battery gets hot unusually.
  It causes other faults.

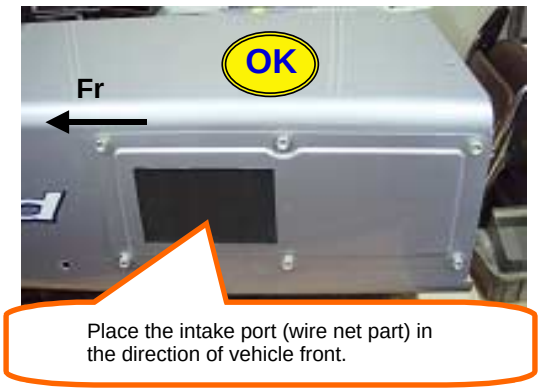

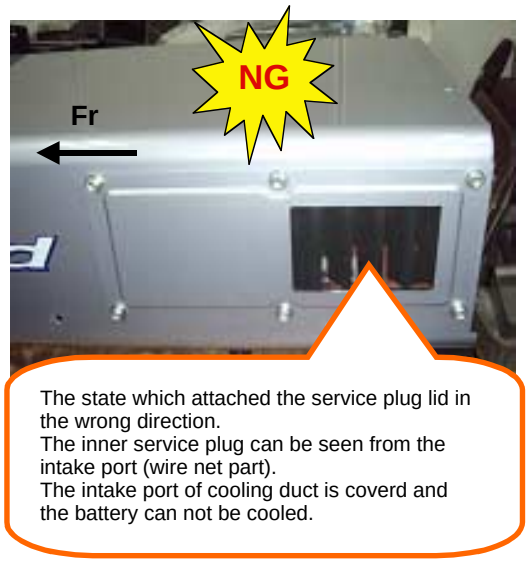

https://truckmanualshub.com/

THE NOISE MEASURES OF THE AM RADIO

Make sure to connect 2 earth wires between body and / or equipment(hereinafter termed body) and chassis frame for the noise preventing of the AM radio by the hybrid system.

- Between body and chassis frame
  Connect one side of the earth wire to the center part of front end of body and the other side to the chassis frame with the fitting nut of parking brake cable bracket.
  Tightening torque of nut : 18±5N·m
  In order to secure an electric conductivity remove the paint of the fixing part.
  Make sure to give anti-rust treatment to the fixing part after installing the each wire.

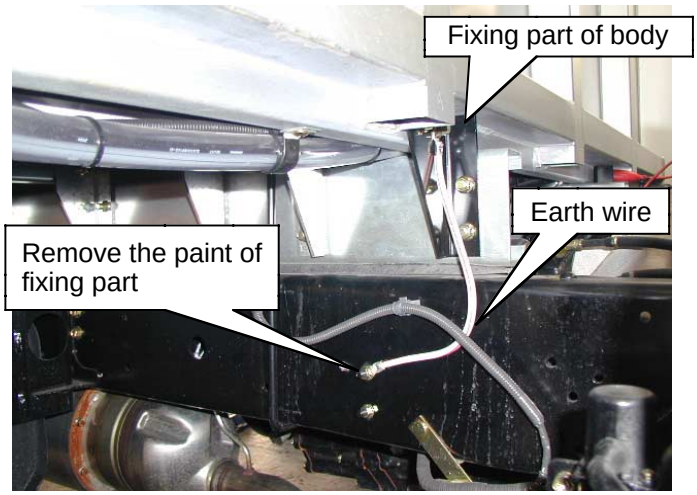

The above figure is the example witch connected the earth wire to the center part of front end of aluminum van and the right side of chassis frame.

https://truckmanualshub.com/

- Between body and motor generator
  Connect one side of the earth wire to the center part of front end body and the other side to the grounding terminal of the motor generator together with the earth wire of the motor generator with the existing bolt.(See the following figure)
  Tightening torque of bolt : 24±7.2N·m
  Tie the additional earth wire to the nearby cable with tie-rap.

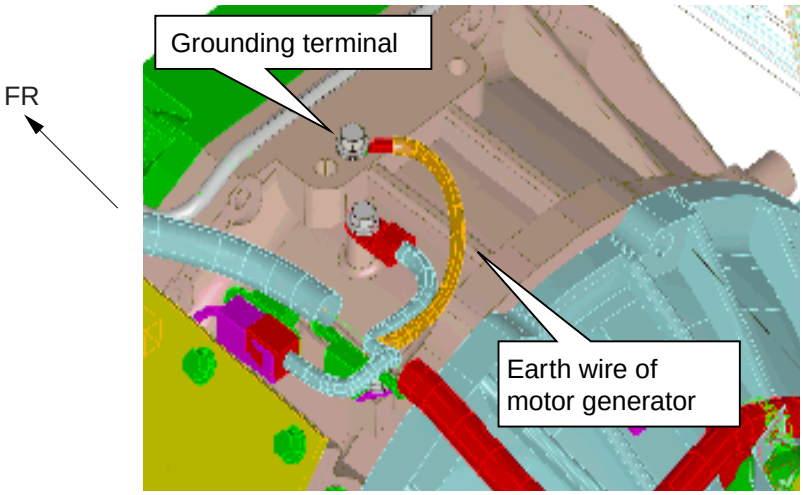

Additional earth wires are contained in the package in the cab.
Part number of earth cable (Assembly part number : 82046-37160)

Place ti be fitted	Part number
Between body and parking brake cable bracket	82284-37160
Between body and motor generator	

Prepare bolts, nuts and washers to needed for mounting body by body builder.

https://truckmanualshub.com/

3. CHASSIS MASS & FRAME SECTION MODULUS

CHASSIS MASS ····· 3 - 1
FRAME SECTION MODULUS ····· 3 - 2

https://truckmanualshub.com/

CHASSIS MASS

MODEL	XZU307L-HKMLB3			XZU307L-HKMMB3			XZU347L-HKMMB3			XZU407L-HKMMD3			XZU407L-HKMQD3		
ITEMS	MASS (kg)	GRAVITY POSITION FROM F.A.C (m)	MOMENT FROM F.A.C (kg·m)	MASS (kg)	GRAVITY POSITION FROM F.A.C (m)	MOMENT FROM F.A.C (kg·m)	MASS (kg)	GRAVITY POSITION FROM F.A.C (m)	MOMENT FROM F.A.C (kg·m)	MASS (kg)	GRAVITY POSITION FROM F.A.C (m)	MOMENT FROM F.A.C (kg·m)	MASS (kg)	GRAVITY POSITION FROM F.A.C (m)	MOMENT FROM F.A.C (kg·m)
FRONT BUMPER	7	-0.920	-6.440	7	-0.920	-6.440	7	-0.920	-6.440	13	-0.970	-12.610	13	-0.970	-12.610
CAB FRONT	211	-0.827	-174.497	211	-0.827	-174.497	211	-0.827	-174.497	205	-0.867	-177.735	205	-0.867	-177.735
CAB FRONT MTG.	23	-0.827	-19.021	23	-0.827	-19.021	23	-0.827	-19.021	23	-0.867	-19.941	23	-0.867	-19.941
STEERING GEAR BOX	19	-0.715	-13.585	19	-0.715	-13.585	19	-0.715	-13.585	20	-0.755	-15.100	20	-0.755	-15.100
RADIATOR	16	-0.220	-3.520	16	-0.220	-3.520	16	-0.220	-3.520	16	-0.220	-3.520	16	-0.220	-3.520
STEERING CONTROL	2	-0.200	-0.400	2	-0.200	-0.400	2	-0.200	-0.400	3	-0.190	-0.570	3	-0.190	-0.570
ENGINE FRONT	373	0.175	65.275	363	0.175	63.525	373	0.175	65.275	377	0.175	65.975	377	0.175	65.975
CONTROL	7	0.440	3.080	7	0.440	3.080	7	0.440	3.080	7	0.480	3.360	7	0.480	3.360
ENGINE ROOM (COVER)	1.4	0.000	0.000	1.4	0.000	0.000	1.4	0.000	0.000	1.4	0.000	0.000	1.4	0.000	0.000
AIR CLEANER	7	0.790	5.530	7	0.790	5.530	7	0.790	5.530	11	0.385	4.235	11	0.385	4.235
CAB REAR	104	0.455	47.320	104	0.455	47.320	104	0.455	47.320	164	0.465	76.260	164	0.465	76.260
CAB REAR MTG.	30	0.455	13.650	30	0.455	13.650	30	0.455	13.650	35	0.465	16.275	35	0.465	16.275
ENGINE REAR	112	1.114	124.768	112	1.114	124.768	112	1.114	124.768	113	1.180	133.340	113	1.180	133.340
REAR SPLASH	2	0.450	0.900	2	0.450	0.900	2	0.450	0.900	4	0.460	1.840	4	0.460	1.840
BRAKE SYSTEM	4	-0.600	-2.400	4	-0.600	-2.400	4	-0.600	-2.400	4	-0.600	-2.400	7	-0.600	-4.200
ELECTRIC SYSTEM	14	0.400	5.600	14	0.400	5.600	14	0.400	5.600	15	0.500	7.500	15	0.500	7.500
EXHAUST SYSTEM	27	1.261	34.047	31	1.545	47.895	27	1.261	34.047	27	1.269	34.263	27	1.269	34.263
BATTERY	32	1.157	37.024	32	1.157	37.024	32	1.157	37.024	38	1.207	45.866	38	1.207	45.866
FUEL TANK	76	1.335	101.460	76	1.335	101.460	104	2.140	222.560	104	1.325	137.800	104	1.325	137.800
FUEL TANK (SUB)															
A/C															
PROPELLER SHAFT (FRONT)															
PROPELLER SHAFT (REAR)	12	1.800	21.600	12	1.800	21.600	25	2.240	56.000	14	2.090	29.260	14	2.090	29.260
FRAME ETC.	184	1.335	245.640	217	1.270	275.590	258	1.870	482.460	211	1.360	286.960	211	1.360	286.960
SPARE TIRE CARRIER	7	3.160	22.120	7	3.370	23.590	7	4.295	30.065	7	1.850	12.950	7	1.850	12.950
SPARE TIRE	32.4	3.160	102.384	33.2	3.370	111.884	32.4	4.295	139.158	32.4	1.850	59.940	38.4	1.850	71.040
FRONT SUSPENSION	60	0.000	0.000	83	0.000	0.000	73	0.000	0.000	72	0.000	0.000	72	0.000	0.000
REAR SUSPENSION	112	2.525	282.800	96	2.525	242.400	134	3.400	455.600	128	2.810	359.680	128	2.810	359.680
TOOL BOX															
TORSION BAR & SUPPORT (4WD)															
REAR BUMPER															
P.T.O															
CAB TILT															
PCU															
AIR BUG															
STABILIZER (FRONT)															
STABILIZER (REAR)															
DISCHARGE HEAD LAMP															
TOOL	10	0.500	5.000	10	0.500	5.000	10	0.500	5.000	10	0.500	5.000	10	0.500	5.000
TOTAL	1484.8	0.605	898.335	1519.6	0.599	910.953	1634.8	0.923	1508.174	1654.8	0.634	1048.628	1663.8	0.636	1057.928
WHEEL BASE (m)	2.525			2.525			3.400			2.810			2.810		
	FRONT (kg)	REAR (kg)	TOTAL (kg)	FRONT (kg)	REAR (kg)	TOTAL (kg)	FRONT (kg)	REAR (kg)	TOTAL (kg)	FRONT (kg)	REAR (kg)	TOTAL (kg)	FRONT (kg)	REAR (kg)	TOTAL (kg)
SPRUNG MASS	1,129	356	1,485	1,159	361	1,520	1,191	444	1,635	1,282	373	1,655	1,287	376	1,664
UNSPRUNG MASS	189	249	438	189	344	533	189	344	533	213	337	550	229	361	590
CHASSIS MASS	1,318	605	1,923	1,348	705	2,053	1,380	788	2,168	1,495	710	2,205	1,516	737	2,254
GRAVITY POSITION FROM F.A.C (m)	0.794			0.867			1.235			0.905			0.919		
GRAVITY HEIGHT FROM GROUND (m)	0.524			0.565			0.555			0.628			0.667		

AUSXZU201 03T002

CHASSIS MASS : On Std. spec, filled with lubricants, coolant and fuel, with spare tire and Std. tool sets.

https://truckmanualshub.com/

MODEL	XZU407L-HKFQD3			XZU407L-HKFRD3			XZU417L-HKMMD3			XZU417L-HKFQD3			XZU417L-HKFRD3		
ITEMS	MASS (kg)	GRAVITY POSITION FROM F.A.C (m)	MOMENT FROM F.A.C (kg·m)	MASS (kg)	GRAVITY POSITION FROM F.A.C (m)	MOMENT FROM F.A.C (kg·m)	MASS (kg)	GRAVITY POSITION FROM F.A.C (m)	MOMENT FROM F.A.C (kg·m)	MASS (kg)	GRAVITY POSITION FROM F.A.C (m)	MOMENT FROM F.A.C (kg·m)	MASS (kg)	GRAVITY POSITION FROM F.A.C (m)	MOMENT FROM F.A.C (kg·m)
FRONT BUMPER	13	-0.970	-12.610	13	-0.970	-12.610	13	-0.970	-12.610	13	-0.970	-12.610	13	-0.970	-12.610
CAB FRONT	205	-0.867	-177.735	205	-0.867	-177.735	205	-0.867	-177.735	205	-0.867	-177.735	205	-0.867	-177.735
CAB FRONT MTG.	23	-0.867	-19.941	23	-0.867	-19.941	23	-0.867	-19.941	23	-0.867	-19.941	23	-0.867	-19.941
STEERING GEAR BOX	20	-0.755	-15.100	20	-0.755	-15.100	20	-0.755	-15.100	20	-0.755	-15.100	20	-0.755	-15.100
RADIATOR	16	-0.220	-3.520	16	-0.220	-3.520	16	-0.220	-3.520	16	-0.220	-3.520	16	-0.220	-3.520
STEERING CONTROL	3	-0.190	-0.570	3	-0.190	-0.570	3	-0.190	-0.570	3	-0.190	-0.570	3	-0.190	-0.570
ENGINE FRONT	387	0.175	67.725	387	0.175	67.725	377	0.175	65.975	387	0.175	67.725	387	0.175	67.725
CONTROL	7	0.480	3.360	7	0.480	3.360	7	0.480	3.360	7	0.480	3.360	7	0.480	3.360
ENGINE ROOM (COVER)	1.4	0.000	0.000	1.4	0.000	0.000	1.4	0.000	0.000	1.4	0.000	0.000	1.4	0.000	0.000
AIR CLEANER	11	0.385	4.235	11	0.385	4.235	11	0.385	4.235	11	0.385	4.235	11	0.385	4.235
CAB REAR	164	0.465	76.260	164	0.465	76.260	164	0.465	76.260	164	0.465	76.260	164	0.465	76.260
CAB REAR MTG.	35	0.465	16.275	35	0.465	16.275	35	0.465	16.275	35	0.465	16.275	35	0.465	16.275
ENGINE REAR	121	1.180	142.780	121	1.180	142.780	113	1.180	133.340	121	1.180	142.780	121	1.180	142.780
REAR SPLASH	4	0.460	1.840	4	0.460	1.840	4	0.460	1.840	4	0.460	1.840	4	0.460	1.840
BRAKE SYSTEM	7	-0.600	-4.200	7	-0.600	-4.200	4	-0.600	-2.400	7	-0.600	-4.200	7	-0.600	-4.200
ELECTRIC SYSTEM	15	0.500	7.500	15	0.500	7.500	15	0.500	7.500	15	0.500	7.500	15	0.500	7.500
EXHAUST SYSTEM	27	1.269	34.263	27	1.269	34.263	27	1.269	34.263	27	1.269	34.263	27	1.763	47.601
BATTERY	38	1.207	45.866	38	1.207	45.866	38	1.207	45.866	38	1.207	45.866	38	1.207	45.866
FUEL TANK	104	1.325	137.800	104	1.325	137.800	104	1.945	202.280	104	1.945	202.280	104	1.945	202.280
FUEL TANK (SUB)															
A/C															
PROPELLER SHAFT (FRONT)															
PROPELLER SHAFT (REAR)	14	2.090	29.260	14	2.090	29.260	26	2.400	62.400	26	2.400	62.400	26	2.400	62.400
FRAME ETC.	211	1.360	286.960	234	1.360	318.240	268	1.790	479.720	268	1.790	479.720	268	1.790	479.720
SPARE TIRE CARRIER	7	1.850	12.950	7	1.850	12.950	7	4.400	30.800	7	4.400	30.800	7	4.400	30.800
SPARE TIRE	38.4	1.850	71.040	46.5	1.850	86.025	32.4	4.400	142.560	38.4	4.400	168.960	46.5	4.400	204.600
FRONT SUSPENSION	72	0.000	0.000	72	0.000	0.000	72	0.000	0.000	72	0.000	0.000	81	0.000	0.000
REAR SUSPENSION	128	2.810	359.680	128	2.810	359.680	128	3.430	439.040	128	3.430	439.040	128	3.430	439.040
TOOL BOX															
TORSION BAR & SUPPORT (4WD)															
REAR BUMPER															
P.T.O															
CAB TILT															
PCU															
AIR BUG															
STABILIZER (FRONT)															
STABILIZER (REAR)															
DISCHARGE HEAD LAMP															
TOOL	10	0.500	5.000	10	0.500	5.000	10	0.500	5.000	10	0.500	5.000	10	0.500	5.000
TOTAL	1681.8	0.636	1069.118	1712.9	0.651	1115.383	1723.8	0.881	1518.838	1750.8	0.888	1554.628	1767.9	0.907	1603.606
WHEEL BASE (m)	2.810			2.810			3.400			3.430			3.430		
	FRONT (kg)	REAR (kg)	TOTAL (kg)	FRONT (kg)	REAR (kg)	TOTAL (kg)	FRONT (kg)	REAR (kg)	TOTAL (kg)	FRONT (kg)	REAR (kg)	TOTAL (kg)	FRONT (kg)	REAR (kg)	TOTAL (kg)
SPRUNG MASS	1,301	380	1,682	1,316	397	1,713	1,281	443	1,724	1,298	453	1,751	1,300	468	1,768
UNSPRUNG MASS	229	361	590	256	415	671	213	337	550	229	361	590	256	415	671
CHASSIS MASS	1,530	741	2,272	1,572	812	2,384	1,494	780	2,274	1,527	814	2,341	1,556	883	2,439
GRAVITY POSITION FROM F.A.C (m)	0.917			0.957			1.176			1.193			1.241		
GRAVITY HEIGHT FROM GROUND (m)	0.667			0.660			0.628			0.667			0.660		

AUSXZU201 03T003

CHASSIS MASS : On Std. spec, filled with lubricants, coolant and fuel, with spare tire and Std. tool sets.

https://truckmanualshub.com/

MODEL	XZU427L-HKFQD3			XZU427L-HKFRD3			XKU417L-HKFQB3		
ITEMS	MASS (kg)	GRAVITY POSITION FROM F.A.C (m)	MOMENT FROM F.A.C (kg·m)	MASS (kg)	GRAVITY POSITION FROM F.A.C (m)	MOMENT FROM F.A.C (kg·m)	MASS (kg)	GRAVITY POSITION FROM F.A.C (m)	MOMENT FROM F.A.C (kg·m)
FRONT BUMPER	13	-0.970	-12.610	13	-0.970	-12.610	13	-0.970	-12.610
CAB FRONT	205	-0.867	-177.735	205	-0.867	-177.735	205	-0.867	-177.735
CAB FRONT MTG.	23	-0.867	-19.941	23	-0.867	-19.941	23	-0.867	-19.941
STEERING GEAR BOX	20	-0.755	-15.100	20	-0.755	-15.100	20	-0.755	-15.100
RADIATOR	16	-0.220	-3.520	16	-0.220	-3.520	16	-0.220	-3.520
STEERING CONTROL	3	-0.190	-0.570	3	-0.190	-0.570	3	-0.190	-0.570
ENGINE FRONT	387	0.175	67.725	387	0.175	67.725	402	0.175	70.350
CONTROL	7	0.480	3.360	7	0.480	3.360	7	0.480	3.360
ENGINE ROOM (COVER)	1.4	0.000	0.000	1.4	0.000	0.000	3	0.000	0.000
AIR CLEANER	11	0.385	4.235	11	0.385	4.235	11	0.385	4.235
CAB REAR	164	0.465	76.260	164	0.465	76.260	164	0.465	76.260
CAB REAR MTG.	35	0.465	16.275	35	0.465	16.275	35	0.465	16.275
ENGINE REAR	121	1.180	142.780	121	1.180	142.780	148	1.293	191.364
REAR SPLASH	4	0.460	1.840	4	0.460	1.840	4	0.460	1.840
BRAKE SYSTEM	7	-0.600	-4.200	7	-0.600	-4.200	7	-0.600	-4.200
ELECTRIC SYSTEM	15	0.500	7.500	15	0.500	7.500	20	0.500	10.000
EXHAUST SYSTEM	27	1.903	51.381	27	1.903	51.381	33	1.500	49.500
BATTERY	38	1.207	45.866	38	1.207	45.866	51	2.461	125.511
FUEL TANK	104	2.385	248.040	104	2.385	248.040	104	1.945	202.280
FUEL TANK (SUB)									
A/C									
PROPELLER SHAFT (FRONT)									
PROPELLER SHAFT (REAR)	28	2.620	73.360	28	2.620	73.360	25	2.400	60.000
FRAME ETC.	280	2.030	568.400	280	2.030	568.400	241	1.780	428.980
SPARE TIRE CARRIER	7	4.815	33.705	7	4.815	33.705	7	4.390	30.730
SPARE TIRE	33.1	4.815	159.377	46.5	4.815	223.898	38.4	4.815	184.896
FRONT SUSPENSION	72	0.000	0.000	81	0.000	0.000	72	0.000	0.000
REAR SUSPENSION	128	3.870	495.360	161	3.870	623.070	128	3.430	439.040
TOOL BOX									
TORSION BAR & SUPPORT (4WD)									
REAR BUMPER									
P.T.O									
CAB TILT									
PCU							122	1.300	158.600
AIR BUG									
STABILIZER (FRONT)									
STABILIZER (REAR)									
DISCHARGE HEAD LAMP									
TOOL	10	0.500	5.000	10	0.500	5.000	10	0.500	5.000
TOTAL	1759.5	1.004	1766.788	1814.9	1.079	1959.019	1912.4	0.954	1824.545
WHEEL BASE (m)	3.870			3.870			3.430		
	FRONT (kg)	REAR (kg)	TOTAL (kg)	FRONT (kg)	REAR (kg)	TOTAL (kg)	FRONT (kg)	REAR (kg)	TOTAL (kg)
SPRUNG MASS	1,303	457	1,760	1,309	506	1,815	1,380	532	1,912
UNSPRUNG MASS	229	361	590	256	415	671	229	361	590
CHASSIS MASS	1,532	818	2,350	1,565	921	2,486	1,609	893	2,502
GRAVITY POSITION FROM F.A.C (m)	1.347			1.434			1.224		
GRAVITY HEIGHT FROM GROUND (m)	0.667			0.660			0.667		

AUSXZU201 03T004

CHASSIS MASS : On Std. spec, filled with lubricants, coolant and fuel, with spare tire and Std. tool sets.

https://truckmanualshub.com/

FRAME SECTION MODULUS (MAIN FRAME ON BOTH SIDE)

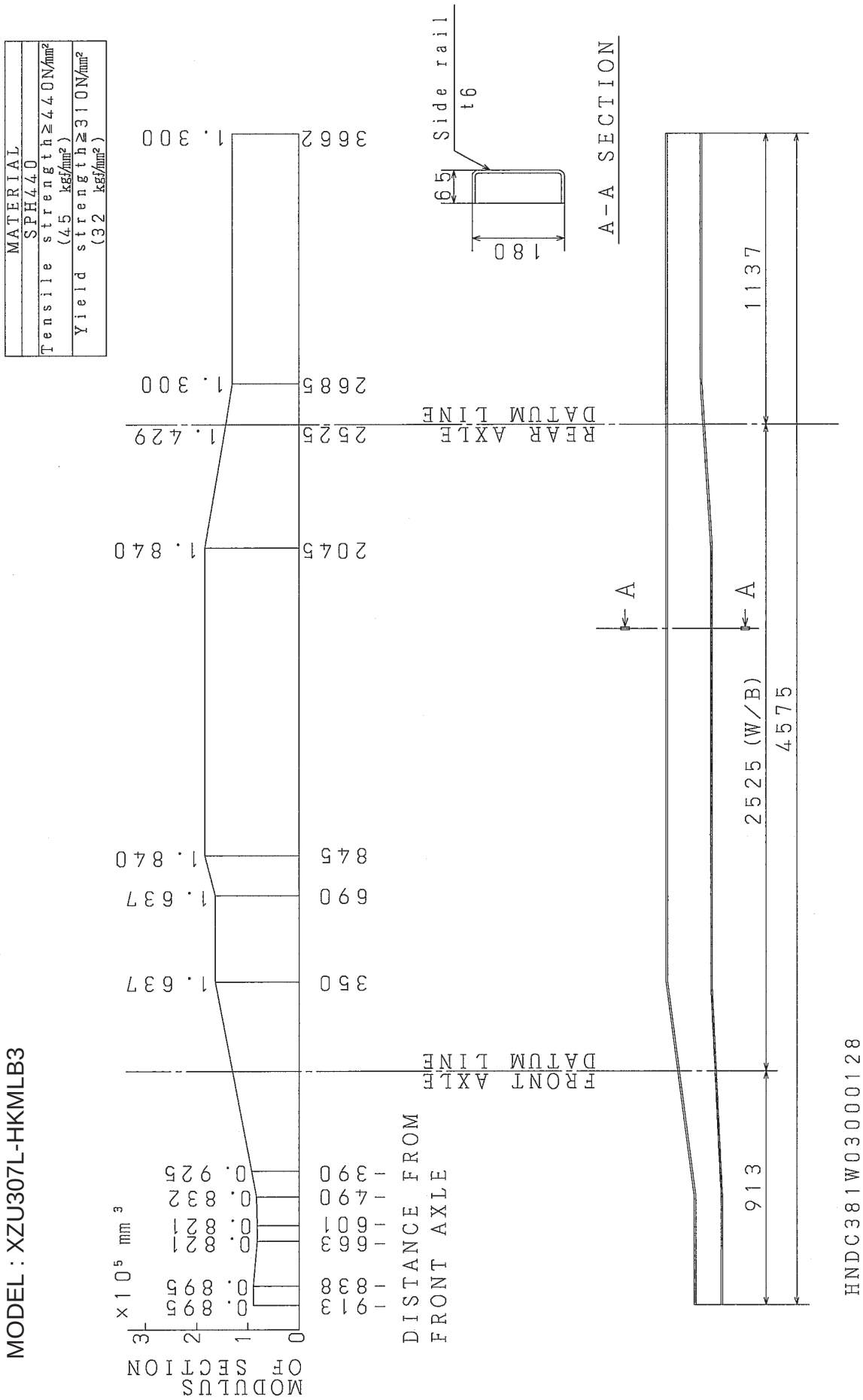

MODEL : XZU307L-HKMLB3

https://truckmanualshub.com/

FRAME SECTION MODULUS (MAIN FRAME ON BOTH SIDE)

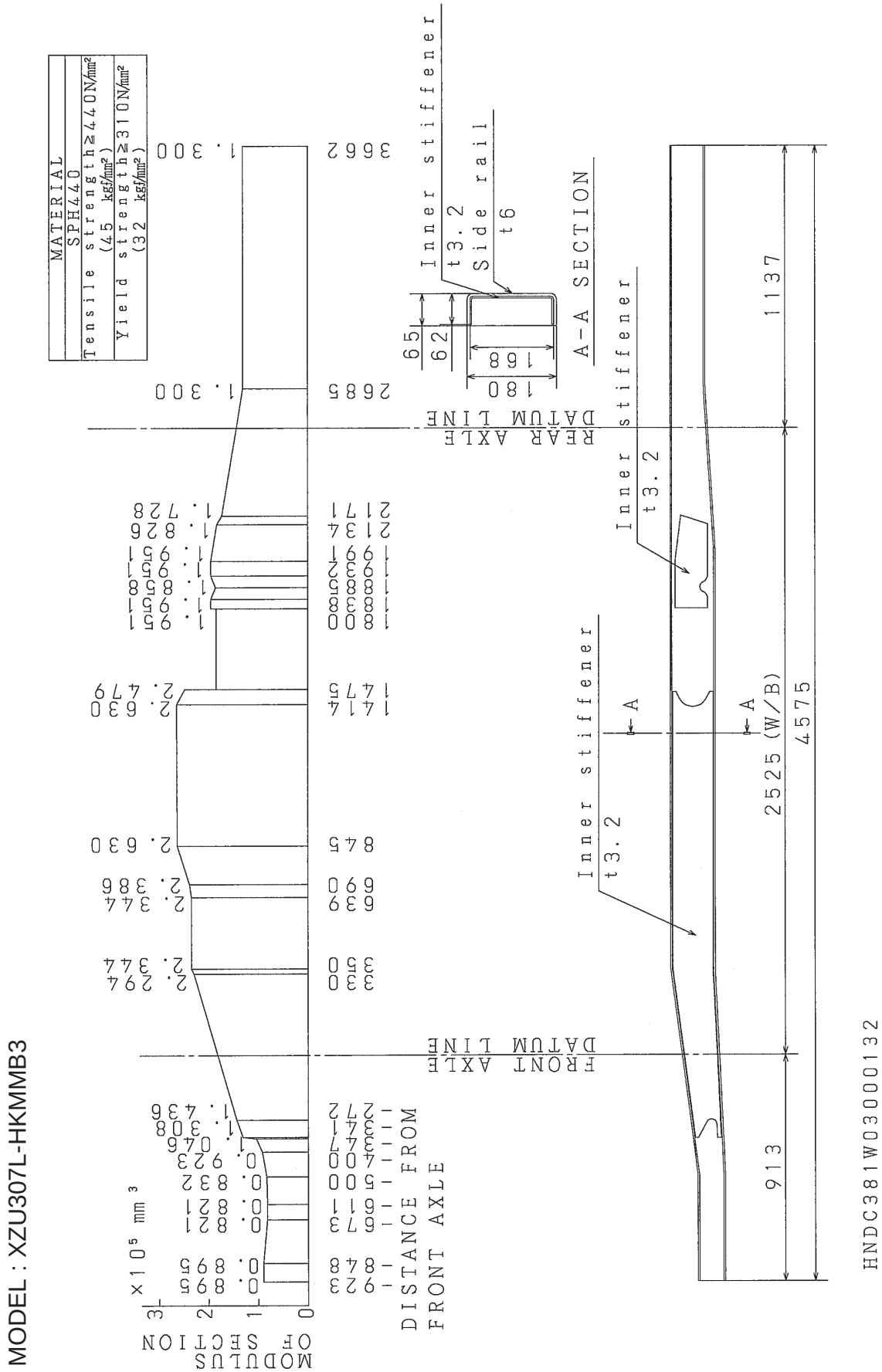

https://truckmanualshub.com/

FRAME SECTION MODULUS (MAIN FRAME ON BOTH SIDE)

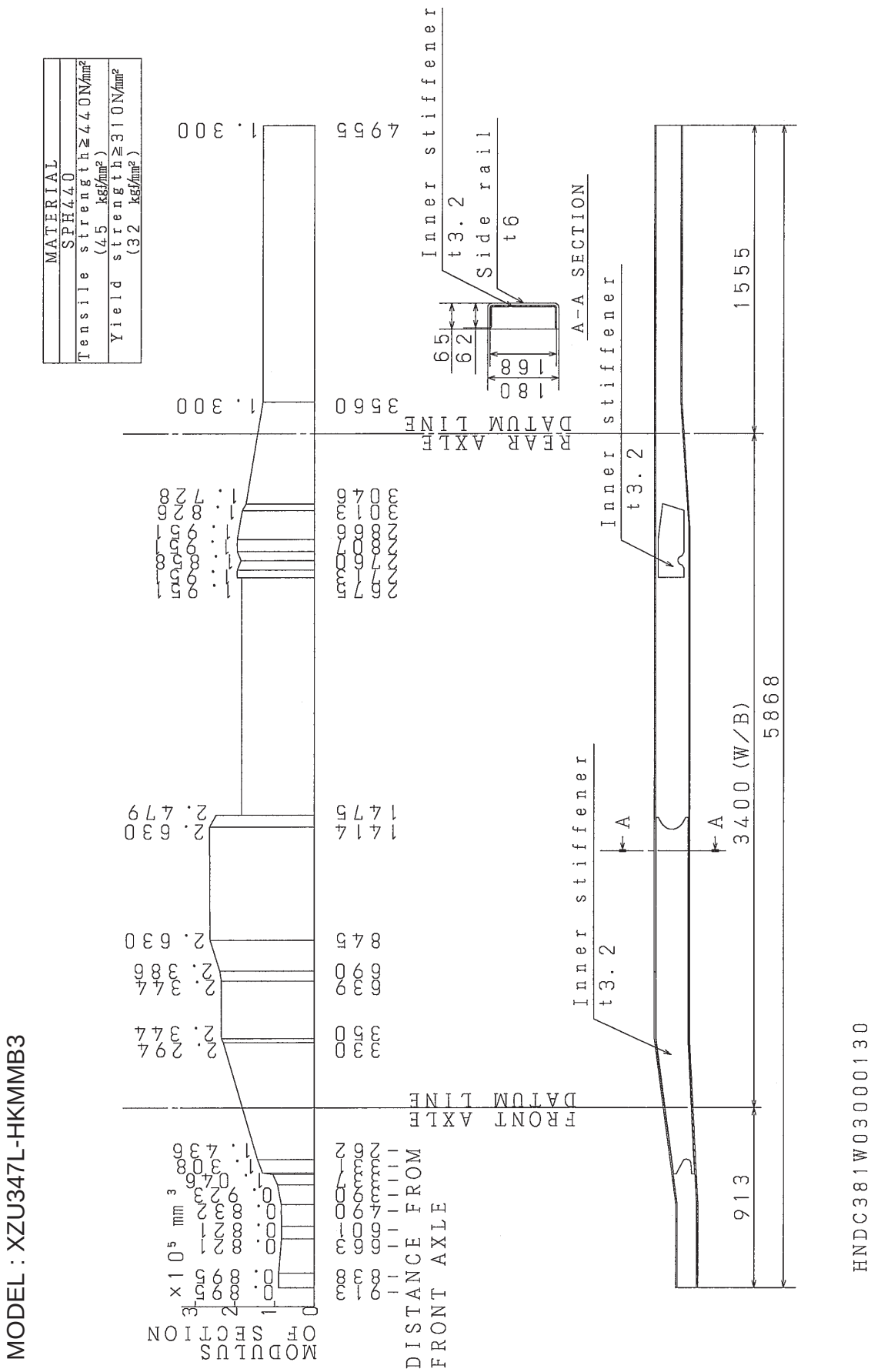

MODEL : XZU347L-HKMMB3

https://truckmanualshub.com/

FRAME SECTION MODULUS (MAIN FRAME ON BOTH SIDE)

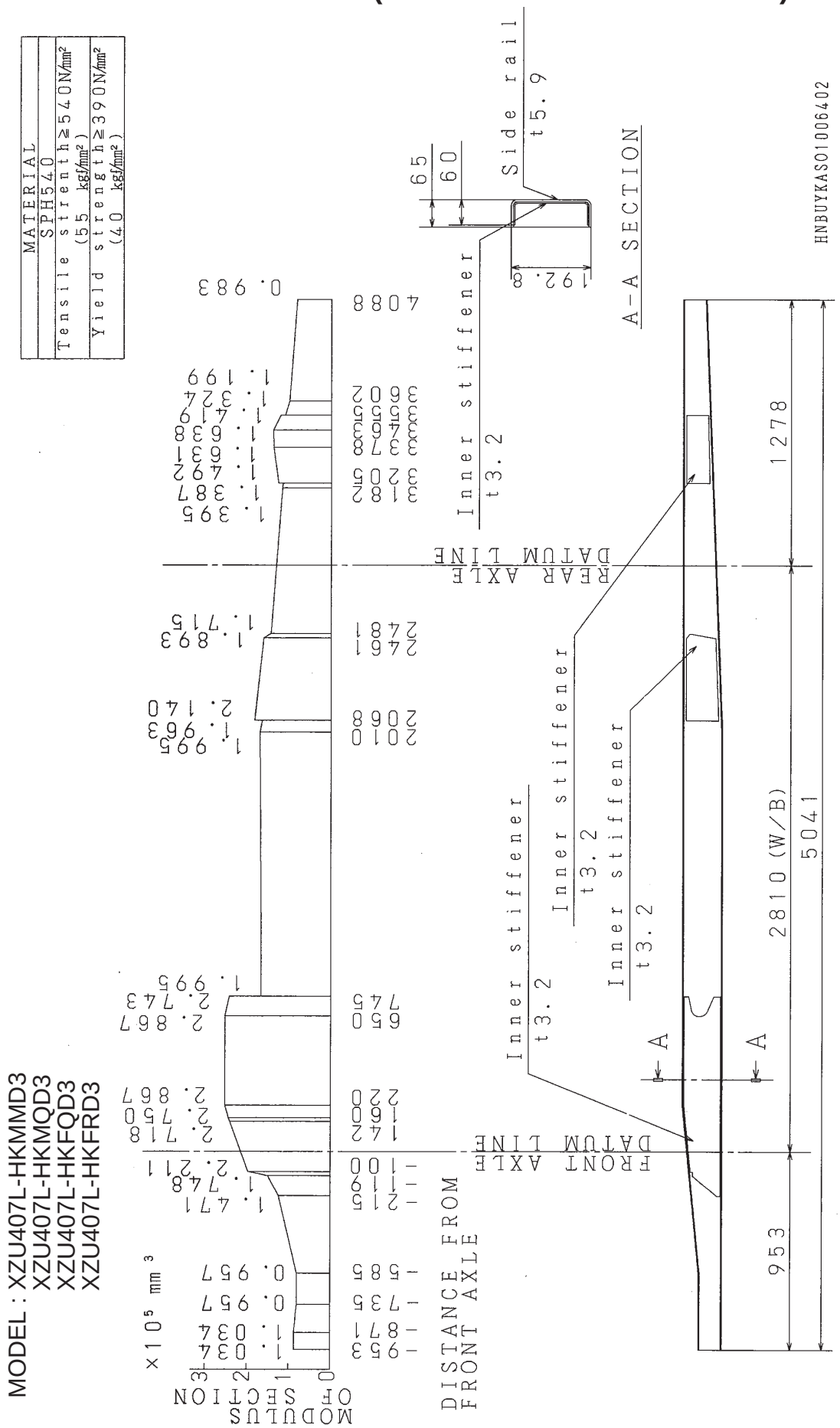

https://truckmanualshub.com/

FRAME SECTION MODULUS (MAIN FRAME ON BOTH SIDE)

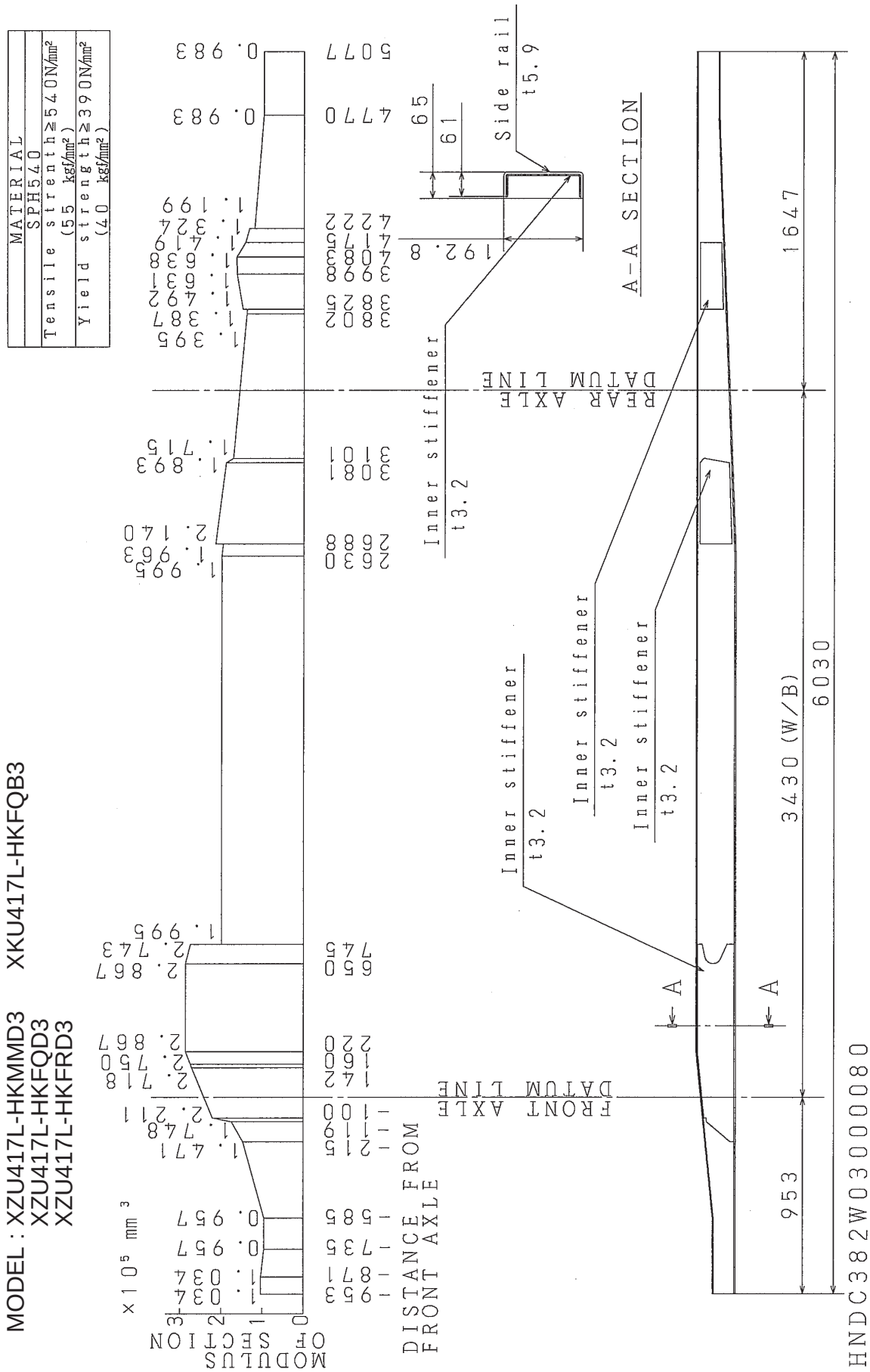

https://truckmanualshub.com/

FRAME SECTION MODULUS (MAIN FRAME ON BOTH SIDE)

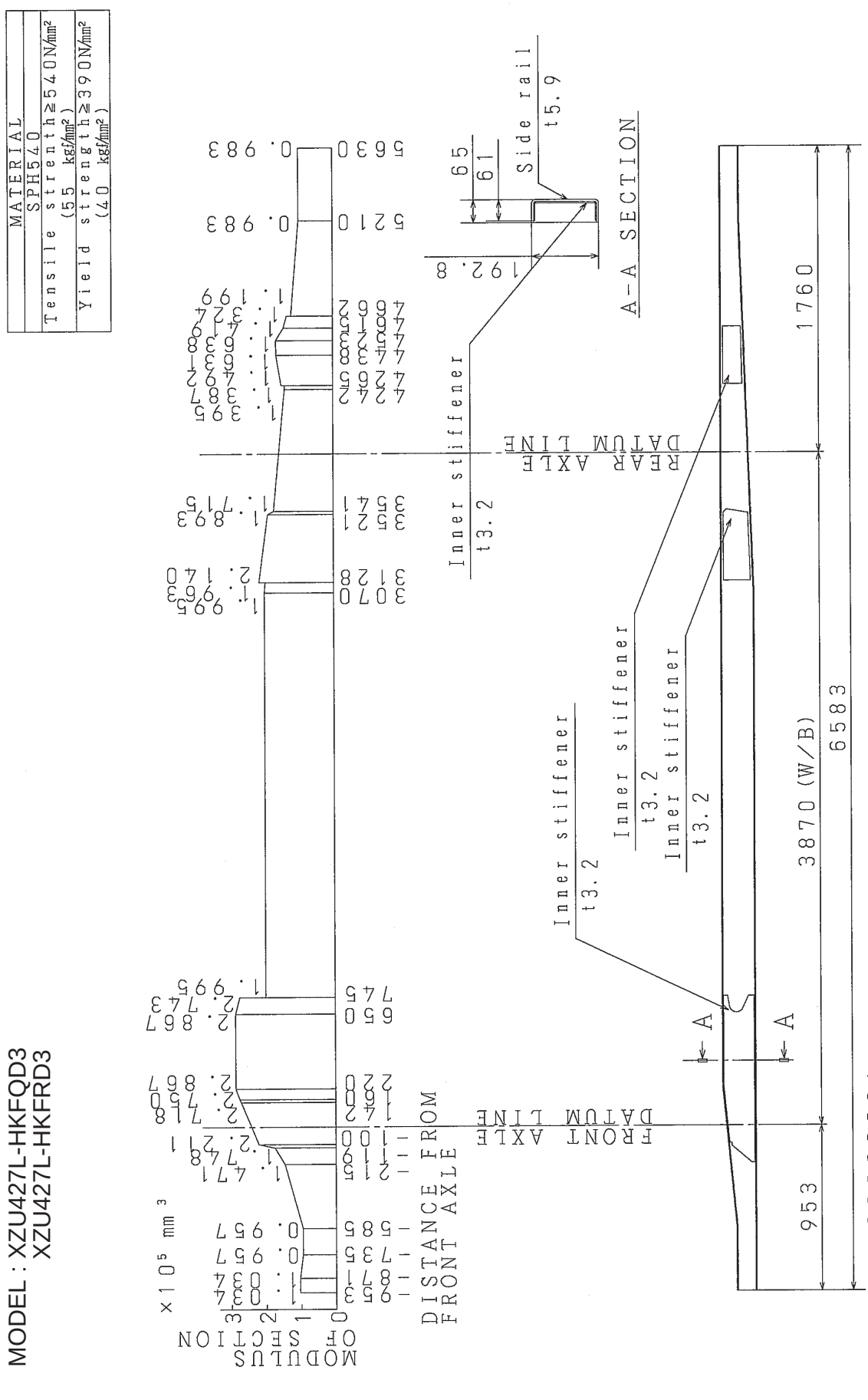

https://truckmanualshub.com/

4. SPRINGS & REAR AXLES

SPRING CHARACTERISTICS ····· 4 - 1
MAXIMUM VERTICAL DEFLECTION OF REAR WHEELS ····· 4 - 2
TRAVEL RANGE OF REAR SPRING ····· 4 - 3

https://truckmanualshub.com/

SPRING CHARACTERISTICS

1) SPRING COMBINATION

Refer to SPRING CHARACTERISTICS CHART based on following table.

MODEL	SPRING CHARACTERISTICS			
	FRONT		REAR	
	STD	OPT	STD	OPT
XZU307L-HKMLB3	F1		R1	
XZU307L-HKMMB3	F2	F6	R2	R5
XZU347L-HKMMB3	F2	F6	R2	R5
XZU407L-HKMMD3	F3	F7	R3	R4
XZU407L-HKMQD3	F4	F5	R3	R4
XZU407L-HKFQD3	F4	F5	R3	R4
XZU407L-HKFRD3	F5	F8	R4	R6
XZU417L-HKMMD3	F3	F7	R3	R4
XZU417L-HKFQD3	F4	F5	R3	R4
XZU417L-HKFRD3	F5	F8	R4	R6
XZU427L-HKFQD3	F4	F5	R3	R4
XZU427L-HKFRD3	F5	F8	R4	R6
XKU417L-HKFQB3	F4	F5	R3	R4

AUSXZU201 04T001

https://truckmanualshub.com/

2) FRONT LEAF SPRING

(1) SPRING CHARACTERISTICS CHART "F1"

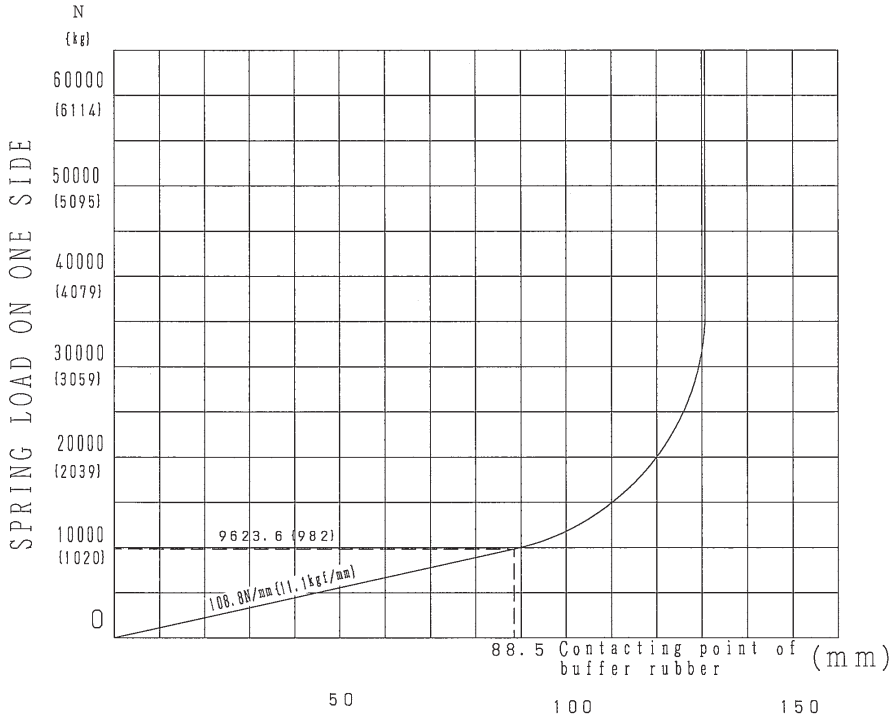

VERTICAL SPRING DEFLECTION LEAF SPRING
LOAD VS DEFLECTION

(2) SPRING CHARACTERISTICS CHART "F2"

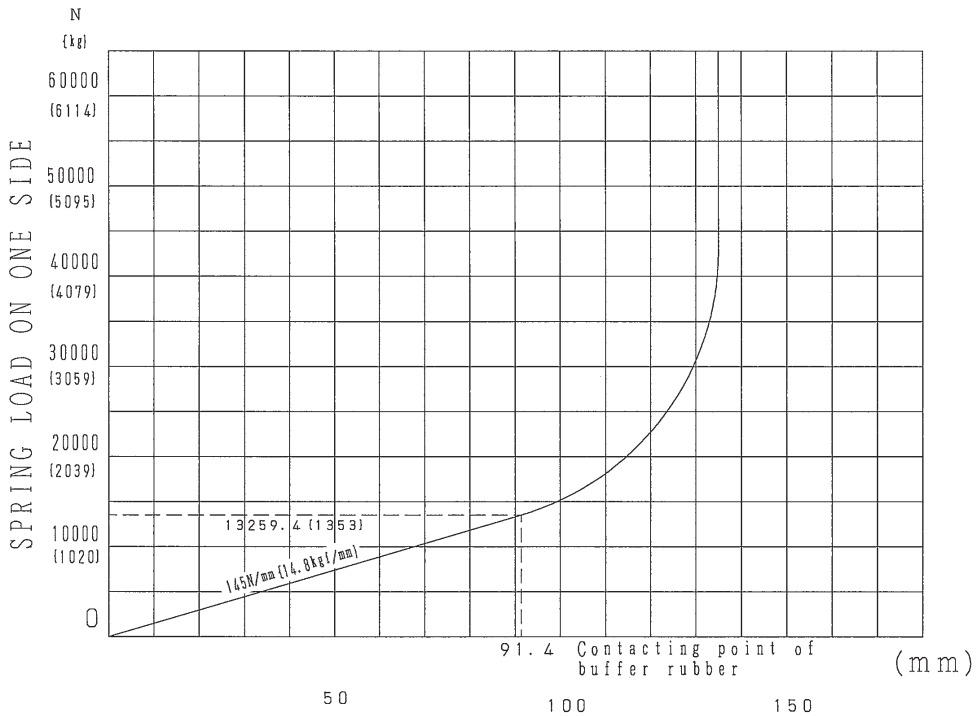

VERTICAL SPRING DEFLECTION LEAF SPRING
LOAD VS DEFLECTION

https://truckmanualshub.com/

(3) SPRING CHARACTERISTICS CHART "F3"

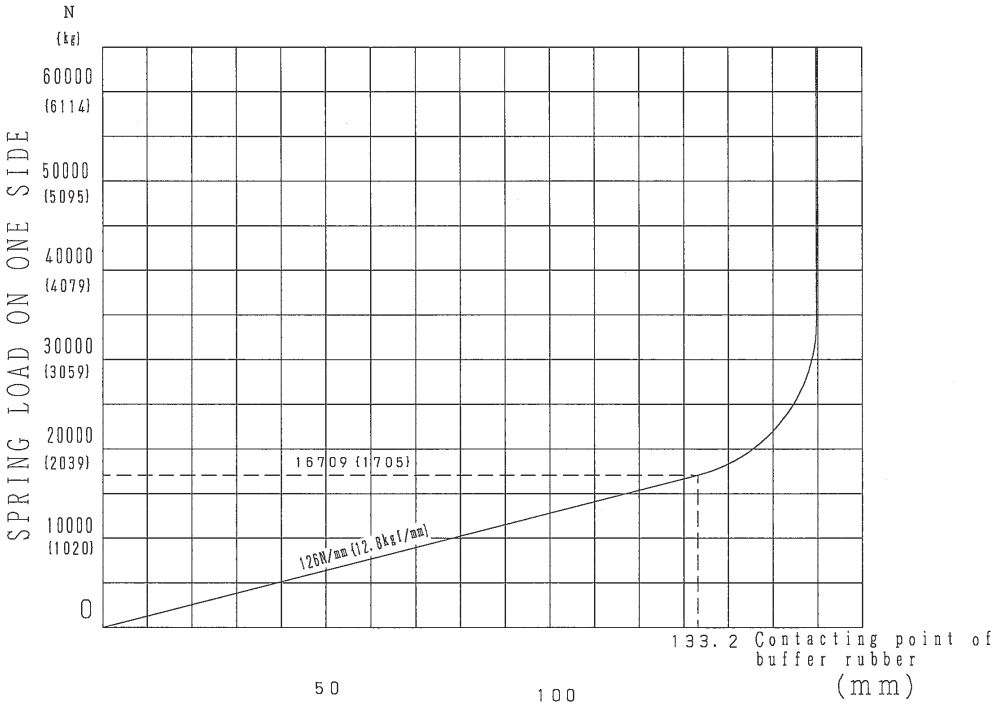

VERTICAL SPRING DEFLECTION LEAF SPRING
LOAD VS DEFLECTION

(4) SPRING CHARACTERISTICS CHART "F4"

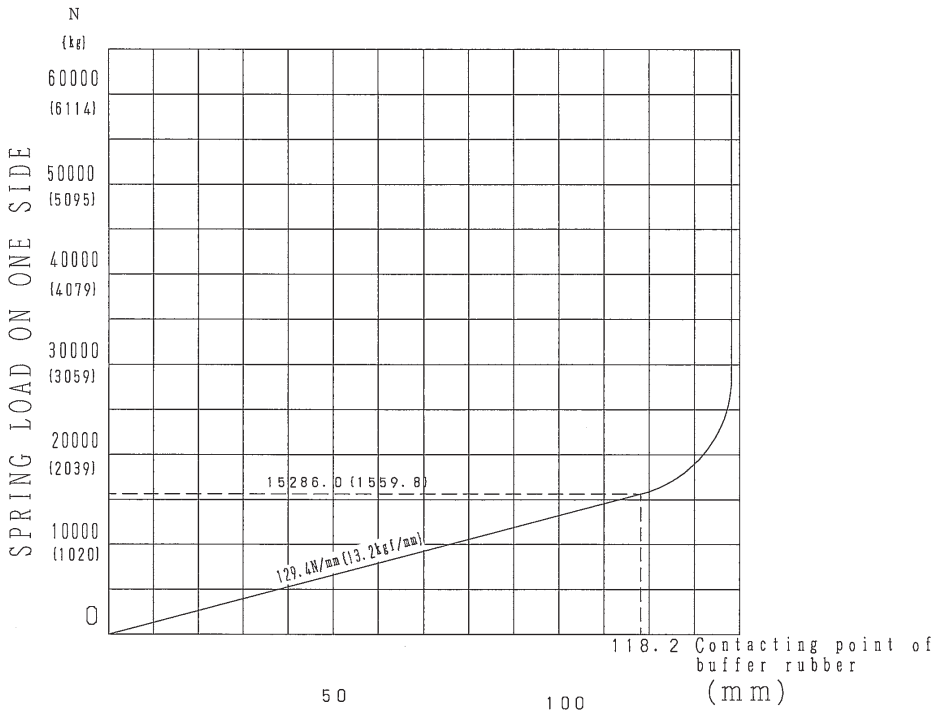

VERTICAL SPRING DEFLECTION LEAF SPRING
LOAD VS DEFLECTION

https://truckmanualshub.com/

(5) SPRING CHARACTERISTICS CHART "F5"

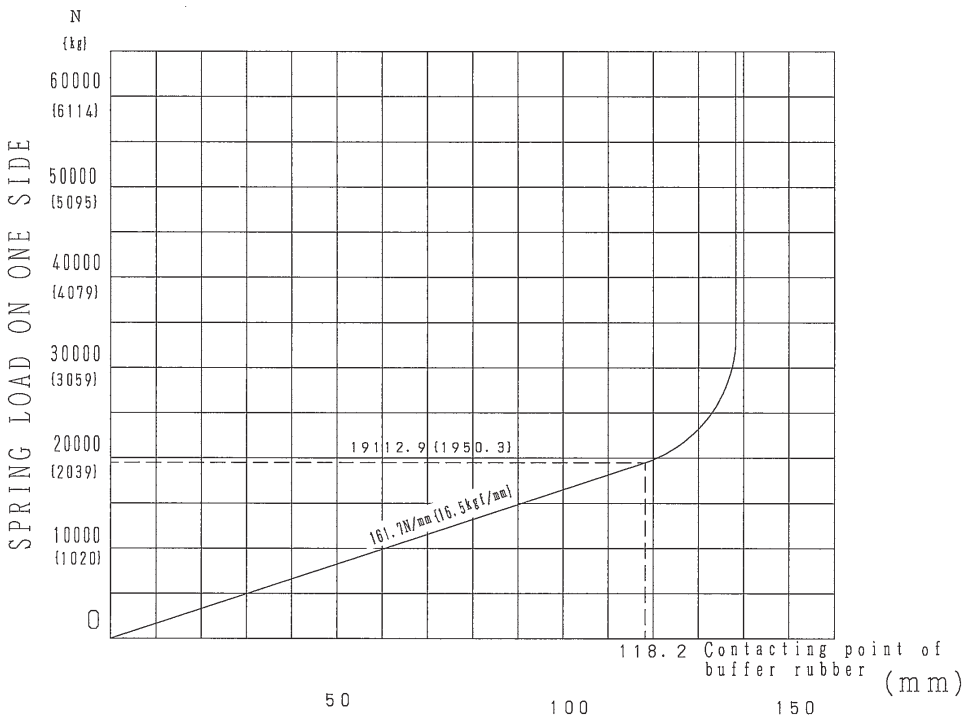

VERTICAL SPRING DEFLECTION LEAF SPRING
LOAD VS DEFLECTION

(6) SPRING CHARACTERISTICS CHART "F6"

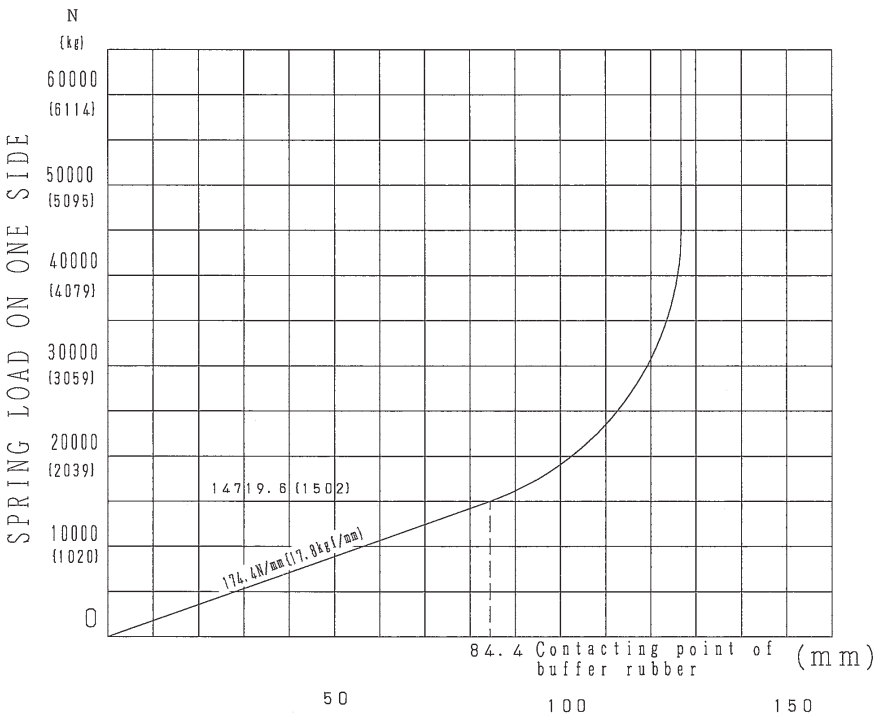

VERTICAL SPRING DEFLECTION LEAF SPRING
LOAD VS DEFLECTION

https://truckmanualshub.com/

(7) SPRING CHARACTERISTICS CHART "F7"

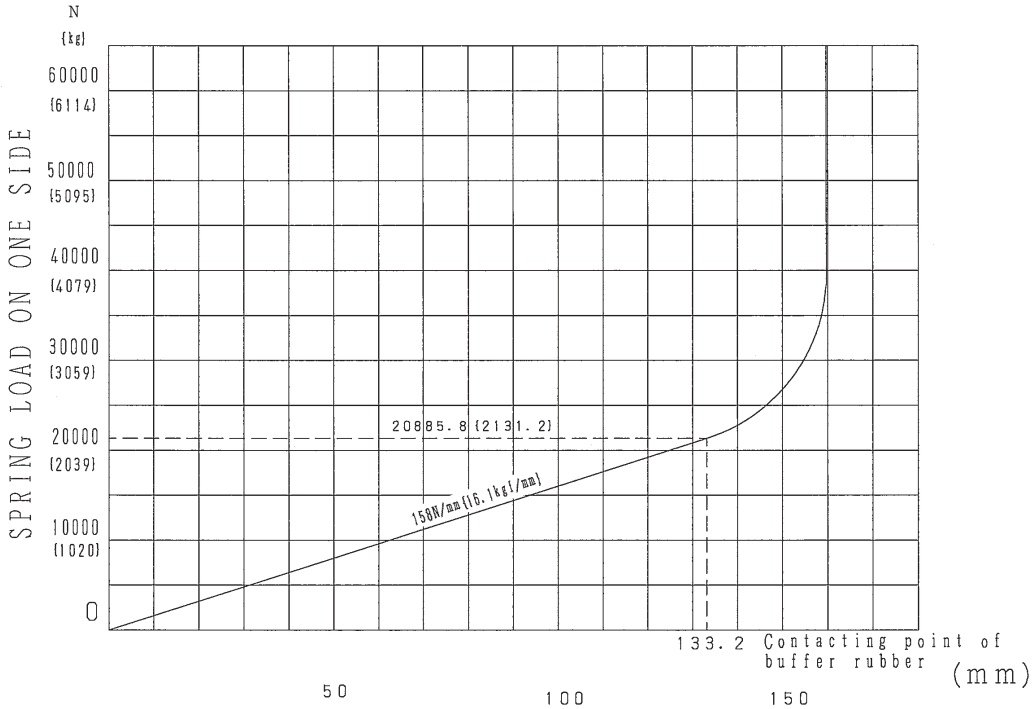

VERTICAL SPRING DEFLECTION LEAF SPRING
LOAD VS DEFLECTION

(8) SPRING CHARACTERISTICS CHART "F8"

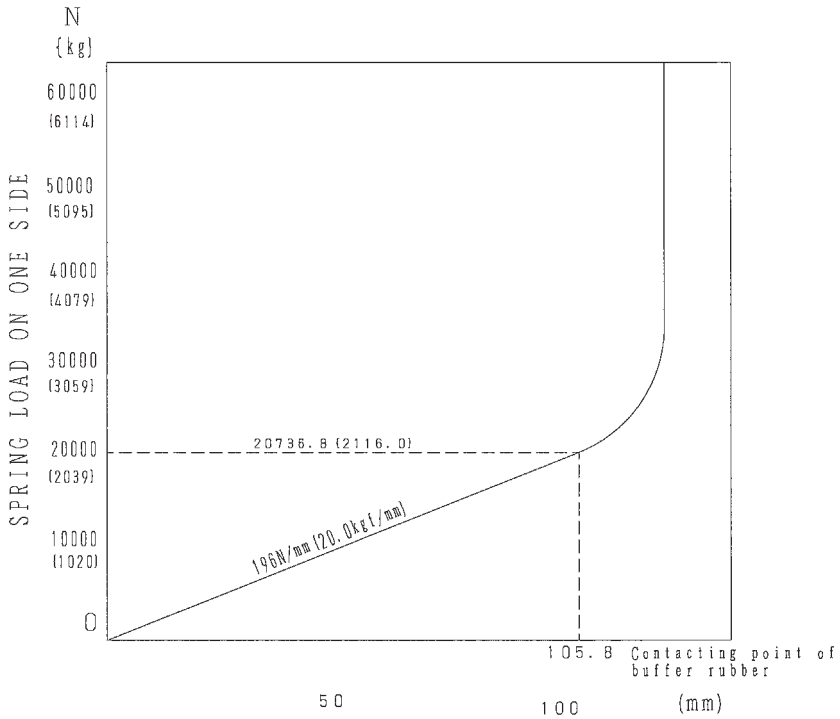

VERTICAL SPRING DEFLECTION LEAF SPRING
LOAD VS DEFLECTION

https://truckmanualshub.com/

3) REAR LEAF SPRING

(1) SPRING CHARACTERISTICS CHART "R1"

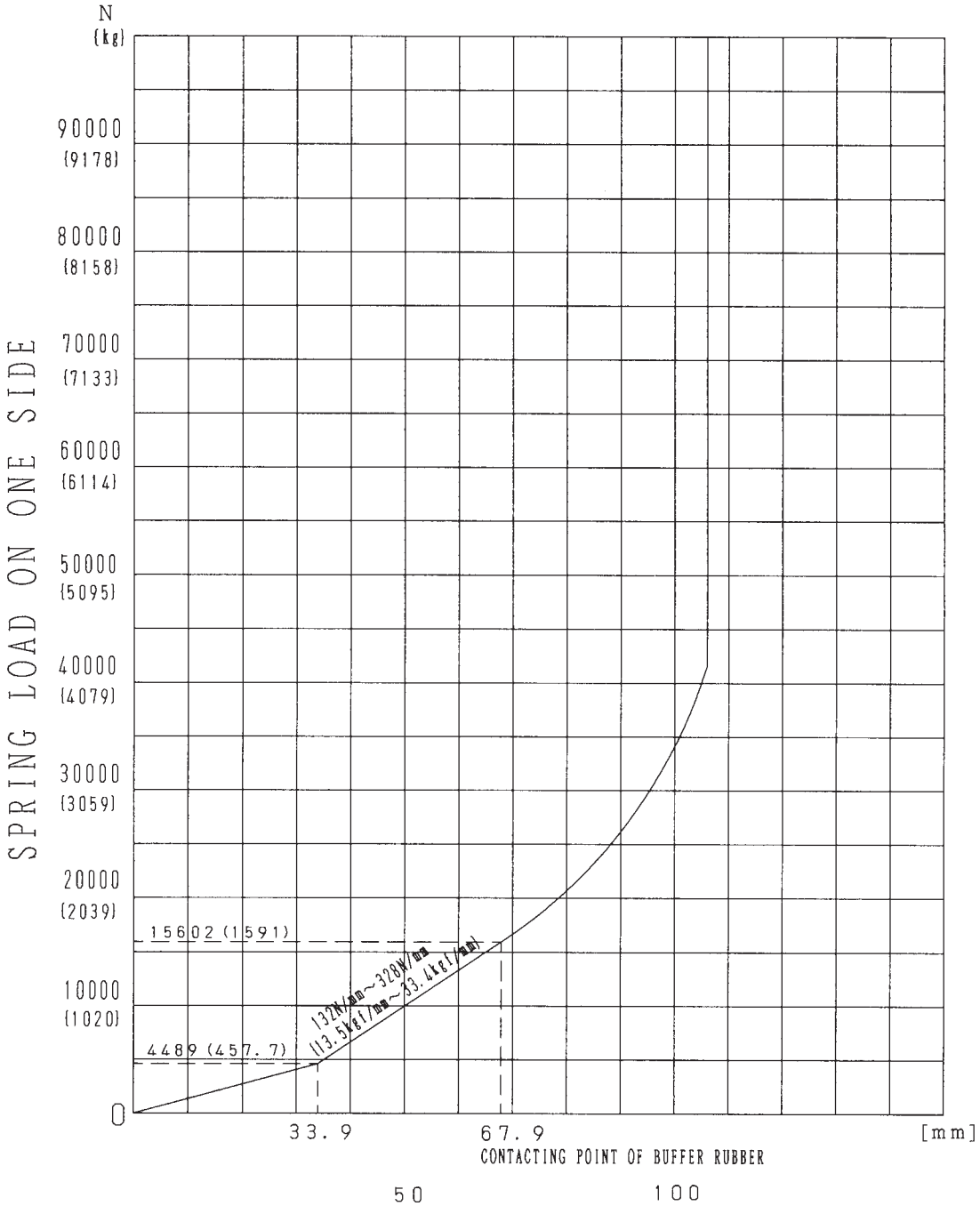

VERTICAL SPRING DEFLECTION LEAF SPRING
LOAD VS DEFLECTION

https://truckmanualshub.com/

(2) SPRING CHARACTERISTICS CHART "R2"

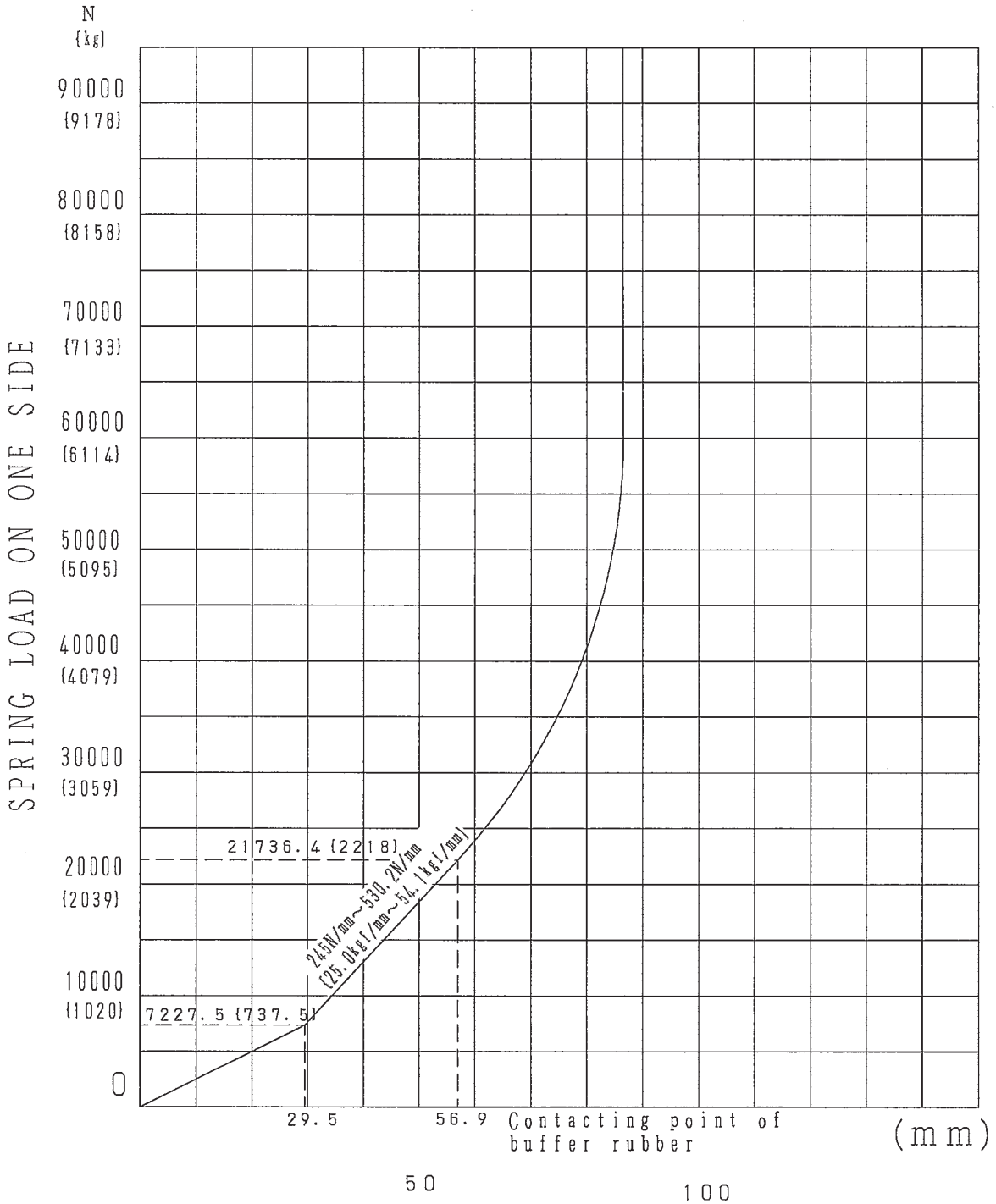

VERTICAL SPRING DEFLECTION LEAF SPRING
LOAD VS DEFLECTION

https://truckmanualshub.com/

(3) SPRING CHARACTERISTICS CHART "R3"

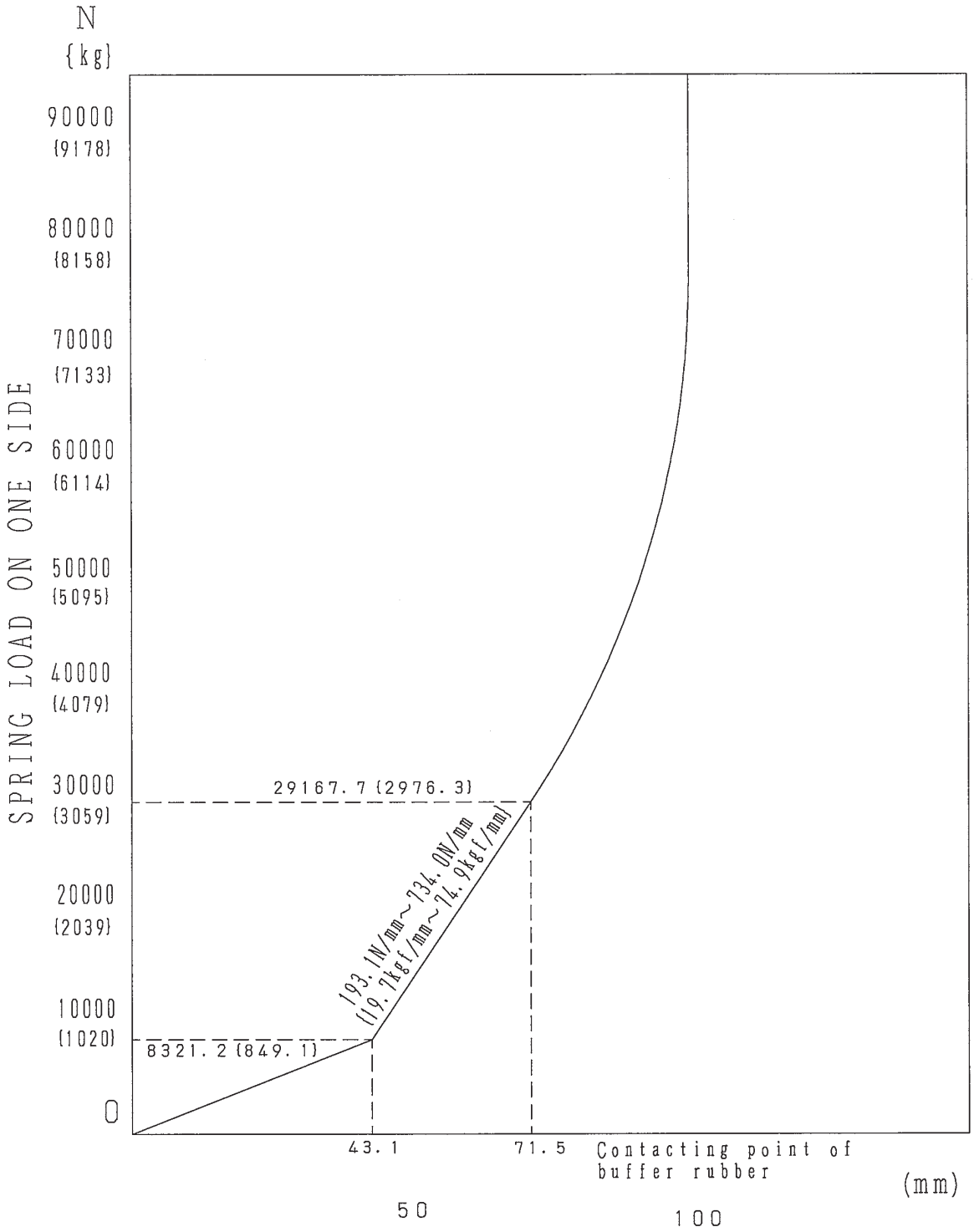

VERTICAL SPRING DEFLECTION LEAF SPRING
LOAD VS DEFLECTION

https://truckmanualshub.com/

(4) SPRING CHARACTERISTICS CHART "R4"

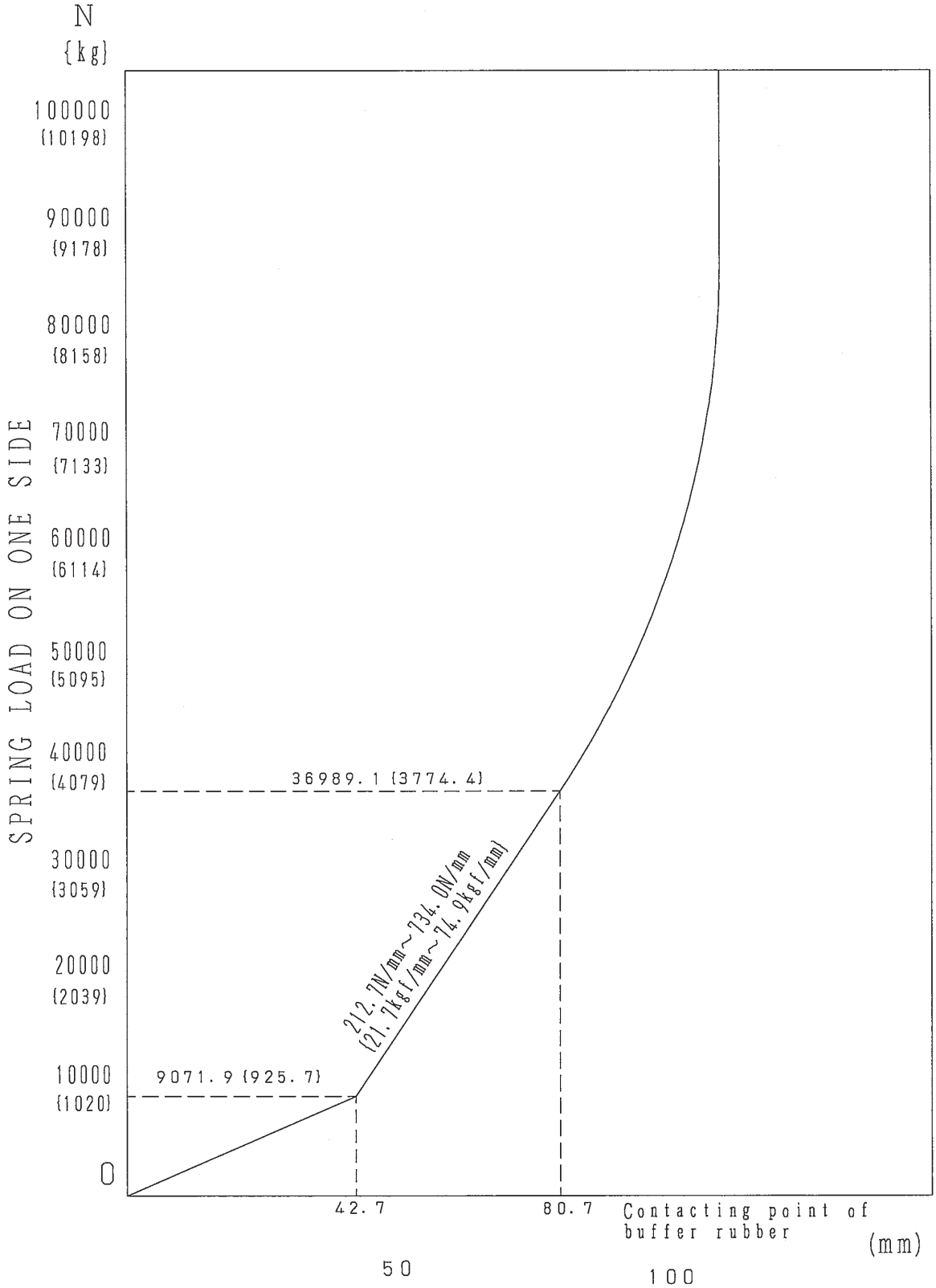

VERTICAL SPRING DEFLECTION LEAF SPRING
LOAD VS DEFLECTION

https://truckmanualshub.com/

(5) SPRING CHARACTERISTICS CHART "R5"

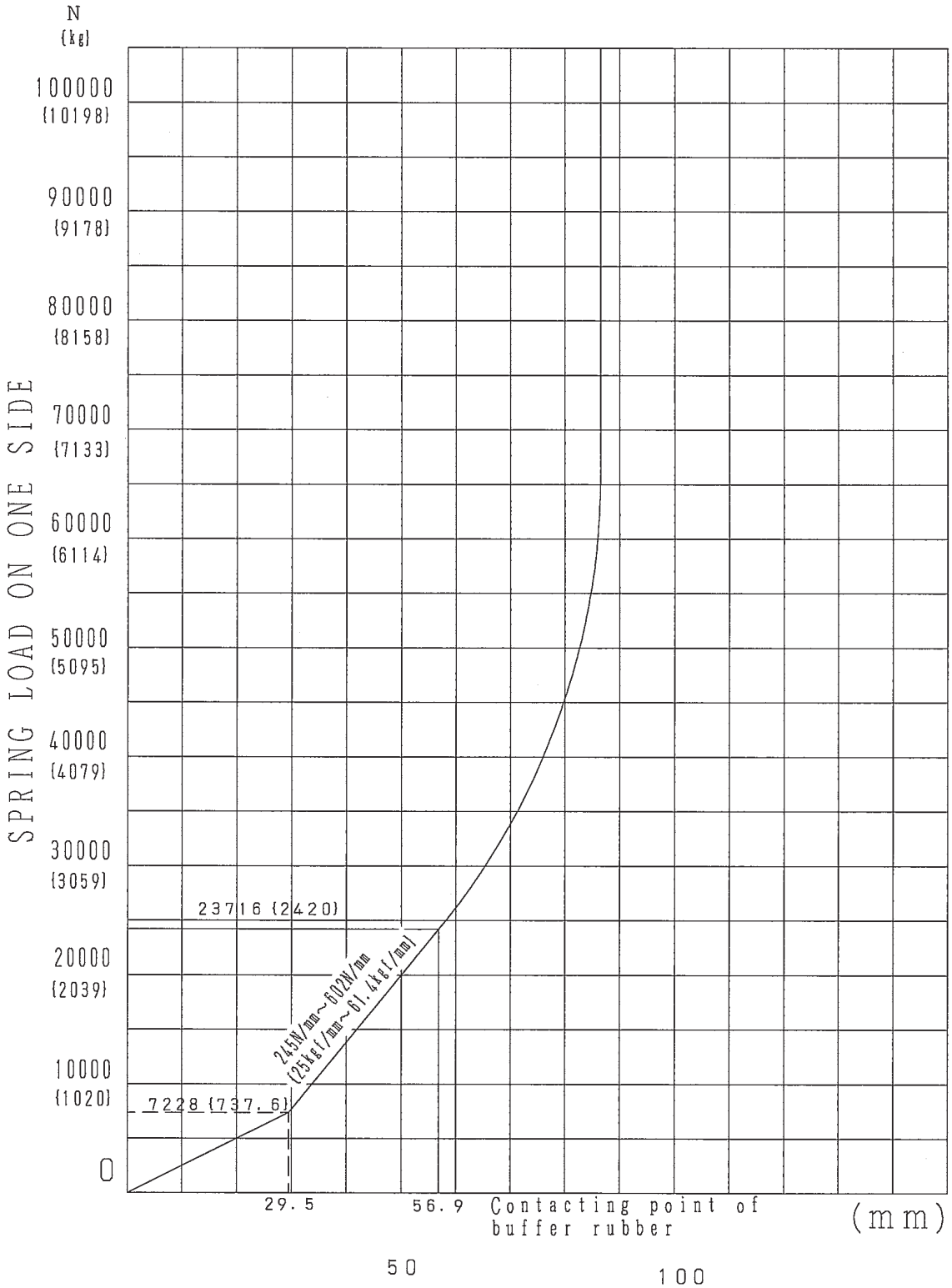

VERTICAL SPRING DEFLECTION LEAF SPRING
LOAD VS DEFLECTION

https://truckmanualshub.com/

(6) SPRING CHARACTERISTICS CHART "R6"

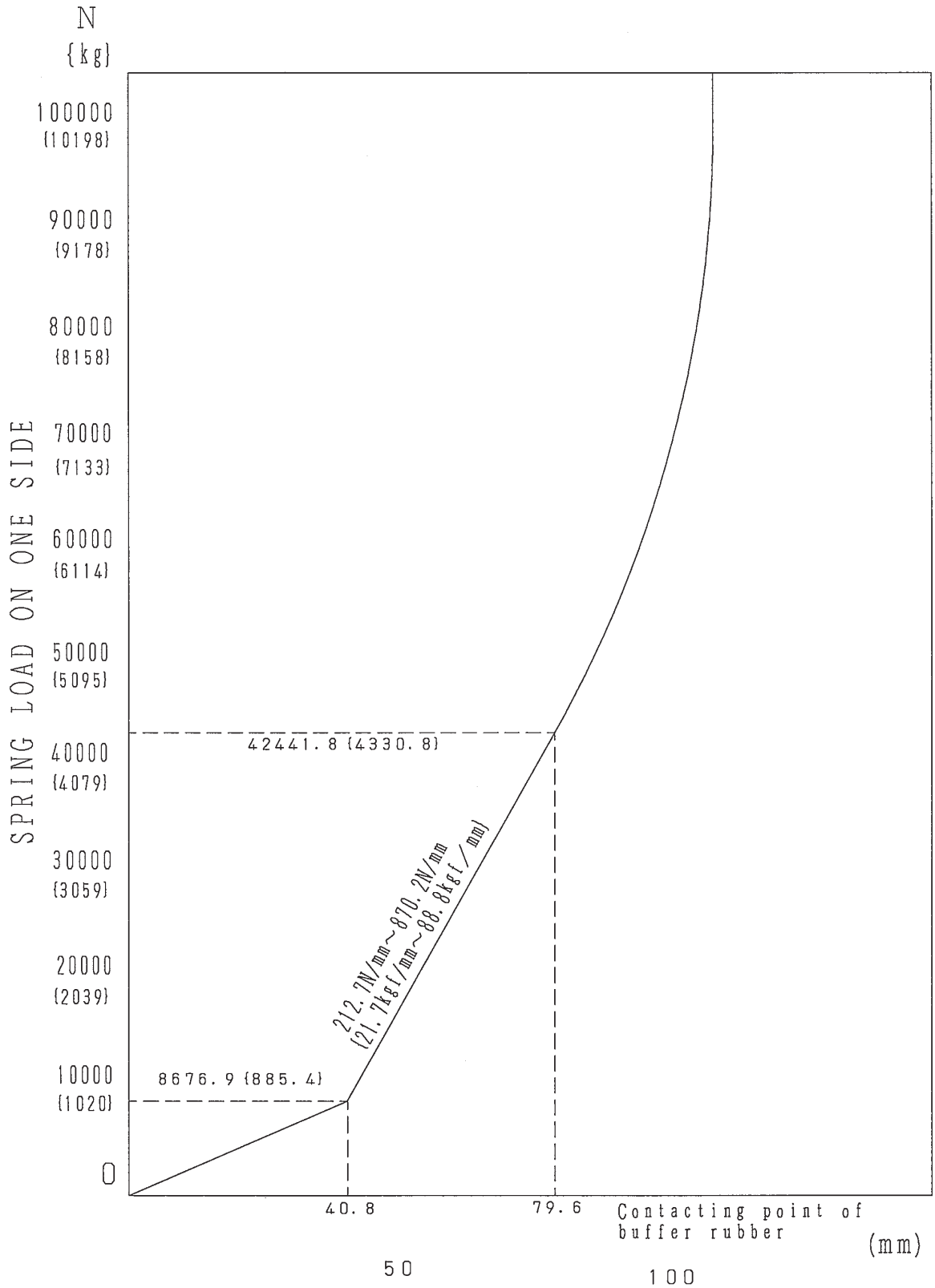

VERTICAL SPRING DEFLECTION LEAF SPRING
LOAD VS DEFLECTION

https://truckmanualshub.com/

MAXIMUM VERTICAL DEFLECTION OF REAR WHEELS

Measurements for the maximum deflection for on tire and for simultaneous left and right deflection are shown below.

When you mount the body, allow a clearance of at least 30mm so as not to obstruct tire deflection.

Deflection of rear tires

1.SINGLE TIRE

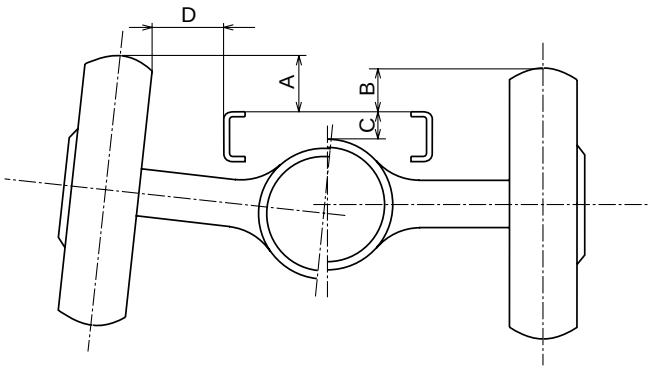

2.DOUBLE TIRE

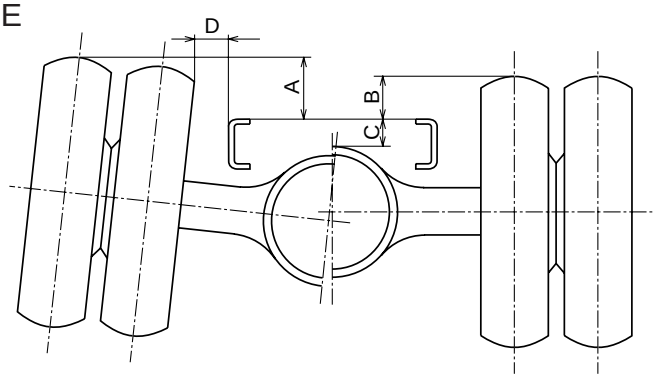

F4 RTIRES2

Maximum deflection for one side wheels.

Maximum simultaneous deflection right and left wheels.

MODEL	TIRE SIZE	A	B	C	D	REAR TIRE
XZU307L-HKMLB3	205/75R16C	139	132	42	198	SINGLE
XZU307L-HKMMB3	205/75R16C	137	97	96	120	DOUBLE
XZU347L-HKMMB3	205/75R16C	137	97	96	120	
XZU407L-HKMMD3	205/75R16C	100	54	125	113	
XZU407L-HKMQD3	215/85R16	124	79	128	127	
XZU407L-HKFQD3	215/85R16	124	79	128	127	
XZU407L-HKFRD3	215/75R17.5	120	75	134	123	
XZU417L-HKMMD3	205/75R16C	100	54	125	113	
XZU417L-HKFQD3	215/85R16	124	79	128	127	
XZU417L-HKFRD3	215/75R17.5	120	75	134	123	
XZU427L-HKFQD3	215/85R16	124	79	128	127	
XZU427L-HKFRD3	215/75R17.5	120	75	134	123	
XKU417L-HKFQB3	215/85R16C	124	79	128	127	

With tire chain : Dimensions A and B are added 50mm.

https://truckmanualshub.com/

TRAVEL RANGE OF REAR SPRING

During driving, the shackle of the main spring slides beyond the end of the rear bracket.

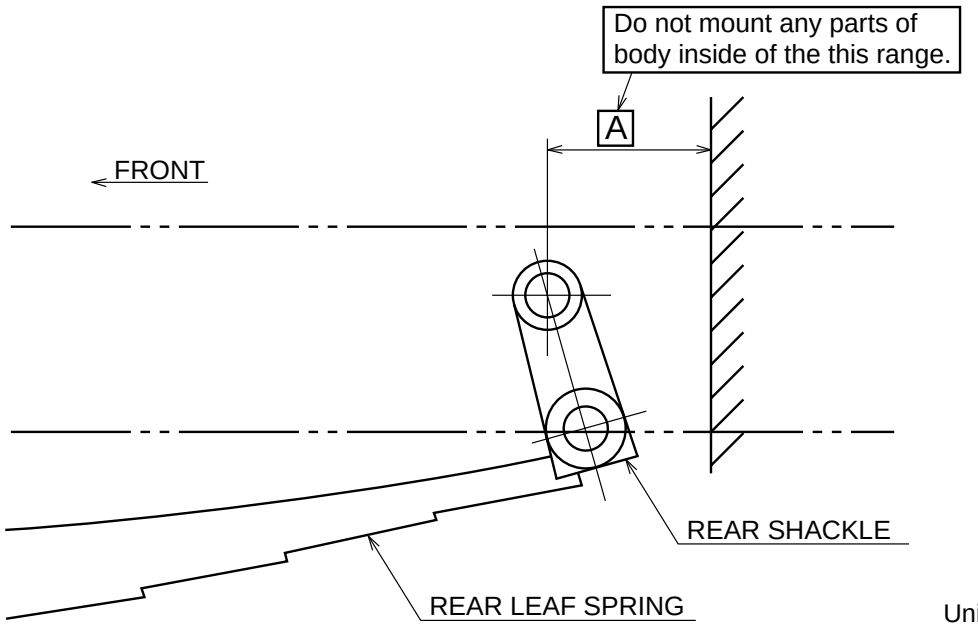

Unit : mm

MODEL	A (min.)
XZU307L-HKMMB3	100
XZU347L-HKMMB3	
XZU407L-HKMMD3	130
XZU407L-HKMQD3	
XZU407L-HKFQD3	
XZU407L-HKFRD3	
XZU417L-HKMMD3	
XZU417L-HKFQD3	
XZU417L-HKFRD3	
XZU427L-HKFQD3	
XZU427L-HKFRD3	
XKU417L-HKFQB3	

MODEL : XZU307L-HKMLB3

AUSXZU201 04T003

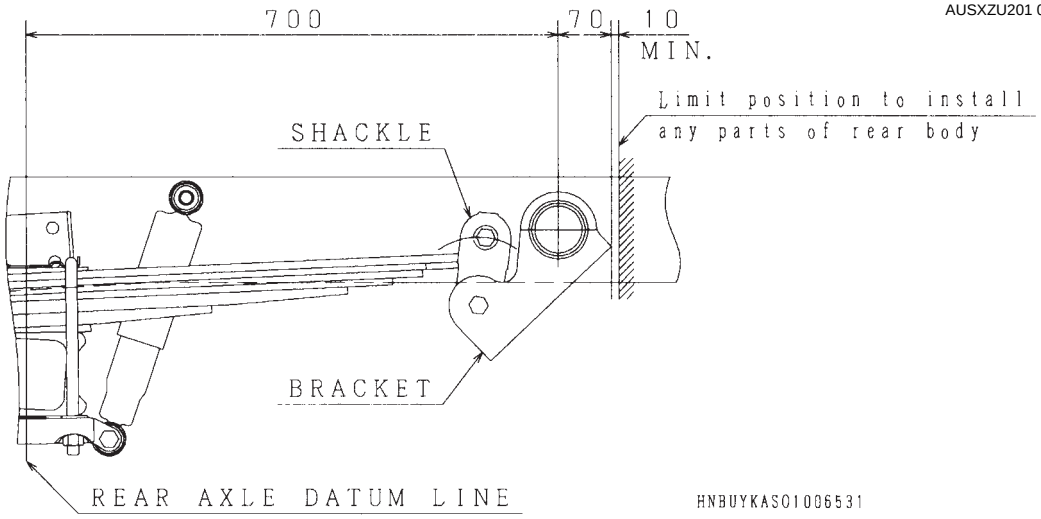

https://truckmanualshub.com/

5. PTO AND CONTROL

LAYOUT OF POWER LINE ····· 5 - 1
TRANSMISSION SIDE POWER TAKE OFF (OPT) ····· 5 - 2
ENGINE CONTROL FOR BODY OR EQUIPMENT ····· 5 - 3
REAR BODY CONTROL LEVER (OPT) ····· 5 - 4

https://truckmanualshub.com/

LAYOUT OF POWER LINE

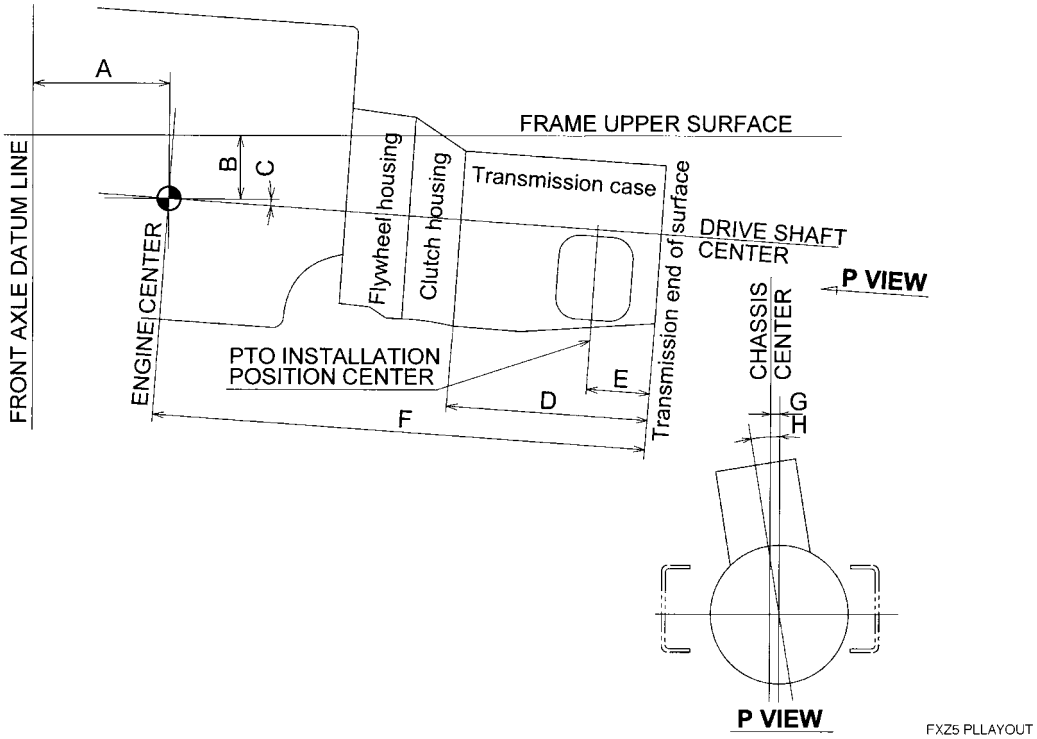

MODEL	E/G MODEL	T/M MODEL	A	B	C	D	E	F	G	H	T/M PTO No.	REAR BODY CONTROL (OPT)
XZU307L-HKMLB3	N04C-TU	M550	247	180	3°	436	287	944	0	0°	–	–
XZU307L-HKMMB3	N04C-TU	M550	247	180	3°	436	287	944	0	0°	1	DUMP LEVER
XZU347L-HKMMB3	N04C-TU	M550	247	180	3°	436	287	944	0	0°	1	DUMP LEVER
XZU407L-HKMMD3	N04C-TV	M550	240	153	4°	436	287	944	0	0°	1	DUMP LEVER
XZU407L-HKMQD3	N04C-TV	M550	240	153	4°	436	287	944	0	0°	1	DUMP LEVER
XZU407L-HKFQD3	N04C-TV	MYY6	240	153	4°	357	221	860	0	0°	2	DUMP LEVER
XZU407L-HKFRD3	N04C-TV	MYY6	240	153	4°	357	221	860	0	0°	2	DUMP LEVER
XZU417L-HKMMD3	N04C-TV	M550	240	153	4°	436	287	944	0	0°	1	DUMP LEVER
XZU417L-HKFQD3	N04C-TV	MYY6	240	153	4°	357	221	860	0	0°	2	DUMP LEVER
XZU417L-HKFRD3	N04C-TV	MYY6	240	153	4°	357	221	860	0	0°	2	DUMP LEVER
XZU427L-HKFQD3	N04C-TV	MYY6	240	153	4°	357	221	860	0	0°	2	DUMP LEVER
XZU427L-HKFRD3	N04C-TV	MYY6	240	153	4°	357	221	860	0	0°	2	DUMP LEVER

AUSXZU201 05T001

https://truckmanualshub.com/

TRANSMISSION SIDE POWER TAKE OFF (OPT)

When the body require transmission Power Take Off (PTO), genuine PTO equipment and related parts should be supplied as shown below.

[T/M PTO No.1]

1) Transmission Series by Vehicle Model

Model	Transmission series
XZU307L-HKMMB3 XZU347L-HKMMB3 XZU407L-HKMMD3 XZU407L-HKMQD3 XZU417L-HKMMD3	M550

AUSXZU201 05T006

2) Data of the PTO Output Shaft

Transmission series	Permissible torque (N·m{kgf·m} at r/min)	PTO control type	Direction of rotation
M550	245 {25} / 1,000	Vacuum control	Reverse to engine

3) Necessary Parts

Transmission model	M550	
Transmission gear ratio		
1st 2nd 3rd 4th 5th Rev.	4.981 2.911 1.556 1.000 0.738 4.625	
PTO control type	Vacuum	
Parts name	Parts No.	Q'ty / unit
Power take off assy	36610-37280	01
Gasket, PTO case	33162-37030	01
Lockwasher	94512-01000	05
Bolt	90119-10372	01
Stud bolt	92132-81025	05
Nut	94130-61000	05

AUSXZU201 05T007

[NOTE]

1. Parts mentioned above table shows transmission PTO unit only.
2. Other related parts of transmission PTO control, please contact each Hino sales dealer or distributor.

https://truckmanualshub.com/

4) PTO Installation Procedure

(1) Drain the transmission oil.
(Do not remove the drain plug while the oil is hot, or you will scaled yourself.)

(2) Remove the PTO cover which is at the left of the transmission.
(Do not reuse the bolts and gasket that you remove at this time.)

(3) Clean the PTO mounting surface on the transmission side.

(4) Prepare the necessary parts, referring to paragraph "3")

(5) Install the stud bolts to the PTO mounting of the transmission case.

(6) Fit the gasket and PTO on the PTO mounting position and tighten the fitting bolts and nuts.
Tightening torque for stud bolts : 36.3N·m {370kgf·cm}

(7) After attaching the PTO, turn the output shaft coupling a few revolutions to be sure that it turns freely.

(8) When you refill the transmission oil, increase the amount by 0.3 liters to allow for the PTO.

5) Gear Layout and Gear Ratio

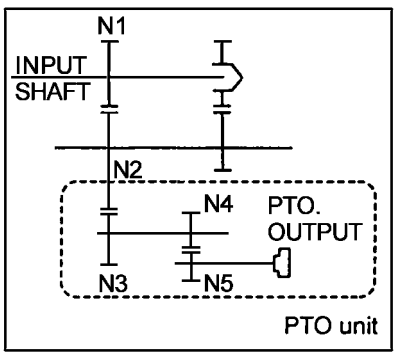

Gear ratio : i = N2/N1 x N3/N2 x N5/N4

Transmission	N1	N2	N3	N4	N5	i
M550	32	35	34	31	40	1.371

[NOTES]
1. Number of revolutions of PTO output shaft
   = number of revolutions of engine x1/ i
2. The PTO output shaft turns in the opposite direction to the engine.

https://truckmanualshub.com/

6) Detail of M550 Transmission

Unit : mm

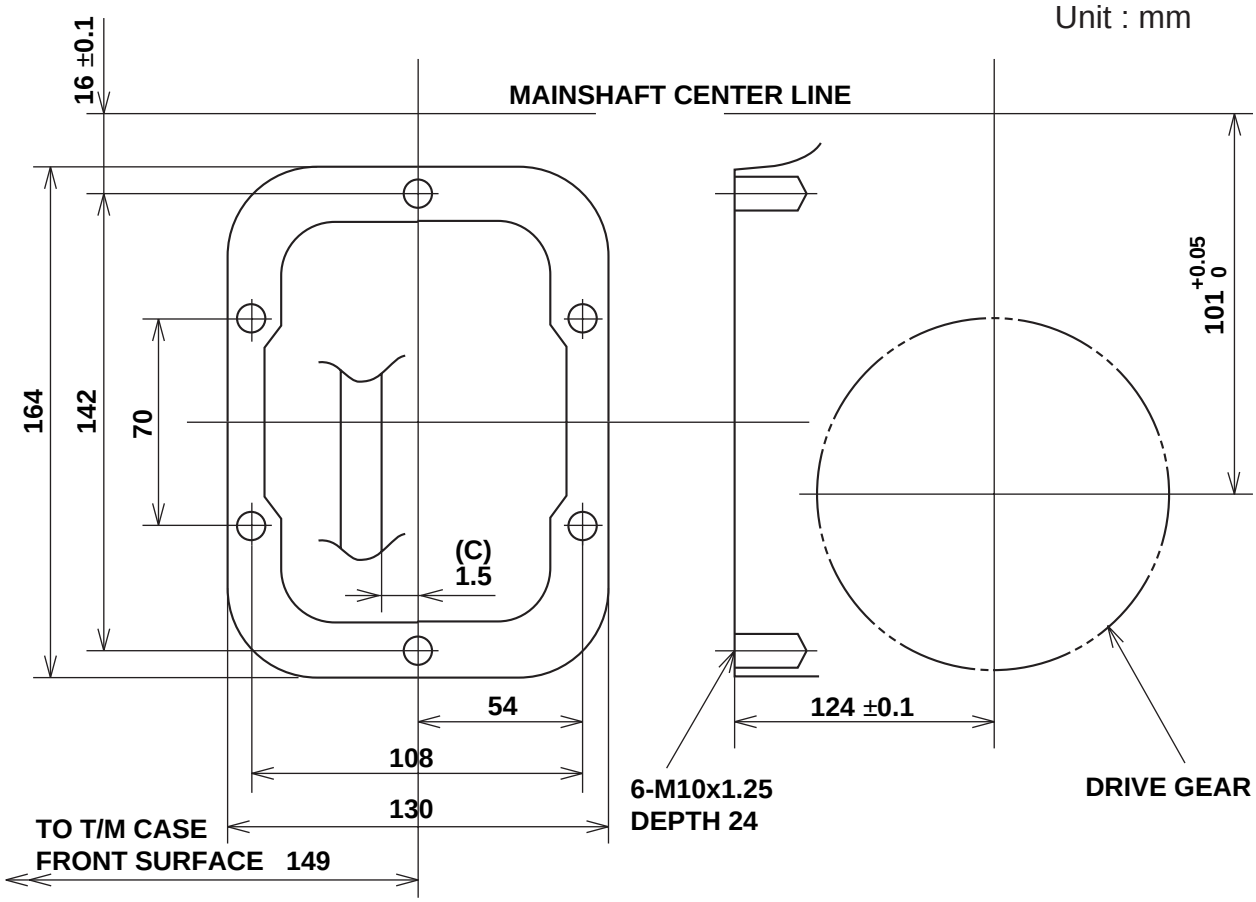

AUSXZU201 05F001

DRIVE GEAR SPECIFICATION (T/M SIDE /3rd COUNTER GEAR)

Tooth profile	Helical gear	Tooth thickness	Normal circular thickness	3.9171
Number of teeth	35		Over ball diameter	113.403 $^{0}_{-0.1}$
Normal module	2.650		Used ball diameter	5.000
Normal pressure angle	17°	Face width		20 ±0.2
Helix angle (and direction)	29° (Right)	Rotation backlash		0.05
Standard pitch circle diameter	106.046	Addendum modification coefficient		-0.1515
Base circle diameter	100.106	Gear layout	INPUT SHAFT 32 35 PTO	
Outside diameter	112.750 $^{0}_{-0.1}$			
Whole depth	8.1			
Semi-topping	0.2			

AUSXZU201 05T005

https://truckmanualshub.com/

7) Transmission PTO mounting (M550)

Vacuum control type

Unit : mm

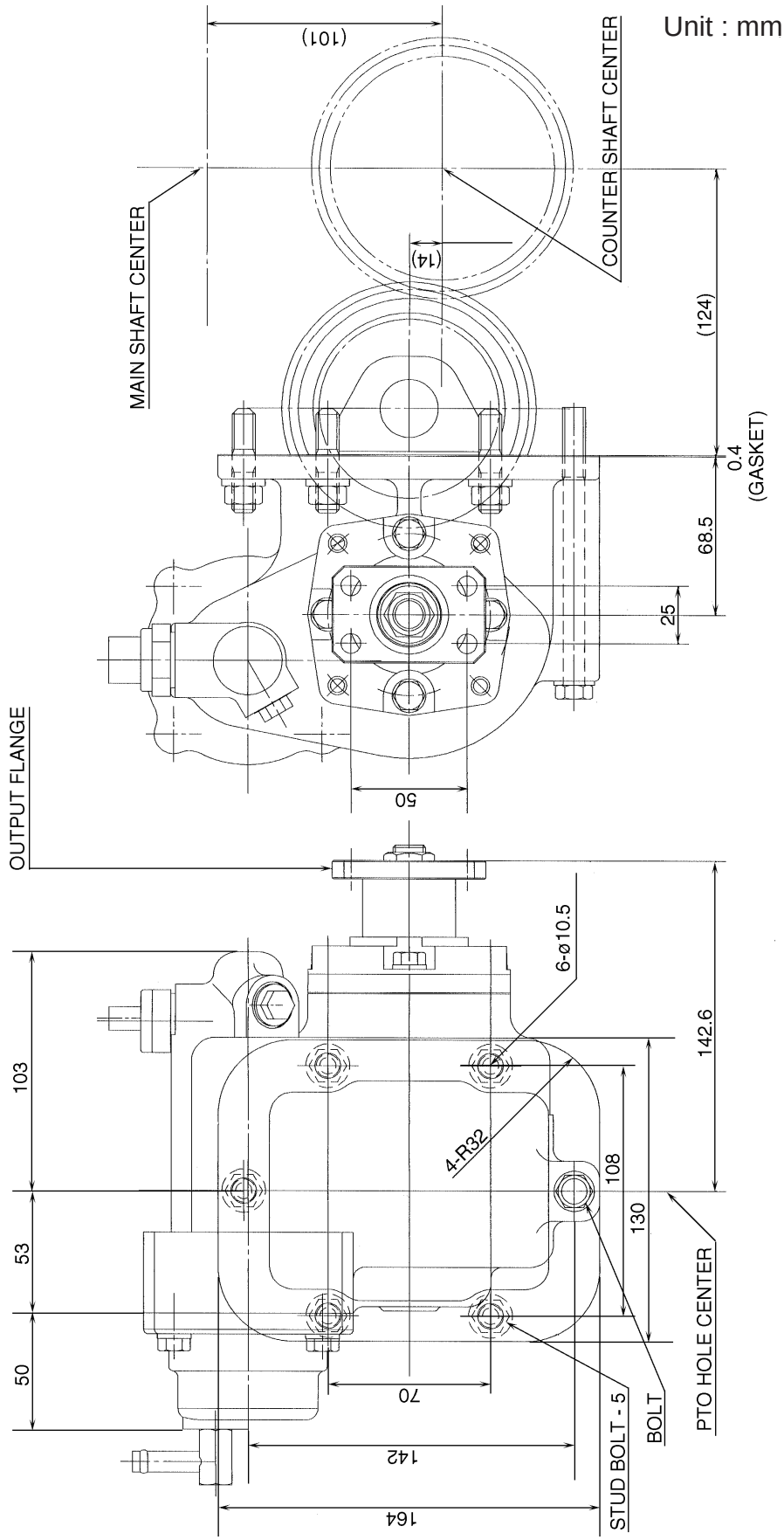

[NOTE] 1) The devices on the body or equipment side (e. g. oil pump) must be mounted at the same angle as engine to the body. (Direct mounting the devices to the PTO output flange is strictly prohibited.)
2) The three-dimensional angle of the universal joint of the drive shaft should be less than 6°.

https://truckmanualshub.com/

• **Detail of PTO Flange**

Unit : mm

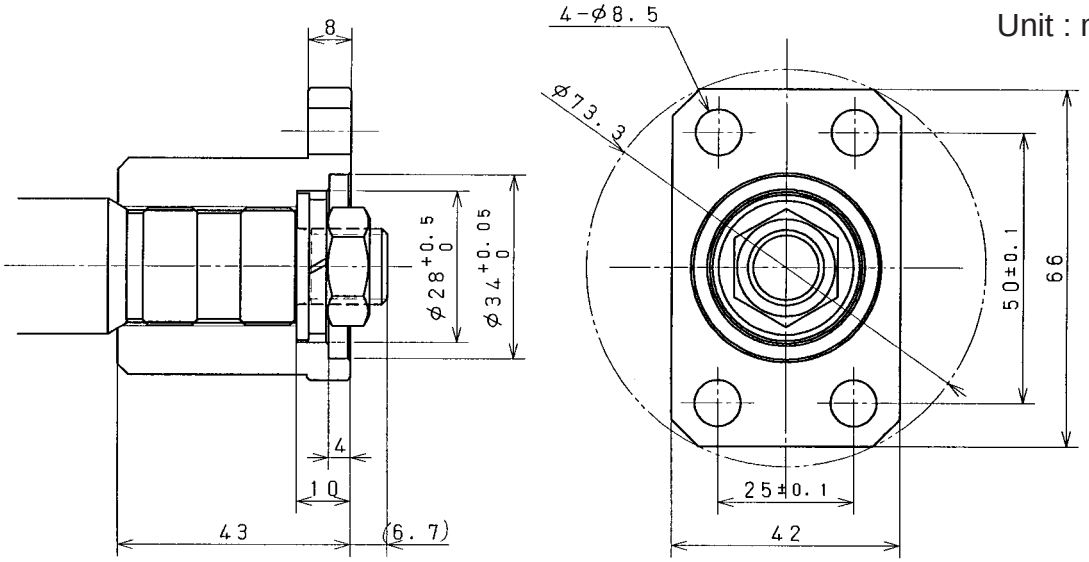

• **Detail of PTO Output Shaft**

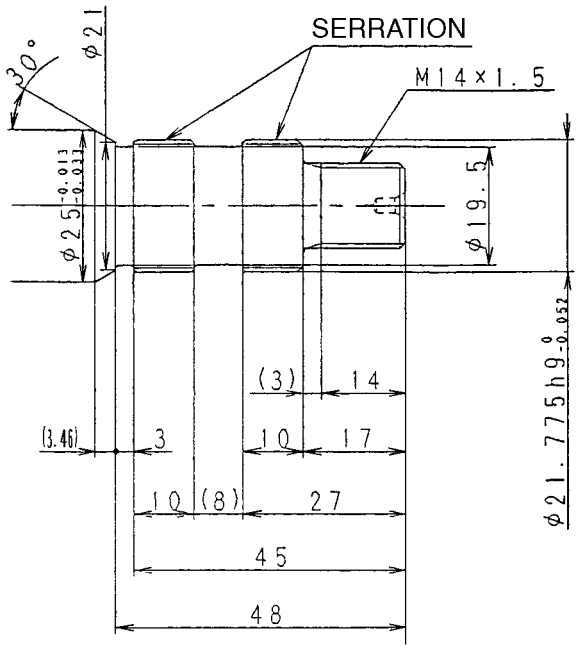

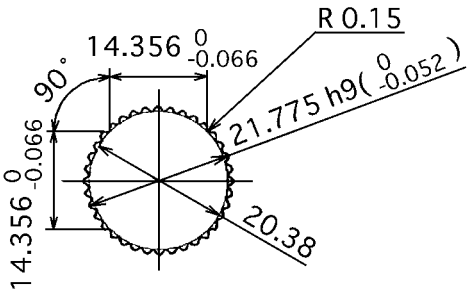

DETAIL OF SERRATION

https://truckmanualshub.com/

[T/M PTO No.2]

1) Transmission Series by Vehicle Model

Model	Transmission series
XZU407L-HKFQD3 XZU407L-HKFRD3 XZU417L-HKFQD3 XZU417L-HKFRD3 XZU427L-HKFQD3 XZU427L-HKFRD3	MYY6S

AUSXZU201 05T012

2) Data of the PTO Output Shaft

Transmission series	Permissible torque (N·m{kgf·m} at r/min)	PTO control type	Direction of rotation
MYY6S	196 {20} / 1,000	Electronic control	Reverse to engine

AUSXZU201 05T013

3) Necessary Parts

Transmission model	MYY6S	
Transmission gear ratio		
1st 2nd 3rd 4th 5th 6th Rev.	5.979 3.434 1.862 1.297 1.000 0.759 5.701	
PTO control type	Electronic	
Parts name	Parts No.	Q'ty / unit
Power take off assy	36610-37290	01
Lockwasher	94512-01000	06
Stud bolt	90031-16079	06
Nut	94130-61000	06

AUSXZU201 05T014

[NOTE]

1. Parts mentioned above table shows transmission PTO unit only.
2. Other related parts of transmission PTO control, please contact each Hino sales dealer or distributor.

https://truckmanualshub.com/

4) PTO Installation Procedure

(1) Drain the transmission oil.
(Do not remove the drain plug while the oil is hot, or you will scaled yourself.)

(2) Remove the PTO cover which is at the left of the transmission.
(Do not reuse the bolts and gasket that you remove at this time.)

(3) Clean the PTO mounting surface on the transmission side.

(4) Prepare the necessary parts, referring to paragraph "3")

(5) Install the stud bolts to the PTO mounting of the transmission case.

(6) Apply liquid gasket 'THREEBOND 1215' or 'LOCKTITE 5127 (FMD-127)' to PTO sealing surface of transmission case as shown.
Appling methods
1) Remove moisture and oils from sealing surface before appling.
2) Dia of liquid gasket is 2 min.
3) Liquid gasket bead must be continued all round.

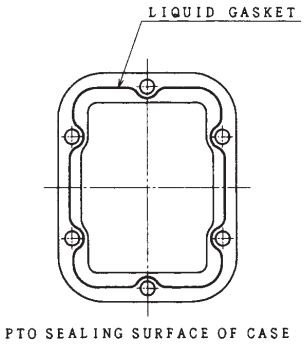

(7) Fit the PTO on the PTO mounting position and tighten nuts.
Tightening torque for nuts : 36.3N·m {370kgf·cm}

(8) After attaching the PTO, turn the output shaft coupling a few revolutions to be sure that it turns freely.

(9) When you refill the transmission oil, increase the amount by 0.3 liters to allow for the PTO.

5) Gear Layout and Gear Ratio

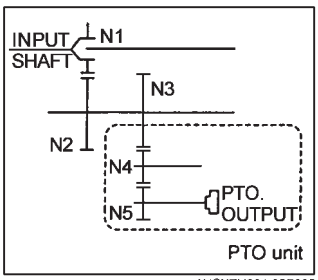

AUSXZU201 05F005

Gear ratio : i =N2/N1xN4/N3xN5/N4

Transmission	N1	N2	N3	N4	N5	i
MYY6S	26	47	33	31	27	1.479

AUSXZU201 05T015

[NOTES]
1. Number of revolutions of PTO output shaft
   = number of revolutions of engine x1/ i
2. The PTO output shaft turns in the opposite direction to the engine.

https://truckmanualshub.com/

6) Detail of MYY6S Transmission

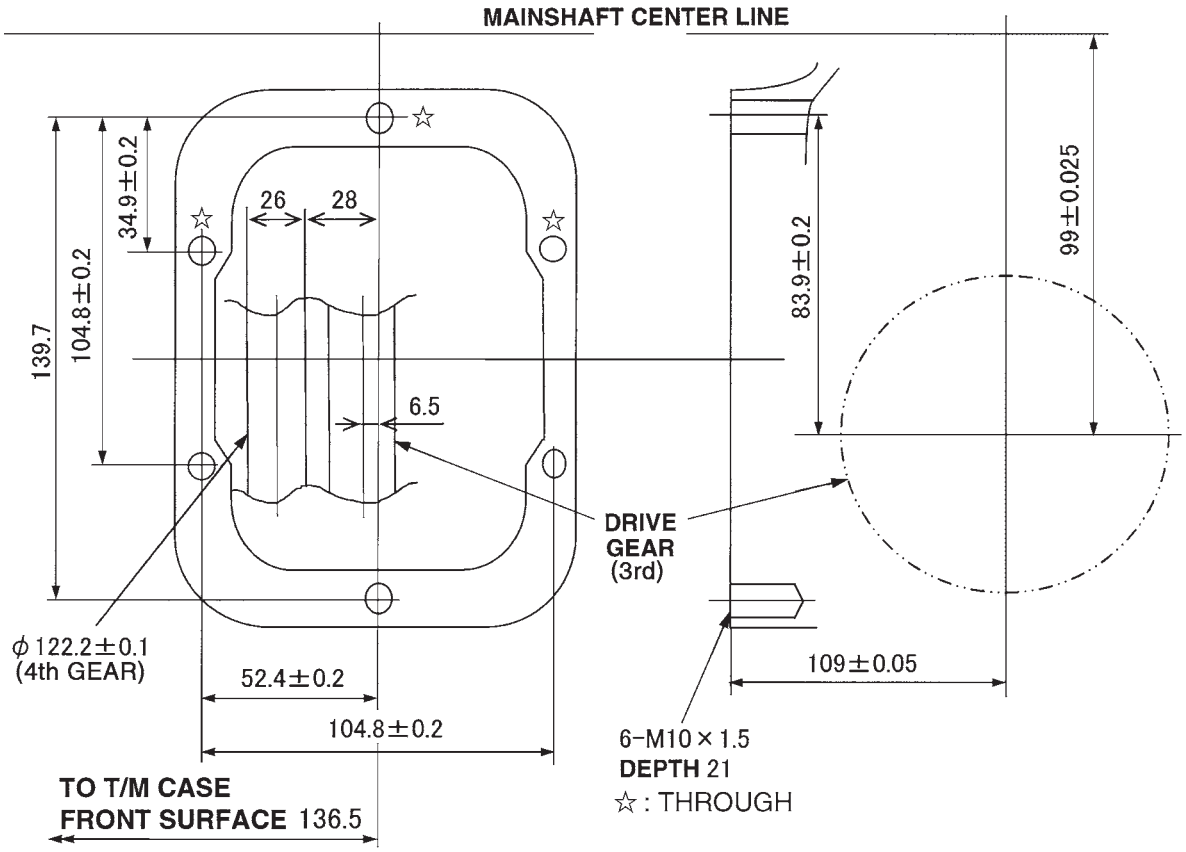

DRIVE GEAR SPECIFICATION (T/M SIDE /3rd COUNTER GEAR)

Tooth profile	Helical gear	Tooth thickness	Normal circular thickness	4. 4585～4. 4946
Number of teeth	33		Over ball diameter	106. 88 $^{0}_{-0.08}$
Normal module	2. 77		Used ball diameter	5. 55625
Normal pressure angle	20°	Face width		29. 8 (Center)
Helix angle (and direction)	20° (Right)	Rotation backlash		0. 055～0. 344
Standard pitch circle diameter	97. 28	Addendum modification coefficient		+0. 072
Base circle diameter	90. 71			
Outside diameter	105±0. 1			
Whole depth	7. 828			
Crowning	With			
Semi-topping	0. 281			

AUSXZU201 05F006

https://truckmanualshub.com/

7) Transmission PTO mounting (MYY6S) Electronic control type

Unit : mm

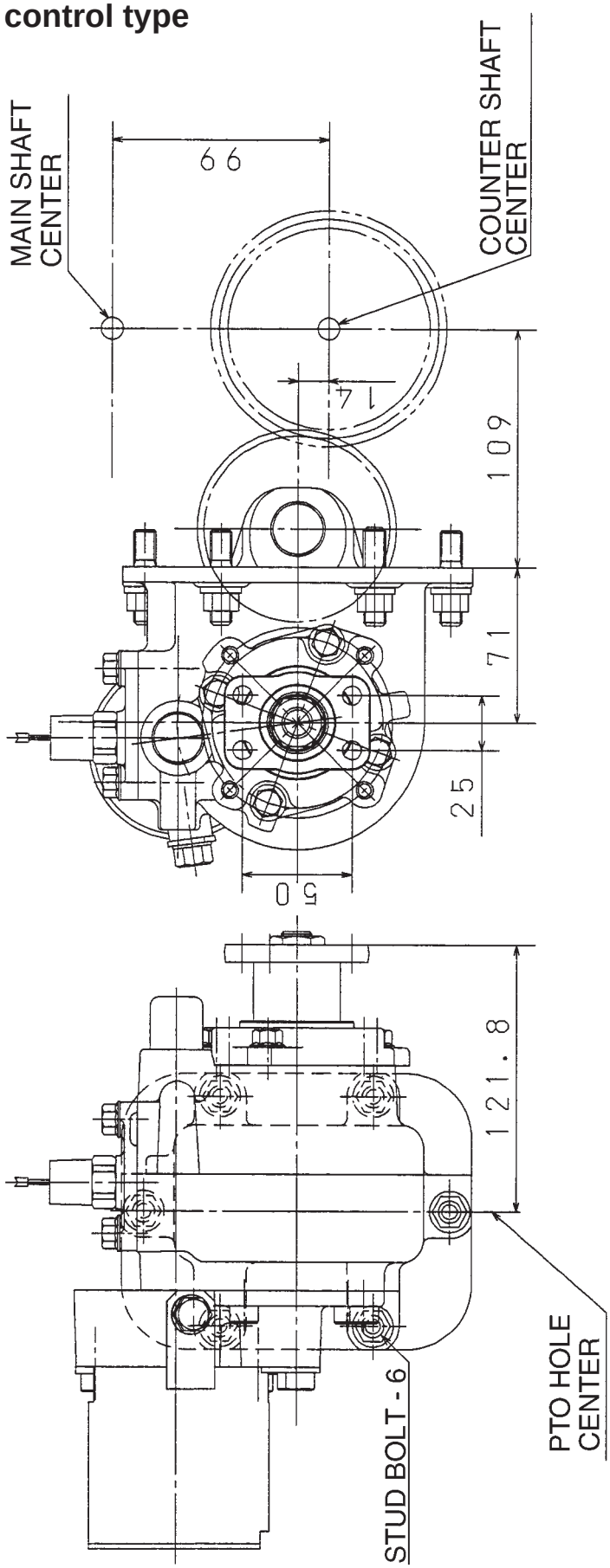

[NOTE] 1) The devices on the body or equipment side (e. g. oil pump) must be mounted at the same angle as engine to the body. (Direct mounting the devices to the PTO output flange is strictly prohibited.)
2) The three-dimensional angle of the universal joint of the drive shaft should be less than 6°.

https://truckmanualshub.com/

• Detail of PTO Flange

Unit : mm

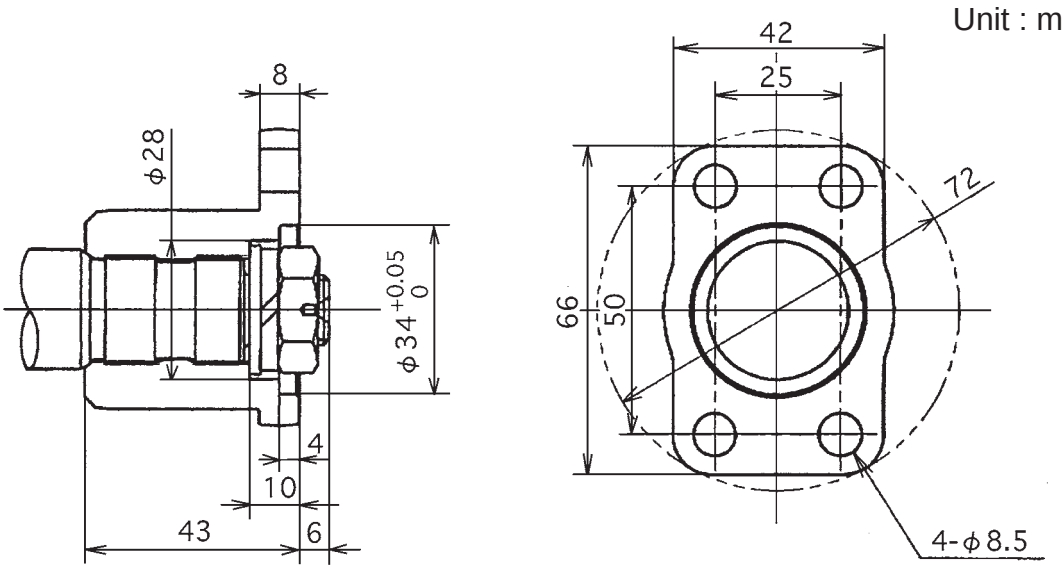

AUSXZU201 05F008

• Detail of PTO Output Shaft

Unit : mm

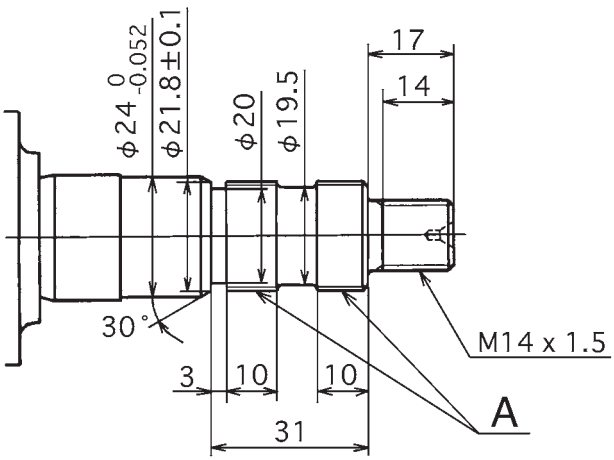

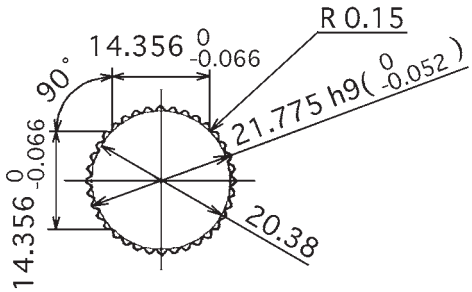

Detail of A

AUSXZU201 05F009

https://truckmanualshub.com/

ENGINE CONTROL FOR BODY OR EQUIPMENT

1) Fuel Injection Pump Governor

- DUTRO vehicles use the following fuel injection pump governor.

No.	MODEL	E/G MODEL	GOVERNOR TYPE		MANUFACTURER
			PUMP	GOVERNOR	
1	XZU307L-HKMLB3	N04C-TU	COMMON-RAIL TYPE	ELECTRONIC CONTROL TYPE	DENSO
2	XZU307L-HKMMB3	N04C-TU	COMMON-RAIL TYPE	ELECTRONIC CONTROL TYPE	DENSO
3	XZU347L-HKMMB3	N04C-TU	COMMON-RAIL TYPE	ELECTRONIC CONTROL TYPE	DENSO
4	XZU407L-HKMMD3	N04C-TV	COMMON-RAIL TYPE	ELECTRONIC CONTROL TYPE	DENSO
5	XZU407L-HKMQD3	N04C-TV	COMMON-RAIL TYPE	ELECTRONIC CONTROL TYPE	DENSO
6	XZU407L-HKFQD3	N04C-TV	COMMON-RAIL TYPE	ELECTRONIC CONTROL TYPE	DENSO
7	XZU407L-HKFRD3	N04C-TV	COMMON-RAIL TYPE	ELECTRONIC CONTROL TYPE	DENSO
8	XZU417L-HKMMD3	N04C-TV	COMMON-RAIL TYPE	ELECTRONIC CONTROL TYPE	DENSO
9	XZU417L-HKFQD3	N04C-TV	COMMON-RAIL TYPE	ELECTRONIC CONTROL TYPE	DENSO
10	XZU417L-HKFRD3	N04C-TV	COMMON-RAIL TYPE	ELECTRONIC CONTROL TYPE	DENSO
11	XZU427L-HKFQD3	N04C-TV	COMMON-RAIL TYPE	ELECTRONIC CONTROL TYPE	DENSO
12	XZU427L-HKFRD3	N04C-TV	COMMON-RAIL TYPE	ELECTRONIC CONTROL TYPE	DENSO

AUSXZU201 05T016

https://truckmanualshub.com/

2) Engine Accelerator

- Engine accelerator and extension harness for body control are packed in cabin as optional equipment.
- Connect the connector of Engine accelerator with spare connector which is provided behind the No.3 crossmember at chassis frame LH side member.
- Should more detailed data or information with regard to engine accelerator for body control be needed, consult authorized Hino distributor.

https://truckmanualshub.com/

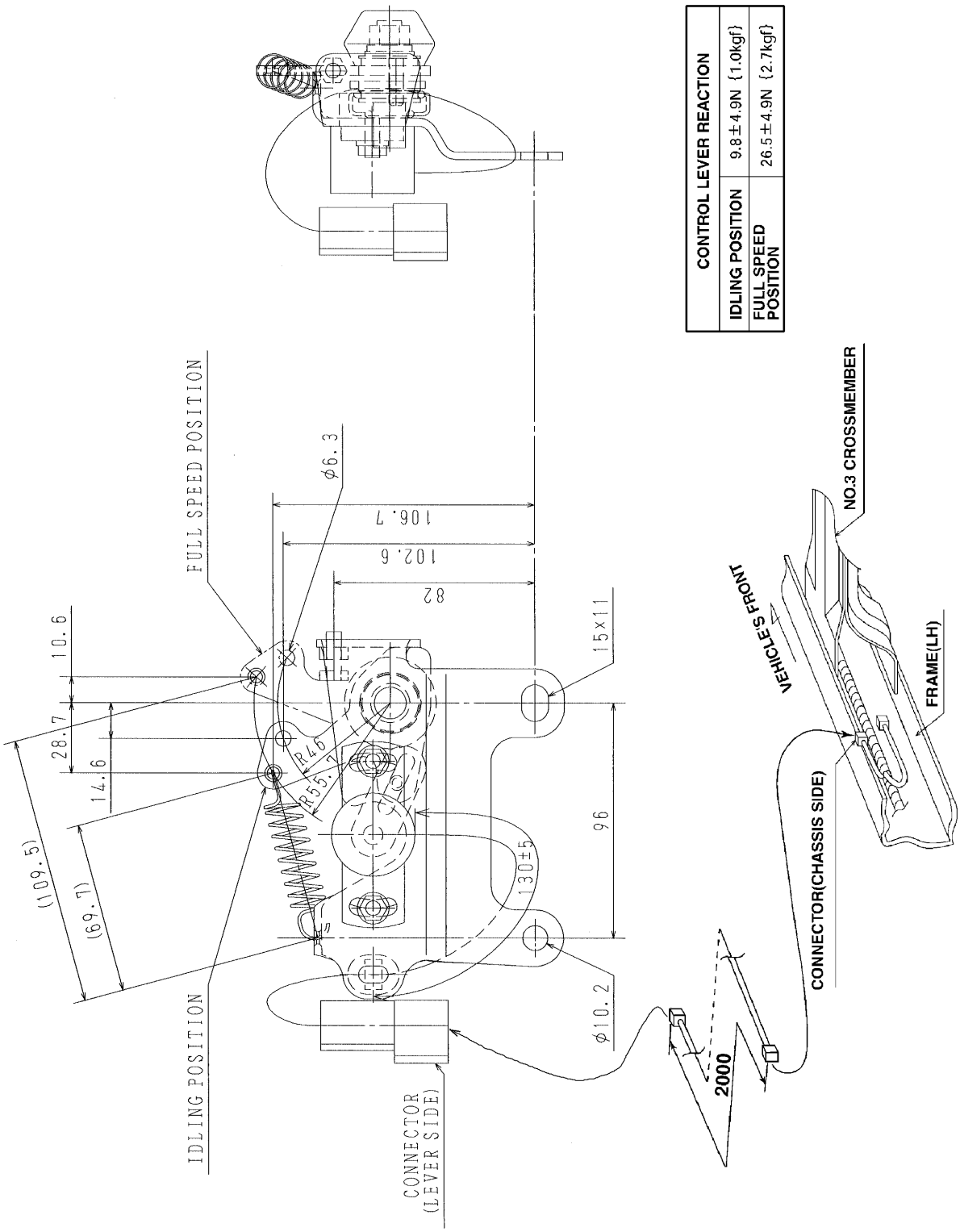

CONTROL LEVER REACTION	
IDLING POSITION	9.8±4.9N {1.0kgf}
FULL SPEED POSITION	26.5±4.9N {2.7kgf}

https://truckmanualshub.com/

3) HOW TO INSTALL ENGINE ACCELERATOR FOR BODY OR EQUIPMENT

(1) Be sure to provide the body controller with the full speed stopper for controlling the stroke of the sensor.
In that case, adjust the body side stroke in such a way that the body side stopper comes in contact earlier than the sensor side stopper.
The standard for adjustment is 1mm clearance between the sensor side lever and stopper under the condition than the body side lever touches the stopper. (See the following illustration.)

- Be sure to set the sensor lever that sensor lever should be contacted with idling stopper by adjusting body control lever while body or equipment do not operate (while vehicle is driving).

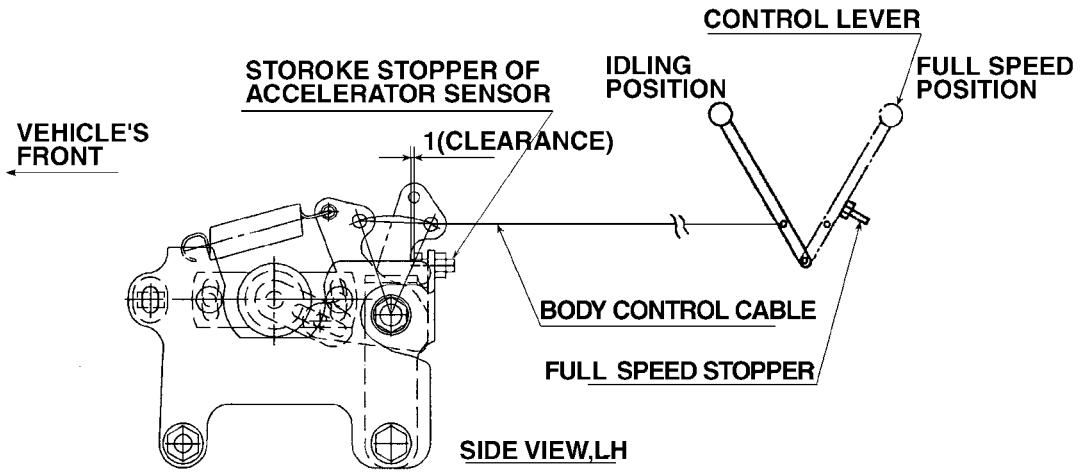

The clearance indicated for the stroke stopper of accelerator stopper is just for reference. If the sensor side stopper comes into contact earlier, a forcible stress will be imposed on the sensor shaft and it may result in the damage of the part in cause.

Moreover if sensor lever do not came into contact with idling stopper may result in a bad condition of the engine while vehicle to be driving.

https://truckmanualshub.com/

(2) When fitting the cable on the sensor lever, define the direction by pulling the cable parallelly to the direction of lever stroke so that an imbalanced load may not be imposed on the sensor shaft.
(See the following illustration.)

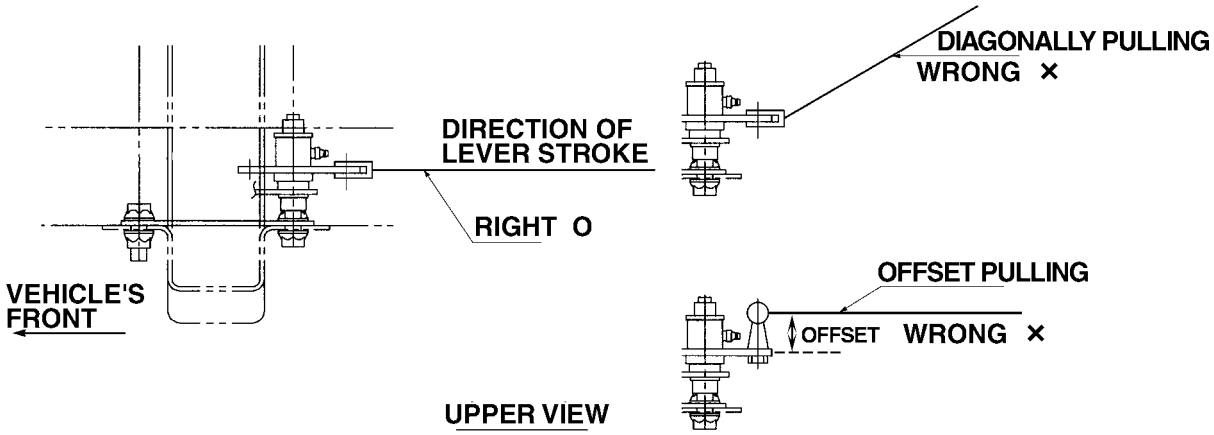

(3) Cautiones when installing the Engine accelerator sensor (hereinafter termed the sensor).

- Never attempt to disassemble the sensor.
  Do not drop the sensor or do not shock it.
  Each above thing may lead malfunction and failure.
- The sensor is not integral waterproof type.
  Therefore, when installing it, pay attention to avoid the direct projection of vehicle washing water, tire splash etc.
- The usable range of temperature is -30~80°C. Use it in the said range.
- Install the sensor in the position which can apply lubrication.
- Avoid such places where there is risk of receiving falling matters or stones that give impact.
- Install the sensor where there is no possibility of exposing dust, oil mist, humidity, chemical product or vibration.
  If it is impossible to find such place, protect it with a cover.
- Install the wire harness certainly so that it may not twist or not bend extremely.
- For fitting and clipping the harness wires,refer to the COMMON manual.
- If the length of the sub-harness wire is too short, try to abtain the same kind of the harness wire for extension.

https://truckmanualshub.com/

REAR BODY CONTROL LEVER (OPT)

1) Mounting position of dump body control lever

Unit : mm

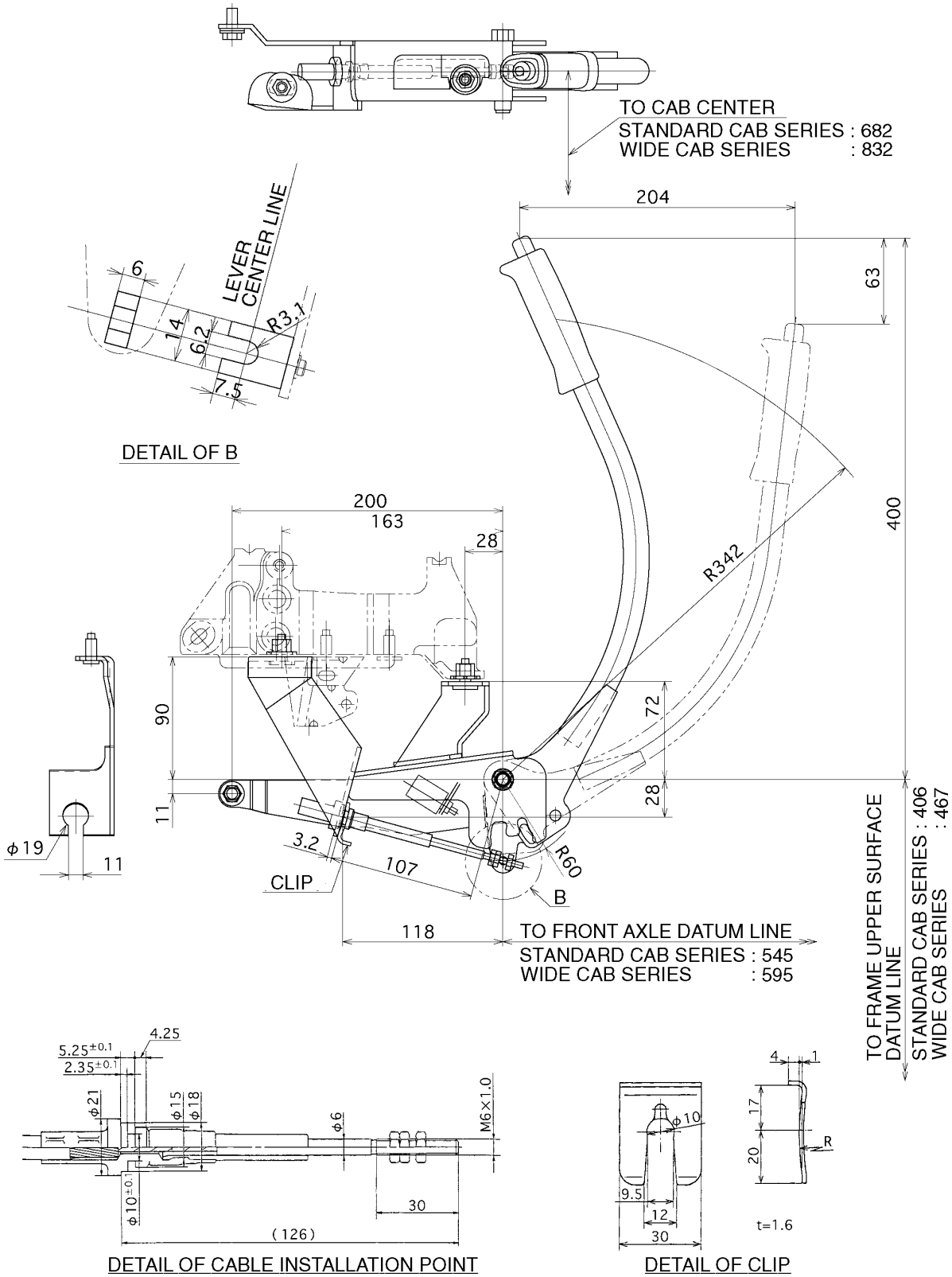

https://truckmanualshub.com/

6. ELECTRICAL SYSTEM

FUSE BLOCK AND RELAY PANEL ····· 6 - 1
ALTERNATOR OUTPUT CHARACTERISTIC ····· 6 - 2
SPARE POWER TERMINALS ····· 6 - 3
ADDITIONAL LAMPS ····· 6 - 4
REAR COMBINATION LAMP ····· 6 - 5
LICENSE PLATE BRACKET AND LICENSE PLATE LAMP ····· 6 - 6
BACK-UP BUZZER ····· 6 - 7
ELECTRICAL WIRING DIAGRAMS ····· 6 - 8

https://truckmanualshub.com/

FUSE BLOCK AND RELAY PANEL

1) LOCATION

The fuse block and relay panel are located inside the instrument panel as shown below.

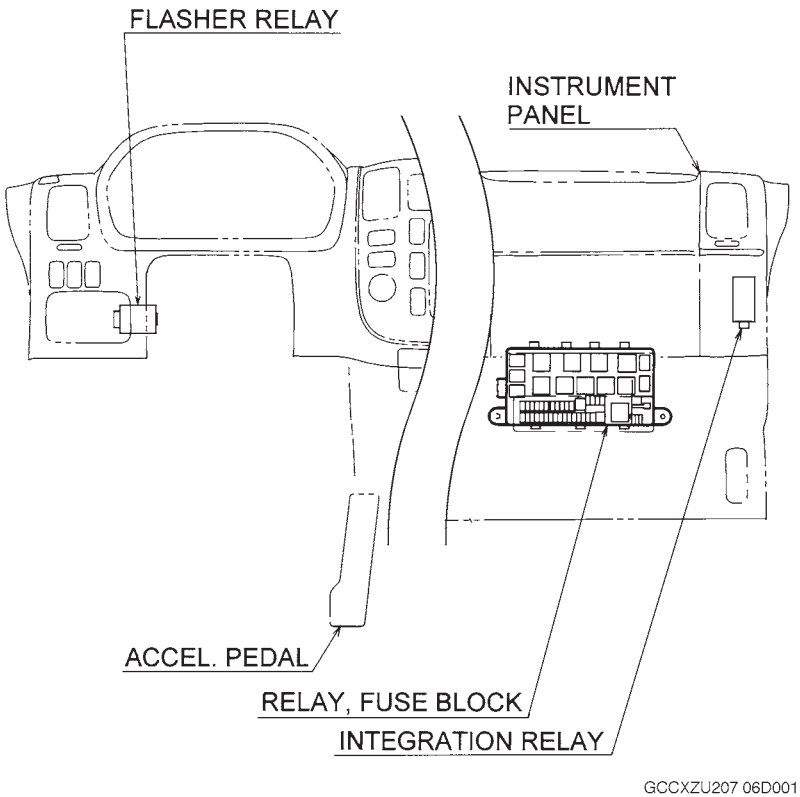

https://truckmanualshub.com/

2) FUSE BLOCK

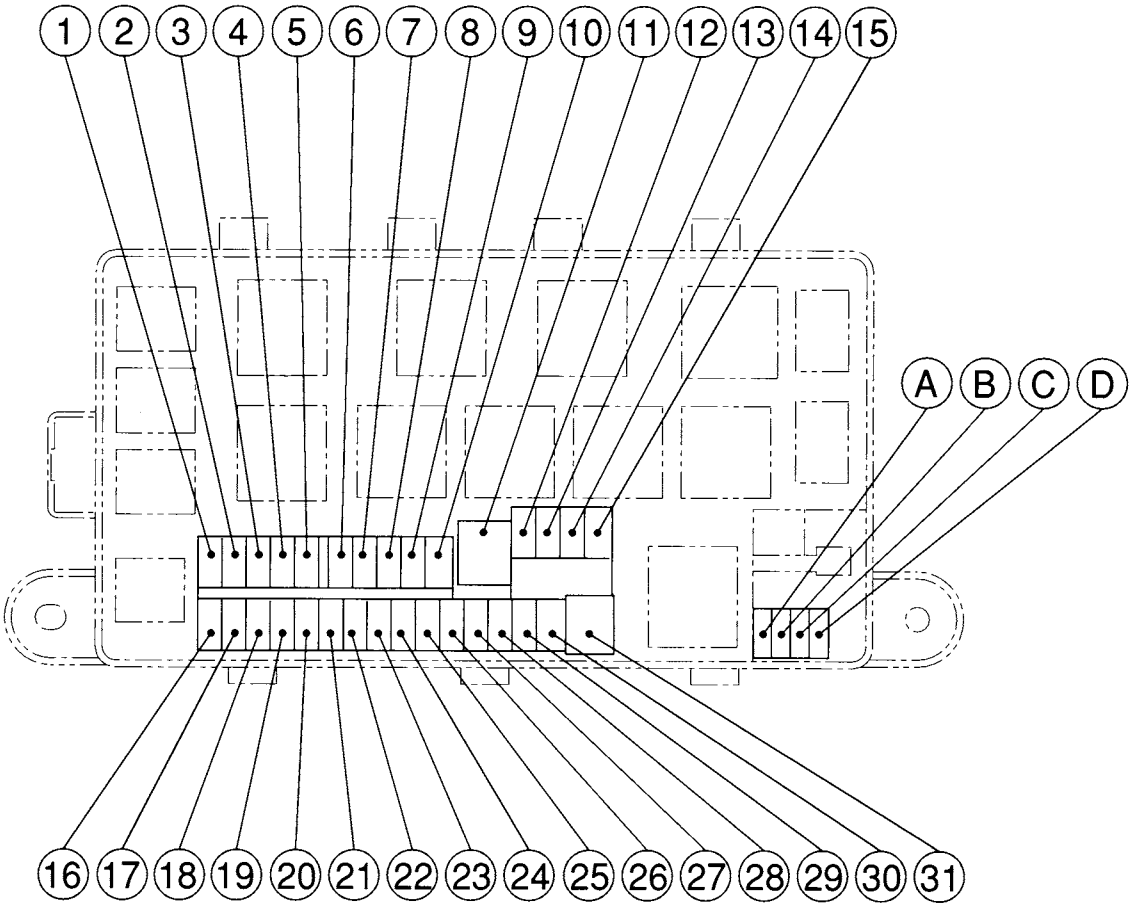

	No.	DESCRIPTION	CAPACITY
	1	ECU, GENERAL (12V)	15A
	2		
*	3	HV (12V)	15A
	4		
	5		
	6	WIPER	20A
	7		
	8		
	9	IGNITION	10A
	10	A/C	10A
	11	POWER WINDOW	30A
	12		
	13	FOG LAMP	15A
	14		
	15	DOME LAMP	10A
	16	STOP LAMP	10A
	17	HORN	10A
	18	SPARE, ACC	10A

No.	DESCRIPTION	CAPACITY
19	ACC	15A
20		
21	AM1	20A
22	AM2	20A
23		
24		
25	HEAD LAMP (LH)	10A
26	HEAD LAMP (RH)	10A
27	ECU, GENERAL	10A
28	GAUGE	10A
29	TAIL LAMP	10A
30	SPARE, LIGHTING	10A
31		
A	SPARE FUSE	20A
B		15A
C		10A
D		

* : XKU417L-HKFQB3 only

https://truckmanualshub.com/

3) RELAY PANEL

(Except XKU417L-HKFQB3)

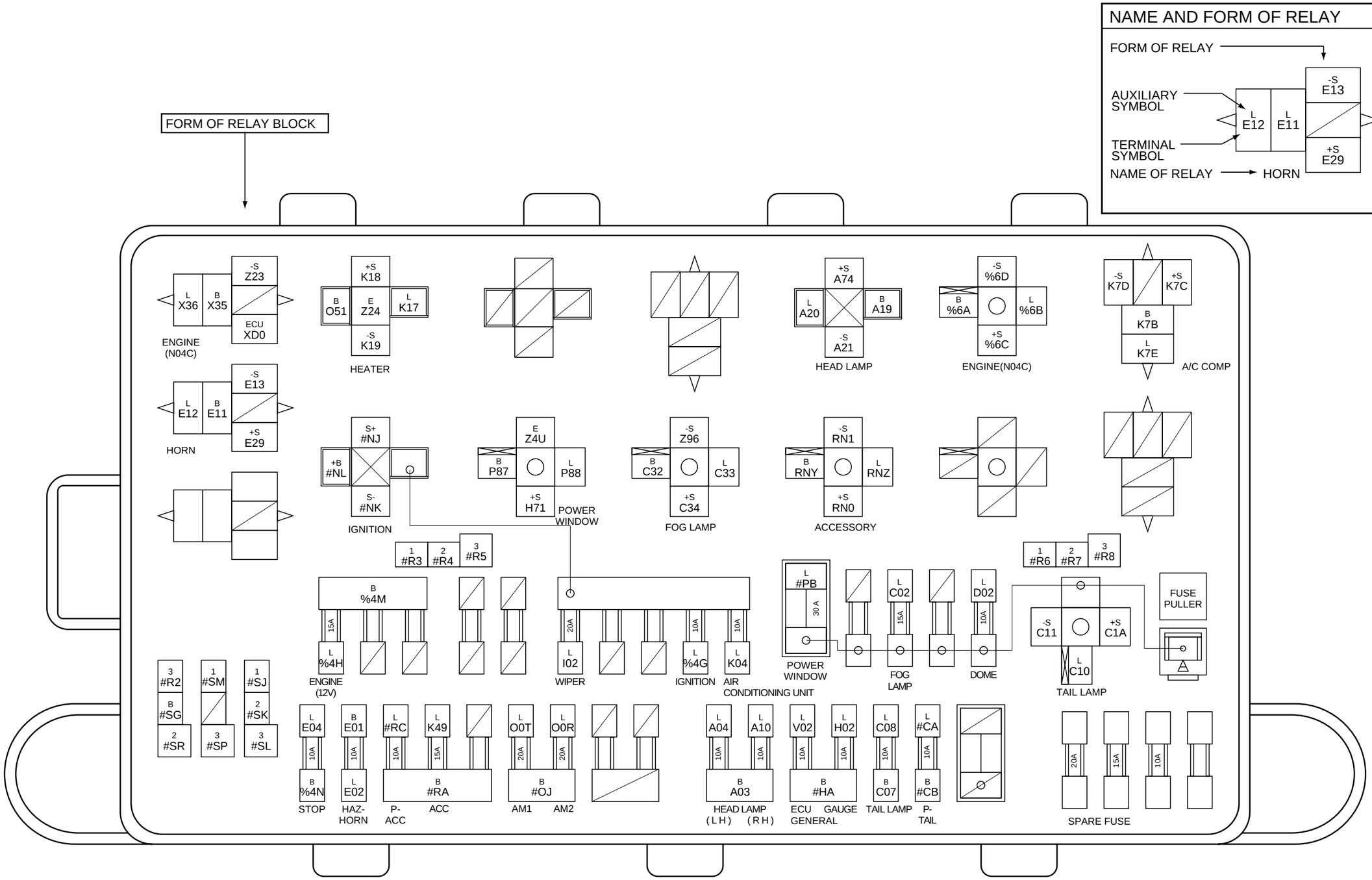

https://truckmanualshub.com/

RELAY PANEL

(XKU417L-HKFQB3 only)

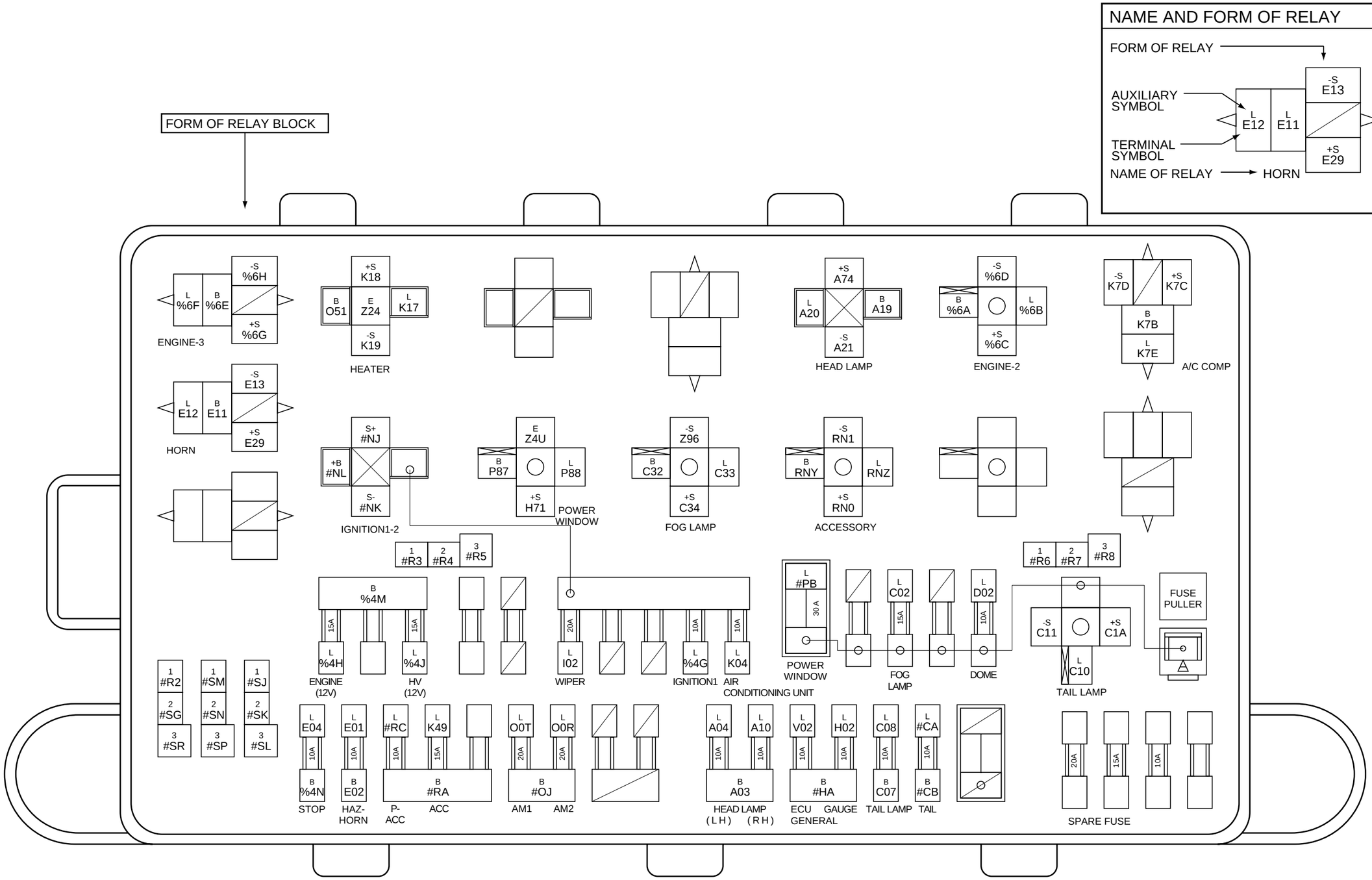

https://truckmanualshub.com/

ALTERNATOR OUTPUT CHARACTERISTIC

• Except XKU417L-HKFQB3

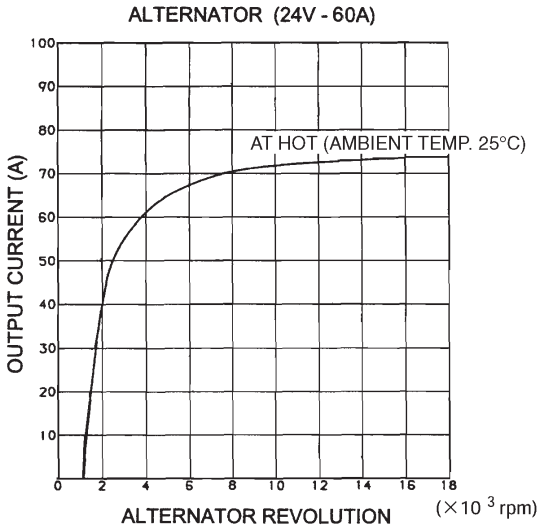

PULLEY RATIO
2.50

• XKU417L-HKFQB3 only

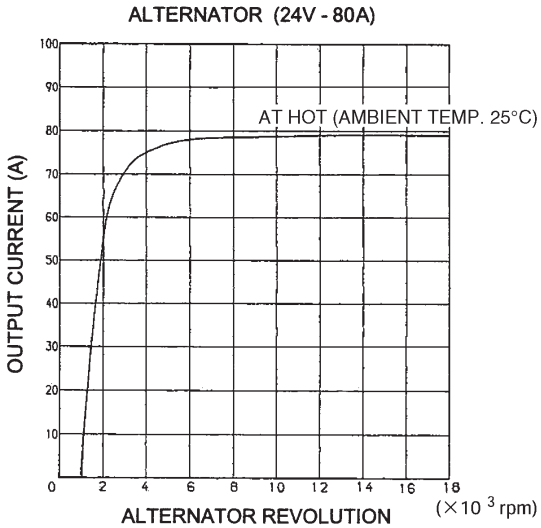

PULLEY RATIO
2.41

• The maximum power available for the whole vehicle is defined by the capacity of the alternator.
Therefore, the electric power that is not consumed by electrical equipments such as head lamps etc. can be available for the body side.

• Pay attention not to exceed the capacity of the alternator equipped on the vehicle.

• In the event that you are obliged to carry out the body mounting exceeding the capacity of the alternator, select the one available as an option or consult your nearest Hino service dealer or distributor.

https://truckmanualshub.com/

SPARE POWER TERMINALS

If you must take an electrical power supply for the body from the chassis, take it from the spare power supply.

Spare power supplies and positions

	TERMINAL MARK	POLE CODE	CIRCUIT (MAIN APPLICATION)	MAX. CAPACITY (A)	WIRE SIZE & COLOR	USING LENGTH (m)	TERMINAL (CONNECTOR) PARTS No.	COUPLING CONNECTOR PARTS No. (SPARE PARTS)	APPLICABLE MODEL	REMARKS
CAB SIDE	E	#NY	Power supply, ACC	7	0.85 P	1.7	90980-10171	90980-10170 (82989-37050)	All model	Permissible current : 7 A {Total current = Terminal J (# N3)}
		#N0	Power supply, lighting	7	0.85 G	2.8			All model	Permissible current : 7 A {Total current = Terminal J (#N6)}
		#N1	Power supply, starter switch ON	10	0.85 V	1.9			All model	Permissible current : 10 A {Total current = Terminal J (# N4)}
		#NZ	Power supply	10	0.5 GR	2.0			All model	Permissible current : 10 A {Total current = Terminal J (# N5)}
CHASSIS SIDE	J	#N6	Power supply, lighting	7	0.85 G	6.3	90980-11178	90980-11177 (82989-37090)	All model	Permissible current : 7 A {Total current = Terminal E (# N0)
		#N4	Power supply, starter switch ON	10	0.85 V	5.1			All model	Permissible current : 10 A {Total current = Terminal E (# N1)}
		#N5	Power supply	10	0.85 GR	4.9			All model	Permissible current : 10 A {Total current = Terminal E (# NZ)}
		#N3	Power supply, ACC	7	0.85 P	4.9			All model	Permissible current : 7 A {Total current = Terminal E (# NY)}

[NOTE] (1) The permissible current to be taken from spare power terminal is determined from the capacity of the fuse and wire size.
Make sure that the maximum load (current) of the installed equipment must be kept lower current than the permissible capacity to be able to take from spare power terminal.

(2) Be sure to keep the lower current value than the alternator generated capacity when switched on the original and additional equipment same time to avoid over discharging electricity of the battery.

(3) Using length show the wire length from fuse to each terminal (pole) of the spare outlet.
Be sure to make circuit using the appropriate kind, size and length of the wire followed by the table described in this page.

https://truckmanualshub.com/

1) Outlet Position Inside the Cab

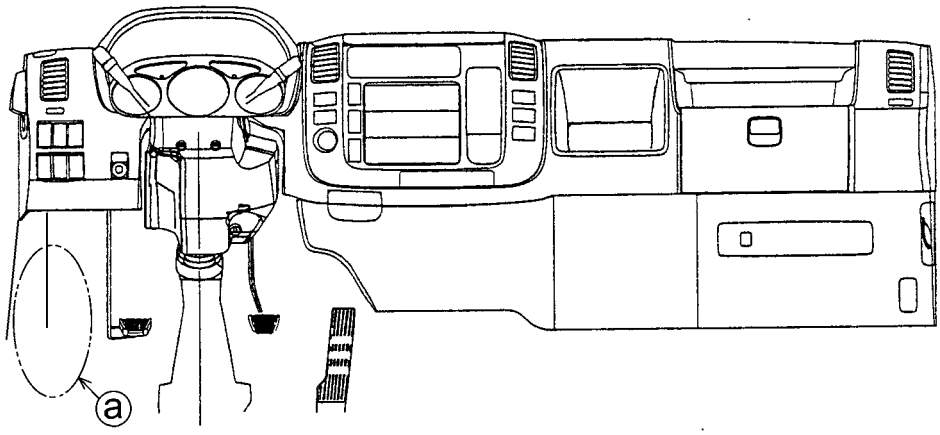

DETAILS OF ⓐ

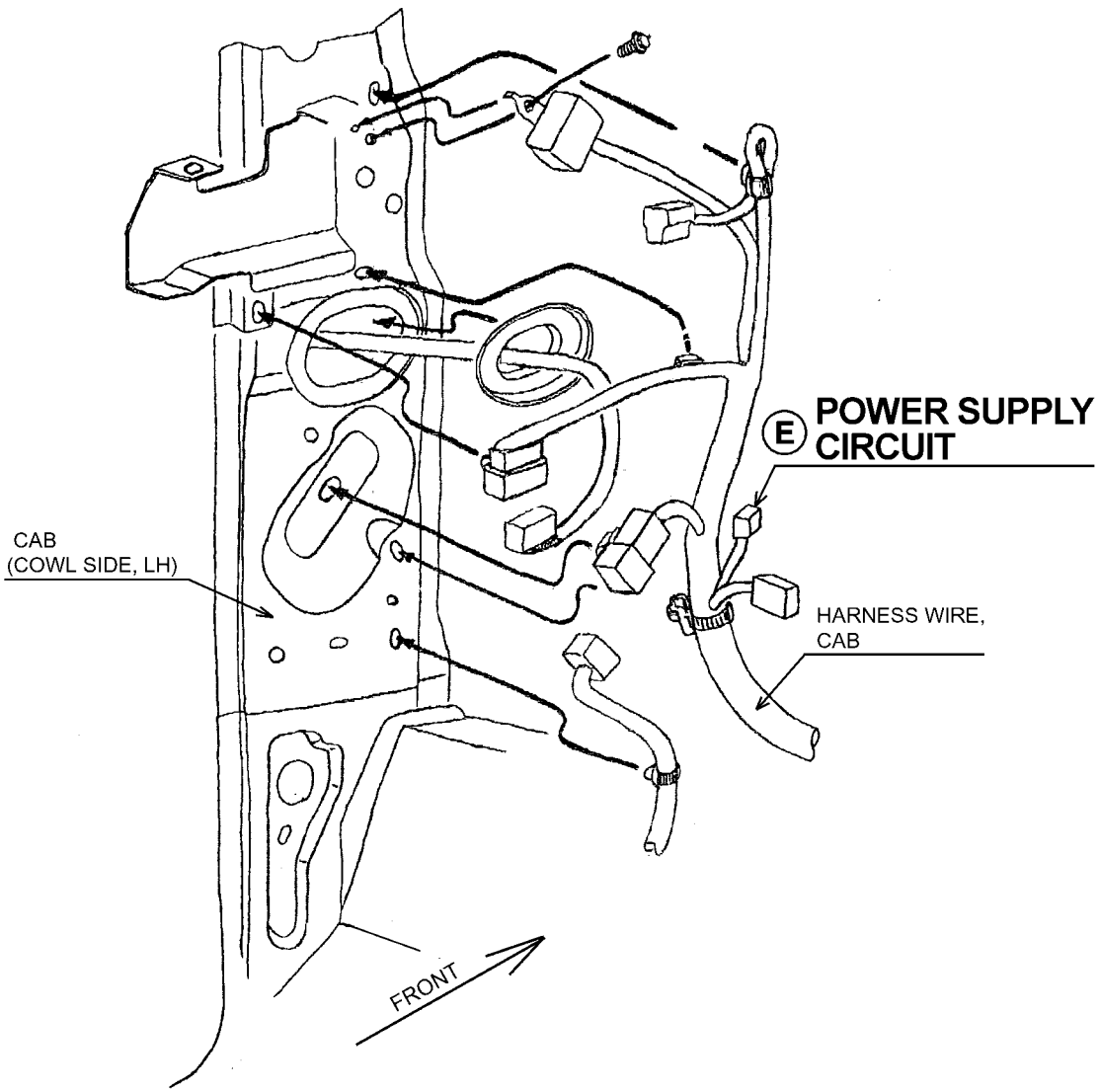

https://truckmanualshub.com/

2) Outlet Position on Chassis Side

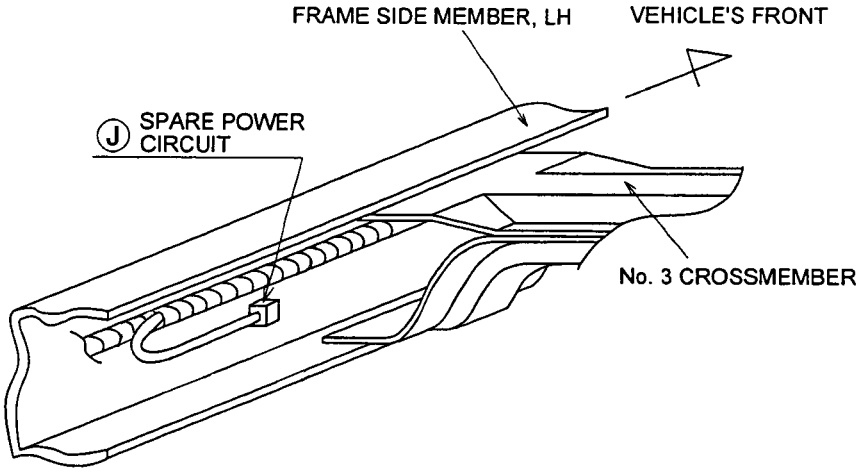

HOW TO TAKE ELECTRICITY FROM POWER SUPPLY CIRCUIT

a. USING SUB-HARNESS TYPE

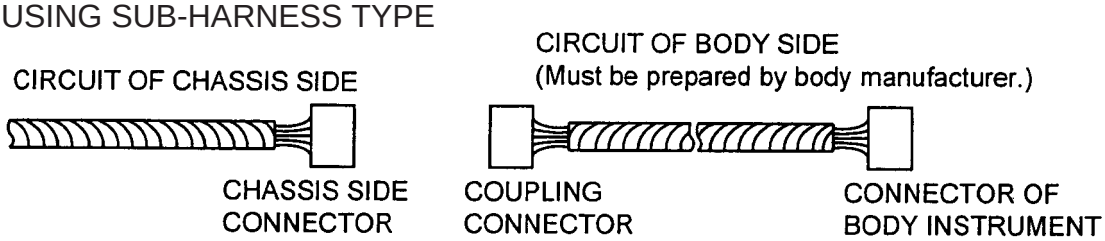

b. DIRECT CONNECTING TYPE

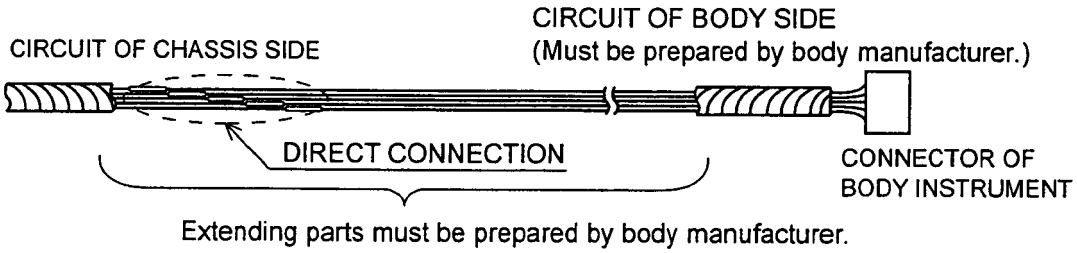

[NOTE]
- As far as possible take power using sub-harness type.
- If you must take power using direct connecting type, be sure to observe the precautions in described item "ELECTRICAL EQUIPMENT AND WIRING".

https://truckmanualshub.com/

3) Detail of Connector (Parts no. & pole arrangement)

• INSIDE THE CAB

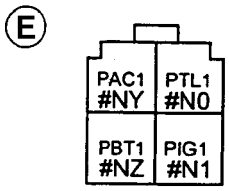

Parts No.90980-10171
(82989-37050)

• CHASSIS SIDE

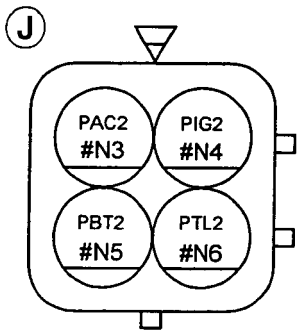

Parts No.90980-11178
(82989-37090)

[NOTE] FOR COUPLING CONNECTOR PROVIDED AS AN OPTIONAL PARTS.

• Parts number of coupling connector is shown in parenthesis.

• Details of coupling connector are as follows.

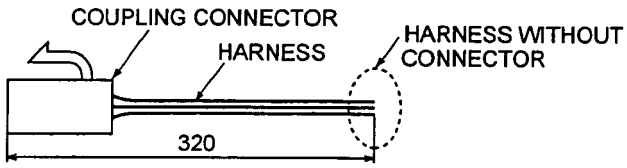

• Each connector of the chassis side has individual color. Make sure that do not connect wrong coupling with spare power terminal (connector).

https://truckmanualshub.com/

ADDITIONAL LAMPS

- The lamps installed to the chassis has already been complied with the laws or regulations. Alteration and modification are therefore strictly prohibited.
- If you must install additional lamps, be sure to observe the following precautions.
- Moreover, installation of the additional lamps must be complied with the laws or regulations and install the harness to be observed the precautions of wire harness described in Common Manual.

https://truckmanualshub.com/

1) Drawing in the Wire Harness into the Cab

Penetration Hole of Wire Harness

- The penetration hole to draw the wire harness into the cab is provided at the floor of cab as following figure.
- When draw the wire harness, replace the grommet and draw it into the cab.

[NOTES]

(1) Make sure that the management should be taken such as disposing the sharp edge of the penetration hole and fixing the corrugated tube on the harness to prevent damage to the wire and potential short circuit.

(2) Make sure that the clearance between wire and penetration hole should be properly sealed by sealant to prevent water coming in and abnormal noise.

(3) The penetration holes of wire marked A, B may be not able to use according to the vehicle's specification.

Be sure to confirm the actual vehicle before drawing the harness (wire) and using empty hole.

(4) Using the chassis harness grommet together for drawing the additional wire is strictly prohibited to prevent damage of chassis harness when processing the grommet.

LEFT HAND DRIVE

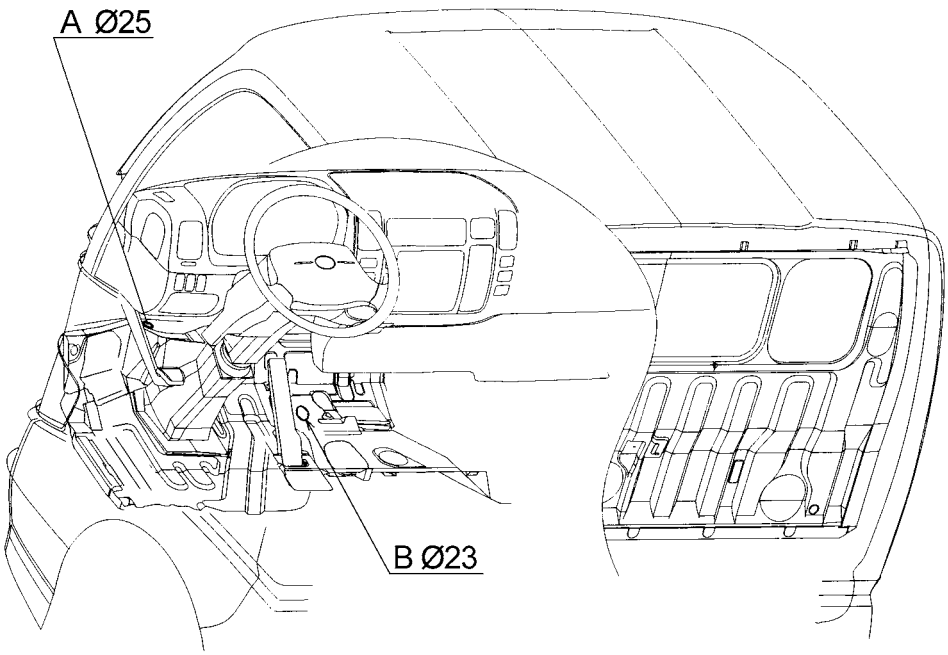

FXZ6 FP HOLE L

https://truckmanualshub.com/

2) Installation of Additional Equipment and Switches

Layout of Equipment and Switches

(1) Installing space of additional equipment

- Have been provided the installing space (H:150mm x W:180 mm) at the center cluster which can be installed three kind of additional equipment as a wireless radio, electrical equipment and etc.

(2) Layout of switches and lamps

- Standard layout of switches and lamps are as following figure.
- If you intend to install additional switches or lamps at instrument panel for the convenience of body mounting, be sure to install it at empty space after confirmation of original condition of the actual vehicle.

Avoid using additional switches and lamps with existing switches and lamps.

- If you install additional switches and lamps, fit a caution plate showing the purpose of each switch, etc., to prevent accidental operation or confirmation.

https://truckmanualshub.com/

LEFT HAND DRIVE

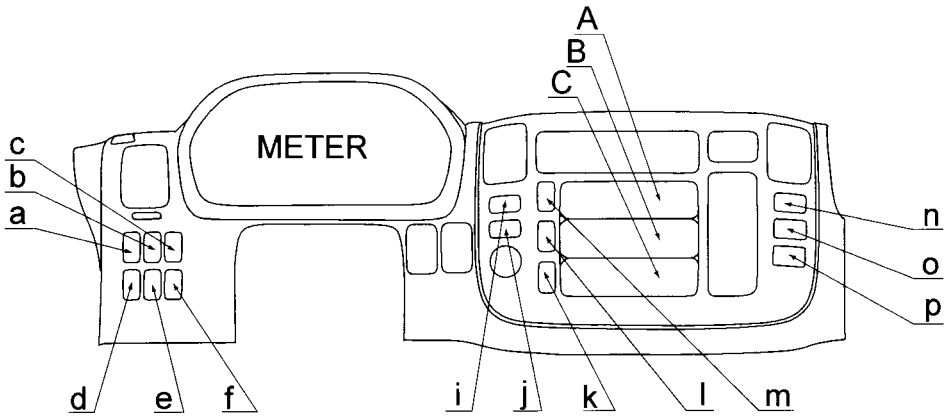

	No.	DESCRIPTION	APPLICATION
	A	TRAY TACHOGRAPH (OPT) AUDIO (OPT)	OPT (1DIN SPACE)
	B	TRAY AUDIO (OPT) (WHEN TACHOGRAPH IS OPT.)	OPT (1DIN SPACE)
	C	TRAY	(1DIN SPACE)
	a	FRONT FOG LAMP SWITCH	OPT
	b	----	----
	c	COIN HOLDER	STD
	d	----	----
*	e	PTO SWITCH	OPT
	f	----	----
	i	WARM UP SWITCH	STD
	j	----	----
	k	PEN HOLDER & HOOK	STD
	l	IDLE STOP SWITCH	STD
	m	HAZARD SWITCH	STD
	n	----	----
	o	----	----
	p	----	----

GEXZU208 06T001

* Except XKU417L-HKFQB3

https://truckmanualshub.com/

Additional Switches

- If you intend to install the switch to the instrument panel, use the switch mentioned hereinafter which is provided as a spare parts.

PARTS NO.	DESCRIPTION	SPECIFICATION
84270-37020	SWITCH ASSY, GENERAL USE	PERMISSIBLE LOAD: 24V - 50W

Unit : mm

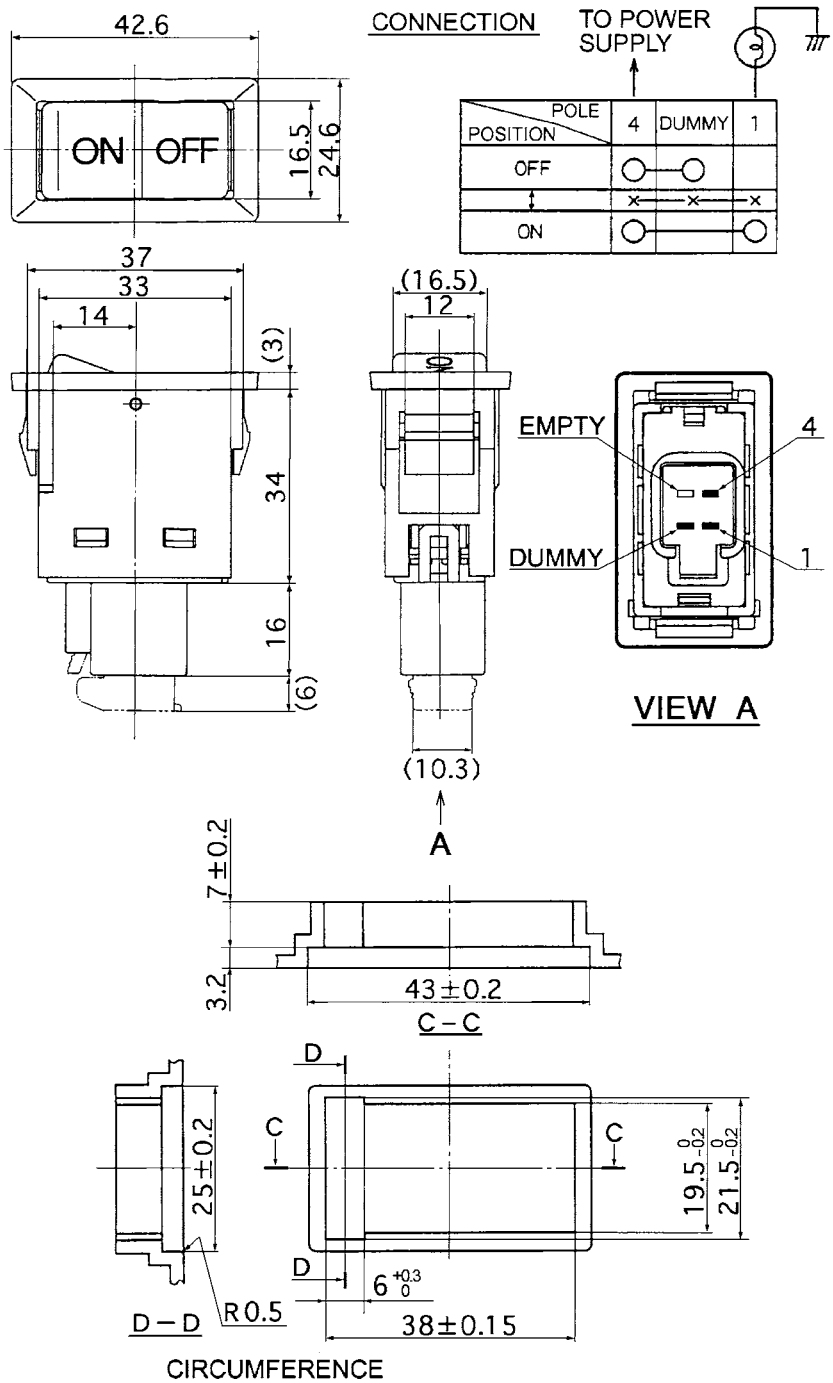

https://truckmanualshub.com/

3) Method of Taking Electrical Power

(1) Taking power directly from the battery

If you intend to take electrical power for the body or equipment directly from the battery, secure the battery cable and the body power supply connector together with the same nut.
(For details, see the following figure.)

In this case, you must install a fuse at a suitable point in the circuit and take precautions to prevent short circuits as these may lead vehicle fires. When securing the cable and power connector, make sure you tighten the nut properly.

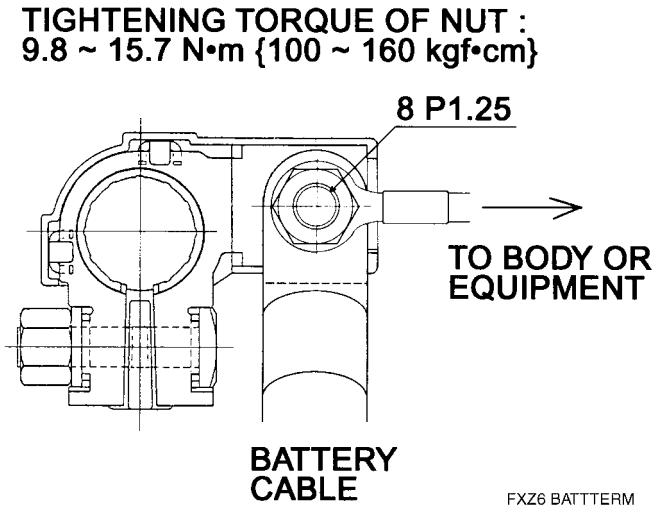

https://truckmanualshub.com/

REAR COMBINATION LAMP

When chassis with cab are shipped, the rear combination lamp assembly is temporarily installed onto the end of the frame.

Therefore, when installing it regularly, attach the combination lamp assembly directly such that the direction indicator lamp (umber) is outside and the back-up lamp (white) is inside of the vehicle.

Do not install the rear combination lamps vertically so as not to affect the performance of reflectors and drain holes.

(Drawing shows right-hand lamp only. Positions reversed for left side.)

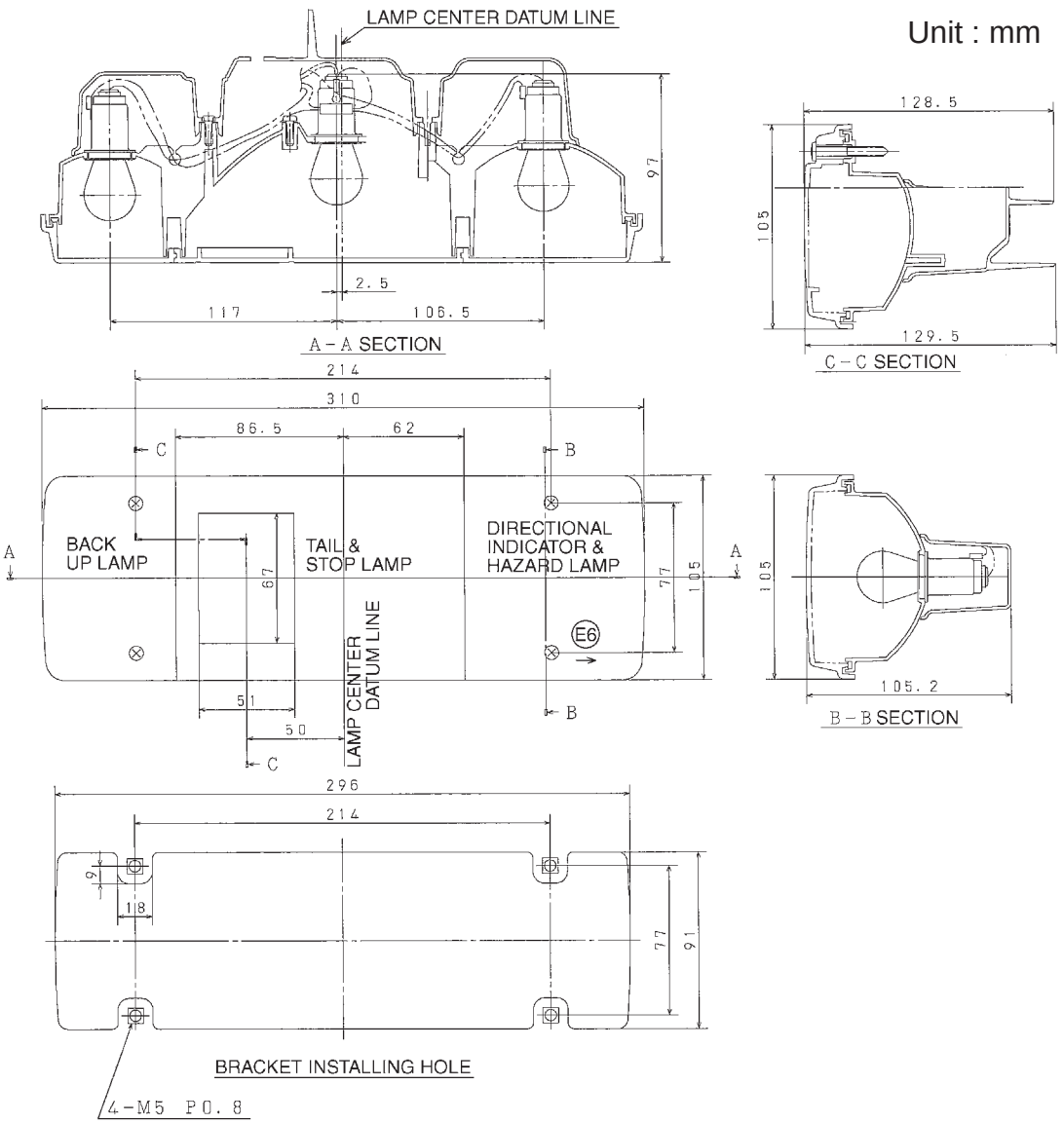

https://truckmanualshub.com/

LIGHT EMISSION PORTION OF REAR COMBINATION LAMP

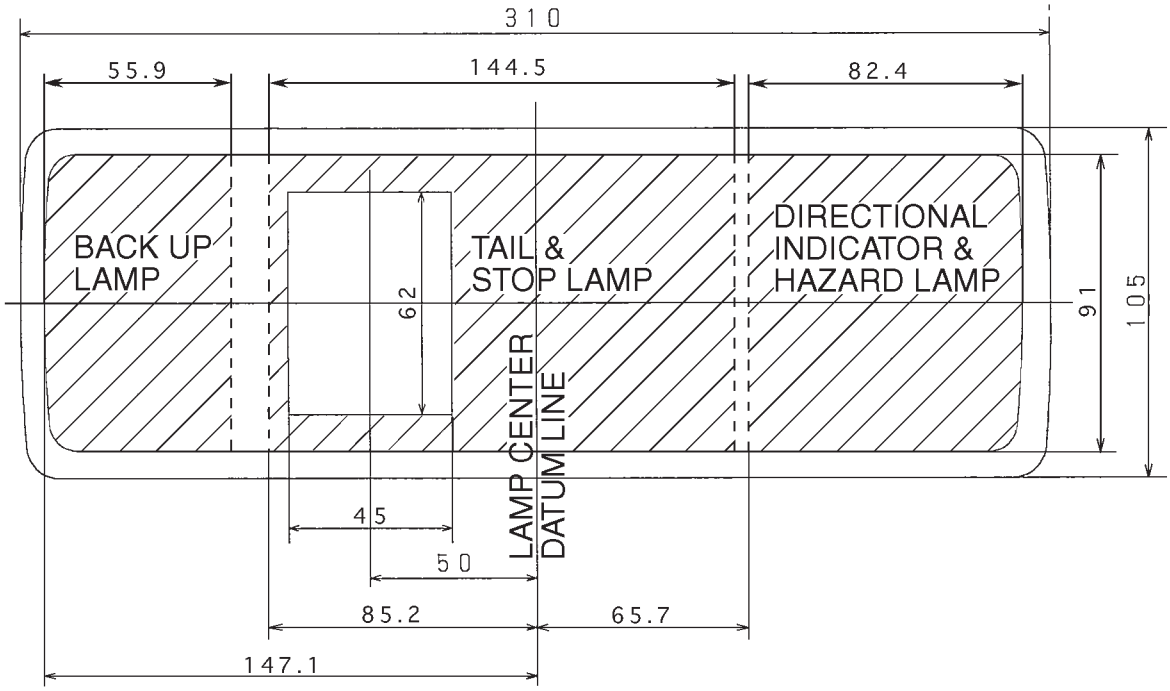

https://truckmanualshub.com/

LICENSE PLATE BRACKET AND LICENSE PLATE LAMP

(1) Use the bracket supplied with the chassis to install the license plate and license plate lamp.

(2) The license plate must be installed so as to be clearly visible from the rear of the vehicle.

Make sure that it is not hidden by the rear bumper, lamps, or by the rear body.

(3) The license plate bracket must be securely installed by rivets or bolts so as to be complied with vehicle laws and regulations.

(4) To prevent the license plate bracket from shaking, always use a strengthening stay when it is installed.

(5) Make sure that light of the license lamp do not directly come through toward the rear of the vehicle.

(6) Mount the license lamp at such a position where it is not exposed directly to the water splashed by the rear wheels.

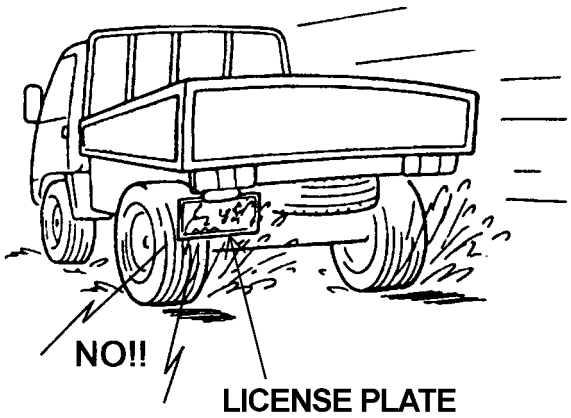

FXZ6 LP SPLASH

https://truckmanualshub.com/

EXTERNAL ASPECT OF LICENSE PLATE BRACKET

Unit : mm

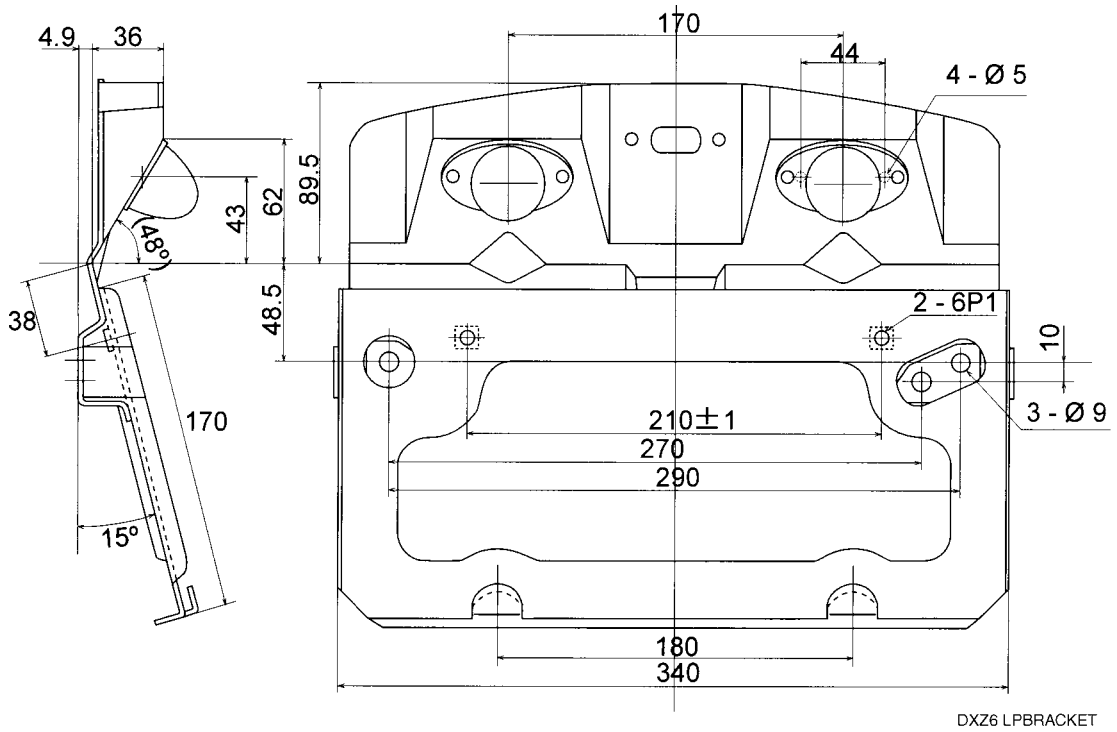

EXTERNAL ASPECT OF LICENSE PLATE LAMP

Unit : mm

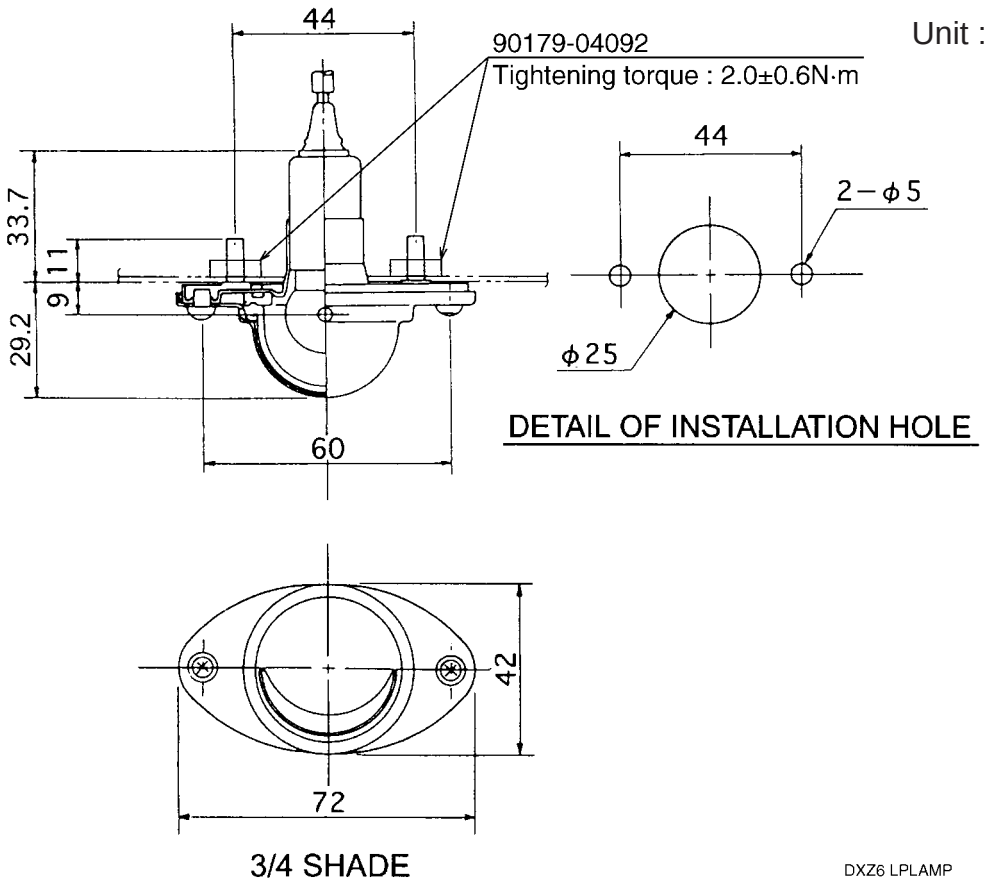

https://truckmanualshub.com/

BACK-UP BUZZER (OPTION EQUIPMENT)

- If you move the back-up buzzer or modify the surrounding parts of the chassis, observe the precautions as followings.

1) Installation angle

- Must be kept the permissible range of installing angles shown in the figure below.
- If the installing angle is not within range, water will accumulate inside the buzzer and may lead to failure.

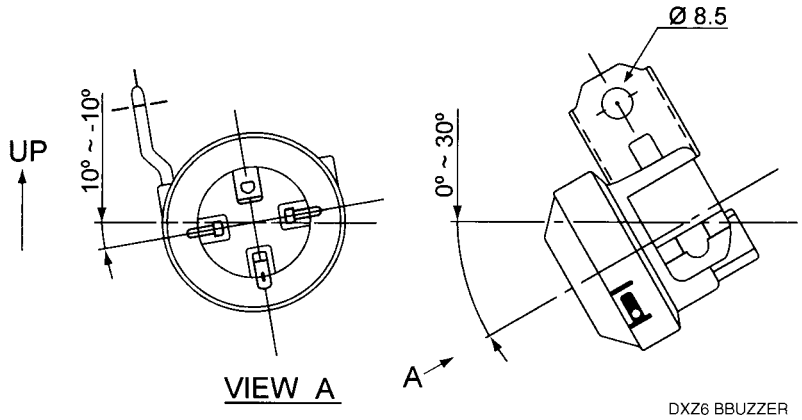

2) Position

- If you move the buzzer to make room for mounting a body, reinstall it in a position where it is not exposed to splashing with muddy water, stone or water.

3) Precaution for painting

- Make sure that the buzzer should be covered during painting to protect the paint coming into buzzer from sound emitting hole for avoiding failure of no sound.

https://truckmanualshub.com/

ELECTRICAL WIRING DIAGRAMS

This manual does not contain electrical wiring diagrams.

The electrical wiring diagrams are in the WORKSHOP MANUAL.

For more details, please consult your nearest Hino sales dealer or distributor.

https://truckmanualshub.com/

7. PAINTING

TOP COAT PAINTING ····· 7 - 1
PRECAUTION OF TOP COAT PAINTING FOR CAB ····· 7 - 2
HANDLING OF LAMINATED WINDSHIELD ····· 7 - 3
HOW TO REMOVE THE RADIATOR GRILLE ····· 7 - 4
THE KIND AND THE ATTACHING POSITION OF MARK AND ORNAMENT ····· 7 - 5
PRECAUTIONS FOR FITTING AND STORING THE CAUTION PLATE ····· 7 - 6

https://truckmanualshub.com/

TOP COAT PAINTING

Take a care to the following points, when required to repaint it by a customer.

1) Sanding

When repainting, perform to sand the original coat carefully not to be left any part no-sanded, in order to improve the adhesion of top coat paint. And, never remove off sealant, adhesive agent at connecting parts of the metal sheet.

[Sanding surface]

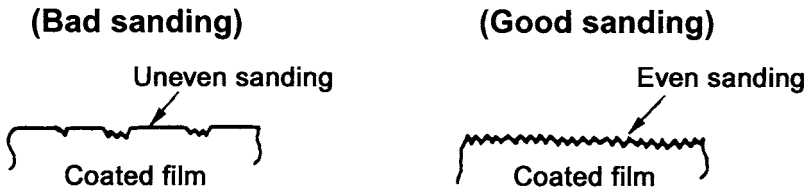

F7 SANDING

2) How to Choose Top Coat Paint

(1) When painting on the metal parts

Hino recommends urethane-type, natural air drying paint to be used, which have superior characteristics as in painting finish quality, color fade-out, comparing with lacquer-type paint. The top coat should be at least 30 μ thick.

Recommendation brand	Nihon paint NAX-M-G2
	Kansai paint RETAN PG-60
	Dainihon paint V-Top

T7 PRECOM 1

(2) When painting on the resin parts

- Hino recommends paint for the resin parts to be used, which is best matched to the characteristics of the resin parts (step rubber, front-grill, front garnish, etc.) and also, can prevent to lowering the shock resistant force at low temperature.

Recommendation brand	Nihon B chemical (NBC)	R240	A
		R225 Hardener	B
	Kansai paint	RETAN PG60 base	A
		RETAN PG plastic hardener	B
[Caution] Above listed 2 brands respectively, mix A and B by a rate of 4 : 1.			

T7 PRECOM2

- Then, Avoid to paint backside of the resin parts as its shock resistant force lowers further down with the both side to be painted, of the resin parts.
- Cab step, made of polypropylene material, can not be painted.

https://truckmanualshub.com/

PRECAUTION OF TOP COAT PAINTING FOR CAB

1) Cautions for Cab Painting

When painting the cab, take a caution to the following points, other than above.

(1) The place and parts to be omitted from painting for cab and mounting body as well as adhesion of all kinds of oil:

- Various kinds of the ornaments, marks.
- Various kinds of caution plates, labels.
- Relating equipments and parts to the brake as well as a brake hose.
- Various types of rubber hoses.
- Electrical wiring, connectors, electrical lamps, electrical switch, relating equipments and parts.
- Back-up buzzer, noise emitting hole of electric horn.
- Rubber and plastic parts of cab, engine, chassis suspension and steering system.
- Rubber hose for cab-tilt, piston rod of the cylinder for cab-tilt. (The vehicle with a hydraulic cab-tilt, driven by an electrical motor)
- Batteries
- Wiper blade, washer nozzle.
- Installing surface of disc to the disc wheel. (Including the hub to be contacted and contacting surface of drum, disc wheel as well as contacting surface of hub nuts.)
  Then, when stained paint to the inner part of the cab, cleaning it with a neutral detergent, do not use gasoline or thinner.

2) Caution when Drying

- When you use forced drying, a temperature on the surface of any parts to be painted must be 80°C as an upper limit. Removing off any plastic parts, rubber parts from the vehicle, paint them when you use a forced drying at over 80°C. (Refer to the figure as shown below.) Take care to those as plastic parts like fender, air cleaner, etc. are much used.
- When a vehicle with air-conditioning whose all piping and hosing are heated at abnormal temperature
  (more than 100°C), a pressure safety valve may function and come out refrigerant gas.

https://truckmanualshub.com/

- When removing off a air-cleaner assy, seal completely the inlet port side of engine to prevent any penetration of dirt, paint or etc.

  Also, install hoses securely and clamp them firmly when mounting them.

- Remove off the parts shown below when painting at over 80°C.

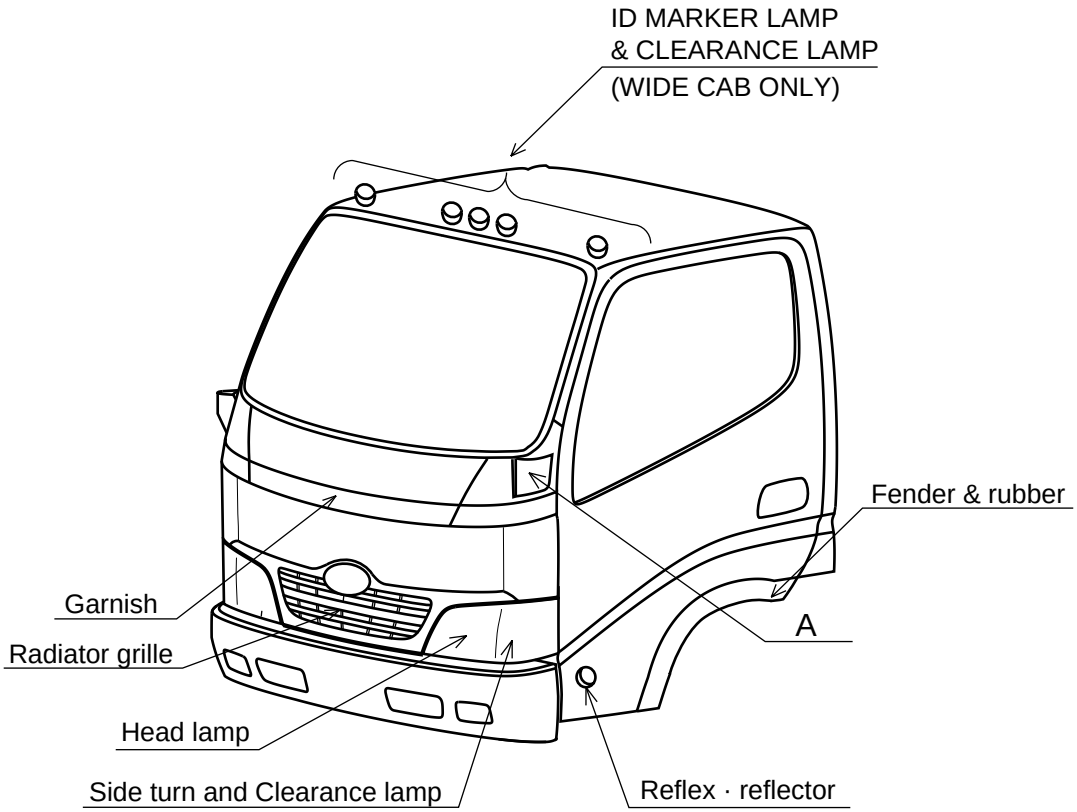

AUSXZU201 07D001

	MODEL	PARTS NAME
A	XZU307L-HKMLB3	Mirror stay cover
	XZU307L-HKMMB3	Cover
	XZU347L-HKMMB3	
	XZU407L-HKMMD3	
	XZU407L-HKMQD3	
	XZU407L-HKFQD3	
	XZU407L-HKFRD3	
	XZU417L-HKMMD3	
	XZU417L-HKFQD3	
	XZU417L-HKFRD3	
	XZU427L-HKFQD3	
	XZU427L-HKFRD3	
	XKU417L-HKFQB3	

[Note] Remove off the radiator grille in accordance with Article 4.

https://truckmanualshub.com/

HANDLING OF LAMINATED WINDSHIELD

A laminated glass is produced in such order that polyvinyl butyral film is inserted between 2 glasses and pressed with heat.

Under driving general condition, there is no problem. But under a hot temperature and a high moisture when painting, intermediate film is fallen off or such defective occur as foaming may be caused. Therefore, a special caution needs to be taken.

Caution when Painting

There is no problem when you use a natural drying. But when a forced drying is used with infrared ray lamp, etc., be sure that the drying should be implemented within 30 minutes at less than 120°C.

When drying at the temperature of more than 120°C, remove off the windshield glass or cover over the glass with something so that the temperature on the glass surface should not go up more than 120°C.

https://truckmanualshub.com/

HOW TO REMOVE THE RADIATOR GRILLE

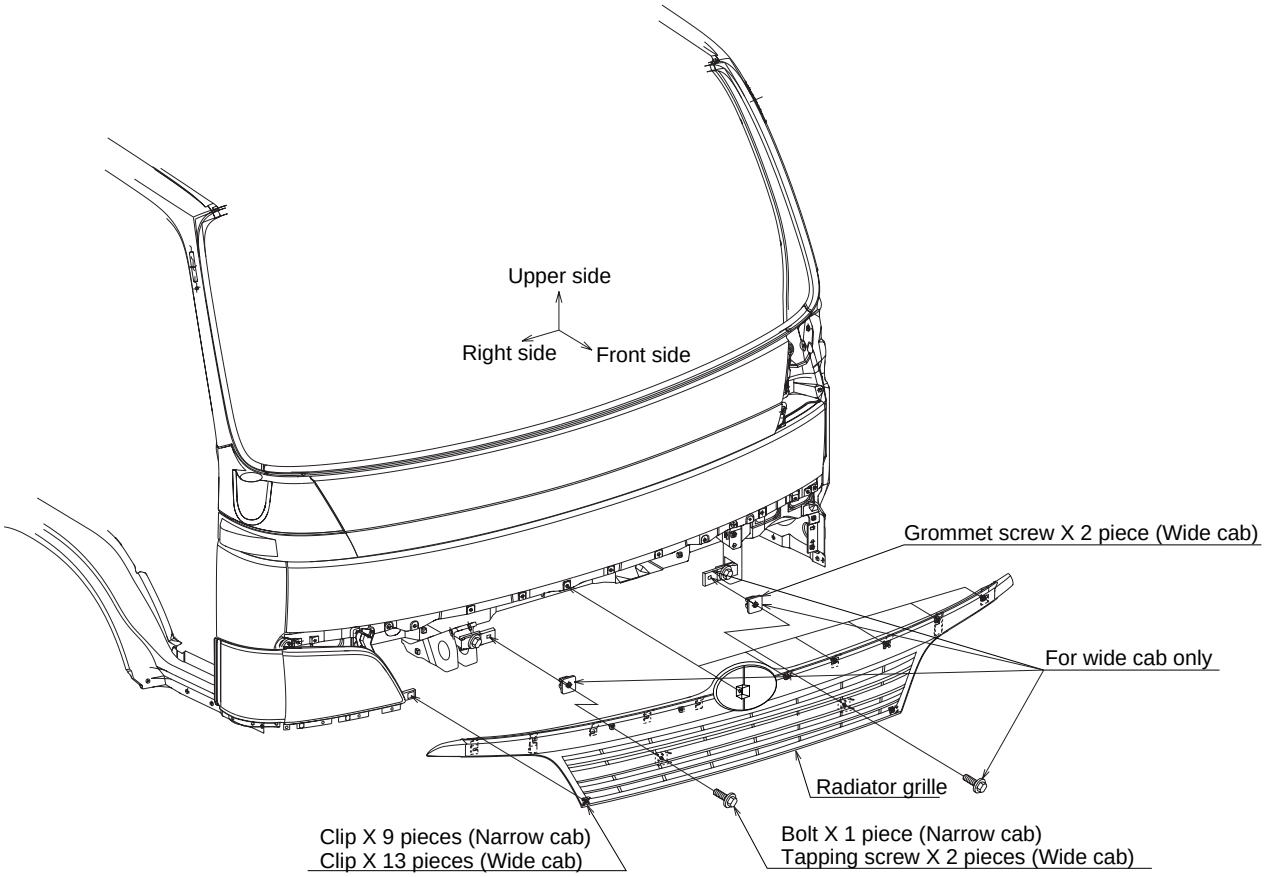

AUSXZU201 07D003

1) How to Remove Off the Radiator Grille

- Loosen the tapping screw or bolt, in the central part.
- Inserting your fingers into the clips underneath to pull them toward you, remove the clips.
- Remove the clips in the same manner at the side.

  * Remove the clips from right side of the vehicle (left side when viewed in front of the vehicle).

2) How to Install the Radiator Grille

- Install the clips on the radiator grille.
- Install the radiator grille on the cab body by matching the clips holes and pushing it in the order from the bottom to the upper side.
- Install the tapping screw or bolt, at the central part.

3) Caution

- After confirming that there are no damages at nail part, etc., of the clips, install them.

https://truckmanualshub.com/

THE KIND AND THE ATTACHING POSITION OF MARK AND ORNAMENT

The kind and the position to be attached of marks and ornaments on the cab as well as the chassis are specified in the chart below. Implement masking them completely when repainting the cab or the body. When the marks and the ornaments to be attached on cab are packed separately and shipped out together with the vehicle, or when attaching them after complete painting, attach them at the specified places in accordance with the attaching position chart and the attaching procedure.

HYBRID MARK (No.4 and 5) is peculiar to XKU417L-HKFQB3.

CAB FRONT

ATTACHING PLACE		NAME OF MARK	No.	KIND OF MARK	PART No.
Cab	Front	SYMBOL MARK	1	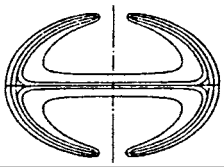	75315-37022
		MODEL MARK	2		75311-37190
		HINO MARK	3		75311-37200
		HYBRID MARK	4		75315-37060

AUSXZU201 07D004

[Note] Parts numbers are changeable always. Accordingly, for confirmation, get in contact with nearest Hino sales dealer or distributor when you place an order for necessary parts.

https://truckmanualshub.com/

DOOR

<HYBRID AND EMISSION CONTROL MARK>

ATTACHING PLACE	NAME OF MARK	No.	KIND OF MARK	PARTS No.
DOOR	HYBRID MARK	5	Hybrid	75427-37140
	EMISSION CONTROL MARK	7	EURO 1	75427-37150 75428-37020
			US 04	75427-37160 75428-37030
			EURO 3	75427-37170 75428-37040
			EURO 4	75427-37180 75428-37050

<MODEL SERIES MARK>

ATTACHING PLACE	NAME OF MARK	No.	KIND OF MARK	PARTS No.
DOOR	MODEL SERIES MARK	6	411	75429- 37010
			511	75429- 37240
			611	75429- 37040
			711	75429- 37100
			811	75429- 37220
			412	75429- 37020
			414	75429- 37030
			415	75429- 37210
			612	75429- 37050
			613	75429- 37060
			614	75429- 37070
			615	75429- 37080
			616	75429- 37090
			713	75429- 37110
			714	75429- 37190
			715	75429- 37120
			716	75429- 37130
			813	75429- 37140
			814	75429- 37200
			815	75429- 37150
			816	75429- 37160
			913	75429- 37170
			915	75429- 37230
			916	75429- 37180

[Note] Parts numbers are changeable always. Accordingly, for confirmation, get in contact with nearest Hino sales dealer or distributor when you place an order for necessary parts.

https://truckmanualshub.com/

1) Attaching Place and Procedure for Each Mark and Ornament

Refer to the detailed figure of the attaching position for 1 to 6 of the attachments on the cab.

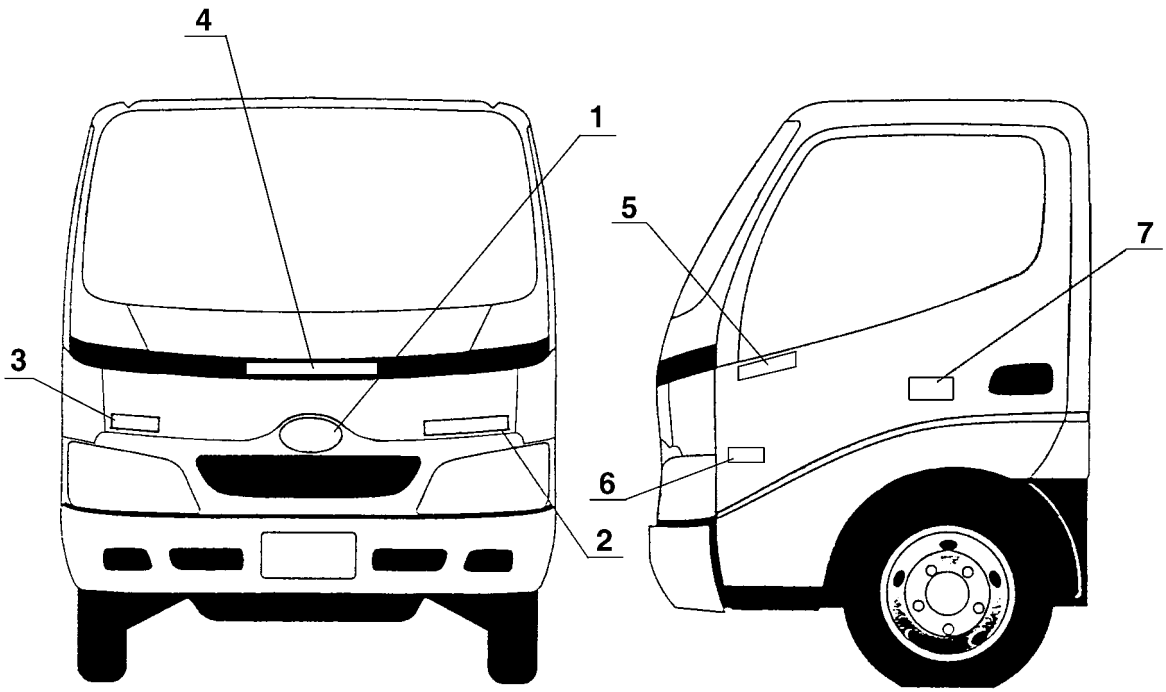

(FRONT VIEW OF CAB) (SIDE VIEW OF CAB)

https://truckmanualshub.com/

2) Detail of Each Mark and Ornament attaching position

(1) NAME : SYMBOL MARK
PLACE : Radiator grille

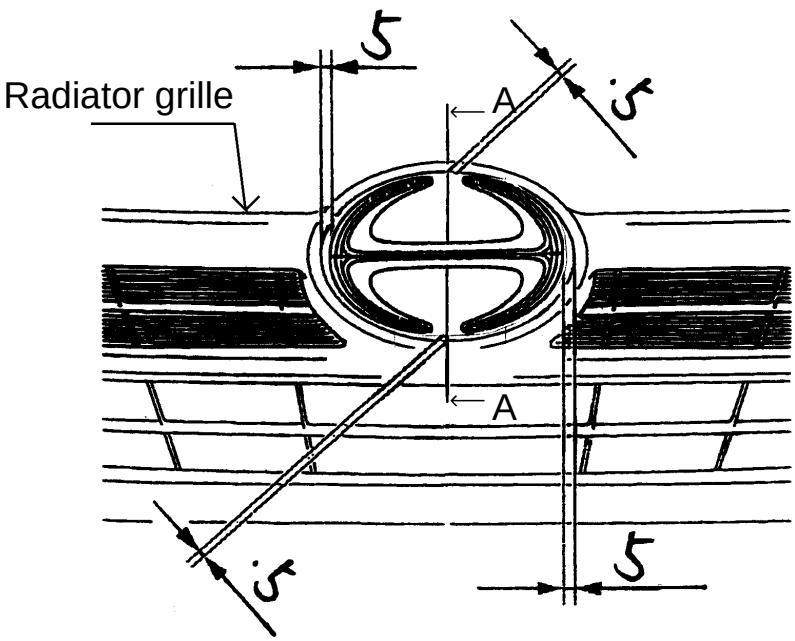

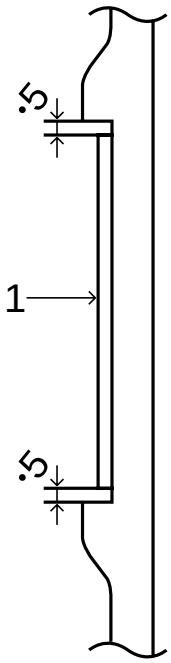

SECTION AA

(2) NAME : MODEL and HINO MARK
PLACE : Cab front panel

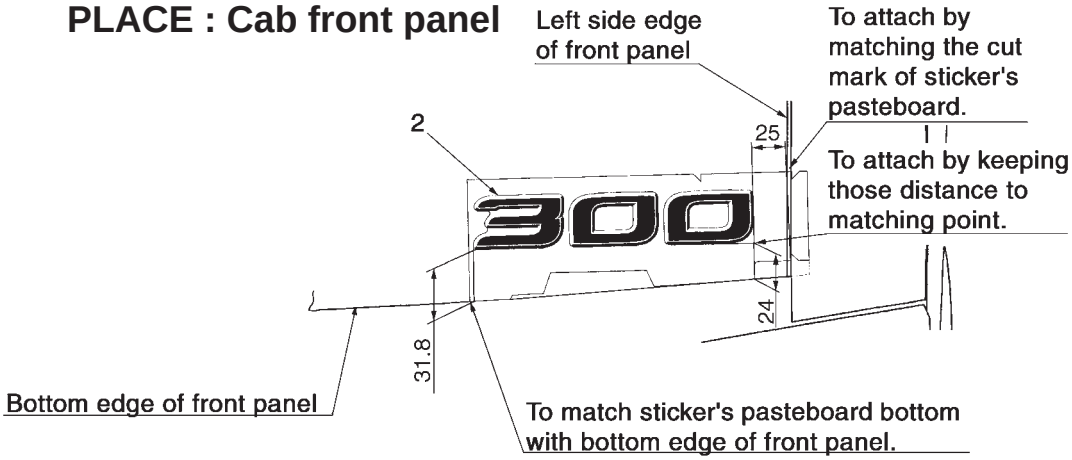

CAB FRONT VIEW (RIGHT SIDE)

AUSXZU201 07D028

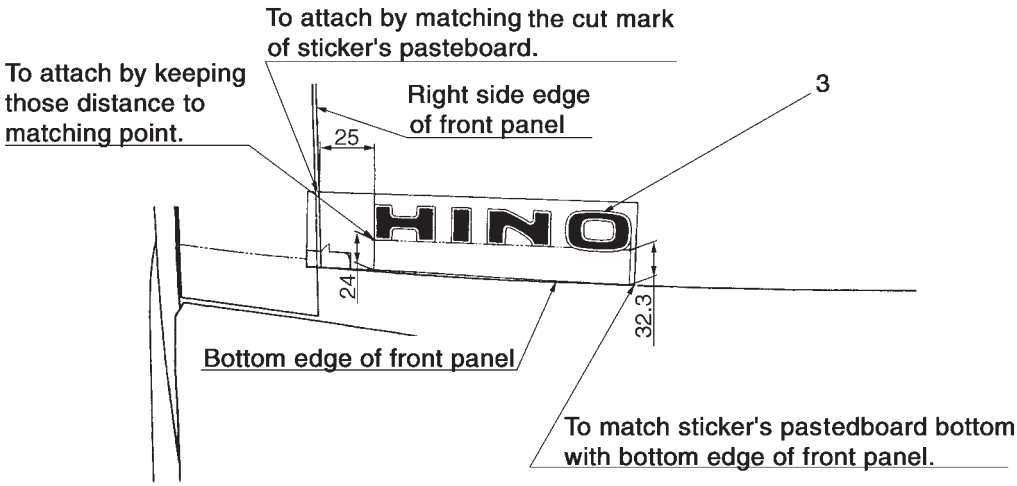

CAB FRONT VIEW (LEFT SIDE)

AUSXZU201 07D029

https://truckmanualshub.com/

(3) NAME : HYBRID, EMISSION CONTROL and MODEL SERIES MARK

PLACE : Door

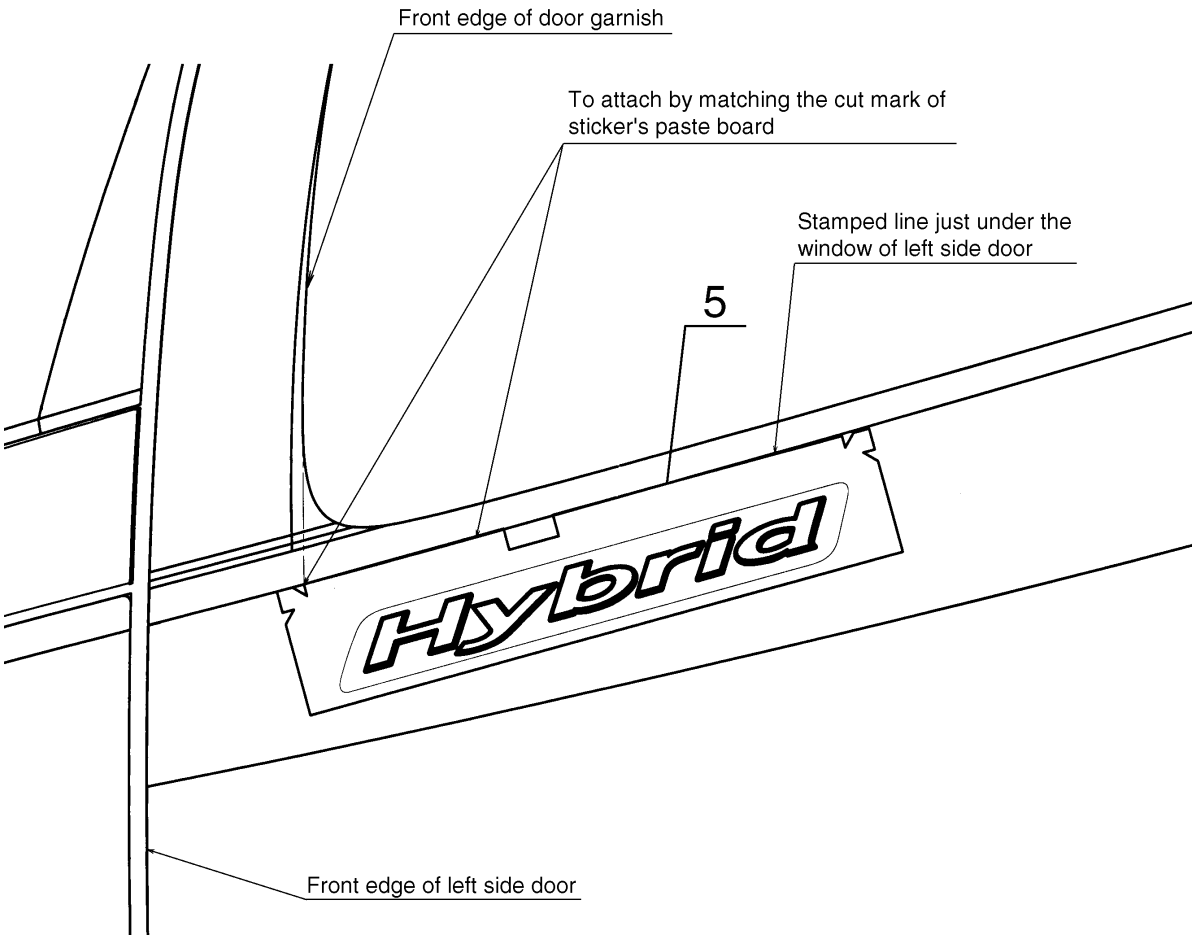

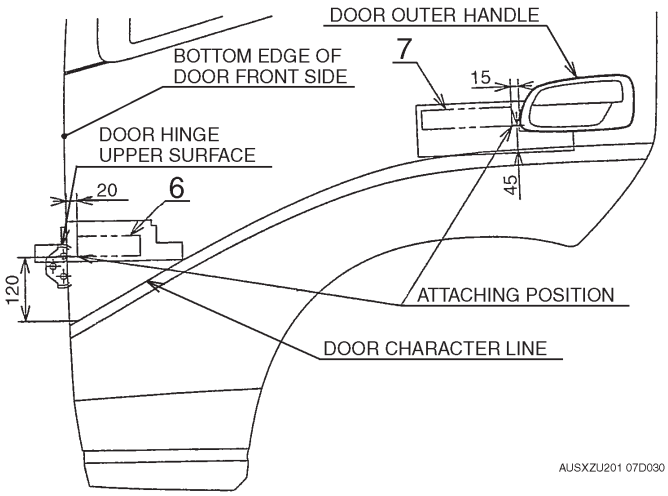

DRAWING SHOWS CAB LEFT SIDE VIEW,
RIGHT SIDE IS SAME AS OPPOSITE.

https://truckmanualshub.com/

PRECAUTIONS FOR FITTING AND STORING THE CAUTION PLATE

1) How to Stick It

a. Stick the caution plate to a dry place which is free from dust and dirt after the paint has completely dried up.

b. Clean your hand and don't use cotton work gloves, etc..

c. Completely remove water, oil, dust, etc. from the surface to stick (surface of cab) with ethyl alcohol if they are found remaining there.

d. When the temperature is less than 10°C, warm up the surface to stick as well as the caution plate with warm wind of more than 20°C before sticking the caution plate.

e. After sticking the caution plate, press it with a roller, etc., with a force of approximately 49 N/cm^2 {5 kgf/cm^2}.

f. Remove liner paper (backing paper) just before using it.

g. When air remains inside, make a tiny hole with a needle or a cutter knife and press it out with your fingers from the bubble area.

2) How to Store It

When storing the caution plate, select a dry place with an ambient temperature (of 20 to 25°C) and without dust, dirt and stain.

Also, store the caution plate at a flat place such as a shelf, etc., and do not place anything on it.

3) Other Precautions for the Caution Plate

a. As the caution plate is made from vinyl chloride, it is thin, soft and easily extendible.

Therefore, take utmost care for handling it.

b. When removing the caution plate, etc., be careful not to damage the painted surface with a sharp knife, etc.

On the other hand, removal of the caution plate can be done more easily by pulling the caution plate in perpendicular direction to the sticking surface while heating it with a hair dryer.

c. Do not throw the caution plates away but keep them together to compare with new caution plates and to prevent mixing up with the new ones.

https://truckmanualshub.com/

8. CHASSIS DRAWINGS

CAB DRAWING ..... 8 - 1
DETAIL OF THE CAB BACK DIMENSIONS ..... 8 - 2
CHASSIS DRAWING ..... 8 - 3

https://truckmanualshub.com/

CAB DRAWING

1) **STANDARD CAB (XZU307L-HKMLB3 ONLY)**

SCALE : 1/20
Unit : mm

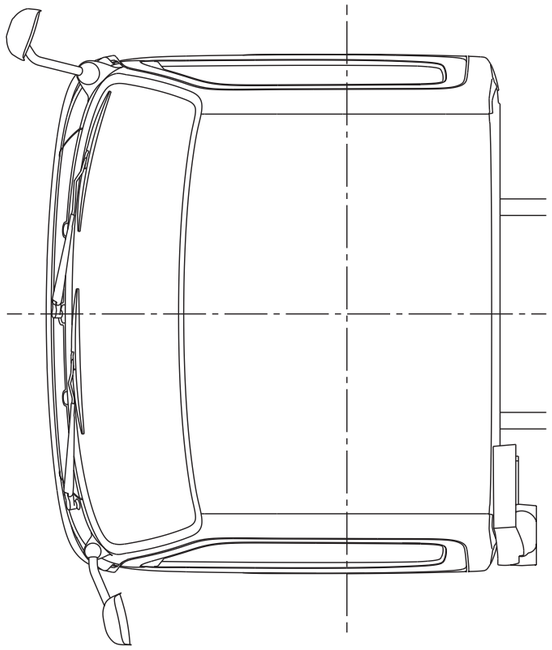

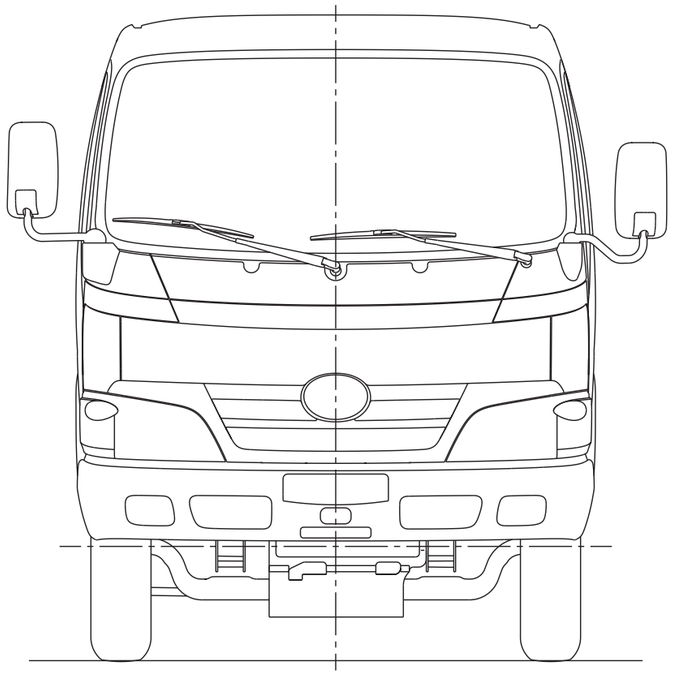

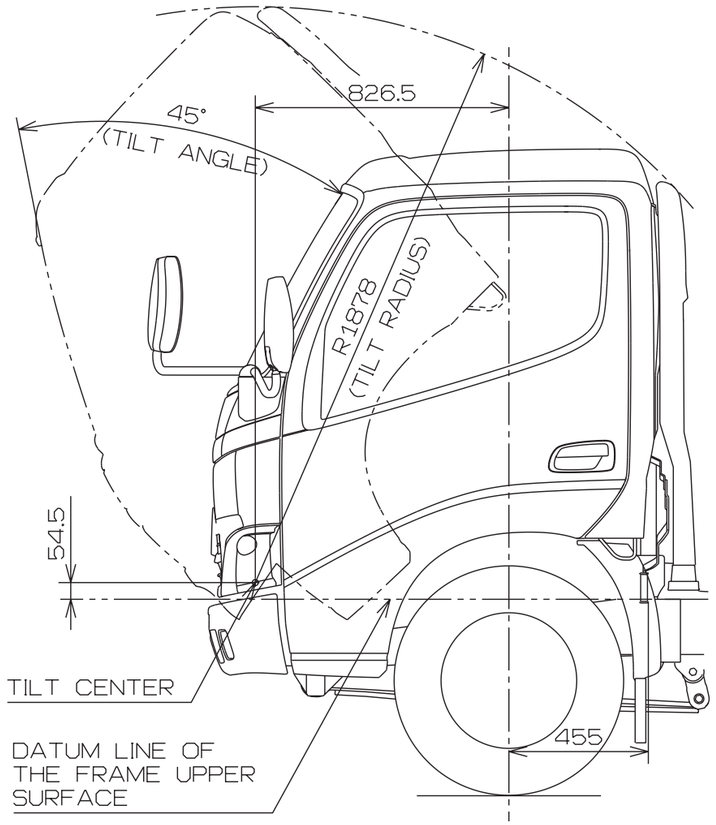

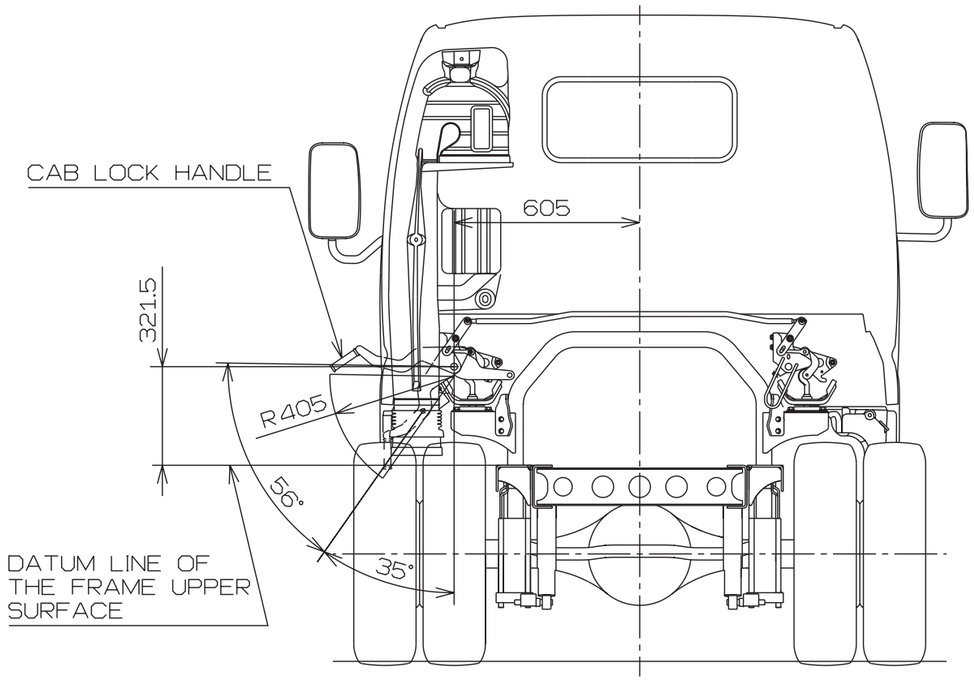

https://truckmanualshub.com/

2) STANDARD CAB

SCALE : 1/20
Unit : mm

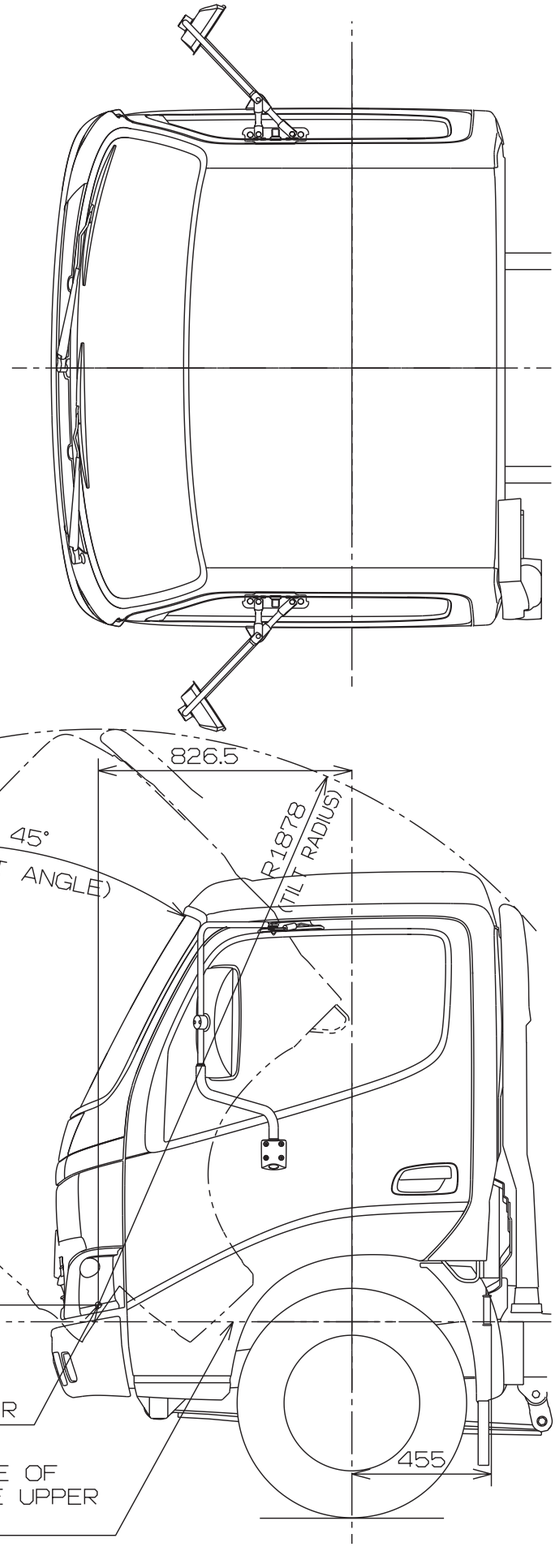

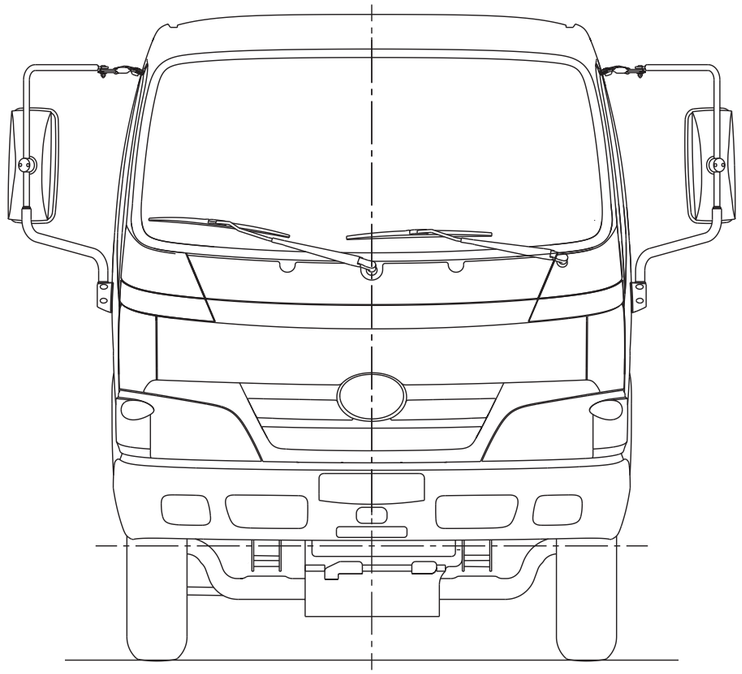

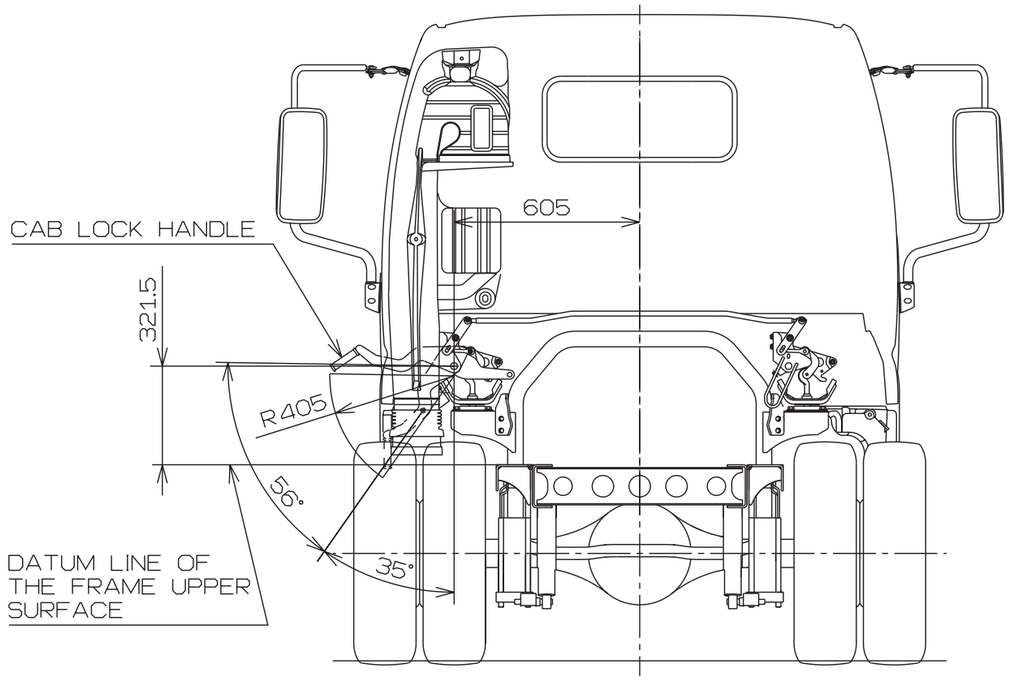

https://truckmanualshub.com/

3) WIDE CAB

SCALE : 1/20
Unit : mm

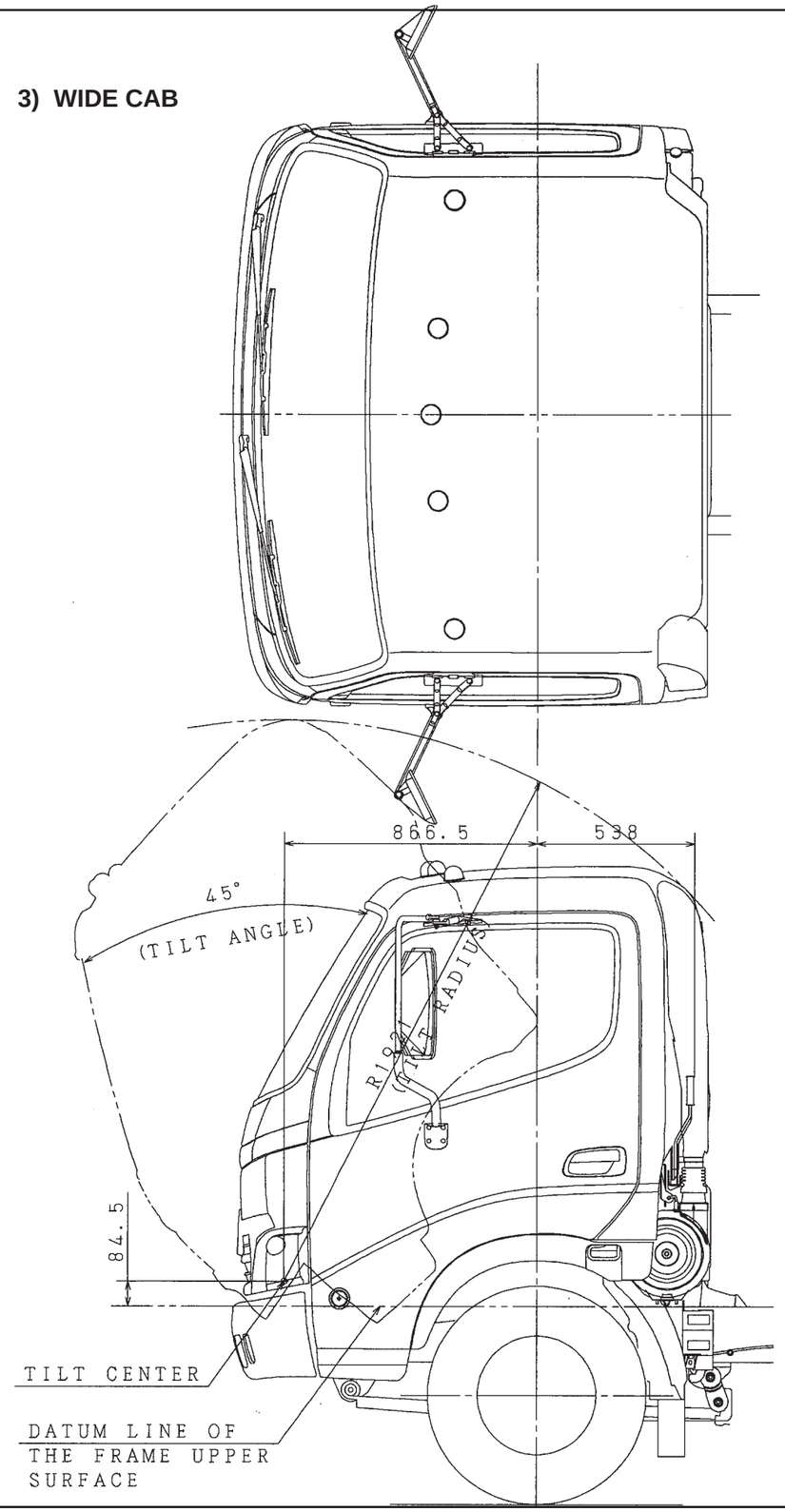

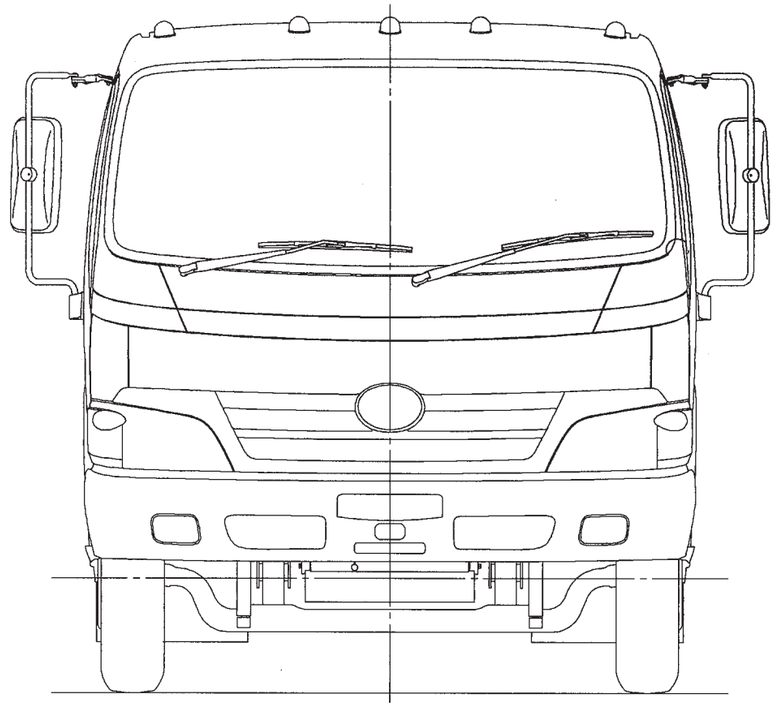

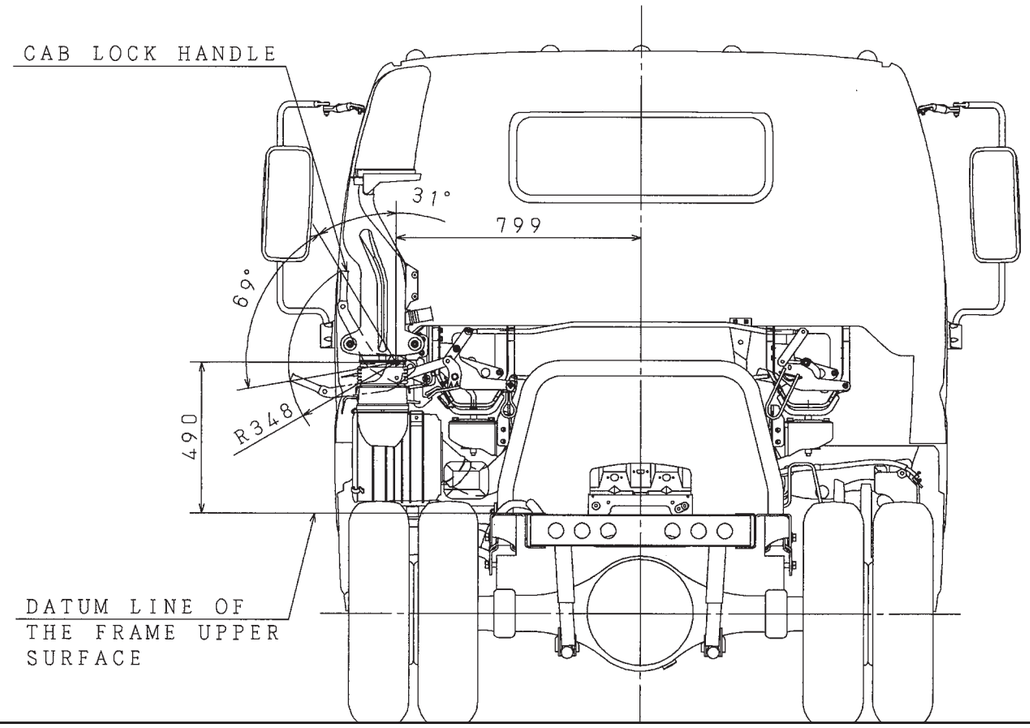

HNBUYKAS01006405

https://truckmanualshub.com/

DETAIL OF THE CAB BACK DIMENSIONS

1) STANDARD CAB . T/M MODEL M550

1/3

LEFT VIEW

Unit : mm

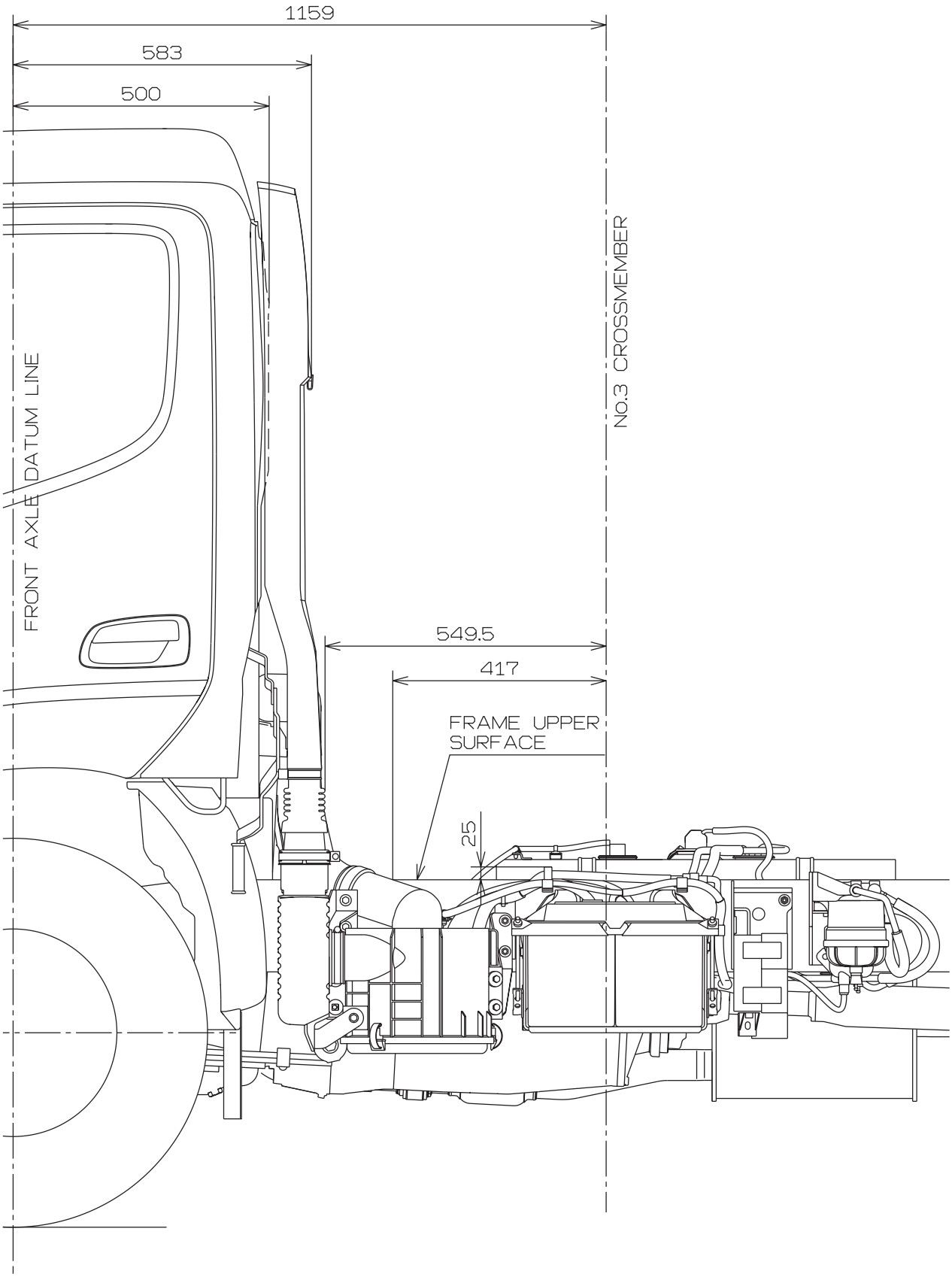

https://truckmanualshub.com/

2/3

RIGHT VIEW

Unit : mm

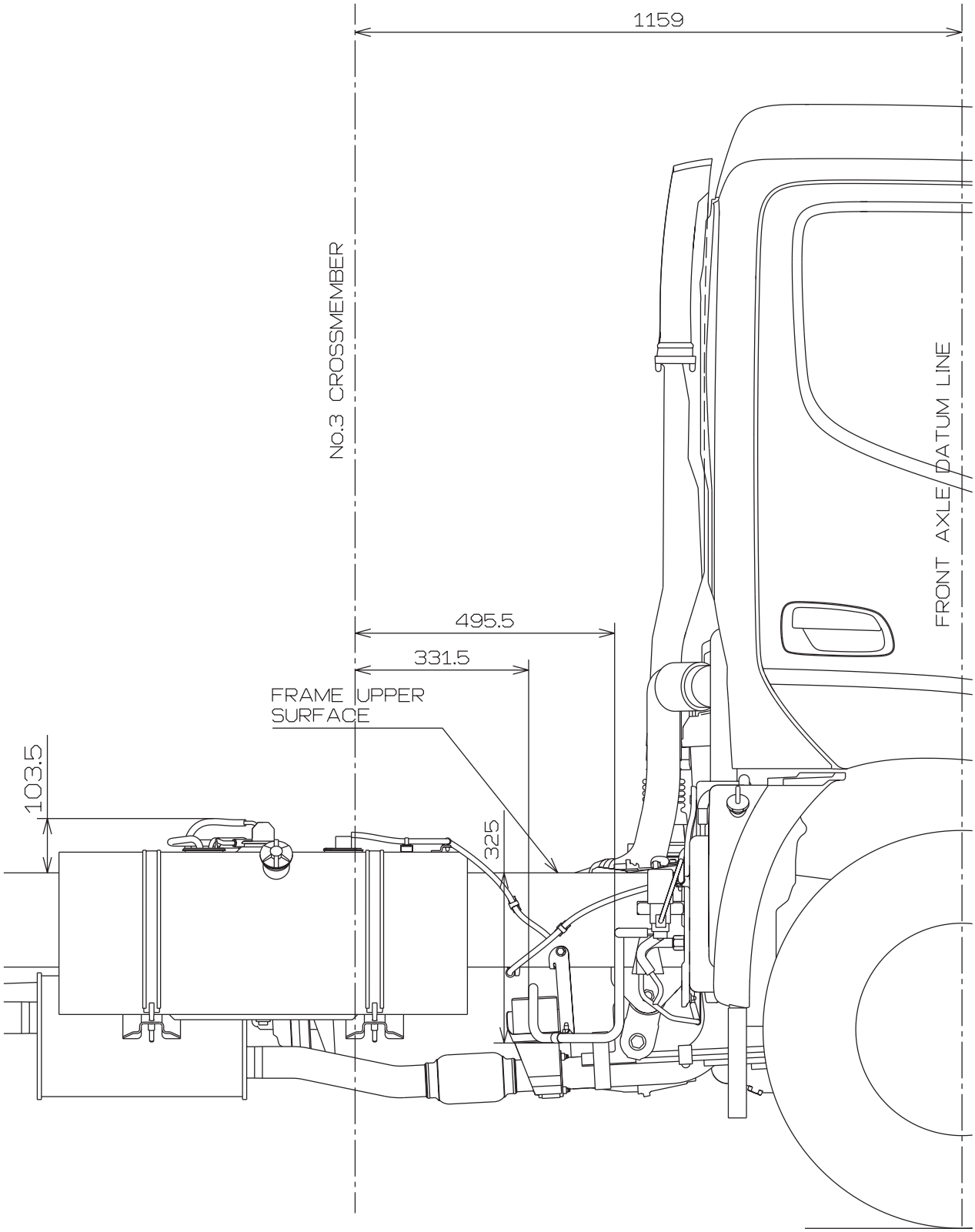

https://truckmanualshub.com/

3/3

UPPER VIEW

Unit : mm

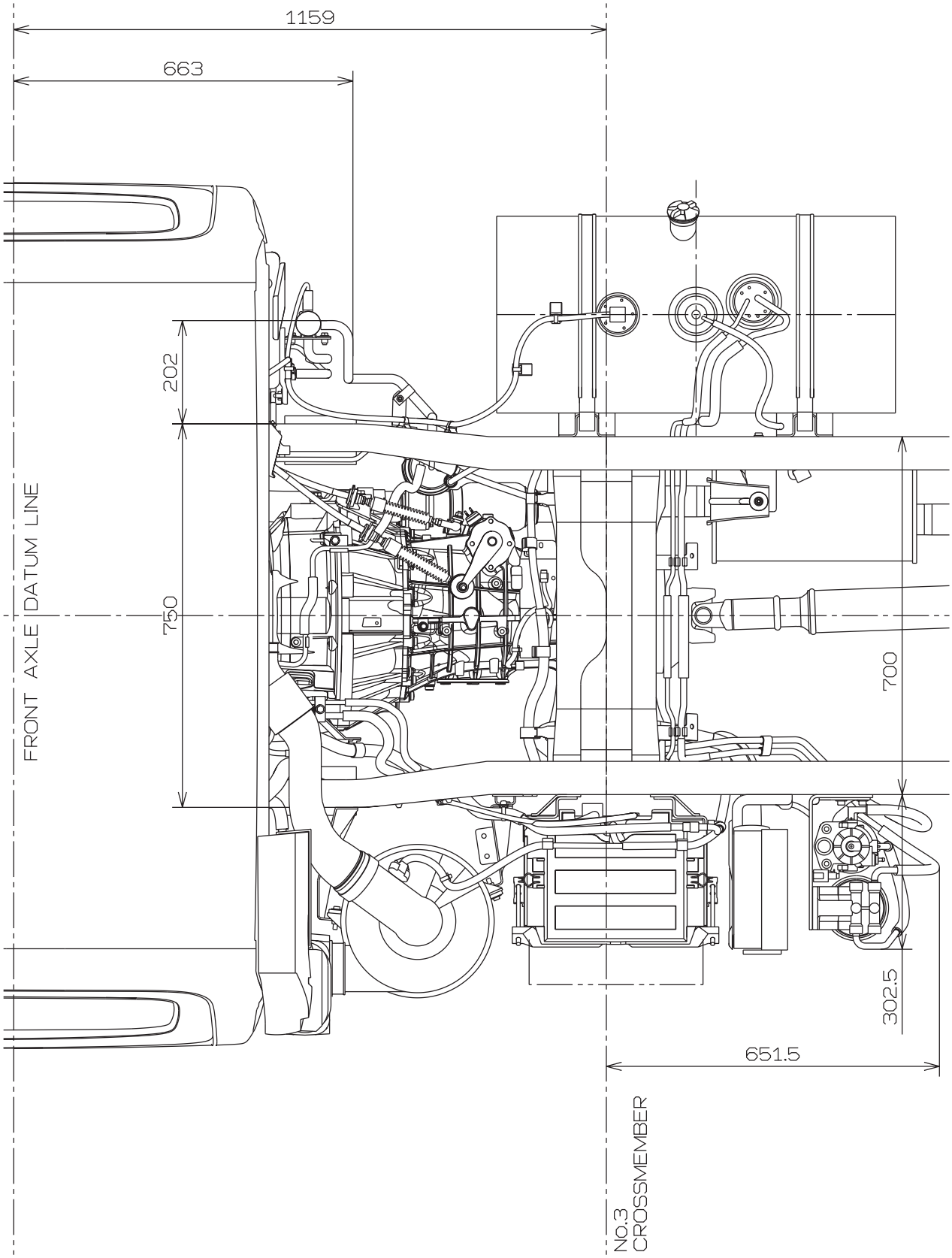

https://truckmanualshub.com/

2) WIDE CAB . T/M MODEL M550

1/3

LEFT VIEW

Unit : mm

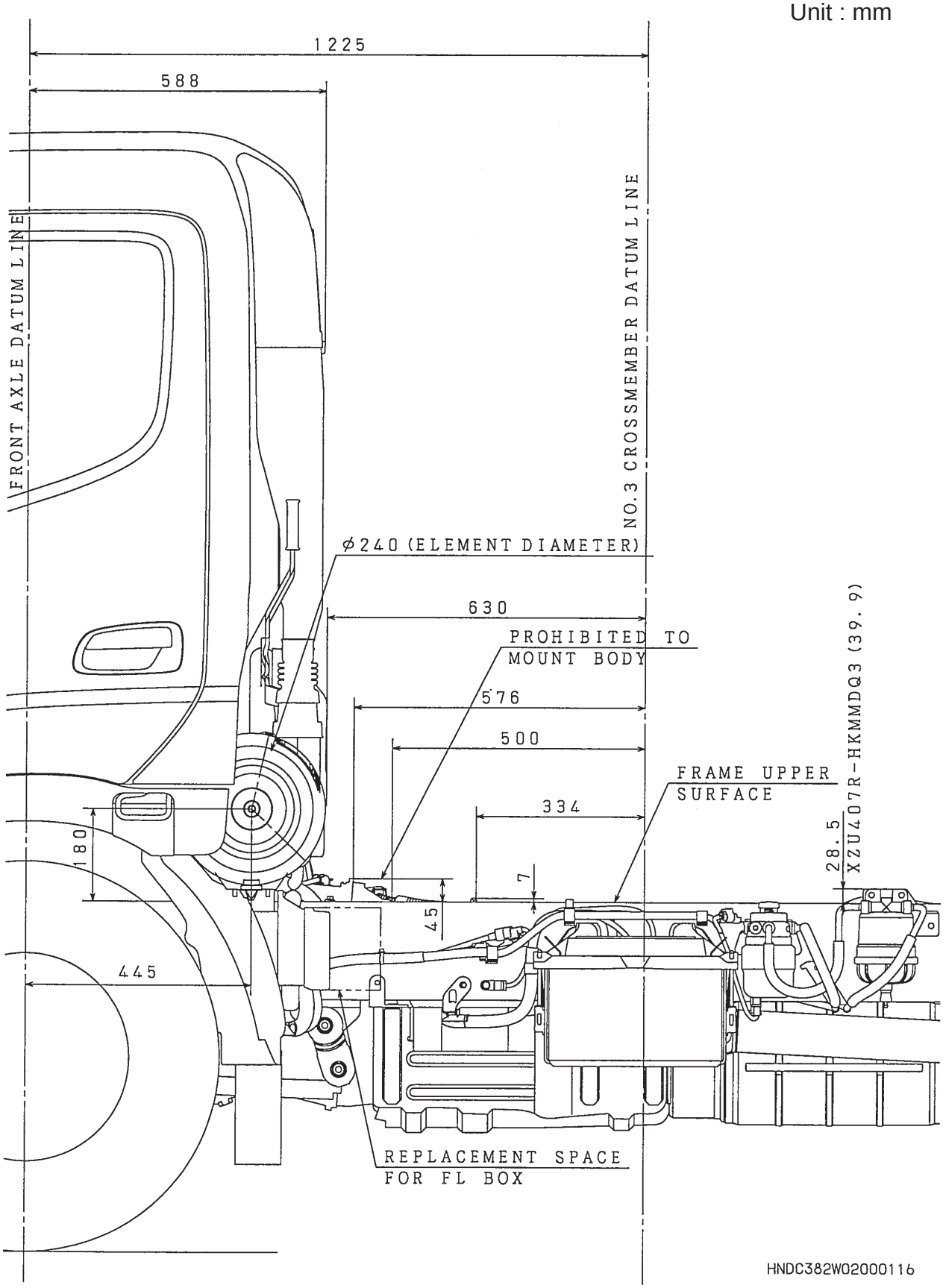

https://truckmanualshub.com/

2/3

RIGHT VIEW

Unit : mm

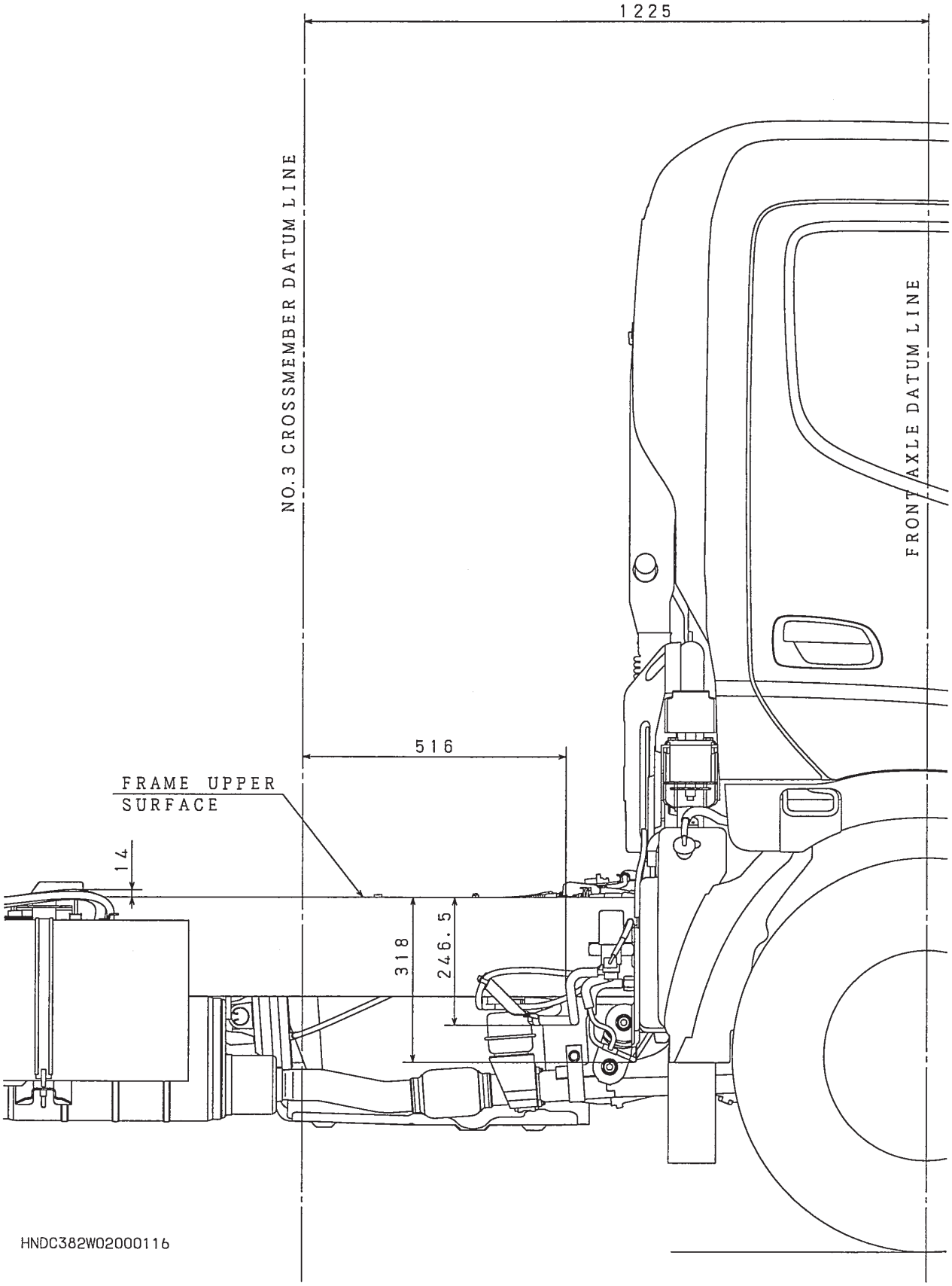

https://truckmanualshub.com/

3/3

UPPER VIEW

Unit : mm

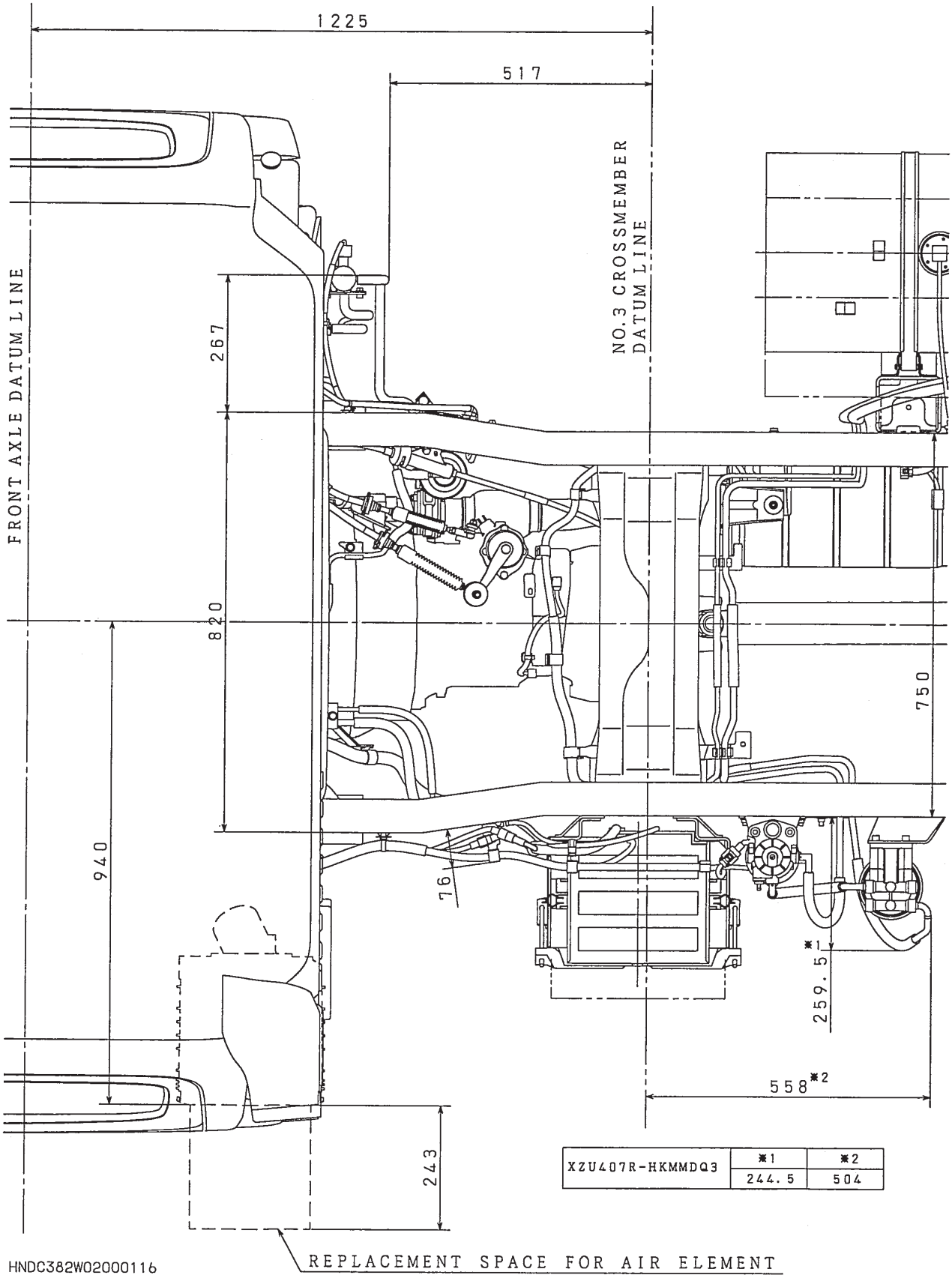

	※1	※2
XZU407R-HKMMDQ3	244.5	504

https://truckmanualshub.com/

3) WIDE CAB . T/M MODEL MYY6S

1/3

LEFT VIEW

Unit : mm

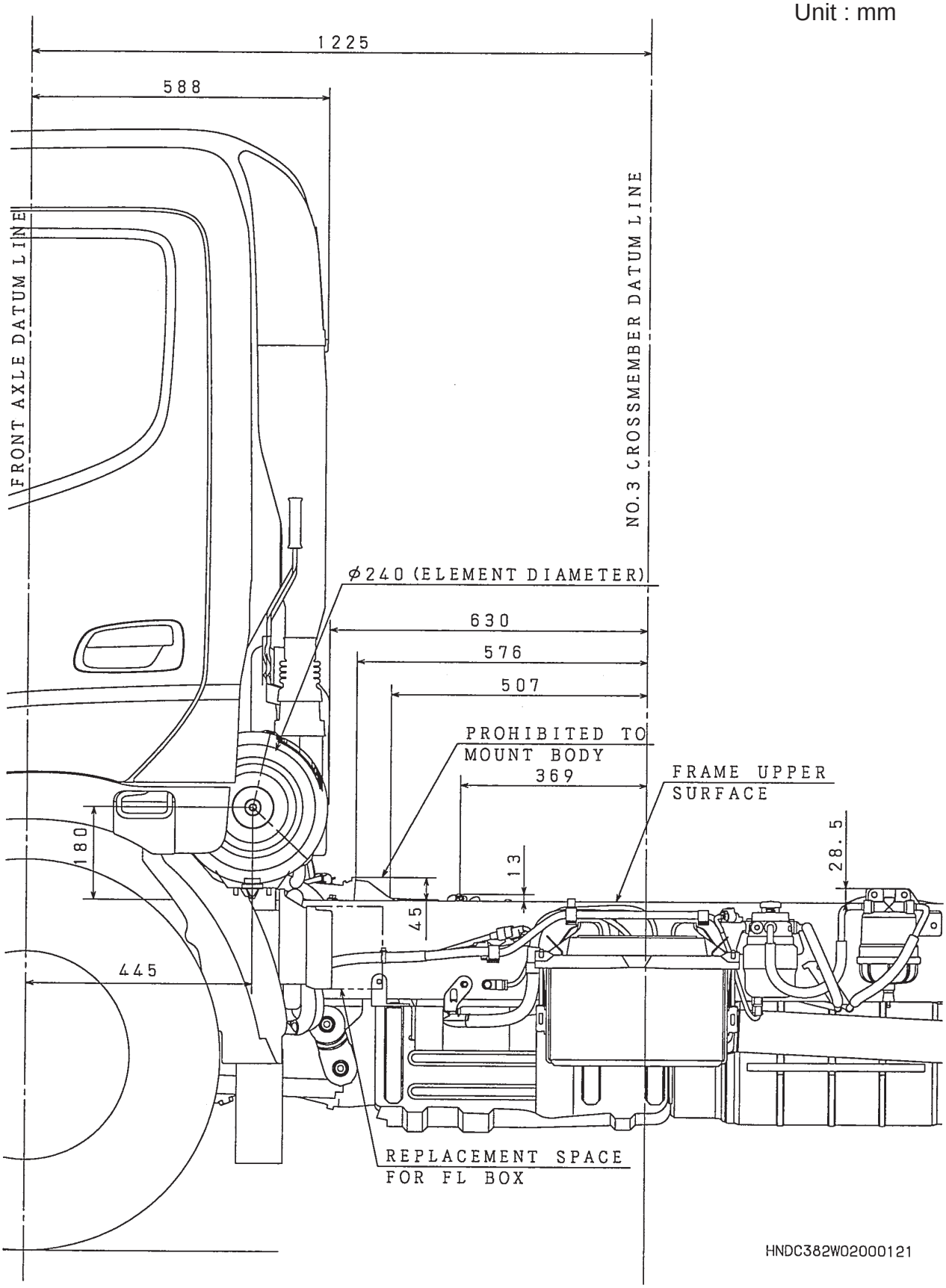

https://truckmanualshub.com/

2/3

RIGHT VIEW

Unit : mm

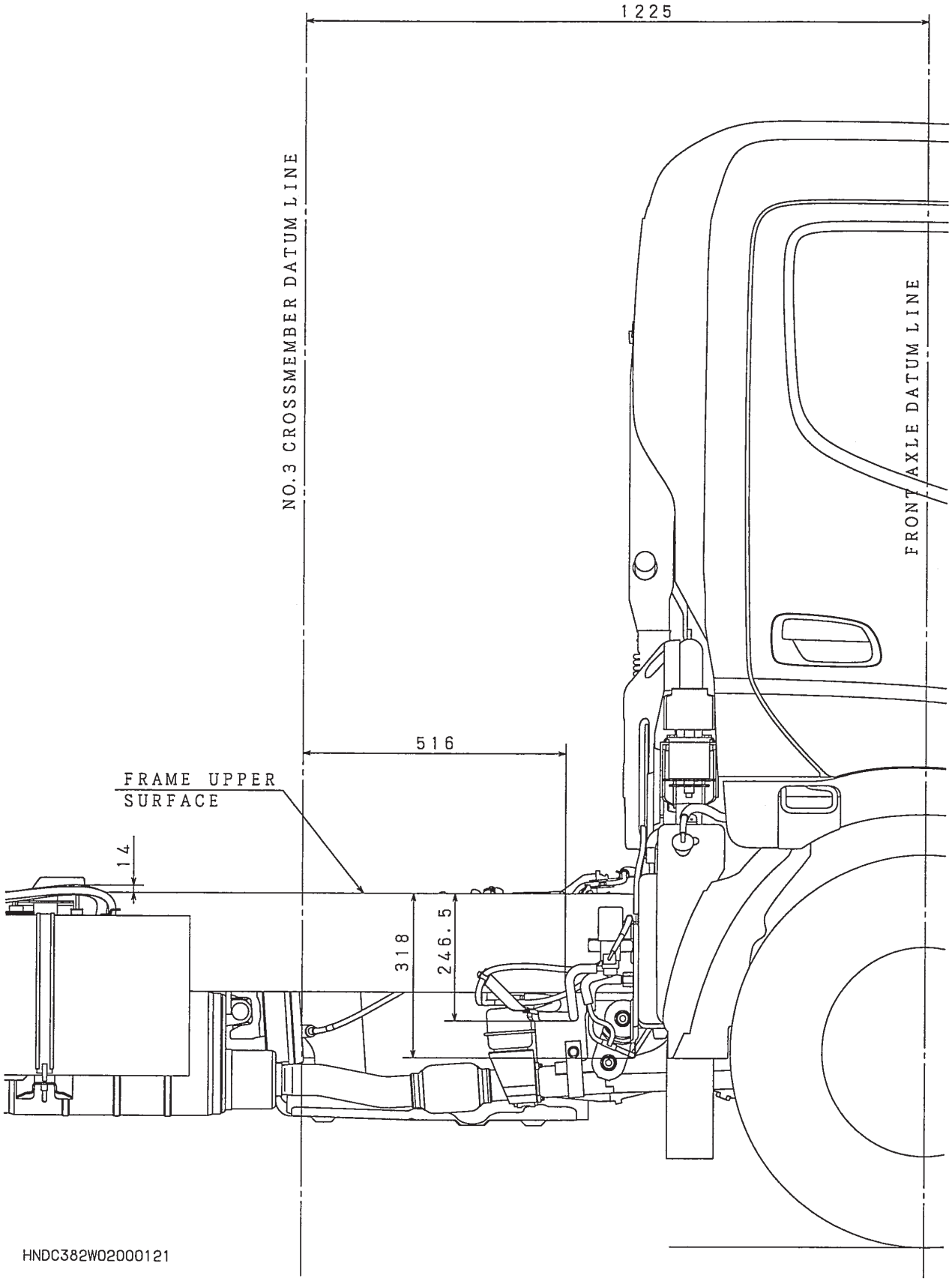

https://truckmanualshub.com/

3/3

UPPER VIEW

Unit : mm

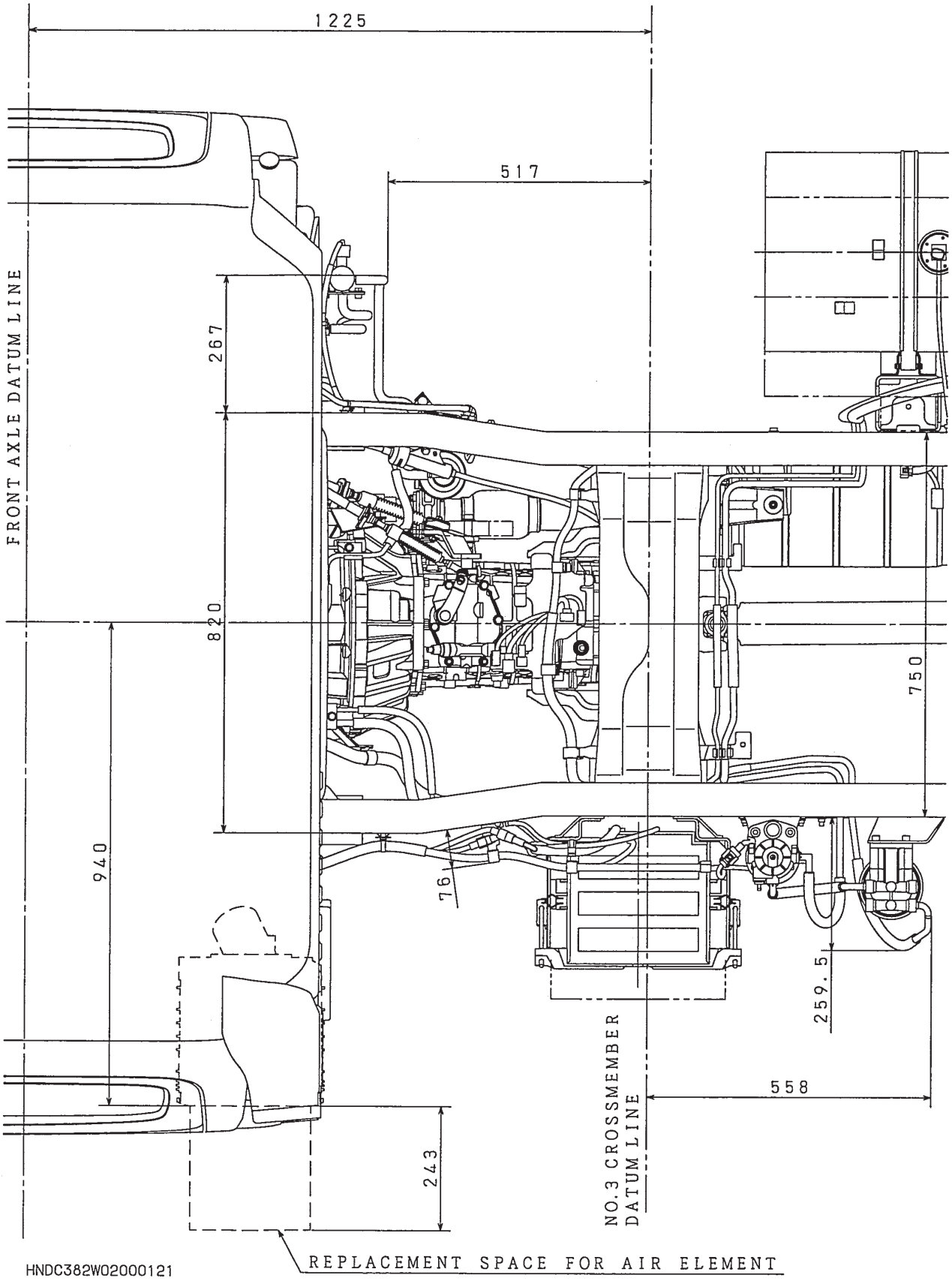

HNDC382W02000121

https://truckmanualshub.com/

4) HYBRID . T/M MODEL MYY6S

LEFT VIEW

Unit : mm

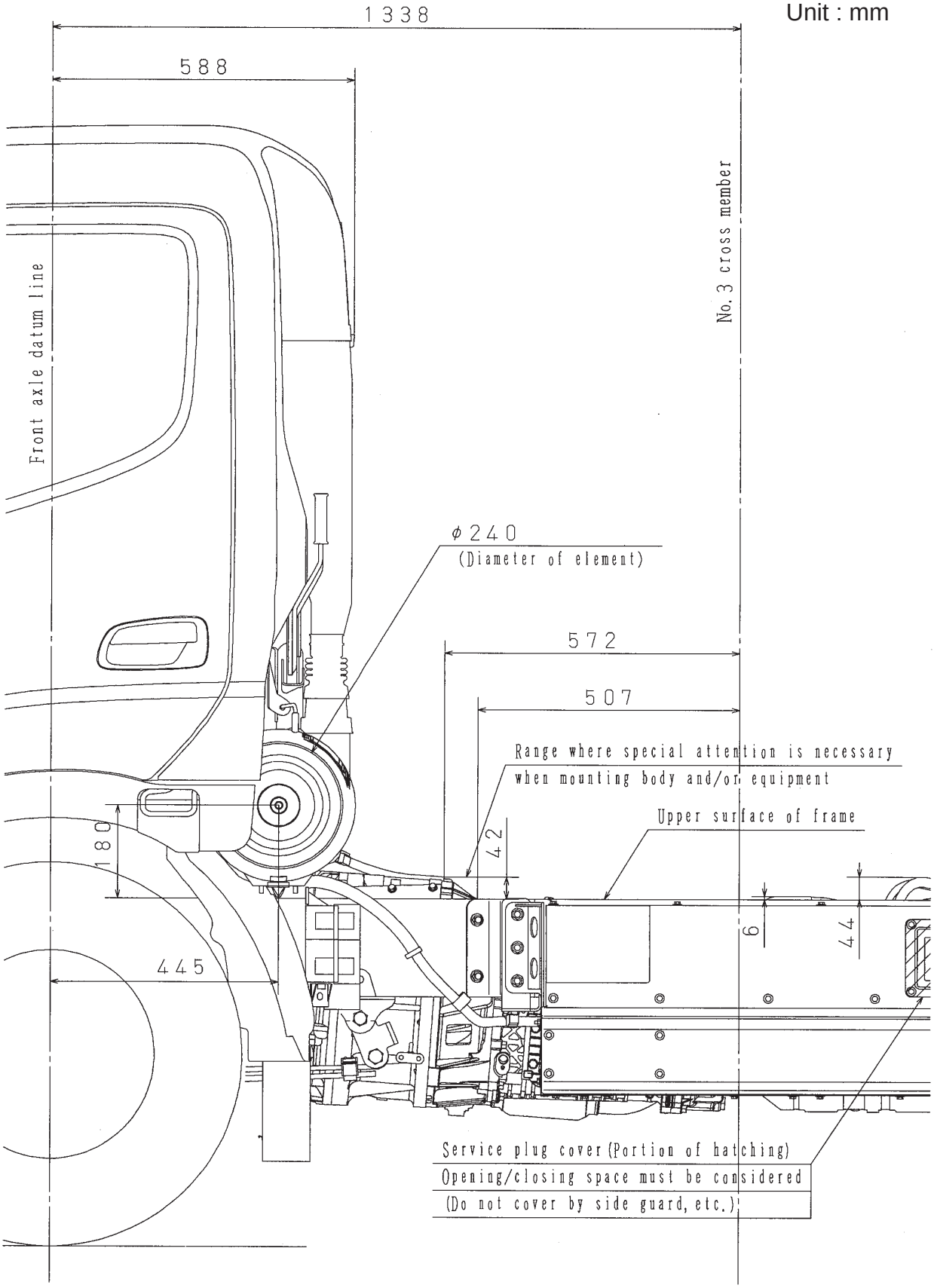

https://truckmanualshub.com/

2/3

RIGHT VIEW

Unit : mm

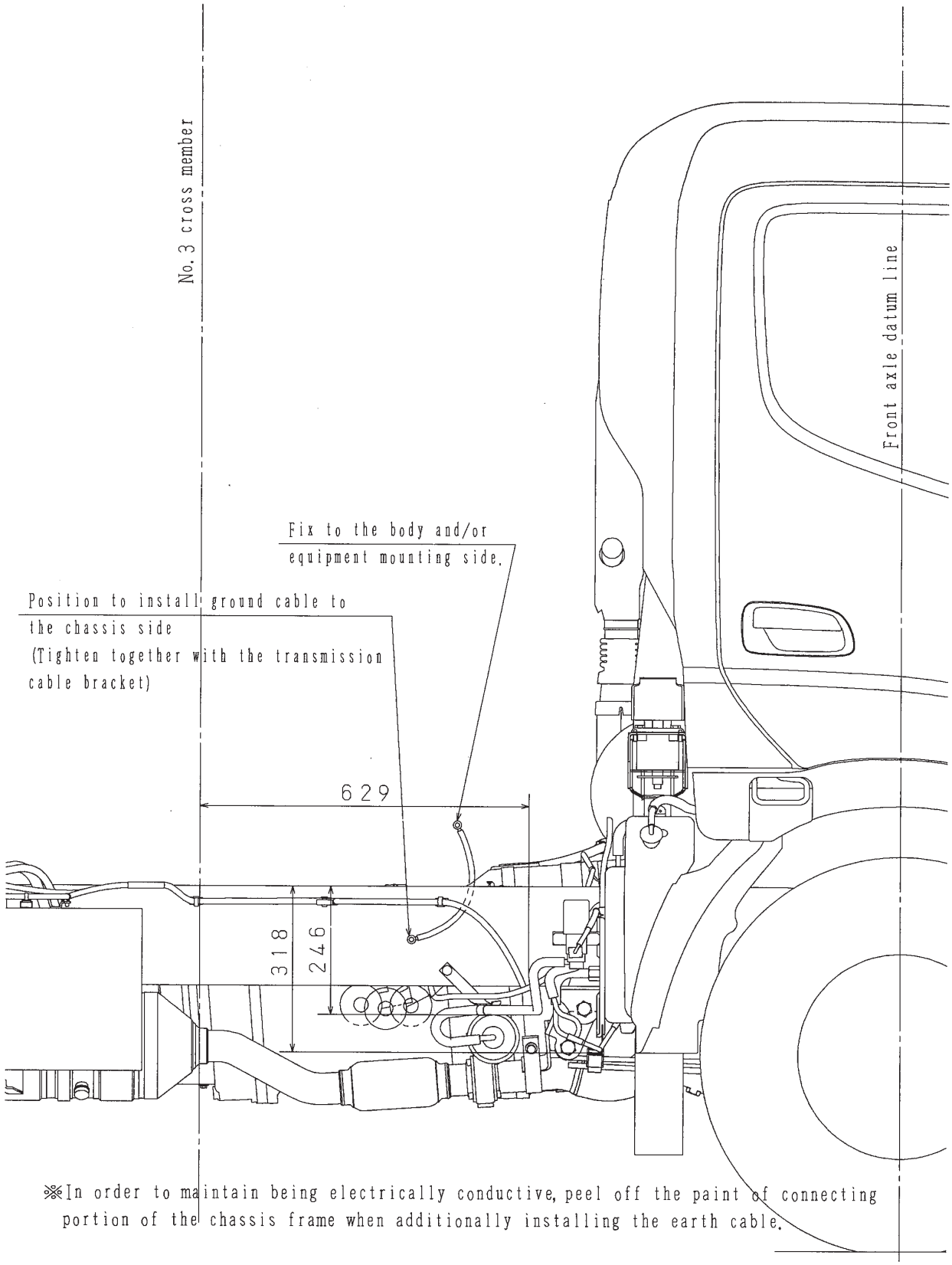

※In order to maintain being electrically conductive, peel off the paint of connecting portion of the chassis frame when additionally installing the earth cable.

https://truckmanualshub.com/

UPPER VIEW

Unit : mm

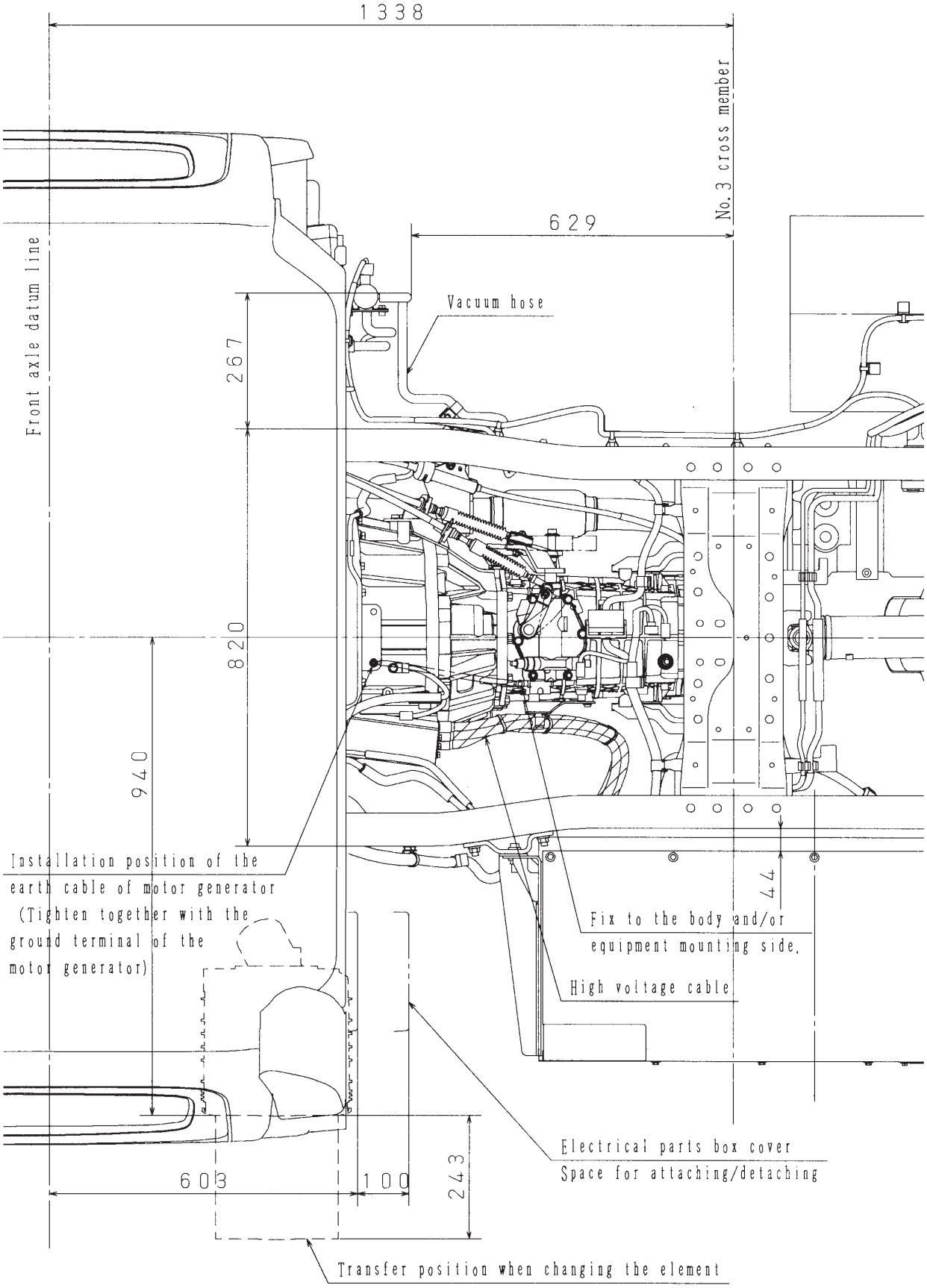

https://truckmanualshub.com/

CHASSIS DRAWING

SCALE : 1/20
Unit : mm

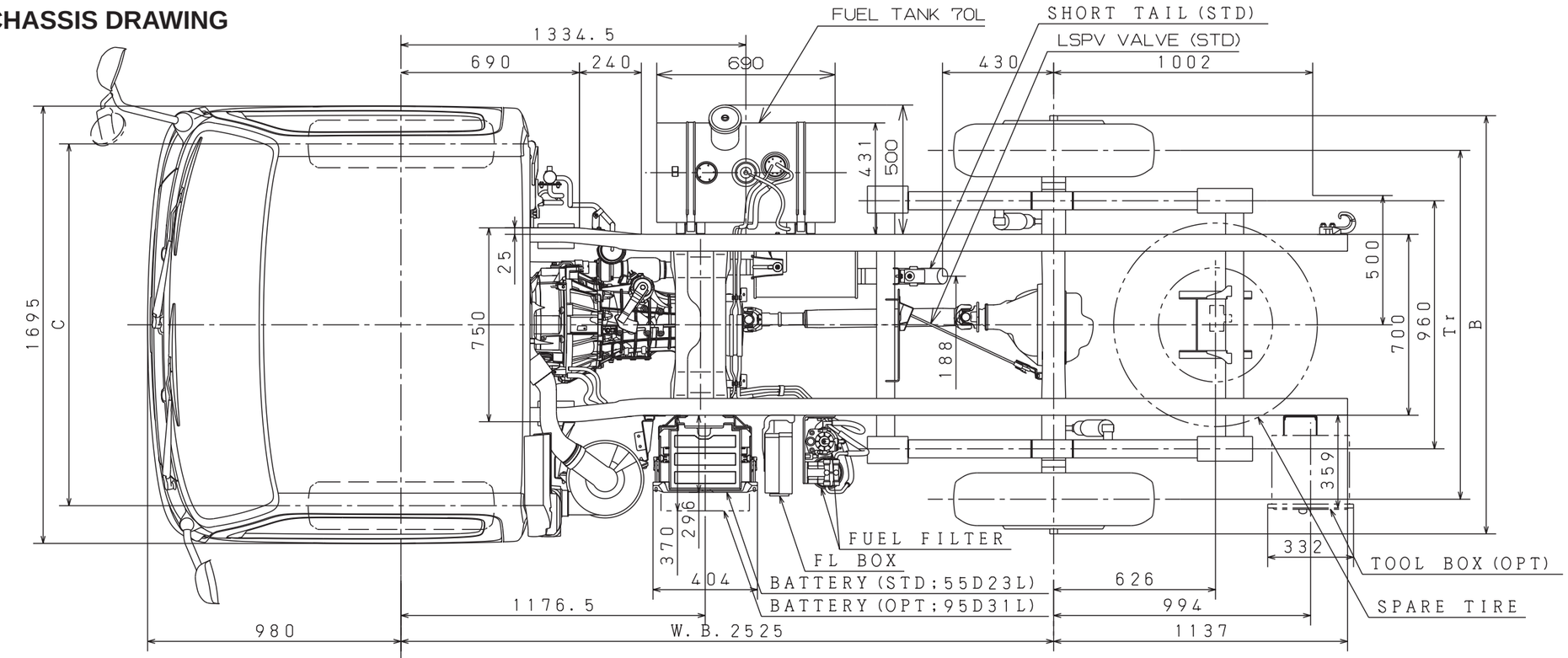

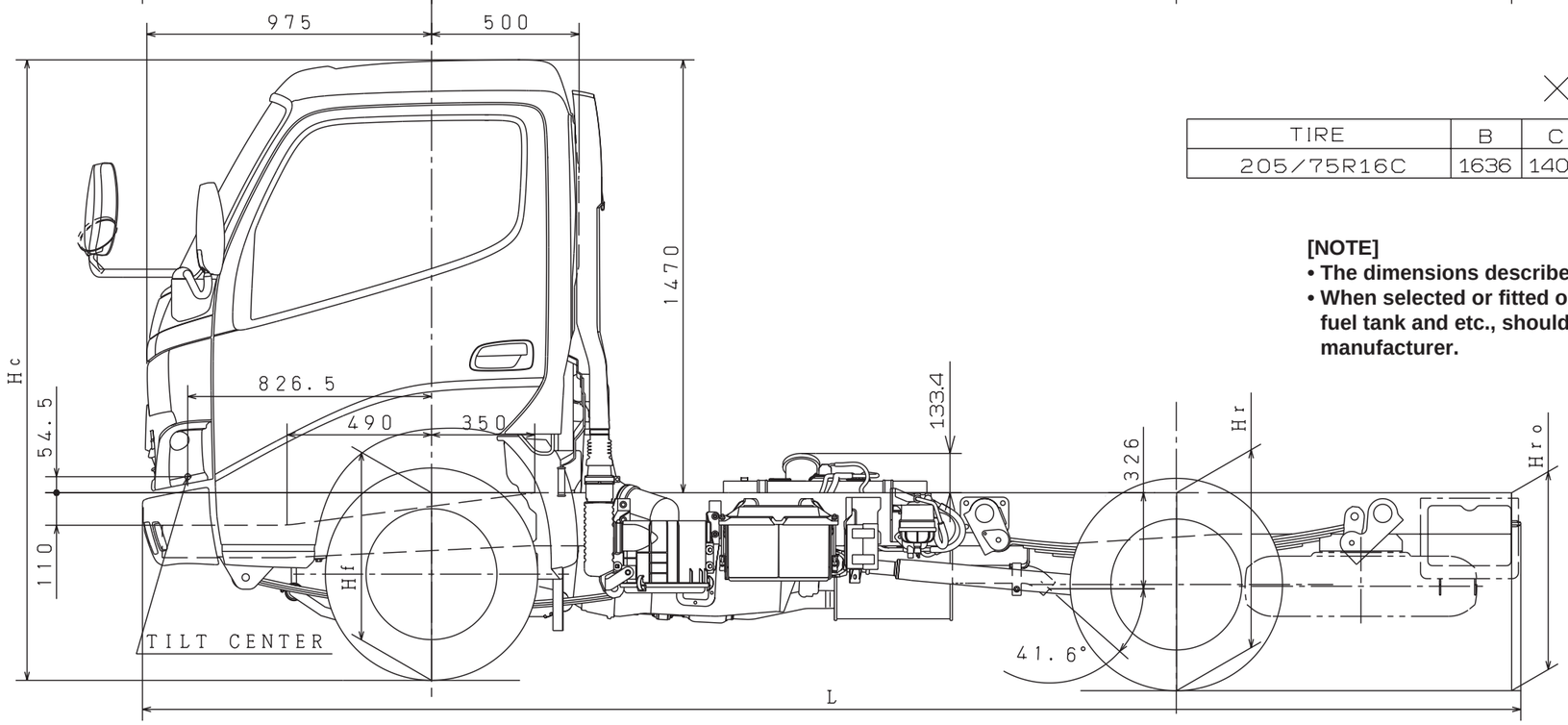

XZU307L-HKMLB3

TIRE	B	C	L	Tr	Hc	Hf	Hr	Hro
205/75R16C	1636	1400	4673	1350	2073	603	664	691

[NOTE]
- **The dimensions described above are designed figure under the chassis condition.**
- **When selected or fitted optional equipment or local parts such as tire, leaf spring, fuel tank and etc., should be examined the frame height from ground by body manufacturer.**

https://truckmanualshub.com/

SCALE : 1/20
Unit : mm

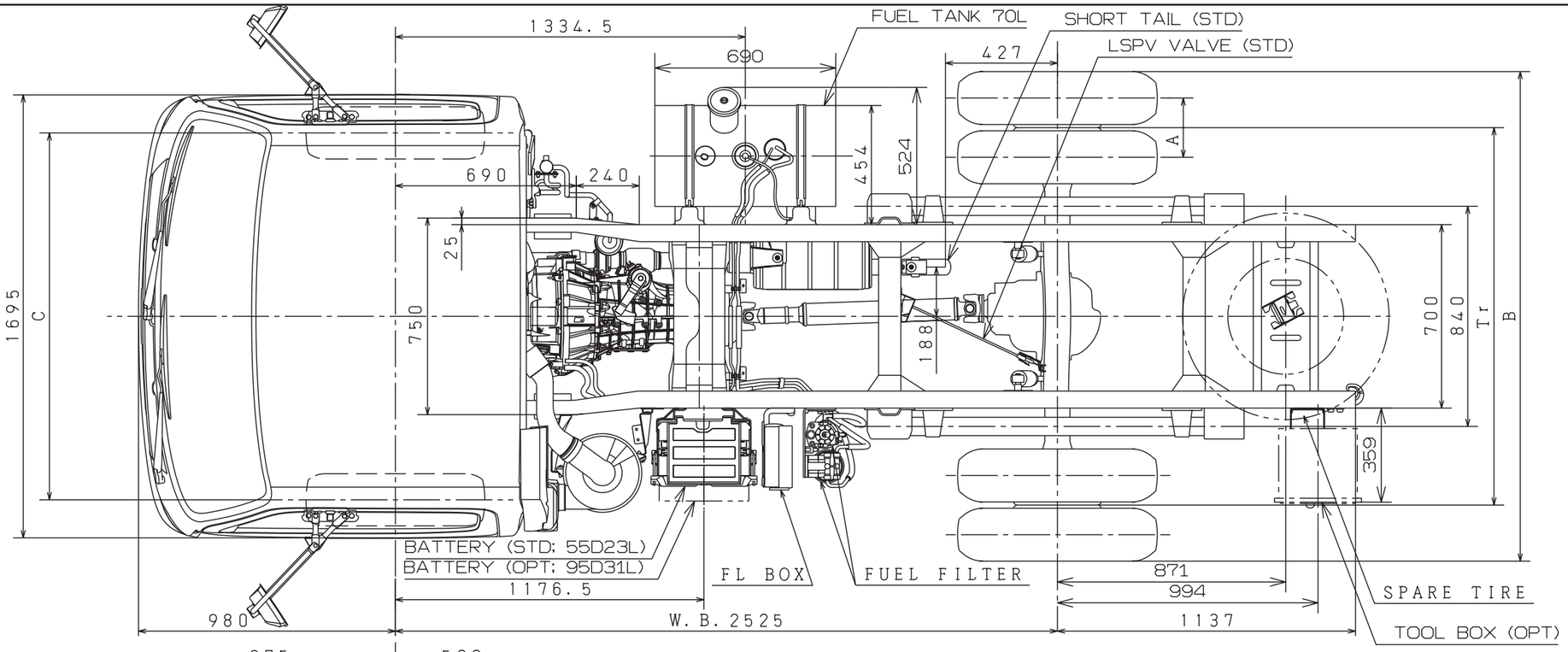

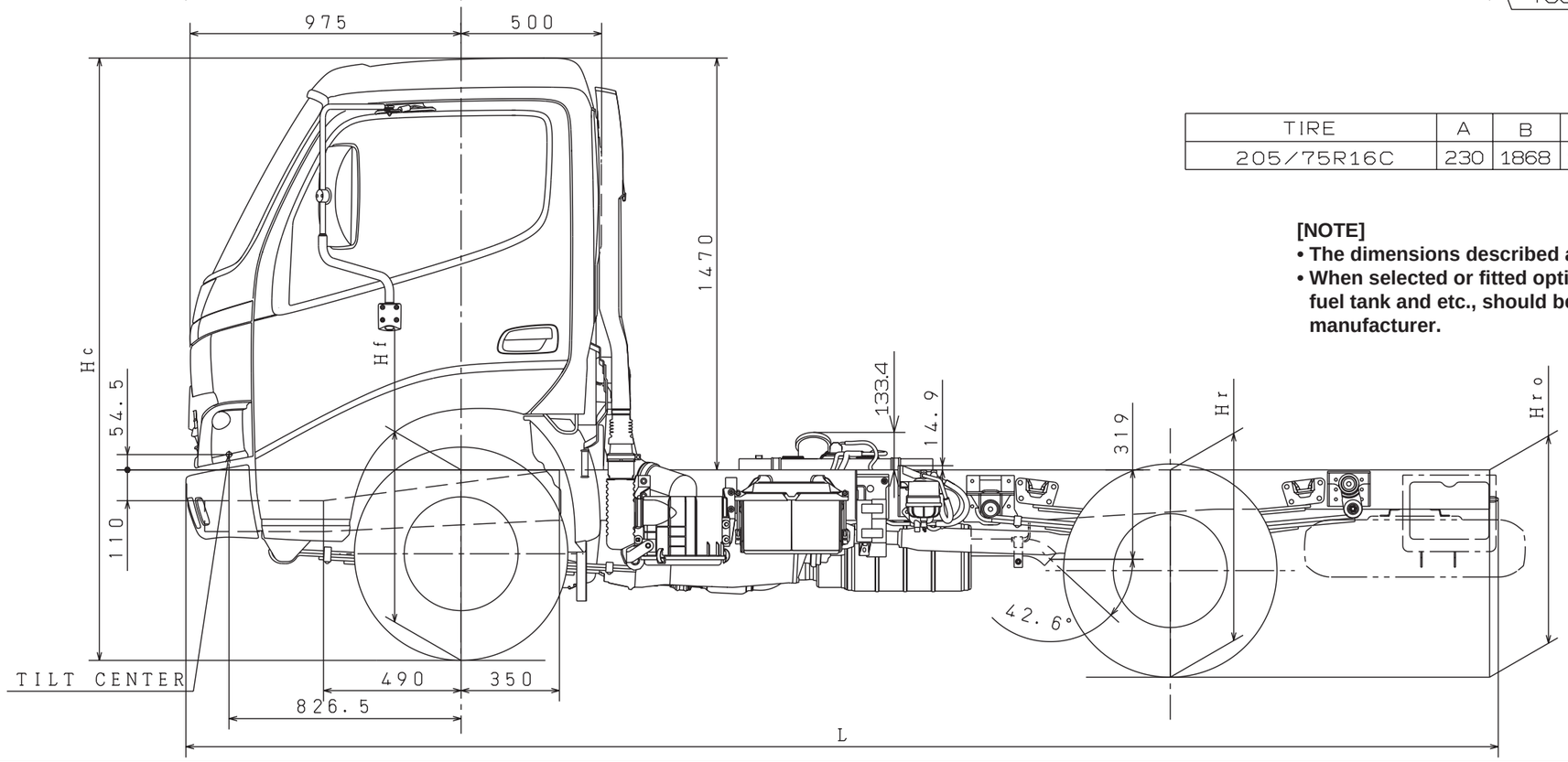

XZU307L-HKMMB3

TIRE	A	B	C	L	Tr	Hc	Hf	Hr	Hro
205/75R16C	230	1868	1400	4673	1435	2114	644	710	740

[NOTE]
- **The dimensions described above are designed figure under the chassis condition.**
- **When selected or fitted optional equipment or local parts such as tire, leaf spring, fuel tank and etc., should be examined the frame height from ground by body manufacturer.**

https://truckmanualshub.com/

SCALE : 1/20
Unit : mm

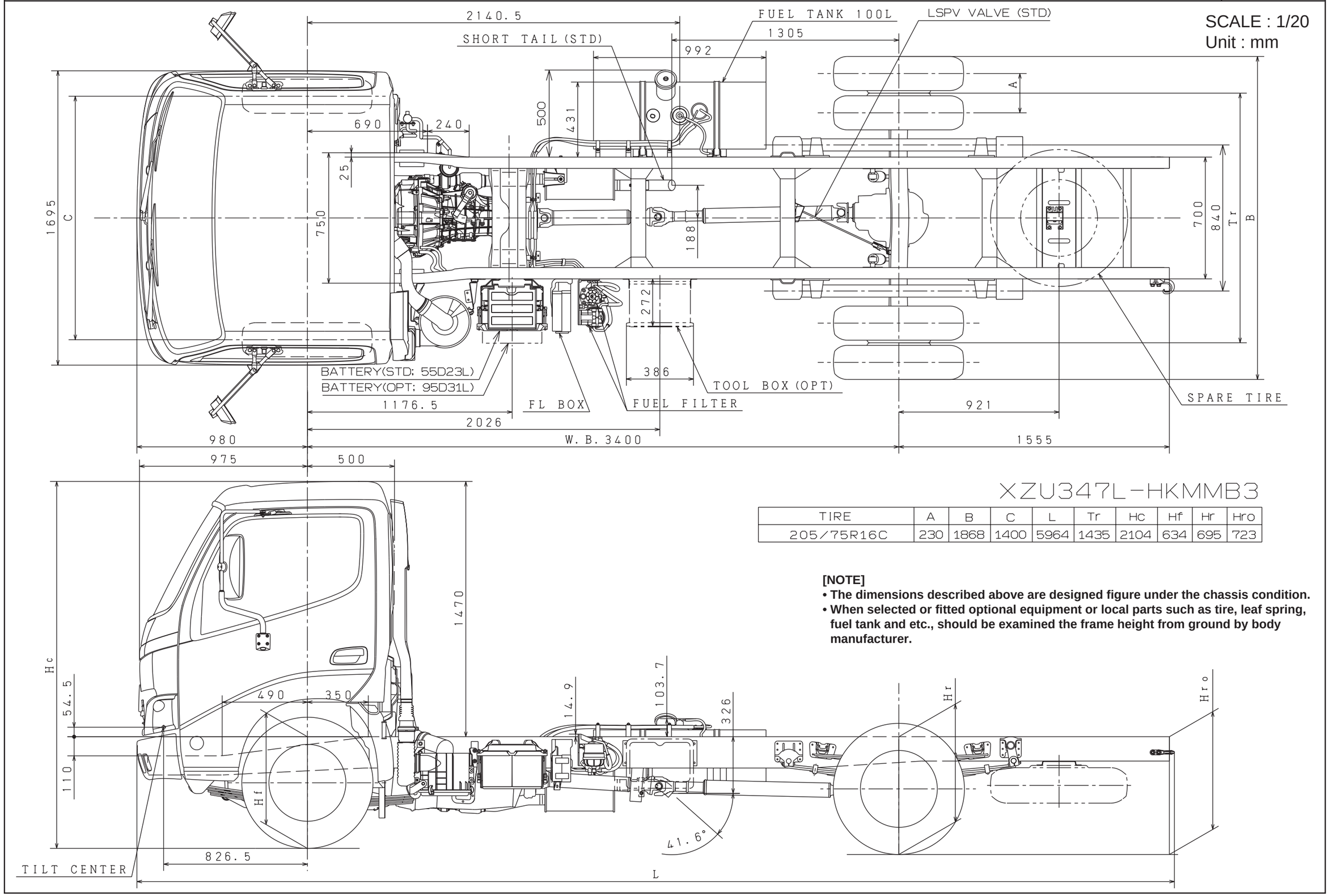

XZU347L-HKMMB3

TIRE	A	B	C	L	Tr	Hc	Hf	Hr	Hro
205/75R16C	230	1868	1400	5964	1435	2104	634	695	723

[NOTE]
- **The dimensions described above are designed figure under the chassis condition.**
- **When selected or fitted optional equipment or local parts such as tire, leaf spring, fuel tank and etc., should be examined the frame height from ground by body manufacturer.**

https://truckmanualshub.com/

SCALE : 1/30
Unit : mm

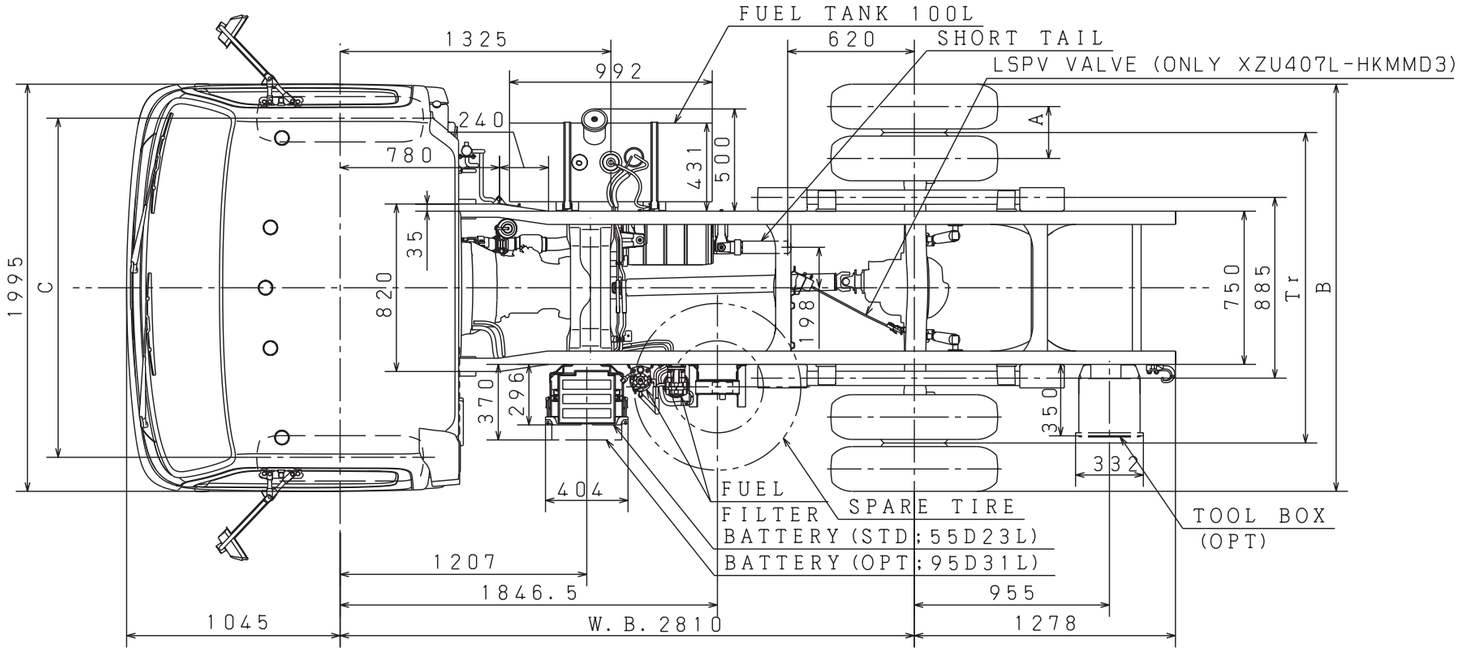

XZU407L-HKMQD3
XZU407L-HKFQD3
XZU407L-HKMMD3
XZU407L-HKFRD3

MODEL CODE	TIRE	A	B	C	L	Tr	Hc	Hf	Hr	Hro
XZU407L-HKMQD3	215/85R16	244	1975	1665	5130	1520	2227	717	790	823
XZU407L-HKFQD3	215/85R16	↑	↑	↑	↑	↑	↑	↑	↑	↑
XZU407L-HKMMD3	205/75R16C	230	1913	1660	5130	1480	2188	678	764	803
XZU407L-HKFRD3	215/75R17.5	254	1986	1655	5130	1520	2220	710	796	835

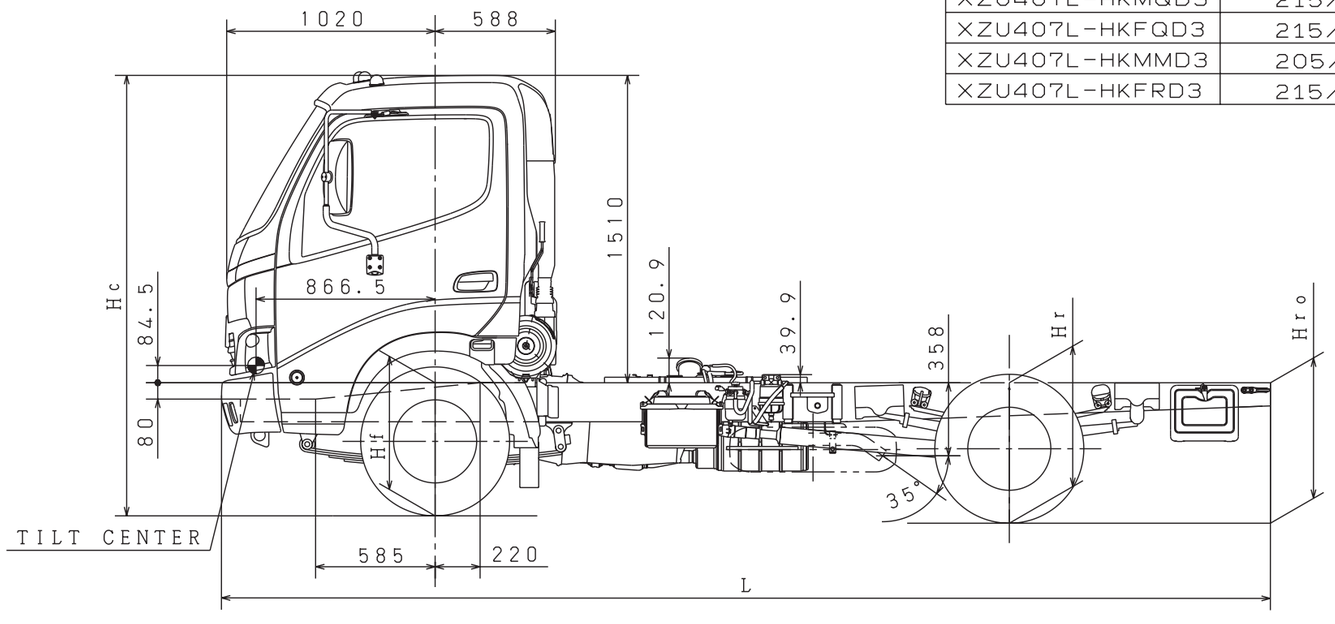

[NOTE]
- **The dimensions described above are designed figure under the chassis condition.**
- **When selected or fitted optional equipment or local parts such as tire, leaf spring, fuel tank and etc., should be examined the frame height from ground by body manufacturer.**

https://truckmanualshub.com/

SCALE : 1/30
Unit : mm

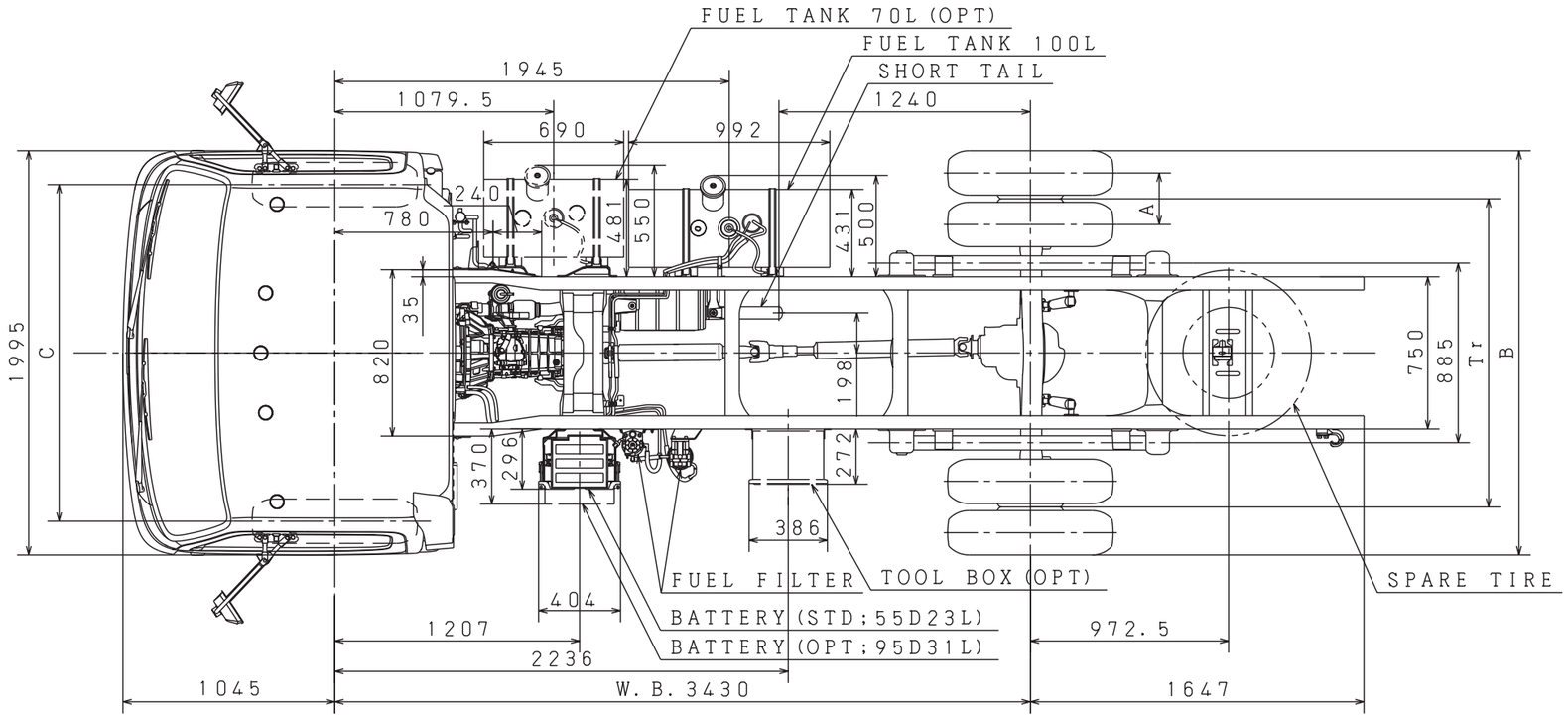

XZU417L-HKFQD3
XZU417L-HKFRD3
XZU417L-HKMMD3

MODEL CODE	TIRE	A	B	C	L	Tr	Hc	Hf	Hr	Hro
XZU417L-HKFQD3	215/85R16	244	1975	1665	6120	1520	2227	717	790	825
XZU417L-HKFRD3	215/75R17.5	254	1986	1655	6120	1520	2200	710	796	837
XZU417L-HKMMD3	205/75R16C	230	1913	1660	6120	1480	2188	678	764	805

[NOTE]
- **The dimensions described above are designed figure under the chassis condition.**
- **When selected or fitted optional equipment or local parts such as tire, leaf spring, fuel tank and etc., should be examined the frame height from ground by body manufacturer.**

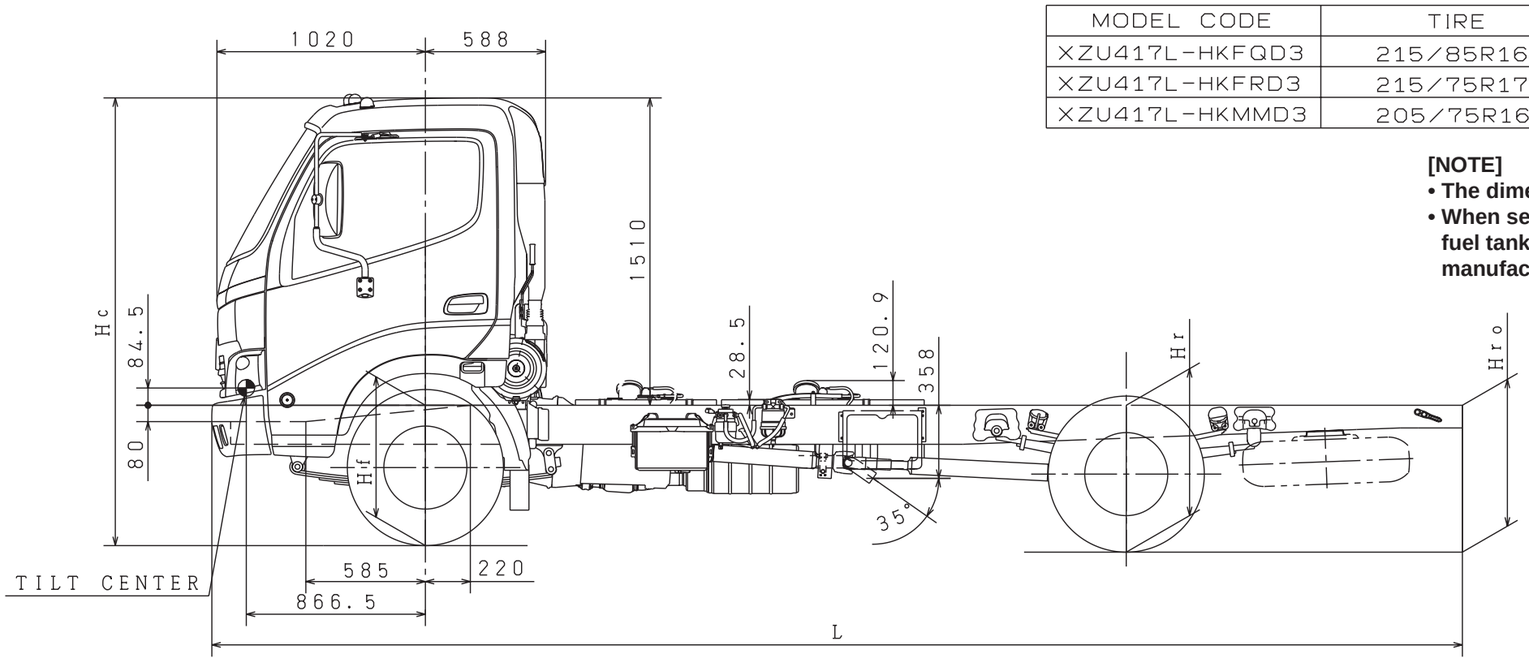

https://truckmanualshub.com/

SCALE : 1/30
Unit : mm

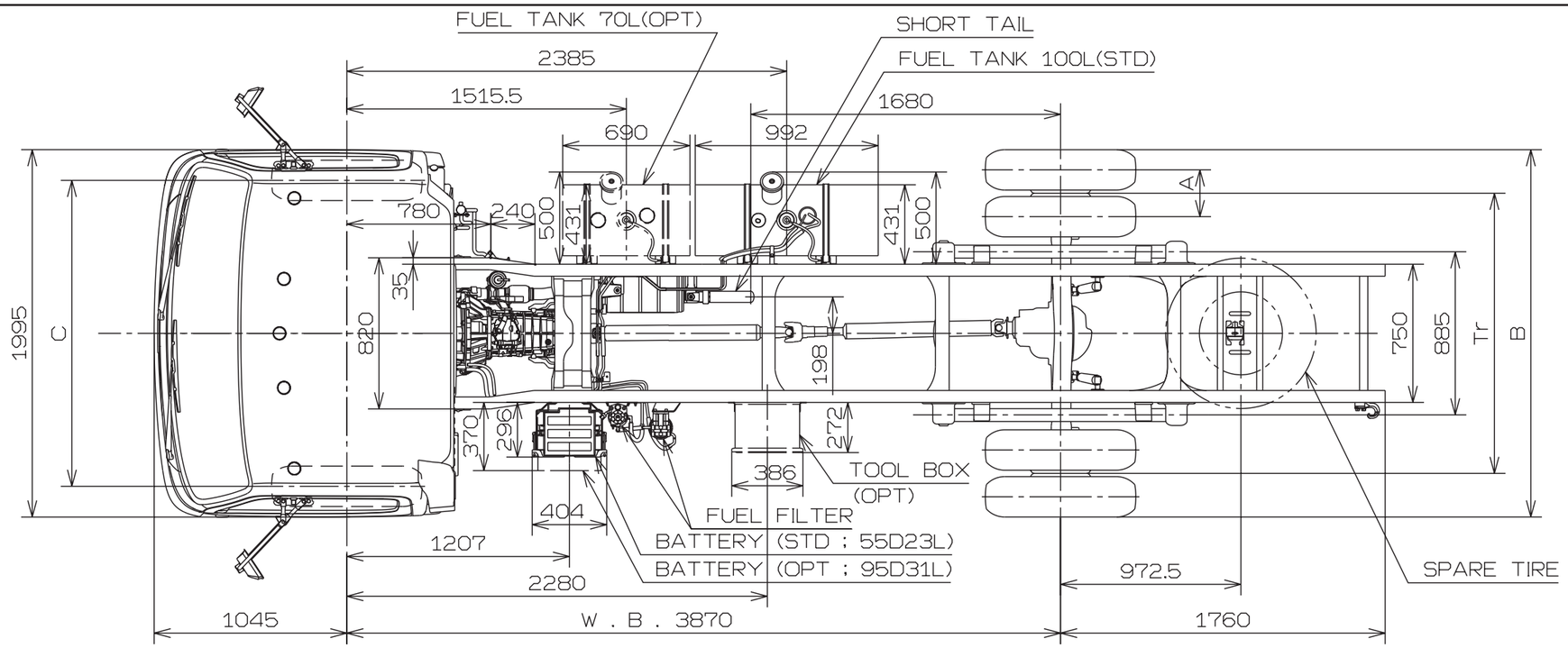

XZU427L-HKFQD3
XZU427L-HKFRD3

MODEL CODE	TIRE	A	B	C	L	Tr	Hc	Hf	Hr	Hro
XZU427L-HKFQD3	215/85R16	244	1975	1665	6675	1520	2227	717	790	823
XZU427L-HKFRD3	215/75R17.5	254	1986	1655	↑	↑	2200	710	796	835

[NOTE]
- **The dimensions described above are designed figure under the chassis condition.**
- **When selected or fitted optional equipment or local parts such as tire, leaf spring, fuel tank and etc., should be examined the frame height from ground by body manufacturer.**

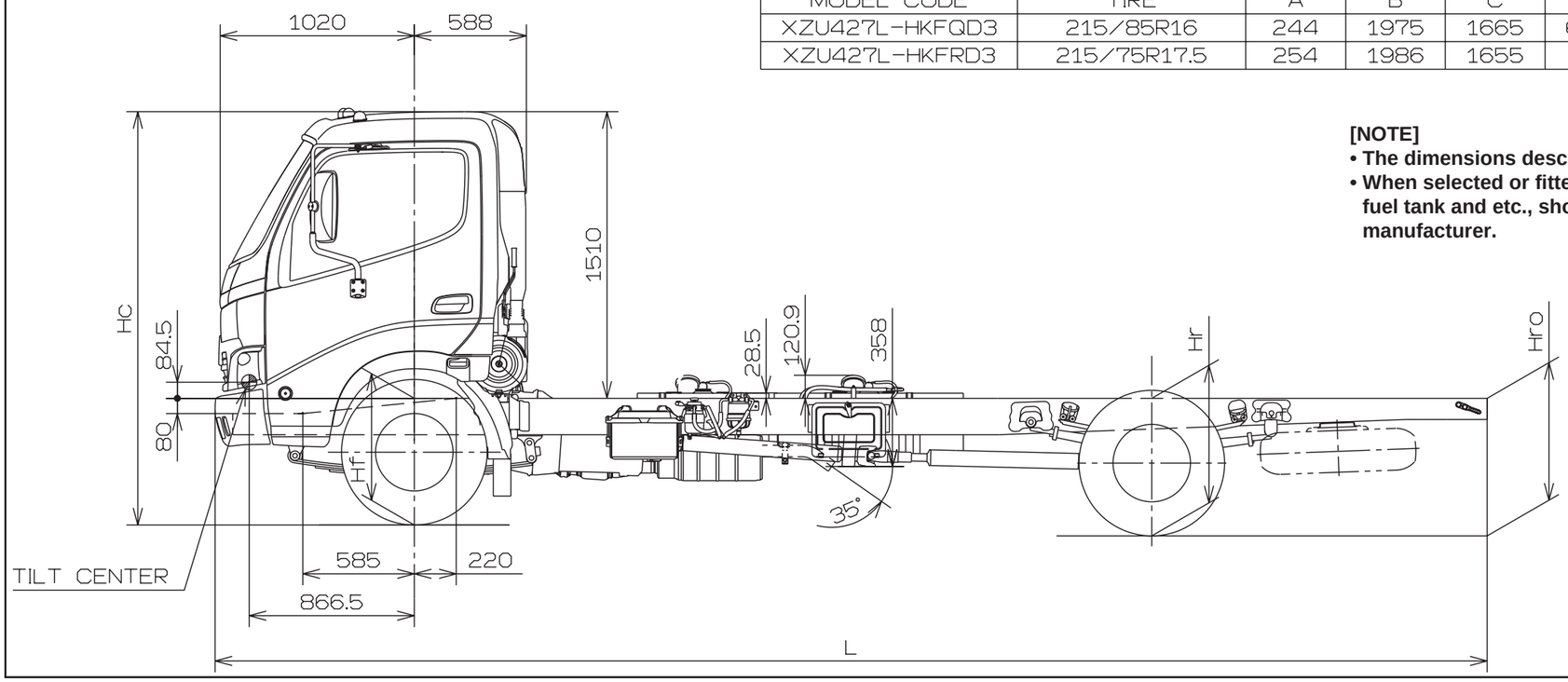

https://truckmanualshub.com/

SCALE : 1/30
Unit : mm

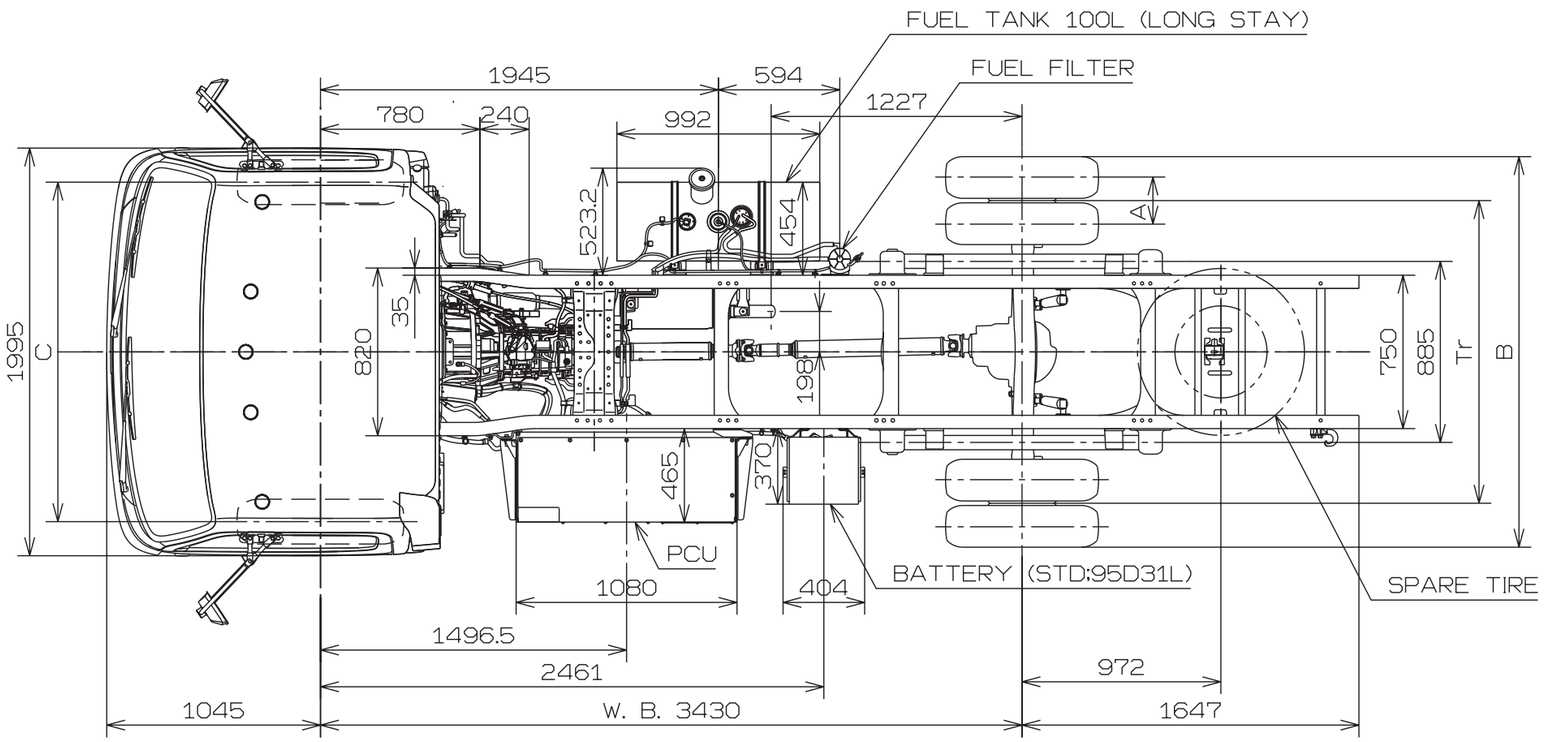

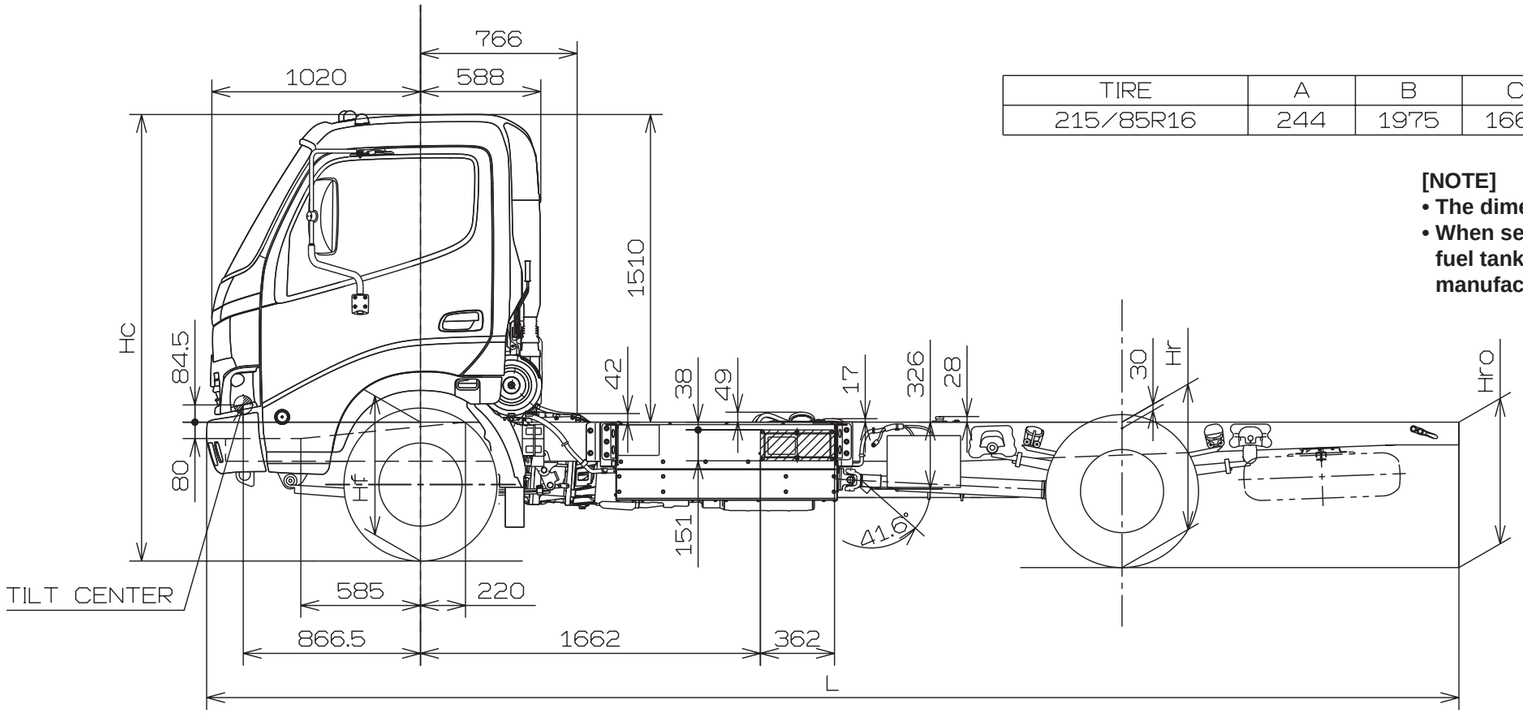

XKU417L-HKFQB3

TIRE	A	B	C	L	Tr	Hc	Hf	Hr	Hro
215/85R16	244	1975	1665	6120	1520	2227	717	790	825

[NOTE]
- **The dimensions described above are designed figure under the chassis condition.**
- **When selected or fitted optional equipment or local parts such as tire, leaf spring, fuel tank and etc., should be examined the frame height from ground by body manufacturer.**

https://truckmanualshub.com/

9. CHASSIS FRAME DRAWINGS

CHASSIS FRAME DRAWINGS ····· 9 - 1

https://truckmanualshub.com/

CHASSIS FRAME DRAWINGS

SCALE : 1/20
Unit : mm

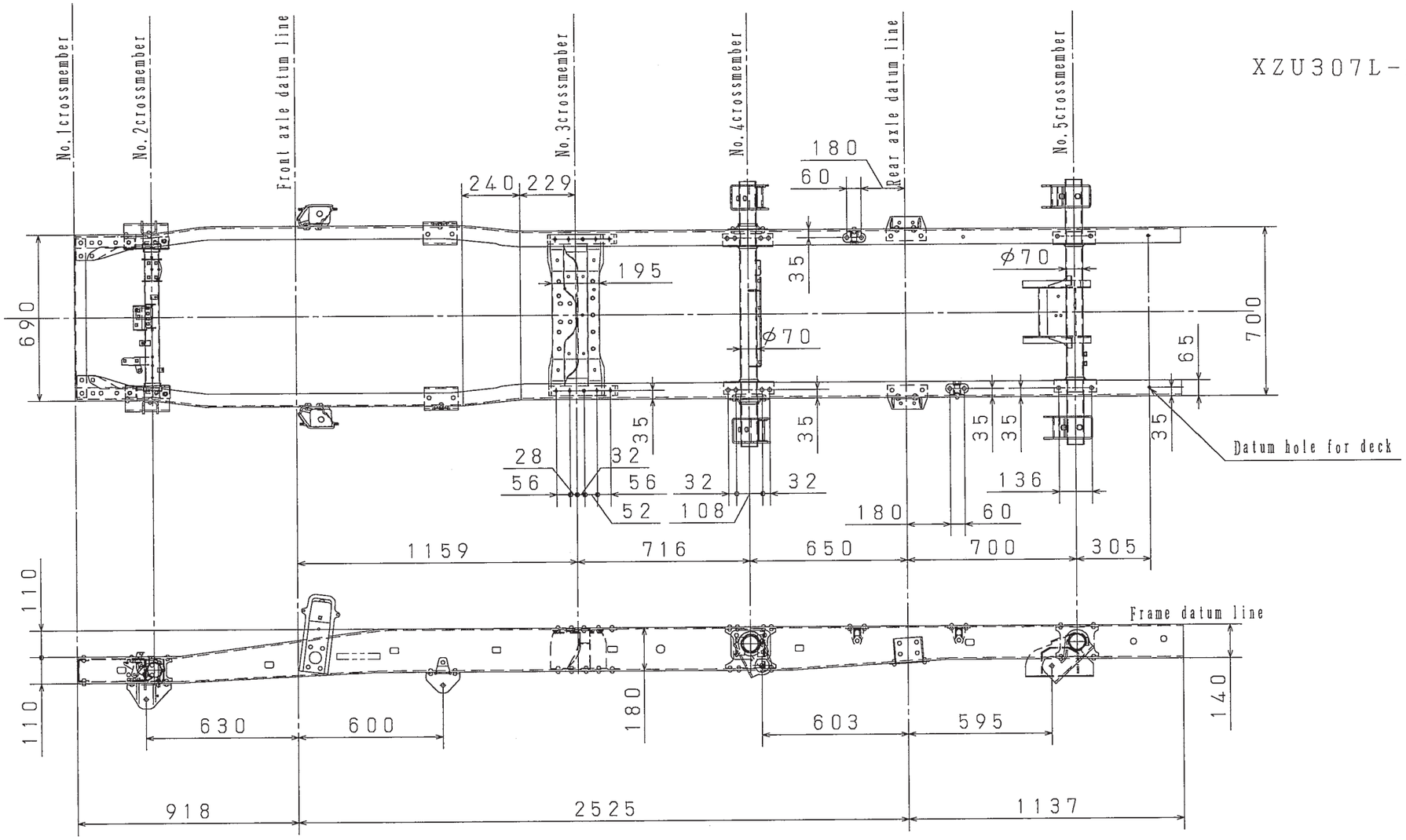

Shape of the rivet head (at frame upper side)

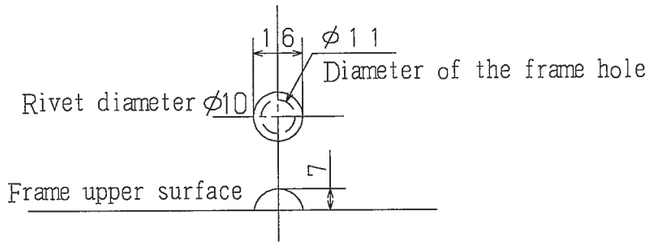

Shape of the frame end (1/10)

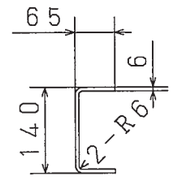

HNDC381W03000127

https://truckmanualshub.com/

SCALE : 1/20
Unit : mm

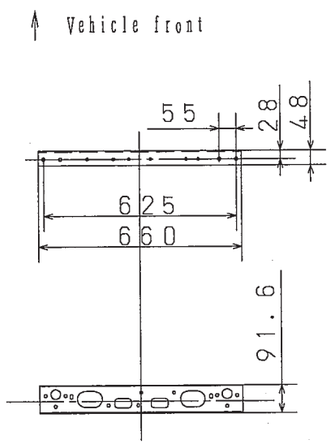

No.1crossmember

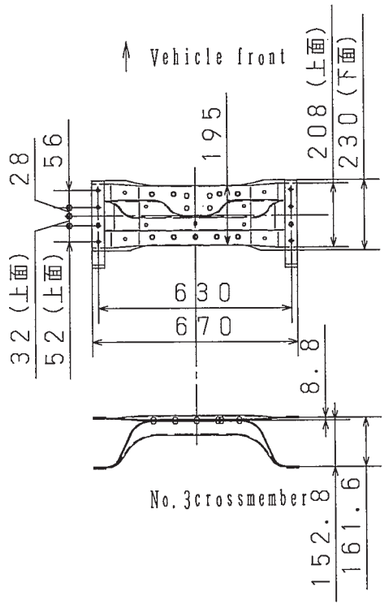

No.3crossmember

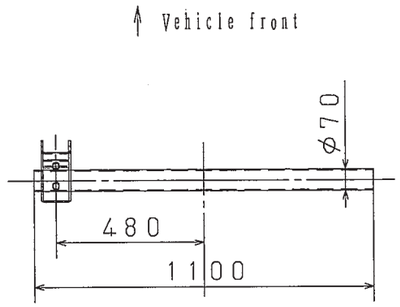

No.5crossmember

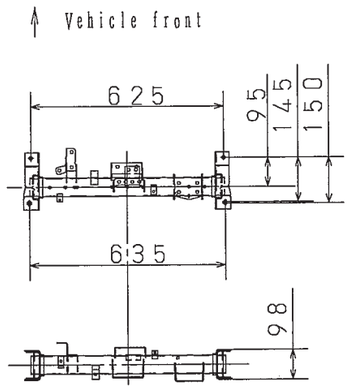

No.2crossmember

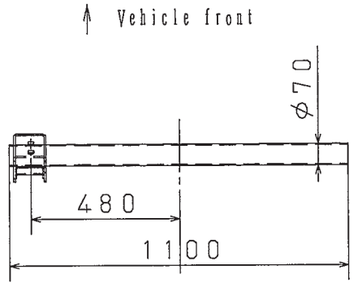

No.4crossmember

XZU307L-HKMLB3

HNDC381W03000127

https://truckmanualshub.com/

SCALE : 1/20
Unit : mm

XZU307L-HKMMB3

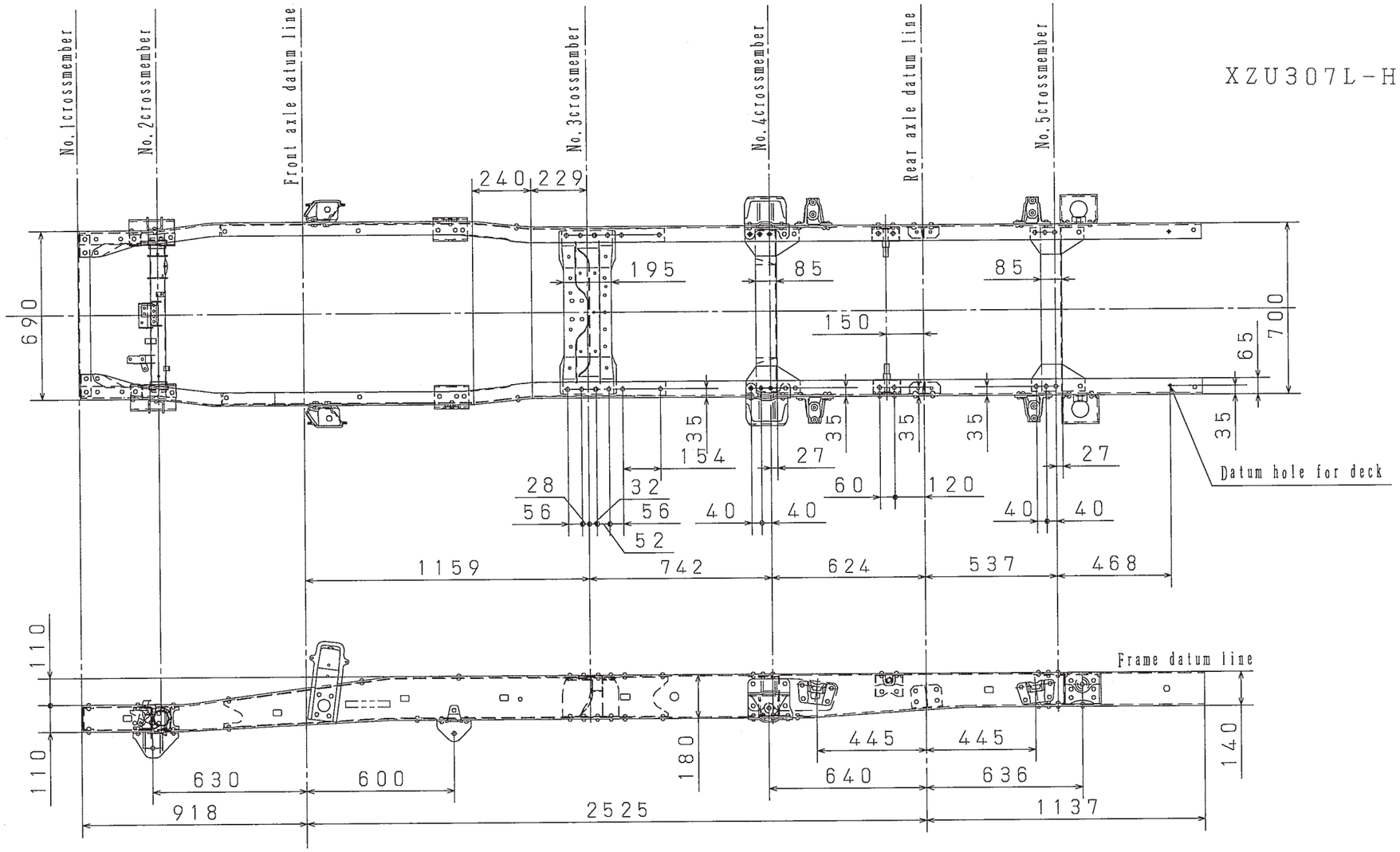

Shape of the rivet head (at frame upper side)

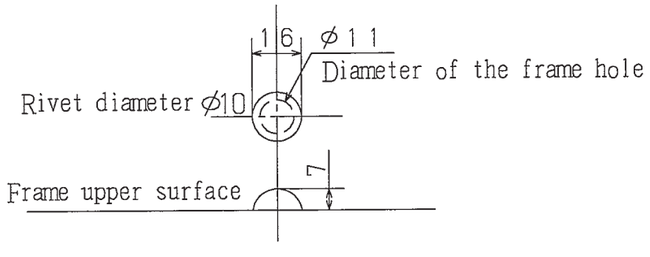

Shape of the frame end (1/10)

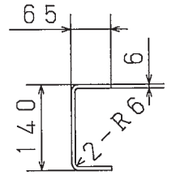

HNDC381W03000131

https://truckmanualshub.com/

SCALE : 1/20
Unit : mm

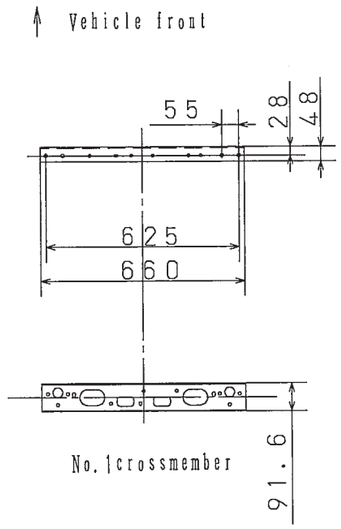

No. 1 crossmember

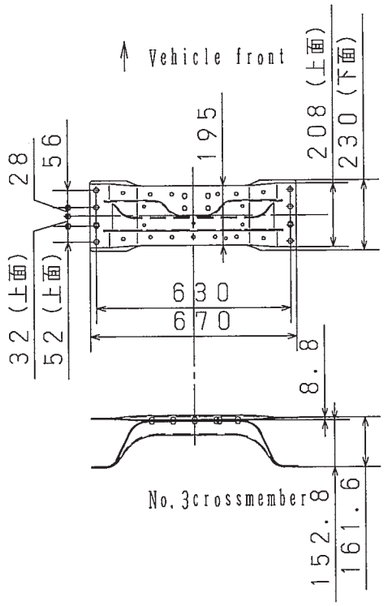

No. 3 crossmember

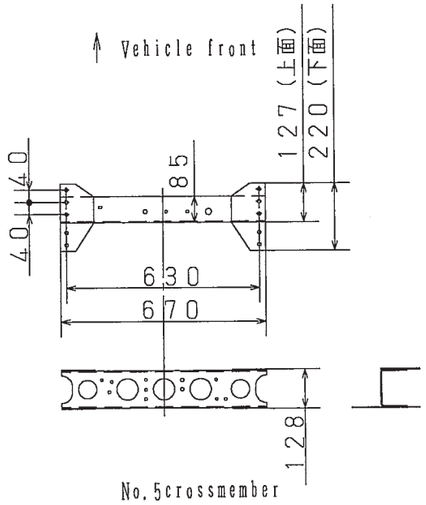

No. 5 crossmember

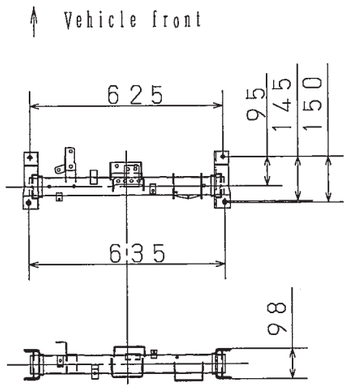

No. 2 crossmember

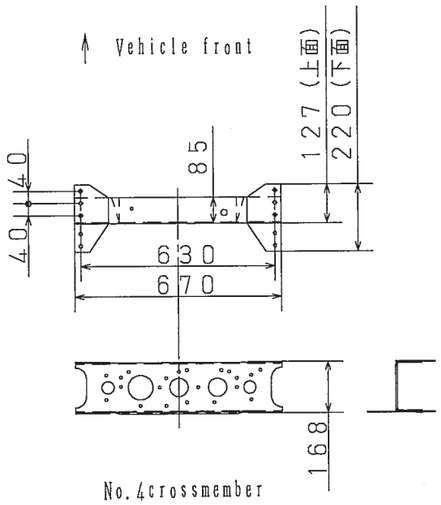

No. 4 crossmember

XZU307L-HKMMB3

HNDC381W03000131

https://truckmanualshub.com/

SCALE : 1/20
Unit : mm

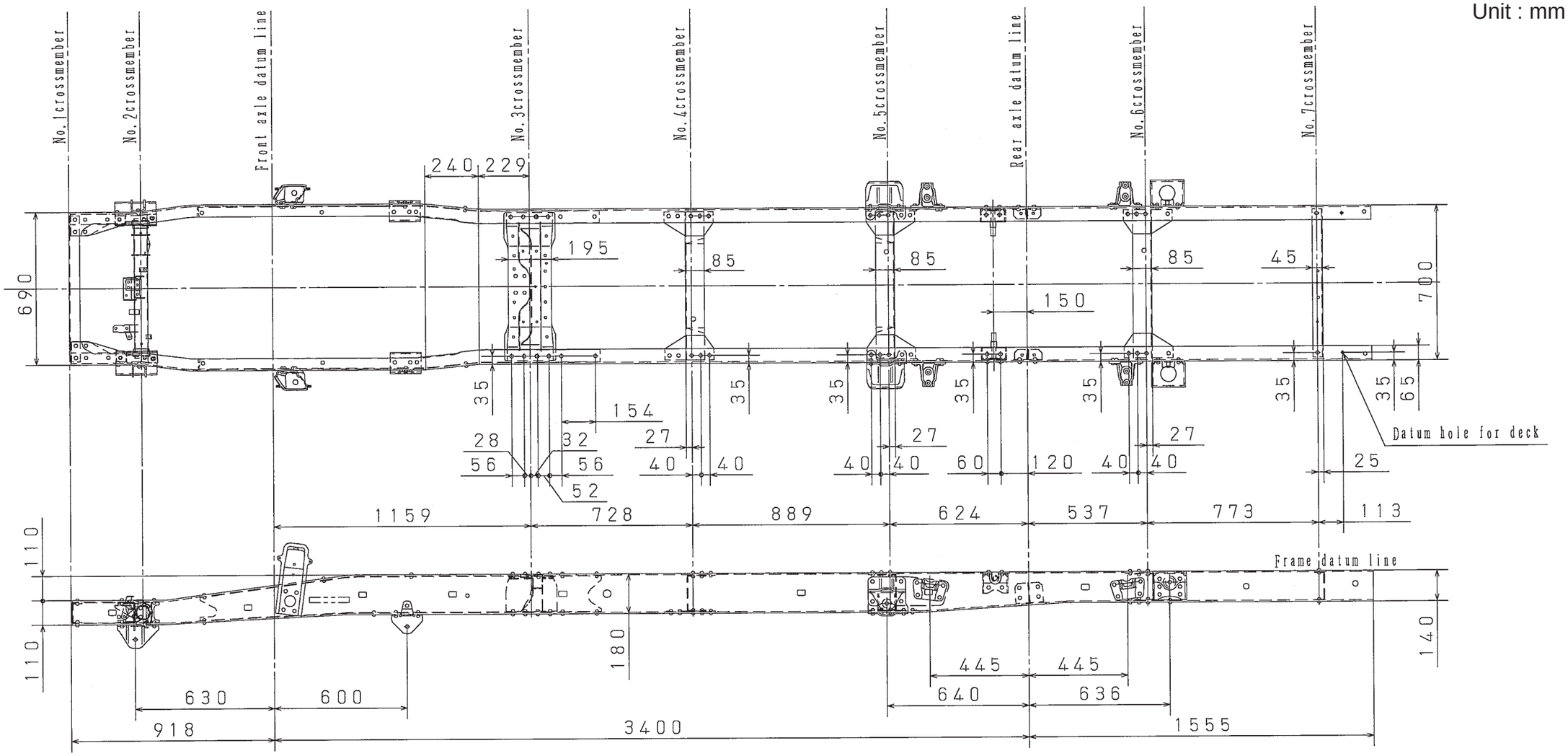

Shape of the rivet head (at frame upper side)

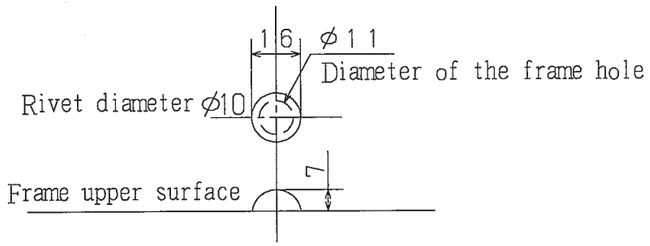

Shape of the frame end (1/10)

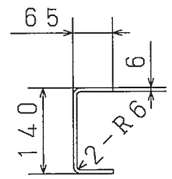

XZU347L-HKMMB3

HNDC381W03000129

https://truckmanualshub.com/

SCALE : 1/20
Unit : mm

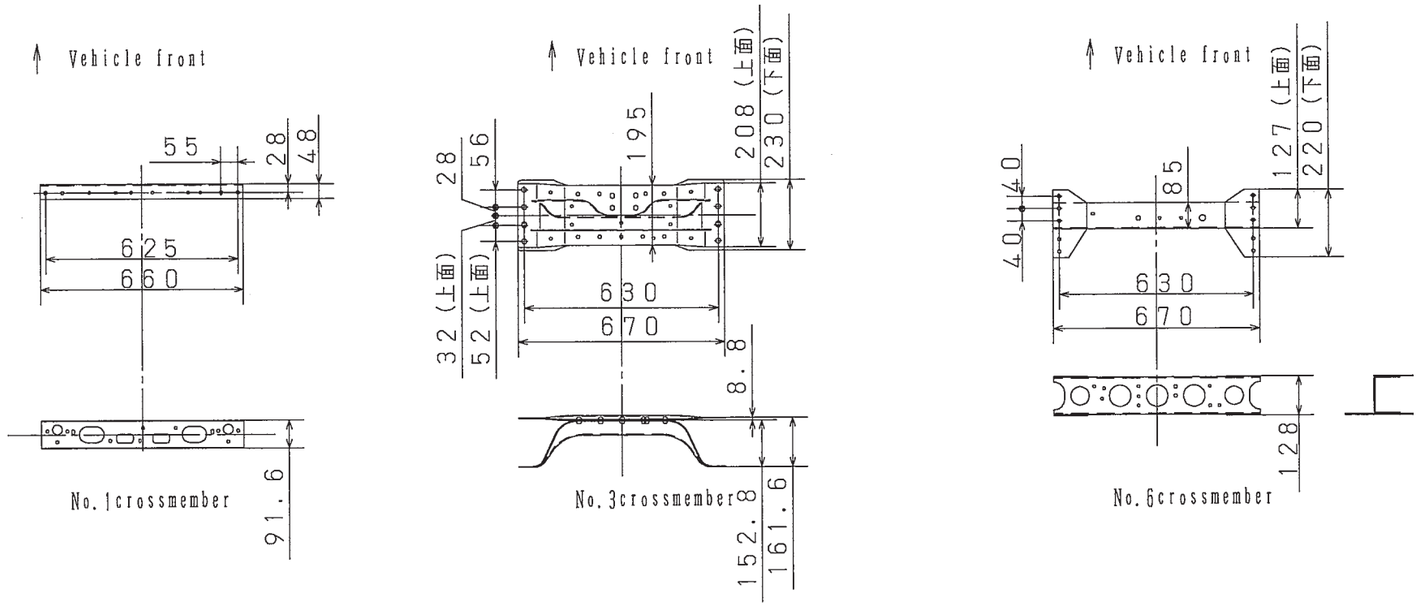

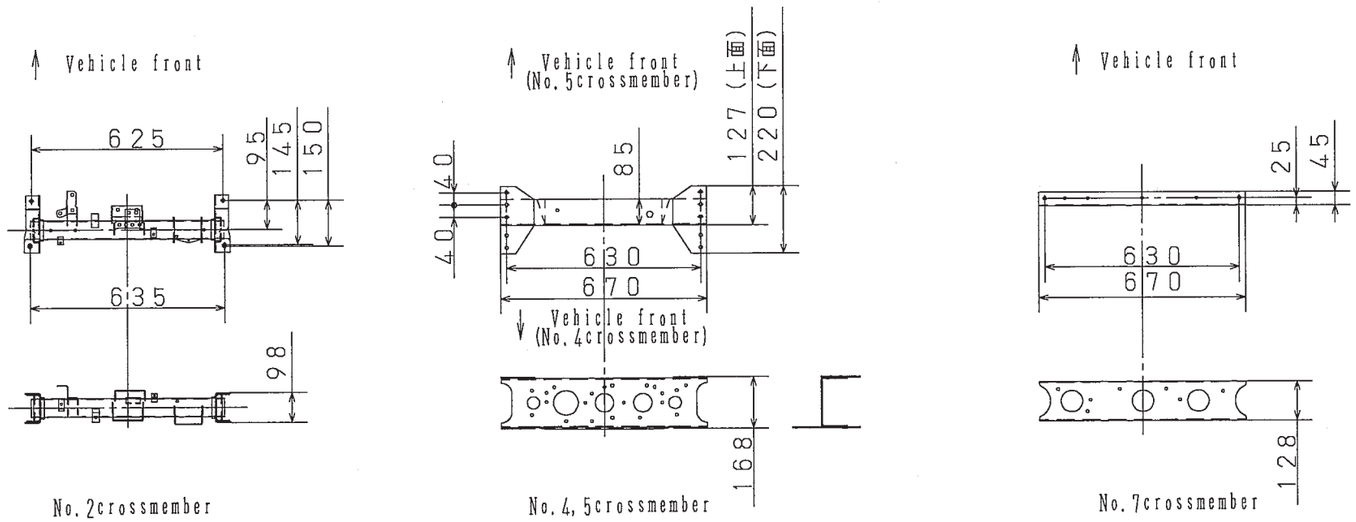

XZU347L-HKMMB3

HNDC381W03000129

https://truckmanualshub.com/

SCALE : 1/20
Unit : mm

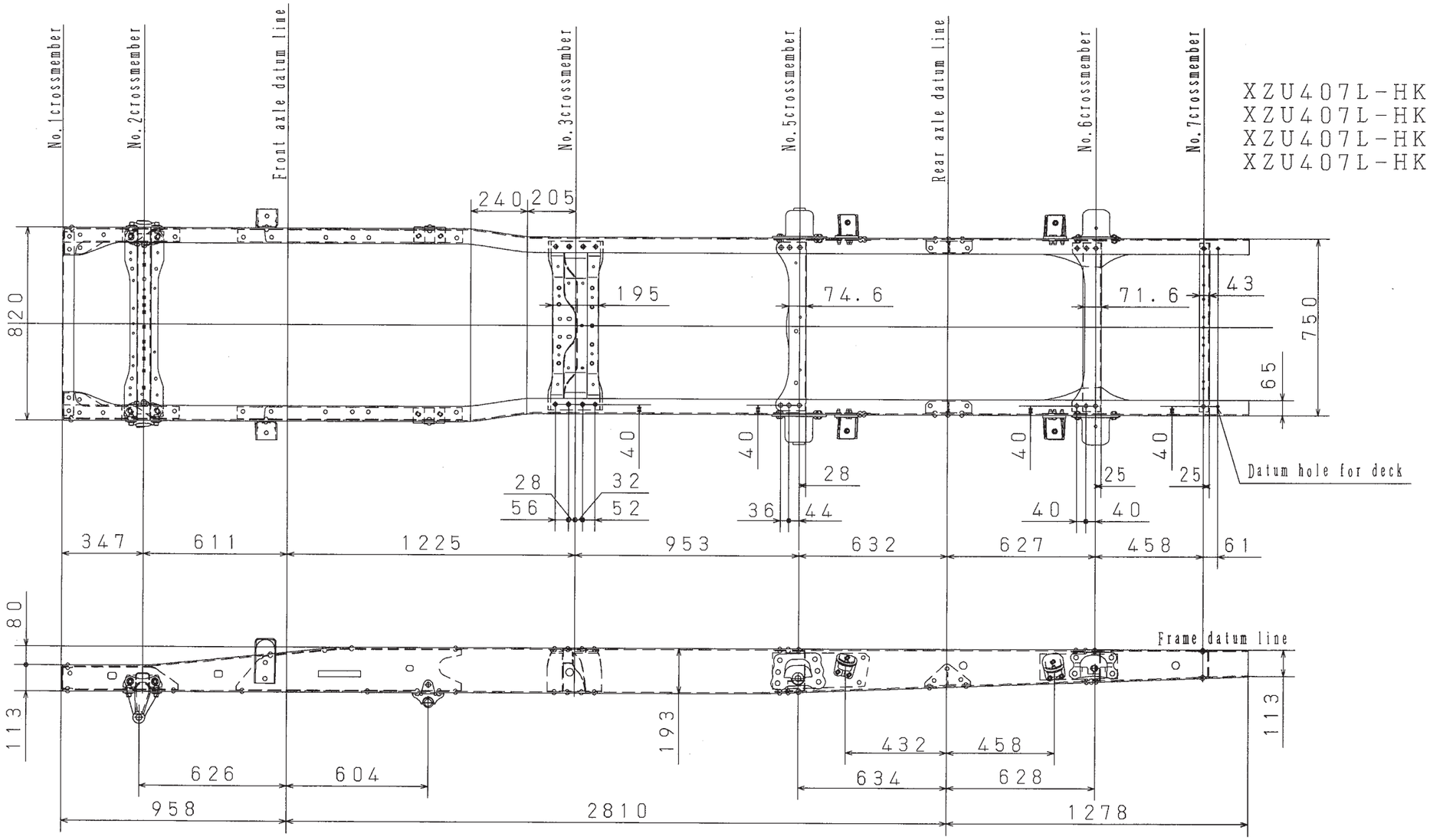

SHAPE OF THE RIVET HEAD (AT FRAME UPPER SIDE)

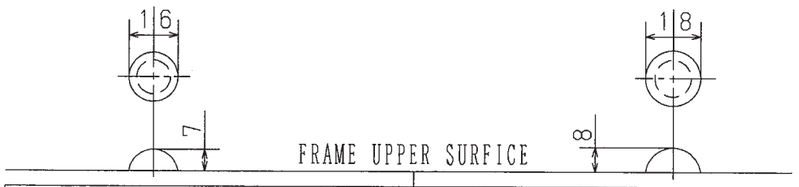

No. 1, 3, 5, 6 CROSSMEMBER		No. 4 CROSSMEMBER	
RIVET DIAMETER	10	RIVET DIAMETER	11
DIAMETER OF FRAME HOLE	11	DIAMETER OF FRAME HOLE	12

SHAPE OF THE FRAME END (1/10)

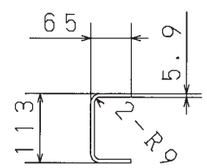

HNBUYKAS01006409

https://truckmanualshub.com/

SCALE : 1/20
Unit : mm

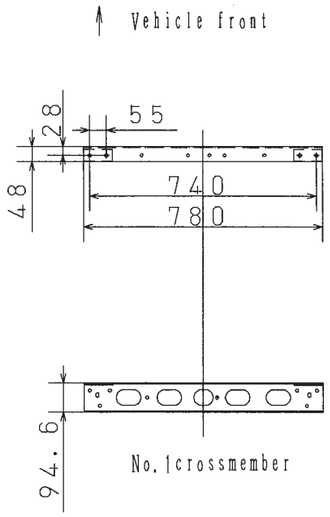

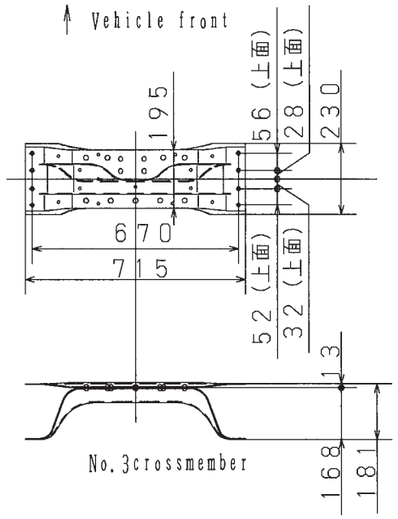

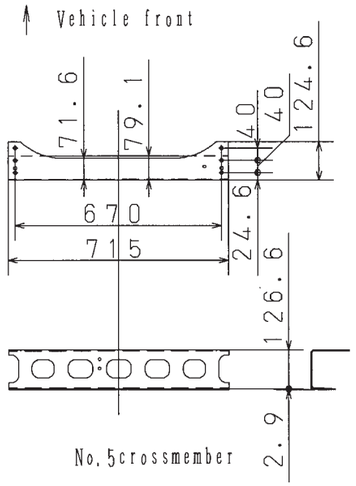

XZU407L-HKMMD3
XZU407L-HKFQD3
XZU407L-HKMQD3
XZU407L-HKFRD3

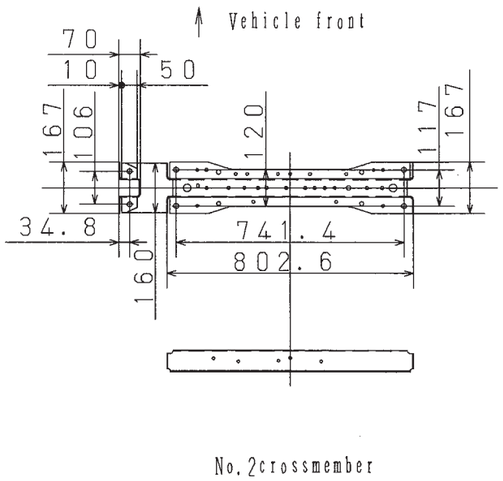

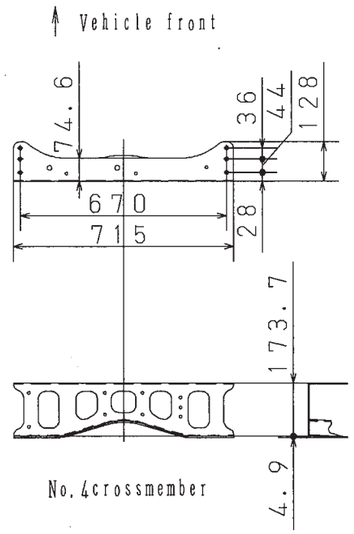

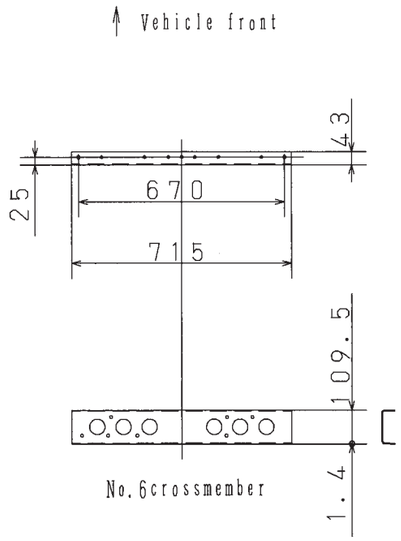

HNBUYKAS01006409

https://truckmanualshub.com/

SCALE : 1/20
Unit : mm

XZU417L-HKMMD3
XZU417L-HKFQD3
XZU417L-HKFRD3

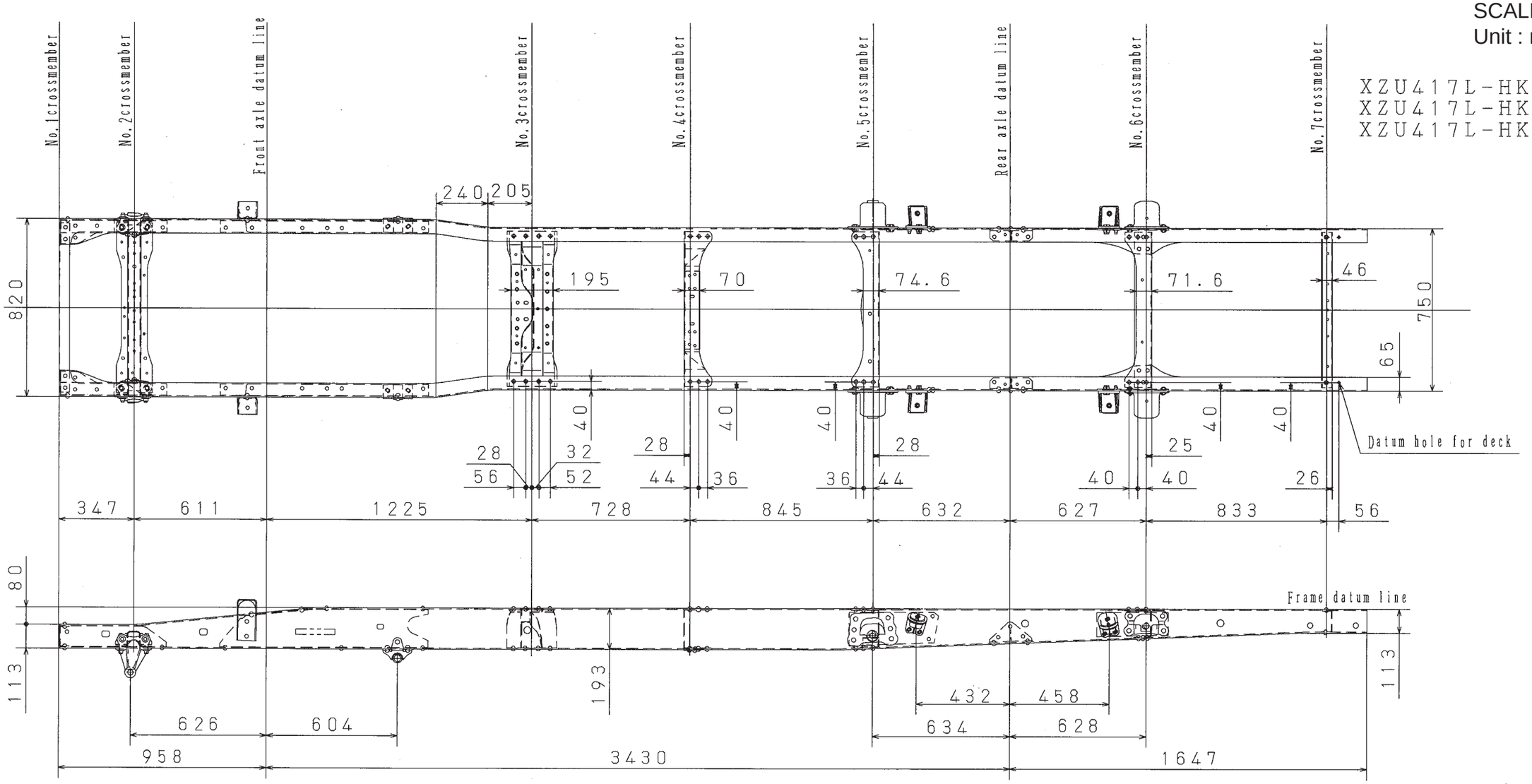

SHAPE OF THE RIVET HEAD (AT FRAME UPPER SIDE)

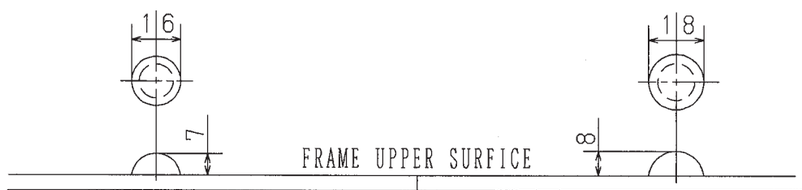

No. 1, 3, 6, 7 CROSSMEMBER		No. 4, 5 CROSSMEMBER	
RIVET DIAMETER	10	RIVET DIAMETER	11
DIAMETER OF FRAME HOLE	11	DIAMETER OF FRAME HOLE	12

SHAPE OF THE FRAME END (1/10)

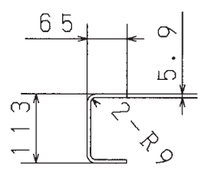

INBUYKAS01006407

https://truckmanualshub.com/

SCALE : 1/20
Unit : mm

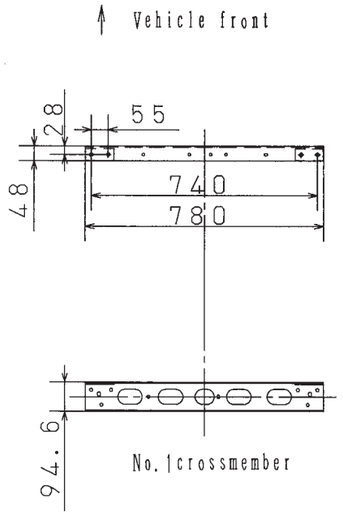

No. 1crossmember

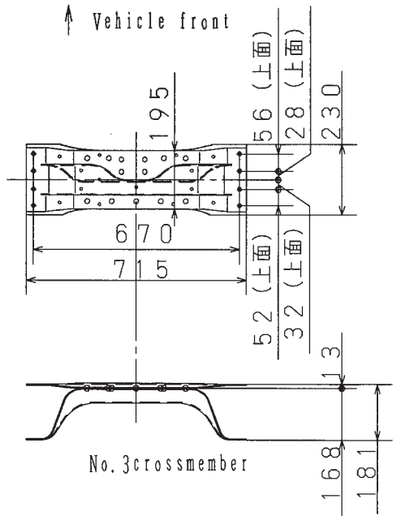

No. 3crossmember

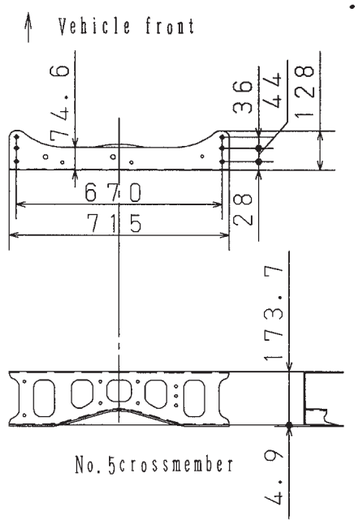

No. 5crossmember

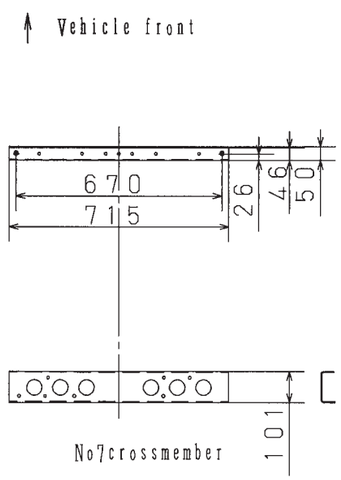

No7crossmember

XZU417L-HKMMD3
XZU417L-HKFQD3
XZU417L-HKFRD3

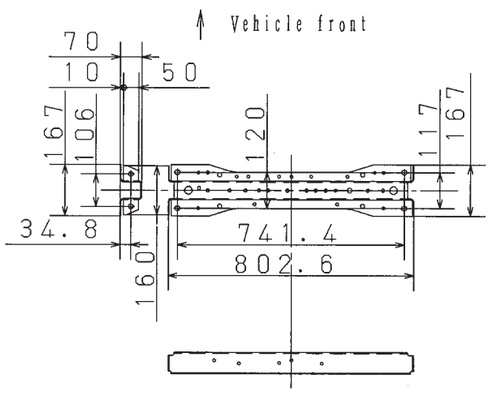

No. 2crossmember

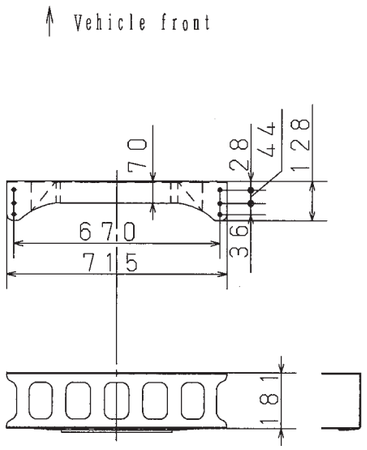

No. 4crossmember

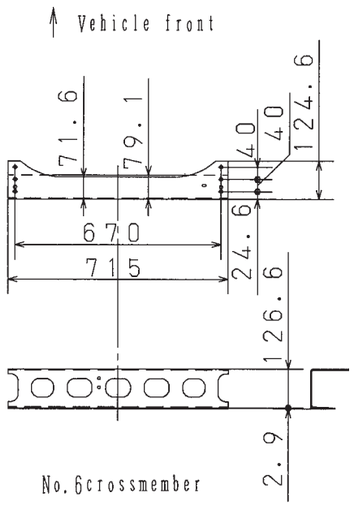

No. 6crossmember

HNBUYKAS01006407

https://truckmanualshub.com/

SCALE : 1/20
Unit : mm

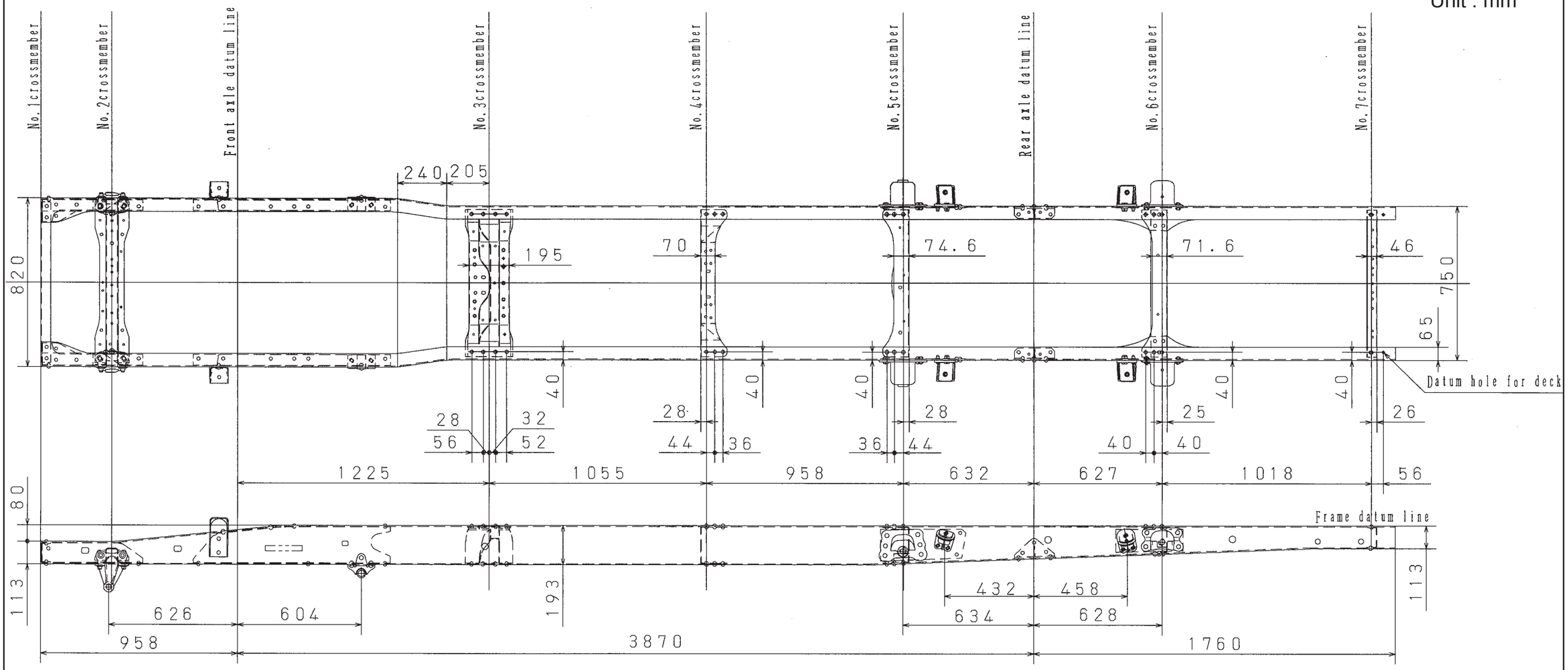

XZU427L-HKFQD3
XZU427L-HKFRD3

SHAPE OF THE RIVET HEAD (AT FRAME UPPER SIDE)

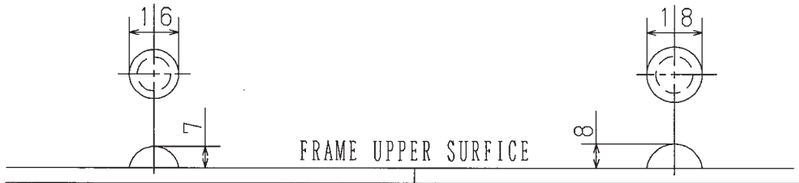

No. 1, 3, 6, 7 CROSSMEMBER		No. 4, 5 CROSSMEMBER	
RIVET DIAMETER	10	RIVET DIAMETER	11
DIAMETER OF FRAME HOLE	11	DIAMETER OF FRAME HOLE	12

SHAPE OF THE FRAME END (1/10)

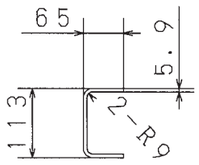

HNBUYKAS01006408

https://truckmanualshub.com/

SCALE : 1/20
Unit : mm

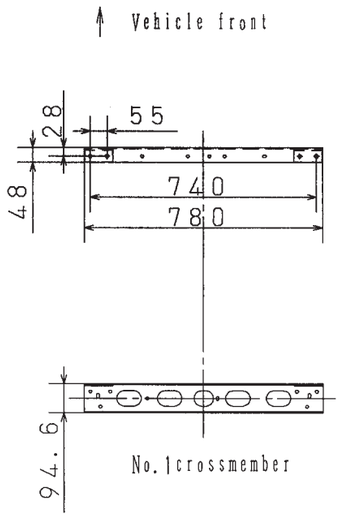

No.1crossmember

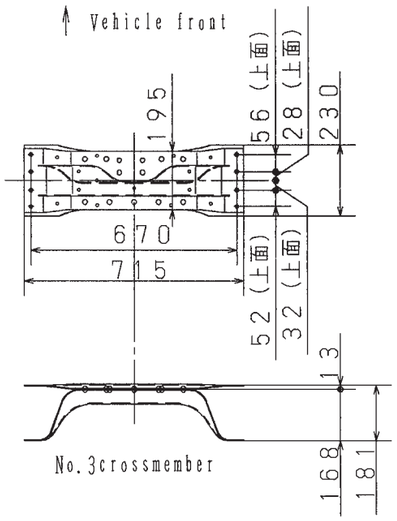

No.3crossmember

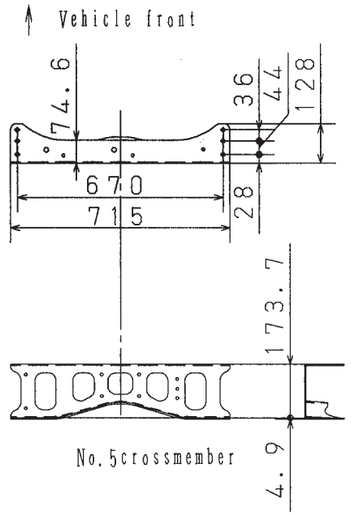

No.5crossmember

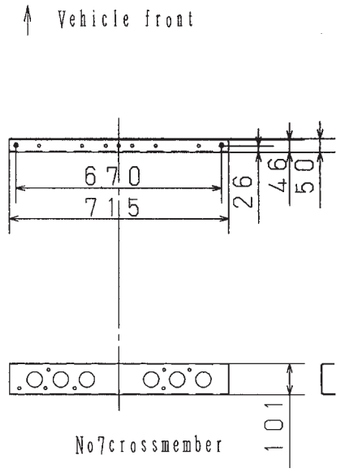

No7crossmember

XZU427L-HKFQD3
XZU427L-HKFRD3

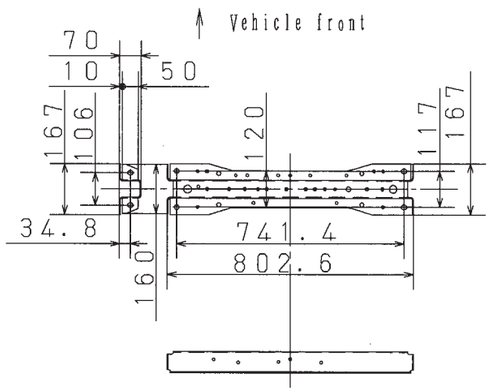

No.2crossmember

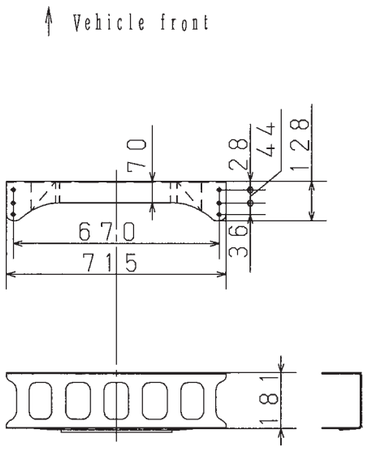

No.4crossmember

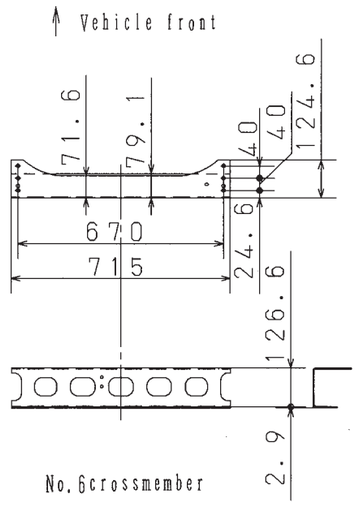

No.6crossmember

HNBUYKAS01006408

https://truckmanualshub.com/

XKU417L-HKFQB3

SCALE : 1/20
Unit : mm

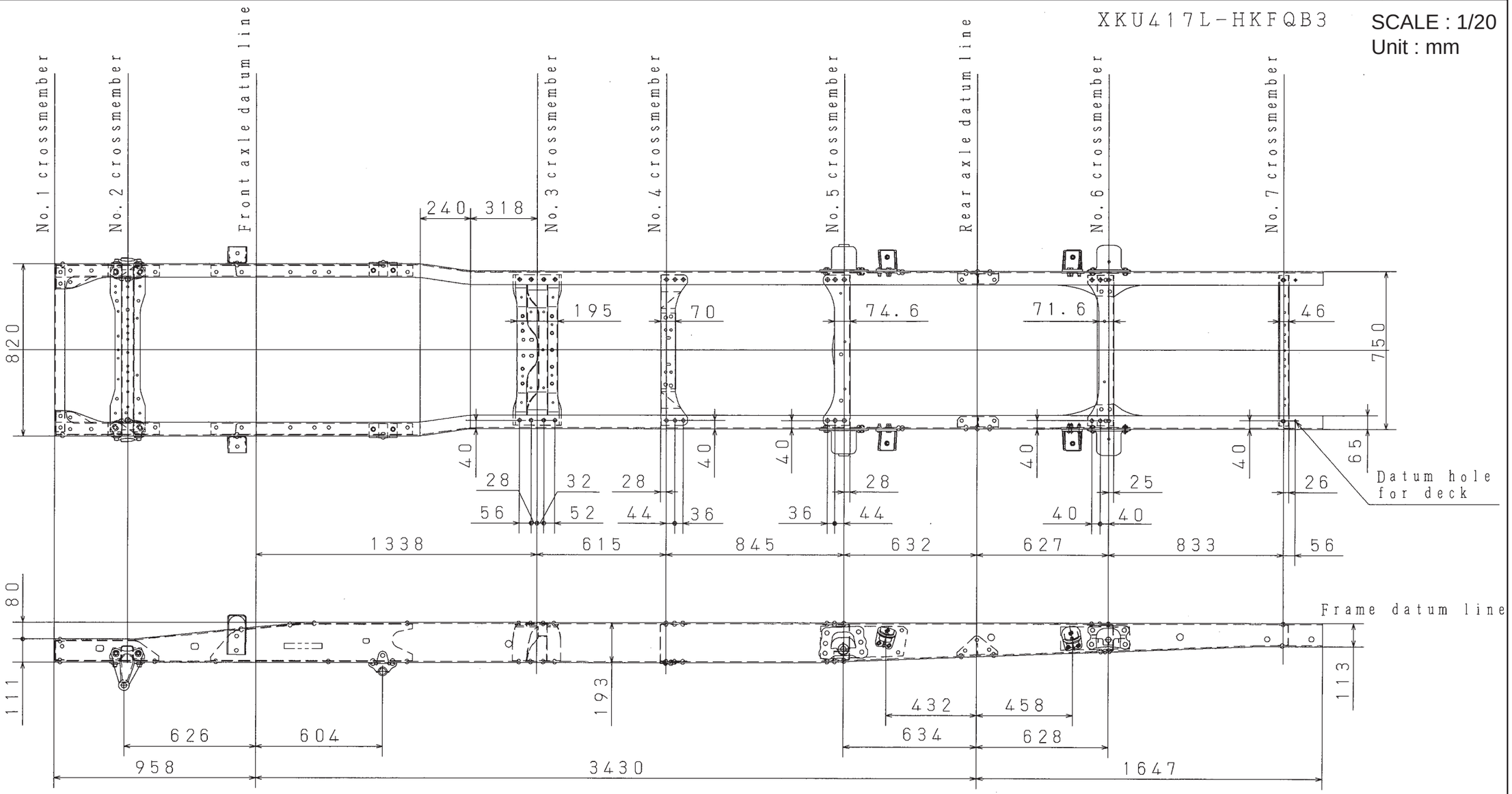

Shape of the rivet head (at frame upper side)

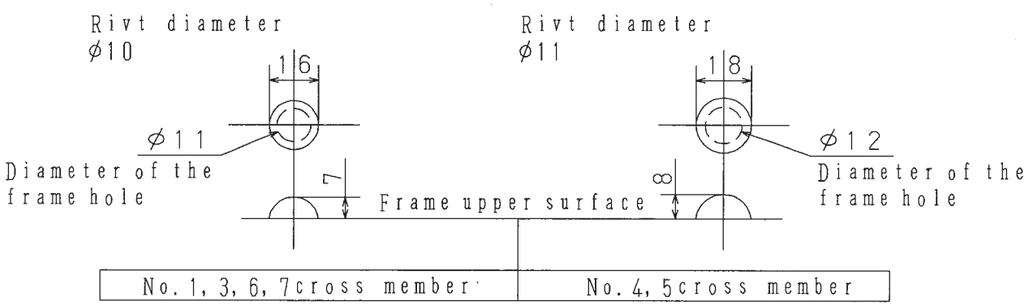

Shape of the frame end
(1/10)

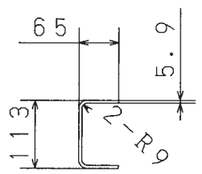

https://truckmanualshub.com/

SCALE : 1/20
Unit : mm

XKU417L-HKFQB3

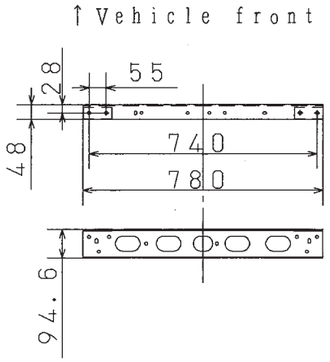

No. 1 crossmember

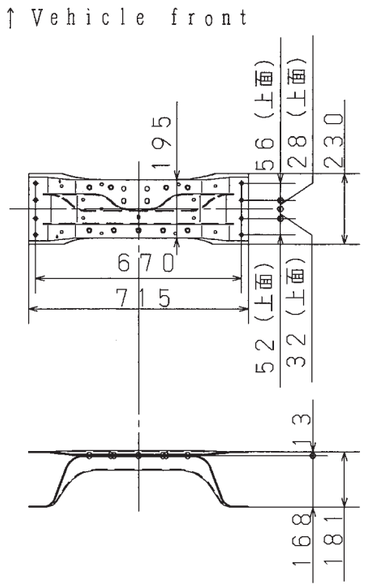

No. 3 crossmember

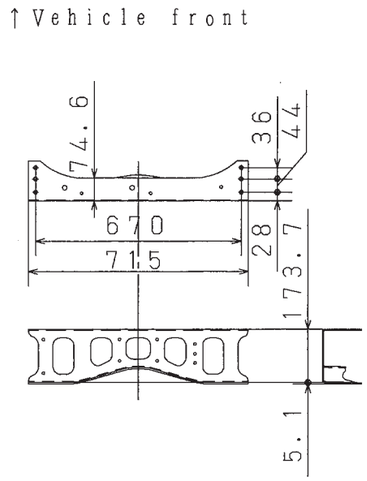

No. 5 crossmember

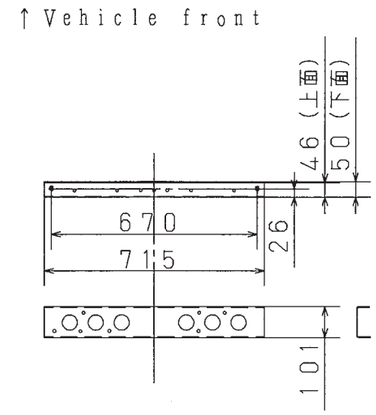

No. 7 crossmember

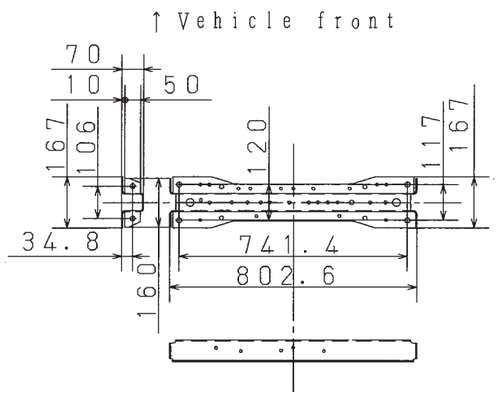

No. 2 crossmember

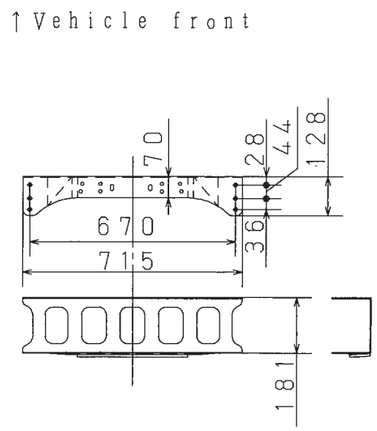

No. 4 crossmember

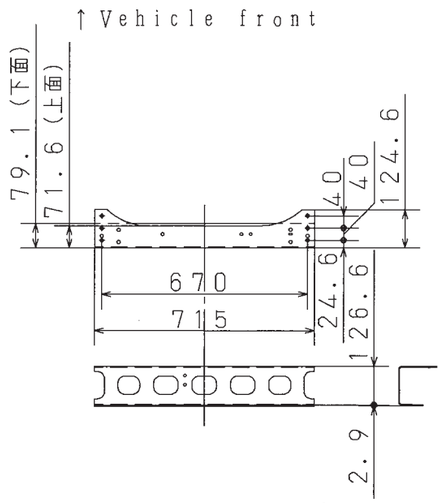

No. 6 crossmember

https://truckmanualshub.com/

10. MOUNTING OF CHASSIS EQUIPMENT

FUEL TANK ..... 10 - 1
BATTERY ..... 10 - 2
EXHAUST SYSTEM ..... 10 - 3

https://truckmanualshub.com/

FUEL TANK

Refer to FUEL TANK based on following table.

	STD/OPT	STD		OPT		
	CAPACITY	70L	100L	100L	100L+70L	
	FILLING PORT SIZE	BIG		STANDARD		BIG
MODEL	XZU307L-HKMLB3	FT1	–	–	–	–
	XZU307L-HKMMB3	FT1	–	–	–	–
	XZU347L-HKMMB3	–	FT2	–	–	–
	XZU407L-HKMMD3	–	FT3	FT5	–	–
	XZU407L-HKMQD3	–	FT3	FT5	–	–
	XZU407L-HKFQD3	–	FT3	FT5	–	–
	XZU407L-HKFRD3	–	FT3	FT5	–	–
	XZU417L-HKMMD3	–	FT4	FT6	FT7	FT9
	XZU417L-HKFQD3	–	FT4	FT6	FT7	FT9
	XZU417L-HKFRD3	–	FT4	FT6	FT7	FT9
	XZU427L-HKFQD3	–	FT4	FT6	FT8	FT10
	XZU427L-HKFRD3	–	FT4	FT6	FT8	FT10
	XKU417L-HKFQB3	–	FT11	–	–	–

AUSXZU201 10T001

https://truckmanualshub.com/

1) FUEL TANK CHART "FT1"

Unit : mm

CAPACITY : 70L

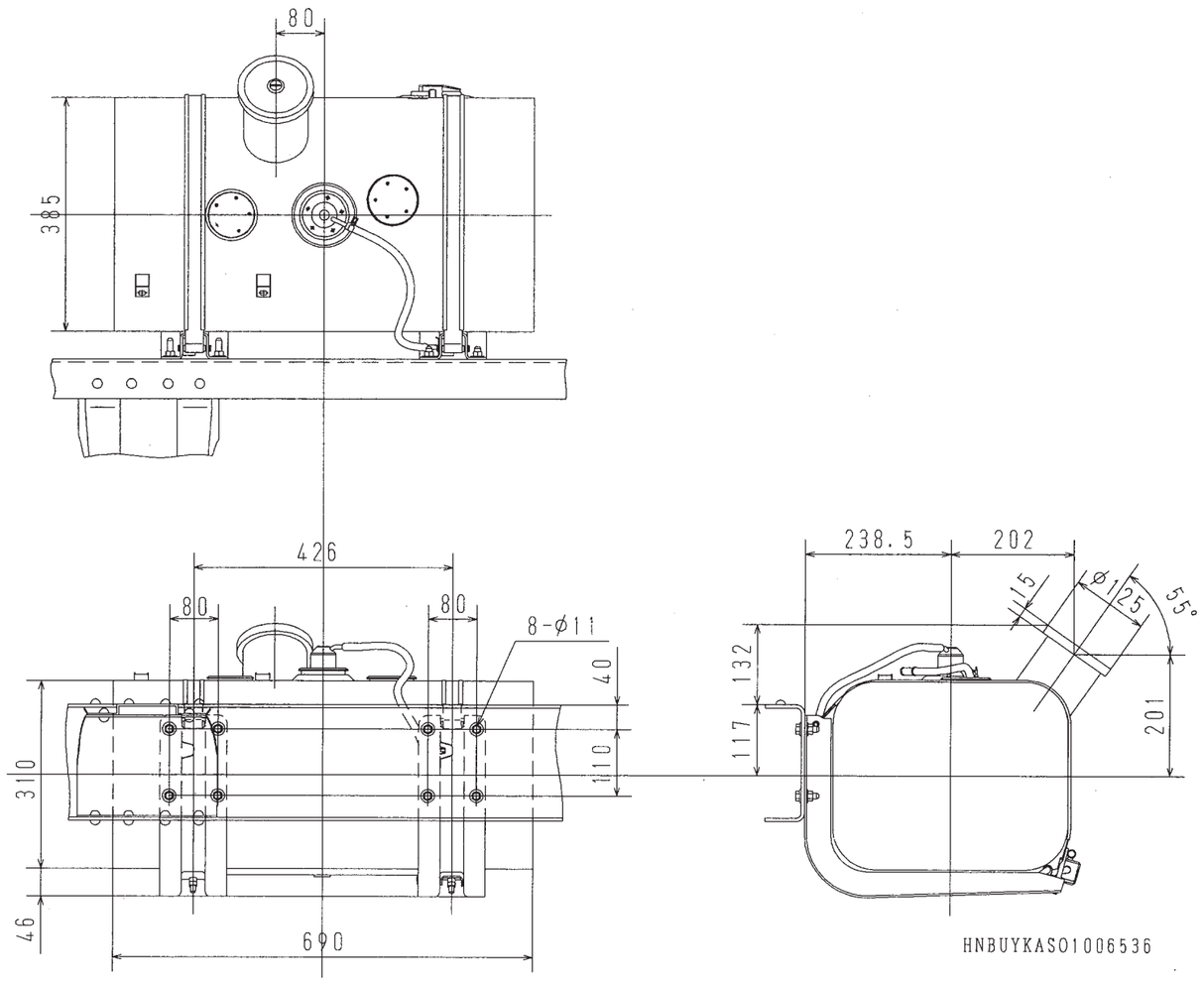

https://truckmanualshub.com/

2) FUEL TANK CHART "FT2"

Unit : mm

CAPACITY : 100L

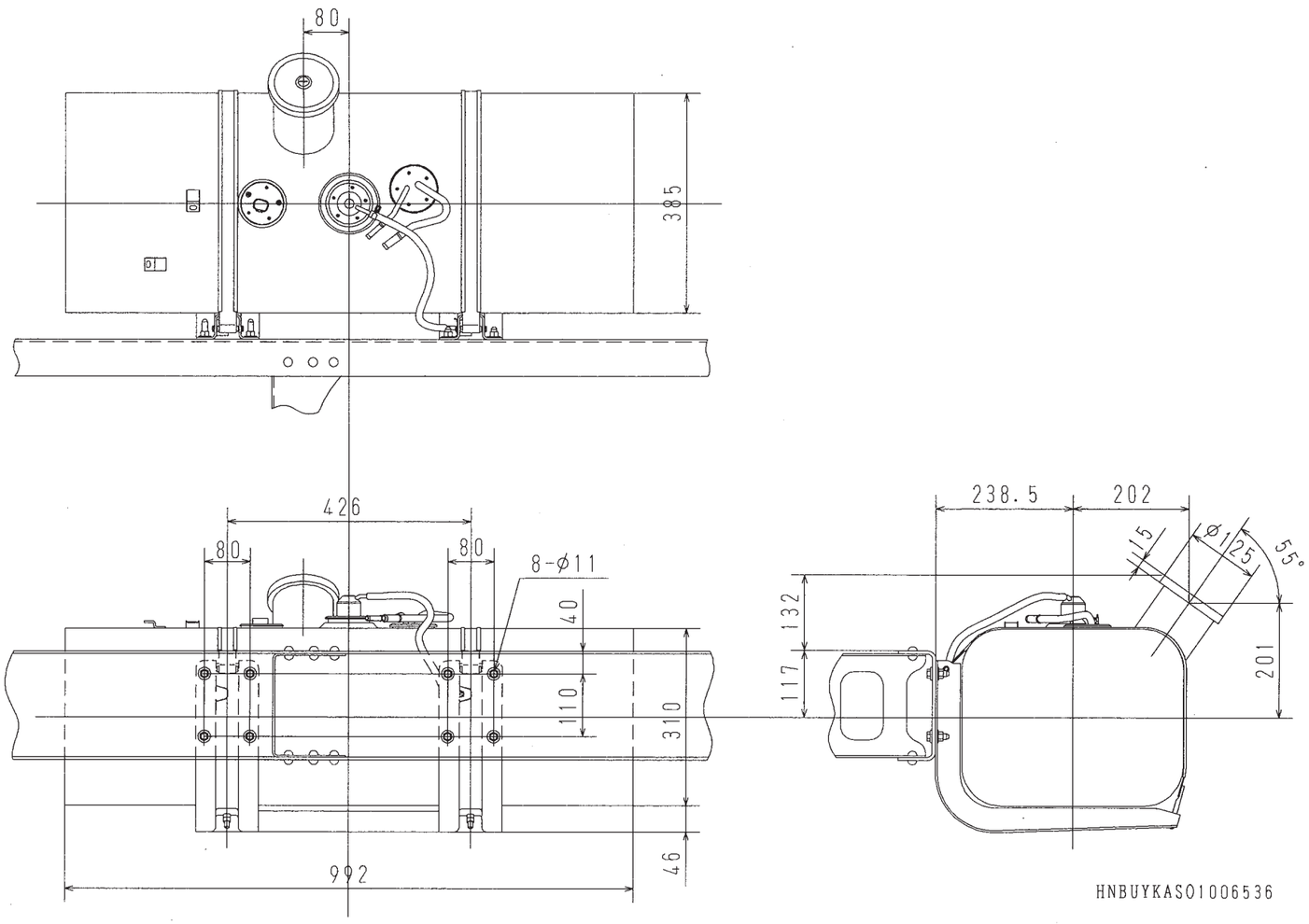

https://truckmanualshub.com/

3) FUEL TANK CHART "FT3"

Unit : mm

CAPACITY : 100L

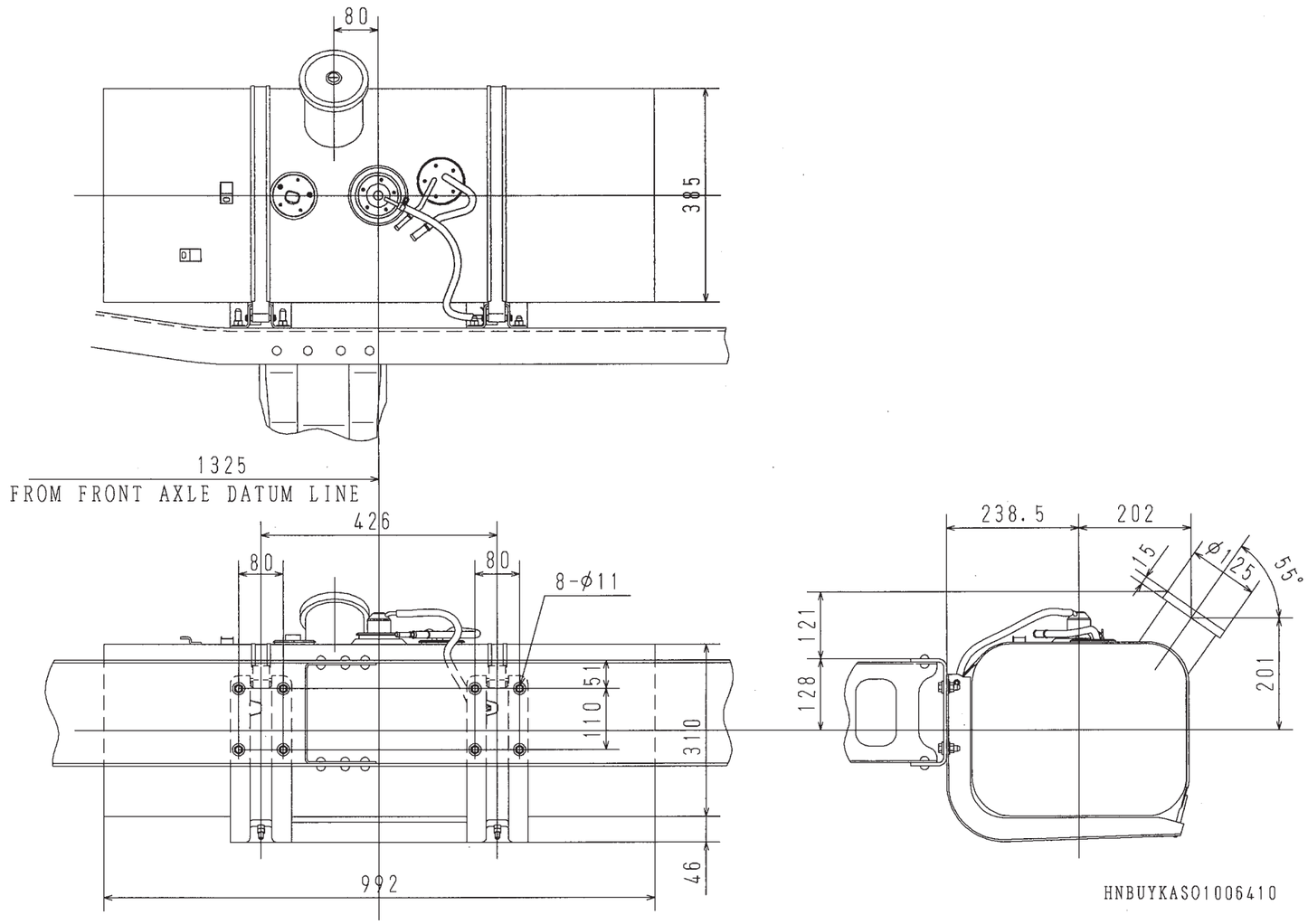

https://truckmanualshub.com/

4) FUEL TANK CHART "FT4"

Unit : mm

CAPACITY : 100L

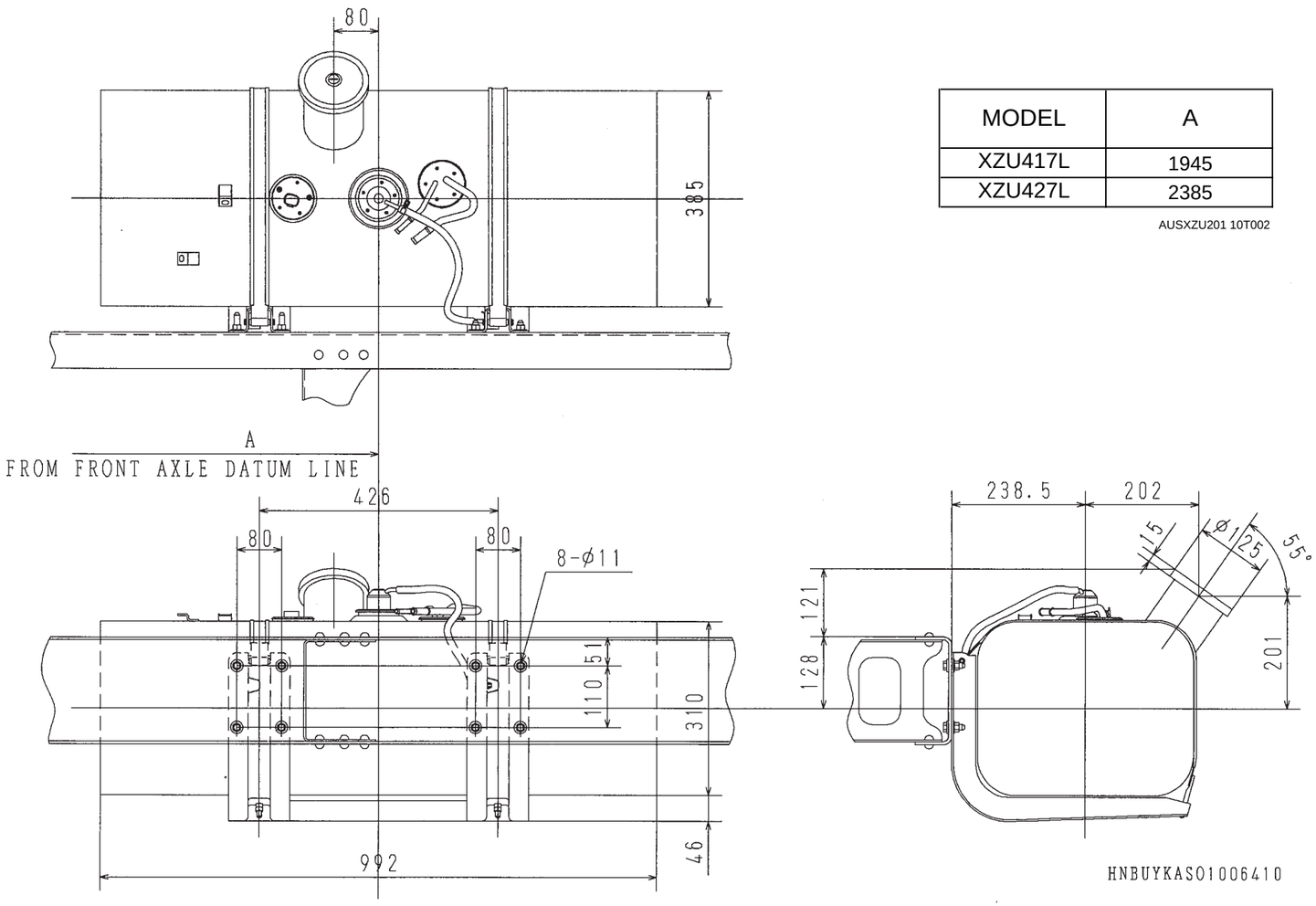

MODEL	A
XZU417L	1945
XZU427L	2385

AUSXZU201 10T002

https://truckmanualshub.com/

5) FUEL TANK CHART "FT5"

Unit : mm

CAPACITY : 100L

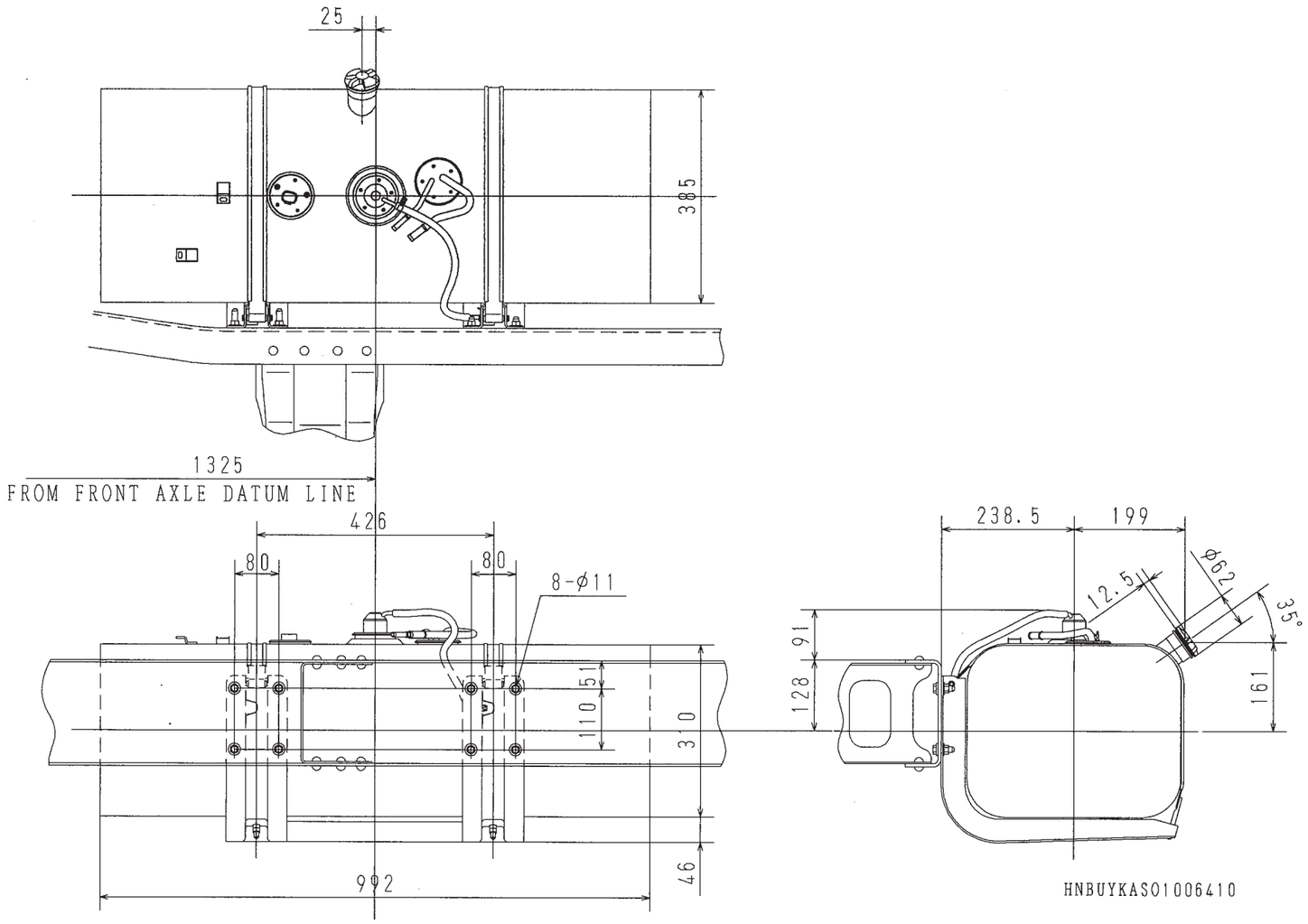

https://truckmanualshub.com/

6) FUEL TANK CHART "FT6"

Unit : mm

CAPACITY : 100L

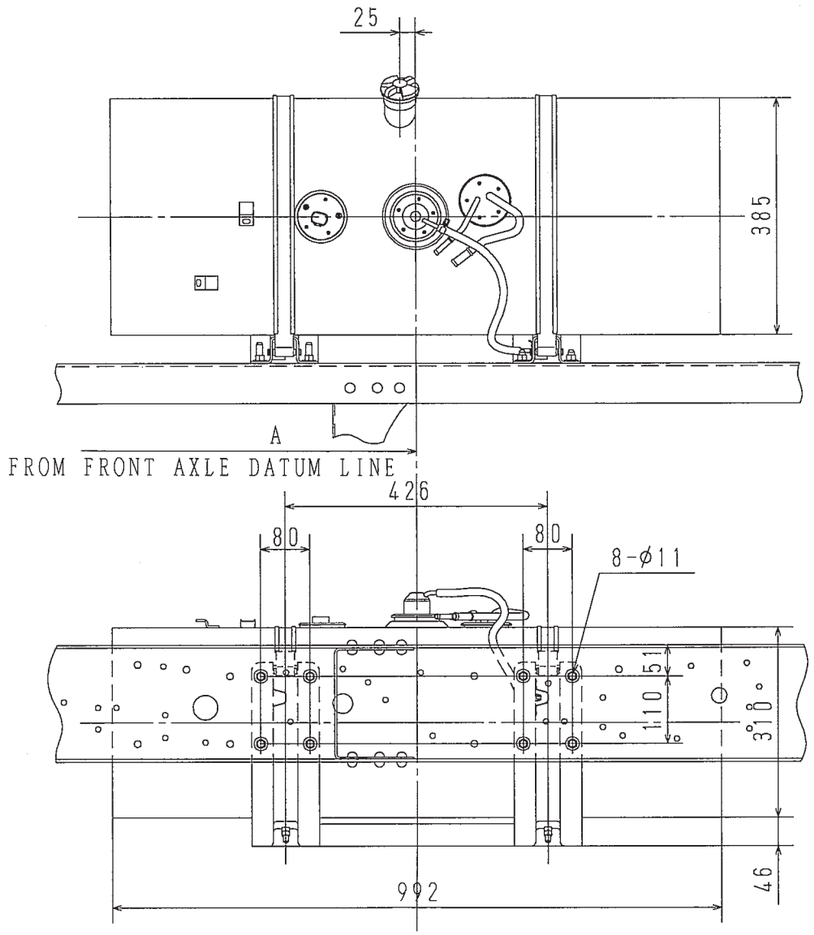

MODEL	A
XZU417L	1945
XZU427L	2385

AUSXZU201 10T002

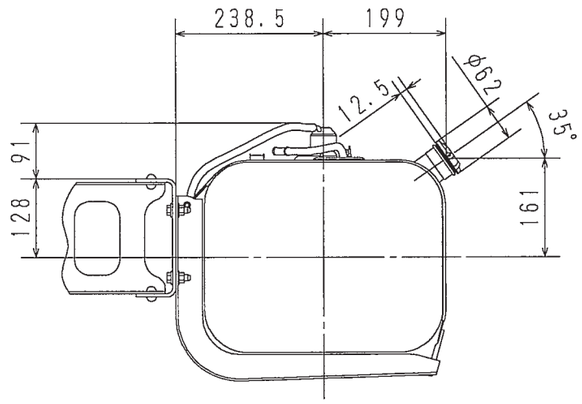

HNBUYKASO1005687

https://truckmanualshub.com/

7) FUEL TANK CHART "FT7"

Unit : mm

CAPACITY : 100L+70L

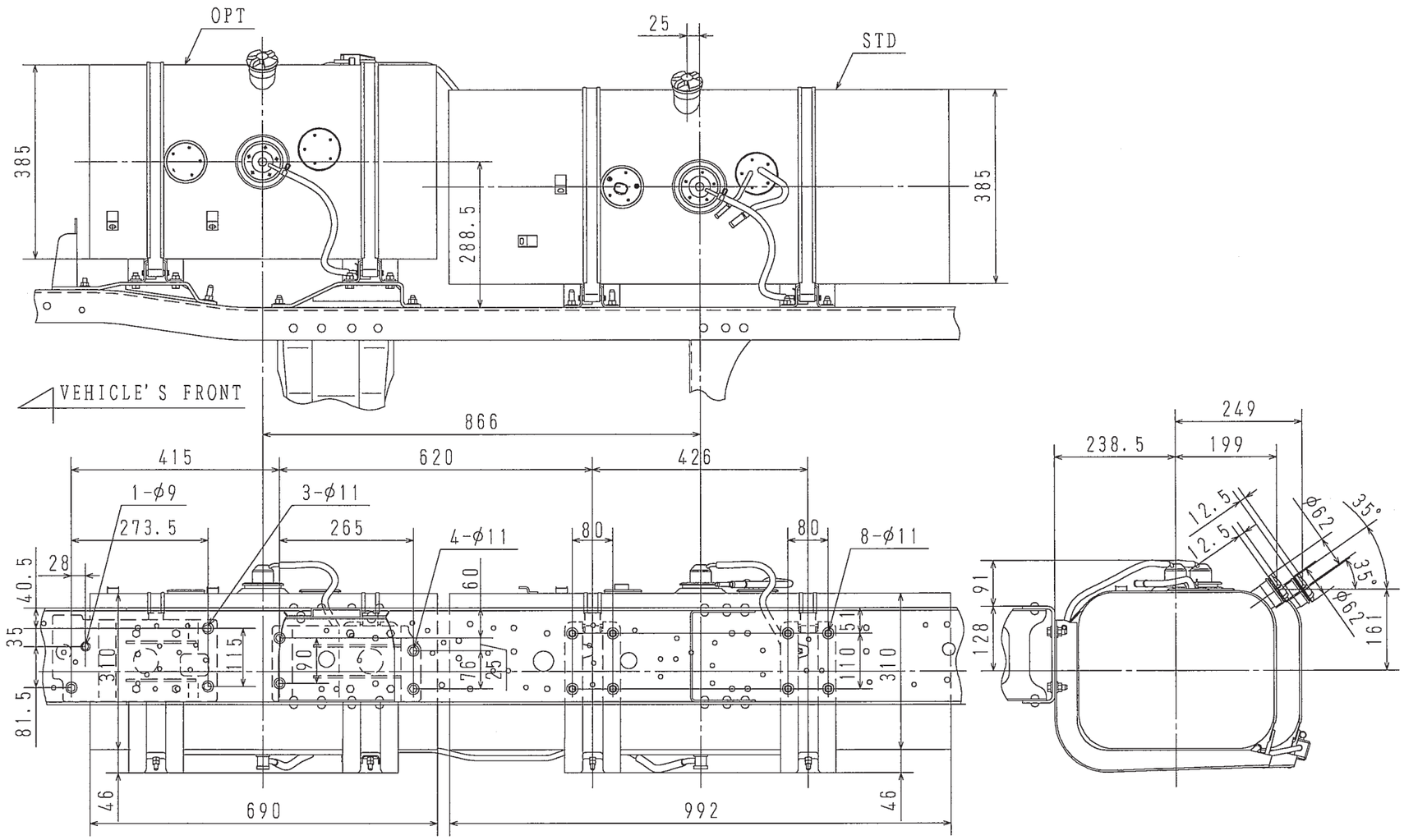

HNBUYKASO1005687

https://truckmanualshub.com/

8) FUEL TANK CHART "FT8"

Unit : mm

CAPACITY : 100L+70L

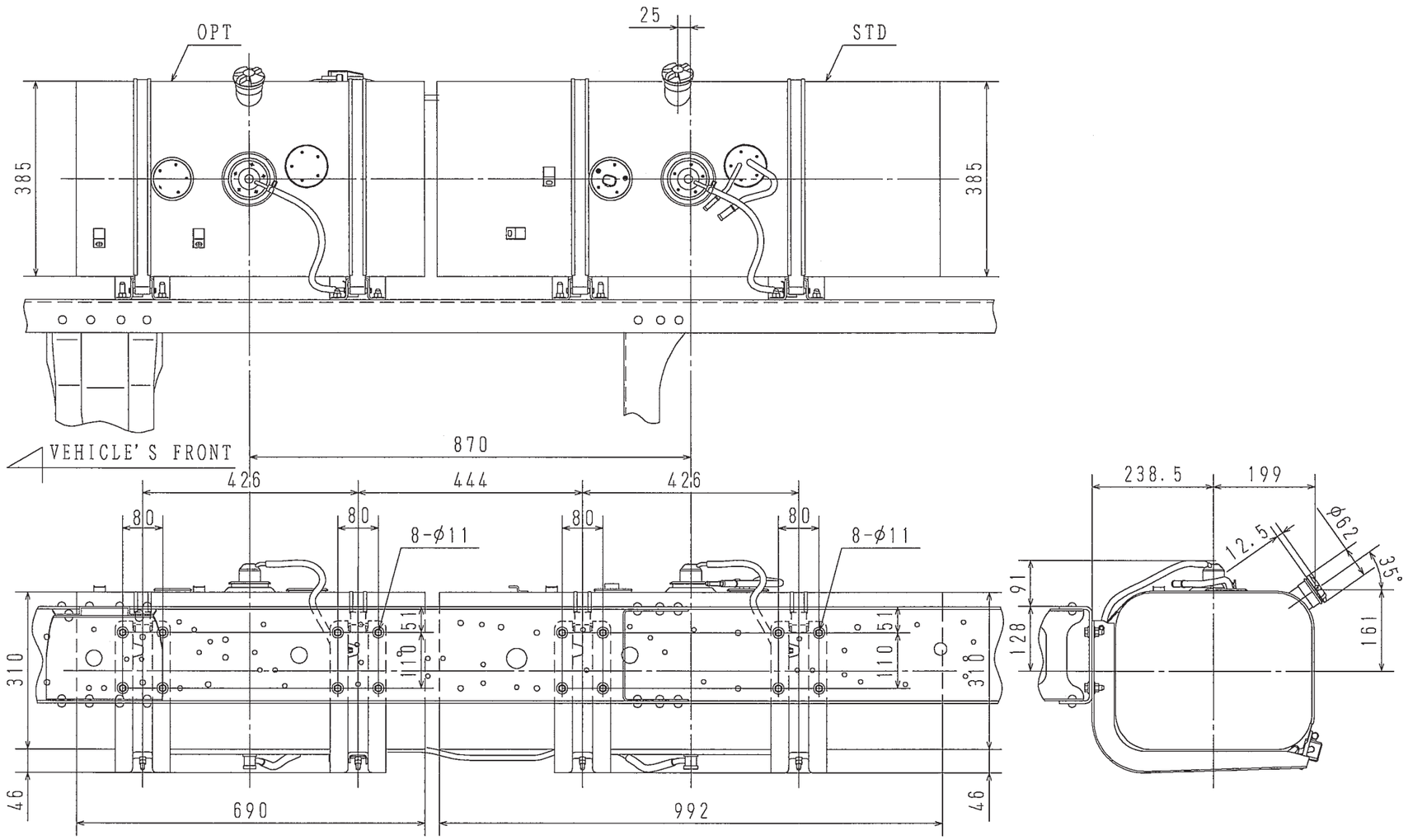

HNBUYKASO1005687

https://truckmanualshub.com/

9) FUEL TANK CHART "FT9"

Unit : mm

CAPACITY : 100L+70L

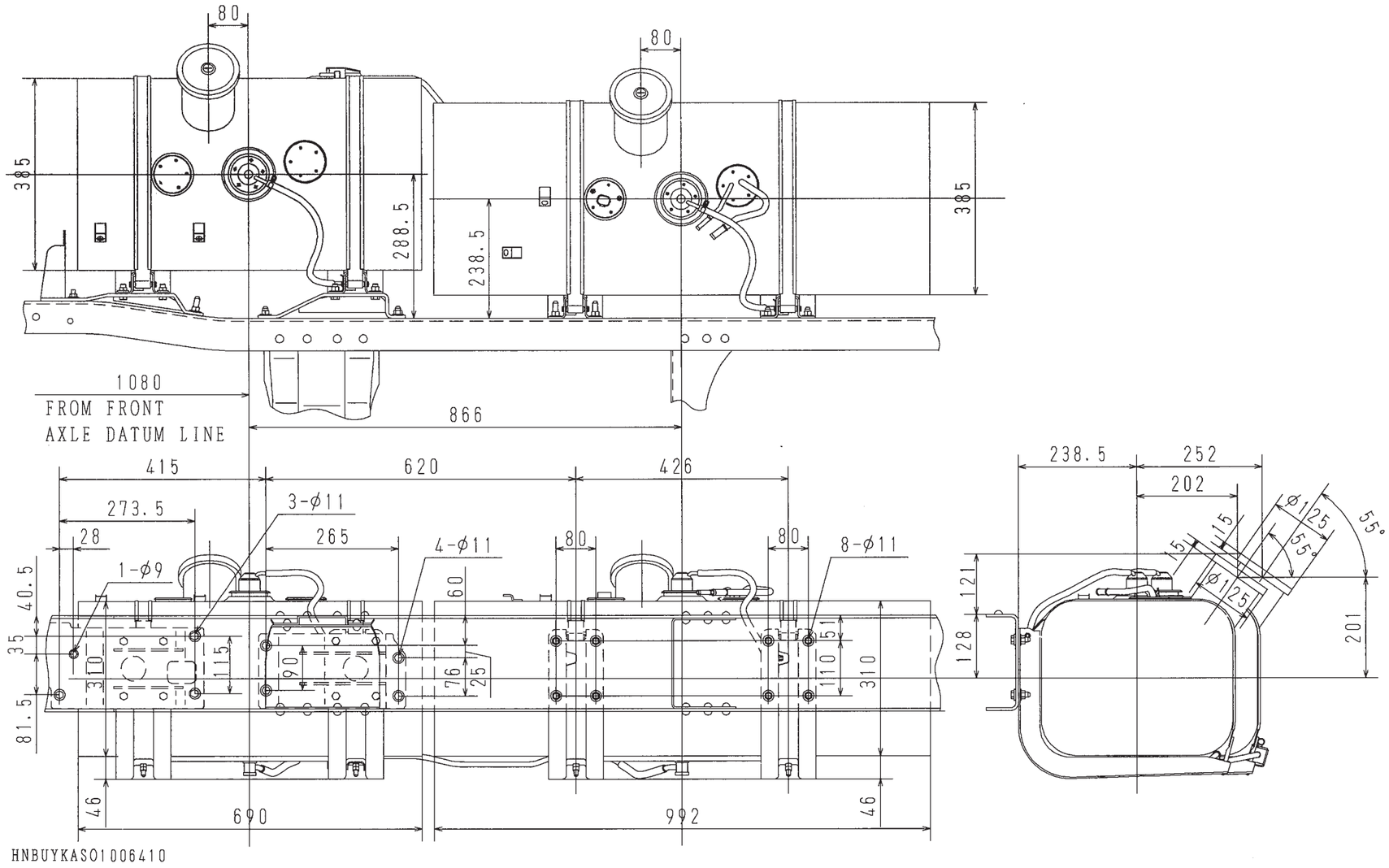

https://truckmanualshub.com/

10) FUEL TANK CHART "FT10"

Unit : mm

CAPACITY : 100L+70L

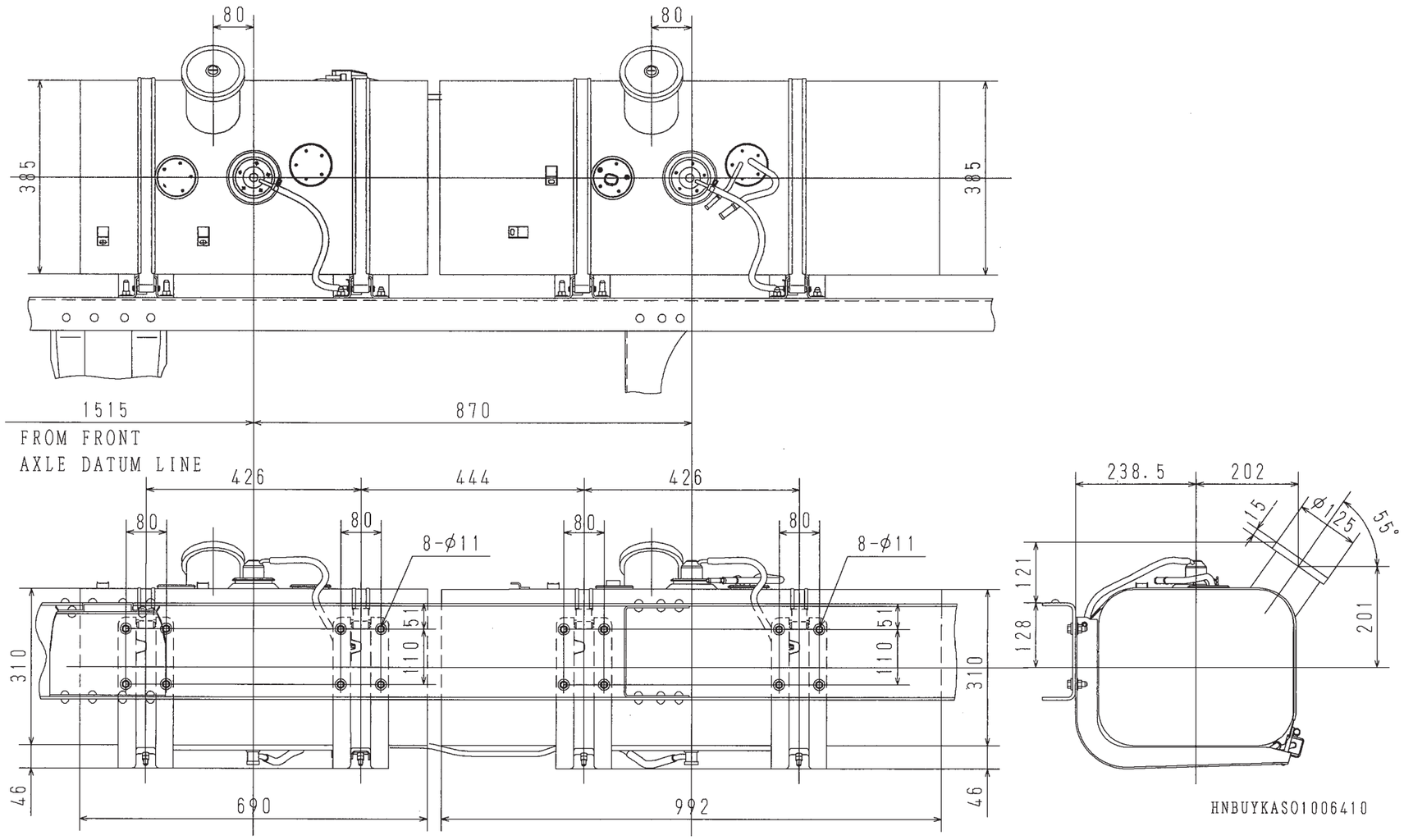

https://truckmanualshub.com/

11) FUEL TANK CHART "FT11"

Unit : mm

CAPACITY : 100L

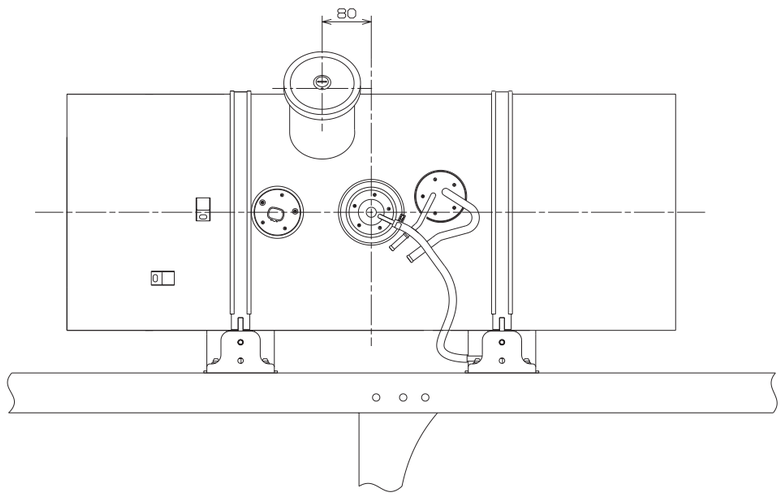

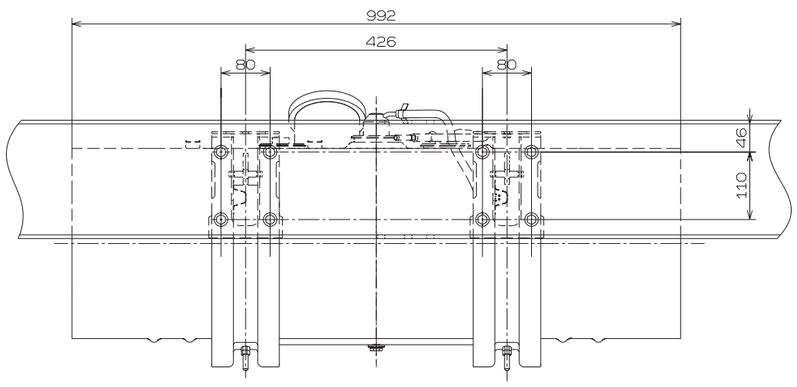

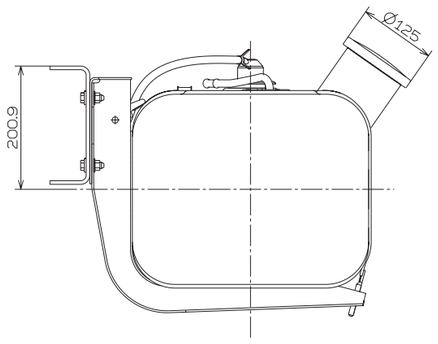

https://truckmanualshub.com/

BATTERY

CAPACITY : 216kC { 60AH }
STD (Except XKU417L-HKFQB3)

Unit : mm

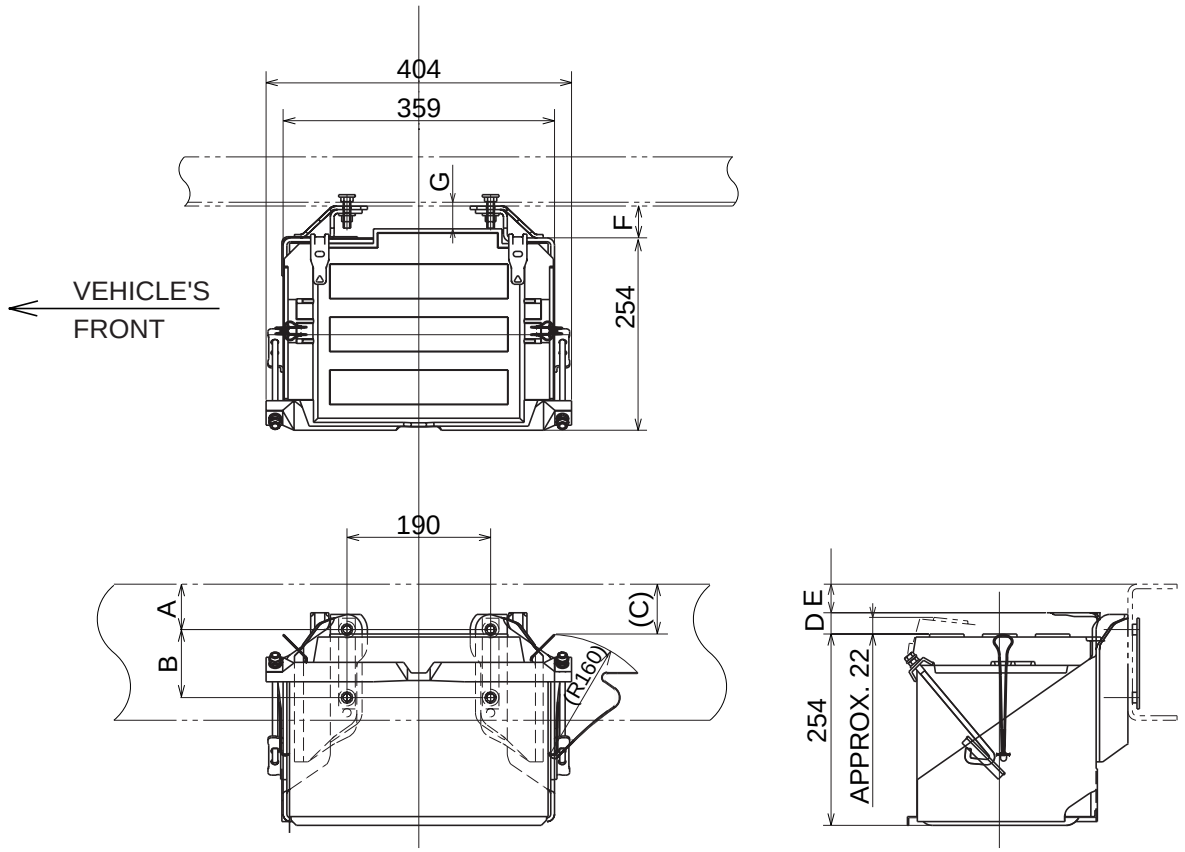

A	B	C	D	E	F	G
60	90	68	28	38	42	30

https://truckmanualshub.com/

CAPACITY : 288kC { 80AH }
OPT (Except XKU417L-HKFQB3)
STD (XKU417L-HKFQB3 only)

Unit : mm

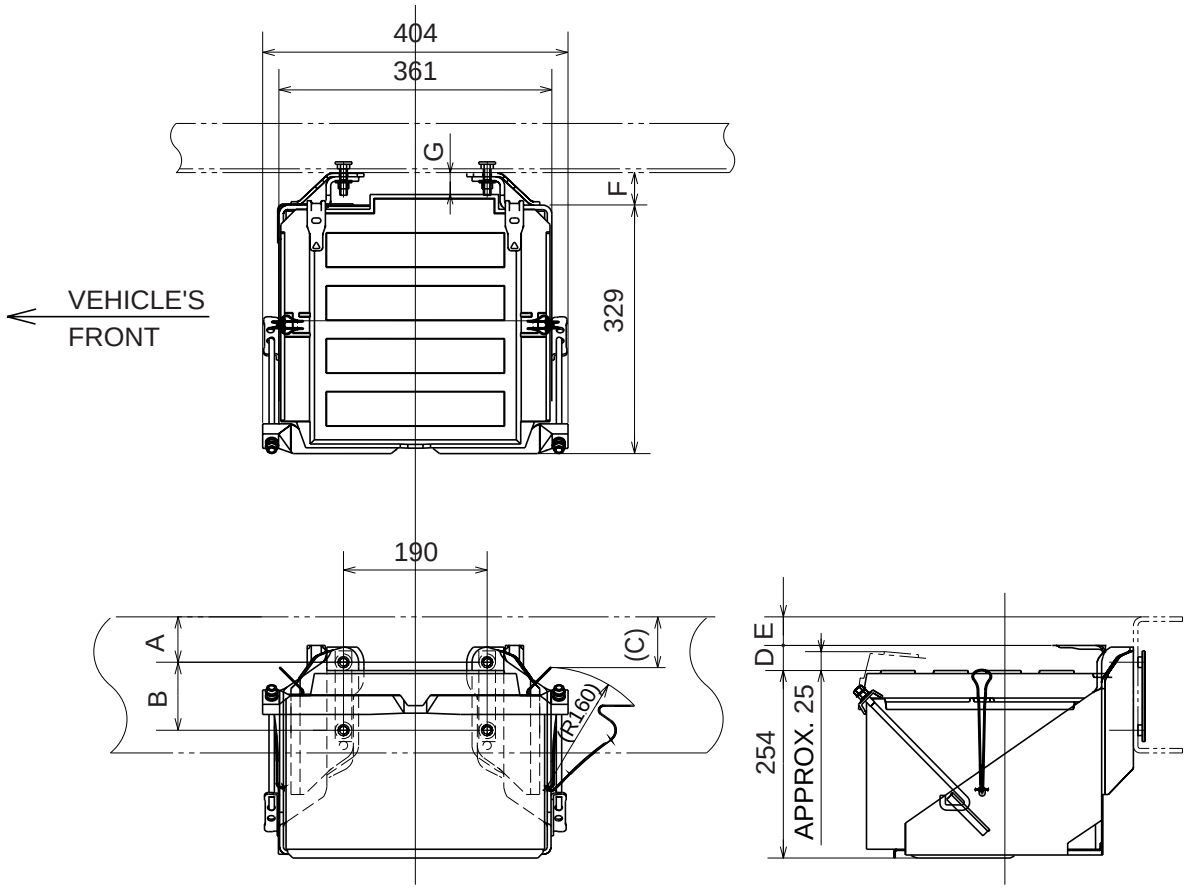

A	B	C	D	E	F	G
60	90	68	28	38	42	43

https://truckmanualshub.com/

EXHAUST SYSTEM

Unit : mm

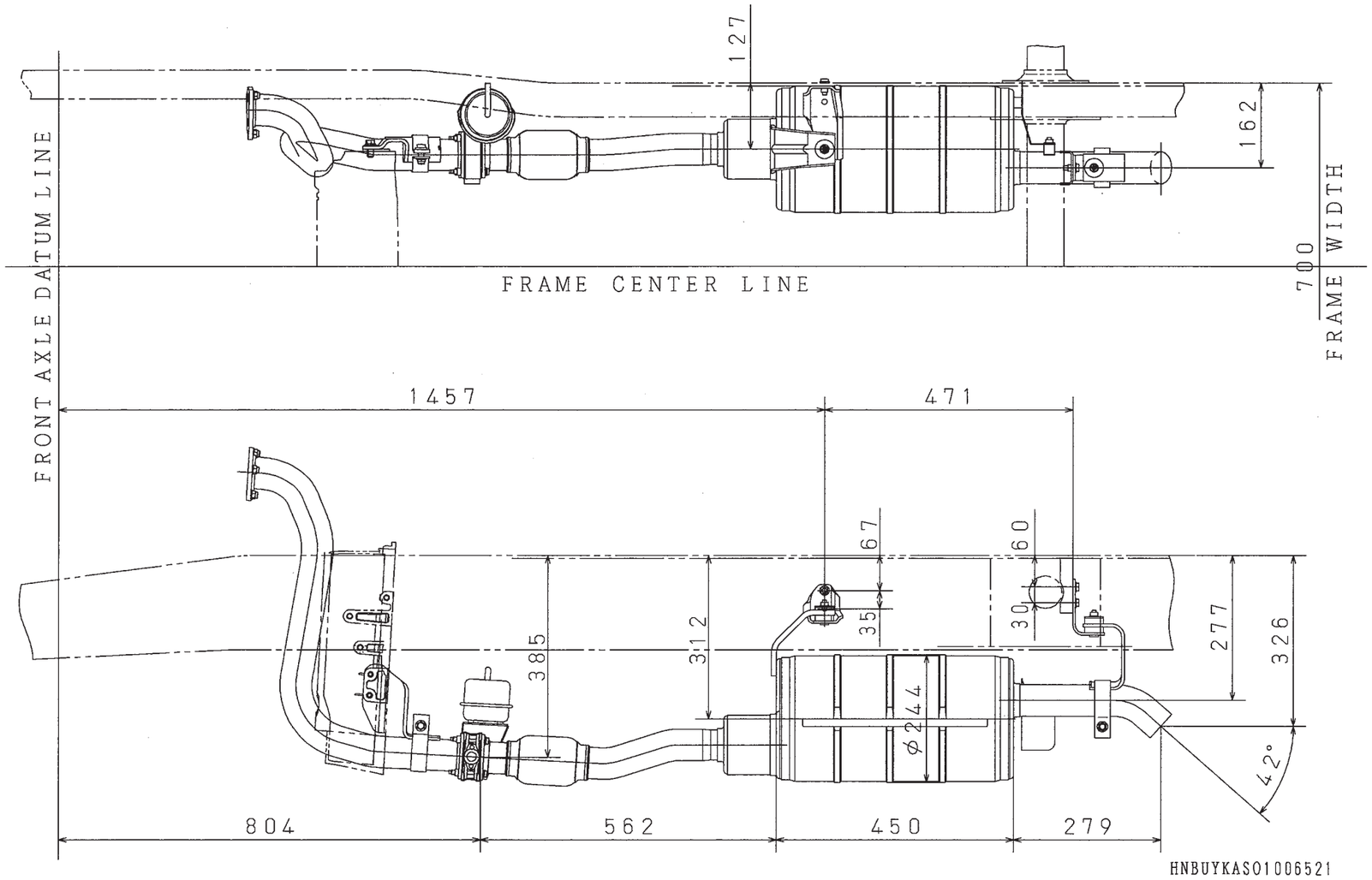

	MODEL
STD	XZU307L-HKMLB3

https://truckmanualshub.com/

Unit : mm

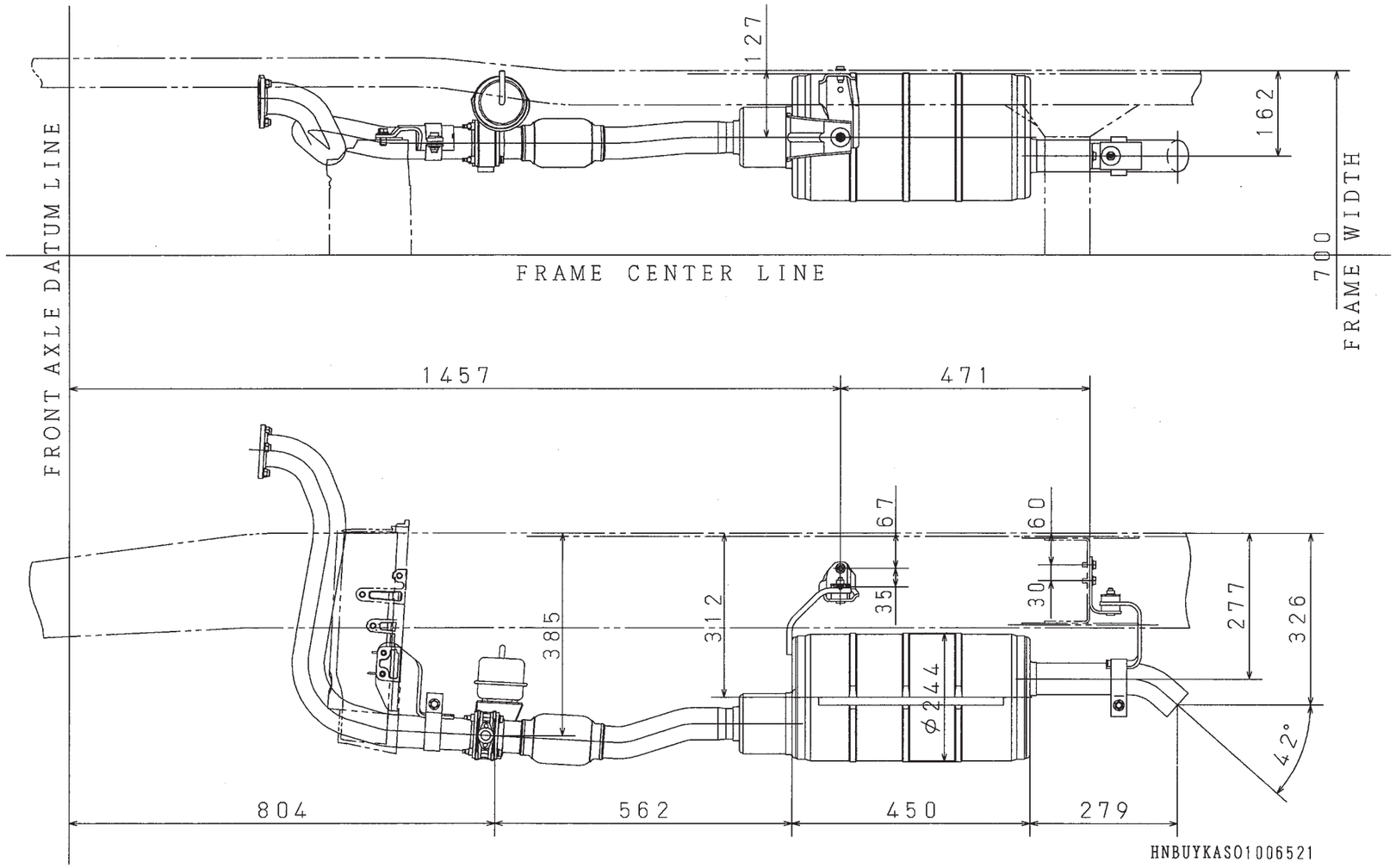

	MODEL
STD	XZU307L-HKMMB3

https://truckmanualshub.com/

Unit : mm

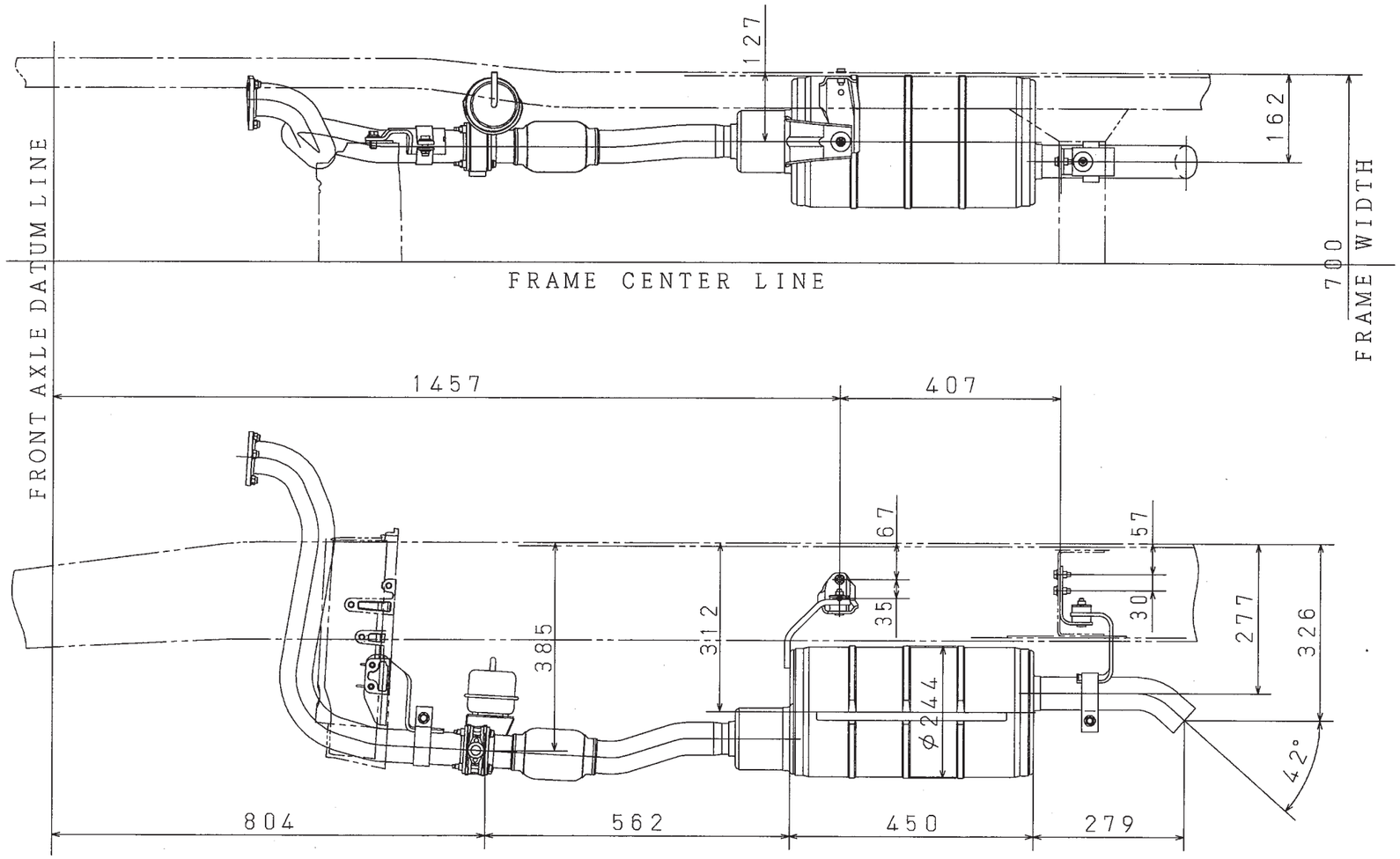

HNBUYKAS01006521

	MODEL
STD	XZU347L-HKMMB3

https://truckmanualshub.com/

Unit : mm

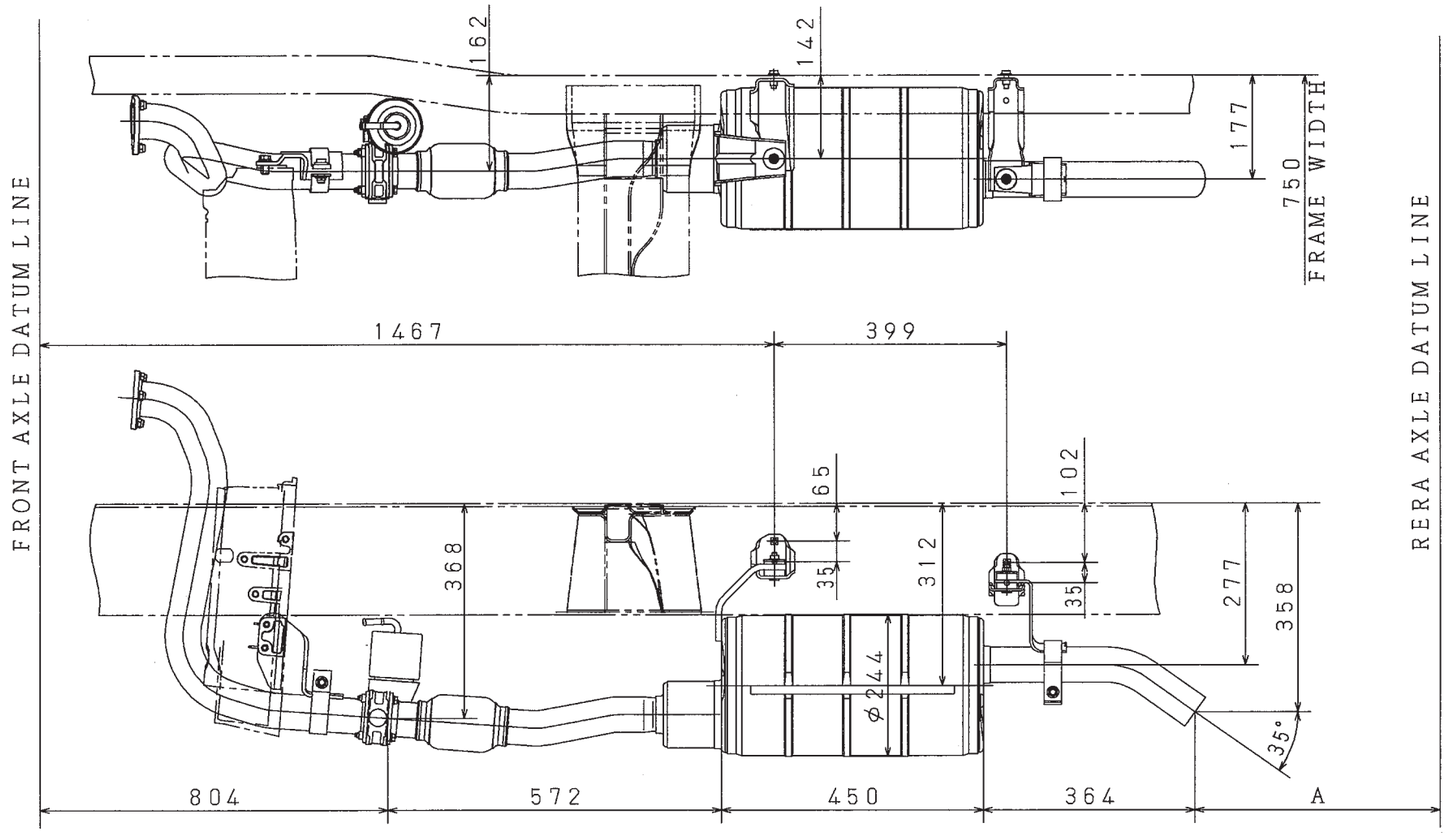

MODEL	A
XZU407L-HKMQD3 XZU407L-HKMMD3 XZU407L-HKFQD3 XZU407L-HKFRD3	620
XZU417L-HKFQD3 XZU417L-HKMMD3 XZU417L-HKFRD3	1240
XZU427L-HKFQD3 XZU427L-HKFRD3	1680

HNBUYKAS01006520

https://truckmanualshub.com/

Unit : mm

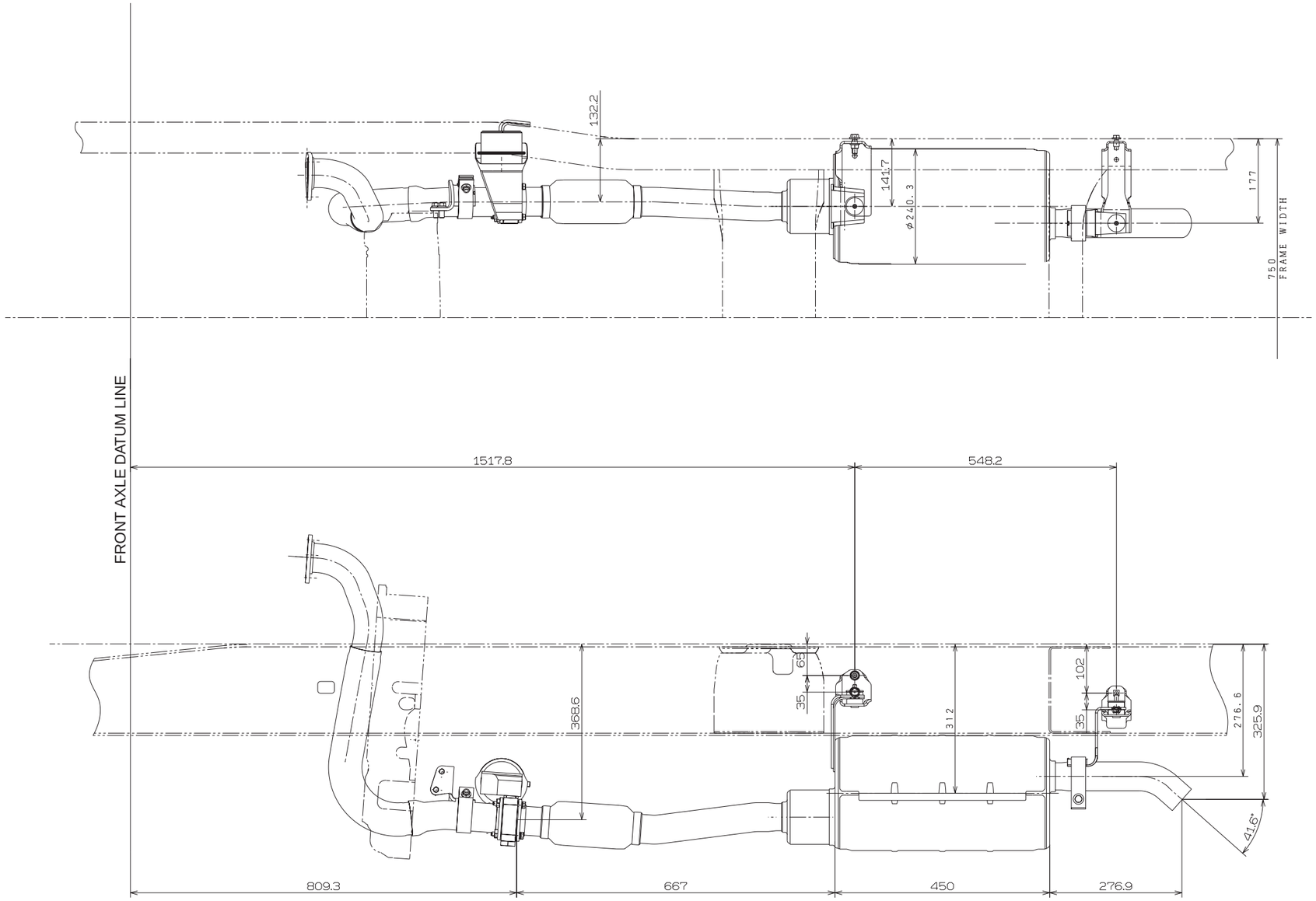

	MODEL
STD	XKU417L-HKFQB3

https://truckmanualshub.com/

HINO