https://truckmanualshub.com/

NICHIYU

OPERATOR'S MANUAL

FBT9P/10P/13P/15P/16P(B)/18P(B)/20P(B)N-80 Series

NICHIYU

ELECTRIC LIFT TRUCK

OPERATOR'S MANUAL

80 SERIES

FBT9P
FBT10P
FBT13P
FBT15P
FBT16P(B)
FBT18P(B)
FBT20P(B)N

⚠ WARNING

Unsafe use of this lift truck may cause serious injury or death. Operators and maintenance personnel must read this manual and be sure that they understand its contents before operating, inspecting or carrying out maintenance on this lift truck. This manual should be kept near the lift truck for reference and periodically reviewed by all operators and maintenance personnel who come in contact with it.

NICHIYU

Nippon Yusoki Co., Ltd.
1-1, 2-Chome, Higashikotari, Nagaokakyo-shi, Kyoto 617-8585 JAPAN
Tel: +81-(0)75-956-8690 Fax: +81-(0)75-955-0584 URL: http://www.nichiyunet.co.jp/en

Printed in Japan
Pub No. OP-12-001
200/1203
Copy rights

https://truckmanualshub.com/

ELECTRIC LIFT TRUCKS

OPERATOR'S MANUAL

NICHIYU

https://truckmanualshub.com/

https://truckmanualshub.com/

INTRODUCTION

The operator must read and understand the instruction of safe operation contained in this manual.

- This operator's manual provides for the proper operation, easy maintenance and periodical inspection.
- Prior to operation, read this manual carefully for safe and efficient operation.
- Specifications and equipment in this manual are subject to change without any notice by the manufacturer for further improvement and modifications.
- Make sure these important instructions in this manual are available for the operator on each delivery or transfer of the truck. Keep this manual after reading.
- If you have any questions, please feel free to contact your local NICHIYU dealer.

☞ and ⚠ are very important for you and others for safety. Follow these instructions.

	DANGER	Indicates an exteremely hazardous situation which, if not avoided, will result in death or serious injury. You must follow this instruction.
	WARNING	Indicates a potentially hazardous situation which, if not avoided, could result in death or serious injury. You must follow this instruction.
	CAUTION	Indicates a potentially hazardous situation which, if not avoided, may result in minor or moderate injury. You must follow this instruction.
	NOTE	Indicates suggestions, tips and hints related to the safety of an operator and maintenance of a truck.
	GENERAL PROHIBITION	If the prohibition is not kept, serious accidents can be caused.

https://truckmanualshub.com/

CONTENTS

1 . SAFE OPERATION 1

Safety decals and name plates 1
Information for safety operation 4
How to survive in a tip over 18

2 . PART NAME AND FUNCTION 19

Name of part 19
Driving equipment 19
Indicator panel 20
Indication of display 21
Function of display 22
Various kinds of mode selection 28
Operating equipment 35
Laser pointer (Option) 41

3 . DRIVING AND OPERATION 46

Preparation of start 46
Traveling 47
Stacking operation 48
Picking operation 49

4 . BATTERY AND CHARGER 51

Battery 51
Precautions for charging the battery 54
Charger 56
How to charge the battery (By stationary charger) 58
How to charge the battery (By built-in charger) 62
Exchanging battery 74
Level of electrolyte and specific gravity 76

5 . INSPECTION PRIOR TO OPERATION 78

Check point and contents 78
Inspection procedure 79

6 . INSPECTION AFTER OPERATION 83

Inspection after working 83

7 . PERIODIC SERVICING 84

Precautions of maintenance 84
Weekly (50-hour) servicing 87
Monthly (200-hour) servicing 89
Lubrication points and recommended oil 90
Every three-month (600-hour) servicing 91
Semiannually (1200-hour) servicing 91
Replacing parts and trouble shooting 92

8 . QUICK FAULT FINDING 93

9 . PERIODICAL REPLACING PARTS 94

10. STABILITY OF FORKLIFT TRUCK 95

Load center and capacity 95
Stability of the forklift truck 96

11. SPECIFICATIONS 97

12. COLD STORAGE TYPE FORKLIFT TRUCK (CS type) 99

Protection from rust and corrosion 99
Protection from low temperature 99

13. SIDESHIFT ATTACHMENT 100

Sideshift attachment 100
Safe operation 101
Part name and function 102
Materials handling 104
Periodical inspection and service 107
Periodical replacing parts 110

https://truckmanualshub.com/

To know about specification of forklift

[11] SPECIFICATIONS [P97]

OPTIONS

LASER POINTER [P41]
[12] COLD STORAGE TYPE FORKLIFT TRUCK (CS type) [P99]
[13] SIDE SHIFT ATTACHMENT [P100]

To know about safe operation

[1] SAFE OPERATION [P1]

[10] STABILITY OF FORKLIFT TRUCK [P95]

To know about procedure of countermeasure for break down

[8] QUICK FAULT FINDING [P93]

To know about procedure of operation

[2] PART NAME AND FUNCTION [P19]

[3] DRIVING AND OPERATION [P46]

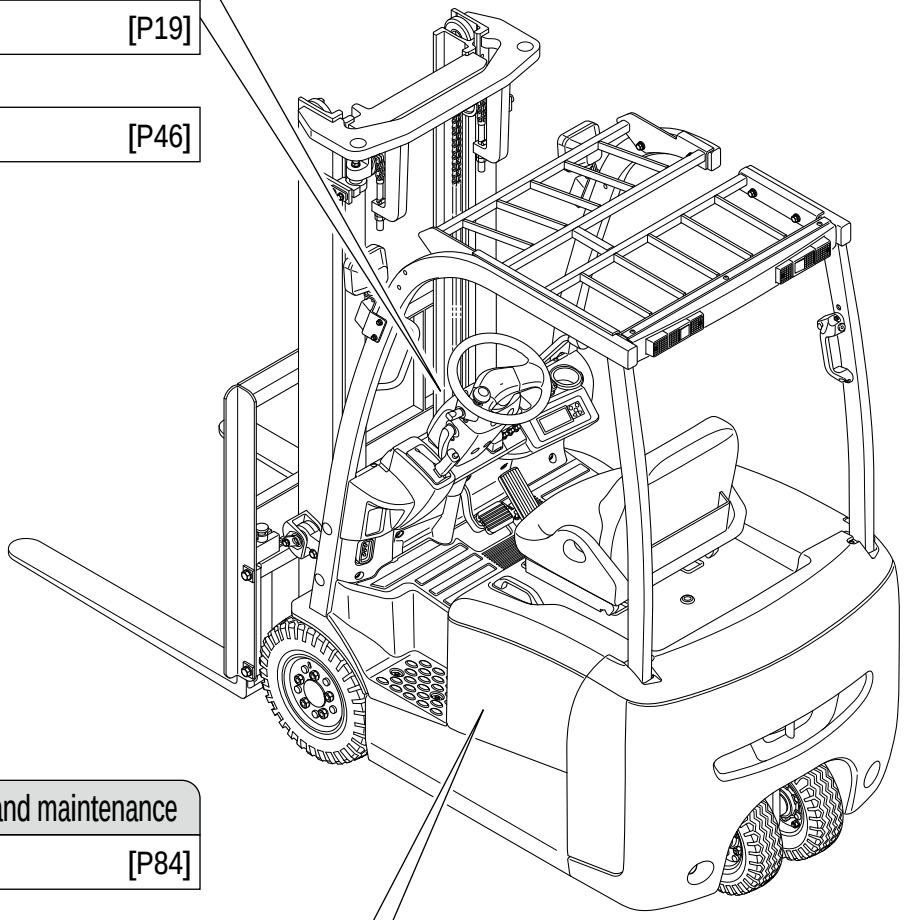

To know about periodical inspection and maintenance

[7] PERIODIC SERVICING [P84]

[5] INSPECTION PRIOR TO OPERATION [P78]

[6] INSPECTION AFTER OPERATION [P83]

[9] PERIODICAL REPLACING PARTS [P94]

To know about battery and charger

[4] BATTERY AND CHARGER [P51]

https://truckmanualshub.com/

https://truckmanualshub.com/

Safety decals and name plates

Safety decals and name plates are installed on the forklift truck to give information about possible hazards.

If you find that the decals and name plates are removed and/or unreadable, contact your local NICHIYU dealer for replacement.

Indication of direction (Right side / Left side)

The following illustration shows the direction of this forklift truck from the operator's compartment.

A : Front
B : Rear
C : Left
D : Right

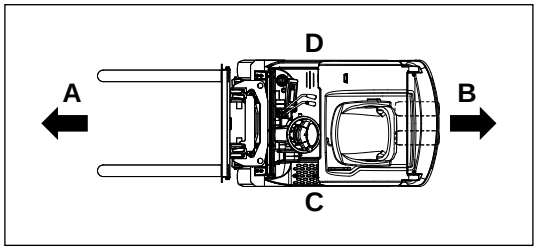

Decals and Name Plates

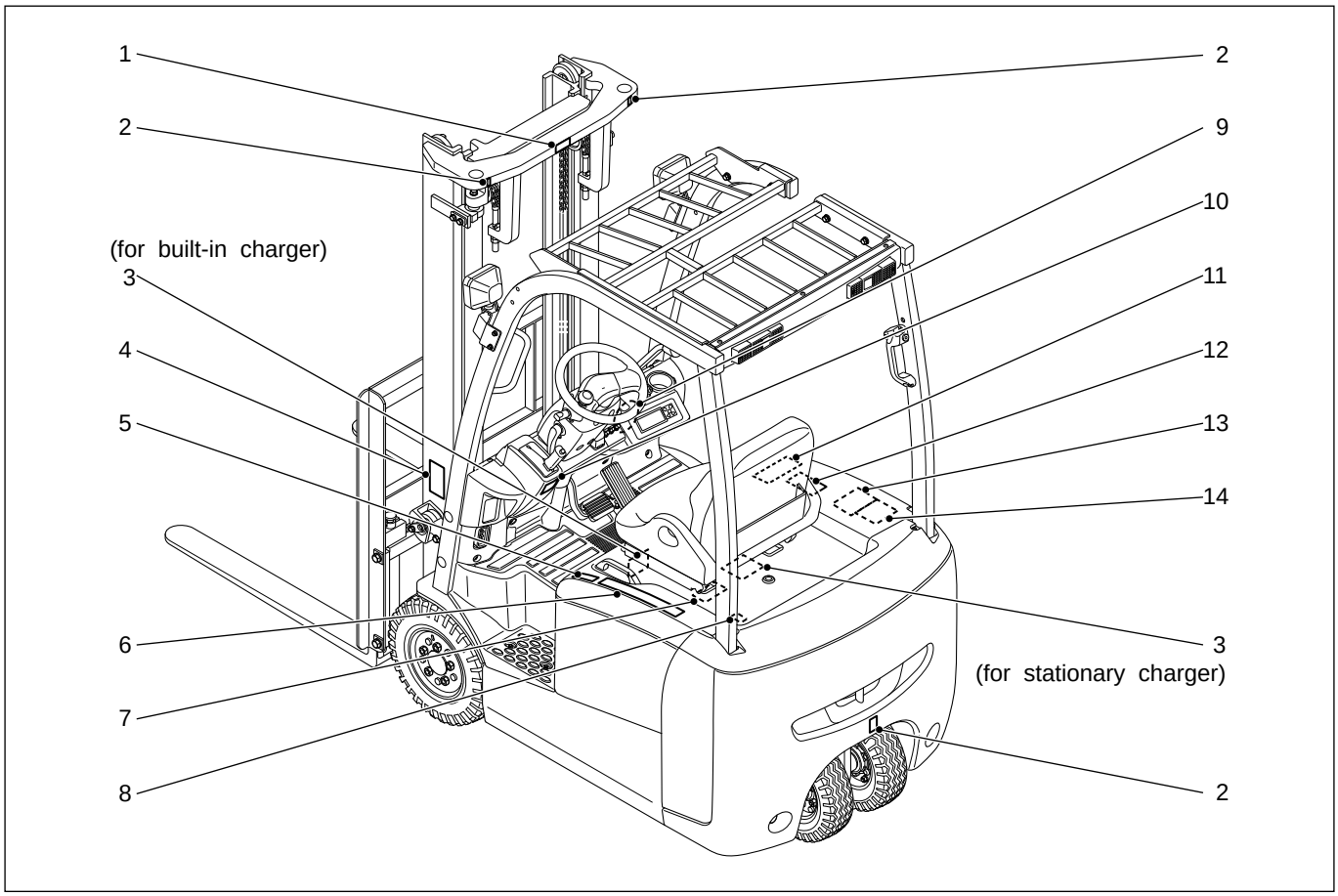

https://truckmanualshub.com/

1

2

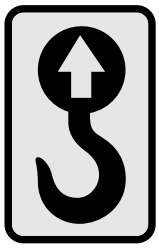

3

CAUTION

SAFETY PRECAUTIONS FOR CHARGING BATTERY

1. **Charge the battery only in approved and well ventilated area without smpking, flames and / or sparks. (Flammable gas will be generated by the battery while charging.)**
2. **Open the battery cover fully when charging the battery.**
3. **Inspect any damages on the charger cable before charging the battery.**
4. **Do not use the cable if any damages or transformation are found.**
5. **Grab the plug itself when connecting or disconnecting the cable. Do not pull the cable when disconnecting to avoid damages.**
6. **Insert the plug completely to the end of the receptacle. Improper connection may cause overheating or burning while charging the battery.**
7. **Do not disconnect the plug while charging. it may create sparks.**
8. **Push the "STOP" button when interrupting to charge before.**
9. **If any abnormalities are found on the cable or plug such as abnormal heating, electric shocks, loosing connection, any transformations disconnecting the plug. or damage of parts, stop charging immediately and repair them.**

50008-34910-0

4

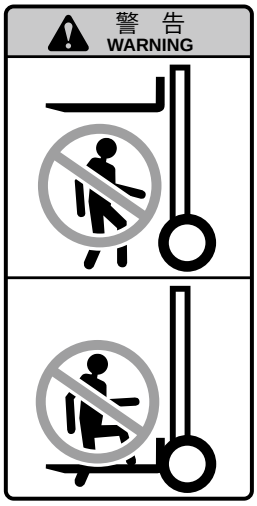

5

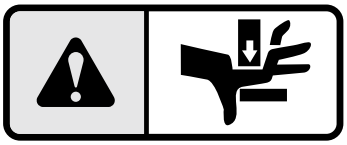

6

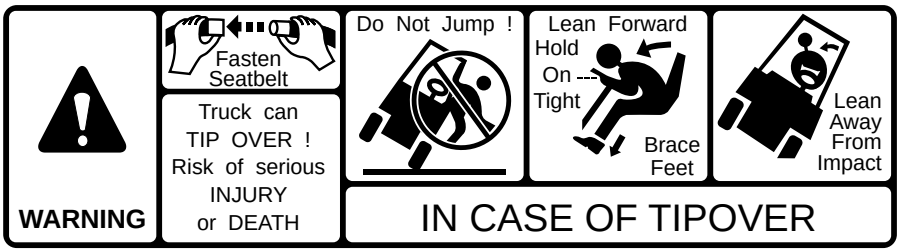

FOR SAFETY NOTICE FOLLOWING WARNINGS

1. Lateral tipover can occur when unloaded if the combination of speed and sharpness of turn produces an overturning moment which exceeds the stability of the truck.
2. Lateral tipover can occur if overloaded or loaded within capacity and the load is elevated and if turning and/or braking when traveling rearward or if turning and/or accelerating when traveling forward produces an overturning moment which exceeds the stability of the truck.
   Rearward tilt and/or off-center positioning of the load and/or uneven ground conditions will further aggravate the above conditions.
3. Longitudinal tipover can occur if overloaded or when loaded within capacity and the load is elevated if forward tilt. braking in forward travel. or commencing rearward travel produces an overturning moment which exceeds the stability of the truck.
4. Serious injury or death can occur to the operator if he/she is trapped between the truck and the ground.

IN CASE OF TIPOVER

1. The operator should stay with the truck if lateral or longitudinal tipover occurs. The operator should hold on firmiy and lean away from the point of impact.
2. The operator should stay with the truck if it falles off a loading dock or ramp. There are other situations where the environment of the landing area presents a severe hazard. In those incidents. it may be prudent for the operator to leave the truck.

24700-04830

7

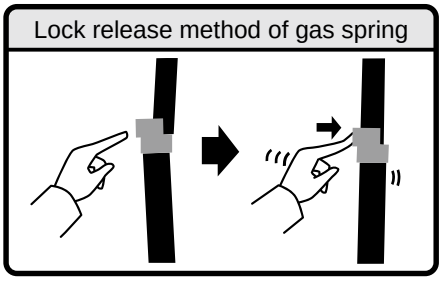

8

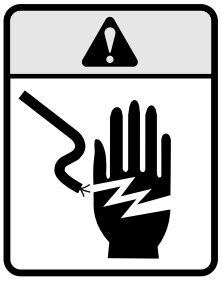

9

10

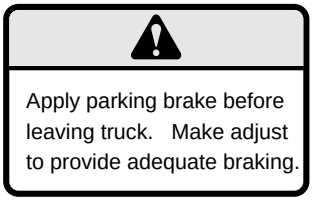

https://truckmanualshub.com/

11

MODEL **NICHIYU** Nippon Yusoki Co., Ltd.

		SERIAL NO.	
		FRONT TIRE SIZE	
		REAR TIRE SIZE	
ACTUAL CAPACITY/LC	kg / mm	TIRE PRESSURE FR/RE	Fr kPa Re kPa
	kg / mm	SERVICE WEIGHT	kg
MAXIMUM LIFT HEIGHT A mm / LOAD CENTER B mm / ACTUAL CAPACITY FORK ONLY kg / ACTUAL CAPACITY ATTACHMENT kg		SERVICE WEIGHT W/O BATTERY	kg
		BATTERY WEIGHT	MIN. kg MAX. kg
		LOAD TIRE TREAD WIDTH	mm MFG YEAR
		MAX REARWARD MAST TILT	deg. VOLTAGE V

MAST VERTICAL 500 A B

CAPACITY SPECIFIED FOR THE TRUCK REQUIRES TIRES AUTHORIZED BY MANUFACTURER. IMPROPER OPERATION OR MAINTENANCE COULD RESULT IN INJURY OR DEATH.

NIPPON YUSOKI CO.,LTD. KYOTO JAPAN

50008-77841 (英)

12

PRECAUTIONS FOR SAFETY OPERATION

1 Do not overload. observe allowable load (blue zone).
2 Prior to operation, check performance of brake or turn quickly.
3 Do not make a sudden start and brake or turn quickly.
4 Do not make a sudden valve lever operation at a high lift.
5 Do not run sideways or handle on an incline.
6 When the red lamp of battery capacity indicator turns on, charge battery.
7 Check electrolyte every week and replenish water.
8 Be sure to use the prescribed fuses.

13

LUBRICATION

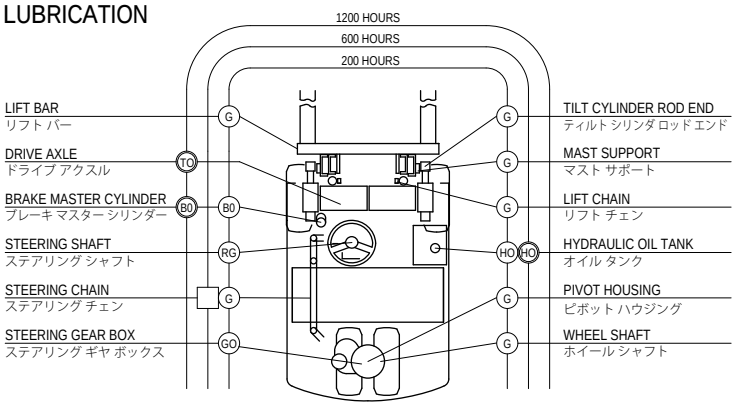

○ : LUBRICATION 給油
◎ : REPLACE 交換
□ : CHECK AND ADJUSTMENT 点検調整
(G) : CHASSIS GREASE シャーシグリース
(GO) : GEAR OIL ギヤーオイル
(HO) : HYDRAULIC OIL 作動油
(BO) : BRAKE OIL ブレーキオイル
(RG) : RUBBER GREASE ラバーグリース
(TO) : TRANSFER OIL トランスファオイル

50008-764900-0 (英・和)

14 (with japanese battery only)

DANGER

- GASES produced by this battery can be explosive. Cigarettes, flames, or sparks could cause battery to explode. Make sure batteries are stored and charged in a well–ventilated area.
- Batteries contain SULFURIC ACID can cause severe burns. Avoid contact with skin, eyes or clothing.
- In event of accident flush with water and call a physician immediately.
- Wear rubber gloves to prevent ELECTRIC SHOCK during checking and maintaining.
- Keep out of reach of children.

IMPORTANT POINT FOR MAINTENANCE

1. Maintain the proper electrolyte level. (When electrolyte is low fill with purified water to the white portion of the float, as shown in the figure.)
2. Always keep the batteries fully charged, do not overdischarge them.
3. Keep the battery surface clean.

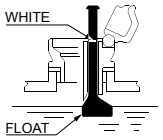

https://truckmanualshub.com/

Information for safety operation

Do not operate forklift truck while taking drugs and/or alcohol; otherwise, an accident may occur which can cause serious injury or death.

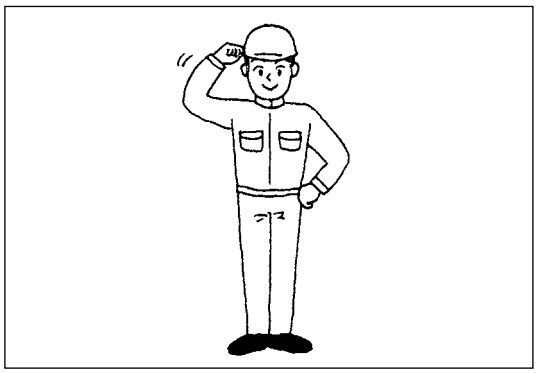

Only a trained and authorized operator shall operate the forklift truck.

The operator is recommended to wear a helmet, safety shoes and working clothes.

Do not use a forklift truck in the following circumstances.
Where the explosive gas (thinner, gasoline etc.) may exist.
When using a forklift truck in the following area, consult your local NICHIYU dealer before operation.
1. Where the explosive materials such as gunpowder are exist.
2. The dusty place.

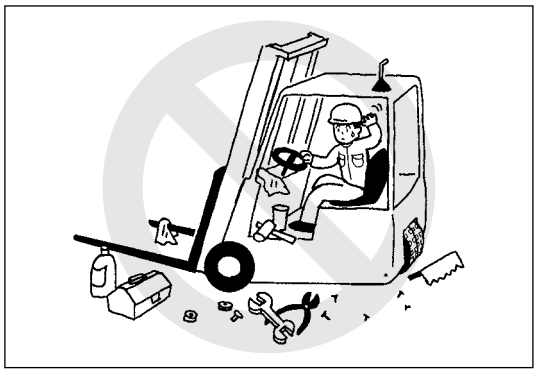

Keep the operator's compartment clean at all times.

Do not operate the forklift truck with greasy or wet hands.

NICHIYU forklift trucks are equipped with an overhead guard and load backrest extension.

- These designed features are incorporated to protect the operator from falling loads.
- Make sure they are in place and in good condition.
- Precautions still should be exercised by the operator for possible falling objects or impacts.

Do not modify the forklift truck.

- Modifications and additions shall not be performed without the written approval of NICHIYU. Contact your local NICHIYU dealer for details.
- Do not install any parts blocking visibility from operating position.

https://truckmanualshub.com/

Carry out the daily inspection before operation.

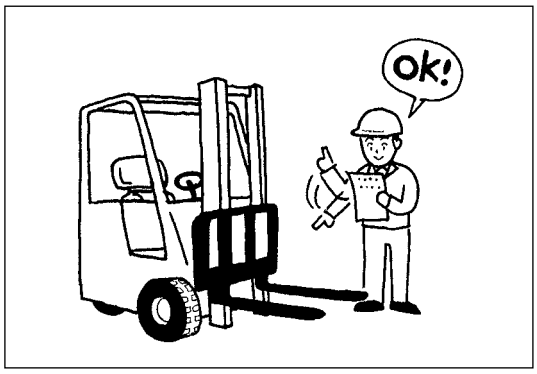

- **Stop operation and report immediately for any damage or faults on the forklift truck.**
- **Do not operate the forklift truck until it is repaired completely.**

Do not overload. Failure to observe the rated capacity can cause the forklift truck to tip over.

- Refer to the load chart and make sure that the weight and the load center are within the capacity of your forklift truck before handling. If the attachment is installed on the forklift truck, the maximum capacity should be reduced. Read the instruction manual of the attachment before operation.

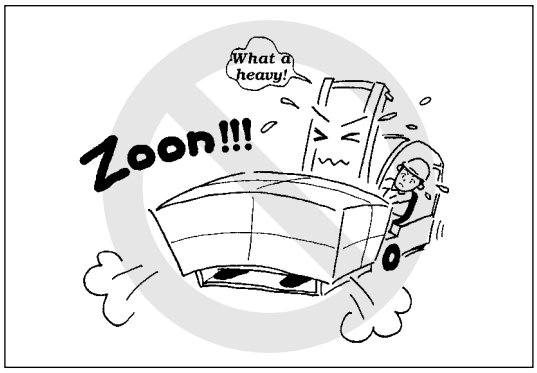

Use proper size pallet with enough strength for the load.

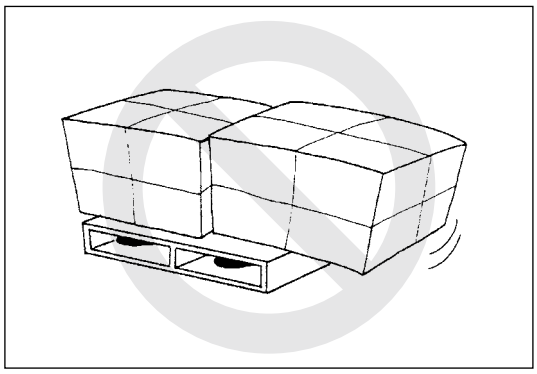

https://truckmanualshub.com/

Make sure that the load is palletized securely in a proper shape. If a load is unstable, it can easily shift and fall on someone.

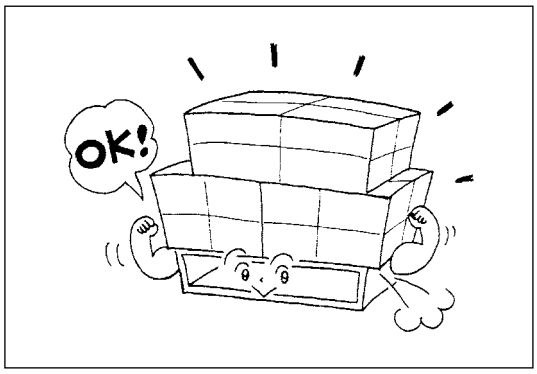

Look all around the forklift truck before moving.

- Make sure no person is around the forklift truck before starting.

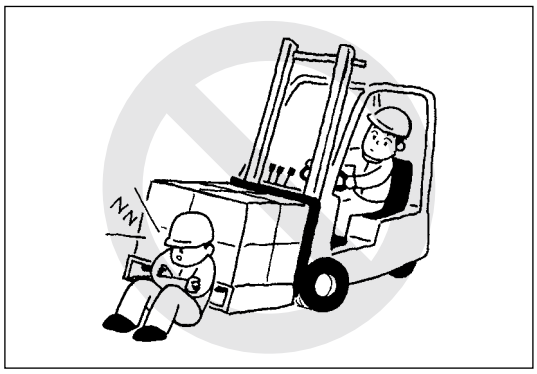

Travel in backward if forward visibility is blocked.

Make sure no person is around the forklift truck when traveling in backward. Look around behind the forklift truck and sound the horn before moving.

- If the load blocks your view, or when you travel down a grade with a load, drive backward. Always look in the direction of travel. A look-out helper may be required if your visibility is obstructed.

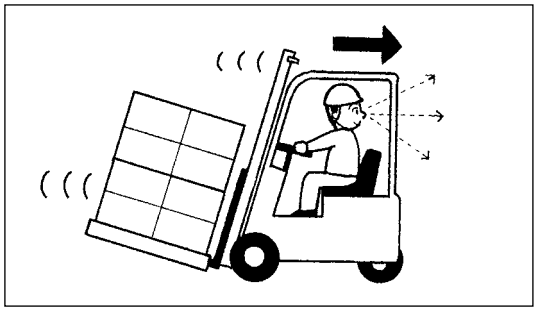

Stop at blind corner and/or intersection.

- If you cannot see where you are going, don't move! Travel slowly around corners.
- Sound the horn at cross aisles and other areas where you cannot see clearly or where visibility is restricted.

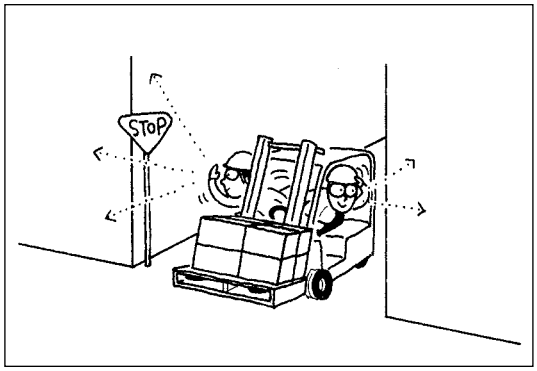

https://truckmanualshub.com/

Always look in the direction of travel!

- Always be aware of people near your forklift truck. Do not proceed near them until they are aware of you.

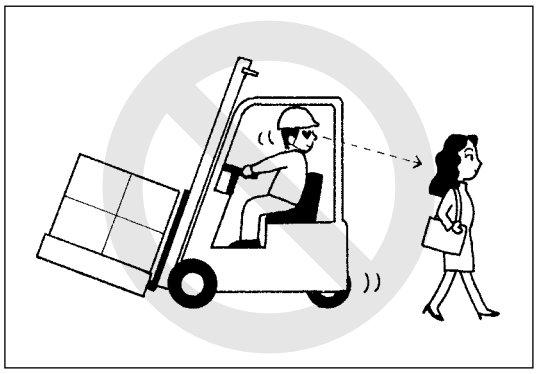

Be aware of tail swing.

- Always make sure that the tail swing area is clear before turning.
- When turning in aisles, especially narrow aisles, keep as far away as possible from stock and racks. Be extra cautious near people.
- Failure to observe the tail swing area when making a turn can injure or kill someone.

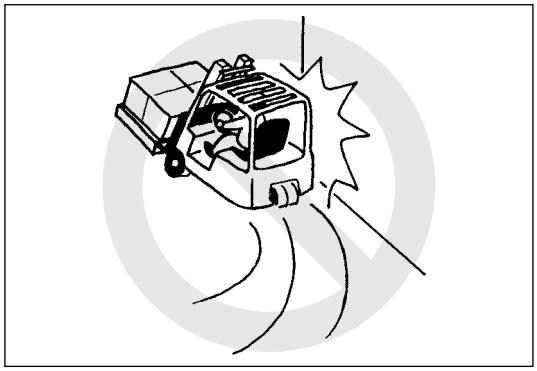

Do not make a sudden start, stop or turn.

- A sudden start or braking can cause the load to fall.
- A sharp turn while traveling can cause the forklift truck to tip over.

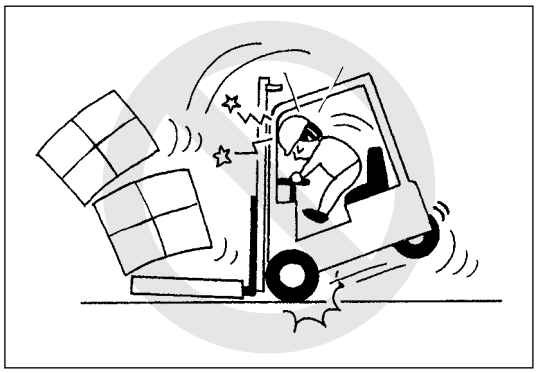

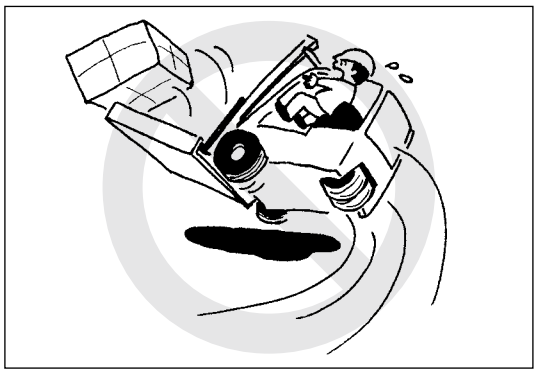

https://truckmanualshub.com/

Do not go over obstacles, curbs, ditches, ridges and railroad trucks.

- Avoid bumps, holes, spill spots and loose materials that may cause the forklift truck to swerve or tip. If unavoidable, slow down, and proceed with caution.

Always check road surface, and stay away from soft or uneven ground to avoid a tip over.

Avoid slippery surface.

- Water, sand, gravel, ice or mud can cause a tipover. If unavoidable, slow down.
- Do not go into a flooded or water covered area.

Keep enough clearance.

- Serious accidents can be caused by hitting pipes and beams near the ceiling with mast or overhead guard. Make sure there is enough clearance for ceiling and height limit of the entrance.

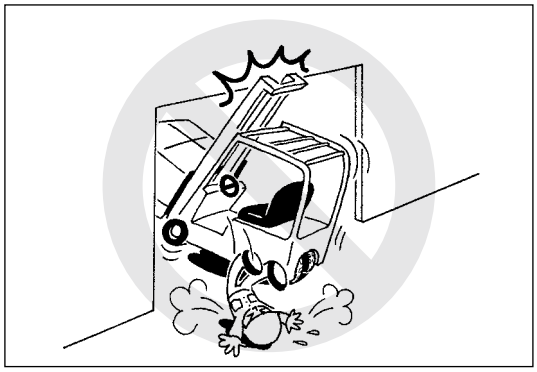

Do not exceed the limitation of the floor strength.

- A forklift truck is very heavy. Check the condition of the driving surface. Make sure the floor, bridge and/or elevator will support the weight of the forklift truck and the load.

https://truckmanualshub.com/

Do not travel while the forks are in the raised position.

- Traveling while lifting the forks can cause the unstable condition to tip the forklift truck over.
- The fork height should be about 200mm from the ground and the mast (fork) should be tilted back while traveling.

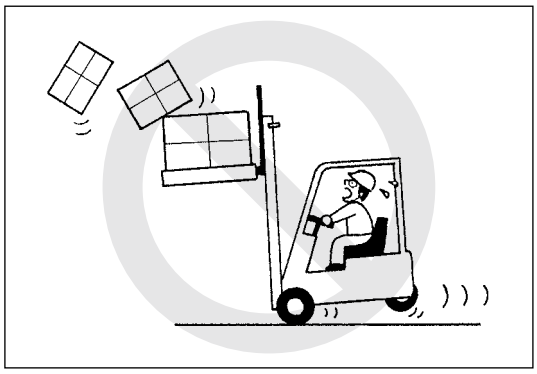

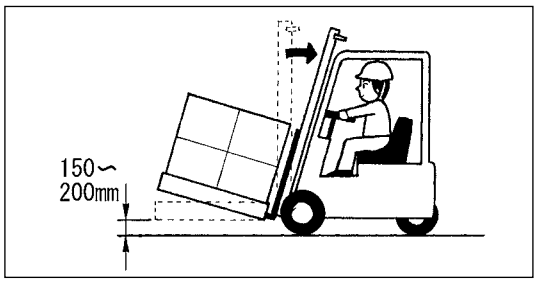

Do not push or drag the load.

- Do not lift the load by the tip of the forks.
- Misuse can damage the loads as well as the forklift truck.

Do not drag any loads with rope by the lift carriage or load backrest.

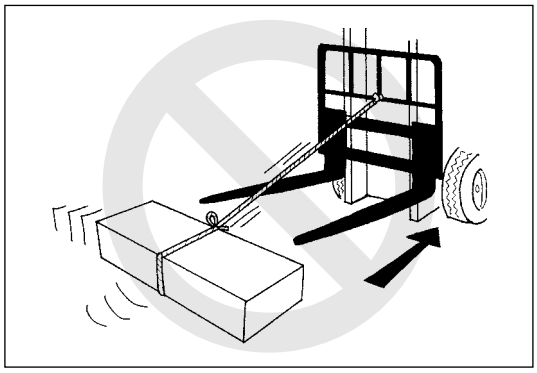

https://truckmanualshub.com/

Never allow anyone to walk or stand under raised forks.

- **Never allow anyone to ride on forklift truck other than operator.**
- **At no time shall anyone be allowed to ride on forks of forklift truck.**

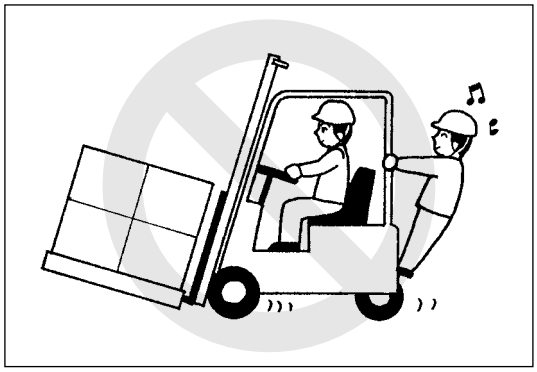

Keep enough distance from the edge of docks, ramps and platforms.

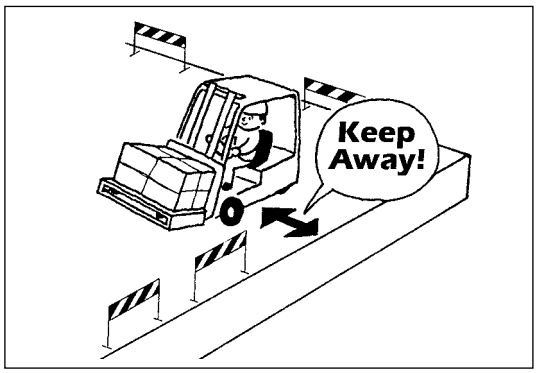

https://truckmanualshub.com/

Travel carefully on grades when loading.

- When traveling up or down the grades, keep the load upside to maintain control.
- Travel down with foot or plugging brake if necessary.

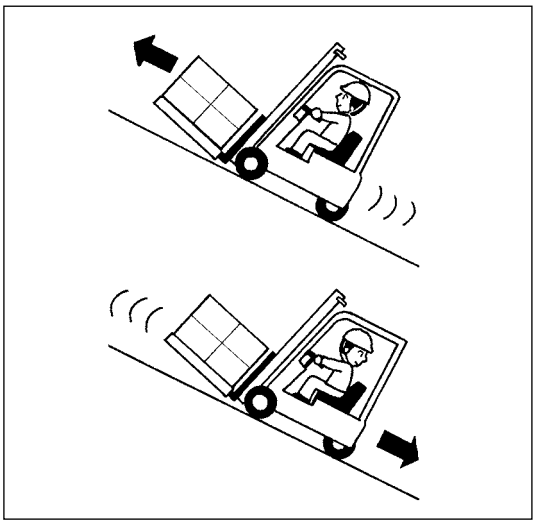

Do not turn on, or angle across an incline.

- Failure to observe this rule can cause the forklift truck to tip over.

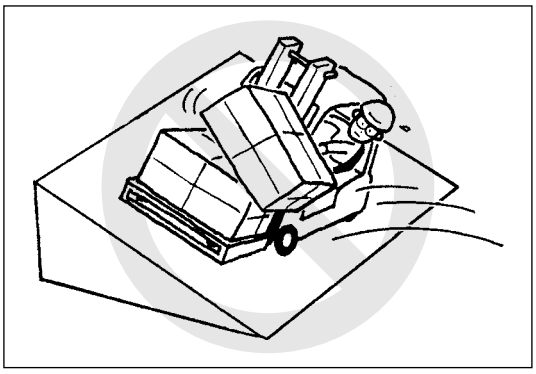

Do not handle an off-center load.

- If the weight of the load is not centered between the forks, the load can fall from the forks when you turn a corner or hit a bump.
- An off centered load will increase the possibility of the forklift truck tipping over to the side.

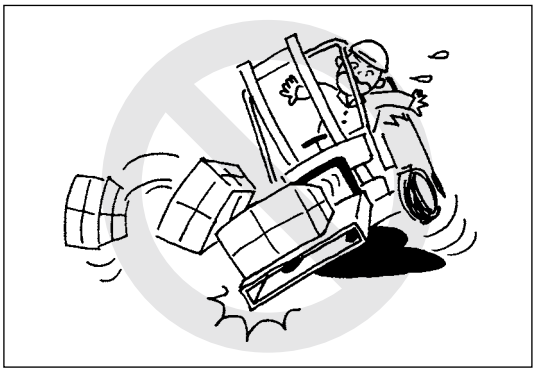

Never put any parts of your body into mast structure or between mast and fork-lift truck.
Do not climb on the mast or overhead guard.

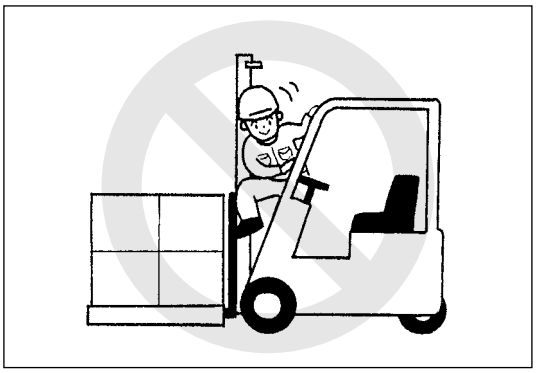

Operate all levers and switches from the driv-er's compartment.

https://truckmanualshub.com/

Do not put any part of your body outside operator's compartment of forklift truck.

- Keep hands and feet inside the operator's compartment.

Operate hydraulic control levers slowly when loading or unloading.

Do not lower and stop the load suddenly.

- Failure to observe this instruction, can cause the forklift truck to tip over.

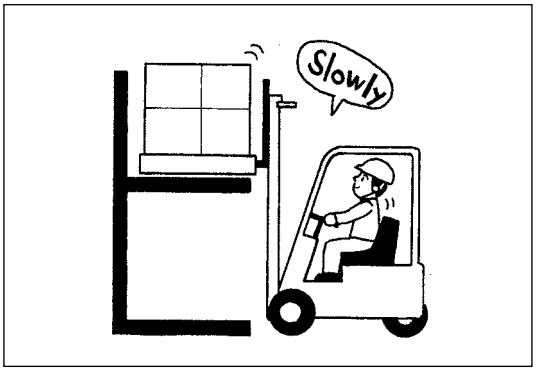

Do not lift-up, down and travel on tilting the mast (fork) down when loading.

- Tilt the mast (fork) up enough to stabilize the load.

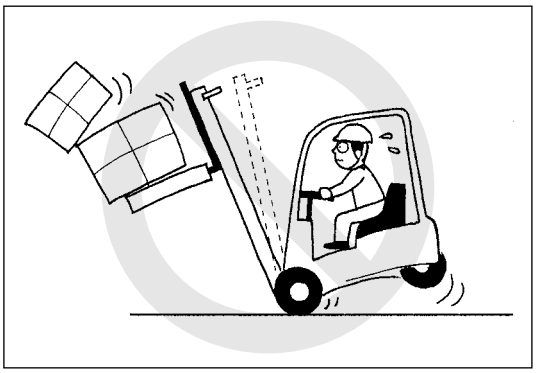

Pay attention to keep enough clearance for the mast and overhead guard when going into the container.

Drive into a trailer carefully.

- Make sure the trailer brakes are set and the wheels are blocked while loading or unloading.

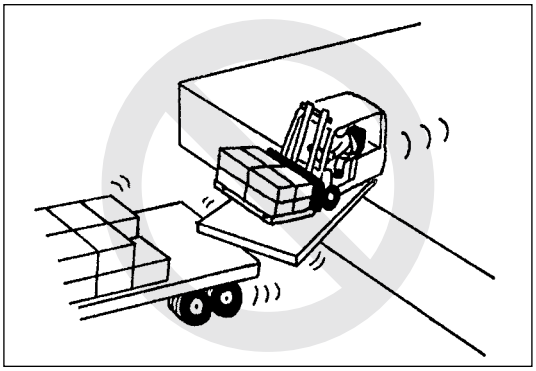

https://truckmanualshub.com/

Do not jump on or off the forklift truck.

- Do not grasp the steering wheel or hydraulic levers to ride forklift truck.

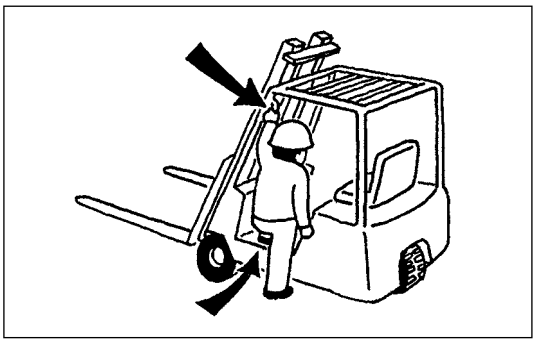

Do not pick the loads up beyond the backrest extension height.

- When handling double stack loads, fasten together with a band to prevent the load from falling.

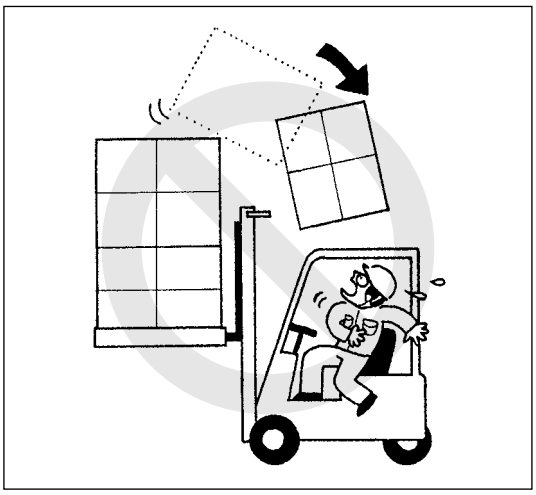

Do not pull the forks out from a pallet if chains and hoses are loosen.

- It is dangerous to have chains and hoses that are loose. It can cause the load to catch, racking by the forks or falling loads.

When chains and hoses are loosen :

- Lift the forks a little until correcting chains and hoses.
- After correcting chains and hoses, pull the forks out from a pallet.

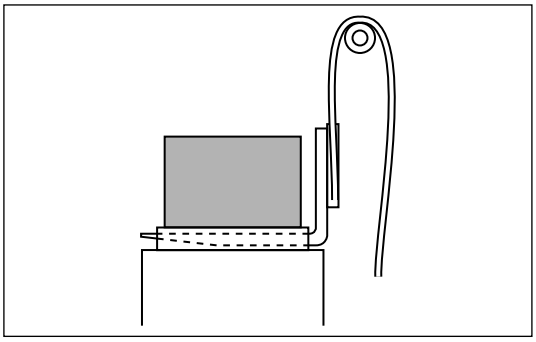

Do not abuse forks.

- Misuse can cause an accident as well as property damage.

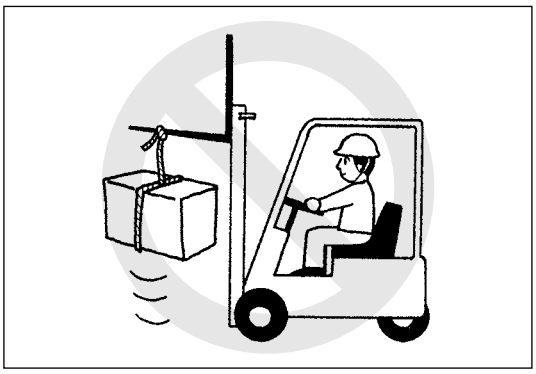

https://truckmanualshub.com/

Do not tow anything by draw-bar pin.

- The draw-bar pin is equipped for towing the truck by another tractor if any problems are occurred.

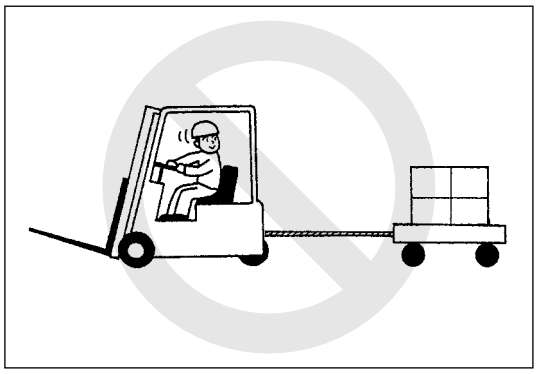

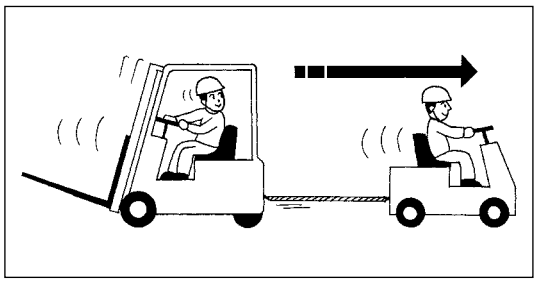

Set the position of forks to meet the pallet size properly.

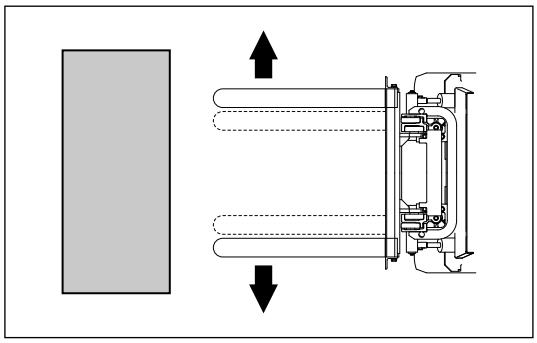

The adjustment procedure of fork set position

1. Lift up the forks about 400mm from the ground.
2. Rotate the set pin 90 degrees while pulling.
3. Move the forks to the required set position while holding the horizontal portion.
4. Put the set pin back into place.

Lubricate the lift bar (the contacting face between the fork and the lift bar) periodically.

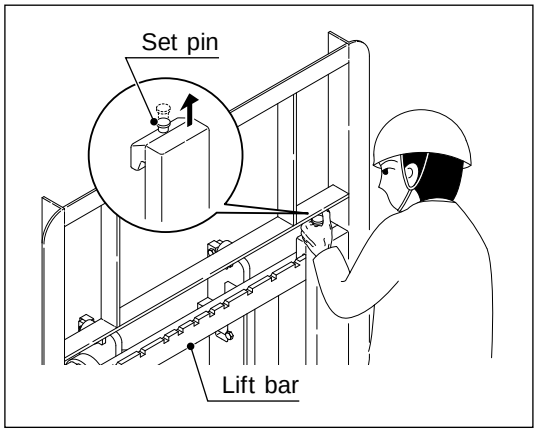

https://truckmanualshub.com/

Do not hold the vertical portion of the fork.

- There is the danger of the worker being injured.

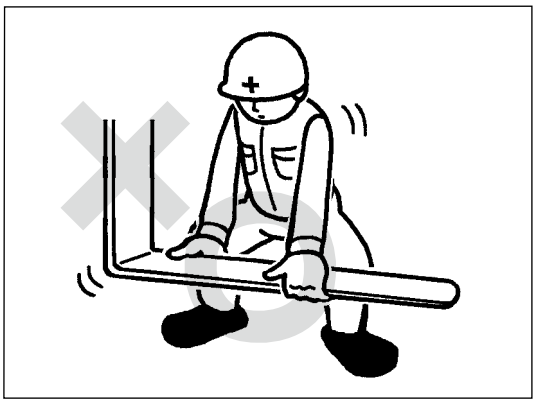

Please mind your hand not to injure when adjusting the set position of forks.

- Make sure to check if the set pin is fixed after adjusting the set position of forks.
- In case the forks are not fixed by the set pin, there is the danger of the load being unpiled and fallen down.

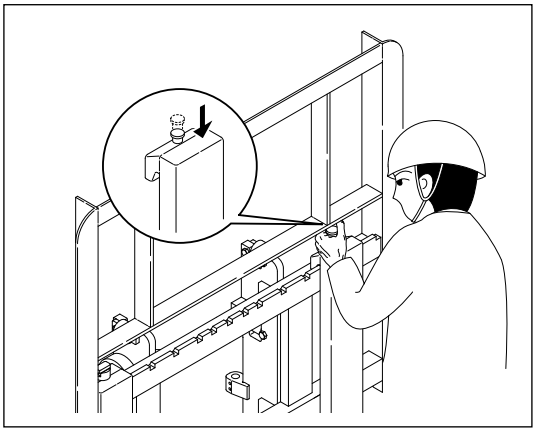

Travel carefully when handling with a long or wide load.

- Be careful when handling a load. The load should be handled at a low lifting position.
- Lifting and lowering should be done slowly.

When carrying a wide load, the suitable wide bar should be mounted. (Option)

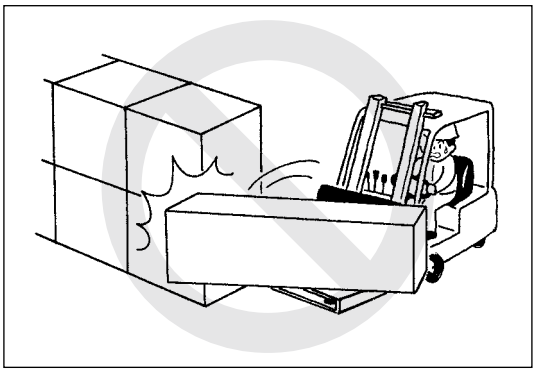

Never allow anyone to hold or pick loads off while traveling or lifting.

- Failure to observe this rule can cause serious personal injury.

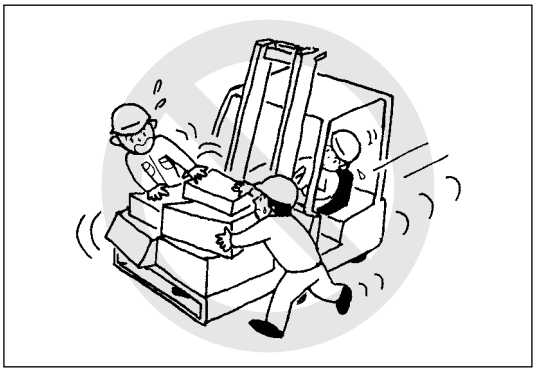

Do not use damaged pallets.

- Make sure pallets and skids are sturdy and in safe operating condition.

https://truckmanualshub.com/

OUT OF ORDER FORKLIFT TRUCK

- When parking a forklift truck requiring repair, a warning or “out-of-order” sign shall be placed on the forklift truck and the key removed.
- When the forks cannot be lowered because of a fault, place a large sign or marker on the forks. This procedure will caution other forklift trucks and pedestrians.

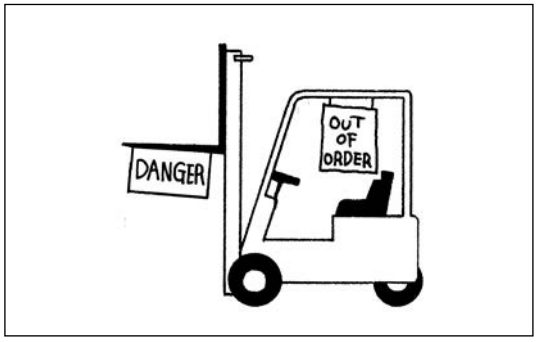

When parking the forklift truck:
- **Tilt the forks down and lower on the ground.**
- **Apply the parking brake.**
- **Turn off the key switch and remove the key before leaving the forklift truck.**

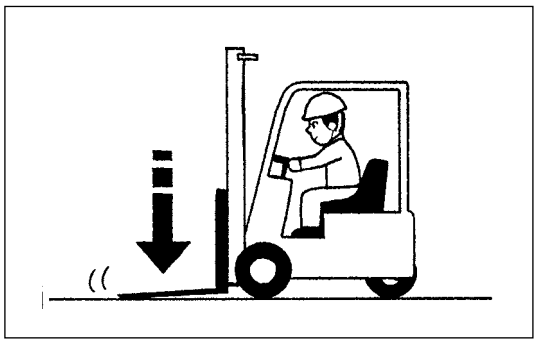

Parking place :

- Park the forklift truck at the reserved place.
- Do not park on or near flammable objects.

Do not park the forklift truck on a slope.

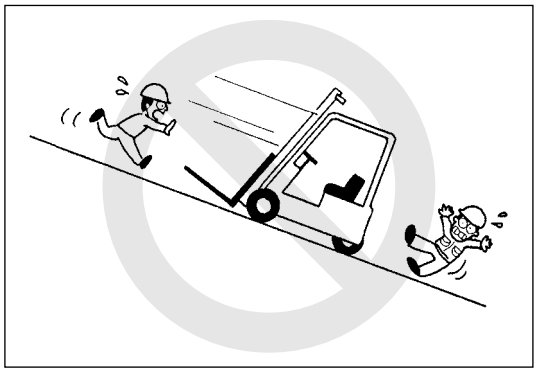

Lift-up the mast to maxium height.

- To prevent the inside of lift cylinders from getting rusty, raise forks to the maximum lifting height several times in case that the usual operation is used only lower height or the forklift truck is not in use for long term.

- **Do not wash the forklift truck by hosing water.**
- **In case that you have no choice but to wash by water, be careful not to splash water to electric components.**

- Water or moisture may affect electric components to be broken down. Turn off the key switch, disconnect the battery plug and cover all electric components to protect from splashing water.
- In case that water is splashed to the electric components, do not connect the battery plug and do not turn on the key switch until the forklift truck will be dried completely.

https://truckmanualshub.com/

Fasten seat belt while operation.

- Adjust the seat position before turning on the key switch. After adjusting, jiggle the seat to make sure if it is properly locked.
- Adjust the seat and steering handle positions before operation for safety.

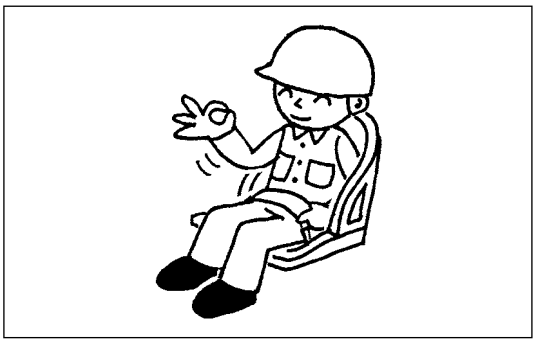

Do not adjust the seat while truck is in motion.

○ **How to fasten the seat belt**
Grip the tang **(A)** of the belt and pull it from the retractor. Then insert the plate into the slot of the buckle **(B)** until a snap is heard. Make sure the belt is not twisted.

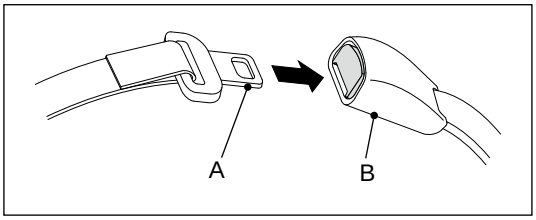

○ **How to release the seat belt**
Push the button **(C)** of the buckle to release the belt. The belt will automatically retract when release. Hold the plate of the belt and allow it to slowly retract.

- Be sure to fasten the belt across your hips, not across your abdomen.

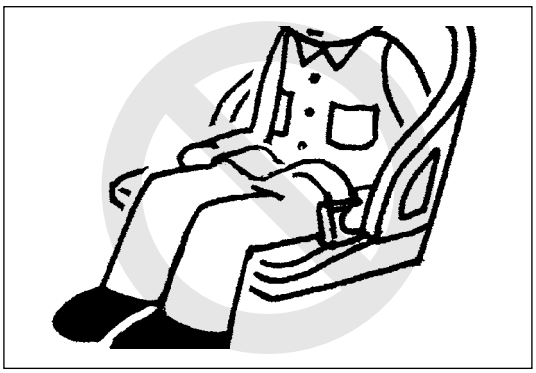

If you fasten the belt across your abdomen, the belt may tug your abdomen in the event of an accident.

- It is not necessary to adjust the belt length. The belt is designed to fit any size.

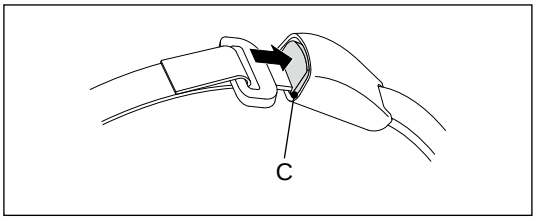

The seat belt would “jackknife” the operator. That is, the upper body would bend at the waist. If you are pregnant or have suffered from some abdomen disease, consult a physician before using the seat belt.

If the seat belt is torn, or damaged in an accident, replace it immediately.

- Contact your local NICHIYU dealer for replacement.

Use neutral detergent or water to clean the belt. Do not use any solvent such as gasoline.

https://truckmanualshub.com/

How to survive in a tip over

Safety notice for tip over

- Lateral tipover can occur when unloaded if the combination of speed and sharpness of turn produces an overturning moment which exceeds the stability of the forklift truck.
- Lateral tipover can occur if overloaded or loaded within capacity and the load is elevated and if turning and /or braking when traveling backward or if turning and/or accelerating when traveling forward produces an overturning moment which exceeds the stability of the forklift truck.
  Backward tilt and/or off-center positioning of the load and/or uneven ground conditions will further aggravate the above conditions.
- Longitudinal tipover can occur if overloaded or when loaded within capacity and the load is elevated if forward tilt, braking in forward travel, or commencing backward travel produces an overturning moment which exceeds the stability of the forklift truck.
- Serious injury or death can occur to the operator if he/she is trapped between the forklift truck and ground.

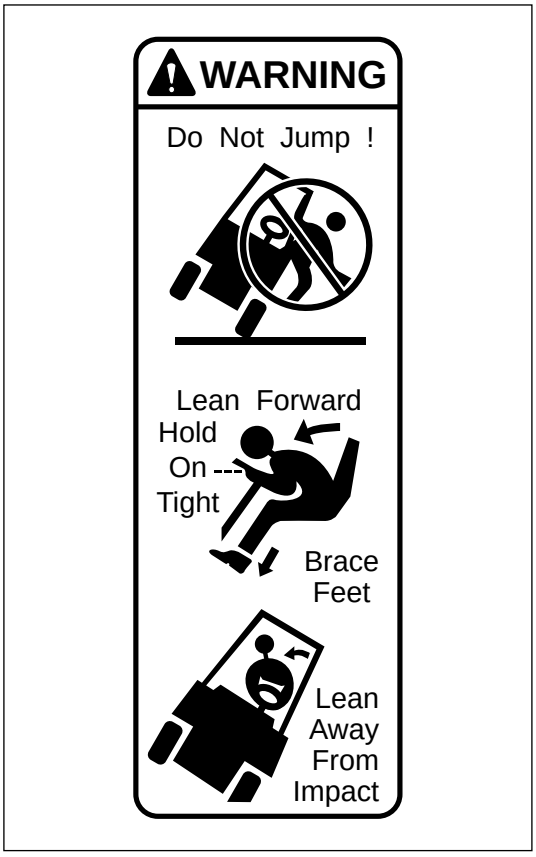

In case of tip over

- The operator should stay with the forklift truck if lateral or longitudinal tipover occurs. The operator should hold on firmly to the steering wheel, brace feet, lean forward and lean away from the point of impact.
- The operator should stay with the forklift truck if it falls off a loading dock or ramp. There are other situations where the environment of the landing area presents a severe hazard. In those incidents, it may be prudent for the operator to leave the forklift truck.

In case of tip over:
- **Do not jump off.**
- **Hold on tight to steering wheel.**
- **Brace your feet.**
- **Lean away from impact.**

- Fasten seat belt while operation.

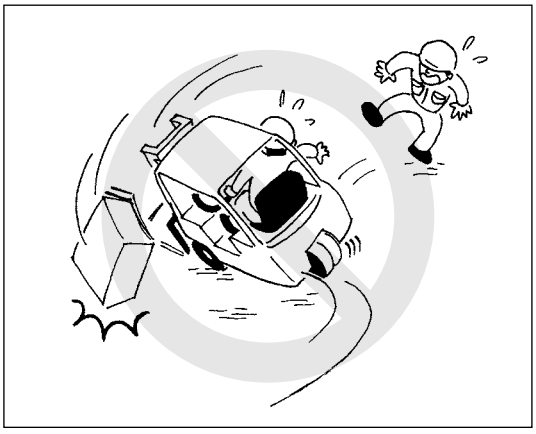

https://truckmanualshub.com/

2 PART NAME AND FUNCTION

Name of part

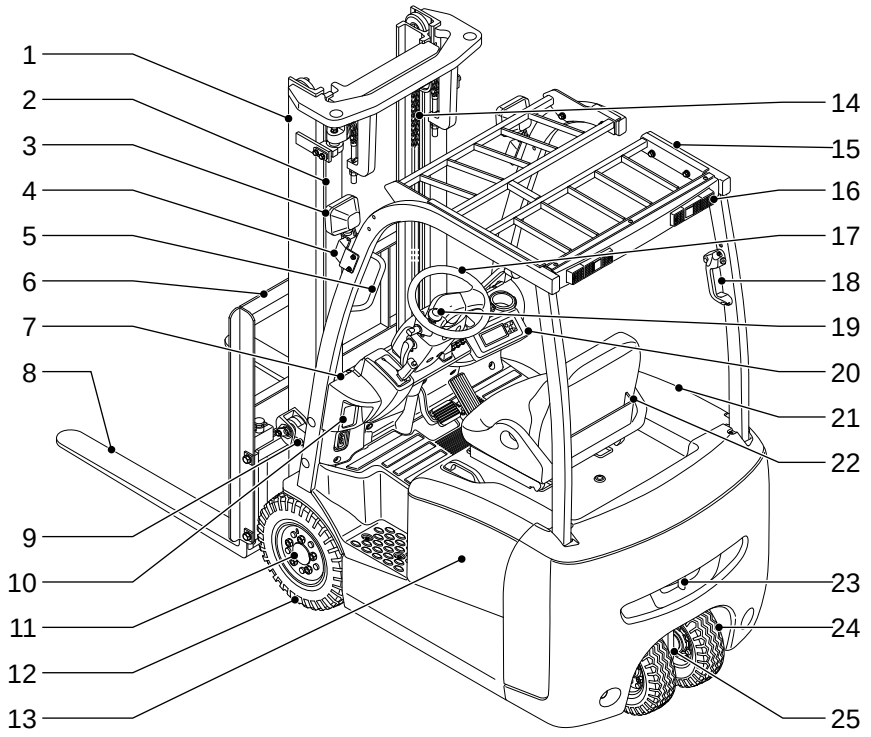

1. Mast
2. Lift cylinder
3. Head lamp
4. Turn signal lamp
5. Grip
6. Load backrest
7. Front panel
8. Forks
9. Tilt cylinder
10. Built-in charger (Option)
11. Drive axle
12. Front wheel
13. Side battery cover
14. Lift chain
15. Overhead guard
16. Rear combination lamp
17. Steering wheel
18. Rear assist grip
19. Steering wheel knob
20. Indicator panel
21. Battery cover
22. Seat
23. Draw-bar pin
24. Rear wheel
25. Rear axle

Driving equipment

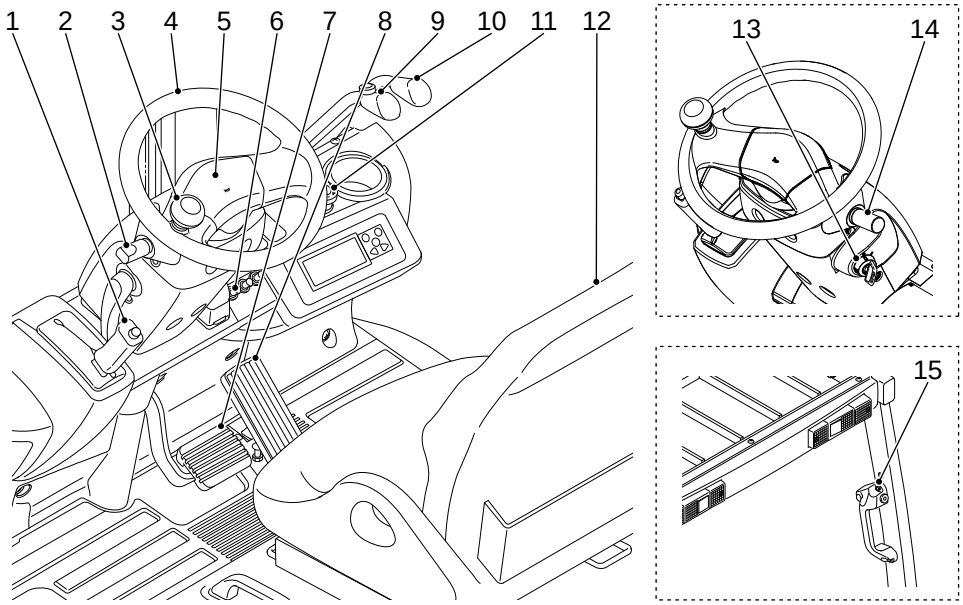

1. Parking brake lever
2. Turn signal switch / Head lamp switch
3. Steering wheel knob
4. Steering wheel
5. Center horn
6. Switch for the laser pointer (Option)
7. Brake pedal
8. Accelerator pedal
9. Lift lever
10. Tilt lever
11. Emergency stop switch
12. Seat
13. Key switch
14. Directional switch
15. Rear assist grip (w/horn switch)

(This illustration shows the directional switch of right side location, head lamp/turn signal lamp switch of left side location.)

https://truckmanualshub.com/

Indicator panel

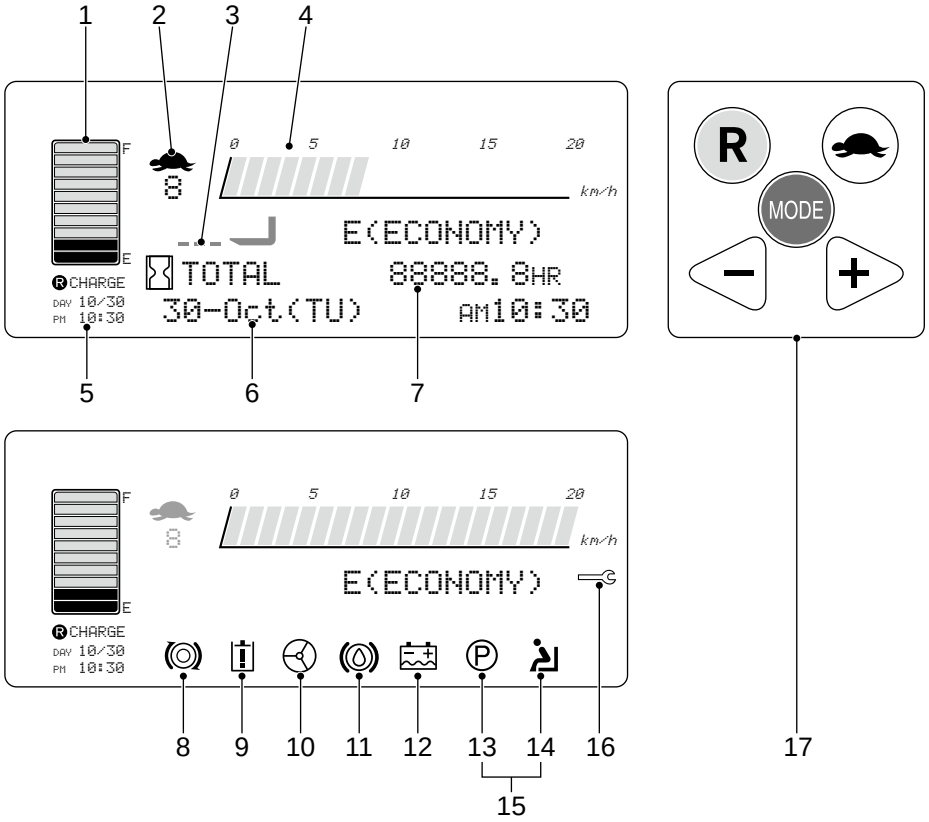

1. Battery indicator
2. Slow speed mode monitor (Turtle mark)
3. Fork horizontal indicator (Option)
4. Travel speed meter
5. Battery charge reservation indicator (Only for built-in charger)
6. Calendar and clock
7. Hour meter
8. Safety monitor for traction circuit
9. Safety monitor for hydraulic circuit
10. Safety monitor for power steering circuit
11. Safety monitor for brake fluid
12. Safety monitor for battery electrolyte level (Option)
13. Safety monitor for parking brake
14. Safety monitor for operation interlock system
15. Safety monitor for parking brake alert
16. Service (spanner) mark
17. Mode select button

Icons of 8 to 16 shown in the illustration are displayed for the explanation. They are displayed only when abnormalities are occurred.

https://truckmanualshub.com/

Indication of display

When the key switch is turned on, the self-diagnosis function checks the control system and display "MONITORING OK" when no problems are found. Icons of "Read operator's manual" are flashed three times for warning to the operator.

After 2 or 3 seconds, the normal screen is displayed.
If any abnormalities are detected, the error message is displayed. If the long message is displayed or some messages are displayed, they are scrolled from right to left alternatively.

If traveling or hydraulic operation is done while this (within 3 or 4 seconds), the normal screen is displayed after finishing the initial monitoring function.

Contact your local NICHIYU dealer if the error message is displayed.

When the key switch is turned on.

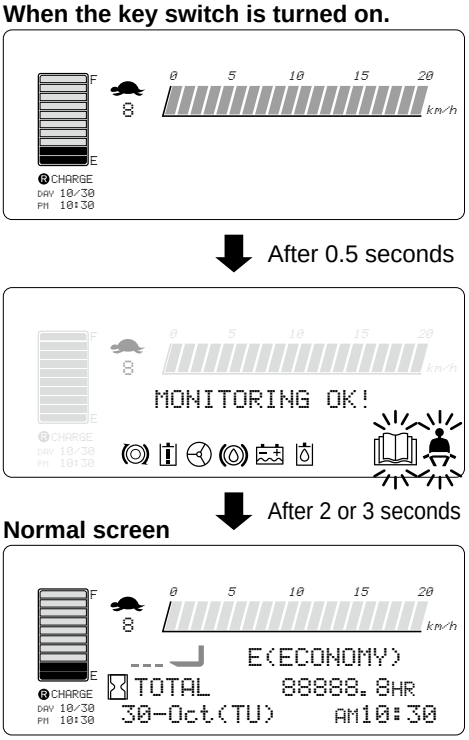

Mode select button

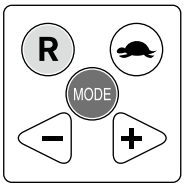

Mode selection

Push Ⓡ button.	**Reserve charge screen** • Set the starting time of battery charge.	•••	Refer the page 65 and the section of the reserve charging.
	(This screen is displayed if the optional built-in charger is equipped.)		
Push one of ◁.	**Electricity consumption meter** (Only for built-in charger) **Hour meter screen** • Indication of electricity rate, eliminated amount of CO2 • Three hour meters of traction, hydraulic and the total hour are displayed.	•••	Refer the page 24, 30 for details.
Push MODE button. (Release within 3 seconds.)	**Mode select screen** • Slow speed mode setting • Travel mode setting • Hour meter / odometer selection • Display mode setting • Coast mode setting • Pitching mode setting	•••	Refer to each setting section.
Push MODE button. for more than 3 seconds.	**Date / time setting screen** • For setting of date and time.	•••	Refer the page 33 for details.

https://truckmanualshub.com/

Function of display

This forklift truck has the self-diagnosis function.

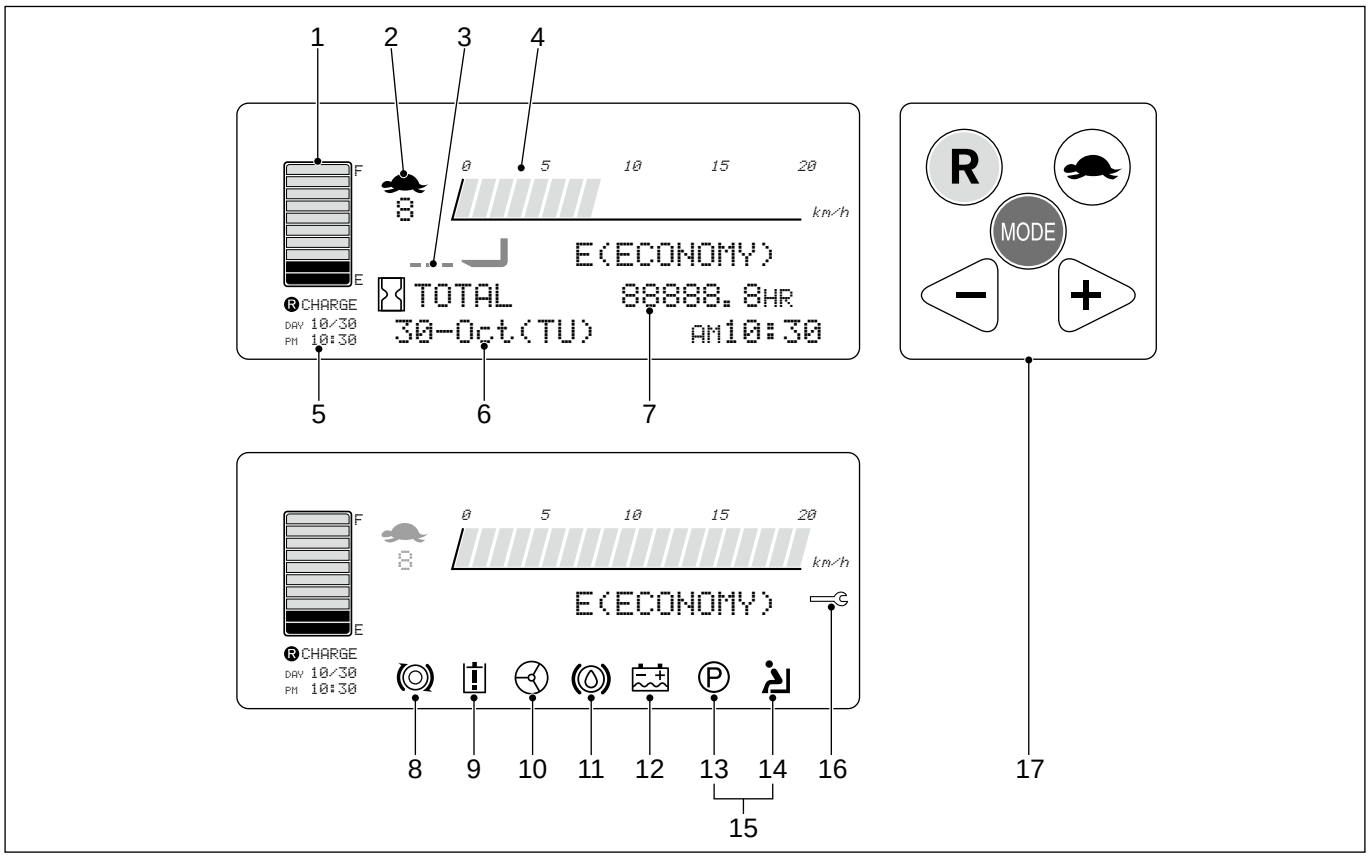

Icons of 8 to 16 shown in the illustration are displayed for the explanation. They are displayed only when abnormalities are occurred.

1. Battery indicator

The battery indicator shows the discharged condition of the battery.

If the forklift truck is used after discharging the battery more than 80%, the lifetime of the battery will be shortened. Then, stop to operate the forklift truck and charge the battery immediately.

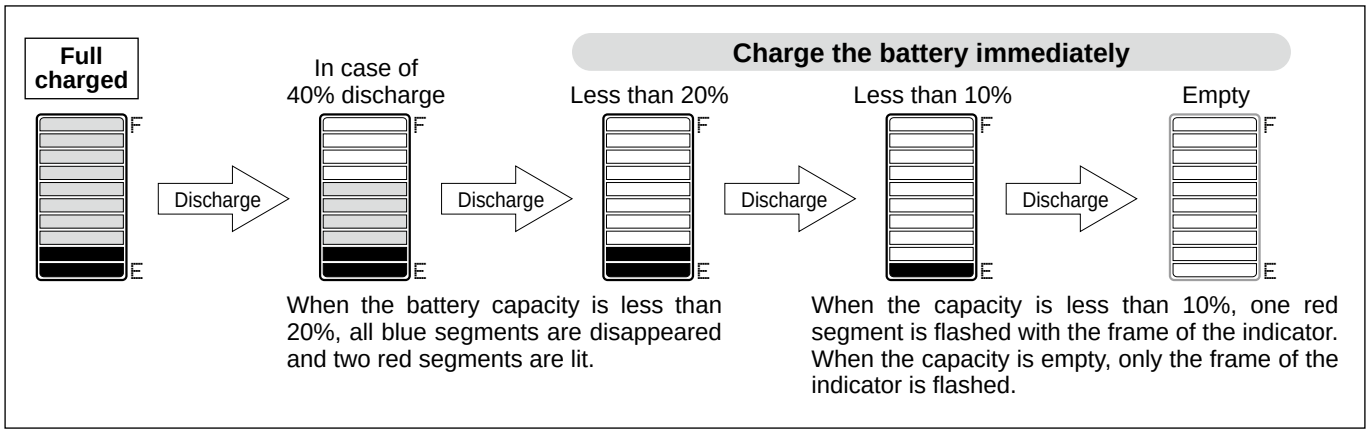

https://truckmanualshub.com/

● Lift interrupt

When all green segments are disappeared and two red segments are lit, the lift speed is reduced by half. At the same time, "*CHARGE THE BATTERY*" message appears on the screen. When the truck is continued to use, only one red segment is started to flash and the lift function is interrupted.

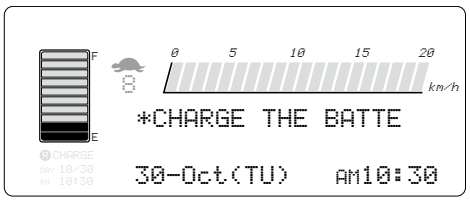

Two red segments are lit.

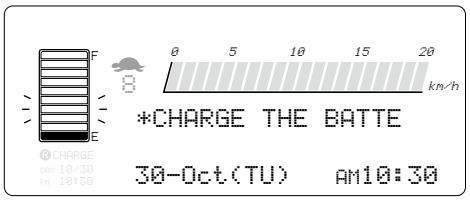

One red segment is started to flash.

2. Slow speed mode monitor (Turtle mark)

When the turtle button is pushed, the turtle mark is indicated on the screen with the preset speed.

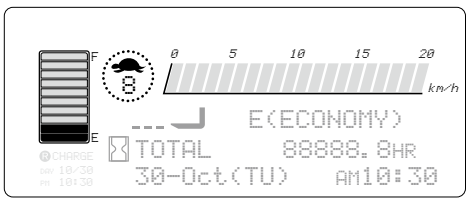

3. Fork horizontal indicator (Option)

This mark is indicated when the fork is horizontal and possible to use the laser pointer.

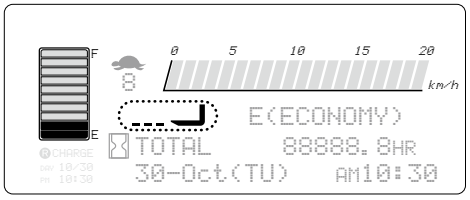

4. Speedometer

The traveling speed is displayed on the screen.

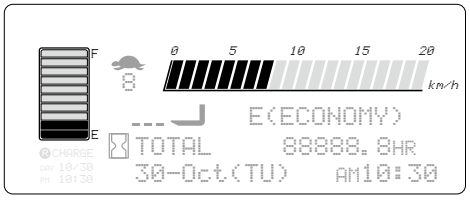

5. Reserve charge indication (Only for built-in charger)

The reserved date and time to start charging the battery is displayed. Refer the section of "Battery and charger" for details.

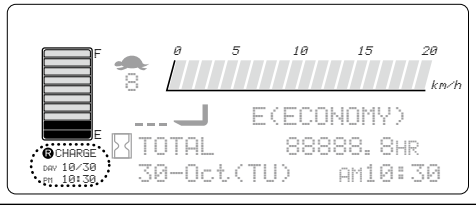

6. Date and time (Calendar and clock)

The current date and time are displayed. If the MODE button is pushed for more than 3 seconds, the display is changed to the setting screen. Refer the page 33 for details.

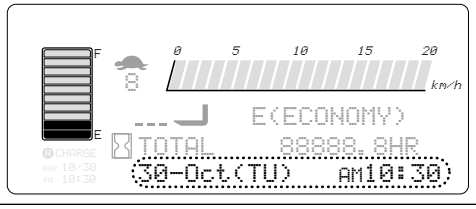

https://truckmanualshub.com/

7. Hour meter

The hour meter shows the total hours of turning on the key switch.
(The actual operating hours can be displayed as option.)
It is useful to know the total operating hours for the daily job management and scheduling of the periodical inspection.

When pushing ⊲ button on the normal screen and pushing Ⓡ button 3 times, the confirmation screen of hour meter is shown.

After 5 seconds, the normal screen is displayed.

Odometer or load weight can be displayed instead of the hour meter.
Refer the meter mode setting in the setting mode section.

Hour meter screen

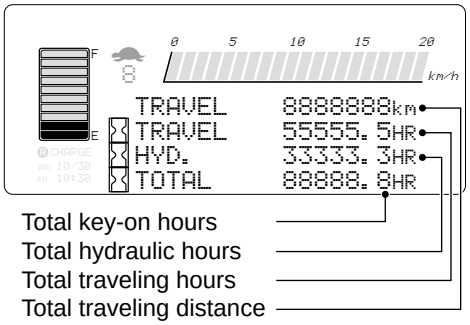

- **The normal screen is displayed automatically after 5 seconds from coming up the above any screen state.**
- **By pushing ⊲ or ⊳ button, the above any screen state is normal screen immediately.**

- When the screen displays the odometer, the word of “TRAVEL” is flashed while traveling.

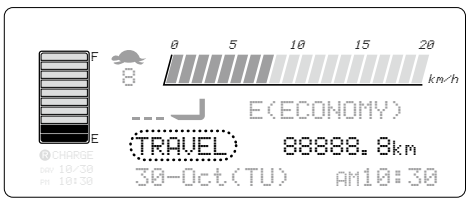

- When the load weight is indicated, “LOAD” message is displayed on the screen. When the weight is measured, “LOAD” message flashes for 5 seconds after hydraulic operation. When flashing “LOAD” message, the indicated weight may be changed. After stopping to flash, the correct weight is indicated.

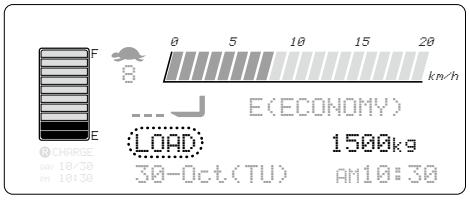

8. Safety monitor (for travel circuit)

When fault is detected in the travel circuit, the travel icon flashes and the presumed defective part name is displayed.

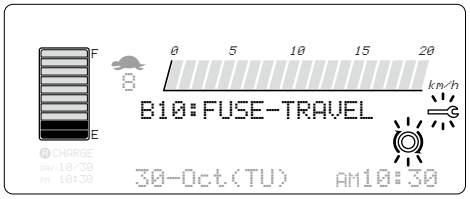

9. Safety monitor (for hydraulic circuit)

When fault is detected in the hydraulic circuit, the hydraulic icon flashes and the presumed defective part name is displayed.

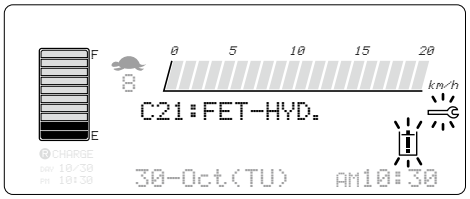

https://truckmanualshub.com/

10. Safety monitor (for steering circuit)

When fault is detected in the power steering circuit, the steering icon flashes and the presumed defective part name is displayed.

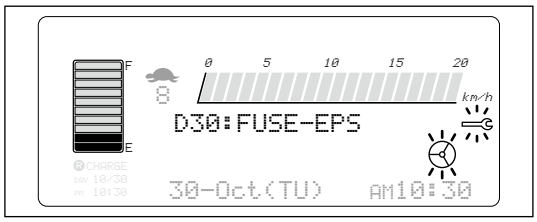

11. Safety monitor (for brake fluid level)

When the brake fluid level is low, the brake icon flashes and "*REFILL BRAKE OIL*" message is displayed.

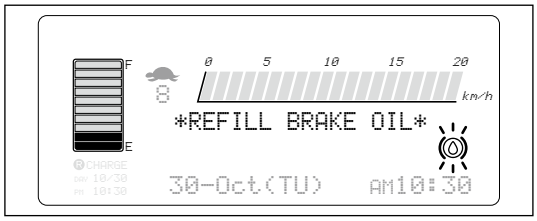

If the error message of parts or "*REFILL HYD. OIL*" is displayed, contact your local NICHIYU dealer to check the truck.

12. Safety monitor (for battery electrolyte level) (Option)

When the electrolyte level is lower than the specific level, the battery icon flashes and "*REPRENISH REFINED WATER FOR BATTERY*" message is displayed.

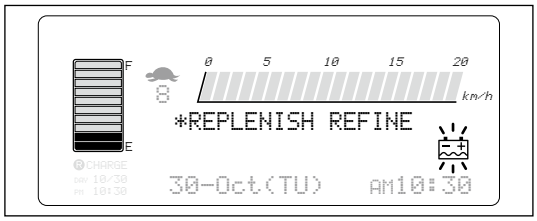

13. Safety monitor (for parking brake)

When the parking brake lever is pulled, the parking brake icon flashes. When the operator starts traveling without releasing the parking brake lever, the warning buzzer beeps and "*RELEASE PARKING BRAKE*" message is displayed.

14. Safety monitor (Operation Interlock System [OIS])

The system will interrupt traveling and hydraulic functions if the operator does not sit on the operator's seat correctly.
If the operator leaves the seat when operating the truck, the OIS icon flashes to warn to the operator, firstly. If that situation continues for more than 2 seconds, the buzzer beeps and traveling and hydraulic functions are interrupted. If the operator sits on the seat correctly within 2 seconds, the system does not work.
When traveling and hydraulic functions are interrupted, quit operation once and start again after sitting on the operator's seat correctly.

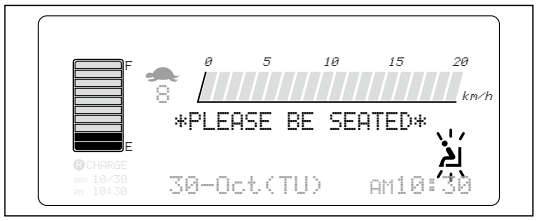

The operation interlock system interrupt the current flow to the traction motor but does not apply the mechanical brake. So, if the interlock system activates while traveling, the forklift truck may keep moving by inertia.

After activating the interlock system, it is not reset when the directional lever is in the forward or reverse position even if the operator sits on the seat correctly. Once, move the directional lever to the neutral position to reset the system.

https://truckmanualshub.com/

15. Safety monitor (for parking brake alert)

When the operator leaves the seat without applying the parking brake, both the OIS icon and the parking brake icon flash. Also, "*PLEASE BE SEATED*" and "*APPLY PARKING BRAKE*" message are displayed and the warning buzzer beeps.
This function works even if the key switch is turned off except for disconnecting the battery plug or applying the emergency stop switch.

[How to reset the alert]
When the key switch is turned on ;
Sit on the operator's seat correctly, or apply the parking brake. (pull the parking brake lever.)

When the key switch is turned off ;
Apply the parking brake. (pull the parking brake lever.) or Sit on the operator's seat correctly.

16. Service icon

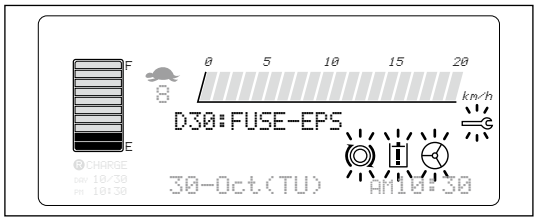

The service icon warns the fault of the forklift truck to an operator. If any faults are detected, the spanner mark is flashed and the presumed defective part name is displayed. If some problems are occurred at the same time, each part name is scrolled alternatively for every 5 seconds.

- **If the next fault is detected, all traveling, hydraulic and power steering functions are interrupted.**
  B11 : FET-TRAVEL
  B12 : SENSOR-CURRENT TRAVEL
  C21 : FET-HYD.
  C22 : SENSOR-CURRENT HYD.
  E40 : TR-AOS
  FAIL CURRENT-TRAVEL
  FAIL CURRENT-HYD
  FAIL VOLTAGE-TRAVEL
  FAIL VOLTAGE-HYD
- **All MODE, R, ◁, ▷ buttons are invalid while displaying these messages.**

https://truckmanualshub.com/

17. Mode select button

Change the screen to each mode by pushing these buttons.

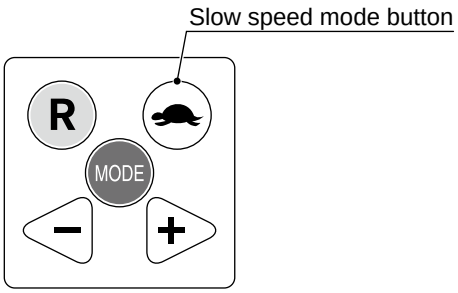

Mode select button

Slow speed mode button

The slow speed mode is activates by pushing this button.

Normal traveling mode

When the slow speed mode is off, the turtle mark is not displayed.

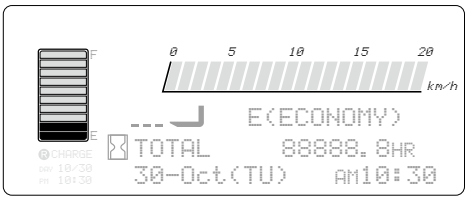

When the slow speed button is off
(Turtle mark is not displayed)

Slow speed mode

When the slow speed mode is activated, the turtle mark and preset speed are displayed on the screen.

- The maximum travel speed (normal mode) and preset speed (turtle mode) can be changed by pushing the turtle button.

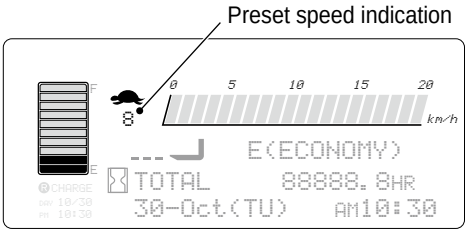

When the slow speed button is on
(Turtle mark is displayed)

https://truckmanualshub.com/

Various kinds of mode selection

[1] Slow speed setting
[2] Travel mode setting
[3] Meter mode setting
[4] Display mode setting
[5] Coast mode setting
[6] Pitching mode setting
[7] How to set the date and time

- **These settings are invalid while traveling or depressing the brake pedal.**
- **If traveling or hydraulic operation is done while setting, the display is returned to the normal screen immediately.**

When pushing the MODE button, the mode selection screen is displayed. If pushing the MODE button again, the normal screen is displayed again.

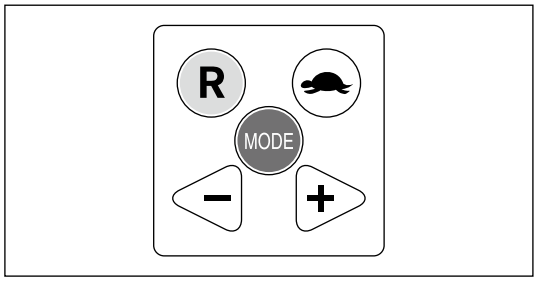

When setting the mode of next [1] to [6], each button works as below.
- ◁ and ▷ buttons : Move the cursor to select the value.
- Ⓡ button : Move the cursor to the next item.
- MODE button : Back the cursor to the previous item.

[1] Slow speed setting

This mode sets the limited maximum traveling speed under the slow speed mode.

Make sure the turtle button is pushed and the turtle icon is flashed. Then, push ◁ or ▷ button to set the speed.
The maximum speed can be set to 8 steps of 2, 3, 4, 5, 6, 8, 10 and 12km/h.
After setting, push Ⓡ button to move the cursor to the travel mode setting.
If push the MODE button, the normal screen is displayed.

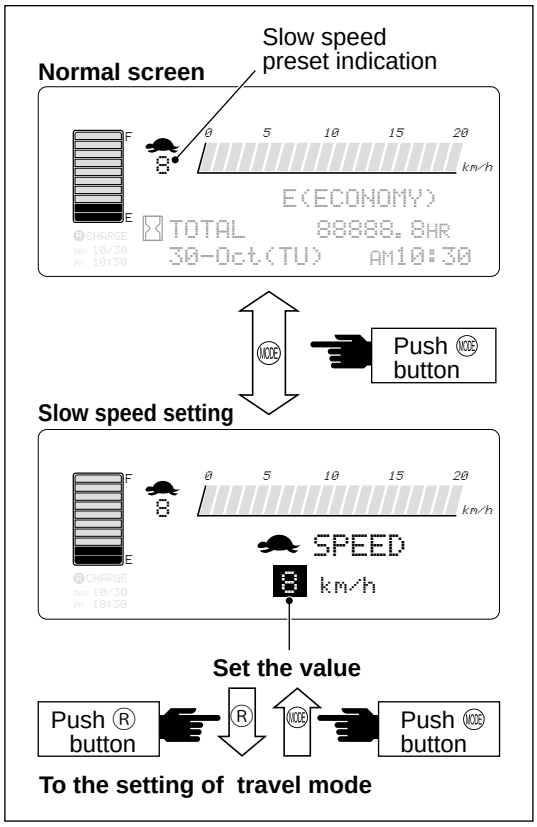

https://truckmanualshub.com/

[2] Travel mode setting

This screen is used to set the travel mode.

Make sure that the current traveling mode indication is flashed. Push ⊖ or ⊕ to select the mode.
After selection, push Ⓡ button to move the cursor to the meter mode setting.
If pushing the MODE button, the cursor is moved to the slow speed mode setting.
The traveling mode can be set to the next three modes.

E (ECONOMY)
This mode is convenient for the slow speed inching. This mode saves the battery energy consumption also.

N (NORMAL)
This is the normal traveling mode. The quick acceleration and smooth inching can be realized.

P (POWER)
This is the most powerful mode for acceleration.

Travel mode setting

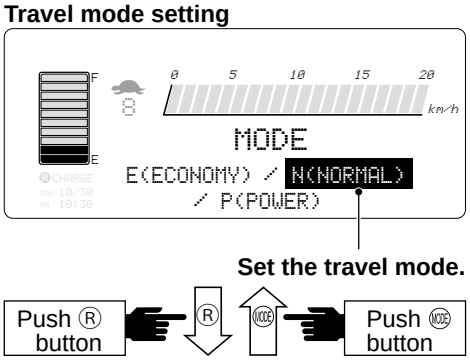

To the setting of meter mode

[3] Meter mode setting

The hour meter, odometer or load weight can be displayed on the normal screen.

When the cursor is located on the meter mode, press ⊖ or ⊕ button to select HR (hour meter), km (odometer) or kg (load weight : LARGE/NORMAL).
After selection, press Ⓡ button go to the next step [4]. To return to the previous step [2], press MODE button.

> When setting "kg (LARGE)", the traveling mode "E (ECONOMY)", "N (NORMAL)", "P (POWER)" is not shown on the display.

Meter mode setting

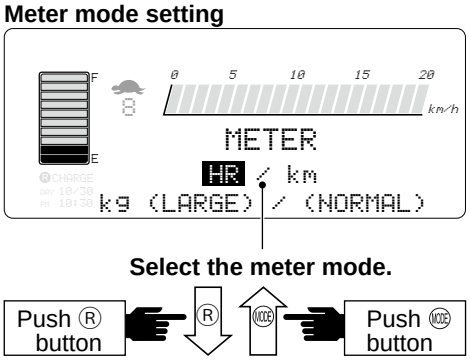

To the display mode setting screen

kg (load weight : LARGE) screen [Option]

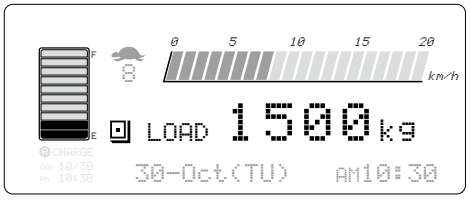

https://truckmanualshub.com/

○ Load weight indication

- **The load weight indicator is equipped for safe operation, however, the indicated value should be used as reference.**
- **The weight must be measured after raising the fork about 500 mm from the floor and stop hydraulic and traveling operation.**
- **This function cannot be used as the formal weight scale.**

Select "kg" mode.
Raise the fork about 500 mm from the floor.
After releasing the hydraulic lever, "LOAD" message flashes for 5 seconds because the hydraulic pressure is fluctuated while hydraulic operation.
Read the weight after "LOAD" message is fixed.

- If the loading weight is more than 110% of the loading capacity on the name plate, the "LOAD" message is changed to "OVER". This "OVER" message flashes and the warning buzzer is also beeped.
- The setting of overload can be changed. Contact your local NICHIYU dealer for details.

Zero adjustment (for net weight)
If you want to deduct the pallet weight to get the net weight of the load, press button. Then the zero adjust icon is indicated and the indicated weight is changed to 0 (zero) kg.
By pressing the button again, this function is turned off.
This function cannot be changed when "LOAD" message is flashed.

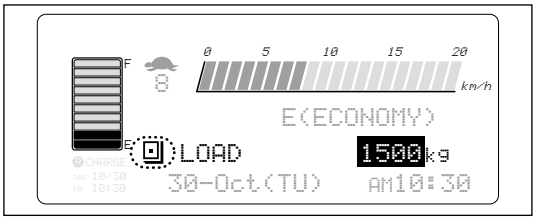

○ Electricity consumption meter (Only for built-in charger)

Date [Month/Day], Consumed amount of electricity [kWh] and Electricity rate [Japanese Yen] (or Eliminated amount of CO2 [kg]) can be shown on the display while charging the battery.

- The standard screen setting is "Electricity rate", As for the change of screen setting, please contact your local NICHIYU dealer.
- Only Japanese Yen can be shown in the screen of electricity rate, The default is 10 Yen/kWh. As for the change of value setting, please contact your local NICHIYU dealer.
- As the backup function, there are data both for last 7 days and for last 2 months.

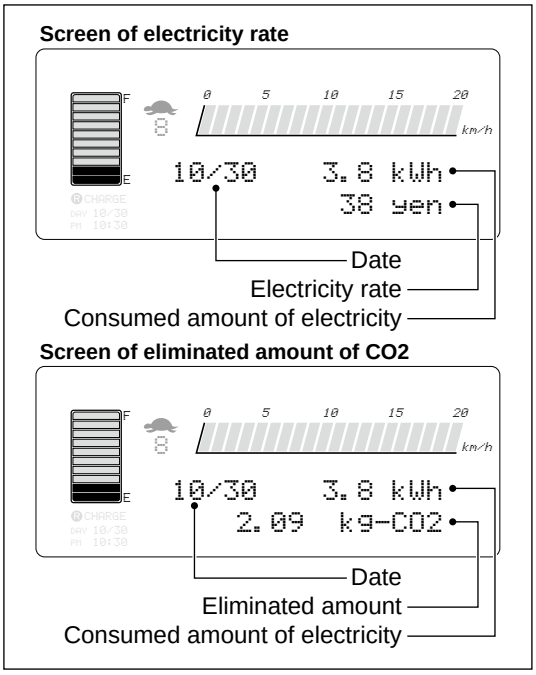

https://truckmanualshub.com/

Normal screen and meter mode screen

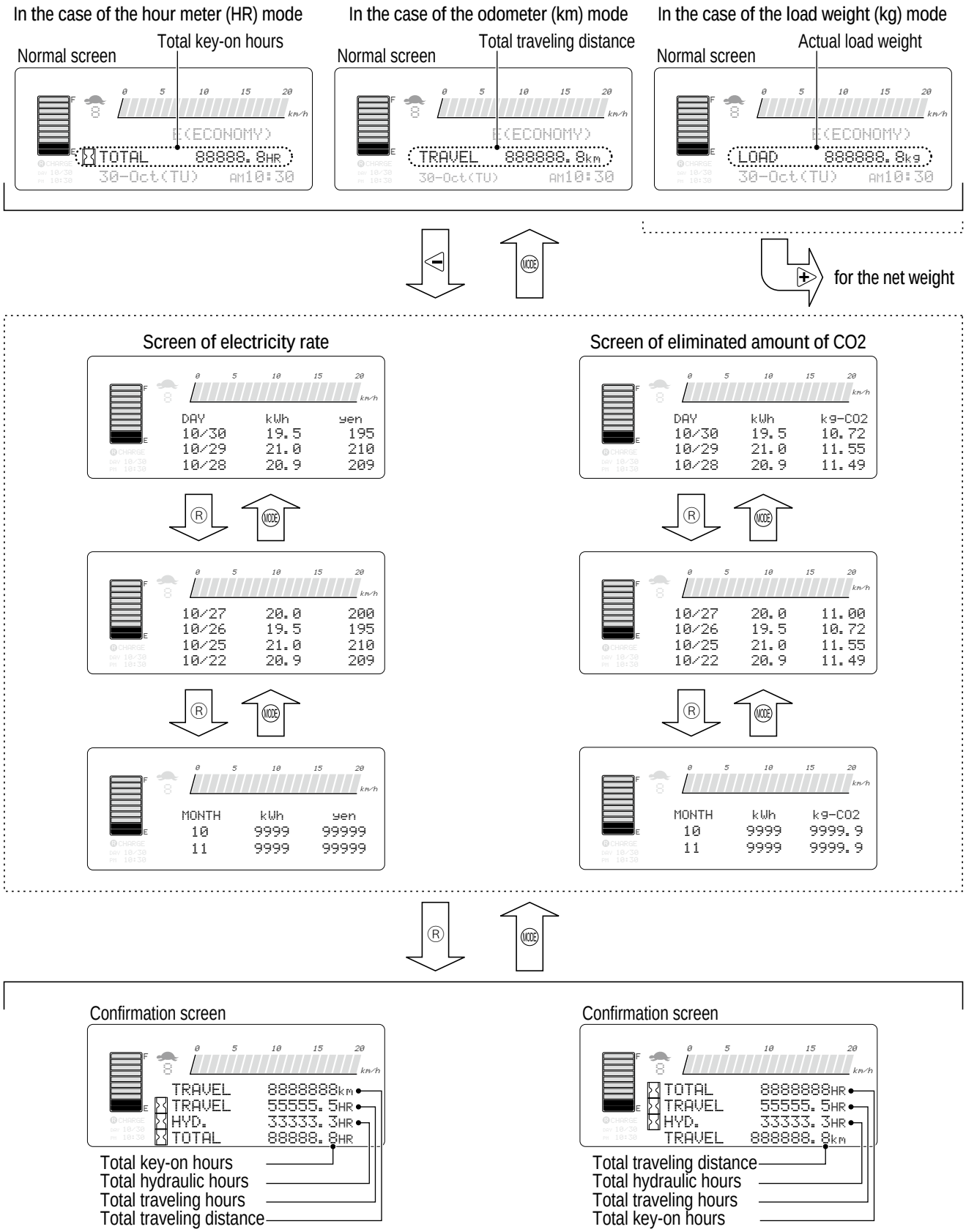

*** The normal screen is displayed automatically after 5 seconds from coming up the above any screen state. Also, by pushing ◁ or ▷ button, the above any screen state is returned to the normal screen immediately.**

https://truckmanualshub.com/

[4] Display mode setting

This mode sets the brightness of the screen.

Make sure that the cursor is located on the brightness setting area. Push the ⊖ or ⊕ button to select the brightness for the best. It can be selected 8 steps (from 0 to 7).
After selection, press Ⓡ button to go to the next step [5]. To return to the previous step [3], press MODE button.

Refer the table below for the brightness settings.

BRIGHTNESS (Intensity of back light)		
0 Dark	⟷	7 Bright

Display mode setting screen

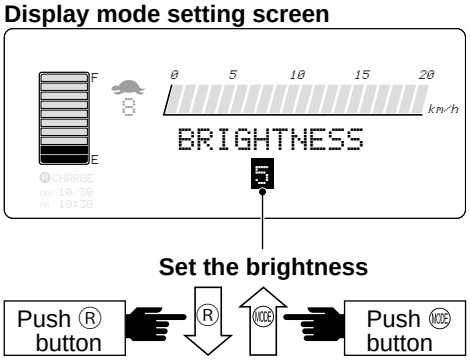

To the setting mode of regeneration (coast mode)

[5] Coast mode setting

This mode can set the regenerative braking force when releasing the accelerator pedal while traveling.

Make sure that the REGEN(NEUTRAL) mode screen is displayed. Then push ⊖ or ⊕ button to select the strength.
The braking strength can be set to 4 steps of "NON" (No braking), "LOW", "MID" (Middle) and "HIGH".
After selection, press Ⓡ button to go to the next step [6]. To return to the previous step [4], press MODE button.

Setting mode of regeneration (coast mode)

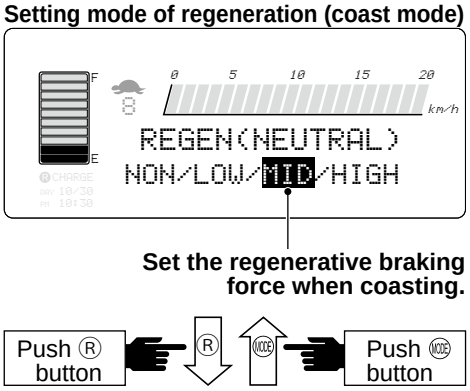

To the setting of pitching control (pitching mode)

[6] Pitching mode setting

This function will suppress forward and backward vibration of loads while traveling. The effect of this function may vary by the condition of the floor, traveling speed and/or weight of loads.
To activate this function, choose "ON" in the pitching mode setting screen by pressing the ⊕ button.
After selection, press Ⓡ button to return the normal screen.
If the MODE button is pressed, the screen return to the previous step [5].

- This function does not suppress the vibration of overall the forklift truck.
- This function has some level for suppressing the vibration. As for the change of the level, please contact your local NICHIYU dealer.
- In case that the feeling is not good remarkably while traveling, choose the better setting by changing the level or changing the setting ON/OFF.

Pitching mode setting screen

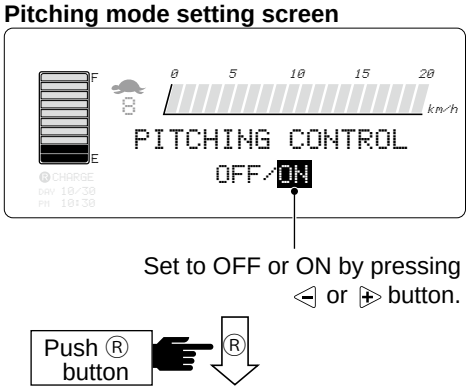

Return to the normal screen.

https://truckmanualshub.com/

[7] How to set the date and time

When the MODE button is pushed for more than 3 seconds, the date and time setting screen is displayed.
Push MODE button to return to the normal screen.

If traveling or hydraulic operation is done while setting, the display is returned to the normal screen immediately.

When setting the mode of next **1** to **6**, each button works as below.

- ◁ and ▷ buttons : Move the cursor to select the value.
- Ⓡ button : Move the cursor to the next item.
- MODE button : Back the cursor to the previous item.

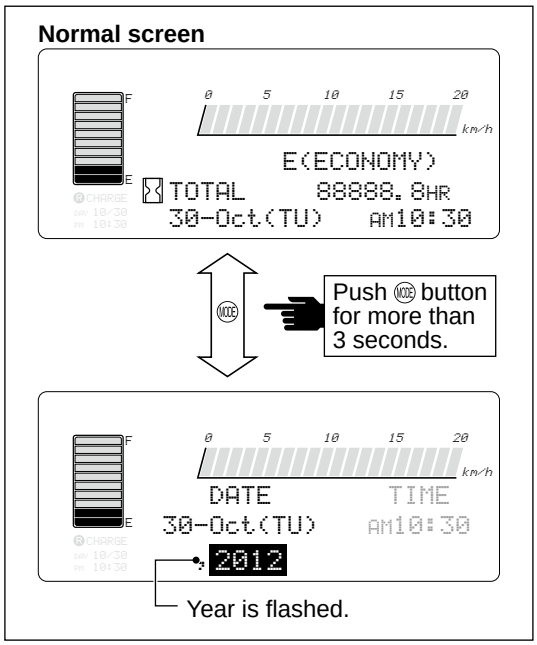

1. Set the year
Make sure the cursor is located on the year area. Push ◁ or ▷ button to set the year. The year can be set from 2000 to 2999.
After setting, push the Ⓡ button to move the cursor to the month area.
If push the MODE button, the normal screen is displayed.

2. Set the month
Make sure the cursor is located on the month area. Push ◁ or ▷ button to set the month. the month can be selected from 1 to 12.
After setting, push Ⓡ button for the date setting.
If pushing MODE button, the cursor is returned to the year area.

3. Set the date
Make sure the cursor is located on the date area. push ◁ or ▷ button to set the date. The date can be set from 1 to 31. When setting the date, the day of the week is set automatically.
After setting, push the Ⓡ button to move the cursor to the AM/PM area.
If pushing MODE button, the cursor is returned to the month area.

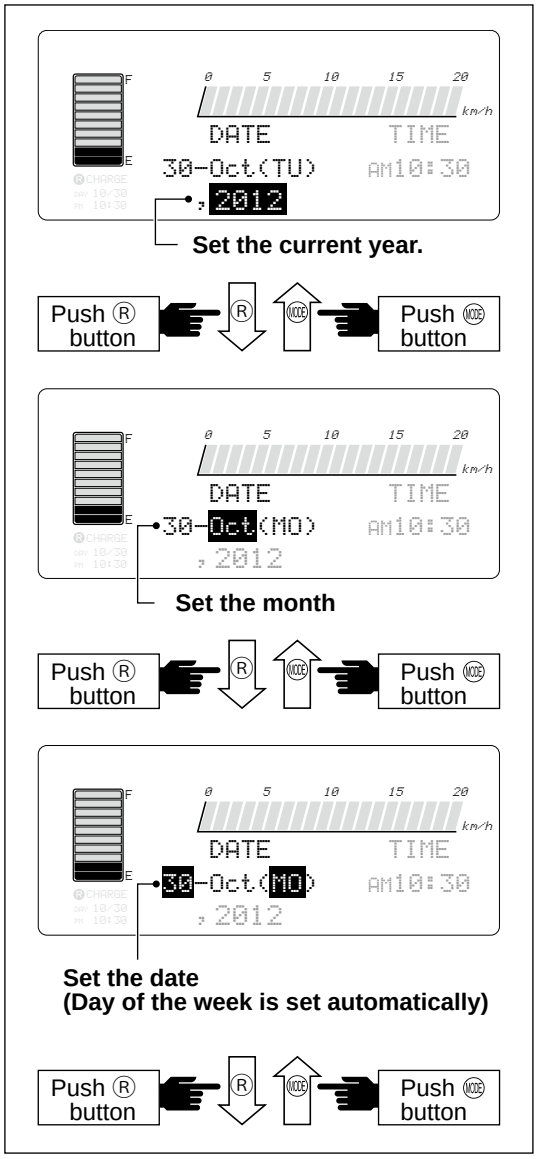

https://truckmanualshub.com/

4. Set the AM or PM
Push the ◁ or ▷ button to select the AM or PM. After setting, push the Ⓡ button to move the cursor to the hour area.
If pushing MODE button, the cursor is returned to the data area.

5. Set the hour
Push the ◁ or ▷ button to set the hour. The hour can be set from 1 to 12.
After setting, push the Ⓡ button to move the cursor to the minute area.
If pushing MODE button, the cursor is returned to the AM or PM area.

6. Set the minute
Push the ◁ or ▷ button to set the minute. The minute can be set from 00 to 59.
After setting, push the Ⓡ button.
Then "COMPLETE" message is flashed three times. In any cases, push MODE button to get the previous step.

- **When pushing the ◁ or ▷ button, the second is set to "00".**
- **After setting the minute and push the Ⓡ button, the second is set to "00".**
- **If set the date and time, the reserve charge setting is also renewed.**

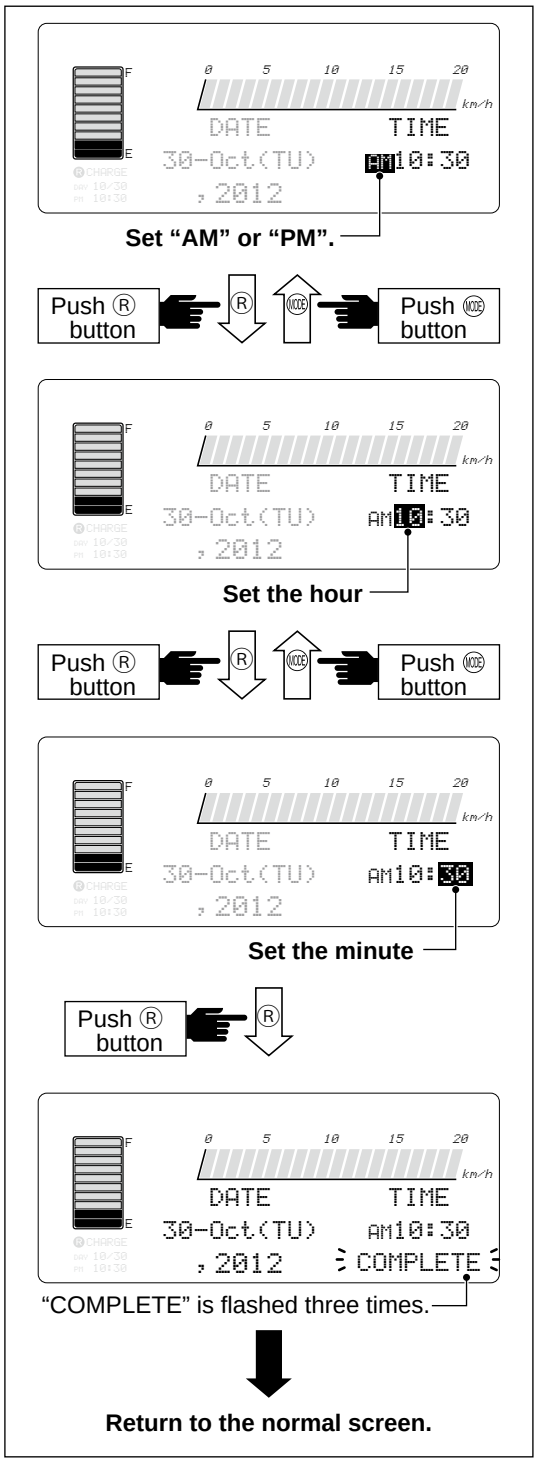

https://truckmanualshub.com/

Operating equipment

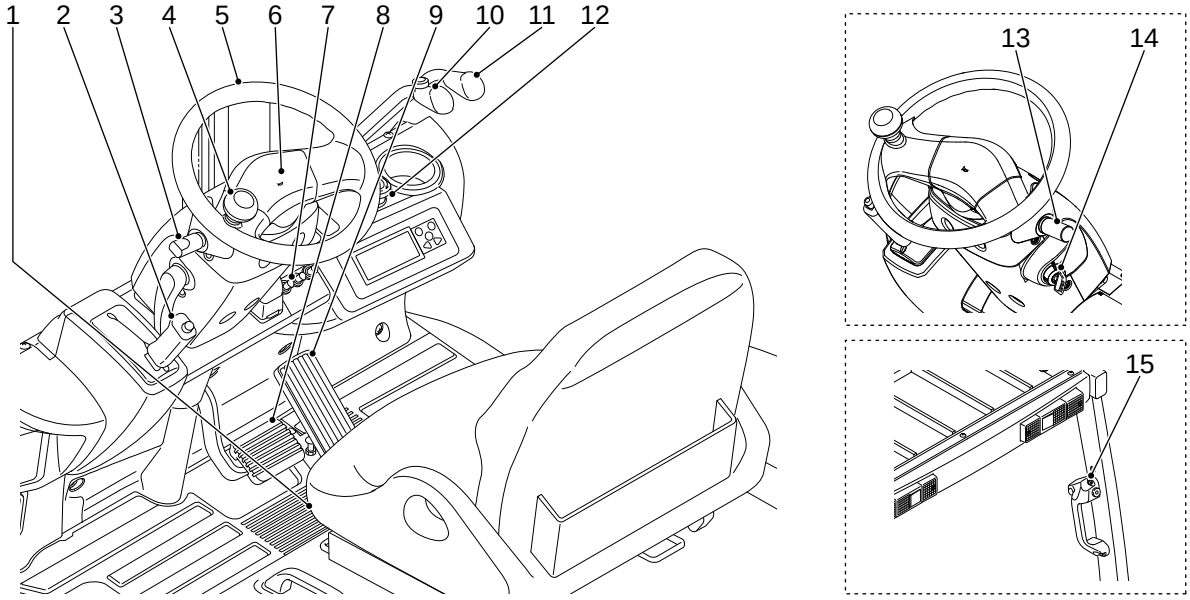

(This illustration shows the directional switch of right side location, head lamp/turn signal lamp switch of left side location.)

1. Seat

The operator's seat is adjustable for the best position to forward or backward by moving the lever **(A)** under the seat.
Adjustment range is 75 mm each for forward and backward.
When releasing the lever, the seat is fixed. (After adjustment, shake the seat to forward and reverse for a couple of times to make sure it is fixed completely.)
Use reclining lever **(B)** to adjust the back.
The operator's manual can be stored in the box behind the back of the seat.

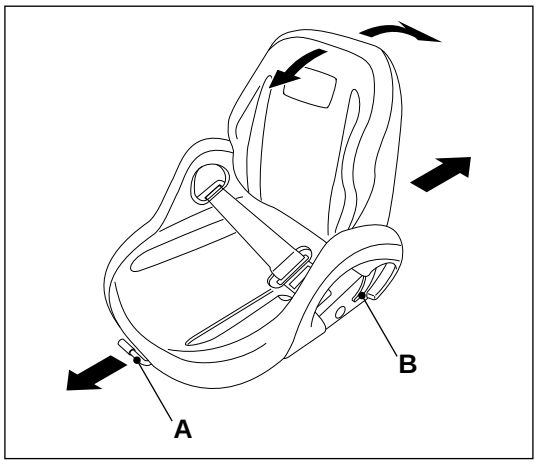

○ **How to fasten the seat belt**

Grip the tang **(C)** of the belt and pull it from the retractor. Then insert the plate into the slot of the buckle **(D)** until a snap is heard. Make sure the belt is not twisted.

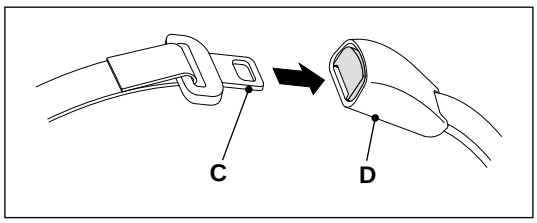

○ **How to release the seat belt**

Push the button **(E)** of the buckle to release the belt. The belt will automatically retract when release. Hold the plate of the belt and allow it to slowly retract.

● Be sure to fasten the belt across your hips, not across your abdomen.

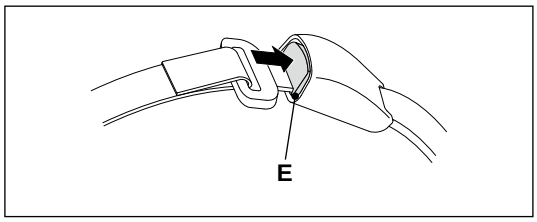

https://truckmanualshub.com/

2. Parking brake lever

When parking the lift truck, pull the lever fully to apply the parking brake. To release the brake, push the top button **(A)** and push the lever forward.
When the parking brake lever is pulled, the parking brake icon flashes. When the operator starts traveling without releasing the parking brake lever, the warning buzzer beeps and "*RELEASE PARKING BRAKE*" message is displayed.

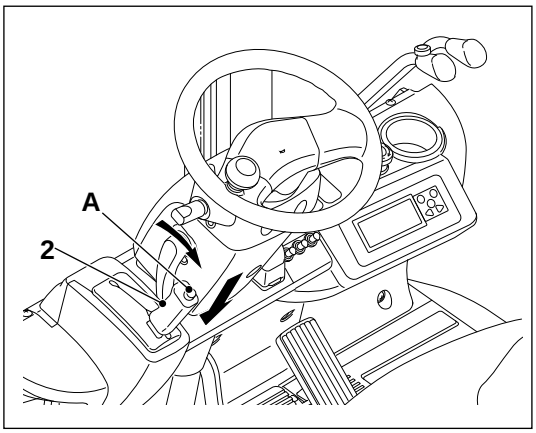

- **When parking the lift truck, lower the forks on the floor and pull the parking brake lever fully.**
- **When leaving the lift truck, turn the key switch off and remove the key.**
- **When operating the parking brake lever, make sure to depress the brake pedal.**

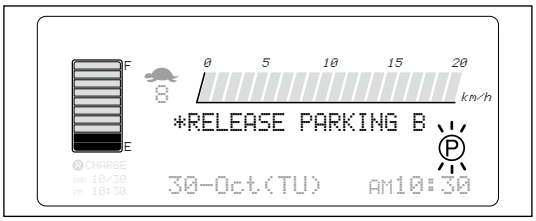

Parking brake alert :
When the operator leaves the seat without applying the parking brake, both the OIS icon and the parking brake icon flash. Also, "*PLEASE BE SEATED*" and "*APPLY PARKING BRAKE*" message are displayed and the warning buzzer beeps.
This function works even if the key switch is turned off except for disconnecting the battery plug or applying the emergency stop switch.

[How to reset the alert]
When the key switch is turned on ;
Sit on the operator's seat correctly, or apply the parking brake. (pull the parking brake lever.)

When the key switch is turned off ;
Apply the parking brake. (pull the parking brake lever.) or Sit on the operator's seat correctly.

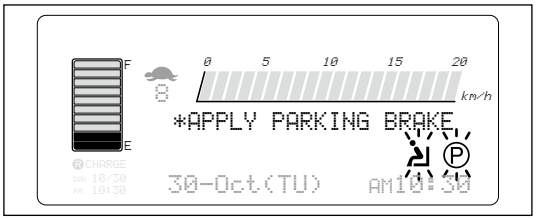

3. Switch for turn signal lamp

Use turn signal lamp when turning.

[the turn signal lamp switch of left side location]
For forward **(A)** :
The right signal lamp is flashed for the right turn.
For backward **(B)** :
The left signal lamp is flashed for the left turn.

[the turn signal lamp switch of right side location]
For forward **(A)** :
The left signal lamp is flashed for the left turn.
For backward **(B)** :
The right signal lamp is flashed for the right turn.

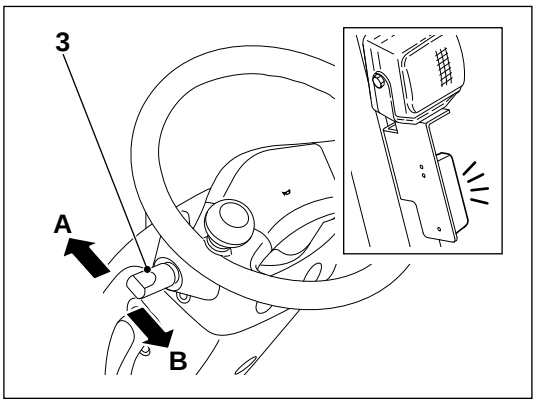

(This illustration shows the turn signal lamp switch of left side location.)

The turn signal lamp switch returns to the neutral position and the lamp turns off automatically by rotating the steering wheel to opposite direction.

https://truckmanualshub.com/

Switch for head lamps

This is the switch for the head lamps
Turn the knob forward to light up.
Turn the knob backward to switch off.

(Right side location or left side location is exactly the same usage.)

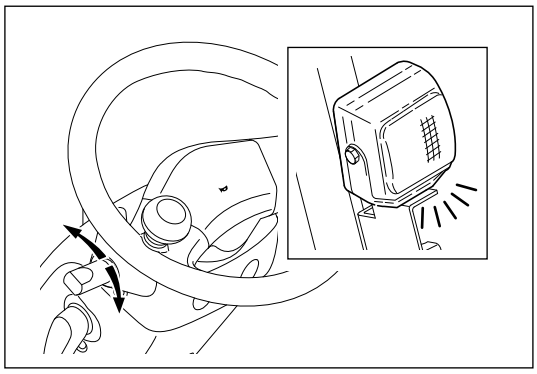

(This illustration shows the head lamp switch of left side location.)

4. Steering wheel knob, 5. Steering wheel

Grasp the steering wheel knob by the left hand. The right hand should hold the hydraulic levers lightly or put on the steering wheel.

- The electric power steering (EPS) and tilt steering column is the standard equipment.

Adjust the steering wheel for your best operating position by the tilt steering lever **(A)**.

After adjusting the steering tilt angle, tighten the tilt steering lever securely.

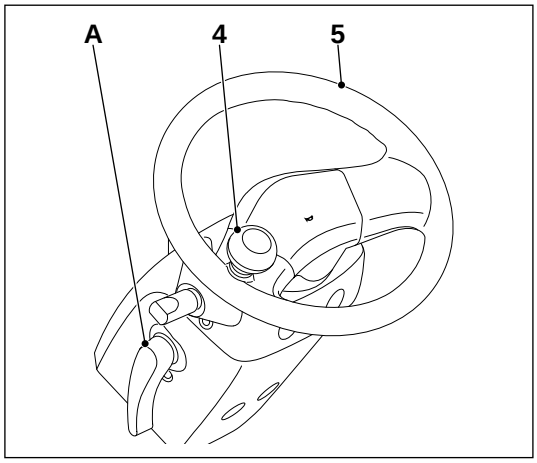

6. Horn button

Horn button is located on the center of the steering wheel and the tilt lever. Press the button to operate the horn.

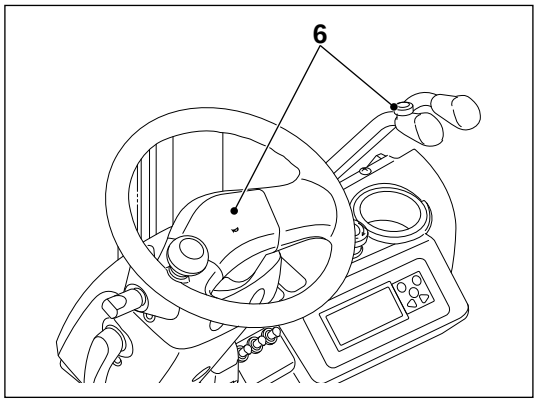

7. Switch for the laser pointer (Option) (Refer to the page 41 for details.)

To power on the laser pointer, turn the switch lever up.
When the fork is leveled, the laser pointer irradiates the laser beam and the fork leveling indicator lamp is lit.

To power off, turn the lever down.

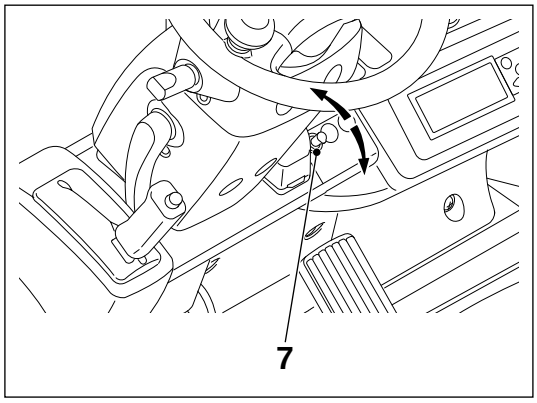

https://truckmanualshub.com/

8. Brake pedal, 9. Accelerator pedal

Depress the accelerator pedal gradually. Travel speed can be adjusted by depressing angle of the pedal.

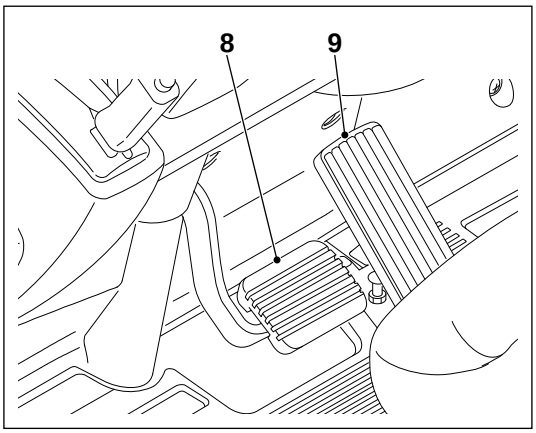

Do not depress the accelerator pedal and brake pedal at the same time. The traction motor may be damaged if this occurs.

10. Lift lever

Lifting up the forks : Pull the lift lever backward.
Lowering the forks : Push the lift lever forward.

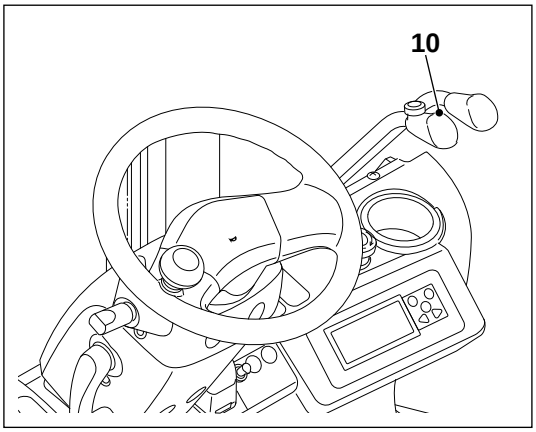

Lifting and lowering speed can be controlled by stroke of the lift lever. Do not operate it roughly.
The lift function will not activate if the lift lever is operated before turning on the key switch.

Do not stop lifting or lowering suddenly.

11. Tilt lever

Tilting backward : Pull the tilt lever backward.
Tilting forward : Push the tilt lever forward.

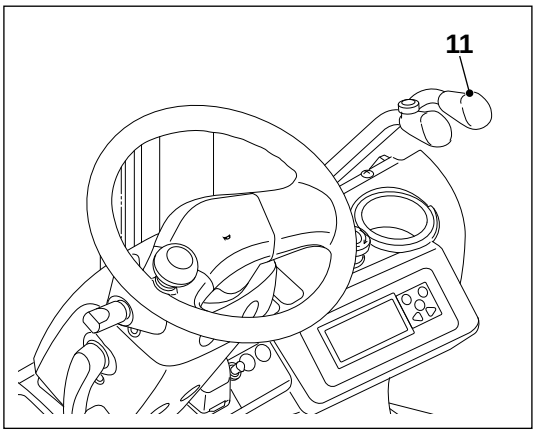

Tilt speed can be controlled by stroke of the tilt lever. Do not operate it roughly.
The tile function will not activate if the tilt lever is operated before turning on the key switch.

Operate hydraulic levers with sitting on the operator's seat.

12. Emergency stop switch

In case of emergency, press the emergency stop switch. The power supply is shut off and all functions are stopped. By turning the switch knob clockwise or pulling the switch knob, the truck can be powered on again.

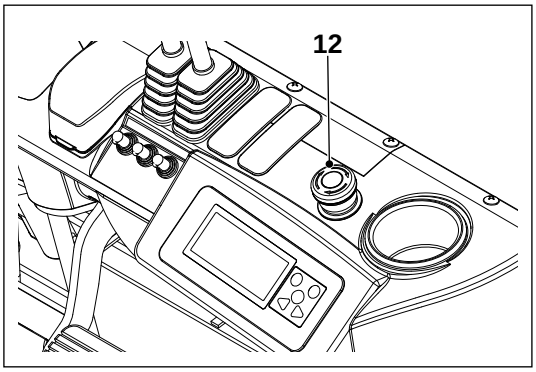

- **Except the emergency case, do not use the emergency stop switch.**
- **As the steering operaton also doesn't work at the same time as pressing the switch, it may cause serious accidents in case the switch is pressed during the traveling operation.**

https://truckmanualshub.com/

13. Directional switch

This switch is used to change the direction of traveling.

For forward **(A)** : Turn on the switch forward and depress the accelerator pedal.

For backward **(B)** : Turn on the switch backward and depress the accelerator pedal.

(Right side location or left side location is exactly the same usage.)

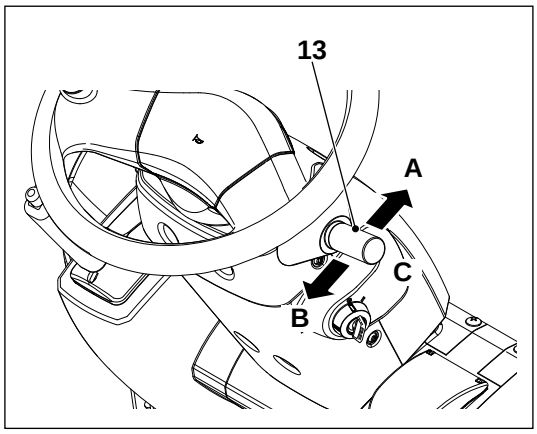

(This illustration shows the directional switch of right side location.)

Travel speed is changed by depressing angle of the accelerator pedal.

Do not flip the directional switch when changing the direction.

- It is dangerous because the directional switch is flipped back to unexpected direction.

Avoid fast start and sudden movements. This can cause the lift truck to tip over. Such movements can cause people to be hurt or killed and material can also be damaged.

Return the directional switch to the neutral position "C" when not traveling.

When the key switch is turned on with depressing the accelerator pedal and with turning on the directional switch forward or backward, the error message is appeared on the screen and all functions do not work. After moving the directional switch to the neutral position and releasing the accelerator pedal, turn on the key switch again to start operation.

14. Key switch

OFF **(A)** : This position turns off all electric circuit except some accessories and the key can be put in or taken off.

ON **(B)** : After turning on all electric circuit, the key switch is held in this [ON] position.

START **(C)**: This [START] position connects all electric circuit to allow the operation of the forklift truck and monitor display is turned on.
The key is returned to [ON] position automatically by releasing.

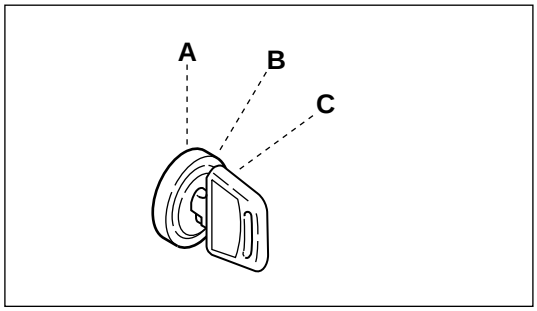

Automatic power off function :
Suspending the travel and hydraulic operation for 15 minutes, electric circuits are turned off automatically. Turn the key switch into the [START] position to turn the power on again.

https://truckmanualshub.com/

15. Rear assist grip (w/horn switch)

The operator can hold the body when traveling backward by grasping this grip. The push button **(A)** is a horn switch.
The operator can beep the horn with grasping the grip when traveling backward.

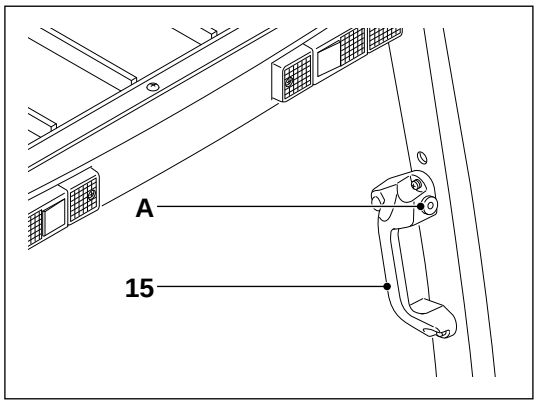

https://truckmanualshub.com/

Laser pointer (Option)

Function

The laser pointer is the laser-pointing device for a pallet to find the fork inserting position easily.

Specification

Voltage of power supply :
3 volts D.C. (supplied from the power circuit of a forklift truck)
Length of beam (Line type) :
Approximately 500 mm long at 1 m ahead
Width of beam (Line type) : 1 through 3 mm wide
Diameter of beam (Point type) : 2 through 5 mm dia.
Lighting power : Less than 1 mw
Laser class : 2

Features

● The laser beam

Line type (Standard)

The light beam is a line and easy to find out on a pallet.

► It is suitable for a bright colored pallet or using in a dark warehouse.

Point type (Option)

The light beam is the dot. It is brighter than the line type but it may not be easy to find the dot.

► It is suitable for the dark-colored pallet or using in a well-lighted warehouse.

● Fork leveling indicator lamp (set option with the laser pointer)

When the fork is leveled, the fork icon is appeared on the display with beeping the buzzer.
Another indicator lamp on the lift cylinder is also illuminated.
Operator can make sure the fork is leveled not only for picking the pallet but for pulling the fork out also from the pallet when stacking.

The fork level indicator lamp indicates that the fork is leveled when unloading. When loaded, the fork may not be leveled even the indicator lamp is lit because of the flexion of forks.

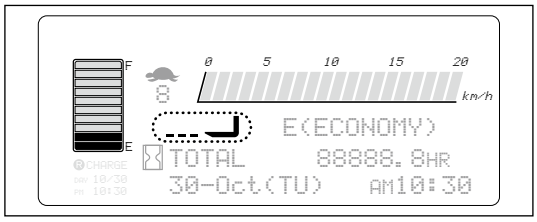

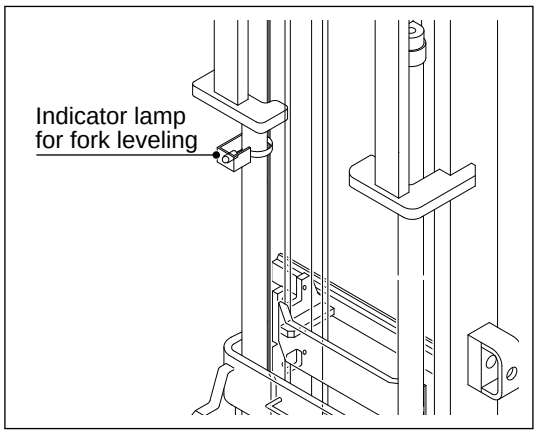

https://truckmanualshub.com/

For safe operation of laser pointer

Read and understand following cautions.

Check the focus of the laser beam before operation. If it is out of focus, contact your local NICHIYU dealer for adjustment.

Do not sprinkle water to the laser pointer.

Do not use the laser pointer on a slope. Then, it cannot detect the correct position.

Explain precautions about the laser beam to people who work around the forklift truck.

The laser beam is just a reference. Operator has to make sure visibly when inserting forks into a pallet.

The laser light is dangerous when eyes are exposed directly. Do not see the beam directly. Do not see the reflected beam by mirror also.

Do not disassemble or modify the laser unit.

Do not use this device in the place where any abnormality or incorrect activation of machines have experienced or expected by the laser beam.

https://truckmanualshub.com/

Name of each part

Switch for the laser pointer

To power on the laser pointer, turn the switch lever up.
When the fork is leveled, the laser pointer irradiates the laser beam and the fork leveling indicator lamp is lit.

To power off, turn the lever down.

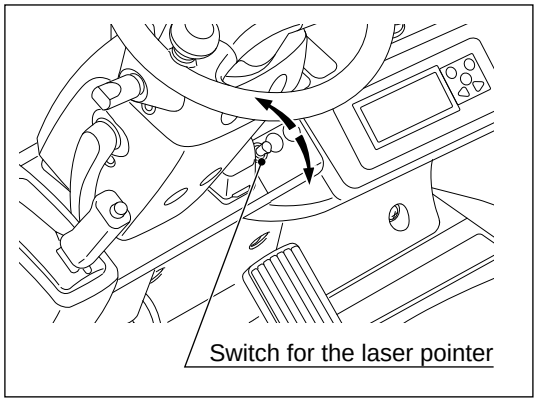

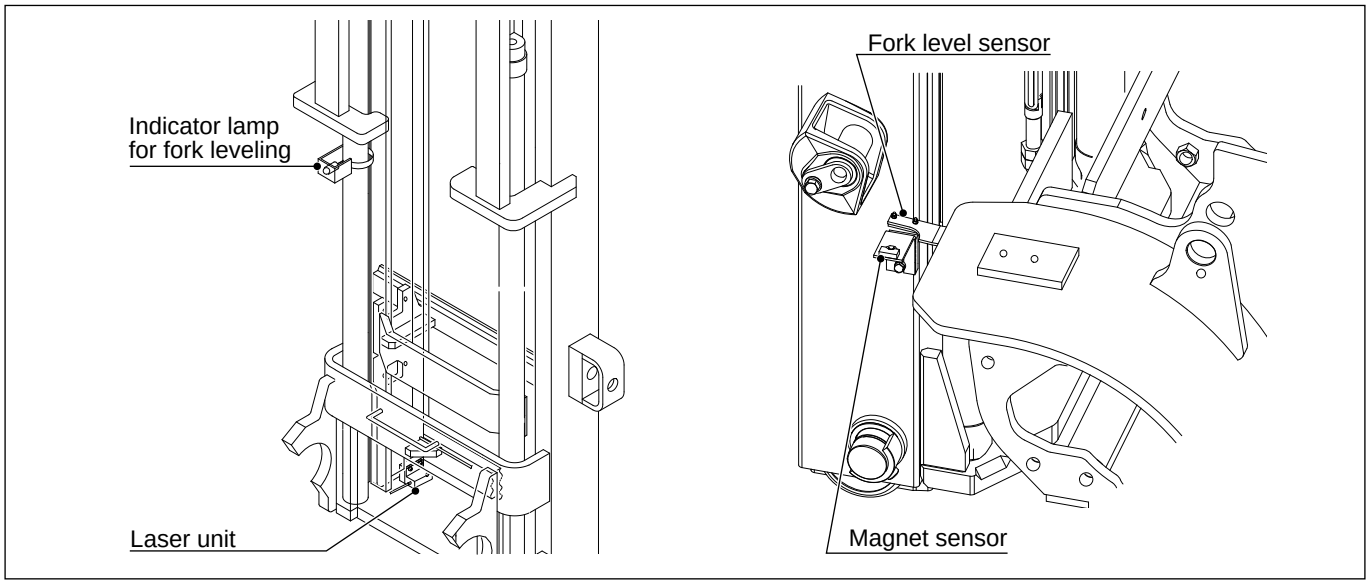

https://truckmanualshub.com/

General information for the laser pointer

The LASER POINTER has the laser unit (semiconductor laser) in it.
The laser is classified by the output power of the beam. Observe the following precautions.

The laser beam is very danger when it is irradiated to eyes.
- **Do not irradiate the beam to eyes directly.**
- **Do not irradiate the beam to animals.**
- **Do not see the beam even reflected.**

If saw the laser beam directly, avert eyes from it immediately.
The category of the laser unit in the LASER POINTER is Class 2.
Under this laser class, eyes are protected by winking several times.

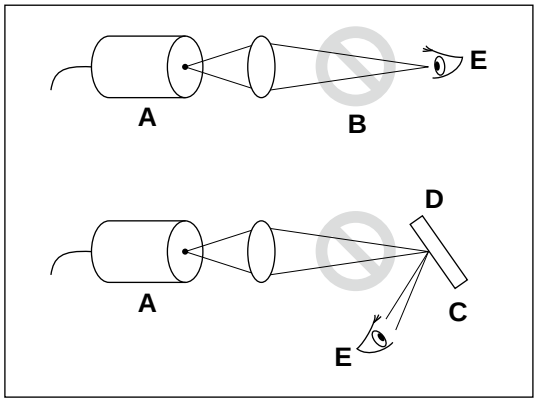

Classification of laser
The laser unit is classified by output power for evaluation of risk.
The classification is as follows.

Classification	Evaluation for danger
Class 1	No effect on human body.
Class 2	Eyes are protected by repugnant reaction such as winking.
Class 3A	Eyes are protected by repugnant reaction such as winking, but direct watching of the laser beam by an optical way is dangerous.
Class 3B	Direct watching of the laser beam is dangerous.
Class 4	High risk is expected for eyes to damage by the laser beam even diffused reflected. Skin damage or source of ignition also may be possible.

The category of the laser unit in the LASER POINTER is Class 2.

https://truckmanualshub.com/

Regarding to affections from or to the LASER POINTER with other equipment

(1) Affection to equipment that uses infrared rays
The wave length of the LASER POINTER (semiconductor laser) is 650 nm, and the general infrared rays are around 800 nm. So, it may not affect each other.

(2) Affection to wireless equipment, OA equipment and/or AGV (Automatic Guided Vehicle)
The laser beam is a lay of light which does not produce electromagnetic noise. So, it does not affect for radio waves.

(3) Affection to LASER POINTER from high-tension line or strong electric noise.
The weak point of the semiconductor laser is the surge (abnormal voltage) that is created by its high-speed response, and high temperature. The LASER POINTER is designed to protect from such circumstances. However, the arc-welding and/or induction noise from a high-tension line is bad for the LASER POINTER, and it may be affected under these circumstances. Therefore, the using place should be made sure not to affect to it. Leaving under direct sunshine in summer is caused high temperature and may shorten the lifetime or damage the laser unit.

The safety precautions of the laser beam shall be explained to operators and other workers around a forklift truck.

Do not use this device in the place where any abnormality or incorrect activation of machines have experienced or expected by the laser beam.

Modification prohibited
- **Do not disassemble, modify and/or adjust a potentiometer of the LASER POINTER. They are very dangerous.**
- **Do not watch a source of light even if not irradiated the beam.**
- **Do not replace with other similar device for the LASER POINTER.**

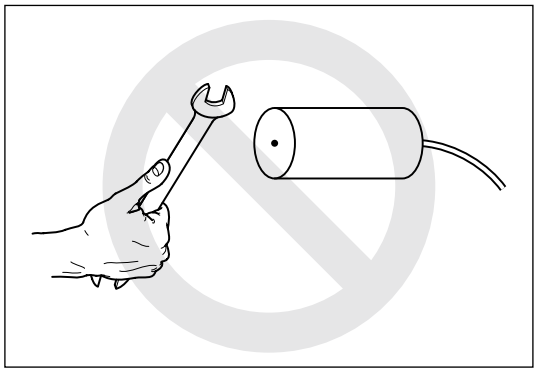

https://truckmanualshub.com/

3 DRIVING AND OPERATION

- **Do not operate the forklift truck prior to daily inspection.**
- **Inspect the forklift truck before you operate it to be sure that it is properly maintained and in good working order.**

Preparation of start

1) Check the directional switch (A) is in the neutral position (B) and the parking brake (C) is applied.

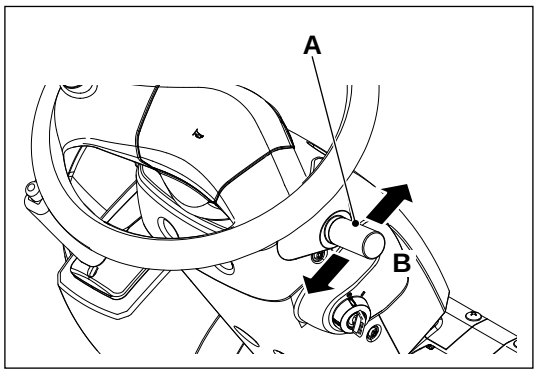

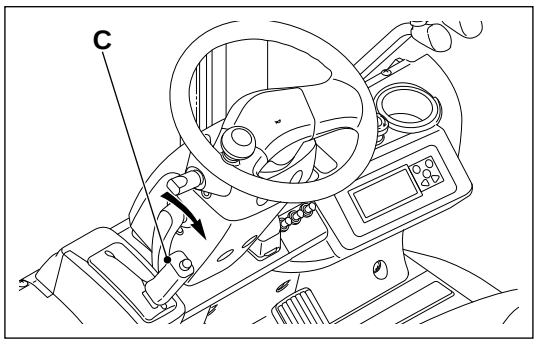

2) Turn on the key switch

Grasp the steering wheel knob and then turn on the key switch.

OFF : **D**
START : **E**
ON : **F**

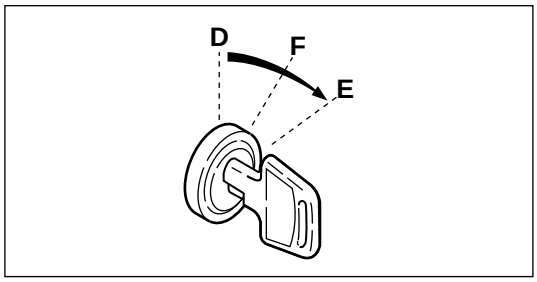

3) Tilting back the mast ass'y.

- Raise the forks about 150 to 200mm from the floor by the lift lever **(G)**.
- Tilt back the mast ass'y by the tilt lever **(H)**.

- The hydraulic speed is adjustable by operating angle of levers.
- If the hydraulic lever is operated when the key switch is turned on, the error message is appeared on the screen and all function are locked. Release all hydraulic levers and turn on the key switch again to start operation.

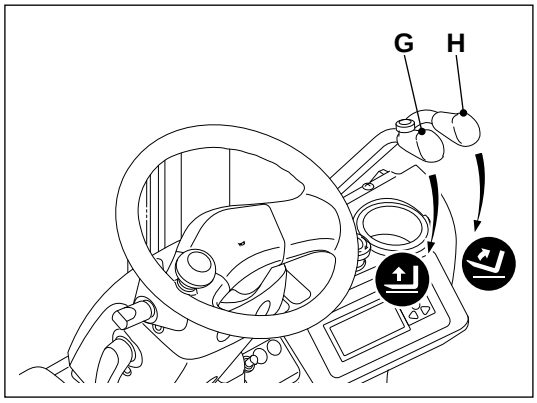

https://truckmanualshub.com/

4) Operation of the directional switch (A)

Operate the directional switch to the direction of traveling.

Forward **(B)** : Turn on the switch forward.

Backward **(C)** : Turn on the switch backward.

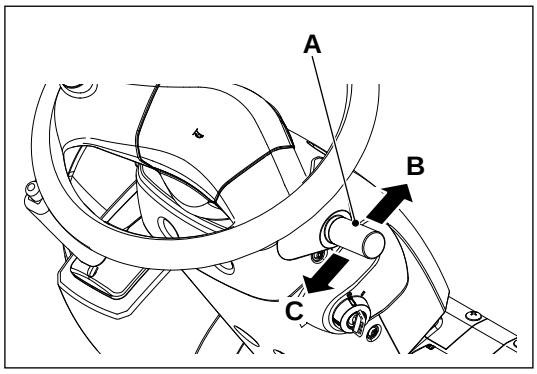

5) Release the parking brake

Depress the brake pedal.

Push the top button and brake lever forward fully to release the parking brake.

Grasp the steering wheel knob by the left hand, put the right hand lightly on the steering wheel.

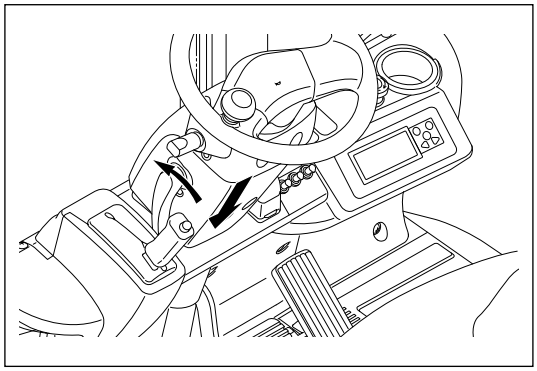

Traveling

1) Start

Release the brake pedal **(D)** and depress the accelerator pedal **(E)** gradually, then the lift truck will begin to move.

Acceleration varies in accordance with the depressing of the accelerator pedal.

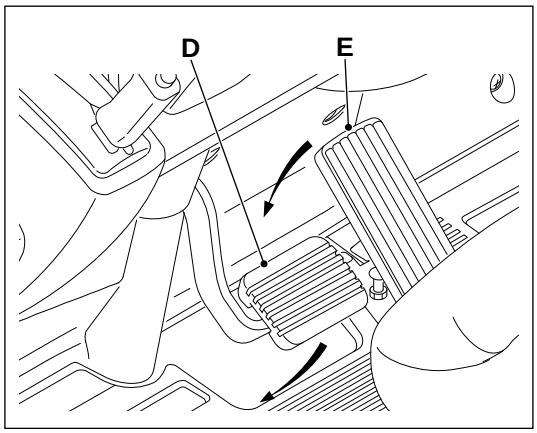

Do not start or stop the lift truck suddenly.

2) Turning

Slow down and operate steering wheel carefully and check to make sure the tail swing area is clear before turning.

3) Electrical brake (Plugging brake)

While traveling, if the directional switch is shifted in opposite position, the electrical brake should be activated.

Braking force varies in accordance with the depressing of the accelerator pedal.

https://truckmanualshub.com/

4) Stop

Slow down and apply the brake gradually. Do not apply brake suddenly.

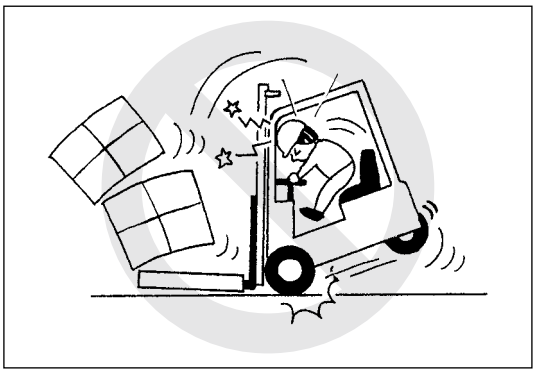

Do not apply brake suddenly.

5) Parking

When parking the lift truck,

- When getting off the lift truck, correctly apply the parking brake.
- Tilt the mast to forward and lower the forks on the floor.
- Do not park the lift truck on a slope.
- When leave the lift truck, remove the key.

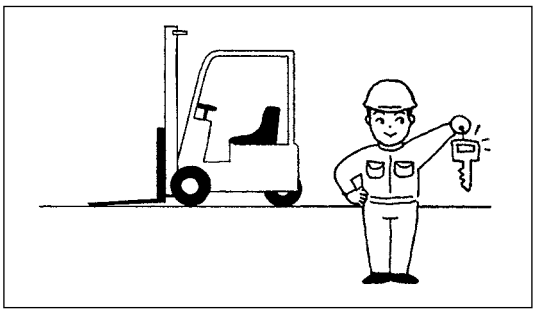

Stacking operation

Check the following items before operating forklift truck.
- **Make sure there is no load falling or damage of load at loading area.**
- **Make sure there is no foreign object in the stacking area.**

When stacking a load, observe the following procedures.

1. Reduce travel speed and stop in front of the stacking area.
2. Make sure it is safe around the stacking area.
3. Face the truck to the stacking position correctly.
4. Tilt the forks to horizontal position and raise the forks above the stacking position.

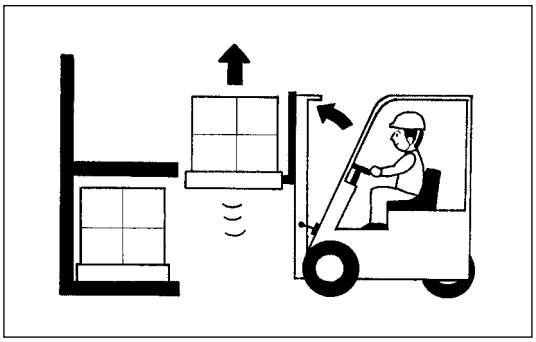

5. After making sure the stacking position and the pallet position again, travel forward slowly until the load, pallet, mast and truck do not touch around the stacking area.

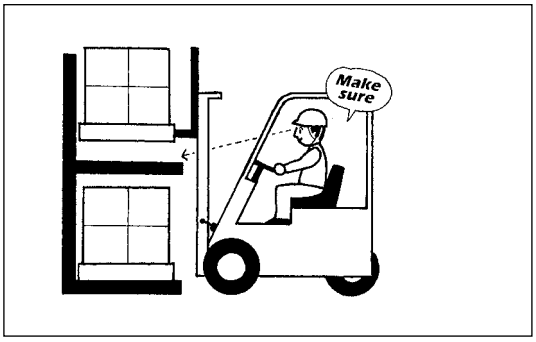

https://truckmanualshub.com/

6. Lower the forks slowly and make sure the load is placed on the stacking position correctly.

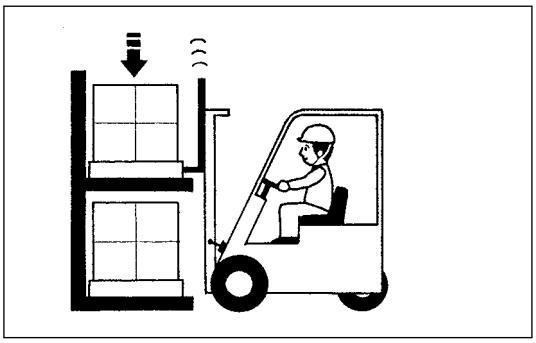

When the load is not aligned at the front or the rear, adjust such non-alignment according to the following procedures:
1) Lower the forks until the load is placed on the stacking position and the forks become free.
2) Travel backward slowly about 1/4 length of the forks.
3) Lift (50-100mm) the forks again and travel forward slowly to align the load. Lower the forks slowly in the proper stacking position.

7. Travel backward slowly until the forks do not touch the load and pallet.
8. Make sure the tips of the forks are off the load or pallet, and lower the forks to the traveling position (150-200mm from the ground).

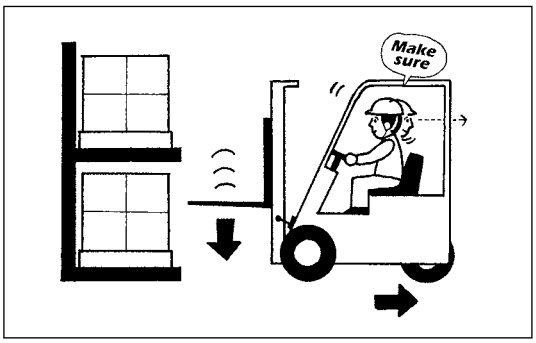

Picking operation

When picking a load, observe the following procedures:
1. Reduce travel speed and stop in front of the picking area. (about 300mm between the load and the tips of the forks.)
2. Face the truck to the picking position correctly.
3. Make sure the load is stable on the pallet.
4. Tilt the forks to horizontal position and raise the forks to the inserting position of the pallet.

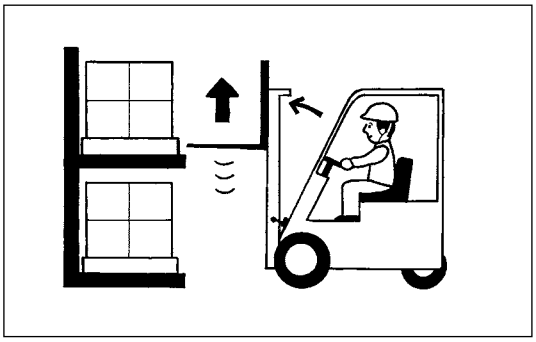

5. After making sure the inserting position of the pallet again, travel forward slowly until the forks are fully inserted into the pallet.

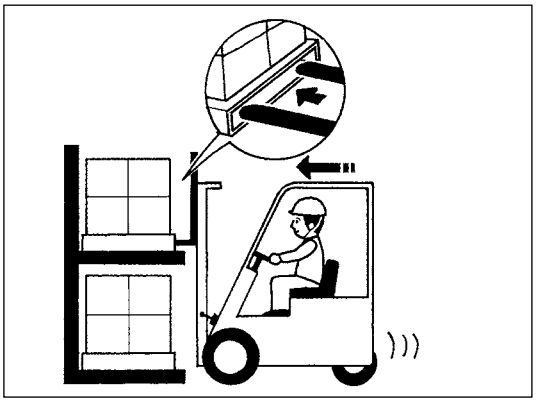

When it is difficult to fully insert the forks into the pallet:
1) Insert about 3/4 length of the forks and raise the forks a little (50-100mm).
2) Travel backward slowly about 100-200mm and lower the forks (place the pallet).
3) Insert the forks into the pallet fully with traveling forward.

https://truckmanualshub.com/

6. After inserting, raise the forks (50-100mm).
7. Travel backward slowly until the load and pallet do not touch around the picking area.

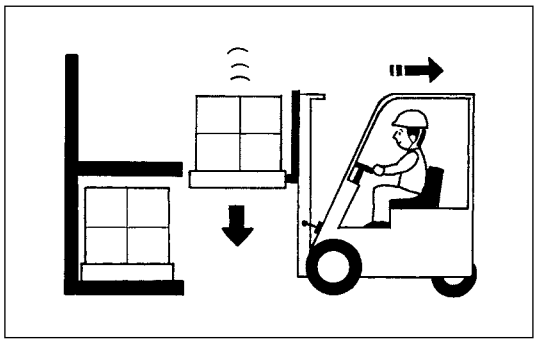

8. Make sure the load is completely out from the picking area. Lower the forks to the traveling position (150-200mm from the ground).
9. Tilt the forks up.

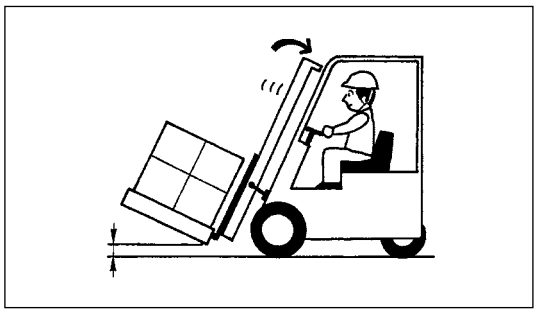

10. Carry the load to its destination.

https://truckmanualshub.com/

4 BATTERY AND CHARGER

Battery

- **This section explains NICHIYU's genuine battery and charger.**
- **When the lift truck is equipped with another type battery and/or charger, please follow the instructions provided by that manufacturer.**

Keep fire away

Do not make any short circuit and spark near the battery.
Also, do not bring any fire like a cigarette close to the battery.

Both while charging and discharging, the explosive gas is produced.
Smoking, flames or sparks can cause battery explosions.

Pay attention to an electric shock

Do not touch the conductive part at the time of installation and maintenance.
The battery has high voltage and power.

When servicing the battery, wear the safety goggles, rubber gloves and boots.

Connect correctly

Do not swap the positive and negative terminals.

●It can cause sparking, burning and/or explosion.

Keep tools away

Keep tools away from terminals to avoid sparks or shorting.

https://truckmanualshub.com/

Do not over-discharge

The battery life can be shortened by over-discharging.
For details, refer to the page 22.

Keep clean

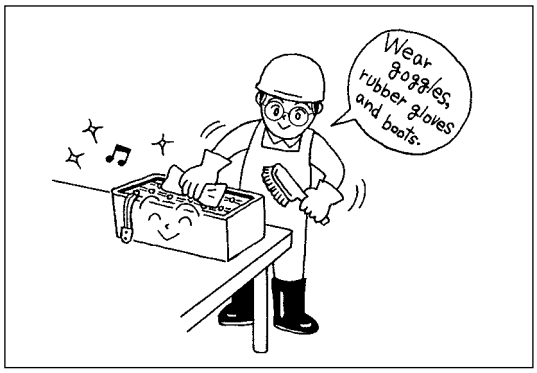

- **Keep the upper surface of the battery clean.**
- **Do not use a dry cloth when cleaning, as it may produce static electricity.**
- **Wear the safety goggles, rubber gloves and boots.**

Clean the battery before charging.

Wear safety clothes

Wear safety goggles, rubber gloves and boots to protect yourself.

Be careful the electrolyte

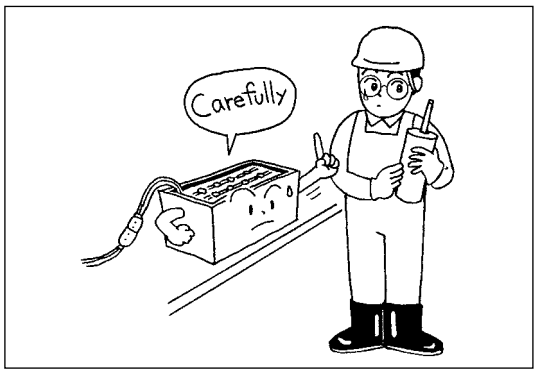

Be careful the electrolyte does not touch the skin.

- Electrolyte of the battery is sulfuric acid.

https://truckmanualshub.com/

Emergency first aid

The battery contains sulfuric acid which causes severe burns if touched.
If an accident occurs, receive emergency first aid and consult your physician immediately.

- **Spilled on skin:**
  Wash down with water for 10 to 15 minutes.
- **Splashed in eye:**
  Wash down with water for 10 to 15 minutes.
- **Swallowed:**
  Drink large amounts of milk or water.
- **Splashed on clothes:**
  Take off clothes immediately.

If you do not follow these instructions, you will be seriously injured or killed.

Close vent caps securely

Make sure all vent caps are closed securely. Failure to close the caps can cause leaking of electrolyte.

Washing

Do not wash the battery on the forklift truck. It causes damage to the truck.

Abnormal battery

If the battery shows the following situation, contact your local NICHIYU dealer.

- **The battery stinks.**
- **The electrolyte is muddy.**
- **The electrolyte decreases fast.**
- **The temperature of electrolyte is too high.**

Do not disassemble the battery.

Do not drain the electrolyte, disassemble and repair the battery.

https://truckmanualshub.com/

Storage

- **When storing the battery, store in a well-ventilated and dry place.**
- **Keep the battery away from open flames or ignitions.**

Do not dispose of used batteries.

Please contact your local NICHIYU dealer.

Precautions for charging the battery

Check electrolyte level

Do not use the forklift truck if the electrolyte level is low.

- Failure to keep proper level of the electrolyte can cause overheating or burning of the battery and electrical components of the forklift truck.
- Check electrolyte level once a week. If the level is low, add distilled water to the specific level.

Do not over-charge.

Do not over-charge the battery.

Pay attention to an electric shock

Do not touch the terminal or transformer when charging.

- The charger has high voltage and power when working.

Charge in well-ventilated areas.

- **Charge batteries only in approved and well-ventilated areas.**
- **Explosive gas comes out of the battery while charging. If you use the local supply charger, follow its manufacturer's instruction.**

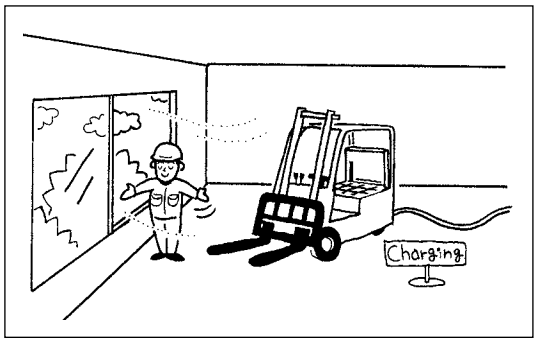

https://truckmanualshub.com/

Check cable and plug

Prior to charging, check the condition of the cable and plug.

Do not charge the battery if cable or plug is damaged.

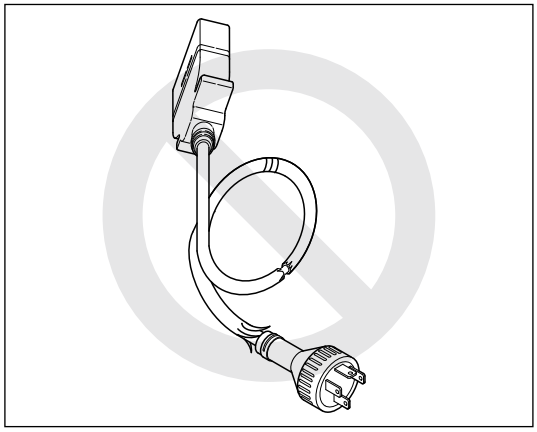

Check specific gravity

Measure the specific gravity of all cells before charge.

- The abnormality of the battery may be found by comparing of the specific gravity before and after charging. (Refer the section "Reading of specific gravity")

Interruption of charge

When interrupting the charge, push the STOP button of the charger before disconnecting plugs.

- **Failure to observe this instruction can cause a hazardous electrical shock or explosion of the battery by sparking.**

Kinds of charge

○ There are three kinds of charge. These charges are a normal charge, a balancing charge and a supplementary charge.
○ Charging time depends on the discharging condition and capacity of the battery.
○ Generally, 8 to 10 hours are required to charge the battery fully.

Classification	Application
Normal charge	After daily operation or when the "E" segment of the battery discharge indicator is lit.
Blancing charge	Every two weeks (Check electrolyte level and specific gravity)
Supplementary charge	In a recess
Charge for storage	Carry out the blancing charge before storing the battery for an extended time. (Periodical charge for every 15 to 30 days during storage is recomended.)

https://truckmanualshub.com/

Charger

Use the same value of a fuse for replacement.
If you need to replace the fuse for the charger, disconnect all input and output plugs first.

The supplied voltage should be stabilized within ±10% of the rated input voltage.

The charger should be used within 0°C to + 40°C ambient temperature.
If the temperature is 40°C or above, the charger may be overheated.

The charger shall be protected from the moisture such as rain and snow.
Failure to do so can cause an electrical short and/or fire.

Do not use the charger for other purpose.
The charger is designed to charge the battery for the truck.

Inspect plugs and cables of the charger periodically.
If you find any damages, do not use the charger until it is repaired.

The ground cable shall be connected.
Otherwise, an electrical shock hazard may be caused.

Do not disassemble or modify the charger.

Do not use the charger continuously to charge some batteries in turn.
The continuous use can cause overheating, and the charger may be damaged.

https://truckmanualshub.com/

Do not connect the charger plug to the chassis plug of the forklift truck.

- This may damage the forklift truck or the charger.

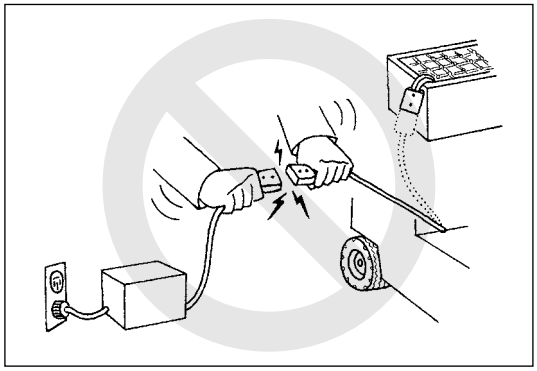

The charger plug [B] (from the charger) must be connect to the plug of battery side [A] securely.

- Insecure connection may overheat or get fire on the charger.

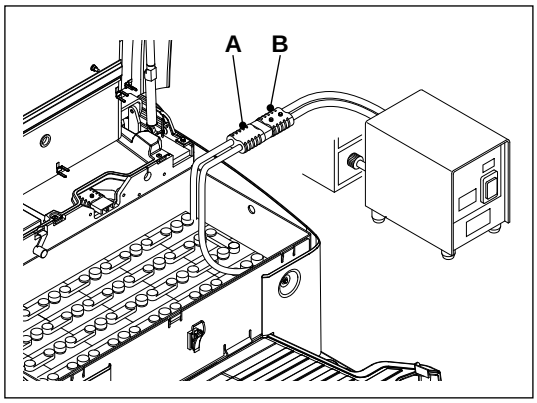

https://truckmanualshub.com/

How to charge the battery (By stationary charger)

Stationary charger

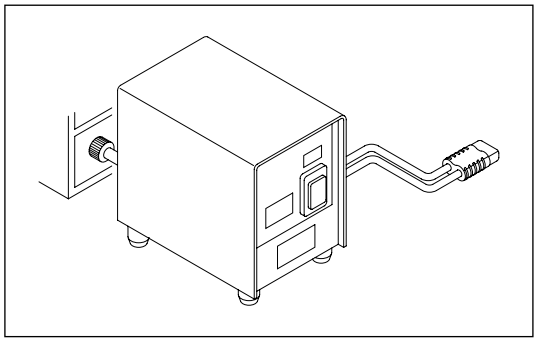

Control panel (Controller)

A : CHECK lamp (red)
B : AUTO lamp (red)
C : AUTO button for charge
D : EQUAL lamp (red)
E : EQUAL button for charge
F : STOP button
G : Indicating lamp (red) of charging state

Lamps indicate the state of charging. The four lamps turn on from bottom to top by turns in accordance with the charging state. All four lamps turn on when charged fully.

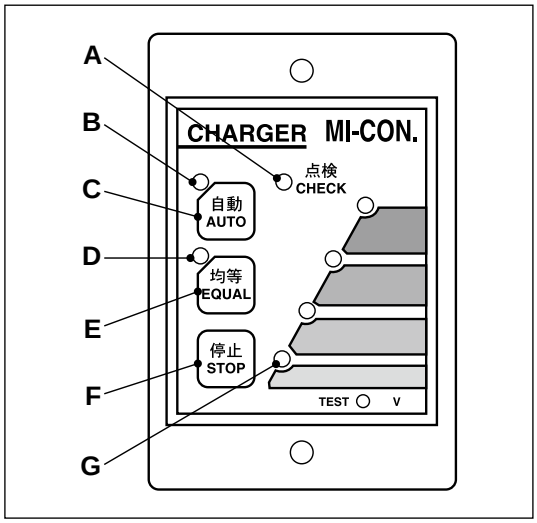

Normal (Daily charge)

This charge returns the battery to a fully charged condition after operating the forklift truck.

1. Move the forklift truck to designated charging area.

2. Turn off the key switch.

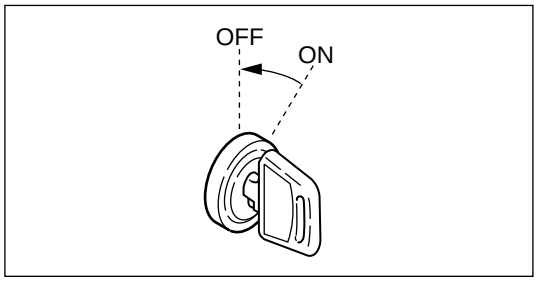

https://truckmanualshub.com/

3. Open the battery cover.

● Release the bonnet catch **(A)** and open the battery cover.

Gas spring (assist damper with self locking (B)) is used at the battery cover.
Make sure the condition of locking.

- **The hydrogen gas is generated while charging. Open the battery cover while charging the battery to release hydrogen gas.**
- **Do not charge the battery with closing the battery cover.**

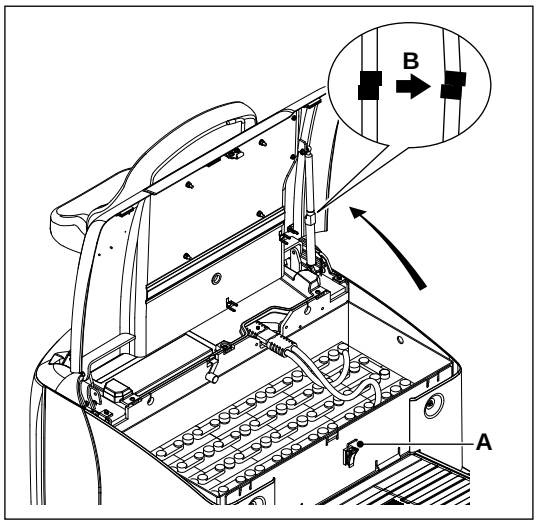

4. Disconnect battery plug (C).

* Disconnect the sub wire **(D)** also when the forklift truck is equipped with the optional battery electrolyte level.

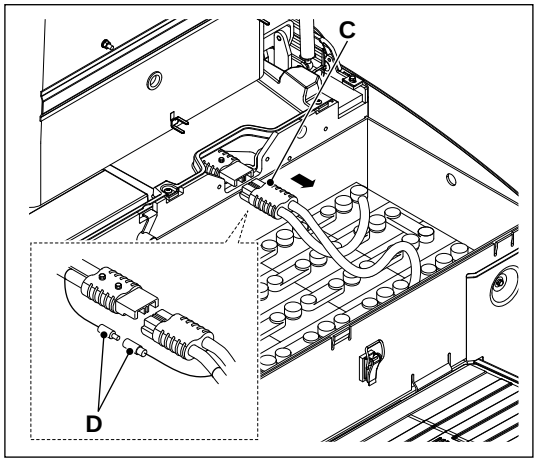

5. Connect charger plug (E) with the battery plug (C).

6. Connect the AC plug of the charger (F) with wall outlet.

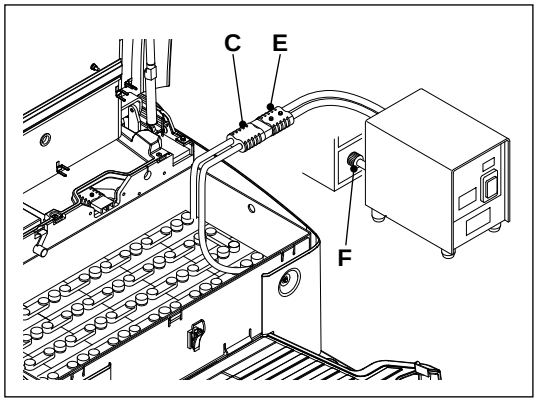

Then both "AUTO" and "EQUAL" lamps turn on.

If "AUTO" and "EQUAL" lamps do not turn on, make sure the charger's cable is connected correctly.

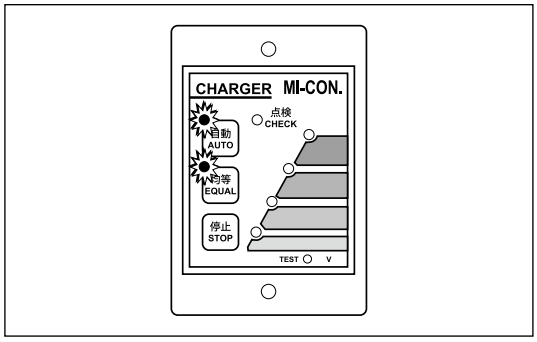

https://truckmanualshub.com/

7. Push the "AUTO" button.
The "AUTO" lamp (red) is turned on, and "EQUAL" lamp is turned off.

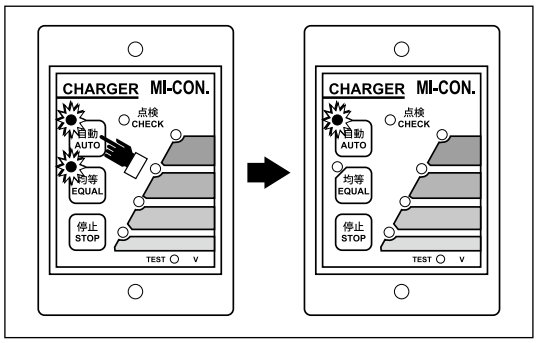

8. When charge is completed, all four lamps (red) of charging state are turned on.

9. Push the “STOP” button.

10. Disconnect the AC plug of the charger (F) with wall outlet.

11. Disconnect the battery plug (C) with the charger plug (E).

12. Connect the battery plug (C) with the plug of chassis side.
* Connect the sub wire (D) also when the forklift truck is equipped with the optional battery electrolyte level.

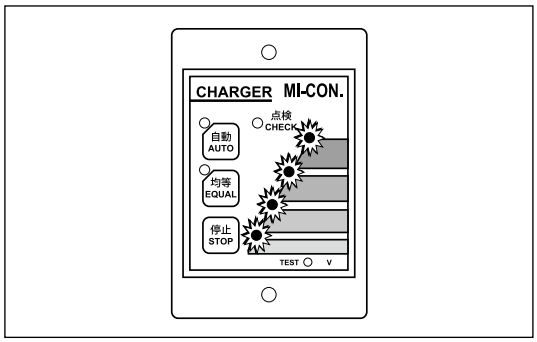

13. Close the battery cover.

● Push the yellow stopper at the center of the gas spring and close the battery cover.

Be careful not to pinch hands or fingers between the battery cover and the case.

Closing battry cover

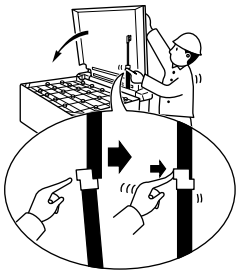

● Apply the bonnet catch after closing the battery cover.

- **Do not disconnect the AC plug of the charger, the charger plug and the battery plug while charging.**
- **Do not operate any hydraulic levers or accelerator pedal while charging.**
- **Push the "STOP" button when discontinue to charge.**

Do not touch any parts of charger and cable by wet hand.

● The charger operates with high voltage. Touch by wet hand may cause electrical shock.

https://truckmanualshub.com/

Balancing charge

Specific gravity of electrolyte in each cell becomes unbalanced after a certain time of charge.
In this case, charge the battery for a little bit longer than a normal charge in order to equalize all cells.

Manual balancing charge

Balancing charge is required for the following cases.

- Every two weeks when the forklift truck is operated every day.
- Not charged for a couple of days after discharged.
- Over-discharged.

○ **Charging procedure**

Push the "EQUAL" button the same way as with a normal charge.
"EQUAL" lamp (red) will turn on.

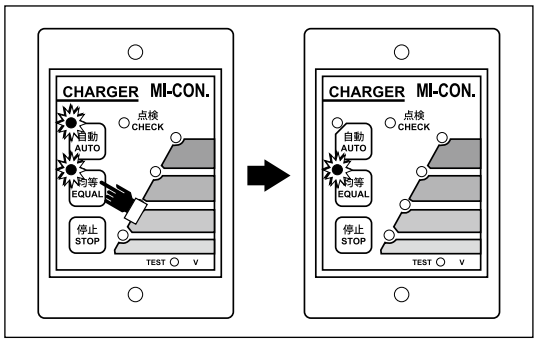

Supplementary charging

When one charge is not enough to finish the daily work, a supplementary charge should be done during a break time.
The procedure of the charge is the same as with a normal charge.

When the ambient temperature is low, the automatic supplementary charge function may be activated.
In this case, the "AUTO" lamp will flash while charging.

Push the STOP button first before disconnecting the battery plug when a charge is interrupted.

Charging for long time storage

In case that the forklift truck is not used for more than 2 weeks, carry out the balancing charge before storage.
Also the periodical charge for every 15 to 30 days is recommended while in storage.

Check the specific gravity

After charging the battery, check the specific gravity.
(Refer the section of "Level of electrolyte and specific gravity" for details.)

https://truckmanualshub.com/

How to charge the battery (By built-in charger)

- **If the operator leaves the seat without applying the parking brake, the parking brake alert works and the built-in charger does not start even if the charging cable is connected properly. (The charging screen is not shown on the display.) In this case, apply the parking brake before charging the battery.**
- **If the parking brake is released during charging the battery or a ready and waiting in the reserve charge, the charging is not stopped. After completion of the charging or after pushing the stop button and disconnecting the plug (for receptacle), the parking brake alert starts working.**

Built-in charger (Option)

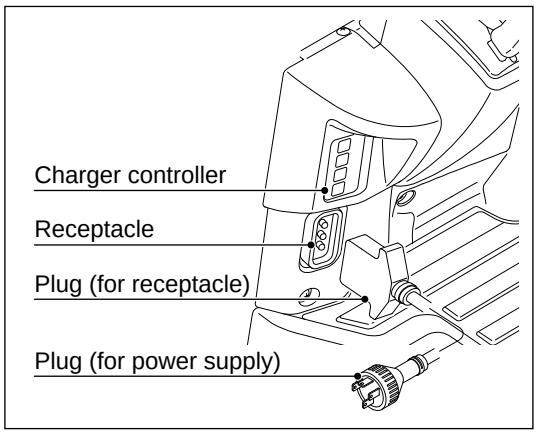

Charger controller

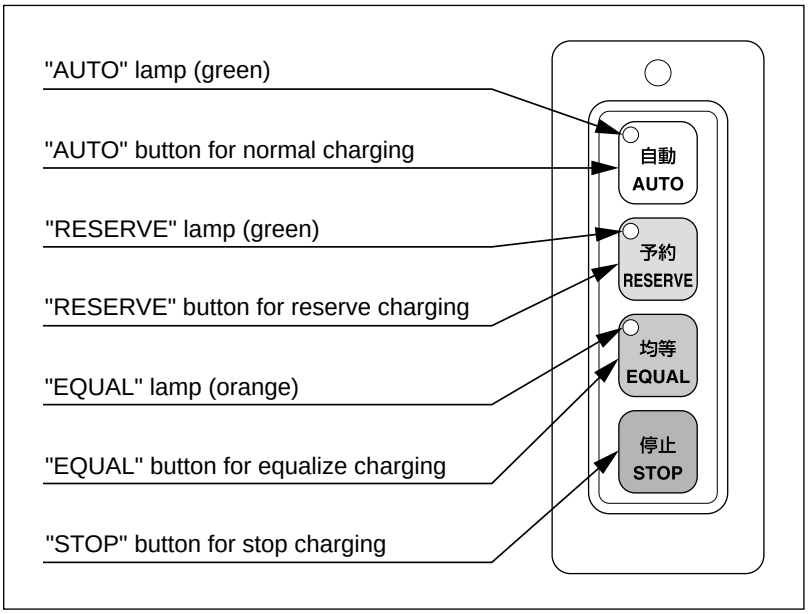

Normal (Daily charge)

This charge returns the battery to a full-charged condition after operating the forklift truck.

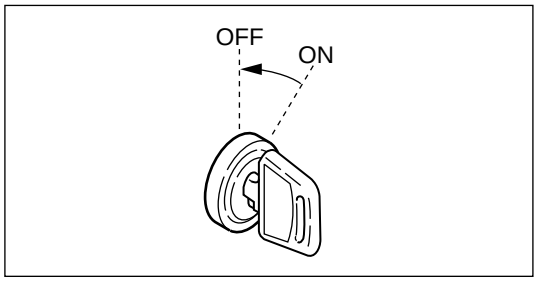

1. **Move the forklift truck to designated charging area.**
2. **Turn off the key switch and remove the key.**

https://truckmanualshub.com/

3. Release the bonnet catch (A) and open the battery cover.

Gas spring (assist damper with self locking (B)) is used at the battery cover.
Make sure the condition of locking.

- **The hydrogen gas is generated while charging. Open the battery cover while charging the battery to release hydrogen gas.**
- **Do not charge the battery with closing the battery cover.**

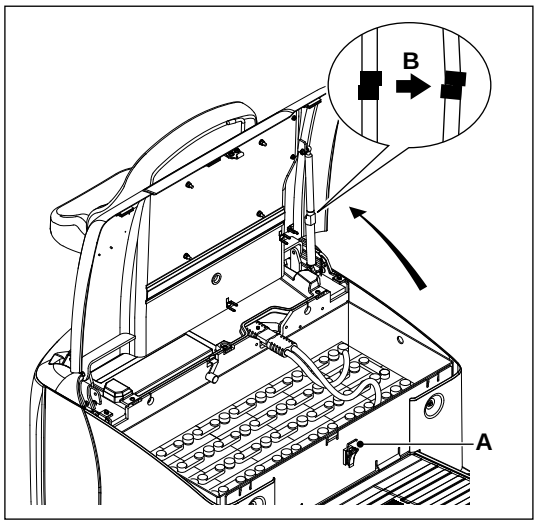

4. Connect the plug of the AC cable (C) to the receptacle.

5. Connect the plug (D) to wall outlet.

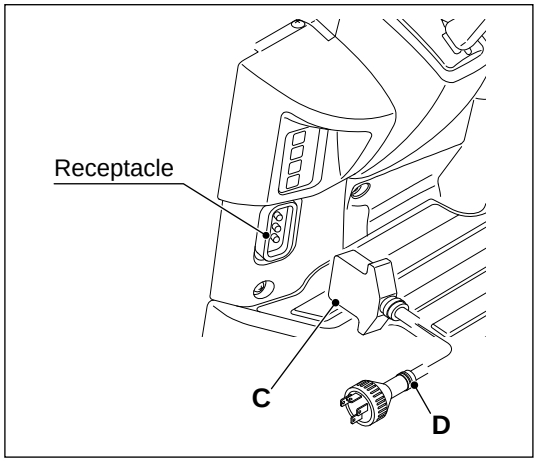

Then, all "AUTO", "RESERVE" and "EQUAL" lamps are turned on.

If these lamps are not turned on, make sure the AC cable is connected correctly.

6. Push the “AUTO” button.
The "AUTO" lamp (green) is lit. Both "RESERVE" and "EQUAL" lamps are turned off.

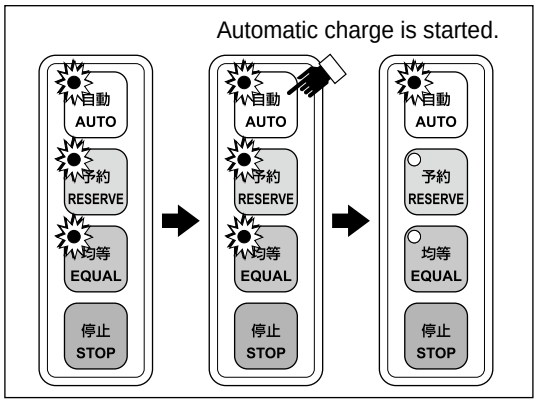

When starting to charge the battery, the display on the truck is turned on and shows the charging status on the battery indicator.

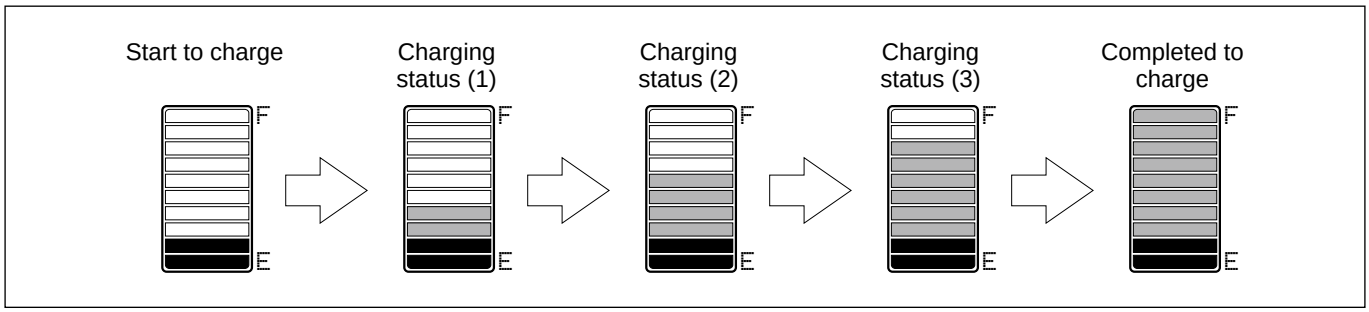

https://truckmanualshub.com/

7. When the charging is completed, the message of "CHARGE COMPLETION" is shown on the display.

8. Push "STOP" button on the charger controller.

- If the charging is not completed within 16 hours, the message of "TIME UP !" is shown on the display to inform abnormal completion.
- This message is cleared when disconnecting the plug of the AC cable.
- In case the message comes up, contact your local NICHIYU dealer.

- **In case the power supply is shut off while charging the battery, the display is turned off once. When the power supply is recovered within one hour, the charging will be started again. When the power supply is not recovered within one hour, the charging will not be started and completely shut off. (The display is turned off either.)**
- **In case the AC cable is not disconnected and the ambient temperature is less then 5 °C as at 44 hours after completion of the charging, the supplementary charging will be started only once.**

Charge completion screen

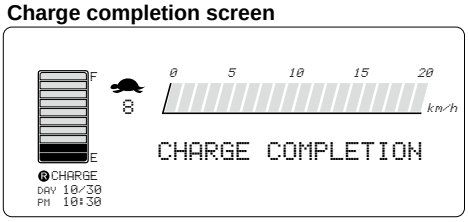

"TIME UP" screen

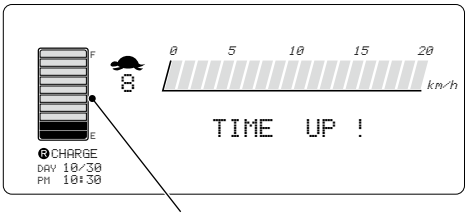

The gauge of the battery discharge indicator is flashed.

9. Disconnect the plug (D) from wall outlet.

10. Disconnect the plug of the AC cable (C).
Then, the display is turned off.

11. Push the yellow stopper at the center of the gas spring and close the battery cover.

Be careful not to pinch hands or fingers between the battery cover and the case.

Closing battry cover

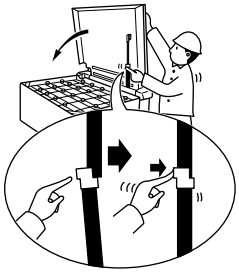

12. Apply the bonnet catch after closing the battery cover.

- **Do not disconnect the plug (for receptacle and for power supply) and the battery plug while charging.**
- **Do not operate any hydraulic levers or accelerator pedal while charging.**
- **Push the "STOP" button when discontinue to charge.**

Do not touch any parts of charger, plug and cable by wet hand.

- The charger operates with high voltage. Touch by wet hand may cause electrical shock.

https://truckmanualshub.com/

Reserve charge

This function is the timer to start charging of the battery. If you want to start charging after a while, or a few days later, for example, this is very convenient function. This function can charge the battery as the "AUTO" mode only.

● Setting of the starting time

- **If any operation of traveling or hydraulics are done while setting the timer, the setting screen is returned to the normal screen immediately.**
- **This setting cannot be activated while traveling and depressing the brake pedal.**

1. Move the forklift truck to appropriate area and park.
2. Push the Ⓡ button of the mode select switch to get the reserve charge setting screen. (If pushing MODE button, the screen returns to the normal.)
   The reserve charge setting screen appears when the AC cable is connected to the charger panel also.
3. Push ◁ or ▷ button to select **"DATE"** or **"EVERY DAY"**.

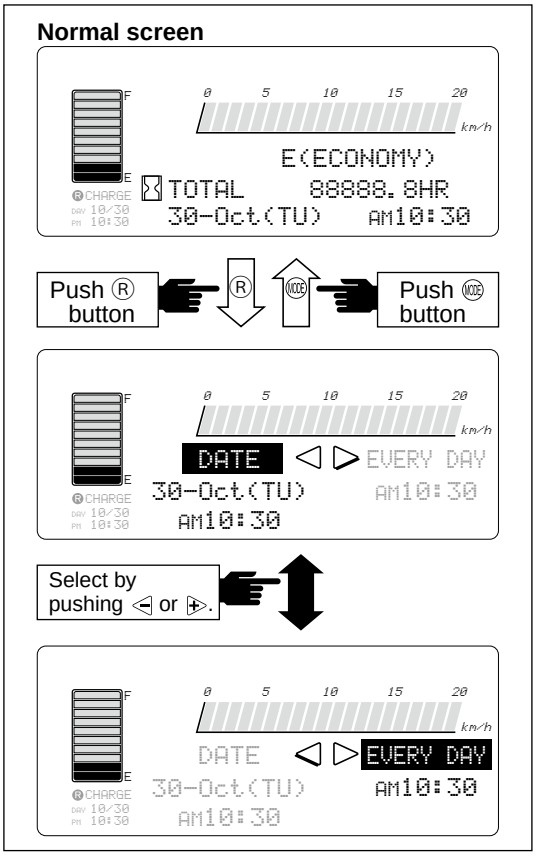

When selecting "DATE"
The reserved time is revised automatically to the same time of seven (7) days later after expiring it.
It is convenient to charge the battery every weekend.

When selecting "EVERY DAY"
The reserved time is revised automatically to the same time of the next day after expiring.
It is convenient to charge the battery everyday.

The displayed time is the starting time of charge. It is not the finishing time of charge.

https://truckmanualshub.com/

● In case of setting of "DATE"

Select **"DATE"** by pushing ◁ or ▷.
Screen displays the current setting. (or no date is displayed if not set before.)
Push Ⓡ button to move the cursor to the month.
Push Ⓜ button to get the normal screen.

> When setting the mode of next (1) to (5), each button works as below.
> ● ◁ and ▷ buttons : Move the cursor to select the value.
> ● Ⓡ button : Move the cursor to the next item.
> ● Ⓜ button : Back the cursor to the previous item.

"DATE" screen

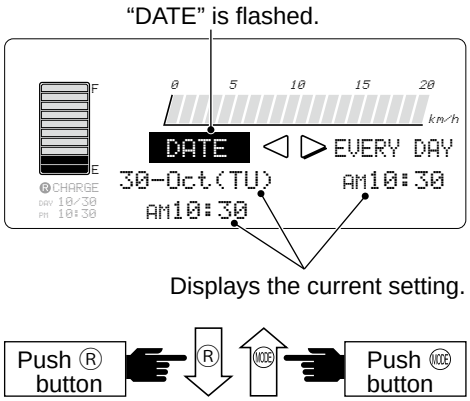

(1) Set the month

Push ◁ or ▷ button to set the month.
After setting of the month, push Ⓡ button to select the date.
If pushing Ⓜ button, the cursor is returns to the **"DATE"** or **"EVERY DAY"** area.

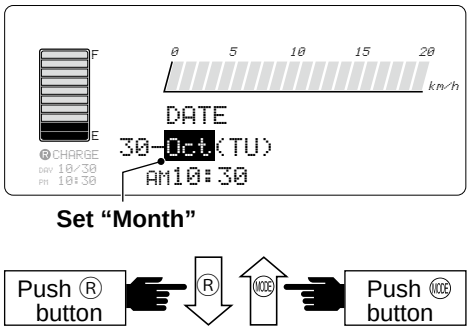

(2) Set the date

Push ◁ or ▷ to select the date. The day of the week is displayed automatically by setting the date.
After setting the date, push Ⓡ button to move the cursor to the time (AM or PM).
If pushing Ⓜ button, the cursor is returned to the month area.

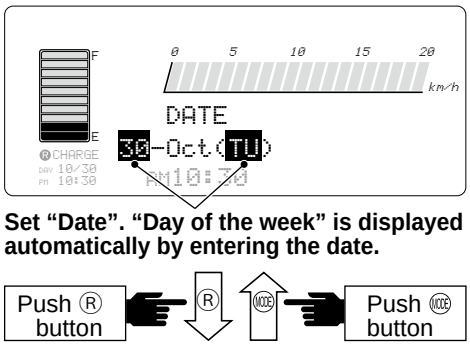

(3) Set the AM or PM

Push ◁ or ▷ to select **"AM"** or **"PM"**.
After the setting, push Ⓡ button to move the cursor to the hour.
If pushing Ⓜ button, the cursor is returned to the data area.

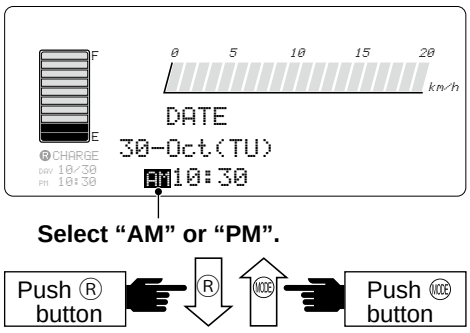

https://truckmanualshub.com/

(4) Set the hour

Push ⊖ or ⊕ to change the hour. Hour can be selected from 1 through 12.
After setting the hour, push Ⓡ button to move the cursor to the minute.
If pushing MODE button, the cursor is returned to the AM or PM area.

(5) Set the minute

Push ⊖ or ⊕ to set the minute. The minute can be set to "00", "15", "30" or "45".
After setting, push Ⓡ button. Then, "COMPLETE" sign is flashed three times and the display returns to the normal screen.
If pushing MODE button, the cursor is returned to the hour area.

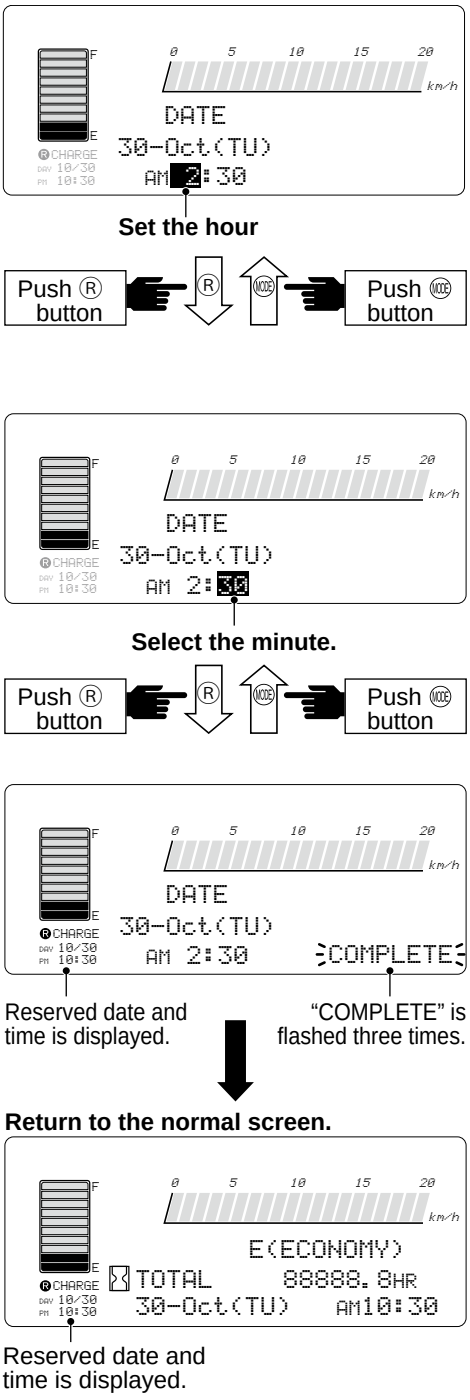

Make sure that the reserved date and time which are displayed at the left lower corner of the screen is correct.

- **The past date and time cannot be set.**

Example

Current time	30-Oct (TU), 2011,	PM10:30
	▼	
Input date and time	30-Oct (TU),	**PM10:00**
	▼	
Reserved setting	30-Oct (TU), **2012,**	**PM10:00**

If input the past date and time, it is memorized as the same date and time of the next year.

*** If the reserved date and time is become past by setting the current date and time, the same situation is occurred.**

- **The reservation is invalid if all required data are not entered.**

Example : Input data 30-**"blank"** (TU), PM10:30 ► **invalid**

If any data is not entered (blanked) and move to the next step, all data in that screen will be invalid and deleted.

https://truckmanualshub.com/

● In case of setting of "EVERY DAY"

Push ◁ or ▷ to select **"EVERY DAY"**. The screen displays the current setting. If not set before, no data are displayed.
Push Ⓡ button to move the cursor to AM/PM.
Push MODE button to return to the previous screen.

When setting the mode of next (1) to (3), each button works as below.
- ◁ and ▷ buttons : Move the cursor to select the value.
- Ⓡ button : Move the cursor to the next item.
- MODE button : Back the cursor to the previous item.

"EVERY DAY" screen

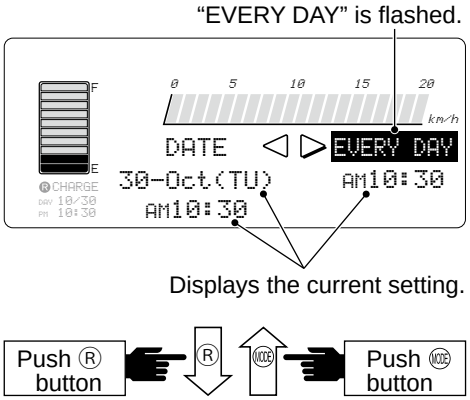

(1) Set the AM or PM
Push ◁ or ▷ to select **"AM"** or **"PM"**.
After selecting, push Ⓡ button to move the cursor to the hour.
If pushing MODE button, the cursor is returns to the **"DATE"** or **"EVERY DAY"** area.

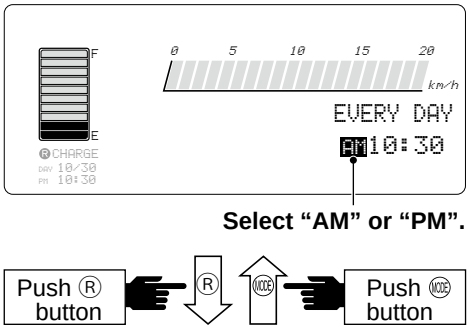

(2) Set the hour
Push ◁ or ▷ to set the hour. The hour can be set from 1 through 12.
After setting, push Ⓡ button to move the cursor to the minute.
If pushing MODE button, the cursor is returned to the AM or PM area.

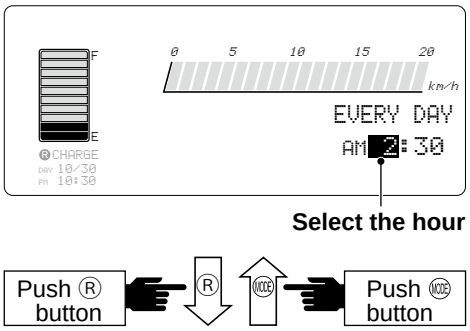

(3) Set the minute
Push ◁ or ▷ to set the minute. The minute can be set to "00", "15", "30" and "45".
After setting the minute, push Ⓡ button. Then, "COMPLETE" sign is flashed three times and return to the normal screen.
If pushing MODE button, the cursor is returned to the hour area.

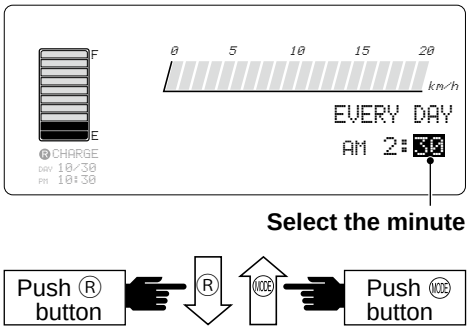

https://truckmanualshub.com/

Make sure that the reserved date and time which are displayed at the left lower corner of the screen is correct.

- **The past time cannot be set.**

Example

Current time	30-Oct (TU), 2012, PM10:30
▼	
Input date and time	**PM10:00**
▼	
Reserved setting	**31**-Oct (FR), 2012**, PM10:00**

If input the past time, it is memorized as the same time of the next day.

*** If the reserved time is become past by setting the current date and time, the same situation is occurred.**

- **The reservation is invalid if all required data are not entered.**

Example : Input data PM-**"blank"** : 00 ► **invalid**

If any data is not entered (blanked) and move to the next step, all data in that screen will be invalid and deleted.

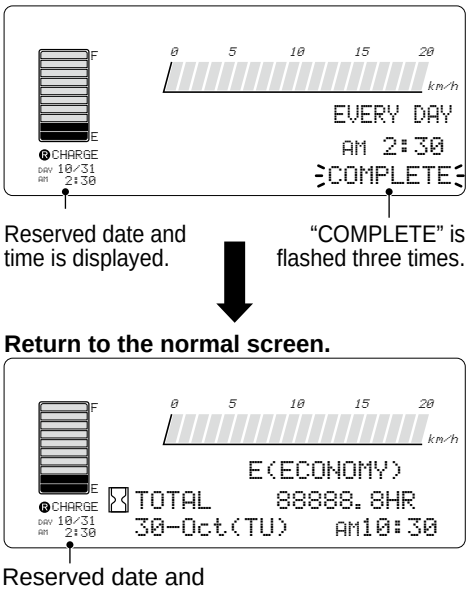

After the completion of the reserve setting, its data is renewed automatically after the past of its time.
In case of "EVERY DAY", it is renewed to the same time of the next day.
In case of "DAY", it is renewed to the same time of seven (7) days later.

https://truckmanualshub.com/

● Reserve charge

This mode starts to charge the battery by the preset date and time.

1. **Move the forklift truck to designated charging area.**
2. **Turn off the key switch and remove the key.**

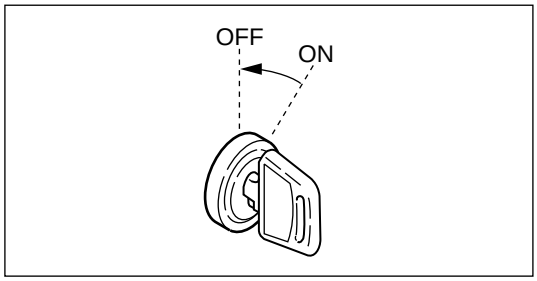

3. **Release the bonnet catch (A) and open the battery cover.**

Gas spring (assist damper with self locking (B)) is used at the battery cover.
Make sure the condition of locking.

- **The hydrogen gas is generated while charging. Open the battery cover while charging the battery to release hydrogen gas.**
- **Do not charge the battery with closing the battery cover.**

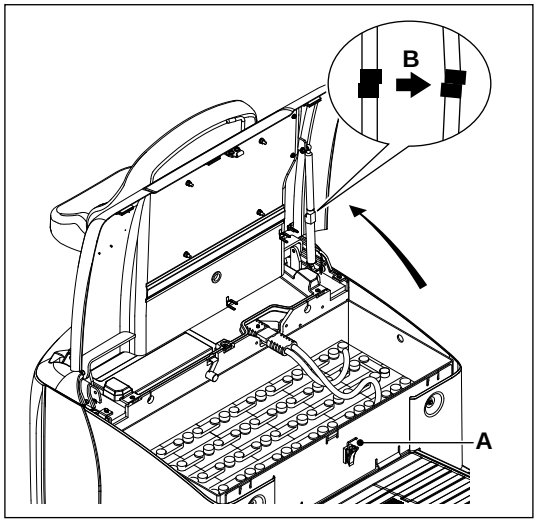

4. **Connect the plug of the AC cable (C) to the receptacle.**
5. **Connect the plug (D) to wall outlet.**

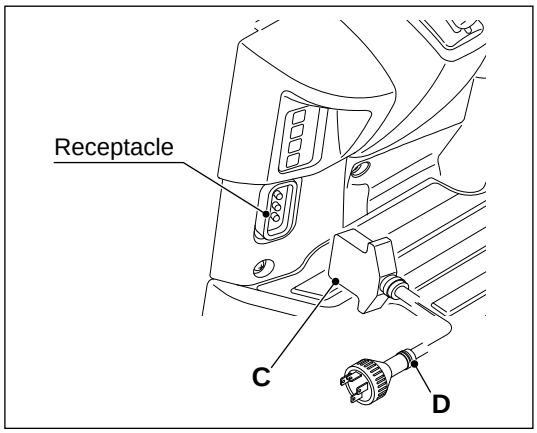

Then, all "AUTO", "RESERVE" and "EQUAL" lamps are turned on.

If these lamps are not turned on, make sure the AC cable is connected correctly.

5. **Push "RESERVE" button.**
6. **The "RESERVE" lamp (green) is lit. Both "AUTO" and "EQUAL" lamps are turned off.**

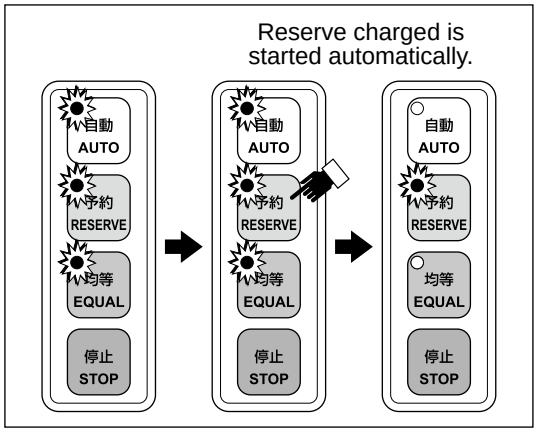

https://truckmanualshub.com/

When starting to charge the battery, the display on the truck is turned on and shows the charging status on the battery indicator.

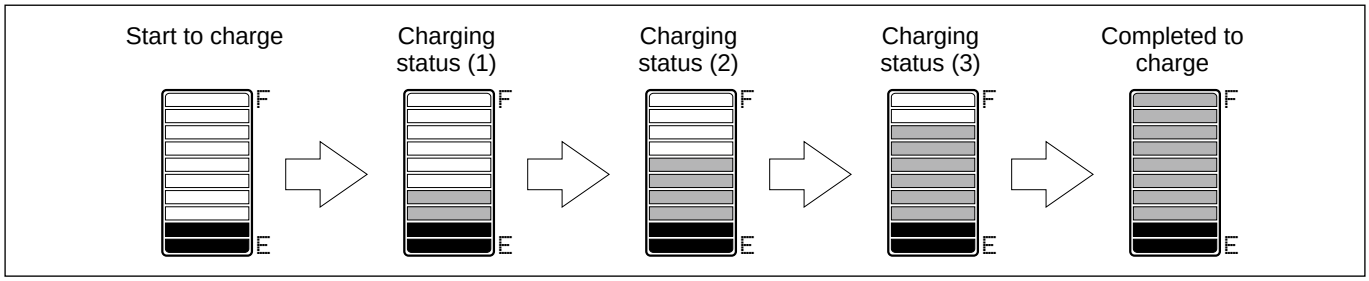

7. When charging is completed, the message of "CHARGE COMPLETION" is shown on the display.

8. Push "STOP" button on the charger controller.

- If the charging is not completed within 16 hours, the message of "TIME UP !" is shown on the display to inform abnormal completion.
- This message is cleared when disconnecting the plug of the AC cable.
- In case the message comes up, contact your local NICHIYU dealer.

To cancel the reservation, push the "STOP" button on the charger controller. To change the reservation, push the "RESERVE" button on the charger controller.

- **In case the power supply is shut off while charging the battery, the display is turned off once. When the power supply is recovered within one hour, the charging will be started again. When the power supply is not recovered within one hour, the charging will not be started and completely shut off. (The display is turned off either.)**
- **In case the AC cable is not disconnected and the ambient temperature is less then 5 °C as at 44 hours after completion of the charging, the supplementary charging will be started only once.**

Charge completion screen

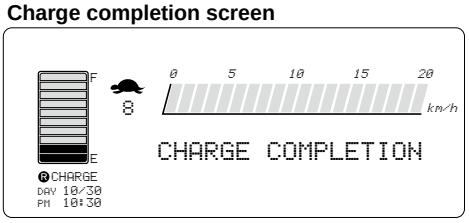

"TIME UP" screen

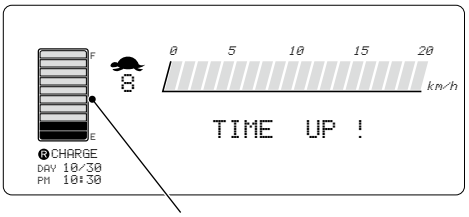

The gauge of the battery discharge indicator is flashed.

9. Disconnect the plug (D).

10. Disconnect the plug of the AC cable (C).
Then, the display is turned off.

11. Push the yellow stopper at the center of the gas spring and close the battery cover.

Be careful not to pinch hands or fingers between the battery cover and the case.

Closing battry cover

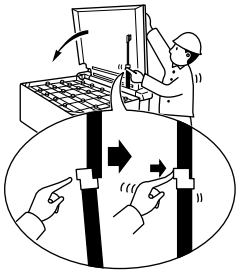

https://truckmanualshub.com/

12. Apply the bonnet catch after closing the battery cover.

- **Do not disconnect the plug (for receptacle and for power supply) and the battery plug while charging.**
- **Do not operate any hydraulic levers or accelerator pedal while charging.**
- **Push the "STOP" button when discontinue to charge.**

Do not touch any parts of charger, plug and cable by wet hand.

- The charger operates with high voltage. Touch by wet hand may cause electrical shock.

Balancing charge

Specific gravity of electrolyte in each cell becomes unbalanced after a certain time of charge. In this case, charge the battery for a little bit longer than a normal charge in order to equalize all cells.

Automatic balancing charge
In the case of the built-in charger, the controller selects the "EQUAL" mode automatically once of ten charges even pushing the "AUTO" button.

Manual balancing charge
Balancing charge is required for the following cases.
- Every two weeks when the lift truck is operated every day.
- Not charged for a couple of days after discharged.
- Over-discharged.

○ Charging procedure

Push the "EQUAL" button as the same way as with a normal charge.
"EQUAL" lamp (orange) will turn on.

If the battery plug is disconnected, the memorize of time of charging is cleared in the controller and the automatic balancing charge function is not activated properly. In this case, the manual balancing charge is recommended.

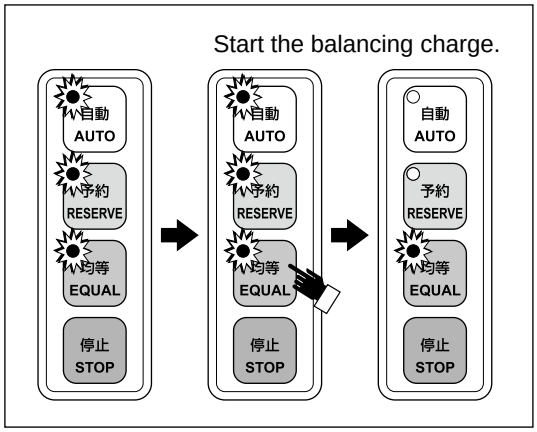

https://truckmanualshub.com/

Supplementary charging

When one charge is not enough to finish the daily work, a supplementary charge should be done during a break time.

The procedure of the charge is the same as with a normal charge.

When the ambient temperature is low, the automatic supplementary charge function may be activated.

Push the STOP button first before disconnecting the battery plug to stop a charge.

Charging for long time storage

In case that the forklift truck is not used for more than 2 weeks, carry out the balancing charge before storage.
Also the periodical charge for every 15 to 30 days is recommended while in storage.

Check the specific gravity

After charging the battery, check the specific gravity.
(Refer the section of "Level of electrolyte and specific gravity" for details.)

https://truckmanualshub.com/

Exchanging battery

- **When an exchange of battery is required, the discharged battery should be charged as soon as possible. (Do not use the same charger continuously.)**
- **Exchange the battery on the flat floor with following procedure.**

The wrong battery size can cause a reduced work time and poor stability. Poor stability could cause the lift truck to overturn. Observe the following range of the battery weight.

	FBT9P	FBT10P	FBT13P	FBT15P	FBT16P	FBT18P FBT20PN	FBT16PB FBT18PB FBT20PBN
Minimum	430 kg	485 kg	530 kg	565 kg	565 kg	630 kg	1025 kg
Maximum	465 kg	615 kg	710 kg	930 kg	1010 kg	1010 kg	1155 kg

○ Procedure to exchange

1. Turn off the key switch.

2. Release the bonnet catch **(A)** and open the battery cover.

Gas spring (assist damper with self locking (B)) is used at the battery cover.
Make sure the condition of locking.

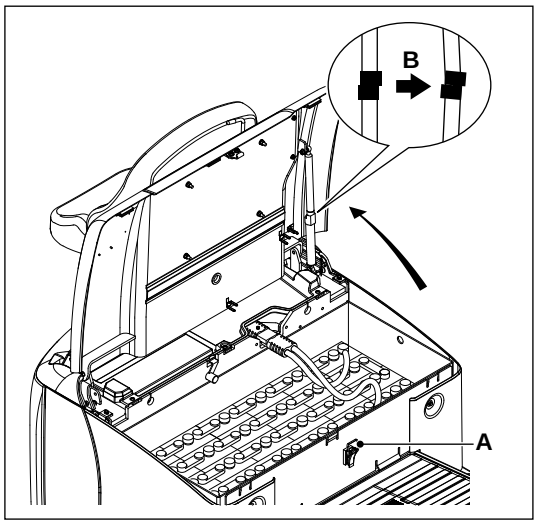

3. Disconnect the plug of battery side **(C)**.
   * Disconnect the sub wire (D) also when the forklift truck is equipped with the optional battery electrolyte level.

4. Remove the stopper pin **(E)**.

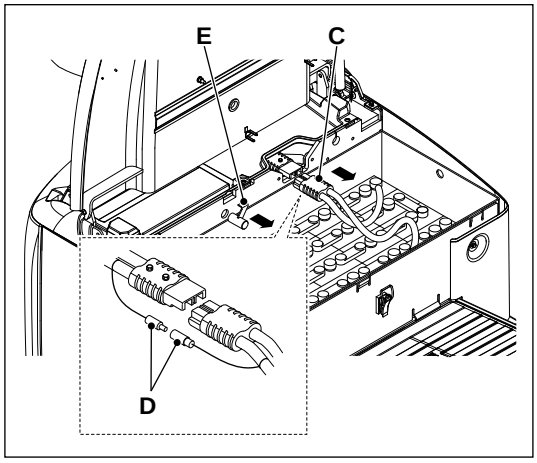

https://truckmanualshub.com/

5. Remove the bolts **(A)** (2 bolts on each side) and remove side battery covers **(B)**.

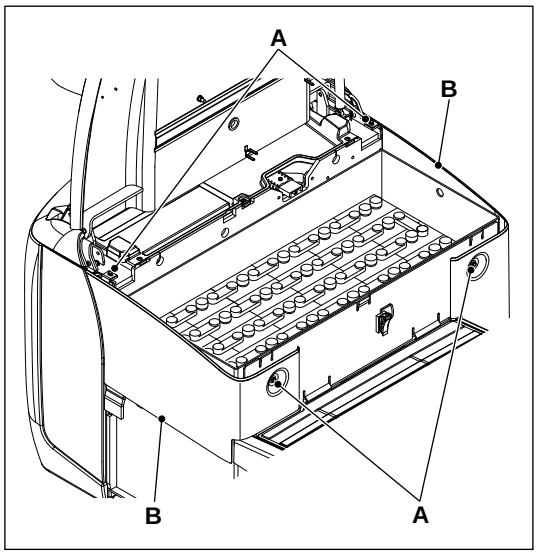

6. Exchange the battery by using slings and hook.

- **Be careful not to pinch hands or fingers when removing and installing side battery covers.**
- **When exchanging the battery by another lift truck, use proper slings and hooks.**
- **When lifting up the battery, be careful not to damage the chassis or equipment.**

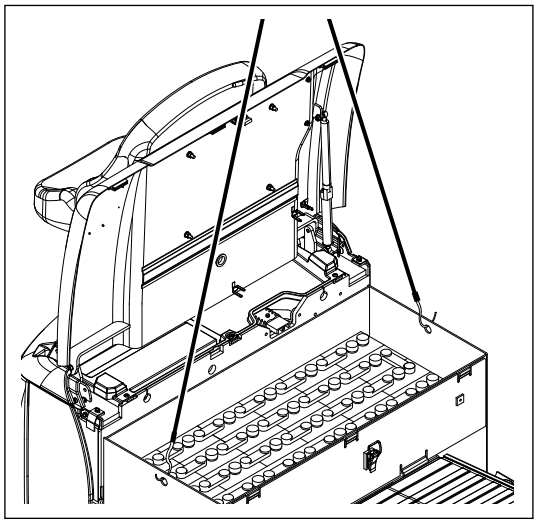

7. After exchanging the battery, make sure to install the stopper pin.

8. Connect the plug of battery side with the plug of chassis side.
   * Connect the sub wire (**D**) also when the forklift truck is equipped with the optional battery electrolyte level.

9. Fit both battery side covers and secure with bolts. (2 bolts on each side)

10. Push the yellow stopper at the center of the gas spring and close the battery cover.

Be careful not to pinch hands or fingers between the battery cover and the case.

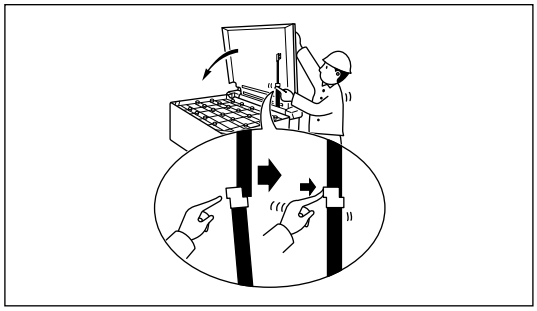

11. Apply the bonnet catch after closing the battery cover.

https://truckmanualshub.com/

Level of electrolyte and specific gravity

Electrolyte level

If the battery is used when the electrolyte level is low, the battery will become overheated causing it to have a shorter life.

- When the battery level sensor which is mounted on the side of the battery case shows the red flashing, the electrolyte level is too low. (Level sensor is equipped on the Japanese battery only.)

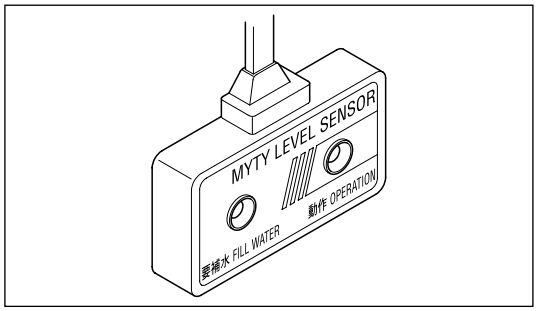

- If the forklift truck is equipped with the optional battery electrolyte level, the message of "REPRENISH REFINED WATER FOR BATTERY" is appeared on the display. Refer the section of "Function of display" at the page 25.

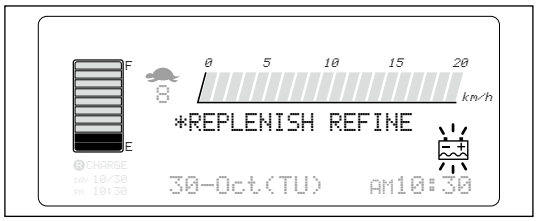

Check of electrolyte level

Electrolyte level can be checked by the float which is equipped in the vent cap.
(This is the case of GS battery only.)

A : Appropriate level
B : Proper level of electrolyte
C : Lowest level of electrolyte

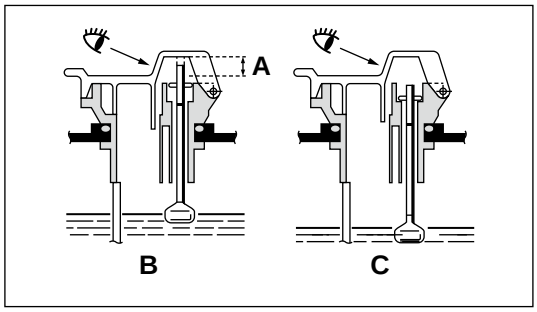

Replenishment of water

To maintain the specific level of electrolyte, replenish with refined water.
(You do not need to replenish the sulfuric acid. Use refined water only.)
Wear safety goggles, rubber gloves and boots for your protection.

A : Botle	**B** : Lidded hose	**C** : Hose
D : Cap	**E** : Pinch-cock	**F** : Float
G : White line	**H** : Level of electrolyte	**I** : Battery

1. Open the vent caps **(D)** of all battery cells.
2. Replenish water into each cell.
3. Stop replenishing when the red float **(F)** is raised and the white line **(G)** appears.
4. After replenishing to all cells, close all vent caps completely.
5. Clean the top of cells by wet cloth.

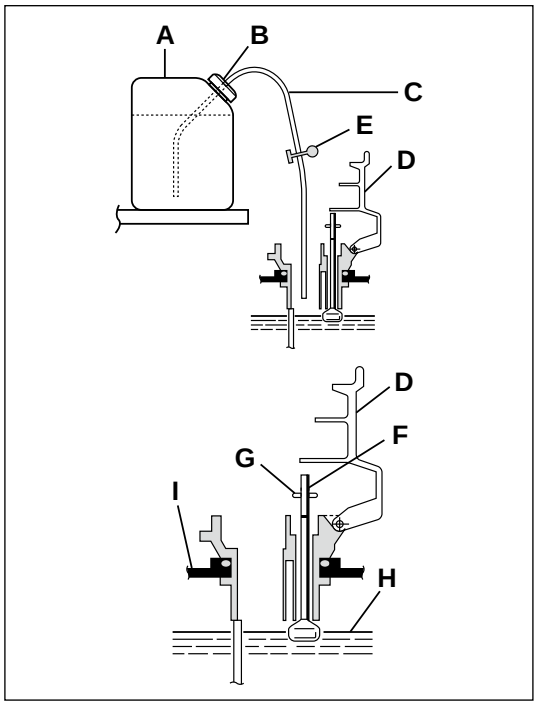

https://truckmanualshub.com/

- **Do not replenish water over the maximum level.**
- **Overfilling will cause the electrolyte to overflow while charging resulting in damage to the forklift truck.**

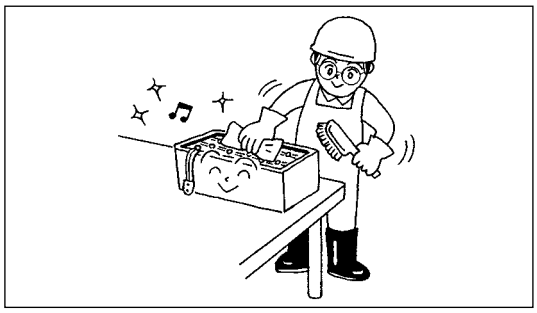

Reading of specific gravity

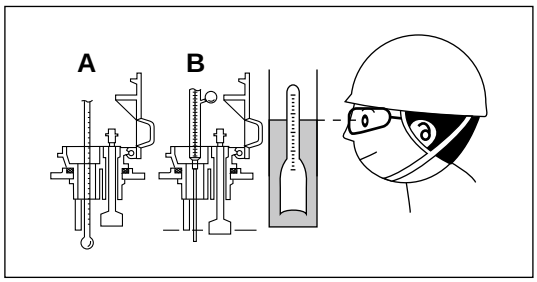

The specific gravity of electrolyte is changed by temperature. Measure the temperature of electrolyte by a thermometer **(A)** and the gravity of electrolyte by a hydrometer **(B)**.

Convert the actual gravity to the specific one at 20°C by the thermal conversion table.

Specific gravity at full charged	1.280 (at 20°C)
Specific gravity at discharged	1.180 (at 20°C)

When the specific gravity is below1.18 at 20°C, should be done the balancing charge.

SPECIFIC GRAVITY OF ELECTROLYTE AND THERMAL CONVERSION TABLE

How to convert the specific gravity:
For example, if the hydrometer reading is 1.25 at 5°C, the specific gravity at 20°C is 1.24.

C : Graduation of Hydrometer
D : Temperature °C
E : Specific gravity at 20°C

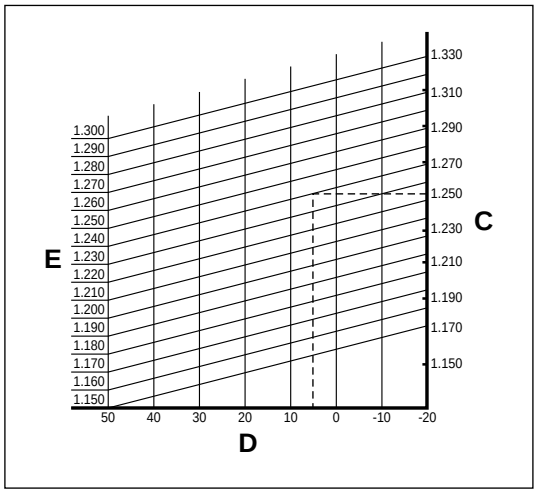

https://truckmanualshub.com/

5 INSPECTION PRIOR TO OPERATION

A daily pre-operation inspection is the key to safety and keeping the forklift truck in good condition.
At the beginning of each shift, check your forklift truck to make sure it is in safe operating condition.
If faults are found, contact your local NICHIYU dealer.

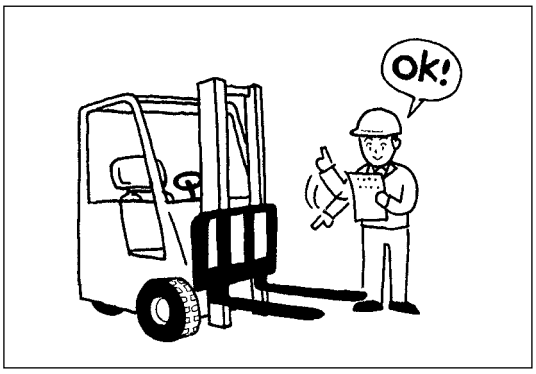

- **Do not operate the forklift truck until finishing repairs and inspections.**
- **Inspecting trucks should be made on a flat floor.**
- **Be sure to turn off the key switch and disconnect the battery plug while checking the electrical system except while turning on the lamps and checking operation.**

Check point and contents

	No.	Check points	Contents
Safety monitor	1	Function	When key switch is turned on, "MONITORING OK" is displayed
Lamp & Horn	2	Head lamps, Tail lamps, Turn signal lamps, Horn	Turn on and off, Sound
Braking system	3	Brake fluid	Quantity and fouling
	4	Parking brake	Pulling force of lever and braking force
	5	Brake pedal	Braking force
Steering system	6	Play of steering wheel	Play and looseness, Operating condition
	7	Power steering operation	Operating of all parts
Hydraulic system & Mast	8	Function	Function, Any cracks, Lubrication
	9	Hydraulic oil	Appropriate quantity
	10	Lift chains	Equal tension of both right and left chains
	11	Oil piping	Oil leakage
Wheel	12	Tyres	Abnormal wearing and / or damege
	13	Hub nuts	Securely tighten
Battery	14	Charging	Check battery capacity indicator and specific gravity, Plug is securely connected
Others	15	Overhead guard, Load backrest	Securely tighten fitting bolts and nuts
	16	Seat belt	Damege
	17	Laser pointer (Option)	Focus of beam
	18	Others than above	Any abnormality

https://truckmanualshub.com/

Inspection procedure

1. Check functions of safety monitor

[MONITORING OK] is displayed for a few seconds after turning the key switch on at normal condition.

2. Check head lamps, tail lamps, turn signal lamps and horn

Check operation of lamps.
Check sound of horn.

A : Switch for head lamps and turn signal lamps
B : Horn button, switch

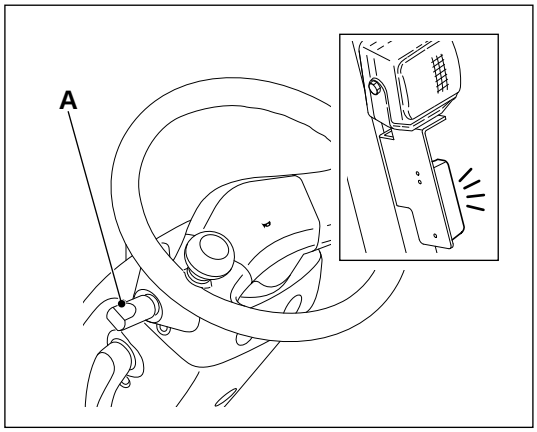

(This illustration shows the turn signal lamp switch of left side location.)

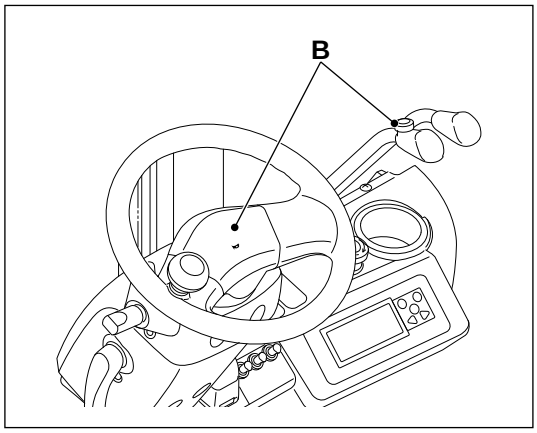

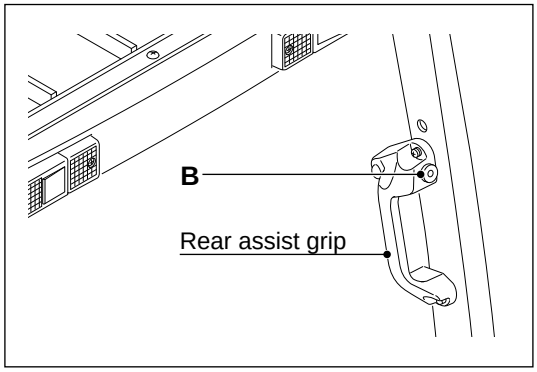

https://truckmanualshub.com/

3. Check brake fluid

Open the cover at the side of the steering wheel.
Remove the cap of the brake fluid tank and check the level and stain of the brake fluid.

Do not spill the brake fluid on any painted surface. Any spillage will cause the painted surface to become damaged.

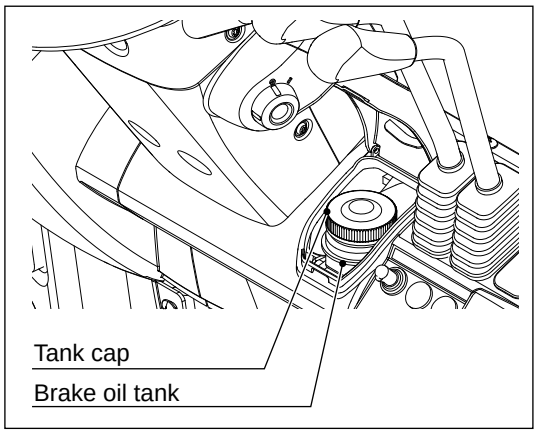

If “REFILL BRAKE OIL” message is appeared on the display, remove the tank cap and check the level and condition of the brake oil.

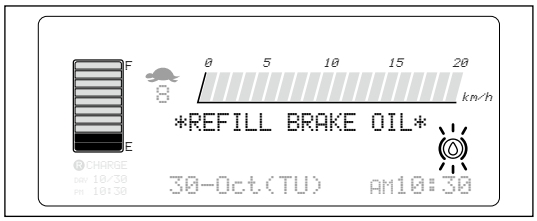

4. Check parking brake lever

Pulling and releasing the parking brake lever **(A)** and check :

- Suitable pulling force
- Enough braking force
- No damaged parts

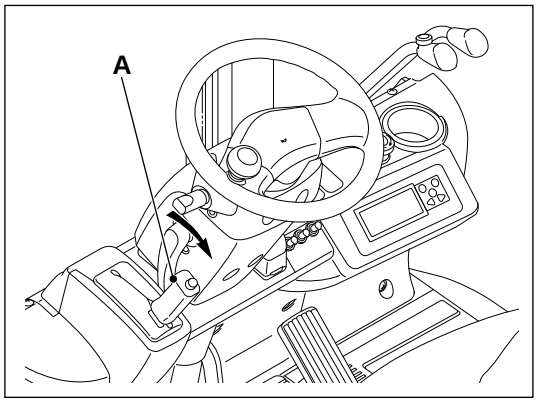

5. Check foot brake pedal

Check performance of brake and make sure the stroke of the foot brake pedal **(A)**.

UNIT : mm

Model	B
FBT-80	77 - 87

Proper braking distance without a load is about 2.5m.

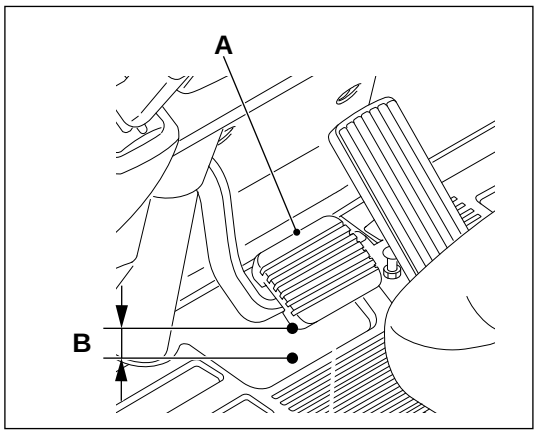

https://truckmanualshub.com/

6. Check play of steering wheel

Turn the steering wheel to the right and left, and check the free play (50-100mm **(A)**).
Make sure if the steering wheel does not have abnormal play or loosing by moving the steering wheel up and down.

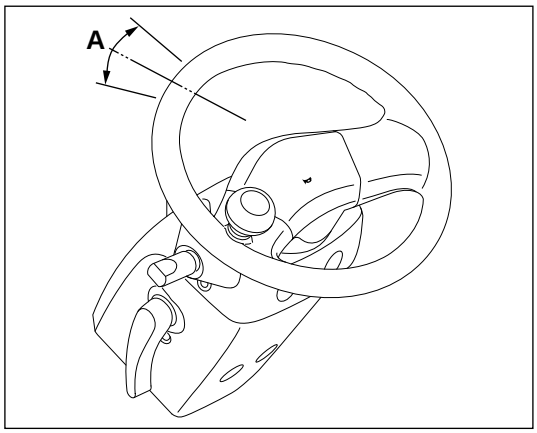

7. Check power steering function

Turn the steering wheel to the right and left to check the steering operation.

8. Check the hydraulic functions

Check if lifting and tilting operations are smooth.

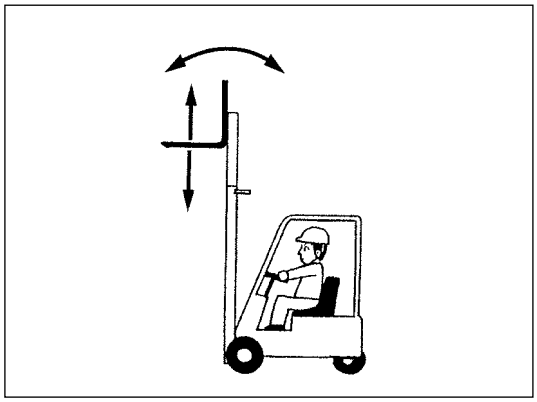

9. Check hydraulic oil

Check oil level by using the level gauge **(A)** when the forks are leveled and lowered on the floor.
Appropriate oil level is within the range of H and L.

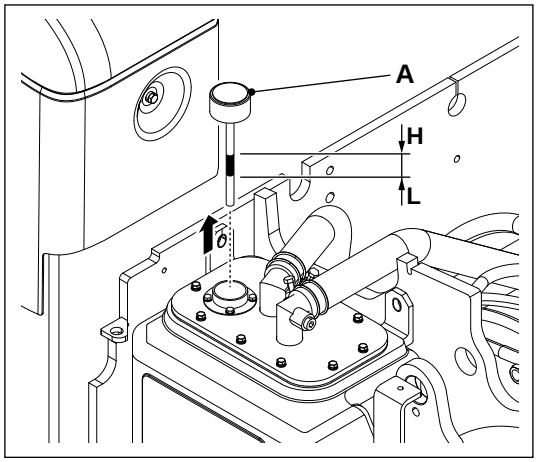

10. Check lift chains

Raise the forks 200-300mm above the floor and check if the tension is the same for both right and left chains **(A)**. The lift carriage should be level. If the carriage leans to the right or left, adjust the chain anchor bolts **(B)**.

After proper adjustment, tighten up the lock nuts (C) securely.

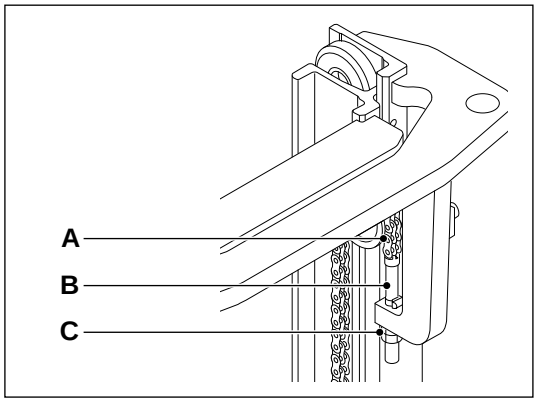

https://truckmanualshub.com/

11. Check oil piping

Check for any oil leakage from the lift cylinders, tilt cylinders and oil piping.

12. Check tyres

Measure the air pressure by using the air pressure gauge.

UNIT : kPa (kgf/cm²)

Applicable model	Front	Rear
FBT9P - 15P	900 (9.0)	1000 (10.0)
FBT16P	1000 (10.0)	1000 (10.0)
FBT18P	1000 (10.0)	850 (8.5)
FBT20PN	No puncture	850 (8.5)

After checking air pressure, check that no air is leaking from the valve.

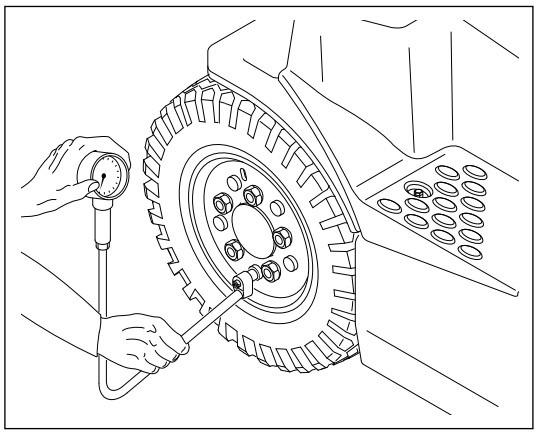

13. Check hub nuts

Check if the hub nuts are secured by tightening them with a torque wrench.

UNIT : N·m (kgf·m)

Applicable model	Front	Rear
FBT9P-16P	216-264 (22-27)	88-108 (9-11)
FBT18P / FBT20PN	216-264 (22-27)	216-264 (22-27)

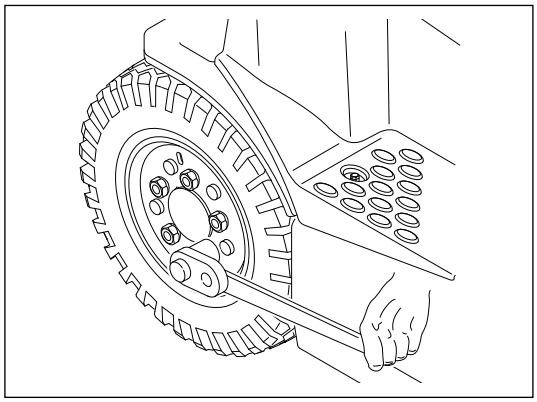

14. Check charging

Measure the specific gravity of battery.
When it shows 1.260-1.280 at 20°C conversion, the battery is fully charged.

15. Check overhead guard and load backrest

Check if all fitting bolts and nuts are correctly secured and torqued.

16. Check seat belt

Check any damages on the tang **(A)** and buckle **(B)**.

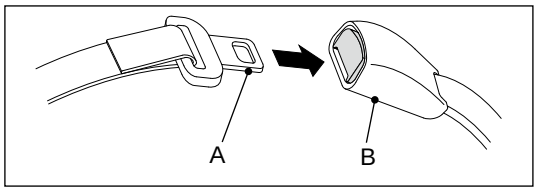

17. Check beam of laser pointer (Option)

If optional laser pointer is equipped, irradiate the beam and check its focus.

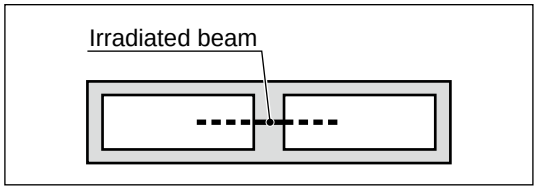

18. Others

Check for any other abnormalities.

https://truckmanualshub.com/

Inspection after working

At the end of work, clean the forklift truck and inspect the following items.

- Any damage or oil leakage.
- Apply grease if required.
  Refer to [Lubrication points and recommended oil]
- Raise forks to the maximum lifting height several times in case that the usual operation is used only lower height. (The hydraulic oil is supplied to the full stroke of the cylinder by lifting to the maximum height. It helps to prevent the inside of lift cylinders from getting rusty.)
- Check any abnormal parts which are found any defects while operation.

- **A small fault can cause a serious accident.**
- **Do not operate the forklift truck until finishing repairs and inspections.**

- **Do not wash the forklift truck by hosing water.**
- **In case that you have no choice but to wash by water, be careful not to splash water to electric components.**

- Water or moisture may affect electric components to be broken down. Turn off the key switch, disconnect the battery plug and cover all electric components to protect from splashing water.
- In case that water is splashed to the electric components, do not connect the battery plug and do not turn on the key switch until the forklift truck will be dried completely.

https://truckmanualshub.com/

7 PERIODIC SERVICING

Periodic inspections and maintenance are necessary to keep your NICHIYU forklift truck running safely and smoothly.
Hours shown in the maintenance schedule are based on eight hours operation per day and 200-hour operation per month.
Make your own maintenance schedule using this formula for your operation requirements.

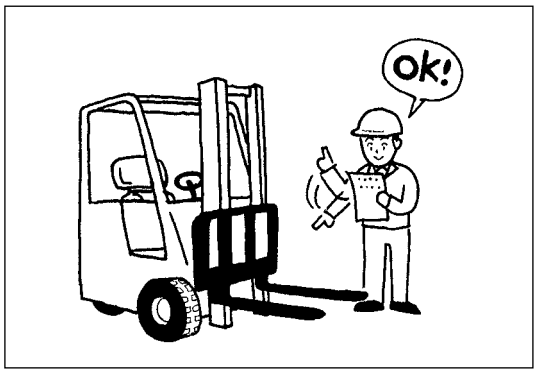

All servicing and repairs shall be made by authorized personnel.

- Contact your local NICHIYU dealer for adjustments and/or repairs.

Precautions of maintenance

Use NICHIYU genuine parts for replacement.
If non-genuine parts are used and a problem occurs, NICHIYU will not offer any guarantees.

Use NICHIYU recomended oil.
Refer to [Recommended oil].

Maintenance place

- **Servicing facility should provide adequate equipment and safety guards.**
- **Servicing place should be on a flat floor.**
- **Be sure there is adequate ventilation in the service area.**
- **Fire extinguishers shall be provided at the servicing facility.**

Precautions of maintenance

- **Smoking shall be prohibited.**
- **Wear safeguard (helmet, shoes, glasses, gloves and boots) and suitable clothes.**
- **Wipe off spilt oil at once.**
- **When lubricating, remove grease and dust off nipples and fittings with a brush or a cloth before lubrication.**
- **Turn off the key switch and disconnect the battery plug except when required for trouble shooting.**
- **When servicing a forklift truck, lower forks to the floor.**
- **Clean the electrical components with compressed air.**

https://truckmanualshub.com/

Precautions during servicing

- **Do not put your feet under forks and be careful not to stumble over forks.**
- **When forks are lifted up, put blocks under the inner mast to prevent the mast and forks from falling.**
- **Be careful not to pinch your hands when opening and closing the covers and clamps.**
- **When working as a group, be sure everyone works safely with each other.**
- **Use only suitable tools.**
- **The hydraulic circuit may have a high pressure condition. Release the inside pressure before performing any service or repairs.**
- **Do not climb on the mast.**

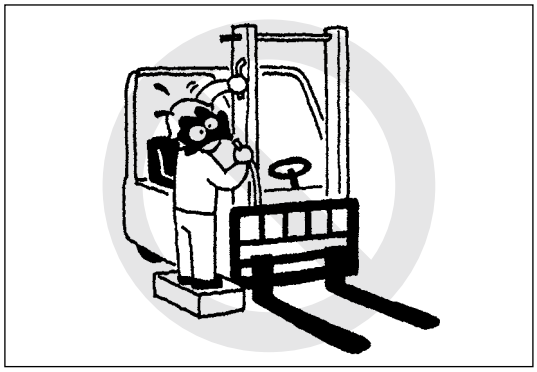

Do not put any part of body into mast structure or between mast and forklift truck.

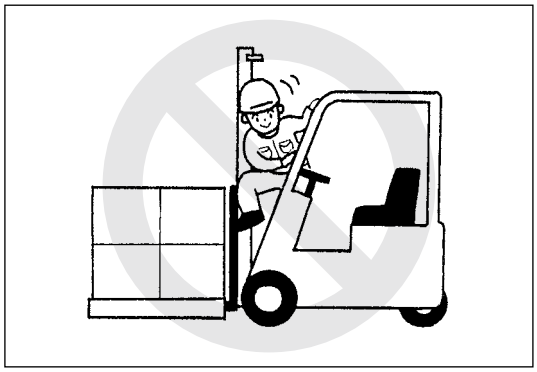

Maintenance of the lift cylinder

The lift cylinder has the special construction for the shock absorbing function. Please contact to your local NICHIYU dealer for disassembling and assembling.

Inspection and exchange of tyre

- **Leave a dismounting and mounting tyres to NICHIYU's qualified service facility.**
- **Handling a high pressure air shall be made by authorized personnel.**
- **When use a compressed air, wear goggle.**
- **When dismounting the tyre, do not loosen bolts and nuts of joint rim. As inside tyre is high pressure, there is a danger of breaking bolts, nuts and rim.**

https://truckmanualshub.com/

Jacking up

Do not put any part of body under the forklift truck while it is being jacked up. Failure to observe this warning can cause serious injury or death if the forklift truck falls on you.

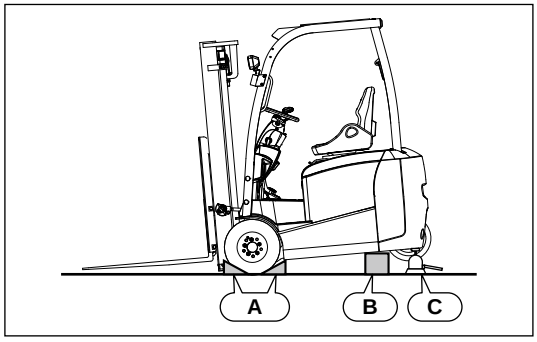

A : Wheel chocks
B : Block
C : Jack

- **Before jacking up the forklift truck, make sure no one is around and no load is on the forklift truck.**
- **Before jacking up, place wheel chocks at tyres.**
- **After jacking up, use blocking or proper stands to prevent the forklift truck from falling.**

Hoisting the truck

- **Lift the forklift truck by trained persons only.**
- **Place slings and hooks to the designated positions.**
- **Use slings and hooks which have sufficient strength.**

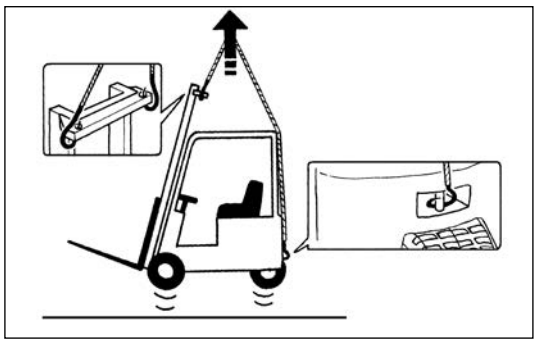

Disposal of waste

Observe local rules to dispose waste such as oils and a battery.

https://truckmanualshub.com/

Weekly (50-hour) servicing

Inspect the following items in addition to the inspection prior to operation.

Check points	Contents
Electrolyte level	Check the electrolyte level. When the level is low, replenish with refined water.
Specific gravity of electrolyte	Measure the specific gravity and temperature of electrolyte of all cells.
Cleaning of battery	Clean the top surface and vent cap of each cell.

Be sure to disconnect the battery plug when inspecting the electrical system.

Check the level of electrolyte

Refer to [Level of electrolyte and specific gravity].

- **After completing the replenishment, securely close the vent caps.**
- **Do not replenish the water over the maximum level.**

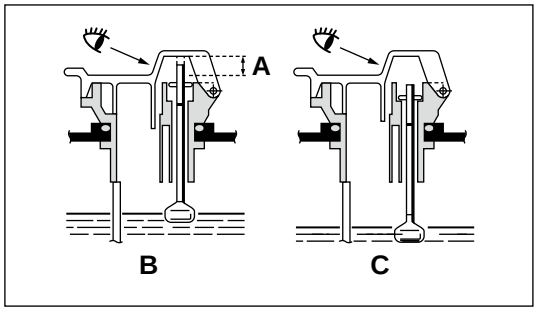

A : Appropriate level
B : Proper level of electrolyte
C : Lowest level of electrolyte

Check for specific gravity of electrolyte

The specific gravity of electrolyte is changed by temperature. Measure the temperature of electrolyte by a thermometer **(A)** and the gravity of electrolyte by a hydrometer **(B)**.

Normal : It is normal when all cells specific gravity are the same.
Abnormal : It is abnormal if the difference of the specific gravity is more than 0.05 from other cells.

Refer to [Battery electrolyte and specific gravity] how to inspect the specific gravity of battery.

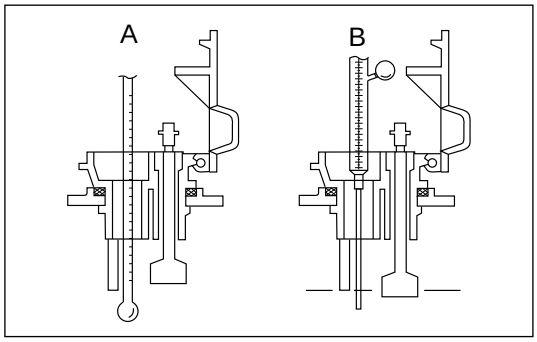

https://truckmanualshub.com/

Cleaning of battery

Keep the battery clean by wiping off with a damp cloth.

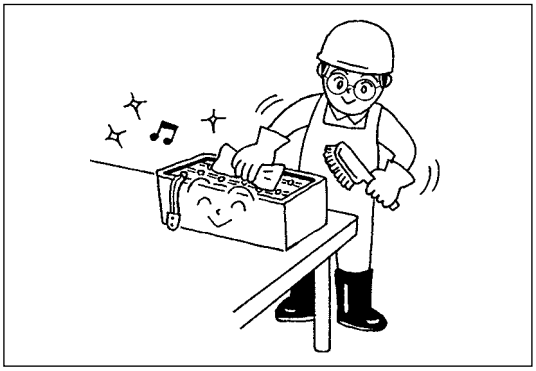

- **Wear the safety goggle.**
- **The battery should be cleaned before charging.**
- **Wear rubber gloves and boots to prevent an electrical shock.**
- **Do not clean the battery plug with water.**

In case the inside of vent caps get dirty and it's difficult to see, clean the caps by the following procedures.

This is the case of a Japanese battery.

1. Remove the vent caps **(C)** by turning counterclockwise **(A)**.
2. Wash the inside of vent caps with a neutral detergent.
   If they are severely stained, brush them.
3. Install the vent caps by turning clockwise **(B)**.

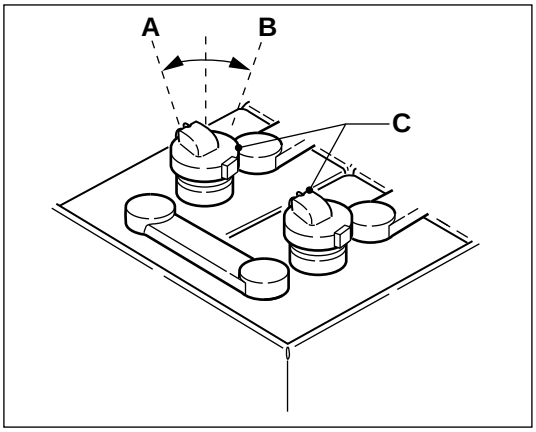

Make sure all vent caps are completely closed.

https://truckmanualshub.com/

Monthly (200-hour) servicing

Perform the following service in addition to the weekly (50-hour) maintenance schedule.
If an adjustment or replacement parts is required, contact your local NICHIYU dealer.

System	No.	Check points	Contents
Truck	1	General	Distortion, crack and abnormal noise
	2	Horn	Sound
	3	Accessories (Head lamp, Turn signal lamp)	Function
Battery, Charger & Electric System	4	Battery electrolyte	Quantity, specific gravity and clean
	5	Terminal plug	Damage and clean
	6	Plug for charger (Opt.)	Looseness and damege
	7	Magnet switch for charger (Opt.)	Function and contacts
	8	Pilot lamp for charger (Opt.)	Turning on and off
	9	Key switch	Function
	10	Contactor	Function
	11	Microswitch	Function
	12	Controller	Function
	13	P.S. motor (Brush, commutator)	Wearing and spring force
	14	Fuses	Looseness and capacity
	15	Wiring, Terminal	Damage and looseness
Drive, Steering, Mast, Hydraulic & Braking System	16	Steering wheel	Play and movement
	17	Steering linkage	Lubrication
	18	Steering link	Oil leakage
	19	Steering chain	Lubricant and tension
	20	Wheel pivot housing	Oil leakage
	21	Gear case (Front)	Oil quantity, leakage and abnormal noise
	22	Gear case (Rear)	Abnormal noise
	23	Fitting nuts for tyres	Looseness
	24	Tyres	Damage and wearing
	25	Mast support	Lubricant and movement (by tilt operation)
	26	Lift chains	Lubricant and tension
	27	Lift bracket (carriage)	Adjustment, lubricant, crack and distortion
	28	Forks	Crack and transformation
	29	Lift rollers	Adjustment and lubricant
	30	Mast rollers	Adjustment and lubricant
	31	Outer mast, Inner mast	Jolt
	32	Lift cylinders	Oil leakage
	33	Tilt cylinders	Oil leakage
	34	Control valve	Function and oil leakage
	35	Hydraulic tank	Oil quantity and oil leakage
	36	H.P. hoses	Oil leakage and transformation
	37	Overhead guard, Load backrest	Damage, crack and transformation
	38	Brake linkage	Lubricant and movement
	39	Parking brake lever	Adjustment
	40	Power steering	Function
	41	Bolts, nuts	Function

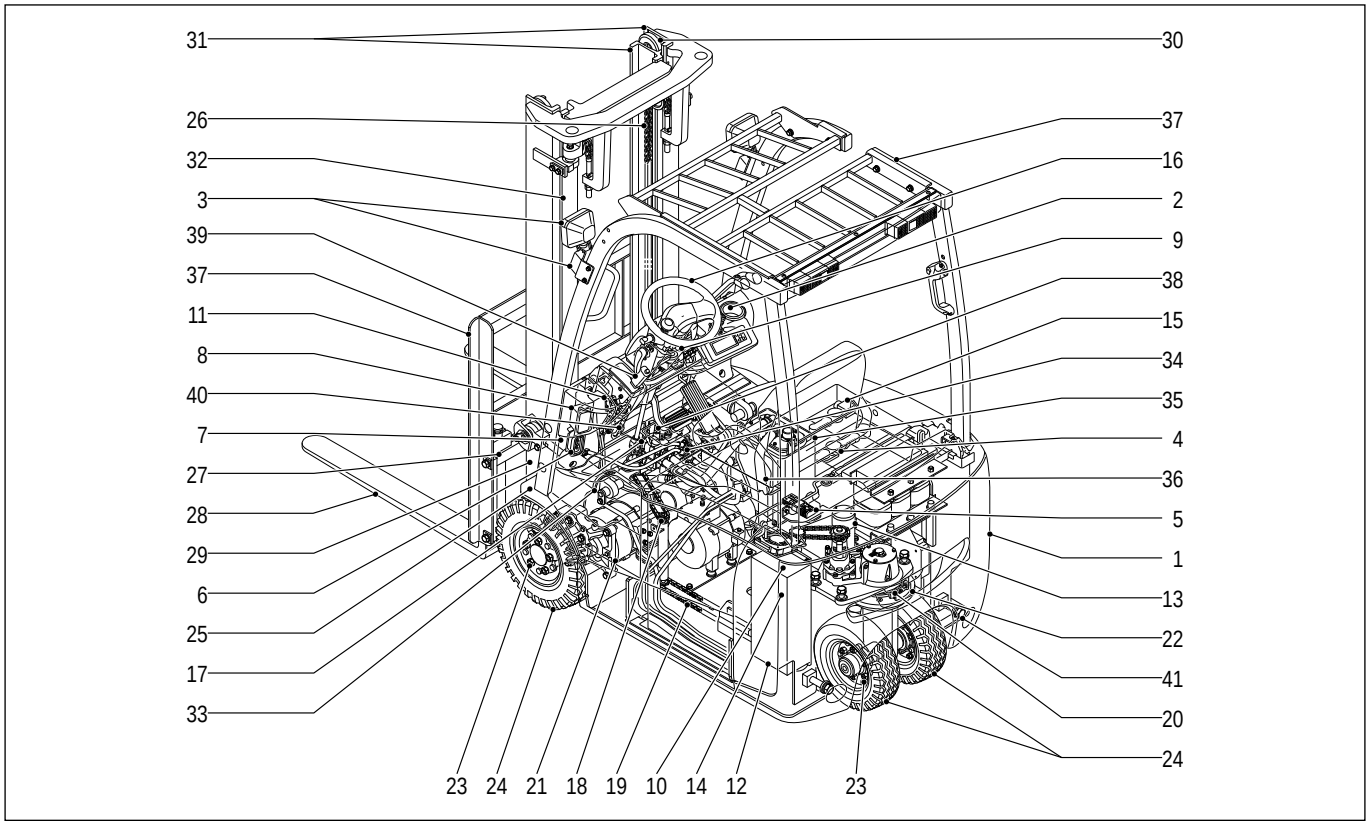

https://truckmanualshub.com/

Lubrication points and recommended oil

Lubrication points

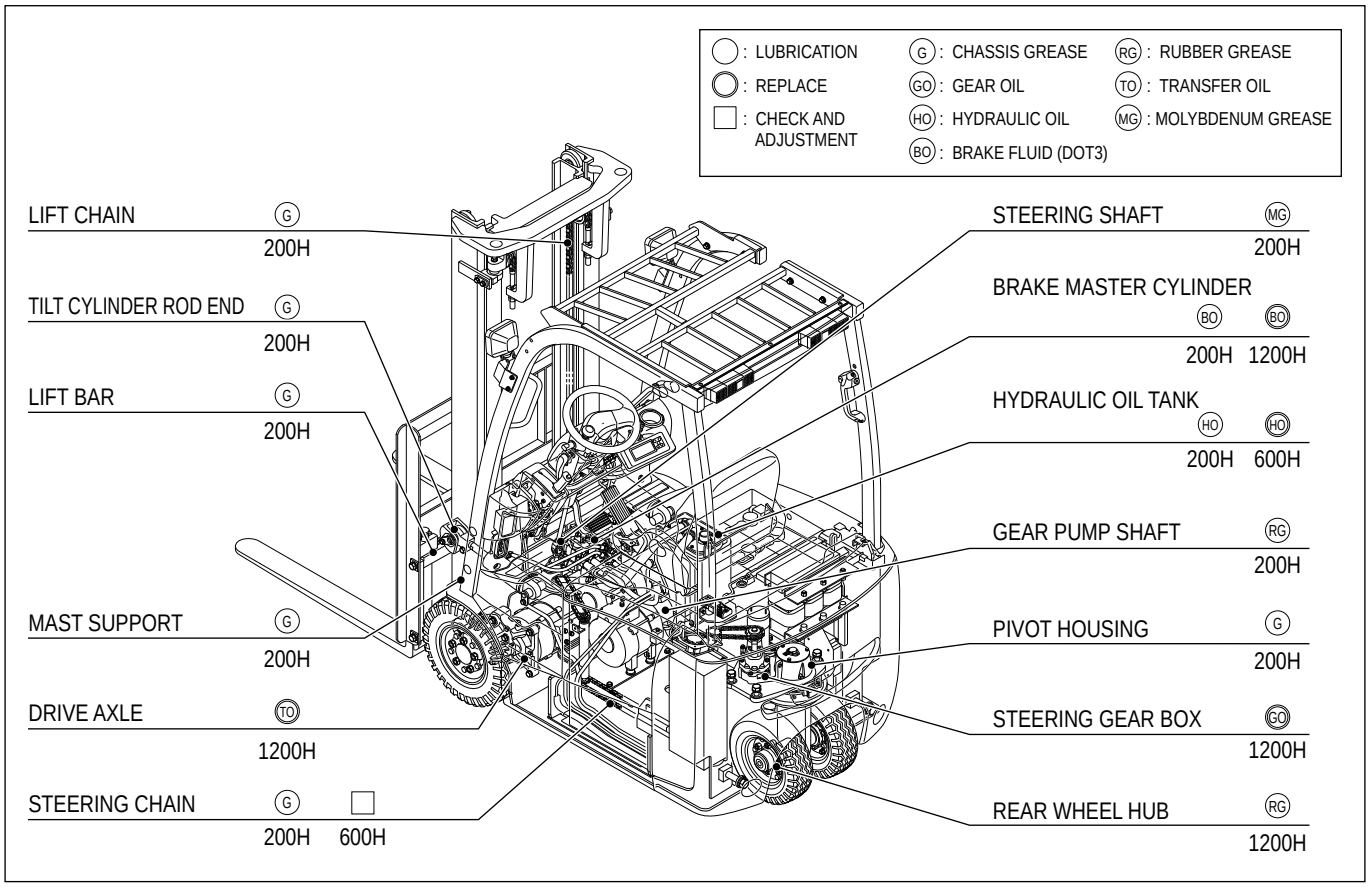

Recommended oil

Manufacturer	Shell	ESSO	Mobile	SUMICO	Kroon oil
Gear oil	Spyluxe EP 80	ESSO Gear Oil GP SAE 80	Mobilube GX-80	—	—
Transfer oil	Shell Donax TDL	—	—	SUMICO 5L022	Kroon F1052
Grease	Alvania Grease 2	ESSO Beacon 2	Mobilluxe 2	—	—

Use NICHIYU genuine parts "NAMS hydraulic oil" for hydraulic oil.

https://truckmanualshub.com/

Every three-month (600-hour) servicing

Perform the following service in addition to the monthly (200-hour) maintenance schedule.
If an adjustment or replacement parts is required, contact your local NICHIYU dealer.

Check points	Contents
Power steering motor	Wearing of the carbon brushes.

Semiannually (1200-hour) servicing

Perform the following service in addition to the (600-hour) maintenance schedule.
If an adjustment or replacement parts is required, contact your local NICHIYU dealer.

Check points	Contents
Power steering motor	Wearing of the carbon brushes.
Drive axle	Change of transfer oil
Steering gear box	Check condition, and change of gear oil
Hydraulic oil	Check condition, and change of hydraulic oil
Oil filter	Cleaning the oil filter
Brake fluid (DOT3)	Check condition, and change of brake fluid

● **Inspection of motor brushes**
Raise up the whirl spring **(A)** and then pull out the carbon brush **(B)** to check the length.
If the brush is worn more than the wearing limit **(C)**, replace all brushes of the motor.

Power steering motor UNIT : mm

	Normal dimension (H)	Wearin g limit (C)	Manufacturer
FBT9P-16P	14.5	8	Fujii
	20	9	Eiko
FBT18P/20PN	20	11	Eiko

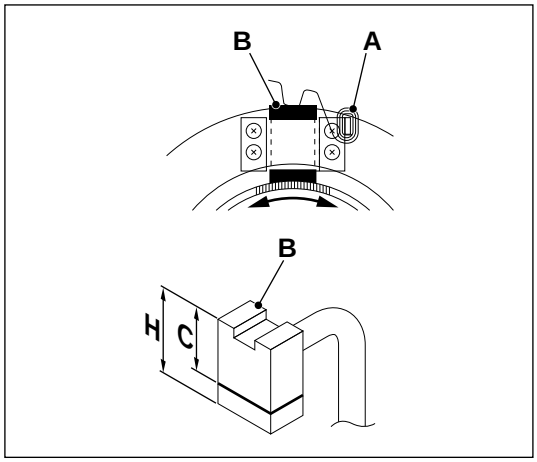

https://truckmanualshub.com/

Replacing parts and trouble shooting

Replacing fuses

Be sure to disconnect the battery plug.

1. Fuse 100A (For transformer)
2. Fuse 40A (For EPS)
3. Fuse 325A (For hydraulic / travel)
4. Tube fuse 10A (For control circuit)
5. Tube fuse 10A (For accessory circuit)

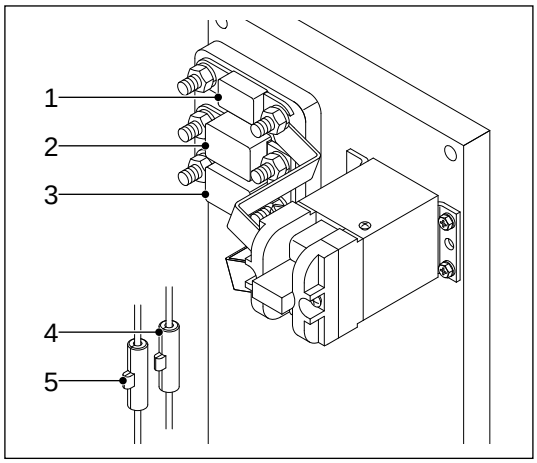

Check points	Replacing procedure
Fuse	Loosen the mounting nuts and removing the fuses.
Tube fuse	Loosen a cap and removing the fuse.
Insufficient tightening of the mounting nuts may cause of poor contact and it can cause overheating or fire. Tighten the nuts securely.	

Be sure to use the fuses with the same voltage and amperage rating.

Replacing bulb

Be sure to turn off the key switch and disconnect the battery plug.

Replacing
Remove a lens of lamp. Release a bulb by pushing and turning lightly.

Bulb for	Rating (56V)
Head lamps	40W
Back up lamps	40W
Turn signal lamps	25W
Tail & Stop lamps	10W / 25W
Reversing lamps	10W

Be sure to use bulbs with the same voltage and watts rating.

https://truckmanualshub.com/

8 QUICK FAULT FINDING

- **When checking, be sure to turn off the key switch and disconnect the battery plug.**
- **When some troubles cannot be solved, contact your local NICHIYU dealer.**

The content of some troubles and check points.

Troubles	Check points	Solutions
Lift truck does not move.	Fuse for the auxiliary control circuit would be blown out.	If the fuse is blown, replace with new fuse with prescribed amps, or contact your local NICHIYU dealer.
	Fuse for the traveling circuit.	If the fuse is blown, replace with new fuse with prescribed amps or contact your local NICHIYU dealer.
	Battery plug connection.	Connect the battery plug securely.
Not charging.	Charging plug, AC plug of the charger.	Connect the plugs securely.
Lamps do not turn on.	Control and accessory fuse. Lead wires. Bulbs.	Contact your local NICHIYU dealer.

https://truckmanualshub.com/

9 PERIODICAL REPLACING PARTS

Periodical inspection and maintenance are very important to keep your forklift truck in good condition.
The parts in the table are also very important for safe operation.
NICHIYU recommends that you replace these parts every period as listed in the Periodical replacement parts chart even if their appearances are good.
The periodical replacement of parts is not covered by warranty.

	Periodical replacement parts	Period
1	Brake hoses	2 years
2	H.P. Hose	2 years
3	Lift chains	2 years
4	Mast support bush	2 years
5	Steering chains	2-4 year
6	AC cable (for built-in charger)	2-4 year

https://truckmanualshub.com/

10 STABILITY OF FORKLIFT TRUCK

As shown in the following illustration, the forklift truck is balanced on its front wheels **(B)** with the maximum rated capacity load on the forks.
Therefore, careful attention should be paid to the load center **(A)**.
If the load weight and/or gravity exceed the rated capacity or load center, the rear wheels **(C)** are lifted and the lift truck tips over.

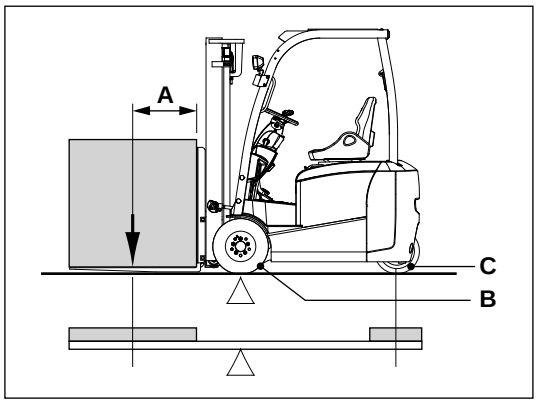

Load center and capacity

The distance from the vertical front side of the forks to the center of the load is called the load center.
The NAME PLATE shows the relation of the load center and capacity.
Observe the NAME PLATE which is installed on each forklift truck.

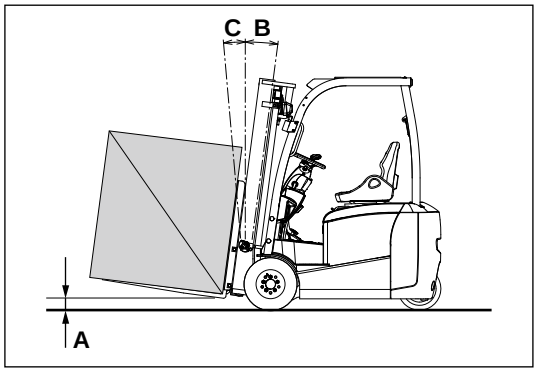

- **Lift the forks 150~200mm (A) from the ground, and tilt the mast up (B) when traveling.**
- **Do not lift up or tilt down (C) while traveling because this operation could cause the fork-lift truck to tip over.**

(1) Insert the fork to the root completely when handling a load.
(2) If the load is handled by only front part of the fork, a large stress may be applied to the mast and forks. It may cause some damages on the truck.
(3) Do not handle off-center load. A large stress may be applied to the mast and forks.
(4) Operate the hydraulic levers carefully when handling a load.
(5) Do not operate the truck roughly when raising a load at high position. Otherwise, big shock may cause rollover.

NAME PLATE

MAXIMUM LIFT HEIGHT A mm	LOAD CENTER B mm	ACTUAL CAPACITY FORK ONLY kg	ACTUAL CAPACITY ATTACHMENT kg
3000	500	1600	– – –
3000	600	1430	– – –
3000	900	1070	– – –

https://truckmanualshub.com/

Stability of the forklift truck

The stability of the forklift truck is prescribed by safety regulation in each country.
The safety of the forklift truck is guaranteed under restricted conditions in those regulations.
So, the safety of the forklift truck is NOT guaranteed for all operating conditions.
The condition is as follows.

- **The operating surface must be flat and hard.**
- **When traveling, the mast and fork must be in the standard condition.**
- **When stacking or picking a load, the fork should be levelled. The operating speed should be slow down.**
- **The truck must be well maintained.**

https://truckmanualshub.com/

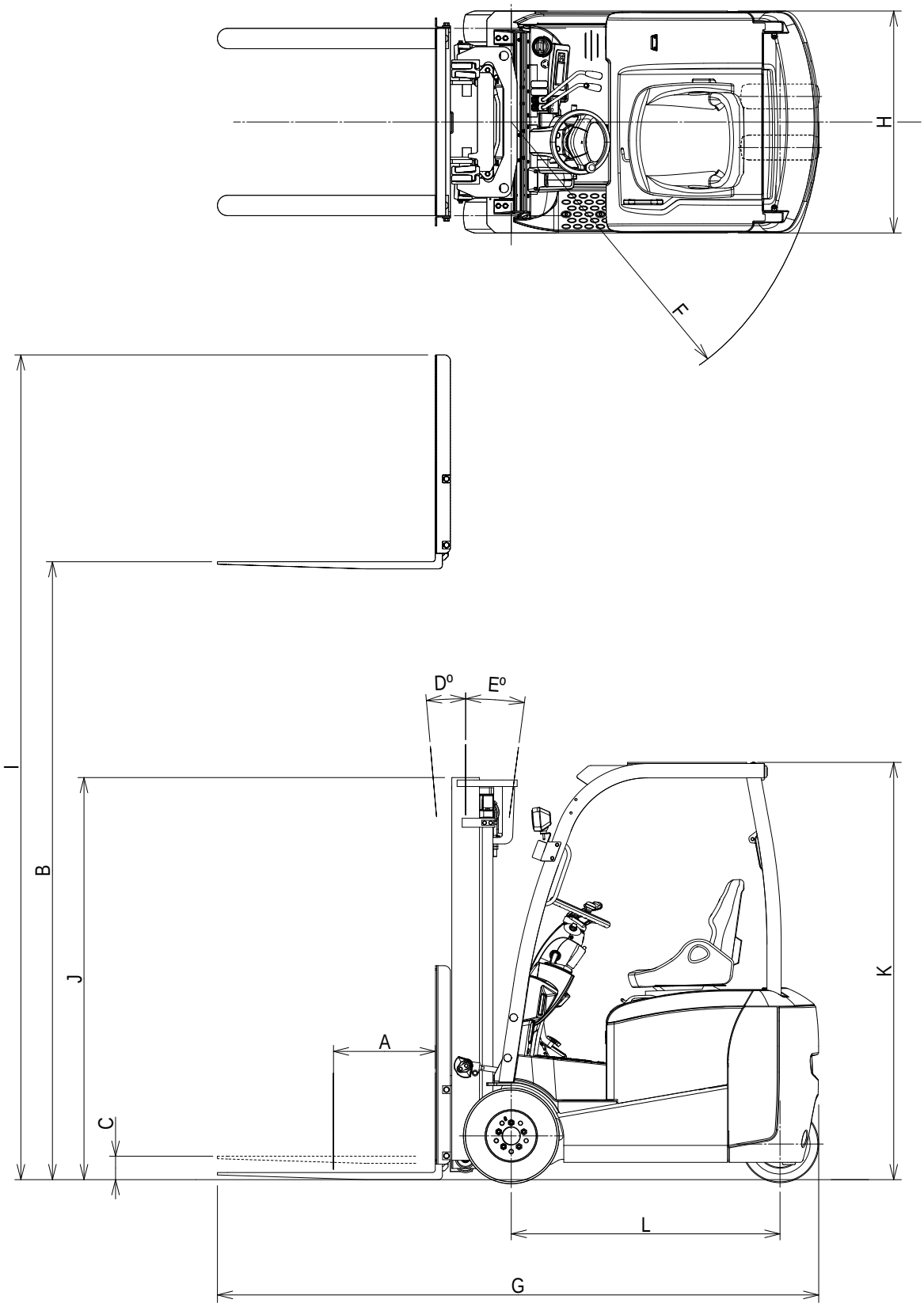

https://truckmanualshub.com/

11. SPECIFICATIONS

MODELS					FBT9P	FBT10P	FBT13P	FBT15P	FBT16P	FBT18P	FBT20PN	FBT16PB	FBT18PB	FBT20PBN
Capacity				kg	900	1000	1300	1500	1600	1800	2000	1600	1800	2000
Load center			A	mm	500									
Lift height			B	mm	3000									
Free lift			C	mm	115						120	115		120
Travel speed	Laden	Pneumatic		km/h	15.0				14.5		—	14.5		—
		Solid/Cushion			14.0				13.5		14.0	13.5		14.0
	Unladen	Pneumatic		km/h	16.5				16.0		—	16.0		—
		Solid/Cushion			15.5				15.0		15.5	15.0		15.5
Lift speed		Laden		mm/s	440		400	380	360		300	360		300
		Unladen			610						500	610		500
Tilt angle		Forward	D	deg	5									
		Backward	E	deg	7.5									
Min. turning radius			F	mm	1410			1510	1605	1660	1690	1715	1770	
Overall length			G	mm	2855			2955	3050	3105	3175	3160	3215	3255
Overall width			H	mm	1090									
Overall height	Mast lifted		I	mm	4015						4000	4015		4000
	Mast lowered		J	mm	1975									
	Overhead guard		K	mm	2050									
Wheel base			L	mm	1220			1320	1415			1525		
Tread (Front / Rear)				mm	920/250					920/230		920/250	920/230	
Service weight (w.o./Battery)				kg	1865		2075	2105	2080	2220	2595	1930	2180	2285
Tyres	Front	Pneumatic			18 x 7 – 8 – 14PR				18 x 7 – 8 – 16PR		—	18 x 7 – 8 – 16PR		—
		Solid			18 x 7 – 8									
		Cushion			18 x 6 x 12 ⅛									
	Rear	Pneumatic			15 x 4.5 – 8 – 12PR					16 x 6 – 8 – 10PR		15x4.5–8–12PR	16 x 6 – 8 – 10PR	
		Solid			15 x 4.5 – 8					16 x 6 – 8		15x4.5–8	16 x 6 – 8	
Control (Travel / Hydraulic)					Inverter Control									
Motor	Traction			kw	4.5 x 2									
	Hydraulic				9.5 x 1									
	Power steering				0.3 x1					0.6 x 1		0.3 x 1	0.6 x 1	
Battery				Ah/5HR	210	280	320	350		390		730		

*Subject to change without notice for improvement.

https://truckmanualshub.com/

12 COLD STORAGE TYPE FORKLIFT TRUCK (CS Type)

The NICHIYU electric forklift trucks for Cold Storage Application are designed to operate in the cold storage area.
The following CS type is available for –35°C storage area.

- **The operationg hours ratio of indoor and outdoor should be same level, and the continuous indoor operation is 30 minutes maximum.**
- **Do not leave the truck in a cold storage area.**

The electrical and mechanical parts are protected from rusting, corrosion and low temperature, but periodical cleaning, lubrication and maintenance are very important.

Protection from rust and corrosion

When going in and out of the cold storage area, the forklift truck is exposed to moisture which can cause rusting or corrosion.
To protect from the weather elements, a special coating and painting are applied to the CS type forklift trucks.
Also stainless bolts, nuts and washers are used on the front and rear axles for protection.

Protection from low temperature

1) Hydraulic oil and grease
Low viscosity oil and grease are required.
Refer to the following table.

2) Lubricating system
The grease nipples are provided on the major sliding parts.
Lubricate periodically to protect these parts from rusting and wearing.

3) Electrical parts
The control systems and switches are protected from rusting and freezing.

- **Do not leave the forklift trucks in a cold storage area.**
- **Charging the battery shall be made in an area outside the cold storage area.**

Recommended hydraulic oil for cold storage type

	Shell
Hydraulic oil	Tellus S2 V15
Grease	Alvania Grease RA

https://truckmanualshub.com/

13 SIDESHIFT ATTACHMENT

Sideshift attachment

This operator's manual provides for the proper operation, easy maintenance and routine inspection of the sideshift attachment.

It can be difficult even for a trained operator to be able to align the forks each time to a pallet. If the load is not aligned correctly, it could cause the load to fall and create an unreasonable risk or injury to yourself and others. The sideshift attachment makes fork shifting easier by operating the lever. The sideshift attachment makes operating the forklift truck easier.

Features

1) Compact design

2) Shift indicator
   The shift indicator is installed to indicate the shifting position.

https://truckmanualshub.com/

Safe operation

Do not attempt to operate this attachment until you are thoroughly familiar with informations and safety precautions in this section.

Information for safety operation

Do not overload. Observe allowable load capacity.

- Overload can cause the forklift truck to tip over or the load to fall.

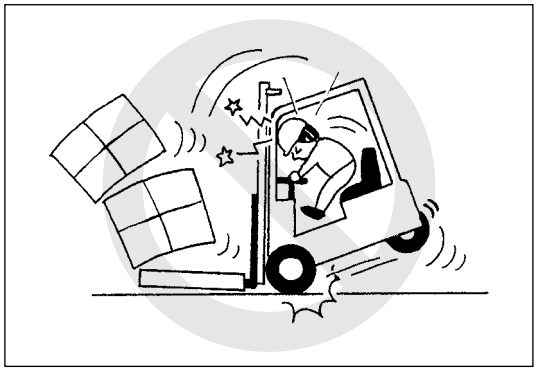

* The forklift truck with a sideshift attachment has a lower capacity in comparison to the standard forklift truck without sideshift attachment.

Prior to operation, check the weight of the load and the center of gravity.
Observe the name plate on the forklift truck.

- **Make sure the forks are inserted in the correct position.**
- **Do not pick up an off-center load.**

- Picking up an off-centered load can cause the forklift truck to tip over or the load to fall.

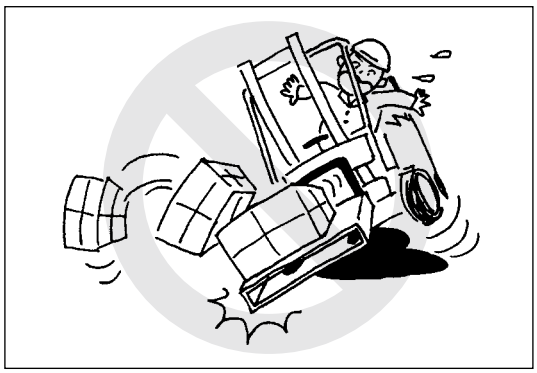

Shift indicator

When the shift indicator is positioned in the same position as the fixed indicator, the shift quantity from the center posotion is 0 mm.

A : Shift indicator
B : Fixed indicator

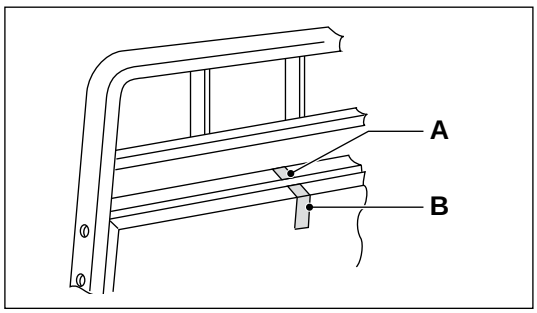

The sideshift should be operated without traveling. Also should be operated at the low lift height.
Make sure to posotion the shift indicator to the center posotion before traveling.

- It may cause rollover when traveling as the sideshift is not the center posotion.

https://truckmanualshub.com/

Part name and function

Parts name

● Hydraulic lever

1. Lift lever
2. Tilt lever
3. Sideshift lever

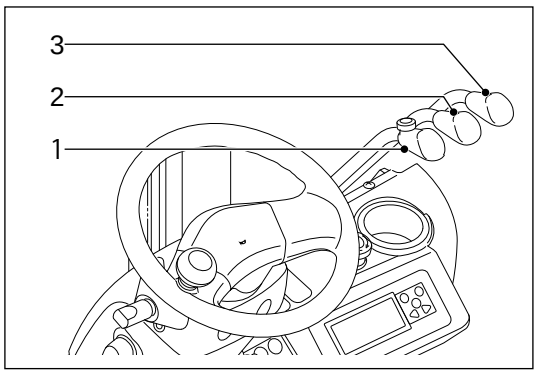

● Sideshift fork attachment

Integral sideshifter

1. Load backrest
2. Sideshift carriage
3. Forks

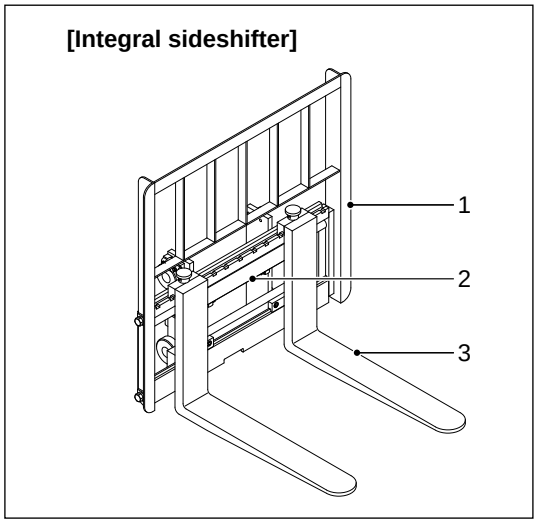

Hook on sideshifter

1. Load backrest
2. Sideshift cylinder
3. Sideshift carriage
4. Forks

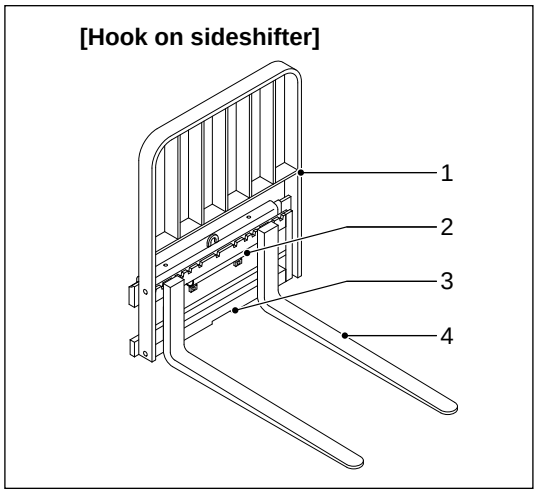

https://truckmanualshub.com/

Function of sideshift

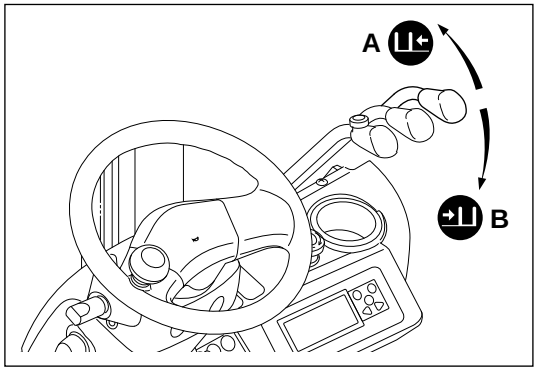

- When pulling the sideshift lever (toward **B**), the forks move toward **B**.
- When pushing the sideshift lever (toward **A**), the forks move toward **A**.

Control the sideshift speed by the stroke of sideshift lever.

Operate hydraulic levers with sitting on the operator's seat.

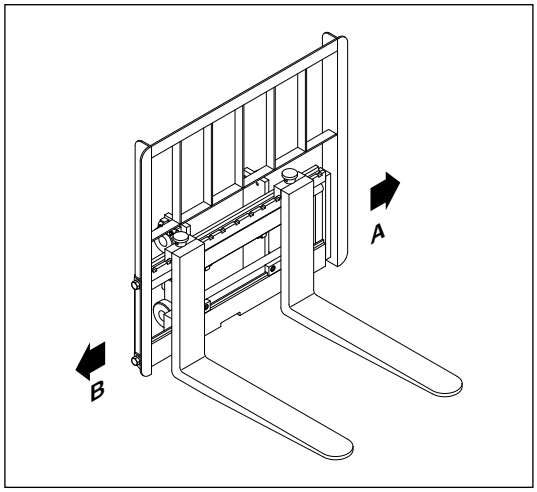

A : Stroke : 100mm
B : Stroke : 100mm
(from the center position)

https://truckmanualshub.com/

Materials handling

When stacking or picking a load with using the sideshift attachment, observe the following procedures.

Stacking operation

Check the following items before starting operation of the forklift truck.
- **Make sure there is no load falling or damage of load at loading area.**
- **Make sure there is no foreign object in the stacking area.**

When stacking a load, observe the following procedures.
1. Reduce travel speed and stop in front of the stacking area.
2. Make sure it is safe around the stacking area.
3. Face the truck to the stacking position correctly.
4. Adjust the pallet position by using sideshift.

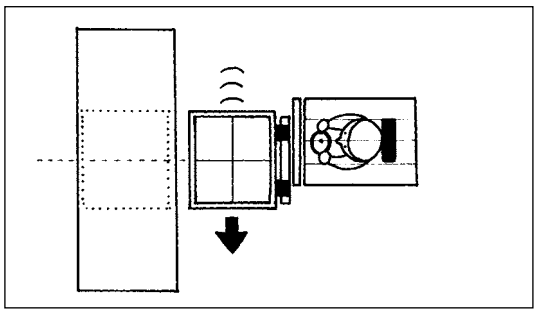

5. Tilt the forks to horizontal position and raise the forks above the stacking position.

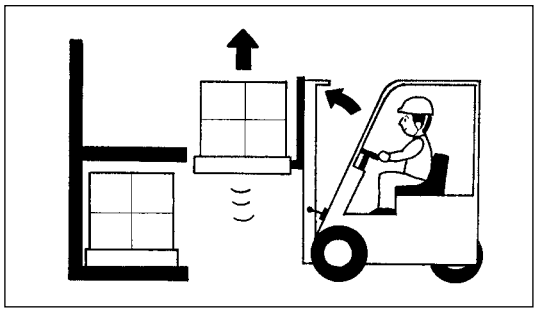

6. After making sure the stacking position and the pallet position again, travel forward slowly until the load, pallet, mast and truck do not touch around the stacking area.

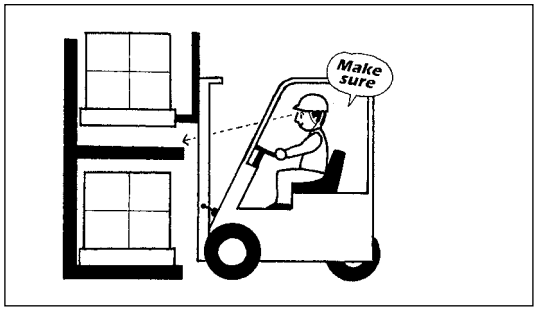

https://truckmanualshub.com/

7. Lower the forks slowly and make sure the load is placed on the stacking position correctly.

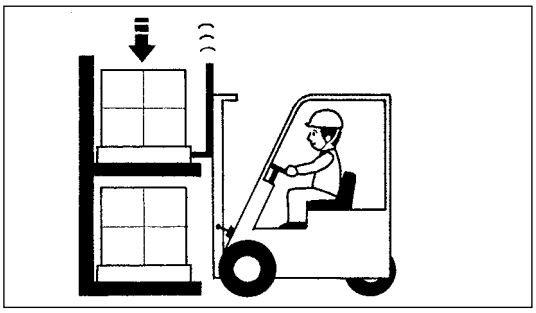

When the load is not aligned at the front or the rear, adjust such non-alignment according to the following procedures:
1) Lower the forks until the load is placed on the stacking position and the forks become free.
2) Travel backward slowly about 1/4 length of the forks.
3) Lift (50-100mm) forks again and travel forward slowly to align the load. Lower the forks slowly in the proper stacking position.

8. Travel backward slowly until the forks do not touch the load and pallet.

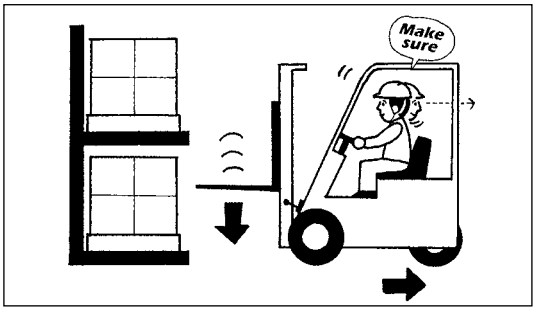

9. Make sure the tips of the forks are not touching the load and pallet, and lower the forks to the position for traveling (150-200mm from the ground).

Picking operation

When picking a load, observe the following procedures:

1. Reduce travel speed and stop in front of the picking area. (about 300mm between the load and the tips of the forks)
2. Face the truck to the picking position correctly.
3. Adjust the forks position by using sideshift.

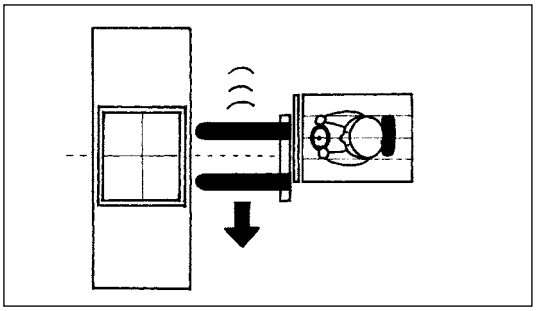

4. Make sure the load is stable on the pallet.
5. Tilt the forks to horizontal position and raise the forks to the inserting position of the pallet.

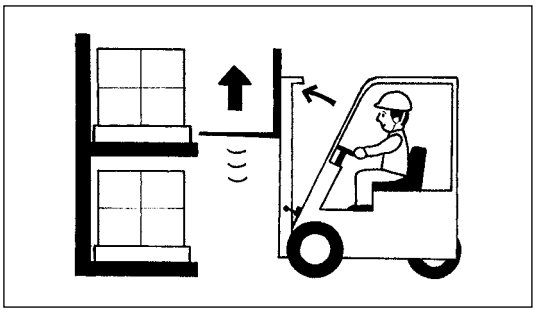

https://truckmanualshub.com/

6. After making sure the inserting position of the pallet again, travel forward slowly until the forks are fully inserted into the pallet.

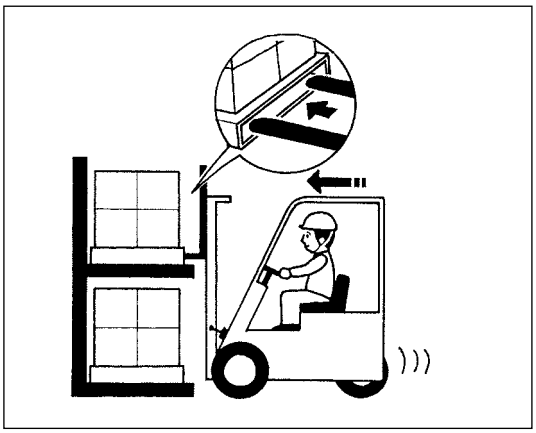

When it is difficult to fully insert the forks into the pallet:
1) Insert about 3/4 length of the forks and raise the forks a little (50-100mm).
2) Travel backward slowly about 100-200mm and lower the forks (place the pallet).
3) Insert the forks into the pallet fully with traveling forward.

7. After inserting, raise the forks (50-100mm).
8. Travel backward slowly until the load and pallet do not touch around the picking area.

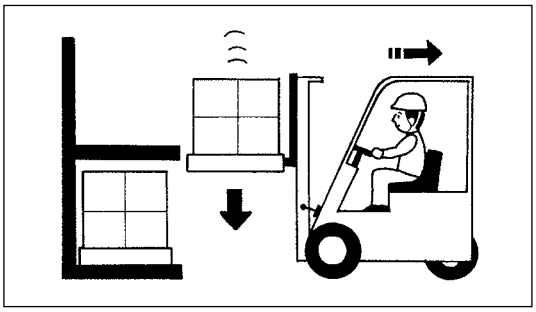

9. Make sure the load is completely out from the picking area. Lower the forks to the traveling position (150-200mm from the ground).

10. Adjust the load position to the forklift truck center by using the shift indicator.

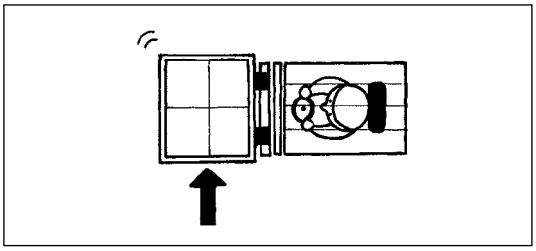

11. Tilt the forks up.

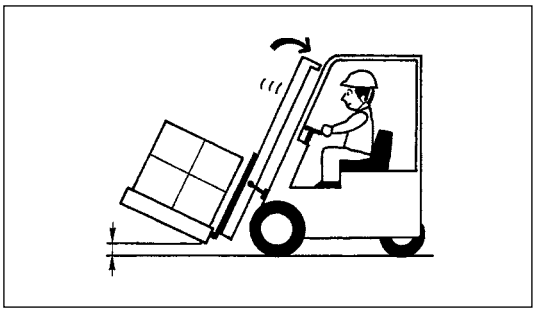

12. Carry the load to its destination.

https://truckmanualshub.com/

Periodical inspection and service

The proper inspection and maintenance prevent from unexpected breakdown and prolong the lifetime of the forklift truck. The periodical inspection should be planned for comfortable and safe operation.

- When adjustments or replacement parts are necessary, contact your local NICHIYU dealer.
- Use only NICHIYU genuine parts for replacement.
- Lubricate after wiping the old grease and dust off from nipples and fittings by a brush or rug.

Refer to the Operator's Manual of the forklift truck for details of the inspection and maintenance of the forklift truck.

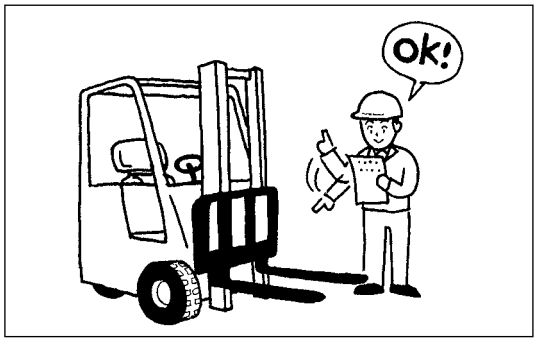

Daily inspection

For the safe operation, the daily inspection of the forklift truck should be carried out before starting
operation. If any abnormalities are found, the forklift truck shall be maintained and repaired.

Item		Detail of inspection
A	Upper hook	Make sure the upper hook of the sideshift carriage and forks are hung on the lift bracket and sideshift carriage completely.
B	Under hook, Lower hook	Make sure the clearance is enough.
C	Bolts	Mounting bolts of the load backrest and the lower hooks are tightened securely.
D	Cylinder, Hoses	Any oil leaks

[Integral sideshifter]

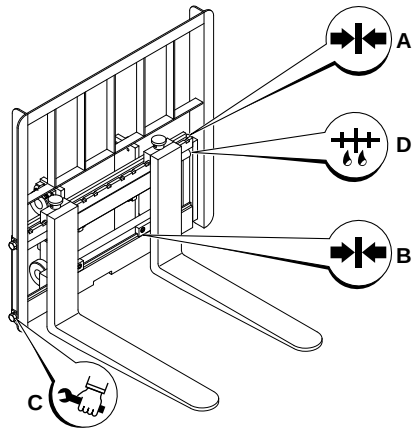

[Hook on sideshifter]

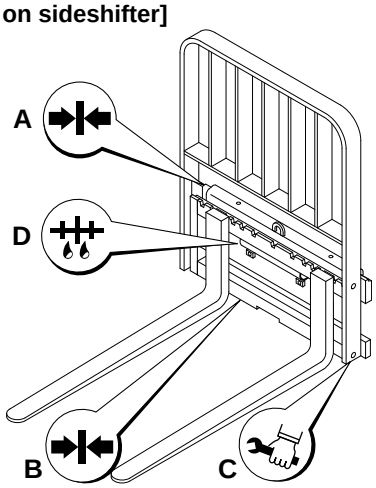

https://truckmanualshub.com/

Periodical inspection of every 100-hour

In every 100-hour or every chance to repair, inspect the following points. If any abnormalities are found, repair them immediately.

Integral sideshifter

Item	Detail of inspection
Upper hook	Make sure the upper hook of the forks is hung on the sideshift carriage completely.
Under hook	Make sure the clearance (0 to 2 mm).
Bolts	Mounting bolts of the load backrest and the lower hook are tightened securely.
Cylinder, Hoses	Any oil leaks
Upper and lower sliding shoe	Lubrication

[Integral sideshifter]

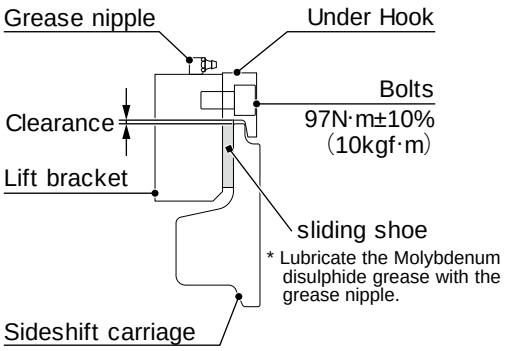

Hook on sideshifter

Item	Detail of inspection
Upper hook	Make sure the upper hook of the sideshift carriage and forks are hung on the lift bracket and sideshift carriage completely.
Lower hook	Make sure the clearance (0 to 2 mm).
Bolts	Mounting bolts of the load backrest and the lower hook are tightened securely.
Cylinder, Hoses	Any oil leaks

[Hook on sideshifter]

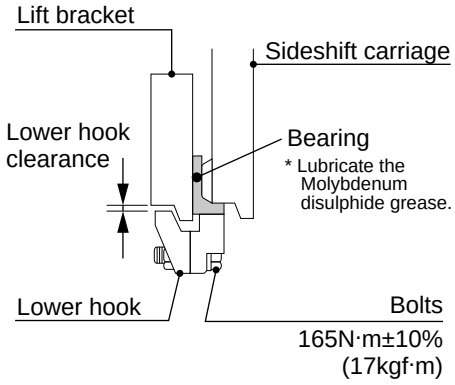

Periodical inspection of every 300-hour

In every 300-hour operation, the following points should be inspect additionally to the 100-hour inspection points. If any abnormalities are found, repair them immediately.

Integral sideshifter

Item	Detail of inspection
Upper and lower sliding shoes	If the thickness is less than 3 mm, replace both upper and lower sliding shoes.
Bolts	Check the tightening torque and re-tightening supplementarily.

Hook on sideshifter

Item	Detail of inspection
Upper and lower bearings	Lubrication
Bolts	Check the tightening torque and re-tightening supplementarily.

https://truckmanualshub.com/

Periodical inspection of every 1000-hour

In every 1000-hour operation, the following points should be inspect additionally to the 100-hour and 300-hour inspection points. If any abnormalities are found, repair them immediately.

Integral sideshifter

Item	Detail of inspection
Hook of the fork bar and forks	Check wearing condition

Hook on sideshifter

Item	Detail of inspection
Upper and lower bearings	If the thickness is less than 3 mm, replace both upper and lower bearings.
Hook of the fork bar and forks	Check wearing condition

Periodical inspection of every 2000-hour

In every 2000-hour operation, the following parts are recommended to replace additionally to the 100-hour, 300-hour and 1000-hour inspection points.

Integral sideshifter

Replacing part
Upper and lower sliding shoes
Cylinder seal kit

Hook on sideshifter

Replacing part
Upper and lower bearings
Cylinder seal kit

https://truckmanualshub.com/

Periodical replacing parts

Periodical inspection and maintenance are very important to keep your forklift truck in good condition.
These parts in the table are also very important for safe operation. Therefore, NICHIYU recommends that you replace these parts each period even if their appearances are good. Use genuine NICHIYU parts for replacement. (The periodical replacement is not covered by warranty.)

Periodical replacement parts	Replacement time
Sliding shoes, bearings	1-2 year
H.P. hoses	2 years

https://truckmanualshub.com/

FBT-80 SERIES

OPERATOR'S MANUAL

Reproduction prohibited

First printing : March 2012

Issued by : Nippon Yusoki Co., Ltd.
Sales & Marketing Division

PBC.1203-200