https://truckmanualshub.com/

OPERATION MANUAL

55N3

IHI

SERIAL NUMBER
WP003001 ～

PUB.1

0903 ENG

https://truckmanualshub.com/

https://truckmanualshub.com/

CONTENTS

Page

FOREWORD 0-1
SAFETY INFORMATION 0-2

1. SAFETY 1-1
1-1 General 1-1
1-2 Mounting and Dismounting 1-5
1-3 Before Starting the Engine 1-6
1-4 Starting the Engine 1-6
1-5 Before Operating the Machine 1-7
1-6 Operating the Machine 1-8
1-7 Safe Travel 1-22
1-8 Towing 1-25
1-9 Safe Transportation 1-26
1-10 Parking the Machine 1-27
1-11 Safe Maintenance 1-28
1-12 Warning Signs and Labels 1-33

2. Operation 2-1
2-1 Nomenclature 2-1
2-2 Controls and Instruments 2-2
2-3 Before Starting the Engine 2-11
2-4 Starting Engine 2-12
2-5 Jumper Cable Starting 2-13
2-6 After Starting the Engine 2-14
2-7 “Break-in”Operation 2-14
2-8 Control System 2-15
2-9 Operating the Special Attachments and Actuators (If Equipped) 2-18
2-10 Traveling the Machine 2-20
2-11 Towing 2-23
2-12 Lifting the Machine 2-24
2-13 Loading and Unloading the Machine 2-25
2-14 Precaution on Use of Rubber Track Shoe 2-26
2-15 Boom Lowering with the Engine Stopped 2-27
2-16 Parking the Machine 2-28
2-17 Emargency Engine Stop 2-28

https://truckmanualshub.com/

Page

3. MAINTENANCE 3-1

Maintenance Intervals 3-1

3-1 Lubrication Chart Maintenance and Checks 3-2

3-2 Recommended Lubricant Table 3-3

3-3 When Required Maintenance and Checks 3-4

3-4 Daily Maintenance and Checks 3-10

3-5 50 Hours Maintenance and Checks 3-14

3-6 250 Hours Maintenance and Checks 3-15

3-7 500 Hours Maintenance and Checks 3-20

3-8 1000 Hours Maintenance and Checks 3-23

3-9 2 Years Maintenance and Checks 3-26

3-11 Unusual Operating Conditions 3-28

3-12 Long Term Storage 3-31

4. TROUBLE SHOOTING 4-1

4-1 Trouble and Action 4-1

5. HYDRAULIC SYSTEM DIAGRAM 5-1

5-1 Hydraulic System Diagram 5-1

6. ELECTRICAL SYSTEM DIAGRAM 6-1

6-1 Electrical Wiring System Diagram 6-1

7. SPECIFICATIONS 7-1

7-1 General Specifications 7-1

7-2 Overall Dimensions 7-3

7-3 Working Range 7-4

7-4 Rated Object Handling Capacities Table 7-6

7-5 Noise Level 7-7

https://truckmanualshub.com/

FOREWORD

This manual contains safety, operation, maintenance, and adjustment information. The procedures are designed to provide the best performance of the machine in an effective and economical way. In order to obtain it, remember the next basic rules.

- This manual should be stored in the operator's compartment in the literature holder or seat back literature storage area.

- Before inspection, maintenance or operating the machine, read and understand this manual completely.

- Since all of the explanations in this manual may not be thoroughly understood at first, repeat reading it until abilities as an operator are obtained and developed for proper operation.

- Further abilities as an operator outside of descriptions in this manual can be obtained from the experience during normal operations and under proper supervision.

- The illustrations in this manual are used first of all to let you pay attention. They do not show all of illustrations in this manual. Because of continuing improvement and advancement of product design, the shape of machine in the illustrations may be partly different from your machine. Please understand it. Whenever a question arises regarding your machine, or this publication, please consult your local **IHI** distributor for the latest available information.

https://truckmanualshub.com/

SAFETY INFORMATION

We offer you basic and important rules and precautions for safe operations.

Read, understand, and observe them before starting operation. This is the most essential way to prevent accidents.
Wrong operation, inspection, or maintenance can cause personal injury or death.

Throughout this manual and on the machine, precautions are provided with ⚠ marks and classified by the words "**DANGER**", ''**WARNING**", and "**CAUTION**" according to their extent of danger.
The classification is as follows :

⚠ DANGER Indicates an imminently hazardous situation which, if not avoided, will result in death or serious injury.

⚠ WARNING Indicates a potentially hazardous situation which, if not avoided, could result in death or serious injury.

⚠ CAUTION Indicates a potentially hazardous situation which, if not avoided, could result in minor or moderate injury. It may also be used to alert against possible damage to the machine and its components.

We have made every effort for you to prevent accidents during operation, however, we cannot be held responsible for predicting every kind of danger in all operating conditions. It is the owner or user of the machine who is responsible for **ALWAYS** paying attention to operate the machine; as well as reading and understanding this manual enough to obtain the essential knowledge and skills fundamental to correct machine operation.

⚠ WARNING

- **BEFORE** inspection, operation, or maintenance of the machine, be sure to read and understand this manual.
- Incorrect operation or maintenance of the machine can cause the accident and serious injury or death.
- Keep this manual on hand during operation so that you can immediately consult it when necessary. If it should be missing or damaged, place an order from **IHI** distributor for a replacement.
- There are various kinds of federal, state, and local regulations that effect construction and industrial machinery. Since the regulations are subject to change, and differ from one locale to another, it is impossible for us to provide such information in this manual.
  It is the responsibility of the owner or user to be familiar with the regulations.
- Specifications and materials of the machine are subject to change without any obligation on the part of the manufacturer.

https://truckmanualshub.com/

1 SAFETY

SAFETY TIPS

This section explains safety tips which you will find throughout this manual and on the machine.
Periodically check labels and plates containing those tips for damage.
If they are damaged, clean or replace them.
For replacement, contact your local **IHI** dealer with their Parts Numbers in the Parts Catalogue.

Remember that the safety tips that we provide cannot cover every kind of danger that you may encounter during operation.

1-1 GENERAL

OBSERVE THE BASICS FOR SAFE AND EFFECTIVE OPERATION.

The operator's knowledge, skills, and experience are the most important to utilize the machine. Therefore, be sure to understand operation procedures and to take necessary training.

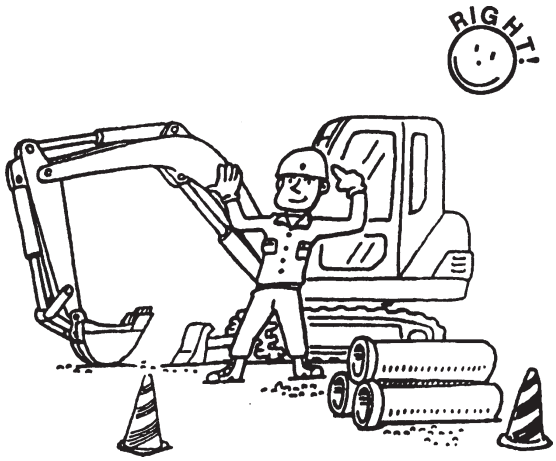

OPERATOR SHOULD BE QUALIFIED.

Only qualified operators should be authorized to operate the machine, and those so authorized should do so only when physically and mentally alert.
The operator should be to be familiar with the hazards and necessary safety measures unique to the operation of hydraulic excavators.

https://truckmanualshub.com/

READ AND UNDERSTAND THE INSTRUCTIONS AND WARNINGS.

This manual, plates, and labels on the machine contain necessary instructions and warnings for safe operation. You are supposed to read and understand them first.
If you should ignore them, injury or death may occur. Do not leave what you do not understand as it is. Your **IHI** distributor is glad to answer any question.
If the manual, plate, or label is missing or damaged, contact **IHI** distributor for replacement.

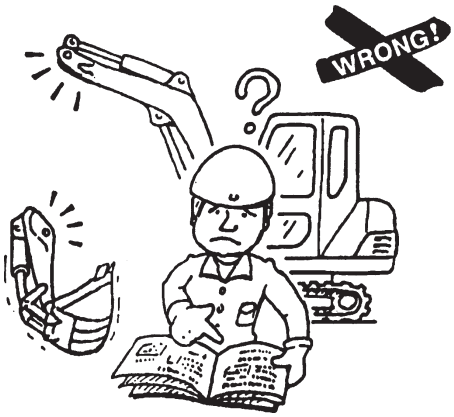

OPERATOR SHOULD BE IN GOOD HEALTH.

Operator should be physically and mentally alert, which is one of the best insurance against an accident.

NEVER operate the machine under the influence of alcohol, medication or intoxication.

WEAR PROPER WORKING CLOTHES.

Wear working clothes that closely fit operators. Avoid loose jackets, shirt sleeves, rings, and other jewelry which may be caught in moving parts. Avoid also oil stained or damaged garments. Shoes should be clear of grease or mud before operation.
Always wear required protective items such as hard hats, safety glasses, reflective clothing. safety shoes, and ear protection as required.

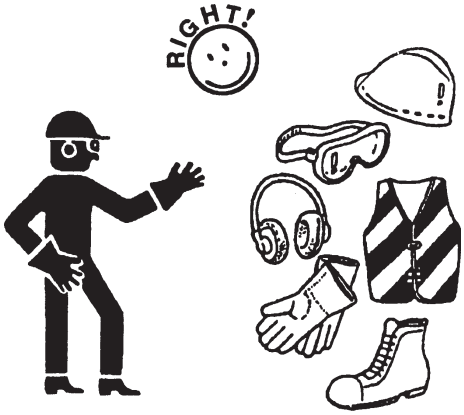

https://truckmanualshub.com/

PERFORM "WALK-AROUND" INSPECTION.

Walk around the machine to check safety guards, plates, and other related parts are set in place. Do not attempt to operate the machine when any unsafe condition is detected.

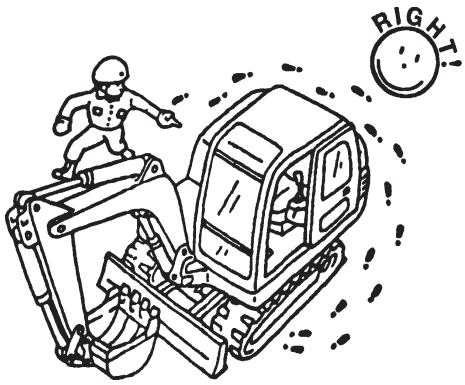

NEVER ASSUME ANYTHING GUARANTEED.

Never assume that everything is all right at the start of a work day just because it seemed satisfactory at the end of the previous work day. Before beginning each days operation, thoroughly inspect the entire excavator for signs of vandalism.

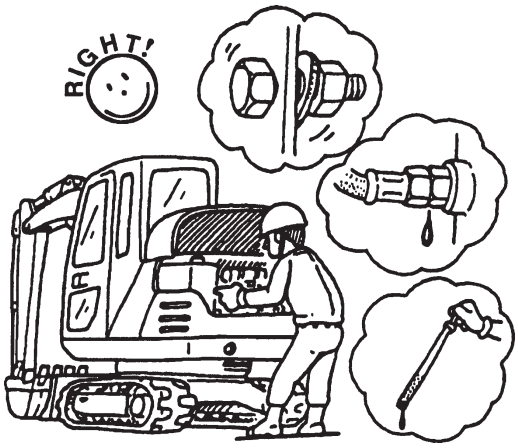

MAKE A WORK PLAN.

Prior to operation, investigate your job site sufficiently. When any obstruction or hazards are detected, mark it so that all personnel are aware of it. Avoid any oversight that may cause serious accident.
Observe a local weather forecast and discuss well work procedures and let all personnel know them without exception.

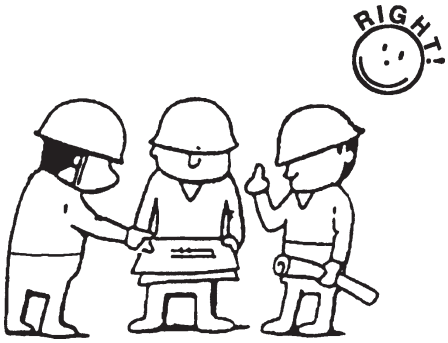

https://truckmanualshub.com/

WATCH FOR UNDERGROUND UTILTIES.

Mark the location of underground utilities such as gas lines, sewers, and power lines before any digging operations.
If necessary, the utilities should be temporarily discontinued.

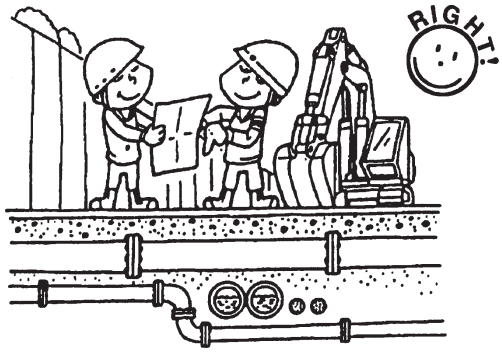

CHECK THE JOB SITE.

ALWAYS check the job site for grade and stability of the ground, ventilation, depth of water and ambient obstructions.
Avoid operating your equipment too close to an overhang.

Since this machine is not provided with anti-explosion design, **NEVER** use it inside a tunnel or in explosive environment to avoid hazard caused by an explosion.

CLEAR ALL PERSONNEL FROM THE MACHINE AND AREA.

Be sure to barricade the job site to prevent entry of the unauthorized. Confirm that there is no one around the machine before starting the engine or operating the machine.

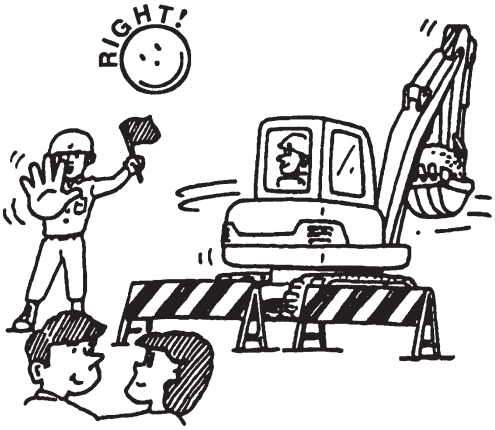

https://truckmanualshub.com/

MAINTAIN GOOD VENTILATION.

Take a countermeasure to vent the exhaust gas to the outside to start and operate the engine, in a pit, tunnel, or trench. In such a place, the air trends to stagnate. It is very dangerous to inhale the exhaust gas.
Remember, exhaust gas can kill you.

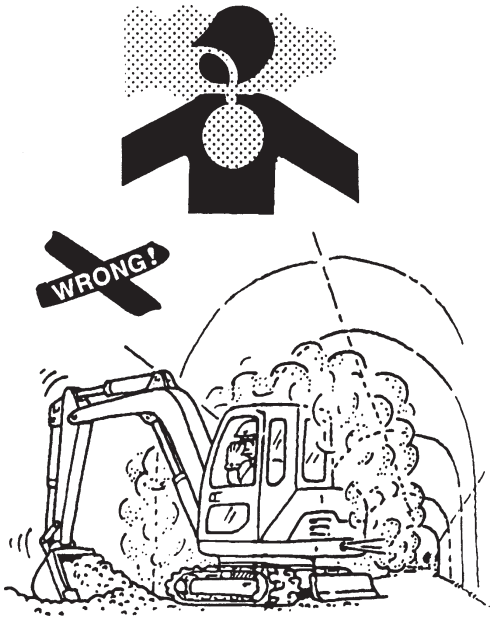

DO NOT MODIFY THE ROPS/TOPS.

Do not modify the **ROPS/TOPS** unless instructed to do so in installation instructions. Modifications such as welding, drilling or cutting can weaken the structure and reduce the protection it provides.
A damaged **ROPS/TOPS** can not be repaired – it must be replaced.

1-2 MOUNTING AND DISMOUNTING

CAREFULLY MOUNT AND DISMOUNT THE MACHINE.

ALWAYS use steps and handholds to mount and dismount the machine.
Hold the handholds with both hands and face the machine keeping a contact with at least three points of the steps and handrails.

NEVER hold control levers at mounting and dismounting.

NEVER not try to mount or dismount the moving machine.

NEVER jump off the machine.

Do not try to climb on or off the machine with implements or supplies in your hand.

https://truckmanualshub.com/

1-3 BEFORE STARTING THE ENGINE

FOLLOW THE NEXT PRECAUTIONS.

- Clear all personnel from the machine and the area.
- Move all control levers to the **NEUTRAL** position before starting the engine.
- Inspect the condition of the seat belt and mounting hardware.
  Replace any damaged or worn parts.
- Fasten the seat belt (if equipped) securely.
- Adjust the operator's seat to be able to depress the pedal completely.

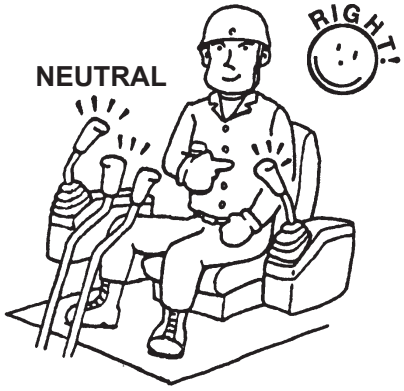

Fasten the seat belt.

Adjust the operator's seat

1-4 STARTING THE ENGINE

- **ALWAYS** start the engine only from the operator's seat following the starting procedure in this manual.
- When the start switch or controls are tagged with **"Do Not Operate"**, do not start the engine or move any of the controls.
- **NEVER** short across the starter terminals or across the battery.

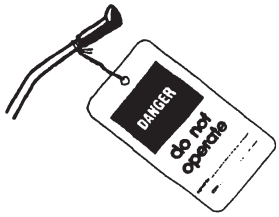

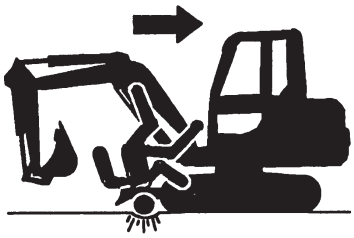

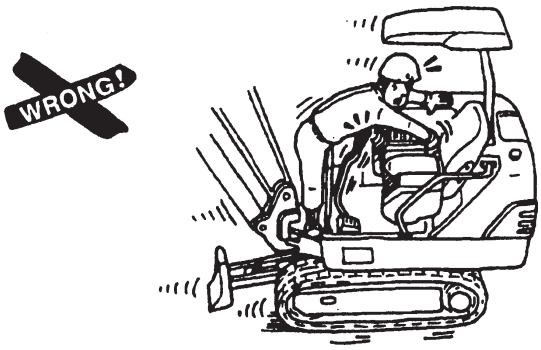

https://truckmanualshub.com/

1-5 BEFORE OPERATING THE MACHINE

FOLLOW THE NEXT PRECAUTIONS RIGHT AFTER STARTING THE ENGINE.

- Clear all personnel from the machine and the area.
- Make sure the machine horn and all other warning device are working properly.
- Be sure all Windows are clean.
- Check for proper operation of all controls and protective devices while moving slowly in an open area.
- When any defect is detected, immediately report it.

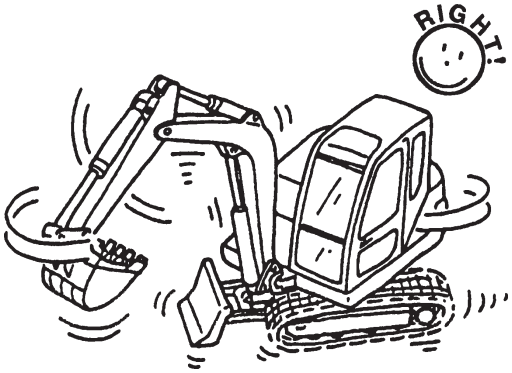

CONDUCT WARM-UP BEFORE OPERATION.

It is **ESSENTIAL** to conduct warm-up operation after starting the engine in order to run the hydraulic fluid smoothly.

The pumps may squeak because of the cold and thick hydraulic fluid, which results in the damage to the pumps.
ALWAYS take a time to warm up the fluid with running the engine at a low speed to maintain the **FREE FLOW OF OIL.**

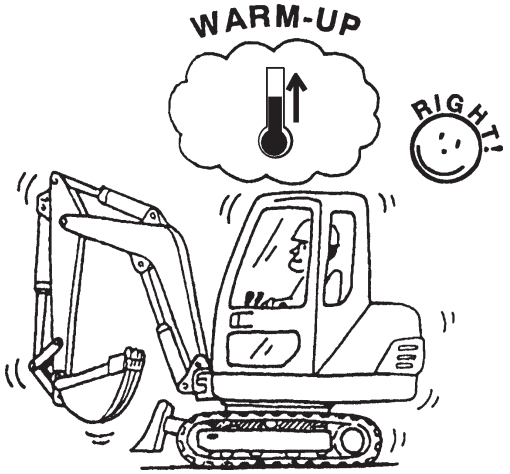

BE SURE TO LOCK DOORS AND OTHERS.

Be sure to lock doors, front windows, and lids before starting operation.
Operating with unlocked doors may cause personal injury.

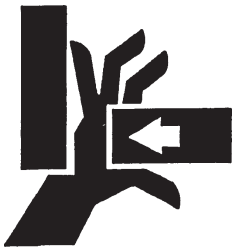

Crushing of finger or hands.

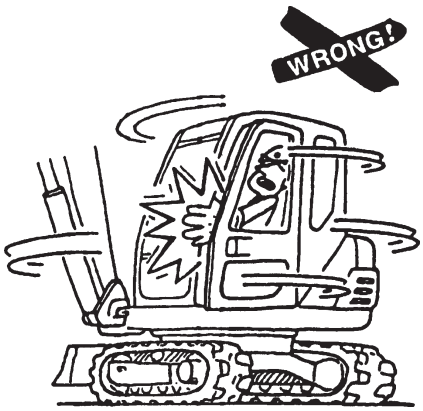

https://truckmanualshub.com/

1-6 OPERATING THE MACHINE

KEEP EACH OPERATION SECURED FOR SAFETY.

Conduct every operation with great care for safety. If you operate the machine roughly, It may cause damage to the machine, degrade the machine performance, and result in serious accidents.

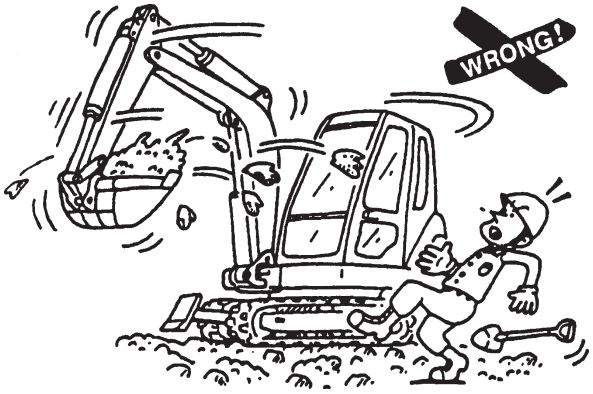

OPERATE CONTROL LEVERS IN A WISE WAY.

Do not get angry with the control levers when you cannot operate the machine as desired. It may degrade the machine performance and damage the machine instead of improving the situation.
ALWAYS consider the machine capacity and take a time to clear problems in the best way.

OBSERVE THE NEXT PRECAUTIONS FOR SAFE OPERATION.

- Do not read.
- Do not drink.
- Do not eat.
- Do not be distracted. If you have to divert yourself from the machine operation, stop the operation first.

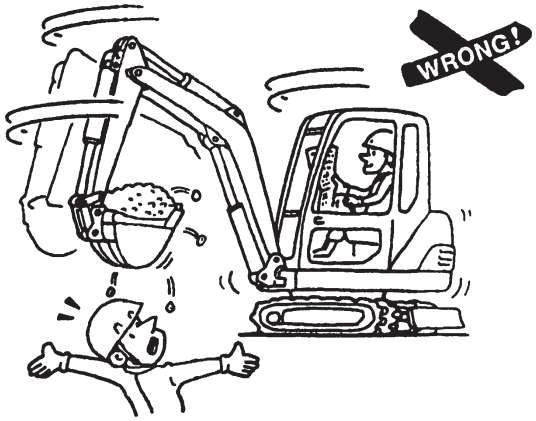

ALWAYS OPERATE THE MACHINE ONLY FROM THE OPERATOR'S SEAT.

NEVER attempt to operate the excavator from any position except the operator's seat. If you operate the machine from any other position, such as standing by the window or door, you may operate the machine inaccurately, which can cause serious injury. Remember that you should not get on or get off the moving machine to be seated or to leave the machine.

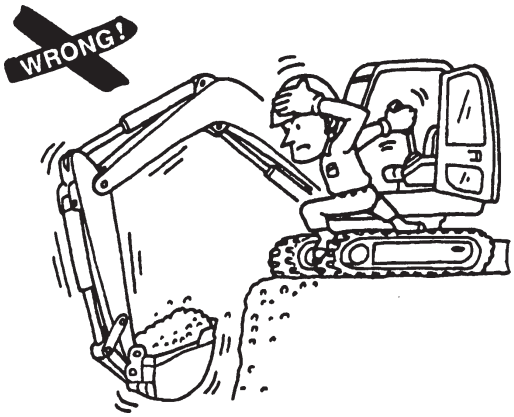

https://truckmanualshub.com/

WATCH FOR OVERHEAD WIRES.

Care must be taken that the boom does not contact, or even close to, overhead wires.

Know the maximum height and around of the machine. When working near overhead electrical lines, keep a distance of at least 10 feet (3 m) plus an additional 4 inches (100 m) for each 1,000 volts over 50,000 volts.
Check for local and state codes, which may require a greater distance for safety. Treat all lines as energized.

DANGER

DEATH OR INJURY MAY RESULT FROM CONTACTING ELECTRIC LINES.

ALWAYS CONTACT THE ELECTRIC POWER LINE OWNER. THE ELECTRIC POWER SHALL BE DISCONNECTED OR THE POWER LINES MOVED OR INSULATED BEFORE MACHINE OPERATIONS BEGIN.

NEVER OPERATE THIS MACHINE WITHIN 10FEET(3m) OF ELECTRIC POWER LINES.

NEVER LEAVE LOAD SUSPENDED IN THE AIR.

NEVER leave the load suspended in mid air, when the machine is out of service, or you have to leave the machine. **ALWAYS** put down the bucket or load onto the ground. Should a malfunction occur, it could fall, striking equipment or personnel.

⚠ DANGER

Should contact occur, stay on the machine until the boom is cleared or until the current is turned off. Keep all personnel off the machine. If you must leave the machine, **JUMP, DO NOT STEP OFF.**

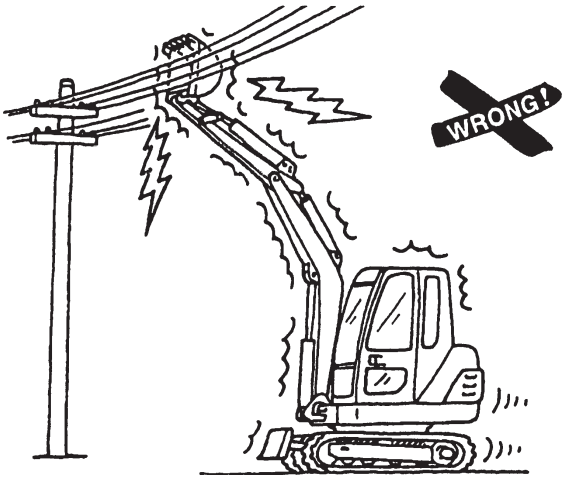

Electrical shock / erectrocution

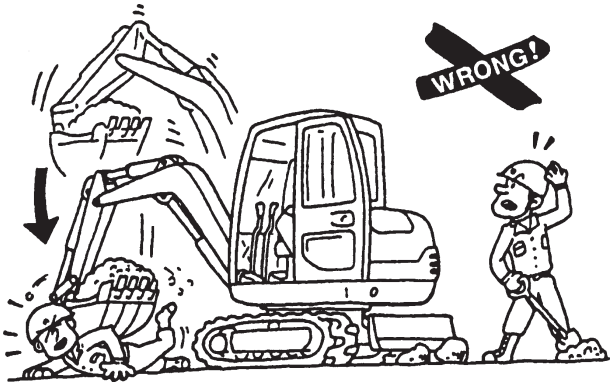

https://truckmanualshub.com/

NEVER ALLOW ANYONE TO RIDE THE ATTACHMENT OR THE LOAD

NEVER attempt to lift personnel using the attachment since the machine is designed to excavate and move **NOT** personnel **BUT** materials. If you lose control of the attachment in such a trial, the personnel will be dropped down, which is likely to occur.
NEVER LIFT, SWING, OR LOWER A LOAD OVER ANYONE OR ALLOW ANYONE TO RIDE TEE ATTACHMENT OR THE LOAD.

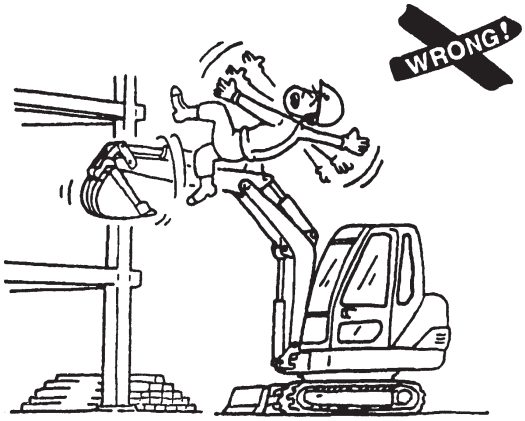

PROVIDE ADEQUATE TAILSWING CLEARANCE

Confirm that there is a sufficient clearance around the machine for swinging operation. The operator tends to be unconscious of the area behind the machine. Before tailswing, make sure that there no personnel or objects in such area.

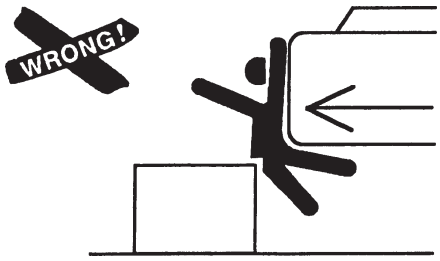

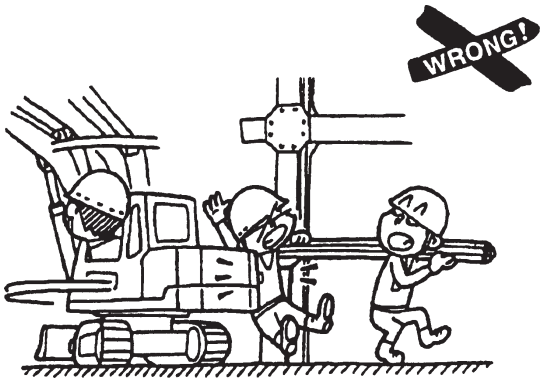

CAUTION

ALWAYS check for personnel or objects around the machine before swinging.

NEVER SWING OVER PERSONNEL

Be sure that no personnel are working around the machine before swinging.
Pay attention to invisible workers in a trench or pit in particular. Follow the signal person's direction not to swing over such workers.

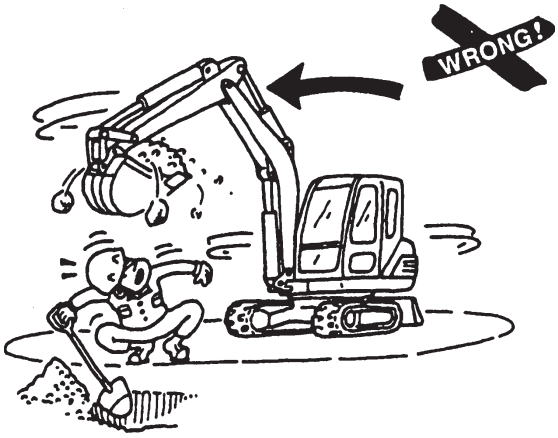

https://truckmanualshub.com/

CAREFULLY TRUCK LOADING

Load the truck from the rear whenever possible. **NEVER** swing the load over the truck cab. **"High altitude"** dumping into the truck is a dangerous practice. Use the bucket wrist action for precise dumping.

NEVER dump over truck cab. **ALWAYS** be sure truck driver is **OUT OF TRUCK CAB** and clear of the dumping bed when lifting.

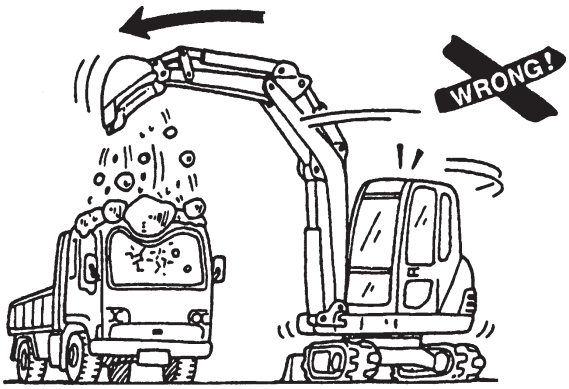

ALWAYS OBSERVE THE BUCKET AND LOAD.

ALWAYS watch the moving bucket or load carefully. Moving bucket or load without care may cause injury to personnel or materials. If you have to look away from it, stop the machine.

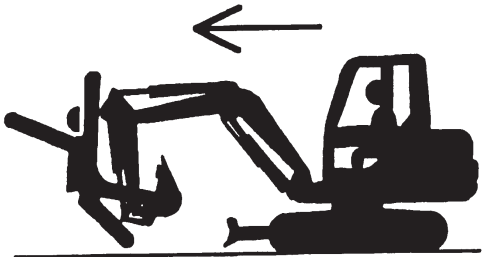

NEVER CAUSE PHYSICAL SHOCK TO HYDRAULIC CYLINDERS.

Be careful to protect the cylinder from any damage during operation. The hydraulic cylinder is not immune to physical shock. If the cylinder is collided or bumped, it may be distorted.

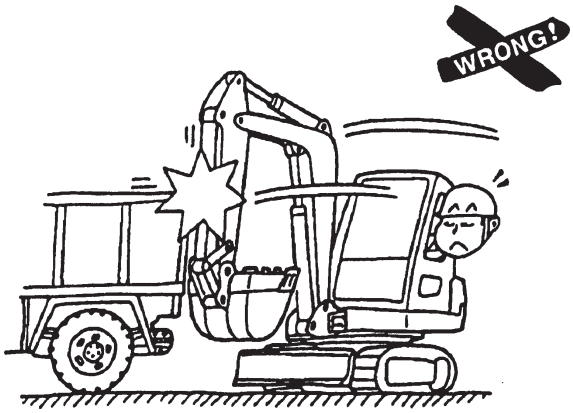

https://truckmanualshub.com/

TAKE SIGNALS FROM ONE SIGNAL PERSON EXCLUSIVELY.

Use only signals which are predetermined and common to all personnel.
Only one signal person should exclusively direct and give signals to personnel

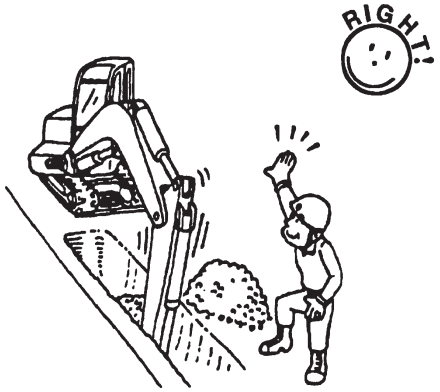

NEVER ALLOW PERSONNEL RIDE ON THE MACHINE OTHER THAN OPERATOR.

Only operator is authorized to be on the machine during operation.
Never let unauthorized personnel ride on the machine.

CAREFULLY OPERATE THE BUCKET.

Slow down the operation when controlling the bucket or moving the filled bucket close to the operator's cab in particular. which prevents the load from being dropped into the cab.

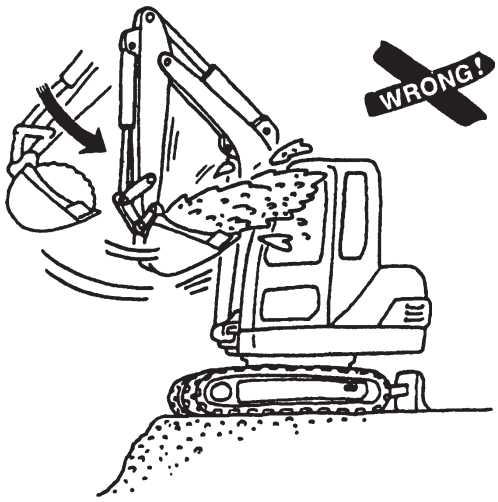

https://truckmanualshub.com/

PREVENT THE BUCKET FROM HITTING THE DITCH.

Be careful that the bucket will not hit the walls of ditch or the bank during swinging operation. This is likely to occur when conducting digging and dumping alternately.
Move the bucket slowly.

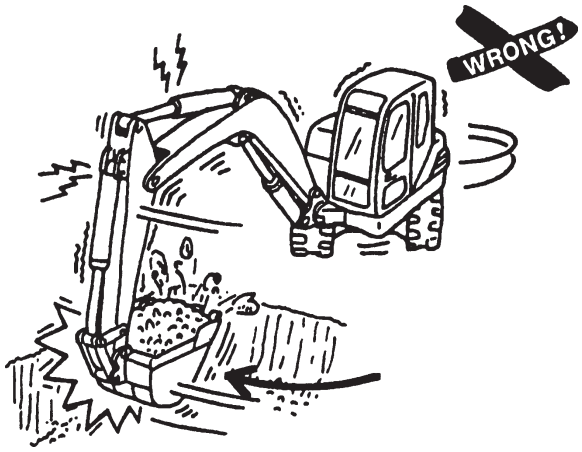

NEVER SWEEP WITH THE BUCKET.

Avoid sweeping the bucket like a broom in order to level off ahead of machine. This causes side strains and wear on the boom, arm, and bucket.

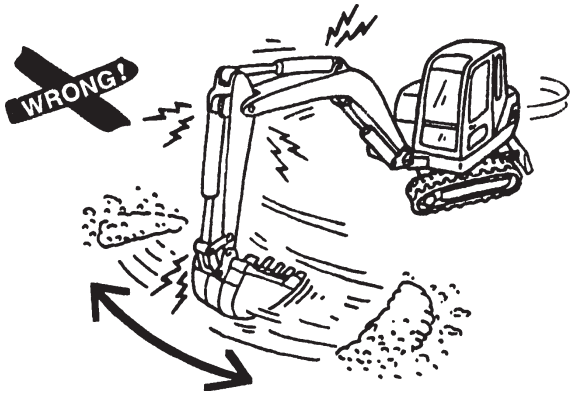

DO NOT MOVE THE ATTACHMENTS TO THE EXTREME ENDS OF THE STROKE.

If the rod is extended to the stroke end of the cylinder, the shock applies a large force to the cylinder, which may cause a damage to the boom or arm.
Operate the machine without moving the cylinder to the extreme end of the stroke.

It is recommended to operate the attachments near the stroke end of the cylinder.

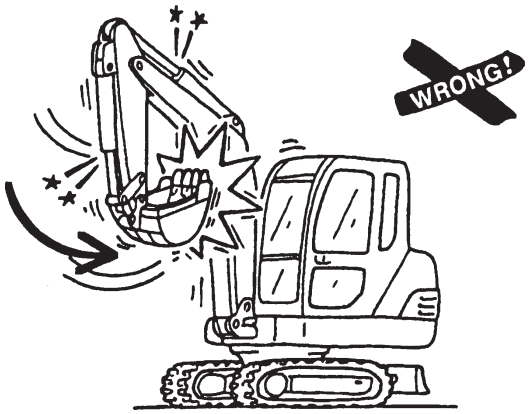

USE AN EXCLUSIVE MACHINE TO DIG OR BREAK EXTREMELY HARD MATERIALS.

Do not use the bucket to dig or break very hard materials like concrete. This will cause damage to the machine.

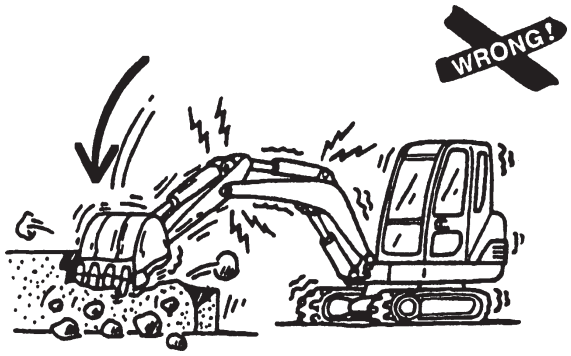

https://truckmanualshub.com/

DO NOT OVERLOAD TO CYLINDER.

Do not forcefully conduct digging operation beyond the capacity, which may overload any cylinder and open its relief valves.
This causes damage to the hydraulic system and machine.

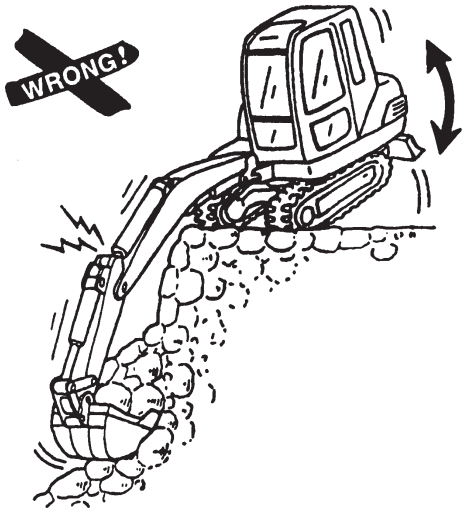

NEVER CONDUCT DIGGING OPERATION WITH FALLING FORCE OF MACHINE.

Do not raise off the rear of the machine from the ground and drop it down for digging up.
This will cause excessive shock and damage to the machine.

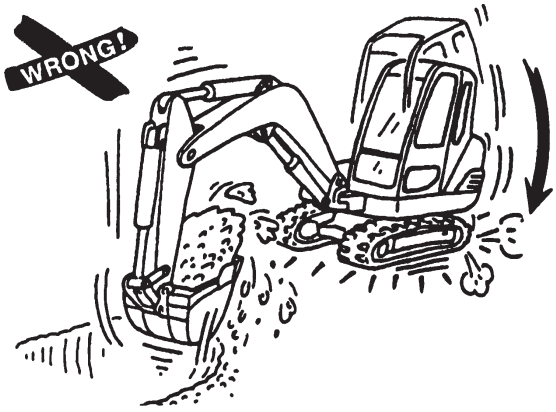

MEASURE DEPTH OF WATER AND CHECK CONDITIONS OF RIVERBED BEFORE FORDING.

Before fording, measure the depth of water and check the riverbed for holes, bumps, and any dangerous condition by following the next:

- Measure the depth of water first.
- Stop the machine and swing the bucket under the water to detect any bump or obstacle.
- Lower the bucket to measure the depth of water and detect holes occasionally.

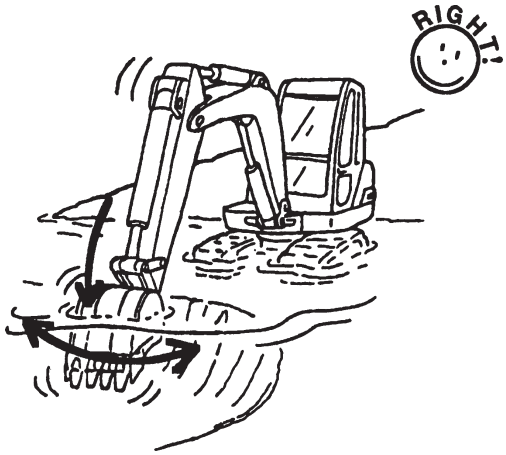

OBSERVE THE ALLOWABLE WATER DEPTH.

Allowable depth of water is limited up to the center of the upper rollers.
Be sure to lubricate long-soaked parts until old grease comes out of the bearings.

Allowable water depth

https://truckmanualshub.com/

DO NOT CRAWL WITH THE BUCKET.

Do not drag the bucket on the ground by crawling. Level the ground with proper equipments in a correct way.

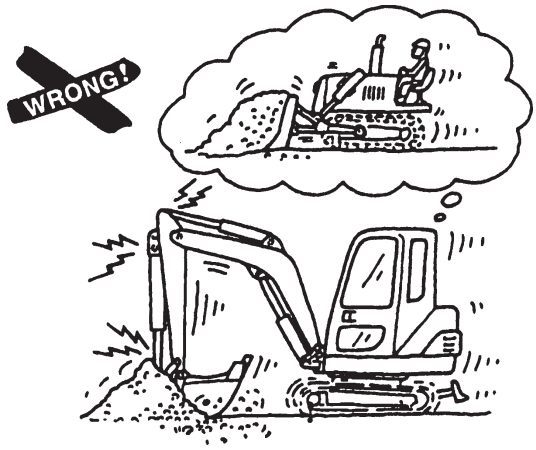

UTILIZE THE BLADE FOR DIGGING OPERATION.

Use the blade as a stabilizer for digging and follow the next precautions.

- Keep the entire blade contact with the ground. If the blade stays at an angle to the ground, or touches the ground partially, it may be damaged or loose its balance. To avoid this, level the ground first.
- Do not use the blade to excessively raise the tracks. Lower the blade only within a range where the tracks behind the blade lift slightly to ground the blade as a stabilizer.

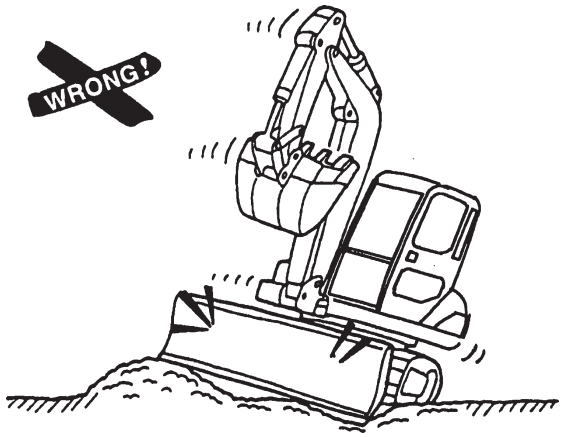

MAINTAIN A CORRECT BLADE POSITION.

If you need to conduct the deep digging with the blade, do not raise the blade so that the blade will not contact with the boom cylinder. Position the blade to rear if it is not necessary.

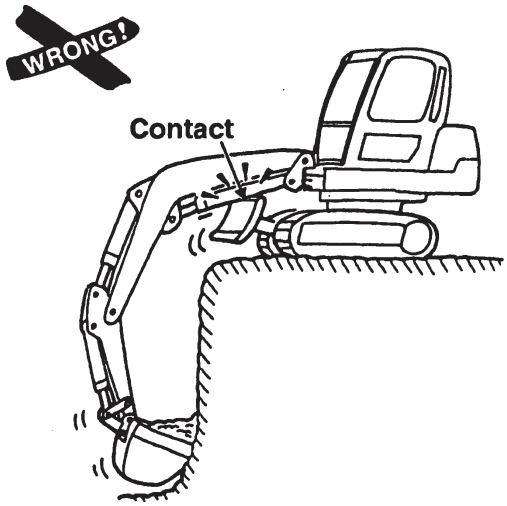

https://truckmanualshub.com/

TOPS THAT PROTECTS YOU FROM BEING CRUSHED BY THE TIPPED-OVER MACHINE

The cab-type machine is equipped with a **TOPS** (Tip over protective structure) as a standard specification.
The canopy-type machine is not equipped with a **TOPS** as standard, however, when the danger of turnover is expected while working on a soft, uneven, or included, we recommend the use of **TOPS canopy**.
Be sure to fasten the seat belt while operating the machine

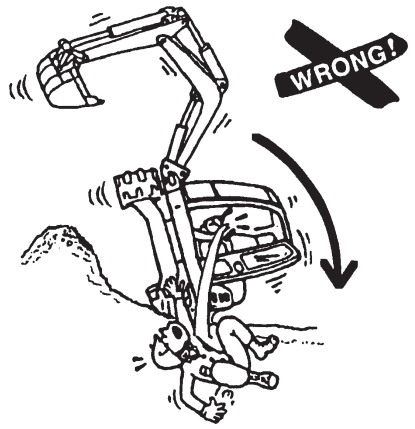

Never try to jump out

NEVER try to jump out of the cabin when the machine falling down. This may crash an operator to serious injury or death.
TOPS canopy is avoidable as option.
Consult your local **IHI** dealer.

Stay in cabin

THE FRONT GUARD PROTECTS AN OPERATOR FROM FLYING OBJECTS THE FRONT.

When braking materials with the machine and objects are likely to fly from the front, the **front guard** shall be equipped. If it is not equipped, flying objects may cause injury or death.

The front guard is avoidable as option. Consult your local **IHI** dealer.

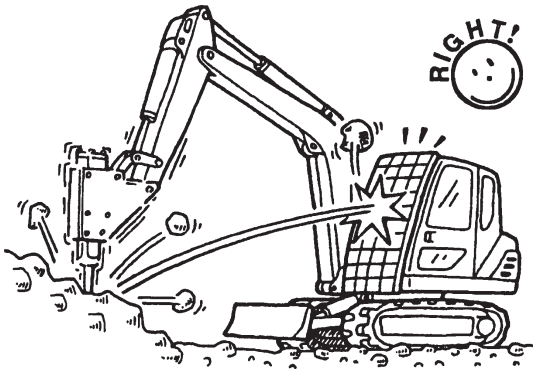

FOPS (TOP GUARD) PROTECTS AN OPERATOR FROM FLYING OBJECTS.

When working underneath cliff or destroying a building with the machine, the **top guard** shall be equipped.
Use the top guard to protect the operator and watch falling object. Otherwise falling objects may cause injury or death.
The top guard is avoidable as option. Consult your local **IHI** dealer.
FOPS: Falling-object protective structure.

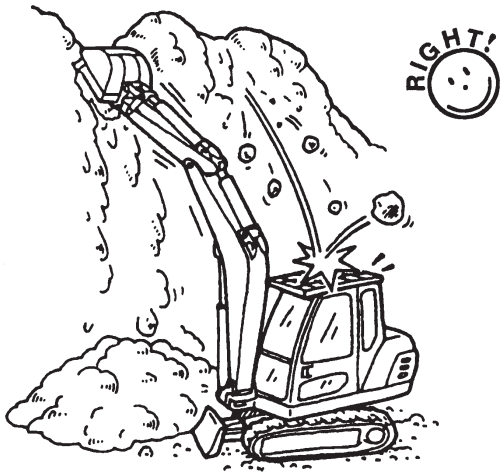

https://truckmanualshub.com/

SECURE FOOTING FOR SAFE OPERATION.

Check that the machine footing is level and firm to avoid the skid or overturn. If you need to operate the machine on the shoulder of a road or a grade. check the ground for levelness and stability prior to operation.

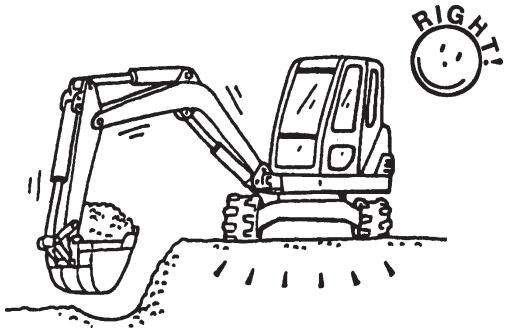

BE CAREFUL TO PREVENT TURNOVER.

The operating radius should be as small as possible when using the heavy bucket, and swing the boom slowly to prevent a turnover. Also, watch for buried objects during digging operation to prevent a turnover.

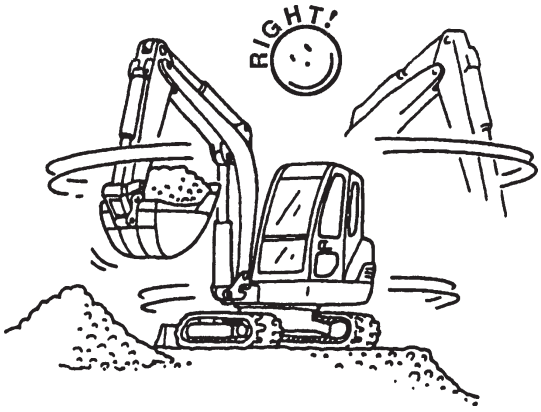

AVOID UNDERCUTTING THE MACHINE.

Do not try to dig close to the machine. If you undercut the machine, the footing may easily collapses. Recede from the digging site enough to keep a distance.

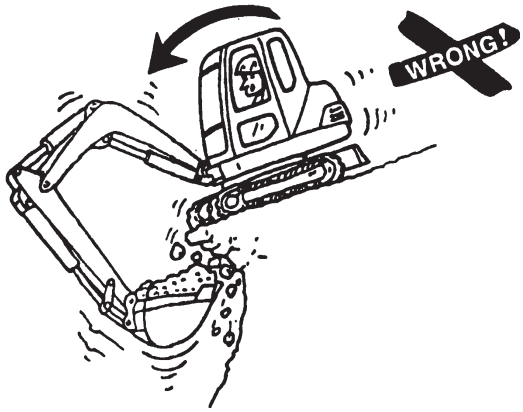

EMERGENCY ESCAPE

If the machine tips over and the cab door will not open, break the window with the hammer for emergency escape located at the rear of the operator cab and escape away from the machine.

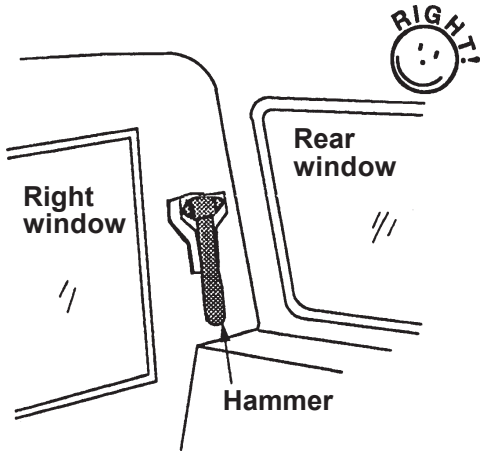

https://truckmanualshub.com/

OBSERVE FOOTING AT SWINGING.

To avoid tipping of the machine in swinging motion, check the machine footing whether it is level enough or not.

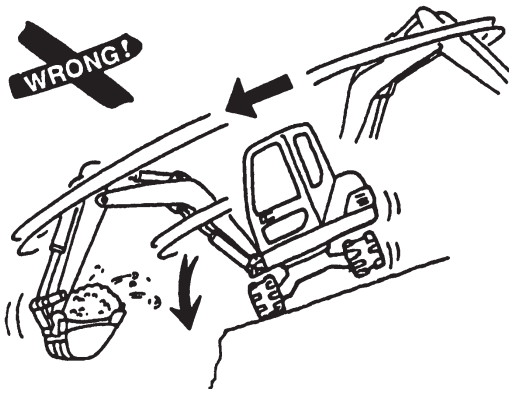

OBSERVE PRECAUTIONS ON OPERATION ACROSS TRACKS.

Pay attention to avoid turnover of the machine when lowering and swinging the boom from the blade side to either side of the machine at the same time. Since the width of each track is shorter than its length, stability is poorer over side than on the blade side. On a grade, operate the machine slowly with the retracted arm in a reduced working radius.

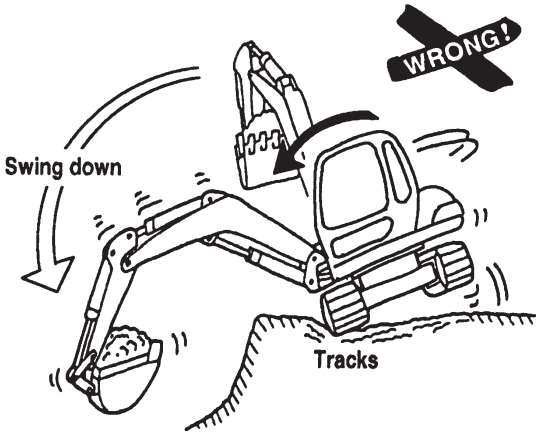

OBSERVE PRECAUTIONS WHEN OPERATING WITH LONG ARM.

Observe the following precautions to use the long arm.

① Do not use any combination of arm and bucket that we do not specify.

② Do not use the breaker attachment.

③ Do not lower and swing the boom at the same time on a soft ground or grade. Operate the machine slowly with the retracted arm in a reduced working radius.

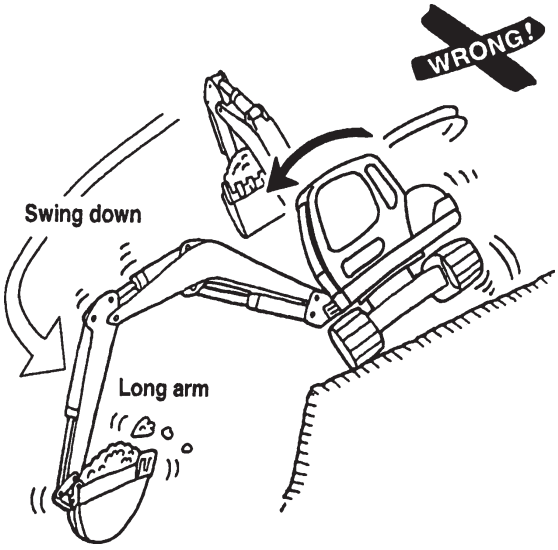

https://truckmanualshub.com/

REMEMBER OPERATING LIMITS.

1. Ground conditions
   The ground should be level and firm for safe operation.
   If you have to operate the machine on a grade, the machine should be parallel with a grade. Do not have it cross a grade.
   If you have to operate the machine on a soft or unlevel ground, carefully operate the machine to avoid serious accidents like a turnover.

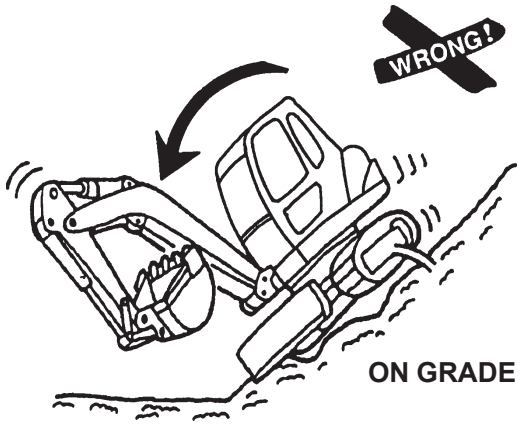

ON GRADE

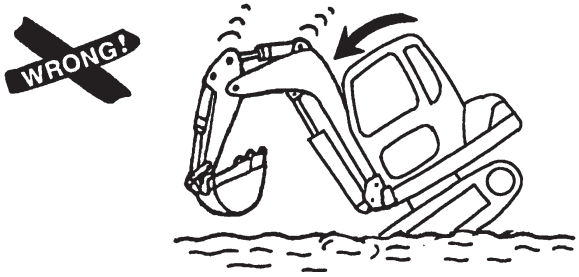

ON SOFT GROUND

ON UNEVEN GROUND

2. Use of attachment

   ① When using the longer arm, great care should be taken. If tends to reduce the machine stability and limits the bucket size. Slowly operate the machine with the longer arm and watch the ground condition.

   ② When using the larger bucket, great care should be taken. It tends to reduce the machine stability.
   Slowly operate the machine with the larger bucket and watch the ground condition.

   ③ **ALWAYS** use a bucket whose capacity meets the specification.

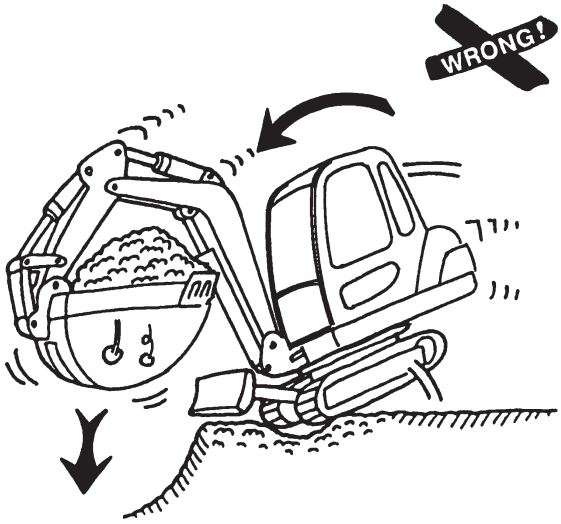

https://truckmanualshub.com/

LIFT COORDINATOR

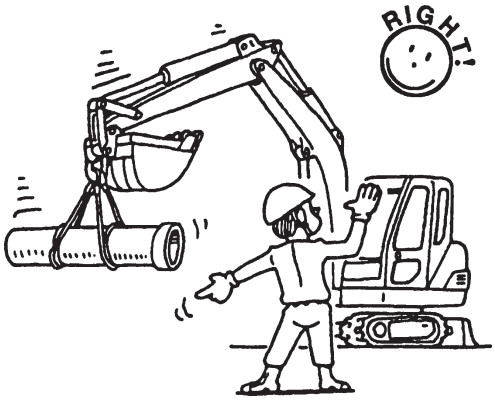

One person should assume responsibility for coordinating all facets of the lift. He must take into consideration the operator, the machine, other personnel, bystanders, and the surrounding area. He must be totally alert to the hazards involved, have in-depth knowledge of proper procedures and exercise good common sense all time.

DO NOT OVERLOAD LIFTING

Prominent among the safety measures unique to hydraulic excavators is the sole reliance upon the manufacturer's load rating chart as a guide to lifting capacity. Relying upon signs of tipping to warn of overload can result is machine damage or personal injury. Lifting capacity in excavators is usually determined by hydraulic and structural fitness, not tipping load. Before making a list, **ALWAYS** consult the load rating chart in the operator's cab.

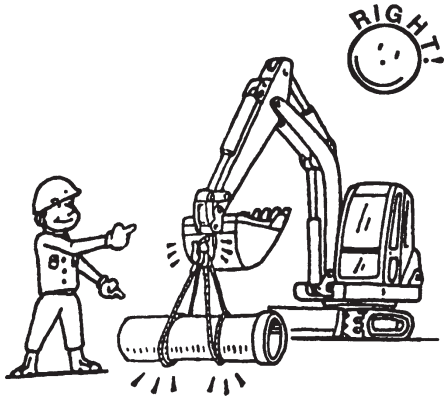

Stay within the lifting limits when laying pipes. Remember, you may be able to lift the pipe close in at ground level, but as you reach out and down, the lifting capacity decrease. If the machine is not on level ground, an instability will result, which could cause tipping. Always use short slings to prevent excessive load swing.

CAUTION

There may be some local government regulations regarding the use of excavators to lift heavy objects. Please observe those regulations where they apply.

CHECK THE SLING CABLE AND DEVICES

ALWAYS be certain that slings, ties and hooks are properly placed, secure, of adequate capacity and good condition before lifting materials.

https://truckmanualshub.com/

LIFT THE UNDERCARRIAGE IN A PROPER WAY.

Do not lift up the machine excessively or in incorrect direction, which may cause a turnover.

In particular, avoid lifting up the machine with the extended arm at an angle with the machine.

When you have to lift up the machine, position the tracks either parallel with or at right angle with the machine.

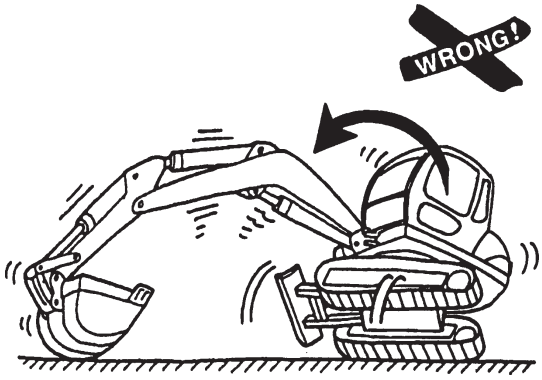

POSITION THE ARM VERTICALLY.

Do not try to lift up the front end of the tracks with the arm cylinder or bucket cylinder fully extended.
Position the arm vertically against the ground for lifting.

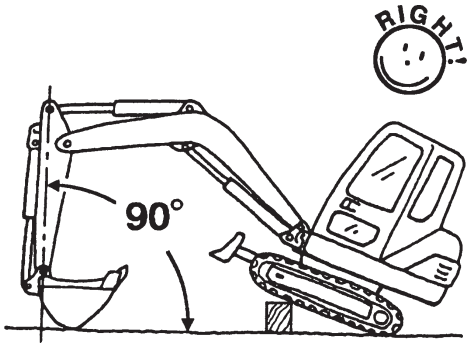

NEVER USE THE BLADE TO EXTRACT PILES.

Do not use the blade to lift up the machine to extract a pile. The great force of the blade cylinder overloads the machine, the attachment, cylinders, and other parts, which may cause serious accidents.

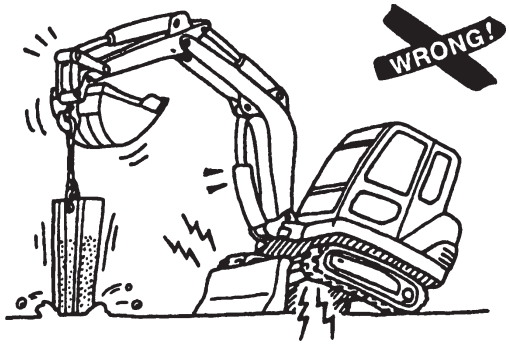

https://truckmanualshub.com/

1-7 SAFE TRAVEL

ALWAYS CHECK THE TRAVEL DIRECTION.

ALWAYS check in which direction the superstructure faces before controlling the travel levers. The machine is likely to travel in the opposite direction to your expectation when the superstructure directly faces to the rear.

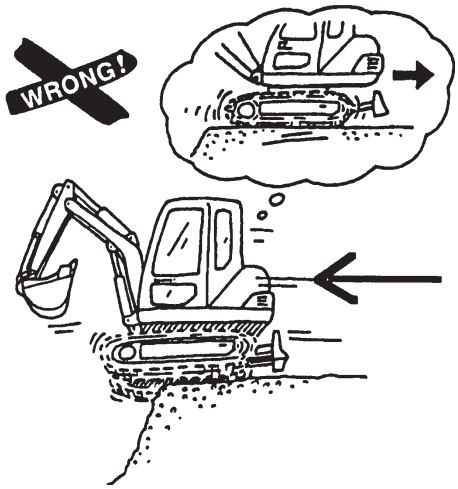

MAINTAIN OVERHEAD CLEARANCES.

ALWAYS be on the alert for overhead obstacles and be sure there is adequate side clearance when traveling. Get the assistance of the man on the ground when clearances cannot be ascertained from the operator's position.

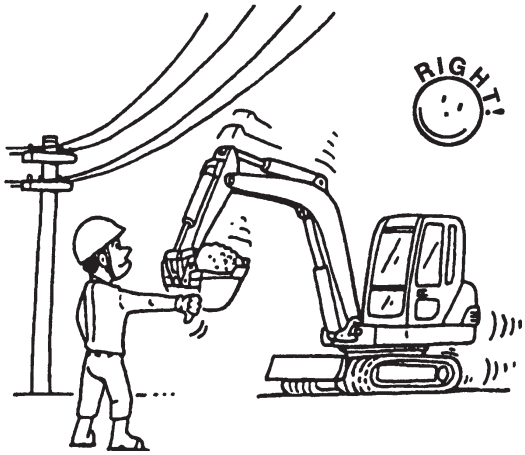

CAREFULLY TRAVEL THE MACHINE IN A NARROW AREA AND LOW CLEARANCE.

NEVER travel in an area where persons are coming and going or there are many objects. **ALWAYS** keep a safety distance around the machine. In a narrow area, place a signal person to guide the operator.
Before traveling, keep away persons from the traveling range.

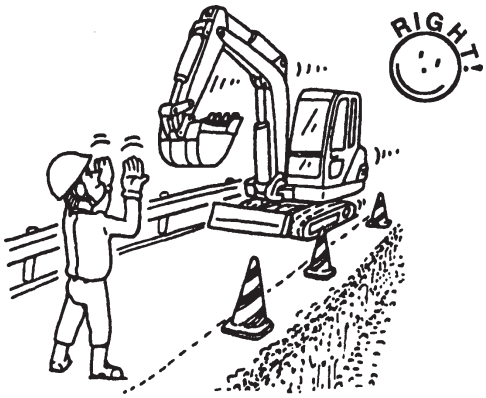

https://truckmanualshub.com/

CAREFULLY GO DOWNHILL.

Keep the bucket 200 mm to 300 mm Ⓐ above the ground while traveling on a grade.
When the machine skids or loses its balance, immediately put down the bucket onto the ground and stop travel.
Do not travel down in backward direction.
When traveling over any object, keep attachment close to the ground and slowly travel.

- When traveling uphill, or on a slope, keep the boom on the uphill side of the machine.

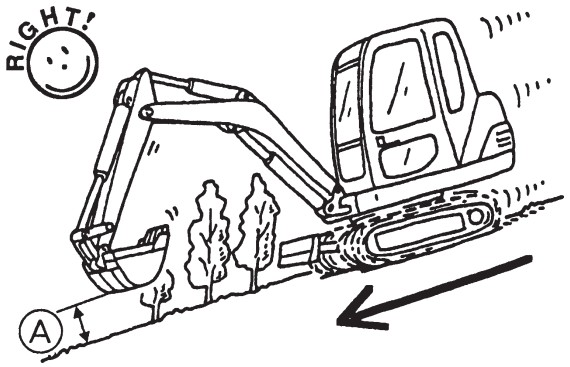

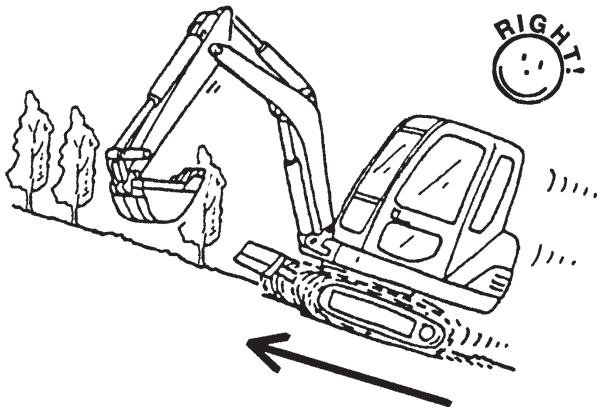

NEVER STEER ON A GRADE.

NEVER steer on a grade or unstable ground, which causes a turnover.
NEVER travel across a grade.
When traveling on a grade, travel up and down in parallel with the grade. Be careful to travel on the frozen ground since the machine tends to skid or fall down.

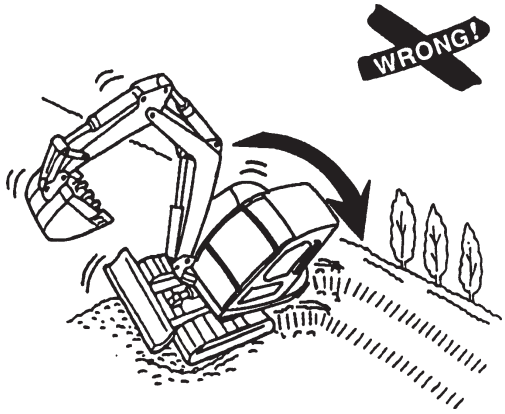

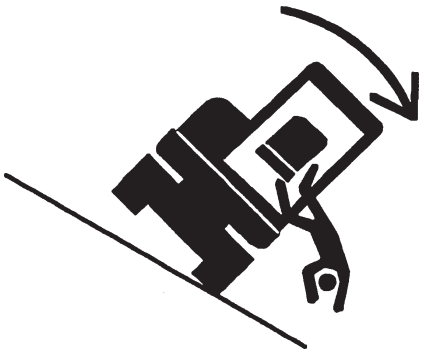

CHECK BRIDGES ARE SAFE.

Check the capacity of any bridge to be crossed to determain whether it will support the machine's weight.

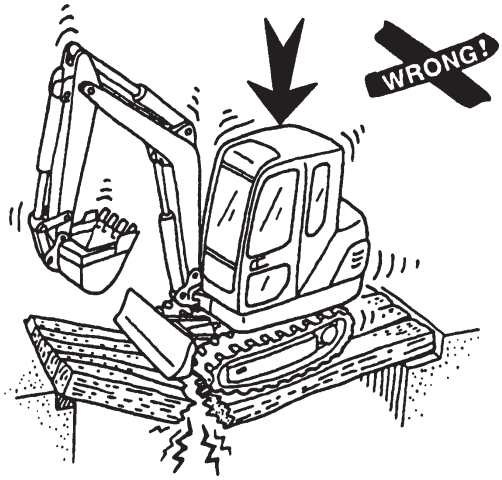

https://truckmanualshub.com/

SLOWLY TRAVEL THE MACHINE IN SPECIAL CONDITIONS.

Travel slowly when the ground is rough or covered with chunks of rock. Control the travel speed with the engine throttle lever. **NEVER** cause shocks to the tracks and the machine.

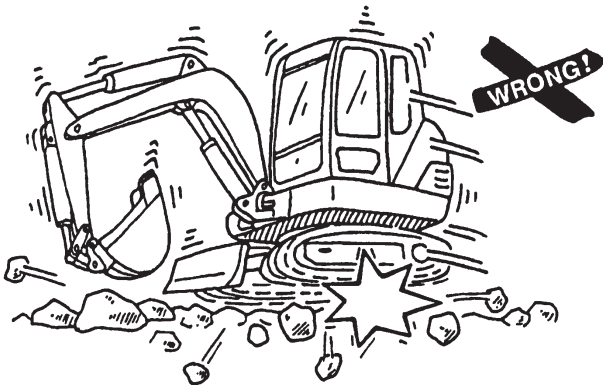

POSITION THE DRVIE SPROCKET TO THE RIGHT POSITION.

ALWAYS travel with the drive sprocket to rear. Keep the drive sprocket to rear in long travel in particular. If you position tt to front, wear at the lower structure will be enhanced.

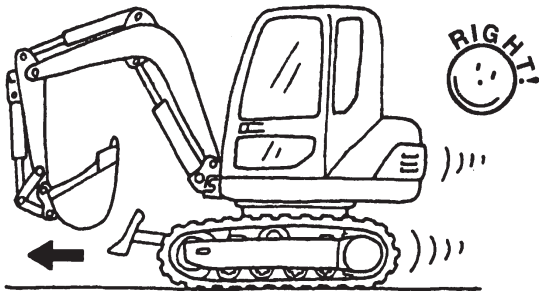

Sprocket

UTILIZE MATS AT A SPECIAL JOB SITE.

Use mats made of lumbers to support the machine on the soft ground or in a marsh. Use the clean and level mats for safe operation. Remember that the mats cannot support the machine in every condition. Carefully check the job site first and confirm that safety can be secured by the mats.

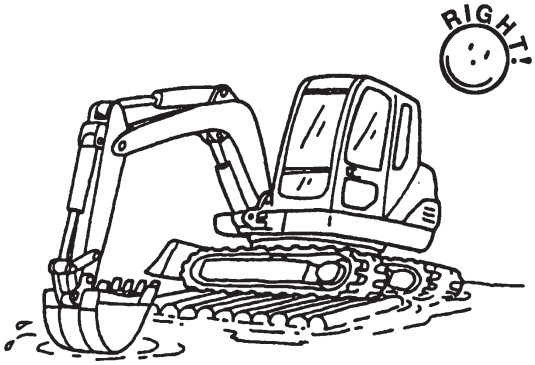

https://truckmanualshub.com/

ALWAYS MAKE SLOW TURNS.

ALWAYS try to make slow turns as much as possible other than emergency. Sharp turns or standing pivot turns will shorten the machine useful life.

Slowly change the travel direction on the unlevel or rough ground. Sharp turns tends to overstress the crawler.

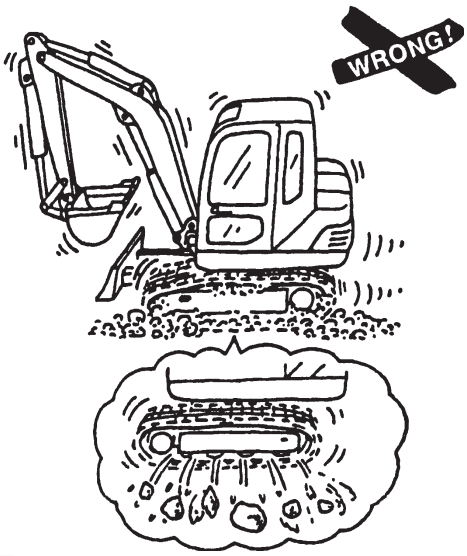

1-8 TOWING

CAREFULLY TOW THE MACHINE.

If the machine sinks down on a soft ground and cannot crawl up by itself, a wire rope should be attached to the rear axle and the machine should be towed by a towing machine.

NEVER attach the wire rope to the towing hook at the rear axle, which causes damage to the axle and the hook, and personal injury may occur.

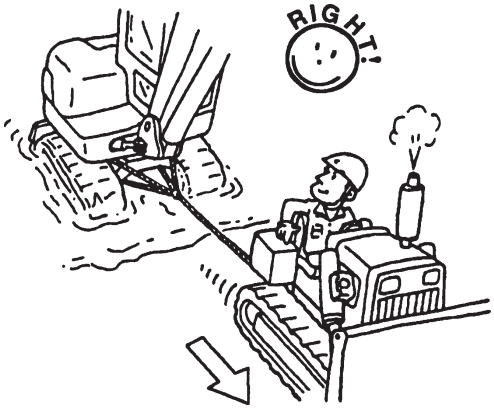

USE THE TOWING HOOK PROPERLY.

The towing hook is used to tow for lightweight material. The maximum allowable towed weight is **500kg.**

NEVER tow the machine with the towing hook, which may damage the towing hook and cause a personal injury.

Keep the tow line angle to a minimum. Do not exceed a 30° angle from the straight ahead position.

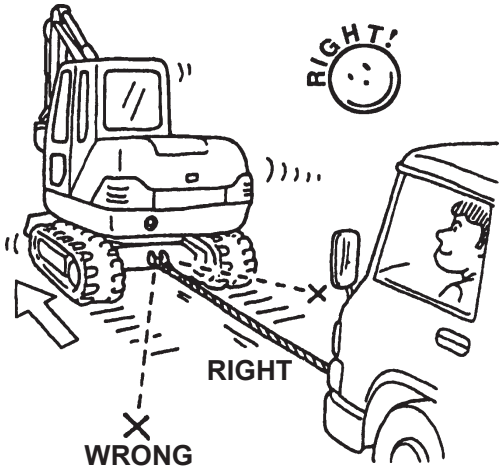

https://truckmanualshub.com/

1-9 SAFE TRANSPORTATION

CAREFULLY LOAD AND UNLOAD THE MACHINE.

ALWAYS load and unload the machine on the level ground.
Use a ramp that has sufficient strength, width, length, and thickness.
Remove ice, snow, or slippery material from the ramp and truck deck before loading.
NEVER make a turn on a ramp.

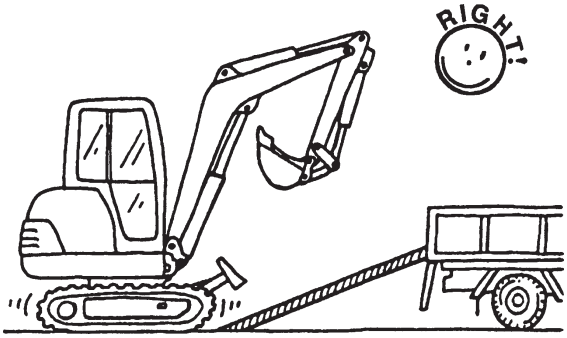

Do not raise the boom excessively at loading and unloading.

NEVER LOAD AND UNLOAD THE MACHINE WITHOUT RAMPS TO PREVENT TURNOVER.

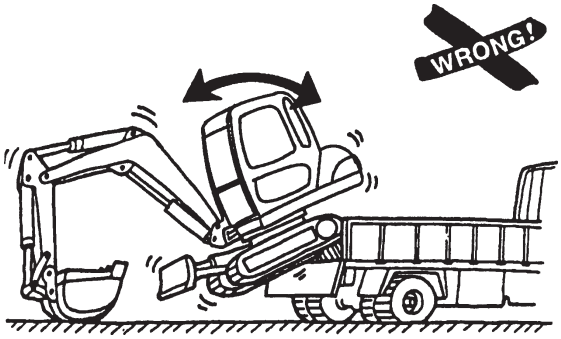

NEVER lift up the machine using the boom to load and unload the machine on and out of the truck. This is very dangerous.

ALWAYS ensure that a ramp has sufficient strength and length to accommodate the size and weight of the machine.

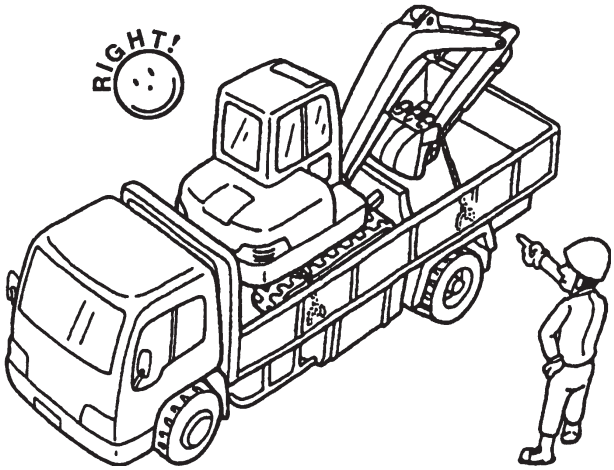

OBSERVE PRECAUTIONS ON TRANSPORTATION.

Be sure to engage the swing lock.
Block tracks and secure the machine to the truck before transporting.
Prior to transportation, check the travel route for clearances around the truck and the machine.

https://truckmanualshub.com/

1-10 PARKING THE MACHINE

BANKS AND SLOPES

NEVER leave the machine on or near any bank which may case, or on the edge of an excavation which might give way. Back the machine away from such areas which it is to be left idle or unattended for more than a brief period. Whenever possible, park on level ground.

DO NOT PARK THE MACHINE ON A GRADE.

If you have to park the machine on a grade, **ALWAYS** lower the bucket and the blade onto the ground and block the machine.

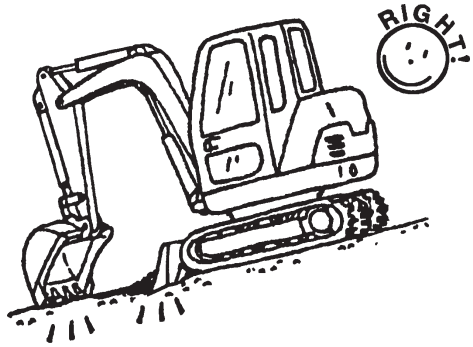

OBSERVE PRECAUTIONS WHEN PARKING THE MACHINE ON THE ROAD.

If you have to park the machine on the road, use appropriate flags, barriers, flares, and warning signals.

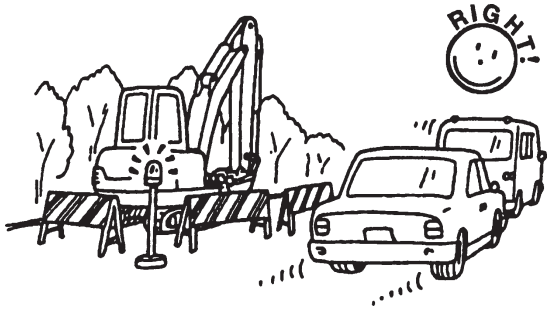

OPERATOR LEAVING MACHINE

ALWAYS lower attachments to rest on ground and stop engine before leaving the machine unattended.
Engage all locks, turn off the start switch, and remove the start key. Lock the windows and doors.

https://truckmanualshub.com/

1-11 SAFE MAINTENANCE

KEEP ROUTINE MAINTENANCE

Maintenance work can be hazardous if not done in a careful manner. All personnel should realize the hazards and strictly follow safe practices. Before performing any maintenance or repair work, consult the instruction manual. Before maintenance, stop the engine and do not conduct any operations.

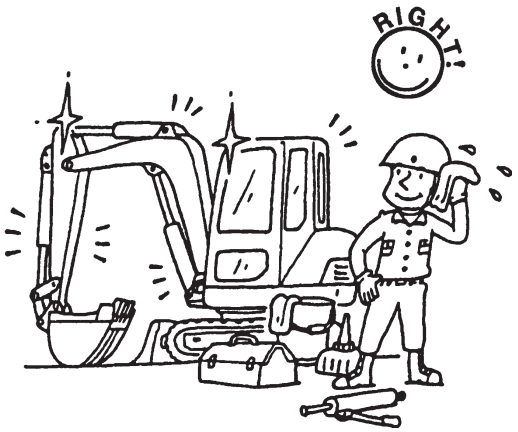

PERFORM MAINTENANCE WORK CORRECTLY.

While maintenance work is being done, that starting controls should be **TAGGED**. the tag should be removed only by someone who is aware of the circumstances, and who can assure that it is safe to do so.

ALWAYS CLEAN THE MACHINE.

Maintain the machine clean for safe operation.
Remove dirt, grease, maintenance tool from the operator's cab for secured control.
Clean the window to obtain good sight.
Do not place anything flammable around the machine.

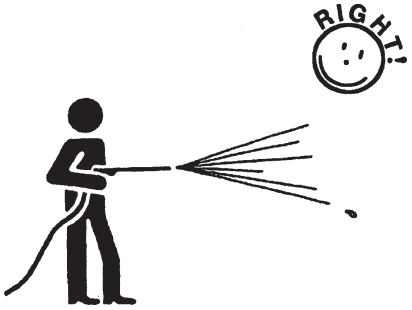

SET HYDRAULIC PRESSURE CORRECTLY.

Only qualified person is allowed to gauge and adjust the hydraulic pressure following the specified procedure and using the correct gauge if necessary.
If there is no qualified person, consult your local **IHI** distributor.

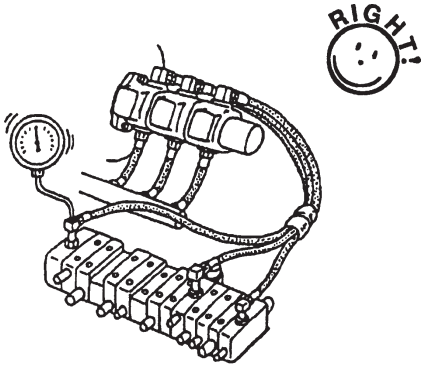

https://truckmanualshub.com/

PREVENT CRUSHING OR CUTTING.

Before **ANY** kind of adjustment or service of the machine, stop the engine and do not operate the machine.

NEVER fuel or lubricate when the engine is running.

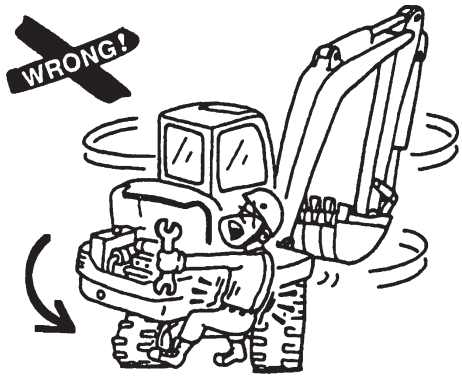

NEVER LEAN OUT OF THE WINDOW.

Keep your body inside the operator's cab.

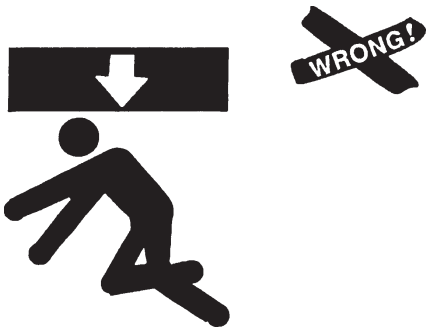

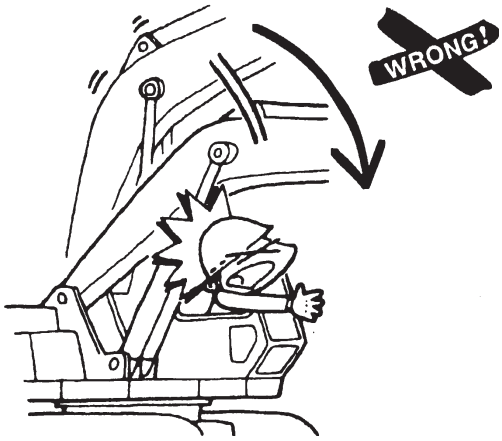

The boom may fall down onto you if the boom control lever is accidentally pressed.
If the window is missing or broken, replace immediately.

SUPPORT THE UNDERCARRIAGE WHEN WORKING UNDER TRACKS.

NEVER allow anyone to work undercarriage that is lifted and not properly blocked. Check that the machine is supported sufficiently by the blocks and will not fall down. Do not keep the machine lifted up only by the boom and arm. Attach a warning tag to warn, **"DO NOT OPERATE".**

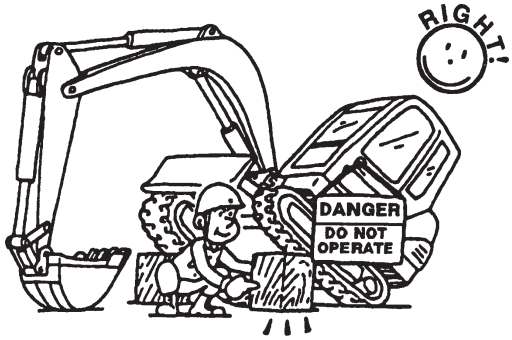

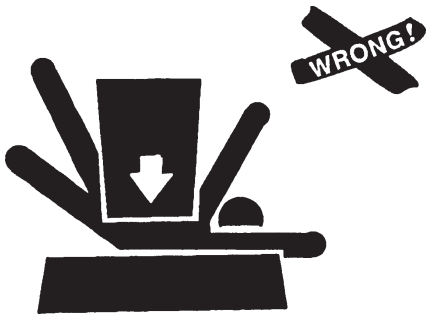

https://truckmanualshub.com/

PREVENT FIRE OR EXPLOSIONS.

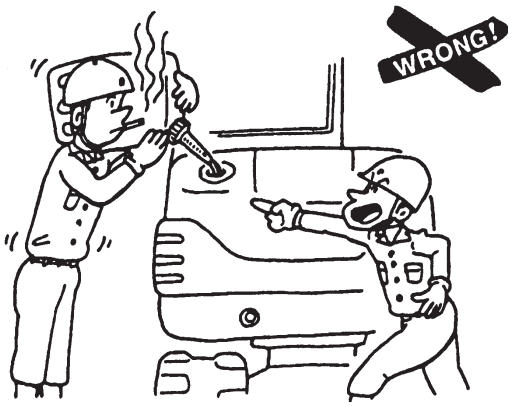

Keep away fuel, lubricant, and coolant from any fire or heat. Most of them are very flammable.
NEVER place flammable materials or objects close to fire or heat.

NEVER SMOKE WHILE REFUELLING.

NEVER smoke while refuelling or in a place close to flammable objects.

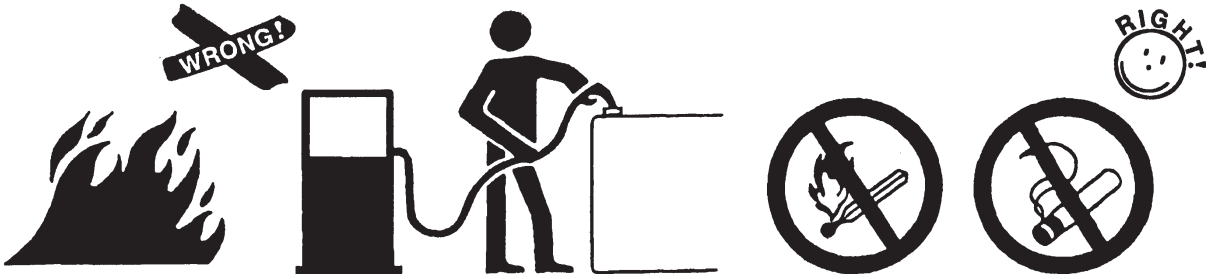

DO NOT TOUCH BATTERY ELECTROLYTE.

Battery post, terminals and related accessories contain lead and lead compounds. Wash hands after handling.

Battery acid will **burn skin,** eat holes in clothing, and **cause blindness** if splashed into eyes. If you spill acid on yourself flush skin immediately with lots of water. Apply baking soda to help neutralize the acid.
If acid gets in your eyes, flush immediately with large amount of water and seek proper medical treatment immediately.

When servicing battery remember that a lead-acid storage battery generates (when charging or discharging) hydrogen and oxygen – a very explosive mixture. A spark or flame could ignite these gases.

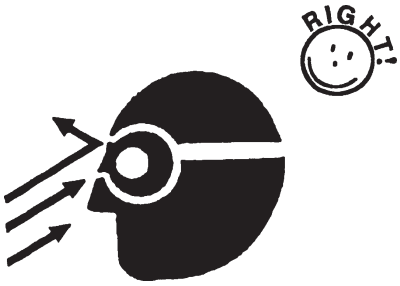

Eye protection required

Always wear **safety grasses and groves** when working with battery.

https://truckmanualshub.com/

ALWAYS RELEASE PRESSURE BEFORE DISASSEMBLING HYDRAULIC LINES.

Before disconnecting **hydraulic fluid lines** on a hydraulic machine, be sure you.

- Place boom on the ground or have it supported.
- Shut off engine.
- Always release any pressurized air on hydraulic tank.
- Move control levers and pedals repeatedly through their operating positions to relieve pressures.

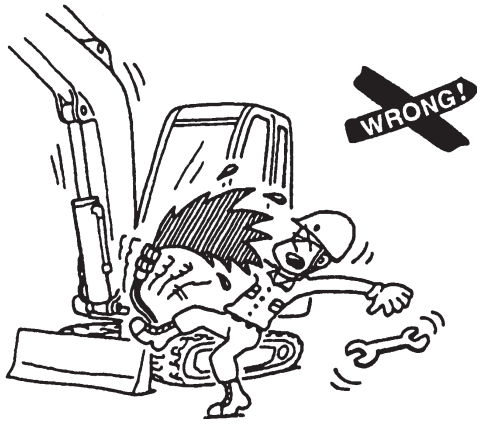

PRESSURIZED HYDRAULIC FLUID CAN PENETRATE THE SKIN AND CAUSE SERIOUS INJURY OR DEATH.

Therefore, be sure all connection are tight and that lines, pipes, and hoses are in good condition before starting the engine.

Fluid escaping from a small hole can be almost invisible. Use a piece of cardboard or wood, instead of your hands, to search for suspected leaks.

If you are struck by escaping hydraulic fluid under pressure, serious reactions can occur if proper medical treatment is not administered immediately. .

NEVER WATCH THE RELIEF VALVE WHEN ADJUSTING TRACKS.

NEVER watch the relief valve when servicing the tracks. Position yourself not to be splashed with grease. Grease used to adjust the tracks is highly pressurized and can cause serious injury or death.
Carefully read and understand the maintenance procedure for track adjustment.

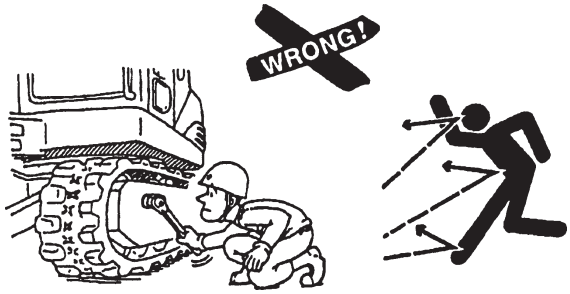

https://truckmanualshub.com/

BE CAREFUL TO ROTATING AND MOVING PARTS.

Do not come close to all rotating or moving parts such as a fan belt.
Do not allow any object to come near moving parts.
It will be repelled and thrown out, which may cause personal injury.

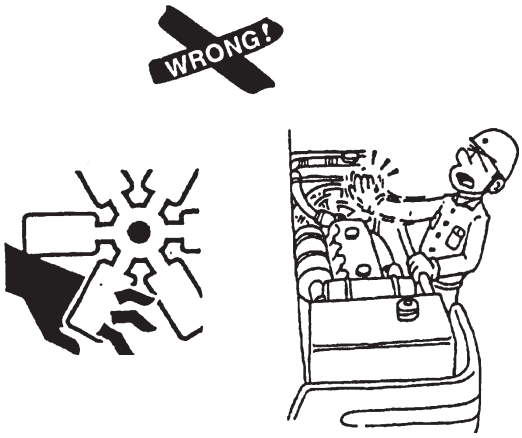

BE CAREFUL TO HOT ENGINE AFTER THE MACHINE STOPS.

NEVER touch the engine or muffler right after the machine is stopped. It is very hot and causes burns.

CAREFULLY HANDLE THE ENGINE COOLANT.

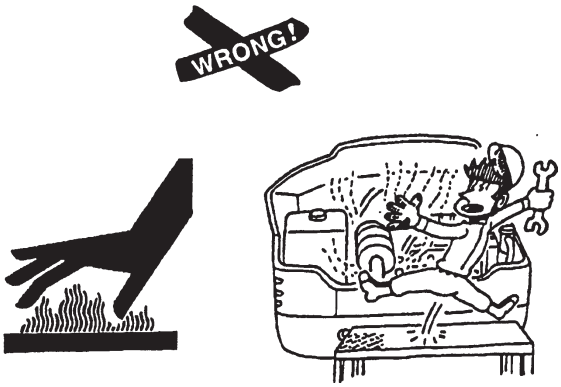

NEVER try to open the coolant filler cap while the engine is running or right after the engine is stopped. If the cap is open, the very hot steam will blow out, which causes serious burns. Wait until the coolant temperature goes down.

Slowly open the filler cap to release the pressure.

Do not touch the engine coolant directly. It may cause injury to your skin. Wear gloves or use a cloth to handle it. **NEVER** drink it, or **NEVER** let it come in contact with your eyes.

Before draining the engine coolant, cool down the radiating systems.

If you drink antifreeze, **IMMEDIATELY** have it thrown out and call for emergency medical cure.

Do not leave any tool on the machine after maintenance and place it in place before re-starting operation.

https://truckmanualshub.com/

1-12 WARNING SIGNS AND LABELS

There are several specific safety signs on your machine. Their exact location and description of the hazard are reviewed in this section.
Please take the time to familiarize yourself with these safety signs.

Wake sure that you can read all safety signs. Clean or replace these if you cannot read the words or see the pictures. When cleaning the labels use a cloth, water and soap. Do not use solvent, gasoline, etc.

You must replace a label if it is damaged, missing or cannot be read. If a label is on a part that is replaced, make sure a new label is installed on the replaced part.
See your IHI dealer new labels.

Located warning lavels

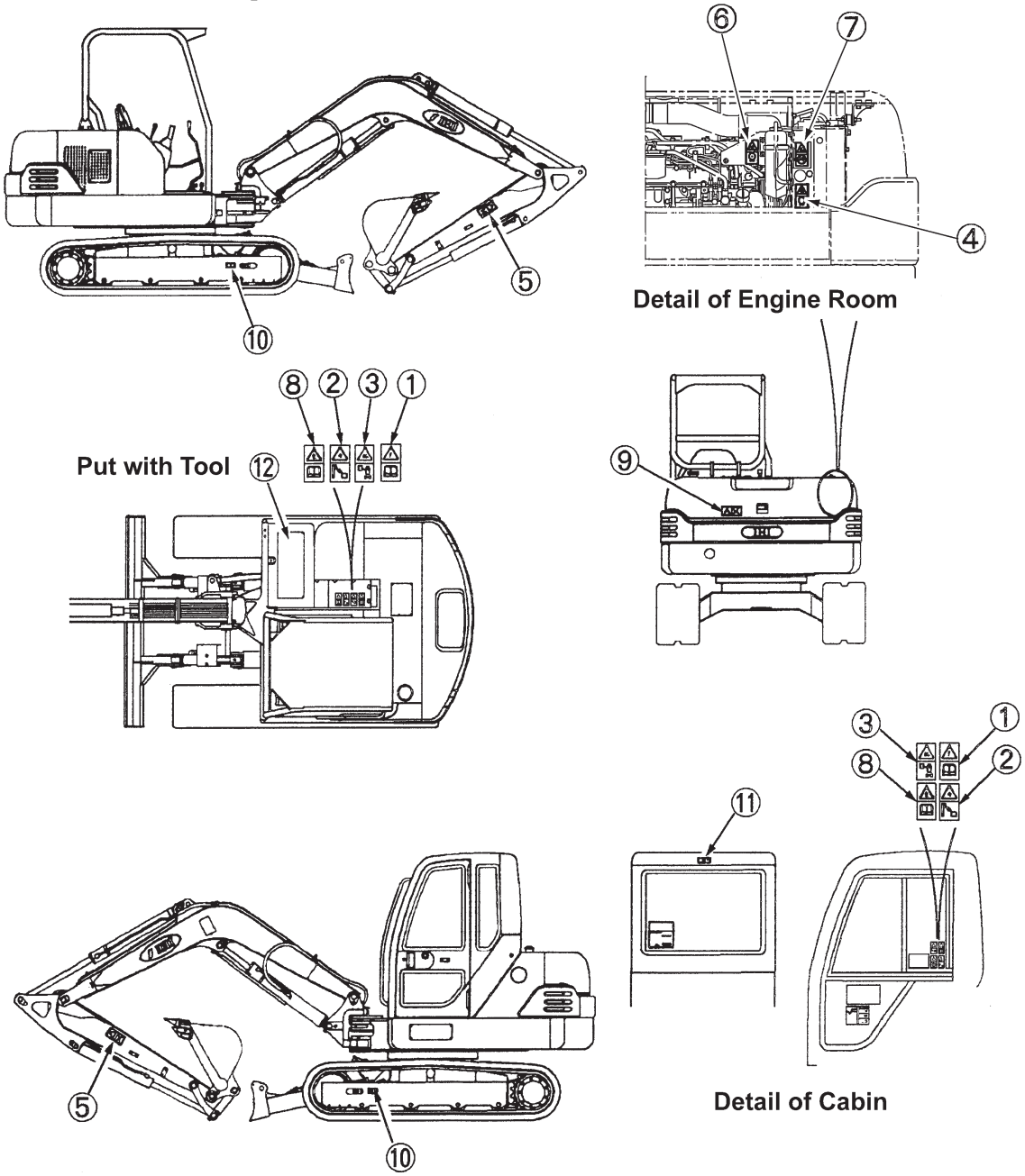

https://truckmanualshub.com/

Illustrated symbol	Recommended explanation	Illustrated symbol	Recommended explanation
	① Warning! Read manual before operation, maintenance, disassembly, assembly and transportaion. • Part No.: D405 359 00		② Sign indicates an electrocution hazard if machine is brought too near electric power lines. Keep a safe distance from electric power lines. • Part No.: D405 506 00
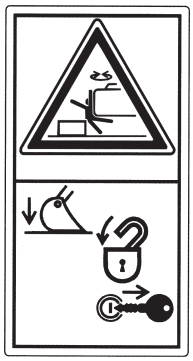	③ Sign indicates a hazard of being crushed or run over by unexpected moving of stopped machine. Lower working device to ground, move safety lever to lock position and take engine key with you before leaving machine. • Part No.: D405 508 00		④ Sign indicates a hazard of rotating parts, such as fan. Turn off before inspection and maintenance. • Part No.: D405 509 00
	⑤ Sign indicates a hazard of being hit by the working device of the machine. Keep away from machine during operation. • Part No.: D405 511 00	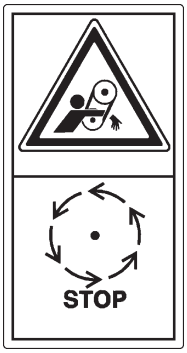	⑥ Sign indicates a hazard of rotating parts, such as belt. Turn off before inspection and maintenance. • Part No.: D405 366 00

https://truckmanualshub.com/

Illustrated symbol	Recommended explanation	Illustrated symbol	Recommended explanation

⑦ Sign indicates a burn hazard from spurting hot water or oil if radiator or hydraulic oil tank is uncapped while hot.
Allow radiator or hydraulic oil tank to cool before removing cap.
• Part No.: D405 360 00

⑧ Sign indicates an electrical hazard from handing the cable.
Read manual for safe and proper handing.
• Part No.: D405 363 00

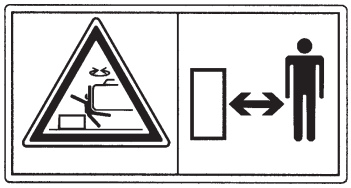

⑨ Sign indicates a crush hazard by rotation of upper structure of the machine.
Keep away from swinging area of machine.
• Part No.: D406 022 00

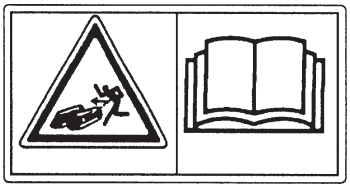

⑩ Sign indicates a hazard of flying plug from track adjuster that could cause injury.
Read manual before adjusting track for safe and proper handling.
• Part No.: D405 505 00

⑪ Sign indicates a hazard from falling window.
After raising window, be sure to lock it in place with lock pins.
• Part No.: D405 510 00
(For the cabin mounted machine only.)

⑫ **DANGER!**
Operation prohibition during inspection and servicing.
Hang this sign on the control lever during inspection and servicing not to allow any other worker to start the engine or operate the machine.
• Part No.: D405 323 00

https://truckmanualshub.com/

This page left intentionally blank

https://truckmanualshub.com/

2 OPERATION

2-1 NOMENCLATURE

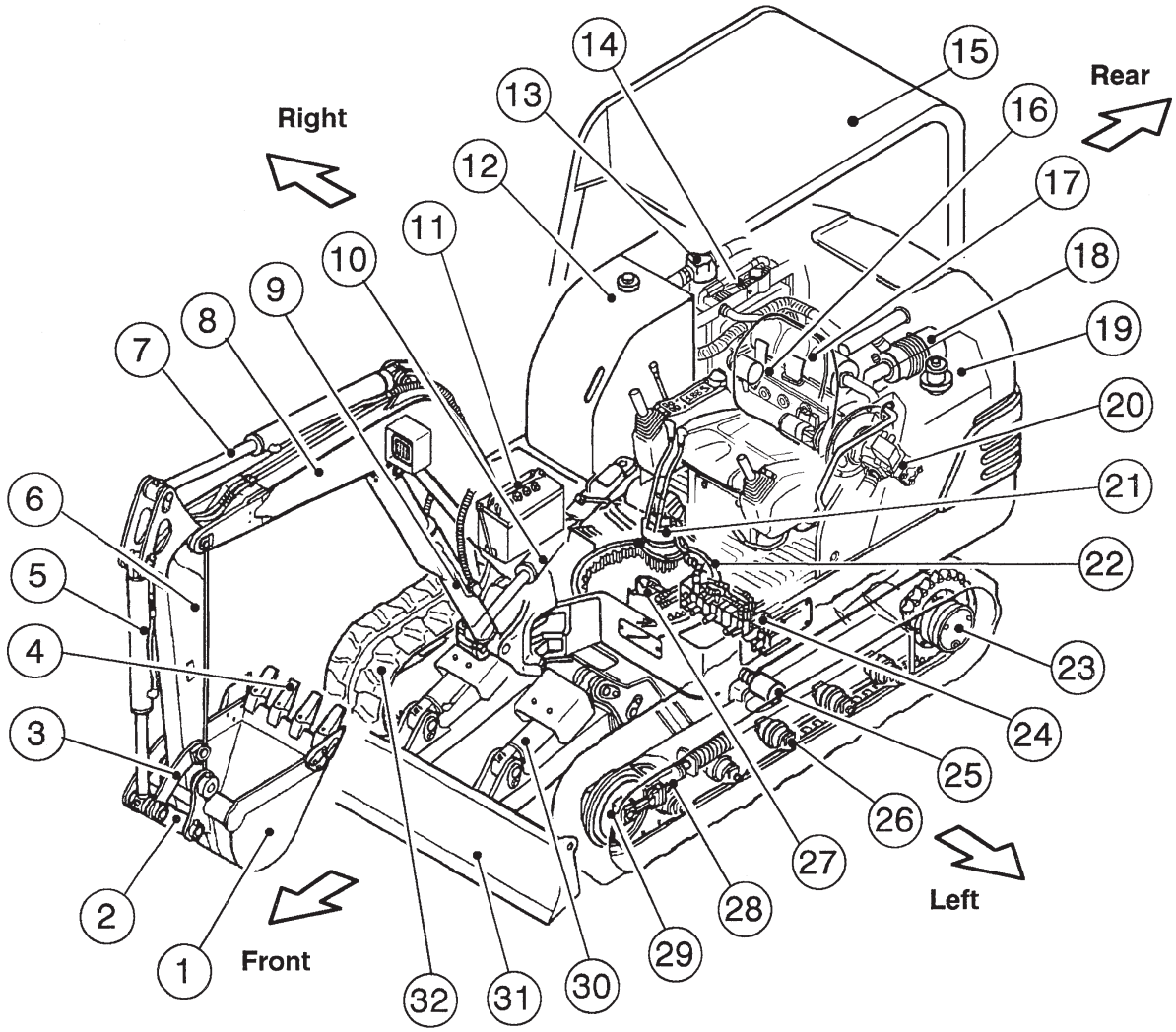

Typical Example

(1) Bucket	(12) Hydraulic Oil Tank	(23) Travel Drive (with motor)
(2) Bucket Link	(13) Return Filter	(24) Control Valve
(3) Arm Link	(14) Radiator and Oil Cooler	(25) Upper Roller
(4) Tooth	(15) Cab	(26) Lower Roller
(5) Bucket Cylinder	(16) Engine	(27) Rotary Joint
(6) Arm	(17) Muffler	(28) Track Adjuster
(7) Arm Cylinder	(18) Air Cleaner	(29) Front Idler
(8) Boom	(19) Fuel Tank	(30) Blade Cylinder
(9) Boom Cylinder	(20) Hydraulic Pump	(31) Blade
(10) Boom Swing Cylinder	(21) Swing Device	(32) Track Shoe
(11) Battery	(22) Swing Bearing	

https://truckmanualshub.com/

2-2 CONTROLS AND INSTRUMENTS

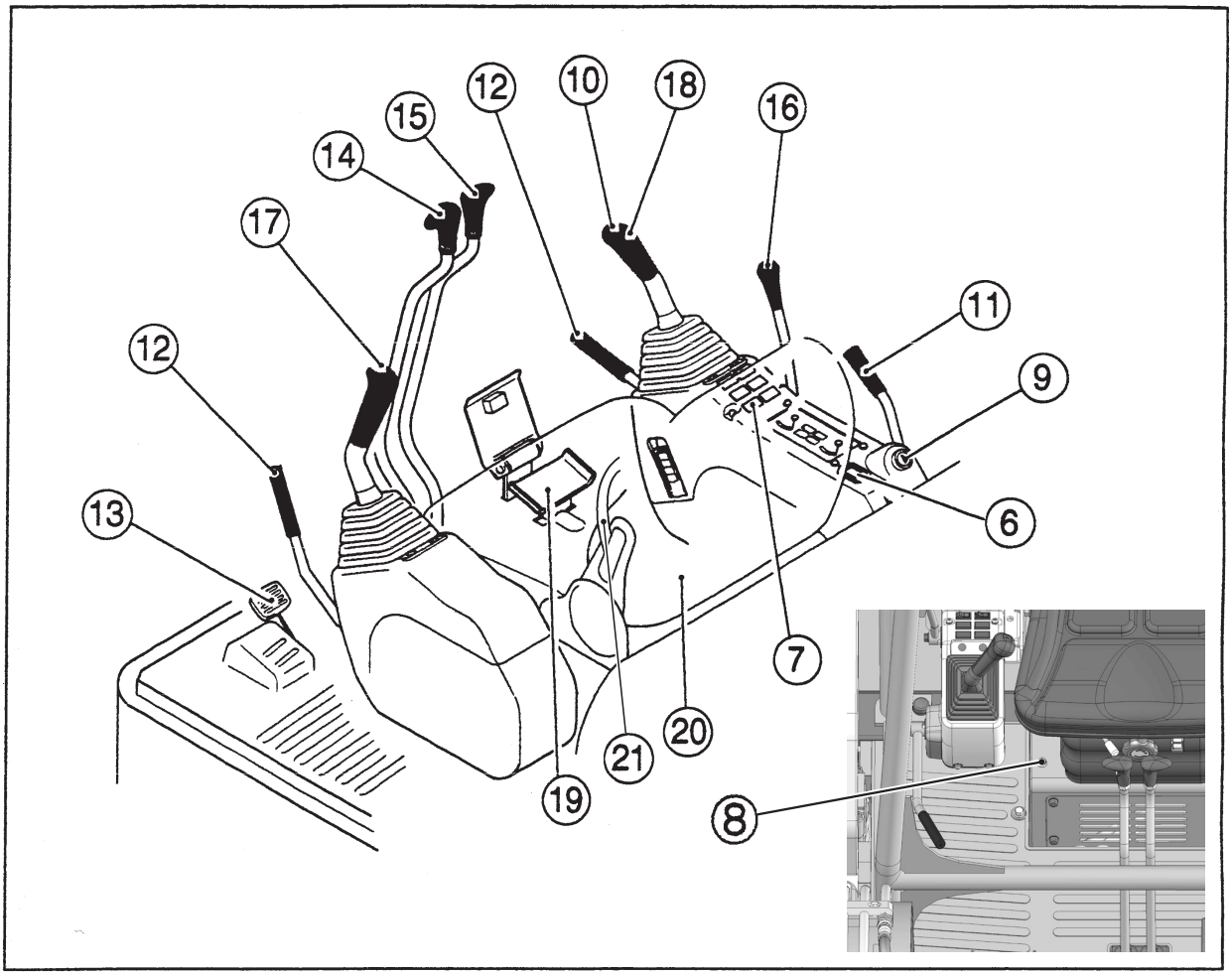

Typical Example

(6)	Service Hour Meter	(14)	Left Travel Lever
(7)	Light Switch	(15)	Right Travel Lever
(8)	Engine Fail Lamp	(16)	Blade Lever
(9)	Engine Start Switch	(17)	Left Operating Lever
(10)	Horn Switch	(18)	Right Operating Lever
(11)	Engine Throttle Lever	(19)	Boom Swing Pedal
(12)	Control Shut-Off Lever	(20)	Operator’s Seat
(13)	High Speed Travel Pedal	(21)	Seat Belt

https://truckmanualshub.com/

ELECTRONIC MONITOR PANEL

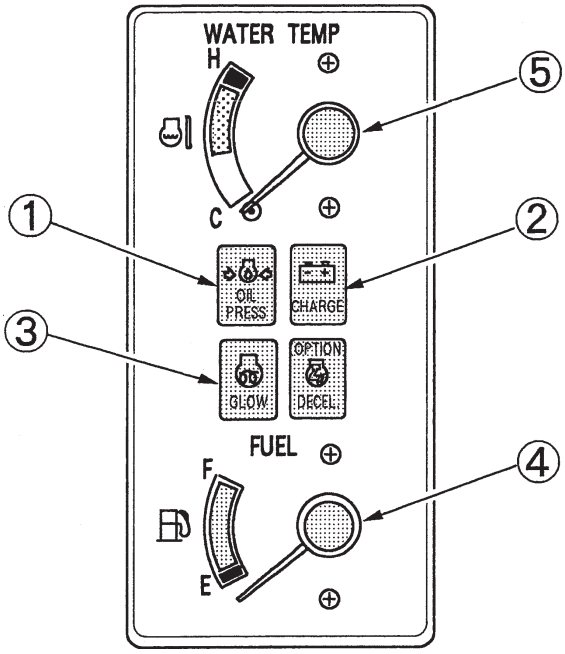

(1) Engine Oil Pressure Warning Lamp

(2) Charge Warning Lamp

(3) Heat Indicate Lamp

(4) Fuel Level Gauge

(5) Water Temperature Gauge

1. MONITOR LAMPS

① **Engine Oil Pressure Warning Lamp**
When warning lamp comes on and the action alarm sounds with the engine running, stop the engine. This indicates insufficient oil pressure.
Check the engine oil level and have any necessary repairs made before starting the engine.

② **Charge Warning Lamp**
This indicates a malfunction in the electrical charging system.
If the light comes on while the engine is running, check the electrical system.

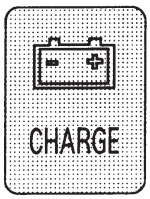

③ **Heat Indicator Lamp**
Hold the engine start switch in the **HEAT** position for approximately 15 seconds. The air heater is activated and the indicator comes on.

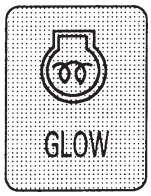

⑧ **Engine Fail Lamp**
The lamp flashes if the engine abnormality occurs while the engine is running.

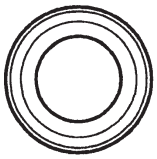

https://truckmanualshub.com/

2. GAUGES and METER

④ Fuel Level Gauge

It indicates the amount of in the fuel tank. Add fuel immediately when the gauge indicates the level is in the **E** range.

F : The fuel tank is full.

E : Fuel level is too low.

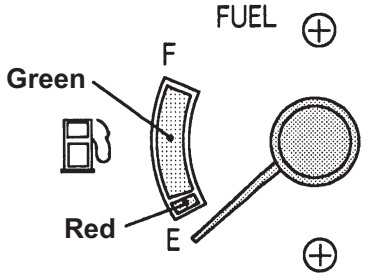

⑤ Water Temperature Gauge

This indicates the engine coolant temperature.

Upon start-up, the lowest **"White"** range indicates. While running the engine, with out load and low idling warming up.

The **"Green"** range is the normal operating temperature.

The **"Red"** range indicates overheating.

If the gauge indicate red range, reduce machine operating speed and keep the engine at low idle until the engine is cooled down. Stop the engine. Check the coolant. Check the fan drive belt. Have any necessary repair made.

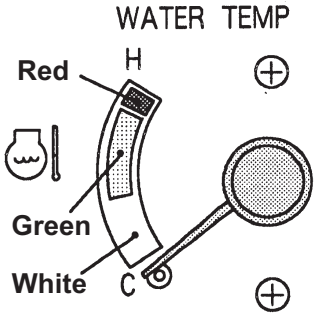

⑥ Service Hour Meter

Indicates the total operating hours of the machine.

It should be used to determine service hour maintenance intervals.

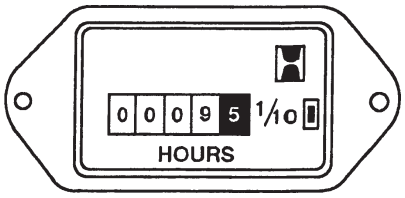

3. SWITCHES

⑦ Light Switch

Push down on the [ ] marked of the switch to turn the light on.

Push down on the blank half of switch to turn the working light off.

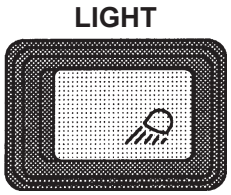

https://truckmanualshub.com/

⑨ Engine Start Switch

CAUTION

If the engine does not start after 10 seconds, return the key to **OFF** and wait for two minutes before returning it to **START**.

OFF : The engine must be in the **OFF** position to insert or remove the key. Turn the key switch to the **OFF** position before trying to restart the engine. Turn the key switch to the **OFF** position to stop the engine.

ON : Turn the key clockwise to active the electrical system. The key will return to the **ON** position when released from the **START** position.

START : Turn the key to the **START** position to crank the engine. Release the key as soon as the engine starts.

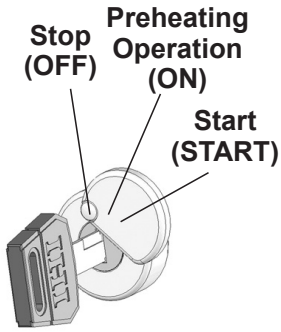

Engine Start Switch

⑩ Horn switch

Push down on the top of the right operating lever to activate the horn.

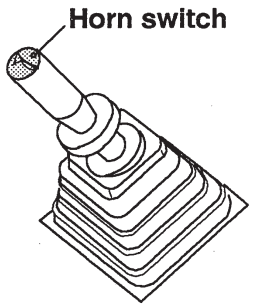

Right Operating Lever

https://truckmanualshub.com/

4. MACHINE CONTROLS

⑪ Engine Throttle Lever

Decrease (1): Move the lever to forward to decrease the engine speed.

Increase (2): Move the lever to the rear to increase the engine speed.

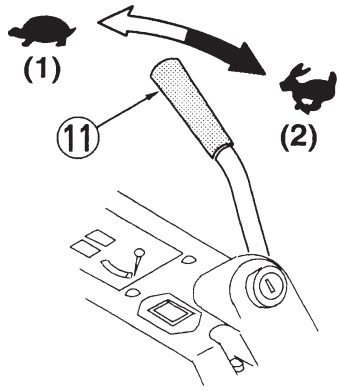

⑫ Control Shut-off Lever (Left and Light Levers) (for all hydraulic activation controls)

⚠ CAUTION

To mounting and dismounting the machine, be sure to put the shut-off lever in the **LOCKED** position.
If the lever is in the **UNLOCKED** position, upper structure can swing and can result personal injury.

Locked: Move the lever back to the locked position. This makes all hydraulic activation controls inoperable.

Unlocked: Move the lever forward to the unlocked position. This makes all hydraulic activation controls operable.

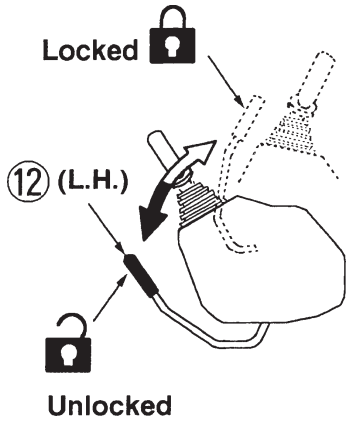

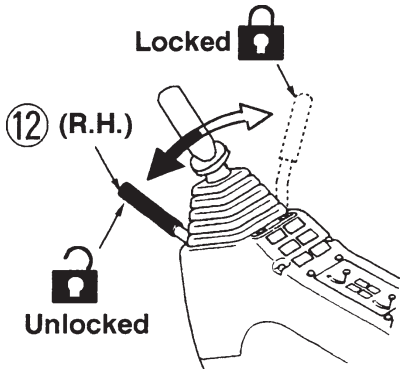

⑬ High Speed Travel Pedal

⚠ CAUTION

* **NEVER** high speed travel on a grade or loading and unloading the machine.
* When control shut-off lever is locked, does not change to high speed travel.

Low Speed Travel

Release the pedal to low speed travel. Select the **LOW** speed travel when driving on rough or soft surface. Low is also recommended for loading or unloading from a truck.

High Speed Travel

During push down the pedal to shift the high speed travel. Select the **HIGH** speed travel when driving on a hard even surface.

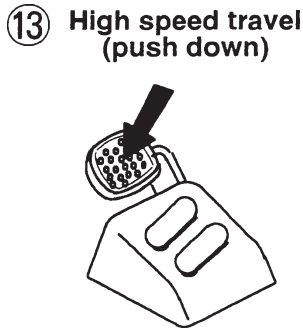

https://truckmanualshub.com/

⑭ **Left Travel Lever**
⑮ **Right Travel Lever**

CAUTION

* Normal traveling is when the drive sprocket are under the rear of the machine. Blade are under the front of the cab. Reverse traveling is when the cab is over the sprockets. Both the directional and traveling functions will be reversed.
* Always travel with sprockets under the rear of the machine.

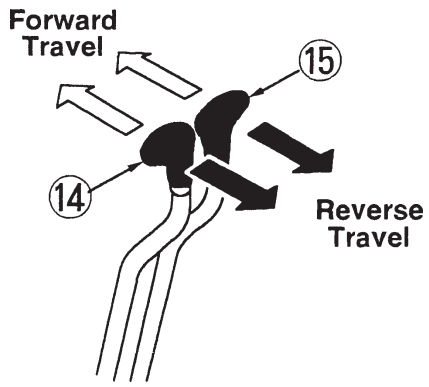

Forward Direction Travel :
Move the both travel levers forward to move the machine forward direction.

Stop :
Release the travel levers to stop the machine and apply the brakes.

Reverse Direction Travel :
Move the both travel levers rear to move the machine reverse direction.

Refer to Traveling the Machine section of this manual.

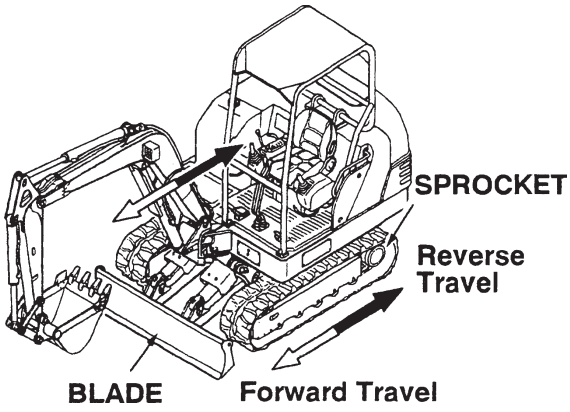

⑯ **Blade Lever**

CAUTION

The blade falls with its self-weight if pushing this lever to forward when the engine stops. Be careful.

Blade raise : Move the lever back to raise the blade.

Blade lower : Move the lever forward to lower the blade.

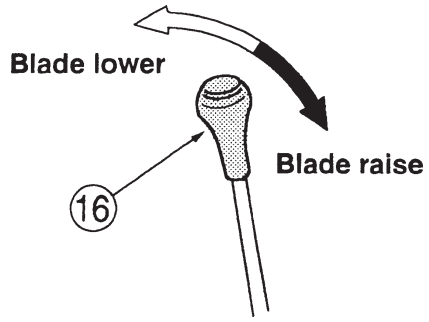

https://truckmanualshub.com/

⑰ Left Operating Lever

[Swing and arm controls]

1. **Arm Out:**
   Move the lever forward to move the arm out.

2. **Arm In:**
   Move the lever rear to move the arm in.

3. **Swing Right :**
   Move the lever right to swing the upper structure to the right.

4. **Swing Left :**
   Move the lever left to swing the upper structure to the left.

5. **Hold :**
   When the lever released from any position, the lever will return to hold (center position). Arm or swing movement will stop.

   Two Functions may be performed at the same time by moving the lever diagonally.

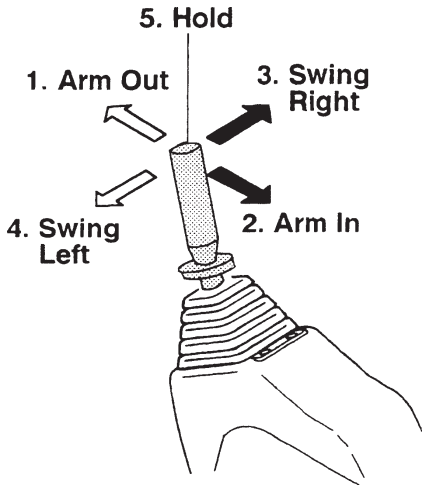

ISO System

⑱ Right Operating Lever

[Bucket and boom controls]

1. **Boom Lower:**
   Move the lever forward to lower the boom.

2. **Boom Raise:**
   Move the lever back to raise the boom.

3. **Bucket Dump :**
   Move the lever right to dump the bucket.

4. **Bucket Dig. :**
   Move the lever left to close the bucket.

5. **Hold :**
   When the lever released from any position, the lever will return to hold (center position) . Boom or bucket movement will stop.

   Two Functions may be performed at the same time by moving the lever diagonally.

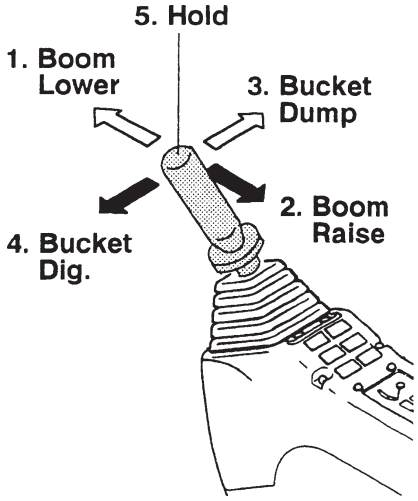

ISO System

https://truckmanualshub.com/

⑲ Boom Swing Pedal

CAUTION

ALWAYS locked pedal when is not in use.

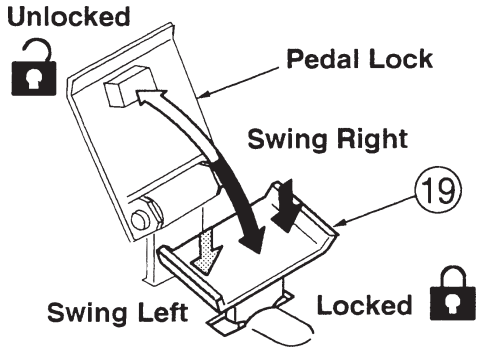

Boom swing right :
Push down right on the pedal to swing the boom to the right.
Boom swing left :
Push down left on the pedal to swing the boom to the left.

⑳ Operator's Seat

CAUTION

* Seat adjustment should be checked at the beginning of each shift or when changing operator.
* Lower the bucket on the ground, stop the engine and then make adjustment.

Seat Adjustment
Seat position can be adjusted forward or backward and seat back tilt. Select the desired position to allow full pedal and lever travel.

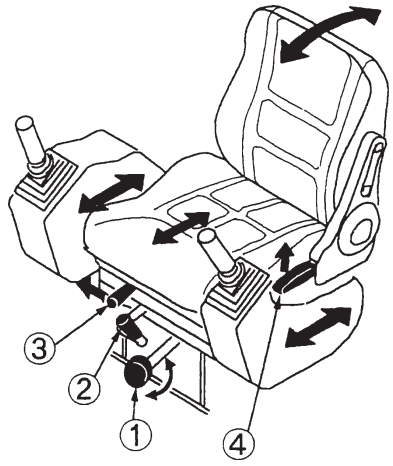

Typical Example

To Adjust the Seat Suspension (if equipped).
Turning nob ① clockwise increases suspension stiffness and turning it counterclockwise decreases suspension stiffness.
To Adjust the Seat Forward or Backward with Right and Left Control Levers.
Pull up and hold lever ② and move the seat and control levers to the desired position from the travel levers. Release the lever to hold the seat in the selected position.
To Adjust the Seat Forward or Backward.
Pull up and hold lever ③ and move the seat to the desired position. Release the lever to hold the seat in the selected position.
To Adjust the Seat Back Tilt.
Pull up and hold lever ④ and tilt the seat back to the desired position. Release the lever to hold the seat in the selected position.

https://truckmanualshub.com/

㉑ Seat Belt (if equipped)

CAUTION

* **ALWAYS** fasten the seat belt while operating the machine.
* **ALWAYS** check the condition of the seat belt and mounting hardware before operating the machine. Replace if damaged.

To Check the Belt

Check for worn or damaged buckle, extrusion and mounting hardware. Replace them if they worn or damaged.

To Fasten the Belt

With gripper ① held and insert extrusion ② into buckle ③ until correctly latched.
Adjust the seat belt length according to your body size. Slightly pull the belt ④ and confirm the belt is fastened.

To Unfasten the Belt

Push in button ⑤ of buckle ③ and extrusion ② will be released from buckle ③.

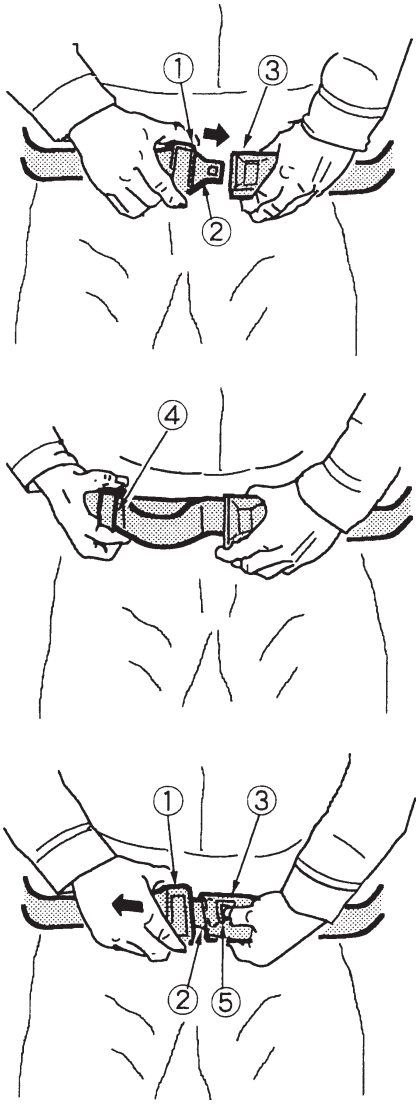

Typical Example

https://truckmanualshub.com/

2-3 BEFORE STARTING THE ENGINE

The following items should be checked each day before start-up or the start operations.

- **Walk-Around Inspection**
  Inspect the loose bolts, oil or coolant leaks and broken or worn parts. Inspect the condition of the attachments and the hydraulic components.

  Inspect the operator's compartment for cleanliness. Keep it clean.

  Inspect any cracks in boom and arm pivot area and cylinder mounting brackets.
  Repair if damaged.

  Refer to Walk-Around Inspection in the Maintenance Section.

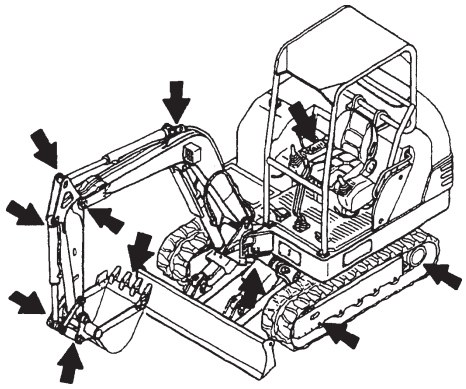

- **Lubrication**
  Perform the daily lubrication as required by the Lubrication Chart.

- **Pre-start Checks**
  Check all of oil, coolant and fuel levels.

  Refer to the Daily in the Maintenance Section for more detailed information.

- **Seat and Seat Belt Checks**
  Adjust the seat to allow full travel of the levers and pedals when the operator is seated against the seat back.

  Inspect the belt mounting hardware. Replace any damaged or worn hardware. Keep the mounting bolt tight.

  Fasten the seat belt before starting the engine.

https://truckmanualshub.com/

2-4 STARTING ENGINE

Once the pre-start inspection has been completed, the engine may be started.

Starting at Normal Temperature

CAUTION

If the engine does not start after 15 seconds, return the key to **OFF** and wait for 15 seconds before returning it to **START**.

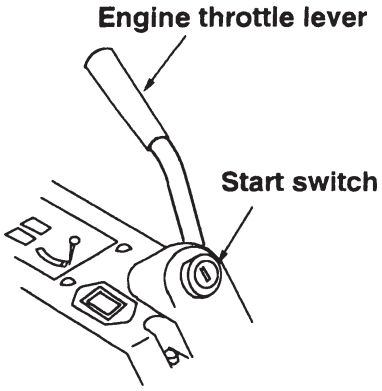

1. Move Control shut-off lever to the **LOCKED** position.
2. Move all Controls to the **HOLD** position.
3. Move the engine throttle lever above the low to medium position (advance about one-third to one-half).
4. Insert key ① into the switch and turn the switch to the **ON** position.
5. Turn the switch to the **START** position.
   Do not crank the engine for more than 15 seconds. Allow the starter to cool for seconds before cranking again.
6. Release the switch key after the engine starts.
7. Move the engine throttle lever to position **LOW** to allow the engine to warm.

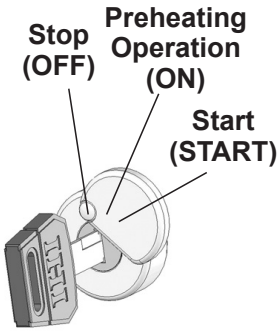

Starting In Cold Weather

WARNING

This engine has an inlet manifold heater for cold weather starting. Do not use other types of starting aids such as ether. Such use could result in an explosion and personal injury.

1. Repeat steps 1 through 4 in Stating At Normal Temperature.
2. Hold the switch in the **HEAT** position to preheat the engine intake air. After approximately 15 seconds the heater indicator on the monitor will turn off.
   This indicates that the engine is ready to start.
3. Repeat steps 5 through 7 in Stating At Normal Temperature.

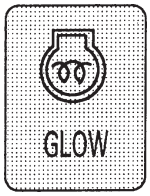

Heater indicator

https://truckmanualshub.com/

2-5 JUMPER CABLE STARTING

CAUTION

Battery gives off flammable fumes that can explode.

When starting from another machine, make sure the machines do not touch. This will prevent damage to engine bearings and electrical circuits.

Always connect the battery **POSITIVE (+)** to battery **POSITIVE (+)** and the battery **NEGATIVE (–)** to battery **NEGATIVE (–)**.

Jump only with a battery source and with the same voltage as the stalled machine. This machine has a **12** volt starting system. Use only equal voltage for jump starting. Use higher voltage will damage the electrical system.

Be sure the start switch is in the **OFF** position **BEFORE** attaching the jumper cables to the machine to be started.

Use of Jumper Cables

1. Move boost start machine near enough to stalled machine for the jumper cables to reach. But, do not allow machines to touch.

2. Lower the bucket to the ground.
   Move all controls to **HOLD**.
   Stop the engine on boost machine.

3. On stalled machine, turn the start switch key to **OFF**. Turn of all accessories.

4. Connect **POSITIVE (+)** jumper cable (red) **POSITIVE (+)** cable terminal of discharged battery.
   Do not allow positive (+) cable clamp to touch any metal other than battery terminals.

5. Connect **POSITIVE (+)** jumper cable (red) **POSITIVE (+)** cable terminal of boost battery.

6. Connect one end of **NEGATIVE (–)** jumper cable (black) to the **NEGATIVE (–)** boost battery terminal.

7. Make final connection of **NEGATIVE (–)** cable to frame of the stalled machine (not **NEGATIVE (–)** post) away from battery or fuel line.

8. Start the engine on the boost machine.

9. Wait a minimum of two minutes for the batteries in the stalled machine to partially charge.

10. Attempt to start the stalled engine. Refer to section on Engine Starting.

11. Immediately after starting the engine, disconnect the jumper cables in reverse order.

12. Conclude failure analysis on starting/charging system of stalled machine as required now that engine is running and charging system is in operation.

https://truckmanualshub.com/

2-6 AFTER STARTING THE ENGINE

CAUTION

Keep engine speed low until the engine oil pressure warning lamp goes out. If does not go out within 10 seconds, stop the engine and investigate the cause before starting the engine. Failure to do so, can cause engine damage.

With any piece of hydraulically operated equipment, it is **EXTREMELY IMPORTANT** that the hydraulic fluid be thoroughly warmed fluid-up **BEFORE** any work is begun. A warm-up period is time well spent in preventive maintenance.

Practice the following warm-up procedure before attempting full load operations.

1. Allow the engine to warm up at **LOW IDLE** for at least five minutes.
   Engage and disengage attachment control levers to help speed warm-up of hydraulic components.

2. To warm up the hydraulic oil, move the engine throttle lever to medium engine speed. Run the engine for about five minutes while intermittently holding the bucket control lever in the bucket dump position.
   Operate the bucket control lever for 10 to 15 seconds and then return the control lever **HOLD** position to ten seconds.

3. Move the engine throttle lever to maximum engine speed. Run the engine for an additional five minutes while intermittently holding the bucket dump position.
   This will allow the oil to reach relief pressure, which causes it to warm more rapidly.
   Cycle all controls to allow warm oil to circulate through all cylinders and lines.

4. Observe the OK warning monitor frequently during the operation.

Be sure to perform the pro-operation warm-up procedure whenever the hydraulic oil temperature is lower than 20°C at start-up.

2-7 “BREAK-IN”OPERATION

In case of the new machine, as the severe operation from the beginning will have a bad influence upon the machine life, perform the enough break-in operation as described the right table.

Hour meter	Load
Up to 10 hours	About 60% load
Up to 50 hours	About 80% load
After 50 hours	Full load

https://truckmanualshub.com/

2-8 CONTROL SYSTEM

1. CONTROL SYSTEM (Hydraulic remote control & mechanical control)

Six operating patterns, which are described below, are available.
IHI employs pattern A as standard system.

Pattern	Control System
A 2 levers	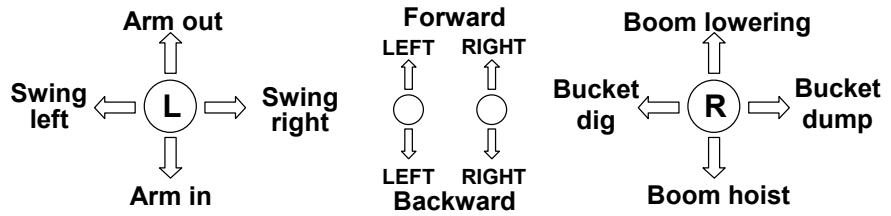
B 2 levers	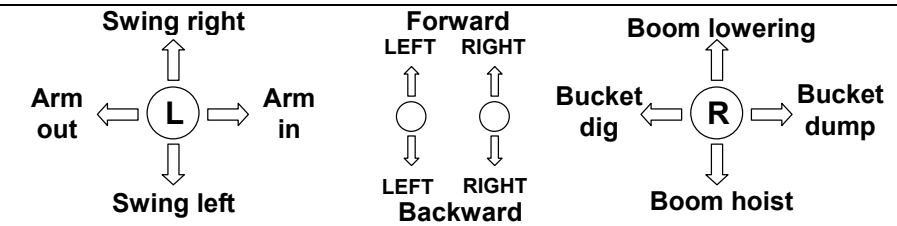
C 2 levers	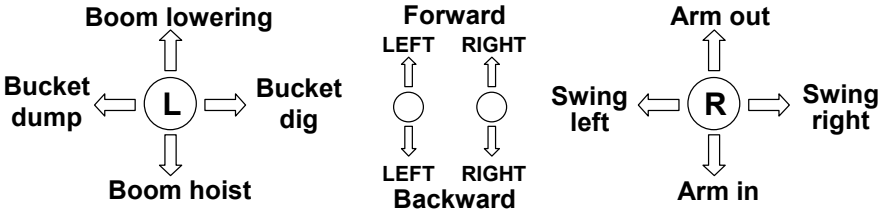
D 2 levers	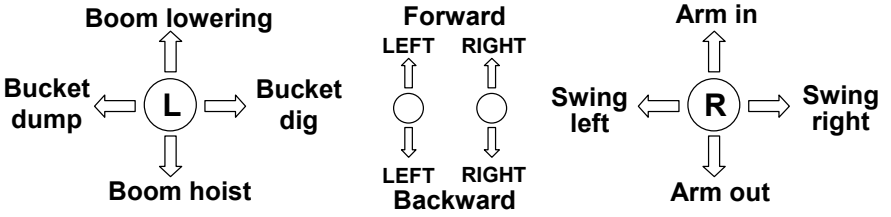
F 2 levers	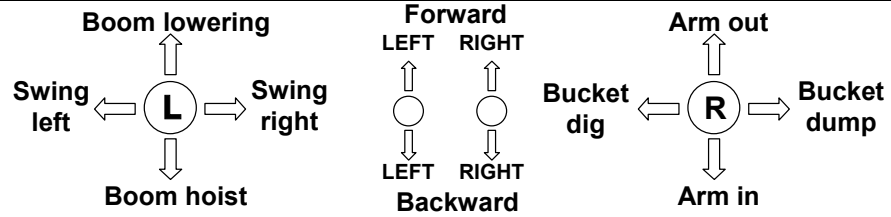
G 2 levers	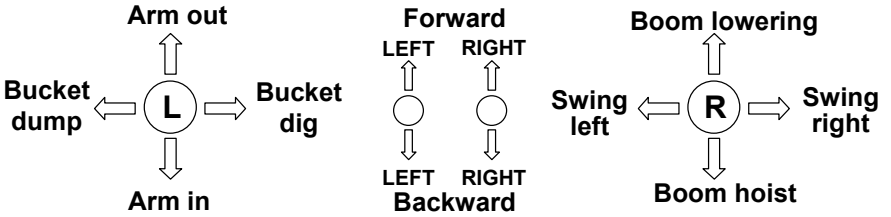

6 patterns are possible by changing the connection of hydraulic remote control hoses. It is not necessary to add parts.

https://truckmanualshub.com/

2. Pattern A

OPERATIONS	DIRECTION OF LEVER	DIRECTION OF MACHINE
BOOM	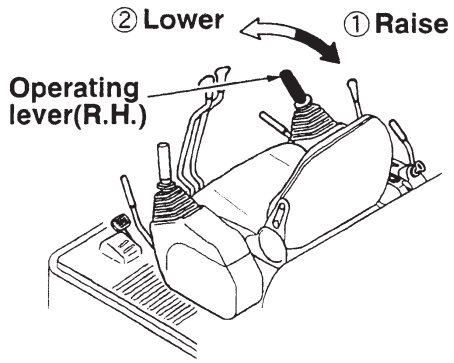	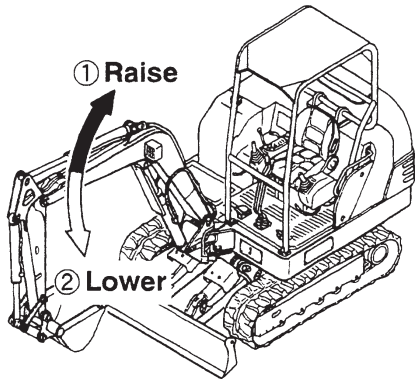
BUCKET	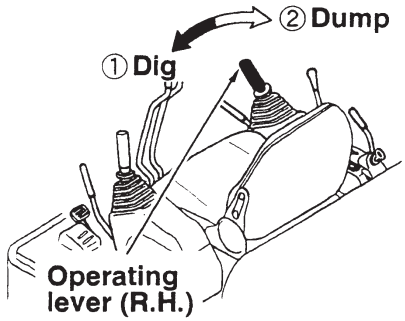	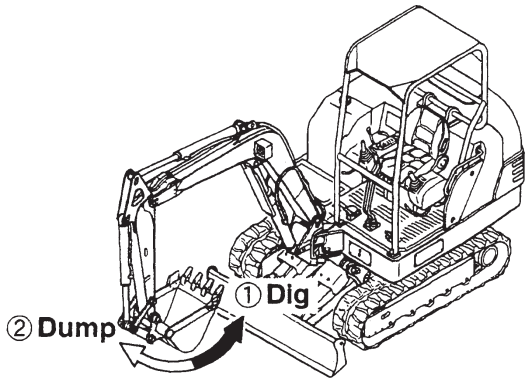
ARM	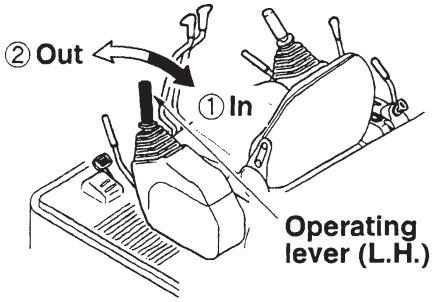	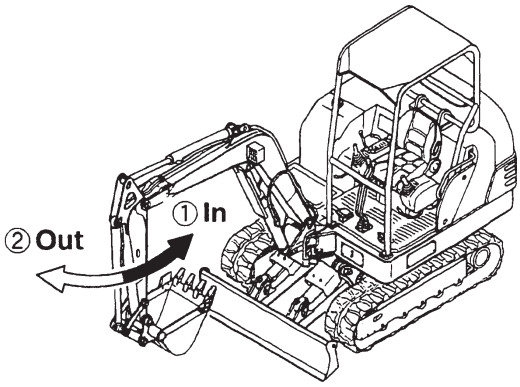
SWING	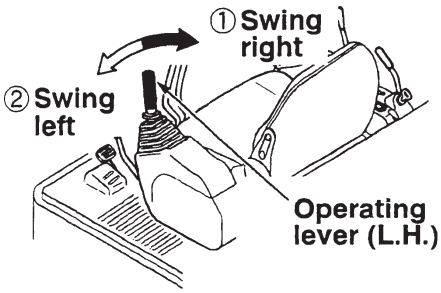	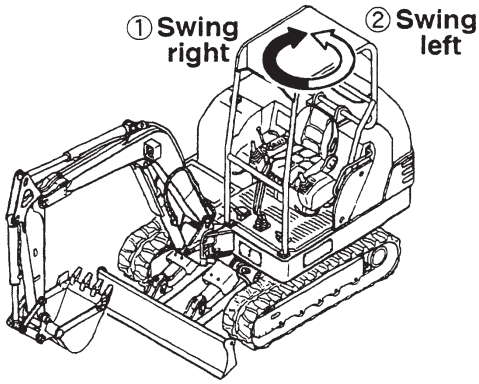

When leaving the operator's seat, stop the engine, lower the bucket and the blade on the ground.

https://truckmanualshub.com/

OPERATIONS	DIRECTION OF LEVER	DIRECTION OF MACHINE
BOOM SWING	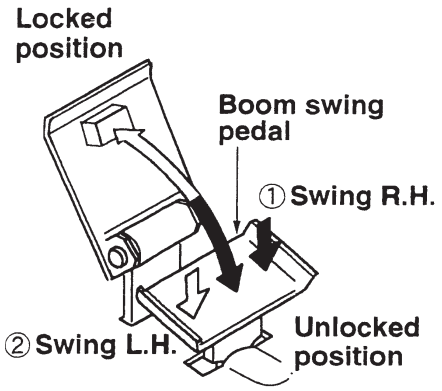	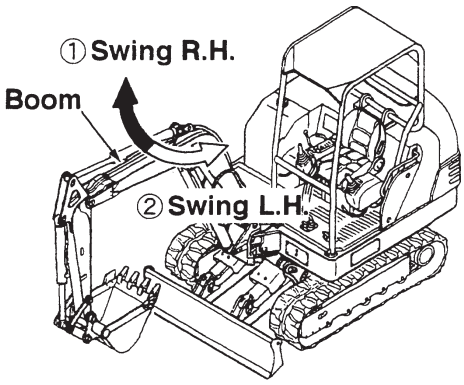 Always locked pedal when is not in use.
BLADE	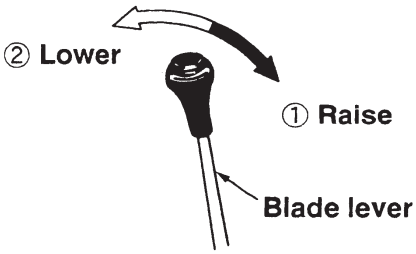	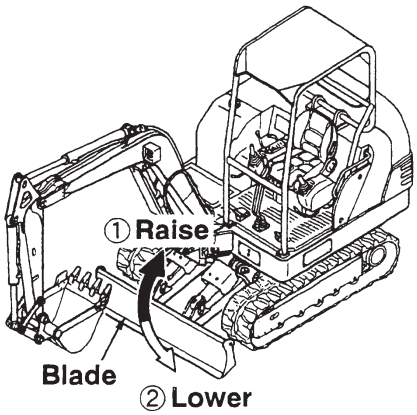

https://truckmanualshub.com/

2-9 OPERATING THE SPECIAL ATTACHMENTS AND ACTUATORS (IF EQUIPPED)

CAUTION

* Select a hydraulic breaker, a wrecking fork and special actuators, etc., witch are applicable to the machine body.
  Consult your local IHI dealer to select a special attachment and an actuator.

Precautions on use of special attachment and actuator.

* Before using a special attachment and an actuator, read and understand their instruction manuals issued by a manufacturer to obtain correct operation and maintenance.
* When a special attachment and an actuator are mounted, the machine specifications such as stability, working radius, transport height, etc., should be altered. Before starting operation, confirm each specification to ensure safety of workers and the machine.

1. SINGLE ACTION OPERATION

Hydraulic Breaker and Other Controls

CAUTION

If the marked (–) of the valve is set in horizontal position, the pressure of returned oil becomes higher and the breaker does not function efficiently. **ALWAYS** set the marked (|) in vertical position.

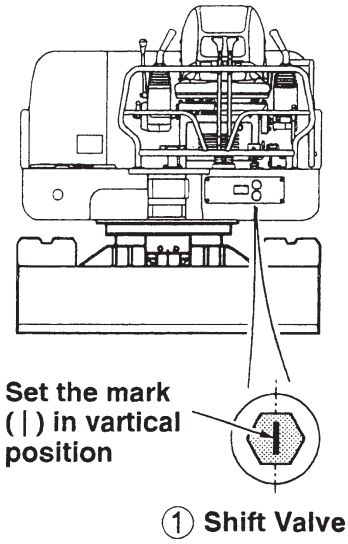

Switching the attachment hydraulic circuit.
Check the marked position on the shift valve ①.
Turn the valve with a wrench and set the marked (|) in vertical position, if necessary.

1) Fold the pedal ② into double layers.
2) Move the lock lever ③ to the unlocked position.

   Breaker ON: Push down the pedal ② to activate the breaker.
   Breaker OFF: Release the pedal ② to deactivate the breaker.

   NOTE: When no breaker operation is needed, be sure to lock the pedal ② by lock lever ③ to the **LOCKED** position.

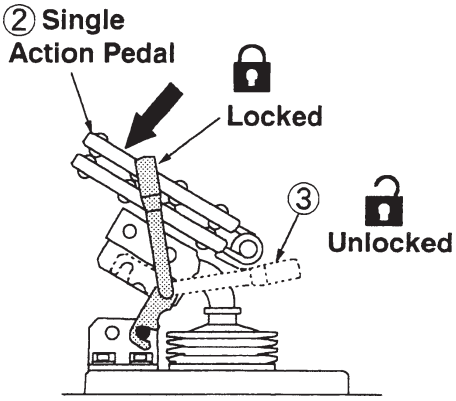

https://truckmanualshub.com/

2. DOUBLE ACTION OPERATION
Wrench Fork and Other Controls

CAUTION

ALWAYS set the marked (–) in horizontal position. If the marked (|) of the valve is set in vertical position, the B port of the double action does not function efficiently.

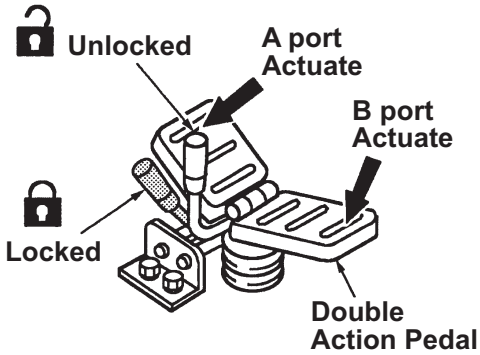

Switching the attachment hydraulic circuit.
Check the marked position on the shift valve ①.
Turn the valve with a wrench and set the marked (–) in horizontal position, if necessary.

1) Unfold the pedal ② into two pedal plates.
2) Move the lock lever ③ to the unlocked position.
   To actuate the port A:
   Push down on the front of the pedal ② to actuate the port A.
   To actuate the port B:
   Push down on the rear of the pedal ② to actuate the port B.

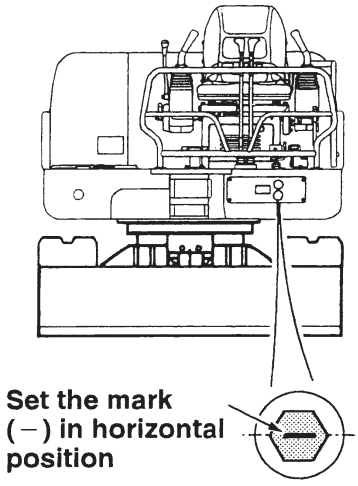

① Shift Valve

3. SINGLE ACTION OPERATION
USED : FOR POWER PORT WORKS

CAUTION

The engine cannot be started if the power port is **ON** (locked status with the pedal depressed).
Be sure to set the pedal at the neutral position before starting the engine.

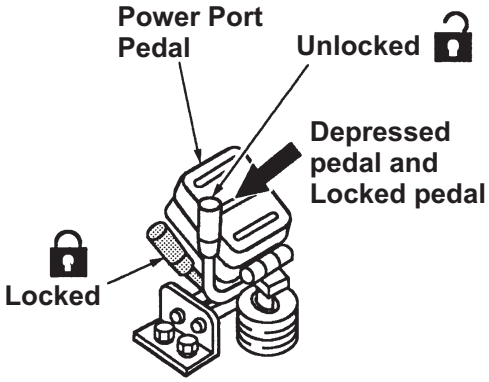

1) Fold the pedal into double layers.
2) Turn the pedal lock lever to the unlocked position and release the pedal lock.
3) Push down the pedal and turn the pedal lock lever to the locked position.
   This makes it possible to supply the hydraulic pressure to the high-pressure line of the power port.
   The actuator can be operated by the actuator's control valve.
4) When the power port is out of service, **ALWAYS** set the pedal back to the neutral position and pedal lock lever to the locked position.

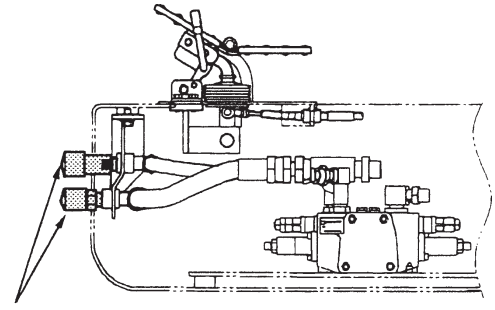

Power Port Lines (Installed the Actuator's Hoses)

https://truckmanualshub.com/

2-10 TRAVELING THE MACHINE

STRAIGHT TRAVEL

⚠ WARNING

* Be sure no one is working on or near the machine to prevent injury. Keep the machine under control at all times to prevent injury.
* Before control levers, confirm which direction the track frame faces.
* Always travel with sprockets under the rear of the machine.

1. Move engine throttle lever ① to the operating range.

2. Move the control shut-off lever ② to the unlocked position.

3. Raise the boom and the blade enough to provide sufficient ground clearance.

4. Control right and left travel levers ③ as follows.

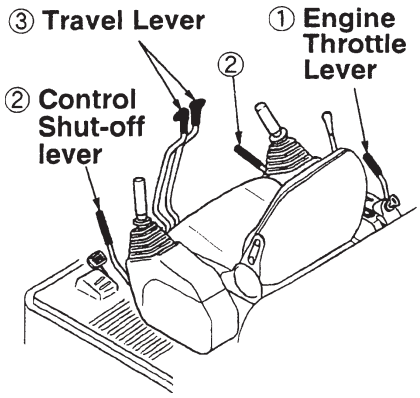

Forward Direction Travel
Move the both travel levers ③ forward to move the machine forward.
The machine will always travel toward the **BLADE.**

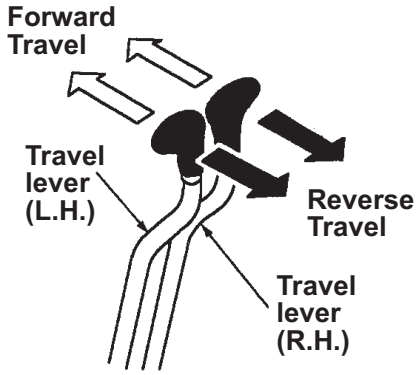

Stop
Slowly move both the travel levers ③ to the stop position to stop the machine and apply the brakes.

Reverse Direction Travel
Move the both travel levers ③ rear to move the machine reverse.
The machine will always travel toward the **SPROCKETS.**

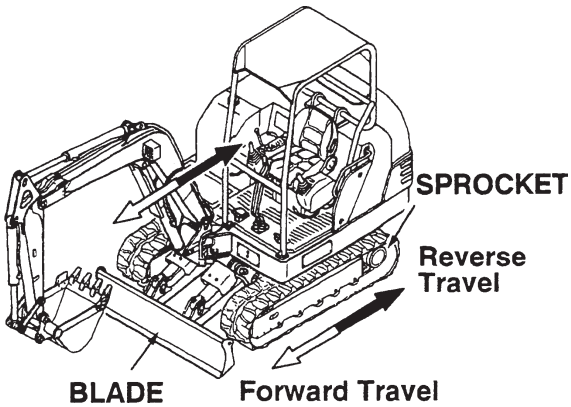

https://truckmanualshub.com/

STEERING CONTROL

⚠ WARNING

* Be sure no one is working on or near the machine to prevent injury. Keep the machine under control at all times to prevent injury.
* Before control levers, confirm which direction the track frame faces.
* Always travel with sprockets under the rear of the machine.

1. Move engine throttle lever ① to the operating range.

2. Move the travel lever lock and control shut-off lever to the unlocked position.

3. Raise the boom and the blade enough to provide sufficient ground clearance.

STEERING
To make turns, control the travel levers.
Control the two travel levers as follows.

Pivot Left Turn
Move the right lever ① forward to travel forward and left, and move it rear to travel reverse and left, pivoting on the left track.

Pivot Right Turn
Move the left lever ② forward to travel forward and right, and move it rear to travel reverse and right, pivoting on the right track.

SPOT TURN
Spot Left Turn
Move the left travel lever ② rear and move the right lever ① forward at the same time. This allows a quick left turn.

Spot Right Turn
Move the right travel lever ① rear and move the left lever ② forward at the same time, allowing a quick right turn.

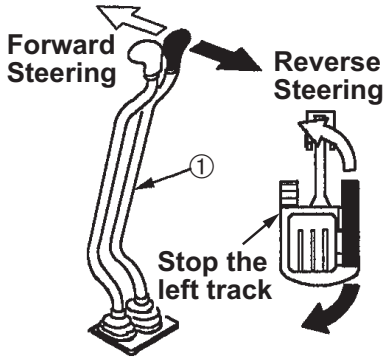

PIVOT LEFT TURN

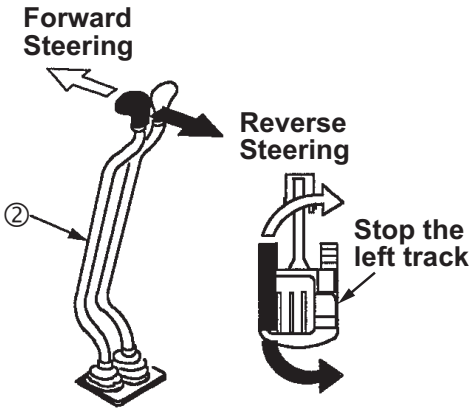

PIVOT RIGHT TURN

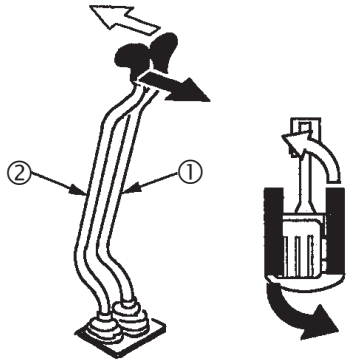

SPOT LEFT TURN

https://truckmanualshub.com/

HIGH SPEED TRAVEL

CAUTION

Do not change travel speed ranges while going downhill.
NEVER high speed travel on a grade or loading and unloading the machine.
When control shut-off lever is locked, does not shift to high speed travel.

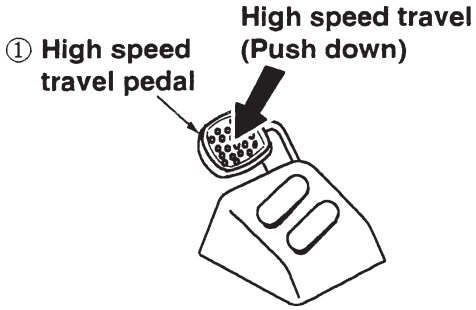

Push down the high speed travel pedal ① shift to the high speed travel.
When released pedal, shift to the low speed travel.

CAUTION ON TRAVEL ON A GRADE

CAUTION

* Reduce engine speed when maneuvering in tight quarters or when breaking over a rise.
* Do not change travel speed ranges while going downhill.
* Work up and down slopes rather then sideways, whenever possible.
  Do not travel across a grade by all means.
* Avoid changing the direction of travel on a slope, which could result in tipping or side slipping of the machine.
* Keep the arm in and carry the boom in a low position.
* When starting up a steep grade or breaking over a rise, keep the boom lowered as close to the ground as possible.

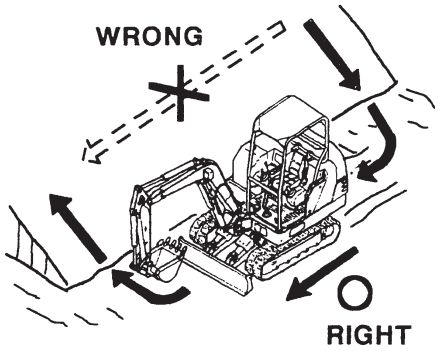

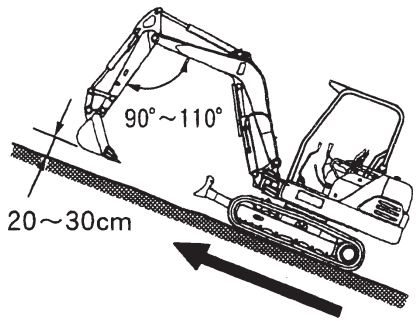

1. When traveling up on a grade inclining by greater than 15°, keep the position in the right illustration and travel with a low engine speed.

2. When traveling down on a grade inclining by greater than 15°, travel with the position in the right illustration.

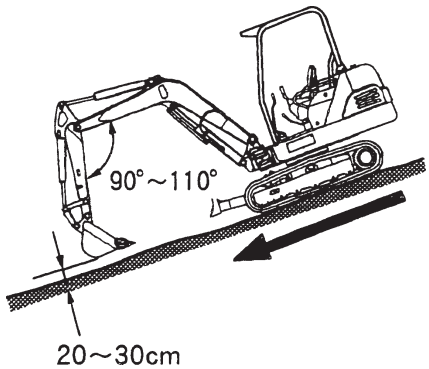

https://truckmanualshub.com/

2-11 TOWING

⚠ WARNING

* Personal injury or death could result when towing a disabled machine incorrectly.
* Follow the recommendations below, to properly perform the towing procedure.
* Never use the towing hook at the rear axle to tow the machine.
* During towing operation, **NEVER** allow anyone between the towing machine and the towed machine.
* Quick machine movement could overload the tow line or bar and cause it to break. Gradual and smooth machine movement will work better.
* Keep the tow line angle to a minimum. Do not exceed a 30º angle from the straight ahead position.

1. If the machine sinks down on a soft ground and cannot crawl up by itself, a wire rope should be attached to the rear axle and the machine should be towed by a towing machine.
   To prevent the damage of the wire rope, be sure to place a protector at the corner of the axle.
   Use the towing wire rope with sufficient strength to tow the machine.

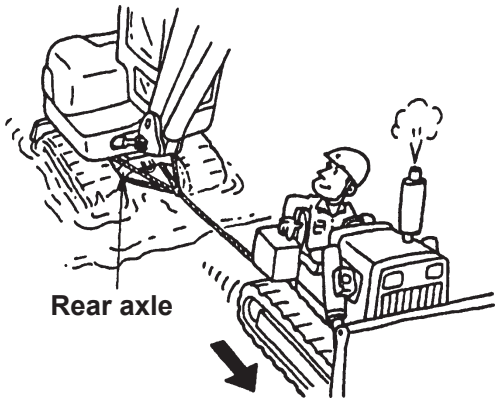

2. Use of the towing hook
   The towing hook is used to tow for lightweight material. The maximum allowable towed weight is 500 kg.
   NEVER tow the machine with the towing hook, which may damage the towing hook and cause a personal injury.

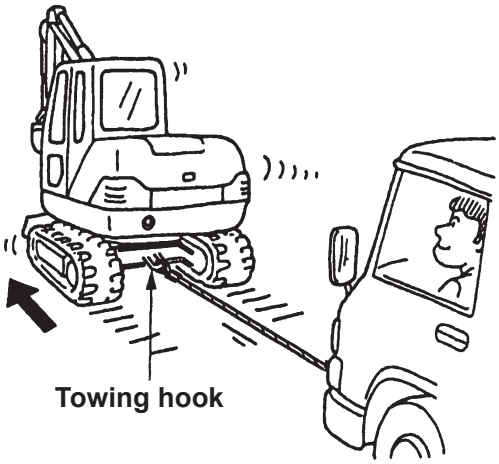

https://truckmanualshub.com/

2-12 LIFTING THE MACHINE

⚠ WARNING

Improper lifting or tie downs can allow load to shift and cause injury or damage.
* Use proper rated cables and slings for lifting. Lifting cables should have sufficient length to prevent contact with machine.
* Position crane for level machine lift.
* **NEVER** lift the machine loaded with any personnel.
* Use guide or tag lines to prevent the machine from swinging or turning.
* Be sure to use are wire ropes with breaking force of greater than 10.6 tons.

Lifting Procedures

1. Start the engine and swing the machine to position the blade to rear.
2. Position the machine on the level ground, with the boom, arm and bucket cylinders fully extended.
3. Position the boom at the center of the machine with the boom swing pedal.
4. Stop the engine.
5. Install the cable to the two lifting eyes on the blade with shackles.
   Install the cable to the lifting eye on the boom of the center with shackle.
6. Install the cables to the crane hook.
7. Confirm that no obstacles nor personal are around the machine and have the operator leave the machine.
8. Once the machine is lifted off the ground, check that the machine is well balanced.

⚠ CAUTION

Selection of the lifting cables:
Be sure to use are wire ropes with breaking force of greater than 10.6 tons.

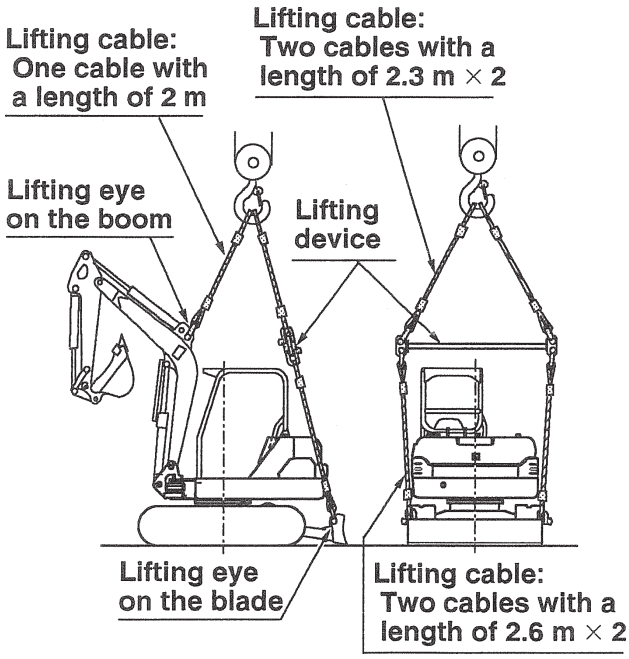

Machine mass (kg)

Shoe type	Canopy	Cabin
Rubber shoe	5200	5330
Steel shoe	5250	5380

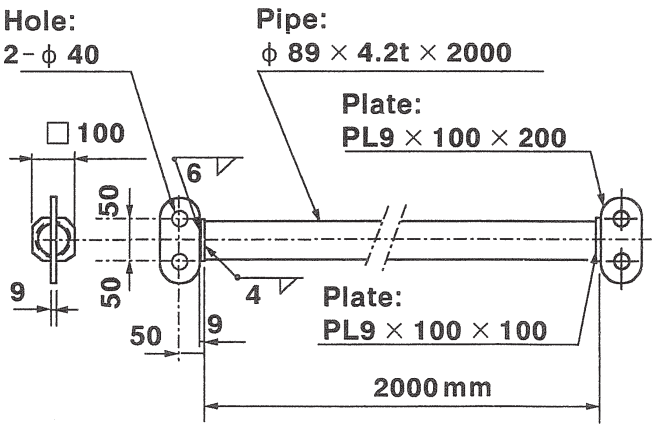

Detail of Lifting Device

https://truckmanualshub.com/

2-13 LOADING AND UNLOADING THE MACHINE

⚠ WARNING

* Choose as flat ground as possible for loading the machine.
* When using loading ramps, be sure there is adequate length, width, firmness and slope.
* To prevent the machine from slipping while loading or shifting transit, remove ice, snow or other slippery material from the loading ramps and the truck bed before loading.
* **NEVER** operate the high speed travel switch when loading the machine on a trailer or loading lamps.
* Perform warm-up the machine before loading and unloading under cold weather.
* Do not raise the boom excessively at loading and unloading.
* **NEVER** make a turn on a ramp. To make a turn, get off the machine from the ramp first.

MACHINE LOADING ONTO A TRUCK.

1. Block the truck wheels before loading.
2. Install the loading ramps to the truck securely. Maintain the slope of loading ramps within 15 degrees.
3. Position the machine so that it can be run straight on the loading ramps. Never operate control levers other than the travel lever while machine is on the lading ramps.
4. Maintain the machine balance point while traveling over the loading ramp joint areas.
5. Lower the attachment to the bed of truck.
6. Be sure to chock both tracks.

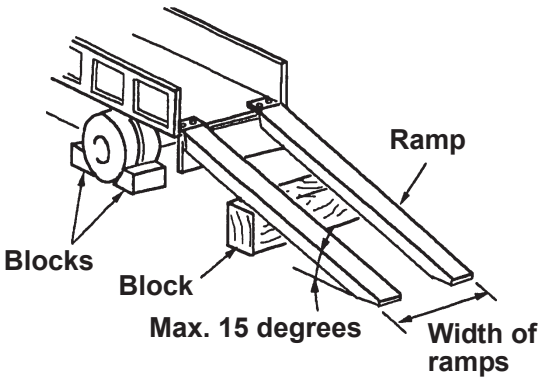

Typical Example

SECURING THE MACHINE

⚠ WARNING

Upper structure movement can cause personal injury or death.

1. Align the upper structure with the truck.
2. Move the control shut-off lever to the **LOCKED** position.
3. Turn the engine start switch of **OFF** to stop the engine and remove the key.
4. Block the tracks and secure the machine with tie-downs. Install and fasten proper rated wire rope cables located on the car body and arm point.

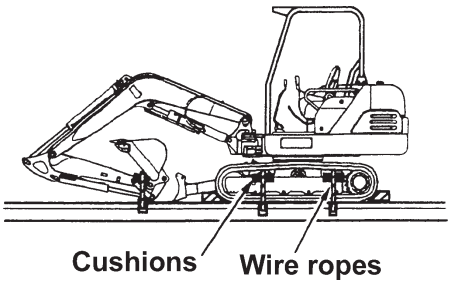

https://truckmanualshub.com/

2-14 PRECAUTION ON USE OF RUBBER TRACK SHOE

CAUTION

The rubber track shoe may be damaged or worn faster depending on working conditions. Perform working operation properly according to working site conditions and machine operation.

■ Structure of Rubber track Shoe

The right illustrates the structure of rubber track shoe. It consists of steel cord to sustain tension, iron core to support it, and covering rubber to them.

CAUTION

If a crack reaches the steel cord, it may be rusted and cut off by moisture. When any crack is detected, repair it immediately with vulcanizer.

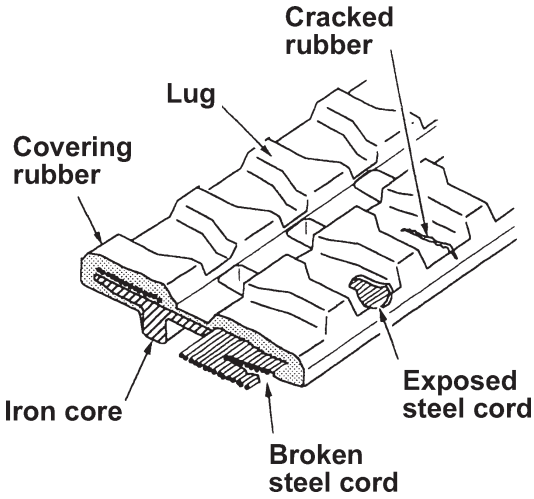

Typical Example

■ Precaution on Use

1. Adjust the track often enough to keep a proper tension.
   - Insufficient tension slips off the rubber track shoe and wears out the sprocket and iron core extremely.
   - Excessive tension increases travel resistance, which prevents proper travel force and speed. It also causes damages and extreme wear at undercarriage as well as overextension of the rubber track shoe.

2. To prevent damages of the rubber track shoe, avoid the following in travel as much as possible.
   - Pointed rocks or quarry
   - Craggy place such as riverbed or path through woods
   - Steel rods or scraps
   - Steel board or cornered objects of concrete
   - Heat source such as a fier
   - Travel in contact with concrete path or wall

3. Immediately wipe off spilt fuel, hydraulic oil, or grease on the rubber track shoe with a cloth.
4. Avoid sudden spot turns or pivot turns. Make slow turns several times at a low speed.
5. Do not use for long (3 months or more). Store it to avoid direct sunlight or rain.
6. Use the rubber track shoe at a temperature between –25°C and +55°C (–13°F and 131°F) because of a rubber's characteristic.

https://truckmanualshub.com/

2-15 BOOM LOWERING WITH THE ENGINE STOPPED

■ Method of Boom Lowering When Engine Damaged.

⚠ WARNING

Be sure no one is under or the front implements before manually lowering the boom.
Keep all personnel away from the boom area when lowering the boom with engine stopped.

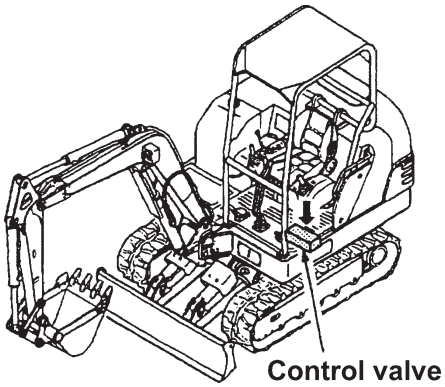

Use the following procedure when it is necessary to lower the boom while engine is shut down or the hydraulic system disabled.

1. Remove the floor cover under the operator's station floor.

2. Remove the lock nut ② of the boom raise relief valve located inside the control valve ①.

3. Slowly loosen adjusting screw ③ until boom start lower. The boom will start to lower slowly.

4. After making sure that the front implement has lowered completely on to the ground, install the lock nut ②.

5. Make any necessary repairs placing the excavator back into service.

NOTE: For further information, contact your IHI dealer.

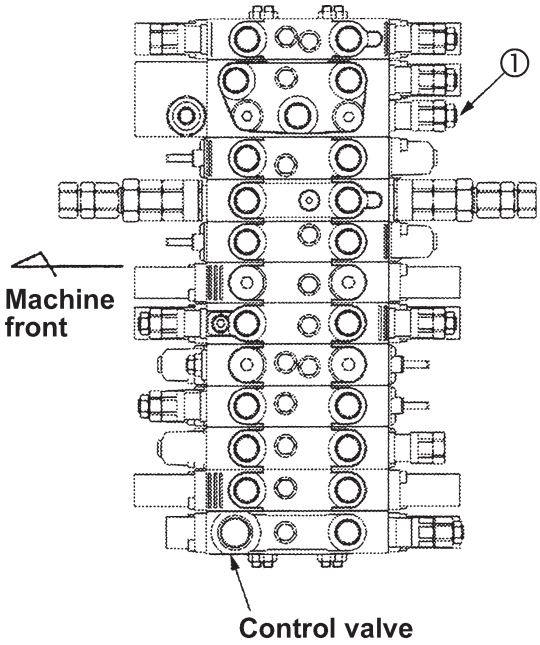

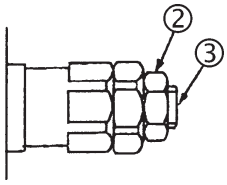

Boom raise relief valve

https://truckmanualshub.com/

2-16 PARKING THE MACHINE

At the end of a day's work, following steps should be observed as the established machine shut-down procedure:

Machine Stopping

Park on a level surface, if necessary to park on a grade, block the tracks securely.

1. Move engine throttle lever forward to reduce the engine speed.
2. Release the travel lever to stop the machine.
3. Lower the bucket to the ground and apply slight down pressure.
4. Move the control shut-off lever to the **LOCKED** position.

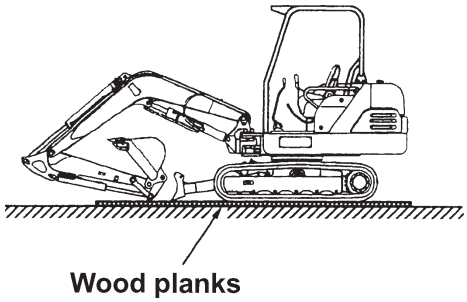

Freezing Conditions

If freezing temperature are expected, each crawler frame should be cleaned of mud and dirt and the machine parked on wood planks.

Engine Stopping

1. Operate the engine at **LOW IDLE** for five minutes. This gives the engine a chance to cool off gradually before they are stopped.
2. Turn the start switch key to **OFF.** Remove the key.

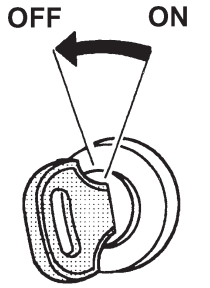

START SWITCH

Leaving the Machine

1. Use the steps and handhold, use both handles and face the machine, when dismounting.
2. Inspect the entire machine for leaks, loose connections, signs of wear, crack etc. Report any signs of trouble discovered during this inspection.
3. Close and lock the doors.

2-17 EMARGENCY ENGINE STOP

To stop the engine in emergency, turn the start switch key to **"OFF"** position.

https://truckmanualshub.com/

3 MAINTENANCE

MAINTENANCE INTERVALS

Check Point	Item	Page
When Required		
Track	Check and Adjust Tension	3 – 4
Track	Check Rubber Shoes	3 – 5
Fuses	Replace	3 – 6
Fusible Link	Replace	3 – 6
Battery	Clean and Check Electrolyte Level	3 – 7
Bucket	Change Bucket	3 – 8
Daily Check (8 Service hours)		
Engine Oil	Check Oil Level	3 – 10
Engine Coolant	Check Coolant Level	3 – 10
Hydraulic Oil Tank	Check Hydraulic Oil Level	3 – 11
Fuel Tank	Check Fuel Level	3 – 11
Air Cleaner	Check Servise Signal	3 – 11
Water Sedimenter	Check Level and Drain Water	3 – 12
Every 50 Service Hours (First perform previous service hour items)		
Fuel Tank	Drain Water and Sediment	3 – 14
Attachment Pins	Lubricate Fitting with Grease	3 – 2
Swing Bearing	Lubricate Fitting with Grease	3 – 2
Engine Oil	Change Oil and Filter *	3 – 15
Hydraulic System	Change Return Filter *	3 – 21
Every 250 Service Hours (First perform previous service hour items)		
Engine Oil	Change Oil and Filter	3 – 15
Air Cleaner	Clean or Change Filter Elements	3 – 16
Fan Belt	Inspect and Adjust	3 – 19
Coolant	Change Coolant (When not used L.L.C)	3 – 26
Every 500 Service Hours (First perform previous service hour items)		
Tighten Bolts	Retightening Bolt	3 – 20
Return Filter	Change Return Filter	3 – 21
Fuel Filter	Change Filter Elements	3 – 22
Travel Drive	Check Oil Level	3 – 22
Every 1000 Service Hours (First perform previous service hour items)		
Travel Drive	Change Gear Case Oil	3 – 23
Hydraulic Tank	Change Hydraulic Oil and Clean Strainer	3 – 24
Every 2 years Service Hours		
Coolant	Change Coolant (When used L.L.C)	3 – 26

* Interval given applies only to initial period of use (Break-in).

https://truckmanualshub.com/

3 MAINTENANCE

3-1 LUBRICATION CHART MAINTENANCE AND CHECKS

The interval of lubrication, maintenance and check is the maximum interval indicated by the hour meter. It should be shortened in service operating conditions.

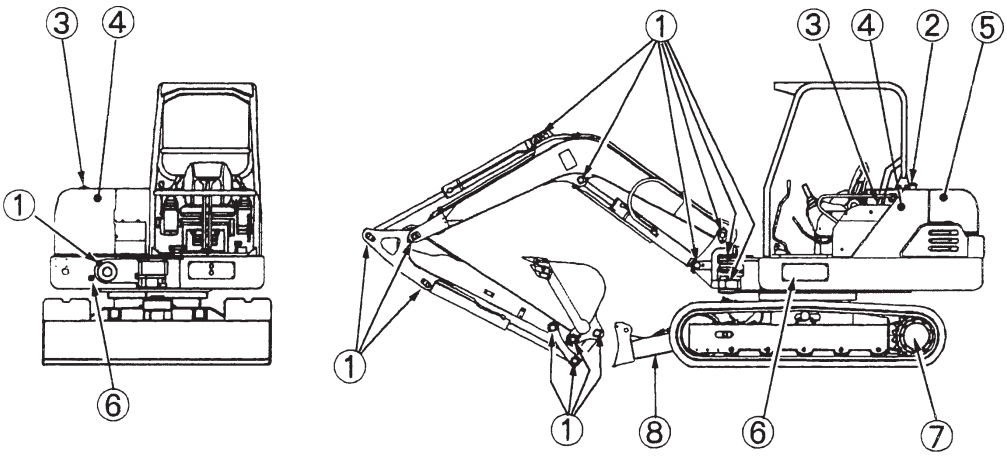

Check points		Check items	Check intervals					
			Initial period of use After 50 hours	Daily	Every 50 hours	Every 250 hours	Every 500 hours	Every 1000 hours
①	Attachment pins	Lubricate with grease "G"			○			
②	Fuel tank	Drain water and sediment			○			
③	Hydraulic tank	Check oil level "H"		○				●
		Drain water and sediment			○			
		Wash and clean strainer						○
④	Return filter	Change filter	●				●	
⑤	Engine	Change engine oil "E"	●	○		●		
		Change fuel filter					●	
		Change oil filter	●			●		
		Clean or Change air filter		○		○	●	
		Check coolant level "W"		○				●
⑥	Swing bearing	Bearing-lubricate with grease "G"			○			
		Ring gear-lubricate with grease "G"					○	
⑦	Travel reduction gear	Check oil level and change oil "L"	○				○	●
⑧	Blade	Lubricate with grease "G"			○			

Symbol	G	L	H	E	W	○	●
Remarks	Grease	Gear oil	Hydraulic fluid	Engine oil	Coolant	Check / Maintenance / Supply	Change

https://truckmanualshub.com/

3-2 RECOMMENDED LUBRICANT TABLE

LOCATIONS	REFILL CAPACITIES (APPROXIMATE)	CHANGE INTERVALS	USE	LUBRICANT VISCOSITIES
Diesel Engine	Max. 11.2 liter Min. 6.7 liter	250 Hrs. Initial oil change 50 hours	Cold Regions	API, Class CD SAE5W-20
			General	API, Class CD SAE10W-30
			Tropical Regions	API, Class CD SAE15W-40
Hydraulic Oil	Total Amount 110 liter Tank Capacity 75 liter	1000 Hrs. (500 Hrs. when breaker used)	Ambient Temperature - 5 °C	Wear Proof Hydraulic Fuluid ISO-VG 46
			Ambient Temperature Below - 5 °C	Wear Proof Hydraulic Fuluid ISO-VG 32
Lower Roller	0.08 liter (Each)	Upon occasion	–	API, GL-4, ISO-VG 320 SAE 90 Gear Oil
Front Idler	0.08 liter (Each)	Upon occasion	–	
Upper Roller	0.06 liter (Each)	Upon occasion	–	
Travel Reduction Gear	1.1 or 1.3 liter (Each)	1000 Hrs.	–	
Grease in Swing Gear	11.5 liter	1000 Hrs.	–	EP2 Lithium Grease
Lubricate the Fitting	Swing Bearing, Attachment pins, etc.			

Note:
1. Oils in the hydraulic fluid columns marked with *should be use above 0 ºC.
2. If the oil becomes dirty or deterioration of the oil's properties are excessive, replace more frequently than described above.
3. Disassemble the lower roller and upper roller when replacing the oil in them.

https://truckmanualshub.com/

3-3 WHEN REQUIRED MAINTENANCE AND CHECKS

TRACKS CHECK / ADJUST

⚠ WARNING

* Grease is under high pressure.
* **NEVER** remove the grease fitting.
* Grease coming out of the check valve under pressure can penetrate the body causing injury or death.
* **DO NOT** watch the check valve to see if grease is escaping. Watch the track or track adjustment cylinder to see if the track is being loosened.
* Loosen the check valve one turn only.

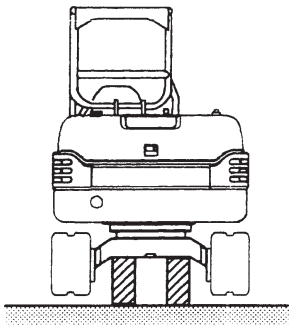

Suported the machine

■ **Measuring Track Tension**

1. Position bucket to the sprocket side. Use boom and blade down pressure to lift the track on both side off the ground.
2. Measure the maximum amount of the track sag from the shoe upper face to the roller face. Properly adjusted track will have approximately 10 to 20 mm slack with rubber shoes. In case of steel shoes, approximately 30 to 50 mm.

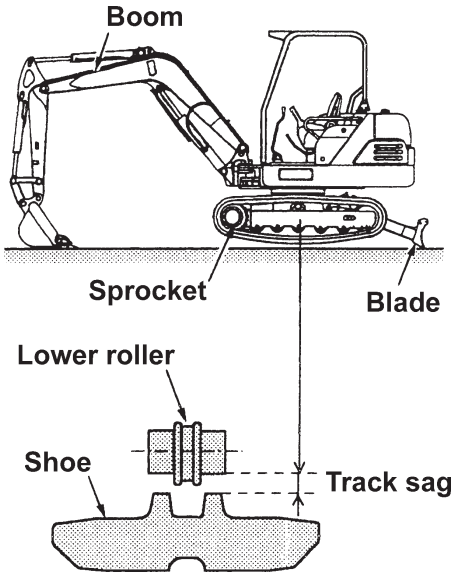

Rubber shoes: 10 to 20 mm
Steel shoes: 30 to 50 mm

■ **Track Tightening**

1. Add grease through check valve fitting ① until the correct track tension is reached.
2. Move the tracks forward and reverse to equalize the pressure.
3. Check the amount of track sag again and adjust as necessary.

■ **Track Loosening**

1. Remove soil deposited on front idler bearing.
2. Loosen the check valve ② carefully (one turn maximum) until the track begins to loosen.
3. Tighten the check valve ② to 59 to 69 N • m (6 to 7 kgf • m) when the desired track tension is reached. **NEVER** over tighten the check valve.
4. Move the tracks forward and reverse.
5. Check the amount of track sag again and adjust as necessary.

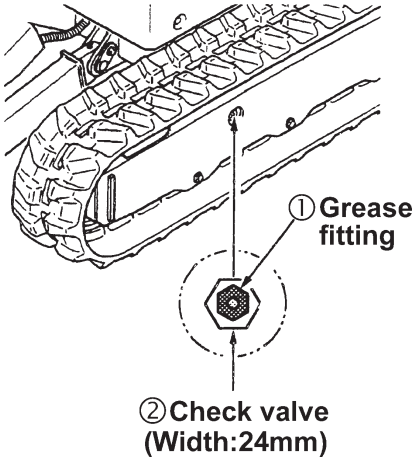

If the correct adjustment cannot be obtained, consult your IHI dealer.

https://truckmanualshub.com/

RUBBER TRACK SHOE MAINTENANCE

CAUTION

* Rubber track shoe should be repaired or replaced under the next conditions.
* If is necessary to repair or replace it, consult your IHI dealer.

(Typical Example)

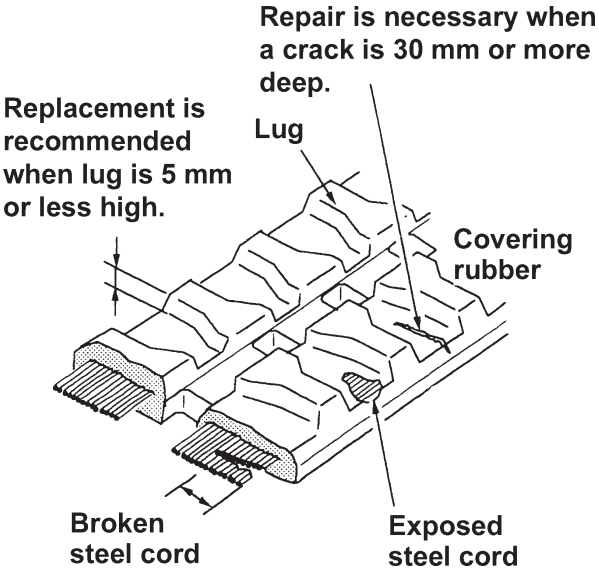

1. **Height of lugs**
   The rubber track shoe can be used even if it is worn, however, if it is excessively worn, the rubber track shoe is likely to be slippery and more travel force is required. If the remaining lug is less than 5 mm high, replace it with brand-new one.

2. **Exposure of Steel Cords**
   If steel cord is exposed because of weary rubber or damage, replace it with brand-new one.

3. **Break of Steel Cords**
   When break of steel cord is detected, replace it immediately. If you leave it as it is, the rubber track shoe can be break without expectation, which causes a serious accident.

4. **Crack of Covering Rubber**
   If a crack is 30 mm or more long and 8 mm or more deep, repair the cover immediately. If steel cord appears even if a crack is small, repair it immediately. Otherwise, water may come into a crack, which rusts steel cords and break the rubber track shoe.

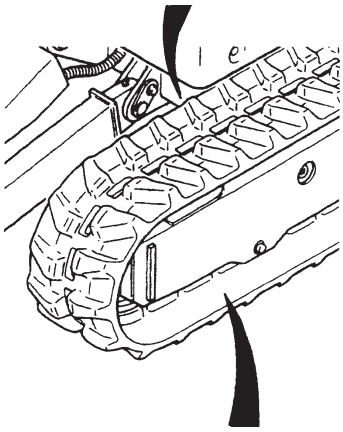

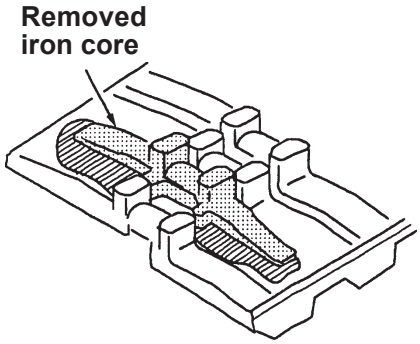

https://truckmanualshub.com/

FUSES

The fuse box is located on the front of the instrument panel.
Fuses will protect the electrical system from damage caused by overloaded circuits.

Replace fuses with the same type and size only. Otherwise, electrical damage can result.
Change a fuse, have the circuit checked and repaired.

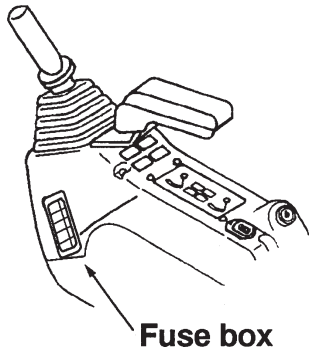

■ **Replace**

1. Pull the latch and remove the cover for fuse access.

2. Change the damaged fuse to new one.

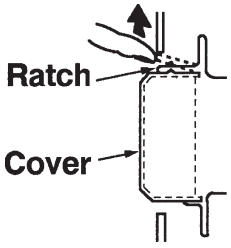

The following circuit protected by each fuse includes the fuse amperage.

① Fuel pump, Control shut-off and Travel speed select solenoid – 20 amps

② Horn, Cigarette lighter and Room lamp – 20 amps

③ Front light – 20 amps

④ OK Monitor, Radio, Heater and Wiper – 20 amps

⑤ Main Relay – 10 amps

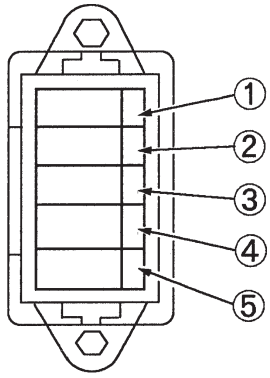

Fuse amperage

FUSIBLE LINK

The fusible link is provided between the positive terminal of the battery and the starter switch to prevent electrical circuit wires from being burned because of short circuit. When the power is turned off by short circuit, check the fusible link. When it is blown out, replace it with new one after repairing the wires.

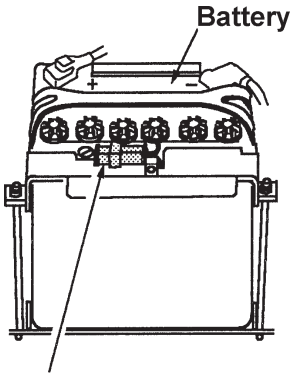

Fusible link (65A)

Replaceable fuse
(Typical Example)

https://truckmanualshub.com/

BATTERY MAINTENANCE

⚠ WARNING

* Battery give off flammable fumes that can explode.
* Do not smoke when observing the battery electrolyte levels.
* Electrolyte is an acid and can cause personal injury if it contacts skin or eyes.
* If the electrolyte comes in contact with eyes, wash it away with water and call for emergency medical cure.
* Always wear protective glasses when working with battery.
* Battery post, terminals and related accessories contain lead and lead compounds, chemicals known to cause cancer and reproductive harm. WASH HAND AFTER HANDLING.

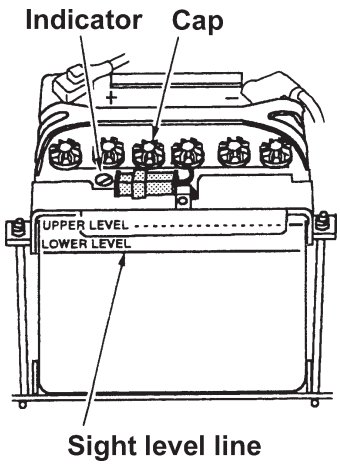

(Typical Example)

1. **Cleanliness**
   Clean the battery surface. Keep the terminals clean and coated with good quality grease.
   Install the post cover after coating.

2. **Battery Recharge**
   Battery should not be allowed to stand in a fully discharged condition, but should be recharged as soon as possible. If battery is out of use for a long time, it must not be allowed to run down completely.

   The battery should be given a small recharge, sufficient to bring it back to fully charged state about every one or two months.

   Trickle charging is not recommend and during charging as before, care must be taken that temperature of electrolyte does not rise above 40°C for temperate climates and 52°C for battery using lower gravity acids specified for tropical use.

3. **Inspection**
   Inspect the electrolyte level look at the indicator or sight level line on the battery.

   Display of indicator
   Shows the standard of charge and electrolyte level.

   - Good (Blue) ◎
   - Charge is necessary (Red) ●
   - Electrolyte shortage (White) ◎

4. **Topping Up**
   Maintain the level to the upper level of the sight level line with distilled water when required. If any electrolyte is spilled, replace it with fresh sulfuric acid of same specific gravity as that of remaining in cell. Level of electrolyte must never fall below tops of plates.

https://truckmanualshub.com/

CHANGE THE BUCKET

CAUTION

* Bucket pins, when struck with force, can fly out and injure nearly persons. Make sure the area is clear of people when driving bucket pins.
* Wear protective glasses when striking a bucket pin to avoid injury to your eyes.
* Chips or other debris can fly off objects when struck. Make sure no one can be injured by flying debris before striking any object.

■ Remove the Bucket

1. Place the bucket in a stable position.
2. Move the O-rings from the regular position to the bucket boss.
3. Remove the pins of section A and B, then remove the arm and the bucket.

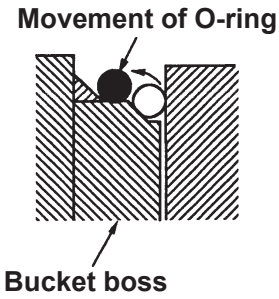

■ Install the Bucket

1. Clean the removed pins and pin holes and apply coat the grease to them surface.
2. Place a new bucket in a stable position as illustrated.
3. Connect the arm into the hole A, and the link into the hole B with pins.
4. Install a stopper bolt to each pin securely.
5. Adjust the bucket clearance.
6. Move the O-rings for sealing into the regular position.
7. Lubricate each pins with grease.
8. After install the bucket, start the engine and low speed rotate the bucket to the stroke end. Check if anything interrupts the bucket rotation.

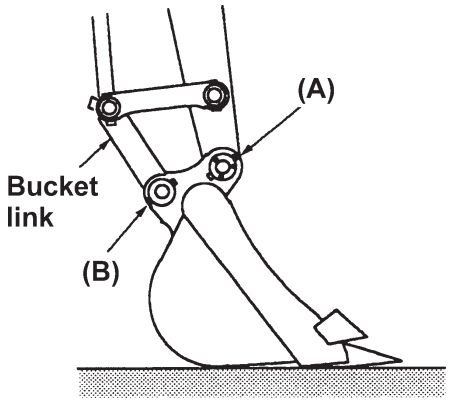

■ Bucket Clearance (If Equipped with a Bucket Capable of Shim Adjustment)

If the bucket installed clearance becomes excessive, adjust clearance to 0.1 to 0.8 mm by remove appropriate number of shims.

1. Stop the engine.
2. To remove shims, remove bolts, washers and flange.
3. After correct number of shim have been removed, install flange washers and bolt. Tighten bolts.
4. After installation, make sure that clearance is still correct.

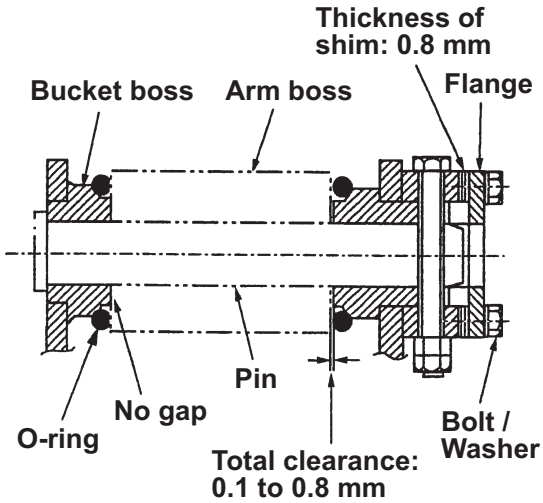

https://truckmanualshub.com/

REPLACE THE TEETH AND SIDE CUTTERS

⚠ WARNING

* Personal injury or death can result from bucket falling
* Block the bucket before changing bucket tooth or side cutter.

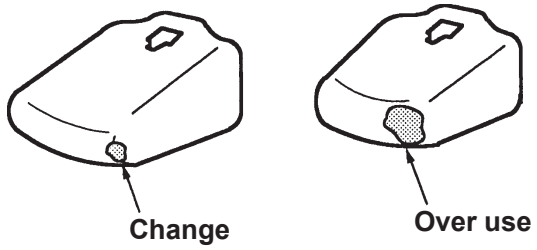

■ Replacement Period of Tooth

Replace the bucket tooth when a wear hole appears.

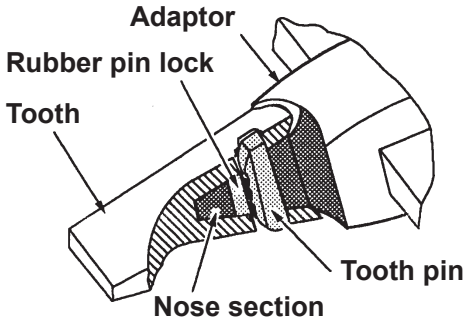

■ Replacement of Tooth

1. Drive the lock pin from the worn tooth. Remove the tooth.
2. Clean the adaptor and pin hole.
3. Install the new rubber pin into the tooth.
4. Install the new tooth over the adaptor.
5. Drive the lock pin through the tooth, until the pin is flush with the tooth surface.

NOTICE:
After driving the lock pin, make sure the lock pin fits snugly into the hole of the tooth.

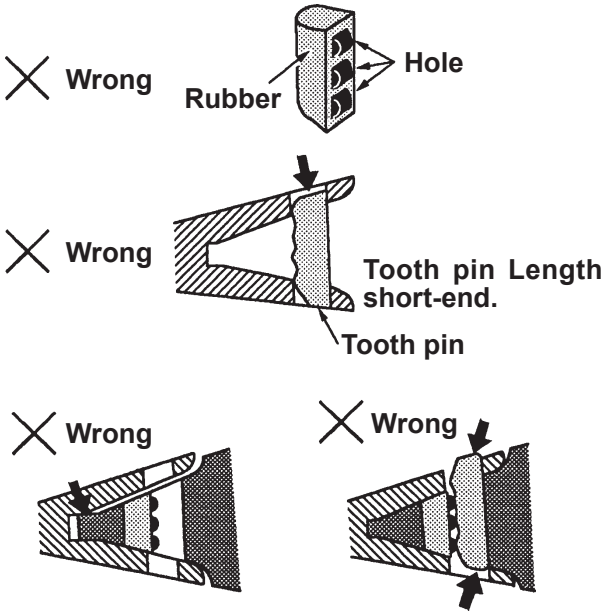

■ Replacement of Side Cutters

1. Remove the mounting bolts and remove the side cutters.
2. Clean the mounting surfaces. Install the new side cutters.

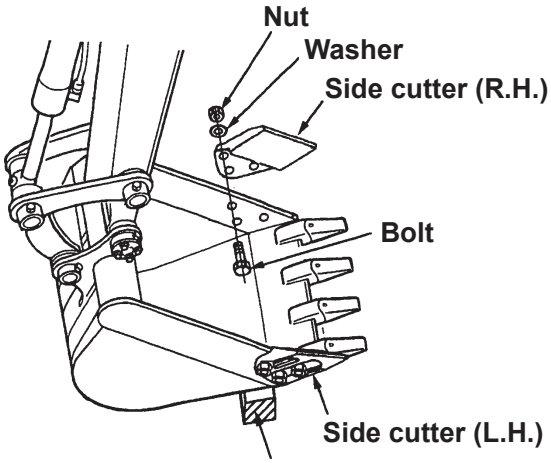

Typical Example

https://truckmanualshub.com/

3-4 DAILY MAINTENANCE AND CHECKS

■ Check the Engine Oil Level

⚠ CAUTION

* Check the oil level with the engine stopped. **DO NOT** check the oil level with engine running.
* **DO NOT** overfill the crankcase to avoid engine damaged. Engine damage can result.
* **NEVER** operate the engine when oil level is above **MAX** or **MIN** marks.

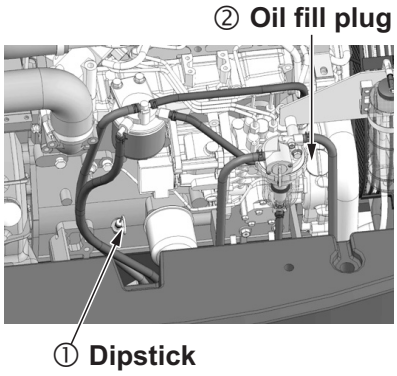

1. Place the machine on level ground. Stop the engine.
2. Remove the dipstick ① and wipe it clean. Insert dipstick ①, then remove it again to read actual oil level. Install dipstick ①.
3. Maintain the oil level to the **MAX** mark on the dipstick ①. Add oil if necessary.
4. Remove the oil fill plug ② and add oil. Clean and install the oil fill plug ②.
5. Close the access door.

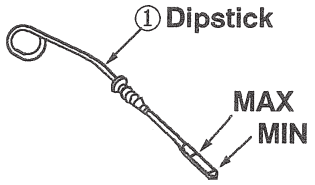

■ Check the Coolant Level

⚠ WARNING

* Steam generated by hot fluid under pressure in radiator can cause personal injury.
* Remove filler cap only when cool enough to touch with bare hand.

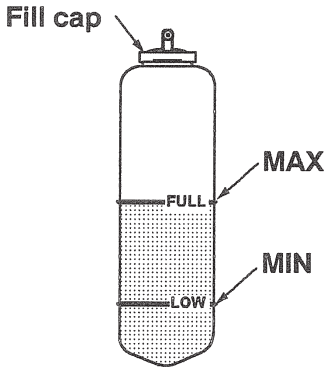

Reserve tank

1. Open the access door on the rear of the machine.
2. Always check the coolant level in the reserve tank. Maintain the coolant level between the **MAX** and **MIN** marks on the reserve tank.
3. Remove the coolant fill cap ① and add the coolant if necessary.
4. If the reserve tank is empty, check the radiator level with the engine stopped. Add coolant to the radiator and the reserve tank.
5. Close the access door.

https://truckmanualshub.com/

Hydraulic Oil Level

CAUTION

* Always clean around fill plug before removing.
* **DO NOT OVER FILL.**
* **DO NOT OPERATE** the machine when oil level is above **FULL** or **ADD** marks.

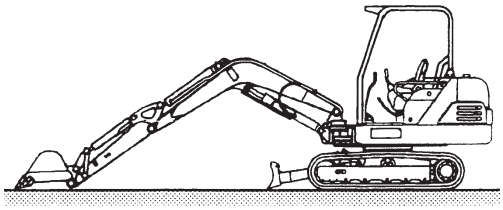

Bucket position at the time of checking the hydraulic oil level.

1. Place the machine on level ground and lower the bucket to the ground, with the arm and bucket cylinders fully retracted, as shown.
2. Maintain the oil level between the **FULL** and **ADD** marks on the level gauge.
3. Slowly loosen the fill plug and remove it to add oil if necessary.
4. Clean and install the fill plug. To pressurize the hydraulic tank, refer to “Change Hydraulic Oil” section.

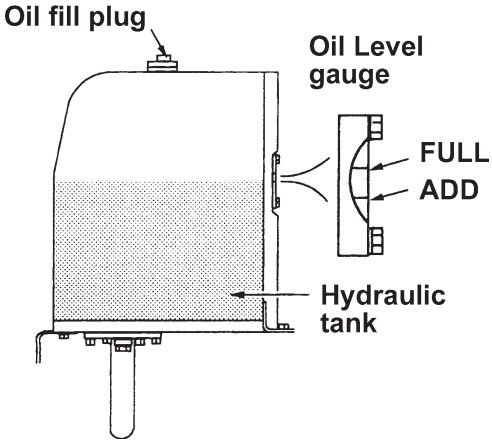

Fill Fuel Tank

Fuel can be added to the tank by removing the fill cap on top of the fuel tank. Do not remove strainer in the fill port when fill fuel tank.
After completion of refueling, be sure to lock the fuel tank cap to protect against vandalism.

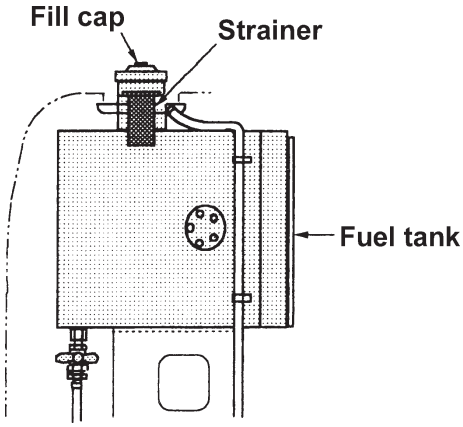

Dust Indicator

Check the air filter dust indicator. If the indicator is in the red zone, clean or replace the element. See Service the Filter Elements.

After servicing, reset the dust indicator pushing in the reset button.

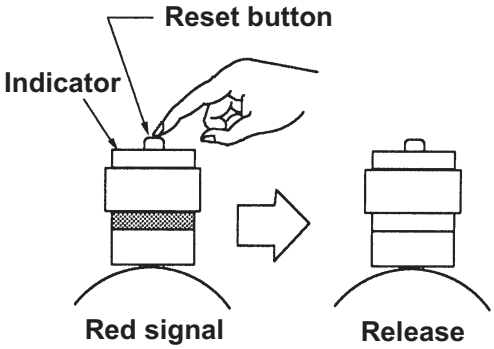

https://truckmanualshub.com/

Water Sedimenter

Maintenance intervals :

- Check Level: Daily
- Drain the Water and Sediment : When the float floated up to the “DRAIN LEVEL” on the sedimenter.

⚠ WARNING

Fuel leaked or spilled onto hot surfaces can cause a fire.

The water sedimenter is located at the rear of the engine.

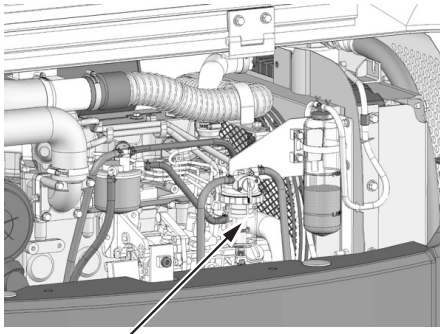

NOTE: Before draining the water and sediment, be sure to fill the tank with fuel.

1. Stop the engine.
2. Turn the drain valve counterclockwise to open.
3. Drain water and sediment into suitable container.

NOTE: Always dispose of drained fluids as established by local regulations.

4. Close drain valve.
5. Priming the sytem. There should be enough fuel in the system to allow the engine to start. Keep the engine start switch key at ON for a period of 20 seconds, which operates the fuel pump and priming automatically.

NOTE: Do not start the engine until all fuel system service is completed.

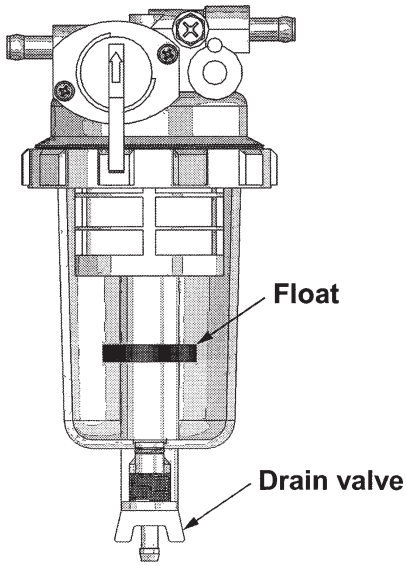

Water Sedimentor

https://truckmanualshub.com/

Walk-Around Inspection

Inspect the operator's compartment for cleanliness. Keep it clean.

Inspect the loose bolts, Tighten any loose bolts. Repair if necessary.

Inspect any cracks in boom and arm pivot area and cylinder mounting brackets.
Repair if damaged.

Inspect attachment cylinders, linkage and bucket for damage or excessive wear.
Repair if damaged.

Inspect and remove any trash build up in the engine compartment.

Inspect the cooling system for leaks, faulty hose and trash built up. Correct any leaks and remove any trash from the radiator.

Inspect the hydraulic system for leaks. Inspect the tank, cylinder rod seals, tubes, plugs, joints and fittings. Correct any leaks.

Inspect and repair travel drive leaks. Check oil level if leakage is noticed.

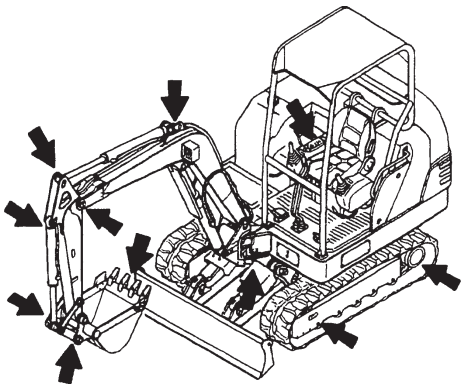

Daily Lubrication

Perform the daily lubrication as required by the Lubrication Chart.

https://truckmanualshub.com/

3-5 50 HOURS MAINTENANCE AND CHECKS

First perform previous service hour items

FUEL TANK

■ **Drain the Water and Sediment**

NOTE: Before draining the water and sediment, be sure to fill the tank with fuel.
The drain valve located under the fuel tank.

1. Open the drain valve ①.
2. Drain water and sediment into suitable container.

NOTE: Always dispose of drained fluids as established by local regulations.

3. Close the drain valve.

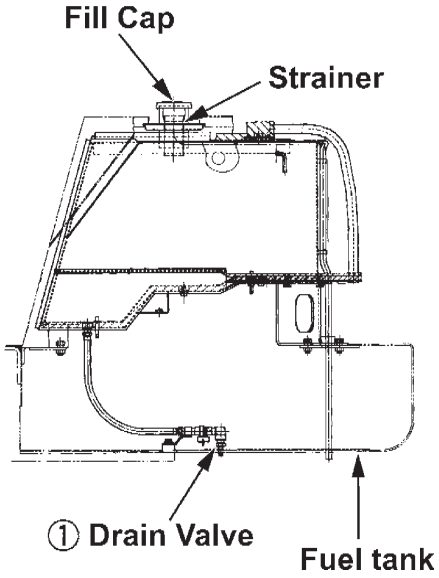

■ **Lubrication**
Perform the 50 hours lubrication as required by the Lubrication Chart. Be sure to lubricate all cylinder mounting bushings and pins.

☆ The following maintenance and checks should be made in 50 hours for the initial time only.
Interval given applies only to period of use (break-in.)

- Return filter replacement.
- Engine oil replacement.
- Engine oil filter replacement.

https://truckmanualshub.com/

3-6 250 HOURS MAINTENANCE AND CHECKS

First perform previous service hour items

ENGINE OIL AND FILTER

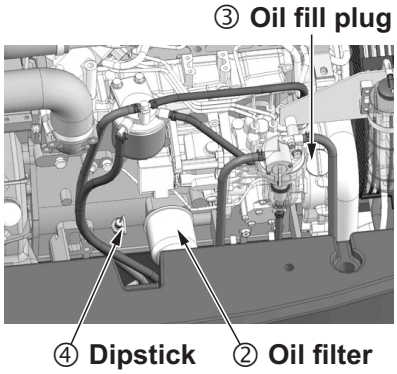

■ **Change the Oil and Filter**

CAUTION

* Hot oil and components can cause personal injury. Do not allow hot oil or components to contact skin.
* **DO NOT** overfill the crankcase to avoid engine damaged. Engine damage can result.
* **NEVER** operate the engine when oil level is above **MAX** or **MIN** marks.

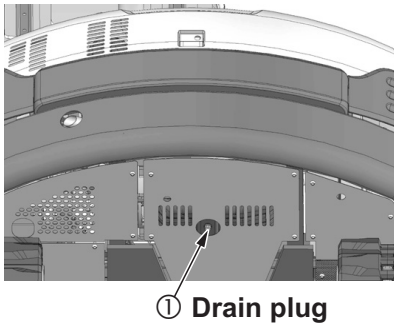

1. Stop the engine.
2. Remove the crankcase oil drain plug ①. Allow the oil to drain into a container. Install the crankcase drain plug ①.

   NOTE: Always dispose of used oil and filters as established by local regulations.

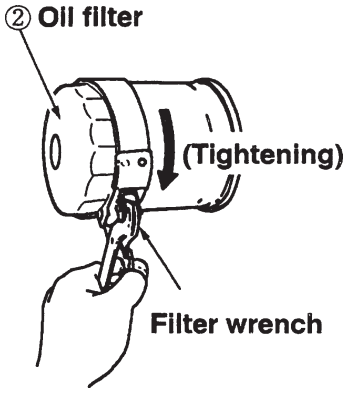

3. Open the engine cover on the rear of machine.
4. Remove the used filter ② by the filter wrench. Clean the filter housing base.
5. Apply a light coat of engine oil to the gasket of the new filter.
6. Install the new filter by hand. When the seal contacts the base, tighten the filter 3/4 turn more by filter wrench. Do not overtighten.
7. Remove the oil fill plug ③. Fill the crankcase with oil. Refer to "Recommended lubricant table." Clean and install the oil fill plug ③.
8. Before starting the engine, make sure the oil level is between the two notches on dipstick ④.

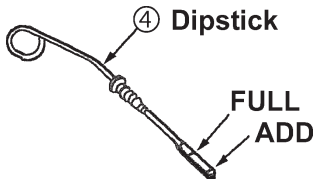

9. Start and run the engine at low idle for two minutes. Inspect for oil leaks. Stop the engine.
10. Wait 10 minutes to allow the oil to drain back into to the crankcase. Check the oil level. Maintain the oil level to the **FULL** mark on dipstick.
11. Close and latch the engine hood.

https://truckmanualshub.com/

■ Service the Filter Elements

⚠ CAUTION

* Service the air cleaner if indicated the red signal in the dust indicator with the engine running at high idle.
* Service the air cleaner only with the engine stopped to prevent engine damage.
* Do not clean the filter elements by bumping or tapping them.
  Do not use filter element with the damaged pleats, gaskets or seals.
  Engine damage could result.
* When using pressure air for cleaning, wear a protective face shield or protective grasses.

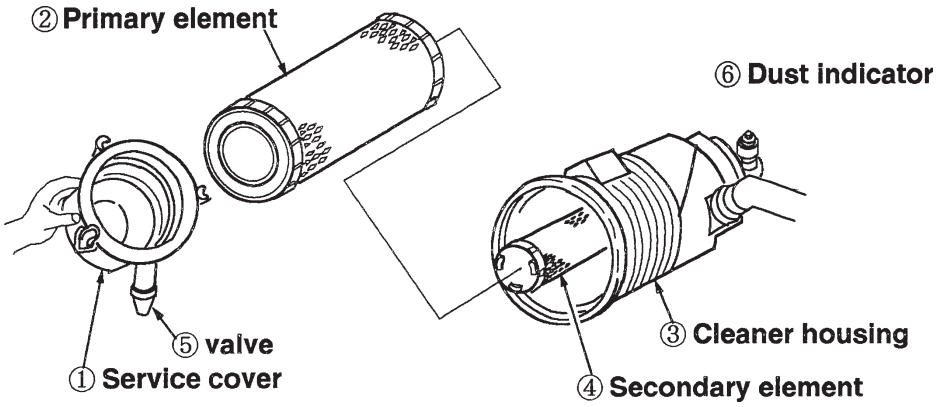

Service the Primary Element

Cleaning: Every 250 hours or when indicated the red signal in the dust indicator.
Replacement: After cleaning five times, after one year or damaged pleats or seals.

1. Stop the engine.
2. Release the two latches and remove the service cover ①.
3. Remove the primary element ② from the air cleaner housing ③.
   Do not remove the secondary element ④, when service the primary element ② only.

NOTE: Remove the seal unit of element gently. The element is radially sealed by the element seal unit and seal tube. To loose the seal unit, move the outer of element gently up and down or right and left or turn the element to remove it.
Take out the element not to scatter dust.

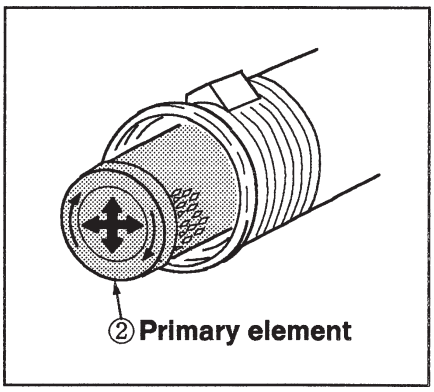

https://truckmanualshub.com/

4. Clean the inside of the cleaner housing ③ and service cover ①.

NOTE: Clean the seal tube in the cleaner housing. Dust on the seal tube causes dust leak.

5. Primary element ② can be cleaned with compressed air 200 kPa (2 kgf/cm^2) maximum. Direct air along pleats inside of filter element.

6. Inspect the filter element after cleaning. Do not use a filter element with damaged pleats, gasket or seals.

NOTE: The used element may be useful to find a foreign substance on the seal surface of the filter element, which can cause leak. If the striped dust is seen on the seal surface, it is a symptom of dust leak. If such dust seen, inspect if there are foreign substances, on the inside and outside of the housing seal tube.

7. Install a clean primary element ②. Install and secure the service cover ① with the valve ⑤ at the bottom.

NOTE: Insert a new element correctly. When the element seal unit is inserted into the seal tube, its seal surface is extended uniformly to seal the element. To seal the element more accurately, push securely not the center but the outer of the element end surface.

8. Reset the dust indicator ⑥ by pushing in the reset button.

9. If the dust indicator indicated the red signal after starting the engine, change to new element.

NOTE: Normally a filter can be cleaned up to five times. Replace after five cleanings maximum.

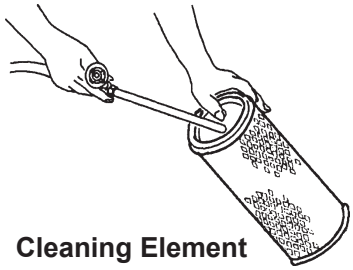

Cleaning Element

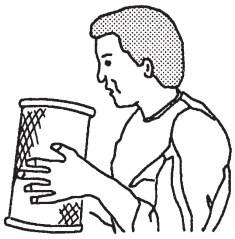

Inspect Primary Element

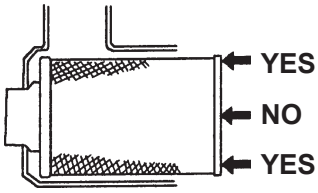

Install Primary Element

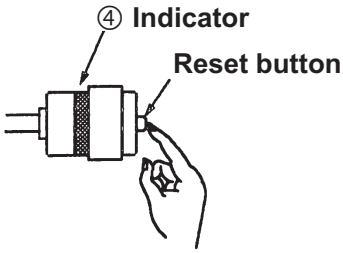

https://truckmanualshub.com/

Change the Secondary Element

CAUTION

* Always replace the secondary filter element. **NEVER** attempt to reuse it by cleaning.
* The secondary filter element should be replaced at the time the primary element is serviced for five time.

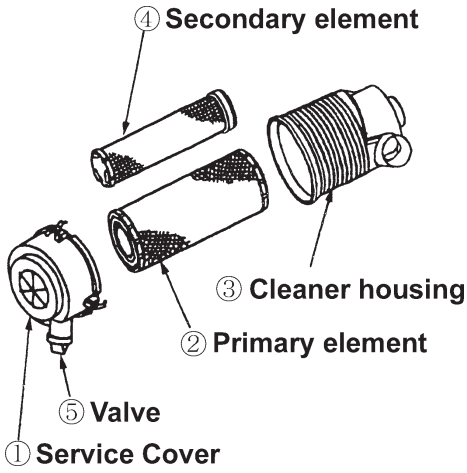

Replacement: When replaced the primary element with the secondary element.

1. Remove the service cover ① and the primary element ② from the air cleaner housing ③.

2. Remove the secondary element ④ from the air cleaner housing ③. Cover the engine intake opening.

3. Clean the inside of the air cleaner housing ③ and service cover ①. Remove the covering from the intake opening.

NOTE: Clean the seal tube in the cleaner housing. Dust on the seal tube causes dust leak.

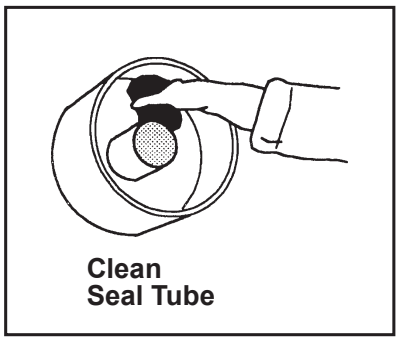

4. Install the new secondary element ④.

5. Install the primary element ② secure the service cover ①.

6. Reset the dust indicator ⑥ by pushing in the reset button.

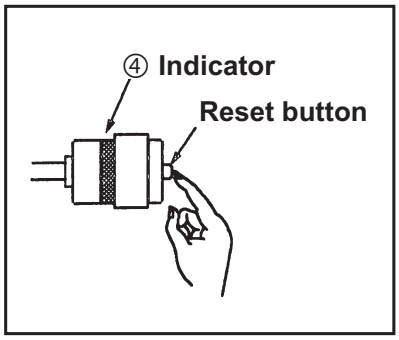

https://truckmanualshub.com/

■ Fan and Alternator Belt

⚠ WARNING

* Hot components can cause personal injury.
* Stop the engine and remove the start switch key.

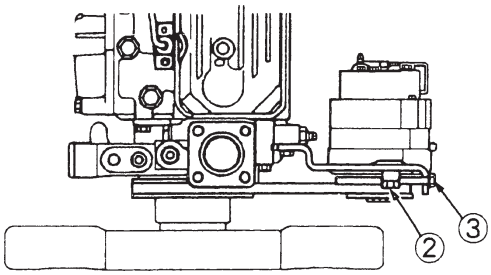

View from engine top

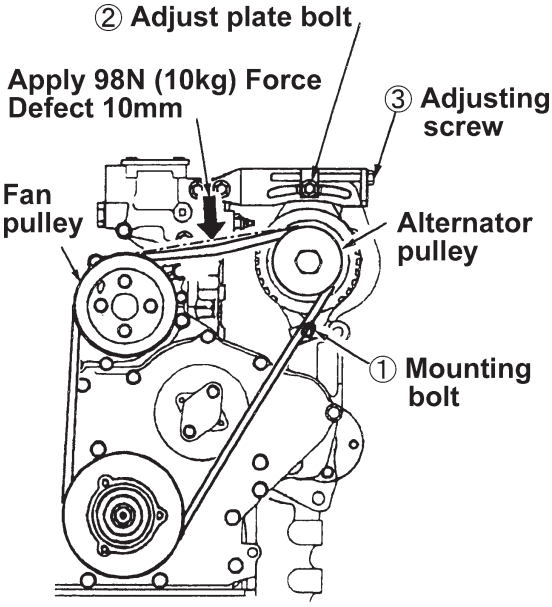

Inspect

Stop the engine. Inspect the belt for wear and cracking. To check the belt tension, Push the belt inward by hand apply 98 N (10 kg) force midway between the pulleys. Correctly adjusted belt will deflect 10 mm.

Adjust

1. To adjust the belt, loosen mounting bolt ① and adjust plate bolt ②.
2. Move the alternator in or out as required to obtain the correct adjustment by turn adjusting screw ③.
3. Tighten mounting bolts ①, adjust plate bolt ② and reinspect the adjustment.
4. Check the belt adjustment again after 5 minutes of engine operation at rated speed.

https://truckmanualshub.com/

3-7 500 HOURS MAINTENANCE AND CHECKS

First perform previous service hour items

■ Check the Fixed Bolt Torque

When loosened bolt or nut is found at daily check, tighten it with torque specifications table.

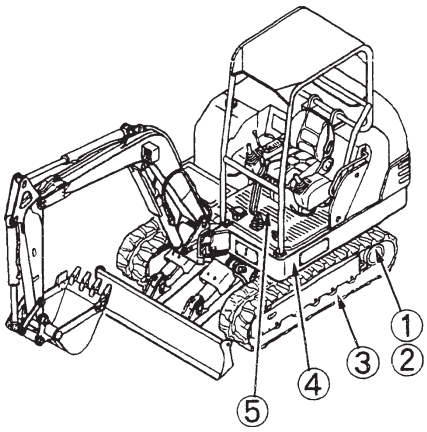

1. Special torque specifications

Special tighten is applied for main bolts as illustrated below.
When replacing bolts, apply molybdenum grease to bolts, nuts, and bearing surface of nuts.
Then, tighten them with specified torque.

Items	Tighten point	Wrench size (mm)	Thread size metrie	Tighten torque N•m
①	Travel drive	24	M16	245
②	Sprocket	22	M14	157
③	Lower roller	30	M20	490
④	Swing bearing	24	M16	245
⑤	Swing motor	24	M16	245

Newton meter (N•m) is approximately the same as 0.1 kg•m

2. General torque specifications

Other than above-mentioned, refer the next table for torques.

Thread size metric	Wrench size (mm)	Tighten torque	
		Metric coarse H.T.	Metric fine H.T. bolt
		N•m	N•m
M8	13	23	25
M10	17	47	50
M12	19	83	91
M14	22	134	135
M16	24	206	220
M20	30	412	450
M24	36	715	813

High pressure-hose union nut	
Hose size (inch)	Tighten torque
	N•m
1/4”	25
3/8”	49
1/2”	59
3/4”	118
1”	137
1-1/4”	167

https://truckmanualshub.com/

■ Change the Return Filter

⚠ CAUTION

* Hot oil and components can cause personal injury. Do not allow hot oil or components to contact the skin.
* At operating temperature, the hydraulic tank is hot and can be under pressure.
* To relieve the pressure from the hydraulic oil tank, loosen the oil fill plug ① on the hydraulic tank.
* Remove the return filter ③ only after the engine has been stopped and the return filter is cool enough to touch with your bare hand.

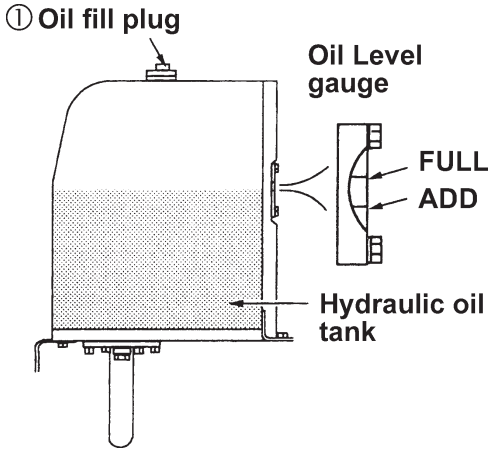

1. Lower the bucket on the ground and stop the engine.
2. Relieve the internal pressure from the hydraulic oil tank by loosening oil fill plug ①.
3. Clean the area to keep dirt out of the filter base ②.
4. Remove the used filter ③ by filter wrench. Clean the filter base ②.

NOTE: This is a cartridge type element. It cannot be reused.

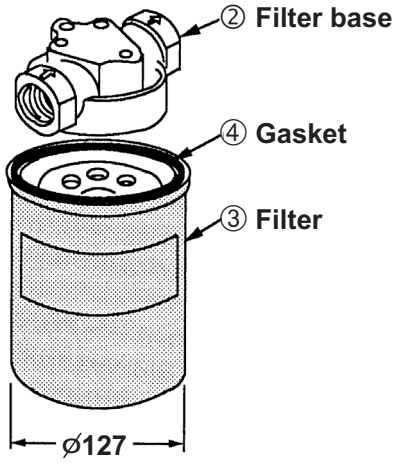

Return filter

5. Coat the gasket ④ of new filter with clean hydraulic oil.
6. Install the new filter ③ by hand. When the seal contacts the base, tighten an additional 3/4 turn by filter wrench.
7. Start and run the engine to fill the filter. Stop the engine. Maintain the oil level between marks on the level gauge. Add oil if necessary.
8. Pressurize the hydraulic oil tank. After fully extending all the cylinders and loosen oil fill plug ① to supply air to the hydraulic oil tank, tighten the plug again.
9. Start and operate the engine. Inspect for leaks on the oil filter ③.

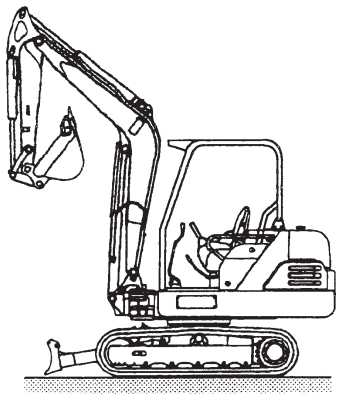

Bucket position at the time of sealing off hydraulic oil tank.

☆ When operation breaker works, replace the return filter every 100 hours operation.

☆ Replace this filter in 50 hours for the initial time only.

https://truckmanualshub.com/

■ Change the Fuel Filter Element

⚠ WARNING

* Hot oil and components can cause personal injury.
* Fuel leaked or spelled on to hot surfaces can cause a fire.

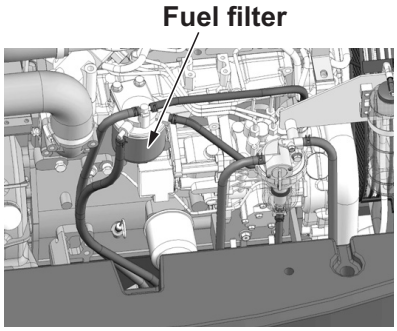

1. Stop the engine.
2. Remove the used filter ① by the filter wrench. Clean the filter housing base.

NOTE: Always dispose of drained fluids as established by local regulations.

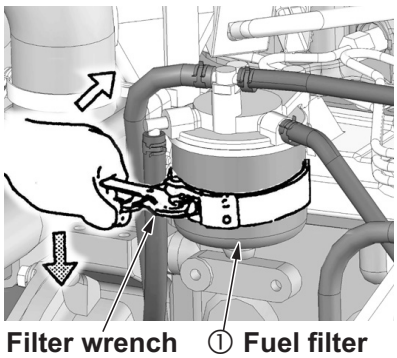

3. Apply a light coat of engine oil to the gasket of the new filter.
4. Install the new filter by hand. When the seal contacts the filter base, tighten the filter 1/2 turn more by filter wrench. Do not overtighten.

NOTE: Do not start the engine until all fuel system service is completed.

5. There should be enough fuel in the system to allow the engine to start. Keep the engine start switch key at ON for a period of 20 seconds, which operates the fuel pump and priming automatically.

■ Check the Travel Reduction Gear Oil Level

⚠ CAUTION

When the quantity of oil is found to have increased abnormally, it is necessary to check the oil seal of the travel motor.
If the seal is leaking, contact a IHI dealer.

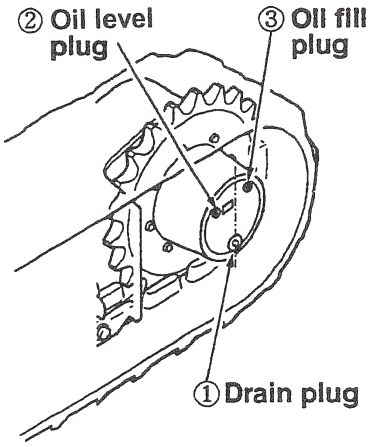

1. Position one travel reduction gear with oil drain plug ① at the bottom.
2. Remove the oil level plug ②. Oil should be to the bottom of the level plug opening.
3. Add oil through the opening of oil fill plug ③, if necessary.
4. Clean the plugs ② and ③.
   Apply pipe sealant to the oil level plug ②.
   Install the plugs ② and ③.
5. Perform procedure on the other travel reduction gear.

https://truckmanualshub.com/

3-8 1000 HOURS MAINTENANCE AND CHECKS

■ Change the Travel Reduction Gear Oil

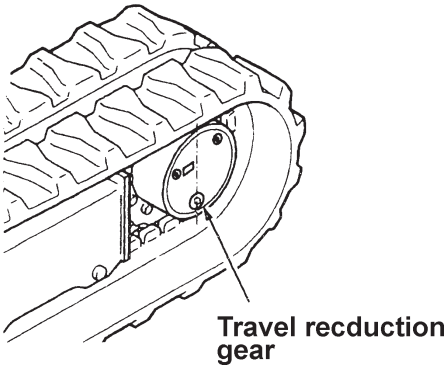

1. Position one travel reduction gear with drain plug ① at the bottom.

2. Remove the drain plug, oil level plug ② and oil fill plug ③. Allow the oil to drain into a container.

NOTE: Dispose drained material according to local regulation.

3. Clean and install the drain plug.

4. Fill the oil to bottom of level plug opening.

   Refill capacities

Serial number	Reduction Gear	Capacity
WP003001 ~ WP003154	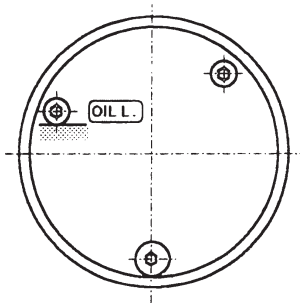	1.3 Liter
WP003155 ~	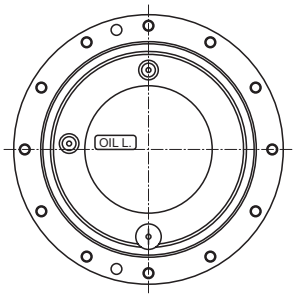	1.1 Liter

5. Clean and install the oil level plug and oil fill plug.

6. Perform procedure on the other travel reduction gear.

7. Start the engine and allow the travel reduction gear to turn through several cycles.

8. Stop the engine, check the oil level.

9. Check the drained oil for metal chips or particles. If there are any, consult your IHI dealer.

https://truckmanualshub.com/

■ Change Hydraulic Oil and Clean the Strainer

⚠ CAUTION

* Hot oil and components can cause personal injury. Do not allow hot oil or components to contact the skin.
* At operating temperature, the hydraulic tank is hot and can be under pressure.
* To relieve the pressure from the hydraulic tank, loosen the oil fill plug ① on the hydraulic tank.
* Relieve the tank pressure with engine off by removing fill plug slowly to prevent burns from hot oil.

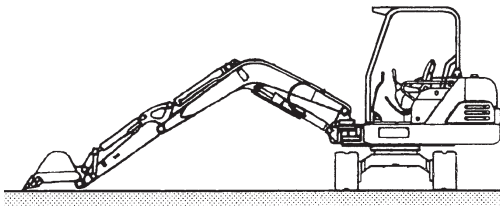

Bucket position at the time of drain the hydraulic oil.

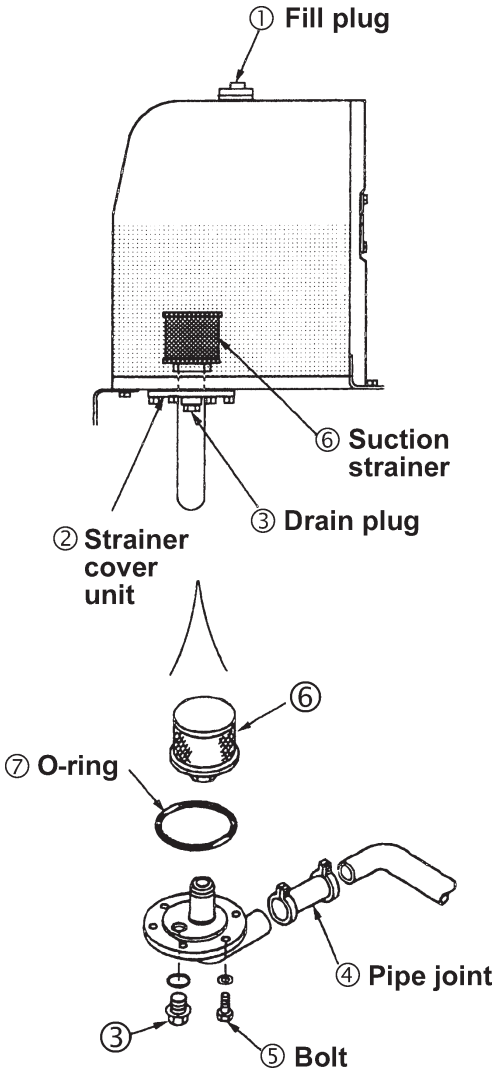

1. Place the machine on level ground, with the arm and bucket cylinder fully retracted and attachments lowered, as shown. Stop the engine.

2. Relieve the internal pressure from the hydraulic tank by loosening the fill plug ①.

3. Clean area thoroughly to keep dirt out of strainer cover unit ② and fill plug ①.

4. Remove the oil drain plug ③. Drain oil into a container. Drain oil in all parts of the hydraulic system thereafter.

NOTE: Always dispose of used oil as established by local regulation.

5. Remove the pipe joint ④. Remove the bolts ⑤ and the strainer cover unit ② /strainer ⑥ from the hydraulic tank.

6. Inspect the O-ring ⑦ and replace it if damaged.

7. Clean the inside of the tank with the clean oil.

8. Clean and install the strainer cover unit ② / strainer ⑥ and the pipe joint ④.

9. Clean and install the drain plug ③.

https://truckmanualshub.com/

10. Fill the hydraulic oil tank with oil.
    See Recommended Lubricant Table.

11. Loosen the air purge valve ⑧ on the pump housing. When oil flow of air bubbles, tighten the purge valve ⑧.

12. Start and operate the engine at idling speed for five minutes.

13. Operate the control levers to allow the hydraulic oil to circulate through all hydraulic circuits.

14. Lower the bucket to the ground with the arm and bucket cylinder fully retracted and stop the engine.

15. Maintain the oil level between **FULL** and **ADD** marks on the level gauge ⑨.

16. Pressurize the hydraulic oil tank.
    Raise the boom with the arm, boom and bucket cylinder fully extended.
    Remove the fill plug ① and then install fill plug again.

17. Lower the bucket on the ground and stop the engine.

CAUTION

Hydraulic Oil Change Intervals for Breaker Works.
Hydraulic oil should be changed in every 500 service hours.

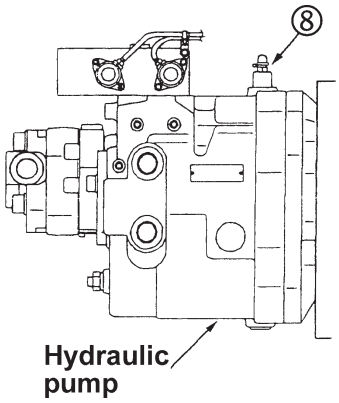

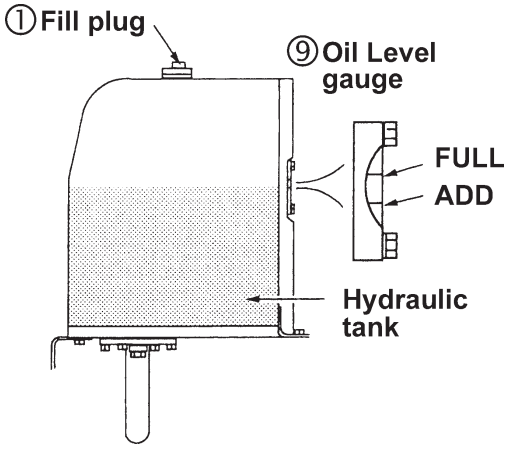

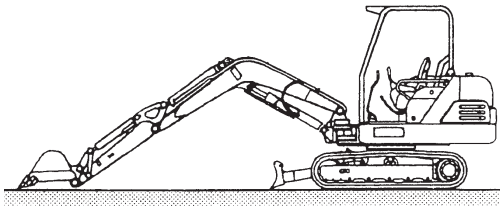

Bucket position at the time of checking the hydraulic oil level.

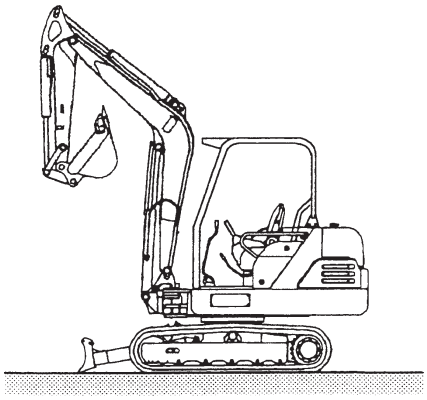

Bucket position at the time of sealing off hydraulic tank.

https://truckmanualshub.com/

3-9 2 YEARS MAINTENANCE AND CHECKS

COOLING SYSTEM COOLANT

⚠ WARNING

* At operating temperature, the engine coolant is hot and under pressure.
* Steam can cause personal injury.
* Change the coolant only after the engine has been stopped and radiator cap is cool enough to touch with your bare hand.
* Remove the radiator cap slowly to relieve pressure.

■ **Change the Coolant**

Coolant should be drained and replaced every 250 service hours or six months. However, when adding “Long-Life-Coolant”, the drain period can be extended to 2 years.

Drain the coolant earlier whenever the coolant is dirty or foaming is observed.

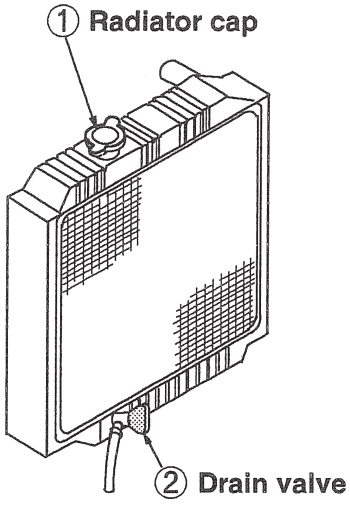

1. Place the machine on the firm and level ground.
2. Loosen the radiator cap ① slowly to relieve pressure, and remove the cap.
3. Open the radiator drain valve ② and allow the coolant to drain into a container.
4. Remove the drain plug ③ allow the coolant to drain into a container. Drain plug is located under the injection pump on the front side of cylinder body.
5. Close the drain valve and drain plug. Fill the system with clean water and cleaning solution.
6. Start and operate the engine for 1/2 hour. Stop the engine and drain the cleaning solution.
7. Flush the system with water, with the engine stopped, until the draining water becomes clear.
8. Close the drain valve and drain plug. Fill the system with clean water and operate the engine for five minutes. Stop the engine and drain the water.
9. Repeat step 7 several times, if necessary, until the drained water becomes clear.
10. Add the coolant solution. See next page.
11. Operate the engine for five minutes with the radiator cap off.

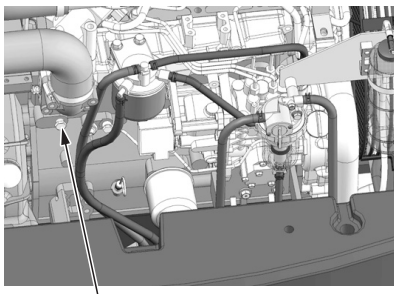

③ Drain plug

https://truckmanualshub.com/

12. Maintain the coolant level to the fill port neck.
13. Replace the cap gasket if the gasket is damaged. Install the radiator cap.
14. Maintain the coolant level between the **MAX** and **MIN** marks on the reserve tank.

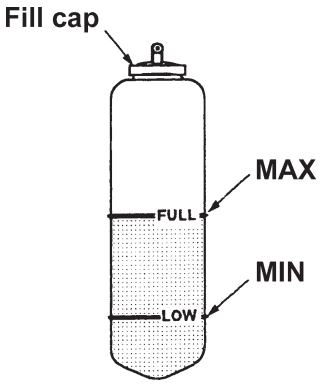

Reserve tank

■ **Clean the Outside of the Radiator Core**

When the radiator core is clogged, the cooling air flow is interrupted lowering the cooling efficiency.

Remove dust or debris from the radiator fins.

Clean the radiator with a pressurized air, high pressure water or steam at 500 hours interval.

Whenever the radiator is found to be closed, clean it at any time.

■ **Selection of coolant**

Long-Life-Coolant (LLC) is supplied to this machine before shipment.

This is a coolant provided with proper ties of antifreeze, corrosion-proof and fouling-proof.

Its long lasting effects will maintain the machine free from coolant exchange for 2 years through summer and winter seasons.

The Long -Life-Coolant is therefore recommended for use with this machine when exchanging its coolant.

■ **Mixing Rate of Long-Life-Coolant**

The mixing ratio of Long-Life-Coolant with water determines the freezing point.

Select the mixing ratio for a freezing point lower by 5º than the expected lowest atmospheric temperature.

Normally, the Long-Life-Coolant is used under a mixing ratio of 30 to 50%.

If the mixing ratio is less than 30%, occurrence of rust is feared and when it is over 50%, overheating is feared and sealing components may be deteriorated quicker than usual.

Meanwhile, use city water to mix with Long-Life-Coolant.

Freezing point (ºC)	–15	–25	–35
Mixing ration (%)	30	40	50
Quantity of LLC (L)	2.5	3.26	4.08
Quantity of water (L)	5.65	4.89	4.07
Coolant Total amount: 8.15 L	Engine proper : 4.2 L Radiator and other proper : 3.5 L Reserve tank : 0.45 L		

https://truckmanualshub.com/

3-11 UNUSUAL OPERATING CONDITIONS

Special problems in maintenance and operation are caused by unusual conditions such as extremes in heat, cold and humidity, high altitude, salt water, and dusty or sandy work sites. When operating under such conditions, special precautions must be taken to prevent machine damage, minimize wear, and avoid component deterioration.

■ Extreme Cold

In periods of extreme cold, the problems of freeze damage, inadequate lubrication and battery failure may become particularly trouble-some. With the onset of very cold weather, it is advisable to "winterize" the machine by servicing the cooling system and switching to the lubricants recommended for cold weather usage.
Follow the recommendations below when the machine must be operated in very cold conditions.

1. To prevent freeze damage to the cooling system and cracking of the engine block or head, drain and flush the cooling system. Clean the radiator exterior, making certain the air passages through the core and the cooling fins are free of foreign matter.

   Refill the cooling system, adding an antifreeze solution recommended by the engine manufacturer in an amount and strength appropriate to the anticipated temperatures. A corrosion inhibitor is recommended.

   Never use a chromatic base corrosion inhibitor when the coolant contains ethylene glycol. Use only non-chromatic base inhibitors.

   Inspect the thermostat, clamps, radiator hoses and radiator core for proper condition. Replace or repair any cooling system component found to be defective.

2. Condensation in the fuel tank contaminates the fuel supply with water, which can freeze in the fuel lines and block the fuel flow to the engine. To minimize this possibility, keep the tank as full as is practical during cold weather.
   This may entail refilling the tank more frequently than usual, but the inconvenience is small compared to clearing a blocked fuel line.
   If water should be noticed in the fuel supply, drain the tank and refill it with uncontaminated fuel.

3. Lubricate the machine with the lubricants recommended for cold weather operation in the lubrication section. If necessary, change the engine oil and other lubricants in order to conform to the recommendations.

4. The battery is more likely to sustain freeze damage if not kept fully charged because its electrolyte will freeze at a higher temperature than that in a fully charged battery. Be certain the battery is charging when the engine is running and use an external charger to restore full charge when the machine is not being operated. The battery can discharge if snow or ice short circuits the terminals. Keep the battery posts and cable connectors clean and dry. Remove any corrosion with a solution of soda and water.
   During extremely cold weather, it is advisable to remove and store the battery in a heated area when the machine is to remain idle overnight or for any extended period.

⚠ CAUTION

Water added to the battery can freeze before it mixes with the electrolyte.
During very cold weather, add water to the battery just prior to, or during operation of the machine.
If the machine is not to be run, water may be added if an external charger is connected to the battery.

https://truckmanualshub.com/

5. Special attention must be given to the hydraulic oil during very cold weather.

> **CAUTION**
>
> **BEFORE** attempting any working operations, warm up the hydraulic oil as described in “After Starting the Engine on Sheet No. 3-6”.

6. At the end of the work period, or whenever the machine is to be left idle for extended periods, prevent it from being frozen to the ground by parking it on wood, concrete, asphalt or mat surface.

■ Extreme Heat

Like extreme cold, extreme heat requires that precautions be taken with respect to the cooling system, the battery and lubrication. Protect the machine by performing the following recommended procedures:

1. High temperatures necessitate the use of lubricants which are both more viscous and which resist deterioration at higher operating temperatures. Refer to the Lubrication Section and lubricate the machine using the lubricants recommended for the expected temperatures.
   Crankcase oil is particularly important because it helps dissipate heat. Check the oil level frequently and add oil as required to maintain required level. Too little oil will hinder heat dissipation.

2. To ensure proper coolant circulation, drain and flush the cooling system, clean any foreign matter from the radiator cooling fins and through-core air passages, replace defective hoses, tighten hose clamps, tension the water pump drive belt properly, eliminate any leaks detected and fill the system with a 50% solution of ethylene glycol.
   A corrosion inhibitor is recommended.
   Engine overheating due to loss of coolant will most often be corrected by **SLOWLY** adding coolant while the engine is running at **FAST IDLE**. Should this fail to correct the problem, drain and flush the system and refill with fresh coolant (50% solution of ethylene glycol) and a corrosion inhibitor.

   Allow the engine to cool before draining and flushing the cooling system.
   Water containing more than small concentrations of salt or minerals should not be used in the cooling system. Salt facilitates corrosion and minerals deposit on the coolant passage walls.
   Both processes inhibit proper cooling.

3. Increased evaporation rates will cause the battery electrolyte level to fall more rapidly during very hot weather. Check the level frequently and add distilled water as required to maintain the proper level.

4. Air circulation around the engine and battery must not be restricted. Keep air intake and exhaust openings clear of leaves, paper or other foreign matter which may restrict air flow.

5. Keep the engine clean of dirt, grease and other substances which inhibit heat dissipation.

6. Operate engine at full throttle when digging or tracking machine.
   Run the engine only when engaged in work operations or when traveling the machine. Avoid prolonged periods at idle and shut the engine down if operations are interrupted.

■ Sandy or Dusty Work Sites

The presence of large amounts of sand or dust at the work site can contribute to accelerated component weather. Either substance win act as an abrasive when deposited on moving parts of the machine.
This problem can be alleviated by increasing the schedule of lubrication and by servicing breathers and fillers at more frequent intervals. Follow the recommendations below when operating in sand or dust on a regular bases.

https://truckmanualshub.com/

1. Keep sand and dust out of the hydraulic system by keeping the reservoir filler cap tight and servicing the hydraulic system filters frequently.

2. The fuel system should be kept free of sand and dust by keeping the tank filler cap tight and servicing the fuel filters frequently.

3. The engine breathers and air cleaner should also be serviced frequently to prevent sand and dust from entering the engine. The engine oil and oil filter should be changed at shorter than normal intervals to ensure a clean oil supply to the engine's moving parts.

4. When lubricating the machine, thoroughly clean each grease fitting before attaching the grease gun. Pump generous amounts of grease into all lubrication points, using the fresh grease to pump out old.

5. Adequate ground bearing support may be required for the tracks when operating in soft sand. Be alert for signs of track digging into sand during operations.
   It may be necessary to back off and fill in area where tracks dig in.
   The increased frequency of lubrication and service discussed above should be determined by observations made at the work site. Inspection will determine how long it takes for lubricants, breathers and filters to accumulate unacceptable amounts of sand or dust. The frequency of lubrication and service should be adjusted accordingly.

■ High Humidity or Saltwater

In some locations, such as coastal areas, the machine may be exposed to the deteriorating effects of salt, moisture, or both. To protect exposed metallic surfaces, wiring, paint and other items, keep them dry and well lubricated where salt or high humidity are encountered. Follow the recommendations below when operating in these conditions.

1. Make frequent inspections for rust and corrosions and remove them as soon as they are detected. Dry and paint exposed surfaces after rust and corrosion have been removed.

2. Where paint may not be applied, such as on polished or machined surfaces, coat the area with grease or lubricant to repel water.

3. Keep bearings and their surrounding surfaces well lubricated to prevent the entry of water.

4. Never use saltwater in the cooling system. Internal corrosion will occur and all parts will have to be replaced.

5. Hose down the machine periodically when working in saltwater. If necessary, use an oil soaked cloth to clean moving parts.

6. If the machine is submerged, be sure it is never submerged in water deeper than upper crawler belt.
   If the machine exceeds this limit, disassemble, clean and lubricate the lower.

■ High Altitudes

Variations in altitude alter the fuel-air mixture burned in the engine and affect the engine's performance. At high altitudes, atmospheric pressures are lower and less oxygen is available for combustion of the fuel. Above 1500 meter, the engine fuel setting may have to be changed to ensure proper performance. Consult engine manufacturer should this problem answer.
Keeping the air cleaner clean and free of obstructions will help alleviate high altitude problems.
At high altitudes, closely monitor the engine temperature for overheating.

https://truckmanualshub.com/

3-12 LONG TERM STORAGE

■ Before Storage

To protect the cylinder rods, set the machine position in the right illustration.
(To prevent the cylinder rods from being rusted)

To store the machine from long term, follow the next procedures.

- Clean parts of the machine and store indoors. If you have to place the machine outdoors, choose a flat place and cover the machine.
- Be sure to perform fill the fuel, lubrication, and oil change.
- Apply grease on the exposed part of the hydraulic cylinder piston rods.
- Store the battery after move the negative terminal and covering it or dismounting the battery from the machine.
- Lock the control levers and pedals with the lock lever and pedal lock.

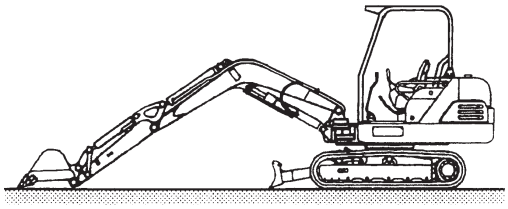

Bucket position at the time of long term storage.

■ During Storage

⚠ WARNING

If you have to operate the machine indoors to prevent rust, keep good ventilation and gas poisoning by window or entrance.

During storage, operate the machine once a month to maintain films of oil at the lubrication section and charge the battery at the same time.

■ After Storage

After long term storage, follow the next procedures before operating the machine.

- Wipe away grease on the hydraulic cylinder rods.
- Be sure to perform fill the fuel and lubrication.

https://truckmanualshub.com/

This page left intentionally blank

https://truckmanualshub.com/

4 TROUBLE SHOOTING

4-1 TROUBLE AND ACTION

Detect the occurrence of anything unusual in its early stages by well getting hold of the normal performance and condition of the machine while at daily operation.
When detecting anything unusual, investigate the cause, and make the repair.
When keeping the operation continue by neglecting anything unusual, it is in danger of relating with further big trouble.

SYMPTOM	PROBABLE CAUSE	ACTION
Operating lever is felt hard or does not return automatically.	• Failed of lubricating lever working part. • Control valve damaged.	• Lubricate • Repair or replace.
All operation are fail or force and speed decrease.	• Low hydraulic oil • Suction strainer clogged. • Engine output drop. • Pump or coupling damaged. • Improper viscosity hydraulic oil. • Main relief valve pressure too low. • Control valve damaged.	• Replenish hydraulic oil. • Clean filter element. • Clean air cleaner and inspect fuel system. • Repair or replace. • Replace hydraulic oil with recommended viscosity. • Check and adjust pressure. • Repair or replace.
Travel of left, right, or both sides are inoperable.	• Clogging foreign matter such as stone. • Defective travel motor or reduction. • Defective brake valve.	• Remove foreign matter. • Repair or replace. • Repair or replace.
Straight travel defective	• Clogging foreign matter. • Shoe tension unequal. • Defective pump • Loosen travel lever stopper. • Defective motor or brake valve.	• Remove foreign matter. • Adjust to properly tension on both sides. • Repair or replace. • Adjust and tighten nut. • Repair or replace.
Swing is inoperable or smooth swing is inoperable.	• Fail lubricate of swing bearing. • Defective motor. • Defective brake valve. • Defective cushion valve.	• Lubricate swing bearing. • Repair or replace. • Repair or replace. • Repair or replace.
Digging force defective	• Low hydraulic oil • Improper viscosity hydraulic oil. • Main relief valve pressure too low. • Control valve damaged. • Internal leakage of hydraulic cylinder	• Replenish hydraulic oil. • Replace hydraulic oil with recommended viscosity. • Check and adjust pressure. • Repair or replace. • Repair or replace.

https://truckmanualshub.com/

This page left intentionally blank

https://truckmanualshub.com/

5 HYDRAULIC SYSTEM DIAGRAM

5-1 HYDRAULIC SYSTEM DIAGRAM

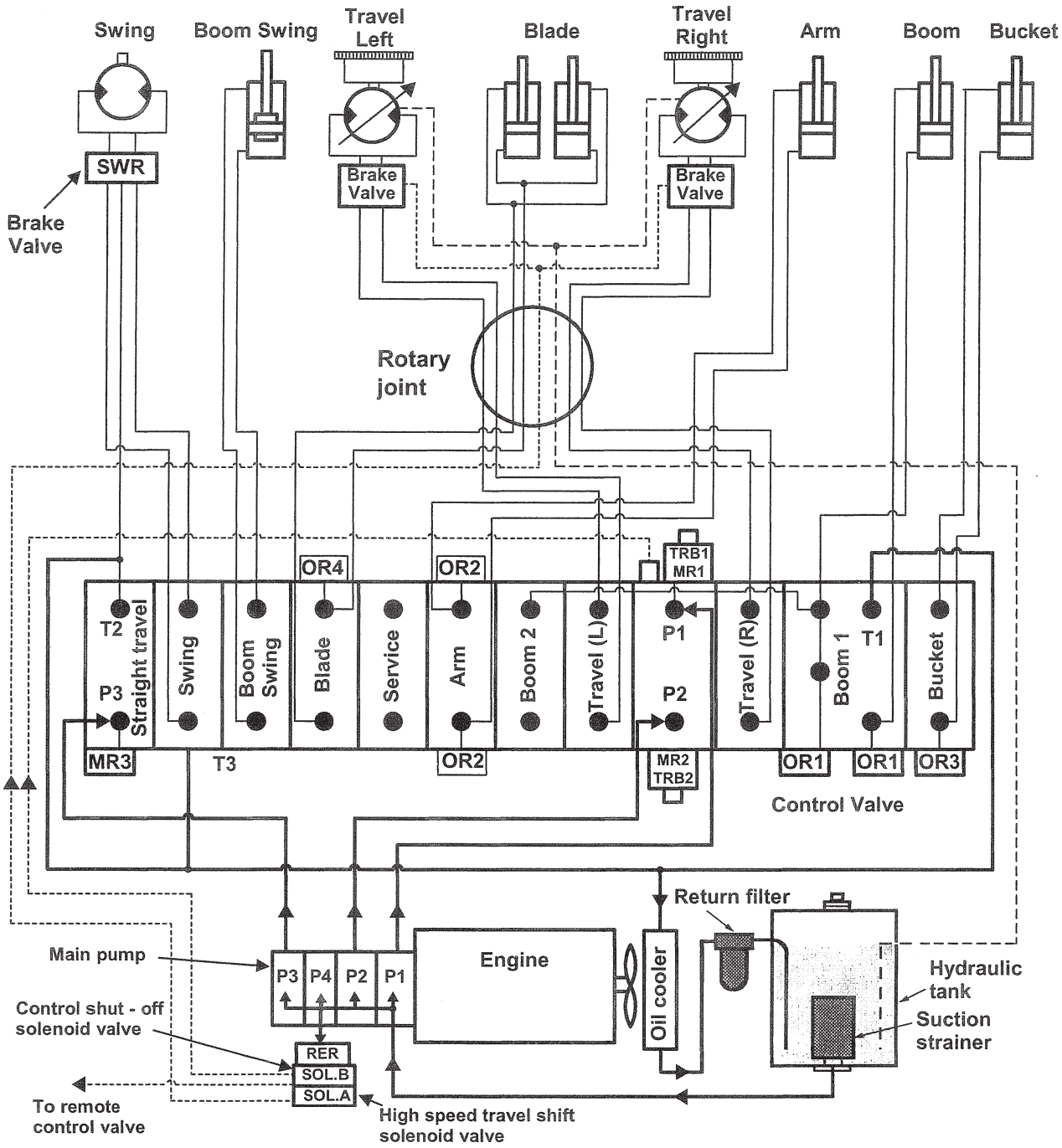

Relief valve set pressure

Code	Name	Pressure	
		MPa	kgf/cm²
MR1	Main relief valve P1 Pump	20.6	210
MR2	Main relief valve P2 Pump	20.6	210
MR3	Main relief valve P3 Pump	20.6	210
TRB1	Travel pressurization relief valve (P1 Pump)	24.5	250
TRB2	Travel pressurization relief valve (P2 Pump)	24.5	250
OR1	Overload relief valve (Boom)	22.6	230
OR2	Overload relief valve (Arm)	22.6	230
OR3	Overload relief valve (Bucket)	24.5	250
OR4	Overload relief valve (Blade)	24.5	250
SWR	Swing relief valve	17.7	180
RER	Remote control relief valve	3.4	35

Tank level capacity
75 liters
Total system volume
110 liters

Pump flow rate (Max.):
P1; 64.6 liter/min
P2; 64.6 liter/min
P3; 46.1 liter/min

The service ports use the flow shared by the P2 and P3 pumps.

https://truckmanualshub.com/

5 HYDRAULIC SYSTEM DIAGRAM

This page left intentionally blank

https://truckmanualshub.com/

6 ELECTRICAL SYSTEM DIAGRAM

6-1 ELECTRICAL WIRING SYSTEM DIAGRAM

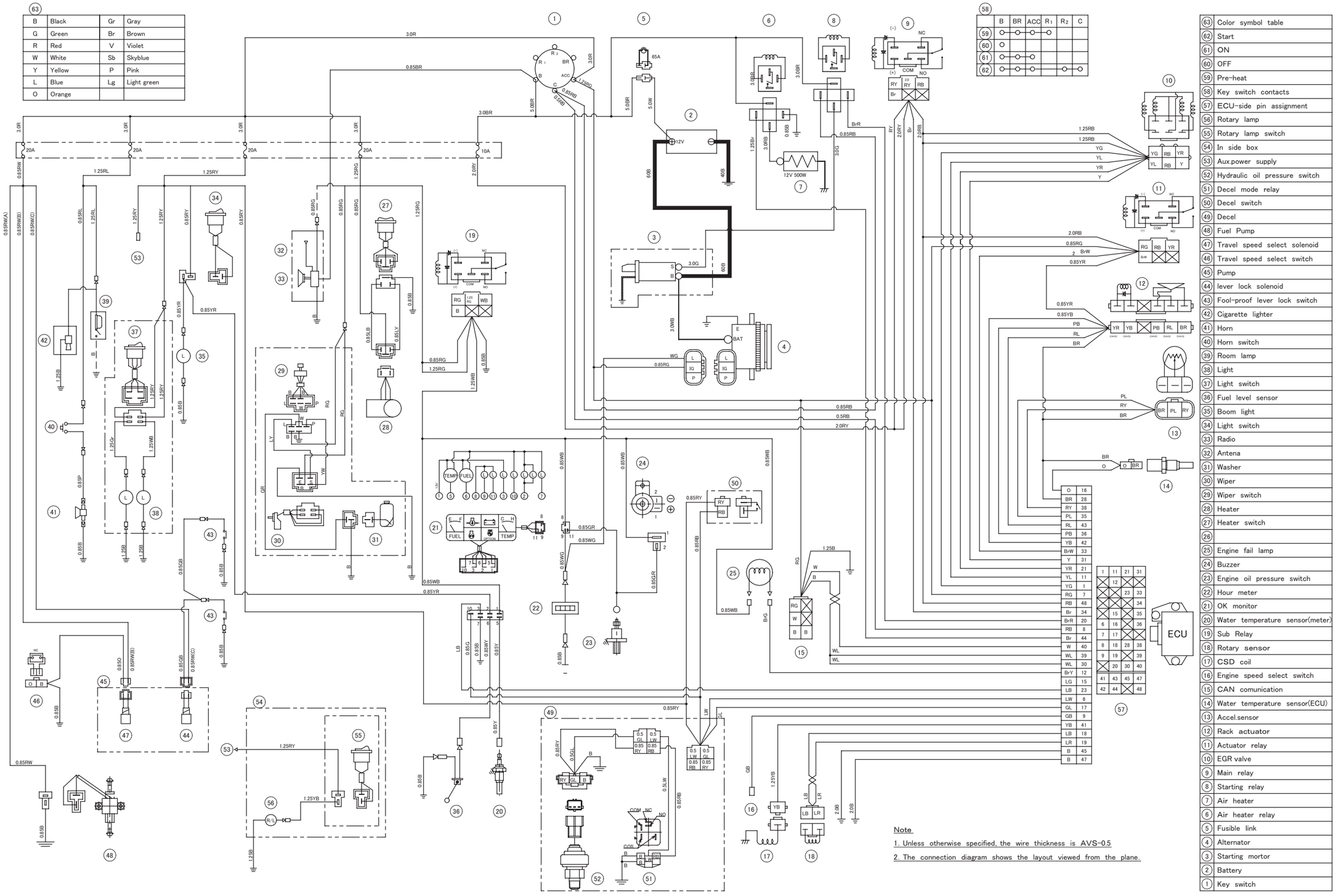

B	Black	Gr	Gray
G	Green	Br	Brown
R	Red	V	Violet
W	White	Sb	Skyblue
Y	Yellow	P	Pink
L	Blue	Lg	Light green
O	Orange		

	B	BR	ACC	R1	R2	C
59	○	○	○			
60	○					
61	○	○	○			
62	○	○	○		○	○

63	Color symbol table
62	Start
61	ON
60	OFF
59	Pre-heat
58	Key switch contacts
57	ECU-side pin assignment
56	Rotary lamp
55	Rotary lamp switch
54	In side box
53	Aux.power supply
52	Hydraulic oil pressure switch
51	Decel mode relay
50	Decel switch
49	Decel
48	Fuel Pump
47	Travel speed select solenoid
46	Travel speed select switch
45	Pump
44	lever lock solenoid
43	Fool-proof lever lock switch
42	Cigarette lighter
41	Horn
40	Horn switch
39	Room lamp
38	Light
37	Light switch
36	Fuel level sensor
35	Boom light
34	Light switch
33	Radio
32	Antena
31	Washer
30	Wiper
29	Wiper switch
28	Heater
27	Heater switch
26	
25	Engine fail lamp
24	Buzzer
23	Engine oil pressure switch
22	Hour meter
21	OK monitor
20	Water temperature sensor(meter)
19	Sub Relay
18	Rotary sensor
17	CSD coil
16	Engine speed select switch
15	CAN comunication
14	Water temperature sensor(ECU)
13	Accel.sensor
12	Rack actuator
11	Actuator relay
10	EGR valve
9	Main relay
8	Starting relay
7	Air heater
6	Air heater relay
5	Fusible link
4	Alternator
3	Starting mortor
2	Battery
1	Key switch

https://truckmanualshub.com/

7 SPECIFICATIONS

7-1 GENERAL SPECIFICATIONS

■ BASE MACHINE PERFORMENCE

	Unit	55N3
Swing speed	min^{-1} (rpm)	9.0 (9.0)
Travel speed	km / h	2.6 / 4.5
Gradability	% (deg.)	58 (30)

■ ENGINE

Engine model	–	YANMAR 4TNV98
Engine type		Vertical 4-cycle, water-cooled, diesel engine Direct injection system
No. of cyl.– bore × storoke	mm	4 – 98 × 110
Total piston displecement	L	3.318
Rated output	kW / min^{-1} (ps/ rpm)	40.8 / 2400 (55.5 / 2400) [DIN6271, 40.4 / 2400]
Max. torque	N•m / min^{-1} (kgf•m / rpm)	205.8 / 1550 (20.99 / 1550)

■ WEIGHT

			Canopy	Cabin
Total operation weight	Rubber shoe	kg	5200	5330
	Steel shoe		5250	5380
Average ground bearing pressure	Rubber shoe	kPa(kgf / cm^2)	30.2 (0.31)	31.0 (0.32)
	Steel shoe		30.8 (0.31)	31.6 (0.32)

■ REFILL CAPACITIES – (APPROXIMATE)

Fuel		L	75
Hydraulic fluid	Oil level	L	75
	Total amount	L	110
Engine oil	Max. level	L	11.2
	Min. level	L	4.5
Coolant	Engine proper	L	4.2
	Total amount	L	8.5

https://truckmanualshub.com/

■ BUCKET

◎: Std. applicable
○: Applicable
×: Not applicable

Bucket capacity ISO (m^3) Heaped	Bucket capacity ISO (m^3) Struck	Side cutter width (mm)	Number of teeth	Mass (kg)	Combinations Std. arm	Combinations Long arm	Remarks	Remarks
0.18	0.14	685	4	150	◎	×	Standard	General digging
0.18	0.14	685	4	155	○	○	OPT.	Reinforced
0.11	0.085	485	3	120	○	×	OPT.	Ditch digging
0.14	0.11	585	3	135	○	◎	OPT.	Ditch digging
0.19	0.15	725	4	148	○	×	OPT.	Loading
Slope bucket		600 L × 1100 W	—	152	○	×	OPT.	Slope finishing

https://truckmanualshub.com/

7-2 OVERALL DIMENSIONS

1. OVERALL DIMENSIONS

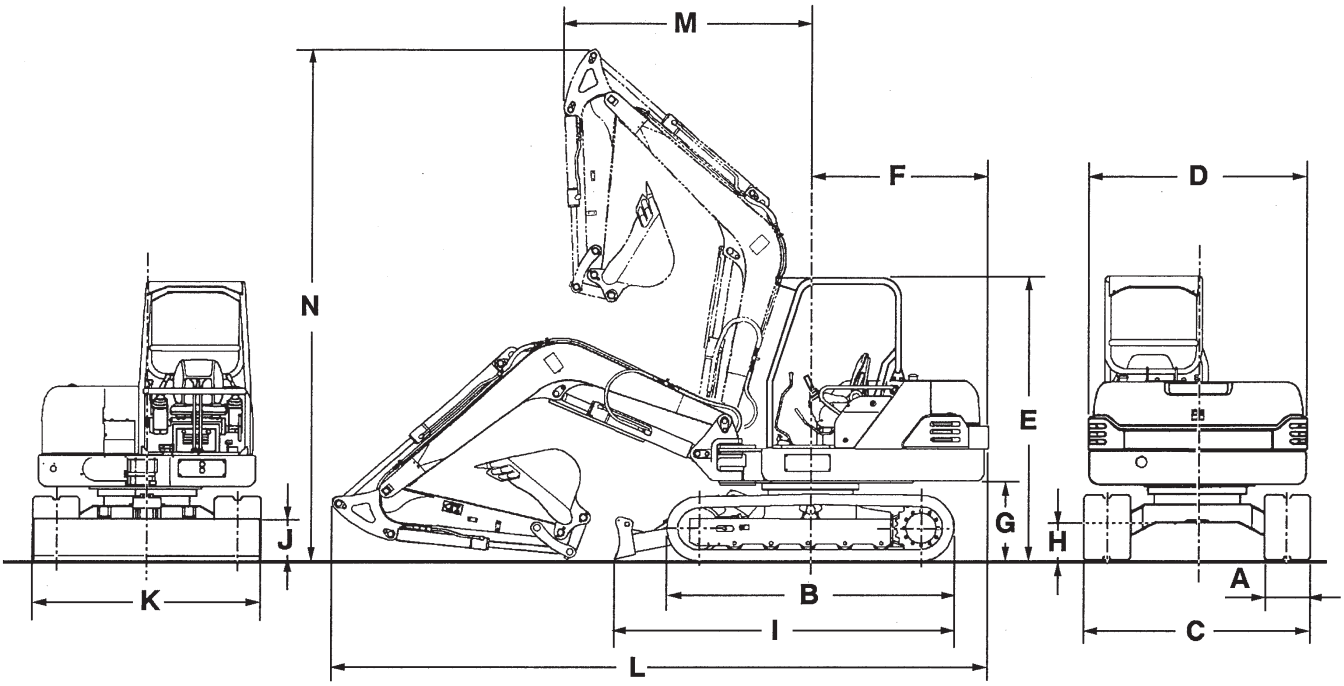

Unit : mm

Codes	Description		Rubber shoe	Steel shoe
A	Crawler shoe width		400	400
B	Overall length of crawler		2500	2480
C	Overall width of crawler		2000	2000
D	Overall width of upper structure	Canopy	1880	1880
		Cabin	1880	1880
E	Overall height	Canopy	2500	2500
		Cabin	2500	2500
F	Rear end swing radius		1560	1560
G	Rear end ground clearance		695	695
H	Ground clearance 340		340	
I	Overall length of undercarriage		2950	2940
J	Blade height		370	370
K	Blade width		2000	2000
L	Overall length	Blade in front	5710	5710
		Blade in rear	5850	5850
M	Front end mini. radius at center	Canopy	2220	2220
		Cabin	2220	2220
N	Arm head clearance	Canopy	4480	4480
		Cabin	4480	4480

https://truckmanualshub.com/

7-3 WORKING RANGE

■ OFFSET DIGGING WORKING RANGE
[Canopy Specification]

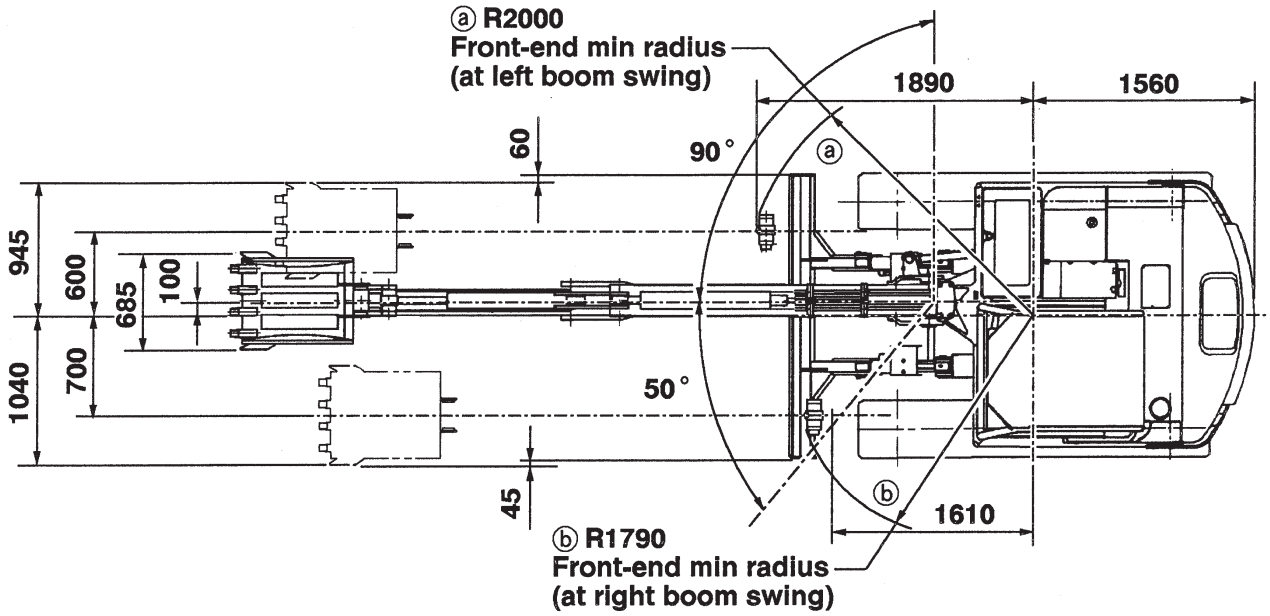

■ OFFSET DIGGING WORKING RANGE
[Cabin Specification]

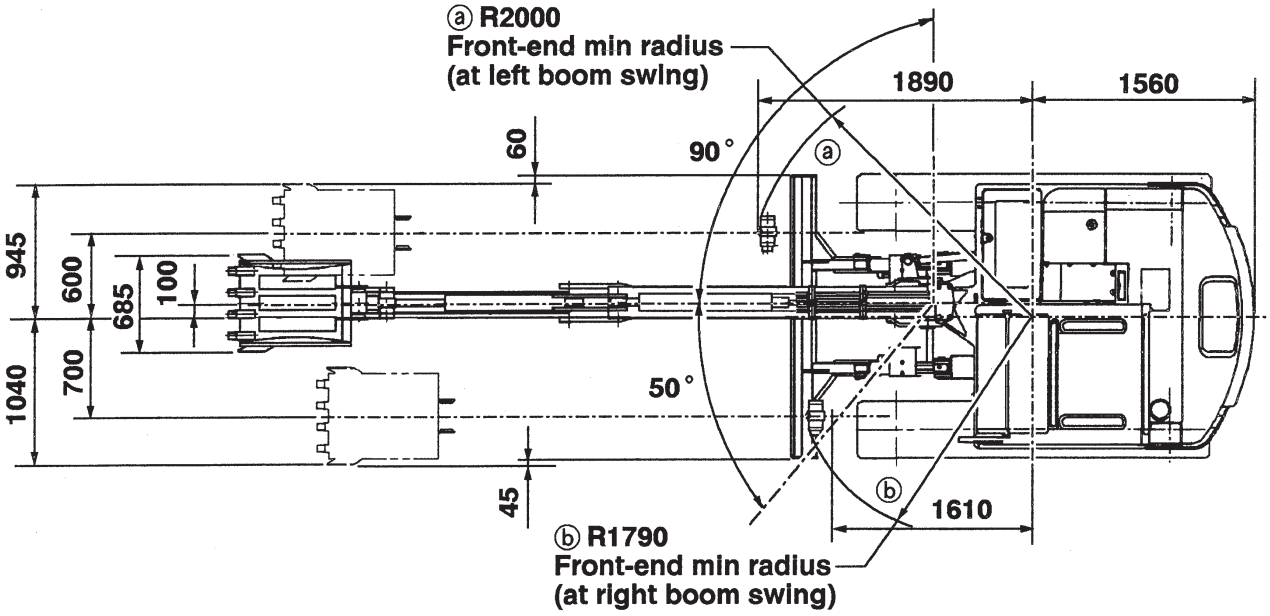

https://truckmanualshub.com/

■ WORKING RANGE (BACK HOE)

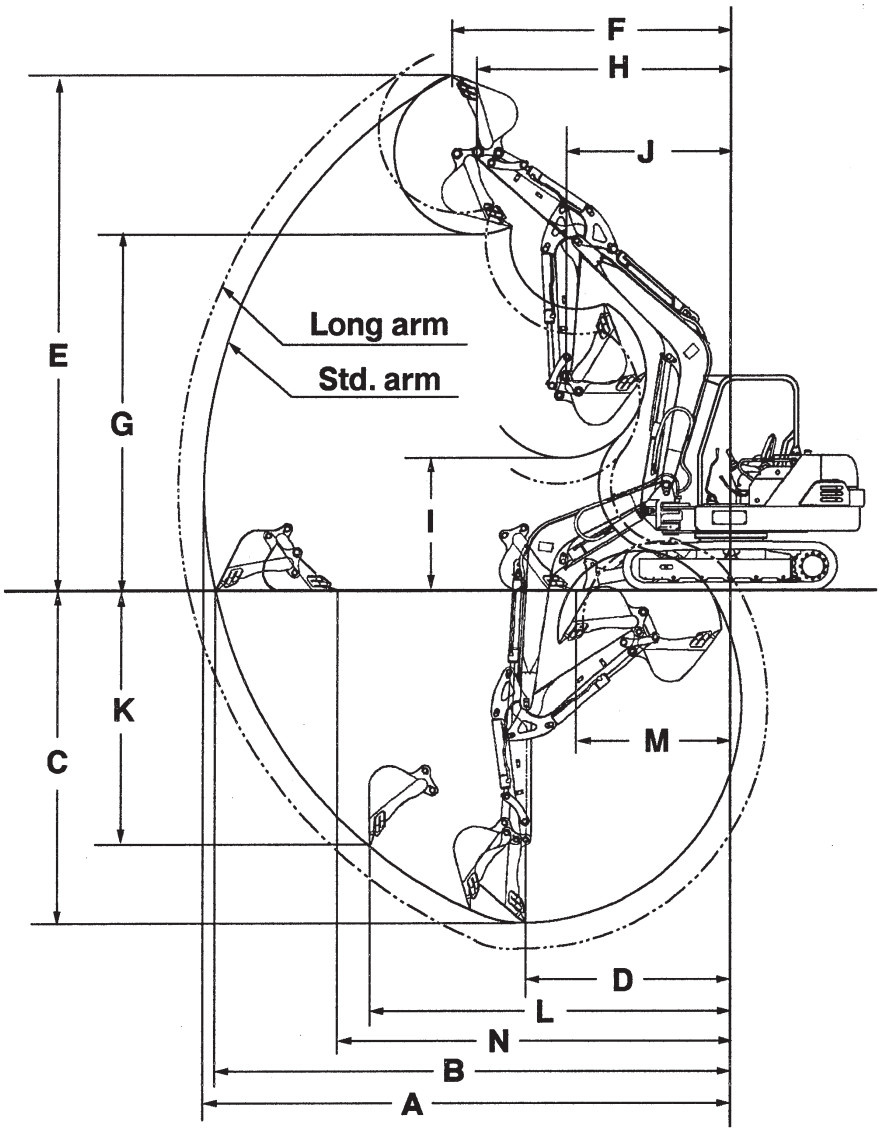

Unit : mm

Key	Description	With Canopy		With Cabin	
		Std. arm	Long arm	Std. arm	Long arm
	Std. of bucket capacity (m^3), ISO Heaped	0.18m^3	0.14m^3	0.18m^3	0.14m^3
A	Max. digging radius	6120	6420	6120	6420
B	Max. bucket outreach at ground level	5980	6290	5980	6290
C	Max. digging depth (Not used blade)	3850	4100	3850	4100
D	Radius of max. digging depth	2370	2370	2370	2370
E	Max. digging height	5950	6190	5950	6190
F	Radius of max. digging height	3265	3430	3265	3430
G	Max. dumping height	4110	4340	4110	4340
H	Radius of max. digging height	2960	3160	2960	3160
I	Min. dumping height	1540	1250	1540	1250
J	Radius of min. dumping height	1930	2010	1930	2010
K	Max. vertical digging depth	2950	3270	2950	3270
L	Radius of max. vertical digging depth	4160	4170	4160	4170
M	Radius of min. digging ground level	1800	1660	1800	1660
N	Max. clean-up radius at floor level	4540	4840	4540	4840

https://truckmanualshub.com/

7-4 RATED OBJECT HANDLING CAPACITIES TABLE

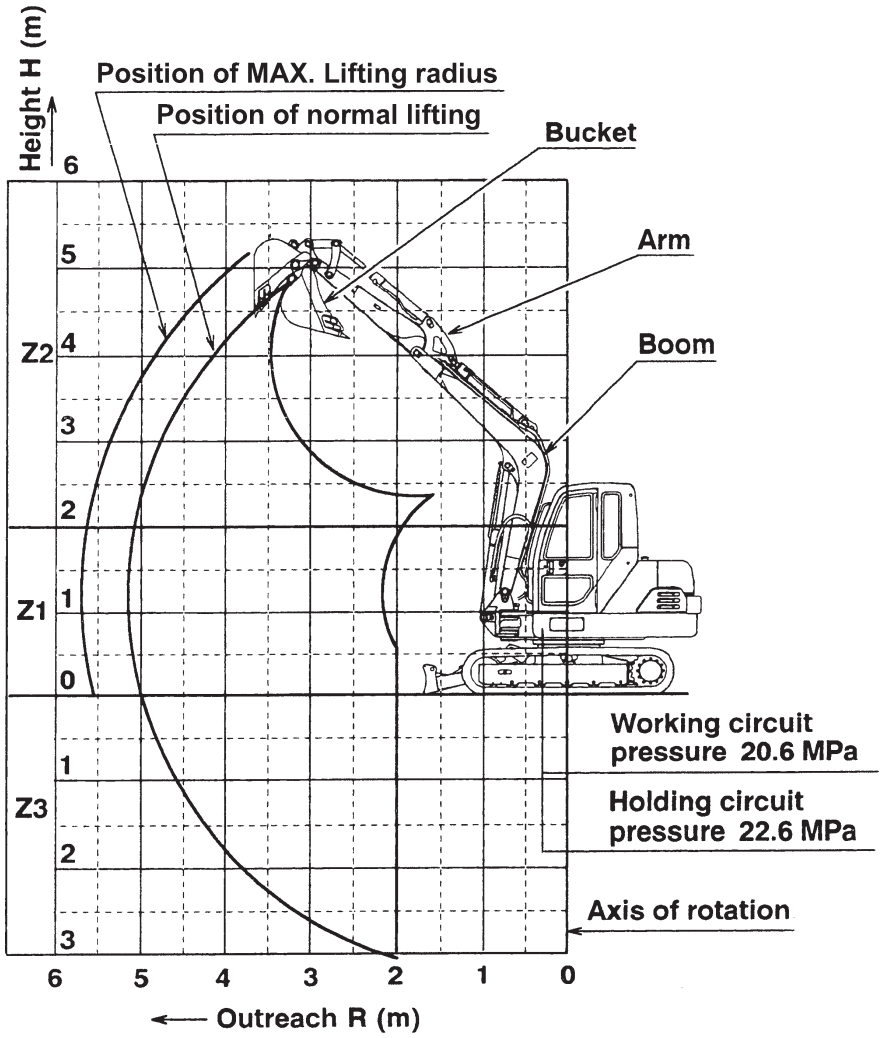

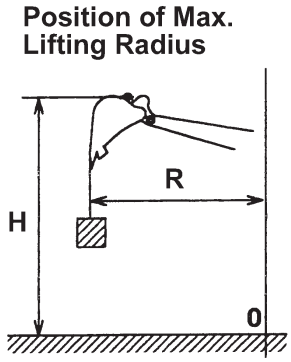

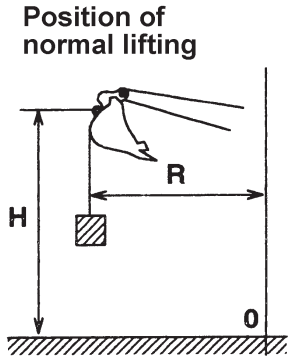

Working conditions:
- with bucket.
- on a compact horizontal level ground.
- in complete swing of the upperstructure.

These lords are value for the height of the considered zone (Z.) for the intended outreach.

LIFTING CAPACITY

This lifting capacity is applied for operation on a level and firm ground. If the machine is operated on an unleveled or unstable ground, the capacity decreases.

Outreach in m - Loads in kg										
Outreach (m)		6.0	6.5	5.0	4.5	4.0	3.5	3.0	2.5	2.0
Boom length 3.0m Arm length 1.55 m / 1.85 m	Z2		500	600	700	900	1100	1300	1700	
	Z1	400	500	500	600	700	900	1200	1500	1600
	Z3				600	700	900	1000	1300	1600

CAUTION

There may be some local government regulations regarding the use of excavators to lift heavy objects. Please observe those regulations where they apply.

https://truckmanualshub.com/

7-5 NOISE LEVEL

Unit : dB (A)

At exterior (measurement position distance 10m)	Measured		97
	Guaranteed		98
At operator's head	Cabin model	Open	77
		Close	78
	Canopy model		-

https://truckmanualshub.com/

2009 年 3 月　初版発行
First Edition, March 2009

不許複製
All rights reserved.

55N3

取　扱　説　明　書
OPERATION MANUAL

編集及び発行所
IHI建機株式会社　プロダクトサポート部

Editing & Publishing Office
IHI Construction Machinery Limited
Product Support Department

〒 236-8611　神奈川県横浜市金沢区昭和町 3174
3174 Syowa-machi, Kanazawa-ku, Yokohama, Kanagawa, 236-8611, Japan

TIS