https://truckmanualshub.com/

L780 Loaders for MX MAGNUM Series Tractors

Operator's Manual

87753767 12/07
1st Printing

CASE IH

https://truckmanualshub.com/

TO THE OWNER

This manual contains information concerning the adjustment and maintenance of your Case IH Model L780 Loader. You have purchased a dependable machine, but only by proper care and operation can you expect to receive the performance and long service built into this loader. Please have all operators read this manual carefully and keep it available for ready reference.

The L780 loader was designed to mount on Case IH MX MAGNUM series tractors. The loader is designed to load and move materials with a variety of buckets and approved Case IH attachments.

Your Case IH dealer will instruct you in the general operation of your loader. (Refer to the “Delivery Report” at the back of this manual.) Your dealer’s staff of factory-trained service technicians will be glad to answer any questions that may arise regarding the operation of your loader.

Your Case IH dealer carries a complete line of genuine Case IH service parts. These parts are manufactured and carefully inspected to insure high quality and accurate fitting of any necessary replacement parts. Be prepared to give your dealer the model and product identification number of the engine and loader, when ordering parts. Locate these numbers now and record them below. Refer to the “General Information” section of this manual for the location of the model and product identification numbers of your loader.

Loader Model _____ Tractor Model _____

Loader PIN Number _____ Tractor PIN Number _____

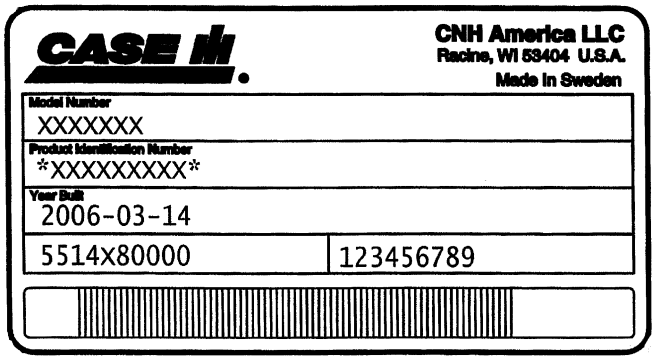

WARNING

This safety alert symbol indicates important safety messages in this manual. When you see this symbol, carefully read the message that follows and be alert to the possibility of personal injury or death.

WARNING

Pictures in this manual may show protective shielding open or removed to better illustrate a particular feature or adjustment. Be certain, however, to close or replace all shielding before operating the machine.

IMPROVEMENTS

CNH America LLC is continually striving to improve its products. We reserve the right to make improvements or changes when it becomes practical and possible to do so, without incurring any obligation to make changes or additions to the equipment sold previously.

https://truckmanualshub.com/

CONTENTS

SAFETY 0-7
GENERAL INFORMATION 1-1
OPERATION 2-1
LUBRICATION AND MAINTENANCE 3-1
TROUBLESHOOTING 4-1
OPTIONAL EQUIPMENT 5-1
SPECIFICATIONS 6-1
INDEX 6-5
DELIVERY REPORT 6-7

https://truckmanualshub.com/

FEDERAL EMISSIONS WARRANTY

(North America Only)

(California owner's emissions warranty is covered elsewhere)

CNH UK Ltd warrants that your new 1996 and later heavy-duty off-road diesel engine was designed, built, and equipped to conform to applicable U.S. Environmental Protection Agency regulations for a period of use of five years or 3,000 hours of operation, whichever occurs first.

The new model year, class of diesel engine, and emission application determination for your engine are identified on the emission control information label affixed to the engine. The warranty period begins on the date the new equipment is sold to the first retail purchaser.

Any emission control system parts which are proven defective during normal use will be repaired or replaced during the warranty period. The warranty repairs and service will be performed by any authorized CNH dealer at the dealer's place of business, with no charge for parts or labor (including diagnosis).

As the engine owner, you are responsible to perform all the required maintenance listed in your owner's manual. CNH UK Ltd will not deny an emission warranty claim solely because you have no record of maintenance; however, a claim may be denied if your failure to perform maintenance resulted in the failure of a warranted part. Receipts covering regular maintenance should be retained in the event of questions and these receipts should be passed on to each subsequent owner of the engine.

It is recommended replacement parts used for maintenance or repairs be CNH Service Parts to maintain the quality originally designed into your emission certified engine. The use of non-CNH parts does not invalidate the warranty on other components unless the use of such parts causes damage to warranted parts.

CNH UK Ltd wishes to assure the emission control systems warranty is being properly administered. If you believe you have not received the service entitled to under this warranty, you should contact the nearest CNH Office for assistance. The address and phone number of each Office is in your equipment owner's manual. If additional assistance or information is needed, contact:

Service Department
CNH America, LLC
500 Diller Avenue
New Holland, PA 17557
(717) 355-1121

Please note that the Emission Warranty does not cover:

1. Systems and parts that were not first installed on the new equipment or engine as original equipment by CNH UK Ltd.
2. Part malfunctions caused by abuse, misuse, improper adjustment, modification, alteration, tampering, disconnection, improper or inadequate maintenance, or use of non-recommended fuels and lubricating oils.
3. Accident caused damage, acts of nature, or other events beyond CNH UK Ltd's control.
4. Replacement of expendable items made in connection with scheduled maintenance.
5. Parts requiring replacement, inspection or adjustment maintenance intervals for reasons other than being defective.
6. Parts which are not CNH Service Parts.
7. Loss of time, inconvenience, loss of use of equipment/engine or commercial loss.
8. Equipment with altered or disconnected hourmeter where the hours cannot be determined.
9. Equipment normally operated outside the United States.
10. Non-defective parts replaced by other than CNH dealers.

Coverage

This emission control system warranty applies only to the following emission control parts.

Electronic Control Unit
Fuel Injection Pump
Fuel Injectors
Turbocharger
Intake Manifold
Exhaust Manifold
Boost Pressure Tubing-connection to Aneroid Device ON F.I.P.

https://truckmanualshub.com/

CALIFORNIA EMISSION CONTROL WARRANTY STATEMENT

(North America Only)
(California Only)

Your Warranty Rights and Obligations

The California Air Resources Board and CNH UK LTD are pleased to explain the emission control system warranty on your engine. In California, new 2004 and later heavy-duty off-road engines from 50 to 750 HP must be designed, built and equipped to meet the State's stringent anti-smog standards. CNH UK LTD must warrant the emission control system on your engine for the periods of time listed below, provided there has been no abuse, neglect or improper maintenance of your engine.

Your emission control system includes parts such as the fuel injection system and the air induction system.

Where a warrantable condition exists, CNH UK LTD will repair your heavy-duty off-road engine at no cost to you including diagnosis, parts and labor.

Manufacturer's Warranty Coverage:

The 2004 and later heavy-duty off-road engines are warranted from the original date of delivery for five years or 3000 hours of operation, whichever occurs first. If any emission-related part on your engine is defective, the part will be repaired or replaced by CNH UK LTD.

Owner's Warranty Responsibilities:

- As the heavy-duty off-road engine owner, you are responsible for the performance of the required maintenance listed in your owner's manual. CNH UK LTD recommends that you retain all receipts covering maintenance on your heavy-duty off-road engine, but CNH UK LTD cannot deny warranty solely for the lack of receipts or for your failure to ensure the performance of all scheduled maintenance.
- As the heavy-duty off-road engine owner, you should, however, be aware that CNH UK LTD may deny you warranty coverage if your heavy-duty off-road engine or a part has failed due to abuse, neglect, improper maintenance or unapproved modifications.
- Your engine is designed to operate on commercially available diesel fuel only. Use of any other fuel may result in your engine no longer operating in compliance with California's emissions requirements.
- You are responsible for initiating the warranty process. The ARB suggests that you present your heavy-duty off-road engine to a CNH dealer as soon as a problem exists. The warranty repairs should be completed by the dealer as expeditiously as possible.
- If you have any questions regarding your warranty rights and responsibilities, you should contact your nearest CNH Office at the address and telephone number listed on the Owner Assistance page of your equipment's operator manual.
- Prior to the expiration of the warranty, you must give notice of any failure of an emission control warranted part. Such notice must be given to CNH UK LTD or an authorized CNH dealer, and you must deliver the engine to the repair location.
- You, the owner, are responsible for incidental costs incurred by yourself or your employees as a result of an unwarrantable failure. Examples of such costs are communication expenses, meals and lodging.
- The owner is responsible for any business costs or losses, any "downtime" expenses and any "cargo" damage which result from the failure of a warranted part. CNH UK LTD is not responsible for other incidental or consequential damages, including, but not limited to fines, theft, vandalism or collisions.

Parts covered:

This emission control system warranty applies to the following emission control parts:

Electronic Control Unit	Intake Manifold
Fuel Injection Pump	Charge Air Cooler
Fuel Injectors	Exhaust Manifold
Turbocharger	Boost Pressure Tubing (connection to Aneroid Device on F.I.P.)

Any replacement part, equivalent in performance and durability, may be used in the performance of any maintenance or repairs and must be provided without charge to the owner. The use of these parts does not reduce the warranty obligations of CNH UK LTD. However, CNH UK LTD recommends the use of new, genuine CNH service parts or CNH approved rebuilt parts and assemblies. CNH UK LTD also recommends that the engine be serviced by a CNH authorized dealer.

CNH UK LTD Responsibilities:

Warranty work will be provided at no charge to the owner at any authorized dealer, using genuine CNH service parts or CNH approved rebuilt parts or assemblies.

The owner will not be charged for diagnostic labor which leads to the determination that a warranted part is defective, if the diagnostic work was performed at a warranty station.

CNH UK LTD is liable for damages to other engine components caused by the failure under warranty of any warranted part.

Warranty Limitations

CNH UK LTD is not responsible for failures resulting from abuse or neglect by owner or operator.

CNH UK LTD warrants to the ultimate purchaser and each subsequent purchaser that the engine is designed, built, and equipped so as to conform with all applicable regulations adopted by the Air Resources Board, and that it is free from defects in materials and workmanship which cause the failure of a warranted part.

Any warranted part which is not scheduled for replacement as required maintenance, or which is scheduled only for regular inspection to the effect of "repair or replace as necessary" is warranted for the warranty period.

Any warranted part which is scheduled for replacement as required maintenance is warranted for the period of time prior to the first scheduled replacement point of that part.

CNH UK LTD is not liable to warrant failures caused by the use of add-on or modified parts.

CNH UK LTD is concerned to ensure proper maintenance of the engine to maximise emissions performance. Information on care and replacement of engine air cleaner, and all other aspects of engine maintenance is provided in a manual supplied to the owner. A maintenance schedule chart is provided in the manual.

https://truckmanualshub.com/

CALIFORNIA

Proposition 65 Warning

Diesel engine exhaust and some of its constituents are known to the State of California to cause cancer, birth defects, and other reproductive harm.

Battery posts, terminals and related accessories contain lead and lead compounds, chemicals known to the State of California to cause cancer and birth defects or other reproductive harm. Wash hands after handling.

https://truckmanualshub.com/

PRECAUTIONARY STATEMENTS

PERSONAL SAFETY

Throughout this manual and on machine decals, you will find precautionary statements ("**DANGER**", "**WARNING**", and "**CAUTION**") followed by specific instructions. These precautions are intended for the personal safety of you and those working with you. Please take the time to read them.

DANGER

This word "DANGER" indicates an immediate hazardous situation that, if not avoided, will result in death or serious injury. The color associated with Danger is RED.

WARNING

This word "WARNING" indicates a potentially hazardous situation that, if not avoided, could result in death or serious injury. The color associated with Warning is ORANGE.

CAUTION

This word "CAUTION" indicates a potentially hazardous situation that, if not avoided, may result in minor or moderate injury. It may also be used to alert against unsafe practices. The color associated with Caution is YELLOW.

FAILURE TO FOLLOW THE "DANGER", "WARNING", AND "CAUTION" INSTRUCTIONS MAY RESULT IN SERIOUS BODILY INJURY OR DEATH.

MACHINE SAFETY

The precautionary statement ("**IMPORTANT**") is followed by specific instructions. This statement is intended for machine safety.

IMPORTANT: *The word "IMPORTANT" is used to inform the reader of something he needs to know to prevent minor machine damage if a certain procedure is not followed.*

INFORMATION

NOTE: *Instructions used to identify and present supplementary information.*

https://truckmanualshub.com/

SAFETY

⚠ PRECAUTIONARY STATEMENTS ⚠

A careful operator is the best operator. Most accidents can be avoided by observing certain precautions. To help prevent accidents, read the following precautions before operating this equipment. Equipment should be operated only by those who are responsible and instructed to do so.

Carefully review the procedures given in this manual with all operators. It is important that all operators be familiar with and follow safety precautions.

OPERATING THE LOADER

1. **The equipment owner is responsible to make certain that all operators read this manual thoroughly and understand the safety precautions and proper operating procedures. Be certain all operators are qualified before allowing operation.**
2. **Always check with proper authorities for underground utilities before digging.**
3. **Exercise caution when operating the loader with a raised bucket or attachment.**
4. **Avoid loose fill, rocks and holes. These are dangerous conditions for loader operation or transport.**
5. **Use caution when operating on steep grades. Always carry the bucket or attachment in the lowest possible position to maintain maximum stability. Select the proper gear BEFORE attempting to travel on a steep grade. Avoid shifting on grades and never "free wheel".**
6. **Be sure to allow for the length of the loader when making turns or working in confined areas.**
7. **Stop the loader arms gradually when raising or lowering the loader.**
8. **Carry the bucket or attachment as low as possible to increase visibility and stability during transport.**
9. **When parked or during servicing of the loader, lower the bucket to the ground, stop the engine, set the park brake and remove the key from the key switch. Special care should be taken to park or store attachments with sharp points or edges in a safe manner.**
10. **Do not operate loader controls unless properly seated in the operator's seat.**
11. **NEVER attempt to handle large, heavy objects such as large round or rectangle bales, logs or oil drums unless the specific special attachments are used. Handling such objects is not recommended without special equipment.**
12. **Handling large heavy objects can be dangerous due to the following:**
    - **danger of overturning the tractor**
    - **danger of upending the tractor**
    - **danger of the object rolling or sliding down the loader arms onto the operator**
13. **If the type of work in precaution # 12 must be performed adhere to the following:**
    - **always use the proper attachment**
    - **never lift the load higher than necessary to clear the ground while moving**
    - **ballast the rear of the tractor to compensate for the weight of the load**
    - **never lift large or heavy objects with equipment that does not have an anti-rollback device**
    - **move slowly and carefully, avoiding rough or uneven terrain**
14. **Loader lift capacity and break-away capacity diminish as the loader height is increased. Use care not to grasp more material than the loader is designed to handle.**

https://truckmanualshub.com/

MAINTENANCE

1. **Always wear eye protection when servicing or repairing the loader.**

2. **Do not modify, alter or permit anyone else to modify or alter the loader or any of it's components or functions without first consulting a Case IH dealer. Contact your dealer with questions about the loader.**

3. **Escaping hydraulic fluid or diesel fuel under pressure can penetrate the skin causing serious injury. To prevent serious personal injury:**

   - **DO NOT use your hand to check for suspected leaks under pressure**
   - **Use a piece of cardboard or heavy paper to search for leaks**
   - **Stop the engine and relieve the pressure in the system before connecting or disconnecting hydraulic or diesel lines and fittings**
   - **Tighten all lines and fittings before starting the engine and pressurizing the system**
   - **If any fluid is injected into the skin, obtain medical attention IMMEDIATELY to avoid the onset of Gangrene**

4. **DO NOT tamper with or change the relief valve settings. The relief valve is preset at the manufacturer for optimum performance and safety. Changing the settings may cause overloading of the tractor hydraulic system resulting in equipment failure and/or serious operator injury.**

5. **When servicing or replacing the pins in the cylinder ends, bucket, etc., always use a brass drift. Failure to do so could result in equipment damage and/or personal injury due to flying metal fragments.**

WHEN YOU SEE THIS SYMBOL

IT MEANS:

ATTENTION!

BECOME ALERT!

YOUR SAFETY IS INVOLVED!

https://truckmanualshub.com/

SAFETY INSTRUCTIONS

GENERAL INFORMATION

Operator safety is one of the most important matters when a new loader is designed. The designer builds in as many safety functions as practical. However, accidents still occur which could have been avoided by a few seconds of reflection and more careful operation of the machine.

Avoid personal injury. Read the following personal safety instructions and insist that everybody who works with you or for you also complies with the instructions.

Only use attachments which have been approved by the manufacturer for use with the loader.

Guards

This instruction manual may contain illustrations that show guards removed, to give a better picture. Never use the machine with guards removed. If a guard has been removed for service or repairs, re-install the guard before the machine is taken back into service.

Safety Decals

Safety decals are installed at various places on the loader and the attachments. Locate, read and understand the safety decals before using the loader and attachments. Refer to the "Location of Safety Decals" section for description and location on pages 0-19 and 0-20.

Do not cover or remove any safety sign. If a safety sign is missing or illegible, replace it. New safety signs are available from your dealer.

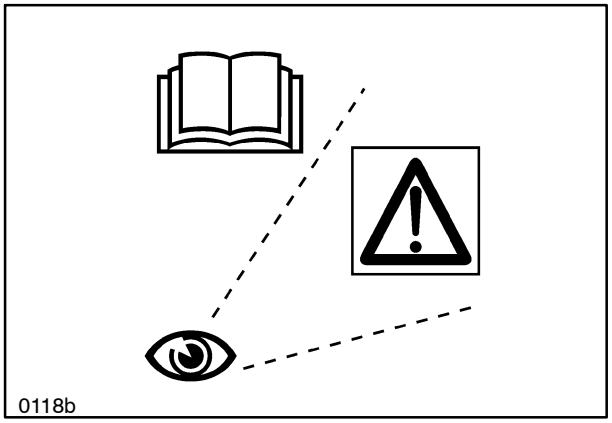

1

https://truckmanualshub.com/

Safety Alert Symbol

When you see the safety alert symbol and signal word on decals and in this book, you MUST follow the instruction because it relates to your personal safety.

DANGER

Indicates a imminently hazardous situation that, if not avoided, will result in DEATH OR SERIOUS INJURY.

WARNING

Indicates a potentially hazardous situation that, if not avoided, could result in DEATH OR SERIOUS INJURY.

CAUTION

Indicates a potentially hazardous situation that, if not avoided, may result in a MINOR OR MODERATE INJURY.

The following words and instructions are not related to personal safety, but are used throughout this book to give you additional tips as you operate or service this equipment.

IMPORTANT: *Indicates a special instruction or procedure which, if not strictly followed, may cause damage to, or destruction of, the machine, the process, or surroundings.*

NOTE: *Indicates additional information about a subject or procedure for more efficient or convenient repair or operation.*

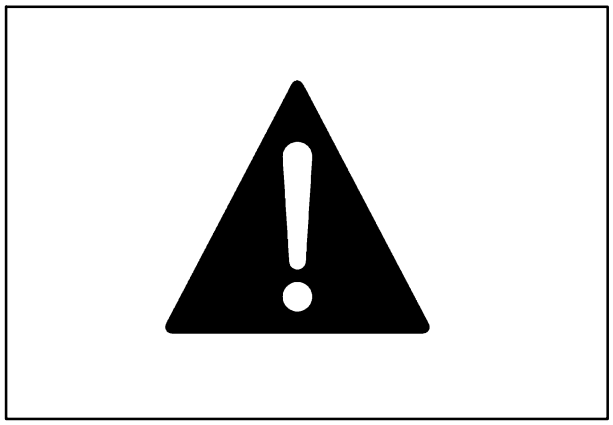

2

https://truckmanualshub.com/

Symbol Explanation

A

A. Electric shock. Get to know the site and the ground. Be aware of free working heights and the limitations related to the increased range.

B

B. Overturning risk. The tractor can overturn and result in personal injury.

C

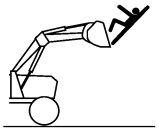

C. Fall risk. Do not use the loader or the bucket as working platforms.

D

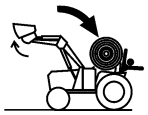

D. Crush risk. Objects can fall or roll backwards when the loader is raised. Only lift loads which fit inside the tools.

E

E. Pinch risk. Never stand between the front of the loader and the cross-tube on the loader.

F

F. Fall risk. Do not use the loader to lift or transport people.

SAFETY RULES

Always store this instruction manual and the tractor's instruction manual in the tractor.

- If there is no instruction manual for the tractor, get one from the dealer before you install and use the loader.
- Read through all material carefully and learn how to use the equipment in a safe, correct manner.
- DO NOT let an untrained or unqualified person operate this machine.

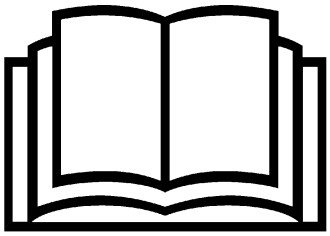

0101

3

https://truckmanualshub.com/

DO NOT use the loader or the attachment as a working platform.

DO NOT use the loader to lift or transport people.

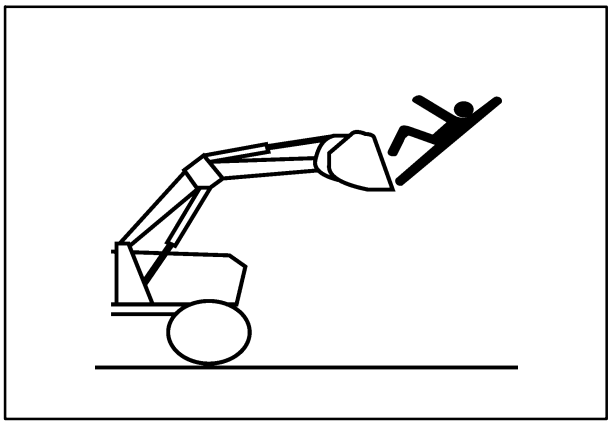

4

Roll Over Protective Structure

The tractor must be equipped with a roll-over protective structure (ROPS) - frame or cab.

WARNING

Use the loader only on a tractor with the ROPS installed.

Whenever possible, operate the tractor and loader with the ROPS in the upright and locked position and the seat belt fastened and correctly adjusted.

When operating in restricted overhead environment with the ROPS folded down, do not wear the seat belt. ALWAYS return the ROPS to the upright and locked position as soon as operating conditions permit.

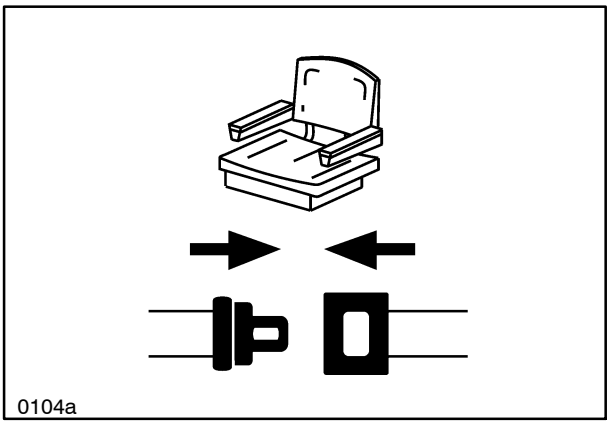

5

https://truckmanualshub.com/

TRANSPORTING ON PUBLIC ROADWAY

When driving the machine on the road or highway, at night or during the day, while carrying or transporting loads, warning devices may not be visible. If this happens, make sure additional marking devices are used.

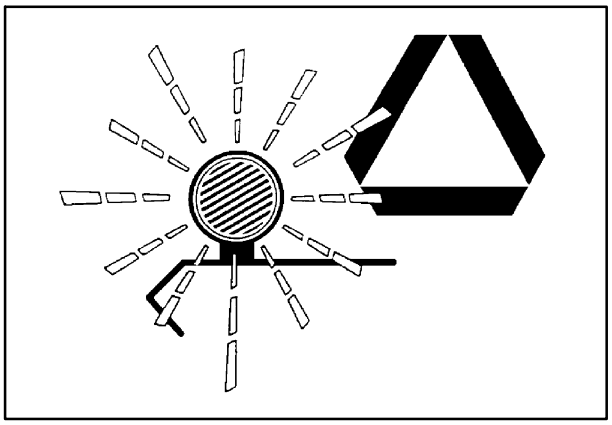

6

- Always lower the loader as far as possible to give maximum visibility and allow others to see you all the time.
- Make allowances for the increased length and weight of the machine during cornering, braking, etc.
- Either remove or rotate the attachment as appropriate to minimize the hazard in the event of a collision with another vehicle or object. For example, a bale spear should be either removed or rolled back as far as possible.

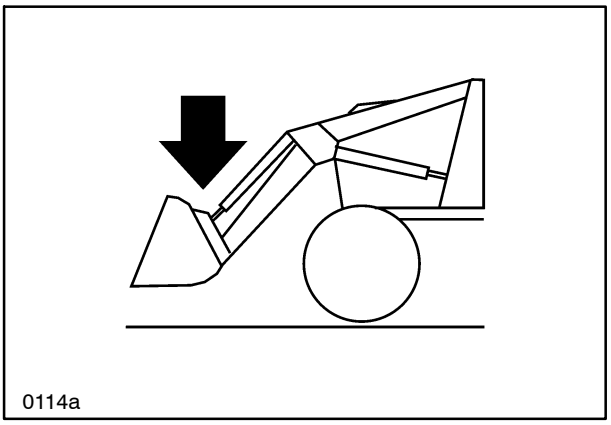

7

WARNING

The loader must not be operated during transportation. During road transportation the loader control valve control lever must be locked in the neutral position. See section Tractor/loader hydraulic controls.

Always check the area around the machine and make sure that everybody, especially children and animals, have been moved away before the machine is started or driven away.

You might not be able to hear people outside when you sit inside the cab with the door shut.

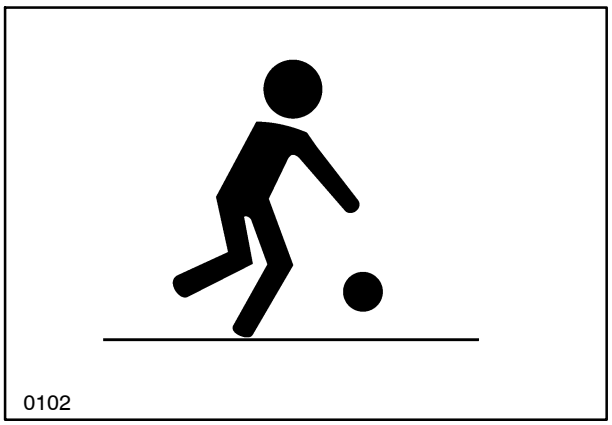

8

https://truckmanualshub.com/

Get to know the site and the ground. Be aware of free working heights and the limitations related to the increased range.

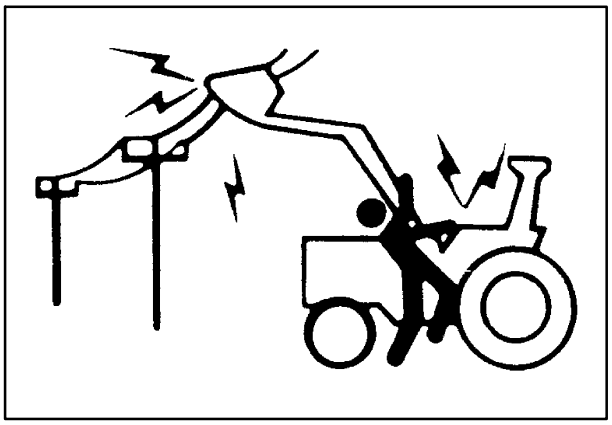

9

KEEP THE LOADER PROPERLY MAINTAINED

- DO NOT operate a machine that is defective or has missing parts. Make sure all recommended maintenance procedures are completed before operating the machine.
- Check all controls regularly and adjust as needed. Make sure tractor brakes are evenly adjusted.
- Periodically check all nuts and bolts for tightness, especially tractor wheel attaching hardware. See “Lubrication and maintenance” for hardware torque specifications.
- Make sure loader is correctly installed on the tractor, and that attaching pins are locked.

TRACTOR BALLAST AND TREAD ADJUSTMENT

- Make sure tractor has rear ballast (weight) to stabilize the load-carrying capacity of the machine.
- Move tractor wheels to the widest recommended setting to increase stability.
- See ”Operaton” in this manual for ballast and tread width information. Also see tractor’s manual for more information.

https://truckmanualshub.com/

Check that the bucket or other attachment is correctly installed on the mount and that the pins are in the locked position. Press the tip of the attachment against the ground, 1, to check that the attachment is firmly fixed, 2.

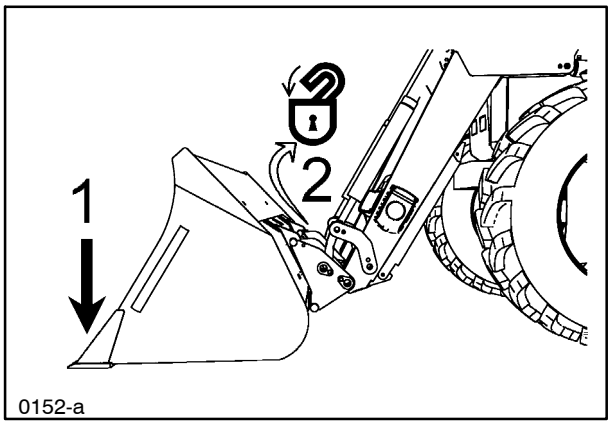

10

Only operate the machine when sitting in the Operator's seat.

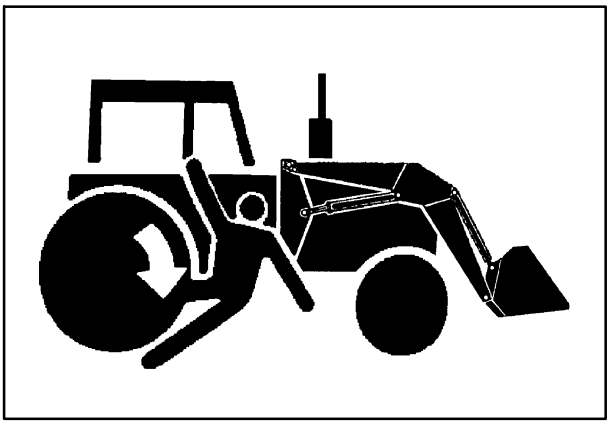

11

DO NOT stand, walk or work under a lifted loader. Make sure that you keep people, especially children and animals away from the workplace.

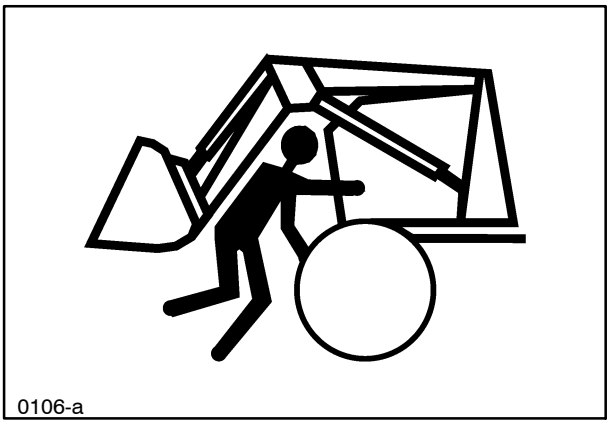

12

https://truckmanualshub.com/

MACHINE STABILITY

Always watch the bucket position. Objects can fall or roll backwards onto the operator when the loader is raised.

Only lift loads that can be contained by the attachment. Use the correct attachment for the task.

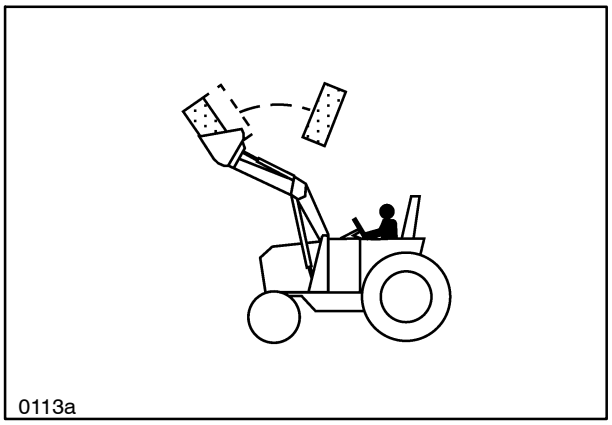

13

DO NOT work on or close to steep slopes.

The distance from the edge of bank must be equal to, or more than the height of the bank.

- Drive straight up or down intermediate slopes, not across. Avoid sudden stops and starts. Keep the loader as low as possible.
- Drive the tractor forwards up slopes with an empty bucket. Fill the bucket and then reverse slowly down the slope.
- Keep the heavy end of the tractor pointed uphill.

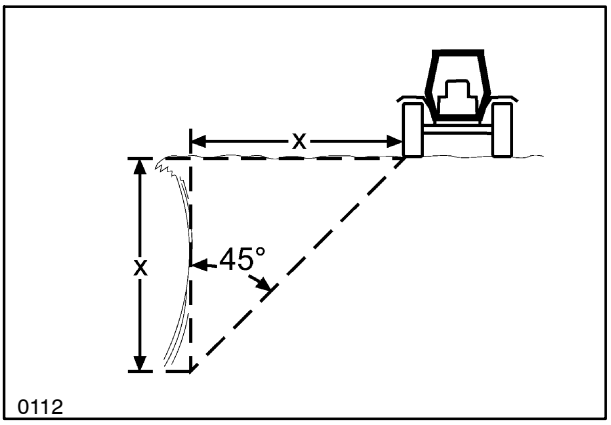

14

Use safe driving practices.

- Keep the tractor brake pedals locked together at all times. NEVER use independant braking with loader installed or you may lose control and/or roll-over.
- Always adjust speed to current conditions. Never drive so fast that you can not stop quickly in an emergency situation.

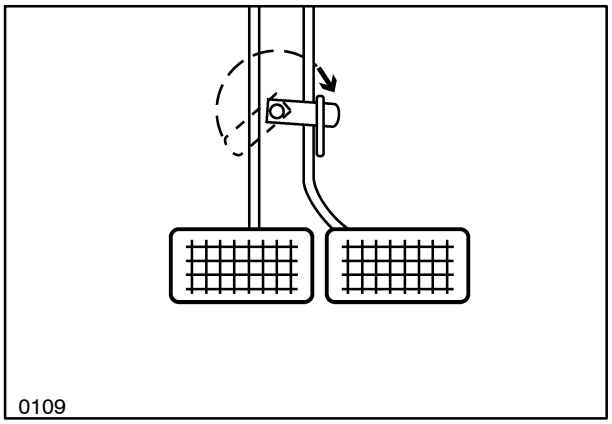

15

https://truckmanualshub.com/

Reduce speed before turning to avoid a roll-over.

- Keep speed at a minimum.
- Avoid sudden uphill turns on steep slopes.
- Always keep the tractor transmission in gear for engine braking when going downhill. Do not coast. Use the same gear as to go uphill.
- Keep the loader as low as possible when traveling. Remember, the higher the loader, the higher the center of gravity, and the higher the risk of roll-over.

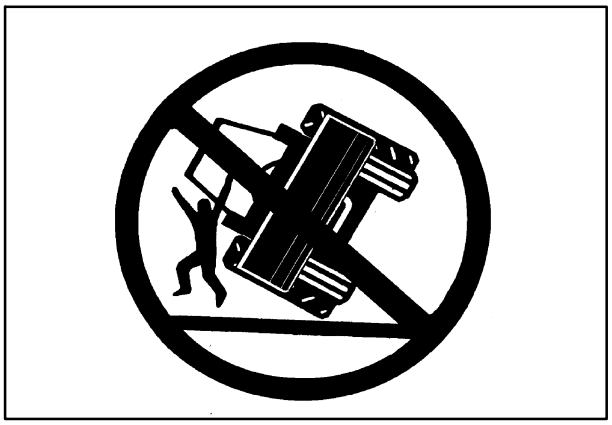

16

Properly park the tractor.

Before leaving the tractor unattended always:

1. Lower the loader and attachment to the ground.
2. Apply parking brake securely.
3. Move transmission lever to neutral or park position.
4. Shut off engine.
5. Remove the key.
6. Move the hydraulic control levers to all operating positions and return to center position to release pressure from circuits.

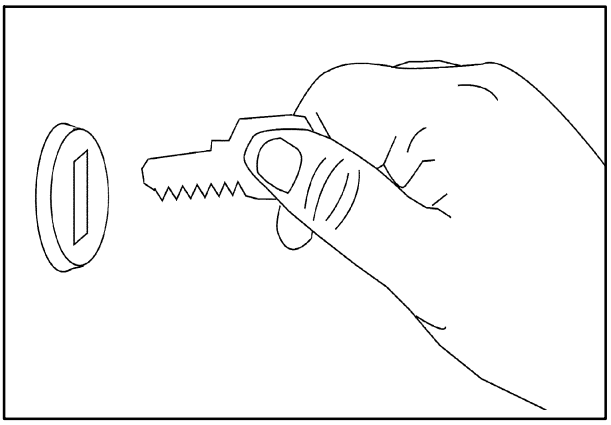

17

Do NOT do any service on the loader when the tractor engine is running or hot, or when the machine is moving.

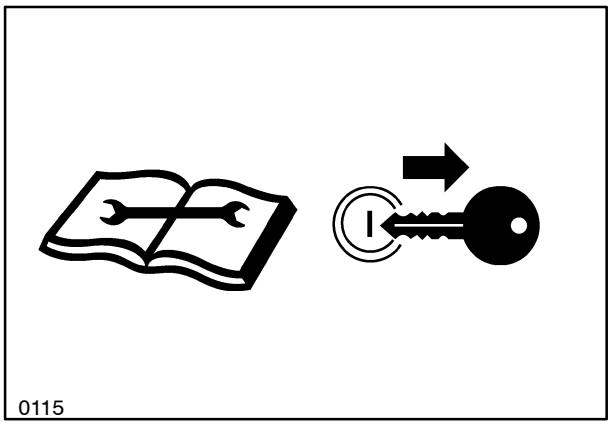

18

https://truckmanualshub.com/

The loader is equipped with a shut-off valve above the control valve on the right of the loader.

This should be moved to the “closed” position during service work, or when the loader is left in the lifted position for any length of time for other reasons.

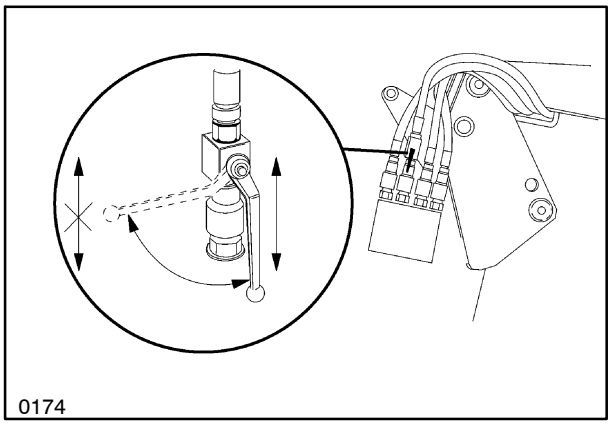

19

WARNING

This shut-off must NOT be used during work on the loader’s hydraulic cylinders or associated piping. In these cases, the loader must be lowered to ground level. Shut off the tractor engine and unload the hydraulic pressure by using the control handle before disassembling couplings or doing other work on the hydraulics – oil under high pressure can cause serious injury.

- When working on the loader’s hydraulic system, unload hydraulic pressure by moving all hydraulic controls to all positions a number of times once the engine has been shut off.
- Do NOT use the loader to support the tractor during service on the tractor or the loader.

Be on your guard against pressurized hydraulic fluid.

NEVER use your finger or hand to search for leaks. The fluid which flows out from small holes can be almost invisible Use a piece of wood or cardboard instead.

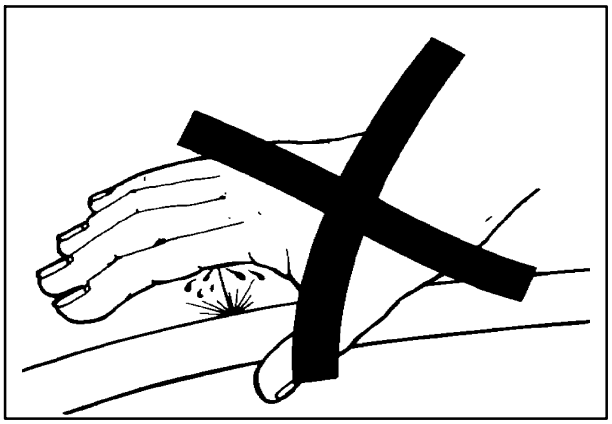

20

- Undo hydraulic couplings slowly. Keep your hands and fingers away from loosened couplings.
- Get medical attention at once if fluid penetrates your skin. Serious reactions and/or infections can rapidly occur if the oil is not removed at once by surgical operation.

Replacement Parts

When a replacement part is needed for periodic maintenance and service, use only genuine, original equipment replacement parts to restore your equipment to original specifications.

- The manufacturer is not responsible for installation of a non approved part/s and/or accessories nor any damage that may occur as a result of its use.

https://truckmanualshub.com/

LOCATION OF SAFETY DECALS

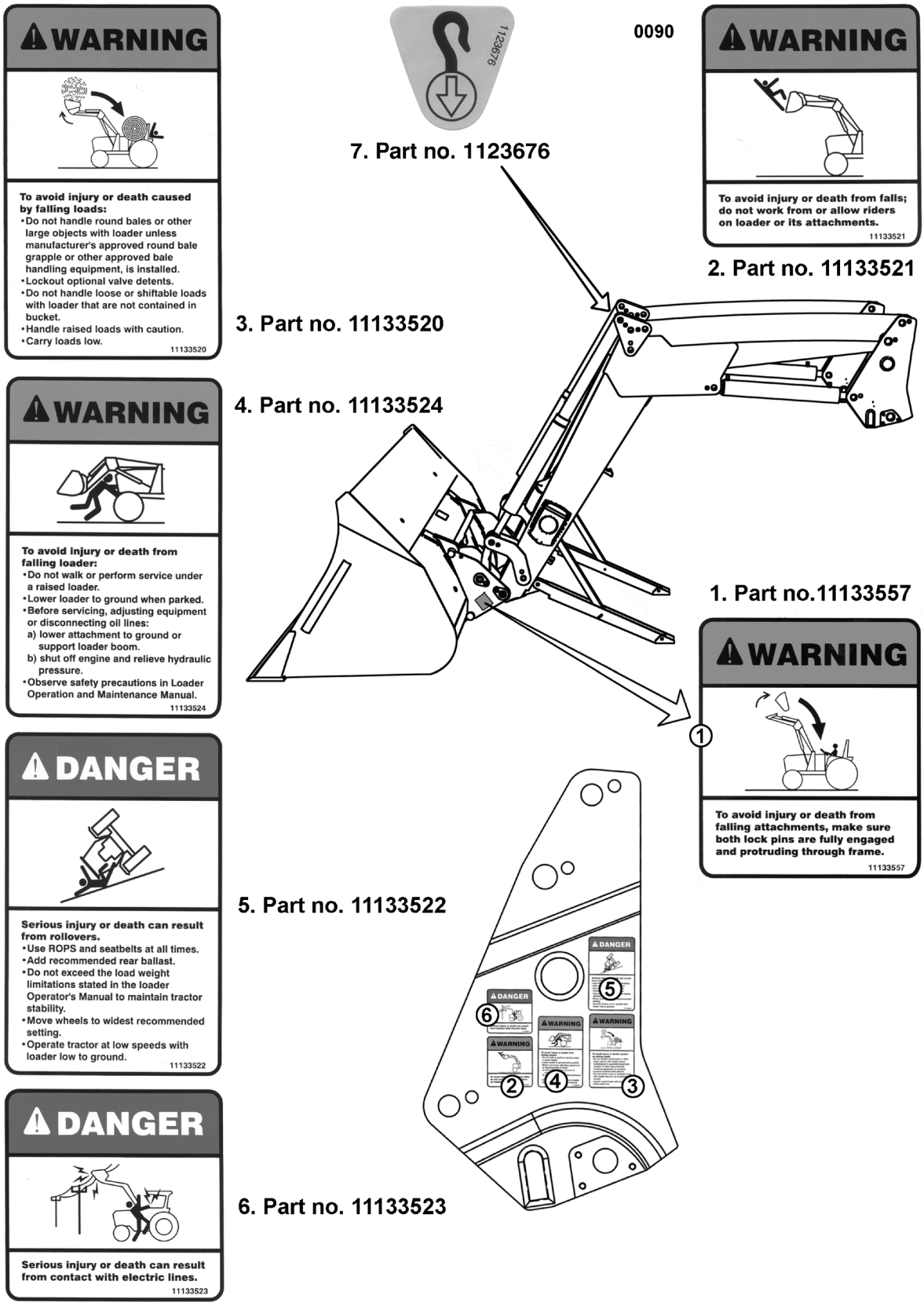

LOCATION OF ATTACHMENT SAFETY DECALS

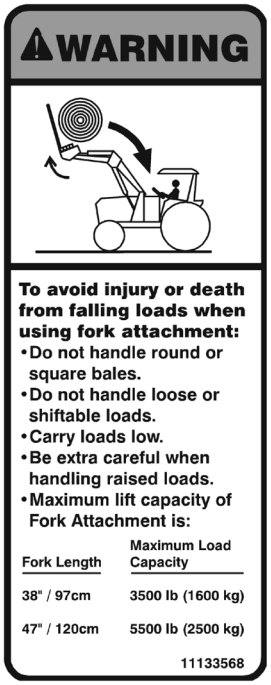

Safety sign (11133568) on fork attachment

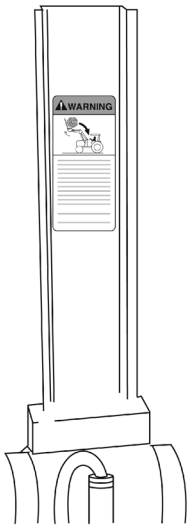

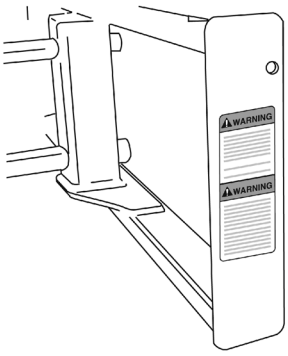

Safety sign (11133565) on round bale spear frame

1. Safety sign (11133569) on H. D. Bale Grip
2. Safety sign (11133567) on H. D. Bale Grip
3. Safety sign (11133566) on H. D. Bale Grip

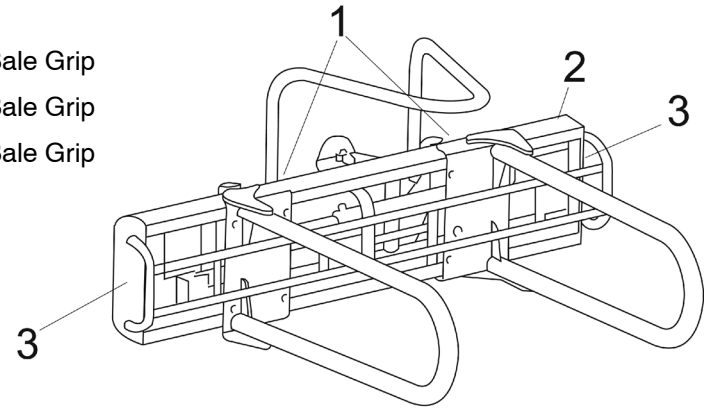

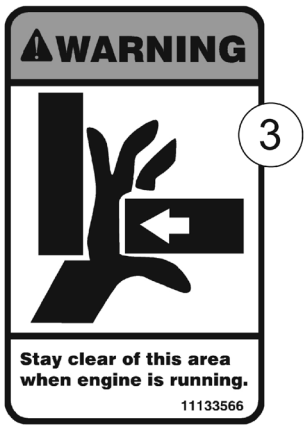

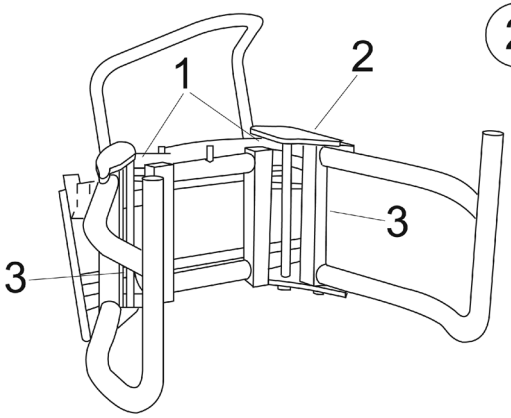

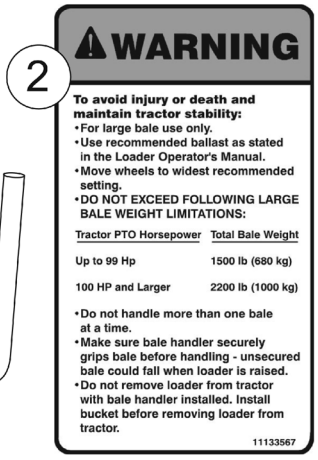

https://truckmanualshub.com/

ECOLOGY AND THE ENVIRONMENT

Soil, air, and water are vital factors of agriculture and life in general. When legislation does not yet rule the treatment of some of the substances which are required by advanced technology, common sense should govern the use and disposal of products of a chemical and petrochemical nature.

The following are recommendations which may be of assistance:

- Become acquainted with and ensure that you understand the relative legislation applicable to your country.
- Where no legislation exists, obtain information from suppliers of oils, filters, batteries, fuels, antifreeze, cleaning agents, etc., with regard to their effect on man and nature and how to safely store, use and dispose of these substances. Agricultural consultants will, in many cases, be able to help you as well.

HELPFUL HINTS

1. Avoid filling tanks using cans or inappropriate pressurized fuel delivery systems which may cause considerable spillage.
2. In general, avoid skin contact with all fuels, oils, acids, solvents, etc. Most of them contain substances which may be harmful to your health.
3. Modern oils contain additives. Do not burn contaminated fuels and or waste oils in ordinary heating systems.
4. Avoid spillage when draining off used engine coolant mixtures, engine, gearbox and hydraulic oils, brake fluids, etc. Do not mix drained brake fluids or fuels with lubricants. Store them safely until they can be disposed of in a proper way to comply with local legislation and available resources.
5. Modern coolant mixtures, i.e. antifreeze and other additives, should be replaced every two years. They should not be allowed to get into the soil but should be collected and disposed of safely.
6. Do not open the air-conditioning system yourself. It contains gases which should not be released into the atmosphere. Your dealer or air conditioning specialist has a special extractor for this purpose and will have to recharge the system properly.
7. Repair any leaks or defects in the engine cooling or hydraulic system immediately.
8. Do not increase the pressure in a pressurized circuit as this may lead to a component failure.
9. Protect hoses during welding as penetrating weld splatter may burn a hole or weaken them, allowing the loss of oils, coolant, etc.

UNIVERSAL SYMBOLS

As a guide to the operation of your tractor, various universal symbols have been utilized on the instruments, controls, switches, and fuse box. The symbols are shown below with an indication of their meaning.

- Thermostart starting aid
- Alternator charge
- Fuel level
- Automatic Fuel shut-off
- Engine speed (rev/min x 100)
- Hours recorded
- Engine oil pressure
- Engine coolant temperature
- Coolant level
- Tractor lights
- Headlamp main beam
- Headlamp dipped beam
- Work lamps
- Stop lamps
- Horn
- Radio
- KAM — Keep alive memory
- Turn signals
- 1 — Turn signals –one trailer
- 2 — Turn signals –two trailers
- Front wind-screen wash/wipe
- Rear wind-screen wash/wipe
- Heater temp-erature control
- Heater fan
- Air conditioner
- Air filter blocked
- Parking brake
- Brake fluid level
- Trailer brake
- Roof beacon
- Warning! Corrosive substance
- P.T.O.
- N — Transmission in neutral
- Creeper gears
- Slow or low setting
- Fast or high setting
- Ground speed
- Differential lock
- Rear axle oil tem-perature
- Transmission oil pressure
- FWD engaged
- FWD disengaged
- Warning!
- Hazard warning lights
- Variable control
- Pressurized! Open carefully
- Position Control
- Draft Control
- Accessory socket
- Implement socket
- %age slip
- Hitch raise (rear)
- Hitch lower (rear)
- Hitch height limit (rear)
- Hitch height limit (front)
- Hitch disabled
- Hydraulic and transmission filters
- Remote valve extend
- Remote valve retract
- Remote valve float
- Malfunction! See Operator's Manual
- Malfunction! (alternative symbol) See Operator's Manual

https://truckmanualshub.com/

SECTION 1
GENERAL INFORMATION

This manual describes the operation and maintenance for “L” 700 series mechanical self-leveling and non leveling agricultural loaders. The information in this manual was correct on the date of publication. If you do not understand an item in this manual, see your dealer.

An operator’s manual is supplied with each machine to show the operator the proper way to operate and maintain the machine. Study and use the information to make sure you get the best machine performance and length of service. This machine was designed to keep service as simple as possible so you can maintain it with normally available hand tools.

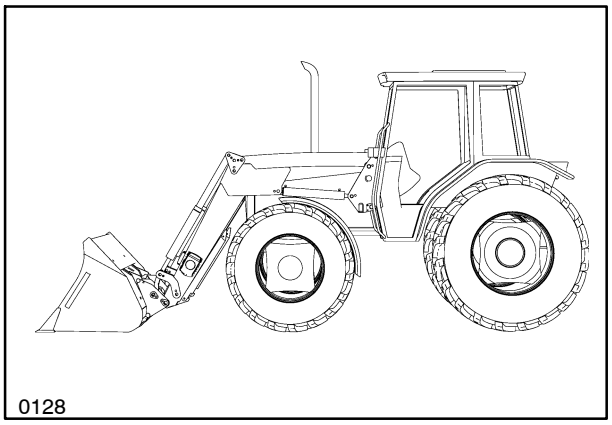

1

Read and thoroughly understand this manual before operating this machine. If you are an inexperienced operator, study this manual and get instructions from an experienced operator. Your dealer can assist you in learning machine operation and show you proper operating procedures. Keep this manual readily available, preferably with the machine. If the original manual is damaged, get a new one from your dealer.

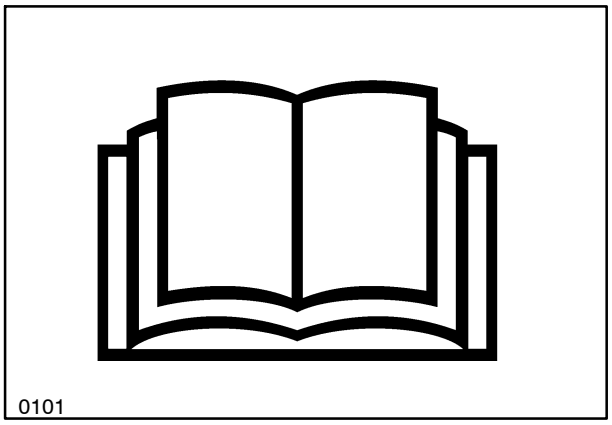

2

CAUTION

Read through the entire instruction manual before you start to use the machine.

CNH reserves the right to make changes in design and specifications or to add improvements at any time without any notice or obligation.

IMPORTANT: *Loader frames are designed for specific tractor models. Do not install a loader frame on a different model than specified, without obtaining approval from CNH America LLC.*

Installation and operation instructions for certain attachments and accessories may not be included in this operator’s manual. Use the publication received with the item.

https://truckmanualshub.com/

IDENTIFICATION

Model and Product Identification Number

Each loader has a product identification number plate, 1, with a unique number printed on it. The sign is placed on the inside of the left arm, above the cross tube.

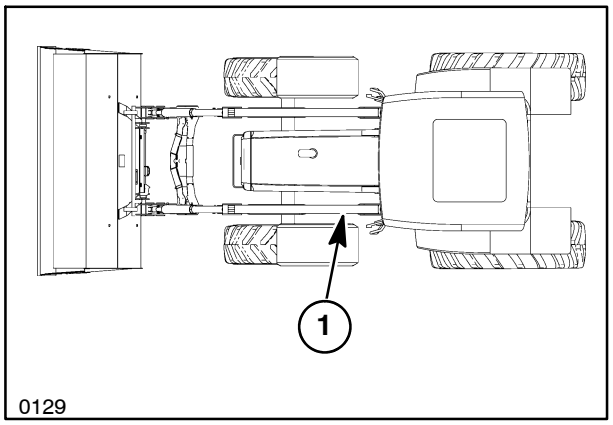

3

The sign specifies:

Type, Ref. No., Serial No., Production Date and Weight.

The loader model, 1, year built, 2, and product identification number, 3, must always be quoted during service questions or when spare parts are needed.

Record the information from your loader in the space below:

1. Model No _____
2. Year Built _____
3. Product Identification No _____

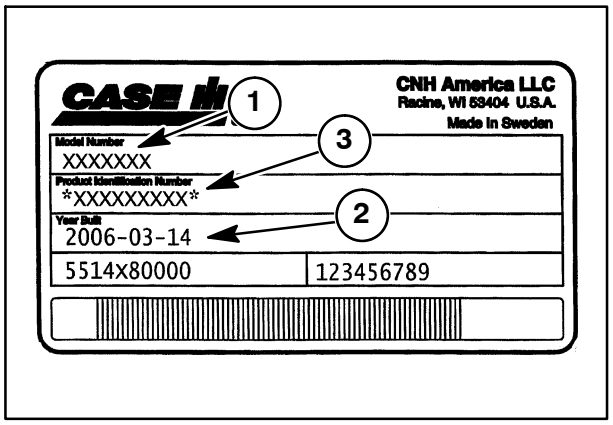

4

https://truckmanualshub.com/

Cylinders, valves, control cables and hoses are also equipped with machine signs or punched/printed order numbers.

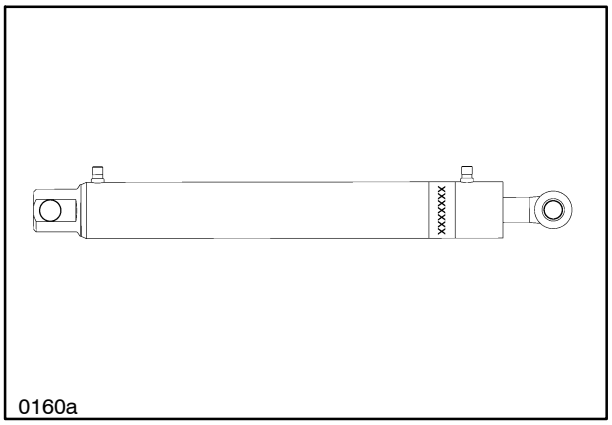

5

When control cables are ordered, please specify the length (L) and make of valve (control valve).

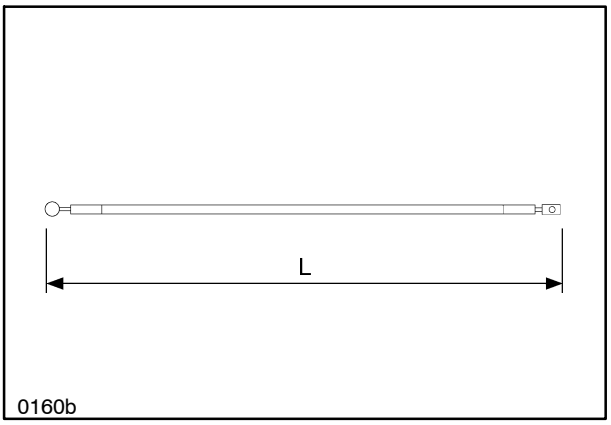

6

https://truckmanualshub.com/

ALIGNMENT REFERENCE

In this manual, references to right and left are consistently as seen from the operator's seat when facing forwards.

NOTE: *Some illustrations in this manual may show a different model of tractor or loader, compared with your loader. The same information applies to your equipment unless otherwise specified.*

DESCRIPTION

Definitions 3rd Function

Extra hydraulic function for operating the attachment hydraulics.

Bucket Lock

Automatic coupling of attachments.

"Quick Connect" (Fast Snap Style)

Equipment for coupling and uncoupling the loader's Hydraulics.

Quick Lock

Automatic coupling between loader and subframe.

Bucket Level Indicator

Equipment which shows the inclination of the attachment during lifting and lowering movements.

Control Valve

Valve intended for lifting and attachment operation on the loader.

Central Control Valve

Valve installed on the front of the loader, intended for attachments which have hydraulic functions and for loaders equipped with a hydraulic attachment lock.

Operation is with the one lever control, which can control all functions.

"Quick Connect" (Fast Snap Style)

Equipment for coupling and uncoupling the attachment's hydraulics.

Hose Kit

Hoses and hydraulic components for connecting the loader to the tractor's original valve.

Soft-Ride Loader Suspension

Load damper, improves driver comfort and reduces stress on the tractor and loader when driving on rough surfaces.

https://truckmanualshub.com/

SECTION 2
OPERATION

TRACTOR/LOADER STABILITY

Determination of Ballast

WARNING

Prevent personal injury due to tractor tipping or losing traction. Make sure proper ballast is fitted.

The following information is according to ASAE EP562 March 2005.

The following information is provided to reduce risk of machine overturning during normal operation. Ballast tractor to meet requirements outlined below.

- Place mass (weight) equivalent to loader lift capacity (F) located 800 mm (31.5 in.) ahead of bucket pivot.
- Raise loader until bucket pivot is level with loader arm pivot (bucket in farthest forward position)
- Apply rear wheel ballast and/or ballast box until a minimum of 25% of total weight is on rear axle. Tractor must be on level ground while measuring axle load. Total weight includes ballasted tractor, loader, bucket and payload (F)
- When using loader for dedicated applications, operator may determine appropriate ballast, based on maximum load to be carried.
- Tractor/loader with high center gravity or unusual configuration may require wider minimum tread setting to achieve same level of stability.

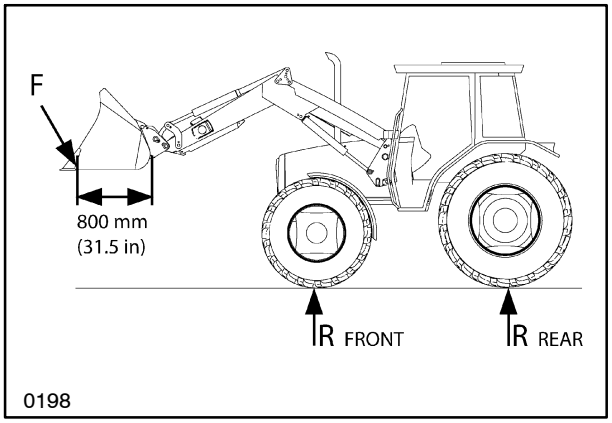

1

https://truckmanualshub.com/

Minimum Tread Settings

WARNING

Overturning risk. The tractor can overturn if its track is too narrow. Increase to maximum track for best stability.

Tread should be set as wide as practical considering the enviroment of use. Minimum tread settings are recommended to provide static stability on a side slope of 15 degrees with loader positioned. Unless otherwise specified by tractor manufacturer, minimum rear tread settings should be selected from Table.

TRACTOR MASS (Weight)		MINIMUM REAR TREAD SETTING*	
Kg	Lbs	mm	inches
Less than 2250	Less than 4960	1575	62.0
2250 – 3650	4950 – 8030	1675	65.9
More than 3650	More than 8030	1825	71.8

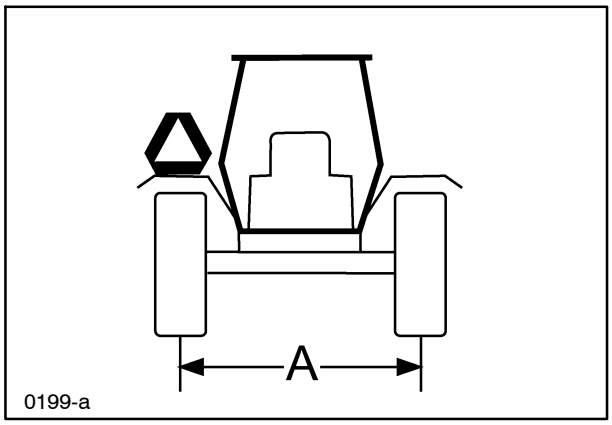

2

BALLAST RECOMMENDATION CHART

Recommended loader ballast for common tractor/loader combinations are listed in ballast chart. Recommendations are intended as a starting point only. Specific tractor configurations may require more or less ballast than that shown in the chart. Always confirm correct ballasting by weighting the fully loaded tractor as specified in “Determination of Ballast” section.

Recommended rear wheel ballast can be reduced by using a three point hitch counter weight.

Tractor/Loader Hydraulic Controls

The loader’s hydraulic system can be connected to the tractor hydraulic system in one of two alternate ways.

Alternative 1

The first method means that the tractor’s hydraulic system is connected to the loader’s control valve.

There are two versions of this method.

Version 1 – Control valve, mechanically operated

Recommended Tractor Ballasting

Tractor Model	Rear Axle Ballast	3-Point Hitch Ballast
MX MAGNUM series	300 kg (660 lb)	200 kg (440 lb)

NOTE: *Choose either rear axle or 3-point hitch ballasting option.*

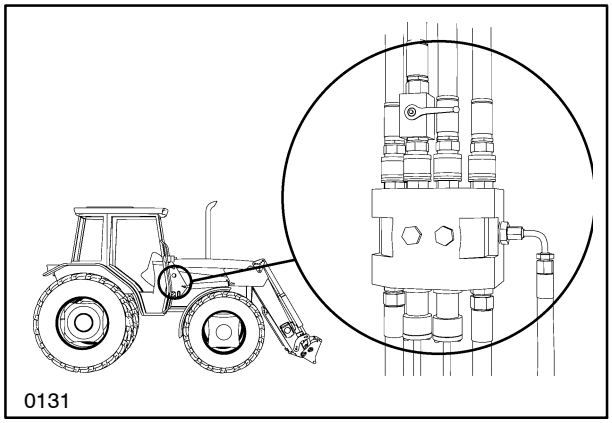

3

https://truckmanualshub.com/

The control valve has a joystick–type control handle located beside the operator's seat. The lever is connected to the hydraulic control valve via two control cables.

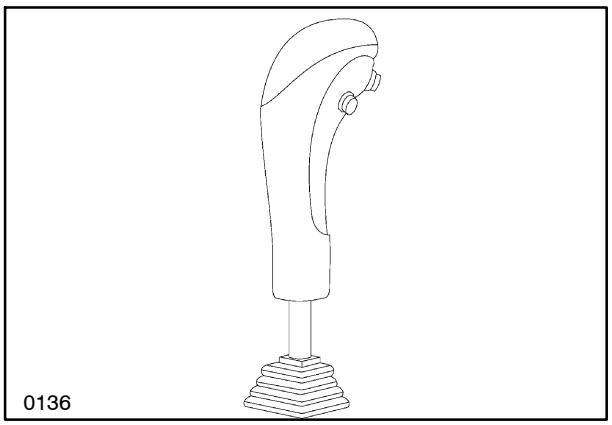

4

The joystick can be locked in neutral to prevent inadvertent operation of the loader. Lock the joystick by moving the tab on the front of the housing to the right. Check that the joystick is locked by moving the handle fore and aft and left and right. If the handle will not lock consult your dealer.

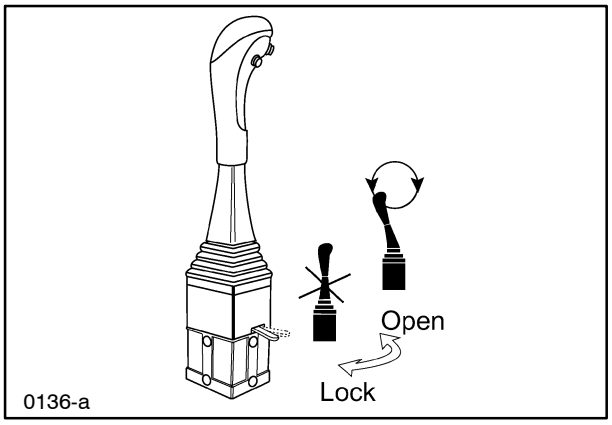

5

Alternative 2

The other method is to connect to the tractor rear remote valves and use the separate control levers to control the movements of the loader.

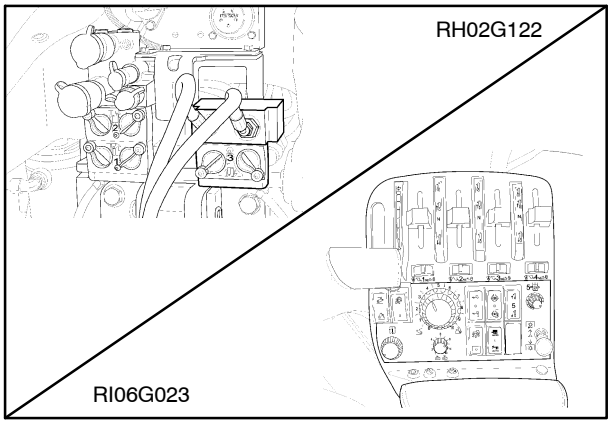

6

https://truckmanualshub.com/

Four hoses are connected directly between the tractor's hydraulic system and the loader.

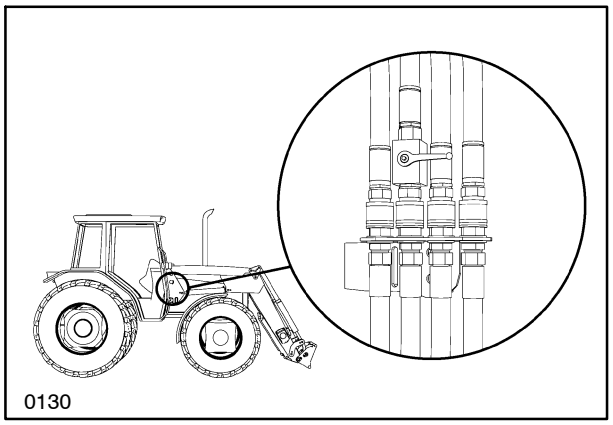

7

The loader may be equipped with a third hydraulic function. A solenoid valve, 1, is then installed on the cross tube of the tractor or on the rear of the tractor.

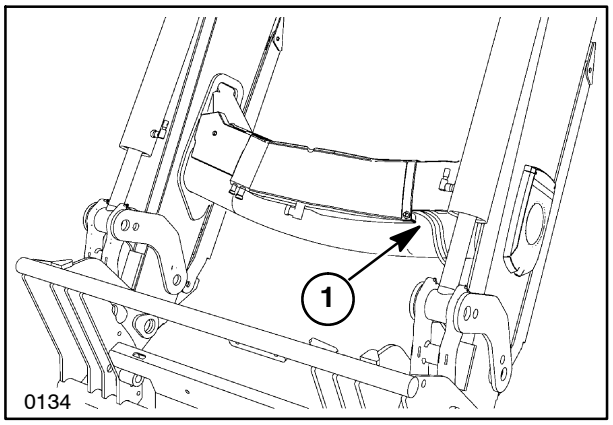

8

OPERATION OF THE LOADER

IMPORTANT: *Tractors with front axle suspension. The loader causes increased wear on the components in the front suspension. Always lock out the front suspension if this facility is available. Read the tractor's instruction manual.*

Loader-Mounted Valve

NOTE: All controls (except for float position) return to neutral when the lever is released.

Raise/Lower the Loader

Move the lever backwards, 1, to lift the loader arm.

Move the lever forwards, 2, to lower the loader arm with constant pressure.

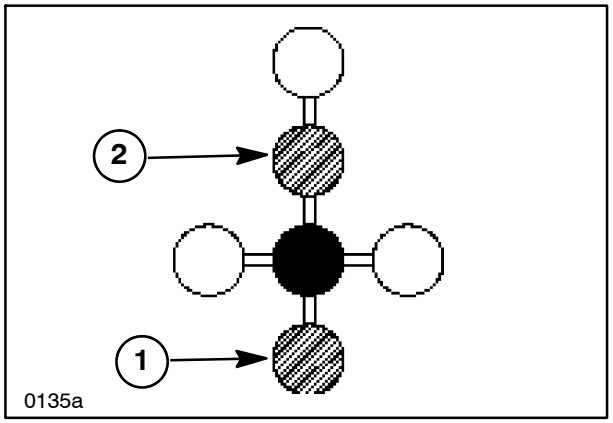

9

https://truckmanualshub.com/

Loader Float Position

Move the lever to the float position, 3, (does not apply to E-command, electronic control valve) and release the lever to lower the loader arm without any downward pressure.

To cancel the float function, move the lever backwards somewhat (out of the float position) and release it.

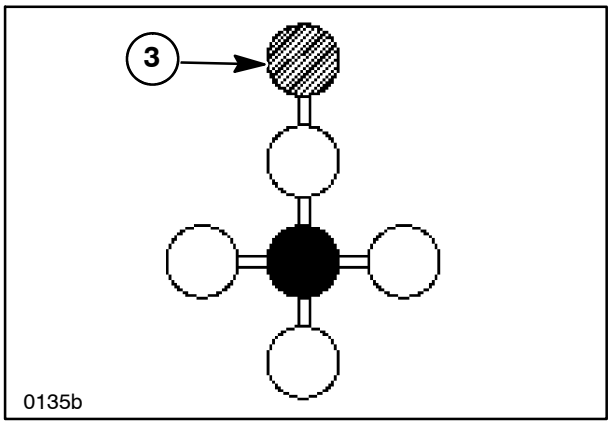

10

Attachment Roll Back/Dump

Move the lever left, 4, to roll the attachment back. Move the lever right, 5, to dump the attachment.

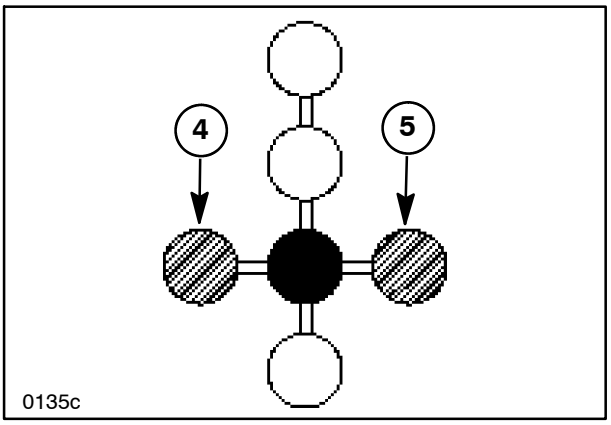

11

https://truckmanualshub.com/

3rd Hydraulic Function

The third hydraulic function is controlled by a switch or switches on the front of the control lever, 1.

On tractor with loader control valve, press the loader third hydraulic function button (A) and move the hydraulic control lever to the right to open the grapple, on units equipped with electric diverter valve system. On Live 3rd units press and hold the top button to open the grapple. Consult with your dealer as to the style of system on your tractor/loader.

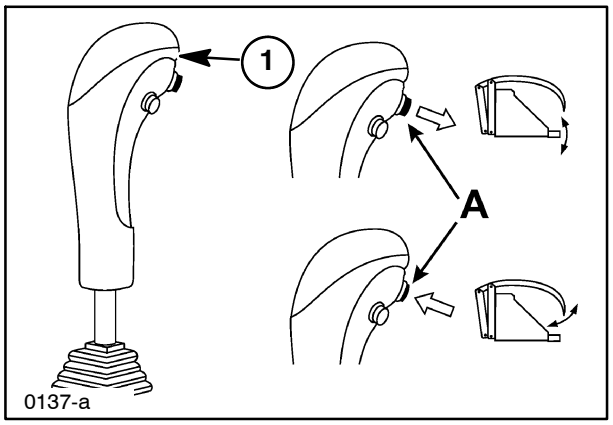

12

Loader with Mechanical Self-Leveling

Parallel links keep the base of the attachment in the same angular position during the entire lift/lowering movement.

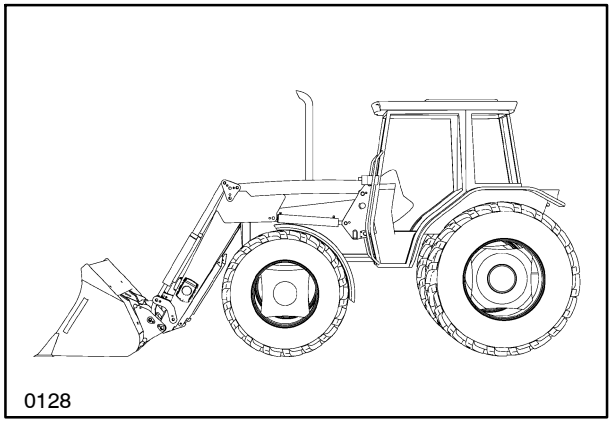

13

INSTALLING THE LOADER

NOTE: The accessory box markings coincide with the loader and the base. The decal installed on the accessory sack for the base contains information about the number of packages and the part numbers of the components, in addition to information about the tractor model. – Check that these coincide.

Read through the installation instructions which accompany each kit before making any attempt at installation.

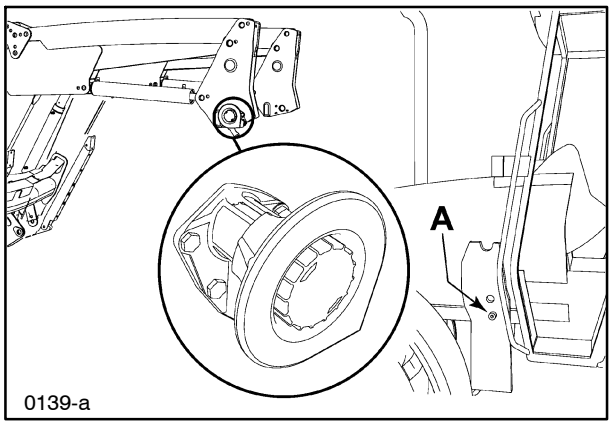

14

⚠ CAUTION ⚠

Pinch risk.

The locking wheel is spring loaded. Handle carefully.

Install Quick Lock on the left and right bearing boxes. Install stop (A) on the left and right subframes.

Install the subframe set and connect the loader valve or hose kit to the tractor's hydraulics in accordance with the installation instructions.

https://truckmanualshub.com/

Lift the loader up onto the subframe. Holes for attaching the lifting hooks are found on the inside of the tie plates.

Make sure that the lock handle on Quick Lock is pulled out and rests on the heel. When the bearing box passes the stop, the Quick Lock system will lock the loader to the subframe. Make sure that the end of the lock pin is visible on the inside of both the left and right bearing boxes.

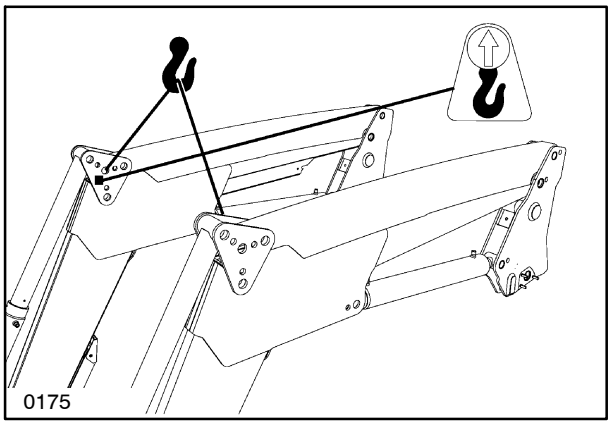

15

Connect the hoses to the hydraulic source as shown in the illustration.

The control joystick must be connected to the valve so that the loader is raised when the joystick is moved rearwards.

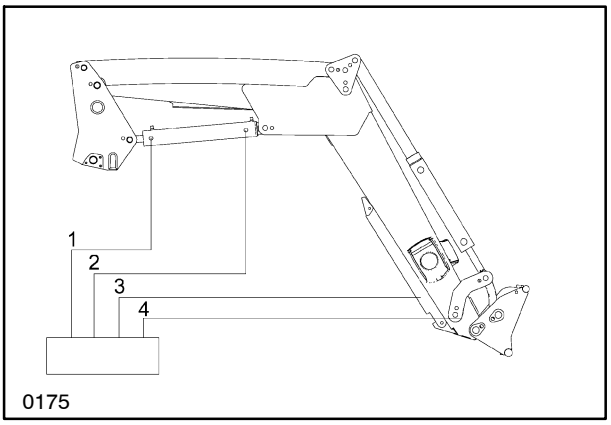

16

Install the Position Indicator

The position indicator can be mounted on the left or right bucket/attachment ram. Set your attachment in a level position and adjust your indicator (A) to reference point (B) on the indicator rod. Check that the indicator moves freely and adjust as needed. Incorrect installation can cause damage to the indicator.

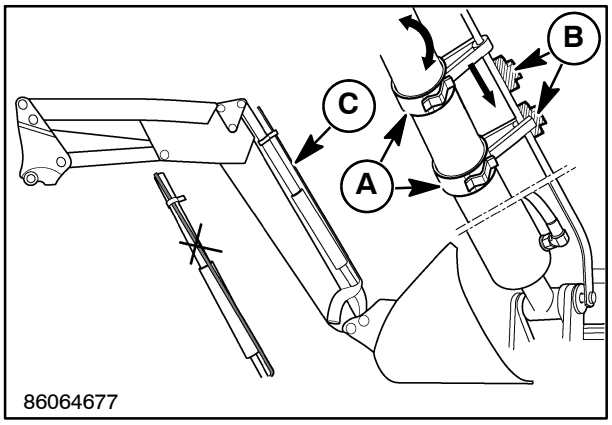

17

https://truckmanualshub.com/

REMOVING LOADER FROM TRACTOR

WARNING

Prevent personal injury due to loader falling. Install a bucket on loader before removing loader from tractor.

IMPORTANT: *If loader is equipped with an attachment with a third hydraulic function that is operated with a tractor auxiliary hydraulic circuit, disconnect hoses before removing loader from tractor.*

If loader is equipped with electrical control functions, when E-command control valve is installed, also disconnect electrical coupler before removing loader from tractor.

Park the tractor and the loader on flat, firm ground. Shut off the Soft-Ride.

Tip the bucket forwards and lower the loader so that the rear of the bucket is 100 – 150 mm (4 – 6 in) above the ground with the front of the bucket resting on the ground.

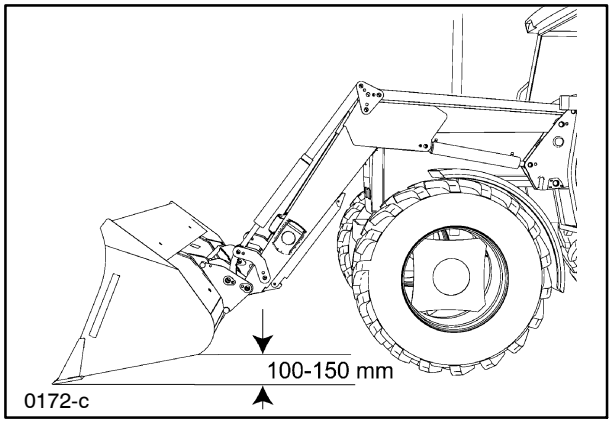

18

Parking stands are located under the front part of the loader arms. Pull up on the top end of the stands to release from the arms and fold them down to the ground. Swing the stay down and insert the bolt in the notched bar inside the stand. Select the notch with the stand resting on the ground.

NOTE: *Raise the loader arms slightly if necessary to ease installation of bolt into notch. Pad on stand should be approximately 50 mm (2 inches) from ground with bolt in the selected notch and front of bucket resting on the ground.*

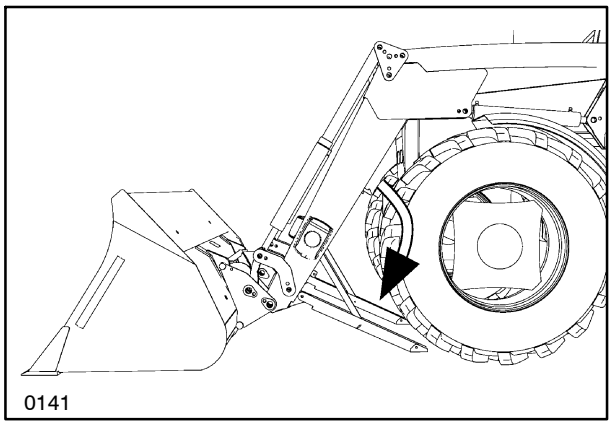

19

https://truckmanualshub.com/

Pull out lock handle (E) to unlock the lock pin and turn until the lock handle rests against the base stop (one on each side).

CAUTION

Pinch risk.

The locking wheel is spring loaded. Handle carefully.

- Release the brakes.
- Move the control joystick to the lowering position, so that the lifting cylinders are completely retracted.

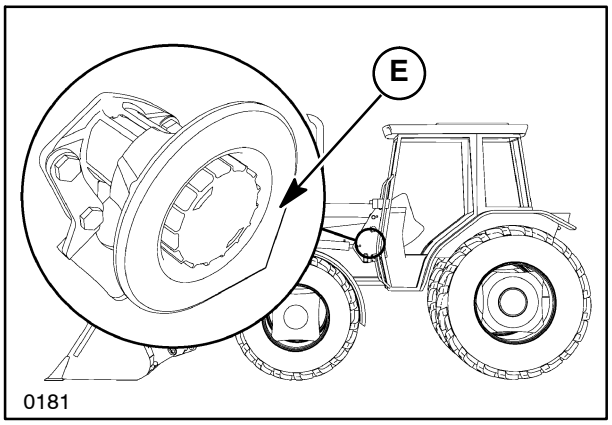

20

Roll back the attachment or bucket carefully. This will make the rear of the loader lift, and come loose and lift upward from the subframe.

- Stop the tractor and relieve the oil pressure to the lift cylinders, using the control valve.
- Disconnect the hose connection(s) and install dust cover on the couplings.
- Reverse the tractor carefully until it is completely clear from the loader.

IMPORTANT: *Make sure that you position the hoses in the hose holder on the RH boom arm so that they do not catch on the tractor.*

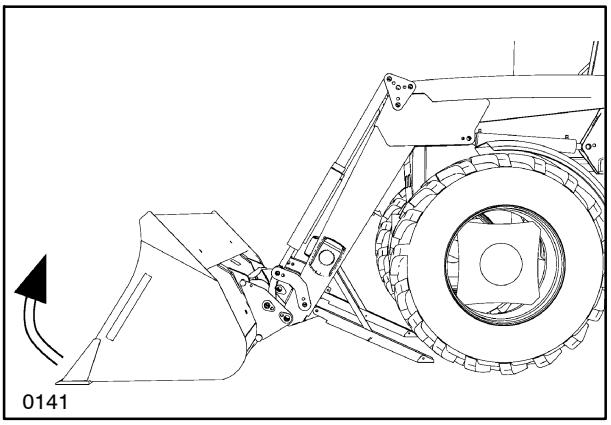

21

https://truckmanualshub.com/

RE-INSTALLING LOADER ON TRACTOR

CAUTION

Air in hydraulic lines and cylinders may cause erratic operation until air is removed from system.

Operate all controls carefully with slow engine speed.

CAUTION

Keep hands and feet away from moving parts. DO NOT use fingers to check component or hole and pin alignment.

Use a drift or steel bar.

CAUTION

Prevent personal injury due to loader falling.

Make sure a bucket is installed on the loader before the loader is installed on a tractor.

IMPORTANT: *To prevent damage to tractor, keep it centered between loader arms during installation.*

Drive the tractor forwards carefully until the subframe slowly enters the bearing boxes.

Connect the hydraulics. If there is any difficulty in coupling the quick release couplings, this will be because the oil pressure has not been relieved.

IMPORTANT: *Never use force on quick release couplings by striking the valve ball. This can damage it so that coupling will not open when coupled together. (Oil can only pass in one direction.) Make sure that couplers are connected to their corresponding point to complete the hydraulic circuit. If your loader is fitted with a Quick Release Coupler system, clean the connection surfaces prior to aligning the guide pins and making the connection.*

Extend the bucket cylinders (dump) to enable the stationary pins to engage and seat into saddles of subframe uprights. (Rear of bucket will come off ground, loader will pivot about parking stands and rear of loader will lower).

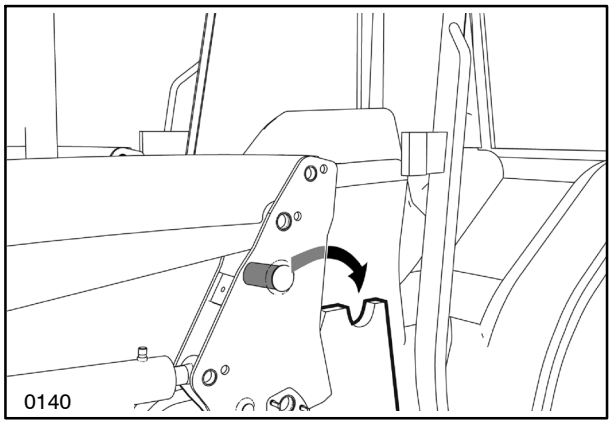

22

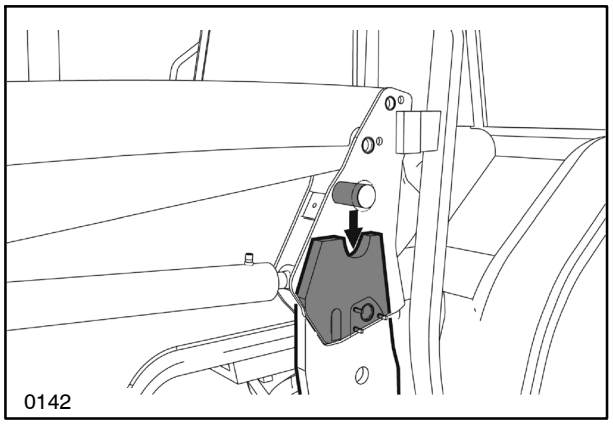

23

https://truckmanualshub.com/

By extending the lift cylinders, the boom connecting system will be engaged by contacting the latch bolts on the subframes. When the end of the locking pin is visible on the inside of the bearing boxes, the loader is locked in place.

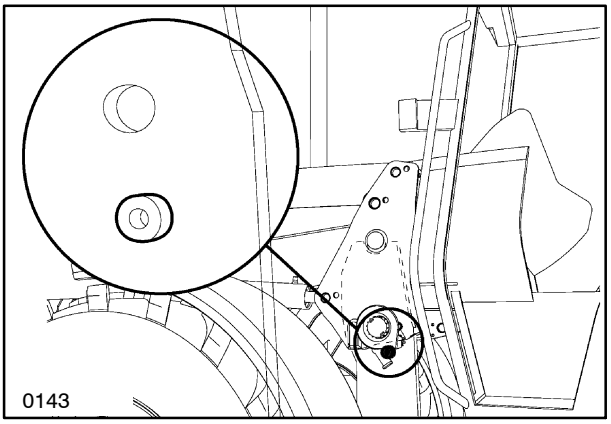

24

CAUTION

Make sure that the end of the locking pins are visible on both right and left bearing boxes.

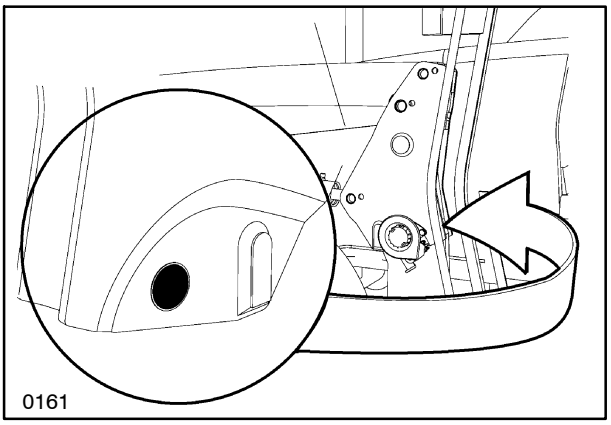

25

Fold the parking stands and secure in the storage position.

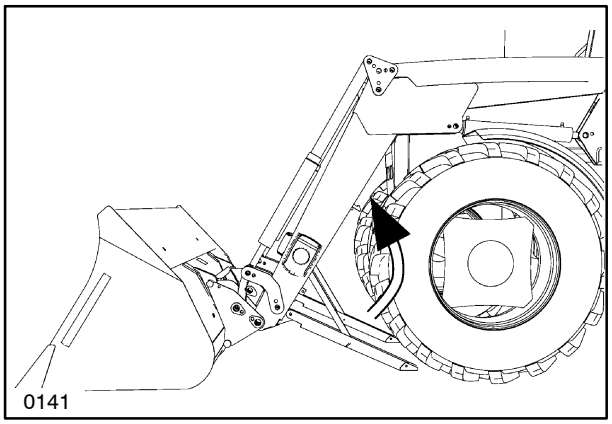

26

https://truckmanualshub.com/

CHECK LIST

When the loader has been installed – check carefully that everything works before it is taken into service. The following points must always be checked. Mark them off and do the necessary adjustments if necessary.

1. Check that everything has been installed in accordance with the installation instructions.
2. Check that a counterweight is fitted, which is appropriate for the bucket and attachment application rating.
3. Check that all screws are tightened.
4. Check that the front wheels clear the loader and base during full wheel lock and oscillation of the front axle – if this is not the case, oscillation stops or limitation of steering lock must be installed.
5. Test operate the loader, make sure that the ends of the lock pins are visible on the inside of both the left and right bearing boxes.
6. Check that no oil leakage occurs.
7. Operate all loader functions several times to remove air from the system.
8. Check the tractor oil level – top off as necessary.
9. Check that the lock pins engage when a bucket or attachment is connected.
10. Check that the loader does not have any visible defects.

https://truckmanualshub.com/

LOADER OPERATION

DANGER

Electric shock, crushing and pinch risk.

When driving with the loader lifted, make sure that there is enough room between the loader and power lines, and other overhead hazards.

CAUTION

Crushing and pinch risk.

People can be inside the working area.

Make sure that nobody is close to the tractor when work starts. Only operate the tractor when sitting in the intended place in the operator's seat.

CAUTION

Crushing and pinch risk.

Lower the bucket to the ground, lock the brakes and shut the engine off before dismounting the tractor. Remove the ignition key if the machine is left unattended.

When operating on a slope, approach load uphill, fill and back downhill. Operating sideways on a slope may cause tractor to tip.

Bucket is filled most effectively by driving straight into stock pile with bucket level. Raise loader slightly while forcing bucket into pile to tear material loose for easier filling. Then roll bucket back to contain material.

NOTE: Remove top layers first when working in deep material.

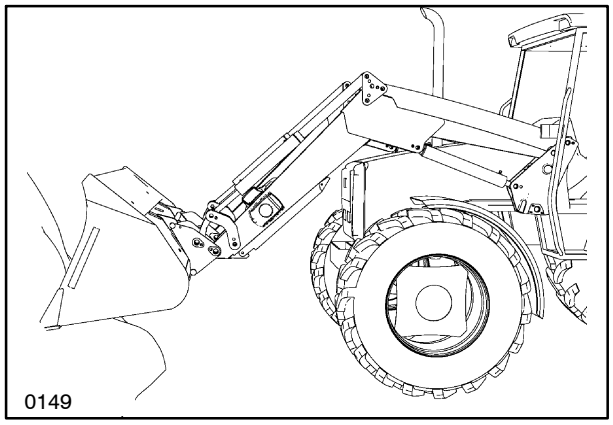

27

https://truckmanualshub.com/

Back away from stock pile, lowering loader slowly. Sudden stops when lowering bucket quickly can result in damage to loader and/or tractor's hydraulic system.

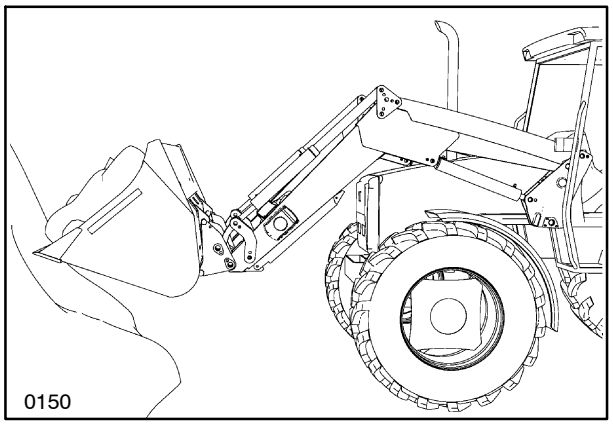

28

Raise loader while approaching vehicle so bucket does not strike vehicle when bucket is dumped. Release load from a low position for better loading and less spillage.

IMPORTANT: *Do not use loader as a battering ram.*

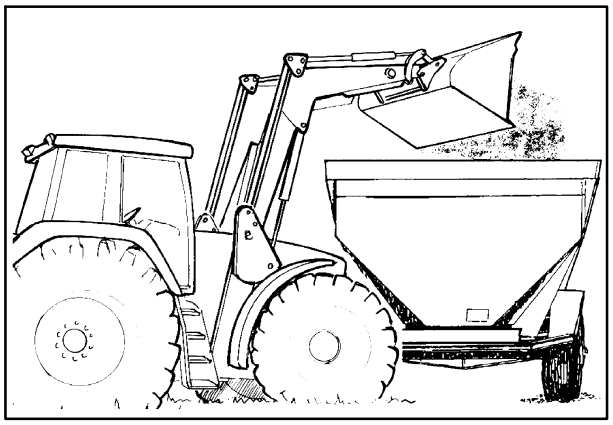

29

When back-grading, angle the bucket downward to allow cutting edge to contact ground and prevent wear on bucket rear face.

IMPORTANT: *To prevent damage to loader, do not back grade material with bucket in the full dumped position. Bottom of bucket should be no more than 45° from the ground during back grading.*

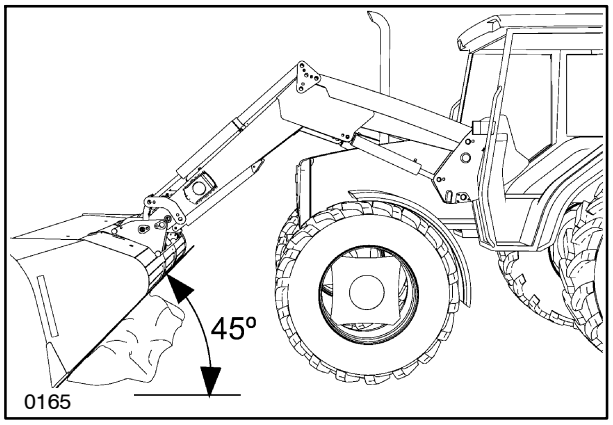

30

https://truckmanualshub.com/

SOFT-RIDE LOADER SUSPENSION SYSTEM (OPTION)

CAUTION

Always lower the loader to the ground before activating/deactivating the "Soft-Ride" function.

Description

This option dampens the vertical movements of the loader when driving on uneven ground. It consists of one or two accumulators, depending on loader model.

Soft-Ride can be engaged during most tasks, but can be disengaged when precision operation with exact control of the loader is required.

NOTE: *The accumulators, 1, used with the* Soft-Ride *system are pre-charged and can not be re-charged. Contact your dealer for service.*

Soft-Ride function can be shut off completely or engaged in two working modes with a knob (2) as desired.

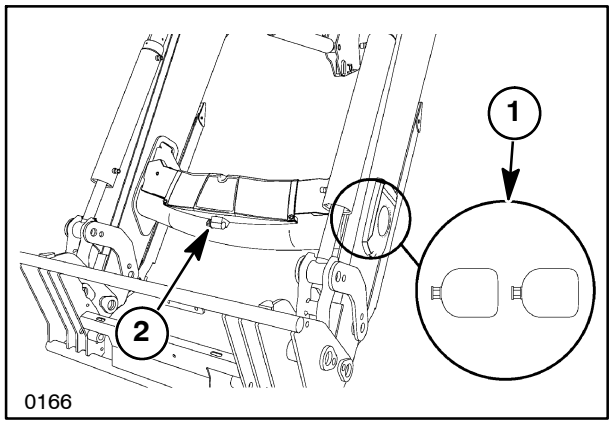

31

Position I = Shut Off

Position II = Accumulators open to the lift side of the cylinders (+).

Position III = Accumulators open to the lift side of the cylinder (+) and the rod side of the cylinder (–).

In position III, there is an internal relief port from the (–) rod side to the (+) side of the lift cylinder. When in position III you cannot maintain down pressure on the cylinders with the joystick in its neutral position.

Positions I, II, III can only be selected when the pressure has been relieved from the system. Lower the loader to the ground and shut off tractor engine. Move the joystick control lever to all control positions and return to neutral.

NOTE: *When using attachments which require a double acting cylinder function, use positions I or II.*

https://truckmanualshub.com/

REMOVE AND INSTALL BUCKET OR ATTACHMENT

Remove Attachment

Raise the loader off the ground and position the attachment level to the ground.

Shut the engine off and lock the joystick control lever in neutral position.

Apply the parking brake.

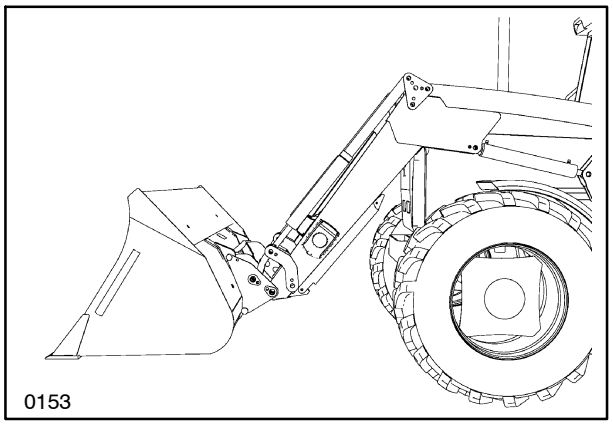

32

Pull the bucket lever to the disengaged position (left).

NOTE: *It is easiest to move the lock lever to the open position if the loader has been lifted about 1 meter (39 inches).*

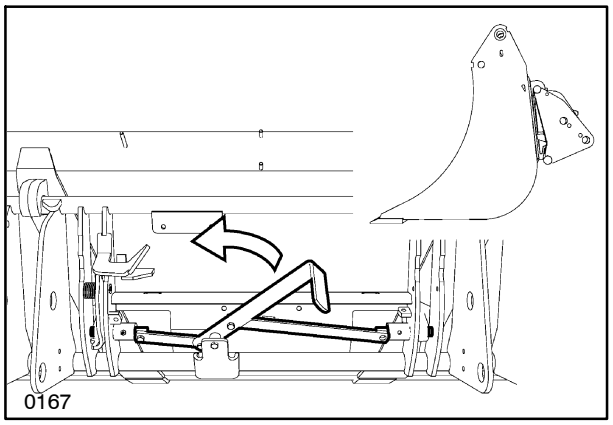

33

Lock the lever behind the catch.

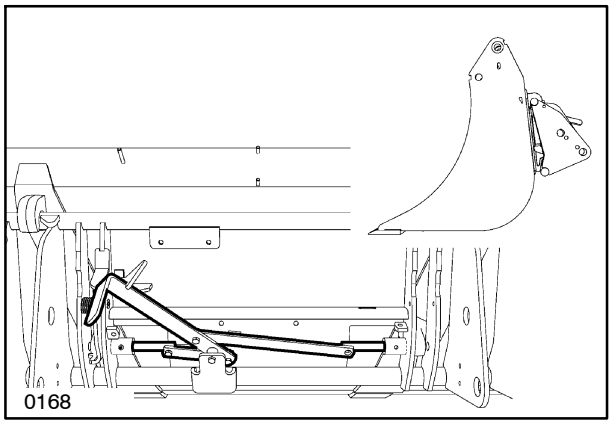

34

https://truckmanualshub.com/

Start tractor and lower the loader to the ground until the attachment disengages from the loader tool carrier.

Back tractor/loader away from attachment.

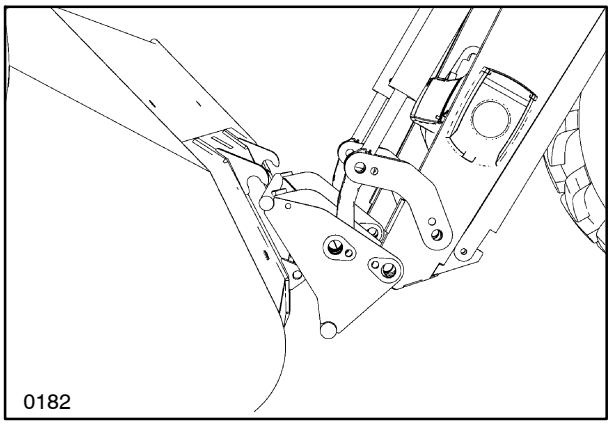

35

INSTALL ATTACHMENT

Raise/lower the loader to make the base of the attachment plate about 50 mm (2 in) from the ground. Tilt the tool forwards slightly (using the bucket level indicator as a reference).

NOTE: *To improve visibility tilt the tool carrier forward.*

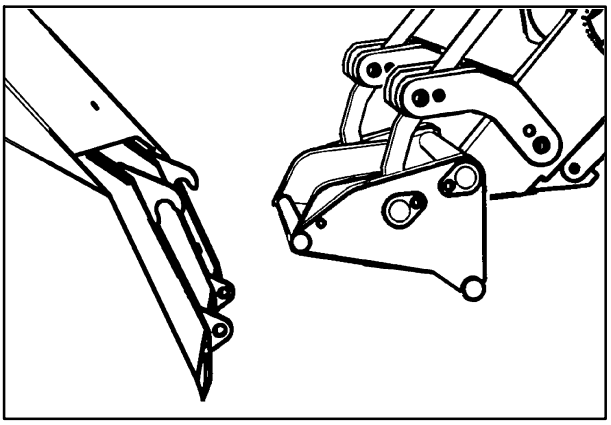

36

Drive the tractor forwards slowly to position the tool carrier under the hooks on the attachment.

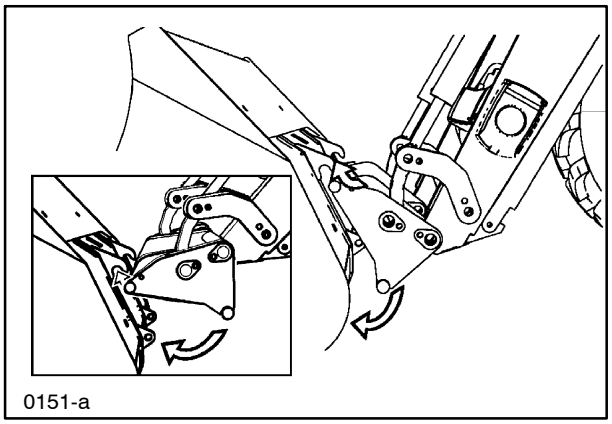

37

https://truckmanualshub.com/

When the attachment plate contacts the attachment, raise the loader to “hook” the attachment to the plate. Roll the attachment back to engage the attachment locking system.

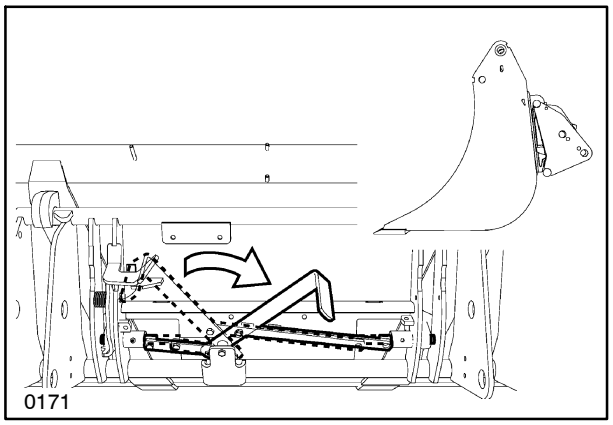

38

Read this before operating loader:

DANGER

Always check to ensure attachment is locked in position by forcing the front of the attachment against the ground and visually inspecting that the tool carrier lever has returned to the engaged position.

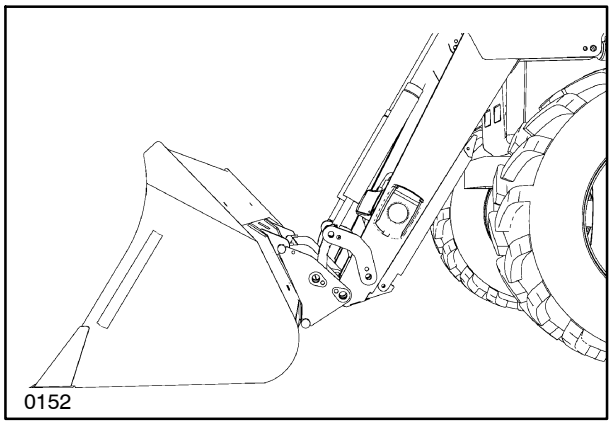

39

https://truckmanualshub.com/

OPERATION WITH BALE SPIKE ATTACHMENT

WARNING

DO NOT move large round bales using loader unless equipped with an approved round bale attachment. Without these, the bale can fall on the operator when the loader is raised causing severe injury or death.

WARNING

Prevent personal injury due to machine tipping. Use extreme caution when turning, loading, and moving bale. Use adequate rear ballast.

CAUTION

Forward visibility is reduced when moving large round bales.

CAUTION

Prevent personal injury due to being struck by a "run-away" bale. Use proper bale handling equipment when stacking round bales. Set bales down on level ground. "Run-away" bales can cause personal injury and/or property damage.

Move the bale spike into position at the end of the bale.

Make sure the bale spike is centered left to right and top to bottom with relation to the bale.

Drive forward slowly into the bale until spike fully penetrates the bale.

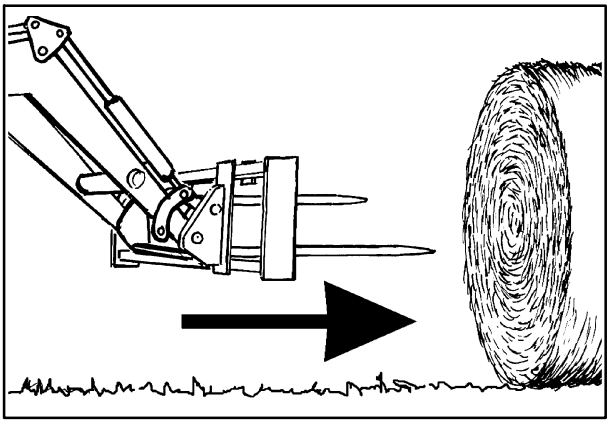

40

https://truckmanualshub.com/

Tilt the bale back, lift the load carefully. Raise loader only enough for clearance under bale. Move bale slowly and carefully until ready to unload.

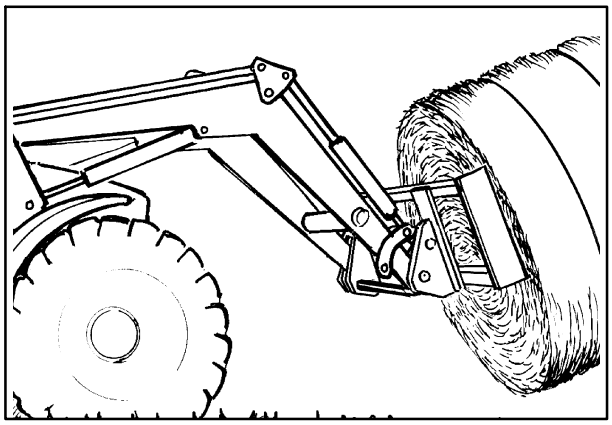

41

Tilt the bale forward to level position and place bale on the ground.

Carefully back unit away from bale.

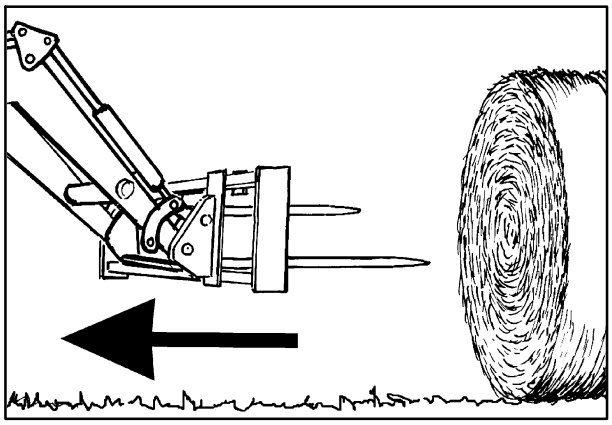

42

https://truckmanualshub.com/

OPERATION WITH GRAPPLE FORK ATTACHMENT

DANGER

DO NOT move large round bales using loader unless equipped with an approved round bale attachment. Without these, the bale can fall on the operator when the loader is raised causing severe injury or death.

DANGER

Prevent personal injury due to machine tipping. Use extreme caution when turning, loading, and moving bale. Use adequate rear ballast.

CAUTION

Forward visibility is reduced when moving large round bales.

CAUTION

Make all adjustments with bucket empty, loader lowered fully to ground, engine off, hydraulic pressure released and parking brake applied.

CAUTION

Prevent personal injury due to being struck by a "run-away" bale. Use proper bale handling equipment when stacking round bales. Set bales down on level ground. "Run-away" bales can cause personal injury and/or property damage.

On tractor with loader control valve, press the loader third hydraulic function button (A) and move the hydraulic control lever to the right to open the grapple, on units equipped with electric diverter valve system. On Live 3rd units press and hold the top button to open the grapple. Consult with your dealer as to the style of system on your tractor/loader.

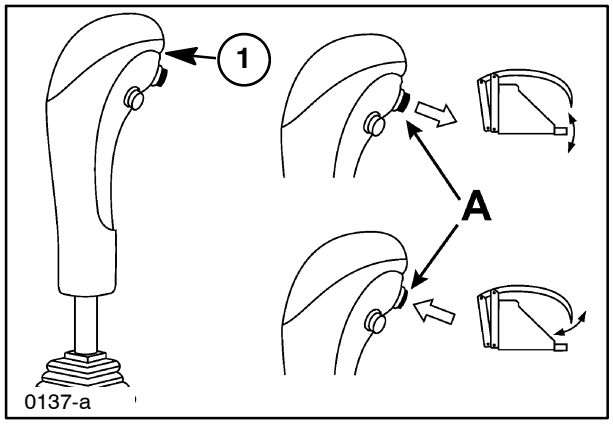

43

https://truckmanualshub.com/

On tractors with electronic hydraulics or original control levers, press the third hydraulic function button (See the tractor's Operators Manual) and move the Joystick lever to the right to open the grapple.

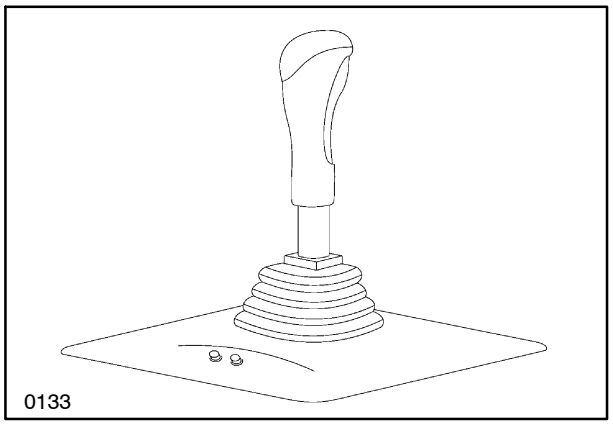

44

Approach bale from the side, with loader raised, grapple tines fully open, and bucket partially dumped.

Move grapple fork over the bale.

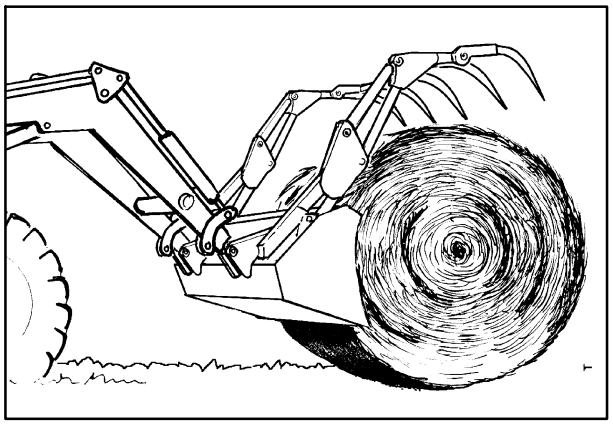

45

Move the grapple down onto the bale.

Make sure grapple is as far down on the bale as possible.

Press the loader third hydraulic function button and move the hydraulic control lever to the left to close the grapple on the bale, on units equipped with electric diverter valve system. On Live 3rd units press and hold the bottom button to close the grapple on the bale.

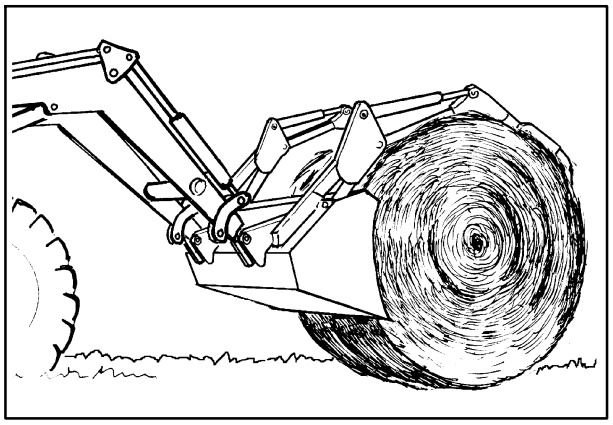

46

https://truckmanualshub.com/

Lift the load carefully, keeping the bucket level. Raise loader only enough for clearance under bale. Move bale slowly and carefully until ready to unload.

IMPORTANT: *Always roll back bucket if bale is to be lifted more than 152 mm (6 in) above ground level.*

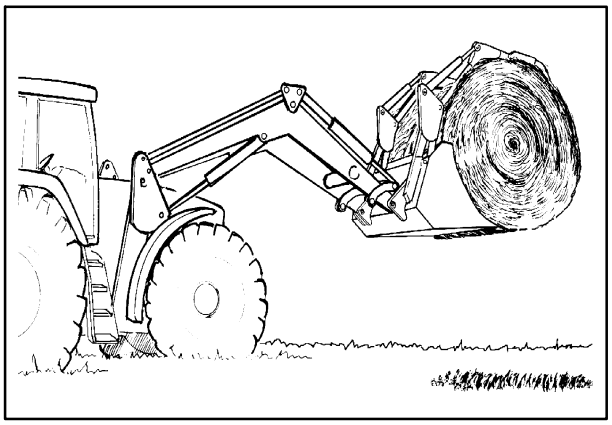

47

Release bale as close to the ground as possible. Partially dump bucket while slowly opening grapple. Carefully back unit away from bale.

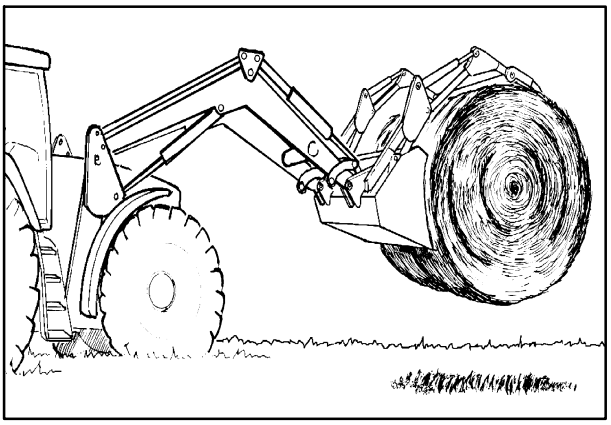

48

https://truckmanualshub.com/

OPERATION WITH H. D. BALE GRIP

Make sure backstop, 1, is installed.

DANGER

Prevent personal injury or death due to bale falling. Do not operate this attachment until the backstop, 1, is installed.

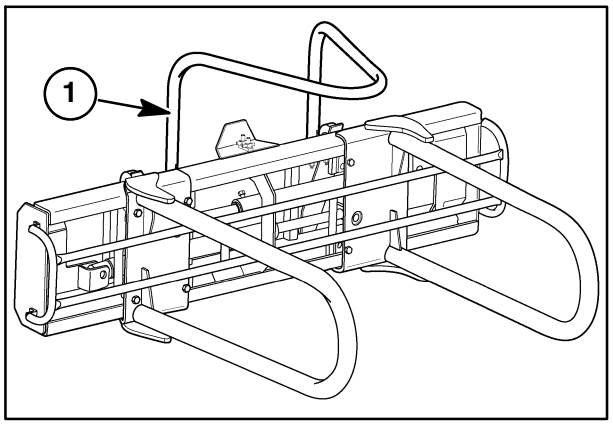

49

Press the loader third hydraulic function button and move the hydraulic control lever to the right to open the arms, on units equipped with the electric diverter valve. On Live 3rd units press and hold the top button to open the arms.

Move the hydraulic control lever forward to lower the quadrogrip around bale.

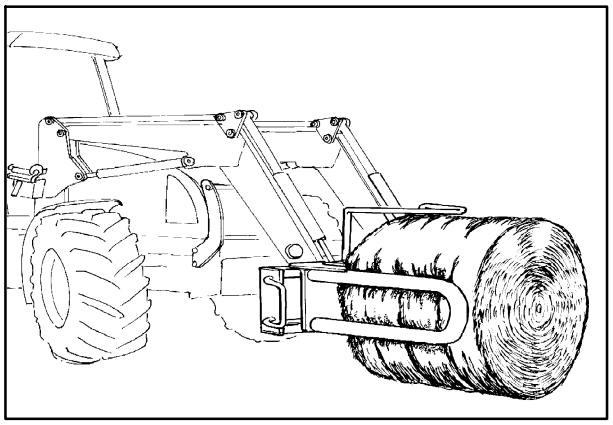

50

Press the loader third hydraulic function button and move the hydraulic control lever to the left to close the arms on the bale, on units equipped with the electric diverter valve. On Live 3rd units press and hold the bottom button to close the arms.

Move the hydraulic control lever rearward to lift the bale. Move the hydraulic control lever to the left to roll the quadrogrip back.

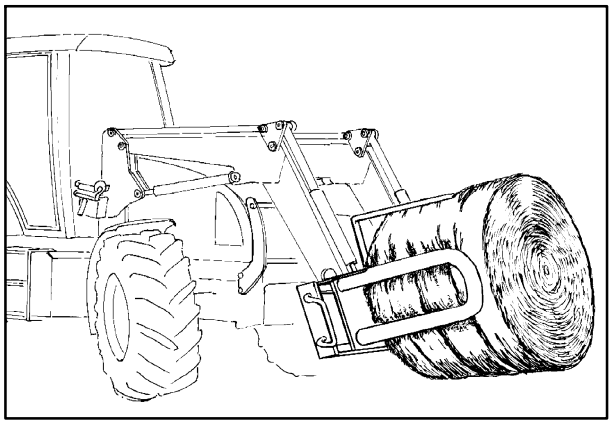

51

https://truckmanualshub.com/

SECTION 3
LUBRICATION AND MAINTENANCE

LUBRICATION POINTS

Lubricate the following grease fittings (zerks) using multi-purpose lithium-based grease, every ten (10) hours of loader operation.

WARNING

To prevent personal injury or death due to loader falling, support loader with a solid support when loader is raised for access to bucket pivot pin grease zerks.

Grease zerks at each pivot pin and links on both sides of the loader.

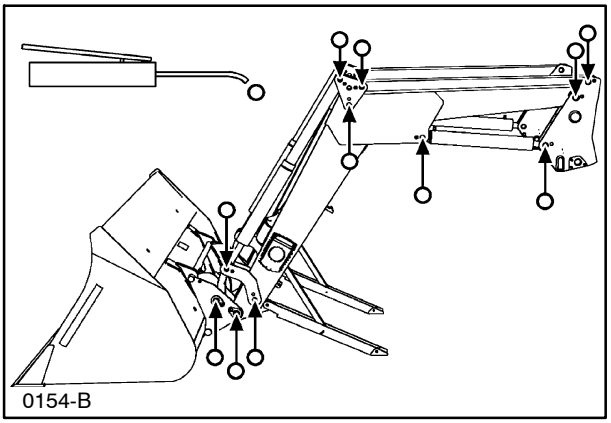

1

STORAGE

Store hoses, on main frame so coupler(s) are off the ground.

Apply a thin layer of grease to exposed cylinder rods as protection.

HYDRAULIC SYSTEM

Frequently check the oil level in the tractor hydraulic oil reservoir when the loader is lowered to the ground. Use oil specified in the tractor operators manual.

https://truckmanualshub.com/

Hoses and Cylinders

Read this before checking hydraulic system for leaks:

WARNING

Oil under pressure.

Prevent possible serious personal injury, blindness, or death caused by injection of hydraulic fluid into your body. Fluid escaping under high pressure may not be visible. Wear approved eye protection. Wear approved skin protection, such as heavy leather gloves. Use a piece of cardboard or wood to find leaks.

If any fluid is injected into your body, it MUST be removed within a few hours by a surgeon familiar with the procedure.

Inspect hoses and fittings periodically for wear and leaks. Be sure hoses have sufficient clearance and do not rub against frame. Replace hoses if damaged and keep all fittings tight.

Cylinders are double-acting. For efficient operation, they must be kept in good repair at all times. Leaks, internal or external, affect operation and can be hazardous.

This loader requires a high pressure hydraulic system. Use only approved replacement parts.

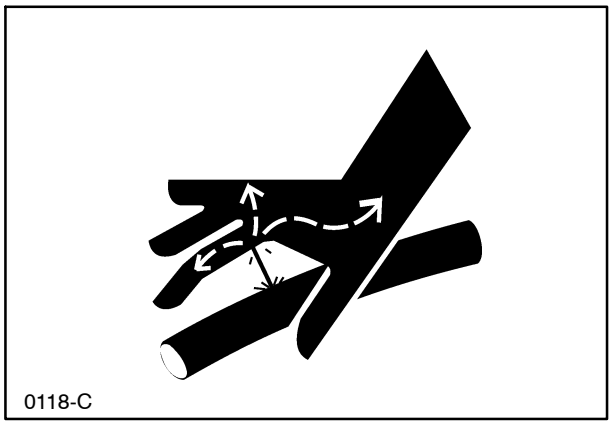

2

https://truckmanualshub.com/

CENTRAL CONTROL VALVE

Connect and Disconnect “Plug in Coupling”

The Central Control Valve receives and distributes the hydraulic oil equally to each side of the loader. The quick couple connectors allow for quick hydraulic hose change in case of failure.

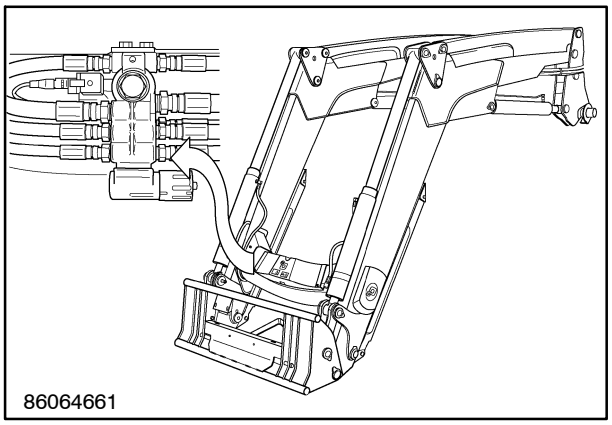

3

Disconnection

1. Remove the assembly stop.
2. Push the hose all the way in.
3. The coupling is now ready to disconnect.
4. Pull the hose back for disconnection.

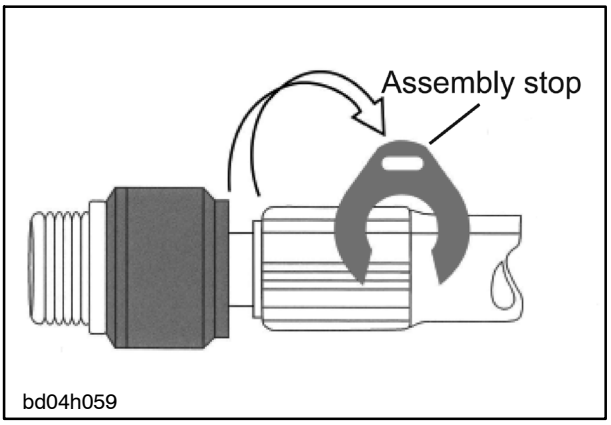

4

Connection

1. Make sure that the assembly stop is in place.
2. DO NOT connect the plug without the assembly stop.
3. Push the hose all the way in until the assembly stop touches the socket.
4. Make sure that there is no space between the assembly stop and the socket.
5. Try to pull apart the coupling in order to make sure that the hose is locked.

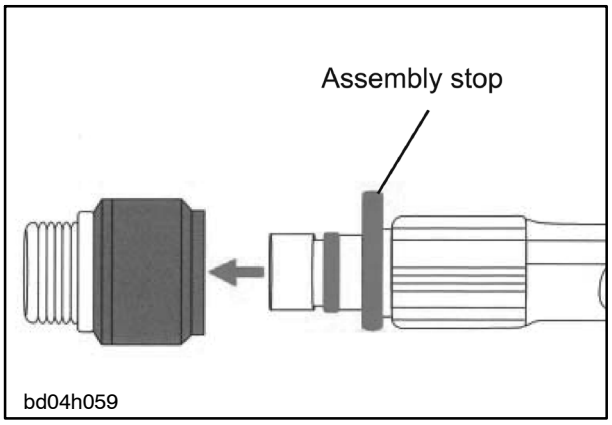

5

https://truckmanualshub.com/

CHECKING HYDRAULIC CONNECTIONS

Check that all hoses and adapters have been tightened and that they do not leak.

Repairing Hydraulic Cylinders

Disassembly, repair and assembly of hydraulic cylinders requires special tools to prevent damage to internal components. We recommend that a cylinder that needs repair should be repaired by an authorized dealer.

Checking Loader Frame Hardware

Hardware torque should be checked immediately after installation, and several times after a short period of use. Improperly tightened hardware may cause structural damage to loader and/or tractor.

Check that all capscrews are tightened to the specified torque, after 10 hours of operation and then every 50 hours of operation. Please refer to the table below for torque values.

Hardware Tightening Chart

Tighten all the capscrews on the loader and mounting bracket hardware to the values specifiec in the table below, except in the cases where the tightening torque is specified in the assembly instructions.

The torques specified below apply to clean, dry threads. Lubricated threads will result in the fastener being overtightened. Damaged or dirty threads result in undertightened.

A torque multiplier may be needed when tightening capscrews to high torque values.

Grade 5 (Class 8.8) Capscrew	
Diameter	**Torque**
1/4 in	10 ft-lb (13.6 N·m)
5/16 in	20 ft-lb (27.1 N·m)
3/8 in	35 ft-lb (47.5 N·m)
7/16 in	55 ft-lb (75 N·m)
1/2 in	85 ft-lb (100 N·m)
5/8 in	170 ft-lb (230 N·m)
3/4 in	300 ft-lb (405 N·m)
M8	27.1 N·m (20 ft-lb)
M10	54.2 N·m (40 ft-lb)
M12	94.9 N·m (70 ft-lb)
M14	119.3 N·m (88 ft-lb)
M16	189.8 N·m (140 ft-lb)
M20	264.4 N·m (195 ft-lb)

Grade 8 (Class 10.9) Capscrew	
Diameter	**Torque**
1/4 in	11 ft-lb (14.9 N·m)
5/16 in	24 ft-lb (32.5 N·m)
3/8 in	44 ft-lb (59.7 N·m)
7/16 in	71 ft-lb (96.3 N·m)
1/2 in	114 ft-lb (154.6 N·m)
5/8 in	222 ft-lb (301 N·m)
3/4 in	325 ft-lb (440.6 N·m)
M8	32.5 N·m (24 ft-lb)
M10	63.7 N·m (47 ft-lb)
M12	108.4 N·m (80 ft-lb)
M14	176.3 N·m (130 ft-lb)
M16	271.2 N·m (200 ft-lb)
M20	542.3 N·m (400 ft-lb)

https://truckmanualshub.com/

SECTION 4
TROUBLESHOOTING

Faulty functioning of the loader is frequently caused by factors not related to the loader:

- Check the oil level in the tractor's hydraulic tank. Top up to the correct level.
- Check that the correct oil is used. Only use the oil specified in the tractor instruction manual. Incorrect oil can cause foaming, heating and internal leakage.
- Make sure that hoses and couplings are correctly installed and connected to the tractor. Hydraulic couplings must be fully inserted.
- Check that the oil is clean and free from moisture. Change the oil and filter as necessary.
- Check hoses and couplings for leakage, cuts and twists.
- Low temperatures can cause slow movement and/or that the loader does not function normally until normal working temperature has been reached. Check that the oil is at normal working temperature before the loader is tested.
- When a hose kit is used, make sure that the tractor valve has been adjusted for double action. Check that flow control has been set to maximum value.
- Operate the loader cylinders to their end positions several times to remove air from hoses and cylinders.

Most problems which occur with the loader are simple in nature and can be easily rectified. Use the "Trouble Shooting" on the following pages to help you localize and rectify problems.

Please contact your dealer if you need more help.

Problem	Possible cause	Action
Lifting and bucket cylinders do not function	Low hydraulic oil level.	Check and top up with hydraulic oil.
	Hydraulic hoses wrongly connected.	Check and connect the hoses correctly.
	Hydraulic hoses to/from control valve are "blocked".	Check hoses for damage (kinks, twists etc.).
	Loader control valve or tractor main reduction valve has stuck open.	Contact your dealer
	Low system pressure from pump.	Contact your dealer
Lifting or bucket cylinders do not function	Break in control cable for control valve.	Inspect. Change if necessary.
	Hydraulic quick-release couplings not fully inserted.	Check coupling. Change coupling(s) as necessary.
	Blocked hydraulic hose/pipe.	Look for damage to hose/pipe which could block oil flow between cylinder and control valve.
	Piston unit damaged (does not seal).	Contact your dealer.
	Blocked control valve.	Contact your dealer.
	Damaged quick-release coupling.	Change quick-release coupling.

https://truckmanualshub.com/

Problem	Possible cause	Action
Lift and/or bucket cylinders operate in wrong direction compared with lever movement	Hydraulic hoses wrongly connected.	Connect hydraulic hoses to correct union.
	Control cables for single lever control wrongly connected.	Contact your dealer.
Air in hydraulic oil (generally shown by foaming)	Low hydraulic oil level.	Check and top up with hydraulic oil to correct level.
	Air leakage in hydraulic pump suction side.	Contact your dealer.
	Foaming due to use of wrong type of oil.	Read the tractor instruction manual and use the recommended type of hydraulic oil.
Slow or jerky lifting movement	Low hydraulic oil level. Cold hydraulic oil.	Check/top up the hydraulic oil. Let the hydraulic oil warm up to working temperature.
	Engine speed too low (hydraulic pump speed is then too low).	Increase engine speed to improve loader performance.
	Too heavy load in bucket. Material weight exceeds loader's specified capacity.	Reduce the load in the bucket.
	Control valve cable system binds or is damaged.	Contact your dealer.
	Air in the hydraulic oil.	Please refer to "Air in hydraulic oil" above.
	Hydraulic quick–release couplings not fully inserted.	Check the couplings. Repair or change.
	Restriction in hydraulic hose or pipe (hoses/pipes have become twisted or crushed).	Check hoses/pipes for signs of restriction.
	Lifting cylinder piston unit leaks.	Contact your dealer.
	Reduction valve works unevenly or is set too low.	Contact your dealer.
	Internal leakage in control valve (bypass flow in valve).	Contact your dealer.
	Low capacity in hydraulic pump.	Please refer to "Low pump capacity" below.

https://truckmanualshub.com/

Problem	Possible cause	Action
System relief valve squeals	Cold hydraulic oil.	Let the hydraulic oil warm up to working temperature.
	Too heavy load in bucket. Material weight exceeds loader's specified capacity.	Reduce the load in the bucket.
	Relief valve set below specification.	Contact your dealer.
	Restriction in hydraulic hose, pipe or quick release coupling.	Contact your dealer.
Insufficient lifting capacity	Engine speed too low.	Increase engine speed.
	Too heavy load in bucket. Material weight exceeds loader's specified capacity.	Reduce load.
	Relief valve set below specification.	Contact your dealer.
	Pistons in lifting cylinders leak.	Contact your dealer
	Internal leakage in control valve.	Contact your dealer.
	Damaged hydraulic pump.	Contact your dealer.
Loader drops with control valve spool in "centering" position. Note: The value at which the loader is allowed to lower varies between 0.5–1.5 mm / min measured on the piston rod, depending on loader model.	Pistons in lifting cylinders leak.	Contact your dealer.
	Internal leakage in control valve.	Contact your dealer.
	Control valve or cable system binds and prevents valve spool from returning to center position.	Find the reason for binding and repair it.
Control valve spool(s) do not return to neutral position	Control valve centering spring is damaged.	Contact your dealer.
	Control valve spool binds in its bore.	Contact your dealer.
	Control lever or cable system binds.	Find the reason for binding and repair it.
External hydraulic oil leakage	Loose hydraulic unions.	Tighten loose unions.
	Damaged hydraulic hoses, pipes, couplings or O-rings in couplings.	Find the reason for the leakage and change the damaged component.
	Damaged O-ring in control valve.	Contact your dealer.
	Control valve spool or housing damaged and/or worn.	Contact your dealer.
	Piston rod seal in cylinder leaks.	Contact your dealer.

https://truckmanualshub.com/

Problem	Possible cause	Action
Low pump capacity	Cold hydraulic oil.	Let the hydraulic oil warm up to working temperature. Increase engine speed.
	Engine speed too low.	Increase engine speed.
	Low hydraulic oil.	Please refer to the tractor instruction manual for service recommendations.
	Restriction in hydraulic hose.	Look for signs of restricted hydraulic hoses.
	Fault in hydraulic pump.	Contact your dealer.
Lift cylinder rods bend when lift cylinders are extended	Excessive load on lift or during transport.	Change cylinders. Review and observe proper operational practices.
Bucket cylinder piston rods are bent when bucket cylinders are extended	Grading or excavation work with bucket cylinders fully extended.	Change cylinders. Review and observe proper operational practices.
Bucket cutting edge wear is uneven side to side	Bucket is not parallel with ground.	Check air pressure in rear tires and level pressure to adjust bucket to ground.
Rapid wear on cutting edge on bucket (wear is evenly distributed across entire bucket width). ***NOTE:*** *Extensive use of bucket on concrete/asphalt surface increases wear on cutting edge on bucket.*	Unsuitable working methods. Excessive high down force on bucket when it is used on a hard, abrasive surface.	Please refer to the “Working with the loader” section for recommended working methods. Use the float position, if appropriate.

https://truckmanualshub.com/

SECTION 5
OPTIONAL EQUIPMENT

Not all accessories fit all loaders. Please contact your dealer to ask about suitable accessories for your loader.

3rd Function

3rd hydraulic function, electrical diverter valve. Solenoid valve used for hydraulic tools.

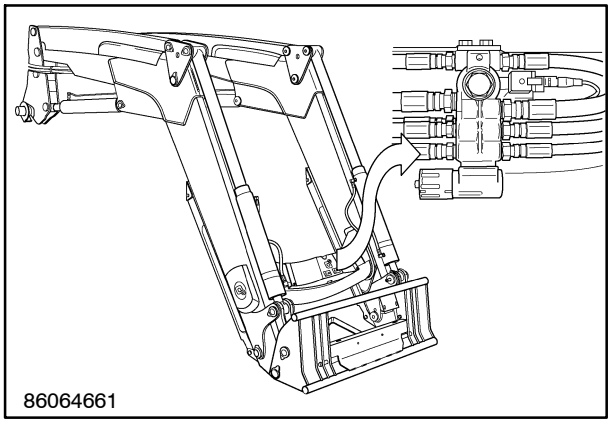

1

Soft-Ride, Load Damper

Reduces stresses on tractor and loader, and improves operator comfort. Can be set to two working modes.

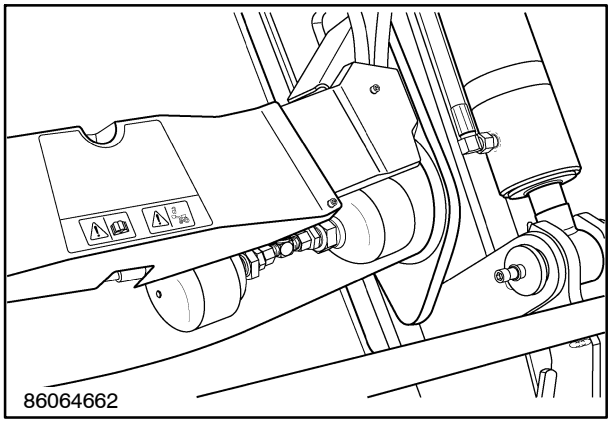

2

Quick-Connect

Couples/uncouples the loader hydraulics with a simple hand operation.

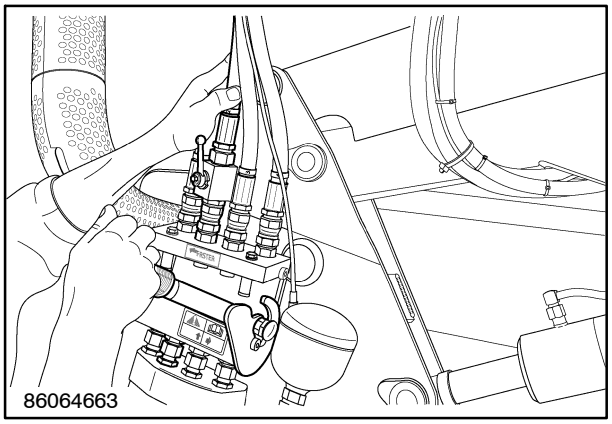

3

https://truckmanualshub.com/

Standard Material Buckets

63 in (160 cm), 73 in (185 cm), 83 in (210 cm), 95 in (240 cm), 102 in (260 cm)

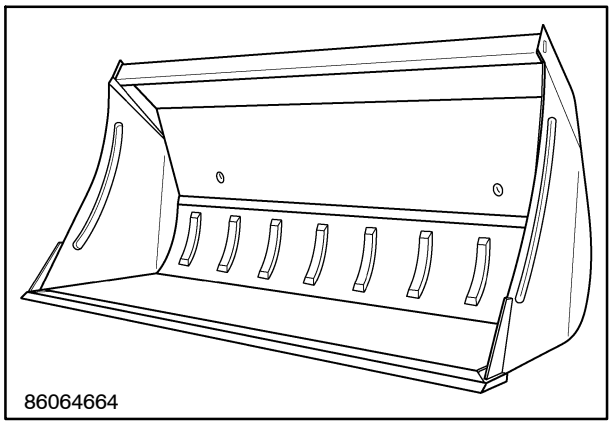

4

Heavy Duty Material Buckets

73 in (185 cm), 83 in (210 cm), 95 in (240 cm), 102 in (260 cm)

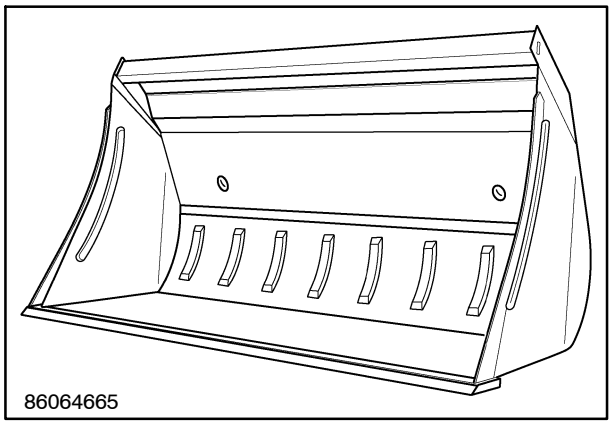

5

Construction Tooth Buckets

63 in (160 cm), 73 in (185 cm), 83 in (210 cm)

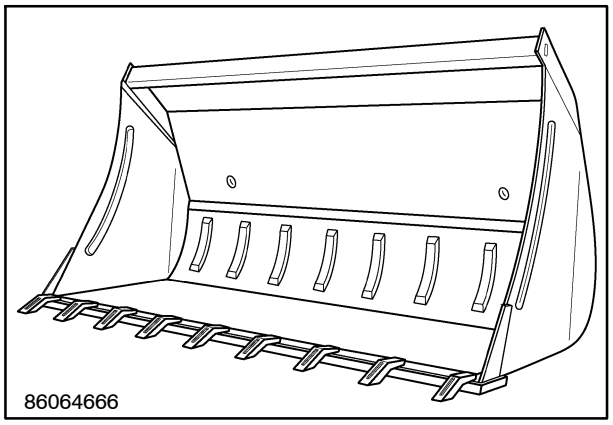

6

https://truckmanualshub.com/

Light Material/Snow Buckets

79 in (200 cm), 87 in (220 cm), 95 in (240 cm), 102 in (260 cm)

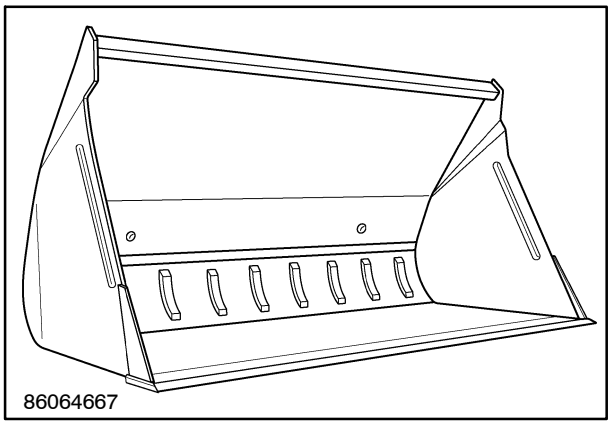

7

Fork Lifts

38 in (160 cm), 47 in (250 cm)

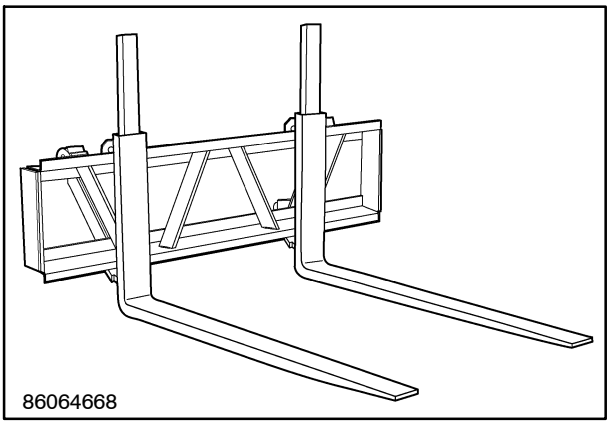

8

Log Grap Attachment for Fork Lifts

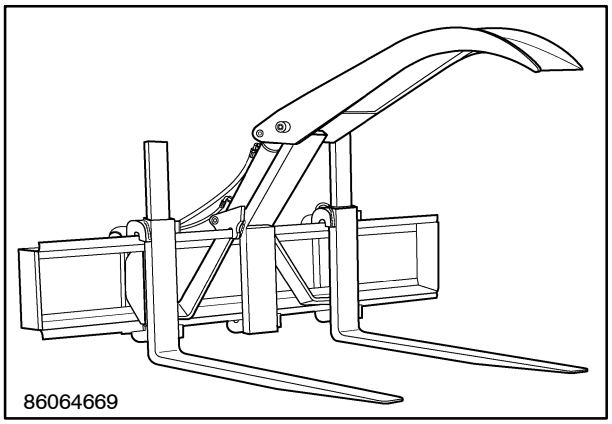

9

https://truckmanualshub.com/

Bale Spike

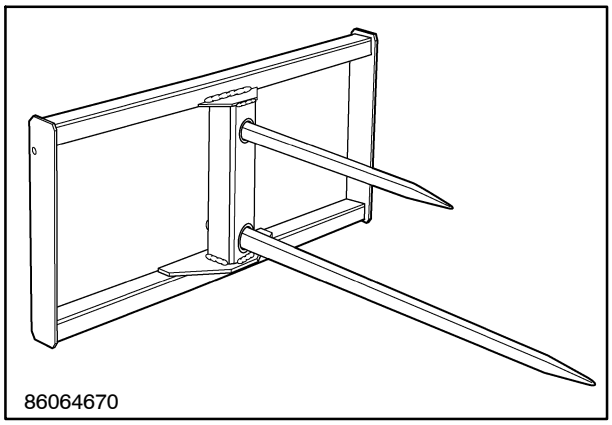

10

Big Bale Fork

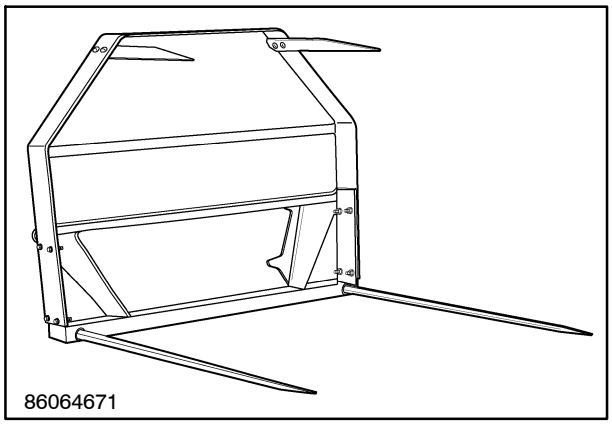

11

Grapple with Optional Backscreen

Available with either tine floor bucket or standard floor bucket.

83 in (210 cm), 95 in (240 cm), 102 in (260 cm)

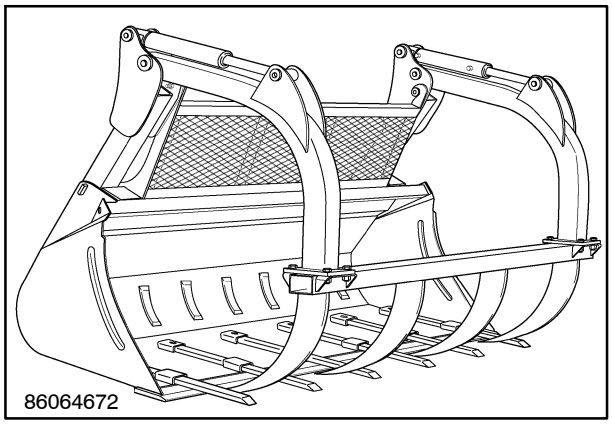

12

https://truckmanualshub.com/

Counterweight (empty)

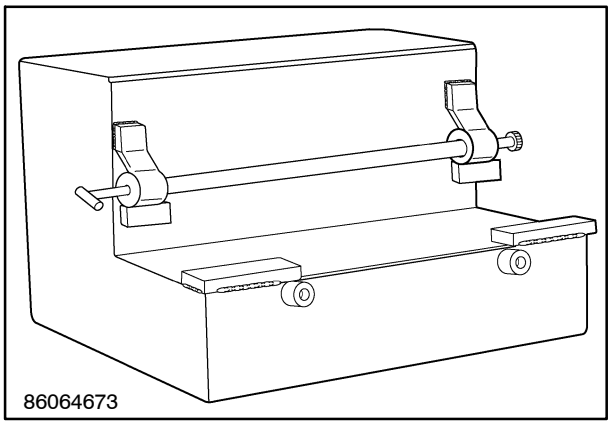

13

H. D. Bale Grip

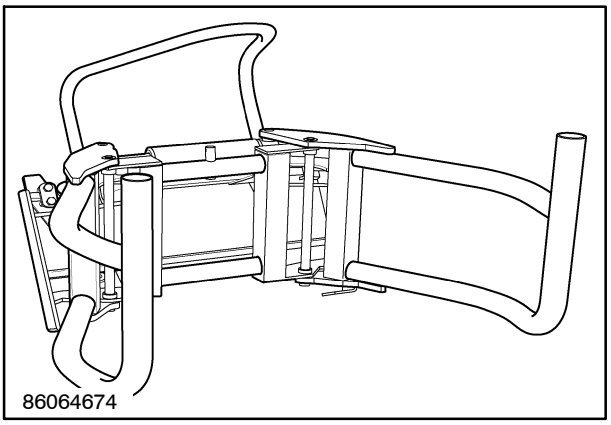

14

H. D. Round or Square Plastic Wrapped Bale Grip

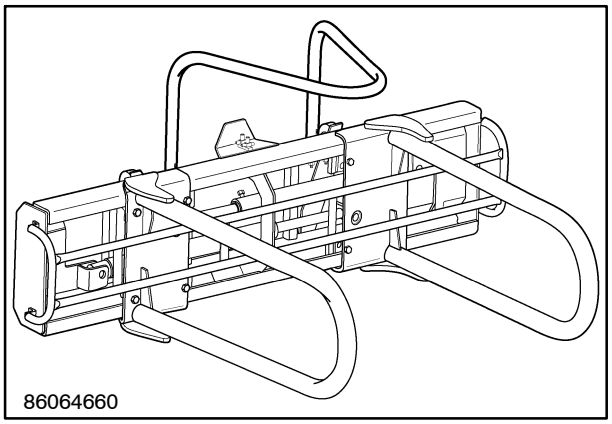

15

https://truckmanualshub.com/

Hose Set

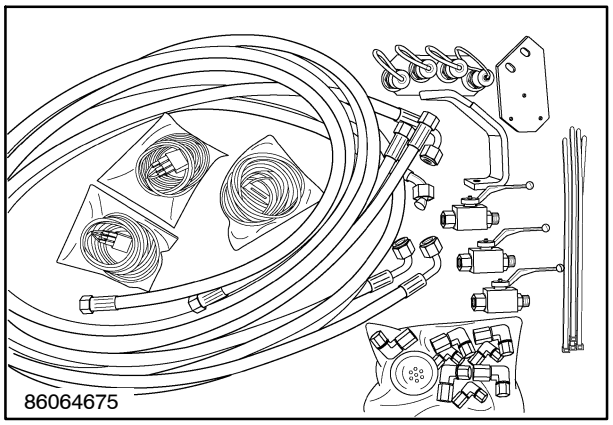

16

Weld on Hook Set

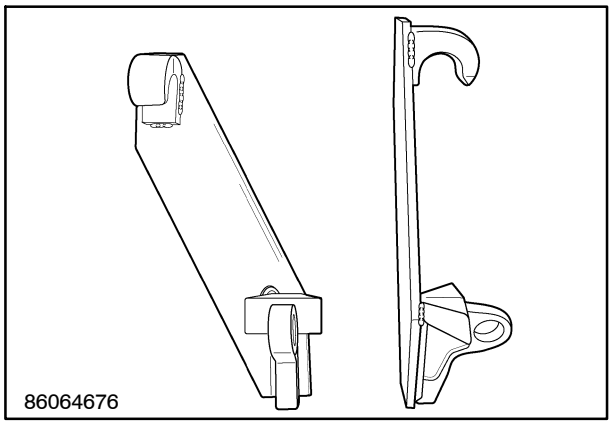

17

https://truckmanualshub.com/

SECTION 6
SPECIFICATIONS

LOADER SPECIFICATION

The following specifications are intended to be used as a general guide. Due to variations in tractor models, tire size, and hydraulic system, these specifications apply only to the tractor specified in each example.

Other tractor models and/or tractor variations may have different values. Specifications are to current ASAE Standard S301 .3.

The technical data may vary, depending on the tractor model and implement.

Loader Model	**L780**
Tractor Model Series	MX MAGNUM
Hydraulic Pressure	3000 psi (207 bar)
Hydraulic Flow	40 gpm (151 l/m)
Front Tires	600 / 70R30
Rear Tires	710 / 70 R42
Wheelbase (WB)	118 in (3000 mm)
Lifting Capacity and Breakout Force at 2930 psi (202 bar) at pivot pin (lb / kg)	
Maximum lifting height (lb / kg)	5950 / 2700
59 in / 1.5 m lift height (lb / kg)	7550 / 3425
Ground line (breakout force) (lb / kg)	8150 / 3697
Lifting Capacity and Breakout Force at 2930 psi (202 bar) at 31.5 in/800mm forward of pivot pin (lb / kg)	
Maximum lifting height (lb / kg)	5250 / 2381
59 in / 1.5 m lift height (lb / kg)	6500 / 2948
Ground line (breakout force) (lb / kg)	7000 / 3175

https://truckmanualshub.com/

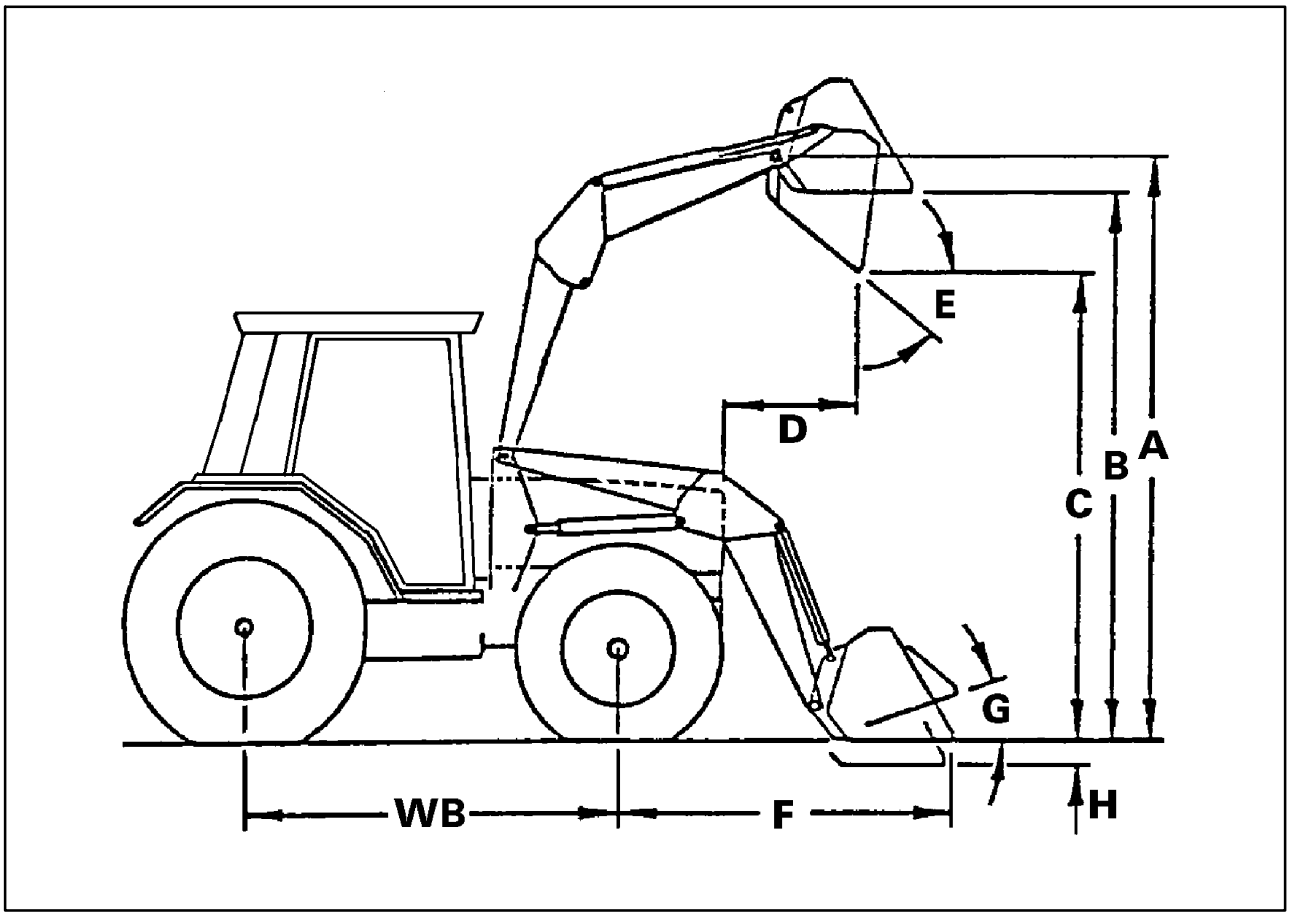

1

Dimension Specification (inch/mm)	
A. Maximum lifting height to pivot pin	187 / 4750
B. Maximum lift height under level bucket	175 / 4445
C . Clearance with bucket dumped	150 / 3810
D. Reach at maximum lift height	7 / 179
E. Maximum dump angle	57 deg
F. Reach with bucket at ground	109 / 2769
G. Maximum rollback angle	38 deg
H. Digging depth	6 / 152
Cycle Times (seconds)	
Raising Time	3.4
Lowering Time	2.7
Bucket Dump Time	1.8
Bucket Rollback Time	1.8
Approximate Weight (loader w/o bucket) lb / kg	
	1780 / 807

https://truckmanualshub.com/

DIAGRAM

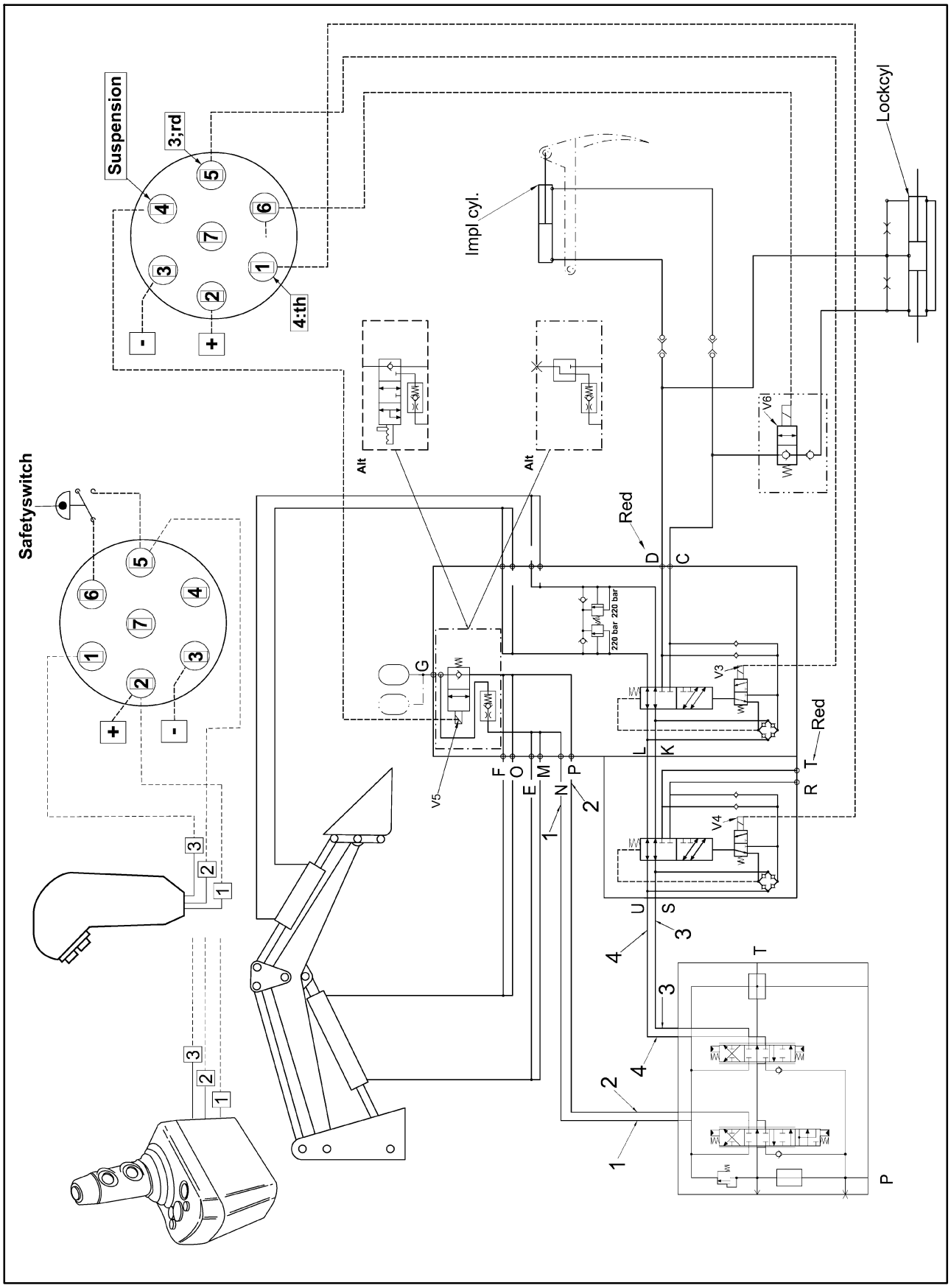

2

https://truckmanualshub.com/

https://truckmanualshub.com/

INDEX

Alignment Reference 1-4
Ballast Recommendation Chart 2-2
California Emission Control Warranty
Statement 0-4
Checking Hydraulic Connections 3-4
Check List 2-12
Central Control Valve 3-3
Description 1-4
Diagram 6-3
Ecology and the Environment 0-21
Federal Emissions Warranty 0-3
General Information 0-9, 1-1
Helpful Hints 0-21
Hydraulic System 3-1
Identification 1-2
Improvements 0-1
Information 0-6
Install Attachment 2-17
Installing the Loader 2-6
Keep the Loader Properly Maintained 0-14
Loader Operation 2-13
Loader Specification 6-1
Location of Attachment Safety Decals 0-20
Location of Safety Decals 0-19
Lubrication and Maintenance 3-1
Lubrication Points 3-1
Machine Safety 0-6
Machine Stability 0-16
Maintenance 0-8
Operating the Loader 0-7
Operation 2-1
Operation of the Loader 2-4
Operation with Bale Spike Attachment 2-19
Operation with Grapple Fork Attachment 2-21
Operation with H. D. Bale Grip 2-24
Optional Equipment 5-1
Personal Safety 0-6
Precautionary Statements 0-6
Predelivery Report 6-7
Remove and Install Bucket or Attachment 2-16
Removing Loader from Tractor 2-8
Re-Installing Loader on Tractor 2-10
Safety 0-7
Safety Rules 0-11
Safety Instructions 0-9
Soft-Ride Loader Suspension System 2-15
Specifications 6-1
Storage 3-1
Tractor Ballast and Tread Adjustment 0-14
Tractor/Loader Stability 2-1
Transporting on Public Highways 0-13
Troubleshooting 4-1
To the Owner 0-1
Universal Symbols 0-22

https://truckmanualshub.com/

https://truckmanualshub.com/

OWNER COPY

PREDELIVERY REPORT

L780 LOADER

Delivery Date _____

Owner's Name _____

Address _____

Dealer's Name _____

Address _____

Model _____

Product Identification No. _____

Using the operator's manual as a guide, instruction was given as indicated by the check marks.

CHECK AND ADJUST AS REQUIRED

INOPERATIVE SERVICE CHECKS

_____ Grease all pivot points

_____ Review mounting and dismounting procedures with owner

_____ Check hydraulic connections

_____ Review bucket mounting and dismounting procedures with owner

SAFETY ITEMS CHECKS

_____ Operator's manual present #87753767

_____ Seat belts installed

OPERATIVE SERVICE CHECKS

_____ Check for hydraulic leaks

_____ Confirm loader operation with joystick decal

_____ Confirm joystick safety lock-out is functioning properly

Dealer representative signature _____ Date _____

I have been instructed in the operation, maintenance and safety features of this machine as detailed in the operator's manual.

Owner's signature _____ Date _____

https://truckmanualshub.com/

https://truckmanualshub.com/

DEALER COPY

PREDELIVERY REPORT

L780 LOADER

Delivery Date _____

Owner's Name _____

Address _____

Dealer's Name _____

Address _____

Model _____

Product Identification No. _____

Using the operator's manual as a guide, instruction was given as indicated by the check marks.

CHECK AND ADJUST AS REQUIRED

INOPERATIVE SERVICE CHECKS

_____ Grease all pivot points

_____ Review mounting and dismounting procedures with owner

_____ Check hydraulic connections

_____ Review bucket mounting and dismounting procedures with owner

SAFETY ITEMS CHECKS

_____ Operator's manual present #87753767

_____ Seat belts installed

OPERATIVE SERVICE CHECKS

_____ Check for hydraulic leaks

_____ Confirm loader operation with joystick decal

_____ Confirm joystick safety lock-out is functioning properly

Dealer representative signature _____ Date _____

I have been instructed in the operation, maintenance and safety features of this machine as detailed in the operator's manual.

Owner's signature _____ Date _____

https://truckmanualshub.com/